BEŞER®

# WE WORK NON-STOP

## FOR YOUR SAFE STOP

# CV DISC BRAKE PADS CATALOGUE

CATALOGUE/CATALOGO/каталог/ قائمة مبوبة /KATALOG

# BRAKE PAD ILLUSTRATIONS

# CONTENTS


VEHICLE APPLICATION 1

BRAKE PAD ILLUSTRATIONS 121

BRAKE PAD KITS 137

MANUFACTURERS CROOS REFERENCE TABLE 157

# VEHICLE APPLICATION

| MAKE & MODEL | | YEAR | 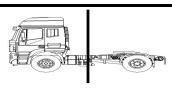 | |
|---|---|---|---|---|
| **BOVA** | | | | |
| FUTURA 2 Axles | 10.0 FHD 10-290 4x2 | *95-* | 3664 | 3664 |
| FUTURA 2 Axles | 10.0 FHD 10-300 4x2 | *95-* | 3664 | 3664 |
| FUTURA 2 Axles | 12.0 FHD 12-290 4x2 | *95-* | 3664 | 3664 |
| FUTURA 2 Axles | 12.0 FHD 12-360 4x2 | *95-* | 3664 | 3664 |
| FUTURA 2 Axles | 12.0 FHD 12-370 4x2 | *95-* | 3664 | 3664 |
| FUTURA 2 Axles | 12.0 FVD 12-220 4x2 | *95-* | 3664 | 3664 |
| FUTURA 2 Axles | 12.0 FVD 12-270 4x2 | *95-* | 3664 | 3664 |
| FUTURA 3 Axles | 15.0 FHD 15-430 6x2 | *95-* | 3664 | 3664 |
| FUTURA 3 Axles | 15.0 FHX 15-420 6x2 | *95-* | 3664 | 3664 |
| FUTURA 3 Axles | 15.0 FLD 15-370 6x2 | *95-* | 3664 | 3664 |
| **BPW** | | | | |
| Eje/Axle | Llanta 22" SB 4345 | *95-* | 3664 | 3664 |
| SH | SB4345 SHSF 10010-15 ECO 430x45 Variante 2 -10 Ton (SK7/MA7) | 96- | | 3902 |
| SH | SB4345 SHSF 10010-15 ECO 430x45 Variante 2 -10 Ton (SK7/MA7) | 96- | | 3902/1 |
| SH | SB4345 SHSF 9010 ECO 430x45 Variante 2 -9 Ton (SK7/MA7) | 96- | | 3902 |
| SH | SB4345 SHSF 9010 ECO 430x45 Variante 2 -9 Ton (SK7/MA7) | 96- | | 3902/1 |
| SH | SB4346 SHSF 10010-15 ECO PLUS 430x45 Variante 2 -10 Ton (SK7/MA7) | 96- | | 3902 |
| SH | SB4346 SHSF 10010-15 ECO PLUS 430x45 Variante 2 -10 Ton (SK7/MA7) | 96- | | 3902/1 |
| SH | SB4346 SHSF 9010 ECO PLUS 430x45 Variante 2 -9 Ton (SK7/MA7) | 96- | | 3902 |
| SH | SB4346 SHSF 9010 ECO PLUS 430x45 Variante 2 -9 Ton (SK7/MA7) | 96- | | 3902/1 |
| SH | SB4347 SHSF 10110-15 ECO-MAXX 430x45 Variante 2 -10 Ton (SK7/MA7) | 96- | | 3902 |
| SH | SB4347 SHSF 10110-15 ECO-MAXX 430x45 Variante 2 -10 Ton (SK7/MA7) | 96- | | 3902/1 |
| SH | SB4347 SHSF 9010 ECO-MAXX 430x45 Variante 2 -9 Ton (SK7/MA7) | 96- | | 3902 |
| SH | SB4347 SHSF 9010 ECO-MAXX 430x45 Variante 2 -9 Ton (SK7/MA7) | 96- | | 3902/1 |
| SH | SB4348 SHSF 10110-15 ECO 430x45 Variante 2 -10 Ton (SK7/MA7) | 96- | | 3902 |
| SH | SB4348 SHSF 10110-15 ECO 430x45 Variante 2 -10 Ton (SK7/MA7) | 96- | | 3902/1 |
| SH | SB4348 SHSF 9010-15 ECO 430x45 Variante 2 -9 Ton (SK7/MA7) | 96- | | 3902 |
| SH | SB4348 SHSF 9010-15 ECO 430x45 Variante 2 -9 Ton (SK7/MA7) | 96- | | 3902/1 |
| SH | SB4349 SHSF 10110-15 ECO PLUS 430x45 Variante 2 -10 Ton (SK7/MA7) | 96- | | 3902 |
| SH | SB4349 SHSF 10110-15 ECO PLUS 430x45 Variante 2 -10 Ton (SK7/MA7) | 96- | | 3902/1 |
| SH | SB4349 SHSF 9010-15 ECO PLUS 430x45 Variante 2 -9 Ton (SK7/MA7) | 96- | | 3902 |
| SH | SB4349 SHSF 9010-15 ECO PLUS 430x45 Variante 2 -9 Ton (SK7/MA7) | 96- | | 3902/1 |
| SH | SB4350 SHSF 10110-15 ECO-MAXX 430x45 Variante 2 -10 Ton (SK7/MA7) | 96- | | 3902 |
| SH | SB4350 SHSF 10110-15 ECO-MAXX 430x45 Variante 2 -10 Ton (SK7/MA7) | 96- | | 3902/1 |
| SH | SB4350 SHSF 9010-15 ECO-MAXX 430x45 Variante 2 -9 Ton (SK7/MA7) | 96- | | 3902 |
| SH | SB4350 SHSF 9010-15 ECO-MAXX 430x45 Variante 2 -9 Ton (SK7/MA7) | 96- | | 3902/1 |
| SH | SB4351 SHSF 12010-16 ECO PLUS 430x45 Variante 2 -12 Ton (SK7/MA7) | 96- | | 3902 |
| SH | SB4351 SHSF 12010-16 ECO PLUS 430x45 Variante 2 -12 Ton (SK7/MA7) | 96- | | 3902/1 |
| SH | SB4351 SHSFA 8010 ECO-MAXX 430x45 Variante 2 -8 Ton (SK7/MA7) | 96- | | 3902 |
| SH | SB4351 SHSFA 8010 ECO-MAXX 430x45 Variante 2 -8 Ton (SK7/MA7) | 96- | | 3902/1 |
| SH | SB4352 SHSF 12010-16 ECO-MAXX 430x45 Variante 2 -12 Ton (SK7/MA7) | 96- | | 3902 |
| SH | SB4352 SHSF 12010-16 ECO-MAXX 430x45 Variante 2 -12 Ton (SK7/MA7) | 96- | | 3902/1 |
| SH | SB4352 SHSFA 8010 ECO 430x45 Variante 2 -9 Ton (SK7/MA7) | 96- | | 3902 |
| SH | SB4352 SHSFA 8010 ECO 430x45 Variante 2 -9 Ton (SK7/MA7) | 96- | | 3902/1 |
| SH | SB4353 SHSF 9010 430x45 Variante 2 SB4353 -9 Ton (SK7/MA7) | 96- | | 3902 |
| SH | SB4353 SHSF 9010 430x45 Variante 2 SB4353 -9 Ton (SK7/MA7) | 96- | | 3902/1 |
| SH | SB4353 SHSFA 9010 ECO-MAXX 430x45 Variante 2 -9 Ton (SK7/MA7) | 96- | | 3902 |
| SH | SB4353 SHSFA 9010 ECO-MAXX 430x45 Variante 2 -9 Ton (SK7/MA7) | 96- | | 3902/1 |
| SH | SB4354 SHSFA 9010-15 ECO-MAXX 430x45 Variante 2 -9 Ton (SK7/MA7) | 96- | | 3902 |
| SH | SB4354 SHSFA 9010-15 ECO-MAXX 430x45 Variante 2 -9 Ton (SK7/MA7) | 96- | | 3902/1 |
| SH | SB4355 SHSM 10010-15 ECO 430x45 Variante 2 -10 Ton (SK7/MA7) | 96- | | 3902 |
| SH | SB4355 SHSM 10010-15 ECO 430x45 Variante 2 -10 Ton (SK7/MA7) | 96- | | 3902/1 |
| SH | SB4356 SHSM 10010-15 ECO PLUS 430x45 Variante 2 -10 Ton (SK7/MA7) | 96- | | 3902 |
| SH | SB4356 SHSM 10010-15 ECO PLUS 430x45 Variante 2 -10 Ton (SK7/MA7) | 96- | | 3902/1 |
| SH | SB4357 SHSM 10010-15 ECO-MAXX 430x45 Variante 2 -10 Ton (SK7/MA7) | 96- | | 3902 |
| SH | SB4357 SHSM 10010-15 ECO-MAXX 430x45 Variante 2 -10 Ton (SK7/MA7) | 96- | | 3902/1 |
| SH | SB4358 SHSM 10110-15 ECO 430x45 Variante 2 -10 Ton (SK7/MA7) | 96- | | 3902 |
| SH | SB4358 SHSM 10110-15 ECO 430x45 Variante 2 -10 Ton (SK7/MA7) | 96- | | 3902/1 |
| SH | SB4359 SHSM 10110-15 ECO PLUS 430x45 Variante 2 -10 Ton (SK7/MA7) | 96- | | 3902 |

| MAKE & MODEL | | YEAR | | |
|---|---|---|---|---|
| **BPW** | | | | |
| SH | SB4359 SHSM 10110-15 ECO PLUS 430x45 Variante 2 -10 Ton (SK7/MA7) | 96- | | 3902/1 |
| SH | SB4360 SHSM 10110-15 ECO-MAXX 430x45 Variante 2 -10 Ton (SK7/MA7) | 96- | | 3902 |
| SH | SB4360 SHSM 10110-15 ECO-MAXX 430x45 Variante 2 -10 Ton (SK7/MA7) | 96- | | 3902/1 |
| SH | SB4361 SHSM 12010-16 ECO PLUS 430x45 Variante 2 -12 Ton (SK7/MA7) | 96- | | 3902 |
| SH | SB4361 SHSM 12010-16 ECO PLUS 430x45 Variante 2 -12 Ton (SK7/MA7) | 96- | | 3902/1 |
| SH | SB4362 SHSM 12010-16 ECO-MAXX 430x45 Variante 2 -12 Ton (SK7/MA7) | 96- | | 3902 |
| SH | SB4362 SHSM 12010-16 ECO-MAXX 430x45 Variante 2 -12 Ton (SK7/MA7) | 96- | | 3902/1 |
| SH | SB4363 SHSM 9010 ECO 430x45 Variante 2 -9 Ton (SK7/MA7) | 96- | | 3902 |
| SH | SB4363 SHSM 9010 ECO 430x45 Variante 2 -9 Ton (SK7/MA7) | 96- | | 3902/1 |
| SH | SB4364 SHSM 9010 ECO-MAXX 430x45 Variante 2 -9 Ton (SK7/MA7) | 96- | | 3902 |
| SH | SB4364 SHSM 9010 ECO-MAXX 430x45 Variante 2 -9 Ton (SK7/MA7) | 96- | | 3902/1 |
| SH | SB4365 SHSM 9010-15 ECO-MAXX 430x45 Variante 2 -9 Ton (SK7/MA7) | 96- | | 3902 |
| SH | SB4365 SHSM 9010-15 ECO-MAXX 430x45 Variante 2 -9 Ton (SK7/MA7) | 96- | | 3902/1 |
| SH | SB4366 SHSMA 9010 ECO 430x45 Variante 2 -9 Ton (SK7/MA7) | 96- | | 3902 |
| SH | SB4366 SHSMA 9010 ECO 430x45 Variante 2 -9 Ton (SK7/MA7) | 96- | | 3902/1 |
| SH | SB4367 SHZ 12010-16 ECO-MAXX 430x45 Variante 2 -12 Ton (SK7/MA7) | 96- | | 3902 |
| SH | SB4367 SHZ 12010-16 ECO-MAXX 430x45 Variante 2 -12 Ton (SK7/MA7) | 96- | | 3902/1 |
| SH | SB4368 SHZF 10010-15 ECO 430x45 Variante 2 -10 Ton (SK7/MA7) | 96- | | 3902 |
| SH | SB4368 SHZF 10010-15 ECO 430x45 Variante 2 -10 Ton (SK7/MA7) | 96- | | 3902/1 |
| SH | SB4369 SHZF 10010-15 ECO PLUS 430x45 Variante 2 -10 Ton (SK7/MA7) | 96- | | 3902 |
| SH | SB4369 SHZF 10010-15 ECO PLUS 430x45 Variante 2 -10 Ton (SK7/MA7) | 96- | | 3902/1 |
| SH | SB4370 SHZF 10010-15 ECO-MAXX 430x45 Variante 2 -10 Ton (SK7/MA7) | 96- | | 3902 |
| SH | SB4370 SHZF 10010-15 ECO-MAXX 430x45 Variante 2 -10 Ton (SK7/MA7) | 96- | | 3902/1 |
| SH | SB4371 SHZF 10110-15 ECO 430x45 Variante 2 S -10 Ton (SK7/MA7) | 96- | | 3902 |
| SH | SB4371 SHZF 10110-15 ECO 430x45 Variante 2 S -10 Ton (SK7/MA7) | 96- | | 3902/1 |
| SH | SB4372 SHZF 10110-15 ECO PLUS 430x45 Variante 2 -10 Ton (SK7/MA7) | 96- | | 3902 |
| SH | SB4372 SHZF 10110-15 ECO PLUS 430x45 Variante 2 -10 Ton (SK7/MA7) | 96- | | 3902/1 |
| SH | SB4373 SHZF 10110-15 ECO-MAXX 430x45 Variante 2 -10 Ton (SK7/MA7) | 96- | | 3902 |
| SH | SB4373 SHZF 10110-15 ECO-MAXX 430x45 Variante 2 -10 Ton (SK7/MA7) | 96- | | 3902/1 |
| SH | SB4374 SHZF 12010-16 ECO PLUS 430x45 Variante 2 -12 Ton (SK7/MA7) | 96- | | 3902 |
| SH | SB4374 SHZF 12010-16 ECO PLUS 430x45 Variante 2 -12 Ton (SK7/MA7) | 96- | | 3902/1 |
| SH | SB4375 SHZF 12010-16 ECO-MAXX 430x45 Variante 2 -12 Ton (SK7/MA7) | 96- | | 3902 |
| SH | SB4375 SHZF 12010-16 ECO-MAXX 430x45 Variante 2 -12 Ton (SK7/MA7) | 96- | | 3902/1 |
| SH | SB4376 SHZF 14010-1 ECO-MAXX 430x45 Variante 2 -14 Ton (SK7/MA7) | 96- | | 3902 |
| SH | SB4376 SHZF 14010-1 ECO-MAXX 430x45 Variante 2 -14 Ton (SK7/MA7) | 96- | | 3902/1 |
| SH | SB4377 SHZF 14010-15 ECO-MAXX 430x45 Variante 2 -14 Ton (SK7/MA7) | 96- | | 3902 |
| SH | SB4377 SHZF 14010-15 ECO-MAXX 430x45 Variante 2 -14 Ton (SK7/MA7) | 96- | | 3902/1 |
| SH | SB4378 SHZF 9010 ECO 430x45 Variante 2 -9 Ton (SK7/MA7) | 96- | | 3902 |
| SH | SB4378 SHZF 9010 ECO 430x45 Variante 2 -9 Ton (SK7/MA7) | 96- | | 3902/1 |
| SH | SB4379 SHZF 9010 ECO-MAXX 430x45 Variante 2 -9 Ton (SK7/MA7) | 96- | | 3902 |
| SH | SB4379 SHZF 9010 ECO-MAXX 430x45 Variante 2 -9 Ton (SK7/MA7) | 96- | | 3902/1 |
| SH | SB4380 SHZF 9010-15 ECO 430x45 Variante 2 -9 Ton (SK7/MA7) | 96- | | 3902 |
| SH | SB4380 SHZF 9010-15 ECO 430x45 Variante 2 -9 Ton (SK7/MA7) | 96- | | 3902/1 |
| SH | SB4381 SHZF 9010-15 ECO PLUS 430x45 Variante 2 -9 Ton (SK7/MA7) | 96- | | 3902 |
| SH | SB4381 SHZF 9010-15 ECO PLUS 430x45 Variante 2 -9 Ton (SK7/MA7) | 96- | | 3902/1 |
| SH | SB4382 SHZF 9010-15 ECO-MAXX 430x45 Variante 2 -9 Ton (SK7/MA7) | 96- | | 3902 |
| SH | SB4382 SHZF 9010-15 ECO-MAXX 430x45 Variante 2 -9 Ton (SK7/MA7) | 96- | | 3902/1 |
| SH | SB4383 SHZM 10010-15 ECO 430x45 Variante 2 -10 Ton (SK7/MA7) | 96- | | 3902 |
| SH | SB4383 SHZM 10010-15 ECO 430x45 Variante 2 -10 Ton (SK7/MA7) | 96- | | 3902/1 |
| SH | SB4384 SHZM 10010-15 ECO-MAXX 430x45 Variante 2 -10 Ton (SK7/MA7) | 96- | | 3902 |
| SH | SB4384 SHZM 10010-15 ECO-MAXX 430x45 Variante 2 -10 Ton (SK7/MA7) | 96- | | 3902/1 |
| SH | SB4385 SHZM 10110-15 ECO 430x45 Variante 2 -10 Ton (SK7/MA7) | 96- | | 3902 |
| SH | SB4385 SHZM 10110-15 ECO 430x45 Variante 2 -10 Ton (SK7/MA7) | 96- | | 3902/1 |
| SH | SB4386 SHZM 10110-15 ECO PLUS 430x45 Variante 2 -10 Ton (SK7/MA7) | 96- | | 3902 |
| SH | SB4386 SHZM 10110-15 ECO PLUS 430x45 Variante 2 -10 Ton (SK7/MA7) | 96- | | 3902/1 |
| SH | SB4387 SHZM 10110-15 ECO-MAXX 430x45 Variante 2 -10 Ton (SK7/MA7) | 96- | | 3902 |
| SH | SB4387 SHZM 10110-15 ECO-MAXX 430x45 Variante 2 -10 Ton (SK7/MA7) | 96- | | 3902/1 |
| SH | SB4388 SHZM 12010-16 ECO PLUS 430x45 Variante 2 -12 Ton (SK7/MA7) | 96- | | 3902 |
| SH | SB4388 SHZM 12010-16 ECO PLUS 430x45 Variante 2 -12 Ton (SK7/MA7) | 96- | | 3902/1 |

| MAKE & MODEL | | YEAR | | |
|---|---|---|---|---|
| **BPW** | | | | |
| SH | SB4389 SHZM 12010-16 ECO-MAXX 430x45 Variante 2 -12 Ton (SK7/MA7) | 96- | | 3902 |
| SH | SB4389 SHZM 12010-16 ECO-MAXX 430x45 Variante 2 -12 Ton (SK7/MA7) | 96- | | 3902/1 |
| SH | SB4390 SHZM 9010-15 ECO-MAXX 430x45 Variante 2 -9 Ton (SK7/MA7) | 96- | | 3902 |
| SH | SB4390 SHZM 9010-15 ECO-MAXX 430x45 Variante 2 -9 Ton (SK7/MA7) | 96- | | 3902/1 |
| SH | SB4391 SHZMA 9010-15 ECO-MAXX 430x45 Variante 2 -9 Ton (SK7/MA7) | 96- | | 3902 |
| SH | SB4391 SHZMA 9010-15 ECO-MAXX 430x45 Variante 2 -9 Ton (SK7/MA7) | 96- | | 3902/1 |
| SH | SHBF 9010 ECO Plus 430x45 Variante 2 -9 Ton (SK7/MA7) | 00- | | 3902 |
| SH | SHBF 9010 ECO Plus 430x45 Variante 2 -9 Ton (SK7/MA7) | 00- | | 3902/1 |
| SH | SHSF 8010 ECO Plus 430x45 Variante 2 -9 Ton (SK7/MA7) | 96-00 | | 3902 |
| SH | SHSF 8010 ECO Plus 430x45 Variante 2 -9 Ton (SK7/MA7) | 96-00 | | 3902/1 |
| SH | SHSF 9010 ECO Plus 430x45 Variante 2 -9 Ton (SK7/MA7) | 00- | | 3902 |
| SH | SHSF 9010 ECO Plus 430x45 Variante 2 -9 Ton (SK7/MA7) | 00- | | 3902/1 |
| SH | SHSFH 9010 ECO-MAXX 430x45 Variante 2 -9 Ton (SK7/MA7) | 97- | | 3902 |
| SH | SHSFH 9010 ECO-MAXX 430x45 Variante 2 -9 Ton (SK7/MA7) | 97- | | 3902/1 |
| SH | SHSM 9010 ECO Plus 430x45 Variante 2 -9 Ton (SK7/MA7) | 00- | | 3902 |
| SH | SHSM 9010 ECO Plus 430x45 Variante 2 -9 Ton (SK7/MA7) | 00- | | 3902/1 |
| SH | SHSM 9010-15 ECO Plus 430x45 Variante 2 -9 Ton (SK7/MA7) | 00- | | 3902 |
| SH | SHSM 9010-15 ECO Plus 430x45 Variante 2 -9 Ton (SK7/MA7) | 00- | | 3902/1 |
| SH | SHZF 9010 ECO Plus 430x45 Variante 2 -9 Ton (SK7/MA7) | 00- | | 3902 |
| SH | SHZF 9010 ECO Plus 430x45 Variante 2 -9 Ton (SK7/MA7) | 00- | | 3902/1 |
| SH | SHZM 9010-15 ECO Plus 430x45 Variante 2 -9 Ton (SK7/MA7) | 00- | | 3902 |
| SH | SHZM 9010-15 ECO Plus 430x45 Variante 2 -9 Ton (SK7/MA7) | 00- | | 3902/1 |
| SH SHSF | 9010 | 01/96- | | 3664/2 |
| SH SHSF | 10010-15 ECO PLUS | 01/96- | | 3664/2 |
| SH SHZF | 9010 ECO | 01/96- | | 3664/2 |
| SH SHZM | 12010-16ECO PLUS | 01/96- | | 3664/2 |
| SKH | SB3745 SKH 9008 370x45 Variante 1 -9 Ton | *98-03* | | 3789 |
| SKH | SB3745 SKH 9008 370x45 Variante 1 -9 Ton | *98-03* | | 3789 |
| SKH | SB3745 SKH 9008 370x45 Variante 1 -9 Ton (SN6) | *03-* | | 3789/1 |
| SKH | SB3745 SKH 9008 370x45 Variante 1 -9 Ton (SN6) | *03-* | | 3789/2 |
| SKH | SB3745 SKH 9010 370x45 Variante 1 -9 Ton | *98-03* | | 3789 |
| SKH | SB3745 SKH 9010 370x45 Variante 1 -9 Ton | *98-03* | | 3789 |
| SKH | SB3745 SKH 9010 370x45 Variante 1 -9 Ton (SN6) | *03-* | | 3789/1 |
| SKH | SB3745 SKH 9010 370x45 Variante 1 -9 Ton (SN6) | *03-* | | 3789/2 |
| SKH | SB3745 SKHBF 9010 ECO Plus 370x45 Variante 1 -9 Ton | *98-03* | | 3789 |
| SKH | SB3745 SKHBF 9010 ECO Plus 370x45 Variante 1 -9 Ton | *98-03* | | 3789 |
| SKH | SB3745 SKHBF 9010 ECO Plus 370x45 Variante 1 -9 Ton (SN6) | *03-* | | 3789/1 |
| SKH | SB3745 SKHBF 9010 ECO Plus 370x45 Variante 1 -9 Ton (SN6) | *03-* | | 3789/2 |
| SKH | SB3745 SKHBF 9010 ECO-MAXX 370x45 Variante 1 -9 Ton | *98-03* | | 3789 |
| SKH | SB3745 SKHBF 9010 ECO-MAXX 370x45 Variante 1 -9 Ton | *98-03* | | 3789 |
| SKH | SB3745 SKHBF 9010 ECO-MAXX 370x45 Variante 1 -9 Ton (SN6) | *03-* | | 3789/1 |
| SKH | SB3745 SKHBF 9010 ECO-MAXX 370x45 Variante 1 -9 Ton (SN6) | *03-* | | 3789/2 |
| SKH | SB3745 SKHBF 9010-15 ECO Plus 370x45 Variante 1 -9 Ton | *98-03* | | 3789 |
| SKH | SB3745 SKHBF 9010-15 ECO Plus 370x45 Variante 1 -9 Ton | *98-03* | | 3789 |
| SKH | SB3745 SKHBF 9010-15 ECO Plus 370x45 Variante 1 -9 Ton (SN6) | *03-* | | 3789/1 |
| SKH | SB3745 SKHBF 9010-15 ECO Plus 370x45 Variante 1 -9 Ton (SN6) | *03-* | | 3789/2 |
| SKH | SB3745 SKHBF 9010-15 ECO-MAXX 370x45 Variante 1 -9 Ton | *98-03* | | 3789 |
| SKH | SB3745 SKHBF 9010-15 ECO-MAXX 370x45 Variante 1 -9 Ton | *98-03* | | 3789 |
| SKH | SB3745 SKHBF 9010-15 ECO-MAXX 370x45 Variante 1 -9 Ton (SN6) | *03-* | | 3789/1 |
| SKH | SB3745 SKHBF 9010-15 ECO-MAXX 370x45 Variante 1 -9 Ton (SN6) | *03-* | | 3789/2 |
| SKH | SB3745 SKHBFHLL 9010 ECO Plus 370x45 Variante 1 -9 Ton | *98-03* | | 3789 |
| SKH | SB3745 SKHBFHLL 9010 ECO Plus 370x45 Variante 1 -9 Ton | *98-03* | | 3789 |
| SKH | SB3745 SKHBFHLL 9010 ECO Plus 370x45 Variante 1 -9 Ton (SN6) | *03-* | | 3789/1 |
| SKH | SB3745 SKHBFHLL 9010 ECO Plus 370x45 Variante 1 -9 Ton (SN6) | *03-* | | 3789/2 |
| SKH | SB3745 SKHBFHLL 9010 ECO-MAXX 370x45 Variante 1 -9 Ton | *98-03* | | 3789 |
| SKH | SB3745 SKHBFHLL 9010 ECO-MAXX 370x45 Variante 1 -9 Ton | *98-03* | | 3789 |
| SKH | SB3745 SKHBFHLL 9010 ECO-MAXX 370x45 Variante 1 -9 Ton (SN6) | *03-* | | 3789/1 |
| SKH | SB3745 SKHBFHLL 9010 ECO-MAXX 370x45 Variante 1 -9 Ton (SN6) | *03-* | | 3789/2 |
| SKH | SB3745 SKHBM 9010 ECO Plus 370x45 Variante 1 -9 Ton | *98-03* | | 3789 |

| MAKE & MODEL | | YEAR | | |
|---|---|---|---|---|
| **BPW** | | | | |
| SKH | SB3745 SKHBM 9010 ECO Plus 370x45 Variante 1 -9 Ton | *98-03* | | 3789 |
| SKH | SB3745 SKHBM 9010 ECO Plus 370x45 Variante 1 -9 Ton (SN6) | *03-* | | 3789/1 |
| SKH | SB3745 SKHBM 9010 ECO Plus 370x45 Variante 1 -9 Ton (SN6) | *03-* | | 3789/2 |
| SKH | SB3745 SKHBM 9010-15 ECO Plus 370x45 Variante 1 -9 Ton | *98-03* | | 3789 |
| SKH | SB3745 SKHBM 9010-15 ECO Plus 370x45 Variante 1 -9 Ton | *98-03* | | 3789 |
| SKH | SB3745 SKHBM 9010-15 ECO Plus 370x45 Variante 1 -9 Ton (SN6) | *03-* | | 3789/1 |
| SKH | SB3745 SKHBM 9010-15 ECO Plus 370x45 Variante 1 -9 Ton (SN6) | *03-* | | 3789/2 |
| SKH | SB3745 SKHBM 9010-15 ECO-MAXX 370x45 Variante 1 -9 Ton | *98-03* | | 3789 |
| SKH | SB3745 SKHBM 9010-15 ECO-MAXX 370x45 Variante 1 -9 Ton | *98-03* | | 3789 |
| SKH | SB3745 SKHBM 9010-15 ECO-MAXX 370x45 Variante 1 -9 Ton (SN6) | *03-* | | 3789/1 |
| SKH | SB3745 SKHBM 9010-15 ECO-MAXX 370x45 Variante 1 -9 Ton (SN6) | *03-* | | 3789/2 |
| SKH | SB3745 SKHBM-15 9010 ECO-MAXX 370x45 Variante 1 -9 Ton | *98-03* | | 3789 |
| SKH | SB3745 SKHBM-15 9010 ECO-MAXX 370x45 Variante 1 -9 Ton | *98-03* | | 3789 |
| SKH | SB3745 SKHBM-15 9010 ECO-MAXX 370x45 Variante 1 -9 Ton (SN6) | *03-* | | 3789/1 |
| SKH | SB3745 SKHBM-15 9010 ECO-MAXX 370x45 Variante 1 -9 Ton (SN6) | *03-* | | 3789/2 |
| SKH | SB3745 SKHBMHLL 9010 ECO Plus 370x45 Variante 1 -9 Ton | *98-03* | | 3789 |
| SKH | SB3745 SKHBMHLL 9010 ECO Plus 370x45 Variante 1 -9 Ton | *98-03* | | 3789 |
| SKH | SB3745 SKHBMHLL 9010 ECO Plus 370x45 Variante 1 -9 Ton (SN6) | *03-* | | 3789/1 |
| SKH | SB3745 SKHBMHLL 9010 ECO Plus 370x45 Variante 1 -9 Ton (SN6) | *03-* | | 3789/2 |
| SKH | SB3745 SKHSF 10010-15 ECO Plus 370x45 Variante 1 -10 Ton | *98-03* | | 3789 |
| SKH | SB3745 SKHSF 10010-15 ECO Plus 370x45 Variante 1 -10 Ton | *98-03* | | 3789 |
| SKH | SB3745 SKHSF 10010-15 ECO Plus 370x45 Variante 1 -10 Ton (SN6) | *03-* | | 3789/1 |
| SKH | SB3745 SKHSF 10010-15 ECO Plus 370x45 Variante 1 -10 Ton (SN6) | *03-* | | 3789/2 |
| SKH | SB3745 SKHSF 10010-15 ECO-MAXX 370x45 Variante 1 -10 Ton | *98-03* | | 3789 |
| SKH | SB3745 SKHSF 10010-15 ECO-MAXX 370x45 Variante 1 -10 Ton | *98-03* | | 3789 |
| SKH | SB3745 SKHSF 10010-15 ECO-MAXX 370x45 Variante 1 -10 Ton (SN6) | *03-* | | 3789/1 |
| SKH | SB3745 SKHSF 10010-15 ECO-MAXX 370x45 Variante 1 -10 Ton (SN6) | *03-* | | 3789/2 |
| SKH | SB3745 SKHSF 10018-15 ECO Plus 370x45 Variante 1 -10 Ton | *98-03* | | 3789 |
| SKH | SB3745 SKHSF 10018-15 ECO Plus 370x45 Variante 1 -10 Ton | *98-03* | | 3789 |
| SKH | SB3745 SKHSF 10018-15 ECO Plus 370x45 Variante 1 -10 Ton (SN6) | *03-* | | 3789/1 |
| SKH | SB3745 SKHSF 10018-15 ECO Plus 370x45 Variante 1 -10 Ton (SN6) | *03-* | | 3789/2 |
| SKH | SB3745 SKHSF 10018-15 ECO-MAXX 370x45 Variante 1 -10 Ton | *98-03* | | 3789 |
| SKH | SB3745 SKHSF 10018-15 ECO-MAXX 370x45 Variante 1 -10 Ton | *98-03* | | 3789 |
| SKH | SB3745 SKHSF 10018-15 ECO-MAXX 370x45 Variante 1 -10 Ton (SN6) | *03-* | | 3789/1 |
| SKH | SB3745 SKHSF 10018-15 ECO-MAXX 370x45 Variante 1 -10 Ton (SN6) | *03-* | | 3789/2 |
| SKH | SB3745 SKHSF 8010 ECO-MAXX 370x45 Variante 1 -8 Ton | *98-03* | | 3789 |
| SKH | SB3745 SKHSF 8010 ECO-MAXX 370x45 Variante 1 -8 Ton | *98-03* | | 3789 |
| SKH | SB3745 SKHSF 8010 ECO-MAXX 370x45 Variante 1 -8 Ton (SN6) | *03-* | | 3789/1 |
| SKH | SB3745 SKHSF 8010 ECO-MAXX 370x45 Variante 1 -8 Ton (SN6) | *03-* | | 3789/2 |
| SKH | SB3745 SKHSF 9008 ECO 370x45 Variante 1 -9 Ton | *98-03* | | 3789 |
| SKH | SB3745 SKHSF 9008 ECO 370x45 Variante 1 -9 Ton | *98-03* | | 3789 |
| SKH | SB3745 SKHSF 9008 ECO 370x45 Variante 1 -9 Ton (SN6) | *03-* | | 3789/1 |
| SKH | SB3745 SKHSF 9008 ECO 370x45 Variante 1 -9 Ton (SN6) | *03-* | | 3789/2 |
| SKH | SB3745 SKHSF 9008 ECO Plus 370x45 Variante 1 -9 Ton | *98-03* | | 3789 |
| SKH | SB3745 SKHSF 9008 ECO Plus 370x45 Variante 1 -9 Ton | *98-03* | | 3789 |
| SKH | SB3745 SKHSF 9008 ECO Plus 370x45 Variante 1 -9 Ton (SN6) | *03-* | | 3789/1 |
| SKH | SB3745 SKHSF 9008 ECO Plus 370x45 Variante 1 -9 Ton (SN6) | *03-* | | 3789/2 |
| SKH | SB3745 SKHSF 9008 ECO-MAXX 370x45 Variante 1 -9 Ton | *98-03* | | 3789 |
| SKH | SB3745 SKHSF 9008 ECO-MAXX 370x45 Variante 1 -9 Ton | *98-03* | | 3789 |
| SKH | SB3745 SKHSF 9008 ECO-MAXX 370x45 Variante 1 -9 Ton (SN6) | *03-* | | 3789/1 |
| SKH | SB3745 SKHSF 9008 ECO-MAXX 370x45 Variante 1 -9 Ton (SN6) | *03-* | | 3789/2 |
| SKH | SB3745 SKHSF 9008-15 ECO Plus 370x45 Variante 1 -9 Ton | *98-03* | | 3789 |
| SKH | SB3745 SKHSF 9008-15 ECO Plus 370x45 Variante 1 -9 Ton | *98-03* | | 3789 |
| SKH | SB3745 SKHSF 9008-15 ECO Plus 370x45 Variante 1 -9 Ton (SN6) | *03-* | | 3789/1 |
| SKH | SB3745 SKHSF 9008-15 ECO Plus 370x45 Variante 1 -9 Ton (SN6) | *03-* | | 3789/2 |
| SKH | SB3745 SKHSF 9008-15 ECO-MAXX 370x45 Variante 1 -9 Ton | *98-03* | | 3789 |
| SKH | SB3745 SKHSF 9008-15 ECO-MAXX 370x45 Variante 1 -9 Ton | *98-03* | | 3789 |
| SKH | SB3745 SKHSF 9008-15 ECO-MAXX 370x45 Variante 1 -9 Ton (SN6) | *03-* | | 3789/1 |
| SKH | SB3745 SKHSF 9008-15 ECO-MAXX 370x45 Variante 1 -9 Ton (SN6) | *03-* | | 3789/2 |
| SKH | SB3745 SKHSF 9010 ECO Plus 370x45 Variante 1 -9 Ton | *98-03* | | 3789 |
| SKH | SB3745 SKHSF 9010 ECO Plus 370x45 Variante 1 -9 Ton | *98-03* | | 3789 |
| SKH | SB3745 SKHSF 9010 ECO Plus 370x45 Variante 1 -9 Ton (SN6) | *03-* | | 3789/1 |
| SKH | SB3745 SKHSF 9010 ECO Plus 370x45 Variante 1 -9 Ton (SN6) | *03-* | | 3789/2 |
| SKH | SB3745 SKHSF 9010 ECO-MAXX 370x45 Variante 1 -9 Ton | *98-03* | | 3789 |
| SKH | SB3745 SKHSF 9010 ECO-MAXX 370x45 Variante 1 -9 Ton | *98-03* | | 3789 |
| SKH | SB3745 SKHSF 9010 ECO-MAXX 370x45 Variante 1 -9 Ton (SN6) | *03-* | | 3789/1 |
| SKH | SB3745 SKHSF 9010 ECO-MAXX 370x45 Variante 1 -9 Ton (SN6) | *03-* | | 3789/2 |
| SKH | SB3745 SKHSF 9010-15 ECO Plus 370x45 Variante 1 -9 Ton | *98-03* | | 3789 |
| SKH | SB3745 SKHSF 9010-15 ECO Plus 370x45 Variante 1 -9 Ton | *98-03* | | 3789 |
| SKH | SB3745 SKHSF 9010-15 ECO Plus 370x45 Variante 1 -9 Ton (SN6) | *03-* | | 3789/1 |
| SKH | SB3745 SKHSF 9010-15 ECO Plus 370x45 Variante 1 -9 Ton (SN6) | *03-* | | 3789/2 |
| SKH | SB3745 SKHSF 9010-15 ECO-MAXX 370x45 Variante 1 -9 Ton | *98-03* | | 3789 |
| SKH | SB3745 SKHSF 9010-15 ECO-MAXX 370x45 Variante 1 -9 Ton | *98-03* | | 3789 |
| SKH | SB3745 SKHSF 9010-15 ECO-MAXX 370x45 Variante 1 -9 Ton (SN6) | *03-* | | 3789/1 |
| SKH | SB3745 SKHSF 9010-15 ECO-MAXX 370x45 Variante 1 -9 Ton (SN6) | *03-* | | 3789/2 |
| SKH | SB3746 SKHB 9010 370x45 Variante 1 -9 Ton | *98-03* | | 3789 |
| SKH | SB3746 SKHB 9010 370x45 Variante 1 -9 Ton | *98-03* | | 3789 |
| SKH | SB3746 SKHB 9010 370x45 Variante 1 -9 Ton (SN6) | *03-* | | 3789/1 |
| SKH | SB3746 SKHB 9010 370x45 Variante 1 -9 Ton (SN6) | *03-* | | 3789/2 |
| SKH | SB3747 SKHSF 9010-15 ECO Plus 370x45 Variante 1 -9 Ton | *98-03* | | 3789 |
| SKH | SB3747 SKHSF 9010-15 ECO Plus 370x45 Variante 1 -9 Ton | *98-03* | | 3789 |
| SKH | SB3747 SKHSF 9010-15 ECO Plus 370x45 Variante 1 -9 Ton (SN6) | *03-* | | 3789/1 |
| SKH | SB3747 SKHSF 9010-15 ECO Plus 370x45 Variante 1 -9 Ton (SN6) | *03-* | | 3789/2 |
| SKH | SB3748 SKHSFA 9010 ECO-MAXX 370x45 Variante 1 -9 Ton | *98-03* | | 3789 |

| MAKE & MODEL | | YEAR | | |
|---|---|---|---|---|
| **BPW** | | | | |
| SKH | SB3748 SKHSFA 9010 ECO-MAXX 370x45 Variante 1 -9 Ton | *98-03* | | 3789 |
| SKH | SB3748 SKHSFA 9010 ECO-MAXX 370x45 Variante 1 -9 Ton (SN6) | *03-* | | 3789/1 |
| SKH | SB3748 SKHSFA 9010 ECO-MAXX 370x45 Variante 1 -9 Ton (SN6) | *03-* | | 3789/2 |
| SKH | SB3749 SKHSFA 9010-15 ECO-MAXX 370x45 Variante 1 -9 Ton | *98-03* | | 3789 |
| SKH | SB3749 SKHSFA 9010-15 ECO-MAXX 370x45 Variante 1 -9 Ton | *98-03* | | 3789 |
| SKH | SB3749 SKHSFA 9010-15 ECO-MAXX 370x45 Variante 1 -9 Ton (SN6) | *03-* | | 3789/1 |
| SKH | SB3749 SKHSFA 9010-15 ECO-MAXX 370x45 Variante 1 -9 Ton (SN6) | *03-* | | 3789/2 |
| SKH | SB3750 SKHSFHLL 9008 ECO-MAXX 370x45 Variante 1 -9 Ton | *98-03* | | 3789 |
| SKH | SB3750 SKHSFHLL 9008 ECO-MAXX 370x45 Variante 1 -9 Ton | *98-03* | | 3789 |
| SKH | SB3750 SKHSFHLL 9008 ECO-MAXX 370x45 Variante 1 -9 Ton (SN6) | *03-* | | 3789/1 |
| SKH | SB3750 SKHSFHLL 9008 ECO-MAXX 370x45 Variante 1 -9 Ton (SN6) | *03-* | | 3789/2 |
| SKH | SB3751 SKHSFHLL 9010 ECO Plus 370x45 Variante 1 -9 Ton | *98-03* | | 3789 |
| SKH | SB3751 SKHSFHLL 9010 ECO Plus 370x45 Variante 1 -9 Ton | *98-03* | | 3789 |
| SKH | SB3751 SKHSFHLL 9010 ECO Plus 370x45 Variante 1 -9 Ton (SN6) | *03-* | | 3789/1 |
| SKH | SB3751 SKHSFHLL 9010 ECO Plus 370x45 Variante 1 -9 Ton (SN6) | *03-* | | 3789/2 |
| SKH | SB3752 SKHSFHLL 9010 ECO-MAXX 370x45 Variante 1 -9 Ton | *98-03* | | 3789 |
| SKH | SB3752 SKHSFHLL 9010 ECO-MAXX 370x45 Variante 1 -9 Ton | *98-03* | | 3789 |
| SKH | SB3752 SKHSFHLL 9010 ECO-MAXX 370x45 Variante 1 -9 Ton (SN6) | *03-* | | 3789/1 |
| SKH | SB3752 SKHSFHLL 9010 ECO-MAXX 370x45 Variante 1 -9 Ton (SN6) | *03-* | | 3789/2 |
| SKH | SB3753 SKHSM 10010-15 ECO Plus 370x45 Variante 1 -10 Ton | *98-03* | | 3789 |
| SKH | SB3753 SKHSM 10010-15 ECO Plus 370x45 Variante 1 -10 Ton | *98-03* | | 3789 |
| SKH | SB3753 SKHSM 10010-15 ECO Plus 370x45 Variante 1 -10 Ton (SN6) | *03-* | | 3789/1 |
| SKH | SB3753 SKHSM 10010-15 ECO Plus 370x45 Variante 1 -10 Ton (SN6) | *03-* | | 3789/2 |
| SKH | SB3754 SKHSM 10010-15 ECO-MAXX 370x45 Variante 1 -10 Ton | *98-03* | | 3789 |
| SKH | SB3754 SKHSM 10010-15 ECO-MAXX 370x45 Variante 1 -10 Ton | *98-03* | | 3789 |
| SKH | SB3754 SKHSM 10010-15 ECO-MAXX 370x45 Variante 1 -10 Ton (SN6) | *03-* | | 3789/1 |
| SKH | SB3754 SKHSM 10010-15 ECO-MAXX 370x45 Variante 1 -10 Ton (SN6) | *03-* | | 3789/2 |
| SKH | SB3755 SKHSM 9008 ECO-MAXX 370x45 Variante 1 -9 Ton | *98-03* | | 3789 |
| SKH | SB3755 SKHSM 9008 ECO-MAXX 370x45 Variante 1 -9 Ton | *98-03* | | 3789 |
| SKH | SB3755 SKHSM 9008 ECO-MAXX 370x45 Variante 1 -9 Ton (SN6) | *03-* | | 3789/1 |
| SKH | SB3755 SKHSM 9008 ECO-MAXX 370x45 Variante 1 -9 Ton (SN6) | *03-* | | 3789/2 |
| SKH | SB3756 SKHSM 9008-15 ECO Plus 370x45 Variante 1 -9 Ton | *98-03* | | 3789 |
| SKH | SB3756 SKHSM 9008-15 ECO Plus 370x45 Variante 1 -9 Ton | *98-03* | | 3789 |
| SKH | SB3756 SKHSM 9008-15 ECO Plus 370x45 Variante 1 -9 Ton (SN6) | *03-* | | 3789/1 |
| SKH | SB3756 SKHSM 9008-15 ECO Plus 370x45 Variante 1 -9 Ton (SN6) | *03-* | | 3789/2 |
| SKH | SB3757 SKHSM 9008-15 ECO-MAXX 370x45 Variante 1 -9 Ton | *98-03* | | 3789 |
| SKH | SB3757 SKHSM 9008-15 ECO-MAXX 370x45 Variante 1 -9 Ton | *98-03* | | 3789 |
| SKH | SB3757 SKHSM 9008-15 ECO-MAXX 370x45 Variante 1 -9 Ton (SN6) | *03-* | | 3789/1 |
| SKH | SB3757 SKHSM 9008-15 ECO-MAXX 370x45 Variante 1 -9 Ton (SN6) | *03-* | | 3789/2 |
| SKH | SB3758 SKHSM 9010 ECO Plus 370x45 Variante 1 -9 Ton | *98-03* | | 3789 |
| SKH | SB3758 SKHSM 9010 ECO Plus 370x45 Variante 1 -9 Ton | *98-03* | | 3789 |
| SKH | SB3758 SKHSM 9010 ECO Plus 370x45 Variante 1 -9 Ton (SN6) | *03-* | | 3789/1 |
| SKH | SB3758 SKHSM 9010 ECO Plus 370x45 Variante 1 -9 Ton (SN6) | *03-* | | 3789/2 |
| SKH | SB3759 SKHSM 9010 ECO-MAXX 370x45 Variante 1 -9 Ton | *98-03* | | 3789 |
| SKH | SB3759 SKHSM 9010 ECO-MAXX 370x45 Variante 1 -9 Ton | *98-03* | | 3789 |
| SKH | SB3759 SKHSM 9010 ECO-MAXX 370x45 Variante 1 -9 Ton (SN6) | *03-* | | 3789/1 |
| SKH | SB3759 SKHSM 9010 ECO-MAXX 370x45 Variante 1 -9 Ton (SN6) | *03-* | | 3789/2 |
| SKH | SB3760 SKHSM 9010-15 ECO Plus 370x45 Variante 1 -9 Ton | *98-03* | | 3789 |
| SKH | SB3760 SKHSM 9010-15 ECO Plus 370x45 Variante 1 -9 Ton | *98-03* | | 3789 |
| SKH | SB3760 SKHSM 9010-15 ECO Plus 370x45 Variante 1 -9 Ton (SN6) | *03-* | | 3789/1 |
| SKH | SB3760 SKHSM 9010-15 ECO Plus 370x45 Variante 1 -9 Ton (SN6) | *03-* | | 3789/2 |
| SKH | SB3761 SKHSM 9010-15 ECO-MAXX 370x45 Variante 1 -9 Ton | *98-03* | | 3789 |
| SKH | SB3761 SKHSM 9010-15 ECO-MAXX 370x45 Variante 1 -9 Ton | *98-03* | | 3789 |
| SKH | SB3761 SKHSM 9010-15 ECO-MAXX 370x45 Variante 1 -9 Ton (SN6) | *03-* | | 3789/1 |
| SKH | SB3761 SKHSM 9010-15 ECO-MAXX 370x45 Variante 1 -9 Ton (SN6) | *03-* | | 3789/2 |
| SKH | SB3762 SKHSMA 9008-15 ECO-MAXX 370x45 Variante 1 -9 Ton | *98-03* | | 3789 |
| SKH | SB3762 SKHSMA 9008-15 ECO-MAXX 370x45 Variante 1 -9 Ton | *98-03* | | 3789 |
| SKH | SB3762 SKHSMA 9008-15 ECO-MAXX 370x45 Variante 1 -9 Ton (SN6) | *03-* | | 3789/1 |
| SKH | SB3762 SKHSMA 9008-15 ECO-MAXX 370x45 Variante 1 -9 Ton (SN6) | *03-* | | 3789/2 |
| SKH | SB3763 SKHSMA 9010 ECO-MAXX 370x45 Variante 1 -9 Ton | *98-03* | | 3789 |
| SKH | SB3763 SKHSMA 9010 ECO-MAXX 370x45 Variante 1 -9 Ton | *98-03* | | 3789 |
| SKH | SB3763 SKHSMA 9010 ECO-MAXX 370x45 Variante 1 -9 Ton (SN6) | *03-* | | 3789/1 |
| SKH | SB3763 SKHSMA 9010 ECO-MAXX 370x45 Variante 1 -9 Ton (SN6) | *03-* | | 3789/2 |
| SKH | SB3764 SKHSMA 9010-15 ECO-MAXX 370x45 Variante 1 -9 Ton | *98-03* | | 3789 |
| SKH | SB3764 SKHSMA 9010-15 ECO-MAXX 370x45 Variante 1 -9 Ton | *98-03* | | 3789 |
| SKH | SB3764 SKHSMA 9010-15 ECO-MAXX 370x45 Variante 1 -9 Ton (SN6) | *03-* | | 3789/1 |
| SKH | SB3764 SKHSMA 9010-15 ECO-MAXX 370x45 Variante 1 -9 Ton (SN6) | *03-* | | 3789/2 |
| SKH | SB3765 SKHSMAHLL 9010 ECO-MAXX 370x45 Variante 1 -9 Ton | *98-03* | | 3789 |
| SKH | SB3765 SKHSMAHLL 9010 ECO-MAXX 370x45 Variante 1 -9 Ton | *98-03* | | 3789 |
| SKH | SB3765 SKHSMAHLL 9010 ECO-MAXX 370x45 Variante 1 -9 Ton (SN6) | *03-* | | 3789/1 |
| SKH | SB3765 SKHSMAHLL 9010 ECO-MAXX 370x45 Variante 1 -9 Ton (SN6) | *03-* | | 3789/2 |
| SKH | SB3766 SKHSMHLL 9010 ECO Plus 370x45 Variante 1 -9 Ton | *98-03* | | 3789 |
| SKH | SB3766 SKHSMHLL 9010 ECO Plus 370x45 Variante 1 -9 Ton | *98-03* | | 3789 |
| SKH | SB3766 SKHSMHLL 9010 ECO Plus 370x45 Variante 1 -9 Ton (SN6) | *03-* | | 3789/1 |
| SKH | SB3766 SKHSMHLL 9010 ECO Plus 370x45 Variante 1 -9 Ton (SN6) | *03-* | | 3789/2 |
| SKH | SB3767 SKHSMHLL 9010 ECO-MAXX 370x45 Variante 1 -9 Ton | *98-03* | | 3789 |

| MAKE & MODEL | | YEAR | 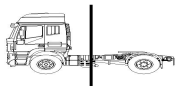 | |
|---|---|---|---|---|
| **BPW** | | | | |
| SKH | SB3767 SKHSMHLL 9010 ECO-MAXX 370x45 Variante 1 -9 Ton | *98-03* | | 3789 |
| SKH | SB3767 SKHSMHLL 9010 ECO-MAXX 370x45 Variante 1 -9 Ton (SN6) | *03-* | | 3789/1 |
| SKH | SB3767 SKHSMHLL 9010 ECO-MAXX 370x45 Variante 1 -9 Ton (SN6) | *03-* | | 3789/2 |
| SKH | SB3768 SKHZF 10018-15 ECO Plus 370x45 Variante 1 -10 Ton | *98-03* | | 3789 |
| SKH | SB3768 SKHZF 10018-15 ECO Plus 370x45 Variante 1 -10 Ton | *98-03* | | 3789 |
| SKH | SB3768 SKHZF 10018-15 ECO Plus 370x45 Variante 1 -10 Ton (SN6) | *03-* | | 3789/1 |
| SKH | SB3768 SKHZF 10018-15 ECO Plus 370x45 Variante 1 -10 Ton (SN6) | *03-* | | 3789/2 |
| SKH | SB3769 SKHZF 10018-15 ECO-MAXX 370x45 Variante 1 -10 Ton | *98-03* | | 3789 |
| SKH | SB3769 SKHZF 10018-15 ECO-MAXX 370x45 Variante 1 -10 Ton | *98-03* | | 3789 |
| SKH | SB3769 SKHZF 10018-15 ECO-MAXX 370x45 Variante 1 -10 Ton (SN6) | *03-* | | 3789/1 |
| SKH | SB3769 SKHZF 10018-15 ECO-MAXX 370x45 Variante 1 -10 Ton (SN6) | *03-* | | 3789/2 |
| SKH | SB3770 SKHZF 10010-15 ECO Plus 370x45 Variante 1 -10 Ton | *98-03* | | 3789 |
| SKH | SB3770 SKHZF 10010-15 ECO Plus 370x45 Variante 1 -10 Ton | *98-03* | | 3789 |
| SKH | SB3770 SKHZF 10010-15 ECO Plus 370x45 Variante 1 -10 Ton (SN6) | *03-* | | 3789/1 |
| SKH | SB3770 SKHZF 10010-15 ECO Plus 370x45 Variante 1 -10 Ton (SN6) | *03-* | | 3789/2 |
| SKH | SB3771 SKHZF 10010-15 ECO-MAXX 370x45 Variante 1 -10 Ton | *98-03* | | 3789 |
| SKH | SB3771 SKHZF 10010-15 ECO-MAXX 370x45 Variante 1 -10 Ton | *98-03* | | 3789 |
| SKH | SB3771 SKHZF 10010-15 ECO-MAXX 370x45 Variante 1 -10 Ton (SN6) | *03-* | | 3789/1 |
| SKH | SB3771 SKHZF 10010-15 ECO-MAXX 370x45 Variante 1 -10 Ton (SN6) | *03-* | | 3789/2 |
| SKH | SB3772 SKHZF 9008 ECO Plus 370x45 Variante 1 -9 Ton | *98-03* | | 3789 |
| SKH | SB3772 SKHZF 9008 ECO Plus 370x45 Variante 1 -9 Ton | *98-03* | | 3789 |
| SKH | SB3772 SKHZF 9008 ECO Plus 370x45 Variante 1 -9 Ton (SN6) | *03-* | | 3789/1 |
| SKH | SB3772 SKHZF 9008 ECO Plus 370x45 Variante 1 -9 Ton (SN6) | *03-* | | 3789/2 |
| SKH | SB3773 SKHZF 9008 ECO-MAXX 370x45 Variante 1 -9 Ton | *98-03* | | 3789 |
| SKH | SB3773 SKHZF 9008 ECO-MAXX 370x45 Variante 1 -9 Ton | *98-03* | | 3789 |
| SKH | SB3773 SKHZF 9008 ECO-MAXX 370x45 Variante 1 -9 Ton (SN6) | *03-* | | 3789/1 |
| SKH | SB3773 SKHZF 9008 ECO-MAXX 370x45 Variante 1 -9 Ton (SN6) | *03-* | | 3789/2 |
| SKH | SB3774 SKHZF 9008-15 ECO Plus 370x45 Variante 1 -9 Ton | *98-03* | | 3789 |
| SKH | SB3774 SKHZF 9008-15 ECO Plus 370x45 Variante 1 -9 Ton | *98-03* | | 3789 |
| SKH | SB3774 SKHZF 9008-15 ECO Plus 370x45 Variante 1 -9 Ton (SN6) | *03-* | | 3789/1 |
| SKH | SB3774 SKHZF 9008-15 ECO Plus 370x45 Variante 1 -9 Ton (SN6) | *03-* | | 3789/2 |
| SKH | SB3775 SKHZF 9008-15 ECO-MAXX 370x45 Variante 1 -9 Ton | *98-03* | | 3789 |
| SKH | SB3775 SKHZF 9008-15 ECO-MAXX 370x45 Variante 1 -9 Ton | *98-03* | | 3789 |
| SKH | SB3775 SKHZF 9008-15 ECO-MAXX 370x45 Variante 1 -9 Ton (SN6) | *03-* | | 3789/1 |
| SKH | SB3775 SKHZF 9008-15 ECO-MAXX 370x45 Variante 1 -9 Ton (SN6) | *03-* | | 3789/2 |
| SKH | SB3776 SKHZF 9010 ECO Plus 370x45 Variante 1 -9 Ton | *98-03* | | 3789 |
| SKH | SB3776 SKHZF 9010 ECO Plus 370x45 Variante 1 -9 Ton | *98-03* | | 3789 |
| SKH | SB3776 SKHZF 9010 ECO Plus 370x45 Variante 1 -9 Ton (SN6) | *03-* | | 3789/1 |
| SKH | SB3776 SKHZF 9010 ECO Plus 370x45 Variante 1 -9 Ton (SN6) | *03-* | | 3789/2 |
| SKH | SB3777 SKHZF 9010 ECO-MAXX 370x45 Variante 1 -9 Ton | *98-03* | | 3789 |
| SKH | SB3777 SKHZF 9010 ECO-MAXX 370x45 Variante 1 -9 Ton | *98-03* | | 3789 |
| SKH | SB3777 SKHZF 9010 ECO-MAXX 370x45 Variante 1 -9 Ton (SN6) | *03-* | | 3789/1 |
| SKH | SB3777 SKHZF 9010 ECO-MAXX 370x45 Variante 1 -9 Ton (SN6) | *03-* | | 3789/2 |
| SKH | SB3778 SKHZF 9010-15 ECO Plus 370x45 Variante 1 -9 Ton | *98-03* | | 3789 |
| SKH | SB3778 SKHZF 9010-15 ECO Plus 370x45 Variante 1 -9 Ton | *98-03* | | 3789 |
| SKH | SB3778 SKHZF 9010-15 ECO Plus 370x45 Variante 1 -9 Ton (SN6) | *03-* | | 3789/1 |
| SKH | SB3778 SKHZF 9010-15 ECO Plus 370x45 Variante 1 -9 Ton (SN6) | *03-* | | 3789/2 |
| SKH | SB3779 SKHZF 9010-15 ECO-MAXX 370x45 Variante 1 -9 Ton | *98-03* | | 3789 |
| SKH | SB3779 SKHZF 9010-15 ECO-MAXX 370x45 Variante 1 -9 Ton | *98-03* | | 3789 |
| SKH | SB3779 SKHZF 9010-15 ECO-MAXX 370x45 Variante 1 -9 Ton (SN6) | *03-* | | 3789/1 |
| SKH | SB3779 SKHZF 9010-15 ECO-MAXX 370x45 Variante 1 -9 Ton (SN6) | *03-* | | 3789/2 |
| SKH | SB3780 SKHZM 10008-15 ECO-MAXX 370x45 Variante 1 -10 Ton | *98-03* | | 3789 |
| SKH | SB3780 SKHZM 10008-15 ECO-MAXX 370x45 Variante 1 -10 Ton | *98-03* | | 3789 |
| SKH | SB3780 SKHZM 10008-15 ECO-MAXX 370x45 Variante 1 -10 Ton (SN6) | *03-* | | 3789/1 |
| SKH | SB3780 SKHZM 10008-15 ECO-MAXX 370x45 Variante 1 -10 Ton (SN6) | *03-* | | 3789/2 |
| SKH | SB3781 SKHZM 10010-15 ECO-MAXX 370x45 Variante 1 -10 Ton | *98-03* | | 3789 |
| SKH | SB3781 SKHZM 10010-15 ECO-MAXX 370x45 Variante 1 -10 Ton | *98-03* | | 3789 |
| SKH | SB3781 SKHZM 10010-15 ECO-MAXX 370x45 Variante 1 -10 Ton (SN6) | *03-* | | 3789/1 |
| SKH | SB3781 SKHZM 10010-15 ECO-MAXX 370x45 Variante 1 -10 Ton (SN6) | *03-* | | 3789/2 |
| SKH | SB3782 SKHZM 9010 ECO-MAXX 370x45 Variante 1 -9 Ton | *98-03* | | 3789 |
| SKH | SB3782 SKHZM 9010 ECO-MAXX 370x45 Variante 1 -9 Ton | *98-03* | | 3789 |
| SKH | SB3782 SKHZM 9010 ECO-MAXX 370x45 Variante 1 -9 Ton (SN6) | *03-* | | 3789/1 |
| SKH | SB3782 SKHZM 9010 ECO-MAXX 370x45 Variante 1 -9 Ton (SN6) | *03-* | | 3789/2 |
| SKH | SB3783 SKHZM 9010-15 ECO-MAXX 370x45 Variante 1 -9 Ton | *98-03* | | 3789 |
| SKH | SB3783 SKHZM 9010-15 ECO-MAXX 370x45 Variante 1 -9 Ton | *98-03* | | 3789 |
| SKH | SB3783 SKHZM 9010-15 ECO-MAXX 370x45 Variante 1 -9 Ton (SN6) | *03-* | | 3789/1 |
| SKH | SB3783 SKHZM 9010-15 ECO-MAXX 370x45 Variante 1 -9 Ton (SN6) | *03-* | | 3789/2 |
| SKH | SB3784 SKHZMA 9008-15 ECO-MAXX 370x45 Variante 1 -9 Ton | *98-03* | | 3789 |
| SKH | SB3784 SKHZMA 9008-15 ECO-MAXX 370x45 Variante 1 -9 Ton | *98-03* | | 3789 |
| SKH | SB3784 SKHZMA 9008-15 ECO-MAXX 370x45 Variante 1 -9 Ton (SN6) | *03-* | | 3789/1 |
| SKH | SB3784 SKHZMA 9008-15 ECO-MAXX 370x45 Variante 1 -9 Ton (SN6) | *03-* | | 3789/2 |
| SKH | SB3785 SKHZMA 9010-15 ECO-MAXX 370x45 Variante 1 -9 Ton | *98-03* | | 3789 |
| SKH | SB3785 SKHZMA 9010-15 ECO-MAXX 370x45 Variante 1 -9 Ton | *98-03* | | 3789 |
| SKH | SB3785 SKHZMA 9010-15 ECO-MAXX 370x45 Variante 1 -9 Ton (SN6) | *03-* | | 3789/1 |
| SKH | SB3785 SKHZMA 9010-15 ECO-MAXX 370x45 Variante 1 -9 Ton (SN6) | *03-* | | 3789/2 |

| MAKE & MODEL | | YEAR | 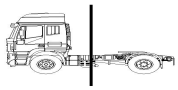 | |
|---|---|---|---|---|
| **BPW** | | | | |
| SKH | SHZF 9010 ECO Plus 370x45 Variante 1 -9 Ton | *97-03* | | 3789 |
| SKH | SHZF 9010 ECO Plus 370x45 Variante 1 -9 Ton | *97-03* | | 3789 |
| SKH | SHZF 9010 ECO Plus 370x45 Variante 1 -9 Ton (SN6) | *03-* | | 3789/1 |
| SKH | SHZF 9010 ECO Plus 370x45 Variante 1 -9 Ton (SN6) | *03-* | | 3789/2 |
| SKH | SKHSF 8008 ECO Plus 370x45 Variante 1 -8 Ton | *00-03* | | 3789 |
| SKH | SKHSF 8008 ECO Plus 370x45 Variante 1 -8 Ton | *00-03* | | 3789 |
| SKH | SKHSF 8008 ECO Plus 370x45 Variante 1 -8 Ton (SN6) | *03-* | | 3789/1 |
| SKH | SKHSF 8008 ECO Plus 370x45 Variante 1 -8 Ton (SN6) | *03-* | | 3789/2 |
| SKH | SKHSF 8010 ECO Plus 370x45 Variante 1 -8 Ton | *00-03* | | 3789 |
| SKH | SKHSF 8010 ECO Plus 370x45 Variante 1 -8 Ton | *00-03* | | 3789 |
| SKH | SKHSF 8010 ECO Plus 370x45 Variante 1 -8 Ton (SN6) | *03-* | | 3789/1 |
| SKH | SKHSF 8010 ECO Plus 370x45 Variante 1 -8 Ton (SN6) | *03-* | | 3789/2 |
| SKH | SKHSFHLL 9008 ECO Plus 370x45 Variante 1 -9 Ton | *00-03* | | 3789 |
| SKH | SKHSFHLL 9008 ECO Plus 370x45 Variante 1 -9 Ton | *00-03* | | 3789 |
| SKH | SKHSFHLL 9008 ECO Plus 370x45 Variante 1 -9 Ton (SN6) | *03-* | | 3789/1 |
| SKH | SKHSFHLL 9008 ECO Plus 370x45 Variante 1 -9 Ton (SN6) | *03-* | | 3789/2 |
| SKH | SKHSM 9008 ECO Plus 370x45 Variante 1 -9 Ton | *00-03* | | 3789 |
| SKH | SKHSM 9008 ECO Plus 370x45 Variante 1 -9 Ton | *00-03* | | 3789 |
| SKH | SKHSM 9008 ECO Plus 370x45 Variante 1 -9 Ton (SN6) | *03-* | | 3789/1 |
| SKH | SKHSM 9008 ECO Plus 370x45 Variante 1 -9 Ton (SN6) | *03-* | | 3789/2 |
| SKH | SKHZM 9008 ECO Plus 370x45 Variante 1 -9 Ton | *00-03* | | 3789 |
| SKH | SKHZM 9008 ECO Plus 370x45 Variante 1 -9 Ton | *00-03* | | 3789 |
| SKH | SKHZM 9008 ECO Plus 370x45 Variante 1 -9 Ton (SN6) | *03-* | | 3789/1 |
| SKH | SKHZM 9008 ECO Plus 370x45 Variante 1 -9 Ton (SN6) | *03-* | | 3789/2 |
| SKH SKHBF | 9010 ECO Plus | *01/98-* | | 3789/1 |
| SKH SKHBF | 9010 ECO Plus | *01/98-* | | 3789/2 |
| SKH SKHSF | 10008-15 ECO -MAXX | *01/98-* | | 3789/1 |
| SKH SKHSF | 10008-15 ECO -MAXX | *01/98-* | | 3789/2 |
| TSB 3709 | D 115-2 | 11- | 4052 | 4052 |
| TSB 4309 | D-115 | 11- | 4053 | 4053 |
| **DAF** | | | | |
| 105 | FA XF 105.410 | *10/05-* | 3664/1 | |
| CF 65 | FA 65.180 | *01/01-* | 3664/1 | |
| CF 65 | 5.9 FA 65.180 4x2 19 Ton | *01-* | 3664 | 3664 |
| CF 65 | 5.9 FA 65.220 4x2 19 Ton | *01-* | 3664 | 3664 |
| CF 65 | 5.9 FA 65.250 4x2 19 Ton | *01-* | 3664 | 3664 |
| CF 65 | FA 65.180 | 01.01 - | 4091 | |
| CF 65 | FA 65.220 | 01.01 - | 4091 | |
| CF 65 | FA 65.220 | 05.06 - | 4091 | |
| CF 65 | FA 65.250 | 01.01 - | 4091 | |
| CF 65 | FA 65.250 | 05.06 - | 4091 | |
| CF 65 | FA 65.290 | 05.06 - | 4091 | |
| CF 75 | 9.2 FA 75.250 4x2 19 Ton | *01-* | 3664 | 3664 |
| CF 75 | 9.2 FA 75.310 4x2 19 Ton | *01-* | 3664 | 3664 |
| CF 75 | 9.2 FA 75.310 4x2 20.5 Ton | *01-* | 3664 | 3664 |
| CF 75 | 9.2 FA 75.360 4x2 19 Ton | *01-* | 3664 | 3664 |
| CF 75 | 9.2 FAG 75.250 6x2/4 26.5 Ton | *01-* | 3664 | 3664 |
| CF 75 | 9.2 FAG 75.310 6x2/4 27 Ton | *01-* | 3664 | 3664 |
| CF 75 | 9.2 FAG 75.360 6x2/4 27 Ton | *01-* | 3664 | 3664 |
| CF 75 | 9.2 FAN 75.250 6x2/4 26.5 Ton | *01-* | 3664 | 3664 |
| CF 75 | 9.2 FAN 75.310 6x2/4 27 Ton | *01-* | 3664 | 3664 |
| CF 75 | 9.2 FAN 75.360 6x2/4 27 Ton | *01-* | 3664 | 3664 |
| CF 75 | 9.2 FAR 75.250 6x2 26.5 Ton | *01-* | 3664 | 3664 |
| CF 75 | 9.2 FAR 75.310 6x2 26.5 Ton | *01-* | 3664 | 3664 |
| CF 75 | 9.2 FAR 75.360 6x2 26.5 Ton | *01-* | 3664 | 3664 |
| CF 75 | 9.2 FAS 75.250 6x2 26.5 Ton | *01-* | 3664 | 3664 |
| CF 75 | 9.2 FAS 75.310 6x2 26.5 Ton | *01-* | 3664 | 3664 |
| CF 75 | 9.2 FAS 75.360 6x2 26.5 Ton | *01-* | 3664 | 3664 |
| CF 75 | 9.2 FAT 75.250 4x2 20.5 Ton | *01-* | 3664 | 3664 |
| CF 75 | 9.2 FAT 75.250 6x4 27 Ton | *01-* | 3664 | 3664 |
| CF 75 | 9.2 FAT 75.310 6x4 27 Ton | *01-* | 3664 | 3664 |
| CF 75 | 9.2 FAT 75.360 4x2 20.5 Ton | *01-* | 3664 | 3664 |
| CF 75 | 9.2 FAT 75.360 6x4 27 Ton | *01-* | 3664 | 3664 |
| CF 75 | FA 75.250 | *01/01-* | 3664/1 | |
| CF 75 | FA 75.250 | 01.01 - | 4091 | |
| CF 75 | FA 75.310 | 01.01 - | 4091 | |
| CF 75 | FA 75.360 | 01.01 - | 4091 | |
| CF 75 | FAD 75.250 | 01.01 - | 4091 | |
| CF 75 | FAD 75.310 | 01.01 - | 4091 | |
| CF 75 | FAD 75.360 | 01.01 - | 4091 | |
| CF 75 | FAG 75.250, FAN 75.250 | 01.01 - | 4091 | |
| CF 75 | FAG 75.310, FAN 75.310 | 01.01 - | 4091 | |
| CF 75 | FAG 75.360, FAN 75.360 | 01.01 - | 4091 | |
| CF 75 | FAR 75.250, FAS 75.250 | 01.01 - | 4091 | |
| CF 75 | FAR 75.310, FAS 75.310 | 01.01 - | 4091 | |
| CF 75 | FAR 75.360, FAS 75.360 | 01.01 - | 4091 | |

| MAKE & MODEL | | YEAR | | |
|---|---|---|---|---|
| **DAF** | | | | |
| CF 75 | FAT 75.250 | 01.01 - | 4091 | |
| CF 75 | FAT 75.310 | 01.01 - | 4091 | |
| CF 75 | FAT 75.360 | 01.01 - | 4091 | |
| CF 75 | FT 75.250 | 01.01 - | 4091 | |
| CF 75 | FT 75.310 | 01.01 - | 4091 | |
| CF 75 | FT 75.360 | 01.01 - | 4091 | |
| CF 85 | 12.6 AN 85.380 6x2/4 25.7 Ton | *01-* | 3664 | 3664 |
| CF 85 | 12.6 FA 85.340 4x2 18 Ton | *01-* | 3664 | 3664 |
| CF 85 | 12.6 FA 85.380 4x2 18 Ton | *01-* | 3664 | 3664 |
| CF 85 | 12.6 FA 85.430 4x2 18 Ton | *01-* | 3664 | 3664 |
| CF 85 | 12.6 FA 85.480 4x2 18 Ton | *01-* | 3664 | 3664 |
| CF 85 | 12.6 FAG 85.340 6x2/4 25.7 Ton | *01-* | 3664 | 3664 |
| CF 85 | 12.6 FAG 85.380 6x2/4 25.7 Ton | *01-* | 3664 | 3664 |
| CF 85 | 12.6 FAG 85.430 6x2/4 25.7 Ton | *01-* | 3664 | 3664 |
| CF 85 | 12.6 FAG 85.480 6x2/4 25.7 Ton | *01-* | 3664 | 3664 |
| CF 85 | 12.6 FAN 85.340 6x2/4 25.7 Ton | *01-* | 3664 | 3664 |
| CF 85 | 12.6 FAN 85.430 6x2/4 25.7 Ton | *01-* | 3664 | 3664 |
| CF 85 | 12.6 FAN 85.480 6x2/4 25.7 Ton | *01-* | 3664 | 3664 |
| CF 85 | 12.6 FAR 85.340 6x2 26 Ton | *01-* | 3664 | 3664 |
| CF 85 | 12.6 FAR 85.380 6x2 26 Ton | *01-* | 3664 | 3664 |
| CF 85 | 12.6 FAR 85.430 6x2 26 Ton | *01-* | 3664 | 3664 |
| CF 85 | 12.6 FAR 85.480 6x2 26 Ton | *01-* | 3664 | 3664 |
| CF 85 | 12.6 FAS 85.340 6x2 26 Ton | *01-* | 3664 | 3664 |
| CF 85 | 12.6 FAS 85.380 6x2 26 Ton | *01-* | 3664 | 3664 |
| CF 85 | 12.6 FAS 85.430 6x2 26 Ton | *01-* | 3664 | 3664 |
| CF 85 | 12.6 FAS 85.480 6x2 26 Ton | *01-* | 3664 | 3664 |
| CF 85 | 12.6 FAT 85.340 4x2 18 Ton | *01-* | 3664 | 3664 |
| CF 85 | 12.6 FAT 85.340 6x4 26 Ton | *01-* | 3664 | 3664 |
| CF 85 | 12.6 FAT 85.340 8x4/4 32 Ton | *01-* | 3664 | 3664 |
| CF 85 | 12.6 FAT 85.380 4x2 18 Ton | *01-* | 3664 | 3664 |
| CF 85 | 12.6 FAT 85.380 6x4 26 Ton | *01-* | 3664 | 3664 |
| CF 85 | 12.6 FAT 85.380 8x4/4 32 Ton | *01-* | 3664 | 3664 |
| CF 85 | 12.6 FAT 85.430 4x2 18 Ton | *01-* | 3664 | 3664 |
| CF 85 | 12.6 FAT 85.430 6x4 26 Ton | *01-* | 3664 | 3664 |
| CF 85 | 12.6 FAT 85.430 8x4/4 32 Ton | *01-* | 3664 | 3664 |
| CF 85 | 12.6 FAT 85.480 4x2 18 Ton | *01-* | 3664 | 3664 |
| CF 85 | 12.6 FAT 85.480 6x4 26 Ton | *01-* | 3664 | 3664 |
| CF 85 | 12.6 FAT 85.480 8x4/4 32 Ton | *01-* | 3664 | 3664 |
| CF 85 | 12.6 FTG 85.340 6x2/4 26 Ton | *01-* | 3664 | 3664 |
| CF 85 | 12.6 FTG 85.380 6x2/4 26 Ton | *01-* | 3664 | 3664 |
| CF 85 | 12.6 FTG 85.480 6x2/4 26 Ton | *01-* | 3664 | 3664 |
| CF 85 | 12.6 FTT 85.340 6x4 26 Ton | *01-* | 3664 | 3664 |
| CF 85 | 12.6 FTT 85.380 6x4 26 Ton | *01-* | 3664 | 3664 |
| CF 85 | 12.6 FTT 85.430 6x4 26 Ton | *01-* | 3664 | 3664 |
| CF 85 | 12.6 FTT 85.480 6x4 26 Ton | *01-* | 3664 | 3664 |
| CF 85 | FA 85.340 | 01.01 - | 4091 | |
| CF 85 | FA 85.360 | 10.06 - | 4091 | |
| CF 85 | FA 85.380 | 01.01 - | 4091 | |
| CF 85 | FA 85.410 | 10.06 - | 4091 | |
| CF 85 | FA 85.430 | 01.01 - | 4091 | |
| CF 85 | FA 85.460 | 10.06 - | 4091 | |
| CF 85 | FA 85.480 | 01.01 - | 4091 | |
| CF 85 | FA 85.510 | 10.06 - | 4091 | |
| CF 85 | FAC 85.340 | 12.05 - | 4091 | |
| CF 85 | FAC 85.360, FAX 85.360 | 10.06 - | 4091 | |
| CF 85 | FAC 85.380 | 12.05 - | 4091 | |
| CF 85 | FAC 85.410, FAX 85.410 | 10.05 - | 4091 | |
| CF 85 | FAC 85.430 | 12.05 - | 4091 | |
| CF 85 | FAC 85.460, FAX 85.460 | 10.05 - | 4091 | |
| CF 85 | FAC 85.480 | 12.05 - | 4091 | |
| CF 85 | FAC 85.510, FAX 85.510 | 10.05 - | 4091 | |
| CF 85 | FAD 85.340 | 01.01 - | 4091 | |
| CF 85 | FAD 85.360 | 10.06 - | 4091 | |
| CF 85 | FAD 85.360 | 10.06 - | 4091 | |
| CF 85 | FAD 85.380 | 01.01 - | 4091 | |
| CF 85 | FAD 85.410 | 10.05 - | 4091 | |
| CF 85 | FAD 85.410 | 10.06 - | 4091 | |
| CF 85 | FAD 85.430 | 01.01 - | 4091 | |
| CF 85 | FAD 85.460 | 10.05 - | 4091 | |
| CF 85 | FAD 85.460 | 10.05 - | 4091 | |
| CF 85 | FAD 85.480 | 01.01 - | 4091 | |
| CF 85 | FAD 85.510 | 10.05 - | 4091 | |
| CF 85 | FAD 85.510 | 10.05 - | 4091 | |
| CF 85 | FAG 85.340, FAN 85.340 | 01.01 - | 4091 | |
| CF 85 | FAG 85.360, FAN 85.360 | 10.06 - | 4091 | |
| CF 85 | FAG 85.380, FAN 85.380 | 01.01 - | 4091 | |

| MAKE & MODEL | | YEAR | 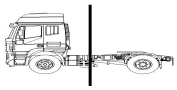 | |
|---|---|---|---|---|
| **DAF** | | | | |
| CF 85 | FAG 85.410, FAN 85.410 | 10.05 - | 4091 | |
| CF 85 | FAG 85.430, FAN 85.430 | 01.01 - | 4091 | |
| CF 85 | FAG 85.460, FAN 85.460 | 10.05 - | 4091 | |
| CF 85 | FAG 85.480, FAN 85.480 | 01.01 - | 4091 | |
| CF 85 | FAG 85.510, FAN 85.510 | 10.05 - | 4091 | |
| CF 85 | FAR 85.340, FAS 85.340 | 01.01 - | 4091 | |
| CF 85 | FAR 85.360, FAS 85.360 | 10.06 - | 4091 | |
| CF 85 | FAR 85.380, FAS 85.380 | 01.01 - | 4091 | |
| CF 85 | FAR 85.410, FAS 85.410 | 10.05 - | 4091 | |
| CF 85 | FAR 85.430, FAS 85.430 | 01.01 - | 4091 | |
| CF 85 | FAR 85.460, FAS 85.460 | 10.05 - | 4091 | |
| CF 85 | FAR 85.480, FAS 85.480 | 01.01 - | 4091 | |
| CF 85 | FAR 85.510, FAS 85.510 | 10.05 - | 4091 | |
| CF 85 | FAT 85.340 | 01.01 - | 4091 | |
| CF 85 | FAT 85.360 | 10.06 - | 4091 | |
| CF 85 | FAT 85.360 | - | 4091 | |
| CF 85 | FAT 85.380 | 01.01 - | 4091 | |
| CF 85 | FAT 85.410 | 10.05 - | 4091 | |
| CF 85 | FAT 85.410 | 10.05 - | 4091 | |
| CF 85 | FAT 85.430 | 01.01 - | 4091 | |
| CF 85 | FAT 85.460 | 10.05 - | 4091 | |
| CF 85 | FAT 85.460 | 10.05 - | 4091 | |
| CF 85 | FAT 85.480 | 01.01 - | 4091 | |
| CF 85 | FAT 85.510 | 10.05 - | 4091 | |
| CF 85 | FAT 85.510 | 10.05 - | 4091 | |
| CF 85 | FAX 85.340 | - | 4091 | |
| CF 85 | FAX 85.360 | 10.05 - | 4091 | |
| CF 85 | FAX 85.380 | 01.01 - | 4091 | |
| CF 85 | FAX 85.430 | 01.01 - | 4091 | |
| CF 85 | FAX 85.480 | 01.01 - | 4091 | |
| CF 85 | FT 85.340 | 01.01 - | 4091 | |
| CF 85 | FT 85.360 | 10.06 - | 4091 | |
| CF 85 | FT 85.380 | 01.01 - | 4091 | |
| CF 85 | FT 85.410 | 10.05 - | 4091 | |
| CF 85 | FT 85.430 | 01.01 - | 4091 | |
| CF 85 | FT 85.460 | 10.05 - | 4091 | |
| CF 85 | FT 85.480 | 01.01 - | 4091 | |
| CF 85 | FT 85.510 | 10.05 - | 4091 | |
| CF 85 | FTG 85.340 | 01.01 - | 4091 | |
| CF 85 | FTG 85.360 | 10.06 - | 4091 | |
| CF 85 | FTG 85.380 | 01.01 - | 4091 | |
| CF 85 | FTG 85.410 | 10.05 - | 4091 | |
| CF 85 | FTG 85.430 | 01.01 - | 4091 | |
| CF 85 | FTG 85.460 | 10.05 - | 4091 | |
| CF 85 | FTG 85.480 | 01.01 - | 4091 | |
| CF 85 | FTG 85.510 | 10.05 - | 4091 | |
| CF 85 | FTP 85.340 | - | 4091 | |
| CF 85 | FTP 85.380 | 01.01 - | 4091 | |
| CF 85 | FTP 85.430 | 01.01 - | 4091 | |
| CF 85 | FTP 85.480 | 01.01 - | 4091 | |
| CF 85 | FTR 85.360; FTS 85.360, FTP 85.360 | 10.06 - | 4091 | |
| CF 85 | FTR 85.410, FTS 85.410, FTP 85.410 | 10.05 - | 4091 | |
| CF 85 | FTR 85.460, FTS 85.460, FTP 85.460 | 10.05 - | 4091 | |
| CF 85 | FTR 85.510, FTS 85.510, FTP 85.510 | 10.05 - | 4091 | |
| CF 85 | FTS 85.340 | 01.01 - | 4091 | |
| CF 85 | FTS 85.380 | 01.01 - | 4091 | |
| CF 85 | FTS 85.430 | 01.01 - | 4091 | |
| CF 85 | FTS 85.480 | 01.01 - | 4091 | |
| CF 85 | FTT 85.340 | 01.01 - | 4091 | |
| CF 85 | FTT 85.360 | 10.06 - | 4091 | |
| CF 85 | FTT 85.380 | 01.01 - | 4091 | |
| CF 85 | FTT 85.410 | 10.05 - | 4091 | |
| CF 85 | FTT 85.430 | 01.01 - | 4091 | |
| CF 85 | FTT 85.430 | - | 4091 | |
| CF 85 | FTT 85.460 | 10.05 - | 4091 | |
| CF 85 | FTT 85.480 | 01.01 - | 4091 | |
| CF 85 | FTT 85.510 | 10.05 - | 4091 | |
| DEN OUDSTEN | All models | *91-* | 3497 | |
| DEN OUDSTEN | All models | *91-* | 3497/1 | |
| LF 45 | 3.9 FA 45.150 4x2 10 Ton | *01-* | 3565 | 3565 |
| LF 45 | 3.9 FA 45.150 4x2 10 Ton | *01-* | 3565/A | 3565/A |
| LF 45 | 3.9 FA 45.150 4x2 10 Ton | *01-* | 3565/2 | 3565/2 |
| LF 45 | 3.9 FA 45.150 4x2 10 Ton | *01-* | 3565/4 | 3565/4 |
| LF 45 | 3.9 FA 45.150 4x2 12 Ton | *01-* | 3565 | 3565 |
| LF 45 | 3.9 FA 45.150 4x2 12 Ton | *01-* | 3565/A | 3565/A |
| LF 45 | 3.9 FA 45.150 4x2 12 Ton | *01-* | 3565/2 | 3565/2 |

| MAKE & MODEL | | YEAR | 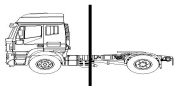 | |
|---|---|---|---|---|
| **DAF** | | | | |
| LF 45 | 3.9 FA 45.150 4x2 12 Ton | 01- | 3565/4 | 3565/4 |
| LF 45 | 3.9 FA 45.150 4x2 7.5 Ton | 01- | 3565 | 3565 |
| LF 45 | 3.9 FA 45.150 4x2 7.5 Ton | 01- | 3565/A | 3565/A |
| LF 45 | 3.9 FA 45.150 4x2 7.5 Ton | 01- | 3565/2 | 3565/2 |
| LF 45 | 3.9 FA 45.150 4x2 7.5 Ton | 01- | 3565/4 | 3565/4 |
| LF 45 | 3.9 FA 45.170 4x2 10 Ton | 01- | 3565 | 3565 |
| LF 45 | 3.9 FA 45.170 4x2 10 Ton | 01- | 3565/A | 3565/A |
| LF 45 | 3.9 FA 45.170 4x2 10 Ton | 01- | 3565/2 | 3565/2 |
| LF 45 | 3.9 FA 45.170 4x2 10 Ton | 01- | 3565/4 | 3565/4 |
| LF 45 | 3.9 FA 45.170 4x2 12 Ton | 01- | 3565 | 3565 |
| LF 45 | 3.9 FA 45.170 4x2 12 Ton | 01- | 3565/A | 3565/A |
| LF 45 | 3.9 FA 45.170 4x2 12 Ton | 01- | 3565/2 | 3565/2 |
| LF 45 | 3.9 FA 45.170 4x2 12 Ton | 01- | 3565/4 | 3565/4 |
| LF 45 | 3.9 FA 45.170 4x2 7.5 Ton | 01- | 3565 | 3565 |
| LF 45 | 3.9 FA 45.170 4x2 7.5 Ton | 01- | 3565/A | 3565/A |
| LF 45 | 3.9 FA 45.170 4x2 7.5 Ton | 01- | 3565/2 | 3565/2 |
| LF 45 | 3.9 FA 45.170 4x2 7.5 Ton | 01- | 3565/4 | 3565/4 |
| LF 45 | 4.5 FA 45.140 4x2 10 Ton | 06- | 3565 | 3565 |
| LF 45 | 4.5 FA 45.140 4x2 10 Ton | 06- | 3565/A | 3565/A |
| LF 45 | 4.5 FA 45.140 4x2 10 Ton | 06- | 3565/2 | 3565/2 |
| LF 45 | 4.5 FA 45.140 4x2 10 Ton | 06- | 3565/4 | 3565/4 |
| LF 45 | 4.5 FA 45.140 4x2 12 Ton | 06- | 3565 | 3565 |
| LF 45 | 4.5 FA 45.140 4x2 12 Ton | 06- | 3565/A | 3565/A |
| LF 45 | 4.5 FA 45.140 4x2 12 Ton | 06- | 3565/2 | 3565/2 |
| LF 45 | 4.5 FA 45.140 4x2 12 Ton | 06- | 3565/4 | 3565/4 |
| LF 45 | 4.5 FA 45.140 4x2 7.5 Ton | 06- | 3565 | 3565 |
| LF 45 | 4.5 FA 45.140 4x2 7.5 Ton | 06- | 3565/A | 3565/A |
| LF 45 | 4.5 FA 45.140 4x2 7.5 Ton | 06- | 3565/2 | 3565/2 |
| LF 45 | 4.5 FA 45.140 4x2 7.5 Ton | 06- | 3565/4 | 3565/4 |
| LF 45 | 4.5 FA 45.160 4x2 10 Ton | 06- | 3565 | 3565 |
| LF 45 | 4.5 FA 45.160 4x2 10 Ton | 06- | 3565/A | 3565/A |
| LF 45 | 4.5 FA 45.160 4x2 10 Ton | 06- | 3565/2 | 3565/2 |
| LF 45 | 4.5 FA 45.160 4x2 10 Ton | 06- | 3565/4 | 3565/4 |
| LF 45 | 4.5 FA 45.160 4x2 12 Ton | 06- | 3565 | 3565 |
| LF 45 | 4.5 FA 45.160 4x2 12 Ton | 06- | 3565/A | 3565/A |
| LF 45 | 4.5 FA 45.160 4x2 12 Ton | 06- | 3565/2 | 3565/2 |
| LF 45 | 4.5 FA 45.160 4x2 12 Ton | 06- | 3565/4 | 3565/4 |
| LF 45 | 4.5 FA 45.160 4x2 7.5 Ton | 06- | 3565 | 3565 |
| LF 45 | 4.5 FA 45.160 4x2 7.5 Ton | 06- | 3565/A | 3565/A |
| LF 45 | 4.5 FA 45.160 4x2 7.5 Ton | 06- | 3565/2 | 3565/2 |
| LF 45 | 4.5 FA 45.160 4x2 7.5 Ton | 06- | 3565/4 | 3565/4 |
| LF 45 | 4.5 FA 45.180 4x2 10 Ton | 06- | 3565 | 3565 |
| LF 45 | 4.5 FA 45.180 4x2 10 Ton | 06- | 3565/A | 3565/A |
| LF 45 | 4.5 FA 45.180 4x2 10 Ton | 06- | 3565/2 | 3565/2 |
| LF 45 | 4.5 FA 45.180 4x2 10 Ton | 06- | 3565/4 | 3565/4 |
| LF 45 | 4.5 FA 45.180 4x2 12 Ton | 06- | 3565 | 3565 |
| LF 45 | 4.5 FA 45.180 4x2 12 Ton | 06- | 3565/A | 3565/A |
| LF 45 | 4.5 FA 45.180 4x2 12 Ton | 06- | 3565/2 | 3565/2 |
| LF 45 | 4.5 FA 45.180 4x2 12 Ton | 06- | 3565/4 | 3565/4 |
| LF 45 | 4.5 FA 45.180 4x2 7.5 Ton | 06- | 3565 | 3565 |
| LF 45 | 4.5 FA 45.180 4x2 7.5 Ton | 06- | 3565/A | 3565/A |
| LF 45 | 4.5 FA 45.180 4x2 7.5 Ton | 06- | 3565/2 | 3565/2 |
| LF 45 | 4.5 FA 45.180 4x2 7.5 Ton | 06- | 3565/4 | 3565/4 |
| LF 45 | 5.9 FA 45.180 4x2 10 Ton | 01- | 3565 | 3565 |
| LF 45 | 5.9 FA 45.180 4x2 10 Ton | 01- | 3565/A | 3565/A |
| LF 45 | 5.9 FA 45.180 4x2 10 Ton | 01- | 3565/2 | 3565/2 |
| LF 45 | 5.9 FA 45.180 4x2 10 Ton | 01- | 3565/4 | 3565/4 |
| LF 45 | 5.9 FA 45.180 4x2 12 Ton | 01- | 3565 | 3565 |
| LF 45 | 5.9 FA 45.180 4x2 12 Ton | 01- | 3565/A | 3565/A |
| LF 45 | 5.9 FA 45.180 4x2 12 Ton | 01- | 3565/2 | 3565/2 |
| LF 45 | 5.9 FA 45.180 4x2 12 Ton | 01- | 3565/4 | 3565/4 |
| LF 45 | 5.9 FA 45.180 4x2 7.5 Ton | 01- | 3565 | 3565 |
| LF 45 | 5.9 FA 45.180 4x2 7.5 Ton | 01- | 3565/A | 3565/A |
| LF 45 | 5.9 FA 45.180 4x2 7.5 Ton | 01- | 3565/2 | 3565/2 |
| LF 45 | 5.9 FA 45.180 4x2 7.5 Ton | 01- | 3565/4 | 3565/4 |
| LF 45 | 5.9 FA 45.220 4x2 10 Ton | 01- | 3565 | 3565 |
| LF 45 | 5.9 FA 45.220 4x2 10 Ton | 01- | 3565/A | 3565/A |
| LF 45 | 5.9 FA 45.220 4x2 10 Ton | 01- | 3565/2 | 3565/2 |
| LF 45 | 5.9 FA 45.220 4x2 10 Ton | 01- | 3565/4 | 3565/4 |
| LF 45 | 5.9 FA 45.220 4x2 12 Ton | 01- | 3565 | 3565 |
| LF 45 | 5.9 FA 45.220 4x2 12 Ton | 01- | 3565/A | 3565/A |
| LF 45 | 5.9 FA 45.220 4x2 12 Ton | 01- | 3565/2 | 3565/2 |
| LF 45 | 5.9 FA 45.220 4x2 12 Ton | 01- | 3565/4 | 3565/4 |
| LF 45 | 5.9 FA 45.220 4x2 7.5 Ton | 01- | 3565 | 3565 |
| LF 45 | 5.9 FA 45.220 4x2 7.5 Ton | 01- | 3565/A | 3565/A |
| LF 45 | 5.9 FA 45.220 4x2 7.5 Ton | 01- | 3565/2 | 3565/2 |

| MAKE & MODEL | | YEAR | | |
|---|---|---|---|---|
| **DAF** | | | | |
| LF 45 | 5.9 FA 45.220 4x2 7.5 Ton | 01- | 3565/4 | 3565/4 |
| LF 45 | 6.7 FA 45.220 4x2 10 Ton | 06- | 3565 | 3565 |
| LF 45 | 6.7 FA 45.220 4x2 10 Ton | 06- | 3565/A | 3565/A |
| LF 45 | 6.7 FA 45.220 4x2 10 Ton | 06- | 3565/2 | 3565/2 |
| LF 45 | 6.7 FA 45.220 4x2 10 Ton | 06- | 3565/4 | 3565/4 |
| LF 45 | 6.7 FA 45.220 4x2 12 Ton | 06- | 3565 | 3565 |
| LF 45 | 6.7 FA 45.220 4x2 12 Ton | 06- | 3565/A | 3565/A |
| LF 45 | 6.7 FA 45.220 4x2 12 Ton | 06- | 3565/2 | 3565/2 |
| LF 45 | 6.7 FA 45.220 4x2 12 Ton | 06- | 3565/4 | 3565/4 |
| LF 45 | 6.7 FA 45.220 4x2 7.5 Ton | 06- | 3565 | 3565 |
| LF 45 | 6.7 FA 45.220 4x2 7.5 Ton | 06- | 3565/A | 3565/A |
| LF 45 | 6.7 FA 45.220 4x2 7.5 Ton | 06- | 3565/2 | 3565/2 |
| LF 45 | 6.7 FA 45.220 4x2 7.5 Ton | 06- | 3565/4 | 3565/4 |
| LF 55 | 3.9 FA 55.170 4x2 13 Ton | 03- | 3844 | 3844 |
| LF 55 | 3.9 FA 55.170 4x2 13 Ton | 01-03 | 3870 | 3870 |
| LF 55 | 3.9 FA 55.170 4x2 13 Ton | 01-03 | 3870/1 | 3870/1 |
| LF 55 | 3.9 FA 55.170 4x2 13 Ton | 01-03 | 3870/2 | 3870/2 |
| LF 55 | 4.5 FA 55.180 4x2 13 Ton | 06- | 3844 | 3844 |
| LF 55 | 4.5 FA 55.180 4x2 15 Ton | 06- | 3844 | 3844 |
| LF 55 | 5.9 FA 55.180 4x2 13 Ton | 03- | 3844 | 3844 |
| LF 55 | 5.9 FA 55.180 4x2 13 Ton | 03- | 3844 | 3844 |
| LF 55 | 5.9 FA 55.180 4x2 13 Ton | 01-03 | 3870 | 3870 |
| LF 55 | 5.9 FA 55.180 4x2 13 Ton | 01-03 | 3870 | 3870 |
| LF 55 | 5.9 FA 55.180 4x2 13 Ton | 01-03 | 3870/1 | 3870/1 |
| LF 55 | 5.9 FA 55.180 4x2 13 Ton | 01-03 | 3870/1 | 3870/1 |
| LF 55 | 5.9 FA 55.180 4x2 13 Ton | 01-03 | 3870/2 | 3870/2 |
| LF 55 | 5.9 FA 55.180 4x2 13 Ton | 01-03 | 3870/2 | 3870/2 |
| LF 55 | 5.9 FA 55.180 4x2 15 Ton | 03- | 3844 | 3844 |
| LF 55 | 5.9 FA 55.180 4x2 15 Ton | 01-03 | 3870 | 3870 |
| LF 55 | 5.9 FA 55.180 4x2 15 Ton | 01-03 | 3870/1 | 3870/1 |
| LF 55 | 5.9 FA 55.180 4x2 15 Ton | 01-03 | 3870/2 | 3870/2 |
| LF 55 | 5.9 FA 55.180 4x2 18 Ton | 01- | 3664 | 3664 |
| LF 55 | 5.9 FA 55.220 4x2 13 Ton | 03- | 3844 | 3844 |
| LF 55 | 5.9 FA 55.220 4x2 13 Ton | 03- | 3844 | 3844 |
| LF 55 | 5.9 FA 55.220 4x2 13 Ton | 01-03 | 3870 | 3870 |
| LF 55 | 5.9 FA 55.220 4x2 13 Ton | 01-03 | 3870 | 3870 |
| LF 55 | 5.9 FA 55.220 4x2 13 Ton | 01-03 | 3870/1 | 3870/1 |
| LF 55 | 5.9 FA 55.220 4x2 13 Ton | 01-03 | 3870/1 | 3870/1 |
| LF 55 | 5.9 FA 55.220 4x2 13 Ton | 01-03 | 3870/2 | 3870/2 |
| LF 55 | 5.9 FA 55.220 4x2 13 Ton | 01-03 | 3870/2 | 3870/2 |
| LF 55 | 5.9 FA 55.220 4x2 15 Ton | 03- | 3844 | 3844 |
| LF 55 | 5.9 FA 55.220 4x2 15 Ton | 01-03 | 3870 | 3870 |
| LF 55 | 5.9 FA 55.220 4x2 15 Ton | 01-03 | 3870/1 | 3870/1 |
| LF 55 | 5.9 FA 55.220 4x2 15 Ton | 01-03 | 3870/2 | 3870/2 |
| LF 55 | 5.9 FA 55.220 4x2 18 Ton | 01- | 3664 | 3664 |
| LF 55 | 5.9 FA 55.250 4x2 13 Ton | 03- | 3844 | 3844 |
| LF 55 | 5.9 FA 55.250 4x2 13 Ton | 01-03 | 3870 | 3870 |
| LF 55 | 5.9 FA 55.250 4x2 13 Ton | 01-03 | 3870/1 | 3870/1 |
| LF 55 | 5.9 FA 55.250 4x2 13 Ton | 01-03 | 3870/2 | 3870/2 |
| LF 55 | 5.9 FA 55.250 4x2 15 Ton | 03- | 3844 | 3844 |
| LF 55 | 5.9 FA 55.250 4x2 15 Ton | 01-03 | 3870 | 3870 |
| LF 55 | 5.9 FA 55.250 4x2 15 Ton | 01-03 | 3870/1 | 3870/1 |
| LF 55 | 5.9 FA 55.250 4x2 15 Ton | 01-03 | 3870/2 | 3870/2 |
| LF 55 | 5.9 FA 55.250 4x2 18 Ton | 01- | 3664 | 3664 |
| LF 55 | 6.7 FA 55.220 4x2 13 Ton | 06- | 3844 | 3844 |
| LF 55 | 6.7 FA 55.220 4x2 13 Ton | 06- | 3844 | 3844 |
| LF 55 | 6.7 FA 55.220 4x2 15 Ton | 06- | 3844 | 3844 |
| LF 55 | 6.7 FA 55.250 4x2 13 Ton | 06- | 3844 | 3844 |
| LF 55 | 6.7 FA 55.250 4x2 13 Ton | 06- | 3844 | 3844 |
| LF 55 | 6.7 FA 55.250 4x2 15 Ton | 06- | 3844 | 3844 |
| LF 55 | 6.7 FA 55.290 4x2 13 Ton | 06- | 3844 | 3844 |
| LF 55 | 6.7 FA 55.290 4x2 13 Ton | 06- | 3844 | 3844 |
| LF 55 | 6.7 FA 55.290 4x2 18 Ton | 06- | 3844 | 3844 |
| LF 55 | FA 55.160 | 05.06 - | 4091 | |
| LF 55 | FA 55.170 | 01.01 - | 4091 | |
| LF 55 | FA 55.180 | 01.01 - | 4091 | |
| LF 55 | FA 55.210 | 01.09 - | 4091 | |
| LF 55 | FA 55.220 | 05.06 - | 4091 | |
| LF 55 | FA 55.220 | 01.01 - | 4091 | |
| LF 55 | FA 55.250 | 01.01 - | 4091 | |
| LF 55 | FA 55.250 | 05.06 - | 4091 | |
| LF 55 | FA 55.290 | 05.06 - | 4091 | |
| LF 55 | FA 55.300 | 01.09 - | 4091 | |
| LF 55 | FAN 55.180 | 05.06 - | 4091 | |
| LF 55 | FAN 55.220 | 05.06 - | 4091 | |
| LF 55 | FAN 55.220 | 05.06 - | 4091 | |

| MAKE & MODEL | | YEAR | | |
|---|---|---|---|---|
| **DAF** | | | | |
| LF 55 | FAN 55.250 | 05.06 - | 4091 | |
| LF 55 | FAN 55.250 | 05.06 - | 4091 | |
| LF 55 | FAN 55.290 | 05.06 - | 4091 | |
| SB | 200 | *02-* | 3789 | 3789 |
| XF 105 | FA 105.410 | 10.05 - | 4091 | |
| XF 105 | FA 105.460 | 10.05 - | 4091 | |
| XF 105 | FA 105.510 | 10.05 - | 4091 | |
| XF 105 | FAD 105.410 | 10.05 - | 4091 | |
| XF 105 | FAD 105.460 | 10.05 - | 4091 | |
| XF 105 | FAD 105.510 | 10.05 - | 4091 | |
| XF 105 | FAK 105.410 | 10.05 - | 4091 | |
| XF 105 | FAK 105.460 | 10.05 - | 4091 | |
| XF 105 | FAK 105.510 | 10.05 - | 4091 | |
| XF 105 | FAS 105.410, FAR 105.410, FAN 105.410 | 10.05 - | 4091 | |
| XF 105 | FAS 105.460, FAR 105.460, FAN 105.460 | 10.05 - | 4091 | |
| XF 105 | FAS 105.510, FAR 105.510, FAN 105.510 | 10.05 - | 4091 | |
| XF 105 | FAT 105.410 | 10.05 - | 4091 | |
| XF 105 | FAT 105.460 | 10.05 - | 4091 | |
| XF 105 | FAT 105.510 | 10.05 - | 4091 | |
| XF 105 | FT 105.410 | 10.05 - | 4091 | |
| XF 105 | FT 105.460 | 10.05 - | 4091 | |
| XF 105 | FT 105.510 | 10.05 - | 4091 | |
| XF 105 | FTM 105.410 | 10.05 - | 4091 | |
| XF 105 | FTM 105.460 | 10.05 - | 4091 | |
| XF 105 | FTM 105.510 | 10.05 - | 4091 | |
| XF 105 | FTP 105.410 | 10.05 - | 4091 | |
| XF 105 | FTP 105.460 | 10.05 - | 4091 | |
| XF 105 | FTP 105.510 | 10.05 - | 4091 | |
| XF 105 | FTS 105.410, FTR 105.410, FTG 105.410 | 10.05 - | 4091 | |
| XF 105 | FTS 105.460, FTR 105.460, FTG 105.460 | 10.05 - | 4091 | |
| XF 105 | FTS 105.510, FTR 105.510, FTG 105.510 | 10.05 - | 4091 | |
| XF 105 | FTT 105.410 | 10.05 - | 4091 | |
| XF 105 | FTT 105.460 | 10.05 - | 4091 | |
| XF 105 | FTT 105.510 | 10.05 - | 4091 | |
| XF 95 | 12.6 FA 95.430 4x2 18 Ton | *02-* | 3664 | 3664 |
| XF 95 | 12.6 FA 95.480 4x2 18 Ton | *02-* | 3664 | 3664 |
| XF 95 | 12.6 FA 95.530 4x2 18 Ton | *02-* | 3664 | 3664 |
| XF 95 | 12.6 FT 95.380 4x2 18 Ton | *02-* | 3664 | 3664 |
| XF 95 | 12.6 FT 95.430 4x2 18 Ton | *02-* | 3664 | 3664 |
| XF 95 | 12.6 FT 95.480 4x2 18 Ton | *02-* | 3664 | 3664 |
| XF 95 | 12.6 FT 95.530 4x2 18 Ton | *02-* | 3664 | 3664 |
| XF 95 | 12.6 FTG 95.380 6x2/4 26 Ton | *02-* | 3664 | 3664 |
| XF 95 | 12.6 FTG 95.380 6x2/4 26 Ton | *02-* | 3664 | 3664 |
| XF 95 | FA 95.380 | 09.02 - 12.06 | 4091 | |
| XF 95 | FA 95.430 | 09.02 - 12.06 | 4091 | |
| XF 95 | FA 95.480 | 09.02 - 12.06 | 4091 | |
| XF 95 | FA 95.530 | 09.02 - 12.06 | 4091 | |
| XF 95 | FAD 95.380 | - | 4091 | |
| XF 95 | FAD 95.430 | - | 4091 | |
| XF 95 | FAD 95.480 | - | 4091 | |
| XF 95 | FAD 95.530 | 09.02 - | 4091 | |
| XF 95 | FAK 95.380 | - | 4091 | |
| XF 95 | FAK 95.430 | - | 4091 | |
| XF 95 | FAK 95.480 | - | 4091 | |
| XF 95 | FAK 95.530 | 09.02 - | 4091 | |
| XF 95 | FAN 95.380 | - | 4091 | |
| XF 95 | FAN 95.430 | - | 4091 | |
| XF 95 | FAN 95.480 | - | 4091 | |
| XF 95 | FAN 95.530 | 09.02 - | 4091 | |
| XF 95 | FAR 95.380 | 09.02 - 12.06 | 4091 | |
| XF 95 | FAR 95.430 | 09.02 - 12.06 | 4091 | |
| XF 95 | FAR 95.480 | 09.02 - 12.06 | 4091 | |
| XF 95 | FAR 95.530 | 09.02 - 12.06 | 4091 | |
| XF 95 | FAS 95.380 | - | 4091 | |
| XF 95 | FAS 95.430 | - | 4091 | |
| XF 95 | FAS 95.480 | - | 4091 | |
| XF 95 | FAS 95.530 | 09.02 - | 4091 | |
| XF 95 | FAT 95.380 | - | 4091 | |
| XF 95 | FAT 95.430 | - | 4091 | |
| XF 95 | FAT 95.480 | - | 4091 | |
| XF 95 | FAT 95.530 | 09.02 - | 4091 | |
| XF 95 | FT 315 | 09.02 - 12.06 | 4091 | |
| XF 95 | FT 355 | 09.02 - 12.06 | 4091 | |
| XF 95 | FT 95.380 | 09.02 - 12.06 | 4091 | |
| XF 95 | FT 95.530 | 09.02 - 12.06 | 4091 | |
| XF 95 | FTG 95.380 | 09.02 - 12.06 | 4091 | |

| MAKE & MODEL | | YEAR | 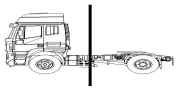 | |
|---|---|---|---|---|
| **DAF** | | | | |
| XF 95 | FTG 95.430 | 12.05 - 12.06 | 4091 | |
| XF 95 | FTG 95.480 | 12.05 - 12.06 | 4091 | |
| XF 95 | FTG 95.530 | 09.02 - 12.06 | 4091 | |
| XF 95 | FTM 95.380 | 12.05 - 12.06 | 4091 | |
| XF 95 | FTM 95.430 | 12.05 - 12.06 | 4091 | |
| XF 95 | FTM 95.480 | 12.05 - 12.06 | 4091 | |
| XF 95 | FTM 95.530 | 09.02 - 12.06 | 4091 | |
| XF 95 | FTP 95.380 | - | 4091 | |
| XF 95 | FTP 95.430 | - | 4091 | |
| XF 95 | FTP 95.480 | - | 4091 | |
| XF 95 | FTP 95.530 | 09.02 - | 4091 | |
| XF 95 | FTR 95.380 | - | 4091 | |
| XF 95 | FTR 95.430 | - | 4091 | |
| XF 95 | FTR 95.480 | - | 4091 | |
| XF 95 | FTR 95.530 | 09.02 - | 4091 | |
| XF 95 | FTS 95.380 | - | 4091 | |
| XF 95 | FTS 95.430 | - | 4091 | |
| XF 95 | FTS 95.480 | - | 4091 | |
| XF 95 | FTS 95.530 | 09.02 - | 4091 | |
| XF 95 | FTT 95.380 | - | 4091 | |
| XF 95 | FTT 95.430 | - | 4091 | |
| XF 95 | FTT 95.480 | - | 4091 | |
| XF 95 | FTT 95.530 | 09.02 - | 4091 | |
| XF105 | 12.9 FA XF105.410 4x2 18 Ton | *05-* | 3664 | 3664 |
| XF105 | 12.9 FA XF105.460 4x2 18 Ton | *05-* | 3664 | 3664 |
| XF105 | 12.9 FA XF105.510 4x2 18 Ton | *05-* | 3664 | 3664 |
| XF105 | 12.9 FAS/FAR/FAN XF105.410 6x2/2/4 18 Ton | *05-* | 3664 | 3664 |
| XF105 | 12.9 FAS/FAR/FAN XF105.460 6x2/2/4 18 Ton | *05-* | 3664 | 3664 |
| XF105 | 12.9 FAS/FAR/FAN XF105.510 6x2/2/4 18 Ton | *05-* | 3664 | 3664 |
| XF105 | 12.9 FT XF105.410 4x2 18 Ton | *05-* | 3664 | 3664 |
| XF105 | 12.9 FT XF105.460 4x2 18 Ton | *05-* | 3664 | 3664 |
| XF105 | 12.9 FT XF105.510 4x2 18 Ton | *05-* | 3664 | 3664 |
| **DENNIS** | | | | |
| ENVIRO LINE | Llanta 19.5" (PAN 19-1) | 02- | 3844 | 3844 |
| **ERF** | | | | |
| ECL | 6.9 7.28 RD3/TP3 6x4 26 Ton. | *02-* | 3664 | 3664 |
| ECL | 6.9 7.28 RD3/TP3 6x4 26 Ton. | *02-* | 3828/3 | 3828/3 |
| ECL | 6.9 7.28 RD3/TP3 6x4 26 Ton. | *02-* | 3828/3 | 3828/3 |
| ECM | 5.9 6.2 RD2 4x2 18 Ton. | *02-* | 3664 | 3664 |
| ECM | 5.9 6.2 RD2 4x2 18 Ton. | *02-* | 3828/3 | 3828/3 |
| ECM | 6.9 7.22 RD2 4x2 18 Ton. | *02-* | 3664 | 3664 |
| ECM | 6.9 7.22 RD2 4x2 18 Ton. | *02-* | 3664 | 3664 |
| ECM | 6.9 7.22 RD2 4x2 18 Ton. | *02-* | 3828/3 | 3828/3 |
| ECM | 6.9 7.22 RD2 4x2 18 Ton. | *02-* | 3828/3 | 3828/3 |
| ECM | 6.9 7.25 Rr3/rdrs3 6x2/2/4 25.6 Ton. | *02-* | 3664 | 3664 |
| ECM | 6.9 7.25 Rr3/rdrs3 6x2/2/4 25.6 Ton. | *02-* | 3828/3 | 3828/3 |
| ECS | All models | *00-* | 3497 | 3497 |
| ECS | All models | *00-* | 3497/1 | 3497/1 |
| ECT | 10.5 10.35 DB2 4x2 18 Ton. | *05-* | 3664 | 3664 |
| ECT | 10.5 10.35 DB2 4x2 18 Ton. | *05-* | 3828/3 | 3828/3 |
| ECT | 10.5 10.35 RDB3 6x2 26 Ton. | *05-* | 3664 | 3664 |
| ECT | 10.5 10.35 RDB3 6x2 26 Ton. | *05-* | 3828/3 | 3828/3 |
| ECT | 10.5 10.35 ST 4x2 18 Ton. | *05-* | 3664 | 3664 |
| ECT | 10.5 10.35 ST 4x2 18 Ton. | *05-* | 3828/3 | 3828/3 |
| ECT | 10.5 10.43 DB2 4x2 18 Ton. | *05-* | 3664 | 3664 |
| ECT | 10.5 10.43 DB2 4x2 18 Ton. | *05-* | 3828/3 | 3828/3 |
| ECT | 10.5 10.43 MT,MTL 6x2/2/4 26 Ton. | *05-* | 3664 | 3664 |
| ECT | 10.5 10.43 MT,MTL 6x2/2/4 26 Ton. | *05-* | 3828/3 | 3828/3 |
| ECT | 10.5 10.43 RDB3 6x2 26 Ton. | *05-* | 3664 | 3664 |
| ECT | 10.5 10.43 RDB3 6x2 26 Ton. | *05-* | 3828/3 | 3828/3 |
| ECT | 10.5 10.43 ST 4x2 18 Ton. | *05-* | 3664 | 3664 |
| ECT | 10.5 10.43 ST 4x2 18 Ton. | *05-* | 3828/3 | 3828/3 |
| ECT | 10.5 32.35 BB 8x4 32 Ton. | *05-* | 3664 | 3664 |
| ECT | 10.5 32.35 BB 8x4 32 Ton. | *05-* | 3828/3 | 3828/3 |
| ECT | 10.8 11.39 DB2 4x2 18 Ton. | *02-* | 3664 | 3664 |
| ECT | 10.8 11.39 DB2 4x2 18 Ton. | *02-* | 3828/3 | 3828/3 |
| ECT | 10.8 11.39 MT,MTL 6x2 18 Ton. | *02-* | 3664 | 3664 |
| ECT | 10.8 11.39 MT,MTL 6x2 18 Ton. | *02-* | 3828/3 | 3828/3 |
| ECT | 10.8 11.39 RDB3 6x2 26 Ton. | *02-* | 3664 | 3664 |
| ECT | 10.8 11.39 RDB3 6x2 26 Ton. | *02-* | 3828/3 | 3828/3 |
| ECT | 10.8 11.39 ST 4x2 18 Ton. | *02-* | 3664 | 3664 |
| ECT | 10.8 11.39 ST 4x2 18 Ton. | *02-* | 3828/3 | 3828/3 |
| ECT | 10.8 11.42 DB2 4x2 18 Ton. | *02-* | 3664 | 3664 |
| ECT | 10.8 11.42 DB2 4x2 18 Ton. | *02-* | 3828/3 | 3828/3 |
| ECT | 10.8 11.42 MT,MTL 6x2 18 Ton. | *02-* | 3664 | 3664 |

| MAKE & MODEL | | YEAR | 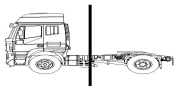 | |
|---|---|---|---|---|
| **ERF** | | | | |
| ECT | 10.8 11.42 MT,MTL 6x2 18 Ton. | 02- | 3828/3 | 3828/3 |
| ECT | 10.8 11.42 RDB3 6x2 26 Ton. | 02- | 3664 | 3664 |
| ECT | 10.8 11.42 RDB3 6x2 26 Ton. | 02- | 3828/3 | 3828/3 |
| ECT | 10.8 11.42 ST 4x2 18 Ton. | 02- | 3664 | 3664 |
| ECT | 10.8 11.42 ST 4x2 18 Ton. | 02- | 3828/3 | 3828/3 |
| ECT | 12.0 12.36 DB2 4x2 18 Ton. | 02- | 3664 | 3664 |
| ECT | 12.0 12.36 DB2 4x2 18 Ton. | 02- | 3828/3 | 3828/3 |
| ECT | 12.0 12.36 ST 4x2 19 Ton. | 02- | 3664 | 3664 |
| ECT | 12.0 12.36 ST 4x2 19 Ton. | 02- | 3828/3 | 3828/3 |
| ECT | 12.8 11.48 RDB3 6x2 26 Ton. | 05- | 3664 | 3664 |
| ECT | 12.8 11.48 RDB3 6x2 26 Ton. | 05- | 3828/3 | 3828/3 |
| ECT | 12.8 13.46 DT 6x4 26 Ton. | 02- | 3664 | 3664 |
| ECT | 12.8 13.46 DT 6x4 26 Ton. | 02- | 3828/3 | 3828/3 |
| ECT | 12.8 13.46 MT,MTL 6x2/2/4 26 Ton. | 02- | 3664 | 3664 |
| ECT | 12.8 13.46 MT,MTL 6x2/2/4 26 Ton. | 02- | 3828/3 | 3828/3 |
| ECT | 12.8 13.46 RDB3 6x2 26 Ton. | 02- | 3664 | 3664 |
| ECT | 12.8 13.46 RDB3 6x2 26 Ton. | 02- | 3828/3 | 3828/3 |
| ECT | 12.8 13.48 DT 6x4 26 Ton. | 05- | 3664 | 3664 |
| ECT | 12.8 13.48 DT 6x4 26 Ton. | 05- | 3828/3 | 3828/3 |
| ECT | 12.8 13.48 MT,MTL 6x2/2/4 26 Ton. | 05- | 3664 | 3664 |
| ECT | 12.8 13.48 MT,MTL 6x2/2/4 26 Ton. | 05- | 3828/3 | 3828/3 |
| ECT | 12.8 13.48 ST 4x2 18 Ton. | 05- | 3664 | 3664 |
| ECT | 12.8 13.48 ST 4x2 18 Ton. | 05- | 3828/3 | 3828/3 |
| ECT | 18.380 FLRC | 06.03 - | 4091 | |
| ECT | 18.380 FLRS | 07.05 - | 4091 | |
| ECT | 18.420 FLRC | 06.03 - | 4091 | |
| ECT | 18.420 FLRS | 07.05 - | 4091 | |
| ECT | 24.380 FPLRS | 07.05 - | 4091 | |
| ECT | 24.420 FPLRS | 07.05 - | 4091 | |
| ECT | 26.380 FNLRC, FNLLRC | 06.03 - | 4091 | |
| ECT | 26.380 FPLRS | 07.05 - | 4091 | |
| ECT | 26.420 FNLRC, FNLLRC | 06.03 - | 4091 | |
| ECT | 26.420 FPLRS | 07.05 - | 4091 | |
| ECX | with MAN-axles | 01-02 | 3497 | 3497 |
| ECX | with MAN-axles | 01-02 | 3497/1 | 3497/1 |
| ECX | with MAN-axles | 02- | 3828/3 | 3828/3 |
| **FRUEHAUF** | | | | |
| Eje/Axle | Llanta 22" SB 7000 | 98- | 3664 | 3664 |
| Eje/Axle | Llanta 19.5" (SB/SN6000 SB/SN6500) | 99- | | 3789 |
| **GIGANT** | | | | |
| DB 22 LT | | 04- | | 4130 |
| PROTEC | DH6 10008 3745 377x45 -11 Ton. | 01- | | 3789 |
| PROTEC | DKH1 09010 3745 377x45 -9 Ton. | 00- | | 3789 |
| PROTEC | DNH6 10008 3745 377x45 -10 Ton. | 00- | | 3789 |
| PROTEC | DNKH1 09010 3745 377x45 -9 Ton. | 01- | | 3789 |
| PROTEC | DZ6 10008 3745 377x45 -10 Ton. | 01- | | 3789 |
| PROTEC | DH6 10008 3745 377x45 -11 Ton. Llanta 19.5" (PAN 19-1) | 01- | | 3844 |
| PROTEC | DNH6 10008 3745 377x45 -10 Ton.Llanta 19.5" (PAN 19-1) | 00- | | 3844 |
| PROTEC | DH4 05506 3334 355x34 -5.5 Ton. | 99- | | 3908 |
| PROTEC | DH4 05506 3334 355x34 -5.5 Ton. | 99- | | 3908/1 |
| **HENDRICKSON** | | | | |
| DB 22 LT | | 04- | | 4130 |
| **IVECO** | | | | |
| DUMPER | 40 Ton. | 91- | 3497 | 3497 |
| DUMPER | 40 Ton. | 91- | 3497/1 | 3497/1 |
| EURO CARGO | 180 E 21 K tector | 09.00 - | 4091 | |
| EURO CARGO | 180 E 21 tector | 09.00 - | 4091 | |
| EURO CARGO | 180 E 22 tector, 160 E 22 P tector | 09.06 - | 4091 | |
| EURO CARGO | 180 E 24 K tector | 09.00 - | 4091 | |
| EURO CARGO | 180 E 24, 180 E 25 tector | 09.00 - | 4091 | |
| EURO CARGO | 180 E 25 K tector | 09.06 - | 4091 | |
| EURO CARGO | 180 E 28 K tector | 09.00 - | 4091 | |
| EURO CARGO | 180 E 28 tector, 180 E 28 P tector | 09.00 - | 4091 | |
| EURO CARGO | 180 E 30 K tector | 09.06 - | 4091 | |
| EURO CARGO | 180 E 30 tector, 180 E 30 P tector | 08.06 - | 4091 | |
| EURO CARGO | 190 E 25 tector, 190 E 25 P tector | 05.08 - | 4091 | |
| EURO CARGO | 190 E 28 tector, 190 E 28 P tector | 05.08 - | 4091 | |
| EURO CARGO | 190 E 30 tector, 190 E 30 P tector | 05.08 - | 4091 | |
| EURO CARGO | 225 E 28 tector | 09.06 - | 4091 | |
| EURO CARGO | 230 E 25 tector | 05.09 - | 4091 | |
| EURO CARGO | 230 E 28 tector | 09.06 - | 4091 | |
| EURO CARGO | 230 E 30 tector | 02.08 - | 4091 | |
| EURO CARGO | 260 E 27 KE | - | 4091 | |
| EURO CARGO | 260 E 28 K tector, 260 E 28 KE tector | - | 4091 | |
| EURO CARGO | 320 E 28 T tector | 09.00 - | 4091 | |

| MAKE & MODEL | | YEAR | | |
|---|---|---|---|---|
| IVECO | | | | |
| EURO TRAKKER | MP 180 E 24 W Cursor | 09.99 - 11.04 | 4091 | |
| EURO TRAKKER | MP 180 E 25 W | 05.99 - 11.04 | 4091 | |
| EURO TRAKKER | MP 190 E 24 H Cursor | 09.99 - 11.04 | 4091 | |
| EURO TRAKKER | MP 190 E 30 H | 01.93 - 11.04 | 4091 | |
| EURO TRAKKER | MP 190 E 30 W | 11.99 - 11.04 | 4091 | |
| EURO TRAKKER | MP 190 E 30 W | 01.93 - 11.04 | 4091 | |
| EURO TRAKKER | MP 190 E 31 H Cursor | 09.99 - 11.04 | 4091 | |
| EURO TRAKKER | MP 190 E 31 H Cursor | 09.99 - 11.04 | 4091 | |
| EURO TRAKKER | MP 190 E 31 W Cursor | 09.99 - 11.04 | 4091 | |
| EURO TRAKKER | MP 190 E 31 W Cursor | 09.99 - 11.04 | 4091 | |
| EURO TRAKKER | MP 190 E 34 H | 01.93 - 11.04 | 4091 | |
| EURO TRAKKER | MP 190 E 34 W | 11.99 - 11.04 | 4091 | |
| EURO TRAKKER | MP 190 E 34 W | 01.93 - 11.04 | 4091 | |
| EURO TRAKKER | MP 190 E 35 H Cursor | 09.99 - 11.04 | 4091 | |
| EURO TRAKKER | MP 190 E 35 H Cursor | 09.99 - 11.04 | 4091 | |
| EURO TRAKKER | MP 190 E 35 W Cursor | 09.99 - 11.04 | 4091 | |
| EURO TRAKKER | MP 190 E 35 W Cursor | 09.99 - 11.04 | 4091 | |
| EURO TRAKKER | MP 190 E 37 H | 01.00 - 11.04 | 4091 | |
| EURO TRAKKER | MP 190 E 37 H | 01.93 - 11.04 | 4091 | |
| EURO TRAKKER | MP 190 E 37 W | 11.99 - 11.04 | 4091 | |
| EURO TRAKKER | MP 190 E 37 W | 01.93 - 11.04 | 4091 | |
| EURO TRAKKER | MP 190 E 38 W Cursor | 01.01 - 11.04 | 4091 | |
| EURO TRAKKER | MP 190 E 38 W Cursor | 01.01 - 11.04 | 4091 | |
| EURO TRAKKER | MP 190 E 42 H | 11.99 - 11.04 | 4091 | |
| EURO TRAKKER | MP 190 E 42 H | 01.93 - 11.04 | 4091 | |
| EURO TRAKKER | MP 190 E 42 W | 01.93 - 11.04 | 4091 | |
| EURO TRAKKER | MP 190 E 44 W Cursor | 09.00 - 11.04 | 4091 | |
| EURO TRAKKER | MP 190 E 44 W Cursor | 09.00 - 11.04 | 4091 | |
| EURO TRAKKER | MP 190 E 47 W | 11.99 - 11.04 | 4091 | |
| EURO TRAKKER | MP 260 E 27 H Cursor | 11.99 - 11.04 | 4091 | |
| EURO TRAKKER | MP 260 E 30 H | 01.93 - 11.04 | 4091 | |
| EURO TRAKKER | MP 260 E 30 W | 11.99 - 11.04 | 4091 | |
| EURO TRAKKER | MP 260 E 31 H Cursor | 09.99 - 11.04 | 4091 | |
| EURO TRAKKER | MP 260 E 31 H Cursor | 09.99 - 11.04 | 4091 | |
| EURO TRAKKER | MP 260 E 31 HB Cursor | 11.99 - 11.04 | 4091 | |
| EURO TRAKKER | MP 260 E 34 H | 11.99 - 11.04 | 4091 | |
| EURO TRAKKER | MP 260 E 34 H | 01.93 - 11.04 | 4091 | |
| EURO TRAKKER | MP 260 E 34 W | 11.99 - 11.04 | 4091 | |
| EURO TRAKKER | MP 260 E 34 W | 01.93 - 11.04 | 4091 | |
| EURO TRAKKER | MP 260 E 35 H Cursor | 01.00 - 11.04 | 4091 | |
| EURO TRAKKER | MP 260 E 35 H Cursor | 01.00 - 11.04 | 4091 | |
| EURO TRAKKER | MP 260 E 35 W Cursor | 09.99 - 11.04 | 4091 | |
| EURO TRAKKER | MP 260 E 35 W Cursor | 09.99 - 11.04 | 4091 | |
| EURO TRAKKER | MP 260 E 37 H | 01.93 - 11.04 | 4091 | |
| EURO TRAKKER | MP 260 E 37 W | 11.99 - 11.04 | 4091 | |
| EURO TRAKKER | MP 260 E 37 W | 01.93 - 11.04 | 4091 | |
| EURO TRAKKER | MP 260 E 38 H Cursor | 01.01 - 11.04 | 4091 | |
| EURO TRAKKER | MP 260 E 38 H Cursor | 01.01 - 11.04 | 4091 | |
| EURO TRAKKER | MP 260 E 38 W Cursor | 01.01 - 11.04 | 4091 | |
| EURO TRAKKER | MP 260 E 38 W Cursor | 01.01 - 11.04 | 4091 | |
| EURO TRAKKER | MP 260 E 42 H | 11.99 - 11.04 | 4091 | |
| EURO TRAKKER | MP 260 E 42 H | 01.93 - 11.04 | 4091 | |
| EURO TRAKKER | MP 260 E 42 W | 01.93 - 11.04 | 4091 | |
| EURO TRAKKER | MP 260 E 44 H Cursor | 01.00 - 11.04 | 4091 | |
| EURO TRAKKER | MP 260 E 44 H Cursor | 01.01 - 11.04 | 4091 | |
| EURO TRAKKER | MP 260 E 44 W Cursor | 01.01 - 11.04 | 4091 | |
| EURO TRAKKER | MP 260 E 44 W Cursor | 01.01 - 11.04 | 4091 | |
| EURO TRAKKER | MP 260 E 47 H | 11.99 - 11.04 | 4091 | |
| EURO TRAKKER | MP 260 E 47 W | 11.99 - 11.04 | 4091 | |
| EURO TRAKKER | MP 340 E 34 H | 11.99 - 11.04 | 4091 | |
| EURO TRAKKER | MP 340 E 34 H | 01.93 - 11.04 | 4091 | |
| EURO TRAKKER | MP 340 E 35 H Cursor | 09.99 - 11.04 | 4091 | |
| EURO TRAKKER | MP 340 E 35 H Cursor | 09.99 - 11.04 | 4091 | |
| EURO TRAKKER | MP 340 E 35 HB Cursor | 01.01 - 11.04 | 4091 | |
| EURO TRAKKER | MP 340 E 37 H | 11.99 - 11.04 | 4091 | |
| EURO TRAKKER | MP 340 E 37 H | 01.93 - 11.04 | 4091 | |
| EURO TRAKKER | MP 340 E 38 H Cursor | 01.01 - 11.04 | 4091 | |
| EURO TRAKKER | MP 340 E 38 H Cursor | 01.01 - 11.04 | 4091 | |
| EURO TRAKKER | MP 340 E 38 HB Cursor | 01.01 - 11.04 | 4091 | |
| EURO TRAKKER | MP 340 E 42 H | 11.99 - 11.04 | 4091 | |
| EURO TRAKKER | MP 340 E 42 H | 01.93 - 11.04 | 4091 | |
| EURO TRAKKER | MP 340 E 44 H Cursor | 01.01 - 11.04 | 4091 | |
| EURO TRAKKER | MP 340 E 44 H Cursor | 01.01 - 11.04 | 4091 | |
| EURO TRAKKER | MP 340 E 44 HB Cursor | 01.01 - 11.04 | 4091 | |
| EURO TRAKKER | MP 380 E 34 H | 11.99 - 11.04 | 4091 | |
| EURO TRAKKER | MP 380 E 34 W | 11.99 - 11.04 | 4091 | |

| MAKE & MODEL | | YEAR | | |
|---|---|---|---|---|
| **IVECO** | | | | |
| EURO TRAKKER | MP 380 E 35 H Cursor | 01.00 - 11.04 | 4091 | |
| EURO TRAKKER | MP 380 E 35 W Cursor | 01.00 - 11.04 | 4091 | |
| EURO TRAKKER | MP 380 E 37 H | 11.99 - 11.04 | 4091 | |
| EURO TRAKKER | MP 380 E 37 H | 01.93 - 11.04 | 4091 | |
| EURO TRAKKER | MP 380 E 37 W | 11.99 - 11.04 | 4091 | |
| EURO TRAKKER | MP 380 E 37 W | 01.93 - 11.04 | 4091 | |
| EURO TRAKKER | MP 380 E 38 H Cursor | 01.01 - 11.04 | 4091 | |
| EURO TRAKKER | MP 380 E 38 H Cursor | 01.01 - 11.04 | 4091 | |
| EURO TRAKKER | MP 380 E 38 HB Cursor | 01.01 - 11.04 | 4091 | |
| EURO TRAKKER | MP 380 E 38 W Cursor | 01.01 - 11.04 | 4091 | |
| EURO TRAKKER | MP 380 E 38 W Cursor | 01.01 - 11.04 | 4091 | |
| EURO TRAKKER | MP 380 E 42 H | 01.93 - 11.04 | 4091 | |
| EURO TRAKKER | MP 380 E 42 H | 01.93 - 11.04 | 4091 | |
| EURO TRAKKER | MP 380 E 42 W | 11.99 - 11.04 | 4091 | |
| EURO TRAKKER | MP 380 E 42 W | 01.93 - 11.04 | 4091 | |
| EURO TRAKKER | MP 380 E 44 H Cursor | 01.01 - 11.04 | 4091 | |
| EURO TRAKKER | MP 380 E 44 H Cursor | 01.01 - 11.04 | 4091 | |
| EURO TRAKKER | MP 380 E 44 HB Cursor | 01.01 - 11.04 | 4091 | |
| EURO TRAKKER | MP 380 E 44 W | 01.01 - 11.04 | 4091 | |
| EURO TRAKKER | MP 380 E 44 W Cursor | 01.01 - 11.04 | 4091 | |
| EURO TRAKKER | MP 380 E 47 H | 11.99 - 11.04 | 4091 | |
| EURO TRAKKER | MP 380 E 47 W | 11.99 - 11.04 | 4091 | |
| EURO TRAKKER | MP 400 E 34 HT | 01.93 - 11.04 | 4091 | |
| EURO TRAKKER | MP 400 E 35 HT Cursor | 01.00 - 11.04 | 4091 | |
| EURO TRAKKER | MP 400 E 37 HT | 01.93 - 11.04 | 4091 | |
| EURO TRAKKER | MP 400 E 37 WT | 01.93 - 11.04 | 4091 | |
| EURO TRAKKER | MP 400 E 42 HT | 01.93 - 11.04 | 4091 | |
| EURO TRAKKER | MP 400 E 42 WT | 01.93 - 11.04 | 4091 | |
| EURO TRAKKER | MP 410 E 35 H Cursor | 01.00 - 11.04 | 4091 | |
| EURO TRAKKER | MP 410 E 37 H | 11.99 - 11.04 | 4091 | |
| EURO TRAKKER | MP 410 E 37 H | 01.93 - 11.04 | 4091 | |
| EURO TRAKKER | MP 410 E 37 W | 11.99 - 11.04 | 4091 | |
| EURO TRAKKER | MP 410 E 38 H Cursor | 01.01 - 11.04 | 4091 | |
| EURO TRAKKER | MP 410 E 38 H Cursor | 01.01 - 11.04 | 4091 | |
| EURO TRAKKER | MP 410 E 38 HB Cursor | 01.01 - 11.04 | 4091 | |
| EURO TRAKKER | MP 410 E 42 H | 11.99 - 11.04 | 4091 | |
| EURO TRAKKER | MP 410 E 42 H | 01.93 - 11.04 | 4091 | |
| EURO TRAKKER | MP 410 E 42 W | 01.93 - 11.04 | 4091 | |
| EURO TRAKKER | MP 410 E 44 H Cursor | 01.01 - 11.04 | 4091 | |
| EURO TRAKKER | MP 410 E 44 H Cursor | 01.01 - 11.04 | 4091 | |
| EURO TRAKKER | MP 410 E 44 HB Cursor | 01.01 - 11.04 | 4091 | |
| EURO TRAKKER | MP 410 E 47 H | 11.99 - 11.04 | 4091 | |
| EURO TRAKKER | MP 410 E 47 W | 11.99 - 11.04 | 4091 | |
| EURO TRAKKER | MP 440 E 34 HT | 01.93 - 11.04 | 4091 | |
| EURO TRAKKER | MP 440 E 37 HT | 01.93 - 11.04 | 4091 | |
| EURO TRAKKER | MP 440 E 38 HT Cursor | 01.01 - 11.04 | 4091 | |
| EURO TRAKKER | MP 440 E 42 HT | 01.93 - 11.04 | 4091 | |
| EURO TRAKKER | MP 440 E 44 HT Cursor | 01.01 - 11.04 | 4091 | |
| EURO TRAKKER | MP 440 E 47 HT | 11.99 - 11.04 | 4091 | |
| EURO TRAKKER | MP 720 E 37 HT | 01.93 - 11.04 | 4091 | |
| EURO TRAKKER | MP 720 E 37 WT | 01.93 - 11.04 | 4091 | |
| EURO TRAKKER | MP 720 E 38 HT Cursor | 01.01 - 11.04 | 4091 | |
| EURO TRAKKER | MP 720 E 42 HT | 01.93 - 11.04 | 4091 | |
| EURO TRAKKER | MP 720 E 42 WT | 01.93 - 11.04 | 4091 | |
| EURO TRAKKER | MP 720 E 44 HT Cursor | 01.01 - 11.04 | 4091 | |
| EURO TRAKKER | MP 720 E 47 HT | 01.93 - 11.04 | 4091 | |
| EURO TRAKKER | MP 720 E 48 HT Cursor | 01.01 - 11.04 | 4091 | |
| EUROCARGO | 100 E18 | 08- | 4169 | 4169 |
| EUROCARGO | 120 E18 | 08- | 4169 | 4169 |
| EUROCARGO | 150 E 18 K | *01.92 -* | 3669 | |
| EUROCARGO | 150 E 18, 150 E 18 P | *01.92 -* | 3669 | |
| EUROCARGO | 150 E 23, 150 E 23 P, 150 E 23 FP | *01.92 -* | 3669 | |
| EUROCARGO | 150 E 27, 150 E 27 P, 150 E27FP, 150 E 27 R | *01.92 -* | 3669 | |
| EUROCARGO | 3.9 120 EL17,P Tector /E18/EL18 Tector 4x2 11.9 Ton | *00-* | 3565 | 3565 |
| EUROCARGO | 3.9 120 EL17,P Tector /E18/EL18 Tector 4x2 11.9 Ton | *00-* | 3565/A | 3565/A |
| EUROCARGO | 3.9 75 E14 4x2 7.5 Ton | 08- | 4169 | 4169 |
| EUROCARGO | 3.9 75 E14 K 4x2 7.5 Ton | 08- | 4169 | 4169 |
| EUROCARGO | 3.9 75 E14 K Tector 4x2 7.49 Ton | 08- | 4169 | 4169 |
| EUROCARGO | 3.9 75 E14, P Tector 4x2 7.49 Ton | 08- | 4169 | 4169 |
| EUROCARGO | 3.9 75 E16 K Tector 4x2 7.49 Ton | 08- | 4169 | 4169 |
| EUROCARGO | 3.9 75 E16, P Tector 4x2 7.49 Ton | 08- | 4169 | 4169 |
| EUROCARGO | 3.9 80 E17 K,DK Tector /E18 K Tector 4x2 8 Ton | 08- | 4169 | 4169 |
| EUROCARGO | 3.9 80 E17,D.DP Tector /E18 Tector 4x2 8 Ton | 08- | 4169 | 4169 |
| EUROCARGO | 3.9 80 E18 K Tector 4x2 8 Ton | 08- | 4169 | 4169 |
| EUROCARGO | 3.9 80 E18 Tector 4x2 7.5 Ton | 08- | 4169 | 4169 |
| EUROCARGO | 3.9 80 E18, P, FP Tector 4x2 8 Ton | 08- | 4169 | 4169 |

| MAKE & MODEL | | YEAR | | |
|---|---|---|---|---|
| **IVECO** | | | | |
| EUROCARGO | 3.9 80 EL18 Tector 4x2 8 Ton | 08- | 4169 | 4169 |
| EUROCARGO | 5.8 170 E18 K/180 E18 K 4x2 18 Ton | 94- | 3525 | 54600 |
| EUROCARGO | 5.8 170 E18 K/180 E18 K 4x2 18 Ton | 94- | 3525/A | 54600 |
| EUROCARGO | 5.8 170 E18/180 E18 4x2 18 Ton | 94- | 3525 | 54600 |
| EUROCARGO | 5.8 170 E18/180 E18 4x2 18 Ton | 94- | 3525/A | 54600 |
| EUROCARGO | 5.8 170 E23 K/180 K E23 4x2 18 Ton | 94- | 3525 | 54600 |
| EUROCARGO | 5.8 170 E23 K/180 K E23 4x2 18 Ton | 94- | 3525/A | 54600 |
| EUROCARGO | 5.8 170 E23/180 E23 4x2 18 Ton | 94- | 3525 | 54600 |
| EUROCARGO | 5.8 170 E23/180 E23 4x2 18 Ton | 94- | 3525/A | 54600 |
| EUROCARGO | 5.8 175 E24 4x2 | 91- | 3525 | 54600 |
| EUROCARGO | 5.8 175 E24 4x2 | 91- | 3525/A | 54600 |
| EUROCARGO | 5.8 175 E27 4x2 | 91- | 3525 | 54600 |
| EUROCARGO | 5.8 175 E27 4x2 | 91- | 3525/A | 54600 |
| EUROCARGO | 5.8 176 E30 4x2 | 91- | 3525 | 54600 |
| EUROCARGO | 5.8 176 E30 4x2 | 91- | 3525/A | 54600 |
| EUROCARGO | 5.8 176 E34 4x2 | 91- | 3525 | 54600 |
| EUROCARGO | 5.8 176 E34 4x2 | 91- | 3525/A | 54600 |
| EUROCARGO | 5.8 179 E24 4x2 | 91- | 3525 | 54600 |
| EUROCARGO | 5.8 179 E24 4x2 | 91- | 3525/A | 54600 |
| EUROCARGO | 5.8 179 E27 4x2 | 91- | 3525 | 54600 |
| EUROCARGO | 5.8 179 E27 4x2 | 91- | 3525/A | 54600 |
| EUROCARGO | 5.8 179 E30 4x2 | 91- | 3525 | 54600 |
| EUROCARGO | 5.8 179 E30 4x2 | 91- | 3525/A | 54600 |
| EUROCARGO | 5.8 325 E27 4x2 | 91- | 3525 | 54600 |
| EUROCARGO | 5.8 325 E27 4x2 | 91- | 3525/A | 54600 |
| EUROCARGO | 5.8 390 E30 4x2 | 91- | 3525 | 54600 |
| EUROCARGO | 5.8 390 E30 4x2 | 91- | 3525/A | 54600 |
| EUROCARGO | 5.8 390 E34 4x2 | 91- | 3525 | 54600 |
| EUROCARGO | 5.8 390 E34 4x2 | 91- | 3525/A | 54600 |
| EUROCARGO | 5.9 120 EL21,P Tector /E22/EL22 Tector 4x2 11.9 Ton | 00- | 3565 | 3565 |
| EUROCARGO | 5.9 120 EL21,P Tector /E22/EL22 Tector 4x2 11.9 Ton | 00- | 3565/A | 3565/A |
| EUROCARGO | 5.9 130 E18 K,DK Tector 4x2 13.5 Ton | 00- | 3789 | 3789 |
| EUROCARGO | 5.9 130 E24 K,DK Tector 4x2 13.5 Ton | 00- | 3789 | 3789 |
| EUROCARGO | 5.9 130 E24,D,DP Tector 4x2 13.5 Ton | 00- | 3789 | 3789 |
| EUROCARGO | 5.9 130 E28 K Tector 4x2 13.5 Ton | 00- | 3789 | 3789 |
| EUROCARGO | 5.9 130 E28 Tector 4x2 13.5 Ton | 00- | 3789 | 3789 |
| EUROCARGO | 5.9 140 E18 W Tector 4WD 14 Ton | 00- | 3789 | 3789 |
| EUROCARGO | 5.9 140 E24 W, WS Tector 4WD 14 Ton | 00- | 3789 | 3789 |
| EUROCARGO | 5.9 150 E18 K Tector 4x2 15 Ton | 00- | 3789 | 3789 |
| EUROCARGO | 5.9 150 E18 Tector 4x2 15 Ton | 00- | 3789 | 3789 |
| EUROCARGO | 5.9 150 E24 K Tector 4x2 15 Ton | 00- | 3789 | 3789 |
| EUROCARGO | 5.9 150 E24/E25 Tector 4x2 15 Ton | 00- | 3789 | 3789 |
| EUROCARGO | 5.9 150 E28 K Tector 4x2 15 Ton | 00- | 3789 | 3789 |
| EUROCARGO | 5.9 150 E28 Tector 4x2 15 Ton | 00- | 3789 | 3789 |
| EUROCARGO | 5.9 75 E18 K Tector 4x2 7.5 Ton | 08- | 4169 | 4169 |
| EUROCARGO | 5.9 75 E18 Tector 4x2 7.5 Ton | 08- | 4169 | 4169 |
| EUROCARGO | 5.9 80 E18 4x2 7.5 Ton | 08- | 4169 | 4169 |
| EUROCARGO | 5.9 80 E18 4x2 8 Ton | 08- | 4169 | 4169 |
| EUROCARGO | 5.9 80 E18 K 4x2 7.5 Ton | 08- | 4169 | 4169 |
| EUROCARGO | 5.9 80 E18 K 4x2 8 Ton | 08- | 4169 | 4169 |
| EUROCARGO | 5.9 80 E18 K,DK Tector 4x2 8 Ton | 08- | 4169 | 4169 |
| EUROCARGO | 5.9 80 E18,D,DP Tector 4x2 8 Ton | 08- | 4169 | 4169 |
| EUROCARGO | 7.7 170 E27/180 E27 4x2 18 Ton | 94- | 3525 | 54600 |
| EUROCARGO | 7.7 170 E27/180 E27 4x2 18 Ton | 94- | 3525 | 54600 |
| EUROCARGO | 7.7 170 E27/180 E27 4x2 18 Ton | 94- | 3525/A | 54600 |
| EUROCARGO | 7.7 170 E27/180 E27 4x2 18 Ton | 94- | 3525/A | 54600 |
| EUROCARGO | Llanta 19.5" Eurocargo (SB/SN6000 SB/SN6500) | 00- | 3789 | 3789 |
| EURORIDER | 12.0 391.12.35 | 96- | 3664 | 3664 |
| EUROSTAR | LD 190 E 38 P | 01.93 - 02.02 | 3669 | |
| EUROSTAR | LD 190 E 40 | 09.00 - 02.02 | 3669 | |
| EUROSTAR | LD 190 E 43, LD 190 E 43 P, LD 190 E 43 FP | 11.99 - 02.02 | 3669 | |
| EUROSTAR | LD 190 E 52 | 01.93 - 02.02 | 3669 | |
| EUROSTAR | 10.3 LD190 E39 4x2 18 Ton -4196456 | 99-02 | 3525 | 3525 |
| EUROSTAR | 10.3 LD190 E39 4x2 18 Ton -4196456 | 99-02 | 3525/A | 3525/A |
| EUROSTAR | 10.3 LD190 E39 4x2 18 Ton 4196457- | 99-02 | 3664 | 3664 |
| EUROSTAR | 10.3 LD190 E40 4x2 18 Ton -4196456 | 00-02 | 3525 | 3525 |
| EUROSTAR | 10.3 LD190 E40 4x2 18 Ton -4196456 | 00-02 | 3525/A | 3525/A |
| EUROSTAR | 10.3 LD190 E40 4x2 18 Ton 4196457- | 00-02 | 3664 | 3664 |
| EUROSTAR | 10.3 LD190 E43 4x2 18 Ton -4196456 | 99-02 | 3525 | 3525 |
| EUROSTAR | 10.3 LD190 E43 4x2 18 Ton -4196456 | 99-02 | 3525/A | 3525/A |
| EUROSTAR | 10.3 LD190 E43 4x2 18 Ton 4196457- | 99-02 | 3664 | 3664 |
| EUROSTAR | 10.3 LD260 E43 6x2/2/4 26 Ton -4196456 | 93-02 | 3525 | 3525 |
| EUROSTAR | 10.3 LD260 E43 6x2/2/4 26 Ton -4196456 | 93-02 | 3525/A | 3525/A |
| EUROSTAR | 10.3 LD260 E43 6x2/2/4 26 Ton 4196457- | 93-02 | 3664 | 3664 |
| EUROSTAR | 10.3 LD440 E39 T 4x2 18 Ton -4196456 | 99-02 | 3525 | 3525 |
| EUROSTAR | 10.3 LD440 E39 T 4x2 18 Ton -4196456 | 99-02 | 3525/A | 3525/A |

| MAKE & MODEL | | YEAR | 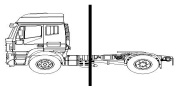 | |
|---|---|---|---|---|
| **IVECO** | | | | |
| EUROSTAR | 10.3 LD440 E39 T 4x2 18 Ton 4196457- | *99-02* | 3664 | 3664 |
| EUROSTAR | 10.3 LD440 E40 T 4x2 18 Ton -4196456 | *00-02* | 3525 | 3525 |
| EUROSTAR | 10.3 LD440 E40 T 4x2 18 Ton -4196456 | *00-02* | 3525/A | 3525/A |
| EUROSTAR | 10.3 LD440 E40 T 4x2 18 Ton 4196457- | *00-02* | 3664 | 3664 |
| EUROSTAR | 10.3 LD440 E40 TXP 6x2/4 18 Ton -4196456 | *01-02* | 3525 | 3525 |
| EUROSTAR | 10.3 LD440 E40 TXP 6x2/4 18 Ton -4196456 | *01-02* | 3525/A | 3525/A |
| EUROSTAR | 10.3 LD440 E40 TXP 6x2/4 18 Ton 4196457- | *01-02* | 3664 | 3664 |
| EUROSTAR | 10.3 LD440 E43 TP 4x2 18 Ton -4196456 | *93-02* | 3525 | 3525 |
| EUROSTAR | 10.3 LD440 E43 TP 4x2 18 Ton -4196456 | *93-02* | 3525/A | 3525/A |
| EUROSTAR | 10.3 LD440 E43 TP 4x2 18 Ton 4196457- | *93-02* | 3664 | 3664 |
| EUROSTAR | 10.3 LD440 E43 TXP 6x2/4 26 Ton -4196456 | *99-02* | 3525 | 3525 |
| EUROSTAR | 10.3 LD440 E43 TXP 6x2/4 26 Ton -4196456 | *99-02* | 3525/A | 3525/A |
| EUROSTAR | 10.3 LD440 E43 TXP 6x2/4 26 Ton 4196457- | *99-02* | 3664 | 3664 |
| EUROSTAR | 12.8 LD440 E48 T 4x2 18 Ton -4196456 | *01-02* | 3525 | 3525 |
| EUROSTAR | 12.8 LD440 E48 T 4x2 18 Ton -4196456 | *01-02* | 3525/A | 3525/A |
| EUROSTAR | 12.8 LD440 E48 T 4x2 18 Ton 4196457- | *01-02* | 3664 | 3664 |
| EUROSTAR | 13.8 LD190 E42 4x2 18 Ton -4196456 | *93-02* | 3525 | 3525 |
| EUROSTAR | 13.8 LD190 E42 4x2 18 Ton -4196456 | *93-02* | 3525/A | 3525/A |
| EUROSTAR | 13.8 LD190 E42 4x2 18 Ton 4196457- | *93-02* | 3664 | 3664 |
| EUROSTAR | 13.8 LD190 E47 4x2 18 Ton -4196456 | *93-02* | 3525 | 3525 |
| EUROSTAR | 13.8 LD190 E47 4x2 18 Ton -4196456 | *93-02* | 3525/A | 3525/A |
| EUROSTAR | 13.8 LD190 E47 4x2 18 Ton 4196457- | *93-02* | 3664 | 3664 |
| EUROSTAR | 13.8 LD190 E47 4x2 18 Ton 4196457- | *93-02* | 3664 | 3664 |
| EUROSTAR | 13.8 LD260 E42 P 6x4 26 Ton -4196456 | *93-02* | 3525 | 3525 |
| EUROSTAR | 13.8 LD260 E42 P 6x4 26 Ton -4196456 | *93-02* | 3525/A | 3525/A |
| EUROSTAR | 13.8 LD260 E42 P 6x4 26 Ton 4196457- | *93-02* | 3664 | 3664 |
| EUROSTAR | 13.8 LD260 E47 P 6x4 26 Ton -4196456 | *93-02* | 3525 | 3525 |
| EUROSTAR | 13.8 LD260 E47 P 6x4 26 Ton -4196456 | *93-02* | 3525/A | 3525/A |
| EUROSTAR | 13.8 LD260 E47 P 6x4 26 Ton 4196457- | *93-02* | 3664 | 3664 |
| EUROSTAR | 13.8 LD440 E42 T 4x2 18 Ton -4196456 | *93-02* | 3525 | 3525 |
| EUROSTAR | 13.8 LD440 E42 T 4x2 18 Ton -4196456 | *93-02* | 3525/A | 3525/A |
| EUROSTAR | 13.8 LD440 E42 T 4x2 18 Ton 4196457- | *93-02* | 3664 | 3664 |
| EUROSTAR | 13.8 LD440 E42 TZ 6x4 26 Ton -4196456 | *93-02* | 3525 | 3525 |
| EUROSTAR | 13.8 LD440 E42 TZ 6x4 26 Ton -4196456 | *93-02* | 3525/A | 3525/A |
| EUROSTAR | 13.8 LD440 E42 TZ 6x4 26 Ton 4196457- | *93-02* | 3664 | 3664 |
| EUROSTAR | 13.8 LD440 E47 T 4x2 18 Ton -4196456 | *93-02* | 3525 | 3525 |
| EUROSTAR | 13.8 LD440 E47 T 4x2 18 Ton -4196456 | *93-02* | 3525/A | 3525/A |
| EUROSTAR | 13.8 LD440 E47 T 4x2 18 Ton 4196457- | *93-02* | 3664 | 3664 |
| EUROSTAR | 13.8 LD440 E47 TZ 6x4 26 Ton -4196456 | *93-02* | 3525 | 3525 |
| EUROSTAR | 13.8 LD440 E47 TZ 6x4 26 Ton -4196456 | *93-02* | 3525/A | 3525/A |
| EUROSTAR | 13.8 LD440 E47 TZ 6x4 26 Ton 4196457- | *93-02* | 3664 | 3664 |
| EUROSTAR | 17.2 LD190 E52 4x2 18 Ton -4196456 | *93-02* | 3525 | 3525 |
| EUROSTAR | 17.2 LD190 E52 4x2 18 Ton -4196456 | *93-02* | 3525/A | 3525/A |
| EUROSTAR | 17.2 LD260 E52 P 6x4 26 Ton -4196456 | *93-02* | 3525 | 3525 |
| EUROSTAR | 17.2 LD260 E52 P 6x4 26 Ton -4196456 | *93-02* | 3525/A | 3525/A |
| EUROSTAR | 17.2 LD260 E52 P 6x4 26 Ton 4196457- | *93-02* | 3664 | 3664 |
| EUROSTAR | 17.2 LD440 E52 T 4x2 18 Ton -4196456 | *93-02* | 3525 | 3525 |
| EUROSTAR | 17.2 LD440 E52 T 4x2 18 Ton -4196456 | *93-02* | 3525/A | 3525/A |
| EUROSTAR | 17.2 LD440 E52 T 4x2 18 Ton 4196457- | *93-02* | 3664 | 3664 |
| EUROSTAR | 17.2 LD440 E52 TZ 6x4 26 Ton -4196456 | *93-02* | 3525 | 3525 |
| EUROSTAR | 17.2 LD440 E52 TZ 6x4 26 Ton -4196456 | *93-02* | 3525/A | 3525/A |
| EUROSTAR | 17.2 LD440 E52 TZ 6x4 26 Ton 4196457- | *93-02* | 3664 | 3664 |
| EUROSTAR | 9.5 LD190 E38 P 4x2 18 Ton -4196456 | *93-02* | 3525 | 3525 |
| EUROSTAR | 9.5 LD190 E38 P 4x2 18 Ton -4196456 | *93-02* | 3525/A | 3525/A |
| EUROSTAR | 9.5 LD190 E38 P 4x2 18 Ton 4196457- | *93-02* | 3664 | 3664 |
| EUROSTAR | 9.5 LD260 E38 P 6x4 26 Ton -4196456 | *93-02* | 3525 | 3525 |
| EUROSTAR | 9.5 LD260 E38 P 6x4 26 Ton -4196456 | *93-02* | 3525/A | 3525/A |
| EUROSTAR | 9.5 LD260 E38 P 6x4 26 Ton 4196457- | *93-02* | 3664 | 3664 |
| EUROSTAR | 9.5 LD440 E38 T 4x2 18 Ton -4196456 | *93-02* | 3525 | 3525 |
| EUROSTAR | 9.5 LD440 E38 T 4x2 18 Ton -4196456 | *93-02* | 3525/A | 3525/A |
| EUROSTAR | 9.5 LD440 E38 T 4x2 18 Ton 4196457- | *93-02* | 3664 | 3664 |
| EUROSTAR | 9.5 LD440 E38 TZ 6x2 26 Ton -4196456 | *93-02* | 3525 | 3525 |
| EUROSTAR | 9.5 LD440 E38 TZ 6x2 26 Ton -4196456 | *93-02* | 3525/A | 3525/A |
| EUROSTAR | 9.5 LD440 E38 TZ 6x2 26 Ton 4196457- | *93-02* | 3664 | 3664 |
| EUROSTAR | EUROSTAR LD 190 E 38P | *01/93-02/02* | 3664/1 | |
| EUROSTAR | LD 190 E 39 P, LD 190 E 39 FP | *11.99 - 02.02* | 3669 | |
| EUROSTAR | LD 190 E 42, LD 190 E 42 P | *01.93 - 02.02* | 3669 | |
| EUROSTAR | LD 190 E 47 | *01.93 - 02.02* | 3669 | |
| EUROSTAR | LD 240 E 38 | *01.93 - 02.02* | 3669 | |
| EUROSTAR | LD 240 E 42 FS, LD 240 E 42 PS | *01.93 - 02.02* | 3669 | |
| EUROSTAR | LD 240 E 47 PS | *01.93 - 02.02* | 3669 | |
| EUROSTAR | LD 240 E 52 PS | *01.93 - 02.02* | 3669 | |
| EUROSTAR | LD 260 E 38 P | *01.93 - 02.02* | 3669 | |
| EUROSTAR | LD 260 E 39 P, LD 260 E 39 FP | *11.99 - 02.02* | 3669 | |
| EUROSTAR | LD 260 E 40 | *09.00 - 02.02* | 3669 | |
| EUROSTAR | LD 260 E 42 P | *01.93 - 02.02* | 3669 | |

| MAKE & MODEL | | YEAR | | |
|---|---|---|---|---|
| **IVECO** | | | | |
| EUROSTAR | LD 260 E 43 Y/PS, LD 260 E 43 FP | *01.93 - 02.02* | 3669 | |
| EUROSTAR | LD 260 E 47 | *01.93 - 02.02* | 3669 | |
| EUROSTAR | LD 260 E 52 | *01.93 - 02.02* | 3669 | |
| EUROSTAR | LD 400 E 38 TX/P,LD 440 E 38 TX/P | *01.93 - 02.02* | 3669 | |
| EUROSTAR | LD 400 E 42 TX/P,LD 440 E 42 TX/P | *01.93 - 02.02* | 3669 | |
| EUROSTAR | LD 440 E 38 T | *01.93 - 02.02* | 3669 | |
| EUROSTAR | LD 440 E 38 TZ | *01.93 - 02.02* | 3669 | |
| EUROSTAR | LD 440 E 39 T, LD 440 E 39 T/P | *11.99 - 02.02* | 3669 | |
| EUROSTAR | LD 440 E 40 T | *09.00 - 02.02* | 3669 | |
| EUROSTAR | LD 440 E 40 TX/P | *01.01 - 02.02* | 3669 | |
| EUROSTAR | LD 440 E 42 T/P | *01.93 - 02.02* | 3669 | |
| EUROSTAR | LD 440 E 42 TZ | *01.93 - 02.02* | 3669 | |
| EUROSTAR | LD 440 E 43 T/P | *01.93 - 02.02* | 3669 | |
| EUROSTAR | LD 440 E 43 TX/P | *11.99 - 02.02* | 3669 | |
| EUROSTAR | LD 440 E 47 T/P | *01.93 - 02.02* | 3669 | |
| EUROSTAR | LD 440 E 47 TZ | *01.93 - 02.02* | 3669 | |
| EUROSTAR | LD 440 E 48 T/P | *01.01 - 02.02* | 3669 | |
| EUROSTAR | LD 440 E 52 T | *01.93 - 02.02* | 3669 | |
| EUROSTAR | LD 440 E 52 TZ | *01.93 - 02.02* | 3669 | |
| EUROSTAR (Perrot-axle) | 10.3 LD190 E39 4x2 18 Ton C063809- | *99-02* | 3664 | 3664 |
| EUROSTAR (Perrot-axle) | 10.3 LD190 E40 4x2 18 Ton C063809- | *00-02* | 3664 | 3664 |
| EUROSTAR (Perrot-axle) | 10.3 LD190 E43 4x2 18 Ton C063809- | *99-02* | 3664 | 3664 |
| EUROSTAR (Perrot-axle) | 10.3 LD260 E39 P 6x2 26 Ton -4196456 | *99-02* | 3525 | 5895 |
| EUROSTAR (Perrot-axle) | 10.3 LD260 E39 P 6x2 26 Ton -4196456 | *99-02* | 3525/A | 5895 |
| EUROSTAR (Perrot-axle) | 10.3 LD260 E39 P 6x2 26 Ton -4196456 Ad.axle | *99-02* | 3525 | 5894 |
| EUROSTAR (Perrot-axle) | 10.3 LD260 E39 P 6x2 26 Ton -4196456 Ad.axle | *99-02* | 3525/A | 5894 |
| EUROSTAR (Perrot-axle) | 10.3 LD260 E39 P 6x2 26 Ton 4196457- | *99-02* | 3664 | 3664 |
| EUROSTAR (Perrot-axle) | 10.3 LD260 E39 P 6x2 26 Ton 4196457- Ad.axle | *99-02* | 3664 | 3664 |
| EUROSTAR (Perrot-axle) | 10.3 LD260 E39 P 6x2 26 Ton C063809- | *99-02* | 3664 | 3664 |
| EUROSTAR (Perrot-axle) | 10.3 LD260 E40 6x2/2/4 26 Ton -4196456 | *00-02* | 3525 | 5895 |
| EUROSTAR (Perrot-axle) | 10.3 LD260 E40 6x2/2/4 26 Ton -4196456 | *00-02* | 3525/A | 5895 |
| EUROSTAR (Perrot-axle) | 10.3 LD260 E40 6x2/2/4 26 Ton -4196456 Ad.axle | *00-02* | 3525 | 5894 |
| EUROSTAR (Perrot-axle) | 10.3 LD260 E40 6x2/2/4 26 Ton -4196456 Ad.axle | *00-02* | 3525/A | 5894 |
| EUROSTAR (Perrot-axle) | 10.3 LD260 E40 6x2/2/4 26 Ton 4196457- | *00-02* | 3664 | 3664 |
| EUROSTAR (Perrot-axle) | 10.3 LD260 E40 6x2/2/4 26 Ton 4196457- Ad.axle | *00-02* | 3664 | 3664 |
| EUROSTAR (Perrot-axle) | 10.3 LD260 E40 6x2/2/4 26 Ton C063809- | *00-02* | 3664 | 3664 |
| EUROSTAR (Perrot-axle) | 10.3 LD260 E43 6x2/2/4 26 Ton C063809- | *93-02* | 3664 | 3664 |
| EUROSTAR (Perrot-axle) | 10.3 LD440 E39 T 4x2 18 Ton C063809- | *99-02* | 3664 | 3664 |
| EUROSTAR (Perrot-axle) | 10.3 LD440 E40 T 4x2 18 Ton C063809- | *00-02* | 3664 | 3664 |
| EUROSTAR (Perrot-axle) | 10.3 LD440 E40 TXP 6x2/4 18 Ton C063809- | *01-02* | 3664 | 3664 |
| EUROSTAR (Perrot-axle) | 10.3 LD440 E43 TP 4x2 18 Ton C063809- | *93-02* | 3664 | 3664 |
| EUROSTAR (Perrot-axle) | 10.3 LD440 E43 TXP 6x2/4 26 Ton C063809- | *99-02* | 3664 | 3664 |
| EUROSTAR (Perrot-axle) | 12.8 LD440 E48 T 4x2 18 Ton C063809- | *01-02* | 3664 | 3664 |
| EUROSTAR (Perrot-axle) | 13.8 LD190 E42 4x2 18 Ton C063809- | *93-02* | 3664 | 3664 |
| EUROSTAR (Perrot-axle) | 13.8 LD190 E47 4x2 18 Ton C063809- | *93-02* | 3664 | 3664 |
| EUROSTAR (Perrot-axle) | 13.8 LD240 E42 6x2/2/4 26 Ton -4196456 | *93-02* | 3525 | 5895 |
| EUROSTAR (Perrot-axle) | 13.8 LD240 E42 6x2/2/4 26 Ton -4196456 | *93-02* | 3525/A | 5895 |
| EUROSTAR (Perrot-axle) | 13.8 LD240 E42 6x2/2/4 26 Ton -4196456 Ad.axle | *93-02* | 3525 | 5894 |
| EUROSTAR (Perrot-axle) | 13.8 LD240 E42 6x2/2/4 26 Ton -4196456 Ad.axle | *93-02* | 3525/A | 5894 |
| EUROSTAR (Perrot-axle) | 13.8 LD240 E42 6x2/2/4 26 Ton 4196457- | *93-02* | 3664 | 3664 |
| EUROSTAR (Perrot-axle) | 13.8 LD240 E42 6x2/2/4 26 Ton 4196457- Ad.axle | *93-02* | 3664 | 3664 |
| EUROSTAR (Perrot-axle) | 13.8 LD240 E42 6x2/2/4 26 Ton C063809- | *93-02* | 3664 | 3664 |
| EUROSTAR (Perrot-axle) | 13.8 LD240 E47 P 6x2/2/4 26 Ton -4196456 | *93-02* | 3525 | 5895 |
| EUROSTAR (Perrot-axle) | 13.8 LD240 E47 P 6x2/2/4 26 Ton -4196456 | *93-02* | 3525/A | 5895 |
| EUROSTAR (Perrot-axle) | 13.8 LD240 E47 P 6x2/2/4 26 Ton -4196456 Ad.axle | *93-02* | 3525 | 5894 |
| EUROSTAR (Perrot-axle) | 13.8 LD240 E47 P 6x2/2/4 26 Ton -4196456 Ad.axle | *93-02* | 3525/A | 5894 |
| EUROSTAR (Perrot-axle) | 13.8 LD240 E47 P 6x2/2/4 26 Ton 4196457- | *93-02* | 3664 | 3664 |
| EUROSTAR (Perrot-axle) | 13.8 LD240 E47 P 6x2/2/4 26 Ton 4196457- Ad.axle | *93-02* | 3664 | 3664 |
| EUROSTAR (Perrot-axle) | 13.8 LD240 E47 P 6x2/2/4 26 Ton C063809- | *93-02* | 3664 | 3664 |
| EUROSTAR (Perrot-axle) | 13.8 LD260 E42 P 6x4 26 Ton C063809- | *93-02* | 3664 | 3664 |
| EUROSTAR (Perrot-axle) | 13.8 LD260 E47 P 6x4 26 Ton C063809- | *93-02* | 3664 | 3664 |
| EUROSTAR (Perrot-axle) | 13.8 LD400 E42 TXP 6x2/4 24.5 Ton -4196456 | *93-02* | 3525 | 5895 |
| EUROSTAR (Perrot-axle) | 13.8 LD400 E42 TXP 6x2/4 24.5 Ton -4196456 | *93-02* | 3525/A | 5895 |
| EUROSTAR (Perrot-axle) | 13.8 LD400 E42 TXP 6x2/4 24.5 Ton -4196456 Ad.axle | *93-02* | 3525 | 5894 |
| EUROSTAR (Perrot-axle) | 13.8 LD400 E42 TXP 6x2/4 24.5 Ton -4196456 Ad.axle | *93-02* | 3525/A | 5894 |
| EUROSTAR (Perrot-axle) | 13.8 LD400 E42 TXP 6x2/4 24.5 Ton 4196457- | *93-02* | 3664 | 3664 |
| EUROSTAR (Perrot-axle) | 13.8 LD400 E42 TXP 6x2/4 24.5 Ton 4196457- Ad.axle | *93-02* | 3664 | 3664 |
| EUROSTAR (Perrot-axle) | 13.8 LD400 E42 TXP 6x2/4 24.5 Ton C063809- | *93-02* | 3664 | 3664 |
| EUROSTAR (Perrot-axle) | 13.8 LD440 E42 T 4x2 18 Ton C063809- | *93-02* | 3664 | 3664 |
| EUROSTAR (Perrot-axle) | 13.8 LD440 E42 TXP 6x2/4 24.5 Ton -4196456 | *93-02* | 3525 | 5895 |
| EUROSTAR (Perrot-axle) | 13.8 LD440 E42 TXP 6x2/4 24.5 Ton -4196456 | *93-02* | 3525/A | 5895 |
| EUROSTAR (Perrot-axle) | 13.8 LD440 E42 TXP 6x2/4 24.5 Ton -4196456 Ad.axle | *93-02* | 3525 | 5894 |
| EUROSTAR (Perrot-axle) | 13.8 LD440 E42 TXP 6x2/4 24.5 Ton -4196456 Ad.axle | *93-02* | 3525/A | 5894 |
| EUROSTAR (Perrot-axle) | 13.8 LD440 E42 TXP 6x2/4 24.5 Ton 4196457- | *93-02* | 3664 | 3664 |
| EUROSTAR (Perrot-axle) | 13.8 LD440 E42 TXP 6x2/4 24.5 Ton 4196457- Ad.axle | *93-02* | 3664 | 3664 |
| EUROSTAR (Perrot-axle) | 13.8 LD440 E42 TZ 6x4 26 Ton C063809- | *93-02* | 3664 | 3664 |

| MAKE & MODEL | | YEAR | 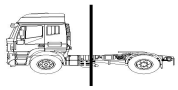 | |
|---|---|---|---|---|
| **IVECO** | | | | |
| EUROSTAR (Perrot-axle) | 13.8 LD440 E47 T 4x2 18 Ton C063809- | *93-02* | 3664 | 3664 |
| EUROSTAR (Perrot-axle) | 13.8 LD440 E47 TZ 6x4 26 Ton C063809- | *93-02* | 3664 | 3664 |
| EUROSTAR (Perrot-axle) | 17.2 LD190 E52 4x2 18 Ton C063809- | *93-02* | 3664 | 3664 |
| EUROSTAR (Perrot-axle) | 17.2 LD240 E52 P 6x2/2/4 26 Ton -4196456 | *93-02* | 3525 | 5895 |
| EUROSTAR (Perrot-axle) | 17.2 LD240 E52 P 6x2/2/4 26 Ton -4196456 | *93-02* | 3525/A | 5895 |
| EUROSTAR (Perrot-axle) | 17.2 LD240 E52 P 6x2/2/4 26 Ton -4196456 Ad.axle | *93-02* | 3525 | 5894 |
| EUROSTAR (Perrot-axle) | 17.2 LD240 E52 P 6x2/2/4 26 Ton -4196456 Ad.axle | *93-02* | 3525/A | 5894 |
| EUROSTAR (Perrot-axle) | 17.2 LD240 E52 P 6x2/2/4 26 Ton 4196457- | *93-02* | 3664 | 3664 |
| EUROSTAR (Perrot-axle) | 17.2 LD240 E52 P 6x2/2/4 26 Ton 4196457- Ad.axle | *93-02* | 3664 | 3664 |
| EUROSTAR (Perrot-axle) | 17.2 LD240 E52 P 6x2/2/4 26 Ton C063809- | *93-02* | 3664 | 3664 |
| EUROSTAR (Perrot-axle) | 17.2 LD260 E52 P 6x4 26 Ton C063809- | *93-02* | 3664 | 3664 |
| EUROSTAR (Perrot-axle) | 17.2 LD440 E52 T 4x2 18 Ton C063809- | *93-02* | 3664 | 3664 |
| EUROSTAR (Perrot-axle) | 17.2 LD440 E52 TZ 6x4 26 Ton C063809- | *93-02* | 3664 | 3664 |
| EUROSTAR (Perrot-axle) | 9.5 LD190 E38 P 4x2 18 Ton C063809- | *93-02* | 3664 | 3664 |
| EUROSTAR (Perrot-axle) | 9.5 LD240 E38 6x2/2/4 26 Ton -4196456 | *93-02* | 3525 | 5895 |
| EUROSTAR (Perrot-axle) | 9.5 LD240 E38 6x2/2/4 26 Ton -4196456 | *93-02* | 3525/A | 5895 |
| EUROSTAR (Perrot-axle) | 9.5 LD240 E38 6x2/2/4 26 Ton -4196456 Ad.axle | *93-02* | 3525 | 5894 |
| EUROSTAR (Perrot-axle) | 9.5 LD240 E38 6x2/2/4 26 Ton -4196456 Ad.axle | *93-02* | 3525/A | 5894 |
| EUROSTAR (Perrot-axle) | 9.5 LD240 E38 6x2/2/4 26 Ton 4196457- | *93-02* | 3664 | 3664 |
| EUROSTAR (Perrot-axle) | 9.5 LD240 E38 6x2/2/4 26 Ton 4196457- Ad.axle | *93-02* | 3664 | 3664 |
| EUROSTAR (Perrot-axle) | 9.5 LD240 E38 6x2/2/4 26 Ton C063809- | *93-02* | 3664 | 3664 |
| EUROSTAR (Perrot-axle) | 9.5 LD260 E38 P 6x4 26 Ton C063809- | *93-02* | 3664 | 3664 |
| EUROSTAR (Perrot-axle) | 9.5 LD400 E38 TXP 6x2/4 24.5 Ton -4196456 | *93-02* | 3525 | 5895 |
| EUROSTAR (Perrot-axle) | 9.5 LD400 E38 TXP 6x2/4 24.5 Ton -4196456 | *93-02* | 3525/A | 5895 |
| EUROSTAR (Perrot-axle) | 9.5 LD400 E38 TXP 6x2/4 24.5 Ton -4196456 Ad.axle | *93-02* | 3525 | 5894 |
| EUROSTAR (Perrot-axle) | 9.5 LD400 E38 TXP 6x2/4 24.5 Ton -4196456 Ad.axle | *93-02* | 3525/A | 5894 |
| EUROSTAR (Perrot-axle) | 9.5 LD400 E38 TXP 6x2/4 24.5 Ton 4196457- | *93-02* | 3664 | 3664 |
| EUROSTAR (Perrot-axle) | 9.5 LD400 E38 TXP 6x2/4 24.5 Ton 4196457- Ad.axle | *93-02* | 3664 | 3664 |
| EUROSTAR (Perrot-axle) | 9.5 LD400 E38 TXP 6x2/4 24.5 Ton C063809- | *93-02* | 3664 | 3664 |
| EUROSTAR (Perrot-axle) | 9.5 LD440 E38 T 4x2 18 Ton C063809- | *93-02* | 3664 | 3664 |
| EUROSTAR (Perrot-axle) | 9.5 LD440 E38 TXP 6x2/4 24.5 Ton -4196456 | *93-02* | 3525 | 5895 |
| EUROSTAR (Perrot-axle) | 9.5 LD440 E38 TXP 6x2/4 24.5 Ton -4196456 | *93-02* | 3525/A | 5895 |
| EUROSTAR (Perrot-axle) | 9.5 LD440 E38 TXP 6x2/4 24.5 Ton -4196456 Ad.axle | *93-02* | 3525 | 5894 |
| EUROSTAR (Perrot-axle) | 9.5 LD440 E38 TXP 6x2/4 24.5 Ton -4196456 Ad.axle | *93-02* | 3525/A | 5894 |
| EUROSTAR (Perrot-axle) | 9.5 LD440 E38 TXP 6x2/4 24.5 Ton 4196457- | *93-02* | 3664 | 3664 |
| EUROSTAR (Perrot-axle) | 9.5 LD440 E38 TXP 6x2/4 24.5 Ton 4196457- Ad.axle | *93-02* | 3664 | 3664 |
| EUROSTAR (Perrot-axle) | 9.5 LD440 E38 TZ 6x2 26 Ton C063809- | *93-02* | 3664 | 3664 |
| EUROSTAR (Rockwell-axle) | 10.3 LD260 E39 P 6x2 26 Ton -4196456 | *99-02* | 3525 | 5897 |
| EUROSTAR (Rockwell-axle) | 10.3 LD260 E39 P 6x2 26 Ton -4196456 | *99-02* | 3525/A | 5897 |
| EUROSTAR (Rockwell-axle) | 10.3 LD260 E39 P 6x2 26 Ton 4196457- | *99-02* | 3664 | 3664 |
| EUROSTAR (Rockwell-axle) | 10.3 LD260 E40 6x2/2/4 26 Ton -4196456 | *00-02* | 3525 | 5897 |
| EUROSTAR (Rockwell-axle) | 10.3 LD260 E40 6x2/2/4 26 Ton -4196456 | *00-02* | 3525/A | 5897 |
| EUROSTAR (Rockwell-axle) | 10.3 LD260 E40 6x2/2/4 26 Ton 4196457- | *00-02* | 3664 | 3664 |
| EUROSTAR (Rockwell-axle) | 13.8 LD240 E42 6x2/2/4 26 Ton -4196456 | *93-02* | 3525 | 5897 |
| EUROSTAR (Rockwell-axle) | 13.8 LD240 E42 6x2/2/4 26 Ton -4196456 | *93-02* | 3525/A | 5897 |
| EUROSTAR (Rockwell-axle) | 13.8 LD240 E42 6x2/2/4 26 Ton 4196457- | *93-02* | 3664 | 3664 |
| EUROSTAR (Rockwell-axle) | 13.8 LD240 E47 P 6x2/2/4 26 Ton -4196456 | *93-02* | 3525 | 5897 |
| EUROSTAR (Rockwell-axle) | 13.8 LD240 E47 P 6x2/2/4 26 Ton -4196456 | *93-02* | 3525/A | 5897 |
| EUROSTAR (Rockwell-axle) | 13.8 LD240 E47 P 6x2/2/4 26 Ton 4196457- | *93-02* | 3664 | 3664 |
| EUROSTAR (Rockwell-axle) | 13.8 LD400 E42 TXP 6x2/4 24.5 Ton -4196456 | *93-02* | 3525 | 5897 |
| EUROSTAR (Rockwell-axle) | 13.8 LD400 E42 TXP 6x2/4 24.5 Ton -4196456 | *93-02* | 3525/A | 5897 |
| EUROSTAR (Rockwell-axle) | 13.8 LD400 E42 TXP 6x2/4 24.5 Ton 4196457- | *93-02* | 3664 | 3664 |
| EUROSTAR (Rockwell-axle) | 13.8 LD440 E42 TXP 6x2/4 24.5 Ton -4196456 | *93-02* | 3525 | 5897 |
| EUROSTAR (Rockwell-axle) | 13.8 LD440 E42 TXP 6x2/4 24.5 Ton -4196456 | *93-02* | 3525/A | 5897 |
| EUROSTAR (Rockwell-axle) | 13.8 LD440 E42 TXP 6x2/4 24.5 Ton 4196457- | *93-02* | 3664 | 3664 |
| EUROSTAR (Rockwell-axle) | 17.2 LD240 E52 P 6x2/2/4 26 Ton -4196456 | *93-02* | 3525 | 5897 |
| EUROSTAR (Rockwell-axle) | 17.2 LD240 E52 P 6x2/2/4 26 Ton -4196456 | *93-02* | 3525/A | 5897 |
| EUROSTAR (Rockwell-axle) | 17.2 LD240 E52 P 6x2/2/4 26 Ton 4196457- | *93-02* | 3664 | 3664 |
| EUROSTAR (Rockwell-axle) | 9.5 LD240 E38 6x2/2/4 26 Ton -4196456 | *93-02* | 3525 | 5897 |
| EUROSTAR (Rockwell-axle) | 9.5 LD240 E38 6x2/2/4 26 Ton -4196456 | *93-02* | 3525/A | 5897 |
| EUROSTAR (Rockwell-axle) | 9.5 LD240 E38 6x2/2/4 26 Ton 4196457- | *93-02* | 3664 | 3664 |
| EUROSTAR (Rockwell-axle) | 9.5 LD400 E38 TXP 6x2/4 24.5 Ton -4196456 | *93-02* | 3525 | 5897 |
| EUROSTAR (Rockwell-axle) | 9.5 LD400 E38 TXP 6x2/4 24.5 Ton -4196456 | *93-02* | 3525/A | 5897 |
| EUROSTAR (Rockwell-axle) | 9.5 LD400 E38 TXP 6x2/4 24.5 Ton 4196457- | *93-02* | 3664 | 3664 |
| EUROSTAR (Rockwell-axle) | 9.5 LD440 E38 TXP 6x2/4 24.5 Ton -4196456 | *93-02* | 3525 | 5897 |
| EUROSTAR (Rockwell-axle) | 9.5 LD440 E38 TXP 6x2/4 24.5 Ton -4196456 | *93-02* | 3525/A | 5897 |
| EUROSTAR (Rockwell-axle) | 9.5 LD440 E38 TXP 6x2/4 24.5 Ton 4196457- | *93-02* | 3664 | 3664 |
| EUROTECH MH | 190 E 24 | *09/98-* | 3664/1 | |
| EUROTECH MH | 190 E 24 K | 09.98 - | 4091 | |
| EUROTECH MH | 190 E 24 K | *09.98 -* | 3669 | 3669 |
| EUROTECH MH | 190 E 24, 190 E 24 /P | 09.98 - | 4091 | |
| EUROTECH MH | 190 E 24, 190 E 24 /P | *09.98 -* | 3669 | 3669 |
| EUROTECH MH | 190 E 27 K | 09.98 - | 4091 | |
| EUROTECH MH | 190 E 27 K | *09.98 -* | 3669 | 3669 |
| EUROTECH MH | 190 E 27, 190 E 27 /P | 09.98 - | 4091 | |
| EUROTECH MH | 190 E 27, 190 E 27 /P | *09.98 -* | 3669 | 3669 |

| MAKE & MODEL | | YEAR | | |
|---|---|---|---|---|
| **IVECO** | | | | |
| EUROTECH MH | 190 E 30, 190 E 30 /P | 01.00 - | 4091 | |
| EUROTECH MH | 190 E 31 K | 09.98 - | 4091 | |
| EUROTECH MH | 190 E 31 K | *09.98 -* | 3669 | 3669 |
| EUROTECH MH | 190 E 31, 190 E 31 /P | 09.98 - | 4091 | |
| EUROTECH MH | 190 E 31, 190 E 31 /P | *09.98 -* | 3669 | 3669 |
| EUROTECH MH | 190 E 35, 190 E 35 /P, 190 E 35 /FP | 09.98 - | 4091 | |
| EUROTECH MH | 190 E 35, 190 E 35 /P, 190 E 35 /FP | *09.98 -* | 3669 | 3669 |
| EUROTECH MH | 260 E 24 Y/P, 260 E 24 Y/PS, 260 E 24 Y/PT | 11.99 - | 4091 | |
| EUROTECH MH | 260 E 24 Y/P, 260 E 24 Y/PS, 260 E 24 Y/PT | *11.99 -* | 3669 | 3669 |
| EUROTECH MH | 260 E 27 Y/P, 260 E 27 Y/PS, 260 E 27 RY/PS, 260 E 27 RY/PT | 11.99 - | 4091 | |
| EUROTECH MH | 260 E 27 Y/P, 260 E 27 Y/PS, 260 E 27 RY/PS, 260 E 27 RY/PT | *11.99 -* | 3669 | 3669 |
| EUROTECH MH | 260 E 30 Y/PS | 01.00 - | 4091 | |
| EUROTECH MH | 260 E 31 Y/P, 260 E 31 Y/PS, 260 E 31 Y/PT | 11.99 - | 4091 | |
| EUROTECH MH | 260 E 31 Y/P, 260 E 31 Y/PS, 260 E 31 Y/PT | *11.99 -* | 3669 | 3669 |
| EUROTECH MH | 260 E 35 Y/P, 260 E 35 Y/PT, 260 E 35 Y/TN | 11.99 - | 4091 | |
| EUROTECH MH | 260 E 35 Y/P, 260 E 35 Y/PT, 260 E 35 Y/TN | *11.99 -* | 3669 | 3669 |
| EUROTECH MH | 400 E 31 TP, 440 E 31 T, 440 E 31 TP | 09.98 - | 4091 | |
| EUROTECH MH | 400 E 31 TP, 440 E 31 T, 440 E 31 TP | *09.98 -* | 3669 | 3669 |
| EUROTECH MH | 400 E 35 TP, 440 E 35 T, 440 E 35 T/P, 440 E 35 T/FP | 09.98 - | 4091 | |
| EUROTECH MH | 400 E 35 TP, 440 E 35 T, 440 E 35 T/P, 440 E 35 T/FP | *09.98 -* | 3669 | 3669 |
| EUROTECH MH | 440 E 35 TX/P | 02.00 - | 4091 | |
| EUROTECH MH | 7.8 190 E24 4x2 18 Ton | *98-* | 3664 | 3664 |
| EUROTECH MH | 7.8 190 E24 K 4x2 18 Ton | *98-* | 3664 | 3664 |
| EUROTECH MH | 7.8 190 E27 4x2 18 Ton | *98-* | 3664 | 3664 |
| EUROTECH MH | 7.8 190 E27 K 4x2 18 Ton | *98-* | 3664 | 3664 |
| EUROTECH MH | 7.8 190 E31 4x2 18 Ton | *98-* | 3664 | 3664 |
| EUROTECH MH | 7.8 190 E31 K 4x2 18 Ton | *98-* | 3664 | 3664 |
| EUROTECH MH | 7.8 190 E35 4x2 18 Ton | *98-* | 3664 | 3664 |
| EUROTECH MH | 7.8 260 E24 Y/P 6x2/2/4 26 Ton | *99-* | 3664 | 3664 |
| EUROTECH MH | 7.8 260 E27 Y/P 6x2/2/4 26 Ton | *99-* | 3664 | 3664 |
| EUROTECH MH | 7.8 260 E31 Y/P 6x2/2/4 26 Ton | *99-* | 3664 | 3664 |
| EUROTECH MH | 7.8 260 E35 Y/P 6x2/2/4 26 Ton | *99-* | 3664 | 3664 |
| EUROTECH MP | 4500 | 01.02 - | 4091 | |
| EUROTECH MP | 4500 | 01.02 - | 4091 | |
| EUROTECH MP | 4500 | 01.02 - | 4091 | |
| EUROTECH MP | 4500 | 01.02 - | 4091 | |
| EUROTECH MP | 13.8 440 E42 TZ 6x4 26 Ton 4196457- | *93-* | 3664 | 3664 |
| EUROTECH MP | 13.8 440 E42 TZ 6x4 26 Ton-4196456 | *93-* | 3525 | 3525 |
| EUROTECH MP | 13.8 440 E42 TZ 6x4 26 Ton-4196456 | *93-* | 3525/A | 3525 |
| EUROTECH MP | 190 E 34 | 01.93 - | 4091 | |
| EUROTECH MP | 190 E 38 | 01.93 - | 4091 | |
| EUROTECH MP | 190 E 39, 190 E 39 /P, 190 E39 /FP | 11.99 - | 4091 | |
| EUROTECH MP | 190 E 40 /P | 01.01 - | 4091 | |
| EUROTECH MP | 190 E 42, 190 E 42 /P | 01.93 - | 4091 | |
| EUROTECH MP | 190 E 43, 190 E 43 /P | 01.01 - | 4091 | |
| EUROTECH MP | 240 E 30 PS | 01.97 - | 4091 | |
| EUROTECH MP | 240 E 38 | 01.92 - | 4091 | |
| EUROTECH MP | 240 E 42 | 01.92 - | 4091 | |
| EUROTECH MP | 260 E 38 P | 01.94 - | 4091 | |
| EUROTECH MP | 260 E 39 Y, 260 E 39 Y/P, 260 E 39 Y/FP, 260 E 39 Y/FS | 11.99 - | 4091 | |
| EUROTECH MP | 260 E 40 | 01.01 - | 4091 | |
| EUROTECH MP | 260 E 42 | 01.94 - | 4091 | |
| EUROTECH MP | 260 E 43 Y, 260 E 43 Y/P | 11.99 - | 4091 | |
| EUROTECH MP | 400 E 34 T, 440 E 34 T | 01.92 - | 4091 | |
| EUROTECH MP | 400 E 38 T, 440 E 38 T, 440 E 38 T /P | 01.92 - | 4091 | |
| EUROTECH MP | 400 E 42 T, 440 E 42 T, 440 E 42 T/P | 01.92 - | 4091 | |
| EUROTECH MP | 440 E 38 TZ | 01.93 - | 4091 | |
| EUROTECH MP | 440 E 39 T, 440 E 39 T/P, 440 E 39 T/FP-CT | 11.99 - | 4091 | |
| EUROTECH MP | 440 E 39 TX/P | 11.99 - | 4091 | |
| EUROTECH MP | 440 E 40 T/P | 09.00 - | 4091 | |
| EUROTECH MP | 440 E 40 TX/P | 01.01 - | 4091 | |
| EUROTECH MP | 440 E 42 TZ | 01.93 - | 4091 | |
| EUROTECH MP | 440 E 43 T, 440 E 43 T/P | 11.99 - | 4091 | |
| EUROTECH MP | 440 E 43 TX/P | 11.99 - | 4091 | |
| EUROTECH MP | 9.5 440 E38 TZ 6x4 26 Ton 4196457- | *93-* | 3664 | 3664 |
| EUROTECH MP | 9.5 440 E38 TZ 6x4 26 Ton-4196456 | *93-* | 3525 | 3525 |
| EUROTECH MP | 9.5 440 E38 TZ 6x4 26 Ton-4196456 | *93-* | 3525/A | 3525 |
| EUROTECH MP (Perrot-axle) | 10.3 190 E39 4x2 18 Ton -4196456 | *99-* | 3525 | 5895 |
| EUROTECH MP (Perrot-axle) | 10.3 190 E39 4x2 18 Ton -4196456 | *99-* | 3525/A | 5895 |
| EUROTECH MP (Perrot-axle) | 10.3 190 E39 4x2 18 Ton 4196457- | *99-* | 3664 | 3664 |
| EUROTECH MP (Perrot-axle) | 10.3 190 E39 4x2 18 Ton 4215283- | *99-* | 3664 | 3664 |
| EUROTECH MP (Perrot-axle) | 10.3 190 E40 P 4x2 18 Ton -4196456 | *01-* | 3525 | 5895 |
| EUROTECH MP (Perrot-axle) | 10.3 190 E40 P 4x2 18 Ton -4196456 | *01-* | 3525/A | 5895 |
| EUROTECH MP (Perrot-axle) | 10.3 190 E40 P 4x2 18 Ton 4196457- | *01-* | 3664 | 3664 |
| EUROTECH MP (Perrot-axle) | 10.3 190 E40 P 4x2 18 Ton 4215283- | *01-* | 3664 | 3664 |
| EUROTECH MP (Perrot-axle) | 10.3 190 E43 4x2 18 Ton -4196456 | *01-* | 3525 | 5895 |

| MAKE & MODEL | | YEAR | | |
|---|---|---|---|---|
| **IVECO** | | | | |
| EUROTECH MP (Perrot-axle) | 10.3 190 E43 4x2 18 Ton -4196456 | *01-* | 3525/A | 5895 |
| EUROTECH MP (Perrot-axle) | 10.3 190 E43 4x2 18 Ton 4196457- | *01-* | 3664 | 3664 |
| EUROTECH MP (Perrot-axle) | 10.3 190 E43 4x2 18 Ton 4215283- | *01-* | 3664 | 3664 |
| EUROTECH MP (Perrot-axle) | 10.3 260 E39 6x2/4 26 Ton -4196456 | *99-* | 3525 | 5895 |
| EUROTECH MP (Perrot-axle) | 10.3 260 E39 6x2/4 26 Ton -4196456 | *99-* | 3525/A | 5895 |
| EUROTECH MP (Perrot-axle) | 10.3 260 E39 6x2/4 26 Ton 4196457- | *99-* | 3664 | 3664 |
| EUROTECH MP (Perrot-axle) | 10.3 260 E39 6x2/4 26 Ton 4215283- | *99-* | 3664 | 3664 |
| EUROTECH MP (Perrot-axle) | 10.3 260 E40 6x2/2/4 26 Ton -4196456 | *01-* | 3525 | 5895 |
| EUROTECH MP (Perrot-axle) | 10.3 260 E40 6x2/2/4 26 Ton -4196456 | *01-* | 3525/A | 5895 |
| EUROTECH MP (Perrot-axle) | 10.3 260 E40 6x2/2/4 26 Ton 4196457- | *01-* | 3664 | 3664 |
| EUROTECH MP (Perrot-axle) | 10.3 260 E40 6x2/2/4 26 Ton 4215283- | *01-* | 3664 | 3664 |
| EUROTECH MP (Perrot-axle) | 10.3 260 E43 6x2/4 26 Ton -4196456 | *99-* | 3525 | 5895 |
| EUROTECH MP (Perrot-axle) | 10.3 260 E43 6x2/4 26 Ton -4196456 | *99-* | 3525/A | 5895 |
| EUROTECH MP (Perrot-axle) | 10.3 260 E43 6x2/4 26 Ton 4196457- | *99-* | 3664 | 3664 |
| EUROTECH MP (Perrot-axle) | 10.3 260 E43 6x2/4 26 Ton 4215283- | *99-* | 3664 | 3664 |
| EUROTECH MP (Perrot-axle) | 10.3 440 E39 TP 4x2 18 Ton 4196457- | *99-* | 3664 | 3664 |
| EUROTECH MP (Perrot-axle) | 10.3 440 E39 TP 4x2 18 Ton 4215283- | *99-* | 3664 | 3664 |
| EUROTECH MP (Perrot-axle) | 10.3 440 E39 TP 4x2 18 Ton-4196456 | *99-* | 3525 | 5895 |
| EUROTECH MP (Perrot-axle) | 10.3 440 E39 TP 4x2 18 Ton-4196456 | *99-* | 3525/A | 5895 |
| EUROTECH MP (Perrot-axle) | 10.3 440 E39 TXP 6x2/4 26 Ton 4196457- | *99-* | 3664 | 3664 |
| EUROTECH MP (Perrot-axle) | 10.3 440 E39 TXP 6x2/4 26 Ton 4215283- | *99-* | 3664 | 3664 |
| EUROTECH MP (Perrot-axle) | 10.3 440 E39 TXP 6x2/4 26 Ton-4196456 | *99-* | 3525 | 5895 |
| EUROTECH MP (Perrot-axle) | 10.3 440 E39 TXP 6x2/4 26 Ton-4196456 | *99-* | 3525/A | 5895 |
| EUROTECH MP (Perrot-axle) | 10.3 440 E40 TP 4x2 18 Ton 4196457- | *00-* | 3664 | 3664 |
| EUROTECH MP (Perrot-axle) | 10.3 440 E40 TP 4x2 18 Ton 4215283- | *00-* | 3664 | 3664 |
| EUROTECH MP (Perrot-axle) | 10.3 440 E40 TP 4x2 18 Ton-4196456 | *00-* | 3525 | 5895 |
| EUROTECH MP (Perrot-axle) | 10.3 440 E40 TP 4x2 18 Ton-4196456 | *00-* | 3525/A | 5895 |
| EUROTECH MP (Perrot-axle) | 10.3 440 E40 TXP 6x2/4 18 Ton 4196457- | *01-* | 3664 | 3664 |
| EUROTECH MP (Perrot-axle) | 10.3 440 E40 TXP 6x2/4 18 Ton 4215283- | *01-* | 3664 | 3664 |
| EUROTECH MP (Perrot-axle) | 10.3 440 E40 TXP 6x2/4 18 Ton-4196456 | *01-* | 3525 | 5895 |
| EUROTECH MP (Perrot-axle) | 10.3 440 E40 TXP 6x2/4 18 Ton-4196456 | *01-* | 3525/A | 5895 |
| EUROTECH MP (Perrot-axle) | 10.3 440 E43 TP 4x2 18 Ton -4196456 | *99-* | 3525 | 5895 |
| EUROTECH MP (Perrot-axle) | 10.3 440 E43 TP 4x2 18 Ton -4196456 | *99-* | 3525/A | 5895 |
| EUROTECH MP (Perrot-axle) | 10.3 440 E43 TP 4x2 18 Ton 4196457- | *99-* | 3664 | 3664 |
| EUROTECH MP (Perrot-axle) | 10.3 440 E43 TP 4x2 18 Ton 4215283- | *99-* | 3664 | 3664 |
| EUROTECH MP (Perrot-axle) | 13.8 180 E42 4x2 18 Ton -4196456 | *92-93* | 3525 | 5895 |
| EUROTECH MP (Perrot-axle) | 13.8 180 E42 4x2 18 Ton -4196456 | *92-93* | 3525/A | 5895 |
| EUROTECH MP (Perrot-axle) | 13.8 180 E42 4x2 18 Ton 4196457- | *92-93* | 3664 | 3664 |
| EUROTECH MP (Perrot-axle) | 13.8 180 E42 4x2 18 Ton 4215283- | *92-93* | 3664 | 3664 |
| EUROTECH MP (Perrot-axle) | 13.8 190 E42 4x2 19 Ton -4196456 | *93-* | 3525 | 5895 |
| EUROTECH MP (Perrot-axle) | 13.8 190 E42 4x2 19 Ton -4196456 | *93-* | 3525/A | 5895 |
| EUROTECH MP (Perrot-axle) | 13.8 190 E42 4x2 19 Ton 4196457- | *93-* | 3664 | 3664 |
| EUROTECH MP (Perrot-axle) | 13.8 190 E42 4x2 19 Ton 4215283- | *93-* | 3664 | 3664 |
| EUROTECH MP (Perrot-axle) | 13.8 240 E42 6x2/2/4 26 Ton -4196456 | *92-* | 3525 | 5895 |
| EUROTECH MP (Perrot-axle) | 13.8 240 E42 6x2/2/4 26 Ton -4196456 | *92-* | 3525/A | 5895 |
| EUROTECH MP (Perrot-axle) | 13.8 240 E42 6x2/2/4 26 Ton 4196457- | *92-* | 3664 | 3664 |
| EUROTECH MP (Perrot-axle) | 13.8 240 E42 6x2/2/4 26 Ton 4215283- | *92-* | 3664 | 3664 |
| EUROTECH MP (Perrot-axle) | 13.8 260 E42 6x4 26 Ton -4196456 | *94-* | 3525 | 5895 |
| EUROTECH MP (Perrot-axle) | 13.8 260 E42 6x4 26 Ton -4196456 | *94-* | 3525/A | 5895 |
| EUROTECH MP (Perrot-axle) | 13.8 260 E42 6x4 26 Ton 4196457- | *94-* | 3664 | 3664 |
| EUROTECH MP (Perrot-axle) | 13.8 260 E42 6x4 26 Ton 4215283- | *94-* | 3664 | 3664 |
| EUROTECH MP (Perrot-axle) | 13.8 400 E42 T 4x2 18 Ton 4196457- | *92-* | 3664 | 3664 |
| EUROTECH MP (Perrot-axle) | 13.8 400 E42 T 4x2 18 Ton 4196457- | *92-* | 3664 | 3664 |
| EUROTECH MP (Perrot-axle) | 13.8 400 E42 T 4x2 18 Ton 4215283- | *92-* | 3664 | 3664 |
| EUROTECH MP (Perrot-axle) | 13.8 400 E42 T 4x2 18 Ton-4196456 | *92-* | 3525 | 5895 |
| EUROTECH MP (Perrot-axle) | 13.8 400 E42 T 4x2 18 Ton-4196456 | *92-* | 3525/A | 5895 |
| EUROTECH MP (Perrot-axle) | 13.8 440 E42 TZ 6x4 26 Ton 4215283- | *93-* | 3664 | 3664 |
| EUROTECH MP (Perrot-axle) | 9.5 180 E34 4x2 18 Ton -4196456 | *92-93* | 3525 | 5895 |
| EUROTECH MP (Perrot-axle) | 9.5 180 E34 4x2 18 Ton -4196456 | *92-93* | 3525/A | 5895 |
| EUROTECH MP (Perrot-axle) | 9.5 180 E34 4x2 18 Ton 4196457- | *92-93* | 3664 | 3664 |
| EUROTECH MP (Perrot-axle) | 9.5 180 E34 4x2 18 Ton 4215283- | *92-93* | 3664 | 3664 |
| EUROTECH MP (Perrot-axle) | 9.5 180 E38 4x2 18 Ton -4196456 | *92-93* | 3525 | 5895 |
| EUROTECH MP (Perrot-axle) | 9.5 180 E38 4x2 18 Ton -4196456 | *92-93* | 3525/A | 5895 |
| EUROTECH MP (Perrot-axle) | 9.5 180 E38 4x2 18 Ton 4196457- | *92-93* | 3664 | 3664 |
| EUROTECH MP (Perrot-axle) | 9.5 180 E38 4x2 18 Ton 4215283- | *92-93* | 3664 | 3664 |
| EUROTECH MP (Perrot-axle) | 9.5 190 E34 4x2 19 Ton -4196456 | *93-* | 3525 | 5895 |
| EUROTECH MP (Perrot-axle) | 9.5 190 E34 4x2 19 Ton -4196456 | *93-* | 3525/A | 5895 |
| EUROTECH MP (Perrot-axle) | 9.5 190 E34 4x2 19 Ton 4196457- | *93-* | 3664 | 3664 |
| EUROTECH MP (Perrot-axle) | 9.5 190 E34 4x2 19 Ton 4215283- | *93-* | 3664 | 3664 |
| EUROTECH MP (Perrot-axle) | 9.5 190 E38 4x2 19 Ton -4196456 | *93-* | 3525 | 5895 |
| EUROTECH MP (Perrot-axle) | 9.5 190 E38 4x2 19 Ton -4196456 | *93-* | 3525/A | 5895 |
| EUROTECH MP (Perrot-axle) | 9.5 190 E38 4x2 19 Ton 4196457- | *93-* | 3664 | 3664 |
| EUROTECH MP (Perrot-axle) | 9.5 190 E38 4x2 19 Ton 4215283- | *93-* | 3664 | 3664 |
| EUROTECH MP (Perrot-axle) | 9.5 240 E30 PS 6x2/4 26 Ton 4196457- | *97-* | 3664 | 3664 |
| EUROTECH MP (Perrot-axle) | 9.5 240 E30 PS 6x2/4 26 Ton 4215283- | *97-* | 3664 | 3664 |
| EUROTECH MP (Perrot-axle) | 9.5 240 E30 PS 6x2/4 26 Ton-4196456 | *97-* | 3525 | 5895 |

| MAKE & MODEL | | YEAR | 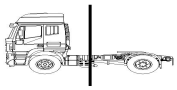 | |
|---|---|---|---|---|
| **IVECO** | | | | |
| EUROTECH MP (Perrot-axle) | 9.5 240 E30 PS 6x2/4 26 Ton-4196456 | 97- | 3525/A | 5895 |
| EUROTECH MP (Perrot-axle) | 9.5 240 E34 6x2 26 Ton 4196457- | 95-96 | 3664 | 3664 |
| EUROTECH MP (Perrot-axle) | 9.5 240 E34 6x2 26 Ton 4215283- | 95-96 | 3664 | 3664 |
| EUROTECH MP (Perrot-axle) | 9.5 240 E34 6x2 26 Ton-4196456 | 95-96 | 3525 | 5895 |
| EUROTECH MP (Perrot-axle) | 9.5 240 E34 6x2 26 Ton-4196456 | 95-96 | 3525/A | 5895 |
| EUROTECH MP (Perrot-axle) | 9.5 240 E38 6x2/2/4 26 Ton -4196456 | 92- | 3525 | 5895 |
| EUROTECH MP (Perrot-axle) | 9.5 240 E38 6x2/2/4 26 Ton -4196456 | 92- | 3525/A | 5895 |
| EUROTECH MP (Perrot-axle) | 9.5 240 E38 6x2/2/4 26 Ton 4196457- | 92- | 3664 | 3664 |
| EUROTECH MP (Perrot-axle) | 9.5 240 E38 6x2/2/4 26 Ton 4215283- | 92- | 3664 | 3664 |
| EUROTECH MP (Perrot-axle) | 9.5 260 E38 P 6x4 26 Ton -4196456 | 94- | 3525 | 5895 |
| EUROTECH MP (Perrot-axle) | 9.5 260 E38 P 6x4 26 Ton -4196456 | 94- | 3525/A | 5895 |
| EUROTECH MP (Perrot-axle) | 9.5 260 E38 P 6x4 26 Ton 4196457- | 94- | 3664 | 3664 |
| EUROTECH MP (Perrot-axle) | 9.5 260 E38 P 6x4 26 Ton 4215283- | 94- | 3664 | 3664 |
| EUROTECH MP (Perrot-axle) | 9.5 400 E34 T 4x2 18 Ton 4196457- | 92- | 3664 | 3664 |
| EUROTECH MP (Perrot-axle) | 9.5 400 E34 T 4x2 18 Ton 4215283- | 92- | 3664 | 3664 |
| EUROTECH MP (Perrot-axle) | 9.5 400 E34 T 4x2 18 Ton-4196456 | 92- | 3525 | 5895 |
| EUROTECH MP (Perrot-axle) | 9.5 400 E34 T 4x2 18 Ton-4196456 | 92- | 3525/A | 5895 |
| EUROTECH MP (Perrot-axle) | 9.5 400 E38 T 4x2 18 Ton 4196457- | 92- | 3664 | 3664 |
| EUROTECH MP (Perrot-axle) | 9.5 400 E38 T 4x2 18 Ton 4215283- | 92- | 3664 | 3664 |
| EUROTECH MP (Perrot-axle) | 9.5 400 E38 T 4x2 18 Ton-4196456 | 92- | 3525 | 5895 |
| EUROTECH MP (Perrot-axle) | 9.5 400 E38 T 4x2 18 Ton-4196456 | 92- | 3525/A | 5895 |
| EUROTECH MP (Perrot-axle) | 9.5 400 E38 TXP 6x2/4 24.5 Ton 4196457- | 93-96 | 3664 | 3664 |
| EUROTECH MP (Perrot-axle) | 9.5 400 E38 TXP 6x2/4 24.5 Ton 4215283- | 93-96 | 3664 | 3664 |
| EUROTECH MP (Perrot-axle) | 9.5 400 E38 TXP 6x2/4 24.5 Ton-4196456 | 93-96 | 3525 | 5895 |
| EUROTECH MP (Perrot-axle) | 9.5 400 E38 TXP 6x2/4 24.5 Ton-4196456 | 93-96 | 3525/A | 5895 |
| EUROTECH MP (Perrot-axle) | 9.5 440 E34 T 4x2 18 Ton 4196457- | 92- | 3664 | 3664 |
| EUROTECH MP (Perrot-axle) | 9.5 440 E34 T 4x2 18 Ton-4196456 | 92- | 3525 | 5895 |
| EUROTECH MP (Perrot-axle) | 9.5 440 E34 T 4x2 18 Ton-4196456 | 92- | 3525/A | 5895 |
| EUROTECH MP (Perrot-axle) | 9.5 440 E38 T 4x2 18 Ton 4196457- | 92- | 3664 | 3664 |
| EUROTECH MP (Perrot-axle) | 9.5 440 E38 T 4x2 18 Ton-4196456 | 92- | 3525 | 5895 |
| EUROTECH MP (Perrot-axle) | 9.5 440 E38 T 4x2 18 Ton-4196456 | 92- | 3525/A | 5895 |
| EUROTECH MP (Perrot-axle) | 9.5 440 E38 TZ 6x4 26 Ton 4215283- | 93- | 3664 | 3664 |
| EUROTECH MP (Rockwell-axle) | 10.3 190 E39 4x2 18 Ton -4196456 | 99- | 3525 | 5897 |
| EUROTECH MP (Rockwell-axle) | 10.3 190 E39 4x2 18 Ton -4196456 | 99- | 3525/A | 5897 |
| EUROTECH MP (Rockwell-axle) | 10.3 190 E39 4x2 18 Ton 4196457- | 99- | 3664 | 3664 |
| EUROTECH MP (Rockwell-axle) | 10.3 190 E40 P 4x2 18 Ton -4196456 | 01- | 3525 | 5897 |
| EUROTECH MP (Rockwell-axle) | 10.3 190 E40 P 4x2 18 Ton -4196456 | 01- | 3525/A | 5897 |
| EUROTECH MP (Rockwell-axle) | 10.3 190 E40 P 4x2 18 Ton 4196457- | 01- | 3664 | 3664 |
| EUROTECH MP (Rockwell-axle) | 10.3 190 E43 4x2 18 Ton -4196456 | 01- | 3525 | 5897 |
| EUROTECH MP (Rockwell-axle) | 10.3 190 E43 4x2 18 Ton -4196456 | 01- | 3525/A | 5897 |
| EUROTECH MP (Rockwell-axle) | 10.3 190 E43 4x2 18 Ton 4196457- | 01- | 3664 | 3664 |
| EUROTECH MP (Rockwell-axle) | 10.3 260 E39 6x2/4 26 Ton -4196456 | 99- | 3525 | 5897 |
| EUROTECH MP (Rockwell-axle) | 10.3 260 E39 6x2/4 26 Ton -4196456 | 99- | 3525/A | 5897 |
| EUROTECH MP (Rockwell-axle) | 10.3 260 E39 6x2/4 26 Ton 4196457- | 99- | 3664 | 3664 |
| EUROTECH MP (Rockwell-axle) | 10.3 260 E40 6x2/2/4 26 Ton -4196456 | 01- | 3525 | 5897 |
| EUROTECH MP (Rockwell-axle) | 10.3 260 E40 6x2/2/4 26 Ton -4196456 | 01- | 3525/A | 5897 |
| EUROTECH MP (Rockwell-axle) | 10.3 260 E40 6x2/2/4 26 Ton 4196457- | 01- | 3664 | 3664 |
| EUROTECH MP (Rockwell-axle) | 10.3 260 E43 6x2/4 26 Ton -4196456 | 99- | 3525 | 5897 |
| EUROTECH MP (Rockwell-axle) | 10.3 260 E43 6x2/4 26 Ton -4196456 | 99- | 3525/A | 5897 |
| EUROTECH MP (Rockwell-axle) | 10.3 260 E43 6x2/4 26 Ton 4196457- | 99- | 3664 | 3664 |
| EUROTECH MP (Rockwell-axle) | 10.3 440 E39 TP 4x2 18 Ton 4196457- | 99- | 3664 | 3664 |
| EUROTECH MP (Rockwell-axle) | 10.3 440 E39 TP 4x2 18 Ton-4196456 | 99- | 3525 | 5897 |
| EUROTECH MP (Rockwell-axle) | 10.3 440 E39 TP 4x2 18 Ton-4196456 | 99- | 3525/A | 5897 |
| EUROTECH MP (Rockwell-axle) | 10.3 440 E39 TXP 6x2/4 26 Ton 4196457- | 99- | 3664 | 3664 |

| MAKE & MODEL | | YEAR | | |
|---|---|---|---|---|
| **IVECO** | | | | |
| EUROTECH MP (Rockwell-axle) | 10.3 440 E39 TXP 6x2/4 26 Ton-4196456 | *99-* | 3525 | 5897 |
| EUROTECH MP (Rockwell-axle) | 10.3 440 E39 TXP 6x2/4 26 Ton-4196456 | *99-* | 3525/A | 5897 |
| EUROTECH MP (Rockwell-axle) | 10.3 440 E40 TP 4x2 18 Ton 4196457- | *00-* | 3664 | 3664 |
| EUROTECH MP (Rockwell-axle) | 10.3 440 E40 TP 4x2 18 Ton-4196456 | *00-* | 3525 | 5897 |
| EUROTECH MP (Rockwell-axle) | 10.3 440 E40 TP 4x2 18 Ton-4196456 | *00-* | 3525/A | 5897 |
| EUROTECH MP (Rockwell-axle) | 10.3 440 E40 TXP 6x2/4 18 Ton 4196457- | *01-* | 3664 | 3664 |
| EUROTECH MP (Rockwell-axle) | 10.3 440 E40 TXP 6x2/4 18 Ton-4196456 | *01-* | 3525 | 5897 |
| EUROTECH MP (Rockwell-axle) | 10.3 440 E40 TXP 6x2/4 18 Ton-4196456 | *01-* | 3525/A | 5897 |
| EUROTECH MP (Rockwell-axle) | 10.3 440 E43 TP 4x2 18 Ton -4196456 | *99-* | 3525 | 5897 |
| EUROTECH MP (Rockwell-axle) | 10.3 440 E43 TP 4x2 18 Ton -4196456 | *99-* | 3525/A | 5897 |
| EUROTECH MP (Rockwell-axle) | 10.3 440 E43 TP 4x2 18 Ton 4196457- | *99-* | 3664 | 3664 |
| EUROTECH MP (Rockwell-axle) | 13.8 180 E42 4x2 18 Ton -4196456 | *92-93* | 3525 | 5897 |
| EUROTECH MP (Rockwell-axle) | 13.8 180 E42 4x2 18 Ton -4196456 | *92-93* | 3525/A | 5897 |
| EUROTECH MP (Rockwell-axle) | 13.8 180 E42 4x2 18 Ton 4196457- | *92-93* | 3664 | 3664 |
| EUROTECH MP (Rockwell-axle) | 13.8 190 E42 4x2 19 Ton -4196456 | *93-* | 3525 | 5897 |
| EUROTECH MP (Rockwell-axle) | 13.8 190 E42 4x2 19 Ton -4196456 | *93-* | 3525/A | 5897 |
| EUROTECH MP (Rockwell-axle) | 13.8 190 E42 4x2 19 Ton 4196457- | *93-* | 3664 | 3664 |
| EUROTECH MP (Rockwell-axle) | 13.8 240 E42 6x2/2/4 26 Ton -4196456 | *92-* | 3525 | 5897 |
| EUROTECH MP (Rockwell-axle) | 13.8 240 E42 6x2/2/4 26 Ton -4196456 | *92-* | 3525/A | 5897 |
| EUROTECH MP (Rockwell-axle) | 13.8 240 E42 6x2/2/4 26 Ton 4196457- | *92-* | 3664 | 3664 |
| EUROTECH MP (Rockwell-axle) | 13.8 260 E42 6x4 26 Ton -4196456 | *94-* | 3525 | 5897 |
| EUROTECH MP (Rockwell-axle) | 13.8 260 E42 6x4 26 Ton -4196456 | *94-* | 3525/A | 5897 |
| EUROTECH MP (Rockwell-axle) | 13.8 260 E42 6x4 26 Ton 4196457- | *94-* | 3664 | 3664 |
| EUROTECH MP (Rockwell-axle) | 13.8 400 E42 T 4x2 18 Ton 4196457- | *92-* | 3664 | 3664 |
| EUROTECH MP (Rockwell-axle) | 13.8 400 E42 T 4x2 18 Ton 4196457- | *92-* | 3664 | 3664 |
| EUROTECH MP (Rockwell-axle) | 13.8 400 E42 T 4x2 18 Ton-4196456 | *92-* | 3525 | 5897 |
| EUROTECH MP (Rockwell-axle) | 13.8 400 E42 T 4x2 18 Ton-4196456 | *92-* | 3525/A | 5897 |
| EUROTECH MP (Rockwell-axle) | 9.5 180 E34 4x2 18 Ton -4196456 | *92-93* | 3525 | 5897 |
| EUROTECH MP (Rockwell-axle) | 9.5 180 E34 4x2 18 Ton -4196456 | *92-93* | 3525/A | 5897 |
| EUROTECH MP (Rockwell-axle) | 9.5 180 E34 4x2 18 Ton 4196457- | *92-93* | 3664 | 3664 |
| EUROTECH MP (Rockwell-axle) | 9.5 180 E38 4x2 18 Ton -4196456 | *92-93* | 3525 | 5897 |
| EUROTECH MP (Rockwell-axle) | 9.5 180 E38 4x2 18 Ton -4196456 | *92-93* | 3525/A | 5897 |
| EUROTECH MP (Rockwell-axle) | 9.5 180 E38 4x2 18 Ton 4196457- | *92-93* | 3664 | 3664 |
| EUROTECH MP (Rockwell-axle) | 9.5 190 E34 4x2 19 Ton -4196456 | *93-* | 3525 | 5897 |
| EUROTECH MP (Rockwell-axle) | 9.5 190 E34 4x2 19 Ton -4196456 | *93-* | 3525/A | 5897 |
| EUROTECH MP (Rockwell-axle) | 9.5 190 E34 4x2 19 Ton 4196457- | *93-* | 3664 | 3664 |
| EUROTECH MP (Rockwell-axle) | 9.5 190 E38 4x2 19 Ton -4196456 | *93-* | 3525 | 5897 |
| EUROTECH MP (Rockwell-axle) | 9.5 190 E38 4x2 19 Ton -4196456 | *93-* | 3525/A | 5897 |

| MAKE & MODEL | | YEAR | 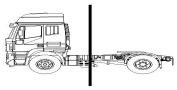 | |
|---|---|---|---|---|
| **IVECO** | | | | |
| EUROTECH MP (Rockwell-axle) | 9.5 190 E38 4x2 19 Ton 4196457- | 93- | 3664 | 3664 |
| EUROTECH MP (Rockwell-axle) | 9.5 240 E30 PS 6x2/4 26 Ton 4196457- | 97- | 3664 | 3664 |
| EUROTECH MP (Rockwell-axle) | 9.5 240 E30 PS 6x2/4 26 Ton-4196456 | 97- | 3525 | 5897 |
| EUROTECH MP (Rockwell-axle) | 9.5 240 E30 PS 6x2/4 26 Ton-4196456 | 97- | 3525/A | 5897 |
| EUROTECH MP (Rockwell-axle) | 9.5 240 E34 6x2 26 Ton 4196457- | 95-96 | 3664 | 3664 |
| EUROTECH MP (Rockwell-axle) | 9.5 240 E34 6x2 26 Ton-4196456 | 95-96 | 3525 | 5897 |
| EUROTECH MP (Rockwell-axle) | 9.5 240 E34 6x2 26 Ton-4196456 | 95-96 | 3525/A | 5897 |
| EUROTECH MP (Rockwell-axle) | 9.5 240 E38 6x2/2/4 26 Ton -4196456 | 92- | 3525 | 5897 |
| EUROTECH MP (Rockwell-axle) | 9.5 240 E38 6x2/2/4 26 Ton -4196456 | 92- | 3525/A | 5897 |
| EUROTECH MP (Rockwell-axle) | 9.5 240 E38 6x2/2/4 26 Ton 4196457- | 92- | 3664 | 3664 |
| EUROTECH MP (Rockwell-axle) | 9.5 260 E38 P 6x4 26 Ton -4196456 | 94- | 3525 | 5897 |
| EUROTECH MP (Rockwell-axle) | 9.5 260 E38 P 6x4 26 Ton -4196456 | 94- | 3525/A | 5897 |
| EUROTECH MP (Rockwell-axle) | 9.5 260 E38 P 6x4 26 Ton 4196457- | 94- | 3664 | 3664 |
| EUROTECH MP (Rockwell-axle) | 9.5 400 E34 T 4x2 18 Ton 4196457- | 92- | 3664 | 3664 |
| EUROTECH MP (Rockwell-axle) | 9.5 400 E34 T 4x2 18 Ton-4196456 | 92- | 3525 | 5897 |
| EUROTECH MP (Rockwell-axle) | 9.5 400 E34 T 4x2 18 Ton-4196456 | 92- | 3525/A | 5897 |
| EUROTECH MP (Rockwell-axle) | 9.5 400 E38 T 4x2 18 Ton 4196457- | 92- | 3664 | 3664 |
| EUROTECH MP (Rockwell-axle) | 9.5 400 E38 T 4x2 18 Ton-4196456 | 92- | 3525 | 5897 |
| EUROTECH MP (Rockwell-axle) | 9.5 400 E38 T 4x2 18 Ton-4196456 | 92- | 3525/A | 5897 |
| EUROTECH MP (Rockwell-axle) | 9.5 400 E38 TXP 6x2/4 24.5 Ton 4196457- | 93-96 | 3664 | 3664 |
| EUROTECH MP (Rockwell-axle) | 9.5 400 E38 TXP 6x2/4 24.5 Ton-4196456 | 93-96 | 3525 | 5897 |
| EUROTECH MP (Rockwell-axle) | 9.5 400 E38 TXP 6x2/4 24.5 Ton-4196456 | 93-96 | 3525/A | 5897 |
| EUROTECH MP (Rockwell-axle) | 9.5 440 E34 T 4x2 18 Ton 4196457- | 92- | 3664 | 3664 |
| EUROTECH MP (Rockwell-axle) | 9.5 440 E34 T 4x2 18 Ton-4196456 | 92- | 3525 | 5897 |
| EUROTECH MP (Rockwell-axle) | 9.5 440 E34 T 4x2 18 Ton-4196456 | 92- | 3525/A | 5897 |
| EUROTECH MP (Rockwell-axle) | 9.5 440 E38 T 4x2 18 Ton 4196457- | 92- | 3664 | 3664 |
| EUROTECH MP (Rockwell-axle) | 9.5 440 E38 T 4x2 18 Ton-4196456 | 92- | 3525 | 5897 |
| EUROTECH MP (Rockwell-axle) | 9.5 440 E38 T 4x2 18 Ton-4196456 | 92- | 3525/A | 5897 |
| EUROTECH MT | 7.7 180 E24 4x2 18 Ton -4196456 | 92-96 | 3525 | 3525 |
| EUROTECH MT | 7.7 180 E24 4x2 18 Ton -4196456 | 92-96 | 3525 | 3525 |
| EUROTECH MT | 7.7 180 E24 4x2 18 Ton -4196456 | 92-96 | 3525 | 54600 |
| EUROTECH MT | 7.7 180 E24 4x2 18 Ton -4196456 | 92-96 | 3525 | 54600 |
| EUROTECH MT | 7.7 180 E24 4x2 18 Ton -4196456 | 92-96 | 3525 | 3525 |
| EUROTECH MT | 7.7 180 E24 4x2 18 Ton -4196456 | 92-96 | 3525 | 54600 |
| EUROTECH MT | 7.7 180 E24 4x2 18 Ton -4196456 | 92-96 | 3525/A | 3525/A |
| EUROTECH MT | 7.7 180 E24 4x2 18 Ton -4196456 | 92-96 | 3525/A | 3525/A |
| EUROTECH MT | 7.7 180 E24 4x2 18 Ton -4196456 | 92-96 | 3525/A | 54600 |
| EUROTECH MT | 7.7 180 E24 4x2 18 Ton -4196456 | 92-96 | 3525/A | 54600 |
| EUROTECH MT | 7.7 180 E24 4x2 18 Ton -4196456 | 92-96 | 3525/A | 3525/A |
| EUROTECH MT | 7.7 180 E24 4x2 18 Ton -4196456 | 92-96 | 3525/A | 54600 |
| EUROTECH MT | 7.7 180 E24 4x2 18 Ton 4196457- | 92-96 | 3664 | 3664 |
| EUROTECH MT | 7.7 180 E24 4x2 18 Ton 4196457- | 92-96 | 3664 | 3664 |
| EUROTECH MT | 7.7 180 E24 4x2 18 Ton 4196457- | 92-96 | 3664 | 3664 |
| EUROTECH MT | 7.7 180 E24 4x2 18 Ton 4196457- | 92-96 | 3664 | 3664 |
| EUROTECH MT | 7.7 180 E24 K 4x2 18 Ton -4196456 | 92-96 | 3525 | 54600 |
| EUROTECH MT | 7.7 180 E24 K 4x2 18 Ton -4196456 | 92-96 | 3525 | 3525 |
| EUROTECH MT | 7.7 180 E24 K 4x2 18 Ton -4196456 | 92-96 | 3525/A | 54600 |

| MAKE & MODEL | | YEAR | 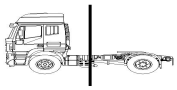 | |
|---|---|---|---|---|
| **IVECO** | | | | |
| EUROTECH MT | 7.7 180 E24 K 4x2 18 Ton -4196456 | 92-96 | 3525/A | 3525/A |
| EUROTECH MT | 7.7 180 E24 K 4x2 18 Ton 4196457- | 92-96 | 3664 | 3664 |
| EUROTECH MT | 7.7 180 E27 K 4x2 18 Ton -4196456 | 92-96 | 3525 | 54600 |
| EUROTECH MT | 7.7 180 E27 K 4x2 18 Ton -4196456 | 92-96 | 3525 | 3525 |
| EUROTECH MT | 7.7 180 E27 K 4x2 18 Ton -4196456 | 92-96 | 3525/A | 54600 |
| EUROTECH MT | 7.7 180 E27 K 4x2 18 Ton -4196456 | 92-96 | 3525/A | 3525/A |
| EUROTECH MT | 7.7 180 E27 K 4x2 18 Ton 4196457- | 92-96 | 3664 | 3664 |
| EUROTECH MT | 7.7 180 E27 K 4x2 18 Ton 4196457- | 92-96 | 3664 | 3664 |
| EUROTECH MT | 7.7 190 E24 4x2 19 Ton -4196456 | 97-98 | 3525 | 54600 |
| EUROTECH MT | 7.7 190 E24 4x2 19 Ton -4196456 | 97-98 | 3525 | 3525 |
| EUROTECH MT | 7.7 190 E24 4x2 19 Ton -4196456 | 97-98 | 3525/A | 54600 |
| EUROTECH MT | 7.7 190 E24 4x2 19 Ton -4196456 | 97-98 | 3525/A | 3525/A |
| EUROTECH MT | 7.7 190 E24 4x2 19 Ton 4196457- | 97-98 | 3664 | 3664 |
| EUROTECH MT | 7.7 190 E24 4x2 19 Ton 4196457- | 97-98 | 3664 | 3664 |
| EUROTECH MT | 7.7 190 E24 K 4x2 19 Ton -4196456 | 97-98 | 3525 | 54600 |
| EUROTECH MT | 7.7 190 E24 K 4x2 19 Ton -4196456 | 97-98 | 3525 | 3525 |
| EUROTECH MT | 7.7 190 E24 K 4x2 19 Ton -4196456 | 97-98 | 3525/A | 54600 |
| EUROTECH MT | 7.7 190 E24 K 4x2 19 Ton -4196456 | 97-98 | 3525/A | 3525/A |
| EUROTECH MT | 7.7 190 E24 K 4x2 19 Ton 4196457- | 97-98 | 3664 | 3664 |
| EUROTECH MT | 7.7 190 E24 K 4x2 19 Ton 4196457- | 97-98 | 3664 | 3664 |
| EUROTECH MT | 7.7 190 E27 4x2 19 Ton -4196456 | 97-98 | 3525 | 54600 |
| EUROTECH MT | 7.7 190 E27 4x2 19 Ton -4196456 | 97-98 | 3525 | 3525 |
| EUROTECH MT | 7.7 190 E27 4x2 19 Ton -4196456 | 97-98 | 3525/A | 54600 |
| EUROTECH MT | 7.7 190 E27 4x2 19 Ton -4196456 | 97-98 | 3525/A | 3525/A |
| EUROTECH MT | 7.7 190 E27 4x2 19 Ton 4196457- | 97-98 | 3664 | 3664 |
| EUROTECH MT | 7.7 190 E27 4x2 19 Ton 4196457- | 97-98 | 3664 | 3664 |
| EUROTECH MT | 7.7 190 E27 K 4x2 19 Ton -4196456 | 97-98 | 3525 | 3525 |
| EUROTECH MT | 7.7 190 E27 K 4x2 19 Ton -4196456 | 97-98 | 3525 | 54600 |
| EUROTECH MT | 7.7 190 E27 K 4x2 19 Ton -4196456 | 97-98 | 3525/A | 3525/A |
| EUROTECH MT | 7.7 190 E27 K 4x2 19 Ton -4196456 | 97-98 | 3525/A | 54600 |
| EUROTECH MT | 7.7 190 E27 K 4x2 19 Ton 4196457- | 97-98 | 3664 | 3664 |
| EUROTECH MT | 7.7 190 E27 K 4x2 19 Ton 4196457- | 97-98 | 3664 | 3664 |
| EUROTECH MT | 7.8 400 E31 TP 4x2 18 Ton | 98- | 3664 | 3664 |
| EUROTECH MT | 7.8 400 E31 TP 4x2 18 Ton | 98- | 3664 | 3664 |
| EUROTECH MT | 7.8 400 E35 TP 4x2 18 Ton | 98- | 3664 | 3664 |
| EUROTECH MT | 7.8 400 E35 TP 4x2 18 Ton | 98- | 3664 | 3664 |
| EUROTECH MT | 7.8 440 E31 TP 4x2 18 Ton | 98- | 3664 | 3664 |
| EUROTECH MT | 7.8 440 E31 TP 4x2 18 Ton | 98- | 3664 | 3664 |
| EUROTECH MT | 7.8 440 E35 TP 4x2 18 Ton | 98- | 3664 | 3664 |
| EUROTECH MT | 7.8 440 E35 TP 4x2 18 Ton | 98- | 3664 | 3664 |
| EUROTECH MT | 9.5 180 E30 4x2 18 Ton -4196456 | 92-96 | 3525 | 54600 |
| EUROTECH MT | 9.5 180 E30 4x2 18 Ton -4196456 | 92-96 | 3525 | 3525 |
| EUROTECH MT | 9.5 180 E30 4x2 18 Ton -4196456 | 92-96 | 3525/A | 54600 |
| EUROTECH MT | 9.5 180 E30 4x2 18 Ton -4196456 | 92-96 | 3525/A | 3525/A |
| EUROTECH MT | 9.5 180 E30 4x2 18 Ton 4196457- | 92-96 | 3664 | 3664 |
| EUROTECH MT | 9.5 180 E30 4x2 18 Ton 4196457- | 92-96 | 3664 | 3664 |
| EUROTECH MT | 9.5 180 E34 R 4x2 18 Ton -4196456 | 92-93 | 3525 | 3525 |
| EUROTECH MT | 9.5 180 E34 R 4x2 18 Ton -4196456 | 92-93 | 3525 | 54600 |
| EUROTECH MT | 9.5 180 E34 R 4x2 18 Ton -4196456 | 92-93 | 3525/A | 3525/A |
| EUROTECH MT | 9.5 180 E34 R 4x2 18 Ton -4196456 | 92-93 | 3525/A | 54600 |
| EUROTECH MT | 9.5 180 E34 R 4x2 18 Ton 4196457- | 92-93 | 3664 | 3664 |
| EUROTECH MT | 9.5 180 E34 R 4x2 18 Ton 4196457- | 92-93 | 3664 | 3664 |
| EUROTECH MT | 9.5 190 E30 4x2 19 Ton -4196456 | 97-98 | 3525 | 3525 |
| EUROTECH MT | 9.5 190 E30 4x2 19 Ton -4196456 | 97-98 | 3525 | 54600 |
| EUROTECH MT | 9.5 190 E30 4x2 19 Ton -4196456 | 97-98 | 3525/A | 3525/A |
| EUROTECH MT | 9.5 190 E30 4x2 19 Ton -4196456 | 97-98 | 3525/A | 54600 |
| EUROTECH MT | 9.5 190 E30 4x2 19 Ton 4196457- | 97-98 | 3664 | 3664 |
| EUROTECH MT | 9.5 190 E30 4x2 19 Ton 4196457- | 97-98 | 3664 | 3664 |
| EUROTECH MT | 9.5 190 E30 K 4x2 19 Ton -4196456 | 97-98 | 3525 | 54600 |
| EUROTECH MT | 9.5 190 E30 K 4x2 19 Ton -4196456 | 97-98 | 3525 | 3525 |
| EUROTECH MT | 9.5 190 E30 K 4x2 19 Ton -4196456 | 97-98 | 3525/A | 54600 |
| EUROTECH MT | 9.5 190 E30 K 4x2 19 Ton -4196456 | 97-98 | 3525/A | 3525/A |
| EUROTECH MT | 9.5 190 E30 K 4x2 19 Ton 4196457- | 97-98 | 3664 | 3664 |
| EUROTECH MT | 9.5 190 E30 K 4x2 19 Ton 4196457- | 97-98 | 3664 | 3664 |
| EUROTECH MT | 9.5 400 E30 T 4x2 18 Ton -4196456 | 92-98 | 3525 | 3525 |
| EUROTECH MT | 9.5 400 E30 T 4x2 18 Ton -4196456 | 92-98 | 3525 | 54600 |
| EUROTECH MT | 9.5 400 E30 T 4x2 18 Ton -4196456 | 92-98 | 3525/A | 3525/A |
| EUROTECH MT | 9.5 400 E30 T 4x2 18 Ton -4196456 | 92-98 | 3525/A | 54600 |
| EUROTECH MT | 9.5 400 E30 T 4x2 18 Ton 4196457- | 92-98 | 3664 | 3664 |
| EUROTECH MT | 9.5 400 E30 T 4x2 18 Ton 4196457- | 92-98 | 3664 | 3664 |
| EUROTECH MT | 9.5 400 E34 T 4x2 18 Ton -4196456 | 92-98 | 3525 | 3525 |
| EUROTECH MT | 9.5 400 E34 T 4x2 18 Ton -4196456 | 92-98 | 3525 | 54600 |
| EUROTECH MT | 9.5 400 E34 T 4x2 18 Ton -4196456 | 92-98 | 3525/A | 3525/A |
| EUROTECH MT | 9.5 400 E34 T 4x2 18 Ton -4196456 | 92-98 | 3525/A | 54600 |
| STRALIS | 10.3 260 S40 6x2/2/4 26 Ton | 02- | 3664 | 3664 |
| STRALIS | 10.3 260 S43 6x2/2/4 26 Ton | 02- | 3664 | 3664 |

| MAKE & MODEL | | YEAR | 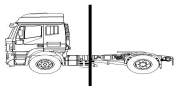 | |
|---|---|---|---|---|
| **IVECO** | | | | |
| STRALIS | 10.3 440 S40 4x2 18 Ton | *02-* | 3664 | 3664 |
| STRALIS | 10.3 440 S40 6x2/4 18 Ton | *02-* | 3664 | 3664 |
| STRALIS | 10.3 440 S43 4x2 18 Ton | *02-* | 3664 | 3664 |
| STRALIS | 10.3 440 S43 TXP 6x2/4 18 Ton | *02-* | 3664 | 3664 |
| STRALIS | 10.3 AD/AT 190 S40 4x2 18 Ton | *03-* | 3664 | 3664 |
| STRALIS | 10.3 AD/AT 190 S43 4x2 18 Ton | *03-* | 3664 | 3664 |
| STRALIS | 10.3 AD/AT 260 S40 6x2/2/4 26 Ton | *03-* | 3664 | 3664 |
| STRALIS | 10.3 AD/AT 260 S43 6x2/2/4 26 Ton | *03-* | 3664 | 3664 |
| STRALIS | 10.3 AD/AT 440 S40 4x2 18 Ton | *03-* | 3664 | 3664 |
| STRALIS | 10.3 AD/AT 440 S40 6x2/4 18 Ton | *03-* | 3664 | 3664 |
| STRALIS | 10.3 AD/AT 440 S43 4x2 18 Ton | *03-* | 3664 | 3664 |
| STRALIS | 10.3 AD/AT 440 S43 6x2/4 24.5 Ton | *03-* | 3664 | 3664 |
| STRALIS | 10.3 AS 190 S40 4x2 18 Ton | *03-* | 3664 | 3664 |
| STRALIS | 10.3 AS 190 S43 4x2 18 Ton | *03-* | 3664 | 3664 |
| STRALIS | 10.3 AT 440 S43 6x4 26 Ton | *03-* | 3664 | 3664 |
| STRALIS | 12.9 260 S48 6x2/2/4 26 Ton | *02-* | 3664 | 3664 |
| STRALIS | 12.9 260 S54 6x2/4 26 Ton | *02-* | 3664 | 3664 |
| STRALIS | 12.9 440 S48 4x2 18 Ton | *02-* | 3664 | 3664 |
| STRALIS | 12.9 AS 190 S48 4x2 18 Ton | *03-* | 3664 | 3664 |
| STRALIS | 12.9 AS 260 S48 6x4 26 Ton | *03-* | 3664 | 3664 |
| STRALIS | 12.9 AS 260 S54 6x4 26 Ton | *03-* | 3664 | 3664 |
| STRALIS | 12.9 AS 440 S48 6x4 18 Ton | *03-* | 3664 | 3664 |
| STRALIS | 12.9 AS 440 S48 TXP 6x2/4 18 Ton | *02-* | 3664 | 3664 |
| STRALIS | 12.9 AS 440 S54 T/P,T/FP-LT 4x2 18 Ton | *02-* | 3664 | 3664 |
| STRALIS | 12.9 AS/ES 440 S54 6x2/2/4 18 Ton | *03-* | 3664 | 3664 |
| STRALIS | 12.9 AS/ES 440 S54 6x4 18 Ton | *03-* | 3664 | 3664 |
| STRALIS | 7.8 AD/AT 190 S31 4x2 18 Ton | *03-* | 3664 | 3664 |
| STRALIS | 7.8 AD/AT 190 S35 4x2 18 Ton | *03-* | 3664 | 3664 |
| STRALIS | 7.8 AD/AT 260 S31 6x2/2/4 26 Ton | *03-* | 3664 | 3664 |
| STRALIS | 7.8 AD/AT 260 S35 6x2/2/4 26 Ton | *03-* | 3664 | 3664 |
| STRALIS | 7.8 AD/AT 440 S35 4x2 18 Ton | *03-* | 3664 | 3664 |
| STRALIS | AD 190S27, AT 190S27 | 06.03 - | 4091 | |
| STRALIS | AD 190S27, AT 190S27 | 04.04 - | 4091 | |
| STRALIS | AD 190S30 | 04.04 - | 4091 | |
| STRALIS | AD 190S30, AD 190S31, AT 190S31 | 06.03 - | 4091 | |
| STRALIS | AD 190S31 | *06/03-* | 3664/1 | |
| STRALIS | AD 190S31, AT 190S31 | 04.04 - | 4091 | |
| STRALIS | AD 190S33, AT 190S33 | 12.06 - | 4091 | |
| STRALIS | AD 190S33, AT 190S33 | 05.07 - | 4091 | |
| STRALIS | AD 190S35 | 04.04 - | 4091 | |
| STRALIS | AD 190S35, AT 190S35, AD 190S36, AT 190S36 | 06.03 - | 4091 | |
| STRALIS | AD 190S36, AT 190S36 | 05.07 - | 4091 | |
| STRALIS | AD 190S40, AT 190S40 | 03.03 - | 4091 | |
| STRALIS | AD 190S42, AT 190S42, AS 190S42 | 07.06 - | 4091 | |
| STRALIS | AD 190S43, AT 190S43 | 06.03 - | 4091 | |
| STRALIS | AD 190S45, AT 190S45 | 12.06 - | 4091 | |
| STRALIS | AD 260S27 CNG, AT 260S27 CNG | 01.08 - | 4091 | |
| STRALIS | AD 260S27, AT 260S27 | 04.04 - | 4091 | |
| STRALIS | AD 260S30, AT 260S30 | 10.05 - | 4091 | |
| STRALIS | AD 260S30, AT 260S30 | 04.04 - | 4091 | |
| STRALIS | AD 260S31, AT 260S31 | 06.03 - | 4091 | |
| STRALIS | AD 260S31, AT 260S31 | 04.04 - | 4091 | |
| STRALIS | AD 260S33, AT 260S33 | 12.06 - | 4091 | |
| STRALIS | AD 260S33, AT 260S33 | 12.06 - | 4091 | |
| STRALIS | AD 260S33, AT 260S33 | 06.07 - | 4091 | |
| STRALIS | AD 260S35 | 04.04 - | 4091 | |
| STRALIS | AD 260S35, AT 260S35, AD 260S36, AT 260S36 | 06.03 - | 4091 | |
| STRALIS | AD 260S36, AT 260S36 | 07.07 - | 4091 | |
| STRALIS | AD 260S40, AT 260S40 | 06.03 - | 4091 | |
| STRALIS | AD 260S42, AT 260S42 | 12.06 - | 4091 | |
| STRALIS | AD 260S42, AT 260S42, AS 260S42 | 05.07 - | 4091 | |
| STRALIS | AD 260S43, AT 260S43 | 06.03 - | 4091 | |
| STRALIS | AD 260S45, AT 260S45 | 12.06 - | 4091 | |
| STRALIS | AD 260S45, AT 260S45, AS 260S45 | 05.07 - | 4091 | |
| STRALIS | AD 320S36 | 05.07 - | 4091 | |
| STRALIS | AD 320S42, AT 320S42 | 05.07 - | 4091 | |
| STRALIS | AD 320S45, AT 320S45 | 05.07 - | 4091 | |
| STRALIS | AD 440S31, AT 440S31 | 06.03 - | 4091 | |
| STRALIS | AD 440S33, AT 440S33 | 12.06 - | 4091 | |
| STRALIS | AD 440S35, AT 440S35, AD 440S36, AT 440S36 | 06.03 - | 4091 | |
| STRALIS | AD 440S40, AT 440S40 | 06.03 - | 4091 | |
| STRALIS | AD 440S40, AT 440S40 | 03.03 - | 4091 | |
| STRALIS | AD 440S40, AT 440S40 | 06.03 - | 4091 | |
| STRALIS | AD 440S42, AT 440S42 | 04.06 - | 4091 | |
| STRALIS | AD 440S43, AT 440S43 | 06.03 - | 4091 | |
| STRALIS | AD 440S43, AT 440S43 | 06.03 - | 4091 | |

| MAKE & MODEL | | YEAR | | |
|---|---|---|---|---|
| **IVECO** | | | | |
| STRALIS | AD 440S45, AT 440S45 | 12.06 - | 4091 | |
| STRALIS | AS 190S40 | 02.02 - | 4091 | |
| STRALIS | AS 190S43 | 02.02 - | 4091 | |
| STRALIS | AS 190S45 | 12.06 - | 4091 | |
| STRALIS | AS 190S48 | 02.02 - | 4091 | |
| STRALIS | AS 190S50 | 12.06 - | 4091 | |
| STRALIS | AS 260S40 | 05.05 - | 4091 | |
| STRALIS | AS 260S40 | 02.02 - | 4091 | |
| STRALIS | AS 260S43 | 05.05 - | 4091 | |
| STRALIS | AS 260S43 | 02.02 - | 4091 | |
| STRALIS | AS 260S48 | 02.02 - | 4091 | |
| STRALIS | AS 260S48 | 02.02 - | 4091 | |
| STRALIS | AS 260S50 | 12.06 - | 4091 | |
| STRALIS | AS 260S50 | 07.06 - | 4091 | |
| STRALIS | AS 260S50 | 12.06 - | 4091 | |
| STRALIS | AS 260S54 | 02.02 - | 4091 | |
| STRALIS | AS 260S54 | 02.02 - | 4091 | |
| STRALIS | AS 260S54 | 02.02 - | 4091 | |
| STRALIS | AS 260S56 | 12.06 - | 4091 | |
| STRALIS | AS 260S56 | 07.06 - | 4091 | |
| STRALIS | AS 260S56 | 12.06 - | 4091 | |
| STRALIS | AS 320S50 | 05.07 - | 4091 | |
| STRALIS | AS 440S40 | 02.02 - | 4091 | |
| STRALIS | AS 440S40 | 02.02 - | 4091 | |
| STRALIS | AS 440S40 | 02.02 - | 4091 | |
| STRALIS | AS 440S42 | 05.06 - | 4091 | |
| STRALIS | AS 440S42 | 07.06 - | 4091 | |
| STRALIS | AS 440S42, AT 440S42 | 12.06 - | 4091 | |
| STRALIS | AS 440S43 | 02.02 - | 4091 | |
| STRALIS | AS 440S43 | 02.02 - | 4091 | |
| STRALIS | AS 440S45 | 12.06 - | 4091 | |
| STRALIS | AS 440S45, AT 440S45 | 12.06 - | 4091 | |
| STRALIS | AS 440S45, AT 440S45 | 12.06 - | 4091 | |
| STRALIS | AS 440S48 | 02.02 - | 4091 | |
| STRALIS | AS 440S48 | 02.02 - | 4091 | |
| STRALIS | AS 440S48 | 02.02 - | 4091 | |
| STRALIS | AS 440S48 | 02.02 - | 4091 | |
| STRALIS | AS 440S50 | 12.06 - | 4091 | |
| STRALIS | AS 440S50 | 07.06 - | 4091 | |
| STRALIS | AS 440S50, AT 440S50 | 12.06 - | 4091 | |
| STRALIS | AS 440S50, AT 440S50 | 12.06 - | 4091 | |
| STRALIS | AS 440S54 | 02.02 - | 4091 | |
| STRALIS | AS 440S54 | 02.02 - | 4091 | |
| STRALIS | AS 440S54 | 02.02 - | 4091 | |
| STRALIS | AS 440S54, ES 440S54 | 02.02 - | 4091 | |
| STRALIS | AS 440S56 | 05.06 - | 4091 | |
| STRALIS | AS 440S56 | 07.06 - | 4091 | |
| STRALIS | AS 440S56, AT 440S56 | 12.06 - | 4091 | |
| STRALIS | AS 440S56, AT 440S56 | 12.06 - | 4091 | |
| STRALIS | AT 440S42 | 07.06 - | 4091 | |
| STRALIS | AT 440S43 | 06.03 - | 4091 | |
| STRALIS | AT 440S43 | 06.03 - | 4091 | |
| STRALIS | AT 440S45 | 07.06 - | 4091 | |
| STRALIS | ES 440S48 | 10.04 - | 4091 | |
| STRALIS | ES 440S54 | 10.04 - | 4091 | |
| STRATOR | ASN 440S42T | 04.10 - | 4091 | |
| STRATOR | ASN 440S42TX | 04.10 - | 4091 | |
| STRATOR | ASN 440S45T | 04.10 - | 4091 | |
| STRATOR | ASN 440S45TX | 04.10 - | 4091 | |
| STRATOR | ASN 440S50T | 04.10 - | 4091 | |
| STRATOR | ASN 440S50TX | 04.10 - | 4091 | |
| STRATOR | ASN 440S50TZ | 04.10 - | 4091 | |
| STRATOR | ASN 440S56T | 04.10 - | 4091 | |
| STRATOR | ASN 440S56TX | 04.10 - | 4091 | |
| STRATOR | ASN 440S56TZ | 04.10 - | 4091 | |
| TRAKKER | AD 190T27, AT 190T27 | 06.05 - | 4091 | |
| TRAKKER | AD 190T31, AT 190T31 | 10.04 - | 4091 | |
| TRAKKER | AD 190T33, AT 190T33 | 03.06 - | 4091 | |
| TRAKKER | AD 190T35 W, AT 190T35 W, AD 190T36 W, AT 190T36 W | 01.05 - | 4091 | |
| TRAKKER | AD 190T35, AD 190T36, AT 190T35, AT 190T36 | 10.04 - | 4091 | |
| TRAKKER | AD 190T35, AT 190T35, AD 190T36, AT 190T36 | 06.05 - | 4091 | |
| TRAKKER | AD 190T38 W, AT 190T38 W | 06.05 - | 4091 | |
| TRAKKER | AD 190T38, AT 190T38 | 10.04 - | 4091 | |
| TRAKKER | AD 190T38, AT 190T38 | 10.04 - | 4091 | |
| TRAKKER | AD 190T41, AT 190T41 | 03.06 - | 4091 | |
| TRAKKER | AD 190T44 W, AT 190T44 W, AD 190T45W, AT 190T45W | 06.05 - | 4091 | |

| MAKE & MODEL | | YEAR | | |
|---|---|---|---|---|
| **IVECO** | | | | |
| TRAKKER | AD 190T44, AD 190T45, AT 190T44, AT 190T45 | 10.04 - | 4091 | |
| TRAKKER | AD 190T44, AT 190T44, AD 19T45, AT 190T45 | 06.05 - | 4091 | |
| TRAKKER | AD 260T31 B | 06.05 - | 4091 | |
| TRAKKER | AD 260T31, AT 260T31 | 10.04 - | 4091 | |
| TRAKKER | AD 260T31, AT 260T31 | 10.04 - | 4091 | |
| TRAKKER | AD 260T33 B | 07.07 - | 4091 | |
| TRAKKER | AD 260T33, AD 380T33, AT 260T33, AT 380T33 | 03.06 - | 4091 | |
| TRAKKER | AD 260T35 B | 06.05 - | 4091 | |
| TRAKKER | AD 260T35 W, AT 260T35 W | 06.05 - | 4091 | |
| TRAKKER | AD 260T35, 260T36, 380T36, AT 260T35, 260T36, 380T36 | 10.04 - | 4091 | |
| TRAKKER | AD 260T35, AT 260T35 | 10.04 - | 4091 | |
| TRAKKER | AD 260T36 B | 07.07 - | 4091 | |
| TRAKKER | AD 260T36, AT 260T36 | 03.06 - | 4091 | |
| TRAKKER | AD 260T38 , AT 260T38 | 10.04 - | 4091 | |
| TRAKKER | AD 260T38 B | 06.05 - | 4091 | |
| TRAKKER | AD 260T38 W, AT 260T38 W | 06.05 - | 4091 | |
| TRAKKER | AD 260T38, AD 260T38 /P, AT 260T38 | | 4091 | |
| TRAKKER | AD 260T41, AD 380T41, AT 260T41, AT 380T41 | 03.06 - | 4091 | |
| TRAKKER | AD 260T44 W, AT 260T44 W | 06.05 - | 4091 | |
| TRAKKER | AD 260T44, AD 260T44 /P, AT 260T44 | 06.05 - | 4091 | |
| TRAKKER | AD 260T45, AD 380T45, AT 260T45, AT 380T45 | 03.06 - | 4091 | |
| TRAKKER | AD 260T48, AT 260T48 | 06.05 - | 4091 | |
| TRAKKER | AD 260T50, AD 380T50, AT 260T50, AT 380T50 | 03.06 - | 4091 | |
| TRAKKER | AD 340T35 B, AT 340T35 B | 06.05 - | 4091 | |
| TRAKKER | AD 340T35, AT 340T35 | 06.05 - | 4091 | |
| TRAKKER | AD 340T36 B | 06.06 - | 4091 | |
| TRAKKER | AD 340T36, AT 340T36 | 03.06 - | 4091 | |
| TRAKKER | AD 340T36, AT 340T36 | 07.07 - | 4091 | |
| TRAKKER | AD 340T38 B, AT 34T38 B | 06.05 - | 4091 | |
| TRAKKER | AD 340T41 B | 06.06 - | 4091 | |
| TRAKKER | AD 340T41, AT 340T41 | 03.06 - | 4091 | |
| TRAKKER | AD 340T41, AT 340T41 | 06.06 - | 4091 | |
| TRAKKER | AD 340T44 B, AT 340T44 B | 06.05 - | 4091 | |
| TRAKKER | AD 340T44, AT 340T44 | 06.05 - | 4091 | |
| TRAKKER | AD 340T45 B | 06.06 - | 4091 | |
| TRAKKER | AD 340T45, AD 340T45 /P, AT 340T45, AT 34T45 /P | 06.06 - | 4091 | |
| TRAKKER | AD 340T45, AT 340T45 | 03.06 - | 4091 | |
| TRAKKER | AD 340T50, AT 340T50 | 03.06 - | 4091 | |
| TRAKKER | AD 380T35 | 01.05 - | 4091 | |
| TRAKKER | AD 380T36 W | 04.06 - | 4091 | |
| TRAKKER | AD 380T38 B | 06.05 - | 4091 | |
| TRAKKER | AD 380T38 W, AT 380T38 W | 06.05 - | 4091 | |
| TRAKKER | AD 380T38, AT 380T38 | 01.05 - | 4091 | |
| TRAKKER | AD 380T41 W, AT 380T41 W | 09.06 - | 4091 | |
| TRAKKER | AD 380T41, AT 380T41 | 09.06 - | 4091 | |
| TRAKKER | AD 380T42 W | 01.05 - | 4091 | |
| TRAKKER | AD 380T44 B | 06.05 - | 4091 | |
| TRAKKER | AD 380T44 W, AT 380T44 W | 06.05 - | 4091 | |
| TRAKKER | AD 380T44, AT 380T44 | 06.05 - | 4091 | |
| TRAKKER | AD 380T45 W, AT 380T45 W | 09.06 - | 4091 | |
| TRAKKER | AD 380T48, AD 380T48 | 06.05 - | 4091 | |
| TRAKKER | AD 380T50 | 03.07 - | 4091 | |
| TRAKKER | AD 400T35 T, AT 400T35 T | 06.05 - | 4091 | |
| TRAKKER | AD 400T36 T, AT 400T36 T | 10.04 - | 4091 | |
| TRAKKER | AD 400T38 T, AT 400T38 T | 06.05 - | 4091 | |
| TRAKKER | AD 400T38 WT, AT 400T38 WT | 06.05 - | 4091 | |
| TRAKKER | AD 400T41 T, AT 400T41 T | 03.06 - | 4091 | |
| TRAKKER | AD 400T44 T, AT 400T44 T | 06.05 - | 4091 | |
| TRAKKER | AD 400T44 WT, AT 400T44 WT | 06.05 - | 4091 | |
| TRAKKER | AD 400T45 T, AT 400T45 T | 03.06 - | 4091 | |
| TRAKKER | AD 400T50 T, AT 400T50 T | 03.06 - | 4091 | |
| TRAKKER | AD 410T35 | 02.05 - | 4091 | |
| TRAKKER | AD 410T36, AT 410T36 | 03.06 - | 4091 | |
| TRAKKER | AD 410T38 | 02.05 - | 4091 | |
| TRAKKER | AD 410T38 B, AT 410T38 B | 06.05 - | 4091 | |
| TRAKKER | AD 410T38 H | 04.05 - | 4091 | |
| TRAKKER | AD 410T41, AT 410T41 | 03.06 - | 4091 | |
| TRAKKER | AD 410T41, AT 410T41 | 06.06 - | 4091 | |
| TRAKKER | AD 410T44 B, AT 410T44 B | 06.05 - | 4091 | |
| TRAKKER | AD 410T44 W , AT 410T44 W | 06.05 - | 4091 | |
| TRAKKER | AD 410T44, AT 410T44 | 02.05 - | 4091 | |
| TRAKKER | AD 410T45 W | 07.07 - | 4091 | |
| TRAKKER | AD 410T45, AT 410T45 | 03.06 - | 4091 | |
| TRAKKER | AD 410T45, AT 410T45 | 06.06 - | 4091 | |
| TRAKKER | AD 410T48 B, AT 410T48 B | 06.05 - | 4091 | |
| TRAKKER | AD 410T48, AT 410T48 | 02.05 - | 4091 | |

| MAKE & MODEL | | YEAR | | |
|---|---|---|---|---|
| **IVECO** | | | | |
| TRAKKER | AD 410T50, AT 410T50 | 03.06 - | 4091 | |
| TRAKKER | AD 410T50, AT 410T50 | 06.06 - | 4091 | |
| TRAKKER | AD 440T38 T, AT 440T38 T | 04.05 - | 4091 | |
| TRAKKER | AD 440T41 T, AT 440T41 T | 03.06 - | 4091 | |
| TRAKKER | AD 440T44 B | 06.05 - | 4091 | |
| TRAKKER | AD 440T44 T, AT 440T44T | 06.05 - | 4091 | |
| TRAKKER | AD 440T45 T, AT 440T45 T | 03.06 - | 4091 | |
| TRAKKER | AD 440T50 T, AT 440T50 T | 03.06 - | 4091 | |
| TRAKKER | AD 720T38 T, AT 720T38 T | 06.05 - | 4091 | |
| TRAKKER | AD 720T38 WT, AT 720T38 WT | 06.05 - | 4091 | |
| TRAKKER | AD 720T41 T, AT 720T41 T | 03.06 - | 4091 | |
| TRAKKER | AD 720T44 T, AT 720T44 T | 06.05 - | 4091 | |
| TRAKKER | AD 720T44 WT, AT 720T44 WT | 06.05 - | 4091 | |
| TRAKKER | AD 720T45 T, AT 720T45 T | 03.06 - | 4091 | |
| TRAKKER | AD 720T48 T, AT 720T48 T | 06.05 - | 4091 | |
| TRAKKER | AD 720T50 T, AT 720T50 T, AT 720T50 TP | 03.06 - | 4091 | |
| TRAKKER | AT 340T38 | 03.05 - | 4091 | |
| TRAKKER | AT 340T38 W | 09.05 - | 4091 | |
| TRAKKER | AT 400T42 TH | 06.05 - | 4091 | |
| TRAKKER | AT 410T54 T | 01.05 - | 4091 | |
| TRAKKER | AT 720T42 T | 04.05 - | 4091 | |
| TRAKKER | AT 720T42 WT | 06.05 - | 4091 | |
| **JUMBO DORSEY** | | | | |
| | | | 3818 | 3818 |
| **KASSBOHRER** | | | | |
| S 300 NC | | *91-* | 3498 | 3498 |
| S 315 HD-HDH | | *91-* | 3498 | 3498 |
| **KOGEL DORSEY** | | | | |
| | | 04- | | 3902 |
| | | 04- | | 3902/1 |
| **KÖGEL** | | | | |
| TRAX | TRAX V_Eq. Solo LRG764,LRG765 | 07- | | 4164 |
| **LECIÑENA** | | | | |
| Eje/Axle | Llanta 22" | *98-* | 3664 | 3664 |
| Eje/Axle | Llanta 19.5" (SB/SN6000 SB/SN6500) | *99-* | | 3789 |
| | Llanta 19.5" (SB/SN6000 SB/SN6500) | *95-* | | 3789 |
| **LECITRAILER** | | | | |
| Eje/Axle | Llanta 22" | *98-* | 3664 | 3664 |
| Eje/Axle | Llanta 19.5" (SB/SN6000 SB/SN6500) | *99-* | | 3789 |
| | Llanta 19.5" (SB/SN6000 SB/SN6500) | *95-* | | 3789 |
| **MAN** | | | | |
| 12-180 | - | 05- | 3908 | 3908 |
| 19.352 | | *91-* | 3498 | 3498 |
| EL | 12.0 EL 262 4x2 17.6 Ton. | *98-* | 3497 | 56268 |
| EL | 12.0 EL 262 4x2 17.6 Ton. | *98-* | 3497/1 | 56268 |
| EL | 6.9 EL 202/EL 222 4x2 17.6 Ton. | *93-93* | 3497 | 56268 |
| EL | 6.9 EL 202/EL 222 4x2 17.6 Ton. | *93-97* | 3497 | 56268 |
| EL | 6.9 EL 202/EL 222 4x2 17.6 Ton. | *93-93* | 3497/1 | 56268 |
| EL | 6.9 EL 202/EL 222 4x2 17.6 Ton. | *93-97* | 3497/1 | 56268 |
| EL | 6.9 EL 202/EL 262 4x2 17.6 Ton. | *94-97* | 3497 | 56268 |
| EL | 6.9 EL 202/EL 262 4x2 17.6 Ton. | *94-97* | 3497/1 | 56268 |
| EM | 6.9 EM 192 4x2 11.7 Ton. | *93-97* | 3497 | |
| EM | 6.9 EM 222/EM 223 4x2 11.7 Ton. | *93-97* | 3497 | |
| EM | 6.9 EM 192 4x2 11.7 Ton. | *93-97* | 3497/1 | |
| EM | 6.9 EM 222/EM 223 4x2 11.7 Ton. | *93-97* | 3497/1 | |
| F 90 (19 T) | 18.2 19.502 F/FL/FLL 4x2 19 Ton. | *90-93* | 3497 | 56268 |
| F 90 (19 T) | 18.2 19.502 F/FL/FLL 4x2 19 Ton. | *93-96* | 3497 | 56268 |
| F 90 (19 T) | 18.2 19.502 F/FL/FLL 4x2 19 Ton. | *90-93* | 3497/1 | 56268 |
| F 90 (19 T) | 18.2 19.502 F/FL/FLL 4x2 19 Ton. | *93-96* | 3497/1 | 56268 |
| F 90 (19 T) | 18.2 19.502 FS/FLS/FLLS 4x2 19 Ton. | *90-93* | 3497 | 56268 |
| F 90 (19 T) | 18.2 19.502 FS/FLS/FLLS 4x2 19 Ton. | *93-96* | 3497 | 56268 |
| F 90 (19 T) | 18.2 19.502 FS/FLS/FLLS 4x2 19 Ton. | *90-96* | 3497/1 | 56268 |
| F 90 (24 T) | 18.2 24.502 DF 6x4 24 Ton. | *90-91* | 3497 | 56268 |
| F 90 (24 T) | 18.2 24.502 DF 6x4 24 Ton. | *90-91* | 3497/1 | 56268 |
| F 90 (24 T) | 18.2 24.502 DFK 6x4 24 Ton. | *90-91* | 3497 | 56268 |
| F 90 (24 T) | 18.2 24.502 DFK 6x4 24 Ton. | *90-91* | 3497/1 | 56268 |
| F 90 (24 T) | 18.2 24.502 DFS 6x4 24 Ton. | *90-91* | 3497 | 56268 |
| F 90 (24 T) | 18.2 24.502 DFS 6x4 24 Ton. | *90-91* | 3497/1 | 56268 |
| F 90 (24 T) | 18.2 24.502 FNL 6x2 24 Ton. | *90-91* | 3497 | 56268 |
| F 90 (24 T) | 18.2 24.502 FNL 6x2 24 Ton. | *90-91* | 3497/1 | 56268 |
| F 90 (25 T) | 18.2 25.502 DF 6x4 25 Ton. | *90-91* | 3497 | 56268 |
| F 90 (25 T) | 18.2 25.502 DF 6x4 25 Ton. | *90-91* | 3497/1 | 56268 |
| F 90 (25 T) | 18.2 25.502 DFS 6x4 25 Ton. | *90-91* | 3497 | 56268 |
| F 90 (25 T) | 18.2 25.502 DFS 6x4 25 Ton. | *90-91* | 3497/1 | 56268 |

| MAKE & MODEL | | YEAR | 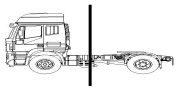 | |
|---|---|---|---|---|
| **MAN** | | | | |
| F 90 (26 T) | 18.2 26.502 DF 6x4 26 Ton. | *90-93* | 3497 | 56268 |
| F 90 (26 T) | 18.2 26.502 DF 6x4 26 Ton. | *93-96* | 3497 | 56268 |
| F 90 (26 T) | 18.2 26.502 DF 6x4 26 Ton. | *90-93* | 3497/1 | 56268 |
| F 90 (26 T) | 18.2 26.502 DF 6x4 26 Ton. | *93-96* | 3497/1 | 56268 |
| F 90 (26 T) | 18.2 26.502 DFS/DFLS 6x4 26 Ton. | *90-93* | 3497 | 56268 |
| F 90 (26 T) | 18.2 26.502 DFS/DFLS 6x4 26 Ton. | *93-96* | 3497 | 56268 |
| F 90 (26 T) | 18.2 26.502 DFS/DFLS 6x4 26 Ton. | *90-93* | 3497/1 | 56268 |
| F 90 (26 T) | 18.2 26.502 DFS/DFLS 6x4 26 Ton. | *93-96* | 3497/1 | 56268 |
| F 90 (26 T) | 18.2 26.502 FNL/FNLL 6x2 26 Ton. | *93-96* | 3497 | 56268 |
| F 90 (26 T) | 18.2 26.502 FNL/FNLL 6x2 26 Ton. | *91-93* | 3497 | 56268 |
| F 90 (26 T) | 18.2 26.502 FNL/FNLL 6x2 26 Ton. | *93-96* | 3497/1 | 56268 |
| F 90 (26 T) | 18.2 26.502 FNL/FNLL 6x2 26 Ton. | *91-93* | 3497/1 | 56268 |
| F 90 (27 T) | 18.2 27.502 DF/DFS 6x4 27 Ton. | *89-93* | 3497 | 56268 |
| F 90 (27 T) | 18.2 27.502 DF/DFS 6x4 27 Ton. | *93-* | 3497 | 56268 |
| F 90 (27 T) | 18.2 27.502 DF/DFS 6x4 27 Ton. | *89-93* | 3497/1 | 56268 |
| F 90 (27 T) | 18.2 27.502 DF/DFS 6x4 27 Ton. | *93-* | 3497/1 | 56268 |
| F 90 (33 T) | 18.2 33.502 DF 6x4 33 Ton. | *91-93* | 3497 | 56268 |
| F 90 (33 T) | 18.2 33.502 DF 6x4 33 Ton. | *93-96* | 3497 | 56268 |
| F 90 (33 T) | 18.2 33.502 DF 6x4 33 Ton. | *91-93* | 3497/1 | 56268 |
| F 90 (33 T) | 18.2 33.502 DF 6x4 33 Ton. | *93-96* | 3497/1 | 56268 |
| F 90 (48 T) | 18.2 48.502VF 6x4 48 Ton. | *89-93* | 3497 | 56268 |
| F 90 (48 T) | 18.2 48.502VF 6x4 48 Ton. | *93-* | 3497 | 56268 |
| F 90 (48 T) | 18.2 48.502VF 6x4 48 Ton. | *89-93* | 3497/1 | 56268 |
| F 90 (48 T) | 18.2 48.502VF 6x4 48 Ton. | *93-* | 3497/1 | 56268 |
| F2000 (19 T) | 10.0 19.273 F/FL/FLL 4x2 19 Ton. | *94-95* | 3497 | 56268 |
| F2000 (19 T) | 10.0 19.273 F/FL/FLL 4x2 19 Ton. | *94-95* | 3497/1 | 56268 |
| F2000 (19 T) | 10.0 19.273 FS/FLS 4x2 19 Ton. | *94-95* | 3497 | 56268 |
| F2000 (19 T) | 10.0 19.273 FS/FLS 4x2 19 Ton. | *94-95* | 3497/1 | 56268 |
| F2000 (19 T) | 10.0 19.293 FC/FLC/FLLC 4x2 19 Ton. | *94-* | 3497 | 56268 |
| F2000 (19 T) | 10.0 19.293 FC/FLC/FLLC 4x2 19 Ton. | *94-* | 3497/1 | 56268 |
| F2000 (19 T) | 10.0 19.293 FS/FLS/FLLS 4x2 19 Ton. | *94-* | 3497 | 56268 |
| F2000 (19 T) | 10.0 19.293 FS/FLS/FLLS 4x2 19 Ton. | *94-* | 3497/1 | 56268 |
| F2000 (19 T) | 10.0 19.323 FC/FLC/FLLC 4x2 19 Ton. | *94-95* | 3497 | 56268 |
| F2000 (19 T) | 10.0 19.323 FC/FLC/FLLC 4x2 19 Ton. | *94-95* | 3497/1 | 56268 |
| F2000 (19 T) | 10.0 19.323 FS/FLS/FLLS 4x2 19 Ton. | *94-95* | 3497 | 56268 |
| F2000 (19 T) | 10.0 19.323 FS/FLS/FLLS 4x2 19 Ton. | *94-95* | 3497/1 | 56268 |
| F2000 (19 T) | 10.0 19.343 FC/FLC/FLLC 4x2 19 Ton. | *94-* | 3497 | 56268 |
| F2000 (19 T) | 10.0 19.343 FC/FLC/FLLC 4x2 19 Ton. | *94-* | 3497/1 | 56268 |
| F2000 (19 T) | 10.0 19.343 FS/FLS/FLLS 4x2 19 Ton. | *94-* | 3497 | 56268 |
| F2000 (19 T) | 10.0 19.343 FS/FLS/FLLS 4x2 19 Ton. | *94-* | 3497/1 | 56268 |
| F2000 (19 T) | 12.0 19.233 FCNG 4x2 19 Ton. | *96-* | 3497 | 56268 |
| F2000 (19 T) | 12.0 19.233 FCNG 4x2 19 Ton. | *96-* | 3497/1 | 56268 |
| F2000 (19 T) | 12.0 19.314 FC/FLC/FLLC 4x2 19 Ton. | *98-* | 3497 | 56268 |
| F2000 (19 T) | 12.0 19.314 FC/FLC/FLLC 4x2 19 Ton. | *98-* | 3497/1 | 56268 |
| F2000 (19 T) | 12.0 19.314 FS/FLS/FLLS 4x2 19 Ton. | *98-* | 3497 | 56268 |
| F2000 (19 T) | 12.0 19.314 FS/FLS/FLLS 4x2 19 Ton. | *98-* | 3497/1 | 56268 |
| F2000 (19 T) | 12.0 19.364 FC/FLC/FLLC 4x2 19 Ton. | *98-* | 3497 | 56268 |
| F2000 (19 T) | 12.0 19.364 FC/FLC/FLLC 4x2 19 Ton. | *98-* | 3497/1 | 56268 |
| F2000 (19 T) | 12.0 19.364 FS/FLS/FLLS 4x2 19 Ton. | *98-* | 3497 | 56268 |
| F2000 (19 T) | 12.0 19.364 FS/FLS/FLLS 4x2 19 Ton. | *98-* | 3497/1 | 56268 |
| F2000 (19 T) | 12.0 19.373 FC/FLC/FLLC 4x2 19 Ton. | *94-95* | 3497 | 56268 |
| F2000 (19 T) | 12.0 19.373 FC/FLC/FLLC 4x2 19 Ton. | *94-95* | 3497/1 | 56268 |
| F2000 (19 T) | 12.0 19.373 FS/FLS/FLLS 4x2 19 Ton. | *94-95* | 3497 | 56268 |
| F2000 (19 T) | 12.0 19.373 FS/FLS/FLLS 4x2 19 Ton. | *94-95* | 3497/1 | 56268 |
| F2000 (19 T) | 12.0 19.403 FC/FLC/FLLC 4x2 19 Ton. | *94-* | 3497 | 56268 |
| F2000 (19 T) | 12.0 19.403 FC/FLC/FLLC 4x2 19 Ton. | *94-* | 3497/1 | 56268 |
| F2000 (19 T) | 12.0 19.403 FS/FLS/FLLS 4x2 19 Ton. | *94-* | 3497 | 56268 |
| F2000 (19 T) | 12.0 19.403 FS/FLS/FLLS 4x2 19 Ton. | *94-* | 3497/1 | 56268 |
| F2000 (19 T) | 12.0 19.414 FC/FLC/FLLC 4x2 19 Ton. | *98-* | 3497 | 56268 |
| F2000 (19 T) | 12.0 19.414 FC/FLC/FLLC 4x2 19 Ton. | *98-* | 3497/1 | 56268 |
| F2000 (19 T) | 12.0 19.414 FS/FLS/FLLS 4x2 19 Ton. | *98-* | 3497 | 56268 |
| F2000 (19 T) | 12.0 19.414 FS/FLS/FLLS 4x2 19 Ton. | *98-* | 3497/1 | 56268 |
| F2000 (19 T) | 12.0 19.423 FC/FLC/FLLC 4x2 19 Ton. | *94-95* | 3497 | 56268 |
| F2000 (19 T) | 12.0 19.423 FC/FLC/FLLC 4x2 19 Ton. | *94-95* | 3497/1 | 56268 |
| F2000 (19 T) | 12.0 19.423 FS/FLS/FLLS 4x2 19 Ton. | *94-95* | 3497 | 56268 |
| F2000 (19 T) | 12.0 19.423 FS/FLS/FLLS 4x2 19 Ton. | *94-95* | 3497/1 | 56268 |
| F2000 (19 T) | 12.8 19.463 FC/FLC/FLLC 4x2 19 Ton. | *94-* | 3497 | 56268 |
| F2000 (19 T) | 12.8 19.463 FC/FLC/FLLC 4x2 19 Ton. | *94-* | 3497/1 | 56268 |
| F2000 (19 T) | 12.8 19.463 FS/FLS/FLLS 4x2 19 Ton. | *94-* | 3497 | 56268 |
| F2000 (19 T) | 12.8 19.463 FS/FLS/FLLS 4x2 19 Ton. | *94-* | 3497/1 | 56268 |
| F2000 (19 T) | 12.8 19.464 FC/FLC/FLLC 4x2 19 Ton. | *98-* | 3497 | 56268 |
| F2000 (19 T) | 12.8 19.464 FC/FLC/FLLC 4x2 19 Ton. | *98-* | 3497/1 | 56268 |
| F2000 (19 T) | 12.8 19.464 FS/FLS/FLLS 4x2 19 Ton. | *98-* | 3497 | 56268 |
| F2000 (19 T) | 12.8 19.464 FS/FLS/FLLS 4x2 19 Ton. | *98-* | 3497/1 | 56268 |
| F2000 (19 T) | 18.3 19.603 FLS 4x2 19 Ton. | *96-* | 3497 | 56268 |
| F2000 (19 T) | 18.3 19.603 FLS 4x2 19 Ton. | *96-* | 3497/1 | 56268 |

| MAKE & MODEL | | YEAR | 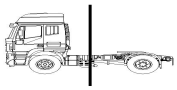 | |
|---|---|---|---|---|
| **MAN** | | | | |
| F2000 (23 T) | 10.0 23.293 FNLLC 6x2 23 Ton. | 94- | 3497 | 56268 |
| F2000 (23 T) | 10.0 23.293 FNLLC 6x2 23 Ton. | 94- | 3497/1 | 56268 |
| F2000 (23 T) | 10.0 23.343 FNLLC 6x2 23 Ton. | 94-00 | 3497 | 56268 |
| F2000 (23 T) | 10.0 23.343 FNLLC 6x2 23 Ton. | 00- | 3497 | 56268 |
| F2000 (23 T) | 10.0 23.343 FNLLC 6x2 23 Ton. | 94-00 | 3497/1 | 56268 |
| F2000 (23 T) | 10.0 23.343 FNLLC 6x2 23 Ton. | 00- | 3497/1 | 56268 |
| F2000 (23 T) | 12.0 23.403 FNLLC 6x2 23 Ton. | 94- | 3497 | 56268 |
| F2000 (23 T) | 12.0 23.403 FNLLC 6x2 23 Ton. | 94- | 3497/1 | 56268 |
| F2000 (23 T) | 12.0 26.233 FVLCNG 6x2 23 Ton. | 96- | 3497 | 56268 |
| F2000 (23 T) | 12.0 26.233 FVLCNG 6x2 23 Ton. | 96- | 3497/1 | 56268 |
| F2000 (23 T) | 12.8 23.463 FNLLC 6x2 23 Ton. | 94- | 3497 | 56268 |
| F2000 (23 T) | 12.8 23.463 FNLLC 6x2 23 Ton. | 94- | 3497/1 | 56268 |
| F2000 (26 T) | 10.0 26.273 DFC/DFLC 6x4 26 Ton. | 94-95 | 3497 | 5623 |
| F2000 (26 T) | 10.0 26.273 DFC/DFLC 6x4 26 Ton. | 94-95 | 3497/1 | 5623 |
| F2000 (26 T) | 10.0 26.273 DFS/DFLS 6x4 26 Ton. | 94-95 | 3497 | 5623 |
| F2000 (26 T) | 10.0 26.273 DFS/DFLS 6x4 26 Ton. | 94-95 | 3497/1 | 5623 |
| F2000 (26 T) | 10.0 26.273 FNLC/FNLLC/FVLC 6x2/2/4 26 Ton. | 94-95 | 3497 | 56268 |
| F2000 (26 T) | 10.0 26.273 FNLC/FNLLC/FVLC 6x2/2/4 26 Ton. | 94-95 | 3497/1 | 56268 |
| F2000 (26 T) | 10.0 26.273 FNLS/FVLS 6x2/2/4 26 Ton. | 94-95 | 3497 | 56268 |
| F2000 (26 T) | 10.0 26.273 FNLS/FVLS 6x2/2/4 26 Ton. | 94-95 | 3497/1 | 56268 |
| F2000 (26 T) | 10.0 26.293 DFC/DFLC 6x4 26 Ton. | 94- | 3497 | 5623 |
| F2000 (26 T) | 10.0 26.293 DFC/DFLC 6x4 26 Ton. | 94- | 3497/1 | 5623 |
| F2000 (26 T) | 10.0 26.293 DFS/DFLS 6x4 26 Ton. | 94- | 3497 | 5623 |
| F2000 (26 T) | 10.0 26.293 DFS/DFLS 6x4 26 Ton. | 94- | 3497/1 | 5623 |
| F2000 (26 T) | 10.0 26.293 FNLC/FNLLC/FVLC 6x2/2/4 26 Ton. | 94- | 3497 | 56268 |
| F2000 (26 T) | 10.0 26.293 FNLC/FNLLC/FVLC 6x2/2/4 26 Ton. | 94- | 3497/1 | 56268 |
| F2000 (26 T) | 10.0 26.293 FNLS/FVLS 6x2/2/4 26 Ton. | 94- | 3497 | 56268 |
| F2000 (26 T) | 10.0 26.293 FNLS/FVLS 6x2/2/4 26 Ton. | 94- | 3497/1 | 56268 |
| F2000 (26 T) | 10.0 26.323 DFC/DFLC 6x4 26 Ton. | 94-95 | 3497 | 5623 |
| F2000 (26 T) | 10.0 26.323 DFC/DFLC 6x4 26 Ton. | 94-95 | 3497/1 | 5623 |
| F2000 (26 T) | 10.0 26.323 DFS/DFLS 6x4 26 Ton. | 94-95 | 3497 | 5623 |
| F2000 (26 T) | 10.0 26.323 DFS/DFLS 6x4 26 Ton. | 94-95 | 3497/1 | 5623 |
| F2000 (26 T) | 10.0 26.323 FNLC/FNLLC/FVLC 6x2/2/4 26 Ton. | 94-95 | 3497 | 56268 |
| F2000 (26 T) | 10.0 26.323 FNLC/FNLLC/FVLC 6x2/2/4 26 Ton. | 94-95 | 3497/1 | 56268 |
| F2000 (26 T) | 10.0 26.323 FNLS/FVLS 6x2/2/4 26 Ton. | 94-95 | 3497 | 56268 |
| F2000 (26 T) | 10.0 26.323 FNLS/FVLS 6x2/2/4 26 Ton. | 94-95 | 3497/1 | 56268 |
| F2000 (26 T) | 10.0 26.343 DFC/DFLC 6x4 26 Ton. | 94- | 3497 | 5623 |
| F2000 (26 T) | 10.0 26.343 DFC/DFLC 6x4 26 Ton. | 94- | 3497/1 | 5623 |
| F2000 (26 T) | 10.0 26.343 DFS/DFLS 6x4 26 Ton. | 94- | 3497 | 5623 |
| F2000 (26 T) | 10.0 26.343 DFS/DFLS 6x4 26 Ton. | 94- | 3497/1 | 5623 |
| F2000 (26 T) | 10.0 26.343 FNLC/FNLLC/FVLC 6x2/2/4 26 Ton. | 94- | 3497 | 56268 |
| F2000 (26 T) | 10.0 26.343 FNLC/FNLLC/FVLC 6x2/2/4 26 Ton. | 94- | 3497/1 | 56268 |
| F2000 (26 T) | 10.0 26.343 FNLS/FVLS 6x2/2/4 26 Ton. | 94- | 3497 | 56268 |
| F2000 (26 T) | 10.0 26.343 FNLS/FVLS 6x2/2/4 26 Ton. | 94- | 3497/1 | 56268 |
| F2000 (26 T) | 12.0 26.373 DFC/DFLC 6x4 26 Ton. | 94-95 | 3497 | 5623 |
| F2000 (26 T) | 12.0 26.373 DFC/DFLC 6x4 26 Ton. | 94-95 | 3497/1 | 5623 |
| F2000 (26 T) | 12.0 26.373 DFS/DFLS 6x4 26 Ton. | 94-95 | 3497 | 5623 |
| F2000 (26 T) | 12.0 26.373 DFS/DFLS 6x4 26 Ton. | 94-95 | 3497/1 | 5623 |
| F2000 (26 T) | 12.0 26.373 FNLC/FNLLC/FVLC 6x2/2/4 26 Ton. | 94-95 | 3497 | 56268 |
| F2000 (26 T) | 12.0 26.373 FNLC/FNLLC/FVLC 6x2/2/4 26 Ton. | 94-95 | 3497/1 | 56268 |
| F2000 (26 T) | 12.0 26.373 FNLS/FVLS 6x2/2/4 26 Ton. | 94-95 | 3497 | 56268 |
| F2000 (26 T) | 12.0 26.373 FNLS/FVLS 6x2/2/4 26 Ton. | 94-95 | 3497/1 | 56268 |
| F2000 (26 T) | 12.0 26.403 DFC/DFLC 6x4 26 Ton. | 94- | 3497 | 5623 |
| F2000 (26 T) | 12.0 26.403 DFC/DFLC 6x4 26 Ton. | 94- | 3497/1 | 5623 |
| F2000 (26 T) | 12.0 26.403 DFS/DFLS 6x4 26 Ton. | 94- | 3497 | 5623 |
| F2000 (26 T) | 12.0 26.403 DFS/DFLS 6x4 26 Ton. | 94- | 3497/1 | 5623 |
| F2000 (26 T) | 12.0 26.403 FNLC/FNLLC/FVLC 6x2/2/4 26 Ton. | 00- | 3497 | 56268 |
| F2000 (26 T) | 12.0 26.403 FNLC/FNLLC/FVLC 6x2/2/4 26 Ton. | 94-00 | 3497 | 56268 |
| F2000 (26 T) | 12.0 26.403 FNLC/FNLLC/FVLC 6x2/2/4 26 Ton. | 00- | 3497/1 | 56268 |
| F2000 (26 T) | 12.0 26.403 FNLC/FNLLC/FVLC 6x2/2/4 26 Ton. | 94-00 | 3497/1 | 56268 |
| F2000 (26 T) | 12.0 26.403 FNLS/FVLS 6x2/2/4 26 Ton. | 94- | 3497 | 56268 |
| F2000 (26 T) | 12.0 26.403 FNLS/FVLS 6x2/2/4 26 Ton. | 94- | 3497/1 | 56268 |
| F2000 (26 T) | 12.0 26.423 DFC/DFLC 6x4 26 Ton. | 94-95 | 3497 | 5623 |
| F2000 (26 T) | 12.0 26.423 DFC/DFLC 6x4 26 Ton. | 94-95 | 3497/1 | 5623 |
| F2000 (26 T) | 12.0 26.423 DFS/DFLS 6x4 26 Ton. | 94-95 | 3497 | 5623 |
| F2000 (26 T) | 12.0 26.423 DFS/DFLS 6x4 26 Ton. | 94-95 | 3497/1 | 5623 |
| F2000 (26 T) | 12.0 26.423 FNLC/FNLLC/FVLC 6x2/2/4 26 Ton. | 94-95 | 3497 | 56268 |
| F2000 (26 T) | 12.0 26.423 FNLC/FNLLC/FVLC 6x2/2/4 26 Ton. | 94-95 | 3497/1 | 56268 |
| F2000 (26 T) | 12.0 26.423 FNLS/FVLS 6x2/2/4 26 Ton. | 94-95 | 3497 | 56268 |
| F2000 (26 T) | 12.0 26.423 FNLS/FVLS 6x2/2/4 26 Ton. | 94-95 | 3497/1 | 56268 |
| F2000 (26 T) | 12.8 26.463 DFC/DFLC 6x4 26 Ton. | 94- | 3497 | 5623 |
| F2000 (26 T) | 12.8 26.463 DFC/DFLC 6x4 26 Ton. | 94- | 3497/1 | 5623 |
| F2000 (26 T) | 12.8 26.463 DFS/DFLS 6x4 26 Ton. | 00- | 3497 | 5623 |
| F2000 (26 T) | 12.8 26.463 DFS/DFLS 6x4 26 Ton. | 94-00 | 3497 | 5623 |
| F2000 (26 T) | 12.8 26.463 DFS/DFLS 6x4 26 Ton. | 00- | 3497/1 | 5623 |
| F2000 (26 T) | 12.8 26.463 DFS/DFLS 6x4 26 Ton. | 94-00 | 3497/1 | 5623 |

| MAKE & MODEL | | YEAR | 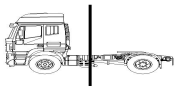 | |
|---|---|---|---|---|
| **MAN** | | | | |
| F2000 (26 T) | 12.8 26.463 FNLC/FNLLC/FVLC 6x2/2/4 26 Ton. | 94- | 3497 | 56268 |
| F2000 (26 T) | 12.8 26.463 FNLC/FNLLC/FVLC 6x2/2/4 26 Ton. | 94- | 3497/1 | 56268 |
| F2000 (26 T) | 12.8 26.463 FNLS/FVLS 6x2/2/4 26 Ton. | 94- | 3497 | 56268 |
| F2000 (26 T) | 12.8 26.463 FNLS/FVLS 6x2/2/4 26 Ton. | 94- | 3497/1 | 56268 |
| F2000 (26 T) | 18.2 26.603 DFC/DFLC 6x4 26 Ton. | 96- | 3497 | 5623 |
| F2000 (26 T) | 18.2 26.603 DFC/DFLC 6x4 26 Ton. | 96- | 3497/1 | 5623 |
| F2000 (26 T) | 18.2 26.603 DFS/DFLS 6x4 26 Ton. | 96- | 3497 | 5623 |
| F2000 (26 T) | 18.2 26.603 DFS/DFLS 6x4 26 Ton. | 96- | 3497/1 | 5623 |
| F2000 (27 T) | 10.0 27.273 DFC 6x4 27 Ton. | 94-95 | 3497 | 5623 |
| F2000 (27 T) | 10.0 27.273 DFC 6x4 27 Ton. | 94-95 | 3497/1 | 5623 |
| F2000 (27 T) | 10.0 27.273 DFS 6x4 27 Ton. | 94-95 | 3497 | 5623 |
| F2000 (27 T) | 10.0 27.273 DFS 6x4 27 Ton. | 94-95 | 3497/1 | 5623 |
| F2000 (27 T) | 10.0 27.293 DFC 6x4 27 Ton. | 94- | 3497 | 5623 |
| F2000 (27 T) | 10.0 27.293 DFC 6x4 27 Ton. | 94- | 3497/1 | 5623 |
| F2000 (27 T) | 10.0 27.293 DFS 6x4 27 Ton. | 94- | 3497 | 5623 |
| F2000 (27 T) | 10.0 27.293 DFS 6x4 27 Ton. | 94- | 3497/1 | 5623 |
| F2000 (27 T) | 10.0 27.323 DFC 6x4 27 Ton. | 94-95 | 3497 | 5623 |
| F2000 (27 T) | 10.0 27.323 DFC 6x4 27 Ton. | 94-95 | 3497/1 | 5623 |
| F2000 (27 T) | 10.0 27.323 DFS 6x4 27 Ton. | 94-95 | 3497 | 5623 |
| F2000 (27 T) | 10.0 27.323 DFS 6x4 27 Ton. | 94-95 | 3497/1 | 5623 |
| F2000 (27 T) | 10.0 27.343 DFC 6x4 27 Ton. | 94- | 3497 | 5623 |
| F2000 (27 T) | 10.0 27.343 DFC 6x4 27 Ton. | 94- | 3497/1 | 5623 |
| F2000 (27 T) | 10.0 27.343 DFS 6x4 27 Ton. | 94- | 3497 | 5623 |
| F2000 (27 T) | 10.0 27.343 DFS 6x4 27 Ton. | 94- | 3497/1 | 5623 |
| F2000 (27 T) | 12.0 27.373 DFC 6x4 27 Ton. | 94-95 | 3497 | 5623 |
| F2000 (27 T) | 12.0 27.373 DFC 6x4 27 Ton. | 94-95 | 3497/1 | 5623 |
| F2000 (27 T) | 12.0 27.373 DFS 6x4 27 Ton. | 94-95 | 3497 | 5623 |
| F2000 (27 T) | 12.0 27.373 DFS 6x4 27 Ton. | 94-95 | 3497/1 | 5623 |
| F2000 (27 T) | 12.0 27.403 DFC 6x4 27 Ton. | 94- | 3497 | 5623 |
| F2000 (27 T) | 12.0 27.403 DFC 6x4 27 Ton. | 94- | 3497/1 | 5623 |
| F2000 (27 T) | 12.0 27.403 DFS 6x4 27 Ton. | 94- | 3497 | 5623 |
| F2000 (27 T) | 12.0 27.403 DFS 6x4 27 Ton. | 94- | 3497/1 | 5623 |
| F2000 (27 T) | 12.0 27.423 DFC 6x4 27 Ton. | 94-95 | 3497 | 5623 |
| F2000 (27 T) | 12.0 27.423 DFC 6x4 27 Ton. | 94-95 | 3497/1 | 5623 |
| F2000 (27 T) | 12.0 27.423 DFS 6x4 27 Ton. | 94-95 | 3497 | 5623 |
| F2000 (27 T) | 12.0 27.423 DFS 6x4 27 Ton. | 94-95 | 3497/1 | 5623 |
| F2000 (27 T) | 12.0 27.463 DFC 6x4 27 Ton. | 94- | 3497 | 5623 |
| F2000 (27 T) | 12.0 27.463 DFC 6x4 27 Ton. | 94- | 3497/1 | 5623 |
| F2000 (27 T) | 12.0 27.463 DFS 6x4 27 Ton. | 94- | 3497 | 5623 |
| F2000 (27 T) | 12.0 27.463 DFS 6x4 27 Ton. | 96- | 3497 | 5623 |
| F2000 (27 T) | 12.0 27.463 DFS 6x4 27 Ton. | 94- | 3497/1 | 5623 |
| F2000 (27 T) | 12.0 27.463 DFS 6x4 27 Ton. | 96- | 3497/1 | 5623 |
| F2000 (27 T) | 18.3 27.603 DFAS 6x6 27 Ton. | 96- | 3497 | 5623 |
| F2000 (27 T) | 18.3 27.603 DFAS 6x6 27 Ton. | 96- | 3497/1 | 5623 |
| F2000 (33 T) | 10.0 33.323 DFC 6x4 33 Ton. | 94- | 3497 | 5623 |
| F2000 (33 T) | 10.0 33.323 DFC 6x4 33 Ton. | 94-95 | 3497 | 5623 |
| F2000 (33 T) | 10.0 33.323 DFC 6x4 33 Ton. | 94- | 3497/1 | 5623 |
| F2000 (33 T) | 10.0 33.323 DFC 6x4 33 Ton. | 94-95 | 3497/1 | 5623 |
| F2000 (33 T) | 10.0 33.323 DFK 6x4 33 Ton. | 94- | 3497 | 5623 |
| F2000 (33 T) | 10.0 33.323 DFK 6x4 33 Ton. | 94-95 | 3497 | 5623 |
| F2000 (33 T) | 10.0 33.323 DFK 6x4 33 Ton. | 94- | 3497/1 | 5623 |
| F2000 (33 T) | 10.0 33.323 DFK 6x4 33 Ton. | 94-95 | 3497/1 | 5623 |
| F2000 (33 T) | 10.0 33.323 DFS 6x4 33 Ton. | 94- | 3497 | 5623 |
| F2000 (33 T) | 10.0 33.323 DFS 6x4 33 Ton. | 94-95 | 3497 | 5623 |
| F2000 (33 T) | 10.0 33.323 DFS 6x4 33 Ton. | 94- | 3497/1 | 5623 |
| F2000 (33 T) | 10.0 33.323 DFS 6x4 33 Ton. | 94-95 | 3497/1 | 5623 |
| F2000 (33 T) | 12.0 33.373 DFC 6x4 33 Ton. | 94-95 | 3497 | 5623 |
| F2000 (33 T) | 12.0 33.373 DFC 6x4 33 Ton. | 94-95 | 3497/1 | 5623 |
| F2000 (33 T) | 12.0 33.373 DFK 6x4 33 Ton. | 94-95 | 3497 | 5623 |
| F2000 (33 T) | 12.0 33.373 DFK 6x4 33 Ton. | 94-95 | 3497/1 | 5623 |
| F2000 (33 T) | 12.0 33.373 DFS 6x4 33 Ton. | 94-95 | 3497 | 5623 |
| F2000 (33 T) | 12.0 33.373 DFS 6x4 33 Ton. | 94-95 | 3497/1 | 5623 |
| F2000 (33 T) | 12.0 33.403 DFC 6x4 33 Ton. | 94- | 3497 | 5623 |
| F2000 (33 T) | 12.0 33.403 DFC 6x4 33 Ton. | 94- | 3497/1 | 5623 |
| F2000 (33 T) | 12.0 33.403 DFK 6x4 33 Ton. | 94- | 3497 | 5623 |
| F2000 (33 T) | 12.0 33.403 DFK 6x4 33 Ton. | 94- | 3497/1 | 5623 |
| F2000 (33 T) | 12.0 33.403 DFS 6x4 33 Ton. | 94- | 3497 | 5623 |
| F2000 (33 T) | 12.0 33.403 DFS 6x4 33 Ton. | 94- | 3497/1 | 5623 |
| F2000 (33 T) | 12.0 33.423 DFC 6x4 33 Ton. | 94-95 | 3497 | 5623 |
| F2000 (33 T) | 12.0 33.423 DFC 6x4 33 Ton. | 94-95 | 3497/1 | 5623 |
| F2000 (33 T) | 12.0 33.423 DFK 6x4 33 Ton. | 94-95 | 3497 | 5623 |
| F2000 (33 T) | 12.0 33.423 DFK 6x4 33 Ton. | 94-95 | 3497/1 | 5623 |
| F2000 (33 T) | 12.0 33.423 DFS 6x4 33 Ton. | 94-95 | 3497 | 5623 |
| F2000 (33 T) | 12.0 33.423 DFS 6x4 33 Ton. | 94-95 | 3497/1 | 5623 |
| F2000 (33 T) | 12.0 33.463 DFS 6x4 33 Ton. | 94- | 3497 | 5623 |
| F2000 (33 T) | 12.0 33.463 DFS 6x4 33 Ton. | 94- | 3497/1 | 5623 |

| MAKE & MODEL | | YEAR | 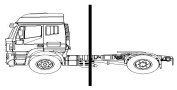 | |
|---|---|---|---|---|
| **MAN** | | | | |
| F2000 (33 T) | 12.8 33.463 DFC 6x4 33 Ton. | 94- | 3497 | 5623 |
| F2000 (33 T) | 12.8 33.463 DFC 6x4 33 Ton. | 94- | 3497/1 | 5623 |
| F2000 (33 T) | 12.8 33.463 DFK 6x4 33 Ton. | 94- | 3497 | 5623 |
| F2000 (33 T) | 12.8 33.463 DFK 6x4 33 Ton. | 94- | 3497/1 | 5623 |
| F2000 (33 T) | 18.3 33.603 DFC 6x4 33 Ton. | 96- | 3497 | 5623 |
| F2000 (33 T) | 18.3 33.603 DFC 6x4 33 Ton. | 96- | 3497/1 | 5623 |
| F2000 (33 T) | 18.3 33.603 DFS 6x4 33 Ton. | 96- | 3497 | 5623 |
| F2000 (33 T) | 18.3 33.603 DFS 6x4 33 Ton. | 96- | 3497/1 | 5623 |
| F2000 (40 T) | 40.403 DFS 40 Ton. | 94- | 3497 | 5623 |
| F2000 (40 T) | 40.463 DFS 40 Ton. | 94- | 3497 | 5623 |
| F2000 (40 T) | 40.403 DFS 40 Ton. | 94- | 3497/1 | 5623 |
| F2000 (40 T) | 40.463 DFS 40 Ton. | 94- | 3497/1 | 5623 |
| L2000 | 8/9/10 Ton | 10/93- | 3565/1 | 3565/1 |
| L2000 ( 7.5 T) | 4.6 8.113 LC, LLC 4x2 7.5 Ton | 00- | 3565 | 3565 |
| L2000 ( 7.5 T) | 4.6 8.113 LC, LLC 4x2 7.5 Ton | 00- | 3565/A | 3565/A |
| L2000 ( 7.5 T) | 4.6 8.113 LC, LLC 4x2 7.5 Ton | 00- | 3565/3 | 3565/3 |
| L2000 ( 7.5 T) | 4.6 8.145 LC, LLC 4x2 7.5 Ton | 00- | 3565 | 3565 |
| L2000 ( 7.5 T) | 4.6 8.145 LC, LLC 4x2 7.5 Ton | 00- | 3565 | 3565 |
| L2000 ( 7.5 T) | 4.6 8.145 LC, LLC 4x2 7.5 Ton | 00- | 3565/A | 3565/A |
| L2000 ( 7.5 T) | 4.6 8.145 LC, LLC 4x2 7.5 Ton | 00- | 3565/A | 3565/A |
| L2000 ( 7.5 T) | 4.6 8.145 LC, LLC 4x2 7.5 Ton | 00- | 3565/3 | 3565/3 |
| L2000 ( 7.5 T) | 4.6 8.145 LC, LLC 4x2 7.5 Ton | 00- | 3565/3 | 3565/3 |
| L2000 ( 7.5 T) | 4.6 8.145 LK 4x2 7.5 Ton | 00- | 3565 | |
| L2000 ( 7.5 T) | 4.6 8.145 LK 4x2 7.5 Ton | 00- | 3565/A | 3565/A |
| L2000 ( 7.5 T) | 4.6 8.145 LK 4x2 7.5 Ton | 00- | 3565/3 | |
| L2000 ( 7.5 T) | 4.6 8.163 LC, LLC 4x2 7.5 Ton | 00- | 3565 | 3565 |
| L2000 ( 7.5 T) | 4.6 8.163 LC, LLC 4x2 7.5 Ton | 00- | 3565/A | 3565/A |
| L2000 ( 7.5 T) | 4.6 8.163 LC, LLC 4x2 7.5 Ton | 00- | 3565/3 | 3565/3 |
| L2000 ( 7.5 T) | 4.6 8.185 LAEC 4WD 7.5 Ton | 00- | 3565 | |
| L2000 ( 7.5 T) | 4.6 8.185 LAEC 4WD 7.5 Ton | 00- | 3565/A | 3565/A |
| L2000 ( 7.5 T) | 4.6 8.185 LAEC 4WD 7.5 Ton | 00- | 3565/3 | |
| L2000 ( 7.5 T) | 4.6 8.185 LAEK 4WD 7.5 Ton | 00- | 3565 | |
| L2000 ( 7.5 T) | 4.6 8.185 LAEK 4WD 7.5 Ton | 00- | 3565/A | 3565/A |
| L2000 ( 7.5 T) | 4.6 8.185 LAEK 4WD 7.5 Ton | 00- | 3565/3 | |
| L2000 ( 7.5 T) | 4.6 8.185 LC, LLC 4x2 7.5 Ton | 00- | 3565 | 3565 |
| L2000 ( 7.5 T) | 4.6 8.185 LC, LLC 4x2 7.5 Ton | 00- | 3565/A | 3565/A |
| L2000 ( 7.5 T) | 4.6 8.185 LC, LLC 4x2 7.5 Ton | 00- | 3565/3 | 3565/3 |
| L2000 ( 7.5 T) | 4.6 8.185 LK 4x2 7.5 Ton | 00- | 3565 | |
| L2000 ( 7.5 T) | 4.6 8.185 LK 4x2 7.5 Ton | 00- | 3565/A | 3565/A |
| L2000 ( 7.5 T) | 4.6 8.185 LK 4x2 7.5 Ton | 00- | 3565/3 | |
| L2000 ( 7.5 T) | 4.6 8.185 LLS 4x2 7.5 Ton | 00- | 3565 | 3565 |
| L2000 ( 7.5 T) | 4.6 8.185 LLS 4x2 7.5 Ton | 00- | 3565/A | 3565/A |
| L2000 ( 7.5 T) | 4.6 8.185 LLS 4x2 7.5 Ton | 00- | 3565/3 | 3565/3 |
| L2000 ( 7.5 T) | 6.9 8.225 LAEC 4WD 7.5 Ton | 00- | 3565 | |
| L2000 ( 7.5 T) | 6.9 8.225 LAEC 4WD 7.5 Ton | 00- | 3565/A | 3565/A |
| L2000 ( 7.5 T) | 6.9 8.225 LAEC 4WD 7.5 Ton | 00- | 3565/3 | |
| L2000 ( 7.5 T) | 6.9 8.225 LAEK 4WD 7.5 Ton | 00- | 3565 | |
| L2000 ( 7.5 T) | 6.9 8.225 LAEK 4WD 7.5 Ton | 00- | 3565/A | 3565/A |
| L2000 ( 7.5 T) | 6.9 8.225 LAEK 4WD 7.5 Ton | 00- | 3565/3 | |
| L2000 ( 7.5 T) | 6.9 8.225 LC, LLC 4x2 7.5 Ton | 00- | 3565 | 3565 |
| L2000 ( 7.5 T) | 6.9 8.225 LC, LLC 4x2 7.5 Ton | 00- | 3565/A | 3565/A |
| L2000 ( 7.5 T) | 6.9 8.225 LC, LLC 4x2 7.5 Ton | 00- | 3565/3 | 3565/3 |
| L2000 ( 7.5 T) | 6.9 8.225 LK 4x2 7.5 Ton | 00- | 3565 | |
| L2000 ( 7.5 T) | 6.9 8.225 LK 4x2 7.5 Ton | 00- | 3565/A | 3565/A |
| L2000 ( 7.5 T) | 6.9 8.225 LK 4x2 7.5 Ton | 00- | 3565/3 | |
| L2000 ( 7.5 T) | 6.9 8.225 LLS 4x2 7.5 Ton | 00- | 3565 | 3565 |
| L2000 ( 7.5 T) | 6.9 8.225 LLS 4x2 7.5 Ton | 00- | 3565/A | 3565/A |
| L2000 ( 7.5 T) | 6.9 8.225 LLS 4x2 7.5 Ton | 00- | 3565/3 | 3565/3 |
| L2000 ( 8 T) | 4.6 8.103 LC,LLC 4x2 8 Ton | 96-96 | 3565 | 3565 |
| L2000 ( 8 T) | 4.6 8.103 LC,LLC 4x2 8 Ton | 96-96 | 3565/A | 3565/A |
| L2000 ( 8 T) | 4.6 8.103 LC,LLC 4x2 8 Ton | 96-96 | 3565/3 | 3565/3 |
| L2000 ( 8 T) | 4.6 8.103 LK 4x2 8 Ton | 95-96 | 3565 | |
| L2000 ( 8 T) | 4.6 8.103 LK 4x2 8 Ton | 95-96 | 3565/A | 3565/A |
| L2000 ( 8 T) | 4.6 8.103 LK 4x2 8 Ton | 95-96 | 3565/3 | |
| L2000 ( 8 T) | 4.6 8.113 LC, LLC 4x2 8 Ton | 96-96 | 3565 | 3565 |
| L2000 ( 8 T) | 4.6 8.113 LC, LLC 4x2 8 Ton | 96-96 | 3565/A | 3565/A |
| L2000 ( 8 T) | 4.6 8.113 LC, LLC 4x2 8 Ton | 96-96 | 3565/3 | 3565/3 |
| L2000 ( 8 T) | 4.6 8.113 LK 4x2 8 Ton | 96- | 3565 | |
| L2000 ( 8 T) | 4.6 8.113 LK 4x2 8 Ton | 96- | 3565/A | 3565/A |
| L2000 ( 8 T) | 4.6 8.113 LK 4x2 8 Ton | 96- | 3565/3 | |
| L2000 ( 8 T) | 4.6 8.150 FOC,FOCL 4x2 8 Ton | 96- | 3565 | 3565 |
| L2000 ( 8 T) | 4.6 8.150 FOC,FOCL 4x2 8 Ton | 96- | 3565/A | 3565/A |
| L2000 ( 8 T) | 4.6 8.150 FOC,FOCL 4x2 8 Ton | 96- | 3565/3 | 3565/3 |
| L2000 ( 8 T) | 4.6 8.153 LAEC 4WD 8 Ton | 95-96 | 3565 | |
| L2000 ( 8 T) | 4.6 8.153 LAEC 4WD 8 Ton | 95-96 | 3565/A | 3565/A |
| L2000 ( 8 T) | 4.6 8.153 LAEC 4WD 8 Ton | 95-96 | 3565/3 | |

| MAKE & MODEL | | YEAR | | |
|---|---|---|---|---|
| **MAN** | | | | |
| L2000 ( 8 T) | 4.6 8.153 LAEK 4WD 8 Ton | 95-96 | 3565 | |
| L2000 ( 8 T) | 4.6 8.153 LAEK 4WD 8 Ton | 95-96 | 3565/A | 3565/A |
| L2000 ( 8 T) | 4.6 8.153 LAEK 4WD 8 Ton | 95-96 | 3565/3 | |
| L2000 ( 8 T) | 4.6 8.153 LC, LLC 4x2 8 Ton | 96-97 | 3565 | 3565 |
| L2000 ( 8 T) | 4.6 8.153 LC, LLC 4x2 8 Ton | 96-97 | 3565/A | 3565/A |
| L2000 ( 8 T) | 4.6 8.153 LC, LLC 4x2 8 Ton | 96-97 | 3565/3 | 3565/3 |
| L2000 ( 8 T) | 4.6 8.153 LK 4x2 8 Ton | 95-97 | 3565 | |
| L2000 ( 8 T) | 4.6 8.153 LK 4x2 8 Ton | 95-97 | 3565/A | 3565/A |
| L2000 ( 8 T) | 4.6 8.153 LK 4x2 8 Ton | 95-97 | 3565/3 | |
| L2000 ( 8 T) | 4.6 8.153 LLS 4x2 8 Ton | 95- | 3565 | 3565 |
| L2000 ( 8 T) | 4.6 8.153 LLS 4x2 8 Ton | 95- | 3565/A | 3565/A |
| L2000 ( 8 T) | 4.6 8.153 LLS 4x2 8 Ton | 95- | 3565/3 | 3565/3 |
| L2000 ( 8 T) | 4.6 8.163 LAEC 4WD 8 Ton | 95-96 | 3565 | |
| L2000 ( 8 T) | 4.6 8.163 LAEC 4WD 8 Ton | 95-97 | 3565 | |
| L2000 ( 8 T) | 4.6 8.163 LAEC 4WD 8 Ton | 95-96 | 3565/A | 3565/A |
| L2000 ( 8 T) | 4.6 8.163 LAEC 4WD 8 Ton | 95-97 | 3565/A | 3565/A |
| L2000 ( 8 T) | 4.6 8.163 LAEC 4WD 8 Ton | 95-97 | 3565/3 | |
| L2000 ( 8 T) | 4.6 8.163 LAEC 4WD 8 Ton | 95-96 | 3565/3 | |
| L2000 ( 8 T) | 4.6 8.163 LC, LLC 4x2 8 Ton | 96- | 3565 | 3565 |
| L2000 ( 8 T) | 4.6 8.163 LC, LLC 4x2 8 Ton | 96- | 3565 | 3565 |
| L2000 ( 8 T) | 4.6 8.163 LC, LLC 4x2 8 Ton | 96- | 3565/A | 3565/A |
| L2000 ( 8 T) | 4.6 8.163 LC, LLC 4x2 8 Ton | 96- | 3565/A | 3565/A |
| L2000 ( 8 T) | 4.6 8.163 LC, LLC 4x2 8 Ton | 96- | 3565/3 | 3565/3 |
| L2000 ( 8 T) | 4.6 8.163 LC, LLC 4x2 8 Ton | 96- | 3565/3 | 3565/3 |
| L2000 ( 8 T) | 4.6 8.163 LK 4x2 8 Ton | 96- | 3565 | |
| L2000 ( 8 T) | 4.6 8.163 LK 4x2 8 Ton | 96- | 3565/A | 3565/A |
| L2000 ( 8 T) | 4.6 8.163 LK 4x2 8 Ton | 96- | 3565/3 | |
| L2000 ( 8 T) | 4.6 8.163 LLS 4x2 8 Ton | 96- | 3565 | 3565 |
| L2000 ( 8 T) | 4.6 8.163 LLS 4x2 8 Ton | 96- | 3565/A | 3565/A |
| L2000 ( 8 T) | 4.6 8.163 LLS 4x2 8 Ton | 96- | 3565/3 | 3565/3 |
| L2000 ( 8 T) | 6.9 8.220 FOC,FOCL 4x2 8 Ton | 96- | 3565 | 3565 |
| L2000 ( 8 T) | 6.9 8.220 FOC,FOCL 4x2 8 Ton | 96- | 3565/A | 3565/A |
| L2000 ( 8 T) | 6.9 8.220 FOC,FOCL 4x2 8 Ton | 96- | 3565/3 | 3565/3 |
| L2000 ( 8 T) | 6.9 8.223 LAEC 4WD 8 Ton | 95-96 | 3565 | |
| L2000 ( 8 T) | 6.9 8.223 LAEC 4WD 8 Ton | 95-96 | 3565/A | 3565/A |
| L2000 ( 8 T) | 6.9 8.223 LAEC 4WD 8 Ton | 95-96 | 3565/3 | |
| L2000 ( 8 T) | 6.9 8.223 LC, LLC 4x2 8 Ton | 96-96 | 3565 | 3565 |
| L2000 ( 8 T) | 6.9 8.223 LC, LLC 4x2 8 Ton | 96-96 | 3565/A | 3565/A |
| L2000 ( 8 T) | 6.9 8.223 LC, LLC 4x2 8 Ton | 96-96 | 3565/3 | 3565/3 |
| L2000 ( 8 T) | 6.9 8.223 LK 4x2 8 Ton | 96-96 | 3565 | |
| L2000 ( 8 T) | 6.9 8.223 LK 4x2 8 Ton | 96-96 | 3565/A | 3565/A |
| L2000 ( 8 T) | 6.9 8.223 LK 4x2 8 Ton | 96-96 | 3565/3 | |
| L2000 ( 8 T) | 6.9 8.223 LLS 4x2 8 Ton | 93-95 | 3565 | 3565 |
| L2000 ( 8 T) | 6.9 8.223 LLS 4x2 8 Ton | 93-95 | 3565/A | 3565/A |
| L2000 ( 8 T) | 6.9 8.223 LLS 4x2 8 Ton | 93-95 | 3565/3 | 3565/3 |
| L2000 ( 8 T) | 6.9 8.224 LAEC 4WD 8 Ton | 95- | 3565 | |
| L2000 ( 8 T) | 6.9 8.224 LAEC 4WD 8 Ton | 95- | 3565/A | 3565/A |
| L2000 ( 8 T) | 6.9 8.224 LAEC 4WD 8 Ton | 95- | 3565/3 | |
| L2000 ( 8 T) | 6.9 8.224 LAEK 4WD 8 Ton | 96- | 3565 | |
| L2000 ( 8 T) | 6.9 8.224 LAEK 4WD 8 Ton | 96- | 3565/A | 3565/A |
| L2000 ( 8 T) | 6.9 8.224 LAEK 4WD 8 Ton | 96- | 3565/3 | |
| L2000 ( 8 T) | 6.9 8.224 LC, LLC 4x2 8 Ton | 96- | 3565 | 3565 |
| L2000 ( 8 T) | 6.9 8.224 LC, LLC 4x2 8 Ton | 96- | 3565/A | 3565/A |
| L2000 ( 8 T) | 6.9 8.224 LC, LLC 4x2 8 Ton | 96- | 3565/3 | 3565/3 |
| L2000 ( 8 T) | 6.9 8.224 LK 4x2 8 Ton | 96- | 3565 | |
| L2000 ( 8 T) | 6.9 8.224 LK 4x2 8 Ton | 96- | 3565/A | 3565/A |
| L2000 ( 8 T) | 6.9 8.224 LK 4x2 8 Ton | 96- | 3565/3 | |
| L2000 ( 8 T) | 6.9 8.224 LLS 4x2 8 Ton | 94-95 | 3565 | 3565 |
| L2000 ( 8 T) | 6.9 8.224 LLS 4x2 8 Ton | 94-95 | 3565/A | 3565/A |
| L2000 ( 8 T) | 6.9 8.224 LLS 4x2 8 Ton | 94-95 | 3565/3 | 3565/3 |
| L2000 ( 9 T) | 4.6 10.145 LC, LLC 4x2 9 Ton | 00- | 3565 | 3565 |
| L2000 ( 9 T) | 4.6 10.145 LC, LLC 4x2 9 Ton | 00- | 3565/A | 3565/A |
| L2000 ( 9 T) | 4.6 10.145 LC, LLC 4x2 9 Ton | 00- | 3565/3 | 3565/3 |
| L2000 ( 9 T) | 4.6 9.145 LC, LLC 4x2 9 Ton | 00- | 3565 | 3565 |
| L2000 ( 9 T) | 4.6 9.145 LC, LLC 4x2 9 Ton | 00- | 3565/A | 3565/A |
| L2000 ( 9 T) | 4.6 9.145 LC, LLC 4x2 9 Ton | 00- | 3565/3 | 3565/3 |
| L2000 ( 9 T) | 4.6 9.145 LK 4x2 9 Ton | 00- | 3565 | |
| L2000 ( 9 T) | 4.6 9.145 LK 4x2 9 Ton | 00- | 3565/A | 3565/A |
| L2000 ( 9 T) | 4.6 9.145 LK 4x2 9 Ton | 00- | 3565/3 | |
| L2000 ( 9 T) | 4.6 9.145 LLS 4x2 9 Ton | 00- | 3565 | 3565 |
| L2000 ( 9 T) | 4.6 9.145 LLS 4x2 9 Ton | 00- | 3565/A | 3565/A |
| L2000 ( 9 T) | 4.6 9.145 LLS 4x2 9 Ton | 00- | 3565/3 | 3565/3 |
| L2000 ( 9 T) | 4.6 9.153 LC, LLC 4x2 9 Ton | 93-95 | 3565 | 3565 |
| L2000 ( 9 T) | 4.6 9.153 LC, LLC 4x2 9 Ton | 93-95 | 3565/A | 3565/A |
| L2000 ( 9 T) | 4.6 9.153 LC, LLC 4x2 9 Ton | 93-95 | 3565/3 | 3565/3 |
| L2000 ( 9 T) | 4.6 9.153 LK 4x2 9 Ton | 96-96 | 3565 | |

| MAKE & MODEL | | YEAR | 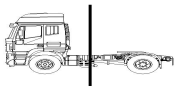 | |
|---|---|---|---|---|
| **MAN** | | | | |
| L2000 ( 9 T) | 4.6 9.153 LK 4x2 9 Ton | 96-96 | 3565/A | 3565/A |
| L2000 ( 9 T) | 4.6 9.153 LK 4x2 9 Ton | 96-96 | 3565/3 | |
| L2000 ( 9 T) | 4.6 9.163 LC 4x2 9 Ton | 96-97 | 3565 | 3565 |
| L2000 ( 9 T) | 4.6 9.163 LC 4x2 9 Ton | 96-97 | 3565/A | 3565/A |
| L2000 ( 9 T) | 4.6 9.163 LC 4x2 9 Ton | 96-97 | 3565/3 | 3565/3 |
| L2000 ( 9 T) | 4.6 9.163 LC,LLC 4x2 9 Ton | 96- | 3565 | 3565 |
| L2000 ( 9 T) | 4.6 9.163 LC,LLC 4x2 9 Ton | 96- | 3565/A | 3565/A |
| L2000 ( 9 T) | 4.6 9.163 LC,LLC 4x2 9 Ton | 96- | 3565/3 | 3565/3 |
| L2000 ( 9 T) | 4.6 9.163 LK 4x2 9 Ton | 96- | 3565 | |
| L2000 ( 9 T) | 4.6 9.163 LK 4x2 9 Ton | 96-97 | 3565 | |
| L2000 ( 9 T) | 4.6 9.163 LK 4x2 9 Ton | 96- | 3565/A | 3565/A |
| L2000 ( 9 T) | 4.6 9.163 LK 4x2 9 Ton | 96-97 | 3565/A | 3565/A |
| L2000 ( 9 T) | 4.6 9.163 LK 4x2 9 Ton | 96- | 3565/3 | |
| L2000 ( 9 T) | 4.6 9.163 LK 4x2 9 Ton | 96-97 | 3565/3 | |
| L2000 ( 9 T) | 4.6 9.163 LLS 4x2 9 Ton | 96- | 3565 | 3565 |
| L2000 ( 9 T) | 4.6 9.163 LLS 4x2 9 Ton | 96- | 3565/A | 3565/A |
| L2000 ( 9 T) | 4.6 9.163 LLS 4x2 9 Ton | 96- | 3565/3 | 3565/3 |
| L2000 ( 9 T) | 4.6 9.185 LC, LLC 4x2 9 Ton | 00- | 3565 | 3565 |
| L2000 ( 9 T) | 4.6 9.185 LC, LLC 4x2 9 Ton | 00- | 3565/A | 3565/A |
| L2000 ( 9 T) | 4.6 9.185 LC, LLC 4x2 9 Ton | 00- | 3565/3 | 3565/3 |
| L2000 ( 9 T) | 4.6 9.185 LK 4x2 9 Ton | 00- | 3565 | |
| L2000 ( 9 T) | 4.6 9.185 LK 4x2 9 Ton | 00- | 3565/A | 3565/A |
| L2000 ( 9 T) | 4.6 9.185 LK 4x2 9 Ton | 00- | 3565/3 | |
| L2000 ( 9 T) | 4.6 9.185 LLS 4x2 9 Ton | 00- | 3565 | 3565 |
| L2000 ( 9 T) | 4.6 9.185 LLS 4x2 9 Ton | 00- | 3565/A | 3565/A |
| L2000 ( 9 T) | 4.6 9.185 LLS 4x2 9 Ton | 00- | 3565/3 | 3565/3 |
| L2000 ( 9 T) | 6.9 9.223 LC,LLC 4x2 9 Ton | 96-96 | 3565 | 3565 |
| L2000 ( 9 T) | 6.9 9.223 LC,LLC 4x2 9 Ton | 96-96 | 3565/A | 3565/A |
| L2000 ( 9 T) | 6.9 9.223 LC,LLC 4x2 9 Ton | 96-96 | 3565/3 | 3565/3 |
| L2000 ( 9 T) | 6.9 9.223 LK 4x2 9 Ton | 96-96 | 3565 | |
| L2000 ( 9 T) | 6.9 9.223 LK 4x2 9 Ton | 96-96 | 3565/A | 3565/A |
| L2000 ( 9 T) | 6.9 9.223 LK 4x2 9 Ton | 96-96 | 3565/3 | |
| L2000 ( 9 T) | 6.9 9.223 LLS 4x2 9 Ton | 96-96 | 3565 | 3565 |
| L2000 ( 9 T) | 6.9 9.223 LLS 4x2 9 Ton | 96-96 | 3565/A | 3565/A |
| L2000 ( 9 T) | 6.9 9.223 LLS 4x2 9 Ton | 96-96 | 3565/3 | 3565/3 |
| L2000 ( 9 T) | 6.9 9.224 LC,LLC 4x2 9 Ton | 96- | 3565 | 3565 |
| L2000 ( 9 T) | 6.9 9.224 LC,LLC 4x2 9 Ton | 96- | 3565/A | 3565/A |
| L2000 ( 9 T) | 6.9 9.224 LC,LLC 4x2 9 Ton | 96- | 3565/3 | 3565/3 |
| L2000 ( 9 T) | 6.9 9.224 LK 4x2 9 Ton | 96- | 3565 | |
| L2000 ( 9 T) | 6.9 9.224 LK 4x2 9 Ton | 96- | 3565/A | 3565/A |
| L2000 ( 9 T) | 6.9 9.224 LK 4x2 9 Ton | 96- | 3565/3 | |
| L2000 ( 9 T) | 6.9 9.224 LLS 4x2 9 Ton | 96- | 3565 | 3565 |
| L2000 ( 9 T) | 6.9 9.224 LLS 4x2 9 Ton | 96- | 3565/A | 3565/A |
| L2000 ( 9 T) | 6.9 9.224 LLS 4x2 9 Ton | 96- | 3565/3 | 3565/3 |
| L2000 ( 9 T) | 6.9 9.225 LC, LLC 4x2 9 Ton | 00- | 3565 | 3565 |
| L2000 ( 9 T) | 6.9 9.225 LC, LLC 4x2 9 Ton | 00- | 3565/A | 3565/A |
| L2000 ( 9 T) | 6.9 9.225 LC, LLC 4x2 9 Ton | 00- | 3565/3 | 3565/3 |
| L2000 ( 9 T) | 6.9 9.225 LK 4x2 9 Ton | 00- | 3565 | |
| L2000 ( 9 T) | 6.9 9.225 LK 4x2 9 Ton | 00- | 3565/A | 3565/A |
| L2000 ( 9 T) | 6.9 9.225 LK 4x2 9 Ton | 00- | 3565/3 | |
| L2000 ( 9 T) | 6.9 9.225 LLS 4x2 9 Ton | 00- | 3565 | 3565 |
| L2000 ( 9 T) | 6.9 9.225 LLS 4x2 9 Ton | 00- | 3565/A | 3565/A |
| L2000 ( 9 T) | 6.9 9.225 LLS 4x2 9 Ton | 00- | 3565/3 | 3565/3 |
| L2000 (10 T) | 4.6 10.145 LK 4x2 10 Ton | 00- | 3565 | |
| L2000 (10 T) | 4.6 10.145 LK 4x2 10 Ton | 00- | 3565/A | 3565/A |
| L2000 (10 T) | 4.6 10.145 LK 4x2 10 Ton | 00- | 3565/3 | |
| L2000 (10 T) | 4.6 10.145 LLS 4x2 10 Ton | 00- | 3565 | 3565 |
| L2000 (10 T) | 4.6 10.145 LLS 4x2 10 Ton | 00- | 3565/A | 3565/A |
| L2000 (10 T) | 4.6 10.145 LLS 4x2 10 Ton | 00- | 3565/3 | 3565/3 |
| L2000 (10 T) | 4.6 10.150 FOC,FOCL 4x2 10 Ton | 96-96 | 3565 | 3565 |
| L2000 (10 T) | 4.6 10.150 FOC,FOCL 4x2 10 Ton | 96-96 | 3565/A | 3565/A |
| L2000 (10 T) | 4.6 10.150 FOC,FOCL 4x2 10 Ton | 96-96 | 3565/3 | 3565/3 |
| L2000 (10 T) | 4.6 10.153 LAEK 4WD 10 Ton | 96-96 | 3565 | |
| L2000 (10 T) | 4.6 10.153 LAEK 4WD 10 Ton | 96-96 | 3565/A | 3565/A |
| L2000 (10 T) | 4.6 10.153 LAEK 4WD 10 Ton | 96-96 | 3565/3 | |
| L2000 (10 T) | 4.6 10.153 LC,LLC 4x2 10 Ton | 96-96 | 3565 | 3565 |
| L2000 (10 T) | 4.6 10.153 LC,LLC 4x2 10 Ton | 96-96 | 3565/A | 3565/A |
| L2000 (10 T) | 4.6 10.153 LC,LLC 4x2 10 Ton | 96-96 | 3565/3 | 3565/3 |
| L2000 (10 T) | 4.6 10.153 LK 4x2 10 Ton | 96- | 3565 | |
| L2000 (10 T) | 4.6 10.153 LK 4x2 10 Ton | 96- | 3565/A | 3565/A |
| L2000 (10 T) | 4.6 10.153 LK 4x2 10 Ton | 96- | 3565/3 | |
| L2000 (10 T) | 4.6 10.153 LLS 4x2 10 Ton | 96-96 | 3565 | 3565 |
| L2000 (10 T) | 4.6 10.153 LLS 4x2 10 Ton | 96-96 | 3565/A | 3565/A |
| L2000 (10 T) | 4.6 10.153 LLS 4x2 10 Ton | 96-96 | 3565/3 | 3565/3 |
| L2000 (10 T) | 4.6 10.163 LAEC 4WD 10 Ton | 96- | 3565 | |
| L2000 (10 T) | 4.6 10.163 LAEC 4WD 10 Ton | 96- | 3565/A | 3565/A |

| MAKE & MODEL | | YEAR | 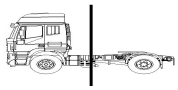 | |
|---|---|---|---|---|
| **MAN** | | | | |
| L2000 (10 T) | 4.6 10.163 LAEC 4WD 10 Ton | 96- | 3565/3 | |
| L2000 (10 T) | 4.6 10.163 LAEK 4WD 10 Ton | 96- | 3565 | |
| L2000 (10 T) | 4.6 10.163 LAEK 4WD 10 Ton | 96- | 3565/A | 3565/A |
| L2000 (10 T) | 4.6 10.163 LAEK 4WD 10 Ton | 96- | 3565/3 | |
| L2000 (10 T) | 4.6 10.163 LC, LLC 4x2 10 Ton | 00- | 3565 | 3565 |
| L2000 (10 T) | 4.6 10.163 LC, LLC 4x2 10 Ton | 00- | 3565/A | 3565/A |
| L2000 (10 T) | 4.6 10.163 LC, LLC 4x2 10 Ton | 00- | 3565/3 | 3565/3 |
| L2000 (10 T) | 4.6 10.163 LC,LLC 4x2 10 Ton | 96- | 3565 | 3565 |
| L2000 (10 T) | 4.6 10.163 LC,LLC 4x2 10 Ton | 96- | 3565/A | 3565/A |
| L2000 (10 T) | 4.6 10.163 LC,LLC 4x2 10 Ton | 96- | 3565/3 | 3565/3 |
| L2000 (10 T) | 4.6 10.163 LK 4x2 10 Ton | 96- | 3565 | |
| L2000 (10 T) | 4.6 10.163 LK 4x2 10 Ton | 96- | 3565/A | 3565/A |
| L2000 (10 T) | 4.6 10.163 LK 4x2 10 Ton | 96- | 3565/3 | |
| L2000 (10 T) | 4.6 10.163 LLS 4x2 10 Ton | 96- | 3565 | 3565 |
| L2000 (10 T) | 4.6 10.163 LLS 4x2 10 Ton | 96- | 3565/A | 3565/A |
| L2000 (10 T) | 4.6 10.163 LLS 4x2 10 Ton | 96- | 3565/3 | 3565/3 |
| L2000 (10 T) | 4.6 10.185 LAEC 4WD 10 Ton | 00- | 3565 | |
| L2000 (10 T) | 4.6 10.185 LAEC 4WD 10 Ton | 00- | 3565/A | 3565/A |
| L2000 (10 T) | 4.6 10.185 LAEC 4WD 10 Ton | 00- | 3565/3 | |
| L2000 (10 T) | 4.6 10.185 LAEK 4WD 10 Ton | 00- | 3565 | |
| L2000 (10 T) | 4.6 10.185 LAEK 4WD 10 Ton | 00- | 3565/A | 3565/A |
| L2000 (10 T) | 4.6 10.185 LAEK 4WD 10 Ton | 00- | 3565/3 | |
| L2000 (10 T) | 4.6 10.185 LC, LLC 4x2 10 Ton | 00- | 3565 | 3565 |
| L2000 (10 T) | 4.6 10.185 LC, LLC 4x2 10 Ton | 00- | 3565/A | 3565/A |
| L2000 (10 T) | 4.6 10.185 LC, LLC 4x2 10 Ton | 00- | 3565/3 | 3565/3 |
| L2000 (10 T) | 4.6 10.185 LK 4x2 10 Ton | 00- | 3565 | |
| L2000 (10 T) | 4.6 10.185 LK 4x2 10 Ton | 00- | 3565/A | 3565/A |
| L2000 (10 T) | 4.6 10.185 LK 4x2 10 Ton | 00- | 3565/3 | |
| L2000 (10 T) | 4.6 10.185 LLS 4x2 10 Ton | 00- | 3565 | 3565 |
| L2000 (10 T) | 4.6 10.185 LLS 4x2 10 Ton | 00- | 3565/A | 3565/A |
| L2000 (10 T) | 4.6 10.185 LLS 4x2 10 Ton | 00- | 3565/3 | 3565/3 |
| L2000 (10 T) | 6.9 10.220 FOC,FOCL 4x2 10 Ton | 96- | 3565 | 3565 |
| L2000 (10 T) | 6.9 10.220 FOC,FOCL 4x2 10 Ton | 96- | 3565/A | 3565/A |
| L2000 (10 T) | 6.9 10.220 FOC,FOCL 4x2 10 Ton | 96- | 3565/3 | 3565/3 |
| L2000 (10 T) | 6.9 10.223 LAEC 4WD 10 Ton | 96-96 | 3565 | |
| L2000 (10 T) | 6.9 10.223 LAEC 4WD 10 Ton | 96-96 | 3565/A | 3565/A |
| L2000 (10 T) | 6.9 10.223 LAEC 4WD 10 Ton | 96-96 | 3565/3 | |
| L2000 (10 T) | 6.9 10.223 LC,LLC 4x2 10 Ton | 96-96 | 3565 | 3565 |
| L2000 (10 T) | 6.9 10.223 LC,LLC 4x2 10 Ton | 96-96 | 3565/A | 3565/A |
| L2000 (10 T) | 6.9 10.223 LC,LLC 4x2 10 Ton | 96-96 | 3565/3 | 3565/3 |
| L2000 (10 T) | 6.9 10.223 LK 4x2 10 Ton | 96-96 | 3565 | |
| L2000 (10 T) | 6.9 10.223 LK 4x2 10 Ton | 96-96 | 3565/A | 3565/A |
| L2000 (10 T) | 6.9 10.223 LK 4x2 10 Ton | 96-96 | 3565/3 | |
| L2000 (10 T) | 6.9 10.223 LLS 4x2 10 Ton | 95-96 | 3565 | 3565 |
| L2000 (10 T) | 6.9 10.223 LLS 4x2 10 Ton | 95-96 | 3565/A | 3565/A |
| L2000 (10 T) | 6.9 10.223 LLS 4x2 10 Ton | 95-96 | 3565/3 | 3565/3 |
| L2000 (10 T) | 6.9 10.224 LAEC 4WD 10 Ton | 96- | 3565 | |
| L2000 (10 T) | 6.9 10.224 LAEC 4WD 10 Ton | 96- | 3565/A | 3565/A |
| L2000 (10 T) | 6.9 10.224 LAEC 4WD 10 Ton | 96- | 3565/3 | |
| L2000 (10 T) | 6.9 10.224 LAEK 4WD 10 Ton | 96- | 3565 | |
| L2000 (10 T) | 6.9 10.224 LAEK 4WD 10 Ton | 96- | 3565/A | 3565/A |
| L2000 (10 T) | 6.9 10.224 LAEK 4WD 10 Ton | 96- | 3565/3 | |
| L2000 (10 T) | 6.9 10.224 LC,LLC 4x2 10 Ton | 96- | 3565 | 3565 |
| L2000 (10 T) | 6.9 10.224 LC,LLC 4x2 10 Ton | 96- | 3565/A | 3565/A |
| L2000 (10 T) | 6.9 10.224 LC,LLC 4x2 10 Ton | 96- | 3565/3 | 3565/3 |
| L2000 (10 T) | 6.9 10.224 LK 4x2 10 Ton | 96- | 3565 | |
| L2000 (10 T) | 6.9 10.224 LK 4x2 10 Ton | 96- | 3565/A | 3565/A |
| L2000 (10 T) | 6.9 10.224 LK 4x2 10 Ton | 96- | 3565/3 | |
| L2000 (10 T) | 6.9 10.224 LLS 4x2 10 Ton | 96- | 3565 | 3565 |
| L2000 (10 T) | 6.9 10.224 LLS 4x2 10 Ton | 96- | 3565/A | 3565/A |
| L2000 (10 T) | 6.9 10.224 LLS 4x2 10 Ton | 96- | 3565/3 | 3565/3 |
| L2000 (10 T) | 6.9 10.225 LAEC 4WD 10 Ton | 00- | 3565 | |
| L2000 (10 T) | 6.9 10.225 LAEC 4WD 10 Ton | 00- | 3565/A | 3565/A |
| L2000 (10 T) | 6.9 10.225 LAEC 4WD 10 Ton | 00- | 3565/3 | |
| L2000 (10 T) | 6.9 10.225 LAEK 4WD 10 Ton | 00- | 3565 | |
| L2000 (10 T) | 6.9 10.225 LAEK 4WD 10 Ton | 00- | 3565/A | 3565/A |
| L2000 (10 T) | 6.9 10.225 LAEK 4WD 10 Ton | 00- | 3565/3 | |
| L2000 (10 T) | 6.9 10.225 LC, LLC 4x2 10 Ton | 00- | 3565 | 3565 |
| L2000 (10 T) | 6.9 10.225 LC, LLC 4x2 10 Ton | 00- | 3565/A | 3565/A |
| L2000 (10 T) | 6.9 10.225 LC, LLC 4x2 10 Ton | 00- | 3565/3 | 3565/3 |
| L2000 (10 T) | 6.9 10.225 LK 4x2 10 Ton | 00- | 3565 | |
| L2000 (10 T) | 6.9 10.225 LK 4x2 10 Ton | 00- | 3565/A | 3565/A |
| L2000 (10 T) | 6.9 10.225 LK 4x2 10 Ton | 00- | 3565/3 | |
| L2000 (10 T) | 6.9 10.225 LLS 4x2 10 Ton | 00- | 3565 | 3565 |
| L2000 (10 T) | 6.9 10.225 LLS 4x2 10 Ton | 00- | 3565/A | 3565/A |
| L2000 (10 T) | 6.9 10.225 LLS 4x2 10 Ton | 00- | 3565/3 | 3565/3 |

| MAKE & MODEL | | YEAR | 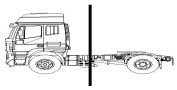 | |
|---|---|---|---|---|
| **MAN** | | | | |
| L2000 (12 T) | 4.6 12.185 LC, LLC 4x2 12 Ton | 00- | 3565 | 3565 |
| L2000 (12 T) | 4.6 12.185 LC, LLC 4x2 12 Ton | 00- | 3565/A | 3565/A |
| L2000 (12 T) | 4.6 12.185 LC, LLC 4x2 12 Ton | 00- | 3565/3 | 3565/3 |
| L2000 (12 T) | 6.9 12.225 LC, LLC 4x2 12 Ton | 00- | 3565 | 3565 |
| L2000 (12 T) | 6.9 12.225 LC, LLC 4x2 12 Ton | 00- | 3565/A | 3565/A |
| L2000 (12 T) | 6.9 12.225 LC, LLC 4x2 12 Ton | 00- | 3565/3 | 3565/3 |
| LION'S COACH (18 T) | 12.0 FRH 352 / RH 353 4x2 18 Ton. | 95- | 3497 | 3497 |
| LION'S COACH (18 T) | 12.0 FRH 352 / RH 353 4x2 18 Ton. | 95- | 3497/1 | 3497/1 |
| LION'S COACH (18 T) | 12.0 FRH 402 / RH 403 4x2 18 Ton. | 95- | 3497 | 3497 |
| LION'S COACH (18 T) | 12.0 FRH 402 / RH 403 4x2 18 Ton. | 95- | 3497/1 | 3497/1 |
| LION'S COACH (18 T) | 12.0 RCH 414 4x2 18 Ton. | 02- | 3497 | 3497 |
| LION'S COACH (18 T) | 12.0 RCH 414 4x2 18 Ton. | 02- | 3497/1 | 3497/1 |
| LION'S COACH (21 T) | 12.0 RH 403 6x2 21 Ton. | 98- | 3497 | 3497 |
| LION'S COACH (21 T) | 12.0 RH 403 6x2 21 Ton. | 98- | 3497/1 | 3497/1 |
| LION'S COACH (24.9 T) | 12.0 RH 413 6x2 24.9 Ton. | 98- | 3497 | 3497 |
| LION'S COACH (24.9 T) | 12.0 RH 413 6x2 24.9 Ton. | 98- | 3497/1 | 3497/1 |
| LION'S COACH (24.9 T) | 12.8 RH 463 6x2 24.9 Ton. | 98- | 3497 | 3497 |
| LION'S COACH (24.9 T) | 12.8 RH 463 6x2 24.9 Ton. | 98- | 3497/1 | 3497/1 |
| LION'S COMFORT (18 T) | 12.0 RN 313 4x2 18 Ton. | 96- | 3497 | 3497 |
| LION'S COMFORT (18 T) | 12.0 RN 313 4x2 18 Ton. | 96- | 3497/1 | 3497/1 |
| LION'S COMFORT (18 T) | 12.0 RN 353 4x2 18 Ton. | 97- | 3497 | 3497 |
| LION'S COMFORT (18 T) | 12.0 RN 353 4x2 18 Ton. | 97- | 3497/1 | 3497/1 |
| LION'S STAR (18 T) | 12.0 FRH 352 / RH 353 4x2 18 Ton. | 95- | 3497 | |
| LION'S STAR (18 T) | 12.0 FRH 352 / RH 353 4x2 18 Ton. | 95- | 3497/1 | |
| LION'S STAR (18 T) | 12.0 FRH 402 / RH 403 4x2 18 Ton. | 95- | 3497 | 3497 |
| LION'S STAR (18 T) | 12.0 FRH 402 / RH 403 4x2 18 Ton. | 95- | 3497/1 | 3497/1 |
| LION'S STAR (18 T) | 12.0 FRH 422 4x2 18 Ton. | 93-96 | 3497 | 3497 |
| LION'S STAR (18 T) | 12.0 FRH 422 4x2 18 Ton. | 93-96 | 3497/1 | 3497/1 |
| LION'S STAR (18 T) | 12.8 RH 414 4x2 18 Ton. | 95- | 3497 | |
| LION'S STAR (18 T) | 12.8 RH 414 4x2 18 Ton. | 95- | 3497/1 | |
| M2000 | 12.153 - 12.164/224 | 08/95- | 3565/1 | 3565/1 |
| M2000 L (12 T) | 4.6 12.163 LC, LLC 4x2 12 Ton | 95- | 3565 | 3565 |
| M2000 L (12 T) | 4.6 12.163 LC, LLC 4x2 12 Ton | 95- | 3565/A | 3565/A |
| M2000 L (12 T) | 4.6 12.163 LC, LLC 4x2 12 Ton | 95- | 3565/3 | 3565/3 |
| M2000 L (12 T) | 4.6 12.163 LK 4x2 12 Ton | 95- | 3565 | 3565 |
| M2000 L (12 T) | 4.6 12.163 LK 4x2 12 Ton | 95- | 3565/A | 3565/A |
| M2000 L (12 T) | 4.6 12.163 LK 4x2 12 Ton | 95- | 3565/3 | 3565/3 |
| M2000 L (12 T) | 6.9 12.224 LC, LLC 4x2 12 Ton | 95- | 3565 | 3565 |
| M2000 L (12 T) | 6.9 12.224 LC, LLC 4x2 12 Ton | 95- | 3565/A | 3565/A |
| M2000 L (12 T) | 6.9 12.224 LC, LLC 4x2 12 Ton | 95- | 3565/3 | 3565/3 |
| M2000 L (12 T) | 6.9 12.224 LK 4x2 12 Ton | 95- | 3565 | 3565 |
| M2000 L (12 T) | 6.9 12.224 LK 4x2 12 Ton | 95- | 3565/A | 3565/A |
| M2000 L (12 T) | 6.9 12.224 LK 4x2 12 Ton | 95- | 3565/3 | 3565/3 |
| M2000 L (14 T) | 4.6 14.163 LC, LLC 4x2 14 Ton | 95- | 3789 | |
| M2000 L (14 T) | 6.9 14.224 LC, LLC, LLLC 4x2 14 Ton | 95- | 3789 | |
| M2000 L (14 T) | 6.9 14.255 LC, LLC, LLLC (LE250B) 4x2 14 Ton | 00- | 3789 | |
| M2000 L (14 T) | 6.9 14.255 LE 4x2 14 Ton | 00- | 3789 | |
| M2000 L (14 T) | 6.9 14.255 LK (LE250B) 4x2 14 Ton | 00- | 3789 | |
| M2000 L (14 T) | 6.9 14.264 LC, LLC, LLLC 4x2 14 Ton | 95- | 3789 | |
| M2000 L (14 T) | 6.9 14.284 LC, LLC, LLLC 4x2 14 Ton | 98- | 3789 | |
| M2000 L (15 T) | 4.6 15.163 L/LC/LLC 4x2 15 Ton. | 95- | 3497 | 5623 |
| M2000 L (15 T) | 4.6 15.163 L/LC/LLC 4x2 15 Ton. | 95- | 3497 | 56268 |
| M2000 L (15 T) | 6.9 15.224 LC/LLC/LLLC 4x2 15 Ton. | 95- | 3497 | 5623 |
| M2000 L (15 T) | 6.9 15.224 LC/LLC/LLLC 4x2 15 Ton. | 95- | 3497 | 56268 |
| M2000 L (15 T) | 6.9 15.264 LC/LLC/LLLC 4x2 15 Ton. | 95- | 3497 | 5623 |
| M2000 L (15 T) | 6.9 15.264 LC/LLC/LLLC 4x2 15 Ton. | 95- | 3497 | 56268 |
| M2000 L (15 T) | 6.9 15.284 LC/LLC/LLLC 4x2 15 Ton. | 98- | 3497 | 5623 |
| M2000 L (15 T) | 6.9 15.284 LC/LLC/LLLC 4x2 15 Ton. | 98- | 3497 | 56268 |
| M2000 L (15 T) | 4.6 15.163 L/LC/LLC 4x2 15 Ton. | 95- | 3497/1 | 5623 |
| M2000 L (15 T) | 4.6 15.163 L/LC/LLC 4x2 15 Ton. | 95- | 3497/1 | 56268 |
| M2000 L (15 T) | 6.9 15.224 LC/LLC/LLLC 4x2 15 Ton. | 95- | 3497/1 | 5623 |
| M2000 L (15 T) | 6.9 15.224 LC/LLC/LLLC 4x2 15 Ton. | 95- | 3497/1 | 56268 |
| M2000 L (15 T) | 6.9 15.264 LC/LLC/LLLC 4x2 15 Ton. | 95- | 3497/1 | 5623 |
| M2000 L (15 T) | 6.9 15.264 LC/LLC/LLLC 4x2 15 Ton. | 95- | 3497/1 | 56268 |
| M2000 L (15 T) | 6.9 15.284 LC/LLC/LLLC 4x2 15 Ton. | 98- | 3497/1 | 5623 |
| M2000 L (15 T) | 6.9 15.284 LC/LLC/LLLC 4x2 15 Ton. | 98- | 3497/1 | 56268 |
| M2000 L (18 T) | 6.9 18.224 LC/LLC/LLLC 4x2 18 Ton. | 95- | 3497 | 5623 |
| M2000 L (18 T) | 6.9 18.224 LC/LLC/LLLC 4x2 18 Ton. | 95- | 3497 | 56268 |
| M2000 L (18 T) | 6.9 18.264 LC/LLC/LLLC 4x2 18 Ton. | 95- | 3497 | 5623 |
| M2000 L (18 T) | 6.9 18.264 LC/LLC/LLLC 4x2 18 Ton. | 95- | 3497 | 56268 |
| M2000 L (18 T) | 6.9 18.284 LC/LLC/LLLC 4x2 18 Ton. | 98- | 3497 | 5623 |
| M2000 L (18 T) | 6.9 18.284 LC/LLC/LLLC 4x2 18 Ton. | 98- | 3497 | 56268 |
| M2000 L (18 T) | 6.9 18.224 LC/LLC/LLLC 4x2 18 Ton. | 95- | 3497/1 | 5623 |
| M2000 L (18 T) | 6.9 18.224 LC/LLC/LLLC 4x2 18 Ton. | 95- | 3497/1 | 56268 |
| M2000 L (18 T) | 6.9 18.264 LC/LLC/LLLC 4x2 18 Ton. | 95- | 3497/1 | 5623 |
| M2000 L (18 T) | 6.9 18.264 LC/LLC/LLLC 4x2 18 Ton. | 95- | 3497/1 | 56268 |

| MAKE & MODEL | | YEAR | 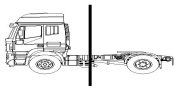 | |
|---|---|---|---|---|
| **MAN** | | | | |
| M2000 L (18 T) | 6.9 18.284 LC/LLC/LLLC 4x2 18 Ton. | 98- | 3497/1 | 5623 |
| M2000 L (18 T) | 6.9 18.284 LC/LLC/LLLC 4x2 18 Ton. | 98- | 3497/1 | 56268 |
| M2000 M (14 T) | 6.9 14.224 MLS 4x2 14 Ton | 95- | 3789 | |
| M2000 M (14 T) | 6.9 14.264 MLS 4x2 14 Ton | 95- | 3789 | |
| M2000 M (14 T) | 6.9 14.284 MLS 4x2 14 Ton | 98- | 3789 | |
| M2000 M (14 T) | 6.9 14.224 MC, MLC, MLLC 4x2 14 Ton | 95- | 3789 | |
| M2000 M (14 T) | 6.9 14.264 MC, MLC, MLLC 4x2 14 Ton | 95- | 3789 | |
| M2000 M (14 T) | 6.9 14.284 MC, MLC, MLLC 4x2 14 Ton | 95- | 3789 | |
| M2000 M (14 T) | 6.9 14.285 MLC, MLLC 4x2 14 Ton | 99- | 3789 | |
| M2000 M (18 T) | 6.9 18.224 MLS 4x2 18 Ton. | 95- | 3497 | 5623 |
| M2000 M (18 T) | 6.9 18.224 MLS 4x2 18 Ton. | 95- | 3497 | 56268 |
| M2000 M (18 T) | 6.9 18.264 MLS 4x2 18 Ton. | 95- | 3497 | 5623 |
| M2000 M (18 T) | 6.9 18.264 MLS 4x2 18 Ton. | 95- | 3497 | 56268 |
| M2000 M (18 T) | 6.9 18.284 MLS 4x2 18 Ton. | 98- | 3497 | 5623 |
| M2000 M (18 T) | 6.9 18.284 MLS 4x2 18 Ton. | 98- | 3497 | 56268 |
| M2000 M (18 T) | 6.9 18.224 MC/MLC/MLLC 4x2 18 Ton. | 95- | 3497 | 5623 |
| M2000 M (18 T) | 6.9 18.224 MC/MLC/MLLC 4x2 18 Ton. | 95- | 3497 | 56268 |
| M2000 M (18 T) | 6.9 18.264 MC/MLC/MLLC 4x2 18 Ton. | 95- | 3497 | 56268 |
| M2000 M (18 T) | 6.9 18.264 MC/MLC/MLLC 4x2 18 Ton. | 95- | 3497 | 5623 |
| M2000 M (18 T) | 6.9 18.284 MC/MLC/MLLC 4x2 18 Ton. | 98- | 3497 | 5623 |
| M2000 M (18 T) | 6.9 18.284 MC/MLC/MLLC 4x2 18 Ton. | 98- | 3497 | 56268 |
| M2000 M (18 T) | 6.9 18.224 MLS 4x2 18 Ton. | 95- | 3497/1 | 5623 |
| M2000 M (18 T) | 6.9 18.224 MLS 4x2 18 Ton. | 95- | 3497/1 | 56268 |
| M2000 M (18 T) | 6.9 18.264 MLS 4x2 18 Ton. | 95- | 3497/1 | 5623 |
| M2000 M (18 T) | 6.9 18.264 MLS 4x2 18 Ton. | 95- | 3497/1 | 56268 |
| M2000 M (18 T) | 6.9 18.284 MLS 4x2 18 Ton. | 98- | 3497/1 | 5623 |
| M2000 M (18 T) | 6.9 18.284 MLS 4x2 18 Ton. | 98- | 3497/1 | 56268 |
| M2000 M (18 T) | 6.9 18.224 MC/MLC/MLLC 4x2 18 Ton. | 95- | 3497/1 | 5623 |
| M2000 M (18 T) | 6.9 18.224 MC/MLC/MLLC 4x2 18 Ton. | 95- | 3497/1 | 56268 |
| M2000 M (18 T) | 6.9 18.264 MC/MLC/MLLC 4x2 18 Ton. | 95- | 3497/1 | 56268 |
| M2000 M (18 T) | 6.9 18.264 MC/MLC/MLLC 4x2 18 Ton. | 95- | 3497/1 | 5623 |
| M2000 M (18 T) | 6.9 18.284 MC/MLC/MLLC 4x2 18 Ton. | 98- | 3497/1 | 5623 |
| M2000 M (18 T) | 6.9 18.284 MC/MLC/MLLC 4x2 18 Ton. | 98- | 3497/1 | 56268 |
| M2000 M (25 T) | 6.9 25.224 MNLC/MNLLC/MVLC 6x2/2/4 25 Ton. | 95- | 3497 | 5623 |
| M2000 M (25 T) | 6.9 25.224 MNLC/MNLLC/MVLC 6x2/2/4 25 Ton. | 95- | 3497 | 56268 |
| M2000 M (25 T) | 6.9 25.224 MNLC/MNLLC/MVLC 6x2/2/4 25 Ton. | 95- | 3497 | 5623 |
| M2000 M (25 T) | 6.9 25.224 MNLC/MNLLC/MVLC 6x2/2/4 25 Ton. | 95- | 3497 | 56268 |
| M2000 M (25 T) | 6.9 25.224 MNLC/MNLLC/MVLC 6x2/2/4 25 Ton. | 95- | 3497/1 | 5623 |
| M2000 M (25 T) | 6.9 25.224 MNLC/MNLLC/MVLC 6x2/2/4 25 Ton. | 95- | 3497/1 | 56268 |
| M2000 M (25 T) | 6.9 25.224 MNLC/MNLLC/MVLC 6x2/2/4 25 Ton. | 95- | 3497/1 | 5623 |
| M2000 M (25 T) | 6.9 25.224 MNLC/MNLLC/MVLC 6x2/2/4 25 Ton. | 95- | 3497/1 | 56268 |
| NG | 6.9 NG 262/NG 272 6x2 28 Ton. | 98- | 3497 | 3497 |
| NG | 10.0 NG 262 6x2 28 Ton. | 98- | 3497 | 3497 |
| NG | 10.0 NG 262 6x2 28 Ton. | 98- | 3497/1 | 3497/1 |
| NG | 10.0 NG 312 6x2 28 Ton. | 98- | 3497 | 3497 |
| NG | 10.0 NG 312 6x2 28 Ton. | 98- | 3497/1 | 3497/1 |
| NG | 12.0 NG 262/NG 263 6x2 28 Ton. | 98- | 3497 | 3497 |
| NG | 12.0 NG 262/NG 263 6x2 28 Ton. | 98- | 3497/1 | 3497/1 |
| NG | 12.0 NG 312/NG 313 6x2 28 Ton. | 98- | 3497 | 3497 |
| NG | 12.0 NG 312/NG 313 6x2 28 Ton. | 98- | 3497/1 | 3497/1 |
| NG | 6.9 NG 262/NG 272 6x2 28 Ton. | 98- | 3497/1 | 3497/1 |
| NL (18 T) | 10.0 NL 262 4x2 18 Ton. | 97- | 3497 | 3497 |
| NL (18 T) | 10.0 NL 262 4x2 18 Ton. | 97- | 3497/1 | 3497/1 |
| NL (18 T) | 10.0 NL 312 4x2 18 Ton. | 95-98 | 3497 | 3497 |
| NL (18 T) | 10.0 NL 312 4x2 18 Ton. | 95-98 | 3497/1 | 3497/1 |
| NL (18 T) | 12.0 NL 262NL 263 4x2 18 Ton. | 98- | 3497 | 3497 |
| NL (18 T) | 12.0 NL 262NL 263 4x2 18 Ton. | 98- | 3497/1 | 3497/1 |
| NL (18 T) | 6.9 NL 202/NL 222/NL 223 4x2 18 Ton. | 92- | 3497 | 3497 |
| NL (18 T) | 6.9 NL 202/NL 222/NL 223 4x2 18 Ton. | 92- | 3497/1 | 3497/1 |
| NM | 6.9 NM222/NM 223 4x2 13 Ton | 96- | 3497 | 56268 |
| NM | 6.9 NM222/NM 223 4x2 13 Ton | 96- | 3497/1 | 56268 |
| NÜ (18 T) | 10.0 NÜ 263 4x2 18 Ton. | 96- | 3497 | 3497 |
| NÜ (18 T) | 10.0 NÜ 263 4x2 18 Ton. | 96- | 3497/1 | 3497/1 |
| NÜ (18 T) | 12.0 NÜ 263 4x2 18 Ton. | 98- | 3497 | 3497 |
| NÜ (18 T) | 12.0 NÜ 263 4x2 18 Ton. | 98- | 3497/1 | 3497/1 |
| NÜ (18 T) | 12.0 NÜ 313 4x2 18 Ton. | 98- | 3497 | 3497 |
| NÜ (18 T) | 12.0 NÜ 313 4x2 18 Ton. | 98- | 3497/1 | 3497/1 |
| NÜ (18 T) | 6.9 NÜ 263 4x2 18 Ton. | 98- | 3497 | 3497 |
| NÜ (18 T) | 6.9 NÜ 263 4x2 18 Ton. | 98- | 3497/1 | 3497/1 |
| NÜ (24.5 T) | 12.0 NÜ 313 15M 6x2 24.5 Ton. | 98- | 3497 | 3497 |
| NÜ (24.5 T) | 12.0 NÜ 313 15M 6x2 24.5 Ton. | 00- | 3497 | 3497 |
| NÜ (24.5 T) | 12.0 NÜ 313 15M 6x2 24.5 Ton. | 98- | 3497/1 | 3497/1 |
| NÜ (24.5 T) | 12.0 NÜ 313 15M 6x2 24.5 Ton. | 00- | 3497/1 | 3497/1 |
| NÜ (24.5 T) | 12.0 NÜ 353 15M 6x2 24.5 Ton. | 98- | 3497 | 3497 |
| NÜ (24.5 T) | 12.0 NÜ 353 15M 6x2 24.5 Ton. | 98- | 3497/1 | 3497/1 |
| SG II | SG 192 | 96- | 3565 | 3565 |

| MAKE & MODEL | | YEAR | | |
|---|---|---|---|---|
| **MAN** | | | | |
| SG II | SG 192 | *96-* | 3565/A | 3565/A |
| SG II | SG 192 | *96-* | 3565/3 | 3565/3 |
| SL III | SL 160 | *96-* | 3565 | 3565 |
| SL III | SL 160 | *96-* | 3565/A | 3565/A |
| SL III | SL 160 | *96-* | 3565/3 | 3565/3 |
| SL III | SL 750 | *96-* | 3565 | 3565 |
| SL III | SL 750 | *96-* | 3565/A | 3565/A |
| SL III | SL 750 | *96-* | 3565/3 | 3565/3 |
| SÜ II | 12.0 SÜ 263 4x2 18 Ton | *03-* | 3828/2 | 3828/2 |
| SÜ II | 12.0 SÜ 263 4x2 18 Ton | *03-* | 3828/3 | 3828/3 |
| SÜ II | 12.0 SÜ 313 4x2 18 Ton | *03-* | 3828/2 | 3828/2 |
| SÜ II | 12.0 SÜ 313 4x2 18 Ton | *03-* | 3828/3 | 3828/3 |
| SÜ II | 6.9 SÜ 283 4x2 18 Ton | *03-* | 3828/2 | 3828/2 |
| SÜ II | 6.9 SÜ 283 4x2 18 Ton | *03-* | 3828/3 | 3828/3 |
| SÜ II | SÜ 210 | *96-* | 3565 | 3565 |
| SÜ II | SÜ 210 | *96-* | 3565/A | 3565/A |
| SÜ II | SÜ 210 | *96-* | 3565/3 | 3565/3 |
| SÜ II | SÜ 230 | *96-* | 3565 | 3565 |
| SÜ II | SÜ 230 | *96-* | 3565/A | 3565/A |
| SÜ II | SÜ 230 | *96-* | 3565/3 | 3565/3 |
| TGA | 18.310 | *05/04-* | 3664/1 | |
| TGA | 18.310 FLS, FLLS, FLLS/N, FLS-TS, FLRS, FLLRS | 04.00 - | 4091 | |
| TGA | 18.310, 18.320 FC, FLC, FLLC, FLLC/N, FLLW, FLLW/N | 05.04 - | 4091 | |
| TGA | 18.310, 18.320 FK, FK-L, FLK, FLK/M | 05.04 - | 4091 | |
| TGA | 18.310, 18.320 FLS, FLRS, FLLS, FLLRS | 05.04 - | 4091 | |
| TGA | 18.310, 18320 FC, FLC, FRC, FLLC, FLLC/N, FLLW, FLLRC, FLLRW | 04.00 - | 4091 | |
| TGA | 18.310, 18320 FK, FLK, FK-L, FLRK | 12.00 - | 4091 | |
| TGA | 18.320 | *05/04-* | 3664/1 | |
| TGA | 18.350 FLS, FLS/N, FLS/M, FLS-TS, FLLS, FLLS/N, FLLRS | 05.04 - | 4091 | |
| TGA | 18.350, 18.360 FC, FLC, FLLC, FLLRC, FLLC/N, FLLW, FLLW/N | 05.04 - | 4091 | |
| TGA | 18.350, 18.360 FK, FK-L, FLK, FLK/M, | 05.04 - | 4091 | |
| TGA | 18.360 FC, FLC, FRC, FLLC, FLLC/N, FLLW, FLLRW | 04.00 - | 4091 | |
| TGA | 18.360 FK, FLK, FK-L, FLRK | 12.00 - | 4091 | |
| TGA | 18.360 FLS, FLLS, FLLS/N, FLS-TS, FLRS, FLLRS | 04.00 - | 4091 | |
| TGA | 18.360 FLS, FLLS, FLRS, FLLRS | 01.06 - | 4091 | |
| TGA | 18.390 FLS, FLS-TS, FLS/M, FLLS, FLLS/N, FLLS/M, FLLRS | 05.04 - | 4091 | |
| TGA | 18.390, 18.400 FC, FLC, FLLC, FLLC/N, FLLW, FLLW/N | 05.04 - | 4091 | |
| TGA | 18.390, 18.400 FK, FK-L, FLK, FLK/M | 05.04 - | 4091 | |
| TGA | 18.400 FLS, FLLS, FLRS, FLLRS | 10.05 - | 4091 | |
| TGA | 18.410 FLS, FLLS, FLLS/N, FLS-TS, FLRS, FLLRS | 04.00 - | 4091 | |
| TGA | 18.410, 18420 FC, FRC, FLC, FLRC, FLLC, FLLC/N, FLLW, FLLRC | 04.00 - | 4091 | |
| TGA | 18.410, 18420 FK, FK-L, FLK, FLRK | 12.00 - | 4091 | |
| TGA | 18.430 FLS, FLS/M, FLS-TS, FLLS, FLLS/N, FLLRS, FLRS | 05.04 - | 4091 | |
| TGA | 18.430, 18.440 FC, FLC, FLLC, FLLW, FLLW/N, FLLRC, FLLRW | 05.04 - | 4091 | |
| TGA | 18.430, 18.440 FK, FK-L, FLK, FLK/M | 05.04 - | 4091 | |
| TGA | 18.440 FLS, FLLS, FLRS, FLLRS | 09.05 - | 4091 | |
| TGA | 18.460 FC, FLC, FRC, FLLC, FLLC/N, FLLW, FLLRC, FLLRW | 04.00 - | 4091 | |
| TGA | 18.460 FK, FK-L, FLK, FLRK | 12.00 - | 4091 | |
| TGA | 18.460 FLS, FLLS, FLLS/N, FLS-TS, FLRS, FLLRS | 04.00 - | 4091 | |
| TGA | 18.480 FC, FLC, FLLC, FLLRC, FLLW, FLRC | 01.06 - | 4091 | |
| TGA | 18.480 FC, FLC, FLLC, FLLW, FLLRW, FLLRC | 09.02 - | 4091 | |
| TGA | 18.480 FK, FK-L, FLK | 01.06 - | 4091 | |
| TGA | 18.480 FK, FLK, FK-L | 09.02 - | 4091 | |
| TGA | 18.480 FLS, FLLS, FLLS/N, FLS-TS, FLRS-WW | 09.02 - | 4091 | |
| TGA | 18.480 FLS, FLLS, FLRS, FLLRS | 01.06 - | 4091 | |
| TGA | 18.510 FC, FLC, FRC, FLLC, FLLC/N, FLLW, FLLRC, FLLRW | 09.00 - | 4091 | |
| TGA | 18.510 FLS, FLLS, FLLS/N, FLRS, FLLRS | 04.00 - | 4091 | |
| TGA | 18.530 FC, FLC, FLLC, FLLC/N, FLLW, FLLRC, FLLRW | 09.02 - | 4091 | |
| TGA | 18.530 FLS, FLLS, FLLS/N | 09.02 - | 4091 | |
| TGA | 18.540 FLC, FLRC, FLLC, FLLRC, FLLW | 08.06 - | 4091 | |
| TGA | 18.540 FLS, FLRS, FLLS, FLLRS | 08.06 - | 4091 | |
| TGA | 19.350 FS, FRS, FLS, FLRS-WW | 05.04 - | 4091 | |
| TGA | 19.360 FS, FRS, FLS, FLRS-WW | 05.04 - | 4091 | |
| TGA | 19.360 FS/M-WW, FRS/M-WW | 05.04 - | 4091 | |
| TGA | 19.390 FS, FRS, FLS, FLRS-WW | 05.04 - | 4091 | |
| TGA | 19.400 FS/M-WW, FRS/M-WW, FLS, FLRS | 05.04 - | 4091 | |
| TGA | 19.410 FS/M-WW, FRS/M-WW | 05.04 - | 4091 | |
| TGA | 19.430 FS/M-WW, FLS, FRS, FLRS | 05.04 - | 4091 | |
| TGA | 19.440 FRS, FS/M-WW, FLS, FLRS | 02.06 - | 4091 | |
| TGA | 19.460 FS/M-WW, FRS/M-WW | 05.04 - | 4091 | |
| TGA | 19.480 FLS, FRS, FLRS-WW | 02.06 - | 4091 | |
| TGA | 19.480 FS/M, FRS/M-WW | 02.06 - | 4091 | |
| TGA | 19.480 FS/M-WW, FRS/M-WW | 05.04 - | 4091 | |
| TGA | 24.350, 24.360 FNLLC, FNLLW/N, FNLLRW | 05.04 - | 4091 | |
| TGA | 24.350, 24.360 FPLS, FPLRS | 02.04 - | 4091 | |
| TGA | 24.360 FNLLC/N, FNLLW, FNLLRW, FNLLRC | 09.01 - | 4091 | |

| MAKE & MODEL | | YEAR | | |
|---|---|---|---|---|
| **MAN** | | | | |
| TGA | 24.390, 24.400 FNLLC/N, FNLLW/N, FNLLRC, FNLLRW | 05.04 - | 4091 | |
| TGA | 24.390, 24.400 FPLS, FPLRS | 05.04 - | 4091 | |
| TGA | 24.410 FNLLC/N, FNLLW, FNLLRW | 09.01 - | 4091 | |
| TGA | 24.430, 24.440 FNLLC/N, FNLRC, FNLLW | 05.04 - | 4091 | |
| TGA | 24.430, 24.440 FPLS, FPLRS | 05.04 - | 4091 | |
| TGA | 24.460 FNLLC/N, FNLLW, FNLLRC, FNLLRW | 09.01 - | 4091 | |
| TGA | 24.480 FNLLC/N, FNLLW, FNLLRC, FNLLRW | 09.02 - | 4091 | |
| TGA | 24.480 FNLLC/N, FNLLW/N | 01.06 - | 4091 | |
| TGA | 24.480 FPLS, FPLRS | 01.06 - | 4091 | |
| TGA | 24.480 FPLS, FPLRS | 07.05 - | 4091 | |
| TGA | 24.510 FNLLC/N, FNLLW, FNLLRW | 09.01 - | 4091 | |
| TGA | 24.530 FNLLC/N, FNLLW, FNLLRW | 09.01 - | 4091 | |
| TGA | 24.530 FPLS, FPLRS | 07.05 - | 4091 | |
| TGA | 24.540 FNLLC/N, FLLCW/N | 01.06 - | 4091 | |
| TGA | 26.280 FNLC, FNLLC, FNLLW | 11.02 - | 4091 | |
| TGA | 26.310 FDC, FDLC, FDRC, FDLC/M, FDLRC | 01.01 - | 4091 | |
| TGA | 26.310 FDK, FDLK, FDRK | 09.02 - | 4091 | |
| TGA | 26.310 FDS, FDLS, FDLS/M, FDLRS | 01.01 - | 4091 | |
| TGA | 26.310 FD-TM, FDR-TM | 10.00 - | 4091 | |
| TGA | 26.310 FNLC, FNLLC, FVLC, FNLLW, FNLRC, FNLLRW | 09.00 - | 4091 | |
| TGA | 26.310 FPLS, FVLS, FNLS, FNLLS, FPLRS, FNLRS, FVLRS | 12.00 - | 4091 | |
| TGA | 26.310 FVLC | 09.03 - | 4091 | |
| TGA | 26.310 FVL-KO | 12.00 - | 4091 | |
| TGA | 26.310, 26.320 FDC, FDRC, FDC/M, FDRC/M, FDLC, FNHLC, FVHLC | 05.04 - | 4091 | |
| TGA | 26.310, 26.320 FDHK | 06.05 - | 4091 | |
| TGA | 26.310, 26.320 FDK, FDLK | 05.04 - | 4091 | |
| TGA | 26.310, 26.320 FDS, FDS/M, FDLS, FDRS, FDRS/M, FNHLS, FDLRS | 05.04 - | 4091 | |
| TGA | 26.310, 26.320 FD-TM | 06.05 - | 4091 | |
| TGA | 26.310, 26.320 FNLC, FNLLC, FNLRC, FNLLRC, FNLLW | 05.04 - | 4091 | |
| TGA | 26.310, 26.320 FNLS, FNLLS, FNLRS, FNLLRS | 05.04 - | 4091 | |
| TGA | 26.310, 26.320 FVHL-KO | 06.05 - | 4091 | |
| TGA | 26.310, 26.320 FVLC | 02.04 - | 4091 | |
| TGA | 26.310, 26.320 FVL-KO | 02.04 - | 4091 | |
| TGA | 26.330 FNLC, FNLLC, FNLLW | 11.02 - | 4091 | |
| TGA | 26.350 FDLRC-WW | 05.04 - | 4091 | |
| TGA | 26.350 FDLS, FDLRS, FDLRS/M, FDLRS-WW | 05.04 - | 4091 | |
| TGA | 26.350 FVHLC | 06.05 - | 4091 | |
| TGA | 26.350 FVHLS | 07.05 - | 4091 | |
| TGA | 26.350 FVLC | 01.04 - | 4091 | |
| TGA | 26.350 FVLS, FVLRS | 07.05 - | 4091 | |
| TGA | 26.350, 26.360 FDC, FDRC, FDC/M, FDRC/M, FDLC, FDLRC, FNHLC | 05.04 - | 4091 | |
| TGA | 26.350, 26.360 FDK, FDLK, FDRK | 05.04 - | 4091 | |
| TGA | 26.350, 26.360 FDS, FDS/M, FDLS, FDRS, FNHLS, FPHLS | 05.04 - | 4091 | |
| TGA | 26.350, 26.360 FD-TM | 02.04 - | 4091 | |
| TGA | 26.350, 26.360 FNLC, FNLLC, FNLLW, FNLRC, FNLLRC | 05.04 - | 4091 | |
| TGA | 26.350, 26.360 FNLS, FNLLS, FNLRS, FNLLRS, FPLS, FPLRS | 05.04 - | 4091 | |
| TGA | 26.350, 26.360 FVHL-KO | 06.05 - | 4091 | |
| TGA | 26.350, 26.360 FVL-KO | 01.04 - | 4091 | |
| TGA | 26.360 FDC, FDLC, FDLC/M, FDRC, FDLRC-WW | 01.01 - | 4091 | |
| TGA | 26.360 FDK, FDLK, FDRK, FDLRK | 09.02 - | 4091 | |
| TGA | 26.360 FDLC-WW, FDLRC | 05.04 - | 4091 | |
| TGA | 26.360 FDLS, FDLRS-WW, FNHLS | 05.04 - | 4091 | |
| TGA | 26.360 FDLS, FDLS/M, FDLRS, FDLRS/M, FDLRS-WW , FDRS | 09.03 - | 4091 | |
| TGA | 26.360 FDS, FDLS, FNLS, FNLLS, FPLS, FPLRS, FVLS, FVLRS | 12.00 - | 4091 | |
| TGA | 26.360 FD-TM, FDR-TM | 01.01 - | 4091 | |
| TGA | 26.360 FNLC, FNLLC, FNLLW, FNLLRC, FNLLRW, FVLC | 09.00 - | 4091 | |
| TGA | 26.360 FVHLC | 04.06 - | 4091 | |
| TGA | 26.360 FVHLS | 04.06 - | 4091 | |
| TGA | 26.360 FVLC | 04.06 - | 4091 | |
| TGA | 26.360 FVL-KO | 12.00 - | 4091 | |
| TGA | 26.360 FVLS, FVLRS | 04.06 - | 4091 | |
| TGA | 26.390 FVLC | 02.04 - | 4091 | |
| TGA | 26.390 FVLS, FVLRS | 07.05 - | 4091 | |
| TGA | 26.390, 26.400 FDC, FDRC, FDLRC, FDRC/M, FDLC, FNHLC, FVHLC | 05.04 - | 4091 | |
| TGA | 26.390, 26.400 FDK, FDLK | 05.04 - | 4091 | |
| TGA | 26.390, 26.400 FDS, FDS/M, FDLS, FDLRS, FNHLS, FPHLS, FVHLS | 05.04 - | 4091 | |
| TGA | 26.390, 26.400 FD-TM | 05.04 - | 4091 | |
| TGA | 26.390, 26.400 FNLC, FNLLC, FNLLW, FNLRC, FNLLRC | 05.04 - | 4091 | |
| TGA | 26.390, 26.400 FNLS, FNLLS, FNLRS, FNLLRS, FPLS, FPLRS | 05.04 - | 4091 | |
| TGA | 26.390, 26.400 FVHL-KO | 06.05 - | 4091 | |
| TGA | 26.390, 26.400 FVL-KO | 02.04 - | 4091 | |
| TGA | 26.400 FVLC | 04.06 - | 4091 | |
| TGA | 26.400 FVLS, FVLRS | 04.06 - | 4091 | |
| TGA | 26.410 FDC, FDLC, FDLC/M, FDLC-WW; FDRC-WW, FDLRC-WW | 01.01 - | 4091 | |
| TGA | 26.410 FDK, FDRK, FDLK, FDLRK | 09.01 - | 4091 | |
| TGA | 26.410 FDS, FDLS, FDLS/M, FDLS-WW, FDRS-WW, FDLRS-WW | 06.01 - | 4091 | |

| MAKE & MODEL | | YEAR | | |
|---|---|---|---|---|
| **MAN** | | | | |
| TGA | 26.410 FD-TM, FDR-TM | 01.01 - | 4091 | |
| TGA | 26.410 FNLC, FNLLC, FNLLW, FNLRC, FNLLRC, FVLC | 04.00 - | 4091 | |
| TGA | 26.410 FPLS, FPLRS, FVLS, FNLS, FNLLS | 12.00 - | 4091 | |
| TGA | 26.410 FVLC | 09.03 - | 4091 | |
| TGA | 26.410 FVL-KO | 12.00 - | 4091 | |
| TGA | 26.410 FVLS, FVLRS | 07.05 - | 4091 | |
| TGA | 26.430 FDLS, FDLS/M, FDLRS-WW | 02.04 - | 4091 | |
| TGA | 26.430 FVL-KO | 12.00 - | 4091 | |
| TGA | 26.430 FVLS, FVLRS | 07.05 - | 4091 | |
| TGA | 26.430, 26.440 FDC, FDRC, FDLC, FDLRC, FDLC/M, FNHLC, FVHLC | 05.04 - | 4091 | |
| TGA | 26.430, 26.440 FDK, FDLK | 05.04 - | 4091 | |
| TGA | 26.430, 26.440 FDS, FDLS, FDRS, FDLRS, FNHLS, FPHLS, FVHLS | 02.04 - | 4091 | |
| TGA | 26.430, 26.440 FD-TM | 05.04 - | 4091 | |
| TGA | 26.430, 26.440 FVLH-KO | 06.05 - | 4091 | |
| TGA | 26.430, 26.440, FNLC, FNLLC, FNLLW, FNLRC, FNLLRC, FVLC | 05.04 - | 4091 | |
| TGA | 26.430, 26.440, FNLS, FNLLS, FNLRS, FNLLRS, FPLS, FPLRS | 05.04 - | 4091 | |
| TGA | 26.440 FDLC-WW, FDLRC-WW | 02.06 - | 4091 | |
| TGA | 26.440 FDS, FDLS, FDLS-WW, FDLRS-WW | 02.06 - | 4091 | |
| TGA | 26.440 FVL-KO | 09.05 - | 4091 | |
| TGA | 26.440 FVLS, FVLRS | 09.05 - | 4091 | |
| TGA | 26.460 FDC, FDLC, FDLC/M, FDLC-WW, FDRC, FDLRC-WW | 01.01 - | 4091 | |
| TGA | 26.460 FDK, FDLK, FDLRK | 01.01 - | 4091 | |
| TGA | 26.460 FDS, FDLS, FDLS/M, FDLS-WW, FDRS-WW, FDLRS-WW | 06.01 - | 4091 | |
| TGA | 26.460 FD-TM, FDR-TM | 01.01 - | 4091 | |
| TGA | 26.460 FNLC, FNLRC, FNLLC, FNLLRW, FNLLRC | 04.00 - | 4091 | |
| TGA | 26.460 FPLS, FPLRS, FVLS, FVLRS, FNLS, FNLLS, FNLRS | 12.00 - | 4091 | |
| TGA | 26.460 FVLC | 02.01 - | 4091 | |
| TGA | 26.460 FVL-KO | 12.00 - | 4091 | |
| TGA | 26.480 FDC, FDC/M, FDLC, FDLRC, FDRC, FNHLC, FVHLC, FDLRC-WW | 02.06 - | 4091 | |
| TGA | 26.480 FDC, FDLC, FDRC, FDLC/M, FDLRC-WW | 09.02 - | 4091 | |
| TGA | 26.480 FDK, FDLK | 02.06 - | 4091 | |
| TGA | 26.480 FDK, FDLK, FDLRK | 09.02 - | 4091 | |
| TGA | 26.480 FDS, FDLS, FDLRS, FNHLS, FPHLS, FVHLS | 02.06 - | 4091 | |
| TGA | 26.480 FDS, FDLS, FDLS/M, FDLRS-WW, FDRS | 09.02 - | 4091 | |
| TGA | 26.480 FD-TM | 02.06 - | 4091 | |
| TGA | 26.480 FD-TM | 09.02 - | 4091 | |
| TGA | 26.480 FNLC, FNLLC, FVLC, FNLLRC, FVLLW | 09.02 - | 4091 | |
| TGA | 26.480 FNLC, FNLRC-WW, FNLLC, FNLLRC, FNLLW, FVLC | 02.06 - | 4091 | |
| TGA | 26.480 FNLS, FNLLS, FNLRS, FPLS, FVLS | 09.02 - | 4091 | |
| TGA | 26.480 FNLS, FNLLS, FNLRS, FPLS, FVLS, FVLRS | 02.06 - | 4091 | |
| TGA | 26.480 FVHL-KO | 02.06 - | 4091 | |
| TGA | 26.480 FVL-KO | 01.06 - | 4091 | |
| TGA | 26.480 FVL-KO | 09.02 - | 4091 | |
| TGA | 26.510 FDC, FDC/M, FDRC, FDLC, FDLC/M, FDLRC | 01.01 - | 4091 | |
| TGA | 26.510 FDS, FDLS, FDLS/M, FDRS, FDLRS | 01.01 - | 4091 | |
| TGA | 26.510 FNLC, FNLLC, FNLLW, FNLLRC, FVLC | 12.00 - | 4091 | |
| TGA | 26.510 FNLS, FNLLS, FNLRS, FPLS, FVLS | 12.00 - | 4091 | |
| TGA | 26.530 FDC, FDLC, FDC/M, FDLRC | 01.01 - | 4091 | |
| TGA | 26.530 FDK, FDLK, FDLRK | 09.02 - | 4091 | |
| TGA | 26.530 FDS, FDLS, FDLS/M, FDLRS | 01.01 - | 4091 | |
| TGA | 26.530 FNLC, FNLLC, FNLLW, FNLLRC, FVLC, FVLRC | 09.02 - | 4091 | |
| TGA | 26.530 FNLS, FNLLS, FNLRS, FPLS, FVLS, FVLRS | 09.02 - | 4091 | |
| TGA | 26.540 FNLC, FNLLC, FNLLRC, FNLLW | 08.06 - | 4091 | |
| TGA | 27.440 FDS, FDLS, FDRS, FDLRS | 10.08 - | 4091 | |
| TGA | 28.310 FNLC, FNLLC | 09.02 - | 4091 | |
| TGA | 28.310 FNLC, FNLLC, FNLRC | 09.02 - | 4091 | |
| TGA | 28.310 FNLC, FNLLC, FNLRC | 09.02 - | 4091 | |
| TGA | 28.310 FNLS, FNLRS | 06.04 - | 4091 | |
| TGA | 28.310 FNLS, FNLRS | 09.02 - | 4091 | |
| TGA | 28.310, 28.320 FNLC, FNLLC, FNLL-LE, FNLLR-LE | 07.06 - | 4091 | |
| TGA | 28.310, 28.320 FNLC, FNLLC, FNLLRC, FNLLR-LE | 07.06 - | 4091 | |
| TGA | 28.320 FNLC, FNLLC, FNLRC | 06.04 - | 4091 | |
| TGA | 28.320 FNLS, FNLRS | 06.04 - | 4091 | |
| TGA | 28.350 FANLC | 07.06 - | 4091 | |
| TGA | 28.350 FANLK | 07.06 - | 4091 | |
| TGA | 28.350 FNLS, FNLRS-WW | 02.04 - | 4091 | |
| TGA | 28.350, 28.360 FNLC, FNLLC, FNLL-LE | 07.06 - | 4091 | |
| TGA | 28.350, 28.360 FNLC, FNLLC, FNLRC, FNLL-LE | 06.04 - | 4091 | |
| TGA | 28.360 FANLC | 07.06 - | 4091 | |
| TGA | 28.360 FANLC | 07.06 - | 4091 | |
| TGA | 28.360 FANLK | 07.06 - | 4091 | |
| TGA | 28.360 FANLK | 07.06 - | 4091 | |
| TGA | 28.360 FNLC, FNLLC | 09.02 - | 4091 | |
| TGA | 28.360 FNLC, FNLLC | 09.02 - | 4091 | |
| TGA | 28.360 FNLS, FNLRS | 09.02 - | 4091 | |
| TGA | 28.360 FNLS, FNLRS-WW | 04.06 - | 4091 | |

| MAKE & MODEL | | YEAR | | |
|---|---|---|---|---|
| **MAN** | | | | |
| TGA | 28.390 FANLC | 07.06 - | 4091 | |
| TGA | 28.390 FANLK | 07.06 - | 4091 | |
| TGA | 28.390 FNLLC | 07.06 - | 4091 | |
| TGA | 28.390 FNLS, FNLRS | 05.04 - | 4091 | |
| TGA | 28.390, 28.400 FNLC, FNLLC, FNLRC-WW | 06.04 - | 4091 | |
| TGA | 28.400 FANLC | 07.06 - | 4091 | |
| TGA | 28.400 FANLK | 07.06 - | 4091 | |
| TGA | 28.400 FNLS, FNLRS | 04.06 - | 4091 | |
| TGA | 28.410 FANLC | 07.06 - | 4091 | |
| TGA | 28.410 FANLK | 07.06 - | 4091 | |
| TGA | 28.410 FNLC, FNLLC | 09.02 - | 4091 | |
| TGA | 28.410 FNLC, FNLLC, FNLRC | 09.02 - | 4091 | |
| TGA | 28.410 FNLS, FNLRS | 09.02 - | 4091 | |
| TGA | 28.430 FANLC | 07.06 - | 4091 | |
| TGA | 28.430 FANLK | 07.06 - | 4091 | |
| TGA | 28.430 FNLS, FNLRS-WW | 05.04 - | 4091 | |
| TGA | 28.430, 28.440 FNLC, FNLLC, FNLRC-WW | 06.04 - | 4091 | |
| TGA | 28.440 FANLC | 07.06 - | 4091 | |
| TGA | 28.440 FANLK | 07.06 - | 4091 | |
| TGA | 28.440 FNLS, FNLRS-WW | 09.05 - | 4091 | |
| TGA | 28.460 FNLC, FNLLC, FNLRC | 09.02 - | 4091 | |
| TGA | 28.460 FNLS, FNLRS | 09.02 - | 4091 | |
| TGA | 28.480 FANLC | 07.06 - | 4091 | |
| TGA | 28.480 FANLC | 07.06 - | 4091 | |
| TGA | 28.480 FANLK | 07.06 - | 4091 | |
| TGA | 28.480 FANLK | 07.06 - | 4091 | |
| TGA | 28.480 FNLC, FNLLC, FNLRC | 09.02 - | 4091 | |
| TGA | 28.480 FNLC, FNLRC-WW, FNLLC | 02.06 - | 4091 | |
| TGA | 28.480 FNLS, FNLRS | 09.02 - | 4091 | |
| TGA | 28.480 FNLS, FNLRS-WW | 02.06 - | 4091 | |
| TGA | 28.510 FNLC, FNLLC, FNLRC | 09.02 - | 4091 | |
| TGA | 28.510 FNLS, FNLRS | 09.02 - | 4091 | |
| TGA | 28.530 FANLC | 07.06 - | 4091 | |
| TGA | 28.530 FANLK | 07.06 - | 4091 | |
| TGA | 28.530 FNLC, FNLLC, FNLRC | 09.02 - | 4091 | |
| TGA | 28.530 FNLS, FNLRS | 09.02 - | 4091 | |
| TGA | 28.540 FNLC, FNLLC | 08.06 - | 4091 | |
| TGA | 28.540 FNLS | 08.06 - | 4091 | |
| TGA | 32.310 FFDC, FFDLC, FFDLRC | 01.02 - | 4091 | |
| TGA | 32.310 FFDK, FFDLK | 01.02 - | 4091 | |
| TGA | 32.310 FFD-TM | 01.02 - | 4091 | |
| TGA | 32.350, 32.360 FFDRC | 05.04 - | 4091 | |
| TGA | 32.350, 32.360 FFD-TM, FFDR-TM | 02.04 - | 4091 | |
| TGA | 32.360 FFDC, FFDLC, FFDLRC | 01.02 - | 4091 | |
| TGA | 32.360 FFDK, FFDLK | 01.02 - | 4091 | |
| TGA | 32.360 FFD-TM | 01.02 - | 4091 | |
| TGA | 32.390, 32.400 FFDRC | 05.04 - | 4091 | |
| TGA | 32.390, 32.400 FFD-TM, FFDR-TM | 05.04 - | 4091 | |
| TGA | 32.410 FFDC, FFDLC, FFDRC, FFDLRC | 01.02 - | 4091 | |
| TGA | 32.410 FFDK, FFDLK | 01.02 - | 4091 | |
| TGA | 32.410 FFD-TM | 01.02 - | 4091 | |
| TGA | 32.430, 32.440 FFDRC | 05.04 - | 4091 | |
| TGA | 32.430, 32.440 FFD-TM, FFDR-TM | 05.04 - | 4091 | |
| TGA | 32.460 FFDC, FFDLC, FFDLRC | 01.02 - | 4091 | |
| TGA | 32.460 FFDK, FFDLK | 01.02 - | 4091 | |
| TGA | 32.460 FFD-TM | 01.02 - | 4091 | |
| TGA | 32.480 FFDC, FFDLC, FFDLRC | 09.02 - | 4091 | |
| TGA | 32.480 FFDK, FFDLK | 09.02 - | 4091 | |
| TGA | 32.480 FFDRC | 02.06 - | 4091 | |
| TGA | 32.480 FFD-TM | 09.02 - | 4091 | |
| TGA | 32.480 FFD-TM, FFDR-TM | 02.06 - | 4091 | |
| TGA | 33.350 FDC-TM, FDRC-TM | 09.07 - | 4091 | |
| TGA | 33.350, 33.360 FDAC, FDHC, FDHC/M | 06.05 - | 4091 | |
| TGA | 33.350, 33.360 FDAK, FDHK | 06.05 - | 4091 | |
| TGA | 33.350, 33.360 FDAS, FDHS, FDHS/M | 06.05 - | 4091 | |
| TGA | 33.350, 33.360 FDC, FDC/M, FDLC, FDRC | 05.04 - | 4091 | |
| TGA | 33.350, 33.360 FDK, FDLK, FDRK | 05.04 - | 4091 | |
| TGA | 33.350, 33.360 FDS, FDLS, FDS/M, FDRS | 05.04 - | 4091 | |
| TGA | 33.360 FDAC, FDARC, FDAC-WW | 09.02 - | 4091 | |
| TGA | 33.360 FDC, FDC-WW, FDLC/M, FDRC-WW, FDLRC | 10.00 - | 4091 | |
| TGA | 33.360 FDC-TM, FDRC-TM | 09.07 - | 4091 | |
| TGA | 33.360 FDK, FDK-WW, FDLK, FDRK-WW | 01.01 - | 4091 | |
| TGA | 33.360 FD-TM, FDR-TM | 01.01 - | 4091 | |
| TGA | 33.390, 33.400 FDC, FDLC, FDRC, FDC/M | 05.04 - | 4091 | |
| TGA | 33.390, 33.400 FDC-TM, FDRC-TM | 09.07 - | 4091 | |
| TGA | 33.390, 33.400 FDK, FDLK, FDRK | 05.04 - | 4091 | |

| MAKE & MODEL | | YEAR | | |
|---|---|---|---|---|
| **MAN** | | | | |
| TGA | 33.390, 33.400 FDS, FDLS, FDLRS, FDRS, FDS/M | 05.04 - | 4091 | |
| TGA | 33.410 FDC, FDC-WW, FDLC, FDLRC, FDRC-WW | 10.00 - | 4091 | |
| TGA | 33.410 FDK, FDK-WW, FDLK, FDRK-WW | 10.00 - | 4091 | |
| TGA | 33.410 FDS, FDS-WW, FDLS, FDLS/M, FDLRS, FDRS-WW | 10.00 - | 4091 | |
| TGA | 33.410 FD-TM, FDR-TM | 10.00 - | 4091 | |
| TGA | 33.430, 33.440 FDC, FDLC, FDRC, FDLRC, FDC/M | 05.04 - | 4091 | |
| TGA | 33.430, 33.440 FDK, FDLK, FDRK | 05.04 - | 4091 | |
| TGA | 33.430, 33.440 FDS, FDLS, FDRS, FDLRS, FDS/M | 05.04 - | 4091 | |
| TGA | 33.440 FDC, FDRC | 06.05 - | 4091 | |
| TGA | 33.440 FDC-TM, FDRC-TM | 09.07 - | 4091 | |
| TGA | 33.440 FDK, FDRK | 06.05 - | 4091 | |
| TGA | 33.460 FDC, FDC-WW, FDLC, FDLRC, FDRC-WW | 09.02 - | 4091 | |
| TGA | 33.460 FDK, FDK-WW, FDLK, FDRK-WW | 09.02 - | 4091 | |
| TGA | 33.460 FDS, FDLS, FDLS/M, FDLRS, FDRS-WW | 09.02 - | 4091 | |
| TGA | 33.460 FD-TM, FDR-TM | 09.02 - | 4091 | |
| TGA | 33.480 FDC, FDC-WW, FDLC, FDRC-WW, FDLRC | 09.02 - | 4091 | |
| TGA | 33.480 FDC, FDLC, FDRC, FDC/M | 01.06 - | 4091 | |
| TGA | 33.480 FDC-TM, FDRC-TM | 09.07 - | 4091 | |
| TGA | 33.480 FDK, FDK-WW, FDLK, FDRK-WW | 09.02 - | 4091 | |
| TGA | 33.480 FDK, FDLK, FDRK | 01.06 - | 4091 | |
| TGA | 33.480 FDS, FDRS, FDLS, FDS/M | 01.06 - | 4091 | |
| TGA | 33.480 FDS, FDS-WW, FDLS, FDLS/M, FDRS-WW, FDLRS | 09.02 - | 4091 | |
| TGA | 33.480 FD-TM | 09.02 - | 4091 | |
| TGA | 33.510 FDC, FDC/M, FDLC, FDRC, FDLRC | 09.02 - | 4091 | |
| TGA | 33.510 FDS, FDLS/M, FDRS, FDLRS/M | 09.02 - | 4091 | |
| TGA | 33.530 FDC, FDC/M, FDLC, FDRC, FDLRC | 09.02 - | 4091 | |
| TGA | 33.530 FDK, FDLK | 07.03 - | 4091 | |
| TGA | 33.530 FDS, FDLS, FDLS/M, FDRS, FDLRS | 07.03 - | 4091 | |
| TGA | 35.310 FFDC, FFDLC | 06.03 - | 4091 | |
| TGA | 35.310 FFDK, FFDLK | 06.03 - | 4091 | |
| TGA | 35.310 FFD-TM | 11.03 - | 4091 | |
| TGA | 35.310, 35.320 FFDC, FFDLC | 02.04 - | 4091 | |
| TGA | 35.310, 35.320 FFDK, FFDLK | 02.04 - | 4091 | |
| TGA | 35.310, 35.320 FFD-TM | 02.04 - | 4091 | |
| TGA | 35.350 FFDHK, FFDHLK | 07.06 - | 4091 | |
| TGA | 35.350 FFDH-TM | 07.06 - | 4091 | |
| TGA | 35.350 FFNLC | 07.06 - | 4091 | |
| TGA | 35.350, 35.360 FFDC, FFDRC, FFDLC | 02.04 - | 4091 | |
| TGA | 35.350, 35.360 FFDK, FFDRK, FFDLK | 02.04 - | 4091 | |
| TGA | 35.350, 35.360 FFD-TM | 02.04 - | 4091 | |
| TGA | 35.360 FFDC, FFDLC | 10.03 - | 4091 | |
| TGA | 35.360 FFDHK, FFDHLK | 07.06 - | 4091 | |
| TGA | 35.360 FFDH-TM | 07.06 - | 4091 | |
| TGA | 35.360 FFDK, FFDLK | 10.03 - | 4091 | |
| TGA | 35.360 FFD-TM | 11.03 - | 4091 | |
| TGA | 35.360 FFNHLC | 07.06 - | 4091 | |
| TGA | 35.360 FFNLC | 07.06 - | 4091 | |
| TGA | 35.360 FFNLC | 07.06 - | 4091 | |
| TGA | 35.390 FDNLC | 07.06 - | 4091 | |
| TGA | 35.390 FFDAK | 02.04 - | 4091 | |
| TGA | 35.390 FFDAK, FFDHK, FFDHLK | 07.06 - | 4091 | |
| TGA | 35.390 FFDH-TM | 07.06 - | 4091 | |
| TGA | 35.390 FFNLC | 07.06 - | 4091 | |
| TGA | 35.390, 35.400 FFDC, FFDRC, FFDLC | 02.04 - | 4091 | |
| TGA | 35.390, 35.400 FFDK, FFDRK, FFDLK | 02.04 - | 4091 | |
| TGA | 35.390, 35.400 FFD-TM | 02.04 - | 4091 | |
| TGA | 35.400 FDNLC | 07.06 - | 4091 | |
| TGA | 35.400 FFDAK | 02.04 - | 4091 | |
| TGA | 35.400 FFDAK, FFDHK, FFDHLK | 07.06 - | 4091 | |
| TGA | 35.400 FFDH-TM | 07.06 - | 4091 | |
| TGA | 35.400 FFNHLC | 11.06 - | 4091 | |
| TGA | 35.400 FFNLC | 07.06 - | 4091 | |
| TGA | 35.410 FDNLC | 07.06 - | 4091 | |
| TGA | 35.410 FFDAK | 07.06 - | 4091 | |
| TGA | 35.410 FFDAK | 07.06 - | 4091 | |
| TGA | 35.410 FFDC, FFDLC | 10.03 - | 4091 | |
| TGA | 35.410 FFDK, FFDLK | 10.03 - | 4091 | |
| TGA | 35.410 FFD-TM | 11.03 - | 4091 | |
| TGA | 35.410 FFNLC | 07.06 - | 4091 | |
| TGA | 35.430 FDNLC | 07.06 - | 4091 | |
| TGA | 35.430 FFDAK, FFDHK, FFDHLK | 07.06 - | 4091 | |
| TGA | 35.430 FFDAK, FFDHK, FFDHLK | 07.06 - | 4091 | |
| TGA | 35.430 FFDH-TM | 07.06 - | 4091 | |
| TGA | 35.430 FFNLC | 07.06 - | 4091 | |
| TGA | 35.430, 35.440 FFDC, FFDRC, FFDLC | 02.04 - | 4091 | |
| TGA | 35.430, 35.440 FFDK, FFDRK, FFDLK | 02.04 - | 4091 | |

| MAKE & MODEL | | YEAR | | |
|---|---|---|---|---|
| **MAN** | | | | |
| TGA | 35.430, 35.440 FFD-TM | 02.04 - | 4091 | |
| TGA | 35.440 FDNLC | 07.06 - | 4091 | |
| TGA | 35.440 FFDAK, FFDHK, FFDHLK | 07.06 - | 4091 | |
| TGA | 35.440 FFDH-TM | 07.06 - | 4091 | |
| TGA | 35.440 FFNHLC | 11.06 - | 4091 | |
| TGA | 35.440 FFNLC | 07.06 - | 4091 | |
| TGA | 35.460 FFDC, FFDLC | 10.03 - | 4091 | |
| TGA | 35.460 FFDK, FFDLK | 10.03 - | 4091 | |
| TGA | 35.460 FFD-TM | 11.03 - | 4091 | |
| TGA | 35.460 FFNLC | 07.06 - | 4091 | |
| TGA | 35.480 FDNLC | 07.06 - | 4091 | |
| TGA | 35.480 FDNLC | 07.06 - | 4091 | |
| TGA | 35.480 FFDAK | 07.06 - | 4091 | |
| TGA | 35.480 FFDAK | 07.06 - | 4091 | |
| TGA | 35.480 FFDAK | 07.06 - | 4091 | |
| TGA | 35.480 FFDAK, FFDHK, FFDHLK | 07.06 - | 4091 | |
| TGA | 35.480 FFDARS | 07.06 - | 4091 | |
| TGA | 35.480 FFDC, FFDLC | 02.04 - | 4091 | |
| TGA | 35.480 FFDC, FFDLC | 10.03 - | 4091 | |
| TGA | 35.480 FFDH-TM | 07.06 - | 4091 | |
| TGA | 35.480 FFDK, FFDLK | 10.03 - | 4091 | |
| TGA | 35.480 FFDK, FFDLK | 02.04 - | 4091 | |
| TGA | 35.480 FFD-TM | 02.04 - | 4091 | |
| TGA | 35.480 FFD-TM | 11.03 - | 4091 | |
| TGA | 35.480 FFNHLC | 11.06 - | 4091 | |
| TGA | 35.480 FFNLC | 07.06 - | 4091 | |
| TGA | 35.480 FFNLC | 07.06 - | 4091 | |
| TGA | 35.530 FDNLC | 04.04 - | 4091 | |
| TGA | 35.530 FFDAK | 07.06 - | 4091 | |
| TGA | 35.530 FFDAK | 07.06 - | 4091 | |
| TGA | 35.530 FFDC, FFDLC | 04.04 - | 4091 | |
| TGA | 35.530 FFDK, FFDLK | 04.04 - | 4091 | |
| TGA | 35.530 FFD-TM | 04.04 - | 4091 | |
| TGA | 35.530 FFNLC | 07.06 - | 4091 | |
| TGA | 37.310 FFDC | 12.04 - | 4091 | |
| TGA | 37.310 FFDK | 12.04 - | 4091 | |
| TGA | 37.310 FFD-TM | 12.04 - | 4091 | |
| TGA | 37.310, 37.320 FFDC | 12.04 - | 4091 | |
| TGA | 37.310, 37.320 FFDK | 12.04 - | 4091 | |
| TGA | 37.310, 37.320 FFD-TM | 12.04 - | 4091 | |
| TGA | 37.350, 37.360 FFDC | 12.04 - | 4091 | |
| TGA | 37.350, 37.360 FFDK | 12.04 - | 4091 | |
| TGA | 37.350, 37.360 FFD-TM | 12.04 - | 4091 | |
| TGA | 37.360 FFDC | 12.04 - | 4091 | |
| TGA | 37.360 FFDK | 12.04 - | 4091 | |
| TGA | 37.360 FFD-TM | 12.04 - | 4091 | |
| TGA | 37.390, 37.400 FFDC | 12.04 - | 4091 | |
| TGA | 37.390, 37.400 FFDK | 12.04 - | 4091 | |
| TGA | 37.390, 37.400 FFD-TM | 12.04 - | 4091 | |
| TGA | 37.410 FFDC | 12.04 - | 4091 | |
| TGA | 37.410 FFDK | 12.04 - | 4091 | |
| TGA | 37.410 FFD-TM | 12.04 - | 4091 | |
| TGA | 37.430, 37.440 FFDC | 12.04 - | 4091 | |
| TGA | 37.430, 37.440 FFDK | 12.04 - | 4091 | |
| TGA | 37.430, 37.440 FFD-TM | 12.04 - | 4091 | |
| TGA | 37.460 FFDC | 12.04 - | 4091 | |
| TGA | 37.460 FFDK | 12.04 - | 4091 | |
| TGA | 37.460 FFD-TM | 12.04 - | 4091 | |
| TGA | 37.480 FFDC | 02.06 - | 4091 | |
| TGA | 37.480 FFDC | 12.04 - | 4091 | |
| TGA | 37.480 FFDK | 02.06 - | 4091 | |
| TGA | 37.480 FFDK | 12.04 - | 4091 | |
| TGA | 37.480 FFD-TM | 02.06 - | 4091 | |
| TGA | 37.480 FFD-TM | 12.04 - | 4091 | |
| TGA | 37.530 FFDC | 12.04 - | 4091 | |
| TGA | 37.530 FFDK | 12.04 - | 4091 | |
| TGA | 37.530 FFD-TM | 12.04 - | 4091 | |
| TGA | 37.530 FVDS, FVDLS | 07.06 - | 4091 | |
| TGA | 39.390 FVNLC | 07.06 - | 4091 | |
| TGA | 39.400 FVNLC | 07.06 - | 4091 | |
| TGA | 39.430 FVNLC | 07.06 - | 4091 | |
| TGA | 39.440 FVNLC | 07.06 - | 4091 | |
| TGA | 39.480 FVNLC | 07.06 - | 4091 | |
| TGA | 40.390, 40.400 FDK-WW, FDRK | 06.05 - | 4091 | |
| TGA | 40.390, 40.400 FDS-WW, FDRS | 06.05 - | 4091 | |
| TGA | 40.410 FDK-WW | 04.04 - | 4091 | |

| MAKE & MODEL | | YEAR | | |
|---|---|---|---|---|
| **MAN** | | | | |
| TGA | 40.410 FDS-WW | 04.04 - | 4091 | |
| TGA | 40.430 FDK-WW, FDRK | 06.05 - | 4091 | |
| TGA | 40.430 FDS-WW, FDRS | 06.05 - | 4091 | |
| TGA | 40.440 FDK-WW, FDRK | 06.05 - | 4091 | |
| TGA | 40.440 FDS-WW, FDRS | 06.05 - | 4091 | |
| TGA | 40.460 FDK-WW | 04.04 - | 4091 | |
| TGA | 40.460 FDS-WW | 04.04 - | 4091 | |
| TGA | 40.480 FDK-WW | 04.04 - | 4091 | |
| TGA | 40.480 FDK-WW, FDRK | 06.05 - | 4091 | |
| TGA | 40.480 FDS-WW | 04.04 - | 4091 | |
| TGA | 40.480 FDS-WW; FDRS | 06.05 - | 4091 | |
| TGA | 41.350 FFDC-TM, FFDRC-TM | 09.07 - | 4091 | |
| TGA | 41.350, 41.360 FFDC, FFDC/M, FFDRC | 12.04 - | 4091 | |
| TGA | 41.350, 41.360 FFDK, FFDRK | 12.04 - | 4091 | |
| TGA | 41.350, 41.360 FFD-TM | 12.04 - | 4091 | |
| TGA | 41.360 FFD | 12.08 - | 4091 | |
| TGA | 41.360 FFDC, FFDC/M, FFDC/M-WW, FFDRC | 01.03 - | 4091 | |
| TGA | 41.360 FFDC-TM, FDRC-TM | 09.07 - | 4091 | |
| TGA | 41.360 FFDK-WW | 09.03 - | 4091 | |
| TGA | 41.360 FFD-TM | 12.04 - | 4091 | |
| TGA | 41.390 FFDAK | 12.04 - | 4091 | |
| TGA | 41.390 FFDC-TM, FDRC-TM | 09.07 - | 4091 | |
| TGA | 41.390, 41.400 FFDC, FFDRC, FFDC/M | 12.04 - | 4091 | |
| TGA | 41.390, 41.400 FFDK, FFDRK | 12.04 - | 4091 | |
| TGA | 41.390, 41.400 FFD-TM | 12.04 - | 4091 | |
| TGA | 41.400 FFD | 12.08 - | 4091 | |
| TGA | 41.400 FFDC-TM, FDRC-TM | 09.07 - | 4091 | |
| TGA | 41.410 FFDAK | 07.06 - | 4091 | |
| TGA | 41.410 FFDAK | 07.06 - | 4091 | |
| TGA | 41.410 FFDC-WW, FDRC | 09.03 - | 4091 | |
| TGA | 41.410 FFDK-WW | 09.03 - | 4091 | |
| TGA | 41.410 FFD-TM | 12.04 - | 4091 | |
| TGA | 41.430 FFDAK | 07.06 - | 4091 | |
| TGA | 41.430 FFDAK | 12.04 - | 4091 | |
| TGA | 41.430 FFDC-TM, FFDRC | 09.07 - | 4091 | |
| TGA | 41.430, 41.440 FFDC, FFDRC, FFDC/M | 12.04 - | 4091 | |
| TGA | 41.430, 41.440 FFDK, FFDRK | 12.04 - | 4091 | |
| TGA | 41.430, 41.440 FFD-TM | 12.04 - | 4091 | |
| TGA | 41.440 FFD/M | 12.04 - | 4091 | |
| TGA | 41.440 FFDAK | 07.06 - | 4091 | |
| TGA | 41.440 FFDAK | 07.06 - | 4091 | |
| TGA | 41.440 FFDC, FFDRC | 12.04 - | 4091 | |
| TGA | 41.440 FFDC-TM, FFDRC-TM | 09.07 - | 4091 | |
| TGA | 41.440 FFDK, FFDRK | 12.04 - | 4091 | |
| TGA | 41.460 FFDC-WW, FFDRC | 09.03 - | 4091 | |
| TGA | 41.460 FFDK-WW | 09.03 - | 4091 | |
| TGA | 41.460 FFD-TM | 12.04 - | 4091 | |
| TGA | 41.480 FFD | 12.08 - | 4091 | |
| TGA | 41.480 FFDAK | 07.06 - | 4091 | |
| TGA | 41.480 FFDAK | 07.06 - | 4091 | |
| TGA | 41.480 FFDAK | 07.06 - | 4091 | |
| TGA | 41.480 FFDAK | 07.06 - | 4091 | |
| TGA | 41.480 FFDARC | 07.06 - | 4091 | |
| TGA | 41.480 FFDC, FFDRC, FFDC/M | 02.06 - | 4091 | |
| TGA | 41.480 FFDC-TM, FFDRC-TM | 09.07 - | 4091 | |
| TGA | 41.480 FFDC-WW, FFDRC | 06.05 - | 4091 | |
| TGA | 41.480 FFDK, FFDRK | 02.06 - | 4091 | |
| TGA | 41.480 FFDK-WW | 06.05 - | 4091 | |
| TGA | 41.480 FFD-TM | 02.06 - | 4091 | |
| TGA | 41.480 FFD-TM | 12.04 - | 4091 | |
| TGA | 41.480 FVDS, FVDLS | 07.06 - | 4091 | |
| TGA | 41.530 FFDAK | 07.06 - | 4091 | |
| TGA | 41.530 FFDAK | 07.06 - | 4091 | |
| TGA | 41.530 FFDAK | 07.06 - | 4091 | |
| TGA | 41.530 FFDC | 12.04 - | 4091 | |
| TGA | 41.530 FFDK | 12.04 - | 4091 | |
| TGA | 41.530 FFD-TM | 12.04 - | 4091 | |
| TGA | 41.530 FVDS, FVDLS | 09.02 - | 4091 | |
| TGA | 41.540 FVDS, FVDLS | 11.06 - | 4091 | |
| TGA | 41.660 FVDS, FVDLS | 09.02 - | 4091 | |
| TGA | All Models | *02-* | | 3828 |
| TGA | All Models | *02-* | | 3828/1 |
| TGA | All Models | *02-* | 3828 | |
| TGA | All Models | *02-* | 3828 | |
| TGA | | | 4091 | |
| TGA (18 T) | 10.5 18.310 FAC/FHLC 4x4 18 Ton. | *04-* | 3664 | 3664 |

| MAKE & MODEL | | YEAR | | |
|---|---|---|---|---|
| **MAN** | | | | |
| TGA (18 T) | 10.5 18.310 FAK/FAK-L/FALK 4x4 18 Ton. | 04- | 3664 | 3664 |
| TGA (18 T) | 10.5 18.310 FAS/FHLS 4x4 18 Ton. | 04- | 3664 | 3664 |
| TGA (18 T) | 10.5 18.310 FC/FLC/FLLC 4x2 18 Ton. | 04- | 3664 | 3664 |
| TGA (18 T) | 10.5 18.310 FC/FLC/FLLC 4x2 18 Ton. | 04- | 3828/2 | 3828/2 |
| TGA (18 T) | 10.5 18.310 FC/FLC/FLLC 4x2 18 Ton. | 04- | 3828/3 | 3828/3 |
| TGA (18 T) | 10.5 18.310 FLS,FLLS 4x2 18 Ton. | 04- | 3664 | 3664 |
| TGA (18 T) | 10.5 18.310 FLS,FLLS 4x2 18 Ton. | 04- | 3828/2 | 3828/2 |
| TGA (18 T) | 10.5 18.310 FLS,FLLS 4x2 18 Ton. | 04- | 3828/3 | 3828/3 |
| TGA (18 T) | 10.5 18.310, 18320 FAC/FHLC 4x4 18 Ton. | 04- | 3828/2 | 3828/2 |
| TGA (18 T) | 10.5 18.310, 18320 FAC/FHLC 4x4 18 Ton. | 04- | 3828/3 | 3828/3 |
| TGA (18 T) | 10.5 18.310, 18320 FAK/FAK-L/FALK/FALK-L/FHLK/FHLK-M 4x4 18 Ton. | 04- | 3828/2 | 3828/2 |
| TGA (18 T) | 10.5 18.310, 18320 FAK/FAK-L/FALK/FALK-L/FHLK/FHLK-M 4x4 18 Ton. | 04- | 3828/3 | 3828/3 |
| TGA (18 T) | 10.5 18.310, 18320 FAS/FHLS/FHLS-M 4x4 18 Ton. | 04- | 3828/2 | 3828/2 |
| TGA (18 T) | 10.5 18.310, 18320 FAS/FHLS/FHLS-M 4x4 18 Ton. | 04- | 3828/3 | 3828/3 |
| TGA (18 T) | 10.5 18.350 FAC 4x4 18 Ton. | 04- | 3664 | 3664 |
| TGA (18 T) | 10.5 18.350 FAK/FAK-L 4x4 18 Ton. | 04- | 3664 | 3664 |
| TGA (18 T) | 10.5 18.350 FAS,FALS 4x4 18 Ton. | 04- | 3664 | 3664 |
| TGA (18 T) | 10.5 18.350 FC/FLC 4x2 18 Ton. | 04- | 3664 | 3664 |
| TGA (18 T) | 10.5 18.350 FK/FK-L 4x2 18 Ton. | 04- | 3664 | 3664 |
| TGA (18 T) | 10.5 18.350 FLS,FLS/N,TS 4x2 18 Ton. | 04- | 3664 | 3664 |
| TGA (18 T) | 10.5 18.350 FLS,FLS/N,TS 4x2 18 Ton. | 04- | 3828/2 | 3828/2 |
| TGA (18 T) | 10.5 18.350 FLS,FLS/N,TS 4x2 18 Ton. | 04- | 3828/3 | 3828/3 |
| TGA (18 T) | 10.5 18.350, 18360 FAC/FHLC 4x4 18 Ton. | 04- | 3828/2 | 3828/2 |
| TGA (18 T) | 10.5 18.350, 18360 FAC/FHLC 4x4 18 Ton. | 04- | 3828/3 | 3828/3 |
| TGA (18 T) | 10.5 18.350, 18360 FAK/FAK-L/FALK/FALK-L/FHLK/FHLK-M 4x4 18 Ton. | 04- | 3828/2 | 3828/2 |
| TGA (18 T) | 10.5 18.350, 18360 FAK/FAK-L/FALK/FALK-L/FHLK/FHLK-M 4x4 18 Ton. | 04- | 3828/3 | 3828/3 |
| TGA (18 T) | 10.5 18.350, 18360 FAS,FALS/FHLS/FHLS-M 4x4 18 Ton. | 04- | 3828/2 | 3828/2 |
| TGA (18 T) | 10.5 18.350, 18360 FAS,FALS/FHLS/FHLS-M 4x4 18 Ton. | 04- | 3828/3 | 3828/3 |
| TGA (18 T) | 10.5 18.350, 18360 FC/FLC/FLLC/FLLC-N/FLLW/FLLW-N 4x2 18 Ton. | 04- | 3828/2 | 3828/2 |
| TGA (18 T) | 10.5 18.350, 18360 FC/FLC/FLLC/FLLC-N/FLLW/FLLW-N 4x2 18 Ton. | 04- | 3828/3 | 3828/3 |
| TGA (18 T) | 10.5 18.350, 18360 FK/FK-L/FLK/FLK-M 4x2 18 Ton. | 04- | 3828/2 | 3828/2 |
| TGA (18 T) | 10.5 18.350, 18360 FK/FK-L/FLK/FLK-M 4x2 18 Ton. | 04- | 3828/3 | 3828/3 |
| TGA (18 T) | 10.5 18.390 FAC 4x4 18 Ton. | 04- | 3664 | 3664 |
| TGA (18 T) | 10.5 18.390 FAK/FAK-L 4x4 18 Ton. | 04- | 3664 | 3664 |
| TGA (18 T) | 10.5 18.390 FAS,FALS 4x4 18 Ton. | 04- | 3664 | 3664 |
| TGA (18 T) | 10.5 18.390 FC/FLC 4x2 18 Ton. | 04- | 3664 | 3664 |
| TGA (18 T) | 10.5 18.390 FK,FLK,FLK/M 4x2 18 Ton. | 04- | 3664 | 3664 |
| TGA (18 T) | 10.5 18.390 FLS,FLS-TS 4x2 18 Ton. | 04- | 3664 | 3664 |
| TGA (18 T) | 10.5 18.390 FLS,FLS-TS 4x2 18 Ton. | 04- | 3828/2 | 3828/2 |
| TGA (18 T) | 10.5 18.390 FLS,FLS-TS 4x2 18 Ton. | 04- | 3828/3 | 3828/3 |
| TGA (18 T) | 10.5 18.390, 18400 FAC, FHLC 4x4 18 Ton. | 04- | 3828/2 | 3828/2 |
| TGA (18 T) | 10.5 18.390, 18400 FAC, FHLC 4x4 18 Ton. | 04- | 3828/3 | 3828/3 |
| TGA (18 T) | 10.5 18.390, 18400 FAK/FAK-L/FALK/FALK-L/FHLK/FHLK-M 4x4 18 Ton. | 04- | 3828/2 | 3828/2 |
| TGA (18 T) | 10.5 18.390, 18400 FAK/FAK-L/FALK/FALK-L/FHLK/FHLK-M 4x4 18 Ton. | 04- | 3828/3 | 3828/3 |
| TGA (18 T) | 10.5 18.390, 18400 FAS,FALS,FHLS,FHLS-M 4x4 18 Ton. | 04- | 3828/2 | 3828/2 |
| TGA (18 T) | 10.5 18.390, 18400 FAS,FALS,FHLS,FHLS-M 4x4 18 Ton. | 04- | 3828/3 | 3828/3 |
| TGA (18 T) | 10.5 18.390, 18400 FC/FLC/FLLC,FLLC-N/FLLW,FLLW-N 4x2 18 Ton. | 04- | 3828/2 | 3828/2 |
| TGA (18 T) | 10.5 18.390, 18400 FC/FLC/FLLC,FLLC-N/FLLW,FLLW-N 4x2 18 Ton. | 04- | 3828/3 | 3828/3 |
| TGA (18 T) | 10.5 18.390, 18400 FK,FK-L/FLK,FLK/M 4x2 18 Ton. | 04- | 3828/2 | 3828/2 |
| TGA (18 T) | 10.5 18.390, 18400 FK,FK-L/FLK,FLK/M 4x2 18 Ton. | 04- | 3828/3 | 3828/3 |
| TGA (18 T) | 10.5 18.430 FAC 4x4 18 Ton. | 04- | 3664 | 3664 |
| TGA (18 T) | 10.5 18.430 FAK/FAL-K 4x4 18 Ton. | 04- | 3664 | 3664 |
| TGA (18 T) | 10.5 18.430 FAS,FALS 4x4 18 Ton. | 04- | 3664 | 3664 |
| TGA (18 T) | 10.5 18.430 FC/FLC 4x2 18 Ton. | 04- | 3664 | 3664 |
| TGA (18 T) | 10.5 18.430 FC/FLC/FLLC/FLLW/FLLW/M 4x2 18 Ton. | 04- | 3828/2 | 3828/2 |
| TGA (18 T) | 10.5 18.430 FC/FLC/FLLC/FLLW/FLLW/M 4x2 18 Ton. | 04- | 3828/3 | 3828/3 |
| TGA (18 T) | 10.5 18.430 FK/FK-L 4x2 18 Ton. | 04- | 3664 | 3664 |
| TGA (18 T) | 10.5 18.430 FLS,FLS/M,TS 4x2 18 Ton. | 04- | 3664 | 3664 |
| TGA (18 T) | 10.5 18.430 FLS,FLS/M,TS 4x2 18 Ton. | 04- | 3828/2 | 3828/2 |
| TGA (18 T) | 10.5 18.430 FLS,FLS/M,TS 4x2 18 Ton. | 04- | 3828/3 | 3828/3 |
| TGA (18 T) | 10.5 18.430, 18440 FAC/FHLC 4x4 18 Ton. | 04- | 3828/2 | 3828/2 |
| TGA (18 T) | 10.5 18.430, 18440 FAC/FHLC 4x4 18 Ton. | 04- | 3828/3 | 3828/3 |
| TGA (18 T) | 10.5 18.430, 18440 FAK/FALK/FAL-K/FHLS/FHLS-M 4x4 18 Ton. | 04- | 3828/2 | 3828/2 |
| TGA (18 T) | 10.5 18.430, 18440 FAK/FALK/FAL-K/FHLS/FHLS-M 4x4 18 Ton. | 04- | 3828/3 | 3828/3 |
| TGA (18 T) | 10.5 18.430, 18440 FAS,FALS,FHLS,FHLS-M 4x4 18 Ton. | 04- | 3828/2 | 3828/2 |
| TGA (18 T) | 10.5 18.430, 18440 FAS,FALS,FHLS,FHLS-M 4x4 18 Ton. | 04- | 3828/3 | 3828/3 |
| TGA (18 T) | 10.5 18.430, 18440 FK/FK-L/FLK/FLK-M 4x2 18 Ton. | 04- | 3828/2 | 3828/2 |
| TGA (18 T) | 10.5 18.430, 18440 FK/FK-L/FLK/FLK-M 4x2 18 Ton. | 04- | 3828/3 | 3828/3 |
| TGA (18 T) | 12.0 18.310 FC/FLC 4x2 18 Ton. | 01- | 3828/2 | 3828/2 |
| TGA (18 T) | 12.0 18.310 FC/FLC 4x2 18 Ton. | 01- | 3828/2 | 3828/2 |
| TGA (18 T) | 12.0 18.310 FC/FLC 4x2 18 Ton. | 01- | 3828/3 | 3828/3 |
| TGA (18 T) | 12.0 18.310 FC/FLC 4x2 18 Ton. | 01- | 3828/3 | 3828/3 |
| TGA (18 T) | 12.0 18.310 FC/FLC/FLLC/FLLW 4x2 18 Ton. | 00-01 | 3497 | 3497 |
| TGA (18 T) | 12.0 18.310 FC/FLC/FLLC/FLLW 4x2 18 Ton. | 00-01 | 3497 | 3497 |
| TGA (18 T) | 12.0 18.310 FC/FLC/FLLC/FLLW 4x2 18 Ton. | 00-01 | 3497/1 | 3497/1 |
| TGA (18 T) | 12.0 18.310 FC/FLC/FLLC/FLLW 4x2 18 Ton. | 00-01 | 3497/1 | 3497/1 |

| MAKE & MODEL | | YEAR | | |
|---|---|---|---|---|
| **MAN** | | | | |
| TGA (18 T) | 12.0 18.310 FK/FLK 4x2 18 Ton. | *00-01* | 3497 | 3497 |
| TGA (18 T) | 12.0 18.310 FK/FLK 4x2 18 Ton. | *00-01* | 3497/1 | 3497/1 |
| TGA (18 T) | 12.0 18.310 FK/FLK 4x2 18 Ton. | *01-* | 3828/2 | 3828/2 |
| TGA (18 T) | 12.0 18.310 FK/FLK 4x2 18 Ton. | *01-* | 3828/3 | 3828/3 |
| TGA (18 T) | 12.0 18.310 FLLC/FLLW 4x2 18 Ton. | *01-* | 3828/2 | 3828/2 |
| TGA (18 T) | 12.0 18.310 FLLC/FLLW 4x2 18 Ton. | *01-* | 3828/2 | 3828/2 |
| TGA (18 T) | 12.0 18.310 FLLC/FLLW 4x2 18 Ton. | *01-* | 3828/3 | 3828/3 |
| TGA (18 T) | 12.0 18.310 FLLC/FLLW 4x2 18 Ton. | *01-* | 3828/3 | 3828/3 |
| TGA (18 T) | 12.0 18.310 FLLSN 4x2 18 Ton. | *01-* | 3828/2 | 3828/2 |
| TGA (18 T) | 12.0 18.310 FLLSN 4x2 18 Ton. | *01-* | 3828/3 | 3828/3 |
| TGA (18 T) | 12.0 18.310 FLS/FLLS 4x2 18 Ton. | *01-* | 3828/2 | 3828/2 |
| TGA (18 T) | 12.0 18.310 FLS/FLLS 4x2 18 Ton. | *01-* | 3828/3 | 3828/3 |
| TGA (18 T) | 12.0 18.310 FLS/FLLS/FLLSN 4x2 18 Ton. | *00-01* | 3497 | 3497 |
| TGA (18 T) | 12.0 18.310 FLS/FLLS/FLLSN 4x2 18 Ton. | *00-01* | 3497/1 | 3497/1 |
| TGA (18 T) | 12.0 18.360 FK/FLK 4x2 18 Ton. | *00-01* | 3497 | 3497 |
| TGA (18 T) | 12.0 18.360 FK/FLK 4x2 18 Ton. | *00-01* | 3497/1 | 3497/1 |
| TGA (18 T) | 12.0 18.360 FK/FLK 4x2 18 Ton. | *01-* | 3828/2 | 3828/2 |
| TGA (18 T) | 12.0 18.360 FK/FLK 4x2 18 Ton. | *01-* | 3828/3 | 3828/3 |
| TGA (18 T) | 12.0 18.360 FLLSN 4x2 18 Ton. | *01-* | 3828/2 | 3828/2 |
| TGA (18 T) | 12.0 18.360 FLLSN 4x2 18 Ton. | *01-* | 3828/3 | 3828/3 |
| TGA (18 T) | 12.0 18.360 FLS/FLLS 4x2 18 Ton. | *01-* | 3828/2 | 3828/2 |
| TGA (18 T) | 12.0 18.360 FLS/FLLS 4x2 18 Ton. | *01-* | 3828/3 | 3828/3 |
| TGA (18 T) | 12.0 18.360 FLS/FLLS/FLLSN 4x2 18 Ton. | *00-01* | 3497 | 3497 |
| TGA (18 T) | 12.0 18.360 FLS/FLLS/FLLSN 4x2 18 Ton. | *00-01* | 3497/1 | 3497/1 |
| TGA (18 T) | 12.0 18.410 FK/FLK 4x2 18 Ton. | *00-01* | 3497 | 3497 |
| TGA (18 T) | 12.0 18.410 FK/FLK 4x2 18 Ton. | *00-01* | 3497/1 | 3497/1 |
| TGA (18 T) | 12.0 18.410 FK/FLK 4x2 18 Ton. | *01-* | 3828/2 | 3828/2 |
| TGA (18 T) | 12.0 18.410 FK/FLK 4x2 18 Ton. | *01-* | 3828/3 | 3828/3 |
| TGA (18 T) | 12.0 18.410 FLC/FLLC 4x2 18 Ton. | *00-01* | 3497 | 3497 |
| TGA (18 T) | 12.0 18.410 FLC/FLLC 4x2 18 Ton. | *00-01* | 3497/1 | 3497/1 |
| TGA (18 T) | 12.0 18.410 FLC/FLLC 4x2 18 Ton. | *01-* | 3828/2 | 3828/2 |
| TGA (18 T) | 12.0 18.410 FLC/FLLC 4x2 18 Ton. | *01-* | 3828/3 | 3828/3 |
| TGA (18 T) | 12.0 18.410 FLS/FLLS 4x2 18 Ton. | *00-01* | 3497 | 3497 |
| TGA (18 T) | 12.0 18.410 FLS/FLLS 4x2 18 Ton. | *00-01* | 3497/1 | 3497/1 |
| TGA (18 T) | 12.0 18.410 FLS/FLLS 4x2 18 Ton. | *01-* | 3828/2 | 3828/2 |
| TGA (18 T) | 12.0 18.410 FLS/FLLS 4x2 18 Ton. | *01-* | 3828/3 | 3828/3 |
| TGA (18 T) | 12.8 18.460 FK/FLK 4x2 18 Ton. | *00-01* | 3497 | 3497 |
| TGA (18 T) | 12.8 18.460 FK/FLK 4x2 18 Ton. | *00-01* | 3497/1 | 3497/1 |
| TGA (18 T) | 12.8 18.460 FK/FLK 4x2 18 Ton. | *01-* | 3828/2 | 3828/2 |
| TGA (18 T) | 12.8 18.460 FK/FLK 4x2 18 Ton. | *01-* | 3828/3 | 3828/3 |
| TGA (18 T) | 12.8 18.460 FLC/FLLC 4x2 18 Ton. | *00-01* | 3497 | 3497 |
| TGA (18 T) | 12.8 18.460 FLC/FLLC 4x2 18 Ton. | *00-01* | 3497/1 | 3497/1 |
| TGA (18 T) | 12.8 18.460 FLC/FLLC 4x2 18 Ton. | *01-* | 3828/2 | 3828/2 |
| TGA (18 T) | 12.8 18.460 FLC/FLLC 4x2 18 Ton. | *01-* | 3828/3 | 3828/3 |
| TGA (18 T) | 12.8 18.460 FLS/FLLS 4x2 18 Ton. | *00-01* | 3497 | 3497 |
| TGA (18 T) | 12.8 18.460 FLS/FLLS 4x2 18 Ton. | *00-01* | 3497/1 | 3497/1 |
| TGA (18 T) | 12.8 18.460 FLS/FLLS 4x2 18 Ton. | *01-* | 3828/2 | 3828/2 |
| TGA (18 T) | 12.8 18.460 FLS/FLLS 4x2 18 Ton. | *01-* | 3828/3 | 3828/3 |
| TGA (18 T) | 12.8 18.510 FC/FLC 4x2 18 Ton. | *01-* | 3828/2 | 3828/2 |
| TGA (18 T) | 12.8 18.510 FC/FLC 4x2 18 Ton. | *01-* | 3828/3 | 3828/3 |
| TGA (18 T) | 12.8 18.510 FC/FLC/FLLC/FLLW 4x2 18 Ton. | *00-01* | 3497 | 3497 |
| TGA (18 T) | 12.8 18.510 FC/FLC/FLLC/FLLW 4x2 18 Ton. | *00-01* | 3497/1 | 3497/1 |
| TGA (18 T) | 12.8 18.510 FLLC/FLLW 4x2 18 Ton. | *01-* | 3828/2 | 3828/2 |
| TGA (18 T) | 12.8 18.510 FLLC/FLLW 4x2 18 Ton. | *01-* | 3828/3 | 3828/3 |
| TGA (18 T) | 12.8 18.510 FLLSN 4x2 18 Ton. | *01-* | 3828/2 | 3828/2 |
| TGA (18 T) | 12.8 18.510 FLLSN 4x2 18 Ton. | *01-* | 3828/3 | 3828/3 |
| TGA (18 T) | 12.8 18.510 FLS/FLLS 4x2 18 Ton. | *01-* | 3828/2 | 3828/2 |
| TGA (18 T) | 12.8 18.510 FLS/FLLS 4x2 18 Ton. | *01-* | 3828/3 | 3828/3 |
| TGA (18 T) | 12.8 18.510 FLS/FLLS/FLLSN 4x2 18 Ton. | *00-01* | 3497 | 3497 |
| TGA (18 T) | 12.8 18.510 FLS/FLLS/FLLSN 4x2 18 Ton. | *00-01* | 3497/1 | 3497/1 |
| TGA (18 T) | 6.9 18.240 FC,FRC,FLC,FLRC 4x2 18 Ton. | *05-* | 3664 | 3664 |
| TGA (18 T) | 6.9 18.240 FC,FRC,FLC,FLRC,FLLC,FLLRC 4x2 18 Ton. | *05-* | 3828/2 | 3828/2 |
| TGA (18 T) | 6.9 18.240 FC,FRC,FLC,FLRC,FLLC,FLLRC 4x2 18 Ton. | *05-* | 3828/3 | 3828/3 |
| TGA (18 T) | 6.9 18.240 FK,FRK,FK-L 4x2 18 Ton. | *05-* | 3664 | 3664 |
| TGA (18 T) | 6.9 18.280 FC,FRC,FLC,FLRC 4x2 18 Ton. | *05-* | 3664 | 3664 |
| TGA (18 T) | 6.9 18.280 FC,FRC,FLC,FLRC,FLLC,FLLRC 4x2 18 Ton. | *05-* | 3828/2 | 3828/2 |
| TGA (18 T) | 6.9 18.280 FC,FRC,FLC,FLRC,FLLC,FLLRC 4x2 18 Ton. | *05-* | 3828/3 | 3828/3 |
| TGA (18 T) | 6.9 18.280 FK,FRK,FK-L 4x2 18 Ton. | *05-* | 3664 | 3664 |
| TGA (18 T) | 6.9 18.330 FC,FRC,FLC,FLRC 4x2 18 Ton. | *05-* | 3664 | 3664 |
| TGA (18 T) | 6.9 18.330 FC,FRC,FLC,FLRC,FLLC,FLLRC 4x2 18 Ton. | *05-* | 3828/2 | 3828/2 |
| TGA (18 T) | 6.9 18.330 FC,FRC,FLC,FLRC,FLLC,FLLRC 4x2 18 Ton. | *05-* | 3828/3 | 3828/3 |
| TGA (18 T) | 6.9 18.330 FK,FRK,FK-L 4x2 18 Ton. | *05-* | 3664 | 3664 |
| TGA (26 T) | 12.0 26.310 FNLC/FNLLC 6x2/2/4 26 Ton. | *01-* | 3828/2 | 3828/2 |
| TGA (26 T) | 12.0 26.310 FNLC/FNLLC 6x2/2/4 26 Ton. | *01-* | 3828/3 | 3828/3 |
| TGA (26 T) | 12.0 26.310 FNLC/FNLLC/FVLC 6x2/2/4 26 Ton. | *00-01* | 3497 | 3497 |
| TGA (26 T) | 12.0 26.310 FNLC/FNLLC/FVLC 6x2/2/4 26 Ton. | *00-01* | 3497/1 | 3497/1 |

| MAKE & MODEL | | YEAR | | |
|---|---|---|---|---|
| **MAN** | | | | |
| TGA (26 T) | 12.0 26.310 FPLS 6x2/2/4 26 Ton. | 01- | 3828/2 | 3828/2 |
| TGA (26 T) | 12.0 26.310 FPLS 6x2/2/4 26 Ton. | 01- | 3828/3 | 3828/3 |
| TGA (26 T) | 12.0 26.310 FPLS/FVLS 6x2/2/4 26 Ton. | 00-01 | 3497 | 3497 |
| TGA (26 T) | 12.0 26.310 FPLS/FVLS 6x2/2/4 26 Ton. | 00-01 | 3497/1 | 3497/1 |
| TGA (26 T) | 12.0 26.310 FVLC 6x2/2/4 26 Ton. | 01- | 3828/2 | 3828/2 |
| TGA (26 T) | 12.0 26.310 FVLC 6x2/2/4 26 Ton. | 01- | 3828/3 | 3828/3 |
| TGA (26 T) | 12.0 26.310 FVL-KO 6x2/4 26 Ton. | 00-01 | 3497 | 3497 |
| TGA (26 T) | 12.0 26.310 FVL-KO 6x2/4 26 Ton. | 00-01 | 3497/1 | 3497/1 |
| TGA (26 T) | 12.0 26.310 FVL-KO 6x2/4 26 Ton. | 01- | 3828/2 | 3828/2 |
| TGA (26 T) | 12.0 26.310 FVL-KO 6x2/4 26 Ton. | 01- | 3828/3 | 3828/3 |
| TGA (26 T) | 12.0 26.310 FVLS 6x2/2/4 26 Ton. | 01- | 3828/2 | 3828/2 |
| TGA (26 T) | 12.0 26.310 FVLS 6x2/2/4 26 Ton. | 01- | 3828/3 | 3828/3 |
| TGA (26 T) | 12.0 26.360 FNLC/FNLLC 6x2/2/4 26 Ton. | 01- | 3828/2 | 3828/2 |
| TGA (26 T) | 12.0 26.360 FNLC/FNLLC 6x2/2/4 26 Ton. | 01- | 3828/3 | 3828/3 |
| TGA (26 T) | 12.0 26.360 FNLC/FNLLC/FVLC 6x2/2/4 26 Ton. | 00-01 | 3497 | 3497 |
| TGA (26 T) | 12.0 26.360 FNLC/FNLLC/FVLC 6x2/2/4 26 Ton. | 00-01 | 3497/1 | 3497/1 |
| TGA (26 T) | 12.0 26.360 FPLS 6x2/2/4 26 Ton. | 01- | 3828/2 | 3828/2 |
| TGA (26 T) | 12.0 26.360 FPLS 6x2/2/4 26 Ton. | 01- | 3828/3 | 3828/3 |
| TGA (26 T) | 12.0 26.360 FPLS/FVLS 6x2/2/4 26 Ton. | 00-01 | 3497 | 3497 |
| TGA (26 T) | 12.0 26.360 FPLS/FVLS 6x2/2/4 26 Ton. | 00-01 | 3497/1 | 3497/1 |
| TGA (26 T) | 12.0 26.360 FVLC 6x2/2/4 26 Ton. | 01- | 3828/2 | 3828/2 |
| TGA (26 T) | 12.0 26.360 FVLC 6x2/2/4 26 Ton. | 01- | 3828/3 | 3828/3 |
| TGA (26 T) | 12.0 26.360 FVL-KO 6x2/4 26 Ton. | 00-01 | 3497 | 3497 |
| TGA (26 T) | 12.0 26.360 FVL-KO 6x2/4 26 Ton. | 00-01 | 3497/1 | 3497/1 |
| TGA (26 T) | 12.0 26.360 FVL-KO 6x2/4 26 Ton. | 01- | 3828/2 | 3828/2 |
| TGA (26 T) | 12.0 26.360 FVL-KO 6x2/4 26 Ton. | 01- | 3828/3 | 3828/3 |
| TGA (26 T) | 12.0 26.360 FVLS 6x2/2/4 26 Ton. | 01- | 3828/2 | 3828/2 |
| TGA (26 T) | 12.0 26.360 FVLS 6x2/2/4 26 Ton. | 01- | 3828/3 | 3828/3 |
| TGA (26 T) | 12.0 26.410 FNLC/FNLLC/FNLLW 6x2 26 Ton. | 00-01 | 3497 | 3497 |
| TGA (26 T) | 12.0 26.410 FNLC/FNLLC/FNLLW 6x2 26 Ton. | 00-01 | 3497/1 | 3497/1 |
| TGA (26 T) | 12.0 26.410 FNLC/FNLLC/FNLLW 6x2 26 Ton. | 01- | 3828/2 | 3828/2 |
| TGA (26 T) | 12.0 26.410 FNLC/FNLLC/FNLLW 6x2 26 Ton. | 01- | 3828/2 | 3828/2 |
| TGA (26 T) | 12.0 26.410 FNLC/FNLLC/FNLLW 6x2 26 Ton. | 01- | 3828/3 | 3828/3 |
| TGA (26 T) | 12.0 26.410 FNLC/FNLLC/FNLLW 6x2 26 Ton. | 01- | 3828/3 | 3828/3 |
| TGA (26 T) | 12.0 26.410 FPLS 6x2/2/4 26 Ton. | 01- | 3828/2 | 3828/2 |
| TGA (26 T) | 12.0 26.410 FPLS 6x2/2/4 26 Ton. | 01- | 3828/3 | 3828/3 |
| TGA (26 T) | 12.0 26.410 FPLS/FVLS 6x2/2/4 26 Ton. | 00-01 | 3497 | 3497 |
| TGA (26 T) | 12.0 26.410 FPLS/FVLS 6x2/2/4 26 Ton. | 00-01 | 3497/1 | 3497/1 |
| TGA (26 T) | 12.0 26.410 FVL-KO 6x2/4 26 Ton. | 00-01 | 3497 | 3497 |
| TGA (26 T) | 12.0 26.410 FVL-KO 6x2/4 26 Ton. | 00-01 | 3497/1 | 3497/1 |
| TGA (26 T) | 12.0 26.410 FVL-KO 6x2/4 26 Ton. | 01- | 3828/2 | 3828/2 |
| TGA (26 T) | 12.0 26.410 FVL-KO 6x2/4 26 Ton. | 01- | 3828/3 | 3828/3 |
| TGA (26 T) | 12.0 26.410 FVLS 6x2/2/4 26 Ton. | 01- | 3828/2 | 3828/2 |
| TGA (26 T) | 12.0 26.410 FVLS 6x2/2/4 26 Ton. | 01- | 3828/3 | 3828/3 |
| TGA (26 T) | 12.8 26.460 FNLC/FNLLC 6x2 26 Ton. | 01- | 3828/2 | 3828/2 |
| TGA (26 T) | 12.8 26.460 FNLC/FNLLC 6x2 26 Ton. | 01- | 3828/3 | 3828/3 |
| TGA (26 T) | 12.8 26.460 FNLC/FNLLC/FNLLW 6x2 26 Ton. | 00-01 | 3497 | 3497 |
| TGA (26 T) | 12.8 26.460 FNLC/FNLLC/FNLLW 6x2 26 Ton. | 00-01 | 3497/1 | 3497/1 |
| TGA (26 T) | 12.8 26.460 FNLLW 6x2 26 Ton. | 01- | 3828/2 | 3828/2 |
| TGA (26 T) | 12.8 26.460 FNLLW 6x2 26 Ton. | 01- | 3828/3 | 3828/3 |
| TGA (26 T) | 12.8 26.460 FPLS 6x2/2/4 26 Ton. | 01- | 3828/2 | 3828/2 |
| TGA (26 T) | 12.8 26.460 FPLS 6x2/2/4 26 Ton. | 01- | 3828/3 | 3828/3 |
| TGA (26 T) | 12.8 26.460 FPLS/FVLS 6x2/2/4 26 Ton. | 00-01 | 3497 | 3497 |
| TGA (26 T) | 12.8 26.460 FPLS/FVLS 6x2/2/4 26 Ton. | 00-01 | 3497/1 | 3497/1 |
| TGA (26 T) | 12.8 26.460 FVL-KO 6x2/4 26 Ton. | 00-01 | 3497 | 3497 |
| TGA (26 T) | 12.8 26.460 FVL-KO 6x2/4 26 Ton. | 00-01 | 3497/1 | 3497/1 |
| TGA (26 T) | 12.8 26.460 FVL-KO 6x2/4 26 Ton. | 01- | 3828/2 | 3828/2 |
| TGA (26 T) | 12.8 26.460 FVL-KO 6x2/4 26 Ton. | 01- | 3828/3 | 3828/3 |
| TGA (26 T) | 12.8 26.460 FVLS 6x2/2/4 26 Ton. | 01- | 3828/2 | 3828/2 |
| TGA (26 T) | 12.8 26.460 FVLS 6x2/2/4 26 Ton. | 01- | 3828/3 | 3828/3 |
| TGA (26 T) | 12.8 26.510 FNLC/FNLLC 6x2/2/4 26 Ton. | 01- | 3828/2 | 3828/2 |
| TGA (26 T) | 12.8 26.510 FNLC/FNLLC 6x2/2/4 26 Ton. | 01- | 3828/3 | 3828/3 |
| TGA (26 T) | 12.8 26.510 FNLC/FNLLC/FNLLW/FLVC 6x2/2/4 26 Ton. | 00-01 | 3497 | 3497 |
| TGA (26 T) | 12.8 26.510 FNLC/FNLLC/FNLLW/FLVC 6x2/2/4 26 Ton. | 00-01 | 3497/1 | 3497/1 |
| TGA (26 T) | 12.8 26.510 FNLLW/FLVC 6x2/2/4 26 Ton. | 01- | 3828/2 | 3828/2 |
| TGA (26 T) | 12.8 26.510 FNLLW/FLVC 6x2/2/4 26 Ton. | 01- | 3828/3 | 3828/3 |
| TGA (26 T) | 12.8 26.510 FPLS 6x2/2/4 26 Ton. | 01- | 3828/2 | 3828/2 |
| TGA (26 T) | 12.8 26.510 FPLS 6x2/2/4 26 Ton. | 01- | 3828/3 | 3828/3 |
| TGA (26 T) | 12.8 26.510 FPLS/FVLS 6x2/2/4 26 Ton. | 00-01 | 3497 | 3497 |
| TGA (26 T) | 12.8 26.510 FPLS/FVLS 6x2/2/4 26 Ton. | 00-01 | 3497/1 | 3497/1 |
| TGA (26 T) | 12.8 26.510 FVLS 6x2/2/4 26 Ton. | 01- | 3828/2 | 3828/2 |
| TGA (26 T) | 12.8 26.510 FVLS 6x2/2/4 26 Ton. | 01- | 3828/3 | 3828/3 |
| TGA (26 T) | 12.8 41530 FVDS,FVDLS 8x4/4 41 Ton. | 02- | 3828/2 | 3828/2 |
| TGA (26 T) | 12.8 41530 FVDS,FVDLS 8x4/4 41 Ton. | 02- | 3828/3 | 3828/3 |
| TGA (26 T) | 6.9 26.330 FNLC/FNLLC 6x2 26 Ton. | 02- | 3664 | 3664 |
| TGA (26 T) | 6.9 26.330 FNLC/FNLLC 6x2 26 Ton. | 02- | 3828/2 | 3828/2 |

| MAKE & MODEL | | YEAR | 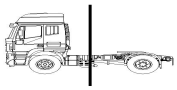 | |
|---|---|---|---|---|
| **MAN** | | | | |
| TGA (26 T) | 6.9 26.330 FNLC/FNLLC 6x2 26 Ton. | 02- | 3828/3 | 3828/3 |
| TGA (26 T) | 6.9 26330 LL 6x2 26 Ton. | 02- | 3828/2 | 3828/2 |
| TGA (26 T) | 6.9 26330 LL 6x2 26 Ton. | 02- | 3828/3 | 3828/3 |
| TGA (28 T) | 12.0 28.310 FNLC 6x2 28 Ton. | 02- | 3664 | 3664 |
| TGA (28 T) | 12.0 28.310 FNLC 6x2 28 Ton. | 02- | 3828/2 | 3828/2 |
| TGA (28 T) | 12.0 28.310 FNLC 6x2 28 Ton. | 02- | 3828/3 | 3828/3 |
| TGA (28 T) | 12.0 28.310 FNLS 6x2 28 Ton. | 02- | 3664 | 3664 |
| TGA (28 T) | 12.0 28.310 FNLS 6x2 28 Ton. | 02- | 3828/2 | 3828/2 |
| TGA (28 T) | 12.0 28.310 FNLS 6x2 28 Ton. | 02- | 3828/3 | 3828/3 |
| TGA (28 T) | 12.0 28.360 FNLC 6x2 28 Ton. | 02- | 3664 | 3664 |
| TGA (28 T) | 12.0 28.360 FNLC 6x2 28 Ton. | 02- | 3828/2 | 3828/2 |
| TGA (28 T) | 12.0 28.360 FNLC 6x2 28 Ton. | 02- | 3828/3 | 3828/3 |
| TGA (28 T) | 12.0 28.360 FNLS 6x2 28 Ton. | 02- | 3664 | 3664 |
| TGA (28 T) | 12.0 28.360 FNLS 6x2 28 Ton. | 02- | 3828/2 | 3828/2 |
| TGA (28 T) | 12.0 28.360 FNLS 6x2 28 Ton. | 02- | 3828/3 | 3828/3 |
| TGA (28 T) | 12.0 28.410 FNLC 6x2 28 Ton. | 02- | 3664 | 3664 |
| TGA (28 T) | 12.0 28.410 FNLC 6x2 28 Ton. | 02- | 3828/2 | 3828/2 |
| TGA (28 T) | 12.0 28.410 FNLC 6x2 28 Ton. | 02- | 3828/3 | 3828/3 |
| TGA (28 T) | 12.0 28.410 FNLS 6x2 28 Ton. | 02- | 3664 | 3664 |
| TGA (28 T) | 12.0 28.410 FNLS 6x2 28 Ton. | 02- | 3828/2 | 3828/2 |
| TGA (28 T) | 12.0 28.410 FNLS 6x2 28 Ton. | 02- | 3828/3 | 3828/3 |
| TGA (28 T) | 12.8 28.460 FNLC 6x2 28 Ton. | 02- | 3664 | 3664 |
| TGA (28 T) | 12.8 28.460 FNLC 6x2 28 Ton. | 02- | 3828/2 | 3828/2 |
| TGA (28 T) | 12.8 28.460 FNLC 6x2 28 Ton. | 02- | 3828/3 | 3828/3 |
| TGA (28 T) | 12.8 28.460 FNLS 6x2 28 Ton. | 02- | 3664 | 3664 |
| TGA (28 T) | 12.8 28.460 FNLS 6x2 28 Ton. | 02- | 3828/2 | 3828/2 |
| TGA (28 T) | 12.8 28.460 FNLS 6x2 28 Ton. | 02- | 3828/3 | 3828/3 |
| TGA (28 T) | 12.8 28.480 FNLC 6x2 28 Ton. | 02- | 3664 | 3664 |
| TGA (28 T) | 12.8 28.480 FNLC 6x2 28 Ton. | 02- | 3828/2 | 3828/2 |
| TGA (28 T) | 12.8 28.480 FNLC 6x2 28 Ton. | 02- | 3828/3 | 3828/3 |
| TGA (28 T) | 12.8 28.480 FNLS 6x2 28 Ton. | 02- | 3664 | 3664 |
| TGA (28 T) | 12.8 28.480 FNLS 6x2 28 Ton. | 02- | 3828/2 | 3828/2 |
| TGA (28 T) | 12.8 28.480 FNLS 6x2 28 Ton. | 02- | 3828/3 | 3828/3 |
| TGA (28 T) | 12.8 28.510 FNLC 6x2 28 Ton. | 02- | 3664 | 3664 |
| TGA (28 T) | 12.8 28.510 FNLC 6x2 28 Ton. | 02- | 3828/2 | 3828/2 |
| TGA (28 T) | 12.8 28.510 FNLC 6x2 28 Ton. | 02- | 3828/3 | 3828/3 |
| TGA (28 T) | 12.8 28.510 FNLS 6x2 28 Ton. | 02- | 3664 | 3664 |
| TGA (28 T) | 12.8 28.510 FNLS 6x2 28 Ton. | 02- | 3828/2 | 3828/2 |
| TGA (28 T) | 12.8 28.510 FNLS 6x2 28 Ton. | 02- | 3828/3 | 3828/3 |
| TGA (28 T) | 12.8 28.530 FNLC 6x2 28 Ton. | 02- | 3664 | 3664 |
| TGA (28 T) | 12.8 28.530 FNLC 6x2 28 Ton. | 02- | 3828/2 | 3828/2 |
| TGA (28 T) | 12.8 28.530 FNLC 6x2 28 Ton. | 02- | 3828/3 | 3828/3 |
| TGA (28 T) | 12.8 28.530 FNLS 6x2 28 Ton. | 02- | 3664 | 3664 |
| TGA (28 T) | 12.8 28.530 FNLS 6x2 28 Ton. | 02- | 3828/2 | 3828/2 |
| TGA (28 T) | 12.8 28.530 FNLS 6x2 28 Ton. | 02- | 3828/3 | 3828/3 |
| TGA (32 T) | 10.5 32.350/32.360 FFDRC 8x4/4 32 Ton. | 04- | 3828/2 | 3828/2 |
| TGA (32 T) | 10.5 32.350/32.360 FFDRC 8x4/4 32 Ton. | 04- | 3828/3 | 3828/3 |
| TGA (32 T) | 10.5 32.350/32.360 FFD-TM,FFDR-TM 8x4/4 32 Ton. | 04- | 3828/2 | 3828/2 |
| TGA (32 T) | 10.5 32.350/32.360 FFD-TM,FFDR-TM 8x4/4 32 Ton. | 04- | 3828/3 | 3828/3 |
| TGA (32 T) | 10.5 32.390/32.400 FFDRC 8x4/4 32 Ton. | 04- | 3828/2 | 3828/2 |
| TGA (32 T) | 10.5 32.390/32.400 FFDRC 8x4/4 32 Ton. | 04- | 3828/3 | 3828/3 |
| TGA (32 T) | 10.5 32.390/32.400 FFD-TM,FFDR-TM 8x4/4 32 Ton. | 04- | 3828/2 | 3828/2 |
| TGA (32 T) | 10.5 32.390/32.400 FFD-TM,FFDR-TM 8x4/4 32 Ton. | 04- | 3828/3 | 3828/3 |
| TGA (32 T) | 10.5 32.430/32.440 FFDRC 8x4/4 32 Ton. | 04- | 3828/2 | 3828/2 |
| TGA (32 T) | 10.5 32.430/32.440 FFDRC 8x4/4 32 Ton. | 04- | 3828/3 | 3828/3 |
| TGA (32 T) | 10.5 32.430/32.440 FFD-TM,FFDR-TM 8x4/4 32 Ton. | 04- | 3828/2 | 3828/2 |
| TGA (32 T) | 10.5 32.430/32.440 FFD-TM,FFDR-TM 8x4/4 32 Ton. | 04- | 3828/3 | 3828/3 |
| TGA (32 T) | 12.0 32.310 8x4/4 32 Ton. | 02- | 3828/2 | 3828/2 |
| TGA (32 T) | 12.0 32.310 8x4/4 32 Ton. | 02- | 3828/3 | 3828/3 |
| TGA (32 T) | 12.0 32.310 FFDC,FFDLC,FFDLRC 8x4/4 32 Ton. | 02- | 3828/2 | 3828/2 |
| TGA (32 T) | 12.0 32.310 FFDC,FFDLC,FFDLRC 8x4/4 32 Ton. | 02- | 3828/3 | 3828/3 |
| TGA (32 T) | 12.0 32.310 FFDK, FFDLK 8x4/4 32 Ton. | 02- | 3828/2 | 3828/2 |
| TGA (32 T) | 12.0 32.310 FFDK, FFDLK 8x4/4 32 Ton. | 02- | 3828/3 | 3828/3 |
| TGA (32 T) | 12.0 32.360 FFDC,FFDLC,FFDLRC 8x4/4 32 Ton. | 02- | 3828/2 | 3828/2 |
| TGA (32 T) | 12.0 32.360 FFDC,FFDLC,FFDLRC 8x4/4 32 Ton. | 02- | 3828/3 | 3828/3 |
| TGA (32 T) | 12.0 32.360 FFDK,FFDLK 8x4/4 32 Ton. | 02- | 3828/2 | 3828/2 |
| TGA (32 T) | 12.0 32.360 FFDK,FFDLK 8x4/4 32 Ton. | 02- | 3828/3 | 3828/3 |
| TGA (32 T) | 12.0 32.360 FFD-TM 8x4/4 32 Ton. | 02- | 3828/2 | 3828/2 |
| TGA (32 T) | 12.0 32.360 FFD-TM 8x4/4 32 Ton. | 02- | 3828/3 | 3828/3 |
| TGA (32 T) | 12.0 32.410 FFDC,FFDLC,FFDLRC 8x4/4 32 Ton. | 02- | 3828/2 | 3828/2 |
| TGA (32 T) | 12.0 32.410 FFDC,FFDLC,FFDLRC 8x4/4 32 Ton. | 02- | 3828/3 | 3828/3 |
| TGA (32 T) | 12.0 32.410 FFDK, FFDLK 8x4/4 32 Ton. | 02- | 3828/2 | 3828/2 |
| TGA (32 T) | 12.0 32.410 FFDK, FFDLK 8x4/4 32 Ton. | 02- | 3828/3 | 3828/3 |
| TGA (32 T) | 12.0 32.410 FFD-TM 8x4/4 32 Ton. | 02- | 3828/2 | 3828/2 |
| TGA (32 T) | 12.0 32.410 FFD-TM 8x4/4 32 Ton. | 02- | 3828/3 | 3828/3 |
| TGA (32 T) | 12.4 32.480 FFDRC 8x4/4 32 Ton. | 06- | 3828/2 | 3828/2 |

| MAKE & MODEL | | YEAR | | |
|---|---|---|---|---|
| **MAN** | | | | |
| TGA (32 T) | 12.4 32.480 FFDRC 8x4/4 32 Ton. | 06- | 3828/3 | 3828/3 |
| TGA (32 T) | 12.4 32.480 FFD-TM 8x4/4 32 Ton. | 06- | 3828/2 | 3828/2 |
| TGA (32 T) | 12.4 32.480 FFD-TM 8x4/4 32 Ton. | 06- | 3828/3 | 3828/3 |
| TGA (32 T) | 12.8 32.460 FFDC,FFDLC,FFDLRC 8x4/4 32 Ton. | 02- | 3828/2 | 3828/2 |
| TGA (32 T) | 12.8 32.460 FFDC,FFDLC,FFDLRC 8x4/4 32 Ton. | 02- | 3828/3 | 3828/3 |
| TGA (32 T) | 12.8 32.460 FFDK,FFDLK 8x4/4 32 Ton. | 02- | 3828/2 | 3828/2 |
| TGA (32 T) | 12.8 32.460 FFDK,FFDLK 8x4/4 32 Ton. | 02- | 3828/3 | 3828/3 |
| TGA (32 T) | 12.8 32.460 FFD-TM 8x4/4 32 Ton. | 02- | 3828/2 | 3828/2 |
| TGA (32 T) | 12.8 32.460 FFD-TM 8x4/4 32 Ton. | 02- | 3828/3 | 3828/3 |
| TGA (32 T) | 12.8 32.480 FFDC,FFDLC,FFDLRC 8x4/4 32 Ton. | 02- | 3828/2 | 3828/2 |
| TGA (32 T) | 12.8 32.480 FFDC,FFDLC,FFDLRC 8x4/4 32 Ton. | 02- | 3828/3 | 3828/3 |
| TGA (32 T) | 12.8 32.480 FFDK,FFDLK 8x4/4 32 Ton. | 02- | 3828/2 | 3828/2 |
| TGA (32 T) | 12.8 32.480 FFDK,FFDLK 8x4/4 32 Ton. | 02- | 3828/3 | 3828/3 |
| TGA (32 T) | 12.8 32.480 FFD-TM 8x4/4 32 Ton. | 02- | 3828/2 | 3828/2 |
| TGA (32 T) | 12.8 32.480 FFD-TM 8x4/4 32 Ton. | 02- | 3828/3 | 3828/3 |
| TGA (33 T) | 10.5 33.350/33.360 FDC,FDC/M,FDRC 6x4 33 Ton. | 04- | 3828/2 | 3828/2 |
| TGA (33 T) | 10.5 33.350/33.360 FDC,FDC/M,FDRC 6x4 33 Ton. | 04- | 3828/3 | 3828/3 |
| TGA (33 T) | 10.5 33.350/33.360 FDK ,FDRK 6x4 33 Ton. | 04- | 3828/2 | 3828/2 |
| TGA (33 T) | 10.5 33.350/33.360 FDK ,FDRK 6x4 33 Ton. | 04- | 3828/3 | 3828/3 |
| TGA (33 T) | 10.5 33.350/33.360 FDS,FDS/M,FDRS 6x4 33 Ton. | 04- | 3828/2 | 3828/2 |
| TGA (33 T) | 10.5 33.350/33.360 FDS,FDS/M,FDRS 6x4 33 Ton. | 04- | 3828/3 | 3828/3 |
| TGA (33 T) | 10.5 33.390/33.400 FDC,FDRC,FDC/M 6x4 33 Ton. | 04- | 3828/2 | 3828/2 |
| TGA (33 T) | 10.5 33.390/33.400 FDC,FDRC,FDC/M 6x4 33 Ton. | 04- | 3828/3 | 3828/3 |
| TGA (33 T) | 10.5 33.390/33.400 FDK,FDRK 6x4 33 Ton. | 04- | 3828/2 | 3828/2 |
| TGA (33 T) | 10.5 33.390/33.400 FDK,FDRK 6x4 33 Ton. | 04- | 3828/3 | 3828/3 |
| TGA (33 T) | 10.5 33.390/33.400 FDS,FDLS,FDS/M 6x4 33 Ton. | 04- | 3828/2 | 3828/2 |
| TGA (33 T) | 10.5 33.390/33.400 FDS,FDLS,FDS/M 6x4 33 Ton. | 04- | 3828/3 | 3828/3 |
| TGA (33 T) | 10.5 33.430/33.440 FDC,FDRC,FDC/M 6x4 33 Ton. | 04- | 3828/2 | 3828/2 |
| TGA (33 T) | 10.5 33.430/33.440 FDC,FDRC,FDC/M 6x4 33 Ton. | 04- | 3828/3 | 3828/3 |
| TGA (33 T) | 10.5 33.430/33.440 FDK,FDRK 6x4 33 Ton. | 04- | 3828/2 | 3828/2 |
| TGA (33 T) | 10.5 33.430/33.440 FDK,FDRK 6x4 33 Ton. | 04- | 3828/3 | 3828/3 |
| TGA (33 T) | 10.5 33.430/33.440 FDS,FDLS,FDRS,FDS/M 6x4 33 Ton. | 04- | 3828/2 | 3828/2 |
| TGA (33 T) | 10.5 33.430/33.440 FDS,FDLS,FDRS,FDS/M 6x4 33 Ton. | 04- | 3828/3 | 3828/3 |
| TGA (33 T) | 12.0 33.360 FDAC 6x6 33 Ton. | 02- | 3828/2 | 3828/2 |
| TGA (33 T) | 12.0 33.360 FDAC 6x6 33 Ton. | 02- | 3828/3 | 3828/3 |
| TGA (33 T) | 12.0 33.360 FDAK 6x6 33 Ton. | 02- | 3828/2 | 3828/2 |
| TGA (33 T) | 12.0 33.360 FDAK 6x6 33 Ton. | 02- | 3828/3 | 3828/3 |
| TGA (33 T) | 12.0 33.360 FDAS 6x6 33 Ton. | 02- | 3828/2 | 3828/2 |
| TGA (33 T) | 12.0 33.360 FDAS 6x6 33 Ton. | 02- | 3828/3 | 3828/3 |
| TGA (33 T) | 12.0 33.360 FDC,FDC-WW,FDLC/M 6x4 33 Ton. | 00- | 3828/2 | 3828/2 |
| TGA (33 T) | 12.0 33.360 FDC,FDC-WW,FDLC/M 6x4 33 Ton. | 00- | 3828/3 | 3828/3 |
| TGA (33 T) | 12.0 33.360 FDK,FDK-WW,FDLK 6x4 33 Ton. | 01- | 3828/2 | 3828/2 |
| TGA (33 T) | 12.0 33.360 FDK,FDK-WW,FDLK 6x4 33 Ton. | 01- | 3828/3 | 3828/3 |
| TGA (33 T) | 12.0 33.360 FDS,FDS-WW,FDLS 6x4 33 Ton. | 00- | 3828/2 | 3828/2 |
| TGA (33 T) | 12.0 33.360 FDS,FDS-WW,FDLS 6x4 33 Ton. | 00- | 3828/3 | 3828/3 |
| TGA (33 T) | 12.0 33.360 FD-TM 6x4 33 Ton. | 00- | 3828/2 | 3828/2 |
| TGA (33 T) | 12.0 33.360 FD-TM 6x4 33 Ton. | 00- | 3828/3 | 3828/3 |
| TGA (33 T) | 12.0 33.410 FDAC 6x6 33 Ton. | 02- | 3828/2 | 3828/2 |
| TGA (33 T) | 12.0 33.410 FDAC 6x6 33 Ton. | 02- | 3828/3 | 3828/3 |
| TGA (33 T) | 12.0 33.410 FDAK 6x6 33 Ton. | 02- | 3828/2 | 3828/2 |
| TGA (33 T) | 12.0 33.410 FDAK 6x6 33 Ton. | 02- | 3828/3 | 3828/3 |
| TGA (33 T) | 12.0 33.410 FDAS 6x6 33 Ton. | 02- | 3828/2 | 3828/2 |
| TGA (33 T) | 12.0 33.410 FDAS 6x6 33 Ton. | 02- | 3828/3 | 3828/3 |
| TGA (33 T) | 12.0 33.410 FDC,FDC-WW,FDLC/M 6x4 33 Ton. | 00- | 3828/2 | 3828/2 |
| TGA (33 T) | 12.0 33.410 FDC,FDC-WW,FDLC/M 6x4 33 Ton. | 00- | 3828/3 | 3828/3 |
| TGA (33 T) | 12.0 33.410 FDK 6x4 33 Ton. | 00- | 3828/2 | 3828/2 |
| TGA (33 T) | 12.0 33.410 FDK 6x4 33 Ton. | 00- | 3828/3 | 3828/3 |
| TGA (33 T) | 12.0 33.410 FDK,FDK-WW,FDLK 6x4 33 Ton. | 00- | 3828/2 | 3828/2 |
| TGA (33 T) | 12.0 33.410 FDK,FDK-WW,FDLK 6x4 33 Ton. | 00- | 3828/3 | 3828/3 |
| TGA (33 T) | 12.0 33.410 FDS,FDS-WW,FDLS,FDLS/M 6x4 33 Ton. | 00- | 3828/2 | 3828/2 |
| TGA (33 T) | 12.0 33.410 FDS,FDS-WW,FDLS,FDLS/M 6x4 33 Ton. | 00- | 3828/3 | 3828/3 |
| TGA (33 T) | 12.4 33.480 FDC,FDRC,FDC/M 6x4 33 Ton. | 06- | 3828/2 | 3828/2 |
| TGA (33 T) | 12.4 33.480 FDC,FDRC,FDC/M 6x4 33 Ton. | 06- | 3828/3 | 3828/3 |
| TGA (33 T) | 12.4 33.480 FDK,FDRK 6x4 33 Ton. | 06- | 3828/2 | 3828/2 |
| TGA (33 T) | 12.4 33.480 FDK,FDRK 6x4 33 Ton. | 06- | 3828/3 | 3828/3 |
| TGA (33 T) | 12.4 33.480 FDS,FDRS,FDLS,FDS/M 6x4 33 Ton. | 06- | 3828/2 | 3828/2 |
| TGA (33 T) | 12.4 33.480 FDS,FDRS,FDLS,FDS/M 6x4 33 Ton. | 06- | 3828/3 | 3828/3 |
| TGA (33 T) | 12.8 33.460 FDC,FDC-WW,FDLC 6x4 33 Ton. | 02- | 3828/2 | 3828/2 |
| TGA (33 T) | 12.8 33.460 FDC,FDC-WW,FDLC 6x4 33 Ton. | 02- | 3828/3 | 3828/3 |
| TGA (33 T) | 12.8 33.460 FDK,FDK-WW,FDLK 6x4 33 Ton. | 02- | 3828/2 | 3828/2 |
| TGA (33 T) | 12.8 33.460 FDK,FDK-WW,FDLK 6x4 33 Ton. | 02- | 3828/3 | 3828/3 |
| TGA (33 T) | 12.8 33.460 FDS,FDLS,FDLS/M 6x4 33 Ton. | 02- | 3828/2 | 3828/2 |
| TGA (33 T) | 12.8 33.460 FDS,FDLS,FDLS/M 6x4 33 Ton. | 02- | 3828/3 | 3828/3 |
| TGA (33 T) | 12.8 33.460 FD-TM 6x4 33 Ton. | 02- | 3828/2 | 3828/2 |
| TGA (33 T) | 12.8 33.460 FD-TM 6x4 33 Ton. | 02- | 3828/3 | 3828/3 |
| TGA (33 T) | 12.8 33.480 FDAC,FDAC-WW, FDALC 6x6 33 Ton. | 02- | 3828/2 | 3828/2 |

| MAKE & MODEL | | YEAR | 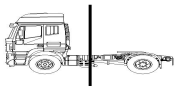 | |
|---|---|---|---|---|
| **MAN** | | | | |
| TGA (33 T) | 12.8 33.480 FDAC,FDAC-WW, FDALC 6x6 33 Ton. | 02- | 3828/3 | 3828/3 |
| TGA (33 T) | 12.8 33.480 FDAK 6x6 33 Ton. | 02- | 3828/2 | 3828/2 |
| TGA (33 T) | 12.8 33.480 FDAK 6x6 33 Ton. | 02- | 3828/3 | 3828/3 |
| TGA (33 T) | 12.8 33.480 FDAS 6x6 33 Ton. | 02- | 3828/2 | 3828/2 |
| TGA (33 T) | 12.8 33.480 FDAS 6x6 33 Ton. | 02- | 3828/3 | 3828/3 |
| TGA (33 T) | 12.8 33.480 FDC,FDC-WW,FDLC, FDRC-WW 6x4 33 Ton. | 02- | 3828/2 | 3828/2 |
| TGA (33 T) | 12.8 33.480 FDC,FDC-WW,FDLC, FDRC-WW 6x4 33 Ton. | 02- | 3828/3 | 3828/3 |
| TGA (33 T) | 12.8 33.480 FDK,FDK-WW,FDLK,FDRK-WW 6x4 33 Ton. | 02- | 3828/2 | 3828/2 |
| TGA (33 T) | 12.8 33.480 FDK,FDK-WW,FDLK,FDRK-WW 6x4 33 Ton. | 02- | 3828/3 | 3828/3 |
| TGA (33 T) | 12.8 33.480 FDS,FDS-WW,FDLS,FDLS/M,FDRS-WW 6x4 33 Ton. | 02- | 3828/2 | 3828/2 |
| TGA (33 T) | 12.8 33.480 FDS,FDS-WW,FDLS,FDLS/M,FDRS-WW 6x4 33 Ton. | 02- | 3828/3 | 3828/3 |
| TGA (33 T) | 12.8 33.480 FD-TM 6x4 33 Ton. | 02- | 3828/2 | 3828/2 |
| TGA (33 T) | 12.8 33.480 FD-TM 6x4 33 Ton. | 02- | 3828/3 | 3828/3 |
| TGA (33 T) | 12.8 33.510 FDC,FDC/M,FDLC 6x4 33 Ton. | 02- | 3828/2 | 3828/2 |
| TGA (33 T) | 12.8 33.510 FDC,FDC/M,FDLC 6x4 33 Ton. | 02- | 3828/3 | 3828/3 |
| TGA (33 T) | 12.8 33.510 FDS,FDLS/M,FDLRS/M 6x4 33 Ton. | 02- | 3828/2 | 3828/2 |
| TGA (33 T) | 12.8 33.510 FDS,FDLS/M,FDLRS/M 6x4 33 Ton. | 02- | 3828/3 | 3828/3 |
| TGA (33 T) | 12.8 33.530 FDC,FDC/M 6x4 33 Ton. | 02- | 3828/2 | 3828/2 |
| TGA (33 T) | 12.8 33.530 FDC,FDC/M 6x4 33 Ton. | 02- | 3828/3 | 3828/3 |
| TGA (33 T) | 12.8 33.530 FDK 6x6 33 Ton. | 02- | 3828/2 | 3828/2 |
| TGA (33 T) | 12.8 33.530 FDK 6x6 33 Ton. | 02- | 3828/3 | 3828/3 |
| TGA (33 T) | 12.8 33.530 FDLK 6x4 33 Ton. | 03- | 3828/2 | 3828/2 |
| TGA (33 T) | 12.8 33.530 FDLK 6x4 33 Ton. | 03- | 3828/3 | 3828/3 |
| TGA (33 T) | 12.8 33.530 FDS 6x6 33 Ton. | 02- | 3828/2 | 3828/2 |
| TGA (33 T) | 12.8 33.530 FDS 6x6 33 Ton. | 02- | 3828/3 | 3828/3 |
| TGA (33 T) | 12.8 33.530 FDS,FDLS/M,FDLRS/M 6x4 33 Ton. | 03- | 3828/2 | 3828/2 |
| TGA (33 T) | 12.8 33.530 FDS,FDLS/M,FDLRS/M 6x4 33 Ton. | 03- | 3828/3 | 3828/3 |
| TGA (35 T) | 10.5 35.310/35.320 FFDC,FFDLC 8x4/4 35 Ton. | 04- | 3828/2 | 3828/2 |
| TGA (35 T) | 10.5 35.310/35.320 FFDC,FFDLC 8x4/4 35 Ton. | 04- | 3828/3 | 3828/3 |
| TGA (35 T) | 10.5 35.310/35.320 FFDK,FFDLK 8x4/4 35 Ton. | 04- | 3828/2 | 3828/2 |
| TGA (35 T) | 10.5 35.310/35.320 FFDK,FFDLK 8x4/4 35 Ton. | 04- | 3828/3 | 3828/3 |
| TGA (35 T) | 10.5 35.310/35.320 FFD-TM 8x4/4 35 Ton. | 04- | 3828/2 | 3828/2 |
| TGA (35 T) | 10.5 35.310/35.320 FFD-TM 8x4/4 35 Ton. | 04- | 3828/3 | 3828/3 |
| TGA (35 T) | 10.5 35.350/35.360 FFDC,FFDRC,FFDLC 8x4/4 35 Ton. | 04- | 3828/2 | 3828/2 |
| TGA (35 T) | 10.5 35.350/35.360 FFDC,FFDRC,FFDLC 8x4/4 35 Ton. | 04- | 3828/3 | 3828/3 |
| TGA (35 T) | 10.5 35.350/35.360 FFDK,FFDRK,FFDLK 8x4/4 35 Ton. | 04- | 3828/2 | 3828/2 |
| TGA (35 T) | 10.5 35.350/35.360 FFDK,FFDRK,FFDLK 8x4/4 35 Ton. | 04- | 3828/3 | 3828/3 |
| TGA (35 T) | 10.5 35.350/35.360 FFD-TM 8x4/4 35 Ton. | 04- | 3828/2 | 3828/2 |
| TGA (35 T) | 10.5 35.350/35.360 FFD-TM 8x4/4 35 Ton. | 04- | 3828/3 | 3828/3 |
| TGA (35 T) | 10.5 35.390 FFDK,FFDRL.FFDLK 8x4/4 35 Ton. | 04- | 3828/2 | 3828/2 |
| TGA (35 T) | 10.5 35.390 FFDK,FFDRL.FFDLK 8x4/4 35 Ton. | 04- | 3828/3 | 3828/3 |
| TGA (35 T) | 10.5 35.390/35.400 FFDC,FFDRC,FFDLC 8x4/4 35 Ton. | 04- | 3828/2 | 3828/2 |
| TGA (35 T) | 10.5 35.390/35.400 FFDC,FFDRC,FFDLC 8x4/4 35 Ton. | 04- | 3828/3 | 3828/3 |
| TGA (35 T) | 10.5 35.390/35.400 FFD-TM 8x4/4 35 Ton. | 04- | 3828/2 | 3828/2 |
| TGA (35 T) | 10.5 35.390/35.400 FFD-TM 8x4/4 35 Ton. | 04- | 3828/3 | 3828/3 |
| TGA (35 T) | 10.5 35.430/35.440 FFDC,FFDRC,FFDLC 8x4/4 35 Ton. | 04- | 3828/2 | 3828/2 |
| TGA (35 T) | 10.5 35.430/35.440 FFDC,FFDRC,FFDLC 8x4/4 35 Ton. | 04- | 3828/3 | 3828/3 |
| TGA (35 T) | 10.5 35.430/35.440 FFDK,FFDRK,FFDLK 8x4/4 35 Ton. | 04- | 3828/2 | 3828/2 |
| TGA (35 T) | 10.5 35.430/35.440 FFDK,FFDRK,FFDLK 8x4/4 35 Ton. | 04- | 3828/3 | 3828/3 |
| TGA (35 T) | 10.5 35.430/35.440 FFD-TM 8x4/4 35 Ton. | 04- | 3828/2 | 3828/2 |
| TGA (35 T) | 10.5 35.430/35.440 FFD-TM 8x4/4 35 Ton. | 04- | 3828/3 | 3828/3 |
| TGA (35 T) | 12.0 35.310 FFDK,FFDLK 8x4/4 35 Ton. | 03- | 3828/2 | 3828/2 |
| TGA (35 T) | 12.0 35.310 FFDK,FFDLK 8x4/4 35 Ton. | 03- | 3828/3 | 3828/3 |
| TGA (35 T) | 12.0 35.360 FFDC,FFDLC 8x4/4 35 Ton. | 03- | 3828/2 | 3828/2 |
| TGA (35 T) | 12.0 35.360 FFDC,FFDLC 8x4/4 35 Ton. | 03- | 3828/3 | 3828/3 |
| TGA (35 T) | 12.0 35.360 FFDK,FFDLK 8x4/4 35 Ton. | 03- | 3828/2 | 3828/2 |
| TGA (35 T) | 12.0 35.360 FFDK,FFDLK 8x4/4 35 Ton. | 03- | 3828/3 | 3828/3 |
| TGA (35 T) | 12.0 35.410 FFDC,FFDLC 8x4/4 35 Ton. | 03- | 3828/2 | 3828/2 |
| TGA (35 T) | 12.0 35.410 FFDC,FFDLC 8x4/4 35 Ton. | 03- | 3828/3 | 3828/3 |
| TGA (35 T) | 12.0 35.410 FFDK,FFDLK 8x4/4 35 Ton. | 03- | 3828/2 | 3828/2 |
| TGA (35 T) | 12.0 35.410 FFDK,FFDLK 8x4/4 35 Ton. | 03- | 3828/3 | 3828/3 |
| TGA (35 T) | 12.4 35.480 FFDC,FFDLC 8x4/4 35 Ton. | 04- | 3828/2 | 3828/2 |
| TGA (35 T) | 12.4 35.480 FFDC,FFDLC 8x4/4 35 Ton. | 04- | 3828/3 | 3828/3 |
| TGA (35 T) | 12.4 35.480 FFDK 8x4/4 35 Ton. | 04- | 3828/2 | 3828/2 |
| TGA (35 T) | 12.4 35.480 FFDK 8x4/4 35 Ton. | 04- | 3828/3 | 3828/3 |
| TGA (35 T) | 12.4 35.480 FFD-TM 8x4/4 35 Ton. | 04- | 3828/2 | 3828/2 |
| TGA (35 T) | 12.4 35.480 FFD-TM 8x4/4 35 Ton. | 04- | 3828/3 | 3828/3 |
| TGA (35 T) | 12.8 35.530 FFDC,FFDLC 8x4/4 35 Ton. | 04- | 3828/2 | 3828/2 |
| TGA (35 T) | 12.8 35.530 FFDC,FFDLC 8x4/4 35 Ton. | 04- | 3828/3 | 3828/3 |
| TGA (35 T) | 12.8 35.530 FFDK,FFDLK 8x4/4 35 Ton. | 04- | 3828/2 | 3828/2 |
| TGA (35 T) | 12.8 35.530 FFDK,FFDLK 8x4/4 35 Ton. | 04- | 3828/3 | 3828/3 |
| TGA (35 T) | 12.9 35.460 FFDC 8x4/4 35 Ton. | 03- | 3828/2 | 3828/2 |
| TGA (35 T) | 12.9 35.460 FFDC 8x4/4 35 Ton. | 03- | 3828/3 | 3828/3 |
| TGA (35 T) | 12.9 35.460 FFDK 8x4/4 35 Ton. | 03- | 3828/2 | 3828/2 |
| TGA (35 T) | 12.9 35.460 FFDK 8x4/4 35 Ton. | 03- | 3828/3 | 3828/3 |
| TGA (35 T) | 12.9 35.480 FFDC,FFDLC 8x4/4 35 Ton. | 03- | 3828/2 | 3828/2 |

| MAKE & MODEL | | YEAR | | |
|---|---|---|---|---|
| **MAN** | | | | |
| TGA (35 T) | 12.9 35.480 FFDC,FFDLC 8x4/4 35 Ton. | 03- | 3828/3 | 3828/3 |
| TGA (35 T) | 12.9 35.480 FFDK,FFDLK 8x4/4 35 Ton. | 03- | 3828/2 | 3828/2 |
| TGA (35 T) | 12.9 35.480 FFDK,FFDLK 8x4/4 35 Ton. | 03- | 3828/3 | 3828/3 |
| TGA (37 T) | 10.5 37.310/37.320 FFDC 8x4/4 37 Ton. | 04- | 3828/2 | 3828/2 |
| TGA (37 T) | 10.5 37.310/37.320 FFDC 8x4/4 37 Ton. | 04- | 3828/3 | 3828/3 |
| TGA (37 T) | 10.5 37.310/37.320 FFDK 8x4/4 37 Ton. | 04- | 3828/2 | 3828/2 |
| TGA (37 T) | 10.5 37.310/37.320 FFDK 8x4/4 37 Ton. | 04- | 3828/3 | 3828/3 |
| TGA (37 T) | 10.5 37.310/37.320 FFD-TM 8x4/4 37 Ton. | 04- | 3828/2 | 3828/2 |
| TGA (37 T) | 10.5 37.310/37.320 FFD-TM 8x4/4 37 Ton. | 04- | 3828/3 | 3828/3 |
| TGA (37 T) | 10.5 37.350/37.360 FFDC 8x4/4 37 Ton. | 04- | 3828/2 | 3828/2 |
| TGA (37 T) | 10.5 37.350/37.360 FFDC 8x4/4 37 Ton. | 04- | 3828/3 | 3828/3 |
| TGA (37 T) | 10.5 37.350/37.360 FFDK 8x4/4 37 Ton. | 04- | 3828/2 | 3828/2 |
| TGA (37 T) | 10.5 37.350/37.360 FFDK 8x4/4 37 Ton. | 04- | 3828/3 | 3828/3 |
| TGA (37 T) | 10.5 37.350/37.360 FFD-TM 8x4/4 37 Ton. | 04- | 3828/2 | 3828/2 |
| TGA (37 T) | 10.5 37.350/37.360 FFD-TM 8x4/4 37 Ton. | 04- | 3828/3 | 3828/3 |
| TGA (37 T) | 10.5 37.390/37.400 FFDC 8x4/4 37 Ton. | 04- | 3828/2 | 3828/2 |
| TGA (37 T) | 10.5 37.390/37.400 FFDC 8x4/4 37 Ton. | 04- | 3828/3 | 3828/3 |
| TGA (37 T) | 10.5 37.390/37.400 FFDK 8x4/4 37 Ton. | 04- | 3828/2 | 3828/2 |
| TGA (37 T) | 10.5 37.390/37.400 FFDK 8x4/4 37 Ton. | 04- | 3828/3 | 3828/3 |
| TGA (37 T) | 10.5 37.390/37.400 FFD-TM 8x4/4 37 Ton. | 04- | 3828/2 | 3828/2 |
| TGA (37 T) | 10.5 37.390/37.400 FFD-TM 8x4/4 37 Ton. | 04- | 3828/3 | 3828/3 |
| TGA (37 T) | 10.5 37.430/37.440 FFDC 8x4/4 37 Ton. | 04- | 3828/2 | 3828/2 |
| TGA (37 T) | 10.5 37.430/37.440 FFDC 8x4/4 37 Ton. | 04- | 3828/3 | 3828/3 |
| TGA (37 T) | 10.5 37.430/37.440 FFDK 8x4/4 37 Ton. | 04- | 3828/2 | 3828/2 |
| TGA (37 T) | 10.5 37.430/37.440 FFDK 8x4/4 37 Ton. | 04- | 3828/3 | 3828/3 |
| TGA (37 T) | 10.5 37.430/37.440 FFD-TM 8x4/4 37 Ton. | 04- | 3828/2 | 3828/2 |
| TGA (37 T) | 10.5 37.430/37.440 FFD-TM 8x4/4 37 Ton. | 04- | 3828/3 | 3828/3 |
| TGA (37 T) | 12.4 37.480 FFDC 8x4/4 37 Ton. | 04- | 3828/2 | 3828/2 |
| TGA (37 T) | 12.4 37.480 FFDC 8x4/4 37 Ton. | 04- | 3828/3 | 3828/3 |
| TGA (37 T) | 12.4 37.480 FFDK 8x4/4 37 Ton. | 04- | 3828/2 | 3828/2 |
| TGA (37 T) | 12.4 37.480 FFDK 8x4/4 37 Ton. | 04- | 3828/3 | 3828/3 |
| TGA (37 T) | 12.4 37.480 FFD-TM 8x4/4 37 Ton. | 04- | 3828/2 | 3828/2 |
| TGA (37 T) | 12.4 37.480 FFD-TM 8x4/4 37 Ton. | 04- | 3828/3 | 3828/3 |
| TGA (40 T) | 10.5 40.390/40.400 FDK-WW,FDRK 6x4 40 Ton. | 05- | 3828/2 | 3828/2 |
| TGA (40 T) | 10.5 40.390/40.400 FDK-WW,FDRK 6x4 40 Ton. | 05- | 3828/3 | 3828/3 |
| TGA (40 T) | 10.5 40.390/40.400 FDS-WW,FDRS 6x4 40 Ton. | 05- | 3828/2 | 3828/2 |
| TGA (40 T) | 10.5 40.390/40.400 FDS-WW,FDRS 6x4 40 Ton. | 05- | 3828/3 | 3828/3 |
| TGA (40 T) | 10.5 40.430 FDK-WW,FDRK 6x4 40 Ton. | 05- | 3828/2 | 3828/2 |
| TGA (40 T) | 10.5 40.430 FDK-WW,FDRK 6x4 40 Ton. | 05- | 3828/3 | 3828/3 |
| TGA (40 T) | 10.5 40.430 FDS-WW,FDRS 6x4 40 Ton. | 05- | 3828/2 | 3828/2 |
| TGA (40 T) | 10.5 40.430 FDS-WW,FDRS 6x4 40 Ton. | 05- | 3828/3 | 3828/3 |
| TGA (40 T) | 12.0 40.410 FDK-WW 6x4 40 Ton. | 04- | 3828/2 | 3828/2 |
| TGA (40 T) | 12.0 40.410 FDK-WW 6x4 40 Ton. | 04- | 3828/3 | 3828/3 |
| TGA (40 T) | 12.0 40.410 FDS-WW 6x4 40 Ton. | 04- | 3828/2 | 3828/2 |
| TGA (40 T) | 12.0 40.410 FDS-WW 6x4 40 Ton. | 04- | 3828/3 | 3828/3 |
| TGA (40 T) | 12.8 40.460 FDK-WW 6x4 40 Ton. | 04- | 3828/2 | 3828/2 |
| TGA (40 T) | 12.8 40.460 FDK-WW 6x4 40 Ton. | 04- | 3828/3 | 3828/3 |
| TGA (40 T) | 12.8 40.460 FDS-WW 6x4 40 Ton. | 04- | 3828/2 | 3828/2 |
| TGA (40 T) | 12.8 40.460 FDS-WW 6x4 40 Ton. | 04- | 3828/3 | 3828/3 |
| TGA (40 T) | 12.8 40.480 FDK-WW 6x4 40 Ton. | 04- | 3828/2 | 3828/2 |
| TGA (40 T) | 12.8 40.480 FDK-WW 6x4 40 Ton. | 04- | 3828/3 | 3828/3 |
| TGA (40 T) | 12.8 40.480 FDS-WW 6x4 40 Ton. | 04- | 3828/2 | 3828/2 |
| TGA (40 T) | 12.8 40.480 FDS-WW 6x4 40 Ton. | 04- | 3828/3 | 3828/3 |
| TGA (41 T) | 10.5 41.350/41.360 FFDC,FFDC/M,FFDRC 8x4/4 41 Ton. | 04- | 3828/2 | 3828/2 |
| TGA (41 T) | 10.5 41.350/41.360 FFDC,FFDC/M,FFDRC 8x4/4 41 Ton. | 04- | 3828/3 | 3828/3 |
| TGA (41 T) | 10.5 41.350/41.360 FFDK ,FDRK 8x4/4 41 Ton. | 04- | 3828/2 | 3828/2 |
| TGA (41 T) | 10.5 41.350/41.360 FFDK ,FDRK 8x4/4 41 Ton. | 04- | 3828/3 | 3828/3 |
| TGA (41 T) | 10.5 41.350/41.360 FFD-TM 8x4/4 41 Ton. | 04- | 3828/2 | 3828/2 |
| TGA (41 T) | 10.5 41.350/41.360 FFD-TM 8x4/4 41 Ton. | 04- | 3828/3 | 3828/3 |
| TGA (41 T) | 10.5 41.390/41.400 FFDC,FFDRC,FFDC/M 8x4/4 41 Ton. | 04- | 3828/2 | 3828/2 |
| TGA (41 T) | 10.5 41.390/41.400 FFDC,FFDRC,FFDC/M 8x4/4 41 Ton. | 04- | 3828/3 | 3828/3 |
| TGA (41 T) | 10.5 41.390/41.400 FFDK,FFDRK 8x4/4 41 Ton. | 04- | 3828/2 | 3828/2 |
| TGA (41 T) | 10.5 41.390/41.400 FFDK,FFDRK 8x4/4 41 Ton. | 04- | 3828/3 | 3828/3 |
| TGA (41 T) | 10.5 41.390/41.400 FFD-TM 8x4/4 41 Ton. | 04- | 3828/2 | 3828/2 |
| TGA (41 T) | 10.5 41.390/41.400 FFD-TM 8x4/4 41 Ton. | 04- | 3828/3 | 3828/3 |
| TGA (41 T) | 10.5 41.430/41.440 FFDC,FFDRC,FFDC/M 8x4/4 41 Ton. | 04- | 3828/2 | 3828/2 |
| TGA (41 T) | 10.5 41.430/41.440 FFDC,FFDRC,FFDC/M 8x4/4 41 Ton. | 04- | 3828/3 | 3828/3 |
| TGA (41 T) | 10.5 41.430/41.440 FFDKFFDRK 8x4/4 41 Ton. | 04- | 3828/2 | 3828/2 |
| TGA (41 T) | 10.5 41.430/41.440 FFDKFFDRK 8x4/4 41 Ton. | 04- | 3828/3 | 3828/3 |
| TGA (41 T) | 10.5 41.430/41.440 FFD-TM 8x4/4 41 Ton. | 04- | 3828/2 | 3828/2 |
| TGA (41 T) | 10.5 41.430/41.440 FFD-TM 8x4/4 41 Ton. | 04- | 3828/3 | 3828/3 |
| TGA (41 T) | 12.0 41.360 FFDC,FFDC/M,FFDC/M-WW 8x4/4 41 Ton. | 03- | 3828/2 | 3828/2 |
| TGA (41 T) | 12.0 41.360 FFDC,FFDC/M,FFDC/M-WW 8x4/4 41 Ton. | 03- | 3828/3 | 3828/3 |
| TGA (41 T) | 12.0 41.360 FFDK-WW 8x4/4 41 Ton. | 03- | 3828/2 | 3828/2 |
| TGA (41 T) | 12.0 41.360 FFDK-WW 8x4/4 41 Ton. | 03- | 3828/3 | 3828/3 |
| TGA (41 T) | 12.0 41.410 FFDC-WW 8x4/4 41 Ton. | 03- | 3828/2 | 3828/2 |

| MAKE & MODEL | | YEAR | | |
|---|---|---|---|---|
| **MAN** | | | | |
| TGA (41 T) | 12.0 41.410 FFDC-WW 8x4/4 41 Ton. | *03-* | 3828/3 | 3828/3 |
| TGA (41 T) | 12.0 41.410 FFDK-WW 8x4/4 41 Ton. | *03-* | 3828/2 | 3828/2 |
| TGA (41 T) | 12.0 41.410 FFDK-WW 8x4/4 41 Ton. | *03-* | 3828/3 | 3828/3 |
| TGA (41 T) | 12.4 41.480 FFDC,FFDRC,FFDC/M 8x4/4 41 Ton. | *06-* | 3828/2 | 3828/2 |
| TGA (41 T) | 12.4 41.480 FFDC,FFDRC,FFDC/M 8x4/4 41 Ton. | *06-* | 3828/3 | 3828/3 |
| TGA (41 T) | 12.4 41.480 FFDK,FFDRK 8x4/4 41 Ton. | *06-* | 3828/2 | 3828/2 |
| TGA (41 T) | 12.4 41.480 FFDK,FFDRK 8x4/4 41 Ton. | *06-* | 3828/3 | 3828/3 |
| TGA (41 T) | 12.4 41.480 FFD-TM 8x4/4 41 Ton. | *04-* | 3828/2 | 3828/2 |
| TGA (41 T) | 12.4 41.480 FFD-TM 8x4/4 41 Ton. | *04-* | 3828/3 | 3828/3 |
| TGA (41 T) | 12.8 41.460 FFDC-WW 8x4/4 41 Ton. | *03-* | 3828/2 | 3828/2 |
| TGA (41 T) | 12.8 41.460 FFDC-WW 8x4/4 41 Ton. | *03-* | 3828/3 | 3828/3 |
| TGA (41 T) | 12.8 41.460 FFDK-WW 8x4/4 41 Ton. | *03-* | 3828/2 | 3828/2 |
| TGA (41 T) | 12.8 41.460 FFDK-WW 8x4/4 41 Ton. | *03-* | 3828/3 | 3828/3 |
| TGA (41 T) | 12.8 41.480 FFDC-WW 8x4/4 41 Ton. | *05-* | 3828/2 | 3828/2 |
| TGA (41 T) | 12.8 41.480 FFDC-WW 8x4/4 41 Ton. | *05-* | 3828/3 | 3828/3 |
| TGA (41 T) | 12.8 41.480 FFDK-WW 8x4/4 41 Ton. | *03-* | 3828/2 | 3828/2 |
| TGA (41 T) | 12.8 41.480 FFDK-WW 8x4/4 41 Ton. | *03-* | 3828/3 | 3828/3 |
| TGA (41 T) | 12.8 41.530 FVDS,FVDLS 8x4/4 41 Ton. | *02-* | 3828/2 | 3828/2 |
| TGA (41 T) | 12.8 41.530 FVDS,FVDLS 8x4/4 41 Ton. | *02-* | 3828/3 | 3828/3 |
| TGA (41 T) | 18.3 41.660 FVDS 8x4/4 41 Ton. | *02-* | 3828/2 | 3828/2 |
| TGA (41 T) | 18.3 41.660 FVDS 8x4/4 41 Ton. | *02-* | 3828/3 | 3828/3 |
| TGL | 4.6 10.180 FC,FRC,FLC,FLRC 4x2 10 Ton. | 05- | 3908 | 3908 |
| TGL | 4.6 10.180 FC,FRC,FLC,FLRC 4x2 10 Ton. | 05- | 3908/1 | 3908/1 |
| TGL | 4.6 10.180 FK,FK-L,FRK,FRK-L 4x2 10 Ton. | 05- | 3908 | 3908 |
| TGL | 4.6 10.180 FK,FK-L,FRK,FRK-L 4x2 10 Ton. | 05- | 3908/1 | 3908/1 |
| TGL | 4.6 10.210 FC,FRC,FLC,FLRC 4x2 10 Ton. | 05- | 3908 | 3908 |
| TGL | 4.6 10.210 FC,FRC,FLC,FLRC 4x2 10 Ton. | 05- | 3908/1 | 3908/1 |
| TGL | 4.6 10.210 FK,FK-L,FRK,FRK-L 4x2 10 Ton. | 05- | 3908 | 3908 |
| TGL | 4.6 10.210 FK,FK-L,FRK,FRK-L 4x2 10 Ton. | 05- | 3908/1 | 3908/1 |
| TGL | 4.6 12.180 FC,FRC,FLC,FLRC 4x2 11.99 Ton. | 05- | 3908 | 3908 |
| TGL | 4.6 12.180 FC,FRC,FLC,FLRC 4x2 11.99 Ton. | 05- | 3908/1 | 3908/1 |
| TGL | 4.6 12.180 FK,FK-L,FRK,FRK-L 4x2 11.99 Ton. | 05- | 3908 | 3908 |
| TGL | 4.6 12.180 FK,FK-L,FRK,FRK-L 4x2 11.99 Ton. | 05- | 3908/1 | 3908/1 |
| TGL | 4.6 12.210 FC,FRC,FLC,FLRC 4x2 11.99 Ton. | 05- | 3908 | 3908 |
| TGL | 4.6 12.210 FC,FRC,FLC,FLRC 4x2 11.99 Ton. | 05- | 3908/1 | 3908/1 |
| TGL | 4.6 12.210 FK,FK-L,FRK,FRK-L 4x2 11.99 Ton. | 05- | 3908 | 3908 |
| TGL | 4.6 12.210 FK,FK-L,FRK,FRK-L 4x2 11.99 Ton. | 05- | 3908/1 | 3908/1 |
| TGL | 4.6 7.150, 8150 FC,FRC,FLC,FLRC 4x2 7.49 Ton. | 05- | 3908 | 3908 |
| TGL | 4.6 7.150, 8150 FC,FRC,FLC,FLRC 4x2 7.49 Ton. | 05- | 3908/1 | 3908/1 |
| TGL | 4.6 7.180 FC,FRC,FLC,FLRC 4x2 7.49 Ton. | 05- | 3908 | 3908 |
| TGL | 4.6 7.180 FC,FRC,FLC,FLRC 4x2 7.49 Ton. | 05- | 3908/1 | 3908/1 |
| TGL | 4.6 8.180 FC,FRC,FLC,FLRC 4x2 8 Ton. | 05- | 3908 | 3908 |
| TGL | 4.6 8.180 FC,FRC,FLC,FLRC 4x2 8 Ton. | 05- | 3908/1 | 3908/1 |
| TGL | 4.6 8.180 FK,FK-L,FRK,FRK-L 4x2 8 Ton. | 05- | 3908 | 3908 |
| TGL | 4.6 8.180 FK,FK-L,FRK,FRK-L 4x2 8 Ton. | 05- | 3908/1 | 3908/1 |
| TGL | 4.6 8.210 FC,FRC,FLC,FLRC 4x2 8 Ton. | 05- | 3908 | 3908 |
| TGL | 4.6 8.210 FC,FRC,FLC,FLRC 4x2 8 Ton. | 05- | 3908/1 | 3908/1 |
| TGL | 4.6 8.210 FK,FK-L,FRK,FRK-L 4x2 8 Ton. | 05- | 3908 | 3908 |
| TGL | 4.6 8.210 FK,FK-L,FRK,FRK-L 4x2 8 Ton. | 05- | 3908/1 | 3908/1 |
| TGL | 6.9 10.240 FC,FRC,FLC,FLRC 4x2 10 Ton. | 05- | 3908 | 3908 |
| TGL | 6.9 10.240 FC,FRC,FLC,FLRC 4x2 10 Ton. | 05- | 3908/1 | 3908/1 |
| TGL | 6.9 10.240 FK,FK-L,FRK,FRK-L 4x2 10 Ton. | 05- | 3908 | 3908 |
| TGL | 6.9 10.240 FK,FK-L,FRK,FRK-L 4x2 10 Ton. | 05- | 3908/1 | 3908/1 |
| TGL | 6.9 12.240 FC,FRC,FLC,FLRC 4x2 11.99 Ton. | 05- | 3908 | 3908 |
| TGL | 6.9 12.240 FC,FRC,FLC,FLRC 4x2 11.99 Ton. | 05- | 3908/1 | 3908/1 |
| TGL | 6.9 12.240 FK,FK-L,FRK,FRK-L 4x2 11.99 Ton. | 05- | 3908 | 3908 |
| TGL | 6.9 12.240 FK,FK-L,FRK,FRK-L 4x2 11.99 Ton. | 05- | 3908/1 | 3908/1 |
| TGL | 6.9 8.240 FC,FRC,FLC,FLRC 4x2 8 Ton. | 05- | 3908 | 3908 |
| TGL | 6.9 8.240 FC,FRC,FLC,FLRC 4x2 8 Ton. | 05- | 3908/1 | 3908/1 |
| TGL | 6.9 8.240 FK,FK-L,FRK,FRK-L 4x2 8 Ton. | 05- | 3908 | 3908 |
| TGL | 6.9 8.240 FK,FK-L,FRK,FRK-L 4x2 8 Ton. | 05- | 3908/1 | 3908/1 |
| TGM | 12.250 FLC, FLLC | 10.05 - | 4091 | |
| TGM | 12.290 FLC, FLLC | 10.05 - | 4091 | |
| TGM | 13.250 FAEC, FAERC, FALC, FAL, FALRC, FALR | 10.05 - | 4091 | |
| TGM | 13.250 FALK, FALRK, FALK-L, FALRK-L | 10.05 - | 4091 | |
| TGM | 13.290 FAEC, FAERC, FAL, FALR, FALC, FALRC | 10.05 - | 4091 | |
| TGM | 13.290 FALK, FALRK, FALK-L, FALRK-L | 10.05 - | 4091 | |
| TGM | 15.240 FC, FLC, FLLC, FLRC, FLLRC | 10.05 - | 4091 | |
| TGM | 15.240 FLK, FLRK | 10.05 - | 4091 | |
| TGM | 15.250 FC, FLC, FLRC, FLLC, FLLRC | 10.05 - | 4091 | |
| TGM | 15.250 FLK, FLRK | 10.05 - | 4091 | |
| TGM | 15.280 FC, FLC, FLLC, FLRC, FLLRC | 10.05 - | 4091 | |
| TGM | 15.280 FLK, FLRK | 10.05 - | 4091 | |
| TGM | 15.290 FC, FLC, FLRC, FLLC, FLLRC | 10.05 - | 4091 | |
| TGM | 15.290 FLK, FLRK | 10.05 - | 4091 | |
| TGM | 15.330 FC, FLC, FRC, FLRC | 10.05 - | 4091 | |

| MAKE & MODEL | | YEAR | | |
|---|---|---|---|---|
| **MAN** | | | | |
| TGM | 15.330 FLK, FLRK | 10.05 - | 4091 | |
| TGM | 15.340 FC, FLC, FLRC | 10.05 - | 4091 | |
| TGM | 15.340 FLK, FLRK | 10.05 - | 4091 | |
| TGM | 18.240 FAC, FARC | 10.05 - | 4091 | |
| TGM | 18.240 FAK, FARK, FAK-L, FARK-L | 05.06 - | 4091 | |
| TGM | 18.240 FC, FRC, FLC, FLRC, FLLC, FLLRC | 10.05 - | 4091 | |
| TGM | 18.240 FK, FRK, FLK, FK-L, FLRK | 10.05 - | 4091 | |
| TGM | 18.250 FAC, FARC | 10.05 - | 4091 | |
| TGM | 18.250 FAK, FARK, FAK-L, FARK-L | 10.05 - | 4091 | |
| TGM | 18.250 FC, FLC, FLLC, FRC, FLRC, FLLRC | 10.05 - | 4091 | |
| TGM | 18.250 FK, FLK, FRK, FLRK | 10.05 - | 4091 | |
| TGM | 18.280 FAC, FARC | 10.05 - | 4091 | |
| TGM | 18.280 FAK, FARK, FAK-L, FARK-L | 10.05 - | 4091 | |
| TGM | 18.280 FC, FRC, FLC, FLRC, FLLC, FLLRC | 10.05 - | 4091 | |
| TGM | 18.280 FK, FLK, FRK, FLRK, FK-L | 10.05 - | 4091 | |
| TGM | 18.290 FAC, FARC | 10.05 - | 4091 | |
| TGM | 18.290 FAK, FARK, FAK-L, FARK-L | 10.05 - | 4091 | |
| TGM | 18.290 FC, FLC, FRC, FLRC, FLLC, FLLRC | 10.05 - | 4091 | |
| TGM | 18.290 FK, FLK, FRK, FLRK | 10.05 - | 4091 | |
| TGM | 18.330 FAC, FARC | 10.05 - | 4091 | |
| TGM | 18.330 FAK, FARK, FAK-L, FARK, L | 10.05 - | 4091 | |
| TGM | 18.330 FC, FRC, FLC, FLRC, FLLC, FLLRC | 10.05 - | 4091 | |
| TGM | 18.330 FK, FLK, FRK, FLRK, FK-L | 10.05 - | 4091 | |
| TGM | 18.340 FAC, FARC | 10.05 - | 4091 | |
| TGM | 18.340 FAK, FARK, FAK-L, FARK-L | 10.05 - | 4091 | |
| TGM | 18.340 FC, FLC, FLRC, FLLC, FLLRC, FRC | 10.05 - | 4091 | |
| TGM | 18.340 FK, FRK, FLK, FLRK | 10.05 - | 4091 | |
| TGM | 22.240 FNLLC | 10.05 - | 4091 | |
| TGM | 22.250 FNLLC | 10.05 - | 4091 | |
| TGM | 22.280 FNL, 22.280 FNLLC | 10.05 - | 4091 | |
| TGM | 22.290 FNL, 22.290 FNLLC | 10.05 - | 4091 | |
| TGM | 26.280 FD | 10.05 - | 4091 | |
| TGM | 26.280 FDK-HK, FDRK-HK | 04.06 - | 4091 | |
| TGM | 26.280 FD-TM, FDR-TM | 04.06 - | 4091 | |
| TGM | 26.280 FNLC, FNLLC, FNLRC, FNLLRC | 10.05 - | 4091 | |
| TGM | 26.290 FD, FDR | 10.05 - | 4091 | |
| TGM | 26.290 FDK-HK, FDRK-HK | 10.05 - | 4091 | |
| TGM | 26.290 FD-TM, FDR-TM | 07.08 - | 4091 | |
| TGM | 26.290 FNLC, FNLLC, FNLRC, FNLLRC, FVL | 10.05 - | 4091 | |
| TGM | 26.330 FD, FDR | 10.05 - | 4091 | |
| TGM | 26.330 FDK-HK, FDRK-HK | 04.06 - | 4091 | |
| TGM | 26.330 FD-TM, FDR-TM | 04.06 - | 4091 | |
| TGM | 26.330 FNLC, FNLLC, FNLRC, FNLLRC, FVL | 10.05 - | 4091 | |
| TGM | 26.340 FD, FDR | 10.05 - | 4091 | |
| TGM | 26.340 FDK-HK, FDRK-HK | 10.05 - | 4091 | |
| TGM | 26.340 FD-TM, FDR-TM | 07.08 - | 4091 | |
| TGM | 26.340 FNLC, FNLLC, FNLRC, FNLLRC | 10.05 - | 4091 | |
| TGM (12 T) | 6.9 12.240 FLC, FLLC 4x2 12 Ton. | *05-* | 3789 | 3789 |
| TGM (12 T) | 6.9 12.280 FLC, FLLC 4x2 12 Ton. | *05-* | 3789 | 3789 |
| TGM (13 T) | 6.9 13.240 FAL,FALC, FALRC,FAEC,FAERC,FALR 4x4 13 Ton. | *06-* | 3789 | 3789 |
| TGM (13 T) | 6.9 13.280 FAEC,FAERC,FAL,FALC, FALRC 4x4 13 Ton. | *06-* | 3789 | 3789 |
| TGM (13 T) | 6.9 13.240 FALK, FALRK, FALK-L 4x4 13 Ton. | *06-* | 3789 | 3789 |
| TGM (13 T) | 6.9 13.280 FALK, FALRK, FALK-L 4x4 13 Ton. | *06-* | 3789 | 3789 |
| TGM (15 T) | 6.9 15.240 FC,FLC, FLLC, FLRC, FLLRC 4x2 15 Ton. | *05-* | 3789 | 3789 |
| TGM (15 T) | 6.9 15.280 FC,FLC, FLLC, FLRC, FLLRC 4x2 15 Ton. | *05-* | 3789 | 3789 |
| TGS | 18.360 FAS, FALS, FHLS, FHLS/M | 10.07 - | 4129 | 4129 |
| TGS | 18.400 FAC, FHLC | 10.07 - | 4129 | 4129 |
| TGS | 18.400 FAK, FAK-L, FALK, FALK-L, FHLK, FHLK/M | 10.07 - | 4129 | 4129 |
| TGS | 18.400 FAS, FALS, FHLS, FHLS/M | 10.07 - | 4129 | 4129 |
| TGS | 18.400 FC, FLC, FLRC, FLLC, FLLRC, FLLW, FLLW/N | 10.07 - | 4129 | 4129 |
| TGS | 18.400 FK, FK-L, FLK, FLK/M | 10.07 - | 4129 | 4129 |
| TGS | 18.400 FLS, FLS/M, FLS-TS, FLRS, FLRS/M, FLLS, FLLS/N, FLLRS | 10.07 - | 4129 | 4129 |
| TGS | 18.440 FAC, FHLC | 10.07 - | 4129 | 4129 |
| TGS | 18.440 FAK, FAK-L, FALK, FALK-L, FHLK, FHLK/M | 10.07 - | 4129 | 4129 |
| TGS | 18.440 FAS, FALS, FHLS, FHLS/M | 10.07 - | 4129 | 4129 |
| TGS | 18.440 FC, FLC, FLRC, FLLC, FLLRC, FLLW, FLLW/N | 10.07 - | 4129 | 4129 |
| TGS | 18.440 FK, FK-L, FLK, FLK/M | 10.07 - | 4129 | 4129 |
| TGS | 18.440 FLS, FLS/M, FLS-TS, FLRS, FLRS/M, FLLS, FLLS/N, FLLRS | 10.07 - | 4129 | 4129 |
| TGS | 18.480 FAC, FHLC | 10.07 - | 4129 | 4129 |
| TGS | 18.480 FAK, FAK-L, FALK, FALK-L, FHLK, FHLK/M | 10.07 - | 4129 | 4129 |
| TGS | 18.480 FAS, FALS, FHLS | 10.07 - | 4129 | 4129 |
| TGS | 18.480 FC, FLC, FLRC, FLLC, FLLRC, FLLW, FLLW/N | 10.07 - | 4129 | 4129 |
| TGS | 18.480 FK, FK-L, FLK, FLK/M | 10.07 - | 4129 | 4129 |
| TGS | 18.480 FLS, FLS/M, FLS-TS, FLRS, FLRS/M, FLLS, FLLS/N, FLLRS | 10.07 - | 4129 | 4129 |
| TGS | 18.540 FAC, FHLC | 10.07 - | 4129 | 4129 |
| TGS | 18.540 FAK, FAK-L, FALK, FALK-L, FHLK, FHLK/M | 10.07 - | 4129 | 4129 |

| MAKE & MODEL | | YEAR | | |
|---|---|---|---|---|
| **MAN** | | | | |
| TGS | 18.540 FAS, FALS, FHLS, FHLS/M | 10.07 - | 4129 | 4129 |
| TGS | 18.540 FC, FLC, FLRC, FLLC, FLLRC, FLLW, FLLW/N | 10.07 - | 4129 | 4129 |
| TGS | 18.540 FK, FK-L, FLK, FLK/M | 10.07 - | 4129 | 4129 |
| TGS | 18.540 FLS, FLS/M, FLRS, FLRS/M, FLLS, FLLS/N, FLLRS | 10.07 - | 4129 | 4129 |
| TGS | 19.360 FS/M-WW, FLS/M-WW, FRS/M-WW, FLRS/M-WW | 02.11 - | 4129 | 4129 |
| TGS | 19.400 FS/M-WW, FLS/M-WW, FRS/M-WW, FLRS/M-WW | 02.11 - | 4129 | 4129 |
| TGS | 19.440 FS-WW, FRS-WW, FLS-WW, FLRS-WW | 02.11 - | 4129 | 4129 |
| TGS | 19.440 FS-WW, FRS-WW, FLS-WW, FLRS-WW | 02.11 - | 4129 | 4129 |
| TGS | 19.480 FS/M-WW, FRS/M-WW, FLS/M-WW, FLRS/M-WW | 02.11 - | 4129 | 4129 |
| TGS | 24.320 FNLLW/N | 10.07 - | 4129 | 4129 |
| TGS | 24.360 FNLLW/N | 10.07 - | 4129 | 4129 |
| TGS | 24.360 FPLS, FPLRS | 10.07 - | 4129 | 4129 |
| TGS | 24.400 FNLLW/N | 10.07 - | 4129 | 4129 |
| TGS | 24.400 FPLS, FPLRS | 10.07 - | 4129 | 4129 |
| TGS | 24.440 FNLLW/N | 10.07 - | 4129 | 4129 |
| TGS | 24.440 FPLS, FPLRS | 10.07 - | 4129 | 4129 |
| TGS | 24.480 FPLS, FPLRS | 10.07 - | 4129 | 4129 |
| TGS | 24.540 FPLS, FPLRS | 10.07 - | 4129 | 4129 |
| TGS | 26.320 FDAC, FDALC, FDHLC, FDHLC/M | 07.08 - | 4129 | 4129 |
| TGS | 26.320 FDAK, FDALK, FDHK, FDHLK | 07.08 - | 4129 | 4129 |
| TGS | 26.320 FDAS, FDALS, FDHS, FDHLS, FDHLS/M | 07.08 - | 4129 | 4129 |
| TGS | 26.320 FDC, FDRC, FDLC, FDLC/M, FDLRC, FDLRC/M, FNHLC | 07.08 - | 4129 | 4129 |
| TGS | 26.320 FDK, FDLK | 07.08 - | 4129 | 4129 |
| TGS | 26.320 FDS, FDLS, FDLS/M, FDRS, FDLRS, FDLRS/M, FNHLS | 07.08 - | 4129 | 4129 |
| TGS | 26.320 FD-TM | 07.08 - | 4129 | 4129 |
| TGS | 26.320 FNLC, FNLRC, FNLLC, FNLLRC, FNLLW, FVLC, FVL-KO | 10.07 - | 4129 | 4129 |
| TGS | 26.320 FNLS, FNLRS, FNLLS, FPLS, FVLS | 07.08 - | 4129 | 4129 |
| TGS | 26.320 FVHLC | 10.07 - | 4129 | 4129 |
| TGS | 26.360 FDAC, FDALC, FDHLC, FDHLC/M | 08.08 - | 4129 | 4129 |
| TGS | 26.360 FDAS, FDALS, FDHS, FDHLS, FDHLS/M | 08.08 - | 4129 | 4129 |
| TGS | 26.360 FDC, FDRC, FDRC/M, FDLC, FDLRC, FNHLC | 08.08 - | 4129 | 4129 |
| TGS | 26.360 FDK, FDLK, FDRK | 08.08 - | 4129 | 4129 |
| TGS | 26.360 FDS, FDRS, FDRS/M, FDLS, FDLRS, FNHLS | 08.08 - | 4129 | 4129 |
| TGS | 26.360 FD-TM | 07.08 - | 4129 | 4129 |
| TGS | 26.360 FNLC, FNLRC, FNLLC, FNLLRC, FVLC, FVL-KO | 10.07 - | 4129 | 4129 |
| TGS | 26.360 FNLLW | 04.08 - | 4129 | 4129 |
| TGS | 26.360 FNLS, FNLLS, FNLRS, FPLS, FPLRS, FVLS | 08.08 - | 4129 | 4129 |
| TGS | 26.360 FPHLS | 05.08 - | 4129 | 4129 |
| TGS | 26.360 FVHLC | 10.07 - | 4129 | 4129 |
| TGS | 26.360 FVHLS | 05.08 - | 4129 | 4129 |
| TGS | 26.400 FDAC, FDALC, FDHLC, FDHLC/M | 02.09 - | 4129 | 4129 |
| TGS | 26.400 FDAS, FDALS, FDHS, FDHLS, FDHLS/M | 09.07 - | 4129 | 4129 |
| TGS | 26.400 FDC, FDRC, FDC/M, FDLC, FDLC/M, FDLRC, FDLRC/M, FNHLC | 08.08 - | 4129 | 4129 |
| TGS | 26.400 FDK, FDLK | 02.09 - | 4129 | 4129 |
| TGS | 26.400 FDS, FDS/M, FDLS, FDLS/M, FDRS, FDLRS, FNHLS | 02.09 - | 4129 | 4129 |
| TGS | 26.400 FD-TM | 07.08 - | 4129 | 4129 |
| TGS | 26.400 FNLC, FNLRC, FNLLC, FNLLRC, FVLC, FVL-KO, FNLLW | 10.07 - | 4129 | 4129 |
| TGS | 26.400 FNLS, FNLRS, FNLLS, FNLLRS, FPLS, FPLRS, FVLS | 02.09 - | 4129 | 4129 |
| TGS | 26.400 FPHLS | 05.08 - | 4129 | 4129 |
| TGS | 26.400 FVHLC | 10.07 - | 4129 | 4129 |
| TGS | 26.400 FVHLS | 05.08 - | 4129 | 4129 |
| TGS | 26.440 FDAC, FDALC, FDHLC, FDHLC/M | 02.09 - | 4129 | 4129 |
| TGS | 26.440 FDAK, FDALK, FDHK, FDHLK | 11.07 - | 4129 | 4129 |
| TGS | 26.440 FDAS, FDALS, FDHLS, FDHLS/M | 02.09 - | 4129 | 4129 |
| TGS | 26.440 FDC, FDRC, FDC/M, FDLC, FDLC/M, FDLRC, FNHLC | 02.09 - | 4129 | 4129 |
| TGS | 26.440 FDK, FDLK | 07.08 - | 4129 | 4129 |
| TGS | 26.440 FDS, FDRS, FDS/M, FDLS, FDLRS, FNHLS | 02.09 - | 4129 | 4129 |
| TGS | 26.440 FD-TM | 07.08 - | 4129 | 4129 |
| TGS | 26.440 FNLC, FNLLC, FNLLW, FNLRC, FNLLRC, FVLC, FVL-KO | 10.07 - | 4129 | 4129 |
| TGS | 26.440 FNLS, FNLLS, FNLRS, FPLS, FPLRS, FVLS | 02.09 - | 4129 | 4129 |
| TGS | 26.440 FPHLS | 05.08 - | 4129 | 4129 |
| TGS | 26.440 FVHLC | 10.07 - | 4129 | 4129 |
| TGS | 26.440 FVHLS | 05.08 - | 4129 | 4129 |
| TGS | 26.480 FDAK, FDALK, FDHK, FDHLK | 02.09 - | 4129 | 4129 |
| TGS | 26.480 FDAS, FDALS, FDHS, FDHLS | 02.09 - | 4129 | 4129 |
| TGS | 26.480 FDC, FDC/M, FDLC, FDLC/M, FDRC, FDRC/M, FDLRC, FNLHC | 02.09 - | 4129 | 4129 |
| TGS | 26.480 FDK, FDLK | 07.08 - | 4129 | 4129 |
| TGS | 26.480 FDS, FDS/M, FDLS, FDLS/M, FDRS, FDLRS, FDRS/M, FNHLS | 02.09 - | 4129 | 4129 |
| TGS | 26.480 FNLC, FNLRC, FNLLC, FNLLRC, FNLLW, FVLC, FVL-KO | 10.07 - | 4129 | 4129 |
| TGS | 26.480 FNLS, FNLLS, FNLRS, FPLS, FPLRS, FVLS | 02.09 - | 4129 | 4129 |
| TGS | 26.480 FPHLS | 05.08 - | 4129 | 4129 |
| TGS | 26.480 FVHLC | 10.07 - | 4129 | 4129 |
| TGS | 26.480 FVHLS | 05.08 - | 4129 | 4129 |
| TGS | 26.540 FDAC, FDALC, FDHLC, FDHLC/M | 02.09 - | 4129 | 4129 |
| TGS | 26.540 FDAK, FDALK, FDHLK | 11.07 - | 4129 | 4129 |
| TGS | 26.540 FDAS, FDALS, FDHLS | 02.09 - | 4129 | 4129 |

| MAKE & MODEL | | YEAR | | |
|---|---|---|---|---|
| **MAN** | | | | |
| TGS | 26.540 FDC, FDC/M, FDLC, FDLC/M, FDLRC, FDLRC/M, FNHLC | 02.09 - | 4129 | 4129 |
| TGS | 26.540 FDK, FDLK | 02.09 - | 4129 | 4129 |
| TGS | 26.540 FDS, FDS/M, FDLS, FDRS, FDLRS, FDLS/M, FNHLS | 02.09 - | 4129 | 4129 |
| TGS | 26.540 FNLC, FNLRC, FNLLC, FNLLRC, FNLLW, FVLC, FVL-KO | 10.07 - | 4129 | 4129 |
| TGS | 26.540 FNLS, FNLLS, FPLS, FPLRS, FVLS | 02.09 - | 4129 | 4129 |
| TGS | 28.320 FNHLC | 07.08 - | 4129 | 4129 |
| TGS | 28.320 FNLC | 07.08 - | 4129 | 4129 |
| TGS | 28.320 FNLS | 07.08 - | 4129 | 4129 |
| TGS | 28.360 FANLC, FNHLC | 08.08 - | 4129 | 4129 |
| TGS | 28.360 FANLK | 08.08 - | 4129 | 4129 |
| TGS | 28.360 FNLC | 08.08 - | 4129 | 4129 |
| TGS | 28.360 FNLS | 08.08 - | 4129 | 4129 |
| TGS | 28.400 FANLC, FNHLC | 08.08 - | 4129 | 4129 |
| TGS | 28.400 FANLK | 08.08 - | 4129 | 4129 |
| TGS | 28.400 FNLC | 08.08 - | 4129 | 4129 |
| TGS | 28.400 FNLS | 08.08 - | 4129 | 4129 |
| TGS | 28.440 FANLC, FNHLC | 08.08 - | 4129 | 4129 |
| TGS | 28.440 FANLK | 08.08 - | 4129 | 4129 |
| TGS | 28.440 FNLC | 08.08 - | 4129 | 4129 |
| TGS | 28.440 FNLS | 08.08 - | 4129 | 4129 |
| TGS | 28.480 FANLC, FNHLC | 08.08 - | 4129 | 4129 |
| TGS | 28.480 FANLK | 08.08 - | 4129 | 4129 |
| TGS | 28.480 FNLC | 08.08 - | 4129 | 4129 |
| TGS | 28.480 FNLS | 08.08 - | 4129 | 4129 |
| TGS | 28.540 FNHLC | 06.08 - | 4129 | 4129 |
| TGS | 28.540 FNLC | 02.09 - | 4129 | 4129 |
| TGS | 28.540 FNLS | 02.09 - | 4129 | 4129 |
| TGS | 32.320 FFD-TM | 02.09 - | 4129 | 4129 |
| TGS | 32.360 FFDRC | 08.08 - | 4129 | 4129 |
| TGS | 32.360 FFD-TM, FFDR-TM | 10.07 - | 4129 | 4129 |
| TGS | 32.400 FFDRC | 08.08 - | 4129 | 4129 |
| TGS | 32.400 FFD-TM, FFDR-TM | 10.07 - | 4129 | 4129 |
| TGS | 32.440 FFDRC | 08.08 - | 4129 | 4129 |
| TGS | 32.440 FFD-TM, FFDR-TM | 10.07 - | 4129 | 4129 |
| TGS | 32.480 FFD-TM | 08.08 - | 4129 | 4129 |
| TGS | 33.360 FDAC, FDALC | 06.08 - | 4129 | 4129 |
| TGS | 33.360 FDAK, FDALK, FDHK | 10.07 - | 4129 | 4129 |
| TGS | 33.360 FDAS, FDALS, FDHS | 10.07 - | 4129 | 4129 |
| TGS | 33.360 FDC, FDLC | 06.08 - | 4129 | 4129 |
| TGS | 33.360 FDK, FDLK | 02.09 - | 4129 | 4129 |
| TGS | 33.360 FDS, FDLS | 06.08 - | 4129 | 4129 |
| TGS | 33.400 FDAC, FDALC | 07.08 - | 4129 | 4129 |
| TGS | 33.400 FDAK, FDALK, FDHK | 07.08 - | 4129 | 4129 |
| TGS | 33.400 FDAS, FDALS, FDHS | 07.08 - | 4129 | 4129 |
| TGS | 33.400 FDC, FDLC | 06.08 - | 4129 | 4129 |
| TGS | 33.400 FDK, FDLK | 07.08 - | 4129 | 4129 |
| TGS | 33.400 FDS, FDLS | 07.08 - | 4129 | 4129 |
| TGS | 33.440 FDAC, FDALC | 07.08 - | 4129 | 4129 |
| TGS | 33.440 FDAK, FDALK, FDHK | 11.07 - | 4129 | 4129 |
| TGS | 33.440 FDAS, FDALS, FDHS | 10.07 - | 4129 | 4129 |
| TGS | 33.440 FDC, FDLC | 06.08 - | 4129 | 4129 |
| TGS | 33.440 FDK, FDLK | 06.08 - | 4129 | 4129 |
| TGS | 33.440 FDS, FDLS, FDLS/M | 06.08 - | 4129 | 4129 |
| TGS | 33.480 FDAC, FDALC | 08.08 - | 4129 | 4129 |
| TGS | 33.480 FDAK, FDALK | 08.08 - | 4129 | 4129 |
| TGS | 33.480 FDAS, FDALS, FDHS | 10.07 - | 4129 | 4129 |
| TGS | 33.480 FDC, FDC/M, FDLC, FDLC/M | 08.08 - | 4129 | 4129 |
| TGS | 33.480 FDK, FDLK | 08.08 - | 4129 | 4129 |
| TGS | 33.480 FDS, FDLS, FDLS/M | 08.08 - | 4129 | 4129 |
| TGS | 33.540 FDAC, FDALC | 02.09 - | 4129 | 4129 |
| TGS | 33.540 FDAK, FDALK | 02.09 - | 4129 | 4129 |
| TGS | 33.540 FDAS, FDALS | 02.09 - | 4129 | 4129 |
| TGS | 33.540 FDC, FDLC, FDLC/M | 02.09 - | 4129 | 4129 |
| TGS | 33.540 FDK, FDLK | 02.09 - | 4129 | 4129 |
| TGS | 33.540 FDS, FDLS, FDLS/M | 02.09 - | 4129 | 4129 |
| TGS | 35.320 FFDAK | 06.08 - | 4129 | 4129 |
| TGS | 35.320 FFDAK, FFDHLK | 06.08 - | 4129 | 4129 |
| TGS | 35.320 FFDC, FFDLC, FDNLC | 06.08 - | 4129 | 4129 |
| TGS | 35.320 FFDK, FFDLK | 08.08 - | 4129 | 4129 |
| TGS | 35.320 FFD-TM | 10.07 - | 4129 | 4129 |
| TGS | 35.320 FFNLC | 01.09 - | 4129 | 4129 |
| TGS | 35.360 FFDAK | 06.08 - | 4129 | 4129 |
| TGS | 35.360 FFDC, FFDLC, FDNLC | 06.08 - | 4129 | 4129 |
| TGS | 35.360 FFDK, FFDLK, FFDRK | 08.08 - | 4129 | 4129 |
| TGS | 35.360 FFD-TM | 10.07 - | 4129 | 4129 |
| TGS | 35.360 FFNLC | 06.08 - | 4129 | 4129 |

| MAKE & MODEL | | YEAR | | |
|---|---|---|---|---|
| **MAN** | | | | |
| TGS | 35.400 FFDAK | 06.08 - | 4129 | 4129 |
| TGS | 35.400 FFDAK, FFDHLK | 06.08 - | 4129 | 4129 |
| TGS | 35.400 FFDC, FFDLC, FDNLC | 06.08 - | 4129 | 4129 |
| TGS | 35.400 FFDK, FFDLK, FFDRK | 08.08 - | 4129 | 4129 |
| TGS | 35.400 FFD-TM | 10.07 - | 4129 | 4129 |
| TGS | 35.400 FFNHLC | 10.07 - | 4129 | 4129 |
| TGS | 35.400 FFNLC | 06.08 - | 4129 | 4129 |
| TGS | 35.440 FDNLC, FFDC, FFDLC, FFNLC | 06.08 - | 4129 | 4129 |
| TGS | 35.440 FFDAK | 06.08 - | 4129 | 4129 |
| TGS | 35.440 FFDAK, FFDHLK | 06.08 - | 4129 | 4129 |
| TGS | 35.440 FFDK, FFDLK, FFDRK | 08.08 - | 4129 | 4129 |
| TGS | 35.440 FFD-TM | 10.07 - | 4129 | 4129 |
| TGS | 35.440 FFNHLC | 10.07 - | 4129 | 4129 |
| TGS | 35.440 FFNLC | 06.08 - | 4129 | 4129 |
| TGS | 35.480 FDNLC, FFDC, FFDLC | 06.08 - | 4129 | 4129 |
| TGS | 35.480 FFDAK | 06.08 - | 4129 | 4129 |
| TGS | 35.480 FFDAK, FFDHLK | 06.08 - | 4129 | 4129 |
| TGS | 35.480 FFDK, FFDLK, FFDRK | 08.08 - | 4129 | 4129 |
| TGS | 35.480 FFD-TM | 10.07 - | 4129 | 4129 |
| TGS | 35.480 FFNHLC | 10.07 - | 4129 | 4129 |
| TGS | 35.480 FFNLC | 06.08 - | 4129 | 4129 |
| TGS | 35.540 FDNLC, FFDC, FFDLC | 06.08 - | 4129 | 4129 |
| TGS | 35.540 FFDAK | 02.09 - | 4129 | 4129 |
| TGS | 35.540 FFDAK, FFDHLK | 02.09 - | 4129 | 4129 |
| TGS | 35.540 FFDK, FFDLK, FFDRK | 02.09 - | 4129 | 4129 |
| TGS | 35.540 FFD-TM | 10.07 - | 4129 | 4129 |
| TGS | 35.540 FFNLC | 02.09 - | 4129 | 4129 |
| TGS | 37.320 FFDC | 07.08 - | 4129 | 4129 |
| TGS | 37.320 FFDK | 07.08 - | 4129 | 4129 |
| TGS | 37.320 FFD-TM | 10.07 - | 4129 | 4129 |
| TGS | 37.360 FFDC | 07.08 - | 4129 | 4129 |
| TGS | 37.360 FFDK | 07.08 - | 4129 | 4129 |
| TGS | 37.360 FFD-TM | 10.07 - | 4129 | 4129 |
| TGS | 37.400 FFDC | 07.08 - | 4129 | 4129 |
| TGS | 37.400 FFDK | 07.08 - | 4129 | 4129 |
| TGS | 37.400 FFD-TM | 10.07 - | 4129 | 4129 |
| TGS | 37.440 FFDC | 07.08 - | 4129 | 4129 |
| TGS | 37.440 FFDK | 07.08 - | 4129 | 4129 |
| TGS | 37.440 FFD-TM | 10.07 - | 4129 | 4129 |
| TGS | 37.480 FFDC | 07.08 - | 4129 | 4129 |
| TGS | 37.480 FFDK | 07.08 - | 4129 | 4129 |
| TGS | 37.480 FFD-TM | 10.07 - | 4129 | 4129 |
| TGS | 37.540 FFDC | 02.09 - | 4129 | 4129 |
| TGS | 37.540 FFDK | 02.09 - | 4129 | 4129 |
| TGS | 37.540 FFD-TM | 10.07 - | 4129 | 4129 |
| TGS | 40.400 FDAK-WW, FDARK-WW | 02.11 - | 4129 | 4129 |
| TGS | 40.400 FDAS-WW, FDARS-WW | 02.11 - | 4129 | 4129 |
| TGS | 40.440 FDAK-WW, FDARK-WW | 02.11 - | 4129 | 4129 |
| TGS | 40.440 FDAK-WW, FDARK-WW | 02.11 - | 4129 | 4129 |
| TGS | 40.440 FDAS-WW, FDARS-WW | 02.11 - | 4129 | 4129 |
| TGS | 40.440 FDAS-WW, FDARS-WW | 02.11 - | 4129 | 4129 |
| TGS | 41.320 FFDAK | 06.08 - | 4129 | 4129 |
| TGS | 41.320 FFDAK | 06.08 - | 4129 | 4129 |
| TGS | 41.360 FFDC | 07.08 - | 4129 | 4129 |
| TGS | 41.360 FFDK | 07.08 - | 4129 | 4129 |
| TGS | 41.360 FFD-TM | 10.07 - | 4129 | 4129 |
| TGS | 41.400 FFDC | 07.08 - | 4129 | 4129 |
| TGS | 41.400 FFDK | 07.08 - | 4129 | 4129 |
| TGS | 41.400 FFD-TM | 10.07 - | 4129 | 4129 |
| TGS | 41.440 FFDAK | 06.08 - | 4129 | 4129 |
| TGS | 41.440 FFDAK | 06.08 - | 4129 | 4129 |
| TGS | 41.440 FFDC | 07.08 - | 4129 | 4129 |
| TGS | 41.440 FFDK | 07.08 - | 4129 | 4129 |
| TGS | 41.440 FFD-TM | 10.07 - | 4129 | 4129 |
| TGS | 41.480 FFDAK | 06.08 - | 4129 | 4129 |
| TGS | 41.480 FFDAK | 06.08 - | 4129 | 4129 |
| TGS | 41.480 FFDC | 07.08 - | 4129 | 4129 |
| TGS | 41.480 FFDK | 07.08 - | 4129 | 4129 |
| TGS | 41.480 FFD-TM | 10.07 - | 4129 | 4129 |
| TGS | 41.540 FFDAK | 02.09 - | 4129 | 4129 |
| TGS | 41.540 FFDAK | 02.09 - | 4129 | 4129 |
| TGS | 41.540 FFDC | 02.09 - | 4129 | 4129 |
| TGS | 41.540 FFDK | 02.09 - | 4129 | 4129 |
| TGS | 41.540 FFD-TM | 10.07 - | 4129 | 4129 |
| TGS | 18.320 FAC, FHLC | 10.07 - | 4129 | 4129 |
| TGS | 18.320 FAC, FHLC | 10.07 - | 4091 | |

| MAKE & MODEL | | YEAR | 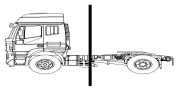 | |
|---|---|---|---|---|
| **MAN** | | | | |
| TGS | 18.320 FAK, FAK-L, FALK, FALK-L, FHLK, FHLK/M | 10.07 - | 4129 | 4129 |
| TGS | 18.320 FAK, FAK-L, FALK, FALK-L, FHLK, FHLK/M | 10.07 - | 4091 | |
| TGS | 18.320 FAS, FHLS, FHLS/M | 10.07 - | 4129 | 4129 |
| TGS | 18.320 FAS, FHLS, FHLS/M | 10.07 - | 4091 | |
| TGS | 18.320 FC, FLC, FLRC, FLLC, FLLRC, FLLW, FLLW/N | 10.07 - | 4129 | 4129 |
| TGS | 18.320 FC, FLC, FLRC, FLLC, FLLRC, FLLW, FLLW/N | 10.07 - | 4091 | |
| TGS | 18.320 FK, FK-L, FLK, FLK/M | 10.07 - | 4129 | 4129 |
| TGS | 18.320 FK, FK-L, FLK, FLK/M | 10.07 - | 4091 | |
| TGS | 18.320 FLS, FLS/M, FLS-TS, FLRS, FLRS/M, FLLS, FLLS/N,FLLRS | 10.07 - | 4129 | 4129 |
| TGS | 18.320 FLS, FLS/M, FLS-TS, FLRS, FLRS/M, FLLS, FLLS/N,FLLRS | 10.07 - | 4091 | |
| TGS | 18.360 FAC, FHLC | 10.07 - | 4129 | 4129 |
| TGS | 18.360 FAC, FHLC | 10.07 - | 4091 | |
| TGS | 18.360 FAK, FAK-L, FALK, FALK-L, FHLK, FHLK/M | 10.07 - | 4129 | 4129 |
| TGS | 18.360 FAK, FAK-L, FALK, FALK-L, FHLK, FHLK/M | 10.07 - | 4091 | |
| TGS | 18.360 FAS, FALS, FHLS, FHLS/M | 10.07 - | 4091 | |
| TGS | 18.360 FC, FLC, FLRC, FLLC, FLLRC, FLLW, FLLW/N | 10.07 - | 4129 | 4129 |
| TGS | 18.360 FC, FLC, FLRC, FLLC, FLLRC, FLLW, FLLW/N | 10.07 - | 4091 | |
| TGS | 18.360 FK, FK-L, FLK, FLK/M | 10.07 - | 4129 | 4129 |
| TGS | 18.360 FK, FK-L, FLK, FLK/M | 10.07 - | 4091 | |
| TGS | 18.360 FLS, FLS/M, FLS-TS, FLRS, FLRS/M, FLLS, FLLS/N, FLLRS | 10.07 - | 4129 | 4129 |
| TGS | 18.360 FLS, FLS/M, FLS-TS, FLRS, FLRS/M, FLLS, FLLS/N, FLLRS | 10.07 - | 4091 | |
| TGS | 18.400 FAC, FHLC | 10.07 - | 4091 | |
| TGS | 18.400 FAK, FAK-L, FALK, FALK-L, FHLK, FHLK/M | 10.07 - | 4091 | |
| TGS | 18.400 FAS, FALS, FHLS, FHLS/M | 10.07 - | 4091 | |
| TGS | 18.400 FC, FLC, FLRC, FLLC, FLLRC, FLLW, FLLW/N | 10.07 - | 4091 | |
| TGS | 18.400 FK, FK-L, FLK, FLK/M | 10.07 - | 4091 | |
| TGS | 18.400 FLS, FLS/M, FLS-TS, FLRS, FLRS/M, FLLS, FLLS/N, FLLRS | 10.07 - | 4091 | |
| TGS | 18.440 FAC, FHLC | 10.07 - | 4091 | |
| TGS | 18.440 FAK, FAK-L, FALK, FALK-L, FHLK, FHLK/M | 10.07 - | 4091 | |
| TGS | 18.440 FAS, FALS, FHLS, FHLS/M | 10.07 - | 4091 | |
| TGS | 18.440 FC, FLC, FLRC, FLLC, FLLRC, FLLW, FLLW/N | 10.07 - | 4091 | |
| TGS | 18.440 FK, FK-L, FLK, FLK/M | 10.07 - | 4091 | |
| TGS | 18.440 FLS, FLS/M, FLS-TS, FLRS, FLRS/M, FLLS, FLLS/N, FLLRS | 10.07 - | 4091 | |
| TGS | 18.480 FAC, FHLC | 10.07 - | 4091 | |
| TGS | 18.480 FAK, FAK-L, FALK, FALK-L, FHLK, FHLK/M | 10.07 - | 4091 | |
| TGS | 18.480 FAS, FALS, FHLS | 10.07 - | 4091 | |
| TGS | 18.480 FC, FLC, FLRC, FLLC, FLLRC, FLLW, FLLW/N | 10.07 - | 4091 | |
| TGS | 18.480 FK, FK-L, FLK, FLK/M | 10.07 - | 4091 | |
| TGS | 18.480 FLS, FLS/M, FLS-TS, FLRS, FLRS/M, FLLS, FLLS/N, FLLRS | 10.07 - | 4091 | |
| TGS | 18.540 FAC, FHLC | 10.07 - | 4091 | |
| TGS | 18.540 FAK, FAK-L, FALK, FALK-L, FHLK, FHLK/M | 10.07 - | 4091 | |
| TGS | 18.540 FAS, FALS, FHLS, FHLS/M | 10.07 - | 4091 | |
| TGS | 18.540 FC, FLC, FLRC, FLLC, FLLRC, FLLW, FLLW/N | 10.07 - | 4091 | |
| TGS | 18.540 FK, FK-L, FLK, FLK/M | 10.07 - | 4091 | |
| TGS | 18.540 FLS, FLS/M, FLRS, FLRS/M, FLLS, FLLS/N, FLLRS | 10.07 - | 4091 | |
| TGS | 19.360 FS/M-WW, FLS/M-WW, FRS/M-WW, FLRS/M-WW | 02.11 - | 4091 | |
| TGS | 19.400 FS/M-WW, FLS/M-WW, FRS/M-WW, FLRS/M-WW | 02.11 - | 4091 | |
| TGS | 19.440 FS-WW, FRS-WW, FLS-WW, FLRS-WW | 02.11 - | 4091 | |
| TGS | 19.440 FS-WW, FRS-WW, FLS-WW, FLRS-WW | 02.11 - | 4091 | |
| TGS | 19.480 FS/M-WW, FRS/M-WW, FLS/M-WW, FLRS/M-WW | 02.11 - | 4091 | |
| TGS | 24.320 FNLLW/N | 10.07 - | 4091 | |
| TGS | 24.360 FNLLW/N | 10.07 - | 4091 | |
| TGS | 24.360 FPLS, FPLRS | 10.07 - | 4091 | |
| TGS | 24.400 FNLLW/N | 10.07 - | 4091 | |
| TGS | 24.400 FPLS, FPLRS | 10.07 - | 4091 | |
| TGS | 24.440 FNLLW/N | 10.07 - | 4091 | |
| TGS | 24.440 FPLS, FPLRS | 10.07 - | 4091 | |
| TGS | 24.480 FPLS, FPLRS | 10.07 - | 4091 | |
| TGS | 24.540 FPLS, FPLRS | 10.07 - | 4091 | |
| TGS | 26.320 FDAC, FDALC, FDHLC, FDHLC/M | 07.08 - | 4091 | |
| TGS | 26.320 FDAK, FDALK, FDHK, FDHLK | 07.08 - | 4091 | |
| TGS | 26.320 FDAS, FDALS, FDHS, FDHLS, FDHLS/M | 07.08 - | 4091 | |
| TGS | 26.320 FDC, FDRC, FDLC, FDLC/M, FDLRC, FDLRC/M, FNHLC | 07.08 - | 4091 | |
| TGS | 26.320 FDK, FDLK | 07.08 - | 4091 | |
| TGS | 26.320 FDS, FDLS, FDLS/M, FDRS, FDLRS, FDLRS/M, FNHLS | 07.08 - | 4091 | |
| TGS | 26.320 FD-TM | 07.08 - | 4091 | |
| TGS | 26.320 FNLC, FNLRC, FNLLC, FNLLRC, FNLLW, FVLC, FVL-KO | 10.07 - | 4091 | |
| TGS | 26.320 FNLS, FNLRS, FNLLS, FPLS, FVLS | 07.08 - | 4091 | |
| TGS | 26.320 FVHLC | 10.07 - | 4091 | |
| TGS | 26.360 FDAC, FDALC, FDHLC, FDHLC/M | 08.08 - | 4091 | |
| TGS | 26.360 FDAK, FDALK, FDHK, FDHLK | 08.08 - | 4091 | |
| TGS | 26.360 FDAS, FDALS, FDHS, FDHLS, FDHLS/M | 08.08 - | 4091 | |
| TGS | 26.360 FDC, FDRC, FDRC/M, FDLC, FDLRC, FNHLC | 08.08 - | 4091 | |
| TGS | 26.360 FDK, FDLK, FDRK | 08.08 - | 4091 | |
| TGS | 26.360 FDS, FDRS, FDRS/M, FDLS, FDLRS, FNHLS | 08.08 - | 4091 | |
| TGS | 26.360 FD-TM | 07.08 - | 4091 | |

| MAKE & MODEL | | YEAR | | |
|---|---|---|---|---|
| **MAN** | | | | |
| TGS | 26.360 FNLC, FNLRC, FNLLC, FNLLRC, FVLC, FVL-KO | 10.07 - | 4091 | |
| TGS | 26.360 FNLLW | 04.08 - | 4091 | |
| TGS | 26.360 FNLS, FNLLS, FNLRS, FPLS, FPLRS, FVLS | 08.08 - | 4091 | |
| TGS | 26.360 FPHLS | 05.08 - | 4091 | |
| TGS | 26.360 FVHLC | 10.07 - | 4091 | |
| TGS | 26.360 FVHLS | 05.08 - | 4091 | |
| TGS | 26.400 | 11.07 - | 4129 | 4129 |
| TGS | 26.400 FDAC, FDALC, FDHLC, FDHLC/M | 02.09 - | 4091 | |
| TGS | 26.400 FDAK, FDALK, FDHK, FDHLK | 11.07 - | 4091 | |
| TGS | 26.400 FDAS, FDALS, FDHS, FDHLS, FDHLS/M | 09.07 - | 4091 | |
| TGS | 26.400 FDC, FDRC, FDC/M, FDLC, FDLC/M, FDLRC, FDLRC/M, FNHLC | 08.08 - | 4091 | |
| TGS | 26.400 FDK, FDLK | 02.09 - | 4091 | |
| TGS | 26.400 FDS, FDS/M, FDLS, FDLS/M, FDRS, FDLRS, FNHLS | 02.09 - | 4091 | |
| TGS | 26.400 FD-TM | 07.08 - | 4091 | |
| TGS | 26.400 FNLC, FNLRC, FNLLC, FNLLRC, FVLC, FVL-KO, FNLLW | 10.07 - | 4091 | |
| TGS | 26.400 FNLS, FNLRS, FNLLS, FNLLRS, FPLS, FPLRS, FVLS | 02.09 - | 4091 | |
| TGS | 26.400 FPHLS | 05.08 - | 4091 | |
| TGS | 26.400 FVHLC | 10.07 - | 4091 | |
| TGS | 26.400 FVHLS | 05.08 - | 4091 | |
| TGS | 26.440 FDAC, FDALC, FDHLC, FDHLC/M | 02.09 - | 4091 | |
| TGS | 26.440 FDAK, FDALK, FDHK, FDHLK | 11.07 - | 4091 | |
| TGS | 26.440 FDAS, FDALS, FDHLS, FDHLS/M | 02.09 - | 4091 | |
| TGS | 26.440 FDC, FDRC, FDC/M, FDLC, FDLC/M, FDLRC, FNHLC | 02.09 - | 4091 | |
| TGS | 26.440 FDK, FDLK | 07.08 - | 4091 | |
| TGS | 26.440 FDS, FDRS, FDS/M, FDLS, FDLRS, FNHLS | 02.09 - | 4091 | |
| TGS | 26.440 FD-TM | 07.08 - | 4091 | |
| TGS | 26.440 FNLC, FNLLC, FNLLW, FNLRC, FNLLRC, FVLC, FVL-KO | 10.07 - | 4091 | |
| TGS | 26.440 FNLS, FNLLS, FNLRS, FPLS, FPLRS, FVLS | 02.09 - | 4091 | |
| TGS | 26.440 FPHLS | 05.08 - | 4091 | |
| TGS | 26.440 FVHLC | 10.07 - | 4091 | |
| TGS | 26.440 FVHLS | 05.08 - | 4091 | |
| TGS | 26.480 FDAC, FDALC, FDHLC, FDHLC/M | 02.09 - | 4091 | |
| TGS | 26.480 FDAK, FDALK, FDHK, FDHLK | 02.09 - | 4091 | |
| TGS | 26.480 FDAS, FDALS, FDHS, FDHLS | 02.09 - | 4091 | |
| TGS | 26.480 FDC, FDC/M, FDLC, FDLC/M, FDRC, FDRC/M, FDLRC, FNLHC | 02.09 - | 4091 | |
| TGS | 26.480 FDK, FDLK | 07.08 - | 4091 | |
| TGS | 26.480 FDS, FDS/M, FDLS, FDLS/M, FDRS, FDLRS, FDRS/M, FNHLS | 02.09 - | 4091 | |
| TGS | 26.480 FNLC, FNLRC, FNLLC, FNLLRC, FNLLW, FVLC, FVL-KO | 10.07 - | 4091 | |
| TGS | 26.480 FNLS, FNLLS, FNLRS, FPLS, FPLRS, FVLS | 02.09 - | 4091 | |
| TGS | 26.480 FPHLS | 05.08 - | 4091 | |
| TGS | 26.480 FVHLC | 10.07 - | 4091 | |
| TGS | 26.480 FVHLS | 05.08 - | 4091 | |
| TGS | 26.540 FDAC, FDALC, FDHLC, FDHLC/M | 02.09 - | 4091 | |
| TGS | 26.540 FDAK, FDALK, FDHLK | 11.07 - | 4091 | |
| TGS | 26.540 FDAS, FDALS, FDHLS | 02.09 - | 4091 | |
| TGS | 26.540 FDC, FDC/M, FDLC, FDLC/M, FDLRC, FDLRC/M, FNHLC | 02.09 - | 4091 | |
| TGS | 26.540 FDK, FDLK | 02.09 - | 4091 | |
| TGS | 26.540 FDS, FDS/M, FDLS, FDRS, FDLRS, FDLS/M, FNHLS | 02.09 - | 4091 | |
| TGS | 26.540 FNLC, FNLRC, FNLLC, FNLLRC, FNLLW, FVLC, FVL-KO | 10.07 - | 4091 | |
| TGS | 26.540 FNLS, FNLLS, FPLS, FPLRS, FVLS | 02.09 - | 4091 | |
| TGS | 28.320 FNHLC | 07.08 - | 4091 | |
| TGS | 28.320 FNLC | 07.08 - | 4091 | |
| TGS | 28.320 FNLS | 07.08 - | 4091 | |
| TGS | 28.360 FANLC, FNHLC | 08.08 - | 4091 | |
| TGS | 28.360 FANLK | 08.08 - | 4091 | |
| TGS | 28.360 FNLC | 08.08 - | 4091 | |
| TGS | 28.360 FNLS | 08.08 - | 4091 | |
| TGS | 28.400 FANLC, FNHLC | 08.08 - | 4091 | |
| TGS | 28.400 FANLK | 08.08 - | 4091 | |
| TGS | 28.400 FNLC | 08.08 - | 4091 | |
| TGS | 28.400 FNLS | 08.08 - | 4091 | |
| TGS | 28.440 FANLC, FNHLC | 08.08 - | 4091 | |
| TGS | 28.440 FANLK | 08.08 - | 4091 | |
| TGS | 28.440 FNLC | 08.08 - | 4091 | |
| TGS | 28.440 FNLS | 08.08 - | 4091 | |
| TGS | 28.480 FANLC, FNHLC | 08.08 - | 4091 | |
| TGS | 28.480 FANLK | 08.08 - | 4091 | |
| TGS | 28.480 FNLC | 08.08 - | 4091 | |
| TGS | 28.480 FNLS | 08.08 - | 4091 | |
| TGS | 28.540 FNHLC | 06.08 - | 4091 | |
| TGS | 28.540 FNLC | 02.09 - | 4091 | |
| TGS | 28.540 FNLS | 02.09 - | 4091 | |
| TGS | 32.320 FFD-TM | 02.09 - | 4091 | |
| TGS | 32.360 FFDRC | 08.08 - | 4091 | |
| TGS | 32.360 FFD-TM, FFDR-TM | 10.07 - | 4091 | |
| TGS | 32.400 FFDRC | 08.08 - | 4091 | |

| MAKE & MODEL | | YEAR | | |
|---|---|---|---|---|
| **MAN** | | | | |
| TGS | 32.400 FFD-TM, FFDR-TM | 10.07 - | 4091 | |
| TGS | 32.440 FFDRC | 08.08 - | 4091 | |
| TGS | 32.440 FFD-TM, FFDR-TM | 10.07 - | 4091 | |
| TGS | 32.480 FFD-TM | 08.08 - | 4091 | |
| TGS | 33.360 FDAC, FDALC | 06.08 - | 4091 | |
| TGS | 33.360 FDAK, FDALK, FDHK | 10.07 - | 4091 | |
| TGS | 33.360 FDAS, FDALS, FDHS | 10.07 - | 4091 | |
| TGS | 33.360 FDC, FDLC | 06.08 - | 4091 | |
| TGS | 33.360 FDK, FDLK | 02.09 - | 4091 | |
| TGS | 33.360 FDS, FDLS | 06.08 - | 4091 | |
| TGS | 33.400 FDAC, FDALC | 07.08 - | 4091 | |
| TGS | 33.400 FDAK, FDALK, FDHK | 07.08 - | 4091 | |
| TGS | 33.400 FDAS, FDALS, FDHS | 07.08 - | 4091 | |
| TGS | 33.400 FDC, FDLC | 06.08 - | 4091 | |
| TGS | 33.400 FDK, FDLK | 07.08 - | 4091 | |
| TGS | 33.400 FDS, FDLS | 07.08 - | 4091 | |
| TGS | 33.440 FDAC, FDALC | 07.08 - | 4091 | |
| TGS | 33.440 FDAK, FDALK, FDHK | 11.07 - | 4091 | |
| TGS | 33.440 FDAS, FDALS, FDHS | 10.07 - | 4091 | |
| TGS | 33.440 FDC, FDLC | 06.08 - | 4091 | |
| TGS | 33.440 FDK, FDLK | 06.08 - | 4091 | |
| TGS | 33.440 FDS, FDLS, FDLS/M | 06.08 - | 4091 | |
| TGS | 33.480 FDAC, FDALC | 08.08 - | 4091 | |
| TGS | 33.480 FDAK, FDALK | 08.08 - | 4091 | |
| TGS | 33.480 FDAS, FDALS, FDHS | 10.07 - | 4091 | |
| TGS | 33.480 FDC, FDC/M, FDLC, FDLC/M | 08.08 - | 4091 | |
| TGS | 33.480 FDK, FDLK | 08.08 - | 4091 | |
| TGS | 33.480 FDS, FDLS, FDLS/M | 08.08 - | 4091 | |
| TGS | 33.540 FDAC, FDALC | 02.09 - | 4091 | |
| TGS | 33.540 FDAK, FDALK | 02.09 - | 4091 | |
| TGS | 33.540 FDAS, FDALS | 02.09 - | 4091 | |
| TGS | 33.540 FDC, FDLC, FDLC/M | 02.09 - | 4091 | |
| TGS | 33.540 FDK, FDLK | 02.09 - | 4091 | |
| TGS | 33.540 FDS, FDLS, FDLS/M | 02.09 - | 4091 | |
| TGS | 35.320 FFDAK | 06.08 - | 4091 | |
| TGS | 35.320 FFDAK, FFDHLK | 06.08 - | 4091 | |
| TGS | 35.320 FFDC, FFDLC, FDNLC | 06.08 - | 4091 | |
| TGS | 35.320 FFDK, FFDLK | 08.08 - | 4091 | |
| TGS | 35.320 FFD-TM | 10.07 - | 4091 | |
| TGS | 35.320 FFNLC | 01.09 - | 4091 | |
| TGS | 35.360 FFDAK | 06.08 - | 4091 | |
| TGS | 35.360 FFDAK, FFHDLK | 06.08 - | 4091 | |
| TGS | 35.360 FFDC, FFDLC, FDNLC | 06.08 - | 4091 | |
| TGS | 35.360 FFDK, FFDLK, FFDRK | 08.08 - | 4091 | |
| TGS | 35.360 FFD-TM | 10.07 - | 4091 | |
| TGS | 35.360 FFNLC | 06.08 - | 4091 | |
| TGS | 35.400 FFDAK | 06.08 - | 4091 | |
| TGS | 35.400 FFDAK, FFDHLK | 06.08 - | 4091 | |
| TGS | 35.400 FFDC, FFDLC, FDNLC | 06.08 - | 4091 | |
| TGS | 35.400 FFDK, FFDLK, FFDRK | 08.08 - | 4091 | |
| TGS | 35.400 FFD-TM | 10.07 - | 4091 | |
| TGS | 35.400 FFNHLC | 10.07 - | 4091 | |
| TGS | 35.400 FFNLC | 06.08 - | 4091 | |
| TGS | 35.440 FDNLC, FFDC, FFDLC, FFNLC | 06.08 - | 4091 | |
| TGS | 35.440 FFDAK | 06.08 - | 4091 | |
| TGS | 35.440 FFDAK, FFDHLK | 06.08 - | 4091 | |
| TGS | 35.440 FFDK, FFDLK, FFDRK | 08.08 - | 4091 | |
| TGS | 35.440 FFD-TM | 10.07 - | 4091 | |
| TGS | 35.440 FFNHLC | 10.07 - | 4091 | |
| TGS | 35.440 FFNLC | 06.08 - | 4091 | |
| TGS | 35.480 FDNLC, FFDC, FFDLC | 06.08 - | 4091 | |
| TGS | 35.480 FFDAK | 06.08 - | 4091 | |
| TGS | 35.480 FFDAK, FFDHLK | 06.08 - | 4091 | |
| TGS | 35.480 FFDK, FFDLK, FFDRK | 08.08 - | 4091 | |
| TGS | 35.480 FFD-TM | 10.07 - | 4091 | |
| TGS | 35.480 FFNHLC | 10.07 - | 4091 | |
| TGS | 35.480 FFNLC | 06.08 - | 4091 | |
| TGS | 35.540 FDNLC, FFDC, FFDLC | 06.08 - | 4091 | |
| TGS | 35.540 FFDAK | 02.09 - | 4091 | |
| TGS | 35.540 FFDAK, FFDHLK | 02.09 - | 4091 | |
| TGS | 35.540 FFDK, FFDLK, FFDRK | 02.09 - | 4091 | |
| TGS | 35.540 FFD-TM | 10.07 - | 4091 | |
| TGS | 35.540 FFNLC | 02.09 - | 4091 | |
| TGS | 37.320 FFDC | 07.08 - | 4091 | |
| TGS | 37.320 FFDK | 07.08 - | 4091 | |
| TGS | 37.320 FFD-TM | 10.07 - | 4091 | |

| MAKE & MODEL | | YEAR | 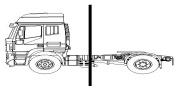 | |
|---|---|---|---|---|
| **MAN** | | | | |
| TGS | 37.360 FFDC | 07.08 - | 4091 | |
| TGS | 37.360 FFDK | 07.08 - | 4091 | |
| TGS | 37.360 FFD-TM | 10.07 - | 4091 | |
| TGS | 37.400 FFDC | 07.08 - | 4091 | |
| TGS | 37.400 FFDK | 07.08 - | 4091 | |
| TGS | 37.400 FFD-TM | 10.07 - | 4091 | |
| TGS | 37.440 FFDC | 07.08 - | 4091 | |
| TGS | 37.440 FFDK | 07.08 - | 4091 | |
| TGS | 37.440 FFD-TM | 10.07 - | 4091 | |
| TGS | 37.480 FFDC | 07.08 - | 4091 | |
| TGS | 37.480 FFDK | 07.08 - | 4091 | |
| TGS | 37.480 FFD-TM | 10.07 - | 4091 | |
| TGS | 37.540 FFDC | 02.09 - | 4091 | |
| TGS | 37.540 FFDK | 02.09 - | 4091 | |
| TGS | 37.540 FFD-TM | 10.07 - | 4091 | |
| TGS | 40.400 FDAK-WW, FDARK-WW | 02.11 - | 4091 | |
| TGS | 40.400 FDAS-WW, FDARS-WW | 02.11 - | 4091 | |
| TGS | 40.440 FDAK-WW, FDARK-WW | 02.11 - | 4091 | |
| TGS | 40.440 FDAS-WW, FDARS-WW | 02.11 - | 4091 | |
| TGS | 40.440 FDAS-WW, FDARS-WW | 02.11 - | 4091 | |
| TGS | 41.320 FFDAK | 06.08 - | 4091 | |
| TGS | 41.320 FFDAK | 06.08 - | 4091 | |
| TGS | 41.360 FFDAK | 06.08 - | 4091 | |
| TGS | 41.360 FFDAK | 06.08 - | 4091 | |
| TGS | 41.360 FFDC | 07.08 - | 4091 | |
| TGS | 41.360 FFDK | 07.08 - | 4091 | |
| TGS | 41.360 FFD-TM | 10.07 - | 4091 | |
| TGS | 41.400 FFDC | 07.08 - | 4091 | |
| TGS | 41.400 FFDK | 07.08 - | 4091 | |
| TGS | 41.400 FFD-TM | 10.07 - | 4091 | |
| TGS | 41.440 FFDAK | 06.08 - | 4091 | |
| TGS | 41.440 FFDAK | 06.08 - | 4091 | |
| TGS | 41.440 FFDC | 07.08 - | 4091 | |
| TGS | 41.440 FFDK | 07.08 - | 4091 | |
| TGS | 41.440 FFD-TM | 10.07 - | 4091 | |
| TGS | 41.480 FFDAK | 06.08 - | 4091 | |
| TGS | 41.480 FFDAK | 06.08 - | 4091 | |
| TGS | 41.480 FFDARC | 06.08 - | 4091 | |
| TGS | 41.480 FFDC | 07.08 - | 4091 | |
| TGS | 41.480 FFDK | 07.08 - | 4091 | |
| TGS | 41.480 FFD-TM | 10.07 - | 4091 | |
| TGS | 41.540 FFDAK | 02.09 - | 4091 | |
| TGS | 41.540 FFDAK | 02.09 - | 4091 | |
| TGS | 41.540 FFDC | 02.09 - | 4091 | |
| TGS | 41.540 FFDK | 02.09 - | 4091 | |
| TGS | 41.540 FFD-TM | 10.07 - | 4091 | |
| TGX | 18.360 FHLC | 10.07 - | 4129 | 4129 |
| TGX | 18.360 FHLC | 10.07 - | 4091 | |
| TGX | 18.360 FHLS, FHLS/M | 10.07 - | 4129 | 4129 |
| TGX | 18.360 FHLS, FHLS/M | 10.07 - | 4091 | |
| TGX | 18.360 FLC, FLRC, FLLC, FLLRC, FLLW, FLLW/N | 10.07 - | 4129 | 4129 |
| TGX | 18.360 FLC, FLRC, FLLC, FLLRC, FLLW, FLLW/N | 10.07 - | 4091 | |
| TGX | 18.360 FLS, FLS/M, FLRS, FLRS/N, FLLS, FLLS/N, FLLRS,FLLRS/N | 10.07 - | 4129 | 4129 |
| TGX | 18.360 FLS, FLS/M, FLRS, FLRS/N, FLLS, FLLS/N, FLLRS,FLLRS/N | 10.07 - | 4091 | |
| TGX | 18.400 FHLC | 10.07 - | 4129 | 4129 |
| TGX | 18.400 FHLC | 10.07 - | 4091 | |
| TGX | 18.400 FHLS, FHLS/M | 10.07 - | 4129 | 4129 |
| TGX | 18.400 FHLS, FHLS/M | 10.07 - | 4091 | |
| TGX | 18.400 FLC, FLRC, FLLC, FLLRC, FLLW, FLLW/N | 10.07 - | 4129 | 4129 |
| TGX | 18.400 FLC, FLRC, FLLC, FLLRC, FLLW, FLLW/N | 10.07 - | 4091 | |
| TGX | 18.400 FLS, FLS/M, FLRS, FLRS/N, FLLS, FLLS/N, FLLRS,FLLRS/N | 10.07 - | 4129 | 4129 |
| TGX | 18.400 FLS, FLS/M, FLRS, FLRS/N, FLLS, FLLS/N, FLLRS,FLLRS/N | 10.07 - | 4091 | |
| TGX | 18.440 FHLC | 10.07 - | 4129 | 4129 |
| TGX | 18.440 FHLC | 10.07 - | 4091 | |
| TGX | 18.440 FHLS, FHLS/M | 10.07 - | 4129 | 4129 |
| TGX | 18.440 FHLS, FHLS/M | 10.07 - | 4091 | |
| TGX | 18.440 FLC, FLRC, FLLC, FLLRC, FLLW, FLLW/N | 10.07 - | 4129 | 4129 |
| TGX | 18.440 FLC, FLRC, FLLC, FLLRC, FLLW, FLLW/N | 10.07 - | 4091 | |
| TGX | 18.440 FLRC | 10.07 - | 4091 | |
| TGX | 18.440 FLRC, FLLC, FLLW, FLLW/N | 10.07 - | 4129 | 4129 |
| TGX | 18.440 FLRS | 10.07 - | 4091 | |
| TGX | 18.440 FLS, FLS/M, FLRS, FLRS/M, FLLS, FLLS/N, FLLRS,FLLRS/ | 10.07 - | 4129 | 4129 |
| TGX | 18.440 FLS, FLS/M, FLRS, FLRS/M, FLLS, FLLS/N, FLLRS,FLLRS/ | 10.07 - | 4091 | |
| TGX | 18.440 FLS, FLSS, FLSS/N, FLRS, FLRS/N | 10.07 - | 4129 | 4129 |
| TGX | 18.480 FHLC | 10.07 - | 4129 | 4129 |

| MAKE & MODEL | | YEAR | | |
|---|---|---|---|---|
| **MAN** | | | | |
| TGX | 18.480 FHLC | 10.07 - | 4091 | |
| TGX | 18.480 FHLS, FHLS/M | 10.07 - | 4129 | 4129 |
| TGX | 18.480 FHLS, FHLS/M | 10.07 - | 4091 | |
| TGX | 18.480 FLC, FLRC, FLLC, FLLRC, FLLW, FLLW/N | 10.07 - | 4129 | 4129 |
| TGX | 18.480 FLC, FLRC, FLLC, FLLRC, FLLW, FLLW/N | 10.07 - | 4091 | |
| TGX | 18.480 FLS, FLS/M, FLRS, FLRS/N, FLLS, FLLS/N, FLLRS,FLLRS/N | 10.07 - | 4129 | 4129 |
| TGX | 18.480 FLS, FLS/M, FLRS, FLRS/N, FLLS, FLLS/N, FLLRS,FLLRS/N | 10.07 - | 4091 | |
| TGX | 18.540 FHLC | 10.07 - | 4129 | 4129 |
| TGX | 18.540 FHLC | 10.07 - | 4091 | |
| TGX | 18.540 FHLS, FHLS/M | 10.07 - | 4129 | 4129 |
| TGX | 18.540 FHLS, FHLS/M | 10.07 - | 4091 | |
| TGX | 18.540 FLC, FLRC, FLLC, FLLRC, FLLW, FLLW/N | 10.07 - | 4129 | 4129 |
| TGX | 18.540 FLC, FLRC, FLLC, FLLRC, FLLW, FLLW/N | 10.07 - | 4091 | |
| TGX | 18.540 FLS, FLS/M, FLRS, FLRS/N, FLLS, FLLS/N,FLLRS,FLLRS/N | 10.07 - | 4129 | 4129 |
| TGX | 18.540 FLS, FLS/M, FLRS, FLRS/N, FLLS, FLLS/N,FLLRS,FLLRS/N | 10.07 - | 4091 | |
| TGX | 18.680 FLS | 10.07 - | 4129 | 4129 |
| TGX | 18.680 FLS | 10.07 - | 4091 | |
| TGX | 24.360 FNLLW/N | 10.07 - | 4129 | 4129 |
| TGX | 24.360 FNLLW/N | 10.07 - | 4091 | |
| TGX | 24.360 FPLS, FPLRS | 10.07 - | 4129 | 4129 |
| TGX | 24.360 FPLS, FPLRS | 10.07 - | 4091 | |
| TGX | 24.400 FNLLW/N | 10.07 - | 4129 | 4129 |
| TGX | 24.400 FNLLW/N | 10.07 - | 4091 | |
| TGX | 24.400 FPLS, FPLRS | 10.07 - | 4129 | 4129 |
| TGX | 24.400 FPLS, FPLRS | 10.07 - | 4091 | |
| TGX | 24.440 FNLLW/N | 10.07 - | 4129 | 4129 |
| TGX | 24.440 FNLLW/N | 10.07 - | 4091 | |
| TGX | 24.440 FPLRS | 10.07 - | 4091 | |
| TGX | 24.440 FPLS, FPLRS | 10.07 - | 4129 | 4129 |
| TGX | 24.440 FPLS, FPLRS | 10.07 - | 4091 | |
| TGX | 24.480 FNLLW/N | 10.07 - | 4129 | 4129 |
| TGX | 24.480 FNLLW/N | 10.07 - | 4091 | |
| TGX | 24.480 FPLS, FPLRS | 10.07 - | 4129 | 4129 |
| TGX | 24.480 FPLS, FPLRS | 10.07 - | 4091 | |
| TGX | 24.540 FNLLW/N | 02.09 - | 4129 | 4129 |
| TGX | 24.540 FNLLW/N | 02.09 - | 4091 | |
| TGX | 24.540 FPLS, FPLRS | 10.07 - | 4129 | 4129 |
| TGX | 24.540 FPLS, FPLRS | 10.07 - | 4091 | |
| TGX | 26.320 FNLS, FNLLS | 10.07 - | 4091 | |
| TGX | 26.320 FNLS, FNLLS, FNLRS | 10.07 - | 4129 | 4129 |
| TGX | 26.360 FDC, FDC/M, FDLC, FDRC, FDRC/M, FDLRC | 07.08 - | 4129 | 4129 |
| TGX | 26.360 FDC, FDLC, FDRC, FDLRC | 07.08 - | 4091 | |
| TGX | 26.360 FDHLC | 10.07 - | 4129 | 4129 |
| TGX | 26.360 FDHLC | 10.07 - | 4091 | |
| TGX | 26.360 FDHLS | 10.07 - | 4129 | 4129 |
| TGX | 26.360 FDHLS | 10.07 - | 4091 | |
| TGX | 26.360 FDS, FDLS, FDRS, FDLRS | 07.08 - | 4091 | |
| TGX | 26.360 FDS, FDS/M, FDLS, FDRS, FDRS/M, FDLRS | 07.08 - | 4129 | 4129 |
| TGX | 26.360 FNHLC | 10.07 - | 4129 | 4129 |
| TGX | 26.360 FNHLC | 10.07 - | 4091 | |
| TGX | 26.360 FNHLS | 12.07 - | 4129 | 4129 |
| TGX | 26.360 FNHLS | 12.07 - | 4091 | |
| TGX | 26.360 FNLC, FNLRC, FNLLC, FNLLRC, FNLLW | 10.07 - | 4129 | 4129 |
| TGX | 26.360 FNLC, FNLRC, FNLLC, FNLLRC, FNLLW | 10.07 - | 4091 | |
| TGX | 26.360 FNLS, FNLLS, FNLRS, FNLLRS, FPLS, FPLRS, FVLS | 10.07 - | 4129 | 4129 |
| TGX | 26.360 FNLS, FNLLS, FNLRS, FNLLRS, FPLS, FPLRS, FVLS | 10.07 - | 4091 | |
| TGX | 26.360 FVHLS | 05.08 - | 4129 | 4129 |
| TGX | 26.360 FVHLS | 05.08 - | 4091 | |
| TGX | 26.400 FDC, FDC/M, FDLC, FDRC, FDRC/M, FDLRC | 07.08 - | 4129 | 4129 |
| TGX | 26.400 FDC, FDLC, FDRC, FDLRC | 07.08 - | 4091 | |
| TGX | 26.400 FDHLC | 10.07 - | 4129 | 4129 |
| TGX | 26.400 FDHLC | 10.07 - | 4091 | |
| TGX | 26.400 FDHLS | 10.07 - | 4129 | 4129 |
| TGX | 26.400 FDHLS | 10.07 - | 4091 | |
| TGX | 26.400 FDS, FDLS, FDLS/M, FDRS, FDLRS, FDLRS/M | 07.08 - | 4129 | 4129 |
| TGX | 26.400 FDS, FDLS, FDRS, FDLRS | 07.08 - | 4091 | |
| TGX | 26.400 FNHLC | 12.07 - | 4129 | 4129 |
| TGX | 26.400 FNHLC | 12.07 - | 4091 | |
| TGX | 26.400 FNHLS | 12.07 - | 4129 | 4129 |
| TGX | 26.400 FNHLS | 12.07 - | 4091 | |
| TGX | 26.400 FNLC, FNLRC, FNLLC, FNLLRC, FNLLW | 10.07 - | 4129 | 4129 |
| TGX | 26.400 FNLC, FNLRC, FNLLC, FNLLRC, FNLLW | 10.07 - | 4091 | |
| TGX | 26.400 FNLS, FNLLS, FNLRS, FNLLRS, FPLS, FPLRS, FVLS | 10.07 - | 4129 | 4129 |
| TGX | 26.400 FNLS, FNLLS, FNLRS, FNLLRS, FPLS, FPLRS, FVLS | 10.07 - | 4091 | |
| TGX | 26.400 FPHLS | 05.08 - | 4129 | 4129 |

| MAKE & MODEL | | YEAR | 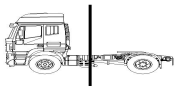 | |
|---|---|---|---|---|
| **MAN** | | | | |
| TGX | 26.400 FPHLS | 05.08 - | 4091 | |
| TGX | 26.400 FVHLS | 05.08 - | 4129 | 4129 |
| TGX | 26.400 FVHLS | 05.08 - | 4091 | |
| TGX | 26.440 FDC, FDC/M, FDLC, FDRC, FDRC/M, FDLRC | 07.08 - | 4129 | 4129 |
| TGX | 26.440 FDC, FDLC, FDRC, FDLRC | 07.08 - | 4091 | |
| TGX | 26.440 FDHLC | 09.07 - | 4129 | 4129 |
| TGX | 26.440 FDHLC | 09.07 - | 4091 | |
| TGX | 26.440 FDHLS | 10.07 - | 4129 | 4129 |
| TGX | 26.440 FDHLS | 10.07 - | 4091 | |
| TGX | 26.440 FDS, FDLS, FDRS, FDLRS | 07.08 - | 4091 | |
| TGX | 26.440 FDS, FDS/M, FDLS, FDRS, FDRS/M, FDLRS, FDRS/M | 07.08 - | 4129 | 4129 |
| TGX | 26.440 FNHLC | 12.07 - | 4129 | 4129 |
| TGX | 26.440 FNHLC | 12.07 - | 4091 | |
| TGX | 26.440 FNHLS | 12.07 - | 4129 | 4129 |
| TGX | 26.440 FNHLS | 12.07 - | 4091 | |
| TGX | 26.440 FNLC, FNLRC, FNLLC, FNLLRC, FNLLW | 10.07 - | 4129 | 4129 |
| TGX | 26.440 FNLC, FNLRC, FNLLC, FNLLRC, FNLLW | 10.07 - | 4091 | |
| TGX | 26.440 FNLS, FNLLS, FNLRS, FNLLRS, FPLS, FPLRS, FVLS | 10.07 - | 4129 | 4129 |
| TGX | 26.440 FNLS, FNLLS, FNLRS, FNLLRS, FPLS, FPLRS, FVLS | 10.07 - | 4091 | |
| TGX | 26.440 FPHLS | 05.08 - | 4129 | 4129 |
| TGX | 26.440 FPHLS | 05.08 - | 4091 | |
| TGX | 26.440 FPLRS | 07.08 - | 4129 | 4129 |
| TGX | 26.440 FPLRS | 07.08 - | 4091 | |
| TGX | 26.440 FVHLS | 05.08 - | 4129 | 4129 |
| TGX | 26.440 FVHLS | 05.08 - | 4091 | |
| TGX | 26.480 FDC, FDC/M, FDLC, FDRC, FDRC/M, FDLRC | 07.08 - | 4129 | 4129 |
| TGX | 26.480 FDC, FDLC, FDRC, FDLRC | 07.08 - | 4091 | |
| TGX | 26.480 FDHLC | 09.07 - | 4129 | 4129 |
| TGX | 26.480 FDHLC | 09.07 - | 4091 | |
| TGX | 26.480 FDHLS | 10.07 - | 4129 | 4129 |
| TGX | 26.480 FDHLS | 10.07 - | 4091 | |
| TGX | 26.480 FDS, FDLS, FDRS, FDLRS | 07.08 - | 4091 | |
| TGX | 26.480 FDS, FDS/M, FDLS, FDRS, FDRS/M, FDLRS, FDLRS/M | 07.08 - | 4129 | 4129 |
| TGX | 26.480 FNHLC | 12.07 - | 4129 | 4129 |
| TGX | 26.480 FNHLC | 12.07 - | 4091 | |
| TGX | 26.480 FNHLS | 12.07 - | 4129 | 4129 |
| TGX | 26.480 FNHLS | 12.07 - | 4091 | |
| TGX | 26.480 FNLC, FNLRC, FNLLC, FNLLRC, FNLLW | 10.07 - | 4129 | 4129 |
| TGX | 26.480 FNLC, FNLRC, FNLLC, FNLLRC, FNLLW | 10.07 - | 4091 | |
| TGX | 26.480 FNLS, FNLLS, FNLRS, FNLLRS, FPLS, FPLRS, FVLS | 10.07 - | 4129 | 4129 |
| TGX | 26.480 FNLS, FNLLS, FNLRS, FNLLRS, FPLS, FPLRS, FVLS | 10.07 - | 4091 | |
| TGX | 26.480 FPHLS | 05.08 - | 4129 | 4129 |
| TGX | 26.480 FPHLS | 05.08 - | 4091 | |
| TGX | 26.480 FVHLS | 05.08 - | 4129 | 4129 |
| TGX | 26.480 FVHLS | 05.08 - | 4091 | |
| TGX | 26.540 FDC, FDC/M, FDLC, FDRC, FDRC/M, FDLRC | 02.09 - | 4129 | 4129 |
| TGX | 26.540 FDC, FDLC, FDRC, FDLRC | 02.09 - | 4091 | |
| TGX | 26.540 FDS, FDLS, FDRS, FDLRS | 02.09 - | 4091 | |
| TGX | 26.540 FDS, FDS/M, FDLS, FDLS/M, FDRS, FDRS/M,FDLRS, FDLRS/M | 02.09 - | 4129 | 4129 |
| TGX | 26.540 FNLC, FNLRC, FNLLC, FNLLRC, FNLLW | 10.07 - | 4129 | 4129 |
| TGX | 26.540 FNLC, FNLRC, FNLLC, FNLLRC, FNLLW | 10.07 - | 4091 | |
| TGX | 26.540 FNLS, FNLRS, FNLLS, FPLS, FPLRS, FVLS | 10.07 - | 4129 | 4129 |
| TGX | 26.540 FNLS, FNLRS, FNLLS, FPLS, FPLRS, FVLS | 10.07 - | 4091 | |
| TGX | 28.360 FNLC | 10.07 - | 4129 | 4129 |
| TGX | 28.360 FNLC | 10.07 - | 4091 | |
| TGX | 28.360 FNLS | 10.07 - | 4129 | 4129 |
| TGX | 28.360 FNLS | 10.07 - | 4091 | |
| TGX | 28.400 FNLC | 10.07 - | 4129 | 4129 |
| TGX | 28.400 FNLC | 10.07 - | 4091 | |
| TGX | 28.400 FNLS | 10.07 - | 4129 | 4129 |
| TGX | 28.400 FNLS | 10.07 - | 4091 | |
| TGX | 28.440 FNLC | 10.07 - | 4129 | 4129 |
| TGX | 28.440 FNLC | 10.07 - | 4091 | |
| TGX | 28.440 FNLS | 10.07 - | 4129 | 4129 |
| TGX | 28.440 FNLS | 10.07 - | 4091 | |
| TGX | 28.480 FNLC | 10.07 - | 4129 | 4129 |
| TGX | 28.480 FNLC | 10.07 - | 4091 | |
| TGX | 28.480 FNLS | 10.07 - | 4129 | 4129 |
| TGX | 28.480 FNLS | 10.07 - | 4091 | |
| TGX | 28.540 FNLC | 10.07 - | 4129 | 4129 |
| TGX | 28.540 FNLC | 10.07 - | 4091 | |
| TGX | 28.540 FNLS | 02.09 - | 4129 | 4129 |
| TGX | 28.540 FNLS | 02.09 - | 4091 | |
| TGX | 33.360 FDC, FDC/M, FDLC | 10.07 - | 4091 | |
| TGX | 33.360 FDS, FDS/M, FDLS, FDLS/M | 10.07 - | 4129 | 4129 |

| MAKE & MODEL | | YEAR | | |
|---|---|---|---|---|
| **MAN** | | | | |
| TGX | 33.360 FDS, FDS/M, FDLS, FDLS/M | 10.07 - | 4091 | |
| TGX | 33.400 FDC, FDC/M, FDLC | 10.07 - | 4091 | |
| TGX | 33.400 FDC, FDC/M, FDLC, FDLRC | 10.07 - | 4129 | 4129 |
| TGX | 33.400 FDS, FDS/M, FDLS, FDLS/M | 10.07 - | 4129 | 4129 |
| TGX | 33.400 FDS, FDS/M, FDLS, FDLS/M | 10.07 - | 4091 | |
| TGX | 33.440 FDC, FDC/M, FDLC | 10.07 - | 4129 | 4129 |
| TGX | 33.440 FDC, FDC/M, FDLC | 10.07 - | 4091 | |
| TGX | 33.440 FDS, FDS/M, FDLS, FDLS/M | 10.07 - | 4129 | 4129 |
| TGX | 33.440 FDS, FDS/M, FDLS, FDLS/M | 10.07 - | 4091 | |
| TGX | 33.480 FDC, FDC/M, FDLC | 10.07 - | 4091 | |
| TGX | 33.480 FDC, FDC/M, FDLC, FDLRC | 10.07 - | 4129 | 4129 |
| TGX | 33.480 FDS, FDS/M, FDLS, FDLS/M | 10.07 - | 4129 | 4129 |
| TGX | 33.480 FDS, FDS/M, FDLS, FDLS/M | 10.07 - | 4091 | |
| TGX | 33.540 FDC, FDC/M, FDLC | 10.07 - | 4091 | |
| TGX | 33.540 FDC, FDC/M, FDLC, FDLRC | 10.07 - | 4129 | 4129 |
| TGX | 33.540 FDS, FDS/M, FDLS, FDLS/M | 10.07 - | 4129 | 4129 |
| TGX | 33.540 FDS, FDS/M, FDLS, FDLS/M | 10.07 - | 4091 | |
| TGX | 33.680 FDLC | 10.07 - | 4129 | 4129 |
| TGX | 33.680 FDLC | 10.07 - | 4091 | |
| TGX | 33.680 FDLS | 10.07 - | 4129 | 4129 |
| TGX | 33.680 FDLS | 10.07 - | 4091 | |
| TGX | 35.360 FDNLC | 06.08 - | 4129 | 4129 |
| TGX | 35.360 FDNLC | 06.08 - | 4091 | |
| TGX | 35.400 FDNLC | 06.08 - | 4129 | 4129 |
| TGX | 35.400 FDNLC | 06.08 - | 4091 | |
| TGX | 35.440 FDNLC | 06.08 - | 4129 | 4129 |
| TGX | 35.440 FDNLC | 06.08 - | 4091 | |
| TGX | 35.480 FDNLC | 06.08 - | 4129 | 4129 |
| TGX | 35.480 FDNLC | 06.08 - | 4091 | |
| TGX | 35.540 FDNLC | 06.08 - | 4129 | 4129 |
| TGX | 35.540 FDNLC | 06.08 - | 4091 | |
| TGX | 41.540 FVDS, FVDLS | 06.08 - | 4129 | 4129 |
| TGX | 41.540 FVDS, FVDLS | 06.08 - | 4091 | |
| TGX | 41.680 FVDS, FVDLS | 10.07 - | 4129 | 4129 |
| TGX | 41.680 FVDS, FVDLS | 10.07 - | 4091 | |
| ÜL | 12.0 ÜL 313 4x2 18 Ton | *96-* | 3497 | 3497 |
| ÜL | 12.0 ÜL 313 4x2 18 Ton | *96-* | 3497/1 | 3497/1 |
| ÜL | 12.0 ÜL 353 4x2 18 Ton | *97-* | 3497 | 3497 |
| | Llanta 19.5" M2000L, M2000 M (SB/SN6000 SB/SN6500) | *95-* | 3789 | 3789 |
| | Llanta 19.5" TGM (SB/SN6000 SB/SN6500) | *05-* | 3789 | 3789 |
| **MERCEDES-BENZ** | | | | |
| 400 SERIES | BUS 10-15 R | *91-* | 3497 | 3497 |
| 400 SERIES | BUS 10-15 R | *91-* | 3498 | 3498 |
| ACTROS | 2031 | 04.97 - 10.02 | 4091 | |
| ACTROS | 2040 | 09.96 - 10.02 | 4091 | |
| ACTROS | 3235 | 04.97 - 10.02 | 4091 | |
| ACTROS | 3240 | 04.97 - 10.02 | 4091 | |
| ACTROS | 3243 | 04.97 - 10.02 | 4091 | |
| ACTROS | 3331 | 04.97 - 10.02 | 4091 | |
| ACTROS | 3335 | 04.97 - 10.02 | 4091 | |
| ACTROS | 3340 | 04.97 - 10.02 | 4091 | |
| ACTROS | 3343 | 04.97 - 10.02 | 4091 | |
| ACTROS | 3348 | 04.97 - 10.02 | 4091 | |
| ACTROS | 3353 | 04.97 - 10.02 | 4091 | |
| ACTROS | 3357 | 04.97 - 10.02 | 4091 | |
| ACTROS | 11.9 1831 AK 4WD 18 Ton | *96-02* | 3664 | 3664 |
| ACTROS | 11.9 1831 K 4x2 18 Ton | *96-02* | 3664 | 3664 |
| ACTROS | 11.9 1831 S, 1831 LS 4x2 18 Ton | *96-02* | 3664 | 3664 |
| ACTROS | 11.9 1831, 1831 L 4x2 18 Ton | *96-02* | 3664 | 3664 |
| ACTROS | 11.9 1835 AK 4WD 18 Ton | *97-02* | 3664 | 3664 |
| ACTROS | 11.9 1835 K 4x2 18 Ton | *97-02* | 3664 | 3664 |
| ACTROS | 11.9 1835 S, 1835 LS 4x2 18 Ton | *96-02* | 3664 | 3664 |
| ACTROS | 11.9 1835, 1835 L 4x2 18 Ton | *96-02* | 3664 | 3664 |
| ACTROS | 11.9 1840 AK 4WD 18 Ton | *97-02* | 3664 | 3664 |
| ACTROS | 11.9 1840 K 4x2 18 Ton | *97-02* | 3664 | 3664 |
| ACTROS | 11.9 1840 S, 1840 LS 4x2 18 Ton | *96-02* | 3664 | 3664 |
| ACTROS | 11.9 1840, 1840 L 4x2 18 Ton | *96-02* | 3664 | 3664 |
| ACTROS | 11.9 1843 AK 4WD 18 Ton | *97-02* | 3664 | 3664 |
| ACTROS | 11.9 1843 K 4x2 18 Ton | *97-02* | 3664 | 3664 |
| ACTROS | 11.9 1843 S, 1843 LS 4x2 18 Ton | *96-02* | 3664 | 3664 |
| ACTROS | 11.9 1843 S, 1843 LS 4x2 18 Ton | *96-02* | 3664 | 3664 |
| ACTROS | 11.9 1843, 1843 L 4x2 18 Ton | *96-02* | 3664 | 3664 |
| ACTROS | 11.9 2031 4x2 20 Ton | *97-02* | 3664 | 3664 |
| ACTROS | 11.9 2031 A 4WD 20 Ton | *97-02* | 3664 | 3664 |
| ACTROS | 11.9 2031 AK 4WD 20 Ton | *96-02* | 3664 | 3664 |

| MAKE & MODEL | | YEAR | | |
|---|---|---|---|---|
| **MERCEDES-BENZ** | | | | |
| ACTROS | 11.9 2031 AS 4WD 20 Ton | *96-02* | 3664 | 3664 |
| ACTROS | 11.9 2031 K 4WD 20 Ton | *97-02* | 3664 | 3664 |
| ACTROS | 11.9 2031 S 4x2 20 Ton | *96-02* | 3664 | 3664 |
| ACTROS | 11.9 2035 A 4WD 20 Ton | *97-02* | 3664 | 3664 |
| ACTROS | 11.9 2040 4x2 20 Ton | *96-02* | 3664 | 3664 |
| ACTROS | 11.9 2040 AK 4WD 20 Ton | *96-02* | 3664 | 3664 |
| ACTROS | 11.9 2040 AS 4WD 20 Ton | *96-02* | 3664 | 3664 |
| ACTROS | 11.9 2040 S 4x2 20 Ton | *96-02* | 3664 | 3664 |
| ACTROS | 11.9 2531 LS 6x2/4 25 Ton | *96-02* | 3664 | 3664 |
| ACTROS | 11.9 2531, 2531 L 6x2/2/4 25 Ton | *96-02* | 3664 | 3664 |
| ACTROS | 11.9 2535 L 6x2/2/4 25 Ton | *96-02* | 3664 | 3664 |
| ACTROS | 11.9 2535 LS 6x2/4 25 Ton | *96-02* | 3664 | 3664 |
| ACTROS | 11.9 2540 LS 6x2/4 25 Ton | *96-02* | 3664 | 3664 |
| ACTROS | 11.9 2540, 2540 L 6x2 25 Ton | *96-02* | 3664 | 3664 |
| ACTROS | 11.9 2543 LS 6x2/4 25 Ton | *96-02* | 3664 | 3664 |
| ACTROS | 11.9 2543, 2543 L 6x2 25 Ton | *96-02* | 3664 | 3664 |
| ACTROS | 11.9 2631 B 6x4 26 Ton | *97-02* | 3664 | 3664 |
| ACTROS | 11.9 2631 K 6x4 26 Ton | *97-02* | 3664 | 3664 |
| ACTROS | 11.9 2631, 2631 L 6x4 26 Ton | *97-02* | 3664 | 3664 |
| ACTROS | 11.9 2635 B 6x4 26 Ton | *97-02* | 3664 | 3664 |
| ACTROS | 11.9 2635 K 6x4 26 Ton | *97-02* | 3664 | 3664 |
| ACTROS | 11.9 2635, 2635 L 6x4 26 Ton | *97-02* | 3664 | 3664 |
| ACTROS | 11.9 2640 B 6x4 26 Ton | *97-02* | 3664 | 3664 |
| ACTROS | 11.9 2640 K, 2640 LK 6x4 26 Ton | *97-02* | 3664 | 3664 |
| ACTROS | 11.9 2640 S, 2640 LS 6x4 26 Ton | *96-02* | 3664 | 3664 |
| ACTROS | 11.9 2640, 2640 L 6x4 26 Ton | *97-02* | 3664 | 3664 |
| ACTROS | 11.9 2643 B 6x4 26 Ton | *97-02* | 3664 | 3664 |
| ACTROS | 11.9 2643 K, 2643 LK 6x4 26 Ton | *97-02* | 3664 | 3664 |
| ACTROS | 11.9 2643 S, 2643 LS 6x4 26 Ton | *97-02* | 3664 | 3664 |
| ACTROS | 11.9 2643, 2643 L 6x4 26 Ton | *97-02* | 3664 | 3664 |
| ACTROS | 11.9 3331 6x4 33 Ton | *97-02* | 3664 | 3664 |
| ACTROS | 11.9 3331 A 6x6 33 Ton | *97-02* | 3664 | 3664 |
| ACTROS | 11.9 3331 AK 6x6 33 Ton | *97-02* | 3664 | 3664 |
| ACTROS | 11.9 3331 AS 6x6 33 Ton | *97-02* | 3664 | 3664 |
| ACTROS | 11.9 3331 B 6x4 33 Ton | *97-02* | 3664 | 3664 |
| ACTROS | 11.9 3331 K 6x4 33 Ton | *97-02* | 3664 | 3664 |
| ACTROS | 11.9 3331 S 6x4 33 Ton | *97-02* | 3664 | 3664 |
| ACTROS | 11.9 3335 6x4 33 Ton | *97-02* | 3664 | 3664 |
| ACTROS | 11.9 3335 B 6x4 33 Ton | *97-02* | 3664 | 3664 |
| ACTROS | 11.9 3335 K 6x4 33 Ton | *97-02* | 3664 | 3664 |
| ACTROS | 11.9 3335 S 6x4 33 Ton | *97-02* | 3664 | 3664 |
| ACTROS | 11.9 3340 6x4 33 Ton | *97-02* | 3664 | 3664 |
| ACTROS | 11.9 3340 A 6x6 33 Ton | *97-02* | 3664 | 3664 |
| ACTROS | 11.9 3340 AK 6x6 33 Ton | *97-02* | 3664 | 3664 |
| ACTROS | 11.9 3340 AS 6x6 33 Ton | *97-02* | 3664 | 3664 |
| ACTROS | 11.9 3340 B 6x4 33 Ton | *97-02* | 3664 | 3664 |
| ACTROS | 11.9 3340 K 6x4 33 Ton | *97-02* | 3664 | 3664 |
| ACTROS | 11.9 3340 S 6x4 33 Ton | *97-02* | 3664 | 3664 |
| ACTROS | 11.9 3343 6x4 33 Ton | *97-02* | 3664 | 3664 |
| ACTROS | 11.9 3343 AK 6x6 33 Ton | *97-02* | 3664 | 3664 |
| ACTROS | 11.9 3343 AS 6x6 33 Ton | *97-02* | 3664 | 3664 |
| ACTROS | 11.9 3343 K 6x4 33 Ton | *97-02* | 3664 | 3664 |
| ACTROS | 11.9 3346 6x4 33 Ton | *02-02* | 3664 | 3664 |
| ACTROS | 15.9 1848 AK 4WD 18 Ton | *97-02* | 3664 | 3664 |
| ACTROS | 15.9 1848 K 4x2 18 Ton | *97-02* | 3664 | 3664 |
| ACTROS | 15.9 1848 S, 1848 LS 4x2 18 Ton | *96-02* | 3664 | 3664 |
| ACTROS | 15.9 1848, 1848 L 4x2 18 Ton | *96-02* | 3664 | 3664 |
| ACTROS | 15.9 1853 S, 1853 LS 4x2 18 Ton | *96-02* | 3664 | 3664 |
| ACTROS | 15.9 1853, 1853 L 4x2 18 Ton | *96-02* | 3664 | 3664 |
| ACTROS | 15.9 1857 L 4x2 18 Ton | *97-02* | 3664 | 3664 |
| ACTROS | 15.9 1857 LS 4x2 18 Ton | *96-02* | 3664 | 3664 |
| ACTROS | 15.9 2053 S 4x2 20 Ton | *96-02* | 3664 | 3664 |
| ACTROS | 15.9 2548 LS 6x2/4 25 Ton | *96-02* | 3664 | 3664 |
| ACTROS | 15.9 2548, 2548 L 6x2 25 Ton | *96-02* | 3664 | 3664 |
| ACTROS | 15.9 2553 LS 6x2/4 25 Ton | *96-02* | 3664 | 3664 |
| ACTROS | 15.9 2553, 2553 L 6x2 25 Ton | *96-02* | 3664 | 3664 |
| ACTROS | 15.9 2557 L 6x2 25 Ton | *96-02* | 3664 | 3664 |
| ACTROS | 15.9 2648 K, 2648 LK 6x4 26 Ton | *97-02* | 3664 | 3664 |
| ACTROS | 15.9 2648 S, 2648 LS 6x4 26 Ton | *96-02* | 3664 | 3664 |
| ACTROS | 15.9 2648, 2648 L 6x4 26 Ton | *96-02* | 3664 | 3664 |
| ACTROS | 15.9 2653 K, 2653 LK 6x4 26 Ton | *97-02* | 3664 | 3664 |
| ACTROS | 15.9 2653 S, 2653 LS 6x4 26 Ton | *96-02* | 3664 | 3664 |
| ACTROS | 15.9 2653, 2653 L 6x4 26 Ton | *97-02* | 3664 | 3664 |
| ACTROS | 15.9 2657 K, 2657 LK 6x4 26 Ton | *97-02* | 3664 | 3664 |
| ACTROS | 15.9 2657 L 6x4 26 Ton | *97-02* | 3664 | 3664 |

| MAKE & MODEL | | YEAR | 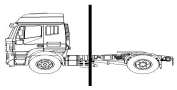 | |
|---|---|---|---|---|
| **MERCEDES-BENZ** | | | | |
| ACTROS | 15.9 2657 S 6x4 26 Ton | *97-02* | 3664 | 3664 |
| ACTROS | 15.9 3348 6x4 33 Ton | *97-02* | 3664 | 3664 |
| ACTROS | 15.9 3348 AK 6x6 33 Ton | *97-02* | 3664 | 3664 |
| ACTROS | 15.9 3348 K 6x4 33 Ton | *97-02* | 3664 | 3664 |
| ACTROS | 15.9 3348 S 6x4 33 Ton | *97-02* | 3664 | 3664 |
| ACTROS | 15.9 3353 6x4 33 Ton | *97-02* | 3664 | 3664 |
| ACTROS | 15.9 3353 AS 6x6 33 Ton | *97-02* | 3664 | 3664 |
| ACTROS | 15.9 3353 S 6x4 33 Ton | *97-02* | 3664 | 3664 |
| ACTROS | 15.9 3357 6x4 33 Ton | *97-02* | 3664 | 3664 |
| ACTROS | 15.9 3357 S 6x4 33 Ton | *97-02* | 3664 | 3664 |
| ACTROS | 1831 AK | *04/97-10/02* | 3664/1 | |
| ACTROS | 1831 K | 04.97 - 10.02 | 4091 | |
| ACTROS | 1831 S, 1831 LS | 04.96 - 10.02 | 4091 | |
| ACTROS | 1831, 1831 L | 04.96 - 10.02 | 4091 | |
| ACTROS | 1835 K | 04.97 - 10.02 | 4091 | |
| ACTROS | 1835 S, 1835 LS | 04.96 - 10.02 | 4091 | |
| ACTROS | 1835, 1835 L | 04.96 - 10.02 | 4091 | |
| ACTROS | 1840 K | 04.97 - 10.02 | 4091 | |
| ACTROS | 1840 S, 1840 LS | 04.96 - 10.02 | 4091 | |
| ACTROS | 1840, 1840 L | 04.96 - 10.02 | 4091 | |
| ACTROS | 1843 K | 04.97 - 10.02 | 4091 | |
| ACTROS | 1843 S, 1843 LS | 04.96 - 10.02 | 4091 | |
| ACTROS | 1843, 1843 L | 04.96 - 10.02 | 4091 | |
| ACTROS | 1846 S, 1846 LS | 10.98 - | 4091 | |
| ACTROS | 1848 K | 04.97 - 10.02 | 4091 | |
| ACTROS | 1848 S, 1848 LS | 04.96 - 10.02 | 4091 | |
| ACTROS | 1848, 1848 L | 04.96 - 10.02 | 4091 | |
| ACTROS | 1853 S, 1853 LS | 04.96 - 10.02 | 4091 | |
| ACTROS | 1853, 1853 L | 04.96 - 10.02 | 4091 | |
| ACTROS | 1857 L | 04.97 - 10.02 | 4091 | |
| ACTROS | 1857 LS | 04.97 - 10.02 | 4091 | |
| ACTROS | 2031 K | 04.97 - 10.02 | 4091 | |
| ACTROS | 2031 S | 04.96 - 10.02 | 4091 | |
| ACTROS | 2035 S | 04.96 - 10.02 | 4091 | |
| ACTROS | 2040 S | 04.96 - 10.02 | 4091 | |
| ACTROS | 2053 S | 04.96 - 10.02 | 4091 | |
| ACTROS | 2531 LS | 09.96 - 10.02 | 4091 | |
| ACTROS | 2531, 2531 L | 09.96 - 10.02 | 4091 | |
| ACTROS | 2535 L | 09.96 - 10.02 | 4091 | |
| ACTROS | 2535 LS | 09.96 - 10.02 | 4091 | |
| ACTROS | 2535 LS | 04.97 - 10.02 | 4091 | |
| ACTROS | 2540 LS | 09.96 - 10.02 | 4091 | |
| ACTROS | 2540, 2540 L | 09.96 - 10.02 | 4091 | |
| ACTROS | 2543 LS | 09.96 - 10.02 | 4091 | |
| ACTROS | 2543, 2543 L | 09.96 - 10.02 | 4091 | |
| ACTROS | 2546 LS | 10.97 - | 4091 | |
| ACTROS | 2548 LS | 09.96 - 10.02 | 4091 | |
| ACTROS | 2548, 2548 L | 09.96 - 10.02 | 4091 | |
| ACTROS | 2553 LS | 09.96 - 10.02 | 4091 | |
| ACTROS | 2553, 2553 L | 09.96 - 10.02 | 4091 | |
| ACTROS | 2557 L | 09.96 - 10.02 | 4091 | |
| ACTROS | 2631 B | 04.97 - 10.02 | 4091 | |
| ACTROS | 2631 K | 04.97 - 10.02 | 4091 | |
| ACTROS | 2631, 2631 L | 04.96 - 10.02 | 4091 | |
| ACTROS | 2635 B | 04.97 - 10.02 | 4091 | |
| ACTROS | 2635 K, 2635 LK | 04.97 - 10.02 | 4091 | |
| ACTROS | 2635, 2635 L | 04.96 - 10.02 | 4091 | |
| ACTROS | 2640 B | 04.97 - 10.02 | 4091 | |
| ACTROS | 2640 K, 2640 LK | 04.97 - 10.02 | 4091 | |
| ACTROS | 2640 S, 2640 LS | 09.96 - 10.02 | 4091 | |
| ACTROS | 2640, 2640 L | 04.96 - 10.02 | 4091 | |
| ACTROS | 2643 B | 04.97 - 10.02 | 4091 | |
| ACTROS | 2643 K, 2643 LK | 04.97 - 10.02 | 4091 | |
| ACTROS | 2643 S, 2643 LS | 04.97 - 10.02 | 4091 | |
| ACTROS | 2643, 2643 L | 04.96 - 10.02 | 4091 | |
| ACTROS | 2646 B | 10.97 - | 4091 | |
| ACTROS | 2646 S, 2646 LS | 10.97 - | 4091 | |
| ACTROS | 2648 K, 2648 LK | 10.97 - | 4091 | |
| ACTROS | 2648 K, 2648 LK | 04.97 - 10.02 | 4091 | |
| ACTROS | 2648 S, 2648 LS | 10.97 - | 4091 | |
| ACTROS | 2648 S, 2648 LS | 09.96 - 10.02 | 4091 | |
| ACTROS | 2648, 2648 L | 04.96 - 10.02 | 4091 | |
| ACTROS | 2650 S, 2650 LS | 10.97 - | 4091 | |
| ACTROS | 2653 K, 2653 LK | 04.97 - 10.02 | 4091 | |
| ACTROS | 2653 S, 2653 LS | 09.96 - 10.02 | 4091 | |

| MAKE & MODEL | | YEAR | | |
|---|---|---|---|---|
| **MERCEDES-BENZ** | | | | |
| ACTROS | 2653, 2653 L | 04.96 - 10.02 | 4091 | |
| ACTROS | 2657 K, 2657 LK | 04.97 - 10.02 | 4091 | |
| ACTROS | 2657 L | 04.97 - 10.02 | 4091 | |
| ACTROS | 2657 S, 2657 LS | 04.97 - 10.02 | 4091 | |
| ACTROS | 2665 LS | 10.02 - | 4091 | |
| ACTROS | 3231 B | 04.97 - 10.02 | 4091 | |
| ACTROS | 3235 B | 04.97 - 10.02 | 4091 | |
| ACTROS | 3240 B | 04.97 - 10.02 | 4091 | |
| ACTROS | 3243 B | 04.97 - 10.02 | 4091 | |
| ACTROS | 3246 B | 10.97 - | 4091 | |
| ACTROS | 3331 B | 04.97 - 10.02 | 4091 | |
| ACTROS | 3331 K | 04.97 - 10.02 | 4091 | |
| ACTROS | 3331 S | 04.97 - 10.02 | 4091 | |
| ACTROS | 3335 B | 04.97 - 10.02 | 4091 | |
| ACTROS | 3335 K | 04.97 - 10.02 | 4091 | |
| ACTROS | 3335 S | 04.97 - 10.02 | 4091 | |
| ACTROS | 3336 S | 10.97 - | 4091 | |
| ACTROS | 3340 B | 04.97 - 10.02 | 4091 | |
| ACTROS | 3340 B | 04.97 - 10.02 | 4091 | |
| ACTROS | 3340 K | 04.97 - 10.02 | 4091 | |
| ACTROS | 3340 S | 04.97 - 10.02 | 4091 | |
| ACTROS | 3341 S | 10.97 - | 4091 | |
| ACTROS | 3343 B | 04.97 - 10.02 | 4091 | |
| ACTROS | 3343 K | 04.97 - 10.02 | 4091 | |
| ACTROS | 3343 S | 04.97 - 10.02 | 4091 | |
| ACTROS | 3346 K | 10.97 - | 4091 | |
| ACTROS | 3346 S | 10.97 - | 4091 | |
| ACTROS | 3348 K | 04.97 - 10.02 | 4091 | |
| ACTROS | 3348 S | 04.97 - 10.02 | 4091 | |
| ACTROS | 3350 K | 10.97 - | 4091 | |
| ACTROS | 3350 S | 10.97 - | 4091 | |
| ACTROS | 3353 S | 04.97 - 10.02 | 4091 | |
| ACTROS | 3357 S | 04.97 - 10.02 | 4091 | |
| ACTROS | 4140 B | 04.97 - 10.02 | 4091 | |
| ACTROS | 4140 K | 04.97 - 10.02 | 4091 | |
| ACTROS | MP2 / MP3 - 1836 LS, LLS | 06.08 - | 4050 | 4051 |
| ACTROS | MP2 / MP3 - 1836 LS, LLS | 06.08 - | 4050 | 4051 |
| ACTROS | MP2 / MP3 - 1836 LS, LLS | 06.08 - | 4050/1 | 4051/1 |
| ACTROS | MP2 / MP3 - 1840 LS, LLS | 06.08 - | 4050 | 4051 |
| ACTROS | MP2 / MP3 - 1840 LS, LLS | 06.08 - | 4050/1 | 4051/1 |
| ACTROS | MP2 / MP3 - 1840 LS, LLS | 06.08 - | 4050 | 4051 |
| ACTROS | MP2 / MP3 - 1840 LS, LLS | 06.08 - | 4050/1 | 4051/1 |
| ACTROS | MP2 / MP3 - 1843 LS, LLS | 06.08 - | 4050 | 4051 |
| ACTROS | MP2 / MP3 - 1843 LS, LLS | 06.08 - | 4050/1 | 4051/1 |
| ACTROS | MP2 / MP3 - 1843 LS, LLS | 06.08 - | 4050 | 4051 |
| ACTROS | MP2 / MP3 - 1843 LS, LLS | 06.08 - | 4050/1 | 4051/1 |
| ACTROS | MP2 / MP3 - 1855 LS, LLS | 06.08 - | 4050 | 4051 |
| ACTROS | MP2 / MP3 - 1855 LS, LLS | 06.08 - | 4050/1 | 4051/1 |
| ACTROS | MP2 / MP3 - 1855 LS, LLS | 06.08 - | 4050 | 4051 |
| ACTROS | MP2 / MP3 - 1855 LS, LLS | 06.08 - | 4050/1 | 4051/1 |
| ACTROS | MP2 / MP3 - 1855, L, LL | 06.08 - | 4050 | 4051 |
| ACTROS | MP2 / MP3 - 1855, L, LL | 06.08 - | 4050/1 | 4051/1 |
| ACTROS | MP2 / MP3 - 1855, L, LL | 06.08 - | 4050 | 4051 |
| ACTROS | MP2 / MP3 - 1855, L, LL | 06.08 - | 4050/1 | 4051/1 |
| ACTROS | MP2 / MP3 - 1860 LS | 06.08 - | 4050 | 4051 |
| ACTROS | MP2 / MP3 - 1860 LS | 06.08 - | 4050/1 | 4051/1 |
| ACTROS | MP2 / MP3 - 1860 LS | 06.08 - | 4050 | 4051 |
| ACTROS | MP2 / MP3 - 1860 LS | 06.08 - | 4050/1 | 4051/1 |
| ACTROS | MP2 / MP3 - 2048 S | 06.08 - | 4050 | 4051 |
| ACTROS | MP2 / MP3 - 2048 S | 06.08 - | 4050/1 | 4051/1 |
| ACTROS | MP2 / MP3 - 2048 S | 06.08 - | 4050 | 4051 |
| ACTROS | MP2 / MP3 - 2048 S | 06.08 - | 4050/1 | 4051/1 |
| ACTROS | MP2 / MP3 - 2048 | 06.08 - | 4050 | 4051 |
| ACTROS | MP2 / MP3 - 2048 | 06.08 - | 4050/1 | 4051/1 |
| ACTROS | MP2 / MP3 - 2048 | 06.08 - | 4050 | 4051 |
| ACTROS | MP2 / MP3 - 2048 | 06.08 - | 4050/1 | 4051/1 |
| ACTROS | MP2 / MP3 - 2051 S | 06.08 - | 4050 | 4051 |
| ACTROS | MP2 / MP3 - 2051 S | 06.08 - | 4050/1 | 4051/1 |
| ACTROS | MP2 / MP3 - 2051 S | 06.08 - | 4050 | 4051 |
| ACTROS | MP2 / MP3 - 2051 S | 06.08 - | 4050/1 | 4051/1 |
| ACTROS | MP2 / MP3 - 2055 S | 06.08 - | 4050 | 4051 |
| ACTROS | MP2 / MP3 - 2055 S | 06.08 - | 4050/1 | 4051/1 |
| ACTROS | MP2 / MP3 - 2055 S | 06.08 - | 4050 | 4051 |
| ACTROS | MP2 / MP3 - 2055 S | 06.08 - | 4050/1 | 4051/1 |
| ACTROS | MP2 / MP3 - 2432 LS | 06.08 - | 4050 | 4051 |

| MAKE & MODEL | | YEAR | 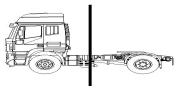 | |
|---|---|---|---|---|
| **MERCEDES-BENZ** | | | | |
| ACTROS | MP2 / MP3 - 2432 LS | 06.08 - | 4050/1 | 4051/1 |
| ACTROS | MP2 / MP3 - 2432 LS | 06.08 - | 4050 | 4051 |
| ACTROS | MP2 / MP3 - 2436 LS | 06.08 - | 4050 | 4051 |
| ACTROS | MP2 / MP3 - 2436 LS | 06.08 - | 4050/1 | 4051/1 |
| ACTROS | MP2 / MP3 - 2436 LS | 06.08 - | 4050 | 4051 |
| ACTROS | MP2 / MP3 - 2436 LS | 06.08 - | 4050/1 | 4051/1 |
| ACTROS | MP2 / MP3 - 2441 LS | 06.08 - | 4050 | 4051 |
| ACTROS | MP2 / MP3 - 2441 LS | 06.08 - | 4050/1 | 4051/1 |
| ACTROS | MP2 / MP3 - 2441 LS | 06.08 - | 4050 | 4051 |
| ACTROS | MP2 / MP3 - 2441 LS | 06.08 - | 4050/1 | 4051/1 |
| ACTROS | MP2 / MP3 - 2444 LS | 06.08 - | 4050 | 4051 |
| ACTROS | MP2 / MP3 - 2444 LS | 06.08 - | 4050/1 | 4051/1 |
| ACTROS | MP2 / MP3 - 2444 LS | 06.08 - | 4050 | 4051 |
| ACTROS | MP2 / MP3 - 2444 LS | 06.08 - | 4050/1 | 4051/1 |
| ACTROS | MP2 / MP3 - 2446 LS | 06.08 - | 4050 | 4051 |
| ACTROS | MP2 / MP3 - 2446 LS | 06.08 - | 4050/1 | 4051/1 |
| ACTROS | MP2 / MP3 - 2446 LS | 06.08 - | 4050 | 4051 |
| ACTROS | MP2 / MP3 - 2446 LS | 06.08 - | 4050/1 | 4051/1 |
| ACTROS | MP2 / MP3 - 2448 LS | 06.08 - | 4050 | 4051 |
| ACTROS | MP2 / MP3 - 2448 LS | 06.08 - | 4050/1 | 4051/1 |
| ACTROS | MP2 / MP3 - 2448 LS | 06.08 - | 4050 | 4051 |
| ACTROS | MP2 / MP3 - 2448 LS | 06.08 - | 4050/1 | 4051/1 |
| ACTROS | MP2 / MP3 - 2451 LS | 06.08 - | 4050 | 4051 |
| ACTROS | MP2 / MP3 - 2451 LS | 06.08 - | 4050/1 | 4051/1 |
| ACTROS | MP2 / MP3 - 2451 LS | 06.08 - | 4050 | 4051 |
| ACTROS | MP2 / MP3 - 2451 LS | 06.08 - | 4050/1 | 4051/1 |
| ACTROS | MP2 / MP3 - 2455 LS | 06.08 - | 4050 | 4051 |
| ACTROS | MP2 / MP3 - 2455 LS | 06.08 - | 4050/1 | 4051/1 |
| ACTROS | MP2 / MP3 - 2455 LS | 06.08 - | 4050 | 4051 |
| ACTROS | MP2 / MP3 - 2455 LS | 06.08 - | 4050/1 | 4051/1 |
| ACTROS | MP2 / MP3 - 2460 LS | 06.08 - | 4050 | 4051 |
| ACTROS | MP2 / MP3 - 2460 LS | 06.08 - | 4050/1 | 4051/1 |
| ACTROS | MP2 / MP3 - 2460 LS | 06.08 - | 4050 | 4051 |
| ACTROS | MP2 / MP3 - 2460 LS | 06.08 - | 4050/1 | 4051/1 |
| ACTROS | MP2 / MP3 - 2532 LS | 06.08 - | 4050 | 4051 |
| ACTROS | MP2 / MP3 - 2532 LS | 06.08 - | 4050/1 | 4051/1 |
| ACTROS | MP2 / MP3 - 2532 LS | 06.08 - | 4050 | 4051 |
| ACTROS | MP2 / MP3 - 2532 LS | 06.08 - | 4050/1 | 4051/1 |
| ACTROS | MP2 / MP3 - 2536 L, LL | 06.08 - | 4050 | 4051 |
| ACTROS | MP2 / MP3 - 2536 L, LL | 06.08 - | 4050/1 | 4051/1 |
| ACTROS | MP2 / MP3 - 2536 L, LL | 06.08 - | 4050 | 4051 |
| ACTROS | MP2 / MP3 - 2536 L, LL | 06.08 - | 4050/1 | 4051/1 |
| ACTROS | MP2 / MP3 - 2536 LS | 06.08 - | 4050 | 4051 |
| ACTROS | MP2 / MP3 - 2536 LS | 06.08 - | 4050/1 | 4051/1 |
| ACTROS | MP2 / MP3 - 2536 LS | 06.08 - | 4050 | 4051 |
| ACTROS | MP2 / MP3 - 2536 LS | 06.08 - | 4050/1 | 4051/1 |
| ACTROS | MP2 / MP3 - 2540 L, LL | 06.08 - | 4050 | 4051 |
| ACTROS | MP2 / MP3 - 2540 L, LL | 06.08 - | 4050/1 | 4051/1 |
| ACTROS | MP2 / MP3 - 2540 L, LL | 06.08 - | 4050 | 4051 |
| ACTROS | MP2 / MP3 - 2540 L, LL | 06.08 - | 4050/1 | 4051/1 |
| ACTROS | MP2 / MP3 - 2541 LS | 06.08 - | 4050 | 4051 |
| ACTROS | MP2 / MP3 - 2541 LS | 06.08 - | 4050/1 | 4051/1 |
| ACTROS | MP2 / MP3 - 2541 LS | 06.08 - | 4050 | 4051 |
| ACTROS | MP2 / MP3 - 2541 LS | 06.08 - | 4050/1 | 4051/1 |
| ACTROS | MP2 / MP3 - 2543 L, LL | 06.08 - | 4050 | 4051 |
| ACTROS | MP2 / MP3 - 2543 L, LL | 06.08 - | 4050/1 | 4051/1 |
| ACTROS | MP2 / MP3 - 2543 L, LL | 06.08 - | 4050 | 4051 |
| ACTROS | MP2 / MP3 - 2543 L, LL | 06.08 - | 4050/1 | 4051/1 |
| ACTROS | MP2 / MP3 - 2544 LS | 06.08 - | 4050 | 4051 |
| ACTROS | MP2 / MP3 - 2544 LS | 06.08 - | 4050/1 | 4051/1 |
| ACTROS | MP2 / MP3 - 2544 LS | 06.08 - | 4050 | 4051 |
| ACTROS | MP2 / MP3 - 2544 LS | 06.08 - | 4050/1 | 4051/1 |
| ACTROS | MP2 / MP3 - 2546 LS | 06.08 - | 4050 | 4051 |
| ACTROS | MP2 / MP3 - 2546 LS | 06.08 - | 4050/1 | 4051/1 |
| ACTROS | MP2 / MP3 - 2546 LS | 06.08 - | 4050 | 4051 |
| ACTROS | MP2 / MP3 - 2546 LS | 06.08 - | 4050/1 | 4051/1 |
| ACTROS | MP2 / MP3 - 2548 LS | 06.08 - | 4050 | 4051 |
| ACTROS | MP2 / MP3 - 2548 LS | 06.08 - | 4050/1 | 4051/1 |
| ACTROS | MP2 / MP3 - 2548 LS | 06.08 - | 4050 | 4051 |
| ACTROS | MP2 / MP3 - 2548 LS | 06.08 - | 4050/1 | 4051/1 |
| ACTROS | MP2 / MP3 - 2631 LS | 10.09 - | 4050 | 4051 |
| ACTROS | MP2 / MP3 - 2631 LS | 10.09 - | 4050/1 | 4051/1 |
| ACTROS | MP2 / MP3 - 2631 LS | 10.09 - | 4050 | 4051 |
| ACTROS | MP2 / MP3 - 2631 LS | 10.09 - | 4050/1 | 4051/1 |
| ACTROS | MP2 / MP3 - 2632 LS | 10.09 - | 4050 | 4051 |

| MAKE & MODEL | | YEAR | 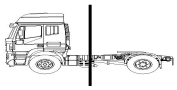 | |
|---|---|---|---|---|
| **MERCEDES-BENZ** | | | | |
| ACTROS | MP2 / MP3 - 2632 LS | 10.09 - | 4050/1 | 4051/1 |
| ACTROS | MP2 / MP3 - 2632 LS | 10.09 - | 4050 | 4051 |
| ACTROS | MP2 / MP3 - 2632 LS | 10.09 - | 4050/1 | 4051/1 |
| ACTROS | MP2 / MP3 - 2635 LS | 10.09 - | 4050 | 4051 |
| ACTROS | MP2 / MP3 - 2635 LS | 10.09 - | 4050/1 | 4051/1 |
| ACTROS | MP2 / MP3 - 2635 LS | 10.09 - | 4050 | 4051 |
| ACTROS | MP2 / MP3 - 2635 LS | 10.09 - | 4050/1 | 4051/1 |
| ACTROS | MP2 / MP3 - 2636 LS | 10.09 - | 4050 | 4051 |
| ACTROS | MP2 / MP3 - 2636 LS | 10.09 - | 4050/1 | 4051/1 |
| ACTROS | MP2 / MP3 - 2636 LS | 10.09 - | 4050 | 4051 |
| ACTROS | MP2 / MP3 - 2636 LS | 10.09 - | 4050/1 | 4051/1 |
| ACTROS | MP2 / MP3 - 2640 LS | 10.09 - | 4050 | 4051 |
| ACTROS | MP2 / MP3 - 2640 LS | 10.09 - | 4050 | 4051 |
| ACTROS | MP2 / MP3 - 2640 LS | 10.09 - | 4050/1 | 4051/1 |
| ACTROS | MP2 / MP3 - 2641 LS | 10.09 - | 4050 | 4051 |
| ACTROS | MP2 / MP3 - 2641 LS | 10.09 - | 4050/1 | 4051/1 |
| ACTROS | MP2 / MP3 - 2641 LS | 10.09 - | 4050 | 4051 |
| ACTROS | MP2 / MP3 - 2641 LS | 10.09 - | 4050/1 | 4051/1 |
| ACTROS | MP2 / MP3 - 2643 LS | 10.09 - | 4050 | 4051 |
| ACTROS | MP2 / MP3 - 2643 LS | 10.09 - | 4050/1 | 4051/1 |
| ACTROS | MP2 / MP3 - 2643 LS | 10.09 - | 4050 | 4051 |
| ACTROS | MP2 / MP3 - 2643 LS | 10.09 - | 4050/1 | 4051/1 |
| ACTROS | MP2 / MP3 - 2646 LS | 10.09 - | 4050 | 4051 |
| ACTROS | MP2 / MP3 - 2646 LS | 10.09 - | 4050/1 | 4051/1 |
| ACTROS | MP2 / MP3 - 2646 LS | 10.09 - | 4050 | 4051 |
| ACTROS | MP2 / MP3 - 2646 LS | 10.09 - | 4050/1 | 4051/1 |
| ACTROS | MP2 / MP3 - 2648 LS | 10.09 - | 4050 | 4051 |
| ACTROS | MP2 / MP3 - 2648 LS | 10.09 - | 4050/1 | 4051/1 |
| ACTROS | MP2 / MP3 - 2648 LS | 10.09 - | 4050 | 4051 |
| ACTROS | MP2 / MP3 - 2648 LS | 10.09 - | 4050/1 | 4051/1 |
| ACTROS | MP2 / MP3 - 2651 LS | 10.09 - | 4050 | 4051 |
| ACTROS | MP2 / MP3 - 2651 LS | 10.09 - | 4050/1 | 4051/1 |
| ACTROS | MP2 / MP3 - 2651 LS | 10.09 - | 4050 | 4051 |
| ACTROS | MP2 / MP3 - 2651 LS | 10.09 - | 4050/1 | 4051/1 |
| ACTROS | MP2 / MP3 - 2653 LS | 10.09 - | 4050 | 4051 |
| ACTROS | MP2 / MP3 - 2653 LS | 10.09 - | 4050/1 | 4051/1 |
| ACTROS | MP2 / MP3 - 2653 LS | 10.09 - | 4050 | 4051 |
| ACTROS | MP2 / MP3 - 2653 LS | 10.09 - | 4050/1 | 4051/1 |
| ACTROS | MP2 / MP3 - 2655 LS | 10.09 - | 4050 | 4051 |
| ACTROS | MP2 / MP3 - 2655 LS | 10.09 - | 4050/1 | 4051/1 |
| ACTROS | MP2 / MP3 - 2655 LS | 10.09 - | 4050 | 4051 |
| ACTROS | MP2 / MP3 - 2655 LS | 10.09 - | 4050/1 | 4051/1 |
| ACTROS | MP2 / MP3 - 2660 S, LS | 06.08 - | 4050 | 4051 |
| ACTROS | MP2 / MP3 - 2660 S, LS | 06.08 - | 4050/1 | 4051/1 |
| ACTROS | MP2 / MP3 - 2660 S, LS | 06.08 - | 4050 | 4051 |
| ACTROS | MP2 / MP3 - 2660 S, LS | 06.08 - | 4050/1 | 4051/1 |
| ACTROS | MP2 / MP3 - 3236 L | 06.08 - | 4050 | 4051 |
| ACTROS | MP2 / MP3 - 3236 L | 06.08 - | 4050/1 | 4051/1 |
| ACTROS | MP2 / MP3 - 3236 L | 06.08 - | 4050 | 4051 |
| ACTROS | MP2 / MP3 - 3236 L | 06.08 - | 4050/1 | 4051/1 |
| ACTROS | MP2 / MP3 - 3241 L | 06.08 - | 4050 | 4051 |
| ACTROS | MP2 / MP3 - 3241 L | 06.08 - | 4050 | 4051 |
| ACTROS | MP2 / MP3 - 3241 L | 06.08 - | 4050/1 | 4051/1 |
| ACTROS | MP2 / MP3 - 3241 L | 06.08 - | 4050/1 | 4051/1 |
| ACTROS | MP2 / MP3 - 3241 L | 06.08 - | 4050 | 4051 |
| ACTROS | MP2 / MP3 - 3241 L | 06.08 - | 4050 | 4051 |
| ACTROS | MP2 / MP3 - 3241 L | 06.08 - | 4050/1 | 4051/1 |
| ACTROS | MP2 / MP3 - 3241 L | 06.08 - | 4050/1 | 4051/1 |
| ACTROS | MP2 / MP3 - 3255 L | 02.09 - | 4050 | 4051 |
| ACTROS | MP2 / MP3 - 3255 L | 02.09 - | 4050/1 | 4051/1 |
| ACTROS | MP2 / MP3 - 3255 L | 02.09 - | 4050 | 4051 |
| ACTROS | MP2 / MP3 - 3255 L | 02.09 - | 4050/1 | 4051/1 |
| ACTROS | MP2 / MP3 - 3260 L | 02.09 - | 4050 | 4051 |
| ACTROS | MP2 / MP3 - 3260 L | 02.09 - | 4050/1 | 4051/1 |
| ACTROS | MP2 / MP3 - 3260 L | 02.09 - | 4050 | 4051 |
| ACTROS | MP2 / MP3 - 3260 L | 02.09 - | 4050/1 | 4051/1 |
| ACTROS | MP2 / MP3 - 3350 S | 06.09 - | 4050 | 4051 |
| ACTROS | MP2 / MP3 - 3350 S | 06.09 - | 4050/1 | 4051/1 |
| ACTROS | MP2 / MP3 - 3350 S | 06.09 - | 4050 | 4051 |
| ACTROS | MP2 / MP3 - 3350 S | 06.09 - | 4050/1 | 4051/1 |
| ACTROS | MP2 / MP3 - 3550 S | 06.09 - | 4050 | 4051 |
| ACTROS | MP2 / MP3 - 3550 S | 06.09 - | 4050/1 | 4051/1 |
| ACTROS | MP2 / MP3 - 3550 S | 06.09 - | 4050 | 4051 |
| ACTROS | MP2 / MP3 - 3550 S | 06.09 - | 4050/1 | 4051/1 |
| ACTROS | MP2 / MP3 - 4036 K | 06.09 - | 4050 | 4051 |

| MAKE & MODEL | | YEAR | | |
|---|---|---|---|---|
| **MERCEDES-BENZ** | | | | |
| ACTROS | MP2 / MP3 - 4036 K | 06.09 - | 4050/1 | 4051/1 |
| ACTROS | MP2 / MP3 - 4036 K | 06.09 - | 4050 | 4051 |
| ACTROS | MP2 / MP3 - 4036 K | 06.09 - | 4050/1 | 4051/1 |
| ACTROS | MP2 / MP3 - 4141 B | 06.08 - | 4050 | 4051 |
| ACTROS | MP2 / MP3 - 4141 B | 06.08 - | 4050/1 | 4051/1 |
| ACTROS | MP2 / MP3 - 4141 B | 06.08 - | 4050 | 4051 |
| ACTROS | MP2 / MP3 - 4141 | 06.08 - | 4050 | 4051 |
| ACTROS | MP2 / MP3 - 4141 | 06.08 - | 4050/1 | 4051/1 |
| ACTROS | MP2 / MP3 - 4141 | 06.08 - | 4050 | 4051 |
| ACTROS | MP2 / MP3 - 4141 | 06.08 - | 4050/1 | 4051/1 |
| ACTROS | MP2 / MP3 - 4144 B | 06.08 - | 4050 | 4051 |
| ACTROS | MP2 / MP3 - 4144 B | 06.08 - | 4050/1 | 4051/1 |
| ACTROS | MP2 / MP3 - 4144 B | 06.08 - | 4050 | 4051 |
| ACTROS | MP2 / MP3 - 4144 B | 06.08 - | 4050/1 | 4051/1 |
| ACTROS | MP2 / MP3 - 4146 B | 06.08 - | 4050 | 4051 |
| ACTROS | MP2 / MP3 - 4146 B | 06.08 - | 4050/1 | 4051/1 |
| ACTROS | MP2 / MP3 - 4146 B | 06.08 - | 4050 | 4051 |
| ACTROS | MP2 / MP3 - 4146 B | 06.08 - | 4050/1 | 4051/1 |
| ACTROS | MP2 / MP3 - 4148 B | 06.08 - | 4050 | 4051 |
| ACTROS | MP2 / MP3 - 4148 B | 06.08 - | 4050/1 | 4051/1 |
| ACTROS | MP2 / MP3 - 4148 B | 06.08 - | 4050 | 4051 |
| ACTROS | MP2 / MP3 - 4148 B | 06.08 - | 4050/1 | 4051/1 |
| ACTROS | MP2 / MP3 - 4165 S | 08.08 - | 4050 | 4051 |
| ACTROS | MP2 / MP3 - 4165 S | 08.08 - | 4050/1 | 4051/1 |
| ACTROS | MP2 / MP3 - 4165 S | 08.08 - | 4050 | 4051 |
| ACTROS | MP2 / MP3 - 4165 S | 08.08 - | 4050/1 | 4051/1 |
| ACTROS | MP2 / MP3 - 5041 B | 06.08 - | 4050 | 4051 |
| ACTROS | MP2 / MP3 - 5041 B | 06.08 - | 4050/1 | 4051/1 |
| ACTROS | MP2 / MP3 - 5041 B | 06.08 - | 4050 | 4051 |
| ACTROS | MP2 / MP3 - 5041 B | 06.08 - | 4050/1 | 4051/1 |
| ACTROS | MP2 / MP3 - 5044 B | 06.08 - | 4050 | 4051 |
| ACTROS | MP2 / MP3 - 5044 B | 06.08 - | 4050/1 | 4051/1 |
| ACTROS | MP2 / MP3 - 5044 B | 06.08 - | 4050 | 4051 |
| ACTROS | MP2 / MP3 - 5044 B | 06.08 - | 4050/1 | 4051/1 |
| ACTROS | MP2 / MP3 - 5046 B | 06.08 - | 4050 | 4051 |
| ACTROS | MP2 / MP3 - 5046 B | 06.08 - | 4050/1 | 4051/1 |
| ACTROS | MP2 / MP3 - 5046 B | 06.08 - | 4050 | 4051 |
| ACTROS | MP2 / MP3 - 5046 B | 06.08 - | 4050/1 | 4051/1 |
| ACTROS | MP4 1842 L | 07.11 - | 4050 | 4051 |
| ACTROS | MP4 1842 L | 07.11 - | 4050/1 | 4051/1 |
| ACTROS | MP4 1842 L | 07.11 - | 4050 | 4051 |
| ACTROS | MP4 1842 L | 07.11 - | 4050/1 | 4051/1 |
| ACTROS | MP4 - 1842 LS | 10.10 - | 4050 | 4051 |
| ACTROS | MP4 - 1842 LS | 10.10 - | 4050/1 | 4051/1 |
| ACTROS | MP4 - 1842 LS | 10.10 - | 4050 | 4051 |
| ACTROS | MP4 - 1842 LS | 10.10 - | 4050/1 | 4051/1 |
| ACTROS | MP4 - 1845 L | 07.11 - | 4050 | 4051 |
| ACTROS | MP4 - 1845 L | 07.11 - | 4050/1 | 4051/1 |
| ACTROS | MP4 - 1845 L | 07.11 - | 4050 | 4051 |
| ACTROS | MP4 - 1845 L | 07.11 - | 4050/1 | 4051/1 |
| ACTROS | MP4 - 1845 LS | 07.11 - | 4050 | 4051 |
| ACTROS | MP4 - 1845 LS | 07.11 - | 4050/1 | 4051/1 |
| ACTROS | MP4 - 1845 LS | 07.11 - | 4050 | 4051 |
| ACTROS | MP4 - 1845 LS | 07.11 - | 4050/1 | 4051/1 |
| ACTROS | MP4 - 1848 L | 07.11 - | 4050 | 4051 |
| ACTROS | MP4 - 1848 L | 07.11 - | 4050/1 | 4051/1 |
| ACTROS | MP4 - 1848 L | 07.11 - | 4050 | 4051 |
| ACTROS | MP4 - 1848 L | 07.11 - | 4050/1 | 4051/1 |
| ACTROS | MP4 - 1848 LS | 07.11 - | 4050 | 4051 |
| ACTROS | MP4 - 1848 LS | 07.11 - | 4050/1 | 4051/1 |
| ACTROS | MP4 - 1848 LS | 07.11 - | 4050 | 4051 |
| ACTROS | MP4 - 1848 LS | 07.11 - | 4050/1 | 4051/1 |
| ACTROS | MP4 - 1851 L | 07.11 - | 4050 | 4051 |
| ACTROS | MP4 - 1851 L | 07.11 - | 4050/1 | 4051/1 |
| ACTROS | MP4 - 1851 L | 07.11 - | 4050 | 4051 |
| ACTROS | MP4 - 1851 L | 07.11 - | 4050/1 | 4051/1 |
| ACTROS | MP4 - 1851 LS | 07.11 - | 4050 | 4051 |
| ACTROS | MP4 - 1851 LS | 07.11 - | 4050/1 | 4051/1 |
| ACTROS | MP4 - 1851 LS | 07.11 - | 4050 | 4051 |
| ACTROS | MP4 - 1851 LS | 07.11 - | 4050/1 | 4051/1 |
| ACTROS | MP4 - 2542 L | 07.11 - | 4050 | 4051 |
| ACTROS | MP4 - 2542 L | 07.11 - | 4050/1 | 4051/1 |
| ACTROS | MP4 - 2542 L | 07.11 - | 4050 | 4051 |
| ACTROS | MP4 - 2542 L | 07.11 - | 4050/1 | 4051/1 |
| ACTROS | MP4 - 2545 L | 07.11 - | 4050 | 4051 |

| MAKE & MODEL | | YEAR | | |
|---|---|---|---|---|
| **MERCEDES-BENZ** | | | | |
| ACTROS | MP4 - 2545 L | 07.11 - | 4050/1 | 4051/1 |
| ACTROS | MP4 - 2545 L | 07.11 - | 4050 | 4051 |
| ACTROS | MP4 - 2545 L | 07.11 - | 4050/1 | 4051/1 |
| ACTROS | MP4 - 2548 L | 07.11 - | 4050 | 4051 |
| ACTROS | MP4 - 2548 L | 07.11 - | 4050/1 | 4051/1 |
| ACTROS | MP4 - 2548 L | 07.11 - | 4050 | 4051 |
| ACTROS | MP4 - 2548 L | 07.11 - | 4050/1 | 4051/1 |
| ACTROS | MP4 - 2651 L | 07.11 - | 4050 | 4051 |
| ACTROS | MP4 - 2651 L | 07.11 - | 4050/1 | 4051/1 |
| ACTROS | MP4 - 2651 L | 07.11 - | 4050 | 4051 |
| ACTROS | MP4 - 2651 L | 07.11 - | 4050/1 | 4051/1 |
| ACTROS | | | 3664/1 | |
| ACTROS MP2 | 2032 | 04.03 - | 4091 | |
| ACTROS MP2 | 2036 | 04.03 - | 4091 | |
| ACTROS MP2 | 2040 | 10.02 - | 4091 | |
| ACTROS MP2 | 2041 | 04.03 - | 4091 | |
| ACTROS MP2 | 2044 | 04.03 - | 4091 | |
| ACTROS MP2 | 2046 | 04.03 - | 4091 | |
| ACTROS MP2 | 2048 | 06.08 - | 4091 | |
| ACTROS MP2 | 3240 | 04.03 - | 4091 | |
| ACTROS MP2 | 3241 | 04.03 - | 4091 | |
| ACTROS MP2 | 3243 | 10.02 - | 4091 | |
| ACTROS MP2 | 3244 | 04.03 - | 4091 | |
| ACTROS MP2 | 3246 | 04.03 - | 4091 | |
| ACTROS MP2 | 3250 | 04.03 - | 4091 | |
| ACTROS MP2 | 3336 | 04.03 - | 4091 | |
| ACTROS MP2 | 3341 | 04.03 - | 4091 | |
| ACTROS MP2 | 3344 | 04.03 - | 4091 | |
| ACTROS MP2 | 3346 | 04.03 - | 4091 | |
| ACTROS MP2 | 3348 | 04.03 - | 4091 | |
| ACTROS MP2 | 3358 | 04.03 - | 4091 | |
| ACTROS MP2 | 3360 | 04.03 - | 4091 | |
| ACTROS MP2 | 11.9 1832 AK 4x4 18 Ton | *03-* | 3664 | 3664 |
| ACTROS MP2 | 11.9 1832 K 4x2 18 Ton | *03-* | 3664 | 3664 |
| ACTROS MP2 | 11.9 1832 L, LL 4x2 18 Ton | *03-* | 3664 | 3664 |
| ACTROS MP2 | 11.9 1832 LS, LLS 4x2 18 Ton | *03-* | 3664 | 3664 |
| ACTROS MP2 | 11.9 1836 AK 4x4 18 Ton | *03-* | 3664 | 3664 |
| ACTROS MP2 | 11.9 1836 K 4x2 18 Ton | *03-* | 3664 | 3664 |
| ACTROS MP2 | 11.9 1836 L, LL 4x2 18 Ton | *03-* | 3664 | 3664 |
| ACTROS MP2 | 11.9 1836 LS, LLS 4x2 18 Ton | *03-* | 3664 | 3664 |
| ACTROS MP2 | 11.9 1841 AK 4x4 18 Ton | *03-* | 3664 | 3664 |
| ACTROS MP2 | 11.9 1841 K 4x2 18 Ton | *03-* | 3664 | 3664 |
| ACTROS MP2 | 11.9 1841 L, LL 4x2 18 Ton | *03-* | 3664 | 3664 |
| ACTROS MP2 | 11.9 1841 LS, LLS 4x2 18 Ton | *03-* | 3664 | 3664 |
| ACTROS MP2 | 11.9 1844 AK 4x4 18 Ton | *03-* | 3664 | 3664 |
| ACTROS MP2 | 11.9 1844 K 4x2 18 Ton | *03-* | 3664 | 3664 |
| ACTROS MP2 | 11.9 1844 L, LL 4x2 18 Ton | *03-* | 3664 | 3664 |
| ACTROS MP2 | 11.9 1844 LS, LLS 4x2 18 Ton | *03-* | 3664 | 3664 |
| ACTROS MP2 | 11.9 1846 AK 4x4 18 Ton | *03-* | 3664 | 3664 |
| ACTROS MP2 | 11.9 1846 K 4x2 18 Ton | *03-* | 3664 | 3664 |
| ACTROS MP2 | 11.9 1846 L 4x2 18 Ton | *03-* | 3664 | 3664 |
| ACTROS MP2 | 11.9 1846 LS 4x2 18 Ton | *03-* | 3664 | 3664 |
| ACTROS MP2 | 11.9 2032 AS 4x4 20 Ton | *03-* | 3664 | 3664 |
| ACTROS MP2 | 11.9 2036 AS 4x4 20 Ton | *03-* | 3664 | 3664 |
| ACTROS MP2 | 11.9 2041 AS 4x4 20 Ton | *03-* | 3664 | 3664 |
| ACTROS MP2 | 11.9 2044 AS 4x4 20 Ton | *03-* | 3664 | 3664 |
| ACTROS MP2 | 11.9 2632 K, LK 6x4 26 Ton | *03-* | 3664 | 3664 |
| ACTROS MP2 | 11.9 2632 L 6x4 26 Ton | *03-* | 3664 | 3664 |
| ACTROS MP2 | 11.9 2632 LS 6x4 26 Ton | *03-* | 3664 | 3664 |
| ACTROS MP2 | 11.9 2636 K 6x4 26 Ton | *03-* | 3664 | 3664 |
| ACTROS MP2 | 11.9 2636 L 6x4 26 Ton | *03-* | 3664 | 3664 |
| ACTROS MP2 | 11.9 2636 LS 6x4 26 Ton | *03-* | 3664 | 3664 |
| ACTROS MP2 | 11.9 2641 K 6x4 26 Ton | *03-* | 3664 | 3664 |
| ACTROS MP2 | 11.9 2641 L 6x4 26 Ton | *03-* | 3664 | 3664 |
| ACTROS MP2 | 11.9 2641 S, LS 6x4 26 Ton | *03-* | 3664 | 3664 |
| ACTROS MP2 | 11.9 2644 K 6x4 26 Ton | *03-* | 3664 | 3664 |
| ACTROS MP2 | 11.9 2644 L 6x4 26 Ton | *03-* | 3664 | 3664 |
| ACTROS MP2 | 11.9 2644 S, LS 6x4 26 Ton | *03-* | 3664 | 3664 |
| ACTROS MP2 | 11.9 2646 K 6x4 26 Ton | *03-* | 3664 | 3664 |
| ACTROS MP2 | 11.9 2646 L 6x4 26 Ton | *03-* | 3664 | 3664 |
| ACTROS MP2 | 11.9 2646 S, LS 6x4 26 Ton | *03-* | 3664 | 3664 |
| ACTROS MP2 | 15.9 1850 AK 4x4 18 Ton | *03-* | 3664 | 3664 |
| ACTROS MP2 | 15.9 1850 K 4x2 18 Ton | *03-* | 3664 | 3664 |
| ACTROS MP2 | 15.9 1850 L 4x2 18 Ton | *03-* | 3664 | 3664 |
| ACTROS MP2 | 15.9 1850 LS 4x2 18 Ton | *03-* | 3664 | 3664 |

| MAKE & MODEL | | YEAR | 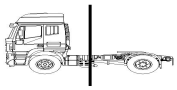 | |
|---|---|---|---|---|
| **MERCEDES-BENZ** | | | | |
| ACTROS MP2 | 15.9 1854 L 4x2 18 Ton | *03-* | 3664 | 3664 |
| ACTROS MP2 | 15.9 1854 LS 4x2 18 Ton | *03-* | 3664 | 3664 |
| ACTROS MP2 | 15.9 1858 L 4x2 18 Ton | *03-* | 3664 | 3664 |
| ACTROS MP2 | 15.9 1858 LS 4x2 18 Ton | *03-* | 3664 | 3664 |
| ACTROS MP2 | 15.9 2650 K 6x4 26 Ton | *03-* | 3664 | 3664 |
| ACTROS MP2 | 15.9 2650 S, LS 6x4 26 Ton | *03-* | 3664 | 3664 |
| ACTROS MP2 | 15.9 2654 K 6x4 26 Ton | *03-* | 3664 | 3664 |
| ACTROS MP2 | 15.9 2654 L 6x4 26 Ton | *03-* | 3664 | 3664 |
| ACTROS MP2 | 15.9 2654 S, LS 6x4 26 Ton | *03-* | 3664 | 3664 |
| ACTROS MP2 | 15.9 2658 K 6x4 26 Ton | *03-* | 3664 | 3664 |
| ACTROS MP2 | 15.9 2658 L 6x4 26 Ton | *03-* | 3664 | 3664 |
| ACTROS MP2 | 15.9 2658 LS 6x4 26 Ton | *03-* | 3664 | 3664 |
| ACTROS MP2 | 1831 K | 04.03 - | 4091 | |
| ACTROS MP2 | 1832 LS | 04.03 - | 4091 | |
| ACTROS MP2 | 1832, L, LL | 04.03 - | 4091 | |
| ACTROS MP2 | 1832, L, LL | 04.03 - | 4091 | |
| ACTROS MP2 | 1832, L, LL | 04.03 - | 4091 | |
| ACTROS MP2 | 1835 K | 04.03 - | 4091 | |
| ACTROS MP2 | 1836 LS | 04.03 - | 4091 | |
| ACTROS MP2 | 1836, L, LL | 04.03 - | 4091 | |
| ACTROS MP2 | 1836, L, LL | 04.03 - | 4091 | |
| ACTROS MP2 | 1840 K | 04.03 - | 4091 | |
| ACTROS MP2 | 1841 A | - | 4091 | |
| ACTROS MP2 | 1841 K | 04.03 - | 4091 | |
| ACTROS MP2 | 1841 L, LL | 04.03 - | 4091 | |
| ACTROS MP2 | 1841, L, LL | 04.03 - | 4091 | |
| ACTROS MP2 | 1841, L, LL | 04.03 - | 4091 | |
| ACTROS MP2 | 1844 A | 04.03 - | 4091 | |
| ACTROS MP2 | 1844 K | 04.03 - | 4091 | |
| ACTROS MP2 | 1844, L, LL | 04.03 - | 4091 | |
| ACTROS MP2 | 1846 A | 04.03 - | 4091 | |
| ACTROS MP2 | 1846 LS | 04.03 - | 4091 | |
| ACTROS MP2 | 1846 LS, LLS | 04.03 - | 4091 | |
| ACTROS MP2 | 1846, L, LL | 04.03 - | 4091 | |
| ACTROS MP2 | 1848 A | 04.03 - | 4091 | |
| ACTROS MP2 | 1848 K | 04.03 - | 4091 | |
| ACTROS MP2 | 1848 K | 04.03 - | 4091 | |
| ACTROS MP2 | 1848 S, LS | 04.03 - | 4091 | |
| ACTROS MP2 | 1848, L, LL | 04.03 - | 4091 | |
| ACTROS MP2 | 1848, L, LL | 04.03 - | 4091 | |
| ACTROS MP2 | 1848, LS, LLS | 04.03 - | 4091 | |
| ACTROS MP2 | 1850, 1851 K | 04.03 - | 4091 | |
| ACTROS MP2 | 1850, 1851 LS, LLS | 04.03 - | 4091 | |
| ACTROS MP2 | 1850, L, LL | 04.03 - | 4091 | |
| ACTROS MP2 | 1854, L | 04.03 - | 4091 | |
| ACTROS MP2 | 1854, L, LL | 04.03 - | 4091 | |
| ACTROS MP2 | 1855 LS, LLS | 06.08 - | 4091 | |
| ACTROS MP2 | 1855, L, LL | 06.08 - | 4091 | |
| ACTROS MP2 | 1858, L | 10.02 - | 4091 | |
| ACTROS MP2 | 1860 L, LL | 05.05 - | 4091 | |
| ACTROS MP2 | 1860 LS | 06.08 - | 4091 | |
| ACTROS MP2 | 1861 LS | 05.05 - | 4091 | |
| ACTROS MP2 | 2032 K | 04.03 - | 4091 | |
| ACTROS MP2 | 2032 S | 04.03 - | 4091 | |
| ACTROS MP2 | 2036 K | 04.03 - | 4091 | |
| ACTROS MP2 | 2036 S | 04.03 - | 4091 | |
| ACTROS MP2 | 2041 K | 04.03 - | 4091 | |
| ACTROS MP2 | 2041 S | 04.03 - | 4091 | |
| ACTROS MP2 | 2044 K | 04.03 - | 4091 | |
| ACTROS MP2 | 2044 S | 04.03 - | 4091 | |
| ACTROS MP2 | 2046 K | 04.03 - | 4091 | |
| ACTROS MP2 | 2046 S | 04.03 - | 4091 | |
| ACTROS MP2 | 2048 K | 04.03 - | 4091 | |
| ACTROS MP2 | 2048 S | 06.08 - | 4091 | |
| ACTROS MP2 | 2050 S | 04.03 - | 4091 | |
| ACTROS MP2 | 2051 S | 06.08 - | 4091 | |
| ACTROS MP2 | 2054 S | 04.03 - | 4091 | |
| ACTROS MP2 | 2055 S | 06.08 - | 4091 | |
| ACTROS MP2 | 2432 LS | 06.08 - | 4091 | |
| ACTROS MP2 | 2436 LS | 06.08 - | 4091 | |
| ACTROS MP2 | 2441 LS | 06.08 - | 4091 | |
| ACTROS MP2 | 2444 LS | 06.08 - | 4091 | |
| ACTROS MP2 | 2446 LS | 06.08 - | 4091 | |
| ACTROS MP2 | 2448 LS | 06.08 - | 4091 | |
| ACTROS MP2 | 2451 LS | 06.08 - | 4091 | |

| MAKE & MODEL | | YEAR | | |
|---|---|---|---|---|
| **MERCEDES-BENZ** | | | | |
| ACTROS MP2 | 2455 LS | 06.08 - | 4091 | |
| ACTROS MP2 | 2460 LS | 06.08 - | 4091 | |
| ACTROS MP2 | 2532 LS | 04.03 - | 4091 | |
| ACTROS MP2 | 2532 LS | 06.08 - | 4091 | |
| ACTROS MP2 | 2532, L, LL | 04.03 - | 4091 | |
| ACTROS MP2 | 2536 LS | 04.03 - | 4091 | |
| ACTROS MP2 | 2536 LS | 06.08 - | 4091 | |
| ACTROS MP2 | 2536, L, LL | 04.03 - | 4091 | |
| ACTROS MP2 | 2541 LS | 04.03 - | 4091 | |
| ACTROS MP2 | 2541 LS | 06.08 - | 4091 | |
| ACTROS MP2 | 2541, L, LL | 04.03 - | 4091 | |
| ACTROS MP2 | 2544 LS | 04.03 - | 4091 | |
| ACTROS MP2 | 2544 LS | 06.08 - | 4091 | |
| ACTROS MP2 | 2544, L, LL | 04.03 - | 4091 | |
| ACTROS MP2 | 2546 LS | 04.03 - | 4091 | |
| ACTROS MP2 | 2546 LS | 06.08 - | 4091 | |
| ACTROS MP2 | 2546, L, LL | 04.03 - | 4091 | |
| ACTROS MP2 | 2548 L | 04.03 - | 4091 | |
| ACTROS MP2 | 2548 LS | 04.03 - | 4091 | |
| ACTROS MP2 | 2548 LS | 06.08 - | 4091 | |
| ACTROS MP2 | 2548, L,LL | 04.03 - | 4091 | |
| ACTROS MP2 | 2550 LS | 04.03 - | 4091 | |
| ACTROS MP2 | 2551 LS | 04.03 - | 4091 | |
| ACTROS MP2 | 2551, L, LL | 04.03 - | 4091 | |
| ACTROS MP2 | 2553 L | 04.03 - | 4091 | |
| ACTROS MP2 | 2554 LS | 04.03 - | 4091 | |
| ACTROS MP2 | 2554, L | 04.03 - | 4091 | |
| ACTROS MP2 | 2555 LS | 09.05 - | 4091 | |
| ACTROS MP2 | 2555, L, LL | 04.03 - | 4091 | |
| ACTROS MP2 | 2558, L | 04.03 - | 4091 | |
| ACTROS MP2 | 2560, L, LL | 04.03 - | 4091 | |
| ACTROS MP2 | 2631 B | 04.03 - | 4091 | |
| ACTROS MP2 | 2631 K, LK | 04.03 - | 4091 | |
| ACTROS MP2 | 2631 L | 04.03 - | 4091 | |
| ACTROS MP2 | 2631 LS | 10.02 - | 4091 | |
| ACTROS MP2 | 2631 LS | 10.09 - | 4091 | |
| ACTROS MP2 | 2632 B | 04.03 - | 4091 | |
| ACTROS MP2 | 2632 K, LK | 04.03 - | 4091 | |
| ACTROS MP2 | 2632 LS | 04.03 - | 4091 | |
| ACTROS MP2 | 2632 LS | 10.09 - | 4091 | |
| ACTROS MP2 | 2632, L, LL | 04.03 - | 4091 | |
| ACTROS MP2 | 2635 B | 04.03 - | 4091 | |
| ACTROS MP2 | 2635 K, LK | 04.03 - | 4091 | |
| ACTROS MP2 | 2635 L | 04.03 - | 4091 | |
| ACTROS MP2 | 2635 LS | 10.02 - | 4091 | |
| ACTROS MP2 | 2635 LS | 10.09 - | 4091 | |
| ACTROS MP2 | 2636 B | 04.03 - | 4091 | |
| ACTROS MP2 | 2636 K, LK | 04.03 - | 4091 | |
| ACTROS MP2 | 2636 LS | 04.03 - | 4091 | |
| ACTROS MP2 | 2636 LS | 10.09 - | 4091 | |
| ACTROS MP2 | 2636, L, LL | 04.03 - | 4091 | |
| ACTROS MP2 | 2640 B | 04.03 - | 4091 | |
| ACTROS MP2 | 2640 K, LK | 04.03 - | 4091 | |
| ACTROS MP2 | 2640 L | 04.03 - | 4091 | |
| ACTROS MP2 | 2640 LS | 10.02 - | 4091 | |
| ACTROS MP2 | 2640 LS | 10.09 - | 4091 | |
| ACTROS MP2 | 2641 B | 04.03 - | 4091 | |
| ACTROS MP2 | 2641 K, LK | 04.03 - | 4091 | |
| ACTROS MP2 | 2641 LS | 10.09 - | 4091 | |
| ACTROS MP2 | 2641 S, LS | 04.03 - | 4091 | |
| ACTROS MP2 | 2641, L, LL | 04.03 - | 4091 | |
| ACTROS MP2 | 2643 B | 04.03 - | 4091 | |
| ACTROS MP2 | 2643 K, LK | 04.03 - | 4091 | |
| ACTROS MP2 | 2643 L | 04.03 - | 4091 | |
| ACTROS MP2 | 2643 LS | 10.09 - | 4091 | |
| ACTROS MP2 | 2644 B | 04.03 - | 4091 | |
| ACTROS MP2 | 2644 K, LK | 04.03 - | 4091 | |
| ACTROS MP2 | 2644 S, LS | 04.03 - | 4091 | |
| ACTROS MP2 | 2644, L, LL | 04.03 - | 4091 | |
| ACTROS MP2 | 2646 B | 04.03 - | 4091 | |
| ACTROS MP2 | 2646 K, LK | 04.03 - | 4091 | |
| ACTROS MP2 | 2646 LS | 10.09 - | 4091 | |
| ACTROS MP2 | 2646 S, LS | 04.03 - | 4091 | |
| ACTROS MP2 | 2646, L, LL | 04.03 - | 4091 | |
| ACTROS MP2 | 2648 B | 04.03 - | 4091 | |

| MAKE & MODEL | | YEAR | | |
|---|---|---|---|---|
| **MERCEDES-BENZ** | | | | |
| ACTROS MP2 | 2648 K, LK | 04.03 - | 4091 | |
| ACTROS MP2 | 2648 K, LK | 04.03 - | 4091 | |
| ACTROS MP2 | 2648 L | 04.03 - | 4091 | |
| ACTROS MP2 | 2648 LS | 10.02 - | 4091 | |
| ACTROS MP2 | 2648 LS | 10.09 - | 4091 | |
| ACTROS MP2 | 2648 S, LS | 04.03 - | 4091 | |
| ACTROS MP2 | 2648, L, LL | 04.03 - | 4091 | |
| ACTROS MP2 | 2650 K, 2651 K, LK | 04.03 - | 4091 | |
| ACTROS MP2 | 2650 S, LS | 04.03 - | 4091 | |
| ACTROS MP2 | 2650, L, 2651,L, LL | 04.03 - | 4091 | |
| ACTROS MP2 | 2651 L | 04.03 - | 4091 | |
| ACTROS MP2 | 2651 LS | 10.09 - | 4091 | |
| ACTROS MP2 | 2651 S, LS | 04.03 - | 4091 | |
| ACTROS MP2 | 2653 K, LK | 04.03 - | 4091 | |
| ACTROS MP2 | 2653 L | 04.03 - | 4091 | |
| ACTROS MP2 | 2653 LS | 10.09 - | 4091 | |
| ACTROS MP2 | 2654 K, LK, 2655 K, LK | 04.03 - | 4091 | |
| ACTROS MP2 | 2654 S, LS | 04.03 - | 4091 | |
| ACTROS MP2 | 2654, L, 2655, L, LL | 04.03 - | 4091 | |
| ACTROS MP2 | 2655 LS | 10.09 - | 4091 | |
| ACTROS MP2 | 2655 S, LS | 04.03 - | 4091 | |
| ACTROS MP2 | 2658 K, LK | 04.03 - | 4091 | |
| ACTROS MP2 | 2658 L | 04.03 - | 4091 | |
| ACTROS MP2 | 2658 LS | 04.03 - | 4091 | |
| ACTROS MP2 | 2660 L, LL | 05.05 - | 4091 | |
| ACTROS MP2 | 2660 LK | 04.03 - | 4091 | |
| ACTROS MP2 | 2660 S, LS | 06.08 - | 4091 | |
| ACTROS MP2 | 2665 LS | 04.03 - | 4091 | |
| ACTROS MP2 | 3231 B | 04.03 - | 4091 | |
| ACTROS MP2 | 3231 K, 3232 K | 04.03 - | 4091 | |
| ACTROS MP2 | 3232 B | 04.03 - | 4091 | |
| ACTROS MP2 | 3235 B | 04.03 - | 4091 | |
| ACTROS MP2 | 3235 K | 04.03 - | 4091 | |
| ACTROS MP2 | 3236 B | 04.03 - | 4091 | |
| ACTROS MP2 | 3236 K | 04.03 - | 4091 | |
| ACTROS MP2 | 3236 L | 04.03 - | 4091 | |
| ACTROS MP2 | 3240 B | 04.03 - | 4091 | |
| ACTROS MP2 | 3240 K | 04.03 - | 4091 | |
| ACTROS MP2 | 3241 B | 04.03 - | 4091 | |
| ACTROS MP2 | 3241 K | 04.03 - | 4091 | |
| ACTROS MP2 | 3241 L | 06.08 - | 4091 | |
| ACTROS MP2 | 3241 L | 06.08 - | 4091 | |
| ACTROS MP2 | 3243 B | 04.03 - | 4091 | |
| ACTROS MP2 | 3243 K | 04.03 - | 4091 | |
| ACTROS MP2 | 3244 B | 04.03 - | 4091 | |
| ACTROS MP2 | 3244 K | 04.03 - | 4091 | |
| ACTROS MP2 | 3246 B | 04.03 - | 4091 | |
| ACTROS MP2 | 3246 K | 04.03 - | 4091 | |
| ACTROS MP2 | 3248 B | 04.03 - | 4091 | |
| ACTROS MP2 | 3248 K | 04.03 - | 4091 | |
| ACTROS MP2 | 3248, L | 04.03 - | 4091 | |
| ACTROS MP2 | 3255 L | 02.09 - | 4091 | |
| ACTROS MP2 | 3260 L | 02.09 - | 4091 | |
| ACTROS MP2 | 3331 B | 04.03 - | 4091 | |
| ACTROS MP2 | 3331 K | 04.03 - | 4091 | |
| ACTROS MP2 | 3331 S, 3332 S | 04.03 - | 4091 | |
| ACTROS MP2 | 3332 B | 04.03 - | 4091 | |
| ACTROS MP2 | 3332 K | 04.03 - | 4091 | |
| ACTROS MP2 | 3335 B | 04.03 - | 4091 | |
| ACTROS MP2 | 3335 K | 04.03 - | 4091 | |
| ACTROS MP2 | 3336 B | 04.03 - | 4091 | |
| ACTROS MP2 | 3336 K | 04.03 - | 4091 | |
| ACTROS MP2 | 3336 K | 04.03 - | 4091 | |
| ACTROS MP2 | 3336 S | 04.03 - | 4091 | |
| ACTROS MP2 | 3339 B | 04.03 - | 4091 | |
| ACTROS MP2 | 3339 K | 04.03 - | 4091 | |
| ACTROS MP2 | 3341 B | 04.03 - | 4091 | |
| ACTROS MP2 | 3341 K | 04.03 - | 4091 | |
| ACTROS MP2 | 3341 S | 04.03 - | 4091 | |
| ACTROS MP2 | 3343 B | 04.03 - | 4091 | |
| ACTROS MP2 | 3343 K | 04.03 - | 4091 | |
| ACTROS MP2 | 3344 B | 04.03 - | 4091 | |
| ACTROS MP2 | 3344 K | 04.03 - | 4091 | |
| ACTROS MP2 | 3344 S | 04.03 - | 4091 | |
| ACTROS MP2 | 3346 B | 04.03 - | 4091 | |

| MAKE & MODEL | | YEAR | 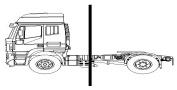 | |
|---|---|---|---|---|
| **MERCEDES-BENZ** | | | | |
| ACTROS MP2 | 3346 K | 04.03 - | 4091 | |
| ACTROS MP2 | 3346 S | 04.03 - | 4091 | |
| ACTROS MP2 | 3348 B | 04.03 - | 4091 | |
| ACTROS MP2 | 3348 K | 04.03 - | 4091 | |
| ACTROS MP2 | 3348 K | 04.03 - | 4091 | |
| ACTROS MP2 | 3348 S | 04.03 - | 4091 | |
| ACTROS MP2 | 3348 S | 04.03 - | 4091 | |
| ACTROS MP2 | 3350 S | 06.09 - | 4091 | |
| ACTROS MP2 | 3350, 3351 | 04.03 - | 4091 | |
| ACTROS MP2 | 3351 K | 04.03 - | 4091 | |
| ACTROS MP2 | 3351 S | 04.03 - | 4091 | |
| ACTROS MP2 | 3354, 3355 | 04.03 - | 4091 | |
| ACTROS MP2 | 3355 S | 04.03 - | 4091 | |
| ACTROS MP2 | 3550 S | 06.09 - | 4091 | |
| ACTROS MP2 | 4140 B | 04.03 - | 4091 | |
| ACTROS MP2 | 4140 K | 04.03 - | 4091 | |
| ACTROS MP2 | 4141 B | 04.03 - | 4091 | |
| ACTROS MP2 | 4141 B | 06.08 - | 4091 | |
| ACTROS MP2 | 4141 K | 04.03 - | 4091 | |
| ACTROS MP2 | 4143 B | 04.03 - | 4091 | |
| ACTROS MP2 | 4144 B | 04.03 - | 4091 | |
| ACTROS MP2 | 4144 B | 06.08 - | 4091 | |
| ACTROS MP2 | 4144 K | 04.03 - | 4091 | |
| ACTROS MP2 | 4144 K | 04.03 - | 4091 | |
| ACTROS MP2 | 4146 B | 06.08 - | 4091 | |
| ACTROS MP2 | 4146 B | 04.03 - | 4091 | |
| ACTROS MP2 | 4146 K | 04.03 - | 4091 | |
| ACTROS MP2 | 4148 B | 06.08 - | 4091 | |
| ACTROS MP2 | 4148 B | 04.03 - | 4091 | |
| ACTROS MP2 | 4148 K | 04.03 - | 4091 | |
| ACTROS MP2 | 4148 K | 04.03 - | 4091 | |
| ACTROS MP2 | 4148 K | 04.03 - | 4091 | |
| ACTROS MP2 | 4150 K | 04.03 - | 4091 | |
| ACTROS MP2 | 4151 K | 05.05 - | 4091 | |
| ACTROS MP2 | 4155 K | 04.03 - | 4091 | |
| ACTROS MP2 | 4160 K | 04.03 - | 4091 | |
| ACTROS MP2 | 5041 B | 06.08 - | 4091 | |
| ACTROS MP2 | 5041 K | 06.08 - | 4091 | |
| ACTROS MP2 | 5044 B | 06.08 - | 4091 | |
| ACTROS MP2 | 5044 K | 06.08 - | 4091 | |
| ACTROS MP2 | 5046 B | 06.08 - | 4091 | |
| ACTROS MP2 | 5046 K | 06.08 - | 4091 | |
| ACTROS MP2 (All wheel drive) | 11.9 2032 4x2 20 Ton | *03-* | 3664 | 3664 |
| ACTROS MP2 (All wheel drive) | 11.9 2032 A 4x4 20 Ton | *03-* | 3664 | 3664 |
| ACTROS MP2 (All wheel drive) | 11.9 2032 AK 4x4 20 Ton | *03-* | 3664 | 3664 |
| ACTROS MP2 (All wheel drive) | 11.9 2032 AS 4x4 20 Ton | *03-* | 3664 | 3664 |
| ACTROS MP2 (All wheel drive) | 11.9 2032 K 4x2 20 Ton | *03-* | 3664 | 3664 |
| ACTROS MP2 (All wheel drive) | 11.9 2032 S 4x2 20 Ton | *03-* | 3664 | 3664 |
| ACTROS MP2 (All wheel drive) | 11.9 2036 4x2 20 Ton | *03-* | 3664 | 3664 |
| ACTROS MP2 (All wheel drive) | 11.9 2036 A 4x4 20 Ton | *03-* | 3664 | 3664 |
| ACTROS MP2 (All wheel drive) | 11.9 2036 AS 4x4 20 Ton | *03-* | 3664 | 3664 |
| ACTROS MP2 (All wheel drive) | 11.9 2036 S 4x2 20 Ton | *03-* | 3664 | 3664 |
| ACTROS MP2 (All wheel drive) | 11.9 2041 4x2 20 Ton | *03-* | 3664 | 3664 |
| ACTROS MP2 (All wheel drive) | 11.9 2041 AK 4x4 20 Ton | *03-* | 3664 | 3664 |
| ACTROS MP2 (All wheel drive) | 11.9 2041 AS 4x4 20 Ton | *03-* | 3664 | 3664 |
| ACTROS MP2 (All wheel drive) | 11.9 2041 K 4x2 20 Ton | *03-* | 3664 | 3664 |
| ACTROS MP2 (All wheel drive) | 11.9 2041 S 4x2 20 Ton | *03-* | 3664 | 3664 |
| ACTROS MP2 (All wheel drive) | 11.9 2044 4x2 20 Ton | *03-* | 3664 | 3664 |
| ACTROS MP2 (All wheel drive) | 11.9 2044 AS 4x4 20 Ton | *03-* | 3664 | 3664 |

| MAKE & MODEL | | YEAR | 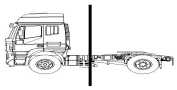 | |
|---|---|---|---|---|
| **MERCEDES-BENZ** | | | | |
| ACTROS MP2 (All wheel drive) | 11.9 2044 S 4x2 20 Ton | *03-* | 3664 | 3664 |
| ACTROS MP2 (All wheel drive) | 11.9 2046 4x2 20 Ton | *03-* | 3664 | 3664 |
| ACTROS MP2 (All wheel drive) | 11.9 2046 S 4x2 20 Ton | *03-* | 3664 | 3664 |
| ACTROS MP2 (All wheel drive) | 11.9 2532, L 6x2/2/4 25 Ton | *03-* | 3664 | 3664 |
| ACTROS MP2 (All wheel drive) | 11.9 2536, L 6x2/2/4 25 Ton | *03-* | 3664 | 3664 |
| ACTROS MP2 (All wheel drive) | 11.9 2541, L 6x2/2/4 25 Ton | *03-* | 3664 | 3664 |
| ACTROS MP2 (All wheel drive) | 11.9 2544, L 6x2/2/4 25 Ton | *03-* | 3664 | 3664 |
| ACTROS MP2 (All wheel drive) | 11.9 2546, L 6x2/2/4 25 Ton | *03-* | 3664 | 3664 |
| ACTROS MP2 (All wheel drive) | 11.9 2548, L 6x2/2/4 25 Ton | *03-* | 3664 | 3664 |
| ACTROS MP2 (All wheel drive) | 15.9 2050 S 4x2 20 Ton | *03-* | 3664 | 3664 |
| ACTROS MP3 | 2032 | 04.03 - | 4091 | |
| ACTROS MP3 | 2036 | 04.03 - | 4091 | |
| ACTROS MP3 | 2040 | 10.02 - | 4091 | |
| ACTROS MP3 | 2041 | 04.03 - | 4091 | |
| ACTROS MP3 | 2044 | 04.03 - | 4091 | |
| ACTROS MP3 | 2046 | 04.03 - | 4091 | |
| ACTROS MP3 | 2048 | 06.08 - | 4091 | |
| ACTROS MP3 | 3240 | 04.03 - | 4091 | |
| ACTROS MP3 | 3241 | 04.03 - | 4091 | |
| ACTROS MP3 | 3243 | 10.02 - | 4091 | |
| ACTROS MP3 | 3244 | 04.03 - | 4091 | |
| ACTROS MP3 | 3246 | 04.03 - | 4091 | |
| ACTROS MP3 | 3250 | 04.03 - | 4091 | |
| ACTROS MP3 | 3336 | 04.03 - | 4091 | |
| ACTROS MP3 | 3341 | 04.03 - | 4091 | |
| ACTROS MP3 | 3344 | 04.03 - | 4091 | |
| ACTROS MP3 | 3346 | 04.03 - | 4091 | |
| ACTROS MP3 | 3348 | 04.03 - | 4091 | |
| ACTROS MP3 | 3348 | 04.03 - | 4091 | |
| ACTROS MP3 | 3358 | 04.03 - | 4091 | |
| ACTROS MP3 | 3360 | 04.03 - | 4091 | |
| ACTROS MP3 | 1831 K | 04.03 - | 4091 | |
| ACTROS MP3 | 1832 LS | 04.03 - | 4091 | |
| ACTROS MP3 | 1832, L, LL | 04.03 - | 4091 | |
| ACTROS MP3 | 1832, L, LL | 04.03 - | 4091 | |
| ACTROS MP3 | 1832, L, LL | 04.03 - | 4091 | |
| ACTROS MP3 | 1835 K | 04.03 - | 4091 | |
| ACTROS MP3 | 1836 LS | 04.03 - | 4091 | |
| ACTROS MP3 | 1836, L, LL | 04.03 - | 4091 | |
| ACTROS MP3 | 1836, L, LL | 04.03 - | 4091 | |
| ACTROS MP3 | 1840 K | 04.03 - | 4091 | |
| ACTROS MP3 | 1841 A | - | 4091 | |
| ACTROS MP3 | 1841 K | 04.03 - | 4091 | |
| ACTROS MP3 | 1841 L, LL | 04.03 - | 4091 | |
| ACTROS MP3 | 1841, L, LL | 04.03 - | 4091 | |
| ACTROS MP3 | 1841, L, LL | 04.03 - | 4091 | |
| ACTROS MP3 | 1844 A | 04.03 - | 4091 | |
| ACTROS MP3 | 1844 K | 04.03 - | 4091 | |
| ACTROS MP3 | 1844, L, LL | 04.03 - | 4091 | |
| ACTROS MP3 | 1846 A | 04.03 - | 4091 | |
| ACTROS MP3 | 1846 LS | 04.03 - | 4091 | |
| ACTROS MP3 | 1846 LS, LLS | 04.03 - | 4091 | |
| ACTROS MP3 | 1846, L, LL | 04.03 - | 4091 | |
| ACTROS MP3 | 1848 A | 04.03 - | 4091 | |
| ACTROS MP3 | 1848 K | 04.03 - | 4091 | |
| ACTROS MP3 | 1848 K | 04.03 - | 4091 | |
| ACTROS MP3 | 1848 S, LS | 04.03 - | 4091 | |
| ACTROS MP3 | 1848, L, LL | 04.03 - | 4091 | |
| ACTROS MP3 | 1848, LS, LLS | 04.03 - | 4091 | |
| ACTROS MP3 | 1850, 1851 K | 04.03 - | 4091 | |
| ACTROS MP3 | 1850, 1851 LS, LLS | 04.03 - | 4091 | |
| ACTROS MP3 | 1850, L, LL | 04.03 - | 4091 | |
| ACTROS MP3 | 1854, L | 04.03 - | 4091 | |
| ACTROS MP3 | 1854, L, LL | 04.03 - | 4091 | |
| ACTROS MP3 | 1855 LS, LLS | 06.08 - | 4091 | |

| MAKE & MODEL | | YEAR | | |
|---|---|---|---|---|
| **MERCEDES-BENZ** | | | | |
| ACTROS MP3 | 1855, L, LL | 06.08 - | 4091 | |
| ACTROS MP3 | 1858, L | 10.02 - | 4091 | |
| ACTROS MP3 | 1860 L, LL | 05.05 - | 4091 | |
| ACTROS MP3 | 1860 LS | 06.08 - | 4091 | |
| ACTROS MP3 | 1861 LS | 05.05 - | 4091 | |
| ACTROS MP3 | 2032 K | 04.03 - | 4091 | |
| ACTROS MP3 | 2032 S | 04.03 - | 4091 | |
| ACTROS MP3 | 2036 K | 04.03 - | 4091 | |
| ACTROS MP3 | 2036 S | 04.03 - | 4091 | |
| ACTROS MP3 | 2041 K | 04.03 - | 4091 | |
| ACTROS MP3 | 2041 S | 04.03 - | 4091 | |
| ACTROS MP3 | 2044 K | 04.03 - | 4091 | |
| ACTROS MP3 | 2044 S | 04.03 - | 4091 | |
| ACTROS MP3 | 2046 K | 04.03 - | 4091 | |
| ACTROS MP3 | 2046 S | 04.03 - | 4091 | |
| ACTROS MP3 | 2048 K | 04.03 - | 4091 | |
| ACTROS MP3 | 2048 S | 06.08 - | 4091 | |
| ACTROS MP3 | 2050 S | 04.03 - | 4091 | |
| ACTROS MP3 | 2051 S | 06.08 - | 4091 | |
| ACTROS MP3 | 2054 S | 04.03 - | 4091 | |
| ACTROS MP3 | 2055 S | 06.08 - | 4091 | |
| ACTROS MP3 | 2432 LS | 06.08 - | 4091 | |
| ACTROS MP3 | 2436 LS | 06.08 - | 4091 | |
| ACTROS MP3 | 2441 LS | 06.08 - | 4091 | |
| ACTROS MP3 | 2444 LS | 06.08 - | 4091 | |
| ACTROS MP3 | 2446 LS | 06.08 - | 4091 | |
| ACTROS MP3 | 2448 LS | 06.08 - | 4091 | |
| ACTROS MP3 | 2451 LS | 06.08 - | 4091 | |
| ACTROS MP3 | 2455 LS | 06.08 - | 4091 | |
| ACTROS MP3 | 2460 LS | 06.08 - | 4091 | |
| ACTROS MP3 | 2532 LS | 04.03 - | 4091 | |
| ACTROS MP3 | 2532 LS | 06.08 - | 4091 | |
| ACTROS MP3 | 2532, L, LL | 04.03 - | 4091 | |
| ACTROS MP3 | 2536 LS | 04.03 - | 4091 | |
| ACTROS MP3 | 2536 LS | 06.08 - | 4091 | |
| ACTROS MP3 | 2536, L, LL | 04.03 - | 4091 | |
| ACTROS MP3 | 2541 LS | 04.03 - | 4091 | |
| ACTROS MP3 | 2541 LS | 06.08 - | 4091 | |
| ACTROS MP3 | 2541, L, LL | 04.03 - | 4091 | |
| ACTROS MP3 | 2544 LS | 04.03 - | 4091 | |
| ACTROS MP3 | 2544 LS | 06.08 - | 4091 | |
| ACTROS MP3 | 2544, L, LL | 04.03 - | 4091 | |
| ACTROS MP3 | 2546 LS | 04.03 - | 4091 | |
| ACTROS MP3 | 2546 LS | 06.08 - | 4091 | |
| ACTROS MP3 | 2546, L, LL | 04.03 - | 4091 | |
| ACTROS MP3 | 2548 L | 04.03 - | 4091 | |
| ACTROS MP3 | 2548 LS | 04.03 - | 4091 | |
| ACTROS MP3 | 2548 LS | 06.08 - | 4091 | |
| ACTROS MP3 | 2548, L,LL | 04.03 - | 4091 | |
| ACTROS MP3 | 2550 LS | 04.03 - | 4091 | |
| ACTROS MP3 | 2550, LS | 04.03 - | 4091 | |
| ACTROS MP3 | 2551 LS | 04.03 - | 4091 | |
| ACTROS MP3 | 2551, L, LL | 04.03 - | 4091 | |
| ACTROS MP3 | 2553 L | 04.03 - | 4091 | |
| ACTROS MP3 | 2554 LS | 04.03 - | 4091 | |
| ACTROS MP3 | 2554, L | 04.03 - | 4091 | |
| ACTROS MP3 | 2555 LS | 09.05 - | 4091 | |
| ACTROS MP3 | 2555, L, LL | 04.03 - | 4091 | |
| ACTROS MP3 | 2558, L | 04.03 - | 4091 | |
| ACTROS MP3 | 2560, L, LL | 04.03 - | 4091 | |
| ACTROS MP3 | 2631 B | 04.03 - | 4091 | |
| ACTROS MP3 | 2631 K, LK | 04.03 - | 4091 | |
| ACTROS MP3 | 2631 L | 04.03 - | 4091 | |
| ACTROS MP3 | 2631 LS | 10.02 - | 4091 | |
| ACTROS MP3 | 2631 LS | 10.09 - | 4091 | |
| ACTROS MP3 | 2632 B | 04.03 - | 4091 | |
| ACTROS MP3 | 2632 K, LK | 04.03 - | 4091 | |
| ACTROS MP3 | 2632 LS | 04.03 - | 4091 | |
| ACTROS MP3 | 2632 LS | 10.09 - | 4091 | |
| ACTROS MP3 | 2632, L, LL | 04.03 - | 4091 | |
| ACTROS MP3 | 2635 B | 04.03 - | 4091 | |
| ACTROS MP3 | 2635 K, LK | 04.03 - | 4091 | |
| ACTROS MP3 | 2635 L | 04.03 - | 4091 | |
| ACTROS MP3 | 2635 LS | 10.02 - | 4091 | |
| ACTROS MP3 | 2635 LS | 10.09 - | 4091 | |
| ACTROS MP3 | 2636 B | 04.03 - | 4091 | |

| MAKE & MODEL | | YEAR | | |
|---|---|---|---|---|
| **MERCEDES-BENZ** | | | | |
| ACTROS MP3 | 2636 K, LK | 04.03 - | 4091 | |
| ACTROS MP3 | 2636 LS | 04.03 - | 4091 | |
| ACTROS MP3 | 2636 LS | 10.09 - | 4091 | |
| ACTROS MP3 | 2636, L, LL | 04.03 - | 4091 | |
| ACTROS MP3 | 2640 B | 04.03 - | 4091 | |
| ACTROS MP3 | 2640 K, LK | 04.03 - | 4091 | |
| ACTROS MP3 | 2640 L | 04.03 - | 4091 | |
| ACTROS MP3 | 2640 LS | 10.02 - | 4091 | |
| ACTROS MP3 | 2640 LS | 10.09 - | 4091 | |
| ACTROS MP3 | 2641 B | 04.03 - | 4091 | |
| ACTROS MP3 | 2641 K, LK | 04.03 - | 4091 | |
| ACTROS MP3 | 2641 LS | 10.09 - | 4091 | |
| ACTROS MP3 | 2641 S, LS | 04.03 - | 4091 | |
| ACTROS MP3 | 2641, L, LL | 04.03 - | 4091 | |
| ACTROS MP3 | 2643 B | 04.03 - | 4091 | |
| ACTROS MP3 | 2643 K, LK | 04.03 - | 4091 | |
| ACTROS MP3 | 2643 L | 04.03 - | 4091 | |
| ACTROS MP3 | 2643 LS | 10.09 - | 4091 | |
| ACTROS MP3 | 2644 B | 04.03 - | 4091 | |
| ACTROS MP3 | 2644 K, LK | 04.03 - | 4091 | |
| ACTROS MP3 | 2644 S, LS | 04.03 - | 4091 | |
| ACTROS MP3 | 2644, L, LL | 04.03 - | 4091 | |
| ACTROS MP3 | 2646 B | 04.03 - | 4091 | |
| ACTROS MP3 | 2646 K, LK | 04.03 - | 4091 | |
| ACTROS MP3 | 2646 LS | 10.09 - | 4091 | |
| ACTROS MP3 | 2646 S, LS | 04.03 - | 4091 | |
| ACTROS MP3 | 2646, L, LL | 04.03 - | 4091 | |
| ACTROS MP3 | 2648 B | 04.03 - | 4091 | |
| ACTROS MP3 | 2648 K, LK | 04.03 - | 4091 | |
| ACTROS MP3 | 2648 K, LK | 04.03 - | 4091 | |
| ACTROS MP3 | 2648 L | 04.03 - | 4091 | |
| ACTROS MP3 | 2648 LS | 10.02 - | 4091 | |
| ACTROS MP3 | 2648 LS | 10.09 - | 4091 | |
| ACTROS MP3 | 2648 S, LS | 04.03 - | 4091 | |
| ACTROS MP3 | 2648, L, LL | 04.03 - | 4091 | |
| ACTROS MP3 | 2650 K, 2651 K, LK | 04.03 - | 4091 | |
| ACTROS MP3 | 2650 S, LS | 04.03 - | 4091 | |
| ACTROS MP3 | 2650, L, 2651,L, LL | 04.03 - | 4091 | |
| ACTROS MP3 | 2651 L | 04.03 - | 4091 | |
| ACTROS MP3 | 2651 LS | 10.09 - | 4091 | |
| ACTROS MP3 | 2651 S, LS | 04.03 - | 4091 | |
| ACTROS MP3 | 2653 K, LK | 04.03 - | 4091 | |
| ACTROS MP3 | 2653 L | 04.03 - | 4091 | |
| ACTROS MP3 | 2653 LS | 10.09 - | 4091 | |
| ACTROS MP3 | 2654 K, LK, 2655 K, LK | 04.03 - | 4091 | |
| ACTROS MP3 | 2654 S, LS | 04.03 - | 4091 | |
| ACTROS MP3 | 2654, L, 2655, L, LL | 04.03 - | 4091 | |
| ACTROS MP3 | 2655 LS | 10.09 - | 4091 | |
| ACTROS MP3 | 2655 S, LS | 04.03 - | 4091 | |
| ACTROS MP3 | 2658 K, LK | 04.03 - | 4091 | |
| ACTROS MP3 | 2658 L | 04.03 - | 4091 | |
| ACTROS MP3 | 2658 LS | 04.03 - | 4091 | |
| ACTROS MP3 | 2660 L, LL | 05.05 - | 4091 | |
| ACTROS MP3 | 2660 LK | 04.03 - | 4091 | |
| ACTROS MP3 | 2660 S, LS | 06.08 - | 4091 | |
| ACTROS MP3 | 2665 LS | 04.03 - | 4091 | |
| ACTROS MP3 | 3231 B | 04.03 - | 4091 | |
| ACTROS MP3 | 3231 K, 3232 K | 04.03 - | 4091 | |
| ACTROS MP3 | 3232 B | 04.03 - | 4091 | |
| ACTROS MP3 | 3235 B | 04.03 - | 4091 | |
| ACTROS MP3 | 3235 K | 04.03 - | 4091 | |
| ACTROS MP3 | 3236 B | 04.03 - | 4091 | |
| ACTROS MP3 | 3236 K | 04.03 - | 4091 | |
| ACTROS MP3 | 3236 L | 04.03 - | 4091 | |
| ACTROS MP3 | 3240 B | 04.03 - | 4091 | |
| ACTROS MP3 | 3240 K | 04.03 - | 4091 | |
| ACTROS MP3 | 3241 B | 04.03 - | 4091 | |
| ACTROS MP3 | 3241 K | 04.03 - | 4091 | |
| ACTROS MP3 | 3241 L | 06.08 - | 4091 | |
| ACTROS MP3 | 3241 L | 06.08 - | 4091 | |
| ACTROS MP3 | 3243 B | 04.03 - | 4091 | |
| ACTROS MP3 | 3243 K | 04.03 - | 4091 | |
| ACTROS MP3 | 3244 B | 04.03 - | 4091 | |
| ACTROS MP3 | 3244 K | 04.03 - | 4091 | |
| ACTROS MP3 | 3246 B | 04.03 - | 4091 | |
| ACTROS MP3 | 3246 K | 04.03 - | 4091 | |

| MAKE & MODEL | | YEAR | | |
|---|---|---|---|---|
| **MERCEDES-BENZ** | | | | |
| ACTROS MP3 | 3248 B | 04.03 - | 4091 | |
| ACTROS MP3 | 3248 K | 04.03 - | 4091 | |
| ACTROS MP3 | 3248, L | 04.03 - | 4091 | |
| ACTROS MP3 | 3255 L | 02.09 - | 4091 | |
| ACTROS MP3 | 3260 L | 02.09 - | 4091 | |
| ACTROS MP3 | 3331 B | 04.03 - | 4091 | |
| ACTROS MP3 | 3331 K | 04.03 - | 4091 | |
| ACTROS MP3 | 3331 S, 3332 S | 04.03 - | 4091 | |
| ACTROS MP3 | 3331, 3332 | 04.03 - | 4091 | |
| ACTROS MP3 | 3332 B | 04.03 - | 4091 | |
| ACTROS MP3 | 3332 K | 04.03 - | 4091 | |
| ACTROS MP3 | 3335 B | 04.03 - | 4091 | |
| ACTROS MP3 | 3335 K | 04.03 - | 4091 | |
| ACTROS MP3 | 3336 B | 04.03 - | 4091 | |
| ACTROS MP3 | 3336 K | 04.03 - | 4091 | |
| ACTROS MP3 | 3336 K | 04.03 - | 4091 | |
| ACTROS MP3 | 3336 S | 04.03 - | 4091 | |
| ACTROS MP3 | 3339 B | 04.03 - | 4091 | |
| ACTROS MP3 | 3339 K | 04.03 - | 4091 | |
| ACTROS MP3 | 3341 B | 04.03 - | 4091 | |
| ACTROS MP3 | 3341 K | 04.03 - | 4091 | |
| ACTROS MP3 | 3341 S | 04.03 - | 4091 | |
| ACTROS MP3 | 3343 B | 04.03 - | 4091 | |
| ACTROS MP3 | 3343 K | 04.03 - | 4091 | |
| ACTROS MP3 | 3344 B | 04.03 - | 4091 | |
| ACTROS MP3 | 3344 K | 04.03 - | 4091 | |
| ACTROS MP3 | 3344 S | 04.03 - | 4091 | |
| ACTROS MP3 | 3346 B | 04.03 - | 4091 | |
| ACTROS MP3 | 3346 K | 04.03 - | 4091 | |
| ACTROS MP3 | 3346 S | 04.03 - | 4091 | |
| ACTROS MP3 | 3348 B | 04.03 - | 4091 | |
| ACTROS MP3 | 3348 K | 04.03 - | 4091 | |
| ACTROS MP3 | 3348 K | 04.03 - | 4091 | |
| ACTROS MP3 | 3348 S | 04.03 - | 4091 | |
| ACTROS MP3 | 3348 S | 04.03 - | 4091 | |
| ACTROS MP3 | 3350 S | 06.09 - | 4091 | |
| ACTROS MP3 | 3350, 3351 | 04.03 - | 4091 | |
| ACTROS MP3 | 3351 K | 04.03 - | 4091 | |
| ACTROS MP3 | 3351 S | 04.03 - | 4091 | |
| ACTROS MP3 | 3354, 3355 | 04.03 - | 4091 | |
| ACTROS MP3 | 3355 S | 04.03 - | 4091 | |
| ACTROS MP3 | 3550 S | 06.09 - | 4091 | |
| ACTROS MP3 | 4140 B | 04.03 - | 4091 | |
| ACTROS MP3 | 4140 K | 04.03 - | 4091 | |
| ACTROS MP3 | 4141 B | 04.03 - | 4091 | |
| ACTROS MP3 | 4141 B | 06.08 - | 4091 | |
| ACTROS MP3 | 4141 K | 04.03 - | 4091 | |
| ACTROS MP3 | 4143 B | 04.03 - | 4091 | |
| ACTROS MP3 | 4144 B | 04.03 - | 4091 | |
| ACTROS MP3 | 4144 B | 06.08 - | 4091 | |
| ACTROS MP3 | 4144 K | 04.03 - | 4091 | |
| ACTROS MP3 | 4144 K | 04.03 - | 4091 | |
| ACTROS MP3 | 4146 B | 06.08 - | 4091 | |
| ACTROS MP3 | 4146 B | 04.03 - | 4091 | |
| ACTROS MP3 | 4146 K | 04.03 - | 4091 | |
| ACTROS MP3 | 4148 B | 06.08 - | 4091 | |
| ACTROS MP3 | 4148 B | 04.03 - | 4091 | |
| ACTROS MP3 | 4148 K | 04.03 - | 4091 | |
| ACTROS MP3 | 4148 K | 04.03 - | 4091 | |
| ACTROS MP3 | 4148 K | 04.03 - | 4091 | |
| ACTROS MP3 | 4150 K | 04.03 - | 4091 | |
| ACTROS MP3 | 4151 K | 05.05 - | 4091 | |
| ACTROS MP3 | 4155 K | 04.03 - | 4091 | |
| ACTROS MP3 | 4160 K | 04.03 - | 4091 | |
| ACTROS MP3 | 5041 B | 06.08 - | 4091 | |
| ACTROS MP3 | 5041 K | 06.08 - | 4091 | |
| ACTROS MP3 | 5044 B | 06.08 - | 4091 | |
| ACTROS MP3 | 5044 K | 06.08 - | 4091 | |
| ACTROS MP3 | 5046 B | 06.08 - | 4091 | |
| ACTROS MP3 | 5046 K | 06.08 - | 4091 | |
| ATEGO | 2628 | 04.98 - 10.04 | 4091 | |
| ATEGO | - | 04- | | 3902 |
| ATEGO | - | 04- | | 3902/1 |
| ATEGO | 1823 K | 04.98 - 10.04 | 4091 | |
| ATEGO | 1823 LS | 04.98 - 10.04 | 4091 | |
| ATEGO | 1823, 1823 L | 01.98 - 10.04 | 4091 | |

| MAKE & MODEL | | YEAR | | |
|---|---|---|---|---|
| **MERCEDES-BENZ** | | | | |
| ATEGO | 1828 K | 04.98 - 10.04 | 4091 | |
| ATEGO | 1828 LS | 04.98 - 10.04 | 4091 | |
| ATEGO | 1828, 1828 L | 04.98 - 10.04 | 4091 | |
| ATEGO | 2523 L | 04.98 - 10.04 | 4091 | |
| ATEGO | 2528 L | 04.98 - 10.04 | 4091 | |
| ATEGO | 2628 B | 04.98 - 10.04 | 4091 | |
| ATEGO | 2628 K | 04.98 - 10.04 | 4091 | |
| ATEGO | 4.2 1214, 1214 L 4x2 12 Ton | *98-04* | 3789 | |
| ATEGO | 4.2 714 K 4x2 6.5 Ton | 98-04 | 3908 | 3908 |
| ATEGO | 4.2 714 K 4x2 6.5 Ton | 98-04 | 3908/1 | 3908/1 |
| ATEGO | 4.2 714, 714 L 4x2 6.5 Ton | 98-04 | 3908 | 3908 |
| ATEGO | 4.2 714, 714 L 4x2 6.5 Ton | 98-04 | 3908 | 3908 |
| ATEGO | 4.2 714, 714 L 4x2 6.5 Ton | 98-04 | 3908/1 | 3908/1 |
| ATEGO | 4.2 714, 714 L 4x2 6.5 Ton | 98-04 | 3908/1 | 3908/1 |
| ATEGO | 4.2 717 K 4x2 6.5 Ton | 98-04 | 3908 | 3908 |
| ATEGO | 4.2 717 K 4x2 6.5 Ton | 98-04 | 3908/1 | 3908/1 |
| ATEGO | 4.2 717, 717 L 4x2 6.5 Ton | 98-04 | 3908 | 3908 |
| ATEGO | 4.2 717, 717 L 4x2 6.5 Ton | 98-04 | 3908/1 | 3908/1 |
| ATEGO | 4.2 814 K 4x2 7.49 Ton | 98-04 | 3908 | 3908 |
| ATEGO | 4.2 814 K 4x2 7.49 Ton | 98-04 | 3908/1 | 3908/1 |
| ATEGO | 4.2 814 K 4x2 8 Ton | 98-04 | 3908 | 3908 |
| ATEGO | 4.2 814 K 4x2 8 Ton | 98-04 | 3908/1 | 3908/1 |
| ATEGO | 4.3 1017 K 4x2 10.5 Ton | 98-04 | 3908 | 3908 |
| ATEGO | 4.3 1017 K 4x2 10.5 Ton | 98-04 | 3908 | |
| ATEGO | 4.3 1017 K 4x2 10.5 Ton | 98-04 | 3908/1 | 3908/1 |
| ATEGO | 4.3 1017 K 4x2 10.5 Ton | 98-04 | 3908/1 | |
| ATEGO | 4.3 1017 KO, 1018 KO 4x2 10.5 Ton | 98-04 | 3908 | 3908 |
| ATEGO | 4.3 1017 KO, 1018 KO 4x2 10.5 Ton | 98-04 | 3908 | |
| ATEGO | 4.3 1017 KO, 1018 KO 4x2 10.5 Ton | 98-04 | 3908/1 | 3908/1 |
| ATEGO | 4.3 1017 KO, 1018 KO 4x2 10.5 Ton | 98-04 | 3908/1 | |
| ATEGO | 4.3 1017,1017L 4x2 10.5 Ton | 98-04 | 3908 | 3908 |
| ATEGO | 4.3 1017,1017L 4x2 10.5 Ton | 98-04 | 3908 | |
| ATEGO | 4.3 1017,1017L 4x2 10.5 Ton | 98-04 | 3908/1 | 3908/1 |
| ATEGO | 4.3 1017,1017L 4x2 10.5 Ton | 98-04 | 3908/1 | |
| ATEGO | 4.3 1215 K 4x2 12 Ton | *98-04* | 3789 | 3789 |
| ATEGO | 4.3 1215 K 4x2 12 Ton | *98-04* | 3789 | |
| ATEGO | 4.3 1215, L 4x2 12 Ton | *98-04* | 3789 | |
| ATEGO | 4.3 1215, L 4x2 12 Ton | *98-04* | 3789 | 3789 |
| ATEGO | 4.3 1217 K 4x2 12 Ton | *98-04* | 3789 | 3789 |
| ATEGO | 4.3 1217 K 4x2 12 Ton | *98-04* | 3789 | |
| ATEGO | 4.3 1217 KO 4x2 12 Ton | *98-04* | 3789 | 3789 |
| ATEGO | 4.3 1217 KO 4x2 12 Ton | *98-04* | 3789 | |
| ATEGO | 4.3 1217, L 4x2 12 Ton | *98-04* | 3789 | |
| ATEGO | 4.3 1217, L 4x2 12 Ton | *98-04* | 3789 | 3789 |
| ATEGO | 4.3 1317 K 4x2 13.5 Ton | *98-04* | 3789 | 3789 |
| ATEGO | 4.3 1317 K 4x2 13.5 Ton | *98-04* | 3789 | |
| ATEGO | 4.3 1317 KO,1317 LKO, 1318 KO, 1318 LKO 4x2 13.5 Ton | *98-04* | 3789 | |
| ATEGO | 4.3 1317 KO,1317 LKO, 1318 KO, 1318 LKO 4x2 13.5 Ton | *98-04* | 3789 | 3789 |
| ATEGO | 4.3 1317 L 4x2 13.5 Ton | *98-04* | 3789 | |
| ATEGO | 4.3 1317 L 4x2 13.5 Ton | *98-04* | 3789 | 3789 |
| ATEGO | 4.3 1517 K 4x2 15 Ton | *98-04* | 3789 | |
| ATEGO | 4.3 1517 K 4x2 15 Ton | *98-04* | 3789 | 3789 |
| ATEGO | 4.3 1517 L 4x2 15 Ton | *98-04* | 3789 | 3789 |
| ATEGO | 4.3 1517 L 4x2 15 Ton | *98-04* | 3789 | |
| ATEGO | 4.3 712 4x2 6.5 Ton | 98-04 | 3908 | 3908 |
| ATEGO | 4.3 712 4x2 6.5 Ton | 98-04 | 3908/1 | 3908/1 |
| ATEGO | 4.3 715, 715L 4x2 6.5 Ton | 98-04 | 3908 | 3908 |
| ATEGO | 4.3 715, 715L 4x2 6.5 Ton | 98-04 | 3908/1 | 3908/1 |
| ATEGO | 4.3 812 4x2 7.5 Ton | 98-04 | 3908 | 3908 |
| ATEGO | 4.3 812 4x2 7.5 Ton | 98-04 | 3908/1 | 3908/1 |
| ATEGO | 4.3 815 F 4x2 7.5 Ton | 98-04 | 3908 | 3908 |
| ATEGO | 4.3 815 F 4x2 7.5 Ton | 98-04 | 3908/1 | 3908/1 |
| ATEGO | 4.3 815 K 4x2 7.5 Ton | 98-04 | 3908 | 3908 |
| ATEGO | 4.3 815 K 4x2 7.5 Ton | 98-04 | 3908 | 3908 |
| ATEGO | 4.3 815 K 4x2 7.5 Ton | 98-04 | 3908/1 | 3908/1 |
| ATEGO | 4.3 815 K 4x2 7.5 Ton | 98-04 | 3908/1 | 3908/1 |
| ATEGO | 4.3 815 K 4x2 8 Ton | 98-04 | 3908 | 3908 |
| ATEGO | 4.3 815 K 4x2 8 Ton | 98-04 | 3908/1 | 3908/1 |
| ATEGO | 4.3 815, 815L 4x2 7.5 Ton | 98-04 | 3908 | 3908 |
| ATEGO | 4.3 815, 815L 4x2 7.5 Ton | 98-04 | 3908/1 | 3908/1 |
| ATEGO | 4.3 815, 815L 4x2 8 Ton | 98-04 | 3908 | 3908 |
| ATEGO | 4.3 815, 815L 4x2 8 Ton | 98-04 | 3908/1 | 3908/1 |
| ATEGO | 4.3 817 K 4x2 8 Ton | 98-04 | 3908 | 3908 |
| ATEGO | 4.3 817 K 4x2 8 Ton | 98-04 | 3908/1 | 3908/1 |
| ATEGO | 4.3 817, 817L 4x2 7.5 Ton | 98-04 | 3908 | 3908 |

| MAKE & MODEL | | YEAR | | |
|---|---|---|---|---|
| **MERCEDES-BENZ** | | | | |
| ATEGO | 4.3 817, 817L 4x2 7.5 Ton | 98-04 | 3908/1 | 3908/1 |
| ATEGO | 4.3 817, 817L 4x2 8 Ton | 98-04 | 3908 | 3908 |
| ATEGO | 4.3 817, 817L 4x2 8 Ton | 98-04 | 3908/1 | 3908/1 |
| ATEGO | 4.3 917 K 4x2 9.5 Ton | 98-04 | 3908 | 3908 |
| ATEGO | 4.3 917 K 4x2 9.5 Ton | 98-04 | 3908 | |
| ATEGO | 4.3 917 K 4x2 9.5 Ton | 98-04 | 3908/1 | 3908/1 |
| ATEGO | 4.3 917 K 4x2 9.5 Ton | 98-04 | 3908/1 | |
| ATEGO | 4.3 917 KO 4x2 9.5 Ton | 98-04 | 3908 | 3908 |
| ATEGO | 4.3 917 KO 4x2 9.5 Ton | 98-04 | 3908 | |
| ATEGO | 4.3 917 KO 4x2 9.5 Ton | 98-04 | 3908/1 | 3908/1 |
| ATEGO | 4.3 917 KO 4x2 9.5 Ton | 98-04 | 3908/1 | |
| ATEGO | 4.3 917, 917L 4x2 9.5 Ton | 98-04 | 3908 | 3908 |
| ATEGO | 4.3 917, 917L 4x2 9.5 Ton | 98-04 | 3908 | |
| ATEGO | 4.3 917, 917L 4x2 9.5 Ton | 98-04 | 3908/1 | 3908/1 |
| ATEGO | 4.3 917, 917L 4x2 9.5 Ton | 98-04 | 3908/1 | |
| ATEGO | 6.4 1023, 1023L 4x2 10.5 Ton | 98-04 | 3908 | 3908 |
| ATEGO | 6.4 1023, 1023L 4x2 10.5 Ton | 98-04 | 3908 | |
| ATEGO | 6.4 1023, 1023L 4x2 10.5 Ton | 98-04 | 3908/1 | 3908/1 |
| ATEGO | 6.4 1023, 1023L 4x2 10.5 Ton | 98-04 | 3908/1 | |
| ATEGO | 6.4 1223, L 4x2 12 Ton | *98-04* | 3789 | |
| ATEGO | 6.4 1223, L 4x2 12 Ton | *98-04* | 3789 | 3789 |
| ATEGO | 6.4 1225 F 4x2 12 Ton | *98-04* | 3789 | 3789 |
| ATEGO | 6.4 1225 F 4x2 12 Ton | *98-04* | 3789 | |
| ATEGO | 6.4 1228, L 4x2 12 Ton | *98-04* | 3789 | |
| ATEGO | 6.4 1228, L 4x2 12 Ton | *98-04* | 3789 | 3789 |
| ATEGO | 6.4 1323 KO, 1323 LKO 4x2 13.5 Ton | *98-04* | 3789 | 3789 |
| ATEGO | 6.4 1323 KO, 1323 LKO 4x2 13.5 Ton | *98-04* | 3789 | |
| ATEGO | 6.4 1323 L 4x2 13.5 Ton | *98-04* | 3789 | 3789 |
| ATEGO | 6.4 1323 L 4x2 13.5 Ton | *98-04* | 3789 | |
| ATEGO | 6.4 1323 LS 4x2 13.5 Ton | *98-04* | 3789 | 3789 |
| ATEGO | 6.4 1323 LS 4x2 13.5 Ton | *98-04* | 3789 | |
| ATEGO | 6.4 1325 F 4x2 13.5 Ton | *98-04* | 3789 | 3789 |
| ATEGO | 6.4 1325 F 4x2 13.5 Ton | *98-04* | 3789 | |
| ATEGO | 6.4 1328 F 4x2 13.5 Ton | *98-04* | 3789 | |
| ATEGO | 6.4 1328 F 4x2 13.5 Ton | *98-04* | 3789 | 3789 |
| ATEGO | 6.4 1328 L 4x2 13.5 Ton | *98-04* | 3789 | |
| ATEGO | 6.4 1328 L 4x2 13.5 Ton | *98-04* | 3789 | 3789 |
| ATEGO | 6.4 1328 LS 4x2 13.5 Ton | *98-04* | 3789 | |
| ATEGO | 6.4 1328 LS 4x2 13.5 Ton | *98-04* | 3789 | 3789 |
| ATEGO | 6.4 1523 K 4x2 15 Ton | *98-04* | 3789 | 3789 |
| ATEGO | 6.4 1523 KO 4x2 15 Ton | *98-04* | 3789 | |
| ATEGO | 6.4 1523 KO 4x2 15 Ton | *98-04* | 3789 | |
| ATEGO | 6.4 1523 KO 4x2 15 Ton | *98-04* | 3789 | |
| ATEGO | 6.4 1523 KO 4x2 15 Ton | *98-04* | 3789 | 3789 |
| ATEGO | 6.4 1523 L 4x2 15 Ton | *98-04* | 3789 | 3789 |
| ATEGO | 6.4 1523 L 4x2 15 Ton | *98-04* | 3789 | |
| ATEGO | 6.4 1528 F 4x2 15 Ton | *98-04* | 3789 | 3789 |
| ATEGO | 6.4 1528 F 4x2 15 Ton | *98-04* | 3789 | |
| ATEGO | 6.4 1528 L 4x2 15 Ton | *98-04* | 3789 | 3789 |
| ATEGO | 6.4 1528 L 4x2 15 Ton | *98-04* | 3789 | |
| ATEGO | 6.4 1818, 1828 L 4x2 18 Ton | *98-04* | 3664 | 3664 |
| ATEGO | 6.4 1823 AK 4WD 18 Ton | *98-04* | 3664 | 3664 |
| ATEGO | 6.4 1823 K 4x2 18 Ton | *98-04* | 3664 | 3664 |
| ATEGO | 6.4 1823 LS 4X2 18 Ton | *98-04* | 3664 | 3664 |
| ATEGO | 6.4 1823, 1823 L 4x2 18 Ton | *98-04* | 3664 | 3664 |
| ATEGO | 6.4 1828 A 4WD 18 Ton | *98-04* | 3664 | 3664 |
| ATEGO | 6.4 1828 AK 4WD 18 Ton | *98-04* | 3664 | 3664 |
| ATEGO | 6.4 1828 K 4x2 18 Ton | *98-04* | 3664 | 3664 |
| ATEGO | 6.4 1828 LS 4x2 18 Ton | *98-04* | 3664 | 3664 |
| ATEGO | 6.4 2523 L 6x2/4 25 Ton | *98-04* | 3664 | 3664 |
| ATEGO | 6.4 2528 L 6x2/2/4 25 Ton | *98-04* | 3664 | 3664 |
| ATEGO | 6.4 2628 6x4 26 Ton | *98-04* | 3664 | 3664 |
| ATEGO | 6.4 2628 B 6x4 26 Ton | *98-04* | 3664 | 3664 |
| ATEGO | 6.4 2628 K 6x4 26 Ton | *98-04* | 3664 | 3664 |
| ATEGO | 6.4 823 K 4x2 8 Ton | 98-04 | 3908 | 3908 |
| ATEGO | 6.4 823 K 4x2 8 Ton | 98-04 | 3908/1 | 3908/1 |
| ATEGO | 6.4 823, 823L 4x2 8 Ton | 98-04 | 3908 | 3908 |
| ATEGO | 6.4 823, 823L 4x2 8 Ton | 98-04 | 3908/1 | 3908/1 |
| ATEGO | 6.4 923 K 4x2 9.5 Ton | 98-04 | 3908 | |
| ATEGO | 6.4 923 K 4x2 9.5 Ton | 98-04 | 3908 | 3908 |
| ATEGO | 6.4 923 K 4x2 9.5 Ton | 98-04 | 3908 | 3908 |
| ATEGO | 6.4 923 K 4x2 9.5 Ton | 98-04 | 3908 | |
| ATEGO | 6.4 923 K 4x2 9.5 Ton | 98-04 | 3908/1 | |
| ATEGO | 6.4 923 K 4x2 9.5 Ton | 98-04 | 3908/1 | 3908/1 |
| ATEGO | 6.4 923 K 4x2 9.5 Ton | 98-04 | 3908/1 | 3908/1 |

| MAKE & MODEL | | YEAR | | |
|---|---|---|---|---|
| **MERCEDES-BENZ** | | | | |
| ATEGO | 6.4 923 K 4x2 9.5 Ton | 98-04 | 3908/1 | |
| ATEGO | | | | 3789/2 |
| ATEGO. II | 2529 L | 10.04 - | 4091 | |
| ATEGO. II | 4.2 1016 K 4x2 10.5 Ton | 04- | 3908 | |
| ATEGO. II | 4.2 1016 K 4x2 10.5 Ton | 04- | 3908 | 3908 |
| ATEGO. II | 4.2 1016 K 4x2 10.5 Ton | 04- | 3908/1 | |
| ATEGO. II | 4.2 1016 K 4x2 10.5 Ton | 04- | 3908/1 | 3908/1 |
| ATEGO. II | 4.2 1016, 1016 L 4x2 10.5 Ton | 04- | 3908 | |
| ATEGO. II | 4.2 1016, 1016 L 4x2 10.5 Ton | 04- | 3908 | 3908 |
| ATEGO. II | 4.2 1016, 1016 L 4x2 10.5 Ton | 04- | 3908 | |
| ATEGO. II | 4.2 1016, 1016 L 4x2 10.5 Ton | 04- | 3908/1 | |
| ATEGO. II | 4.2 1016, 1016 L 4x2 10.5 Ton | 04- | 3908/1 | 3908/1 |
| ATEGO. II | 4.2 1016, 1016 L 4x2 10.5 Ton | 04- | 3908/1 | |
| ATEGO. II | 4.2 1018 K 4x2 10 Ton | 04- | 3908 | |
| ATEGO. II | 4.2 1018 K 4x2 10 Ton | 04- | 3908 | 3908 |
| ATEGO. II | 4.2 1018 K 4x2 10 Ton | 04- | 3908/1 | |
| ATEGO. II | 4.2 1018 K 4x2 10 Ton | 04- | 3908/1 | 3908/1 |
| ATEGO. II | 4.2 1018, 1018 L 4x2 10.5 Ton | 04- | 3908 | 3908 |
| ATEGO. II | 4.2 1018, 1018 L 4x2 10.5 Ton | 04- | 3908/1 | 3908/1 |
| ATEGO. II | 4.2 1215/L, 1216/L 4x2 12 Ton | *04-* | 3789 | 3789 |
| ATEGO. II | 4.2 1215/L, 1216/L 4x2 12 Ton | *04-* | 3789 | |
| ATEGO. II | 4.2 1216 K 4x2 12 Ton | *04-* | 3789 | |
| ATEGO. II | 4.2 1216 K 4x2 12 Ton | *04-* | 3789 | 3789 |
| ATEGO. II | 4.2 1218 K 4x2 12 Ton | *04-* | 3789 | |
| ATEGO. II | 4.2 1218 K 4x2 12 Ton | *04-* | 3789 | 3789 |
| ATEGO. II | 4.2 1218, 1218 L 4x2 12 Ton | *04-* | 3789 | 3789 |
| ATEGO. II | 4.2 1218, 1218 L 4x2 12 Ton | *04-* | 3789 | |
| ATEGO. II | 4.2 1318 AK 4x4 13.5 Ton | *04-* | 3789 | 3789 |
| ATEGO. II | 4.2 1318 AK 4x4 13.5 Ton | *04-* | 3789 | |
| ATEGO. II | 4.2 1318 K 4x2 13.5 Ton | *04-* | 3789 | 3789 |
| ATEGO. II | 4.2 1318 K 4x2 13.5 Ton | *04-* | 3789 | |
| ATEGO. II | 4.2 1318, 1318 L 4x2 13.5 Ton | *04-* | 3789 | |
| ATEGO. II | 4.2 1318, 1318 L 4x2 13.5 Ton | *04-* | 3789 | 3789 |
| ATEGO. II | 4.2 1518 K 4x2 15 Ton | *04-* | 3789 | |
| ATEGO. II | 4.2 1518 K 4x2 15 Ton | *04-* | 3789 | 3789 |
| ATEGO. II | 4.2 1518, 1518 L 4x2 15 Ton | *04-* | 3789 | 3789 |
| ATEGO. II | 4.2 712, 713 4x2 6.5 Ton | 04- | 3908 | 3908 |
| ATEGO. II | 4.2 712, 713 4x2 6.5 Ton | 04- | 3908/1 | 3908/1 |
| ATEGO. II | 4.2 715/L, 716/L 4x2 6.5 Ton | 04- | 3908 | 3908 |
| ATEGO. II | 4.2 715/L, 716/L 4x2 6.5 Ton | 04- | 3908/1 | 3908/1 |
| ATEGO. II | 4.2 812, 813 4x2 7.5 Ton | 04- | 3908 | 3908 |
| ATEGO. II | 4.2 812, 813 4x2 7.5 Ton | 04- | 3908/1 | 3908/1 |
| ATEGO. II | 4.2 815 K, 816 K 4x2 7.49 Ton | 04- | 3908 | 3908 |
| ATEGO. II | 4.2 815 K, 816 K 4x2 7.49 Ton | 04- | 3908/1 | 3908/1 |
| ATEGO. II | 4.2 815 K, 816 K 4x2 8 Ton | 04- | 3908 | 3908 |
| ATEGO. II | 4.2 815 K, 816 K 4x2 8 Ton | 04- | 3908/1 | 3908/1 |
| ATEGO. II | 4.2 815/L, 816/L 4x2 7.49 Ton | 04- | 3908 | 3908 |
| ATEGO. II | 4.2 815/L, 816/L 4x2 7.49 Ton | 04- | 3908/1 | 3908/1 |
| ATEGO. II | 4.2 818 K 4x2 7.49 Ton | 04- | 3908 | 3908 |
| ATEGO. II | 4.2 818 K 4x2 7.49 Ton | 04- | 3908/1 | 3908/1 |
| ATEGO. II | 4.2 818 K 4x2 8 Ton | 04- | 3908 | 3908 |
| ATEGO. II | 4.2 818 K 4x2 8 Ton | 04- | 3908/1 | 3908/1 |
| ATEGO. II | 4.2 818, 818 L 4x2 7.49 Ton | 04- | 3908 | 3908 |
| ATEGO. II | 4.2 818, 818 L 4x2 7.49 Ton | 04- | 3908/1 | 3908/1 |
| ATEGO. II | 4.2 818, 818 L 4x2 8 Ton | 04- | 3908 | 3908 |
| ATEGO. II | 4.2 818, 818 L 4x2 8 Ton | 04- | 3908/1 | 3908/1 |
| ATEGO. II | 4.2 915/L, 916/L 4x2 9.5 Ton | 04- | 3908 | |
| ATEGO. II | 4.2 915/L, 916/L 4x2 9.5 Ton | 04- | 3908 | 3908 |
| ATEGO. II | 4.2 915/L, 916/L 4x2 9.5 Ton | 04- | 3908/1 | |
| ATEGO. II | 4.2 915/L, 916/L 4x2 9.5 Ton | 04- | 3908/1 | 3908/1 |
| ATEGO. II | 4.2 916 K 4x2 9.5 Ton | 04- | 3908 | |
| ATEGO. II | 4.2 916 K 4x2 9.5 Ton | 04- | 3908 | 3908 |
| ATEGO. II | 4.2 916 K 4x2 9.5 Ton | 04- | 3908/1 | |
| ATEGO. II | 4.2 916 K 4x2 9.5 Ton | 04- | 3908/1 | 3908/1 |
| ATEGO. II | 4.2 918 K 4x2 9.5 Ton | 04- | 3908 | 3908 |
| ATEGO. II | 4.2 918 K 4x2 9.5 Ton | 04- | 3908 | |
| ATEGO. II | 4.2 918 K 4x2 9.5 Ton | 04- | 3908/1 | 3908/1 |
| ATEGO. II | 4.2 918 K 4x2 9.5 Ton | 04- | 3908/1 | |
| ATEGO. II | 4.2 918, 918 L 4x2 9.5 Ton | 04- | 3908 | |
| ATEGO. II | 4.2 918, 918 L 4x2 9.5 Ton | 04- | 3908 | 3908 |
| ATEGO. II | 4.2 918, 918 L 4x2 9.5 Ton | 04- | 3908/1 | |
| ATEGO. II | 4.2 918, 918 L 4x2 9.5 Ton | 04- | 3908/1 | 3908/1 |
| ATEGO. II | 4.8 1022 K 4x2 10.5 Ton | 04- | 3908 | 3908 |
| ATEGO. II | 4.8 1022 K 4x2 10.5 Ton | 04- | 3908 | |
| ATEGO. II | 4.8 1022 K 4x2 10.5 Ton | 04- | 3908/1 | 3908/1 |

| MAKE & MODEL | | YEAR | 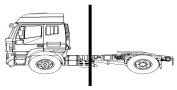 | |
|---|---|---|---|---|
| **MERCEDES-BENZ** | | | | |
| ATEGO. II | 4.8 1022 K 4x2 10.5 Ton | 04- | 3908/1 | |
| ATEGO. II | 4.8 1022, 1022 L 4x2 10.5 Ton | 04- | 3908 | |
| ATEGO. II | 4.8 1022, 1022 L 4x2 10.5 Ton | 04- | 3908 | 3908 |
| ATEGO. II | 4.8 1022, 1022 L 4x2 10.5 Ton | 04- | 3908/1 | |
| ATEGO. II | 4.8 1022, 1022 L 4x2 10.5 Ton | 04- | 3908/1 | 3908/1 |
| ATEGO. II | 4.8 1222 K 4x2 12 Ton | 04- | 3789 | |
| ATEGO. II | 4.8 1222 K 4x2 12 Ton | 04- | 3789 | 3789 |
| ATEGO. II | 4.8 1222, 1222 L 4x2 12 Ton | 04- | 3789 | 3789 |
| ATEGO. II | 4.8 1222, 1222 L 4x2 12 Ton | 04- | 3789 | |
| ATEGO. II | 4.8 1322 K 4x2 13.5 Ton | 04- | 3789 | 3789 |
| ATEGO. II | 4.8 1322 K 4x2 13.5 Ton | 04- | 3789 | |
| ATEGO. II | 4.8 1322 LS 4x2 13.5 Ton | 04- | 3789 | 3789 |
| ATEGO. II | 4.8 1322 LS 4x2 13.5 Ton | 04- | 3789 | |
| ATEGO. II | 4.8 1322, 1322 L 4x2 13.5 Ton | 04- | 3789 | 3789 |
| ATEGO. II | 4.8 1322, 1322 L 4x2 13.5 Ton | 04- | 3789 | |
| ATEGO. II | 4.8 1522, 1522 L 4x2 15 Ton | 04- | 3789 | 3789 |
| ATEGO. II | 4.8 1522, 1522 L 4x2 15 Ton | 04- | 3789 | |
| ATEGO. II | 4.8 822 K 4x2 7.49 Ton | 04- | 3908 | 3908 |
| ATEGO. II | 4.8 822 K 4x2 7.49 Ton | 04- | 3908/1 | 3908/1 |
| ATEGO. II | 4.8 822, 822 L 4x2 7.49 Ton | 04- | 3908 | 3908 |
| ATEGO. II | 4.8 822, 822 L 4x2 7.49 Ton | 04- | 3908/1 | 3908/1 |
| ATEGO. II | 4.8 822, 822 L 4x2 8 Ton | 04- | 3908 | 3908 |
| ATEGO. II | 4.8 822, 822 L 4x2 8 Ton | 04- | 3908/1 | 3908/1 |
| ATEGO. II | 4.8 922 K 4x2 9.5 Ton | 04- | 3908 | |
| ATEGO. II | 4.8 922 K 4x2 9.5 Ton | 04- | 3908 | 3908 |
| ATEGO. II | 4.8 922 K 4x2 9.5 Ton | 04- | 3908/1 | |
| ATEGO. II | 4.8 922 K 4x2 9.5 Ton | 04- | 3908/1 | 3908/1 |
| ATEGO. II | 4.8 922, 922 L 4x2 9.5 Ton | 04- | 3908 | |
| ATEGO. II | 4.8 922, 922 L 4x2 9.5 Ton | 04- | 3908 | 3908 |
| ATEGO. II | 4.8 922, 922 L 4x2 9.5 Ton | 04- | 3908/1 | |
| ATEGO. II | 4.8 922, 922 L 4x2 9.5 Ton | 04- | 3908/1 | 3908/1 |
| ATEGO. II | 6.4 1023/L, 1024/L 4x2 10.5 Ton | 04- | 3908 | 3908 |
| ATEGO. II | 6.4 1023/L, 1024/L 4x2 10.5 Ton | 04- | 3908 | |
| ATEGO. II | 6.4 1023/L, 1024/L 4x2 10.5 Ton | 04- | 3908/1 | 3908/1 |
| ATEGO. II | 6.4 1023/L, 1024/L 4x2 10.5 Ton | 04- | 3908/1 | |
| ATEGO. II | 6.4 1024 K 4x2 10.5 Ton | 04- | 3908 | 3908 |
| ATEGO. II | 6.4 1024 K 4x2 10.5 Ton | 04- | 3908 | |
| ATEGO. II | 6.4 1024 K 4x2 10.5 Ton | 04- | 3908/1 | 3908/1 |
| ATEGO. II | 6.4 1024 K 4x2 10.5 Ton | 04- | 3908/1 | |
| ATEGO. II | 6.4 1223/L, 1224/L 4x2 12 Ton | 04- | 3789 | |
| ATEGO. II | 6.4 1223/L, 1224/L 4x2 12 Ton | 04- | 3789 | 3789 |
| ATEGO. II | 6.4 1224 K 4x2 12 Ton | 04- | 3789 | |
| ATEGO. II | 6.4 1224 K 4x2 12 Ton | 04- | 3789 | 3789 |
| ATEGO. II | 6.4 1226, 1226 L 4x2 12 Ton | 04- | 3789 | 3789 |
| ATEGO. II | 6.4 1226, 1226 L 4x2 12 Ton | 04- | 3789 | |
| ATEGO. II | 6.4 1228/L, 1229/L 4x2 12 Ton | 04- | 3789 | 3789 |
| ATEGO. II | 6.4 1228/L, 1229/L 4x2 12 Ton | 04- | 3789 | |
| ATEGO. II | 6.4 1323 LS, 1324 LS 4x2 13.5 Ton | 04- | 3789 | 3789 |
| ATEGO. II | 6.4 1323 LS, 1324 LS 4x2 13.5 Ton | 04- | 3789 | |
| ATEGO. II | 6.4 1323/L, 1324/L 4x2 13.5 Ton | 04- | 3789 | 3789 |
| ATEGO. II | 6.4 1323/L, 1324/L 4x2 13.5 Ton | 04- | 3789 | |
| ATEGO. II | 6.4 1324 AK 4x4 13.5 Ton | 04- | 3789 | 3789 |
| ATEGO. II | 6.4 1324 AK 4x4 13.5 Ton | 04- | 3789 | |
| ATEGO. II | 6.4 1324 K 4x2 13.5 Ton | 04- | 3789 | |
| ATEGO. II | 6.4 1324 K 4x2 13.5 Ton | 04- | 3789 | 3789 |
| ATEGO. II | 6.4 1326 LS 4x2 13.5 Ton | 04- | 3789 | |
| ATEGO. II | 6.4 1326 LS 4x2 13.5 Ton | 04- | 3789 | 3789 |
| ATEGO. II | 6.4 1326, 1326 L 4x2 13.5 Ton | 04- | 3789 | 3789 |
| ATEGO. II | 6.4 1326, 1326 L 4x2 13.5 Ton | 04- | 3789 | |
| ATEGO. II | 6.4 1328 LS, 1329 LS 4x2 13.5 Ton | 04- | 3789 | |
| ATEGO. II | 6.4 1328 LS, 1329 LS 4x2 13.5 Ton | 04- | 3789 | 3789 |
| ATEGO. II | 6.4 1328/L, 1329/L 4x2 13.5 Ton | 04- | 3789 | 3789 |
| ATEGO. II | 6.4 1328/L, 1329/L 4x2 13.5 Ton | 04- | 3789 | |
| ATEGO. II | 6.4 1523 K,1524 K 4x2 15 Ton | 04- | 3789 | 3789 |
| ATEGO. II | 6.4 1523/L, 1524/L 4x2 15 Ton | 04- | 3789 | 3789 |
| ATEGO. II | 6.4 1523/L, 1524/L 4x2 15 Ton | 04- | 3789 | |
| ATEGO. II | 6.4 1524 AK 4x4 15 Ton | 04- | 3789 | |
| ATEGO. II | 6.4 1524 AK 4x4 15 Ton | 04- | 3789 | 3789 |
| ATEGO. II | 6.4 1524 K 4x2 15 Ton | 04- | 3789 | |
| ATEGO. II | 6.4 1526 AK 4x4 15 Ton | 04- | 3789 | 3789 |
| ATEGO. II | 6.4 1526 K 4x2 15 Ton | 04- | 3789 | |
| ATEGO. II | 6.4 1526 K 4x2 15 Ton | 04- | 3789 | 3789 |
| ATEGO. II | 6.4 1526, 1526 L 4x2 15 Ton | 04- | 3789 | 3789 |
| ATEGO. II | 6.4 1526, 1526 L 4x2 15 Ton | 04- | 3789 | |
| ATEGO. II | 6.4 1528/L, 1529/L 4x2 15 Ton | 04- | 3789 | |

| MAKE & MODEL | | YEAR | 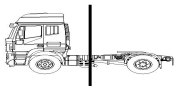 | |
|---|---|---|---|---|
| **MERCEDES-BENZ** | | | | |
| ATEGO. II | 6.4 1528/L, 1529/L 4x2 15 Ton | *04-* | 3789 | 3789 |
| ATEGO. II | 6.4 1529 AK 4x4 15 Ton | *04-* | 3789 | 3789 |
| ATEGO. II | 6.4 1529 AK 4x4 15 Ton | *04-* | 3789 | |
| ATEGO. II | 6.4 1529 K 4x2 15 Ton | *04-* | 3789 | |
| ATEGO. II | 6.4 1529 K 4x2 15 Ton | *04-* | 3789 | 3789 |
| ATEGO. II | 6.4 823/L, 824/L 4x2 8 Ton | 04- | 3908 | 3908 |
| ATEGO. II | 6.4 823/L, 824/L 4x2 8 Ton | 04- | 3908/1 | 3908/1 |
| ATEGO. II | 6.4 824 K 4x2 8 Ton | 04- | 3908 | 3908 |
| ATEGO. II | 6.4 824 K 4x2 8 Ton | 04- | 3908/1 | 3908/1 |
| ATEGO. II | 6.4 923/L, 924/L 4x2 9.5 Ton | 04- | 3908 | |
| ATEGO. II | 6.4 923/L, 924/L 4x2 9.5 Ton | 04- | 3908 | 3908 |
| ATEGO. II | 6.4 923/L, 924/L 4x2 9.5 Ton | 04- | 3908/1 | |
| ATEGO. II | 6.4 923/L, 924/L 4x2 9.5 Ton | 04- | 3908/1 | 3908/1 |
| ATEGO. II | 6.4 924 K 4x2 9.5 Ton | 04- | 3908 | |
| ATEGO. II | 6.4 924 K 4x2 9.5 Ton | 04- | 3908 | 3908 |
| ATEGO. II | 6.4 924 K 4x2 9.5 Ton | 04- | 3908/1 | |
| ATEGO. II | 6.4 924 K 4x2 9.5 Ton | 04- | 3908/1 | 3908/1 |
| AXOR | 1823 | *01/02-10/04* | 3664/1 | |
| AXOR | 2523 | 01.02 - 10.04 | 4091 | |
| AXOR | 2528 | 01.02 - 10.04 | 4091 | |
| AXOR | 12.0 1835 LS 4x2 18 Ton | *02-* | 3664 | 3664 |
| AXOR | 12.0 1840 LS 4x2 18 Ton | *02-* | 3664 | 3664 |
| AXOR | 12.0 1843 LS 4x2 18 Ton | *02-* | 3664 | 3664 |
| AXOR | 12.0 2535 LS 4x2 25 Ton | *02-* | 3664 | 3664 |
| AXOR | 12.0 2540 LS 4x2 25 Ton | *02-* | 3664 | 3664 |
| AXOR | 12.0 2543 LS 4x2 25 Ton | *02-* | 3664 | 3664 |
| AXOR | 1823 K | 01.02 - 10.04 | 4091 | |
| AXOR | 1835 LS | 01.02 - 10.04 | 4091 | |
| AXOR | 1840 LS | 01.02 - 10.04 | 4091 | |
| AXOR | 1843 LS | 01.02 - 10.04 | 4091 | |
| AXOR | 2523 K | 01.02 - 10.04 | 4091 | |
| AXOR | 2535 LS | 01.02 - 10.04 | 4091 | |
| AXOR | 2540 LS | 01.02 - 10.04 | 4091 | |
| AXOR | 2543 LS | 01.02 - 10.04 | 4091 | |
| AXOR | 2623 L | 01.02 - 10.04 | 4091 | |
| AXOR | 2628 B | 01.02 - 10.04 | 4091 | |
| AXOR | 2628 K | 01.02 - 10.04 | 4091 | |
| AXOR | 2628 L | 01.02 - 10.04 | 4091 | |
| AXOR | 3228 C | 01.02 - 10.04 | 4091 | |
| AXOR | 6.4 1823 4x2 18 Ton | *02-* | 3664 | 3664 |
| AXOR | 6.4 1823 K 4x2 18 Ton | *02-* | 3664 | 3664 |
| AXOR | 6.4 2523 6x2 25 Ton | *02-* | 3664 | 3664 |
| AXOR | 6.4 2523 K 6x2 25 Ton | *02-* | 3664 | 3664 |
| AXOR | 6.4 2528 6x2 25 Ton | *02-* | 3664 | 3664 |
| AXOR | 6.4 2623 L 6x2 26 Ton | *02-* | 3664 | 3664 |
| AXOR | 6.4 2628 B 6x2 26 Ton | *02-* | 3664 | 3664 |
| AXOR | 6.4 2628 K 6x2 26 Ton | *02-* | 3664 | 3664 |
| AXOR | 6.4 2628 L 6x2 26 Ton | *02-* | 3664 | 3664 |
| AXOR | 6.4 3228 6x4 32 Ton | *02-* | 3664 | 3664 |
| AXOR 2 | 1933 | 10.04 - | 4091 | |
| AXOR 2 | 2523 | - | 4091 | |
| AXOR 2 | 2633 | 10.04 - | 4091 | |
| AXOR 2 | 2636 | 10.04 - | 4091 | |
| AXOR 2 | 2640 | 10.04 - | 4091 | |
| AXOR 2 | 2643 | 10.04 - | 4091 | |
| AXOR 2 | 3228 | - | 4091 | |
| AXOR 2 | 3235 | 10.04 - | 4091 | |
| AXOR 2 | 3240 | 03.05 - | 4091 | |
| AXOR 2 | 3243 | 10.04 - | 4091 | |
| AXOR 2 | 3335 | 10.04 - | 4091 | |
| AXOR 2 | 3340 | 10.04 - | 4091 | |
| AXOR 2 | 3343 | 10.04 - | 4091 | |
| AXOR 2 | 1823 K, 1823 KL, 1824 K | 10.04 - | 4091 | |
| AXOR 2 | 1823 LS, 1824 LS | 10.04 - | 4091 | |
| AXOR 2 | 1823, 1823 L, 1824, 1824 L, LL | 10.04 - | 4091 | |
| AXOR 2 | 1826 K | 10.04 - | 4091 | |
| AXOR 2 | 1826 LS | 10.04 - | 4091 | |
| AXOR 2 | 1826, 1826 L, LL | 10.04 - | 4091 | |
| AXOR 2 | 1828 K, 1828 KL, 1829 K | 10.04 - | 4091 | |
| AXOR 2 | 1828 LS | 10.04 - | 4091 | |
| AXOR 2 | 1828, 1828 L, 1829, 1829 L, LL | 10.04 - | 4091 | |
| AXOR 2 | 1829 LS | 10.04 - | 4091 | |
| AXOR 2 | 1833 K | 10.04 - | 4091 | |
| AXOR 2 | 1833 LS | 10.04 - | 4091 | |
| AXOR 2 | 1833, 1833 L, LL | 10.04 - | 4091 | |

| MAKE & MODEL | | YEAR | | |
|---|---|---|---|---|
| **MERCEDES-BENZ** | | | | |
| AXOR 2 | 1835 LS | 01.11 - | 4091 | |
| AXOR 2 | 1836 LS, LLS | 10.04 - | 4091 | |
| AXOR 2 | 1840 LS, LLS | 10.04 - | 4091 | |
| AXOR 2 | 1933 S | 01.11 - | 4091 | |
| AXOR 2 | 2035 S | 01.11 - | 4091 | |
| AXOR 2 | 2040 S | 01.11 - | 4091 | |
| AXOR 2 | 2044 S | 01.11 - | 4091 | |
| AXOR 2 | 2436 LS, 2536 LS | 10.04 - | 4091 | |
| AXOR 2 | 2440 LS, 2540 LS | 10.04 - | 4091 | |
| AXOR 2 | 2443 LS, 2543 LS | 10.04 - | 4091 | |
| AXOR 2 | 2528 K, 2528 KL | 01.11 - | 4091 | |
| AXOR 2 | 2528 L, 2529 L | 10.04 - | 4091 | |
| AXOR 2 | 2533, 2533 L | 10.04 - | 4091 | |
| AXOR 2 | 2535 L, 2536 L, 2536 LL | 10.04 - | 4091 | |
| AXOR 2 | 2535 S, 2535 LS | 10.04 - | 4091 | |
| AXOR 2 | 2540 L, LL | 10.04 - | 4091 | |
| AXOR 2 | 2540 S, 2540 LS | 10.04 - | 4091 | |
| AXOR 2 | 2543 L, LL | 10.04 - | 4091 | |
| AXOR 2 | 2543 S, 2543 LS | 10.04 - | 4091 | |
| AXOR 2 | 2628 B, 2629 B | 10.04 - | 4091 | |
| AXOR 2 | 2628 K, 2629 K | 10.04 - | 4091 | |
| AXOR 2 | 2628, 2629 | 10.04 - | 4091 | |
| AXOR 2 | 2633 B | 10.04 - | 4091 | |
| AXOR 2 | 2633 K | 10.04 - | 4091 | |
| AXOR 2 | 2635 B | 10.05 - | 4091 | |
| AXOR 2 | 2636 B | 10.04 - | 4091 | |
| AXOR 2 | 2636 K | 10.04 - | 4091 | |
| AXOR 2 | 2640 B | 10.04 - | 4091 | |
| AXOR 2 | 2640 K | 10.04 - | 4091 | |
| AXOR 2 | 2640 S | 10.04 - | 4091 | |
| AXOR 2 | 2643 B | 10.04 - | 4091 | |
| AXOR 2 | 2643 K | 10.04 - | 4091 | |
| AXOR 2 | 2644 S | 01.11 - | 4091 | |
| AXOR 2 | 3028 B | - | 4091 | |
| AXOR 2 | 3028 K | - | 4091 | |
| AXOR 2 | 3236 B | 10.04 - | 4091 | |
| AXOR 2 | 3236 K | 10.04 - | 4091 | |
| AXOR 2 | 3240 B | 10.04 - | 4091 | |
| AXOR 2 | 3240 K | 10.04 - | 4091 | |
| AXOR 2 | 3243 B | 10.04 - | 4091 | |
| AXOR 2 | 3243 K | 10.04 - | 4091 | |
| AXOR 2 | 3335 B | 10.04 - 10.05 | 4091 | |
| AXOR 2 | 3335 K | 06.09 - | 4091 | |
| AXOR 2 | 3335 S | 09.08 - | 4091 | |
| AXOR 2 | 3340 B | 10.04 - 10.05 | 4091 | |
| AXOR 2 | 3340 K | 10.04 - | 4091 | |
| AXOR 2 | 3340 S | 06.09 - | 4091 | |
| AXOR 2 | 3343 B | 10.04 - | 4091 | |
| AXOR 2 | 3343 K | 01.11 - | 4091 | |
| AXOR 2 | 3344 K | 01.11 - | 4091 | |
| AXOR 2 | 4135 B | 10.05 - | 4091 | |
| AXOR 2 | 4135 K | 06.09 - | 4091 | |
| AXOR 2 | 4140 B | - | 4091 | |
| AXOR 2 | 4140 K | 06.09 - | 4091 | |
| AXOR 2 | 4143 B | - | 4091 | |
| AXOR 2 | 4143 K | - | 4091 | |
| AXOR 2 | 4143 K | 06.09 - | 4091 | |
| CITARO | ( O 530 ) | *04/99-* | 3664/1 | |
| CITO | 4.2 O 520 4.2 4x2 12 Ton. | *99-* | 3664 | 3664 |
| ECONIC | 1823LL | *03/98-* | 3664/1 | |
| ECONIC | 1828 LS | 10.04 - | 4091 | |
| ECONIC | 1829 LS | 10.07 - | 4091 | |
| ECONIC | 1833 LS | 10.07 - | 4091 | |
| ECONIC | 2628 L | 10.00 - | 4091 | |
| ECONIC | 6.4 1823 LL 4x2 18 Ton | *98-* | 3664 | 3664 |
| ECONIC | 6.4 1828 LL 4x2 18 Ton | *98-* | 3664 | 3664 |
| ECONIC | 6.4 2628 LL 6x2/4 26 Ton | *98-* | 3664 | 3664 |
| ECONIC | 6.4 2628 LL 6x4 26 Ton | *98-* | 3664 | 3664 |
| Eje DCA | DCA 377x45 -9 Ton | | | 3789 |
| Eje DLS | DLS 8 Loch 377x45 9 a 10.5 Ton | | | 3789 |
| Eje DLS | DLS 10 Loch 377x45 9 a 10.5 Ton | | | 3789 |
| Eje TE | TE3/1C 6-9 377x45 - 9 Ton | | | 3789 |
| Eje TE | TE4/2C 6-9 377x45 - 9 Ton | | | 3789 |
| Eje TE | TE4/3C 6-9 377x45 - 9 Ton | | | 3789 |
| Eje TE | TE4/5C 6-9 377x45 - 9 Ton | | | 3789 |

| MAKE & MODEL | | YEAR | | |
|---|---|---|---|---|
| **MERCEDES-BENZ** | | | | |
| Eje TE | TE4/6C 6-9 377x45 - 9 Ton | | | 3789 |
| Eje TE | TE4/8C 6-9 377x45 - 9 Ton | | | 3789 |
| Eje TL | TL4/1C 6-9 377x45 - 9 Ton | | | 3789 |
| Eje TZ | TZ3/1C 6-10 377x45 -10 Ton | | | 3789 |
| Eje TZ | TZ3/2C6-10.5 377x45 -10.5 Ton | | | 3789 |
| Eje TZ | TZ4/8C 6-9 377x45 - 9 Ton | | | 3789 |
| Eje/Axle | Llanta 22.5" DWP 5000 (SK7/MA7) | 96- | | 3902 |
| Eje/Axle | Llanta 22.5" DWP 5000 (SK7/MA7) | 96- | | 3902/1 |
| O 340 | 11.0 4x2 18 Ton. | 91-95 | 3497 | 3497 |
| O 340 | 11.0 4x2 18 Ton. | 91-95 | 3497/1 | 3497/1 |
| O 340 | 12.8 4x2 17 Ton. | 92-95 | 3497 | 3497 |
| O 340 | 12.8 4x2 17 Ton. | 92-95 | 3497/1 | 3497/1 |
| O 350 TOURISMO | 11.0 RHD, SHD 4x2 18 Ton. | 95- | 3497 | 3497 |
| O 350 TOURISMO | 11.0 RHD, SHD 4x2 18 Ton. | 95- | 3497/1 | 3497/1 |
| O 350 TOURISMO | 12.0 RHD, SHD 4x2 18 Ton. | 03- | 3664 | 3664 |
| O 350 TOURISMO | 12.0 RHD, SHD 4x2 18 Ton. | 03- | 3664 | 3664 |
| O 350 TOURISMO | 12.8 4x2 18 Ton. | 95- | 3497 | 3497 |
| O 350 TOURISMO | 12.8 4x2 18 Ton. | 95- | 3497/1 | 3497/1 |
| O 350 TOURISMO | 14.6 4x2 18 Ton. | 95- | 3497 | 3497 |
| O 350 TOURISMO | 14.6 4x2 18 Ton. | 95- | 3497/1 | 3497/1 |
| O 404 | 11.0 4x2 14.5 Ton. | 94- | 3497 | 3497 |
| O 404 | 11.0 4x2 14.5 Ton. | 94- | 3497/1 | 3497/1 |
| O 404 | 11.0 4x2 17 Ton. | 91- | 3497 | 3497 |
| O 404 | 11.0 4x2 17 Ton. | 94- | 3497 | 3497 |
| O 404 | 11.0 4x2 17 Ton. | 91- | 3497/1 | 3497/1 |
| O 404 | 11.0 4x2 17 Ton. | 94- | 3497/1 | 3497/1 |
| O 404 | 11.0 4x2 18 Ton. | 91- | 3497 | 3497 |
| O 404 | 11.0 4x2 18 Ton. | 94- | 3497 | 3497 |
| O 404 | 11.0 4x2 18 Ton. | 91- | 3497/1 | 3497/1 |
| O 404 | 11.0 4x2 18 Ton. | 94- | 3497/1 | 3497/1 |
| O 404 | 11.3 4x2 14.5 Ton. | 91-92 | 3497 | 3497 |
| O 404 | 11.3 4x2 14.5 Ton. | 92- | 3497 | 3497 |
| O 404 | 11.3 4x2 14.5 Ton. | 91-92 | 3497/1 | 3497/1 |
| O 404 | 11.3 4x2 14.5 Ton. | 92- | 3497/1 | 3497/1 |
| O 404 | 12.8 4x2 17 Ton. | 91-94 | 3497 | 3497 |
| O 404 | 12.8 4x2 17 Ton. | 91-94 | 3497/1 | 3497/1 |
| O 404 | 12.8 4x2 18 Ton. | 91-94 | 3497 | 3497 |
| O 404 | 12.8 4x2 18 Ton. | 91-94 | 3497/1 | 3497/1 |
| O 404 | 14.6 4x2 17 Ton. | 94- | 3497 | 3497 |
| O 404 | 14.6 4x2 17 Ton. | 94- | 3497/1 | 3497/1 |
| O 404 | 14.6 4x2 18 Ton. | 94- | 3497 | 3497 |
| O 404 | 14.6 4x2 18 Ton. | 94- | 3497/1 | 3497/1 |
| O 404 | 14.6 6x2 26 Ton. | 94-99 | 3497 | 3497 |
| O 404 | 14.6 6x2 26 Ton. | 94-99 | 3497/1 | 3497/1 |
| O 404 | 15.1 4x2 18 Ton. | 91-92 | 3497 | 3497 |
| O 404 | 15.1 4x2 18 Ton. | 91-92 | 3497 | 3497 |
| O 404 | 15.1 4x2 18 Ton. | 91-92 | 3497/1 | 3497/1 |
| O 404 | 15.1 4x2 18 Ton. | 91-92 | 3497/1 | 3497/1 |
| O 404 | 9.6 4x2 14.5 Ton. | 91-94 | 3497 | 3497 |
| O 404 | 9.6 4x2 14.5 Ton. | 91-94 | 3497/1 | 3497/1 |
| O 404 | 9.6 4x2 17 Ton. | 91-94 | 3497 | 3497 |
| O 404 | 9.6 4x2 17 Ton. | 91-94 | 3497/1 | 3497/1 |
| O 404 | 9.6 4x2 18 Ton. | 92-94 | 3497 | 3497 |
| O 404 | 9.6 4x2 18 Ton. | 92-94 | 3497/1 | 3497/1 |
| O 404 | 9.8 4x2 14.5 Ton. | 91- | 3497 | 3497 |
| O 404 | 9.8 4x2 14.5 Ton. | 91- | 3497/1 | 3497/1 |
| O 404 | 9.8 4x2 18 Ton. | 91- | 3497 | 3497 |
| O 404 | 9.8 4x2 18 Ton. | 91- | 3497/1 | 3497/1 |
| O 510 TOURINO | 6.4 4x2 12.6 Ton | 03- | 3789 | 3789 |
| O 510 TOURINO | 6.4 4x2 12.6 Ton | 03- | 3789 | 3789 |
| O 520 CITO | 4.2 4x2 12 Ton | 98- | 3664 | 3664 |
| O 530 CITARO | 12.0 GNG 6x2 28 Ton. | 00- | 3664 | 3664 |
| O 530 CITARO | 12.0 N 4x2 18 Ton. | 98- | 3664 | 3664 |
| O 530 CITARO | 12.0 N 4x2 18 Ton. | 98- | 3664 | 3664 |
| O 530 CITARO | 12.0 N 4x2 18 Ton. | 98- | 3664 | 3664 |
| O 530 CITARO | 12.0 NG 4x2 18 Ton. | 00- | 3664 | 3664 |
| O 530 CITARO | 12.0 NG 4x2 18 Ton. | 00- | 3664 | 3664 |
| O 530 CITARO | 6.4 G 6x2 28 Ton. | 99- | 3664 | 3664 |
| O 530 CITARO | 6.4 G 6x2 28 Ton. | 98- | 3664 | 3664 |
| O 530 CITARO | 6.4 L 6x2 25 Ton. | 99- | 3664 | 3664 |
| O 530 CITARO | 6.4 N 4x2 18 Ton. | 98- | 3664 | 3664 |
| O 530 CITARO | 6.4 N 4x2 18 Ton. | 98- | 3664 | 3664 |
| O 530 CITARO | 6.4 N 4x2 18 Ton. | 98- | 3664 | 3664 |
| O 550 INTEGRO | L | 00- | 3497 | 5890 |
| O 550 INTEGRO | L | 00- | 3497 | 5890 |
| O 550 INTEGRO | L | 00- | 3497 | 5890 |

| MAKE & MODEL | | YEAR | 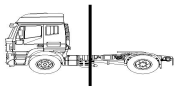 | |
|---|---|---|---|---|
| **MERCEDES-BENZ** | | | | |
| O 550 INTEGRO | L | 00- | 3497/1 | 5890 |
| O 550 INTEGRO | L | 00- | 3497/1 | 5890 |
| O 580 TRAVEGO | 12.0 O 580-15 RH/RHD 4x2 18 Ton. | 99- | 3664 | 3664 |
| O 580 TRAVEGO | 12.0 O 580-15 RH/RHD 4x2 18 Ton. | 99- | 3664 | 3664 |
| O 580 TRAVEGO | 12.0 O 580-15 RHD 4x2 18 Ton. | 99- | 3664 | 3664 |
| O 580 TRAVEGO | 12.0 O 580-17 RHD 6x2 26 Ton. | 99- | 3664 | 3664 |
| O 580 TRAVEGO | 15.9 O 580-17 RHD 6x2 26 Ton. | 99- | 3664 | 3664 |
| O 580 TRAVEGO | 15.9 O 580-17 RHD 6x2 26 Ton. | 99- | 3664 | 3664 |
| T22 LT | | 04- | | 4130 |
| TOURISMO | ( O 350 ) | 09/03- | 3664/1 | |
| TRAVEGO | ( O 580) | 10/99- | 3664/1 | |
| | Llanta 19.5" Atego,O 510 Tourino (SB/SN6000 SB/SN6500) | 98-04 | 3789 | 3789 |
| | Llanta 19.5" Eje DCA,DLS, TE, TL, TZ (SB/SN6000 SB/SN6500) | | | 3789 |
| **MERITOR** | | | | |
| Assali / Axles | D-Elsa | | 3828 | |
| Assali / Axles | D-Elsa | | 3828/1 | |
| LM | LM V_Eq. Solo LRG764, LRG765 | - | | 4164 |
| LMC | LM V_Eq. Solo LRG764, LRG765 | - | | 4164 |
| **NEOPLAN** | | | | |
| CENTROLINER | 12.0 N 4416 4x2 18 Ton | 99-01 | 3664 | 3664 |
| CENTROLINER | 12.0 N 4416 4x2 18 Ton | 99-01 | 3664 | 3664 |
| CENTROLINER | 12.0 N 4420 6x2 25 Ton | 99- | 3664 | 3664 |
| CENTROLINER | 12.0 N 4420 6x2 25 Ton | 99- | 3664 | 3664 |
| CENTROLINER | 12.0 N 4420 6x2 25 Ton | 99- | 3664 | 3664 |
| CENTROLINER | 12.0 N 4421 6x2 28 Ton | 99- | 3664 | 3664 |
| CENTROLINER | 12.0 N 4421 6x2 28 Ton | 99- | 3664 | 3664 |
| CENTROLINER | 12.0 N 4421 6x2 28 Ton | 99- | 3664 | 3664 |
| CENTROLINER | 6.9 N 4407 4x2 11.5 Ton | 98- | 3664 | 3664 |
| CENTROLINER | 6.9 N 4411 4x2 18 Ton | 98- | 3664 | 3664 |
| CENTROLINER | 6.9 N 4411 4x2 18 Ton | 98- | 3664 | 3664 |
| CENTROLINER | 6.9 N 4416 4x2 18 Ton | 98- | 3664 | 3664 |
| CENTROLINER | 6.9 N 4416 4x2 18 Ton | 99-01 | 3664 | 3664 |
| CITYLINER | 11.0 N 116 4x2 18 Ton | 90- | 3664 | 3664 |
| CITYLINER | 11.0 N 116 4x2 18 Ton | 90-93 | 3664 | 3664 |
| CITYLINER | 11.0 N 116 4x2 18 Ton | 92- | 3664 | 3664 |
| CITYLINER | 11.6 N 116 4x2 18 Ton | 92- | 3664 | 3664 |
| CITYLINER | 11.6 N 116 4x2 18 Ton | 92- | 3664 | 3664 |
| CITYLINER | 12.0 N 116 4x2 18 Ton | 92- | 3664 | 3664 |
| CITYLINER | 12.0 N 116 4x2 18 Ton | 92- | 3664 | 3664 |
| CITYLINER | 12.0 N 116 4x2 18 Ton | 92- | 3664 | 3664 |
| CITYLINER | 12.8 N 116 4x2 18 Ton | 90-92 | 3664 | 3664 |
| CITYLINER | 12.8 N 116 4x2 18 Ton | 90-92 | 3664 | 3664 |
| CITYLINER | 12.8 N 116/3 HC 6x2 25.5 Ton | 04- | 3664 | 3664 |
| EUROLINER | 12.0 N 3316 K 4x2 18 Ton | 92- | 3664 | 3664 |
| EUROLINER | 12.0 N 3316 KL 6x2 25.1 Ton | 92- | 3664 | 3664 |
| EUROLINER | 12.0 N 3316 Ü 4x2 18 Ton | 92- | 3664 | 3664 |
| EUROLINER | 12.0 N 3316 ÜL 6x2 25.1 Ton | 92- | 3664 | 3664 |
| EUROLINER | 12.0 N 3318/3 Ü 6x2 25.1 Ton | 92- | 3664 | 3664 |
| EUROLINER | 12.0 N 3318/3 Ü 6x2 25.1 Ton | 92- | 3664 | 3664 |
| JETLINER | 11.0 N 214, N 216 4x2 17.6 Ton | 90-92 | 3664 | 3664 |
| JETLINER | 11.0 N 214, N 216 4x2 17.6 Ton | 90-93 | 3664 | 3664 |
| JETLINER | 11.0 N 214, N 216 4x2 17.6 Ton | 92- | 3664 | 3664 |
| JETLINER | 11.6 N 214, N 216 4x2 17.6 Ton | 90-93 | 3664 | 3664 |
| JETLINER | 11.6 N 214, N 216 4x2 17.6 Ton | 92- | 3664 | 3664 |
| JETLINER | 12.0 N 214, N 216 4x2 17.6 Ton | 90- | 3664 | 3664 |
| JETLINER | 12.0 N 214, N 216 4x2 17.6 Ton | 90-92 | 3664 | 3664 |
| JETLINER | 12.0 N 214, N 216 4x2 17.6 Ton | 90- | 3664 | 3664 |
| JETLINER | 12.8 N 213 4x2 14.2 Ton | 90-92 | 3664 | 3664 |
| JETLINER | 12.8 N 213 4x2 14.2 Ton | 90-92 | 3664 | 3664 |
| JETLINER | 12.8 N 214 4x2 17.6 Ton | 90-92 | 3664 | 3664 |
| JETLINER | 12.8 N 214, N 216 4x2 17.6 Ton | 90-92 | 3664 | 3664 |
| JETLINER | 12.8 N 216 4x2 17.6 Ton | 90-92 | 3664 | 3664 |
| JETLINER | 6.9 N 208 4x2 11.9 Ton | 90- | 3664 | 3664 |
| JETLINER | 6.9 N 208 4x2 11.9 Ton | 92- | 3664 | 3664 |
| LOW CHASSIS | N 4008, N4009, N4010, N4011 | 92- | 3664 | 3664 |
| LOW CHASSIS | N 4014, N4016, N4024, N4026 | 92- | 3664 | 3664 |
| REGIOLINER | N 3014 | 92- | 3664 | 3664 |
| REGIOLINER | N 3016 | 92- | 3664 | 3664 |
| SKYLINER | 11.0 N 122/3 6x2/4 26 Ton | 92- | 3664 | 3664 |
| SKYLINER | 11.7 N 122/3 6x2/4 26 Ton | 92- | 3664 | 3664 |
| SKYLINER | 11.7 N 122/3 6x2/4 26 Ton | 92- | 3664 | 3664 |
| SKYLINER | 12.0 N 122/3 6x2/4 26 Ton | 90- | 3664 | 3664 |
| SKYLINER | 12.0 N 122/3 6x2/4 26 Ton | 90- | 3664 | 3664 |
| SKYLINER | 12.8 N 122/3 L 6x2 26 Ton | 04- | 3664 | 3664 |
| SPACELINER | 11.0 N 117 4x2 18 Ton | 90- | 3664 | 3664 |

| MAKE & MODEL | | YEAR | 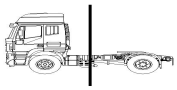 | |
|---|---|---|---|---|
| **NEOPLAN** | | | | |
| SPACELINER | 11.0 N 117 4x2 18 Ton | 92- | 3664 | 3664 |
| SPACELINER | 11.0 N 117/3 6x2/4 22 Ton | 90-93 | 3664 | 3664 |
| SPACELINER | 11.0 N 117/3 6x2/4 22 Ton | 92- | 3664 | 3664 |
| SPACELINER | 11.6 N 117 4x2 18 Ton | 92- | 3664 | 3664 |
| SPACELINER | 11.6 N 117 4x2 18 Ton | 92- | 3664 | 3664 |
| SPACELINER | 11.6 N 117/3 6x2/4 22 Ton | 92- | 3664 | 3664 |
| SPACELINER | 11.6 N 117/3 6x2/4 22 Ton | 92- | 3664 | 3664 |
| SPACELINER | 12.0 N 117 4x2 18 Ton | 90- | 3664 | 3664 |
| SPACELINER | 12.0 N 117 4x2 18 Ton | 90- | 3664 | 3664 |
| SPACELINER | 12.0 N 117/3 6x2/4 22 Ton | 92- | 3664 | 3664 |
| SPACELINER | 12.0 N 117/3 6x2/4 22 Ton | 92- | 3664 | 3664 |
| SPACELINER | 12.8 N 117 4x2 18 Ton | 90-92 | 3664 | 3664 |
| SPACELINER | 12.8 N 117 4x2 18 Ton | 90-92 | 3664 | 3664 |
| STARLINER | 12.0 N 516 4x2 18 Ton | 02- | 3664 | 3664 |
| STARLINER | 12.0 N 516 4x2 18 Ton | 96- | 3664 | 3664 |
| STARLINER | 12.0 N 516/3 6x2 25.5 Ton | 02- | 3664 | 3664 |
| STARLINER | 12.0 N 516/3 6x2/4 25.5 Ton | 96- | 3664 | 3664 |
| STARLINER | 12.8 N 516 4x2 18 Ton | 96- | 3664 | 3664 |
| STARLINER | 12.8 N 516/3 6x2/4 25.5 Ton | 96- | 3664 | 3664 |
| STARLINER | 12.8 N 5218 SHD 6x2 24.9 Ton | 05- | 3664 | 3664 |
| STARLINER | 12.8 N 5218 SHD 6x2 24.9 Ton | 05- | 3664 | 3664 |
| STARLINER | 14.6 N 516 4x2 18 Ton | 96- | 3664 | 3664 |
| STARLINER | 14.6 N 516/3 6x2/4 25.5 Ton | 96- | 3664 | 3664 |
| TOURLINER | 12.0 N 2216 SHD 4x2 18 Ton | 03- | 3664 | 3664 |
| TOURLINER | 12.8 N 2216 SHD 4x2 18 Ton | 03- | 3664 | 3664 |
| TRANSLINER | 10.0 N 314, N 316 4x2 18 Ton | 93- | 3664 | 3664 |
| TRANSLINER | 10.0 N 316 4x2 18 Ton | 93- | 3664 | 3664 |
| TRANSLINER | 10.0 N 316 6x2 28 Ton | 93- | 3664 | 3664 |
| TRANSLINER | 10.0 N 321/3 6x2 28 Ton | 93- | 3664 | 3664 |
| TRANSLINER | 11.0 N 314, N 316 4x2 18 Ton | 93- | 3664 | 3664 |
| TRANSLINER | 11.0 N 316 4x2 18 Ton | 90-92 | 3664 | 3664 |
| TRANSLINER | 11.0 N 316 4x2 18 Ton | 92- | 3664 | 3664 |
| TRANSLINER | 11.0 N 321/3 6x2 28 Ton | 93- | 3664 | 3664 |
| TRANSLINER | 11.6 N 316 4x2 18 Ton | 92- | 3664 | 3664 |
| TRANSLINER | 11.6 N 316 4x2 18 Ton | 92- | 3664 | 3664 |
| TRANSLINER | 12.0 N 316 4x2 18 Ton | 92- | 3664 | 3664 |
| TRANSLINER | 12.0 N 316 4x2 18 Ton | 90-93 | 3664 | 3664 |
| TRANSLINER | 12.0 N 316 4x2 18 Ton | 90-93 | 3664 | 3664 |
| TRANSLINER | 12.0 N 316 4x2 18 Ton | 92- | 3664 | 3664 |
| TRANSLINER | 12.0 N 3516 Ú 4x2 18 Ton | 04- | 3664 | 3664 |
| TRANSLINER | 12.0 N 3516 Ú 4x2 18 Ton | 04- | 3664 | 3664 |
| TRANSLINER | 12.0 N 3516 Ú 4x2 18 Ton | 04- | 3664 | 3664 |
| TRANSLINER | 12.0 N 3516/3 ÚL 6x2 24.9 Ton | 04- | 3664 | 3664 |
| TRENDLINER | 12.8 N 316 4x2 18 Ton | 90-92 | 3664 | 3664 |
| TRENDLINER | 12.8 N 316 4x2 18 Ton | 90-92 | 3664 | 3664 |
| TRENDLINER | 12.8 N 321/3 6x2 28 Ton | 90-92 | 3664 | 3664 |
| | | | 3669 | 3669 |
| **OPTARE** | | | | |
| SOLERA | SR, Corta | 02- | 3789 | 3789 |
| SOLO | | 02- | 3565 | 3565 |
| SOLO | | 02- | 3565/A | 3565/A |
| | Llanta 19.5" Solera SR, Corta (SB/SN6000 SB/SN6500) | 02- | 3789 | 3789 |
| **OTOKAR** | | | | |
| DORUK | 190 H | 07- | 3789 | 3789 |
| DORUK | 190 LE | 08- | 3789 | 3789 |
| DORUK | 190 S | 07- | 3789 | 3789 |
| DORUK | 215 T | 09- | 3789 | 3789 |
| DORUK | 230 DG | 09- | 3789 | 3789 |
| SULTAN | 125 S - 145 S | 09- | 3565/4 | 3565/4 |
| VECTIO | 215 LE | 09- | 3789 | 3789 |
| VECTIO | 240 S | 07- | 3789 | 3789 |
| VECTIO | 240 U | 07- | 3789 | 3789 |
| VECTIO | 250 LE | 09- | 3789 | 3789 |
| VECTIO | 250 S | 09- | 3789 | 3789 |
| VECTIO | 250 T | 09- | 3789 | 3789 |
| VECTIO | 250 U | 09- | 3789 | 3789 |
| | | | 3908/A | |
| **R.O.R.** | | | | |
| Assali / Axles | Meritor D-Elsa | | 3828 | |
| Assali / Axles | Meritor D-Elsa | | 3828/1 | |
| DINGIL | | | | 4164 |
| MERITOR LM | Llanta 19.5" 377x45 Eje apoyo (Elsa 195/VGT 195) | 04- | | 4131 |
| MERITOR LM | Llanta 19.5" 377x45 Eje rígido -13 Ton (Elsa 195/VGT 195) | 04- | | 4131 |
| MERITOR LM | Llanta 19.5" 377x45 Eje rígido -9 Ton (Elsa 195/VGT 195) | 04- | | 4131 |
| MERITOR TM | Llanta 19.5" 377x45 Eje rígido -9.3 Ton (Elsa 195/VGT 195) | 04- | | 4131 |

| MAKE & MODEL | | YEAR | | |
|---|---|---|---|---|
| **RENAULT** | | | | |
| AGORA | All models | 96- | 3497 | 5875 |
| AGORA | All models | 96- | 3497/1 | 5875 |
| AGORA | All models | 00- | 3770 | 5875 |
| AGORA | All models | 00- | 3770/1 | 5875 |
| CITYBUS | All models | 96- | 3497 | 5875 |
| CITYBUS | All models | 96- | 3497/1 | 5875 |
| CITYBUS | All models | 00- | 3770 | 5875 |
| CITYBUS | All models | 00- | 3770/1 | 5875 |
| LLIADE | GTX | 97-00 | 3497 | 3497 |
| LLIADE | GTX | 97-00 | 3497/1 | 3497/1 |
| LLIADE | GTX | 00- | 3828/3 | 3828/3 |
| LLIADE | RT, RTX, GTC | 97-00 | 3497 | 3497 |
| LLIADE | RT, RTX, GTC | 97-00 | 3497/1 | 3497/1 |
| LLIADE | RT, RTX, GTC | 00- | 3828/3 | 3828/3 |
| LLIADE | TE, RTC | 97-00 | 3497 | 3497 |
| LLIADE | TE, RTC | 97-00 | 3497/1 | 3497/1 |
| LLIADE | TE, RTC | 00- | 3828/3 | 3828/3 |
| MAGNUM | 12.0 AE 385 Ti 4x2 18 Ton. | 92-95 | 3497 | 5875 |
| MAGNUM | 12.0 AE 385 Ti 4x2 18 Ton. | 92-95 | 3497 | 5875 |
| MAGNUM | 12.0 AE 385 Ti 4x2 18 Ton. | 92-95 | 3497/1 | 5875 |
| MAGNUM | 12.0 AE 385 Ti 4x2 18 Ton. | 92-95 | 3497/1 | 5875 |
| MAGNUM | 12.0 AE 385 Ti 4x2 19 Ton. | 92-95 | 3497 | 5875 |
| MAGNUM | 12.0 AE 385 Ti 4x2 19 Ton. | 92-95 | 3497 | 5875 |
| MAGNUM | 12.0 AE 385 Ti 4x2 19 Ton. | 92-95 | 3497/1 | 5875 |
| MAGNUM | 12.0 AE 385 Ti 4x2 19 Ton. | 92-95 | 3497/1 | 5875 |
| MAGNUM | 12.0 AE 385 Ti 6x2 26 Ton. | 92-95 | 3497 | 5875 |
| MAGNUM | 12.0 AE 385 Ti 6x2 26 Ton. | 92-95 | 3497/1 | 5875 |
| MAGNUM | 12.0 AE 390 4x2 18 Ton. | 00- | 3497 | 5875 |
| MAGNUM | 12.0 AE 390 4x2 18 Ton. | 00- | 3497 | 5875 |
| MAGNUM | 12.0 AE 390 4x2 18 Ton. | 00- | 3497/1 | 5875 |
| MAGNUM | 12.0 AE 390 4x2 18 Ton. | 00- | 3497/1 | 5875 |
| MAGNUM | 12.0 AE 390 4x2 18 Ton. | 97-00 | 3770 | 5875 |
| MAGNUM | 12.0 AE 390 4x2 18 Ton. | 97-00 | 3770 | 5875 |
| MAGNUM | 12.0 AE 390 4x2 18 Ton. | 97-00 | 3770/1 | 5875 |
| MAGNUM | 12.0 AE 390 4x2 18 Ton. | 97-00 | 3770/1 | 5875 |
| MAGNUM | 12.0 AE 390 4x2 18 Ton. | 00- | 3828/3 | 5875 |
| MAGNUM | 12.0 AE 390 4x2 18 Ton. | 00- | 3828/3 | 5875 |
| MAGNUM | 12.0 AE 390 4x2 19 Ton. | 00- | 3497 | 5875 |
| MAGNUM | 12.0 AE 390 4x2 19 Ton. | 00- | 3497 | 5875 |
| MAGNUM | 12.0 AE 390 4x2 19 Ton. | 00- | 3497/1 | 5875 |
| MAGNUM | 12.0 AE 390 4x2 19 Ton. | 00- | 3497/1 | 5875 |
| MAGNUM | 12.0 AE 390 4x2 19 Ton. | 97-00 | 3770 | 5875 |
| MAGNUM | 12.0 AE 390 4x2 19 Ton. | 97-00 | 3770 | 5875 |
| MAGNUM | 12.0 AE 390 4x2 19 Ton. | 97-00 | 3770/1 | 5875 |
| MAGNUM | 12.0 AE 390 4x2 19 Ton. | 97-00 | 3770/1 | 5875 |
| MAGNUM | 12.0 AE 390 4x2 19 Ton. | 00- | 3828/3 | 5875 |
| MAGNUM | 12.0 AE 390 4x2 19 Ton. | 00- | 3828/3 | 5875 |
| MAGNUM | 12.0 AE 390 6x2 26 Ton. | 00- | 3497 | 5875 |
| MAGNUM | 12.0 AE 390 6x2 26 Ton. | 00- | 3497/1 | 5875 |
| MAGNUM | 12.0 AE 390 6x2 26 Ton. | 97-00 | 3770 | 5875 |
| MAGNUM | 12.0 AE 390 6x2 26 Ton. | 97-00 | 3770/1 | 5875 |
| MAGNUM | 12.0 AE 390 6x2 26 Ton. | 00- | 3828/3 | 5875 |
| MAGNUM | 12.0 AE 400 4x2 18 Ton. | 00- | 3828/3 | 3828/3 |
| MAGNUM | 12.0 AE 400 4x2 18 Ton. | 00- | 3828/3 | 3828/3 |
| MAGNUM | 12.0 AE 400 6x2 24 Ton. | 00- | 3828/3 | 3828/3 |
| MAGNUM | 12.0 AE 400 6x2 26 Ton. | 00- | 3828/3 | 3828/3 |
| MAGNUM | 12.0 AE 420 Ti 4x2 18 Ton. | 92-95 | 3497 | 5875 |
| MAGNUM | 12.0 AE 420 Ti 4x2 18 Ton. | 92-95 | 3497 | 5875 |
| MAGNUM | 12.0 AE 420 Ti 4x2 18 Ton. | 92-95 | 3497/1 | 5875 |
| MAGNUM | 12.0 AE 420 Ti 4x2 18 Ton. | 92-95 | 3497/1 | 5875 |
| MAGNUM | 12.0 AE 420 Ti 4x2 19 Ton. | 92-95 | 3497 | 5875 |
| MAGNUM | 12.0 AE 420 Ti 4x2 19 Ton. | 92-95 | 3497/1 | 5875 |
| MAGNUM | 12.0 AE 420 Ti 6x2 24 Ton. | 92-95 | 3497 | 5875 |
| MAGNUM | 12.0 AE 420 Ti 6x2 24 Ton. | 92-95 | 3497 | 5875 |
| MAGNUM | 12.0 AE 420 Ti 6x2 24 Ton. | 92-95 | 3497/1 | 5875 |
| MAGNUM | 12.0 AE 420 Ti 6x2 24 Ton. | 92-95 | 3497/1 | 5875 |
| MAGNUM | 12.0 AE 420 Ti 6x2 26 Ton. | 92-95 | 3497 | 5875 |
| MAGNUM | 12.0 AE 420 Ti 6x2 26 Ton. | 92-95 | 3497 | 5875 |
| MAGNUM | 12.0 AE 420 Ti 6x2 26 Ton. | 92-95 | 3497/1 | 5875 |
| MAGNUM | 12.0 AE 420 Ti 6x2 26 Ton. | 92-95 | 3497/1 | 5875 |
| MAGNUM | 12.0 AE 420 Ti 6x4 22 Ton. | 92-95 | 3497 | 5875 |
| MAGNUM | 12.0 AE 420 Ti 6x4 22 Ton. | 92-95 | 3497/1 | 5875 |
| MAGNUM | 12.0 AE 430 4x2 18 Ton. | 00- | 3497 | 5875 |
| MAGNUM | 12.0 AE 430 4x2 18 Ton. | 00- | 3497 | 5875 |
| MAGNUM | 12.0 AE 430 4x2 18 Ton. | 00- | 3497/1 | 5875 |
| MAGNUM | 12.0 AE 430 4x2 18 Ton. | 97-00 | 3770 | 5875 |

| MAKE & MODEL | | YEAR | 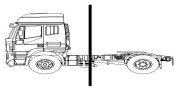 | |
|---|---|---|---|---|
| **RENAULT** | | | | |
| MAGNUM | 12.0 AE 430 4x2 18 Ton. | 97-00 | 3770 | 5875 |
| MAGNUM | 12.0 AE 430 4x2 18 Ton. | 97-00 | 3770/1 | 5875 |
| MAGNUM | 12.0 AE 430 4x2 18 Ton. | 97-00 | 3770/1 | 5875 |
| MAGNUM | 12.0 AE 430 4x2 18 Ton. | 00- | 3828/3 | 5875 |
| MAGNUM | 12.0 AE 430 4x2 18 Ton. | 00- | 3828/3 | 5875 |
| MAGNUM | 12.0 AE 430 4x2 19 Ton. | 00- | 3497 | 5875 |
| MAGNUM | 12.0 AE 430 4x2 19 Ton. | 00- | 3497 | 5875 |
| MAGNUM | 12.0 AE 430 4x2 19 Ton. | 00- | 3497/1 | 5875 |
| MAGNUM | 12.0 AE 430 4x2 19 Ton. | 00- | 3497/1 | 5875 |
| MAGNUM | 12.0 AE 430 4x2 19 Ton. | 97-00 | 3770 | 5875 |
| MAGNUM | 12.0 AE 430 4x2 19 Ton. | 97-00 | 3770 | 5875 |
| MAGNUM | 12.0 AE 430 4x2 19 Ton. | 97-00 | 3770/1 | 5875 |
| MAGNUM | 12.0 AE 430 4x2 19 Ton. | 97-00 | 3770/1 | 5875 |
| MAGNUM | 12.0 AE 430 4x2 19 Ton. | 00- | 3828/3 | 5875 |
| MAGNUM | 12.0 AE 430 4x2 19 Ton. | 00- | 3828/3 | 5875 |
| MAGNUM | 12.0 AE 430 6x2 26 Ton. | 00- | 3497 | 5875 |
| MAGNUM | 12.0 AE 430 6x2 26 Ton. | 00- | 3497 | 5875 |
| MAGNUM | 12.0 AE 430 6x2 26 Ton. | 00- | 3497/1 | 5875 |
| MAGNUM | 12.0 AE 430 6x2 26 Ton. | 00- | 3497/1 | 5875 |
| MAGNUM | 12.0 AE 430 6x2 26 Ton. | 97-00 | 3770 | 5875 |
| MAGNUM | 12.0 AE 430 6x2 26 Ton. | 97-00 | 3770 | 5875 |
| MAGNUM | 12.0 AE 430 6x2 26 Ton. | 97-00 | 3770/1 | 5875 |
| MAGNUM | 12.0 AE 430 6x2 26 Ton. | 97-00 | 3770/1 | 5875 |
| MAGNUM | 12.0 AE 430 6x2 26 Ton. | 00- | 3828/3 | 5875 |
| MAGNUM | 12.0 AE 430 6x2 26 Ton. | 00- | 3828/3 | 5875 |
| MAGNUM | 12.0 AE 430 6x4 26 Ton. | 00- | 3497 | 5888 |
| MAGNUM | 12.0 AE 430 6x4 26 Ton. | 00- | 3497 | 5887 |
| MAGNUM | 12.0 AE 430 6x4 26 Ton. | 00- | 3497/1 | 5888 |
| MAGNUM | 12.0 AE 430 6x4 26 Ton. | 00- | 3497/1 | 5887 |
| MAGNUM | 12.0 AE 430 6x4 26 Ton. | 97-00 | 3770 | 5888 |
| MAGNUM | 12.0 AE 430 6x4 26 Ton. | 97-00 | 3770 | 5887 |
| MAGNUM | 12.0 AE 430 6x4 26 Ton. | 97-00 | 3770/1 | 5888 |
| MAGNUM | 12.0 AE 430 6x4 26 Ton. | 97-00 | 3770/1 | 5887 |
| MAGNUM | 12.0 AE 430 6x4 26 Ton. | 00- | 3828/3 | 5888 |
| MAGNUM | 12.0 AE 430 6x4 26 Ton. | 00- | 3828/3 | 5887 |
| MAGNUM | 12.0 AE 440 4x2 18 Ton. | 00- | 3828/3 | 3828/3 |
| MAGNUM | 12.0 AE 440 4x2 18 Ton. | 00- | 3828/3 | 3828/3 |
| MAGNUM | 12.0 AE 440 6x2 24 Ton. | 00- | 3828/3 | 3828/3 |
| MAGNUM | 12.0 AE 440 6x2 26 Ton. | 00- | 3828/3 | 3828/3 |
| MAGNUM | 12.0 AE 440 6x2 26 Ton. | 00- | 3828/3 | 3828/3 |
| MAGNUM | 12.0 AE 440 6x4 26 Ton. | 00- | 3828/3 | 3828/3 |
| MAGNUM | 12.0 AE 470 4x2 18 Ton. | 00- | 3497 | 5875 |
| MAGNUM | 12.0 AE 470 4x2 18 Ton. | 00- | 3497 | 5875 |
| MAGNUM | 12.0 AE 470 4x2 18 Ton. | 00- | 3497/1 | 5875 |
| MAGNUM | 12.0 AE 470 4x2 18 Ton. | 00- | 3497/1 | 5875 |
| MAGNUM | 12.0 AE 470 4x2 18 Ton. | 97-00 | 3770 | 5875 |
| MAGNUM | 12.0 AE 470 4x2 18 Ton. | 97-00 | 3770 | 5875 |
| MAGNUM | 12.0 AE 470 4x2 18 Ton. | 97-00 | 3770/1 | 5875 |
| MAGNUM | 12.0 AE 470 4x2 18 Ton. | 97-00 | 3770/1 | 5875 |
| MAGNUM | 12.0 AE 470 4x2 18 Ton. | 00- | 3828/3 | 5875 |
| MAGNUM | 12.0 AE 470 4x2 18 Ton. | 00- | 3828/3 | 5875 |
| MAGNUM | 12.0 AE 470 4x2 19 Ton. | 00- | 3497 | 5875 |
| MAGNUM | 12.0 AE 470 4x2 19 Ton. | 00- | 3497 | 5875 |
| MAGNUM | 12.0 AE 470 4x2 19 Ton. | 00- | 3497/1 | 5875 |
| MAGNUM | 12.0 AE 470 4x2 19 Ton. | 00- | 3497/1 | 5875 |
| MAGNUM | 12.0 AE 470 4x2 19 Ton. | 97-00 | 3770 | 5875 |
| MAGNUM | 12.0 AE 470 4x2 19 Ton. | 97-00 | 3770 | 5875 |
| MAGNUM | 12.0 AE 470 4x2 19 Ton. | 97-00 | 3770/1 | 5875 |
| MAGNUM | 12.0 AE 470 4x2 19 Ton. | 97-00 | 3770/1 | 5875 |
| MAGNUM | 12.0 AE 470 4x2 19 Ton. | 00- | 3828/3 | 5875 |
| MAGNUM | 12.0 AE 470 4x2 19 Ton. | 00- | 3828/3 | 5875 |
| MAGNUM | 12.0 AE 470 6x2 26 Ton. | 00- | 3497 | 5875 |
| MAGNUM | 12.0 AE 470 6x2 26 Ton. | 00- | 3497/1 | 5875 |
| MAGNUM | 12.0 AE 470 6x2 26 Ton. | 97-00 | 3770 | 5875 |
| MAGNUM | 12.0 AE 470 6x2 26 Ton. | 97-00 | 3770/1 | 5875 |
| MAGNUM | 12.0 AE 470 6x2 26 Ton. | 00- | 3828/3 | 5875 |
| MAGNUM | 12.0 AE 470 6x4 26 Ton. | 00- | 3497 | 5888 |
| MAGNUM | 12.0 AE 470 6x4 26 Ton. | 00- | 3497 | 5887 |
| MAGNUM | 12.0 AE 470 6x4 26 Ton. | 00- | 3497/1 | 5888 |
| MAGNUM | 12.0 AE 470 6x4 26 Ton. | 00- | 3497/1 | 5887 |
| MAGNUM | 12.0 AE 470 6x4 26 Ton. | 97-00 | 3770 | 5888 |
| MAGNUM | 12.0 AE 470 6x4 26 Ton. | 97-00 | 3770 | 5887 |
| MAGNUM | 12.0 AE 470 6x4 26 Ton. | 97-00 | 3770/1 | 5888 |
| MAGNUM | 12.0 AE 470 6x4 26 Ton. | 97-00 | 3770/1 | 5887 |
| MAGNUM | 12.0 AE 470 6x4 26 Ton. | 00- | 3828/3 | 5887 |
| MAGNUM | 12.0 AE 470 6x4 26 Ton. | 00- | 3828/3 | 5888 |

| MAKE & MODEL | | YEAR | 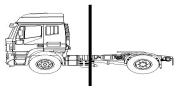 | |
|---|---|---|---|---|
| **RENAULT** | | | | |
| MAGNUM | 12.0 AE 480 4x2 18 Ton. | *00-* | 3828/3 | 3828/3 |
| MAGNUM | 12.0 AE 480 4x2 18 Ton. | *00-* | 3828/3 | 3828/3 |
| MAGNUM | 12.0 AE 480 6x2 24 Ton. | *00-* | 3828/3 | 3828/3 |
| MAGNUM | 12.0 AE 480 6x2 26 Ton. | *00-* | 3828/3 | 3828/3 |
| MAGNUM | 12.0 AE 480 6x2 26 Ton. | *00-* | 3828/3 | 3828/3 |
| MAGNUM | 12.0 AE 480 6x4 26 Ton. | *00-* | 3828/3 | 3828/3 |
| MAGNUM | 12.1 DXi 12 440.18 4x2 18 Ton. | 04-06 | 3917 | 3917 |
| MAGNUM | 12.1 DXi 12 440.18 4x2 18 Ton. | 04-06 | 3917/1 | 3917/1 |
| MAGNUM | 12.1 DXi 12 440.18 4x2 18 Ton. Eje Elevador | 04-06 | | 4131 |
| MAGNUM | 12.1 DXi 12 440.18 T 4x2 18 Ton. | 04-06 | 3917 | 3917 |
| MAGNUM | 12.1 DXi 12 440.18 T 4x2 18 Ton. | 04-06 | 3917/1 | 3917/1 |
| MAGNUM | 12.1 DXi 12 440.24 6x2 24 Ton. | 04-06 | 3917 | 3917 |
| MAGNUM | 12.1 DXi 12 440.24 6x2 24 Ton. | 04-06 | 3917/1 | 3917/1 |
| MAGNUM | 12.1 DXi 12 440.26 6x2 26 Ton. | 04-06 | 3917 | 3917 |
| MAGNUM | 12.1 DXi 12 440.26 6x2 26 Ton. | 04-06 | 3917/1 | 3917/1 |
| MAGNUM | 12.1 DXi 12 440.26 6x2 26 Ton. Eje Elevador | 04-06 | | 4131 |
| MAGNUM | 12.1 DXi 12 440.26 T 6x2 26 Ton. | 04-06 | 3917 | 3917 |
| MAGNUM | 12.1 DXi 12 440.26 T 6x2 26 Ton. | 04-06 | 3917/1 | 3917/1 |
| MAGNUM | 12.1 DXi 12 440.26 T 6x4 26 Ton. | 04-06 | 3917 | 3917 |
| MAGNUM | 12.1 DXi 12 440.26 T 6x4 26 Ton. | 04-06 | 3917/1 | 3917/1 |
| MAGNUM | 12.1 DXi 12 480.18 4x2 18 Ton. | 04-06 | 3917 | 3917 |
| MAGNUM | 12.1 DXi 12 480.18 4x2 18 Ton. | 04-06 | 3917/1 | 3917/1 |
| MAGNUM | 12.1 DXi 12 480.18 4x2 18 Ton. Eje Elevador | 04-06 | | 4131 |
| MAGNUM | 12.1 DXi 12 480.18 T 4x2 18 Ton. | 04-06 | 3917 | 3917 |
| MAGNUM | 12.1 DXi 12 480.18 T 4x2 18 Ton. | 04-06 | 3917/1 | 3917/1 |
| MAGNUM | 12.1 DXi 12 480.24 6x2 24 Ton. | 04-06 | 3917 | 3917 |
| MAGNUM | 12.1 DXi 12 480.24 6x2 24 Ton. | 04-06 | 3917/1 | 3917/1 |
| MAGNUM | 12.1 DXi 12 480.24 6x2 24 Ton. Eje Elevador | 04-06 | | 4131 |
| MAGNUM | 12.1 DXi 12 480.26 6x2 26 Ton. | 04-06 | 3917 | 3917 |
| MAGNUM | 12.1 DXi 12 480.26 6x2 26 Ton. | 04-06 | 3917/1 | 3917/1 |
| MAGNUM | 12.1 DXi 12 480.26 6x2 26 Ton. Eje Elevador | 04-06 | | 4131 |
| MAGNUM | 12.1 DXi 12 480.26 T 6x2 26 Ton. | 04-06 | 3917 | 3917 |
| MAGNUM | 12.1 DXi 12 480.26 T 6x2 26 Ton. | 04-06 | 3917/1 | 3917/1 |
| MAGNUM | 12.1 DXi 12 480.26 T 6x4 26 Ton. | 04-06 | 3917 | 3917 |
| MAGNUM | 12.1 DXi 12 480.26 T 6x4 26 Ton. | 04-06 | 3917/1 | 3917/1 |
| MAGNUM | 12.8 DXi 13 460.18 T 4x2 18 Ton. | 06- | 3917 | 3917 |
| MAGNUM | 12.8 DXi 13 460.18 T 4x2 18 Ton. | 06- | 3917/1 | 3917/1 |
| MAGNUM | 12.8 DXi 13 460.18 T 4x2 18 Ton. Eje Elevador | 06- | | 4131 |
| MAGNUM | 12.8 DXi 13 460.24 6x2 24.5 Ton. | 06- | 3917 | 3917 |
| MAGNUM | 12.8 DXi 13 460.24 6x2 24.5 Ton. | 06- | 3917/1 | 3917/1 |
| MAGNUM | 12.8 DXi 13 460.24 6x2 24.5 Ton. Eje Elevador | 06- | | 4131 |
| MAGNUM | 12.8 DXi 13 460.25 6x2 25 Ton. | 06- | 3917 | 3917 |
| MAGNUM | 12.8 DXi 13 460.25 6x2 25 Ton. | 06- | 3917/1 | 3917/1 |
| MAGNUM | 12.8 DXi 13 460.25 6x2 25 Ton. Eje Elevador | 06- | | 4131 |
| MAGNUM | 12.8 DXi 13 460.26 6x2 26 Ton. | 06- | 3917 | 3917 |
| MAGNUM | 12.8 DXi 13 460.26 6x2 26 Ton. | 06- | 3917/1 | 3917/1 |
| MAGNUM | 12.8 DXi 13 460.26 6x2 26 Ton. Eje Elevador | 06- | | 4131 |
| MAGNUM | 12.8 DXi 13 460.26 T 6x2 26 Ton. | 06- | 3917 | 3917 |
| MAGNUM | 12.8 DXi 13 460.26 T 6x2 26 Ton. | 06- | 3917/1 | 3917/1 |
| MAGNUM | 12.8 DXi 13 500.18 T 4x2 18 Ton. | 06- | 3917 | 3917 |
| MAGNUM | 12.8 DXi 13 500.18 T 4x2 18 Ton. | 06- | 3917/1 | 3917/1 |
| MAGNUM | 12.8 DXi 13 500.18 T 4x2 18 Ton. Eje Elevador | 06- | | 4131 |
| MAGNUM | 12.8 DXi 13 500.24 6x2 24.5 Ton. | 06- | 3917 | 3917 |
| MAGNUM | 12.8 DXi 13 500.24 6x2 24.5 Ton. | 06- | 3917/1 | 3917/1 |
| MAGNUM | 12.8 DXi 13 500.24 6x2 24.5 Ton. Eje Elevador | 06- | | 4131 |
| MAGNUM | 12.8 DXi 13 500.25 6x2 25 Ton. | 06- | 3917 | 3917 |
| MAGNUM | 12.8 DXi 13 500.25 6x2 25 Ton. | 06- | 3917/1 | 3917/1 |
| MAGNUM | 12.8 DXi 13 500.25 6x2 25 Ton. Eje Elevador | 06- | | 4131 |
| MAGNUM | 12.8 DXi 13 500.26 6x2 26 Ton. | 06- | 3917 | 3917 |
| MAGNUM | 12.8 DXi 13 500.26 6x2 26 Ton. | 06- | 3917/1 | 3917/1 |
| MAGNUM | 12.8 DXi 13 500.26 6x2 26 Ton. Eje Elevador | 06- | | 4131 |
| MAGNUM | 12.8 DXi 13 500.26 T 6x2 26 Ton. | 06- | 3917 | 3917 |
| MAGNUM | 12.8 DXi 13 500.26 T 6x2 26 Ton. | 06- | 3917/1 | 3917/1 |
| MAGNUM | 12.8 DXi 13 500.26 T 6x2 26 Ton. Eje Elevador | 06- | | 4131 |
| MAGNUM | 16.4 AE 560 4x2 18 Ton. | *00-* | 3497 | 5875 |
| MAGNUM | 16.4 AE 560 4x2 18 Ton. | *00-* | 3497 | 5875 |
| MAGNUM | 16.4 AE 560 4x2 18 Ton. | *00-* | 3497/1 | 5875 |
| MAGNUM | 16.4 AE 560 4x2 18 Ton. | *00-* | 3497/1 | 5875 |
| MAGNUM | 16.4 AE 560 4x2 18 Ton. | *97-00* | 3770 | 5875 |
| MAGNUM | 16.4 AE 560 4x2 18 Ton. | *97-00* | 3770 | 5875 |
| MAGNUM | 16.4 AE 560 4x2 18 Ton. | *97-00* | 3770/1 | 5875 |
| MAGNUM | 16.4 AE 560 4x2 18 Ton. | *97-00* | 3770/1 | 5875 |
| MAGNUM | 16.4 AE 560 4x2 18 Ton. | *00-* | 3828/3 | 5875 |
| MAGNUM | 16.4 AE 560 4x2 18 Ton. | *00-* | 3828/3 | 5875 |
| MAGNUM | 16.4 AE 560 4x2 19 Ton. | *00-* | 3497 | 5875 |
| MAGNUM | 16.4 AE 560 4x2 19 Ton. | *00-* | 3497 | 5875 |

| MAKE & MODEL | | YEAR | | |
|---|---|---|---|---|
| **RENAULT** | | | | |
| MAGNUM | 16.4 AE 560 4x2 19 Ton. | 00- | 3497/1 | 5875 |
| MAGNUM | 16.4 AE 560 4x2 19 Ton. | 00- | 3497/1 | 5875 |
| MAGNUM | 16.4 AE 560 4x2 19 Ton. | 97-00 | 3770 | 5875 |
| MAGNUM | 16.4 AE 560 4x2 19 Ton. | 97-00 | 3770 | 5875 |
| MAGNUM | 16.4 AE 560 4x2 19 Ton. | 97-00 | 3770/1 | 5875 |
| MAGNUM | 16.4 AE 560 4x2 19 Ton. | 97-00 | 3770/1 | 5875 |
| MAGNUM | 16.4 AE 560 4x2 19 Ton. | 00- | 3828/3 | 5875 |
| MAGNUM | 16.4 AE 560 4x2 19 Ton. | 00- | 3828/3 | 5875 |
| MAGNUM | 16.4 AE 560 6x2 26 Ton. | 00- | 3497 | 5875 |
| MAGNUM | 16.4 AE 560 6x2 26 Ton. | 00- | 3497/1 | 5875 |
| MAGNUM | 16.4 AE 560 6x2 26 Ton. | 97-00 | 3770 | 5875 |
| MAGNUM | 16.4 AE 560 6x2 26 Ton. | 97-00 | 3770/1 | 5875 |
| MAGNUM | 16.4 AE 560 6x2 26 Ton. | 00- | 3828/3 | 5875 |
| MAGNUM | 16.4 AE 560 6x4 26 Ton. | 00- | 3497 | 5888 |
| MAGNUM | 16.4 AE 560 6x4 26 Ton. | 00- | 3497 | 5888 |
| MAGNUM | 16.4 AE 560 6x4 26 Ton. | 00- | 3497 | 5887 |
| MAGNUM | 16.4 AE 560 6x4 26 Ton. | 00- | 3497 | 5887 |
| MAGNUM | 16.4 AE 560 6x4 26 Ton. | 00- | 3497/1 | 5888 |
| MAGNUM | 16.4 AE 560 6x4 26 Ton. | 00- | 3497/1 | 5888 |
| MAGNUM | 16.4 AE 560 6x4 26 Ton. | 00- | 3497/1 | 5887 |
| MAGNUM | 16.4 AE 560 6x4 26 Ton. | 00- | 3497/1 | 5887 |
| MAGNUM | 16.4 AE 560 6x4 26 Ton. | 97-00 | 3770 | 5888 |
| MAGNUM | 16.4 AE 560 6x4 26 Ton. | 97-00 | 3770 | 5888 |
| MAGNUM | 16.4 AE 560 6x4 26 Ton. | 97-00 | 3770 | 5887 |
| MAGNUM | 16.4 AE 560 6x4 26 Ton. | 97-00 | 3770 | 5887 |
| MAGNUM | 16.4 AE 560 6x4 26 Ton. | 97-00 | 3770/1 | 5888 |
| MAGNUM | 16.4 AE 560 6x4 26 Ton. | 97-00 | 3770/1 | 5888 |
| MAGNUM | 16.4 AE 560 6x4 26 Ton. | 97-00 | 3770/1 | 5887 |
| MAGNUM | 16.4 AE 560 6x4 26 Ton. | 97-00 | 3770/1 | 5887 |
| MAGNUM | 16.4 AE 560 6x4 26 Ton. | 00- | 3828/3 | 5888 |
| MAGNUM | 16.4 AE 560 6x4 26 Ton. | 00- | 3828/3 | 5888 |
| MAGNUM | 16.4 AE 560 6x4 26 Ton. | 00- | 3828/3 | 5887 |
| MAGNUM | 16.4 AE 560 6x4 26 Ton. | 00- | 3828/3 | 5887 |
| MAGNUM | 16.5 AE 520 4x2 18 Ton. | 92-95 | 3497 | 5875 |
| MAGNUM | 16.5 AE 520 4x2 18 Ton. | 92-95 | 3497 | 5875 |
| MAGNUM | 16.5 AE 520 4x2 18 Ton. | 92-95 | 3497/1 | 5875 |
| MAGNUM | 16.5 AE 520 4x2 18 Ton. | 92-95 | 3497/1 | 5875 |
| MAGNUM | 16.5 AE 520 4x2 19 Ton. | 92-95 | 3497 | 5875 |
| MAGNUM | 16.5 AE 520 4x2 19 Ton. | 92-95 | 3497 | 5875 |
| MAGNUM | 16.5 AE 520 4x2 19 Ton. | 92-95 | 3497/1 | 5875 |
| MAGNUM | 16.5 AE 520 4x2 19 Ton. | 92-95 | 3497/1 | 5875 |
| MAGNUM | 16.5 AE 520 6x2 24 Ton. | 92-95 | 3497 | 5875 |
| MAGNUM | 16.5 AE 520 6x2 24 Ton. | 92-95 | 3497 | 5875 |
| MAGNUM | 16.5 AE 520 6x2 24 Ton. | 92-95 | 3497/1 | 5875 |
| MAGNUM | 16.5 AE 520 6x2 24 Ton. | 92-95 | 3497/1 | 5875 |
| MAGNUM | 16.5 AE 520 6x2 26 Ton. | 92- | 3497 | 5875 |
| MAGNUM | 16.5 AE 520 6x2 26 Ton. | 92- | 3497/1 | 5875 |
| MAGNUM | 16.5 AE 520 6x2 26 Ton. | 97-00 | 3770 | 5875 |
| MAGNUM | 16.5 AE 520 6x2 26 Ton. | 97-00 | 3770/1 | 5875 |
| MAGNUM | 16.5 AE 520 6x2 26 Ton. | 00- | 3828/3 | 5875 |
| MAGNUM | 16.5 AE 520 6x4 22 Ton. | 92-95 | 3497 | 5875 |
| MAGNUM | 16.5 AE 520 6x4 22 Ton. | 92-95 | 3497/1 | 5875 |
| MAGNUM | 16.5 AE 520 6x4 26 Ton. | 92-95 | 3497 | 5888 |
| MAGNUM | 16.5 AE 520 6x4 26 Ton. | 92-95 | 3497 | 5887 |
| MAGNUM | 16.5 AE 520 6x4 26 Ton. | 92-95 | 3497/1 | 5888 |
| MAGNUM | 16.5 AE 520 6x4 26 Ton. | 92-95 | 3497/1 | 5887 |
| MAGNUM | AE380,385ti,390 | 1/93- | | 3496 |
| MAGNUM E-Tech | AE 400 | 00- | 3828 | |
| MAGNUM E-Tech | AE 400 | 00- | | 3828 |
| MAGNUM E-Tech | AE 400 | 00- | 3828/1 | |
| MAGNUM E-Tech | AE 400 | 00- | | 3828/1 |
| MAGNUM E-Tech | AE 440 | 00- | 3828 | |
| MAGNUM E-Tech | AE 440 | 00- | | 3828 |
| MAGNUM E-Tech | AE 440 | 00- | 3828/1 | |
| MAGNUM E-Tech | AE 440 | 00- | | 3828/1 |
| MAGNUM E-Tech | AE 480 | 00- | 3828 | |
| MAGNUM E-Tech | AE 480 | 00- | | 3828 |
| MAGNUM E-Tech | AE 480 | 00- | 3828/1 | |
| MAGNUM E-Tech | AE 480 | 00- | | 3828/1 |
| MIDLUM | 150.10/B | 10/01- | 3870 | 3870 |
| MIDLUM | 150.10/B | 10/01- | 3870/1 | 3870/1 |
| MIDLUM | 150.10/B | 10/01- | 3870/2 | 3870/2 |
| MIDLUM | 210.12/C | 01/00- | 3870 | 3870 |
| MIDLUM | 210.12/C | 01/00- | 3870/1 | 3870/1 |
| MIDLUM | 210.12/C | 01/00- | 3870/2 | 3870/2 |
| MIDLUM | 210.13/C | 01/00- | 3870 | 3870 |

| MAKE & MODEL | | YEAR | 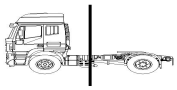 | |
|---|---|---|---|---|
| **RENAULT** | | | | |
| MIDLUM | 210.13/C | 01/00- | 3870/1 | 3870/1 |
| MIDLUM | 210.13/C | 01/00- | 3870/2 | 3870/2 |
| MIDLUM | 250.12/C | 01/00- | 3870 | 3870 |
| MIDLUM | 250.12/C | 01/00- | 3870/1 | 3870/1 |
| MIDLUM | 250.12/C | 01/00- | 3870/2 | 3870/2 |
| MIDLUM | 4.1 135. 8/B 4x2 7.5 Ton | 00- | 3565 | 3565 |
| MIDLUM | 4.1 135. 8/B 4x2 7.5 Ton | 00- | 3565 | 3565 |
| MIDLUM | 4.1 135. 8/B 4x2 7.5 Ton | 00- | 3565/A | 3565/A |
| MIDLUM | 4.1 135. 8/B 4x2 7.5 Ton | 00- | 3565/A | 3565/A |
| MIDLUM | 4.1 135. 9/B 4x2 9 Ton | 00- | 3565 | 3565 |
| MIDLUM | 4.1 135. 9/B 4x2 9 Ton | 00- | 3565/A | 3565/A |
| MIDLUM | 4.1 135.10/B 4x2 10 Ton | 00- | 3565 | 3565 |
| MIDLUM | 4.1 135.10/B 4x2 10 Ton | 00- | 3565 | 3565 |
| MIDLUM | 4.1 135.10/B 4x2 10 Ton | 00- | 3565/A | 3565/A |
| MIDLUM | 4.1 135.10/B 4x2 10 Ton | 00- | 3565/A | 3565/A |
| MIDLUM | 4.1 150. 8/B 4x2 7.5 Ton | 00- | 3565 | 3565 |
| MIDLUM | 4.1 150. 8/B 4x2 7.5 Ton | 01- | 3565 | 3565 |
| MIDLUM | 4.1 150. 8/B 4x2 7.5 Ton | 00- | 3565 | 3565 |
| MIDLUM | 4.1 150. 8/B 4x2 7.5 Ton | 00- | 3565/A | 3565/A |
| MIDLUM | 4.1 150. 8/B 4x2 7.5 Ton | 01- | 3565/A | 3565/A |
| MIDLUM | 4.1 150. 8/B 4x2 7.5 Ton | 00- | 3565/A | 3565/A |
| MIDLUM | 4.1 150. 9/B 4x2 9 Ton | 00- | 3565 | 3565 |
| MIDLUM | 4.1 150. 9/B 4x2 9 Ton | 00- | 3565/A | 3565/A |
| MIDLUM | 4.1 150.10/B 4x2 10 Ton | 01- | 3565 | 3565 |
| MIDLUM | 4.1 150.10/B 4x2 10 Ton | 00- | 3565 | 3565 |
| MIDLUM | 4.1 150.10/B 4x2 10 Ton | 00- | 3565 | 3565 |
| MIDLUM | 4.1 150.10/B 4x2 10 Ton | 01- | 3565/A | 3565/A |
| MIDLUM | 4.1 150.10/B 4x2 10 Ton | 00- | 3565/A | 3565/A |
| MIDLUM | 4.1 150.10/B 4x2 10 Ton | 00- | 3565/A | 3565/A |
| MIDLUM | 4.1 150.12/B 4x2 12 Ton | 00- | 3565 | 3565 |
| MIDLUM | 4.1 150.12/B 4x2 12 Ton | 00- | 3565/A | 3565/A |
| MIDLUM | 4.1 180. 8/B 4x2 7.5 Ton | 01- | 3565 | 3565 |
| MIDLUM | 4.1 180. 8/B 4x2 7.5 Ton | 01- | 3565/A | 3565/A |
| MIDLUM | 4.1 180.10/B 4x2 10 Ton | 01- | 3565 | 3565 |
| MIDLUM | 4.1 180.10/B 4x2 10 Ton | 01- | 3565/A | 3565/A |
| MIDLUM | 4.1 180.12 4x2 12 Ton | 01- | 3565 | 3565 |
| MIDLUM | 4.1 180.12 4x2 12 Ton | 01- | 3565/A | 3565/A |
| MIDLUM | 4.1 180.12/B/C 4x2 12 Ton | 01- | 3565 | 3565 |
| MIDLUM | 4.1 180.12/B/C 4x2 12 Ton | 01- | 3565/A | 3565/A |
| MIDLUM | 4.8 160.10 4x2 10 Ton | 06- | 3818 | 3818 |
| MIDLUM | 4.8 160.12 4x2 11.99 Ton | 06- | 4047 | 4047 |
| MIDLUM | 4.8 190.10 4x2 10 Ton | 06- | 3818 | 3818 |
| MIDLUM | 4.8 190.12 4x2 11.99 Ton | 06- | 4047 | 4047 |
| MIDLUM | 4.8 190.12 4x2 11.99 Ton | 06- | 4047 | 4047 |
| MIDLUM | 4.8 190.13 4x2 13 Ton | 06- | 4047 | 4047 |
| MIDLUM | 4.8 190.14 4x2 14 Ton | 06- | 4047 | 4047 |
| MIDLUM | 4.8 190.16 4x2 16 Ton | 06- | 4047 | 4047 |
| MIDLUM | 4.8 220.10 4x2 10 Ton | 06- | 3818 | 3818 |
| MIDLUM | 4.8 220.12 4x2 11.99 Ton | 06- | 4047 | 4047 |
| MIDLUM | 4.8 220.13 4x2 13 Ton | 06- | 4047 | 4047 |
| MIDLUM | 4.8 220.14 4x2 14 Ton | 06- | 4047 | 4047 |
| MIDLUM | 4.8 220.16 4x2 16 Ton | 06- | 4047 | 4047 |
| MIDLUM | 6.2 180. 8/B 4x2 7.5 Ton | 00- | 3565 | 3565 |
| MIDLUM | 6.2 180. 8/B 4x2 7.5 Ton | 00- | 3565 | 3565 |
| MIDLUM | 6.2 180. 8/B 4x2 7.5 Ton | 00- | 3565/A | 3565/A |
| MIDLUM | 6.2 180. 8/B 4x2 7.5 Ton | 00- | 3565/A | 3565/A |
| MIDLUM | 6.2 180. 9/B 4x2 9 Ton | 00- | 3565 | 3565 |
| MIDLUM | 6.2 180. 9/B 4x2 9 Ton | 00- | 3565/A | 3565/A |
| MIDLUM | 6.2 180.10/B 4x2 10 Ton | 00- | 3565 | 3565 |
| MIDLUM | 6.2 180.10/B 4x2 10 Ton | 00- | 3565 | 3565 |
| MIDLUM | 6.2 180.10/B 4x2 10 Ton | 00- | 3565/A | 3565/A |
| MIDLUM | 6.2 180.10/B 4x2 10 Ton | 00- | 3565/A | 3565/A |
| MIDLUM | 6.2 180.12/B 4x2 12 Ton | 00- | 3565 | 3565 |
| MIDLUM | 6.2 180.12/B 4x2 12 Ton | 00- | 3565/A | 3565/A |
| MIDLUM | 6.2 210. 8/B 4x2 7.5 Ton | 00- | 3565 | 3565 |
| MIDLUM | 6.2 210. 8/B 4x2 7.5 Ton | 00- | 3565 | 3565 |
| MIDLUM | 6.2 210. 8/B 4x2 7.5 Ton | 00- | 3565/A | 3565/A |
| MIDLUM | 6.2 210. 8/B 4x2 7.5 Ton | 00- | 3565/A | 3565/A |
| MIDLUM | 6.2 210. 9/B 4x2 9 Ton | 00- | 3565 | 3565 |
| MIDLUM | 6.2 210. 9/B 4x2 9 Ton | 00- | 3565/A | 3565/A |
| MIDLUM | 6.2 210.10/B 4x2 10 Ton | 00- | 3565 | 3565 |
| MIDLUM | 6.2 210.10/B 4x2 10 Ton | 00- | 3565 | 3565 |
| MIDLUM | 6.2 210.10/B 4x2 10 Ton | 00- | 3565/A | 3565/A |
| MIDLUM | 6.2 210.10/B 4x2 10 Ton | 00- | 3565/A | 3565/A |
| MIDLUM | 6.2 210.12/C 4x2 12 Ton | 01- | 3870 | 3870 |
| MIDLUM | 6.2 210.12/C 4x2 12 Ton | 01- | 3870 | 3870 |

| MAKE & MODEL | | YEAR | 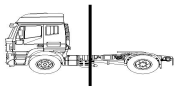 | |
|---|---|---|---|---|
| **RENAULT** | | | | |
| MIDLUM | 6.2 210.12/C 4x2 12 Ton | 01- | 3870/1 | 3870/1 |
| MIDLUM | 6.2 210.12/C 4x2 12 Ton | 01- | 3870/1 | 3870/1 |
| MIDLUM | 6.2 210.12/C 4x2 12 Ton | 01- | 3870/2 | 3870/2 |
| MIDLUM | 6.2 210.12/C 4x2 12 Ton | 01- | 3870/2 | 3870/2 |
| MIDLUM | 6.2 210.13/C 4x2 13 Ton | 01- | 3870 | 3870 |
| MIDLUM | 6.2 210.13/C 4x2 13 Ton | 01- | 3870 | 3870 |
| MIDLUM | 6.2 210.13/C 4x2 13 Ton | 01- | 3870/1 | 3870/1 |
| MIDLUM | 6.2 210.13/C 4x2 13 Ton | 01- | 3870/1 | 3870/1 |
| MIDLUM | 6.2 210.13/C 4x2 13 Ton | 01- | 3870/2 | 3870/2 |
| MIDLUM | 6.2 210.13/C 4x2 13 Ton | 01- | 3870/2 | 3870/2 |
| MIDLUM | 6.2 210.14/C 4x2 14 Ton | 01- | 3870 | 3870 |
| MIDLUM | 6.2 210.14/C 4x2 14 Ton | 01- | 3870/1 | 3870/1 |
| MIDLUM | 6.2 210.14/C 4x2 14 Ton | 01- | 3870/2 | 3870/2 |
| MIDLUM | 6.2 210.15/C 4x2 15 Ton | 01- | 3870 | 3870 |
| MIDLUM | 6.2 210.15/C 4x2 15 Ton | 01- | 3870 | 3870 |
| MIDLUM | 6.2 210.15/C 4x2 15 Ton | 01- | 3870/1 | 3870/1 |
| MIDLUM | 6.2 210.15/C 4x2 15 Ton | 01- | 3870/1 | 3870/1 |
| MIDLUM | 6.2 210.15/C 4x2 15 Ton | 01- | 3870/2 | 3870/2 |
| MIDLUM | 6.2 210.15/C 4x2 15 Ton | 01- | 3870/2 | 3870/2 |
| MIDLUM | 6.2 210.16/C 4x2 16 Ton | 01- | 3870 | 3870 |
| MIDLUM | 6.2 210.16/C 4x2 16 Ton | 01- | 3870/1 | 3870/1 |
| MIDLUM | 6.2 210.16/C 4x2 16 Ton | 01- | 3870/2 | 3870/2 |
| MIDLUM | 6.2 220.12 4x4 12 Ton | 03- | 3844 | 3844 |
| MIDLUM | 6.2 220.12 4x4 12 Ton | 01- | 3870 | 3870 |
| MIDLUM | 6.2 220.12 4x4 12 Ton | 01- | 3870/1 | 3870/1 |
| MIDLUM | 6.2 220.12 4x4 12 Ton | 01- | 3870/2 | 3870/2 |
| MIDLUM | 6.2 220.14 4x4 14 Ton | 03- | 3844 | 3844 |
| MIDLUM | 6.2 220.14 4x4 14 Ton | 01- | 3870 | 3870 |
| MIDLUM | 6.2 220.14 4x4 14 Ton | 01- | 3870/1 | 3870/1 |
| MIDLUM | 6.2 220.14 4x4 14 Ton | 01- | 3870/2 | 3870/2 |
| MIDLUM | 6.2 220.15 4x2 15 Ton | 01- | 3565 | 3565 |
| MIDLUM | 6.2 220.15 4x2 15 Ton | 01- | 3565/A | 3565/A |
| MIDLUM | 6.2 220.15 4x2 15 Ton | 01- | 3870 | 3870 |
| MIDLUM | 6.2 220.15 4x2 15 Ton | 01- | 3870/1 | 3870/1 |
| MIDLUM | 6.2 220.15 4x2 15 Ton | 01- | 3870/2 | 3870/2 |
| MIDLUM | 6.2 220.16 4x4 16 Ton | 03- | 3844 | 3844 |
| MIDLUM | 6.2 220.16 4x4 16 Ton | 01- | 3870 | 3870 |
| MIDLUM | 6.2 220.16 4x4 16 Ton | 01- | 3870/1 | 3870/1 |
| MIDLUM | 6.2 220.16 4x4 16 Ton | 01- | 3870/2 | 3870/2 |
| MIDLUM | 6.2 220.18/D 4x2 18 Ton | 01- | 3565 | 3565 |
| MIDLUM | 6.2 220.18/D 4x2 18 Ton | 01- | 3565/A | 3565/A |
| MIDLUM | 6.2 220.18/D 4x2 18 Ton | 01- | 3870 | 3870 |
| MIDLUM | 6.2 220.18/D 4x2 18 Ton | 01- | 3870/1 | 3870/1 |
| MIDLUM | 6.2 220.18/D 4x2 18 Ton | 01- | 3870/2 | 3870/2 |
| MIDLUM | 6.2 250.12/C 4x2 12 Ton | 01- | 3870 | 3870 |
| MIDLUM | 6.2 250.12/C 4x2 12 Ton | 01- | 3870 | 3870 |
| MIDLUM | 6.2 250.12/C 4x2 12 Ton | 01- | 3870/1 | 3870/1 |
| MIDLUM | 6.2 250.12/C 4x2 12 Ton | 01- | 3870/1 | 3870/1 |
| MIDLUM | 6.2 250.12/C 4x2 12 Ton | 01- | 3870/2 | 3870/2 |
| MIDLUM | 6.2 250.12/C 4x2 12 Ton | 01- | 3870/2 | 3870/2 |
| MIDLUM | 6.2 250.13/C 4x2 13 Ton | 01- | 3870 | 3870 |
| MIDLUM | 6.2 250.13/C 4x2 13 Ton | 01- | 3870 | 3870 |
| MIDLUM | 6.2 250.13/C 4x2 13 Ton | 01- | 3870/1 | 3870/1 |
| MIDLUM | 6.2 250.13/C 4x2 13 Ton | 01- | 3870/1 | 3870/1 |
| MIDLUM | 6.2 250.13/C 4x2 13 Ton | 01- | 3870/2 | 3870/2 |
| MIDLUM | 6.2 250.13/C 4x2 13 Ton | 01- | 3870/2 | 3870/2 |
| MIDLUM | 6.2 250.14/C 4x2 14 Ton | 01- | 3870 | 3870 |
| MIDLUM | 6.2 250.14/C 4x2 14 Ton | 01- | 3870/1 | 3870/1 |
| MIDLUM | 6.2 250.14/C 4x2 14 Ton | 01- | 3870/2 | 3870/2 |
| MIDLUM | 6.2 250.15/C 4x2 15 Ton | 01- | 3870 | 3870 |
| MIDLUM | 6.2 250.15/C 4x2 15 Ton | 01- | 3870 | 3870 |
| MIDLUM | 6.2 250.15/C 4x2 15 Ton | 01- | 3870/1 | 3870/1 |
| MIDLUM | 6.2 250.15/C 4x2 15 Ton | 01- | 3870/1 | 3870/1 |
| MIDLUM | 6.2 250.15/C 4x2 15 Ton | 01- | 3870/2 | 3870/2 |
| MIDLUM | 6.2 250.15/C 4x2 15 Ton | 01- | 3870/2 | 3870/2 |
| MIDLUM | 6.2 250.16/C 4x2 16 Ton | 01- | 3870 | 3870 |
| MIDLUM | 6.2 250.16/C 4x2 16 Ton | 01- | 3870/1 | 3870/1 |
| MIDLUM | 6.2 250.16/C 4x2 16 Ton | 01- | 3870/2 | 3870/2 |
| MIDLUM | 6.2 250.16/CT 4x2 16 Ton | 01- | 3870 | 3870 |
| MIDLUM | 6.2 250.16/CT 4x2 16 Ton | 01- | 3870/1 | 3870/1 |
| MIDLUM | 6.2 250.16/CT 4x2 16 Ton | 01- | 3870/2 | 3870/2 |
| MIDLUM | 6.2 270.12/C 4x2 12 Ton | 01- | 3870 | 3870 |
| MIDLUM | 6.2 270.12/C 4x2 12 Ton | 01- | 3870/1 | 3870/1 |
| MIDLUM | 6.2 270.12/C 4x2 12 Ton | 01- | 3870/2 | 3870/2 |
| MIDLUM | 6.2 270.13/C 4x2 13 Ton | 01- | 3870 | 3870 |
| MIDLUM | 6.2 270.13/C 4x2 13 Ton | 01- | 3870/1 | 3870/1 |

| MAKE & MODEL | | YEAR | | |
|---|---|---|---|---|
| **RENAULT** | | | | |
| MIDLUM | 6.2 270.13/C 4x2 13 Ton | 01- | 3870/2 | 3870/2 |
| MIDLUM | 6.2 270.14/C 4x2 14 Ton | 01- | 3870 | 3870 |
| MIDLUM | 6.2 270.14/C 4x2 14 Ton | 01- | 3870/1 | 3870/1 |
| MIDLUM | 6.2 270.14/C 4x2 14 Ton | 01- | 3870/2 | 3870/2 |
| MIDLUM | 6.2 270.16/B 4x2 16 Ton | 01- | 3870 | 3870 |
| MIDLUM | 6.2 270.16/B 4x2 16 Ton | 01- | 3870/1 | 3870/1 |
| MIDLUM | 6.2 270.16/B 4x2 16 Ton | 01- | 3870/2 | 3870/2 |
| MIDLUM | 6.2 270.16/C 4x2 16 Ton | 01- | 3870 | 3870 |
| MIDLUM | 6.2 270.16/C 4x2 16 Ton | 01- | 3870/1 | 3870/1 |
| MIDLUM | 6.2 270.16/C 4x2 16 Ton | 01- | 3870/2 | 3870/2 |
| MIDLUM | 6.2 270.18/C 4x2 18 Ton | 01- | 3870 | 3870 |
| MIDLUM | 6.2 270.18/C 4x2 18 Ton | 01- | 3870/1 | 3870/1 |
| MIDLUM | 6.2 270.18/C 4x2 18 Ton | 01- | 3870/2 | 3870/2 |
| MIDLUM | 7.2 240.12 4x2 11.99 Ton | 06- | 4047 | 4047 |
| MIDLUM | 7.2 240.13 4x2 13 Ton | 06- | 4047 | 4047 |
| MIDLUM | 7.2 240.14 4x2 14 Ton | 06- | 4047 | 4047 |
| MIDLUM | 7.2 240.15 4x2 15 Ton | 06- | 4047 | 4047 |
| MIDLUM | 7.2 240.16 4x2 16 Ton | 06- | 4047 | 4047 |
| MIDLUM | 7.2 240.18 4x2 18 Ton | 06- | 4047 | 4047 |
| MIDLUM | 7.2 280.12 4x2 11.99 Ton | 06- | 4047 | 4047 |
| MIDLUM | 7.2 280.13 4x2 13 Ton | 06- | 4047 | 4047 |
| MIDLUM | 7.2 280.14 4x2 17 Ton | 06- | 4047 | 4047 |
| MIDLUM | 7.2 280.16 4x2 16 Ton | 06- | 4047 | 4047 |
| MIDLUM | 7.2 280.18 4x2 18 Ton | 06- | 4047 | 4047 |
| PREMIUM | 210 - 250 - 260 | 96-99 | 3828 | |
| PREMIUM | 210 - 250 - 260 | 96-99 | 3828/1 | |
| PREMIUM | 300 - 340 - 385 | 00- | 3828 | |
| PREMIUM | 300 - 340 - 385 | 00- | | 3828 |
| PREMIUM | 300 - 340 - 385 | 00- | 3828/1 | |
| PREMIUM | 300 - 340 - 385 | 00- | | 3828/1 |
| PREMIUM (Distribution) | 11.1 320.18 4x2 18 Ton | 00-01 | 3497 | |
| PREMIUM (Distribution) | 11.1 320.18 4x2 18 Ton | 00-01 | 3497/1 | |
| PREMIUM (Distribution) | 11.1 320.18 4x2 18 Ton | 00-05 | 3828/3 | 3828/3 |
| PREMIUM (Distribution) | 11.1 320.18 D 4x2 18 Ton | 00-01 | 3497 | |
| PREMIUM (Distribution) | 11.1 320.18 D 4x2 18 Ton | 00-01 | 3497/1 | |
| PREMIUM (Distribution) | 11.1 320.18 D 4x2 18 Ton | 01-05 | 3828/3 | 3828/3 |
| PREMIUM (Distribution) | 11.1 320.24 D 6x2 24 Ton | 00-01 | 3497 | |
| PREMIUM (Distribution) | 11.1 320.24 D 6x2 24 Ton | 00-01 | 3497/1 | |
| PREMIUM (Distribution) | 11.1 320.24 D 6x2 24 Ton | 01-05 | 3828/3 | 3828/3 |
| PREMIUM (Distribution) | 11.1 320.26 D 6x2/2/4 26 Ton | 00-01 | 3497 | |
| PREMIUM (Distribution) | 11.1 320.26 D 6x2/2/4 26 Ton | 00-01 | 3497/1 | |
| PREMIUM (Distribution) | 11.1 320.26 D 6x2/2/4 26 Ton | 01-05 | 3828/3 | 3828/3 |
| PREMIUM (Distribution) | 11.1 370.18 4x2 18 Ton | 00-01 | 3497 | |
| PREMIUM (Distribution) | 11.1 370.18 4x2 18 Ton | 00-01 | 3497/1 | |
| PREMIUM (Distribution) | 11.1 370.18 4x2 18 Ton | 00-05 | 3828/3 | 3828/3 |
| PREMIUM (Distribution) | 11.1 370.18 D 4x2 18 Ton | 00-01 | 3497 | |
| PREMIUM (Distribution) | 11.1 370.18 D 4x2 18 Ton | 00-01 | 3497/1 | |
| PREMIUM (Distribution) | 11.1 370.18 D 4x2 18 Ton | 01-05 | 3828/3 | 3828/3 |
| PREMIUM (Distribution) | 11.1 370.24 6x2 24 Ton | 00-01 | 3497 | |
| PREMIUM (Distribution) | 11.1 370.24 6x2 24 Ton | 00-01 | 3497/1 | |
| PREMIUM (Distribution) | 11.1 370.24 6x2 24 Ton | 01-05 | 3828/3 | 3828/3 |
| PREMIUM (Distribution) | 11.1 370.26 D 6x2/2/4 26 Ton | 00-01 | 3497 | |
| PREMIUM (Distribution) | 11.1 370.26 D 6x2/2/4 26 Ton | 00-01 | 3497/1 | |
| PREMIUM (Distribution) | 11.1 370.26 D 6x2/2/4 26 Ton | 01-05 | 3828/3 | 3828/3 |
| PREMIUM (Distribution) | 11.1 420.18 4x2 18 Ton | 00-01 | 3497 | |
| PREMIUM (Distribution) | 11.1 420.18 4x2 18 Ton | 00-01 | 3497/1 | |
| PREMIUM (Distribution) | 11.1 420.18 4x2 18 Ton | 00-05 | 3828/3 | 3828/3 |
| PREMIUM (Distribution) | 11.1 420.18 D 4x2 18 Ton | 00-01 | 3497 | |
| PREMIUM (Distribution) | 11.1 420.18 D 4x2 18 Ton | 00-01 | 3497/1 | |
| PREMIUM (Distribution) | 11.1 420.18 D 4x2 18 Ton | 01-05 | 3828/3 | 3828/3 |
| PREMIUM (Distribution) | 6.2 210 4x2 18 Ton | 98-00 | 3770 | 5875 |
| PREMIUM (Distribution) | 6.2 210 4x2 18 Ton | 98-00 | 3770/1 | 5875 |
| PREMIUM (Distribution) | 6.2 210 4x2 18 Ton D2 | 00-05 | 3828/3 | 5875 |
| PREMIUM (Distribution) | 6.2 210 4x2 18 Ton D3 | 00-05 | 3497 | 5875 |
| PREMIUM (Distribution) | 6.2 210 4x2 18 Ton D3 | 00-05 | 3497/1 | 5875 |
| PREMIUM (Distribution) | 6.2 250 4x2 18 Ton | 98-00 | 3770 | 5875 |
| PREMIUM (Distribution) | 6.2 250 4x2 18 Ton | 98-00 | 3770/1 | 5875 |
| PREMIUM (Distribution) | 6.2 250 4x2 18 Ton D2 | 00-05 | 3828/3 | 5875 |
| PREMIUM (Distribution) | 6.2 250 4x2 18 Ton D3 | 00-05 | 3497 | 5875 |
| PREMIUM (Distribution) | 6.2 250 4x2 18 Ton D3 | 00-05 | 3497/1 | 5875 |
| PREMIUM (Distribution) | 6.2 270.18 4x2 18 Ton | 00-01 | 3497 | 3497 |
| PREMIUM (Distribution) | 6.2 270.18 4x2 18 Ton | 00-01 | 3497/1 | 3497/1 |
| PREMIUM (Distribution) | 6.2 270.18 4x2 18 Ton | 01-05 | 3828/3 | 3828/3 |
| PREMIUM (Distribution) | 9.8 300 4x2 18 Ton | 98-00 | 3770 | 5875 |
| PREMIUM (Distribution) | 9.8 300 4x2 18 Ton | 98-00 | 3770 | 5875 |
| PREMIUM (Distribution) | 9.8 300 4x2 18 Ton | 98-00 | 3770/1 | 5875 |

| MAKE & MODEL | | YEAR | | |
|---|---|---|---|---|
| **RENAULT** | | | | |
| PREMIUM (Distribution) | 9.8 300 4x2 18 Ton | 98-00 | 3770/1 | 5875 |
| PREMIUM (Distribution) | 9.8 300 4x2 18 Ton D2 | 00-05 | 3828/3 | 5875 |
| PREMIUM (Distribution) | 9.8 300 4x2 18 Ton D2 | 00-05 | 3828/3 | 5875 |
| PREMIUM (Distribution) | 9.8 300 4x2 18 Ton D3 | 00-05 | 3497 | 5875 |
| PREMIUM (Distribution) | 9.8 300 4x2 18 Ton D3 | 00-05 | 3497 | 5875 |
| PREMIUM (Distribution) | 9.8 300 4x2 18 Ton D3 | 00-05 | 3497/1 | 5875 |
| PREMIUM (Distribution) | 9.8 300 4x2 18 Ton D3 | 00-05 | 3497/1 | 5875 |
| PREMIUM (Distribution) | 9.8 300 6x2/2/4 26 Ton | 98-00 | 3770 | 5875 |
| PREMIUM (Distribution) | 9.8 300 6x2/2/4 26 Ton | 98-00 | 3770/1 | 5875 |
| PREMIUM (Distribution) | 9.8 300 6x2/2/4 26 Ton D2 | 00-05 | 3828/3 | 5875 |
| PREMIUM (Distribution) | 9.8 300 6x2/2/4 26 Ton D3 | 00-05 | 3497 | 5875 |
| PREMIUM (Distribution) | 9.8 300 6x2/2/4 26 Ton D3 | 00-05 | 3497/1 | 5875 |
| PREMIUM (Distribution) | 9.8 340 4x2 18 Ton | 98-00 | 3770 | 5875 |
| PREMIUM (Distribution) | 9.8 340 4x2 18 Ton | 98-00 | 3770 | 5875 |
| PREMIUM (Distribution) | 9.8 340 4x2 18 Ton | 98-00 | 3770/1 | 5875 |
| PREMIUM (Distribution) | 9.8 340 4x2 18 Ton | 98-00 | 3770/1 | 5875 |
| PREMIUM (Distribution) | 9.8 340 4x2 18 Ton D2 | 00-05 | 3828/3 | 5875 |
| PREMIUM (Distribution) | 9.8 340 4x2 18 Ton D2 | 00-05 | 3828/3 | 5875 |
| PREMIUM (Distribution) | 9.8 340 4x2 18 Ton D3 | 00-05 | 3497 | 5875 |
| PREMIUM (Distribution) | 9.8 340 4x2 18 Ton D3 | 00-05 | 3497 | 5875 |
| PREMIUM (Distribution) | 9.8 340 4x2 18 Ton D3 | 00-05 | 3497/1 | 5875 |
| PREMIUM (Distribution) | 9.8 340 4x2 18 Ton D3 | 00-05 | 3497/1 | 5875 |
| PREMIUM (Distribution) | 9.8 340 6x2/2/2/4 26 Ton | 98-00 | 3770 | 5875 |
| PREMIUM (Distribution) | 9.8 340 6x2/2/2/4 26 Ton | 98-00 | 3770/1 | 5875 |
| PREMIUM (Distribution) | 9.8 340 6x2/2/2/4 26 Ton D2 | 00-05 | 3828/3 | 5875 |
| PREMIUM (Distribution) | 9.8 340 6x2/2/2/4 26 Ton D3 | 00-05 | 3497 | 5875 |
| PREMIUM (Distribution) | 9.8 340 6x2/2/2/4 26 Ton D3 | 00-05 | 3497/1 | 5875 |
| PREMIUM (Route) | 11.1 320, 320.18 4x2 18 Ton | 00-01 | 3497 | 3828 |
| PREMIUM (Route) | 11.1 320, 320.18 4x2 18 Ton | 00-01 | 3497 | 3828 |
| PREMIUM (Route) | 11.1 320, 320.18 4x2 18 Ton | 00-01 | 3497/1 | 3828 |
| PREMIUM (Route) | 11.1 320, 320.18 4x2 18 Ton | 00-01 | 3497/1 | 3828 |
| PREMIUM (Route) | 11.1 320, 320.18 4x2 18 Ton | 00-01 | 3497 | 3828/3 |
| PREMIUM (Route) | 11.1 320, 320.18 4x2 18 Ton | 01-05 | 3828/3 | 3828/3 |
| PREMIUM (Route) | 11.1 320, 320.18 4x2 18 Ton | 00-01 | 3497 | 3828/3 |
| PREMIUM (Route) | 11.1 320, 320.18 4x2 18 Ton | 01-05 | 3828/3 | 3828/3 |
| PREMIUM (Route) | 11.1 370, 370.18 4x2 18 Ton | 00-01 | 3497 | 3828 |
| PREMIUM (Route) | 11.1 370, 370.18 4x2 18 Ton | 00-01 | 3497/1 | 3828 |
| PREMIUM (Route) | 11.1 370, 370.18 4x2 18 Ton | 01-05 | 3828/3 | 3828/3 |
| PREMIUM (Route) | 11.1 370, 370.18 4x2 18 Ton | 00-01 | 3497 | 3828/3 |
| PREMIUM (Route) | 11.1 370, 370.18 4x2 18 Ton | 01-05 | 3828/3 | 3828/3 |
| PREMIUM (Route) | 11.1 370, 370.24 6x2 24 Ton | 00-01 | 3497 | 3828 |
| PREMIUM (Route) | 11.1 370, 370.24 6x2 24 Ton | 00-01 | 3497/1 | 3828 |
| PREMIUM (Route) | 11.1 370, 370.24 6x2 24 Ton | 00-01 | 3497 | 3828/3 |
| PREMIUM (Route) | 11.1 370, 370.24 6x2 24 Ton | 01-05 | 3828/3 | 3828/3 |
| PREMIUM (Route) | 11.1 370, 370.26 6x2 26 Ton | 01-05 | 3828/3 | 3828/3 |
| PREMIUM (Route) | 11.1 370,370.26 6x2 26 Ton | 00-01 | 3497 | 3828 |
| PREMIUM (Route) | 11.1 370,370.26 6x2 26 Ton | 00-01 | 3497/1 | 3828 |
| PREMIUM (Route) | 11.1 370,370.26 6x2 26 Ton | 00-01 | 3497 | 3828/3 |
| PREMIUM (Route) | 11.1 370. 370.18 4x2 18 Ton | 00-01 | 3497 | 3828 |
| PREMIUM (Route) | 11.1 370. 370.18 4x2 18 Ton | 00-01 | 3497/1 | 3828 |
| PREMIUM (Route) | 11.1 370. 370.18 4x2 18 Ton | 00-01 | 3497 | 3828/3 |
| PREMIUM (Route) | 11.1 385 4x2 18 Ton | 00-05 | 3497 | 3828 |
| PREMIUM (Route) | 11.1 385 4x2 18 Ton | 00-05 | 3497/1 | 3828 |
| PREMIUM (Route) | 11.1 385 4x2 18 Ton | 98-00 | 3770 | 5875 |
| PREMIUM (Route) | 11.1 385 4x2 18 Ton | 98-00 | 3770/1 | 5875 |
| PREMIUM (Route) | 11.1 385 4x2 18 Ton | 00-05 | 3828/3 | 3828/3 |
| PREMIUM (Route) | 11.1 385 4x2 18 Ton | 00-05 | 3497 | 3828/3 |
| PREMIUM (Route) | 11.1 385 6x2 24 Ton | 00-05 | 3497 | 3828 |
| PREMIUM (Route) | 11.1 385 6x2 24 Ton | 00-05 | 3497/1 | 3828 |
| PREMIUM (Route) | 11.1 385 6x2 24 Ton | 98-00 | 3770 | 5875 |
| PREMIUM (Route) | 11.1 385 6x2 24 Ton | 98-00 | 3770/1 | 5875 |
| PREMIUM (Route) | 11.1 385 6x2 24 Ton | 00-05 | 3828/3 | 3828/3 |
| PREMIUM (Route) | 11.1 385 6x2 24 Ton | 00-05 | 3497 | 3828/3 |
| PREMIUM (Route) | 11.1 385 6x2/4 26 Ton | 00-05 | 3497 | 3828 |
| PREMIUM (Route) | 11.1 385 6x2/4 26 Ton | 00-05 | 3497/1 | 3828 |
| PREMIUM (Route) | 11.1 385 6x2/4 26 Ton | 98-00 | 3770 | 5875 |
| PREMIUM (Route) | 11.1 385 6x2/4 26 Ton | 98-00 | 3770/1 | 5875 |
| PREMIUM (Route) | 11.1 385 6x2/4 26 Ton | 00-05 | 3497 | 3828/3 |
| PREMIUM (Route) | 11.1 385 6x2/4 26 Ton | 00-05 | 3828/3 | 3828/3 |
| PREMIUM (Route) | 11.1 385/400 4x2 18 Ton | 00-05 | 3497 | 3828 |
| PREMIUM (Route) | 11.1 385/400 4x2 18 Ton | 00-05 | 3497/1 | 3828 |
| PREMIUM (Route) | 11.1 385/400 4x2 18 Ton | 98-00 | 3770 | 5875 |
| PREMIUM (Route) | 11.1 385/400 4x2 18 Ton | 98-00 | 3770/1 | 5875 |
| PREMIUM (Route) | 11.1 385/400 4x2 18 Ton | 00-05 | 3497 | 3828/3 |
| PREMIUM (Route) | 11.1 385/400 4x2 18 Ton | 00-05 | 3828/3 | 3828/3 |
| PREMIUM (Route) | 11.1 385/400 6x2 24 Ton | 00-05 | 3497 | 3828 |

| MAKE & MODEL | | YEAR | 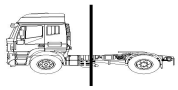 | |
|---|---|---|---|---|
| **RENAULT** | | | | |
| PREMIUM (Route) | 11.1 385/400 6x2 24 Ton | 00-05 | 3497/1 | 3828 |
| PREMIUM (Route) | 11.1 385/400 6x2 24 Ton | 98-00 | 3770 | 5875 |
| PREMIUM (Route) | 11.1 385/400 6x2 24 Ton | 98-00 | 3770/1 | 5875 |
| PREMIUM (Route) | 11.1 385/400 6x2 24 Ton | 00-05 | 3828/3 | 3828/3 |
| PREMIUM (Route) | 11.1 385/400 6x2 24 Ton | 00-05 | 3497 | 3828/3 |
| PREMIUM (Route) | 11.1 385/400 6x2 26 Ton | 00-05 | 3497 | 3828 |
| PREMIUM (Route) | 11.1 385/400 6x2 26 Ton | 00-05 | 3497/1 | 3828 |
| PREMIUM (Route) | 11.1 385/400 6x2 26 Ton | 98-00 | 3770 | 5875 |
| PREMIUM (Route) | 11.1 385/400 6x2 26 Ton | 98-00 | 3770/1 | 5875 |
| PREMIUM (Route) | 11.1 385/400 6x2 26 Ton | 00-05 | 3828/3 | 3828/3 |
| PREMIUM (Route) | 11.1 385/400 6x2 26 Ton | 00-05 | 3497 | 3828/3 |
| PREMIUM (Route) | 11.1 420, 420.18 4x2 18 Ton | 00-01 | 3497 | 3828 |
| PREMIUM (Route) | 11.1 420, 420.18 4x2 18 Ton | 00-01 | 3497/1 | 3828 |
| PREMIUM (Route) | 11.1 420, 420.18 4x2 18 Ton | 00-01 | 3497 | 3828/3 |
| PREMIUM (Route) | 11.1 420, 420.18 4x2 18 Ton | 01-05 | 3828/3 | 3828/3 |
| PREMIUM (Route) | 11.1 420, 420.24 6x2 24 Ton | 00-01 | 3497 | 3828 |
| PREMIUM (Route) | 11.1 420, 420.24 6x2 24 Ton | 00-01 | 3497 | 3828 |
| PREMIUM (Route) | 11.1 420, 420.24 6x2 24 Ton | 00-01 | 3497/1 | 3828 |
| PREMIUM (Route) | 11.1 420, 420.24 6x2 24 Ton | 00-01 | 3497/1 | 3828 |
| PREMIUM (Route) | 11.1 420, 420.24 6x2 24 Ton | 00-01 | 3497 | 3828/3 |
| PREMIUM (Route) | 11.1 420, 420.24 6x2 24 Ton | 01-05 | 3828/3 | 3828/3 |
| PREMIUM (Route) | 11.1 420, 420.24 6x2 24 Ton | 00-01 | 3497 | 3828/3 |
| PREMIUM (Route) | 11.1 420, 420.24 6x2 24 Ton | 01-05 | 3828/3 | 3828/3 |
| PREMIUM (Route) | 11.1 420, 420.25 6x2 25 Ton | 00-01 | 3497 | 3828 |
| PREMIUM (Route) | 11.1 420, 420.25 6x2 25 Ton | 00-01 | 3497/1 | 3828 |
| PREMIUM (Route) | 11.1 420, 420.25 6x2 25 Ton | 00-01 | 3497 | 3828/3 |
| PREMIUM (Route) | 11.1 420, 420.25 6x2 25 Ton | 01-05 | 3828/3 | 3828/3 |
| PREMIUM (Route) | 11.1 420, 420.26 6x2 26 Ton | 00-01 | 3497 | 3828 |
| PREMIUM (Route) | 11.1 420, 420.26 6x2 26 Ton | 00-01 | 3497/1 | 3828 |
| PREMIUM (Route) | 11.1 420, 420.26 6x2 26 Ton | 01-05 | 3828/3 | 3828/3 |
| PREMIUM (Route) | 11.1 420, 420.26 6x2 26 Ton | 00-01 | 3497 | 3828/3 |
| PREMIUM (Route) | 9.8 300 4x2 18 Ton | 00-05 | 3497 | 3828 |
| PREMIUM (Route) | 9.8 300 4x2 18 Ton | 00-05 | 3497 | 3828 |
| PREMIUM (Route) | 9.8 300 4x2 18 Ton | 00-05 | 3497/1 | 3828 |
| PREMIUM (Route) | 9.8 300 4x2 18 Ton | 00-05 | 3497/1 | 3828 |
| PREMIUM (Route) | 9.8 300 4x2 18 Ton | 98-00 | 3770 | 5875 |
| PREMIUM (Route) | 9.8 300 4x2 18 Ton | 98-00 | 3770 | 5875 |
| PREMIUM (Route) | 9.8 300 4x2 18 Ton | 98-00 | 3770/1 | 5875 |
| PREMIUM (Route) | 9.8 300 4x2 18 Ton | 98-00 | 3770/1 | 5875 |
| PREMIUM (Route) | 9.8 300 4x2 18 Ton | 00-05 | 3828/3 | 3828/3 |
| PREMIUM (Route) | 9.8 300 4x2 18 Ton | 00-05 | 3497 | 3828/3 |
| PREMIUM (Route) | 9.8 300 4x2 18 Ton | 00-05 | 3497 | 3828/3 |
| PREMIUM (Route) | 9.8 300 4x2 18 Ton | 00-05 | 3828/3 | 3828/3 |
| PREMIUM (Route) | 9.8 340 4x2 18 Ton | 00-05 | 3497 | 3828 |
| PREMIUM (Route) | 9.8 340 4x2 18 Ton | 00-05 | 3497 | 3828 |
| PREMIUM (Route) | 9.8 340 4x2 18 Ton | 00-05 | 3497/1 | 3828 |
| PREMIUM (Route) | 9.8 340 4x2 18 Ton | 00-05 | 3497/1 | 3828 |
| PREMIUM (Route) | 9.8 340 4x2 18 Ton | 98-00 | 3770 | 5875 |
| PREMIUM (Route) | 9.8 340 4x2 18 Ton | 98-00 | 3770 | 5875 |
| PREMIUM (Route) | 9.8 340 4x2 18 Ton | 98-00 | 3770/1 | 5875 |
| PREMIUM (Route) | 9.8 340 4x2 18 Ton | 98-00 | 3770/1 | 5875 |
| PREMIUM (Route) | 9.8 340 4x2 18 Ton | 00-05 | 3828/3 | 3828/3 |
| PREMIUM (Route) | 9.8 340 4x2 18 Ton | 00-05 | 3497 | 3828/3 |
| PREMIUM (Route) | 9.8 340 4x2 18 Ton | 00-05 | 3497 | 3828/3 |
| PREMIUM (Route) | 9.8 340 4x2 18 Ton | 00-05 | 3828/3 | 3828/3 |
| PREMIUM (Route) | 9.8 340 6x2 26 Ton | 00-05 | 3497 | 3828 |
| PREMIUM (Route) | 9.8 340 6x2 26 Ton | 00-05 | 3497/1 | 3828 |
| PREMIUM (Route) | 9.8 340 6x2 26 Ton | 98-00 | 3770 | 5875 |
| PREMIUM (Route) | 9.8 340 6x2 26 Ton | 98-00 | 3770/1 | 5875 |
| PREMIUM (Route) | 9.8 340 6x2 26 Ton | 00-05 | 3828/3 | 3828/3 |
| PREMIUM (Route) | 9.8 340 6x2 26 Ton | 00-05 | 3497 | 3828/3 |
| PREMIUM 2 (Distribution) | 10.8 370.18 D 4x2 18 Ton | 05- | 3917 | 3917 |
| PREMIUM 2 (Distribution) | 10.8 370.18 D 4x2 18 Ton | 05- | 3917 | 3917 |
| PREMIUM 2 (Distribution) | 10.8 370.18 D 4x2 18 Ton | 05- | 3917/1 | 3917/1 |
| PREMIUM 2 (Distribution) | 10.8 370.18 D 4x2 18 Ton | 05- | 3917/1 | 3917/1 |
| PREMIUM 2 (Distribution) | 10.8 370.18 D 4x2 18 Ton Eje Elevador | 05- | | 4131 |
| PREMIUM 2 (Distribution) | 10.8 370.26 6x2 26 Ton | 05- | 3917 | 3917 |
| PREMIUM 2 (Distribution) | 10.8 370.26 6x2 26 Ton | 05- | 3917/1 | 3917/1 |
| PREMIUM 2 (Distribution) | 10.8 370.26 6x2 26 Ton Eje Elevador | 05- | | 4131 |
| PREMIUM 2 (Distribution) | 10.8 410.18 D 4x2 18 Ton | 05- | 3917 | 3917 |
| PREMIUM 2 (Distribution) | 10.8 410.18 D 4x2 18 Ton | 05- | 3917 | 3917 |
| PREMIUM 2 (Distribution) | 10.8 410.18 D 4x2 18 Ton | 05- | 3917/1 | 3917/1 |
| PREMIUM 2 (Distribution) | 10.8 410.18 D 4x2 18 Ton | 05- | 3917/1 | 3917/1 |
| PREMIUM 2 (Distribution) | 10.8 410.18 D 4x2 18 Ton Eje Elevador | 05- | | 4131 |
| PREMIUM 2 (Distribution) | 10.8 410.26 6x2 26 Ton | 05- | 3917 | 3917 |
| PREMIUM 2 (Distribution) | 10.8 410.26 6x2 26 Ton | 05- | 3917/1 | 3917/1 |

| MAKE & MODEL | | YEAR | 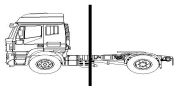 | |
|---|---|---|---|---|
| **RENAULT** | | | | |
| PREMIUM 2 (Distribution) | 10.8 410.26 6x2 26 Ton Eje Elevador | 05- | | 4131 |
| PREMIUM 2 (Distribution) | 10.8 450.18 D 4x2 18 Ton | 05- | 3917 | 3917 |
| PREMIUM 2 (Distribution) | 10.8 450.18 D 4x2 18 Ton | 05- | 3917/1 | 3917/1 |
| PREMIUM 2 (Distribution) | 10.8 450.18 D 4x2 18 Ton Eje Elevador | 05- | | 4131 |
| PREMIUM 2 (Distribution) | 7.2 280.18 D 4x2 18 Ton | 05- | 3917 | 3917 |
| PREMIUM 2 (Distribution) | 7.2 280.18 D 4x2 18 Ton | 05- | 3917/1 | 3917/1 |
| PREMIUM 2 (Distribution) | 7.2 280.26 6x2/4 26 Ton | 05- | 3917 | 3917 |
| PREMIUM 2 (Distribution) | 7.2 280.26 6x2/4 26 Ton | 05- | 3917/1 | 3917/1 |
| PREMIUM 2 (Distribution) | 7.2 280.26 6x2/4 26 Ton Eje Elevador | 05- | | 4131 |
| PREMIUM 2 (Distribution) | 7.2 320.18 D 4x2 18 Ton | 05- | 3917 | 3917 |
| PREMIUM 2 (Distribution) | 7.2 320.18 D 4x2 18 Ton | 05- | 3917/1 | 3917/1 |
| PREMIUM 2 (Distribution) | 7.2 320.18 D 4x2 18 Ton Eje Elevador | 05- | | 4131 |
| PREMIUM 2 (Distribution) | 7.2 320.26 6x2 26 Ton | 05- | 3917 | 3917 |
| PREMIUM 2 (Distribution) | 7.2 320.26 6x2 26 Ton | 05- | 3917/1 | 3917/1 |
| PREMIUM 2 (Distribution) | 7.2 320.26 6x2 26 Ton Eje Elevador | 05- | | 4131 |
| PREMIUM 2 (Route) | 10.8 410.18 4x2 18 Ton | 05- | 3917 | 3917 |
| PREMIUM 2 (Route) | 10.8 410.18 4x2 18 Ton | 05- | 3917/1 | 3917/1 |
| PREMIUM 2 (Route) | 10.8 410.18 4x2 18 Ton Eje Elevador | 05- | | 4131 |
| PREMIUM 2 (Route) | 10.8 410.18 D 4x2 18 Ton | 05- | 3917 | 3917 |
| PREMIUM 2 (Route) | 10.8 410.18 D 4x2 18 Ton | 05- | 3917/1 | 3917/1 |
| PREMIUM 2 (Route) | 10.8 410.18 D 4x2 18 Ton Eje Elevador | 05- | | 4131 |
| PREMIUM 2 (Route) | 10.8 410.24 6x2 24 Ton | 05- | 3917 | 3917 |
| PREMIUM 2 (Route) | 10.8 410.24 6x2 24 Ton | 05- | 3917/1 | 3917/1 |
| PREMIUM 2 (Route) | 10.8 410.24 6x2 24 Ton Eje Elevador | 05- | | 4131 |
| PREMIUM 2 (Route) | 10.8 410.25 6x2 25 Ton | 05- | 3917 | 3917 |
| PREMIUM 2 (Route) | 10.8 410.25 6x2 25 Ton | 05- | 3917 | 3917 |
| PREMIUM 2 (Route) | 10.8 410.25 6x2 25 Ton | 05- | 3917/1 | 3917/1 |
| PREMIUM 2 (Route) | 10.8 410.25 6x2 25 Ton | 05- | 3917/1 | 3917/1 |
| PREMIUM 2 (Route) | 10.8 410.25 6x2 25 Ton Eje Elevador | 05- | | 4131 |
| PREMIUM 2 (Route) | 10.8 410.26 6x2 26 Ton | 05- | 3917 | 3917 |
| PREMIUM 2 (Route) | 10.8 410.26 6x2 26 Ton | 05- | 3917/1 | 3917/1 |
| PREMIUM 2 (Route) | 10.8 410.26 6x2 26 Ton Eje Elevador | 05- | | 4131 |
| PREMIUM 2 (Route) | 10.8 450.18 4x2 18 Ton | 05- | 3917 | 3917 |
| PREMIUM 2 (Route) | 10.8 450.18 4x2 18 Ton | 05- | 3917/1 | 3917/1 |
| PREMIUM 2 (Route) | 10.8 450.18 4x2 18 Ton Eje Elevador | 05- | | 4131 |
| PREMIUM 2 (Route) | 10.8 450.18 D 4x2 18 Ton | 05- | 3917 | 3917 |
| PREMIUM 2 (Route) | 10.8 450.18 D 4x2 18 Ton | 05- | 3917/1 | 3917/1 |
| PREMIUM 2 (Route) | 10.8 450.18 D 4x2 18 Ton Eje Elevador | 05- | | 4131 |
| PREMIUM 2 (Route) | 10.8 450.24 6x2 24.5 Ton | 05- | 3917 | 3917 |
| PREMIUM 2 (Route) | 10.8 450.24 6x2 24.5 Ton | 05- | 3917/1 | 3917/1 |
| PREMIUM 2 (Route) | 10.8 450.24 6x2 24.5 Ton Eje Elevador | 05- | | 4131 |
| PREMIUM 2 (Route) | 10.8 450.25 6x2 25 Ton | 05- | 3917 | 3917 |
| PREMIUM 2 (Route) | 10.8 450.25 6x2 25 Ton | 05- | 3917 | 3917 |
| PREMIUM 2 (Route) | 10.8 450.25 6x2 25 Ton | 05- | 3917/1 | 3917/1 |
| PREMIUM 2 (Route) | 10.8 450.25 6x2 25 Ton | 05- | 3917/1 | 3917/1 |
| PREMIUM 2 (Route) | 10.8 450.25 6x2 25 Ton Eje Elevador | 05- | | 4131 |
| PREMIUM 2 (Route) | 10.8 450.26 6x2 26 Ton | 05- | 3917 | 3917 |
| PREMIUM 2 (Route) | 10.8 450.26 6x2 26 Ton | 05- | 3917/1 | 3917/1 |
| PREMIUM 2 (Route) | 10.8 450.26 6x2 26 Ton Eje Elevador | 05- | | 4131 |
| R MAJOR | 12.0 R 380 4x2 17.5 Ton | *91-96* | 3497 | 5888 |
| R MAJOR | 12.0 R 380 4x2 17.5 Ton | *91-96* | 3497/1 | 5888 |
| R MAJOR | 12.0 R 380 4x2 18 Ton | *91-96* | 3497 | 5888 |
| R MAJOR | 12.0 R 380 4x2 18 Ton | *91-96* | 3497 | 5888 |
| R MAJOR | 12.0 R 380 4x2 18 Ton | *91-96* | 3497 | 5888 |
| R MAJOR | 12.0 R 380 4x2 18 Ton | *91-96* | 3497 | 5888 |
| R MAJOR | 12.0 R 380 4x2 18 Ton | *91-96* | 3497/1 | 5888 |
| R MAJOR | 12.0 R 380 4x2 18 Ton | *91-96* | 3497/1 | 5888 |
| R MAJOR | 12.0 R 380 4x2 18 Ton | *91-96* | 3497/1 | 5888 |
| R MAJOR | 12.0 R 380 4x2 18 Ton | *91-96* | 3497/1 | 5888 |
| R MAJOR | 12.0 R 380 4x2 19 Ton | *91-96* | 3497 | 5888 |
| R MAJOR | 12.0 R 380 4x2 19 Ton | *91-96* | 3497 | 5888 |
| R MAJOR | 12.0 R 380 4x2 19 Ton | *91-96* | 3497/1 | 5888 |
| R MAJOR | 12.0 R 380 4x2 19 Ton | *91-96* | 3497/1 | 5888 |
| R MAJOR | 12.0 R 385 ti.17 4x2 17.5 Ton | *91-96* | 3497 | 5888 |
| R MAJOR | 12.0 R 385 ti.17 4x2 17.5 Ton | *91-96* | 3497/1 | 5888 |
| R MAJOR | 12.0 R 385 ti.18 4x2 18 Ton | *91-96* | 3497 | 5888 |
| R MAJOR | 12.0 R 385 ti.18 4x2 18 Ton | *91-96* | 3497 | 5888 |
| R MAJOR | 12.0 R 385 ti.18 4x2 18 Ton | *91-96* | 3497 | 5888 |
| R MAJOR | 12.0 R 385 ti.18 4x2 18 Ton | *91-96* | 3497/1 | 5888 |
| R MAJOR | 12.0 R 385 ti.18 4x2 18 Ton | *91-96* | 3497/1 | 5888 |
| R MAJOR | 12.0 R 385 ti.18 4x2 18 Ton | *91-96* | 3497/1 | 5888 |
| R MAJOR | 12.0 R 385 ti.18 4x2 18.5 Ton | *91-96* | 3497 | 5888 |
| R MAJOR | 12.0 R 385 ti.18 4x2 18.5 Ton | *91-96* | 3497/1 | 5888 |
| R MAJOR | 12.0 R 385 ti.19 4x2 19 Ton | *91-96* | 3497 | 5888 |
| R MAJOR | 12.0 R 385 ti.19 4x2 19 Ton | *91-96* | 3497 | 5888 |
| R MAJOR | 12.0 R 385 ti.19 4x2 19 Ton | *91-96* | 3497/1 | 5888 |

| MAKE & MODEL | | YEAR | | |
|---|---|---|---|---|
| **S.A.E. / DUPILLIER** | | | | |
| | | 04- | | 3902 |
| | | 04- | | 3902/1 |
| **SAF - SAUER** | | | | |
| Eje/Axle | Llanta 22" SK RS/RZ 11222 K. 9022 K | *98-* | 3664 | 3664 |
| SK | SKRZ 11019 K Variante 1 - 11 Ton (SB/SN6000) | | | 3789 |
| SK | SKRZ 11222 K Variante 1 - 11 Ton Llanta 22.5" (PAN22-1) | *04-* | | 3839 |
| SK | SKRZ 11222 K Variante 1 - 11 Ton Llanta 22.5" (PAN22-1) | *04-* | | 3839/1 |
| SK | SKRZ 11222 K Variante 1 - 11 Ton Llanta 22.5" (PAN22-1) | *04-* | | 3839/2 |
| SK | SKRZ 9019 K Variante 1 - 9 Ton (SB/SN6000) | | | 3789 |
| SK | SKRZ 9022 K Variante 1 - 9 Ton Llanta 22.5" (PAN22-1) | *04-* | | 3839 |
| SK | SKRZ 9022 K Variante 1 - 9 Ton Llanta 22.5" (PAN22-1) | *04-* | | 3839/1 |
| SK | SKRZ 9022 K Variante 1 - 9 Ton Llanta 22.5" (PAN22-1) | *04-* | | 3839/2 |
| SKRB | 9022 K 430x45 Variante 1 Llanta 22" | *98-* | 3664 | 3664 |
| SKRB | SKRB 9019 K 377x45 Variante 1 Llanta 19.5" (SB/SN6000) | *98-* | | 3789 |
| SKRB | SKRB 9019 K -9 Ton. (PAN 19-1) | 03- | | 3844 |
| SKRB | SKRB 9019 KI Integral 377x45 -9 Ton. (SB/SN6000) | | | 3789 |
| SKRB | SKRB 9019 W 377x45 Variante 1 -9 Ton (PAN 19-1) | 03- | | 3844 |
| SKRB | SKRB 9019 W 377x45 Variante 1 Llanta 19.5" -9 Ton (SB/SN6000) | *03-* | | 3789 |
| SKRB | SKRB 9019 WI Integral 377x45 -9 Ton. (SB/SN6000) | | | 3789 |
| SKRB | SKRB 9022 H (MK IV) 430x45 - 9 Ton Llanta 22.5" (PAN22-1) | *04-* | | 3839 |
| SKRB | SKRB 9022 H (MK IV) 430x45 - 9 Ton Llanta 22.5" (PAN22-1) | *04-* | | 3839/1 |
| SKRB | SKRB 9022 H (MK IV) 430x45 - 9 Ton Llanta 22.5" (PAN22-1) | *04-* | | 3839/2 |
| SKRB | SKRB 9022 H (MK IV) 430x45 - 9 Ton Llanta 22.5" (SK7/MA7) | | | 3902 |
| SKRB | SKRB 9022 H (MK IV) 430x45 - 9 Ton Llanta 22.5" (SK7/MA7) | | | 3902/1 |
| SKRB | SKRB 9022 H (Modul X) 430x45 - 9 Ton Llanta 22.5" (PAN22-1) | *04-* | | 3839 |
| SKRB | SKRB 9022 H (Modul X) 430x45 - 9 Ton Llanta 22.5" (PAN22-1) | *04-* | | 3839/1 |
| SKRB | SKRB 9022 H (Modul X) 430x45 - 9 Ton Llanta 22.5" (PAN22-1) | *04-* | | 3839/2 |
| SKRB | SKRB 9022 H (Modul X) 430x45 - 9 Ton Llanta 22.5" (SK7/MA7) | | | 3902 |
| SKRB | SKRB 9022 H (Modul X) 430x45 - 9 Ton Llanta 22.5" (SK7/MA7) | | | 3902/1 |
| SKRB | SKRB 9022 H 377x45 -9 Ton. (PAN 19-1) | 03- | | 3844 |
| SKRB | SKRB 9022 H 377x45 -9 Ton. (SB/SN6000) | | | 3789 |
| SKRB | SKRB 9022 K 01 430x45 - 9 Ton Llanta 22.5" (PAN22-1) | *04-* | | 3839 |
| SKRB | SKRB 9022 K 01 430x45 - 9 Ton Llanta 22.5" (PAN22-1) | *04-* | | 3839/1 |
| SKRB | SKRB 9022 K 01 430x45 - 9 Ton Llanta 22.5" (PAN22-1) | *04-* | | 3839/2 |
| SKRB | SKRB 9022 K 430x45 - 9 Ton Llanta 22.5" (PAN22-1) | *04-* | | 3839 |
| SKRB | SKRB 9022 K 430x45 - 9 Ton Llanta 22.5" (PAN22-1) | *04-* | | 3839/1 |
| SKRB | SKRB 9022 K 430x45 - 9 Ton Llanta 22.5" (PAN22-1) | *04-* | | 3839/2 |
| SKRB | SKRB 9022 K 430x45 - 9 Ton Llanta 22.5" (SK7/MA7) | | | 3902 |
| SKRB | SKRB 9022 K 430x45 - 9 Ton Llanta 22.5" (SK7/MA7) | | | 3902/1 |
| SKRB | SKRB 9022 KI 01 Integral 430x45 - 9 Ton Llanta 22.5" (PAN22-1) | *04-* | | 3839 |
| SKRB | SKRB 9022 KI 01 Integral 430x45 - 9 Ton Llanta 22.5" (PAN22-1) | *04-* | | 3839/1 |
| SKRB | SKRB 9022 KI 01 Integral 430x45 - 9 Ton Llanta 22.5" (PAN22-1) | *04-* | | 3839/2 |
| SKRB | SKRB 9022 KI 01 Integral 430x45 - 9 Ton Llanta 22.5" (SK7/MA7) | | | 3902 |
| SKRB | SKRB 9022 KI 01 Integral 430x45 - 9 Ton Llanta 22.5" (SK7/MA7) | | | 3902/1 |
| SKRB | SKRB 9022 KI Integral 430x45 - 9 Ton Llanta 22.5" (PAN22-1) | *04-* | | 3839 |
| SKRB | SKRB 9022 KI Integral 430x45 - 9 Ton Llanta 22.5" (PAN22-1) | *04-* | | 3839/1 |
| SKRB | SKRB 9022 KI Integral 430x45 - 9 Ton Llanta 22.5" (PAN22-1) | *04-* | | 3839/2 |
| SKRB | SKRB 9022 KI Integral 430x45 - 9 Ton Llanta 22.5" (SK7/MA7) | | | 3902 |
| SKRB | SKRB 9022 KI Integral 430x45 - 9 Ton Llanta 22.5" (SK7/MA7) | | | 3902/1 |
| SKRLB | SKRLB 9022 W -9 Ton Llanta 22.5" (PAN22-1) | *04-* | | 3839/2 |
| SKRLB | SKRLB 9022 WI Integral -9 Ton Llanta 22.5" (PAN22-1) | *04-* | | 3839/2 |
| SKRS | SKRS 11019 K -11 Ton. (PAN 19-1) | 03- | | 3844 |
| SKRS | SKRS 11222 K -11 Ton Llanta 22.5" (PAN22-1) | *04-* | | 3839 |
| SKRS | SKRS 11222 K -11 Ton Llanta 22.5" (PAN22-1) | *04-* | | 3839/1 |
| SKRS | SKRS 11222 K -11 Ton Llanta 22.5" (PAN22-1) | *04-* | | 3839/2 |
| SKRS | SKRS 9019 K -9 Ton. (PAN 19-1) | 03- | | 3844 |
| SKRS | SKRS 9022 K -9 Ton Llanta 22.5" (PAN22-1) | *04-* | | 3839 |
| SKRS | SKRS 9022 K -9 Ton Llanta 22.5" (PAN22-1) | *04-* | | 3839/1 |
| SKRS | SKRS 9022 K -9 Ton Llanta 22.5" (PAN22-1) | *04-* | | 3839/2 |
| SKRZ | SKRZ 9019 K -9 Ton. (PAN 19-1) | 03- | | 3844 |
| SKRZ | SKRZ 11019 K -11 Ton. (PAN 19-1) | 03- | | 3844 |
| | Llanta 19.5" SK, SKRB (SB/SN6000 SB/SN6500) | *98-* | | 3789 |
| **SAF-SAE** | | | | |
| AXLE | | 06- | | 4130 |
| **SCANIA** | | | | |
| 114 C | 10.6 C340 4WD 18 Ton | *98-00* | 3664 | 3664 |
| 114 C | 10.6 C340 4x2 18 Ton | *98-00* | 3664 | 3664 |
| 114 C | 10.6 C340 4x2 18 Ton | *98-00* | 3664 | 3664 |
| 114 C | 10.6 C340 4x2 18 Ton | *98-00* | 3664 | 3664 |
| 114 C | 10.6 C340 6x4 26 Ton | *98-00* | 3664 | 3664 |
| 114 C | 10.6 C340 6x4 26 Ton | *98-00* | 3664 | 3664 |
| 114 C | 10.6 C340 6x4 26 Ton | *98-00* | 3664 | 3664 |
| 114 C | 10.6 C340 8X4/4 32 Ton | *98-00* | 3664 | 3664 |
| 114 C | 10.6 C380 4WD 10.6 Ton | *98-00* | 3664 | 3664 |
| 114 C | 10.6 C380 4x2 10.6 Ton | *98-00* | 3664 | 3664 |

| MAKE & MODEL | | YEAR | | |
|---|---|---|---|---|
| **SCANIA** | | | | |
| 114 C | 10.6 C380 4x2 18 Ton | 98-00 | 3664 | 3664 |
| 114 C | 10.6 C380 4x2 18 Ton | 98-00 | 3664 | 3664 |
| 114 C | 10.6 C380 6x4 10.6 Ton | 98-00 | 3664 | 3664 |
| 114 C | 10.6 C380 6x4 26 Ton | 98-00 | 3664 | 3664 |
| 114 C | 10.6 C380 6x4 26 Ton | 98-00 | 3664 | 3664 |
| 114 C | 10.6 C380 6x6 26 Ton | 98-00 | 3664 | 3664 |
| 114 C | 10.6 C380 8x4/4 32 Ton | 98-00 | 3664 | 3664 |
| 114 C | 11.0 C340 4WD 18 Ton | 96-00 | 3664 | 3664 |
| 114 C | 11.0 C340 4x2 18 Ton | 96-00 | 3664 | 3664 |
| 114 C | 11.0 C340 4x2 18 Ton | 96-00 | 3664 | 3664 |
| 114 C | 11.0 C340 4x2 18 Ton | 96-00 | 3664 | 3664 |
| 114 C | 11.0 C340 6x4 26 Ton | 96-00 | 3664 | 3664 |
| 114 C | 11.0 C340 6x4 26 Ton | 96-00 | 3664 | 3664 |
| 114 C | 11.0 C340 6x4 26 Ton | 96-00 | 3664 | 3664 |
| 114 C | 11.0 C340 6x6 26 Ton | 96-00 | 3664 | 3664 |
| 114 C | 11.0 C340 8x4/4 32 Ton | 96-00 | 3664 | 3664 |
| 114 G | 10.6 G340 4x2 18 Ton | 98-00 | 3664 | 3664 |
| 114 G | 10.6 G340 4x2 18 Ton | 98-00 | 3664 | 3664 |
| 114 G | 10.6 G340 6x2 26 Ton | 98-00 | 3664 | 3664 |
| 114 G | 10.6 G340 6x2/2/4 26 Ton | 98-00 | 3664 | 3664 |
| 114 G | 10.6 G340 6x4 26 Ton | 98-00 | 3664 | 3664 |
| 114 G | 10.6 G340 6x4 26 Ton | 98-00 | 3664 | 3664 |
| 114 G | 10.6 G340 8x4/4 32 Ton | 98-00 | 3664 | 3664 |
| 114 G | 10.6 G380 4x2 18 Ton | 98-00 | 3664 | 3664 |
| 114 G | 10.6 G380 4x2 18 Ton | 98-00 | 3664 | 3664 |
| 114 G | 10.6 G380 6x2 26 Ton | 98-00 | 3664 | 3664 |
| 114 G | 10.6 G380 6x2/2/4 26 Ton | 98-00 | 3664 | 3664 |
| 114 G | 10.6 G380 6x4 26 Ton | 98-00 | 3664 | 3664 |
| 114 G | 10.6 G380 6x4 26 Ton | 98-00 | 3664 | 3664 |
| 114 G | 10.6 G380 8x2/4/6 32 Ton | 98-00 | 3664 | 3664 |
| 114 G | 10.6 G380 8x4/4 32 Ton | 98-00 | 3664 | 3664 |
| 114 G | 11.0 G340 4x2 18 Ton | 96-00 | 3664 | 3664 |
| 114 G | 11.0 G340 4x2 18 Ton | 96-00 | 3664 | 3664 |
| 114 G | 11.0 G340 6x2 26 Ton | 96-00 | 3664 | 3664 |
| 114 G | 11.0 G340 6x2/2/4 26 Ton | 96-00 | 3664 | 3664 |
| 114 G | 11.0 G340 6x4 26 Ton | 96-00 | 3664 | 3664 |
| 114 G | 11.0 G340 6x4 26 Ton | 98-00 | 3664 | 3664 |
| 114 G | 11.0 G340 8x2/4/6 32 Ton | 96-00 | 3664 | 3664 |
| 114 G | 11.0 G340 8x4/4 32 Ton | 96-00 | 3664 | 3664 |
| 114 L | 10.6 L340 4x2 18 Ton | 98-00 | 3664 | 3664 |
| 114 L | 10.6 L340 4x2 18 Ton | 98-00 | 3664 | 3664 |
| 114 L | 10.6 L340 6x2/2/4 26 Ton | 98-00 | 3664 | 3664 |
| 114 L | 10.6 L340 6x2/4 26 Ton | 98-00 | 3664 | 3664 |
| 114 L | 10.6 L340 6x4 26 Ton | 98-00 | 3664 | 3664 |
| 114 L | 10.6 L380 4x2 18 Ton | 98-00 | 3664 | 3664 |
| 114 L | 10.6 L380 4x2 18 Ton | 98-00 | 3664 | 3664 |
| 114 L | 10.6 L380 6x2/2/4 26 Ton | 98-00 | 3664 | 3664 |
| 114 L | 10.6 L380 6x2/4 26 Ton | 98-00 | 3664 | 3664 |
| 114 L | 10.6 L380 6x4 26 Ton | 98-00 | 3664 | 3664 |
| 114 L | 11.0 L340 4x2 18 Ton | 96-00 | 3664 | 3664 |
| 114 L | 11.0 L340 4x2 18 Ton | 96-00 | 3664 | 3664 |
| 114 L | 11.0 L340 6x2/2/4 26 Ton | 96-00 | 3664 | 3664 |
| 114 L | 11.0 L340 6x2/2/4 26 Ton | 96-00 | 3664 | 3664 |
| 114 L | 11.0 L340 6x4 26 Ton | 96-00 | 3664 | 3664 |
| 124 C | 11.7 C360 4WD 18 Ton | 96-00 | 3664 | 3664 |
| 124 C | 11.7 C360 4x2 18 Ton | 96-00 | 3664 | 3664 |
| 124 C | 11.7 C360 4x2 18 Ton | 96-00 | 3664 | 3664 |
| 124 C | 11.7 C360 4x2 18 Ton | 96-00 | 3664 | 3664 |
| 124 C | 11.7 C360 6x4 26 Ton | 96-00 | 3664 | 3664 |
| 124 C | 11.7 C360 6x4 26 Ton | 96-00 | 3664 | 3664 |
| 124 C | 11.7 C360 6x4 26 Ton | 96-00 | 3664 | 3664 |
| 124 C | 11.7 C360 6x6 26 Ton | 96-00 | 3664 | 3664 |
| 124 C | 11.7 C360 8X4/4 32 Ton | 96-00 | 3664 | 3664 |
| 124 C | 11.7 C400 4WD 18 Ton | 96-00 | 3664 | 3664 |
| 124 C | 11.7 C400 4WD 18 Ton | 96-00 | 3664 | 3664 |
| 124 C | 11.7 C400 4x2 18 Ton | 96-00 | 3664 | 3664 |
| 124 C | 11.7 C400 4x2 18 Ton | 96-00 | 3664 | 3664 |
| 124 C | 11.7 C400 4x2 18 Ton | 96-00 | 3664 | 3664 |
| 124 C | 11.7 C400 6x4 26 Ton | 96-00 | 3664 | 3664 |
| 124 C | 11.7 C400 6x4 26 Ton | 96-00 | 3664 | 3664 |
| 124 C | 11.7 C400 6x4 26 Ton | 96-00 | 3664 | 3664 |
| 124 C | 11.7 C400 6x6 26 Ton | 96-00 | 3664 | 3664 |
| 124 C | 11.7 C400 8X4/4 32 Ton | 96-00 | 3664 | 3664 |
| 124 G | 11.7 G360 4x2 18 Ton | 96-00 | 3664 | 3664 |
| 124 G | 11.7 G360 4x2 18 Ton | 96-00 | 3664 | 3664 |
| 124 G | 11.7 G360 6x2 26 Ton | 96-00 | 3664 | 3664 |

| MAKE & MODEL | | YEAR | 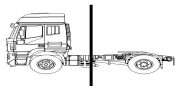 | |
|---|---|---|---|---|
| **SCANIA** | | | | |
| 124 G | 11.7 G360 6x2/2/4 26 Ton | 96-00 | 3664 | 3664 |
| 124 G | 11.7 G360 6x4 26 Ton | 96-00 | 3664 | 3664 |
| 124 G | 11.7 G360 6x4 26 Ton | 96-00 | 3664 | 3664 |
| 124 G | 11.7 G360 8x2/4/6 32 Ton | 96-00 | 3664 | 3664 |
| 124 G | 11.7 G360 8x4/4 32 Ton | 96-00 | 3664 | 3664 |
| 124 G | 11.7 G400 4x2 18 Ton | 96-00 | 3664 | 3664 |
| 124 G | 11.7 G400 4x2 18 Ton | 96-00 | 3664 | 3664 |
| 124 G | 11.7 G400 6x2 26 Ton | 96-00 | 3664 | 3664 |
| 124 G | 11.7 G400 6x2/2/4 26 Ton | 96-00 | 3664 | 3664 |
| 124 G | 11.7 G400 6x4 26 Ton | 96-00 | 3664 | 3664 |
| 124 G | 11.7 G400 6x4 26 Ton | 96-00 | 3664 | 3664 |
| 124 G | 11.7 G400 8x2/4/6 32 Ton | 96-00 | 3664 | 3664 |
| 124 G | 11.7 G400 8x4/4 32 Ton | 96-00 | 3664 | 3664 |
| 124 L | 11.7 L360 4x2 18 Ton | 96-00 | 3664 | 3664 |
| 124 L | 11.7 L360 4x2 18 Ton | 96-00 | 3664 | 3664 |
| 124 L | 11.7 L360 6x2/2/4 26 Ton | 96-00 | 3664 | 3664 |
| 124 L | 11.7 L360 6x2/2/4 26 Ton | 96-00 | 3664 | 3664 |
| 124 L | 11.7 L360 6x4 26 Ton | 96-00 | 3664 | 3664 |
| 124 L | 11.7 L360 6x4 26 Ton | 96-00 | 3664 | 3664 |
| 124 L | 11.7 L400 4x2 18 Ton | 96-00 | 3664 | 3664 |
| 124 L | 11.7 L400 4x2 18 Ton | 96-00 | 3664 | 3664 |
| 124 L | 11.7 L400 6x2/2/4 26 Ton | 96-00 | 3664 | 3664 |
| 124 L | 11.7 L400 6x2/2/4 26 Ton | 96-00 | 3664 | 3664 |
| 124 L | 11.7 L400 6x4 26 Ton | 96-00 | 3664 | 3664 |
| 124 L | 11.7 L400 6x4 26 Ton | 96-00 | 3664 | 3664 |
| 124 L | 11.7 L420 4x2 18 Ton | 97-00 | 3664 | 3664 |
| 124 L | 11.7 L420 4x2 18 Ton | 97-00 | 3664 | 3664 |
| 124 L | 11.7 L420 6x2/2/4 26 Ton | 97-00 | 3664 | 3664 |
| 124 L | 11.7 L420 6x2/2/4 26 Ton | 97-00 | 3664 | 3664 |
| 124 L | 11.7 L420 6x4 26 Ton | 97-00 | 3664 | 3664 |
| 124 L | 11.7 L420 6x4 26 Ton | 97-00 | 3664 | 3664 |
| 144 C | 14.2 C460 4x2 18 Ton | 96-00 | 3664 | 3664 |
| 144 C | 14.2 C460 4x2 18 Ton | 96-00 | 3664 | 3664 |
| 144 C | 14.2 C460 6x4 26 Ton | 96-00 | 3664 | 3664 |
| 144 C | 14.2 C460 6x4 26 Ton | 96-00 | 3664 | 3664 |
| 144 C | 14.2 C460 6x4 26 Ton | 96-00 | 3664 | 3664 |
| 144 C | 14.2 C460 8x4/4 32 Ton | 96-00 | 3664 | 3664 |
| 144 C | 14.2 C530 4x2 18 Ton | 96-00 | 3664 | 3664 |
| 144 C | 14.2 C530 4x2 18 Ton | 96-00 | 3664 | 3664 |
| 144 C | 14.2 C530 6x4 26 Ton | 96-00 | 3664 | 3664 |
| 144 C | 14.2 C530 6x4 26 Ton | 96-00 | 3664 | 3664 |
| 144 C | 14.2 C530 6x4 26 Ton | 96-00 | 3664 | 3664 |
| 144 C | 14.2 C530 8x4/4 32 Ton | 96-00 | 3664 | 3664 |
| 144 G | 14.2 G460 4x2 18 Ton | 96-00 | 3664 | 3664 |
| 144 G | 14.2 G460 4x2 18 Ton | 96-00 | 3664 | 3664 |
| 144 G | 14.2 G460 6x2 25 Ton | 96-00 | 3664 | 3664 |
| 144 G | 14.2 G460 6x2 26 Ton | 96-00 | 3664 | 3664 |
| 144 G | 14.2 G460 6x4 26 Ton | 96-00 | 3664 | 3664 |
| 144 G | 14.2 G460 6x4 26 Ton | 96-00 | 3664 | 3664 |
| 144 G | 14.2 G460 8x2/4/6 32 Ton | 96-00 | 3664 | 3664 |
| 144 G | 14.2 G460 8x4/4 32 Ton | 96-00 | 3664 | 3664 |
| 144 G | 14.2 G530 4x2 18 Ton | 96-00 | 3664 | 3664 |
| 144 G | 14.2 G530 4x2 18 Ton | 96-00 | 3664 | 3664 |
| 144 G | 14.2 G530 6x2 25 Ton | 96-00 | 3664 | 3664 |
| 144 G | 14.2 G530 6x2 26 Ton | 96-00 | 3664 | 3664 |
| 144 G | 14.2 G530 6x4 26 Ton | 96-00 | 3664 | 3664 |
| 144 G | 14.2 G530 6x4 26 Ton | 96-00 | 3664 | 3664 |
| 144 G | 14.2 G530 8x2/4/6 32 Ton | 96-00 | 3664 | 3664 |
| 144 G | 14.2 G530 8x4/4 32 Ton | 96-00 | 3664 | 3664 |
| 144 L | 14.2 L460 4x2 18 Ton | 95-00 | 3664 | 3664 |
| 144 L | 14.2 L460 4x2 18 Ton | 95-00 | 3664 | 3664 |
| 144 L | 14.2 L460 6x2/2/4 26 Ton | 95-00 | 3664 | 3664 |
| 144 L | 14.2 L460 6x2/4 26 Ton | 95-00 | 3664 | 3664 |
| 144 L | 14.2 L460 6x4 26 Ton | 95-00 | 3664 | 3664 |
| 144 L | 14.2 L460 6x4 26 Ton | 95-00 | 3664 | 3664 |
| 144 L | 14.2 L530 4x2 18 Ton | 95-00 | 3664 | 3664 |
| 144 L | 14.2 L530 4x2 18 Ton | 95-00 | 3664 | 3664 |
| 144 L | 14.2 L530 6x2/2/4 26 Ton | 95-00 | 3664 | 3664 |
| 144 L | 14.2 L530 6x2/4 26 Ton | 95-00 | 3664 | 3664 |
| 144 L | 14.2 L530 6x4 26 Ton | 95-00 | 3664 | 3664 |
| 144 L | 14.2 L530 6x4 26 Ton | 95-00 | 3664 | 3664 |
| 164 C | 15.6 C480 4WD 18 Ton | 00-01 | 3664 | 3664 |
| 164 C | 15.6 C480 4WD 18 Ton | 00-01 | 3664 | 3664 |
| 164 C | 15.6 C480 4WD 18 Ton | 00-01 | 3664 | 3664 |
| 164 C | 15.6 C480 4x2 18 Ton | 00-01 | 3664 | 3664 |
| 164 C | 15.6 C480 4x2 18 Ton | 00-01 | 3664 | 3664 |

| MAKE & MODEL | | YEAR | | |
|---|---|---|---|---|
| **SCANIA** | | | | |
| 164 C | 15.6 C480 4x2 18 Ton | *00-01* | 3664 | 3664 |
| 164 C | 15.6 C480 6x4 26 Ton | *00-01* | 3664 | 3664 |
| 164 C | 15.6 C480 6x4 26 Ton | *00-01* | 3664 | 3664 |
| 164 C | 15.6 C480 6x4 26 Ton | *00-01* | 3664 | 3664 |
| 164 C | 15.6 C480 6x6 26 Ton | *00-01* | 3664 | 3664 |
| 164 C | 15.6 C480 8x4/4 32 Ton | *00-01* | 3664 | 3664 |
| 164 C | 15.6 C580 4x2 18 Ton | *00-01* | 3664 | 3664 |
| 164 C | 15.6 C580 4x2 18 Ton | *00-01* | 3664 | 3664 |
| 164 C | 15.6 C580 6x4 26 Ton | *00-01* | 3664 | 3664 |
| 164 C | 15.6 C580 6x6 26 Ton | *00-01* | 3664 | 3664 |
| 164 G | 15.6 G480 4x2 18 Ton | *00-01* | 3664 | 3664 |
| 164 G | 15.6 G480 4x2 18 Ton | *00-01* | 3664 | 3664 |
| 164 G | 15.6 G480 6x2 26 Ton | *00-01* | 3664 | 3664 |
| 164 G | 15.6 G580 4x2 18 Ton | *00-01* | 3664 | 3664 |
| 164 G | 15.6 G580 4x2 18 Ton | *00-01* | 3664 | 3664 |
| 164 G | 15.6 G580 6x2 26 Ton | *00-01* | 3664 | 3664 |
| 164 G | 15.6 G580 6x2 26 Ton | *00-01* | 3664 | 3664 |
| 164 G | 15.6 G580 6x4 26 Ton | *00-01* | 3664 | 3664 |
| 164 L | 15.6 L480 4x2 18 Ton | *00-01* | 3664 | 3664 |
| 164 L | 15.6 L480 4x2 18 Ton | *00-01* | 3664 | 3664 |
| 164 L | 15.6 L480 6x2 26 Ton | *00-01* | 3664 | 3664 |
| 164 L | 15.6 L480 6x2/2/4 26 Ton | *00-01* | 3664 | 3664 |
| 164 L | 15.6 L480 6x4 26 Ton | *00-01* | 3664 | 3664 |
| 164 L | 15.6 L480 6x4 26 Ton | *00-01* | 3664 | 3664 |
| 164 L | 15.6 L580 4x2 18 Ton | *00-01* | 3664 | 3664 |
| 164 L | 15.6 L580 4x2 18 Ton | *00-01* | 3664 | 3664 |
| 164 L | 15.6 L580 6x2 26 Ton | *00-01* | 3664 | 3664 |
| 164 L | 15.6 L580 6x2/2/4 26 Ton | *00-01* | 3664 | 3664 |
| 164 L | 15.6 L580 6x4 26 Ton | *00-01* | 3664 | 3664 |
| 164 L | 15.6 L580 6x4 26 Ton | *00-01* | 3664 | 3664 |
| 3 SERIES | 113 G/340 | *03/98-* | 3664/1 | |
| 4 SERIES | 114 C/330 | - | 4091 | |
| 4 SERIES | 114 C/340 | *03/98-* | 3664/1 | |
| 4 SERIES | 114 C/340 | 03.98 - | 4091 | |
| 4 SERIES | 114 C/340 | 05.96 - | 4091 | |
| 4 SERIES | 114 C/340 | - | 4091 | |
| 4 SERIES | 114 C/340 | 03.98 - | 4091 | |
| 4 SERIES | 114 C/340 | 05.96 - | 4091 | |
| 4 SERIES | 114 C/340 | - | 4091 | |
| 4 SERIES | 114 C/340 | - | 4091 | |
| 4 SERIES | 114 C/340 | 03.98 - | 4091 | |
| 4 SERIES | 114 C/340 | 05.96 - | 4091 | |
| 4 SERIES | 114 C/340 | - | 4091 | |
| 4 SERIES | 114 C/340 | 03.98 - | 4091 | |
| 4 SERIES | 114 C/340 | 05.96 - | 4091 | |
| 4 SERIES | 114 C/340 | 03.98 - | 4091 | |
| 4 SERIES | 114 C/340 | 05.96 - | 4091 | |
| 4 SERIES | 114 C/340 | 03.98 - | 4091 | |
| 4 SERIES | 114 C/340 | 05.96 - | 4091 | |
| 4 SERIES | 114 C/340 | 03.98 - | 4091 | |
| 4 SERIES | 114 C/340 | 05.96 - | 4091 | |
| 4 SERIES | 114 C/340 | 03.98 - | 4091 | |
| 4 SERIES | 114 C/340 | 05.96 - | 4091 | |
| 4 SERIES | 114 C/340 | - | 4091 | |
| 4 SERIES | 114 C/340 | 03.98 - | 4091 | |
| 4 SERIES | 114 C/340 | 05.96 - | 4091 | |
| 4 SERIES | 114 C/340 | - | 4091 | |
| 4 SERIES | 114 C/340 | - | 4091 | |
| 4 SERIES | 114 C/380 | 03.98 - | 4091 | |
| 4 SERIES | 114 C/380 | - | 4091 | |
| 4 SERIES | 114 C/380 | 03.98 - | 4091 | |
| 4 SERIES | 114 C/380 | - | 4091 | |
| 4 SERIES | 114 C/380 | - | 4091 | |
| 4 SERIES | 114 C/380 | 03.98 - | 4091 | |
| 4 SERIES | 114 C/380 | - | 4091 | |
| 4 SERIES | 114 C/380 | 03.98 - | 4091 | |
| 4 SERIES | 114 C/380 | 03.98 - | 4091 | |
| 4 SERIES | 114 C/380 | 03.98 - | 4091 | |
| 4 SERIES | 114 C/380 | 03.98 - | 4091 | |
| 4 SERIES | 114 C/380 | 03.98 - | 4091 | |
| 4 SERIES | 114 C/380 | - | 4091 | |
| 4 SERIES | 114 C/380 | 03.98 - | 4091 | |
| 4 SERIES | 114 C/380 | - | 4091 | |
| 4 SERIES | 114 C/380 | - | 4091 | |
| 4 SERIES | 114 G/340 | 03.98 - | 4091 | |
| 4 SERIES | 114 G/340 | 05.96 - | 4091 | |

| MAKE & MODEL | | YEAR | | |
|---|---|---|---|---|
| SCANIA | | | | |
| 4 SERIES | 114 G/340 | - | 4091 | |
| 4 SERIES | 114 G/340 | - | 4091 | |
| 4 SERIES | 114 G/340 | 03.98 - | 4091 | |
| 4 SERIES | 114 G/340 | 05.96 - | 4091 | |
| 4 SERIES | 114 G/340 | 03.98 - | 4091 | |
| 4 SERIES | 114 G/340 | 05.96 - | 4091 | |
| 4 SERIES | 114 G/340 | - | 4091 | |
| 4 SERIES | 114 G/340 | - | 4091 | |
| 4 SERIES | 114 G/340 | 03.98 - | 4091 | |
| 4 SERIES | 114 G/340 | 05.96 - | 4091 | |
| 4 SERIES | 114 G/340 | - | 4091 | |
| 4 SERIES | 114 G/340 | 03.98 - | 4091 | |
| 4 SERIES | 114 G/340 | 05.96 - | 4091 | |
| 4 SERIES | 114 G/340 | 03.98 - | 4091 | |
| 4 SERIES | 114 G/340 | 05.96 - | 4091 | |
| 4 SERIES | 114 G/340 | 03.98 - | 4091 | |
| 4 SERIES | 114 G/340 | 05.96 - | 4091 | |
| 4 SERIES | 114 G/340 | 03.98 - | 4091 | |
| 4 SERIES | 114 G/340 | 05.96 - | 4091 | |
| 4 SERIES | 114 G/380 | 03.98 - | 4091 | |
| 4 SERIES | 114 G/380 | - | 4091 | |
| 4 SERIES | 114 G/380 | - | 4091 | |
| 4 SERIES | 114 G/380 | 03.98 - | 4091 | |
| 4 SERIES | 114 G/380 | 03.98 - | 4091 | |
| 4 SERIES | 114 G/380 | - | 4091 | |
| 4 SERIES | 114 G/380 | 03.98 - | 4091 | |
| 4 SERIES | 114 G/380 | - | 4091 | |
| 4 SERIES | 114 G/380 | - | 4091 | |
| 4 SERIES | 114 G/380 | 03.98 - | 4091 | |
| 4 SERIES | 114 G/380 | 03.98 - | 4091 | |
| 4 SERIES | 114 G/380 | 03.98 - | 4091 | |
| 4 SERIES | 114 G/380 | 03.98 - | 4091 | |
| 4 SERIES | 114 L/340 | 03.98 - | 4091 | |
| 4 SERIES | 114 L/340 | 05.96 - | 4091 | |
| 4 SERIES | 114 L/340 | - | 4091 | |
| 4 SERIES | 114 L/340 | - | 4091 | |
| 4 SERIES | 114 L/340 | 03.98 - | 4091 | |
| 4 SERIES | 114 L/340 | 05.96 - | 4091 | |
| 4 SERIES | 114 L/340 | 03.98 - | 4091 | |
| 4 SERIES | 114 L/340 | 05.96 - | 4091 | |
| 4 SERIES | 114 L/340 | - | 4091 | |
| 4 SERIES | 114 L/340 | 03.98 - | 4091 | |
| 4 SERIES | 114 L/340 | 05.96 - | 4091 | |
| 4 SERIES | 114 L/340 | 03.98 - | 4091 | |
| 4 SERIES | 114 L/340 | 05.96 - | 4091 | |
| 4 SERIES | 114 L/380 | 03.98 - | 4091 | |
| 4 SERIES | 114 L/380 | - | 4091 | |
| 4 SERIES | 114 L/380 | - | 4091 | |
| 4 SERIES | 114 L/380 | 03.98 - | 4091 | |
| 4 SERIES | 114 L/380 | 03.98 - | 4091 | |
| 4 SERIES | 114 L/380 | - | 4091 | |
| 4 SERIES | 114 L/380 | 03.98 - | 4091 | |
| 4 SERIES | 114 L/380 | 03.98 - | 4091 | |
| 4 SERIES | 114 L/530 | - | 4091 | |
| 4 SERIES | 124 /G420 | - | 4091 | |
| 4 SERIES | 124 C/360 | 09.96 - | 4091 | |
| 4 SERIES | 124 C/360 | 09.96 - | 4091 | |
| 4 SERIES | 124 C/360 | - | 4091 | |
| 4 SERIES | 124 C/360 | - | 4091 | |
| 4 SERIES | 124 C/360 | 09.96 - | 4091 | |
| 4 SERIES | 124 C/360 | 09.96 - | 4091 | |
| 4 SERIES | 124 C/360 | 09.96 - | 4091 | |
| 4 SERIES | 124 C/360 | 09.96 - | 4091 | |
| 4 SERIES | 124 C/360 | 09.96 - | 4091 | |
| 4 SERIES | 124 C/360 | 09.96 - | 4091 | |
| 4 SERIES | 124 C/360 | - | 4091 | |
| 4 SERIES | 124 C/360 | - | 4091 | |
| 4 SERIES | 124 C/400 | 09.96 - | 4091 | |
| 4 SERIES | 124 C/400 | 09.96 - | 4091 | |
| 4 SERIES | 124 C/400 | 09.96 - | 4091 | |
| 4 SERIES | 124 C/400 | 09.96 - | 4091 | |
| 4 SERIES | 124 C/400 | 09.96 - | 4091 | |
| 4 SERIES | 124 C/400 | 09.96 - | 4091 | |
| 4 SERIES | 124 C/400 | 09.96 - | 4091 | |
| 4 SERIES | 124 C/400 | 09.96 - | 4091 | |

| MAKE & MODEL | | YEAR | 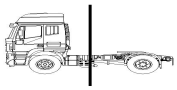 | |
|---|---|---|---|---|
| **SCANIA** | | | | |
| 4 SERIES | 124 C/400 | 09.96 - | 4091 | |
| 4 SERIES | 124 C/400 | 09.96 - | 4091 | |
| 4 SERIES | 124 C/420 | - | 4091 | |
| 4 SERIES | 124 C/420 | - | 4091 | |
| 4 SERIES | 124 C/420 | - | 4091 | |
| 4 SERIES | 124 C/420 | - | 4091 | |
| 4 SERIES | 124 C/420 | - | 4091 | |
| 4 SERIES | 124 C/420 | - | 4091 | |
| 4 SERIES | 124 C/420 | - | 4091 | |
| 4 SERIES | 124 C/420 | - | 4091 | |
| 4 SERIES | 124 C/470 | - | 4091 | |
| 4 SERIES | 124 C/470 | - | 4091 | |
| 4 SERIES | 124 G/360 | 05.96 - | 4091 | |
| 4 SERIES | 124 G/360 | 05.96 - | 4091 | |
| 4 SERIES | 124 G/360 | 05.96 - | 4091 | |
| 4 SERIES | 124 G/360 | 05.96 - | 4091 | |
| 4 SERIES | 124 G/360 | 05.96 - | 4091 | |
| 4 SERIES | 124 G/360 | 05.96 - | 4091 | |
| 4 SERIES | 124 G/360 | 05.96 - | 4091 | |
| 4 SERIES | 124 G/360 | 05.96 - | 4091 | |
| 4 SERIES | 124 G/400 | 05.96 - | 4091 | |
| 4 SERIES | 124 G/400 | 05.96 - | 4091 | |
| 4 SERIES | 124 G/400 | 05.96 - | 4091 | |
| 4 SERIES | 124 G/400 | 05.96 - | 4091 | |
| 4 SERIES | 124 G/400 | 05.96 - | 4091 | |
| 4 SERIES | 124 G/400 | 05.96 - | 4091 | |
| 4 SERIES | 124 G/400 | 05.96 - | 4091 | |
| 4 SERIES | 124 G/400 | 05.96 - | 4091 | |
| 4 SERIES | 124 G/420 | - | 4091 | |
| 4 SERIES | 124 G/420 | - | 4091 | |
| 4 SERIES | 124 G/420 | - | 4091 | |
| 4 SERIES | 124 G/420 | - | 4091 | |
| 4 SERIES | 124 G/420 | - | 4091 | |
| 4 SERIES | 124 G/420 | - | 4091 | |
| 4 SERIES | 124 G/420 | - | 4091 | |
| 4 SERIES | 124 G/420 | - | 4091 | |
| 4 SERIES | 124 G/470 | - | 4091 | |
| 4 SERIES | 124 G/470 | - | 4091 | |
| 4 SERIES | 124 L/360 | 09.96 - | 4091 | |
| 4 SERIES | 124 L/360 | 09.96 - | 4091 | |
| 4 SERIES | 124 L/360 | 09.96 - | 4091 | |
| 4 SERIES | 124 L/360 | 09.96 - | 4091 | |
| 4 SERIES | 124 L/360 | 09.96 - | 4091 | |
| 4 SERIES | 124 L/360 | 09.96 - | 4091 | |
| 4 SERIES | 124 L/400 | 09.96 - | 4091 | |
| 4 SERIES | 124 L/400 | 09.96 - | 4091 | |
| 4 SERIES | 124 L/400 | 09.96 - | 4091 | |
| 4 SERIES | 124 L/400 | 09.96 - | 4091 | |
| 4 SERIES | 124 L/400 | 09.96 - | 4091 | |
| 4 SERIES | 124 L/400 | 09.96 - | 4091 | |
| 4 SERIES | 124 L/420 | 09.97 - | 4091 | |
| 4 SERIES | 124 L/420 | - | 4091 | |
| 4 SERIES | 124 L/420 | - | 4091 | |
| 4 SERIES | 124 L/420 | 09.97 - | 4091 | |
| 4 SERIES | 124 L/420 | 09.97 - | 4091 | |
| 4 SERIES | 124 L/420 | 09.97 - | 4091 | |
| 4 SERIES | 124 L/420 | - | 4091 | |
| 4 SERIES | 124 L/420 | - | 4091 | |
| 4 SERIES | 124 L/420 | 09.97 - | 4091 | |
| 4 SERIES | 124 L/420 | 09.97 - | 4091 | |
| 4 SERIES | 124 L/440 | 01.01 - | 4091 | |
| 4 SERIES | 124 L/440 | 01.01 - | 4091 | |
| 4 SERIES | 124 L/440 | 01.01 - | 4091 | |
| 4 SERIES | 124 L/440 | 01.01 - | 4091 | |
| 4 SERIES | 124 L/470 | 01.01 - | 4091 | |
| 4 SERIES | 124 L/470 | 01.01 - | 4091 | |
| 4 SERIES | 124 L/470 | 01.01 - | 4091 | |
| 4 SERIES | 124 L/470 | - | 4091 | |
| 4 SERIES | 124 L/470 | 01.01 - | 4091 | |
| 4 SERIES | 124 L/470 | - | 4091 | |
| 4 SERIES | 144 C/460 | 09.96 - | 4091 | |
| 4 SERIES | 144 C/460 | 09.96 - | 4091 | |
| 4 SERIES | 144 C/460 | 09.96 - | 4091 | |
| 4 SERIES | 144 C/460 | 09.96 - | 4091 | |
| 4 SERIES | 144 C/460 | 09.96 - | 4091 | |

| MAKE & MODEL | | YEAR | | |
|---|---|---|---|---|
| SCANIA | | | | |
| 4 SERIES | 144 C/460 | 09.96 - | 4091 | |
| 4 SERIES | 144 C/530 | 09.96 - | 4091 | |
| 4 SERIES | 144 C/530 | 09.96 - | 4091 | |
| 4 SERIES | 144 C/530 | 09.96 - | 4091 | |
| 4 SERIES | 144 C/530 | 09.96 - | 4091 | |
| 4 SERIES | 144 C/530 | 09.96 - | 4091 | |
| 4 SERIES | 144 C/530 | 09.96 - | 4091 | |
| 4 SERIES | 144 G/460 | 04.96 - | 4091 | |
| 4 SERIES | 144 G/460 | 04.96 - | 4091 | |
| 4 SERIES | 144 G/460 | 04.96 - | 4091 | |
| 4 SERIES | 144 G/460 | 04.96 - | 4091 | |
| 4 SERIES | 144 G/460 | 04.96 - | 4091 | |
| 4 SERIES | 144 G/460 | 04.96 - | 4091 | |
| 4 SERIES | 144 G/460 | 04.96 - | 4091 | |
| 4 SERIES | 144 G/460 | 04.96 - | 4091 | |
| 4 SERIES | 144 G/530 | 04.96 - | 4091 | |
| 4 SERIES | 144 G/530 | 04.96 - | 4091 | |
| 4 SERIES | 144 G/530 | 04.96 - | 4091 | |
| 4 SERIES | 144 G/530 | 04.96 - | 4091 | |
| 4 SERIES | 144 G/530 | 04.96 - | 4091 | |
| 4 SERIES | 144 G/530 | 04.96 - | 4091 | |
| 4 SERIES | 144 G/530 | 04.96 - | 4091 | |
| 4 SERIES | 144 G/530 | 04.96 - | 4091 | |
| 4 SERIES | 144 L/460 | 11.95 - | 4091 | |
| 4 SERIES | 144 L/460 | - | 4091 | |
| 4 SERIES | 144 L/460 | 11.95 - | 4091 | |
| 4 SERIES | 144 L/460 | 11.95 - | 4091 | |
| 4 SERIES | 144 L/460 | 11.95 - | 4091 | |
| 4 SERIES | 144 L/460 | 11.95 - | 4091 | |
| 4 SERIES | 144 L/460 | 11.95 - | 4091 | |
| 4 SERIES | 144 L/530 | 11.95 - | 4091 | |
| 4 SERIES | 144 L/530 | 11.95 - | 4091 | |
| 4 SERIES | 144 L/530 | 11.95 - | 4091 | |
| 4 SERIES | 144 L/530 | 11.95 - | 4091 | |
| 4 SERIES | 144 L/530 | 11.95 - | 4091 | |
| 4 SERIES | 144 L/530 | 11.95 - | 4091 | |
| 4 SERIES | 164 C/480 | 05.00 - | 4091 | |
| 4 SERIES | 164 C/480 | 05.00 - | 4091 | |
| 4 SERIES | 164 C/480 | 05.00 - | 4091 | |
| 4 SERIES | 164 C/480 | 05.00 - | 4091 | |
| 4 SERIES | 164 C/480 | 05.00 - | 4091 | |
| 4 SERIES | 164 C/480 | 05.00 - | 4091 | |
| 4 SERIES | 164 C/480 | 05.00 - | 4091 | |
| 4 SERIES | 164 C/480 | 05.00 - | 4091 | |
| 4 SERIES | 164 C/480 | 05.00 - | 4091 | |
| 4 SERIES | 164 C/480 | 05.00 - | 4091 | |
| 4 SERIES | 164 C/480 | 05.00 - | 4091 | |
| 4 SERIES | 164 C/580 | 05.00 - | 4091 | |
| 4 SERIES | 164 C/580 | 05.00 - | 4091 | |
| 4 SERIES | 164 C/580 | 05.00 - | 4091 | |
| 4 SERIES | 164 C/580 | 05.00 - | 4091 | |
| 4 SERIES | 164 G/480 | 05.00 - | 4091 | |
| 4 SERIES | 164 G/480 | 05.00 - | 4091 | |
| 4 SERIES | 164 G/480 | - | 4091 | |
| 4 SERIES | 164 G/480 | 05.00 - | 4091 | |
| 4 SERIES | 164 G/480 | - | 4091 | |
| 4 SERIES | 164 G/580 | 05.00 - | 4091 | |
| 4 SERIES | 164 G/580 | 05.00 - | 4091 | |
| 4 SERIES | 164 G/580 | - | 4091 | |
| 4 SERIES | 164 G/580 | 05.00 - | 4091 | |
| 4 SERIES | 164 G/580 | 05.00 - | 4091 | |
| 4 SERIES | 164 G/580 | 05.00 - | 4091 | |
| 4 SERIES | 164 L/480 | 05.00 - | 4091 | |
| 4 SERIES | 164 L/480 | 05.00 - | 4091 | |
| 4 SERIES | 164 L/480 | 05.00 - | 4091 | |
| 4 SERIES | 164 L/480 | 05.00 - | 4091 | |
| 4 SERIES | 164 L/480 | - | 4091 | |
| 4 SERIES | 164 L/480 | - | 4091 | |
| 4 SERIES | 164 L/480 | 05.00 - | 4091 | |
| 4 SERIES | 164 L/480 | 05.00 - | 4091 | |
| 4 SERIES | 164 L/580 | 05.00 - | 4091 | |
| 4 SERIES | 164 L/580 | 05.00 - | 4091 | |
| 4 SERIES | 164 L/580 | 05.00 - | 4091 | |
| 4 SERIES | 164 L/580 | 05.00 - | 4091 | |
| 4 SERIES | 164 L/580 | - | 4091 | |
| 4 SERIES | 164 L/580 | - | 4091 | |

| MAKE & MODEL | | YEAR | | |
|---|---|---|---|---|
| SCANIA | | | | |
| 4 SERIES | 164 L/580 | 05.00 - | 4091 | |
| 4 SERIES | 164 L/580 | 05.00 - | 4091 | |
| 4 SERIES | 94 /G260 | - | 4091 | |
| 4 SERIES | 94 C/260 | 12.96 - | 4091 | |
| 4 SERIES | 94 C/260 | 12.96 - | 4091 | |
| 4 SERIES | 94 C/260 | 12.96 - | 4091 | |
| 4 SERIES | 94 C/260 | 12.96 - | 4091 | |
| 4 SERIES | 94 C/260 | 12.96 - | 4091 | |
| 4 SERIES | 94 C/260 | 12.96 - | 4091 | |
| 4 SERIES | 94 C/260 | 12.96 - | 4091 | |
| 4 SERIES | 94 C/300 | - | 4091 | |
| 4 SERIES | 94 C/310 | 08.96 - | 4091 | |
| 4 SERIES | 94 C/310 | 08.96 - | 4091 | |
| 4 SERIES | 94 C/310 | 08.96 - | 4091 | |
| 4 SERIES | 94 C/310 | 08.96 - | 4091 | |
| 4 SERIES | 94 C/310 | 08.96 - | 4091 | |
| 4 SERIES | 94 C/310 | 08.96 - | 4091 | |
| 4 SERIES | 94 C/310 | 08.96 - | 4091 | |
| 4 SERIES | 94 C/310 | 08.96 - | 4091 | |
| 4 SERIES | 94 C/310 | 08.96 - | 4091 | |
| 4 SERIES | 94 D/220 | 08.96 - | 4091 | |
| 4 SERIES | 94 D/220 | 08.96 - | 4091 | |
| 4 SERIES | 94 D/220 | - | 4091 | |
| 4 SERIES | 94 D/220 | 08.96 - | 4091 | |
| 4 SERIES | 94 D/220 | - | 4091 | |
| 4 SERIES | 94 D/230 | 08.99 - | 4091 | |
| 4 SERIES | 94 D/230 | 08.99 - | 4091 | |
| 4 SERIES | 94 D/230 | 08.99 - | 4091 | |
| 4 SERIES | 94 D/230 | - | 4091 | |
| 4 SERIES | 94 D/230 | - | 4091 | |
| 4 SERIES | 94 D/260 | 08.96 - | 4091 | |
| 4 SERIES | 94 D/260 | - | 4091 | |
| 4 SERIES | 94 D/260 | 08.96 - | 4091 | |
| 4 SERIES | 94 D/260 | - | 4091 | |
| 4 SERIES | 94 D/260 | 08.96 - | 4091 | |
| 4 SERIES | 94 D/260 | - | 4091 | |
| 4 SERIES | 94 D/260 | - | 4091 | |
| 4 SERIES | 94 D/270 | - | 4091 | |
| 4 SERIES | 94 D/300 | - | 4091 | |
| 4 SERIES | 94 D/300 | - | 4091 | |
| 4 SERIES | 94 D/300 | - | 4091 | |
| 4 SERIES | 94 D/300 | - | 4091 | |
| 4 SERIES | 94 D/300 | - | 4091 | |
| 4 SERIES | 94 D/310 | 12.96 - | 4091 | |
| 4 SERIES | 94 D/310 | 01.98 - | 4091 | |
| 4 SERIES | 94 D/310 | - | 4091 | |
| 4 SERIES | 94 D/310 | 12.96 - | 4091 | |
| 4 SERIES | 94 D/310 | - | 4091 | |
| 4 SERIES | 94 G/220 | 08.96 - | 4091 | |
| 4 SERIES | 94 G/220 | 01.98 - | 4091 | |
| 4 SERIES | 94 G/220 | 08.96 - | 4091 | |
| 4 SERIES | 94 G/260 | 08.96 - | 4091 | |
| 4 SERIES | 94 G/260 | - | 4091 | |
| 4 SERIES | 94 G/260 | 01.98 - | 4091 | |
| 4 SERIES | 94 G/260 | 08.96 - | 4091 | |
| 4 SERIES | 94 G/310 | 08.96 - | 4091 | |
| 4 SERIES | 94 G/310 | - | 4091 | |
| 4 SERIES | 94 G/310 | - | 4091 | |
| 4 SERIES | 94 G/310 | 08.96 - | 4091 | |
| 4 SERIES | 94 G/310 | - | 4091 | |
| 4 SERIES | 94 G/310 | 08.96 - | 4091 | |
| 4 SERIES | 94 L/310 | 08.96 - | 4091 | |
| 4 SERIES | 94 L/310 | - | 4091 | |
| 4 SERIES | 94 L/310 | 08.96 - | 4091 | |
| 4 SERIES | 94 L/310 | 08.96 - | 4091 | |
| 4 SERIES | 94 L/310 | 08.96 - | 4091 | |
| 4 SERIES | 94 L/310 | 08.96 - | 4091 | |
| 4 SERIES | T 114 C/340 | 03.98 - | 4091 | |
| 4 SERIES | T 114 C/340 | 03.98 - | 4091 | |
| 4 SERIES | T 114 C/340 | 03.98 - | 4091 | |
| 4 SERIES | T 114 C/340 | - | 4091 | |
| 4 SERIES | T 114 C/340 | - | 4091 | |
| 4 SERIES | T 114 C/340 | - | 4091 | |
| 4 SERIES | T 114 C/340 | 03.98 - | 4091 | |
| 4 SERIES | T 114 C/380 | 03.98 - | 4091 | |
| 4 SERIES | T 114 C/380 | 03.98 - | 4091 | |

| MAKE & MODEL | | YEAR | | |
|---|---|---|---|---|
| SCANIA | | | | |
| 4 SERIES | T 114 C/380 | 03.98 - | 4091 | |
| 4 SERIES | T 114 C/380 | - | 4091 | |
| 4 SERIES | T 114 C/380 | 03.98 - | 4091 | |
| 4 SERIES | T 114 C/380 | 03.98 - | 4091 | |
| 4 SERIES | T 114 G/340 | 03.98 - | 4091 | |
| 4 SERIES | T 114 G/340 | 05.96 - | 4091 | |
| 4 SERIES | T 114 G/340 | 03.98 - | 4091 | |
| 4 SERIES | T 114 G/340 | 05.96 - | 4091 | |
| 4 SERIES | T 114 G/340 | 03.98 - | 4091 | |
| 4 SERIES | T 114 G/340 | 05.96 - | 4091 | |
| 4 SERIES | T 114 G/340 | 03.98 - | 4091 | |
| 4 SERIES | T 114 G/340 | 05.96 - | 4091 | |
| 4 SERIES | T 114 G/340 | - | 4091 | |
| 4 SERIES | T 114 G/340 | 03.98 - | 4091 | |
| 4 SERIES | T 114 G/340 | 05.96 - | 4091 | |
| 4 SERIES | T 114 G/340 | 05.96 - | 4091 | |
| 4 SERIES | T 114 G/380 | 03.98 - | 4091 | |
| 4 SERIES | T 114 G/380 | 03.98 - | 4091 | |
| 4 SERIES | T 114 G/380 | 03.98 - | 4091 | |
| 4 SERIES | T 114 G/380 | 03.98 - | 4091 | |
| 4 SERIES | T 114 G/380 | - | 4091 | |
| 4 SERIES | T 114 G/380 | 03.98 - | 4091 | |
| 4 SERIES | T 114 G/380 | 03.98 - | 4091 | |
| 4 SERIES | T 114 L/340 | 03.98 - | 4091 | |
| 4 SERIES | T 114 L/340 | 05.96 - | 4091 | |
| 4 SERIES | T 114 L/340 | - | 4091 | |
| 4 SERIES | T 114 L/340 | 03.98 - | 4091 | |
| 4 SERIES | T 114 L/380 | 03.98 - | 4091 | |
| 4 SERIES | T 114 L/380 | - | 4091 | |
| 4 SERIES | T 114 L/380 | 03.98 - | 4091 | |
| 4 SERIES | T 114 L/380 | 03.98 - | 4091 | |
| 4 SERIES | T 124 C/360 | 09.95 - | 4091 | |
| 4 SERIES | T 124 C/360 | 09.95 - | 4091 | |
| 4 SERIES | T 124 C/360 | 09.95 - | 4091 | |
| 4 SERIES | T 124 C/360 | 09.95 - | 4091 | |
| 4 SERIES | T 124 C/360 | 09.95 - | 4091 | |
| 4 SERIES | T 124 C/400 | 05.96 - | 4091 | |
| 4 SERIES | T 124 C/400 | 05.96 - | 4091 | |
| 4 SERIES | T 124 C/400 | 05.96 - | 4091 | |
| 4 SERIES | T 124 C/400 | 05.96 - | 4091 | |
| 4 SERIES | T 124 C/400 | 05.96 - | 4091 | |
| 4 SERIES | T 124 C/420 | 05.96 - | 4091 | |
| 4 SERIES | T 124 C/420 | 05.96 - | 4091 | |
| 4 SERIES | T 124 C/420 | 05.96 - | 4091 | |
| 4 SERIES | T 124 C/420 | - | 4091 | |
| 4 SERIES | T 124 C/420 | 09.97 - | 4091 | |
| 4 SERIES | T 124 C/420 | 05.96 - | 4091 | |
| 4 SERIES | T 124 G/360 | 03.97 - | 4091 | |
| 4 SERIES | T 124 G/360 | 03.97 - | 4091 | |
| 4 SERIES | T 124 G/360 | 03.97 - | 4091 | |
| 4 SERIES | T 124 G/360 | 03.97 - | 4091 | |
| 4 SERIES | T 124 G/360 | 03.97 - | 4091 | |
| 4 SERIES | T 124 G/360 | 03.97 - | 4091 | |
| 4 SERIES | T 124 G/400 | 03.97 - | 4091 | |
| 4 SERIES | T 124 G/400 | 03.97 - | 4091 | |
| 4 SERIES | T 124 G/400 | 03.97 - | 4091 | |
| 4 SERIES | T 124 G/400 | 03.97 - | 4091 | |
| 4 SERIES | T 124 G/400 | 03.97 - | 4091 | |
| 4 SERIES | T 124 G/400 | 03.97 - | 4091 | |
| 4 SERIES | T 124 G/420 | 09.97 - | 4091 | |
| 4 SERIES | T 124 G/420 | 05.96 - | 4091 | |
| 4 SERIES | T 124 G/420 | - | 4091 | |
| 4 SERIES | T 124 G/420 | 09.97 - | 4091 | |
| 4 SERIES | T 124 G/420 | 09.97 - | 4091 | |
| 4 SERIES | T 124 G/420 | 09.97 - | 4091 | |
| 4 SERIES | T 124 L/360 | 02.97 - | 4091 | |
| 4 SERIES | T 124 L/360 | 05.95 - | 4091 | |
| 4 SERIES | T 124 L/360 | 09.95 - | 4091 | |
| 4 SERIES | T 124 L/400 | 02.97 - | 4091 | |
| 4 SERIES | T 124 L/400 | 05.96 - | 4091 | |
| 4 SERIES | T 124 L/400 | 05.96 - | 4091 | |
| 4 SERIES | T 124 L/420 | 05.96 - | 4091 | |
| 4 SERIES | T 124 L/420 | - | 4091 | |
| 4 SERIES | T 124 L/420 | 09.97 - | 4091 | |
| 4 SERIES | T 124 L/420 | 09.97 - | 4091 | |
| 4 SERIES | T 124 L/470 | - | 4091 | |

| MAKE & MODEL | | YEAR | | |
|---|---|---|---|---|
| **SCANIA** | | | | |
| 4 SERIES | T 124 L/470 | 01.01 - | 4091 | |
| 4 SERIES | T 144 C/460 | 09.95 - | 4091 | |
| 4 SERIES | T 144 C/460 | 09.95 - | 4091 | |
| 4 SERIES | T 144 C/460 | 09.95 - | 4091 | |
| 4 SERIES | T 144 C/460 | 09.95 - | 4091 | |
| 4 SERIES | T 144 C/530 | 09.95 - | 4091 | |
| 4 SERIES | T 144 C/530 | 09.95 - | 4091 | |
| 4 SERIES | T 144 C/530 | 09.95 - | 4091 | |
| 4 SERIES | T 144 C/530 | 09.95 - | 4091 | |
| 4 SERIES | T 144 G/460 | 03.97 - | 4091 | |
| 4 SERIES | T 144 G/460 | 03.97 - | 4091 | |
| 4 SERIES | T 144 G/460 | 03.97 - | 4091 | |
| 4 SERIES | T 144 G/460 | 03.97 - | 4091 | |
| 4 SERIES | T 144 G/460 | 03.97 - | 4091 | |
| 4 SERIES | T 144 G/460 | 03.97 - | 4091 | |
| 4 SERIES | T 144 G/530 | 03.97 - | 4091 | |
| 4 SERIES | T 144 G/530 | 03.97 - | 4091 | |
| 4 SERIES | T 144 G/530 | 03.97 - | 4091 | |
| 4 SERIES | T 144 G/530 | 03.97 - | 4091 | |
| 4 SERIES | T 144 G/530 | 03.97 - | 4091 | |
| 4 SERIES | T 144 G/530 | 03.97 - | 4091 | |
| 4 SERIES | T 144 L/460 | 03.97 - | 4091 | |
| 4 SERIES | T 144 L/460 | 03.97 - | 4091 | |
| 4 SERIES | T 144 L/460 | 09.95 - | 4091 | |
| 4 SERIES | T 144 L/460 | 09.95 - | 4091 | |
| 4 SERIES | T 144 L/530 | 03.97 - | 4091 | |
| 4 SERIES | T 144 L/530 | 03.97 - | 4091 | |
| 4 SERIES | T 144 L/530 | 09.95 - | 4091 | |
| 4 SERIES | T 144 L/530 | 09.95 - | 4091 | |
| 4 SERIES | T 94 C/260 | 12.96 - | 4091 | |
| 4 SERIES | T 94 C/260 | 12.96 - | 4091 | |
| 4 SERIES | T 94 C/260 | 12.96 - | 4091 | |
| 4 SERIES | T 94 C/310 | 09.96 - | 4091 | |
| 4 SERIES | T 94 C/310 | 09.96 - | 4091 | |
| 4 SERIES | T 94 C/310 | 09.96 - | 4091 | |
| 4 SERIES | T 94 C/310 | 09.96 - | 4091 | |
| 4 SERIES | T 94 G/220 | 08.96 - | 4091 | |
| 4 SERIES | T 94 G/220 | 08.96 - | 4091 | |
| 4 SERIES | T 94 G/220 | 08.96 - | 4091 | |
| 4 SERIES | T 94 G/230 | 04.99 - | 4091 | |
| 4 SERIES | T 94 G/230 | 04.99 - | 4091 | |
| 4 SERIES | T 94 G/230 | 04.99 - | 4091 | |
| 4 SERIES | T 94 G/260 | 12.96 - | 4091 | |
| 4 SERIES | T 94 G/260 | 12.96 - | 4091 | |
| 4 SERIES | T 94 G/260 | 12.96 - | 4091 | |
| 4 SERIES | T 94 G/260 | 12.96 - | 4091 | |
| 4 SERIES | T 94 G/310 | 12.96 - | 4091 | |
| 4 SERIES | T 94 G/310 | 12.96 - | 4091 | |
| 4 SERIES | T 94 G/310 | 09.96 - | 4091 | |
| 4 SERIES | T 94 G/310 | 12.96 - | 4091 | |
| 4 SERIES | T 94 L/310 | 09.96 - | 4091 | |
| 94 C | 9.0 C260 4WD 18 Ton | *96-00* | 3664 | 3664 |
| 94 C | 9.0 C260 4x2 18 Ton | *96-00* | 3664 | 3664 |
| 94 C | 9.0 C260 4x2 18 Ton | *96-00* | 3664 | 3664 |
| 94 C | 9.0 C260 6x4 26 Ton | *96-00* | 3664 | 3664 |
| 94 C | 9.0 C260 6x4 26 Ton | *96-00* | 3664 | 3664 |
| 94 C | 9.0 C260 6x6 26 Ton | *96-00* | 3664 | 3664 |
| 94 C | 9.0 C260 8x4/4 32 Ton | *96-00* | 3664 | 3664 |
| 94 C | 9.0 C310 4WD 18 Ton | *96-00* | 3664 | 3664 |
| 94 C | 9.0 C310 4x2 18 Ton | *96-00* | 3664 | 3664 |
| 94 C | 9.0 C310 4x2 18 Ton | *96-00* | 3664 | 3664 |
| 94 C | 9.0 C310 4x2 18 Ton | *96-00* | 3664 | 3664 |
| 94 C | 9.0 C310 6x2 26 Ton | *96-00* | 3664 | 3664 |
| 94 C | 9.0 C310 6x4 26 Ton | *96-00* | 3664 | 3664 |
| 94 C | 9.0 C310 6x4 26 Ton | *96-00* | 3664 | 3664 |
| 94 C | 9.0 C310 6x6 26 Ton | *96-00* | 3664 | 3664 |
| 94 C | 9.0 C310 8x4/4 32 Ton | *96-00* | 3664 | 3664 |
| 94 D | 9.0 D220 4x2 18 Ton | *96-00* | 3664 | 3664 |
| 94 D | 9.0 D220 4x2 18 Ton | *96-00* | 3664 | 3664 |
| 94 D | 9.0 D220 4x2 18 Ton | *96-00* | 3664 | 3664 |
| 94 D | 9.0 D220 4x2 18 Ton | *96-00* | 3664 | 3664 |
| 94 D | 9.0 D220 6x2/2/4 25 Ton | *96-00* | 3664 | 3664 |
| 94 D | 9.0 D220 6x2/2/4 25 Ton | *96-00* | 3664 | 3664 |
| 94 D | 9.0 D230 4x2 18 Ton | *96-00* | 3664 | 3664 |
| 94 D | 9.0 D230 4x2 18 Ton | *96-00* | 3664 | 3664 |
| 94 D | 9.0 D230 6x2/2/4 25 Ton | *96-00* | 3664 | 3664 |

| MAKE & MODEL | | YEAR | 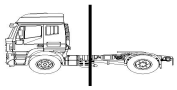 | |
|---|---|---|---|---|
| **SCANIA** | | | | |
| 94 D | 9.0 D310 4x2 18 Ton | *96-00* | 3664 | 3664 |
| 94 D | 9.0 D310 4x2 18 Ton | *96-00* | 3664 | 3664 |
| 94 D | 9.0 D310 6x2/2/4 25 Ton | *96-00* | 3664 | 3664 |
| 94 G | 9.0 G220 4x2 18 Ton | *96-00* | 3664 | 3664 |
| 94 G | 9.0 G220 4x2 18 Ton | *96-00* | 3664 | 3664 |
| 94 G | 9.0 G220 4x2 18 Ton | *96-00* | 3664 | 3664 |
| 94 G | 9.0 G220 6x2/2/4 25 Ton | *98-00* | 3664 | 3664 |
| 94 G | 9.0 G220 6x2/2/4 25 Ton | *98-00* | 3664 | 3664 |
| 94 G | 9.0 G260 4x2 18 Ton | *96-00* | 3664 | 3664 |
| 94 G | 9.0 G310 4x2 18 Ton | *96-00* | 3664 | 3664 |
| 94 G | 9.0 G310 4x2 18 Ton | *96-00* | 3664 | 3664 |
| 94 G | 9.0 G310 6x2/2/4 25 Ton | *96-00* | 3664 | 3664 |
| 94 L | 9.0 L310 4x2 18 Ton | *96-00* | 3664 | 3664 |
| 94 L | 9.0 L310 4x2 18 Ton | *96-00* | 3664 | 3664 |
| 94 L | 9.0 L310 6x2/2/4 26 Ton | *96-00* | 3664 | 3664 |
| 94 L | 9.0 L310 6x4 26 Ton | *96-00* | 3664 | 3664 |
| 94 L | 9.0 L310 6x4 26 Ton | *96-00* | 3664 | 3664 |
| P | 10.6 P 380 4x2 18 Ton | *04-* | 3664 | 3664 |
| P | 8.9 P 270 4x2 18 Ton | *04-* | 3664 | 3664 |
| P,G,R,T - series | G 230 | - | 4091 | |
| P,G,R,T - series | G 230, P 230 | 08.06 - | 4091 | |
| P,G,R,T - series | G 230, P 230 | 09.07 - | 4091 | |
| P,G,R,T - series | G 230, P 230 | 09.07 - | 4091 | |
| P,G,R,T - series | G 230, P 230 | 09.07 - | 4091 | |
| P,G,R,T - series | G 230, P 230 | 09.07 - | 4091 | |
| P,G,R,T - series | G 230, P 230 | 09.07 - | 4091 | |
| P,G,R,T - series | G 270, P 270 | - | 4091 | |
| P,G,R,T - series | G 270, P 270, R 270 | 09.04 - | 4091 | |
| P,G,R,T - series | G 310, P 310 | 09.04 - | 4091 | |
| P,G,R,T - series | G 310, P 310 | - | 4091 | |
| P,G,R,T - series | G 340, P 340 | 08.04 - | 4091 | |
| P,G,R,T - series | G 340, P 340 | - | 4091 | |
| P,G,R,T - series | G 340, P 340 | - | 4091 | |
| P,G,R,T - series | G 340, P 340, R 340 | - | 4091 | |
| P,G,R,T - series | G 340, P 340, R 340 | - | 4091 | |
| P,G,R,T - series | G 340, P 340, R 340 | - | 4091 | |
| P,G,R,T - series | G 340, P 340, R 340 | - | 4091 | |
| P,G,R,T - series | G 340, R 340 | 08.06 - | 4091 | |
| P,G,R,T - series | G 360, P 360, R 360 | 04.10 - | 4091 | |
| P,G,R,T - series | G 380, P 380 | - | 4091 | |
| P,G,R,T - series | G 380, P 380 | 08.04 - | 4091 | |
| P,G,R,T - series | G 380, P 380 | - | 4091 | |
| P,G,R,T - series | G 380, P 380, R 380 | - | 4091 | |
| P,G,R,T - series | G 380, P 380, R 380 | 09.05 - | 4091 | |
| P,G,R,T - series | G 380, P 380, R 380 | - | 4091 | |
| P,G,R,T - series | G 380, P 380, R 380 | 03.08 - | 4091 | |
| P,G,R,T - series | G 380, P 380, R 380 | - | 4091 | |
| P,G,R,T - series | G 380, P 380, R 380 | - | 4091 | |
| P,G,R,T - series | G 400, P 400, R 400 | 03.08 - | 4091 | |
| P,G,R,T - series | G 400, R 400 | 03.09 - | 4091 | |
| P,G,R,T - series | G 420 | - | 4091 | |
| P,G,R,T - series | G 420, P 420, R 420 | 03.04 - | 4091 | |
| P,G,R,T - series | G 420, P 420, R 420 | 09.05 - | 4091 | |
| P,G,R,T - series | G 420, R 420 | 01.08 - | 4091 | |
| P,G,R,T - series | G 420, R 420 | 01.08 - | 4091 | |
| P,G,R,T - series | G 420, R 420 | 01.08 - | 4091 | |
| P,G,R,T - series | G 440, R 440 | 03.08 - | 4091 | |
| P,G,R,T - series | G 440, R 440 | 04.10 - | 4091 | |
| P,G,R,T - series | G 480, R 480 | 01.08 - | 4091 | |
| P,G,R,T - series | G 480, R 480 | 03.08 - | 4091 | |
| P,G,R,T - series | G 480, R 480 | 03.08 - | 4091 | |
| P,G,R,T - series | G 480, R 480 | 01.08 - | 4091 | |
| P,G,R,T - series | G 480, R 480 | - | 4091 | |
| P,G,R,T - series | G 480, R 480 | 01.08 - | 4091 | |
| P,G,R,T - series | P 230 | - | 4091 | |
| P,G,R,T - series | P 230 | - | 4091 | |
| P,G,R,T - series | P 230 | 04.06 - | 4091 | |
| P,G,R,T - series | P 230 | - | 4091 | |
| P,G,R,T - series | P 230 | - | 4091 | |
| P,G,R,T - series | P 230 | 01.08 - | 4091 | |
| P,G,R,T - series | P 230 | - | 4091 | |
| P,G,R,T - series | P 230, R 230 | 09.04 - | 4091 | |
| P,G,R,T - series | P 230, R 230 | 08.06 - | 4091 | |
| P,G,R,T - series | P 230, R 230 | 09.04 - | 4091 | |
| P,G,R,T - series | P 230, R 230 | - | 4091 | |

| MAKE & MODEL | | YEAR | | |
|---|---|---|---|---|
| **SCANIA** | | | | |
| P,G,R,T - series | P 230, R 230 | - | 4091 | |
| P,G,R,T - series | P 260 | - | 4091 | |
| P,G,R,T - series | P 260 | - | 4091 | |
| P,G,R,T - series | P 270 | 09.04 - | 4091 | |
| P,G,R,T - series | P 270 | 04.06 - | 4091 | |
| P,G,R,T - series | P 270 | - | 4091 | |
| P,G,R,T - series | P 270 | 08.06 - | 4091 | |
| P,G,R,T - series | P 270 | - | 4091 | |
| P,G,R,T - series | P 270 | - | 4091 | |
| P,G,R,T - series | P 270 | - | 4091 | |
| P,G,R,T - series | P 270, R 270 | 08.06 - | 4091 | |
| P,G,R,T - series | P 270, R 270 | 09.04 - | 4091 | |
| P,G,R,T - series | P 270, R 270 | - | 4091 | |
| P,G,R,T - series | P 270, R 270 | - | 4091 | |
| P,G,R,T - series | P 280 | - | 4091 | |
| P,G,R,T - series | P 300 | - | 4091 | |
| P,G,R,T - series | P 310 | 04.06 - | 4091 | |
| P,G,R,T - series | P 310 | - | 4091 | |
| P,G,R,T - series | P 310 | 01.08 - | 4091 | |
| P,G,R,T - series | P 310 | 08.06 - | 4091 | |
| P,G,R,T - series | P 310 | - | 4091 | |
| P,G,R,T - series | P 310 | - | 4091 | |
| P,G,R,T - series | P 310 | - | 4091 | |
| P,G,R,T - series | P 310, R 310 | 09.04 - | 4091 | |
| P,G,R,T - series | P 310, R 310 | 08.06 - | 4091 | |
| P,G,R,T - series | P 310, R 310 | 09.04 - | 4091 | |
| P,G,R,T - series | P 310, R 310 | - | 4091 | |
| P,G,R,T - series | P 310, R 310 | - | 4091 | |
| P,G,R,T - series | P 340 | 09.04 - | 4091 | |
| P,G,R,T - series | P 340 | - | 4091 | |
| P,G,R,T - series | P 340 | - | 4091 | |
| P,G,R,T - series | P 340 | - | 4091 | |
| P,G,R,T - series | P 340 | - | 4091 | |
| P,G,R,T - series | P 340 | - | 4091 | |
| P,G,R,T - series | P 340 | - | 4091 | |
| P,G,R,T - series | P 340 | - | 4091 | |
| P,G,R,T - series | P 340 | - | 4091 | |
| P,G,R,T - series | P 340 | 10.06 - | 4091 | |
| P,G,R,T - series | P 340 | - | 4091 | |
| P,G,R,T - series | P 340 | - | 4091 | |
| P,G,R,T - series | P 340 | - | 4091 | |
| P,G,R,T - series | P 340 | - | 4091 | |
| P,G,R,T - series | P 340 | 10.06 - | 4091 | |
| P,G,R,T - series | P 340, R 340 | - | 4091 | |
| P,G,R,T - series | P 340, R 340 | - | 4091 | |
| P,G,R,T - series | P 340, R 340 | - | 4091 | |
| P,G,R,T - series | P 340, R 340 | - | 4091 | |
| P,G,R,T - series | P 340, R 340 | - | 4091 | |
| P,G,R,T - series | P 340, R 340 | 09.04 - | 4091 | |
| P,G,R,T - series | P 340, R 340 | 10.06 - | 4091 | |
| P,G,R,T - series | P 340, R 340 | - | 4091 | |
| P,G,R,T - series | P 340, R 340 | 09.04 - | 4091 | |
| P,G,R,T - series | P 340, R 340 | 08.06 - | 4091 | |
| P,G,R,T - series | P 340, R 340 | - | 4091 | |
| P,G,R,T - series | P 340, R 340 | - | 4091 | |
| P,G,R,T - series | P 360 | 04.10 - | 4091 | |
| P,G,R,T - series | P 360 | 04.10 - | 4091 | |
| P,G,R,T - series | P 360 | 09.09 - | 4091 | |
| P,G,R,T - series | P 360 | 07.09 - | 4091 | |
| P,G,R,T - series | P 360, R 360 | 04.10 - | 4091 | |
| P,G,R,T - series | P 360, R 360 | 04.10 - | 4091 | |
| P,G,R,T - series | P 360, R 360 | 04.10 - | 4091 | |
| P,G,R,T - series | P 360, R 360 | 04.10 - | 4091 | |
| P,G,R,T - series | P 380 | - | 4091 | |
| P,G,R,T - series | P 380 | 09.05 - | 4091 | |
| P,G,R,T - series | P 380 | - | 4091 | |
| P,G,R,T - series | P 380 | - | 4091 | |
| P,G,R,T - series | P 380 | 09.05 - | 4091 | |
| P,G,R,T - series | P 380 | 10.06 - | 4091 | |
| P,G,R,T - series | P 380 | - | 4091 | |
| P,G,R,T - series | P 380 | - | 4091 | |
| P,G,R,T - series | P 380 | - | 4091 | |
| P,G,R,T - series | P 380 | 09.04 - | 4091 | |
| P,G,R,T - series | P 380 | - | 4091 | |
| P,G,R,T - series | P 380 | - | 4091 | |
| P,G,R,T - series | P 380 | - | 4091 | |

| MAKE & MODEL | | YEAR | | |
|---|---|---|---|---|
| **SCANIA** | | | | |
| P,G,R,T - series | P 380 | - | 4091 | |
| P,G,R,T - series | P 380 | 10.06 - | 4091 | |
| P,G,R,T - series | P 380, R 380 | - | 4091 | |
| P,G,R,T - series | P 380, R 380 | - | 4091 | |
| P,G,R,T - series | P 380, R 380 | - | 4091 | |
| P,G,R,T - series | P 380, R 380 | - | 4091 | |
| P,G,R,T - series | P 380, R 380 | - | 4091 | |
| P,G,R,T - series | P 380, R 380 | 09.05 - | 4091 | |
| P,G,R,T - series | P 380, R 380 | - | 4091 | |
| P,G,R,T - series | P 380, R 380 | 09.05 - | 4091 | |
| P,G,R,T - series | P 380, R 380 | - | 4091 | |
| P,G,R,T - series | P 380, R 380 | - | 4091 | |
| P,G,R,T - series | P 380, R 380 | 09.04 - | 4091 | |
| P,G,R,T - series | P 380, R 380 | 10.06 - | 4091 | |
| P,G,R,T - series | P 380, R 380 | - | 4091 | |
| P,G,R,T - series | P 380, R 380 | - | 4091 | |
| P,G,R,T - series | P 380, R 380 | 09.04 - | 4091 | |
| P,G,R,T - series | P 380, R 380 | 10.06 - | 4091 | |
| P,G,R,T - series | P 380, R 380 | - | 4091 | |
| P,G,R,T - series | P 380, R 380 | - | 4091 | |
| P,G,R,T - series | P 380, R 380 | - | 4091 | |
| P,G,R,T - series | P 380, R380 | - | 4091 | |
| P,G,R,T - series | P 400 | 04.10 - | 4091 | |
| P,G,R,T - series | P 400 | 04.10 - | 4091 | |
| P,G,R,T - series | P 400 | 07.09 - | 4091 | |
| P,G,R,T - series | P 400, R 400 | 04.10 - | 4091 | |
| P,G,R,T - series | P 400, R 400 | 04.10 - | 4091 | |
| P,G,R,T - series | P 400, R 400 | 04.10 - | 4091 | |
| P,G,R,T - series | P 400, R 400 | 04.10 - | 4091 | |
| P,G,R,T - series | P 420 | 09.04 - | 4091 | |
| P,G,R,T - series | P 420, R 420 | - | 4091 | |
| P,G,R,T - series | P 420, R 420 | 09.05 - | 4091 | |
| P,G,R,T - series | P 420, R 420 | - | 4091 | |
| P,G,R,T - series | P 420, R 420 | 04.04 - | 4091 | |
| P,G,R,T - series | P 420, R 420 | 08.06 - | 4091 | |
| P,G,R,T - series | P 420, R 420 | - | 4091 | |
| P,G,R,T - series | P 420, R 420 | - | 4091 | |
| P,G,R,T - series | P 440, R 440 | 04.10 - | 4091 | |
| P,G,R,T - series | P 470, R 470 | 03.04 - | 4091 | |
| P,G,R,T - series | P 470, R 470 | 09.05 - | 4091 | |
| P,G,R,T - series | P 480, R 480 | 04.10 - | 4091 | |
| P,G,R,T - series | P 480, R 480 | - | 4091 | |
| P,G,R,T - series | P 480, R 480 | - | 4091 | |
| P,G,R,T - series | P 500, R 500 | 04.04 - | 4091 | |
| P,G,R,T - series | P 500, R 500 | 04.04 - | 4091 | |
| P,G,R,T - series | P 500, R 500 | - | 4091 | |
| P,G,R,T - series | P 560, R 560 | 11.06 - | 4091 | |
| P,G,R,T - series | P 560, R 560 | 11.06 - | 4091 | |
| P,G,R,T - series | P 560, R 560 | 04.04 - | 4091 | |
| P,G,R,T - series | P 580, R 580 | 04.04 - | 4091 | |
| P,G,R,T - series | P 620, R 620 | 11.06 - | 4091 | |
| P,G,R,T - series | P 620, R 620 | 11.06 - | 4091 | |
| P,G,R,T - series | P 620, R 620 | 08.06 - | 4091 | |
| P,G,R,T - series | R 340 | 03.04 - | 4091 | |
| P,G,R,T - series | R 340 | 08.06 - | 4091 | |
| P,G,R,T - series | R 360 | 04.10 - | 4091 | |
| P,G,R,T - series | R 360 | 04.10 - | 4091 | |
| P,G,R,T - series | R 360 | 04.10 - | 4091 | |
| P,G,R,T - series | R 380 | - | 4091 | |
| P,G,R,T - series | R 380 | 04.10 - | 4091 | |
| P,G,R,T - series | R 380 | 03.04 - | 4091 | |
| P,G,R,T - series | R 380 | 09.04 - | 4091 | |
| P,G,R,T - series | R 380 | - | 4091 | |
| P,G,R,T - series | R 400 | 03.08 - | 4091 | |
| P,G,R,T - series | R 400 | 04.10 - | 4091 | |
| P,G,R,T - series | R 400 | 04.10 - | 4091 | |
| P,G,R,T - series | R 420 | - | 4091 | |
| P,G,R,T - series | R 420 | - | 4091 | |
| P,G,R,T - series | R 420 | - | 4091 | |
| P,G,R,T - series | R 440 | 04.10 - | 4091 | |
| P,G,R,T - series | R 440 | 04.10 - | 4091 | |
| P,G,R,T - series | R 440 | 04.10 - | 4091 | |
| P,G,R,T - series | R 440 | 04.10 - | 4091 | |
| P,G,R,T - series | R 440 | 04.10 - | 4091 | |
| P,G,R,T - series | R 470 | - | 4091 | |
| P,G,R,T - series | R 470 | - | 4091 | |

| MAKE & MODEL | | YEAR | | |
|---|---|---|---|---|
| **SCANIA** | | | | |
| P,G,R,T - series | R 470 | - | 4091 | |
| P,G,R,T - series | R 470 | - | 4091 | |
| P,G,R,T - series | R 470 | - | 4091 | |
| P,G,R,T - series | R 470 | 04.04 - | 4091 | |
| P,G,R,T - series | R 470 | 04.04 - | 4091 | |
| P,G,R,T - series | R 470 | 04.04 - | 4091 | |
| P,G,R,T - series | R 480 | - | 4091 | |
| P,G,R,T - series | R 480 | 04.10 - | 4091 | |
| P,G,R,T - series | R 480 | - | 4091 | |
| P,G,R,T - series | R 480 | 04.10 - | 4091 | |
| P,G,R,T - series | R 480 | - | 4091 | |
| P,G,R,T - series | R 480 | - | 4091 | |
| P,G,R,T - series | R 480 | - | 4091 | |
| P,G,R,T - series | R 480 | 04.10 - | 4091 | |
| P,G,R,T - series | R 480 | - | 4091 | |
| P,G,R,T - series | R 480 | 04.10 - | 4091 | |
| P,G,R,T - series | R 480 | 08.06 - | 4091 | |
| P,G,R,T - series | R 480 | 04.10 - | 4091 | |
| P,G,R,T - series | R 500 | - | 4091 | |
| P,G,R,T - series | R 500 | - | 4091 | |
| P,G,R,T - series | R 500 | 03.04 - | 4091 | |
| P,G,R,T - series | R 500 | 04.04 - | 4091 | |
| P,G,R,T - series | R 500 | - | 4091 | |
| P,G,R,T - series | R 560 | - | 4091 | |
| P,G,R,T - series | R 560 | 03.08 - | 4091 | |
| P,G,R,T - series | R 560 | - | 4091 | |
| P,G,R,T - series | R 580 | - | 4091 | |
| P,G,R,T - series | R 580 | - | 4091 | |
| P,G,R,T - series | R 580 | 03.04 - | 4091 | |
| P,G,R,T - series | R 580 | 04.04 - | 4091 | |
| P,G,R,T - series | R 580 | 04.04 - | 4091 | |
| P,G,R,T - series | R 580 | - | 4091 | |
| P,G,R,T - series | R 620 | - | 4091 | |
| P,G,R,T - series | R 620 | - | 4091 | |
| P,G,R,T - series | R 620 | 03.08 - | 4091 | |
| P,G,R,T - series | R 620 | 09.05 - | 4091 | |
| P,G,R,T - series | R 620 | - | 4091 | |
| P,G,R,T - series | R 730 | 04.10 - | 4091 | |
| P,G,R,T - series | R 730 | 04.10 - | 4091 | |
| P,G,R,T - series | R 730 | 04.10 - | 4091 | |
| P,G,R,T - series | T 470 | 09.04 - 10.05 | 4091 | |
| R | 10.6 R 340 4x2 18 Ton | *04-* | 3664 | 3664 |
| R | 10.6 R 380 4x2 18 Ton | *04-* | 3664 | 3664 |
| R | 11.7 R 420 4x2 18 Ton | *04-* | 3664 | 3664 |
| R | 11.7 R 470 4x2 18 Ton | *04-* | 3664 | 3664 |
| R | 15.6 R 500 4x2 18 Ton | *04-* | 3664 | 3664 |
| R | 15.6 R 580 4x2 18 Ton | *04-* | 3664 | 3664 |
| SB 7000 | All models | *96-* | 3664 | 3664 |
| T 94 C | 9.0 C260 4x2 18 Ton | *96-00* | 3664 | 3664 |
| T 94 C | 9.0 C260 6x4 26 Ton | *96-00* | 3664 | 3664 |
| T 94 C | 9.0 C260 6x4 26 Ton | *96-00* | 3664 | 3664 |
| T 94 C | 9.0 C310 4x2 18 Ton | *96-00* | 3664 | 3664 |
| T 94 C | 9.0 C310 4x2 18 Ton | *96-00* | 3664 | 3664 |
| T 94 C | 9.0 C310 6x4 26 Ton | *96-00* | 3664 | 3664 |
| T 94 C | 9.0 C310 6x4 26 Ton | *96-00* | 3664 | 3664 |
| T 94 G | 9.0 G220 4x2 18 Ton | *96-00* | 3664 | 3664 |
| T 94 G | 9.0 G220 4x2 18 Ton | *96-00* | 3664 | 3664 |
| T 94 G | 9.0 G220 6x2 26 Ton | *96-00* | 3664 | 3664 |
| T 94 G | 9.0 G230 4x2 18 Ton | *99-00* | 3664 | 3664 |
| T 94 G | 9.0 G230 4x2 18 Ton | *99-00* | 3664 | 3664 |
| T 94 G | 9.0 G230 6x2 26 Ton | *99-00* | 3664 | 3664 |
| T 94 G | 9.0 G260 4x2 18 Ton | *96-00* | 3664 | 3664 |
| T 94 G | 9.0 G260 4x2 18 Ton | *96-00* | 3664 | 3664 |
| T 94 G | 9.0 G260 6x2 26 Ton | *96-00* | 3664 | 3664 |
| T 94 G | 9.0 G260 6x4 26 Ton | *96-00* | 3664 | 3664 |
| T 94 G | 9.0 G310 4x2 18 Ton | *96-00* | 3664 | 3664 |
| T 94 G | 9.0 G310 4x2 18 Ton | *96-00* | 3664 | 3664 |
| T 94 G | 9.0 G310 6x2 26 Ton | *96-00* | 3664 | 3664 |
| T 94 G | 9.0 G310 6x4 26 Ton | *96-00* | 3664 | 3664 |
| T 94 L | 9.0 L310 4x2 19 Ton | *96-00* | 3664 | 3664 |
| T114 C | 10.6 C340 4x2 18 Ton | *98-00* | 3664 | 3664 |
| T114 C | 10.6 C340 4x2 18 Ton | *98-00* | 3664 | 3664 |
| T114 C | 10.6 C340 6x4 26 Ton | *98-00* | 3664 | 3664 |
| T114 C | 10.6 C340 6x4 26 Ton | *98-00* | 3664 | 3664 |
| T114 C | 10.6 C380 4x2 18 Ton | *98-00* | 3664 | 3664 |
| T114 C | 10.6 C380 4x2 18 Ton | *98-00* | 3664 | 3664 |

| MAKE & MODEL | | YEAR | 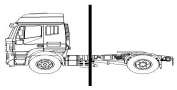 | |
|---|---|---|---|---|
| **SCANIA** | | | | |
| T114 C | 10.6 C380 6x4 26 Ton | 98-00 | 3664 | 3664 |
| T114 C | 10.6 C380 6x4 26 Ton | 98-00 | 3664 | 3664 |
| T114 C | 12.6 C380 6x4 26 Ton | 98-00 | 3664 | 3664 |
| T114 G | 10.6 G340 4x2 18 Ton | 98-00 | 3664 | 3664 |
| T114 G | 10.6 G340 4x2 18 Ton | 98-00 | 3664 | 3664 |
| T114 G | 10.6 G340 6x2 26 Ton | 98-00 | 3664 | 3664 |
| T114 G | 10.6 G340 6x4 26 Ton | 98-00 | 3664 | 3664 |
| T114 G | 10.6 G380 4x2 18 Ton | 98-00 | 3664 | 3664 |
| T114 G | 10.6 G380 4x2 18 Ton | 98-00 | 3664 | 3664 |
| T114 G | 10.6 G380 6x2 26 Ton | 98-00 | 3664 | 3664 |
| T114 G | 10.6 G380 6x2 26 Ton | 98-00 | 3664 | 3664 |
| T114 G | 10.6 G380 6x4 26 Ton | 98-00 | 3664 | 3664 |
| T114 G | 10.6 G380 6x4 26 Ton | 98-00 | 3664 | 3664 |
| T114 G | 11.0 G340 4x2 18 Ton | 96-00 | 3664 | 3664 |
| T114 G | 11.0 G340 4x2 18 Ton | 96-00 | 3664 | 3664 |
| T114 G | 11.0 G340 6x2 26 Ton | 96-00 | 3664 | 3664 |
| T114 G | 11.0 G340 6x2 26 Ton | 96-00 | 3664 | 3664 |
| T114 G | 11.0 G340 6x4 26 Ton | 96-00 | 3664 | 3664 |
| T114 G | 11.0 G340 6x4 26 Ton | 96-00 | 3664 | 3664 |
| T114 L | 10.6 L340 4x2 18 Ton | 98-00 | 3664 | 3664 |
| T114 L | 10.6 L340 6x2 26 Ton | 98-00 | 3664 | 3664 |
| T114 L | 10.6 L380 4x2 18 Ton | 98-00 | 3664 | 3664 |
| T114 L | 10.6 L380 6x2 26 Ton | 98-00 | 3664 | 3664 |
| T114 L | 10.6 L380 6x4 26 Ton | 98-00 | 3664 | 3664 |
| T114 L | 11.0 L340 4x2 18 Ton | 96-00 | 3664 | 3664 |
| T124 C | 11.7 C360 4x2 18 Ton | 95-00 | 3664 | 3664 |
| T124 C | 11.7 C360 4x2 18 Ton | 95-00 | 3664 | 3664 |
| T124 C | 11.7 C360 6x4 26 Ton | 95-00 | 3664 | 3664 |
| T124 C | 11.7 C360 6x4 26 Ton | 95-00 | 3664 | 3664 |
| T124 C | 11.7 C360 6x4 26 Ton | 95-00 | 3664 | 3664 |
| T124 C | 11.7 C400 4x2 18 Ton | 96-00 | 3664 | 3664 |
| T124 C | 11.7 C400 4x2 18 Ton | 96-00 | 3664 | 3664 |
| T124 C | 11.7 C400 6x4 26 Ton | 97-00 | 3664 | 3664 |
| T124 C | 11.7 C400 6x4 26 Ton | 96-00 | 3664 | 3664 |
| T124 C | 11.7 C400 6x4 26 Ton | 96-00 | 3664 | 3664 |
| T124 C | 11.7 C420 4x2 18 Ton | 96-00 | 3664 | 3664 |
| T124 C | 11.7 C420 4x2 18 Ton | 96-00 | 3664 | 3664 |
| T124 C | 11.7 C420 6x4 26 Ton | 96-00 | 3664 | 3664 |
| T124 C | 11.7 C420 6x4 26 Ton | 96-00 | 3664 | 3664 |
| T124 G | 11.7 G360 4x2 18 Ton | 97-00 | 3664 | 3664 |
| T124 G | 11.7 G360 4x2 18 Ton | 97-00 | 3664 | 3664 |
| T124 G | 11.7 G360 6x2 26 Ton | 97-00 | 3664 | 3664 |
| T124 G | 11.7 G360 6x2 26 Ton | 97-00 | 3664 | 3664 |
| T124 G | 11.7 G360 6x4 26 Ton | 97-00 | 3664 | 3664 |
| T124 G | 11.7 G360 6x4 26 Ton | 97-00 | 3664 | 3664 |
| T124 G | 11.7 G400 4x2 18 Ton | 97-00 | 3664 | 3664 |
| T124 G | 11.7 G400 4x2 18 Ton | 97-00 | 3664 | 3664 |
| T124 G | 11.7 G400 6x2 26 Ton | 97-00 | 3664 | 3664 |
| T124 G | 11.7 G400 6x2 26 Ton | 97-00 | 3664 | 3664 |
| T124 G | 11.7 G400 6x4 26 Ton | 97-00 | 3664 | 3664 |
| T124 G | 11.7 G400 6x4 26 Ton | 97-00 | 3664 | 3664 |
| T124 G | 11.7 G420 4x2 18 Ton | 97-00 | 3664 | 3664 |
| T124 G | 11.7 G420 4x2 18 Ton | 97-00 | 3664 | 3664 |
| T124 G | 11.7 G420 6x2 26 Ton | 97-00 | 3664 | 3664 |
| T124 G | 11.7 G420 6x4 26 Ton | 97-00 | 3664 | 3664 |
| T124 G | 11.7 G420 6x4 26 Ton | 97-00 | 3664 | 3664 |
| T124 L | 11.7 L360 4x2 18 Ton | 97-00 | 3664 | 3664 |
| T124 L | 11.7 L360 6x2 26 Ton | 95-00 | 3664 | 3664 |
| T124 L | 11.7 L360 6x4 26 Ton | 95-00 | 3664 | 3664 |
| T124 L | 11.7 L400 4x2 18 Ton | 97-00 | 3664 | 3664 |
| T124 L | 11.7 L400 6x2 26 Ton | 96-00 | 3664 | 3664 |
| T124 L | 11.7 L400 6x4 26 Ton | 96-00 | 3664 | 3664 |
| T124 L | 11.7 L420 4x2 18 Ton | 96-00 | 3664 | 3664 |
| T124 L | 11.7 L420 6x2 26 Ton | 96-00 | 3664 | 3664 |
| T124 L | 11.7 L420 6x4 26 Ton | 96-00 | 3664 | 3664 |
| T144 C | 14.2 C460 4x2 18 Ton | 95-00 | 3664 | 3664 |
| T144 C | 14.2 C460 4x2 18 Ton | 95-00 | 3664 | 3664 |
| T144 C | 14.2 C460 6x4 26 Ton | 95-00 | 3664 | 3664 |
| T144 C | 14.2 C460 6x4 26 Ton | 95-00 | 3664 | 3664 |
| T144 C | 14.2 C530 4x2 18 Ton | 95-00 | 3664 | 3664 |
| T144 C | 14.2 C530 4x2 18 Ton | 95-00 | 3664 | 3664 |
| T144 C | 14.2 C530 6x4 26 Ton | 95-00 | 3664 | 3664 |
| T144 C | 14.2 C530 6x4 26 Ton | 95-00 | 3664 | 3664 |
| T144 G | 14.2 G460 4x2 18 Ton | 97-00 | 3664 | 3664 |
| T144 G | 14.2 G460 4x2 18 Ton | 97-00 | 3664 | 3664 |

| MAKE & MODEL | | YEAR | 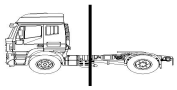 | |
|---|---|---|---|---|
| **SCANIA** | | | | |
| T144 G | 14.2 G460 6x2 26 Ton | *97-00* | 3664 | 3664 |
| T144 G | 14.2 G460 6x2 26 Ton | *97-00* | 3664 | 3664 |
| T144 G | 14.2 G460 6x4 26 Ton | *97-00* | 3664 | 3664 |
| T144 G | 14.2 G460 6x4 26 Ton | *97-00* | 3664 | 3664 |
| T144 G | 14.2 G530 4x2 18 Ton | *97-00* | 3664 | 3664 |
| T144 G | 14.2 G530 4x2 18 Ton | *97-00* | 3664 | 3664 |
| T144 G | 14.2 G530 6x2 26 Ton | *97-00* | 3664 | 3664 |
| T144 G | 14.2 G530 6x2 26 Ton | *97-00* | 3664 | 3664 |
| T144 G | 14.2 G530 6x4 26 Ton | *97-00* | 3664 | 3664 |
| T144 G | 14.2 G530 6x4 26 Ton | *97-00* | 3664 | 3664 |
| T144 L | 14.2 L460 4x2 18 Ton | *97-00* | 3664 | 3664 |
| T144 L | 14.2 L460 6x2 26 Ton | *95-00* | 3664 | 3664 |
| T144 L | 14.2 L460 6x4 26 Ton | *95-00* | 3664 | 3664 |
| T144 L | 14.2 L530 4x2 18 Ton | *97-00* | 3664 | 3664 |
| T144 L | 14.2 L530 6x2 26 Ton | *95-00* | 3664 | 3664 |
| T144 L | 14.2 L530 6x4 26 Ton | *95-00* | 3664 | 3664 |
| **SETRA** | | | | |
| COMFORTCLASS 300 | S 315 GT, GT-HD disc 045-041 mm | *91-* | 3497 | 3664 |
| COMFORTCLASS 300 | S 315 GT, GT-HD disc 045-041 mm | *91-* | 3497/1 | 3664 |
| COMFORTCLASS 300 | S 315 GT, GT-HD disc 045-041 mm | *91-* | 3664 | 3664 |
| COMFORTCLASS 300 | S 315 GT, GT-HD disc 045-041 mm | *91-* | 3664 | 3664 |
| COMFORTCLASS 300 | S 317 GT, GT-HD disc 045-041 mm | *91-* | 3497 | 3664 |
| COMFORTCLASS 300 | S 317 GT, GT-HD disc 045-041 mm | *91-* | 3497/1 | 3664 |
| COMFORTCLASS 300 | S 317 GT, GT-HD disc 045-041 mm | *91-* | 3664 | 3664 |
| COMFORTCLASS 300 | S 317 GT, GT-HD disc 045-041 mm | *91-* | 3664 | 3664 |
| COMFORTCLASS 300 | S 319 GT, GT-HD disc 045-041 mm | *91-* | 3497 | |
| COMFORTCLASS 300 | S 319 GT, GT-HD disc 045-041 mm | *91-* | 3497/1 | |
| COMFORTCLASS 300 | S 319 GT, GT-HD disc 045-041 mm Addit.axle | *91-* | 3664 | 3664 |
| COMFORTCLASS 300 | S 319 GT, GT-HD disc 045-041 mm Addit.axle | *91-* | 3664 | 3664 |
| COMFORTCLASS 400 | 12.0 S 415 GT 4x2 18 Ton | *03-* | 3664 | 3664 |
| COMFORTCLASS 400 | 12.0 S 415 GT 4x2 18 Ton | *03-* | 3664 | 3664 |
| COMFORTCLASS 400 | 12.0 S 415 GT, GT-HD 4x2 18 Ton | *03-* | 3664 | 3664 |
| COMFORTCLASS 400 | 12.0 S 415 GT, GT-HD 4x2 18 Ton | *03-* | 3664 | 3664 |
| COMFORTCLASS 400 | 12.0 S 415 GT, GT-HD 4x2 18 Ton | *03-* | 3664 | 3664 |
| COMFORTCLASS 400 | 12.0 S 416 GT-HD 6x2 24 Ton | *03-* | 3664 | 3664 |
| COMFORTCLASS 400 | 12.0 S 416 GT-HD 6x2 24 Ton | *03-* | 3664 | 3664 |
| COMFORTCLASS 400 | 12.0 S 417 GT-HD 6x2 24 Ton | *03-* | 3664 | 3664 |
| COMFORTCLASS 400 | 12.0 S 417 GT-HD 6x2 24 Ton | *03-* | 3664 | 3664 |
| GMCOMFORTCLASS | 400 S 415 GT | *10/03-* | 3664/1 | |
| MULTICLASS 300 | S 313 UL disc 045-041 mm | *91-* | 3497 | 5890 |
| MULTICLASS 300 | S 313 UL disc 045-041 mm | *91-* | 3497/1 | 5890 |
| MULTICLASS 300 | S 315 H disc 045-041 mm | *91-* | 3497 | 3664 |
| MULTICLASS 300 | S 315 H disc 045-041 mm | *91-* | 3497/1 | 3664 |
| MULTICLASS 300 | S 315 H disc 045-041 mm | *91-* | 3664 | 3664 |
| MULTICLASS 300 | S 315 H disc 045-041 mm | *91-* | 3664 | 3664 |
| MULTICLASS 300 | S 315 NF disc 045-041 mm | *91-* | 3497 | 3664 |
| MULTICLASS 300 | S 315 NF disc 045-041 mm | *91-* | 3497/1 | 3664 |
| MULTICLASS 300 | S 315 NF disc 045-041 mm | *91-* | 3664 | 3664 |
| MULTICLASS 300 | S 315 NF disc 045-041 mm | *91-* | 3664 | 3664 |
| MULTICLASS 300 | S 315 UL disc 045-041 mm | *91-* | 3497 | 3664 |
| MULTICLASS 300 | S 315 UL disc 045-041 mm | *91-* | 3497/1 | 3664 |
| MULTICLASS 300 | S 315 UL disc 045-041 mm | *91-* | 3664 | 3664 |
| MULTICLASS 300 | S 315 UL disc 045-041 mm | *91-* | 3664 | 3664 |
| MULTICLASS 300 | S 319 NF disc 045-041 mm | *91-* | 3497 | |
| MULTICLASS 300 | S 319 NF disc 045-041 mm | *91-* | 3497/1 | |
| MULTICLASS 300 | S 319 NF disc 045-041 mm Addit.axle | *91-* | 3664 | 3664 |
| MULTICLASS 300 | S 319 NF disc 045-041 mm Addit.axle | *91-* | 3664 | 3664 |
| MULTICLASS 300 | S 319 ÜL disc 045-041 mm | *91-* | 3497 | |
| MULTICLASS 300 | S 319 ÜL disc 045-041 mm | *91-* | 3497/1 | |
| MULTICLASS 300 | S 319 ÜL disc 045-041 mm Addit.axle | *91-* | 3664 | 3664 |
| MULTICLASS 300 | S 319 ÜL disc 045-041 mm Addit.axle | *91-* | 3664 | 3664 |
| MULTICLASS 300 | SG 321 UL disc 045-041 mm | *91-* | 3497 | 3664 |
| MULTICLASS 300 | SG 321 UL disc 045-041 mm | *91-* | 3497/1 | 3664 |
| MULTICLASS 300 | SG 321 UL disc 045-041 mm | *91-* | 3664 | 3664 |
| MULTICLASS 300 | SG 321 UL disc 045-041 mm | *91-* | 3664 | 3664 |
| S-SERIE | S 215 NR disc 045-041 mm | *91-* | 3497 | 5890 |
| S-SERIE | S 215 NR disc 045-041 mm | *91-* | 3497/1 | 5890 |
| S-SERIE | S 300 NC City disc 045-041 mm | *91-* | 3497 | |
| S-SERIE | S 300 NC City disc 045-041 mm | *91-* | 3497/1 | |
| TOPCLASS | 400 S 416 HDH | *10/02-* | 3664/1 | |
| TOPCLASS 300 | S 309 HD disc 045-041 mm | *91-* | 3497 | 5890 |
| TOPCLASS 300 | S 309 HD disc 045-041 mm | *91-* | 3497/1 | 5890 |
| TOPCLASS 300 | S 312 HD disc 045-041 mm | *91-* | 3497 | 5890 |
| TOPCLASS 300 | S 312 HD disc 045-041 mm | *91-* | 3497/1 | 5890 |
| TOPCLASS 300 | S 315 HD, HDH disc 045-041 mm | *91-* | 3497 | 5890 |
| TOPCLASS 300 | S 315 HD, HDH disc 045-041 mm | *91-* | 3497/1 | 5890 |

| MAKE & MODEL | | YEAR | 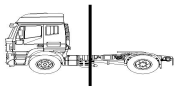 | |
|---|---|---|---|---|
| **SCANIA** | | | | |
| TOPCLASS 300 | S 315 HDH-3 disc 045-041 mm | 91- | 3497 | 5890 |
| TOPCLASS 300 | S 315 HDH-3 disc 045-041 mm | 91- | 3497/1 | 5890 |
| TOPCLASS 300 | S 316 HDS disc 045-041 mm | 91- | 3497 | |
| TOPCLASS 300 | S 316 HDS disc 045-041 mm | 91- | 3497/1 | |
| TOPCLASS 300 | S 317 HDH-3 disc 045-041 mm | 91- | 3497 | 3664 |
| TOPCLASS 300 | S 317 HDH-3 disc 045-041 mm | 91- | 3497/1 | 3664 |
| TOPCLASS 300 | S 317 HDH-3 disc 045-041 mm | 91- | 3664 | 3664 |
| TOPCLASS 300 | S 317 HDH-3 disc 045-041 mm | 91- | 3664 | 3664 |
| TOPCLASS 300 | S 328 DT | 94- | 3664 | 3664 |
| TOPCLASS 400 | 12.0 S 415 HD 4x2 18 Ton. | 01- | 3664 | 3664 |
| TOPCLASS 400 | 12.0 S 415 HDH 6x2/4 24 Ton | 01- | 3664 | 3664 |
| TOPCLASS 400 | 15.9 S 411 HD 4x2 18 Ton | 01- | 3664 | 3664 |
| TOPCLASS 400 | 15.9 S 416 HDH 6x2/4 24 Ton | 02- | 3664 | 3664 |
| TOPCLASS 400 | 15.9 S 417 HDH 6x2/4 24 Ton | 01- | 3664 | 3664 |
| TOPCLASS 400 | 15.9 S 431 DT 6x2/4 26 Ton | 02- | 3664 | 3664 |
| **SMB** | | | | |
| DB22LT | | 04- | | 4130 |
| **TEMSA** | | | | |
| AVENUE | | 13- | 3664/4 | 3664/4 |
| **VAN HOOL** | | | | |
| T | T 815 | 98- | 3497 | |
| T | T 815 | 98- | 3497/1 | |
| **VOLVO** | | | | |
| B 10 | B10 L | 99- | 3770 | 5881 |
| B 10 | B10 L | 99- | 3770/1 | 5881 |
| B 12 | 12.0 B 12 4x2 18 Ton | 99- | 3770 | 5881 |
| B 12 | 12.0 B 12 4x2 18 Ton | 99- | 3770 | 5881 |
| B 12 | 12.0 B 12 4x2 18 Ton | 99- | 3770/1 | 5881 |
| B 12 | 12.0 B 12 4x2 18 Ton | 99- | 3770/1 | 5881 |
| B 12 | 12.1 B 12 4x2 23.5 Ton | 99- | 3770 | 5881 |
| B 12 | 12.1 B 12 4x2 23.5 Ton | 99- | 3770/1 | 5881 |
| FE | 7.1 FE 240-18 4x2 18 Ton | 06- | 3917 | 3917 |
| FE | 7.1 FE 240-18 4x2 18 Ton | 06- | 3917 | 3917 |
| FE | 7.1 FE 240-18 4x2 18 Ton | 06- | 3917 | 3917 |
| FE | 7.1 FE 240-18 4x2 18 Ton | 06- | 3917 | 3917 |
| FE | 7.1 FE 240-18 4x2 18 Ton | 06- | 3917/1 | 3917/1 |
| FE | 7.1 FE 240-18 4x2 18 Ton | 06- | 3917/1 | 3917/1 |
| FE | 7.1 FE 240-18 4x2 18 Ton | 06- | 3917/1 | 3917/1 |
| FE | 7.1 FE 240-18 4x2 18 Ton | 06- | 3917/1 | 3917/1 |
| FE | 7.1 FE 240-22 6x2 22 Ton | 06- | 3917 | 3917 |
| FE | 7.1 FE 240-22 6x2 22 Ton | 06- | 3917/1 | 3917/1 |
| FE | 7.1 FE 240-26 6x2 26 Ton | 06- | 3917 | 3917 |
| FE | 7.1 FE 240-26 6x2 26 Ton | 06- | 3917 | 3917 |
| FE | 7.1 FE 240-26 6x2 26 Ton | 06- | 3917/1 | 3917/1 |
| FE | 7.1 FE 240-26 6x2 26 Ton | 06- | 3917/1 | 3917/1 |
| FE | 7.1 FE 240-26 6x4 26 Ton | 06- | 3917 | 3917 |
| FE | 7.1 FE 240-26 6x4 26 Ton | 06- | 3917 | 3917 |
| FE | 7.1 FE 240-26 6x4 26 Ton | 06- | 3917/1 | 3917/1 |
| FE | 7.1 FE 240-26 6x4 26 Ton | 06- | 3917/1 | 3917/1 |
| FE | 7.1 FE 280-18 4x2 18 Ton | 06- | 3917 | 3917 |
| FE | 7.1 FE 280-18 4x2 18 Ton | 06- | 3917 | 3917 |
| FE | 7.1 FE 280-18 4x2 18 Ton | 06- | 3917 | 3917 |
| FE | 7.1 FE 280-18 4x2 18 Ton | 06- | 3917 | 3917 |
| FE | 7.1 FE 280-18 4x2 18 Ton | 06- | 3917/1 | 3917/1 |
| FE | 7.1 FE 280-18 4x2 18 Ton | 06- | 3917/1 | 3917/1 |
| FE | 7.1 FE 280-18 4x2 18 Ton | 06- | 3917/1 | 3917/1 |
| FE | 7.1 FE 280-18 4x2 18 Ton | 06- | 3917/1 | 3917/1 |
| FE | 7.1 FE 280-22 6x2 22 Ton | 06- | 3917 | 3917 |
| FE | 7.1 FE 280-22 6x2 22 Ton | 06- | 3917/1 | 3917/1 |
| FE | 7.1 FE 280-26 6x2 26 Ton | 06- | 3917 | 3917 |
| FE | 7.1 FE 280-26 6x2 26 Ton | 06- | 3917 | 3917 |
| FE | 7.1 FE 280-26 6x2 26 Ton | 06- | 3917/1 | 3917/1 |
| FE | 7.1 FE 280-26 6x2 26 Ton | 06- | 3917/1 | 3917/1 |
| FE | 7.1 FE 280-26 6x4 26 Ton | 06- | 3917 | 3917 |
| FE | 7.1 FE 280-26 6x4 26 Ton | 06- | 3917 | 3917 |
| FE | 7.1 FE 280-26 6x4 26 Ton | 06- | 3917/1 | 3917/1 |
| FE | 7.1 FE 280-26 6x4 26 Ton | 06- | 3917/1 | 3917/1 |
| FE | 7.1 FE 320-18 4x2 18 Ton | 06- | 3917 | 3917 |
| FE | 7.1 FE 320-18 4x2 18 Ton | 06- | 3917 | 3917 |
| FE | 7.1 FE 320-18 4x2 18 Ton | 06- | 3917 | 3917 |
| FE | 7.1 FE 320-18 4x2 18 Ton | 06- | 3917 | 3917 |
| FE | 7.1 FE 320-18 4x2 18 Ton | 06- | 3917/1 | 3917/1 |
| FE | 7.1 FE 320-18 4x2 18 Ton | 06- | 3917/1 | 3917/1 |
| FE | 7.1 FE 320-18 4x2 18 Ton | 06- | 3917/1 | 3917/1 |
| FE | 7.1 FE 320-18 4x2 18 Ton | 06- | 3917/1 | 3917/1 |

| MAKE & MODEL | | YEAR | | |
|---|---|---|---|---|
| VOLVO | | | | |
| FE | 7.1 FE 320-22 6x2 22 Ton | 06- | 3917 | 3917 |
| FE | 7.1 FE 320-22 6x2 22 Ton | 06- | 3917/1 | 3917/1 |
| FE | 7.1 FE 320-26 6x2 26 Ton | 06- | 3917 | 3917 |
| FE | 7.1 FE 320-26 6x2 26 Ton | 06- | 3917 | 3917 |
| FE | 7.1 FE 320-26 6x2 26 Ton | 06- | 3917/1 | 3917/1 |
| FE | 7.1 FE 320-26 6x2 26 Ton | 06- | 3917/1 | 3917/1 |
| FE | 7.1 FE 320-26 6x4 26 Ton | 06- | 3917 | 3917 |
| FE | 7.1 FE 320-26 6x4 26 Ton | 06- | 3917 | 3917 |
| FE | 7.1 FE 320-26 6x4 26 Ton | 06- | 3917/1 | 3917/1 |
| FE | 7.1 FE 320-26 6x4 26 Ton | 06- | 3917/1 | 3917/1 |
| FH | 12.8 FH 400 4x2 18 Ton | 05- | 3917 | 3917 |
| FH | 12.8 FH 400 4x2 18 Ton | 05- | 3917 | 3917 |
| FH | 12.8 FH 400 4x2 18 Ton | 05- | 3917/1 | 3917/1 |
| FH | 12.8 FH 400 4x2 18 Ton | 05- | 3917/1 | 3917/1 |
| FH | 12.8 FH 400 4x2 18 Ton Eje Elevador | 05- | | 4131 |
| FH | 12.8 FH 400 6x2 26 Ton | 05- | 3917 | 3917 |
| FH | 12.8 FH 400 6x2 26 Ton | 05- | 3917 | 3917 |
| FH | 12.8 FH 400 6x2 26 Ton | 05- | 3917/1 | 3917/1 |
| FH | 12.8 FH 400 6x2 26 Ton | 05- | 3917/1 | 3917/1 |
| FH | 12.8 FH 400 6x2 26 Ton Eje Elevador | 05- | | 4131 |
| FH | 12.8 FH 400 6x4 26 Ton | 05- | 3917 | 3917 |
| FH | 12.8 FH 400 6x4 26 Ton | 05- | 3917 | 3917 |
| FH | 12.8 FH 400 6x4 26 Ton | 05- | 3917/1 | 3917/1 |
| FH | 12.8 FH 400 6x4 26 Ton | 05- | 3917/1 | 3917/1 |
| FH | 12.8 FH 440 4x2 18 Ton | 05- | 3917 | 3917 |
| FH | 12.8 FH 440 4x2 18 Ton | 05- | 3917 | 3917 |
| FH | 12.8 FH 440 4x2 18 Ton | 05- | 3917/1 | 3917/1 |
| FH | 12.8 FH 440 4x2 18 Ton | 05- | 3917/1 | 3917/1 |
| FH | 12.8 FH 440 4x2 18 Ton Eje Elevador | 05- | | 4131 |
| FH | 12.8 FH 440 6x2 26 Ton | 05- | 3917 | 3917 |
| FH | 12.8 FH 440 6x2 26 Ton | 05- | 3917 | 3917 |
| FH | 12.8 FH 440 6x2 26 Ton | 05- | 3917/1 | 3917/1 |
| FH | 12.8 FH 440 6x2 26 Ton | 05- | 3917/1 | 3917/1 |
| FH | 12.8 FH 440 6x2 26 Ton Eje Elevador | 05- | | 4131 |
| FH | 12.8 FH 440 6x4 26 Ton | 05- | 3917 | 3917 |
| FH | 12.8 FH 440 6x4 26 Ton | 05- | 3917 | 3917 |
| FH | 12.8 FH 440 6x4 26 Ton | 05- | 3917/1 | 3917/1 |
| FH | 12.8 FH 440 6x4 26 Ton | 05- | 3917/1 | 3917/1 |
| FH | 12.8 FH 480 4x2 18 Ton | 05- | 3917 | 3917 |
| FH | 12.8 FH 480 4x2 18 Ton | 05- | 3917 | 3917 |
| FH | 12.8 FH 480 4x2 18 Ton | 05- | 3917/1 | 3917/1 |
| FH | 12.8 FH 480 4x2 18 Ton | 05- | 3917/1 | 3917/1 |
| FH | 12.8 FH 480 4x2 18 Ton Eje Elevador | 05- | | 4131 |
| FH | 12.8 FH 480 6x2 26 Ton | 05- | 3917 | 3917 |
| FH | 12.8 FH 480 6x2 26 Ton | 05- | 3917 | 3917 |
| FH | 12.8 FH 480 6x2 26 Ton | 05- | 3917/1 | 3917/1 |
| FH | 12.8 FH 480 6x2 26 Ton | 05- | 3917/1 | 3917/1 |
| FH | 12.8 FH 480 6x2 26 Ton Eje Elevador | 05- | | 4131 |
| FH | 12.8 FH 480 6x4 26 Ton | 05- | 3917 | 3917 |
| FH | 12.8 FH 480 6x4 26 Ton | 05- | 3917 | 3917 |
| FH | 12.8 FH 480 6x4 26 Ton | 05- | 3917/1 | 3917/1 |
| FH | 12.8 FH 480 6x4 26 Ton | 05- | 3917/1 | 3917/1 |
| FH | 12.8 FH 500 4x2 18 Ton Eje Elevador | 05- | | 4131 |
| FH | 12.8 FH 520 4x2 18 Ton | 05- | 3917 | 3917 |
| FH | 12.8 FH 520 4x2 18 Ton | 05- | 3917 | 3917 |
| FH | 12.8 FH 520 4x2 18 Ton | 05- | 3917/1 | 3917/1 |
| FH | 12.8 FH 520 4x2 18 Ton | 05- | 3917/1 | 3917/1 |
| FH | 12.8 FH 520 4x2 18 Ton Eje Elevador | 05- | | 4131 |
| FH | 12.8 FH 520 6x2 26 Ton | 05- | 3917 | 3917 |
| FH | 12.8 FH 520 6x2 26 Ton | 05- | 3917 | 3917 |
| FH | 12.8 FH 520 6x2 26 Ton | 05- | 3917/1 | 3917/1 |
| FH | 12.8 FH 520 6x2 26 Ton | 05- | 3917/1 | 3917/1 |
| FH | 12.8 FH 520 6x2 26 Ton Eje Elevador | 05- | | 4131 |
| FH | 12.8 FH 520 6x4 26 Ton | 05- | 3917 | 3917 |
| FH | 12.8 FH 520 6x4 26 Ton | 05- | 3917 | 3917 |
| FH | 12.8 FH 520 6x4 26 Ton | 05- | 3917/1 | 3917/1 |
| FH | 12.8 FH 520 6x4 26 Ton | 05- | 3917/1 | 3917/1 |
| FH 12 | 12.1 FH 12.340 4x2 18 Ton | 00- | 3845 | 3845 |
| FH 12 | 12.1 FH 12.340 4x2 18 Ton | 00- | 3845 | 3845 |
| FH 12 | 12.1 FH 12.340 6x2 25 Ton | 00- | 3845 | 3845 |
| FH 12 | 12.1 FH 12.340 6x2 26 Ton | 00- | 3845 | 3845 |
| FH 12 | 12.1 FH 12.340 6x2/2/4 26 Ton | 00- | 3845 | 3845 |
| FH 12 | 12.1 FH 12.340 6x4 26 Ton | 00- | 3845 | 3845 |
| FH 12 | 12.1 FH 12.340 6x4 26 Ton | 00- | 3845 | 3845 |
| FH 12 | 12.1 FH 12.340 6x4 26 Ton | 00- | 3845 | 3845 |
| FH 12 | 12.1 FH 12.340 8x2/4 32 Ton | 00- | 3845 | 3845 |

| MAKE & MODEL | | YEAR | 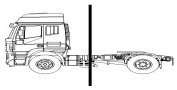 | |
|---|---|---|---|---|
| **VOLVO** | | | | |
| FH 12 | 12.1 FH 12.340 8x4/4 32 Ton | *00-* | 3845 | 3845 |
| FH 12 | 12.1 FH 12.380 4x2 18 Ton | *00-* | 3845 | 3845 |
| FH 12 | 12.1 FH 12.380 4x2 18 Ton | *00-* | 3845 | 3845 |
| FH 12 | 12.1 FH 12.380 6x2 26 Ton | *00-* | 3845 | 3845 |
| FH 12 | 12.1 FH 12.380 6x2/2/4 26 Ton | *00-* | 3845 | 3845 |
| FH 12 | 12.1 FH 12.380 6x4 26 Ton | *00-* | 3845 | 3845 |
| FH 12 | 12.1 FH 12.380 6x4 26 Ton | *00-* | 3845 | 3845 |
| FH 12 | 12.1 FH 12.380 8x2/4 32 Ton | *00-* | 3845 | 3845 |
| FH 12 | 12.1 FH 12.380 8x4/4 32 Ton | *00-* | 3845 | 3845 |
| FH 12 | 12.1 FH 12.420 4x2 18 Ton | *00-* | 3845 | 3845 |
| FH 12 | 12.1 FH 12.420 4x2 18 Ton | *00-* | 3845 | 3845 |
| FH 12 | 12.1 FH 12.420 6x2 25 Ton | *00-* | 3845 | 3845 |
| FH 12 | 12.1 FH 12.420 6x2 26 Ton | *00-* | 3845 | 3845 |
| FH 12 | 12.1 FH 12.420 6x2/2/4 26 Ton | *00-* | 3845 | 3845 |
| FH 12 | 12.1 FH 12.420 6x4 26 Ton | *00-* | 3845 | 3845 |
| FH 12 | 12.1 FH 12.420 6x4 26 Ton | *00-* | 3845 | 3845 |
| FH 12 | 12.1 FH 12.420 6x4 26 Ton | *00-* | 3845 | 3845 |
| FH 12 | 12.1 FH 12.420 8x2/4 32 Ton | *00-* | 3845 | 3845 |
| FH 12 | 12.1 FH 12.420 8x4/4 32 Ton | *00-* | 3845 | 3845 |
| FH 12 | 12.1 FH 12.460 4x2 18 Ton | *00-* | 3845 | 3845 |
| FH 12 | 12.1 FH 12.460 4x2 18 Ton | *00-* | 3845 | 3845 |
| FH 12 | 12.1 FH 12.460 6x2 25 Ton | *00-* | 3845 | 3845 |
| FH 12 | 12.1 FH 12.460 6x2 26 Ton | *00-* | 3845 | 3845 |
| FH 12 | 12.1 FH 12.460 6x2/2/4 26 Ton | *00-* | 3845 | 3845 |
| FH 12 | 12.1 FH 12.460 6x4 26 Ton | *00-* | 3845 | 3845 |
| FH 12 | 12.1 FH 12.460 6x4 26 Ton | *00-* | 3845 | 3845 |
| FH 12 | 12.1 FH 12.460 6x4 26 Ton | *00-* | 3845 | 3845 |
| FH 12 | 12.1 FH 12.460 8x2/4 32 Ton | *00-* | 3845 | 3845 |
| FH 12 | 12.1 FH 12.460 8x4/4 32 Ton | *00-* | 3845 | 3845 |
| FH 12 | 12.1 FH 12.500 4x2 18 Ton | *00-* | 3845 | 3845 |
| FH 12 | | *08/93-* | 3845 | 3845 |
| FH 12 | | *01/03-* | 3845 | 3845 |
| FH 16 | 16.1 FH 16.520 4x2 18 Ton | *00-02* | 3845 | 3845 |
| FH 16 | 16.1 FH 16.520 4x2 18 Ton | *00-02* | 3845 | 3845 |
| FH 16 | 16.1 FH 16.550 4x2 18 Ton | *03-* | 3845 | 3845 |
| FH 16 | 16.1 FH 16.550 4x2 21 Ton | *03-* | 3845 | 3845 |
| FH 16 | 16.1 FH 16.550 6x2 27 Ton | *03-* | 3845 | 3845 |
| FH 16 | 16.1 FH 16.550 6x2/2/4 26 Ton | *03-* | 3845 | 3845 |
| FH 16 | 16.1 FH 16.550 6x4 28 Ton | *03-* | 3845 | 3845 |
| FH 16 | 16.1 FH 16.550 6x4 29 Ton | *03-* | 3845 | 3845 |
| FH 16 | 16.1 FH 16.550 8x2 35 Ton | *03-* | 3845 | 3845 |
| FH 16 | 16.1 FH 16.550 8x4 37 Ton | *03-* | 3845 | 3845 |
| FH 16 | 16.1 FH 16.580 4x2 18 Ton Eje Elevador | 06- | | 4131 |
| FH 16 | 16.1 FH 16.580 4x2 21 Ton Eje Elevador | 06- | | 4131 |
| FH 16 | 16.1 FH 16.580 6x2 27 Ton Eje Elevador | 06- | | 4131 |
| FH 16 | 16.1 FH 16.580 6x4 28 Ton Eje Elevador | 06- | | 4131 |
| FH 16 | 16.1 FH 16.580 8x2 35 Ton Eje Elevador | 06- | | 4131 |
| FH 16 | 16.1 FH 16.580 8x4 37 Ton Eje Elevador | 06- | | 4131 |
| FH 16 | 16.1 FH 16.610 4x2 18 Ton | *03-* | 3845 | 3845 |
| FH 16 | 16.1 FH 16.610 4x2 21 Ton | *03-* | 3845 | 3845 |
| FH 16 | 16.1 FH 16.610 6x2 27 Ton | *03-* | 3845 | 3845 |
| FH 16 | 16.1 FH 16.610 6x2/4 26 Ton | *03-* | 3845 | 3845 |
| FH 16 | 16.1 FH 16.610 6x2/4 28 Ton | *03-* | 3845 | 3845 |
| FH 16 | 16.1 FH 16.610 6x4 29 Ton | *03-* | 3845 | 3845 |
| FH 16 | 16.1 FH 16.610 8x2 35 Ton | *03-* | 3845 | 3845 |
| FH 16 | 16.1 FH 16.610 8x4 37 Ton | *03-* | 3845 | 3845 |
| FH 16 | 16.1 FH 16.660 4x2 18 Ton Eje Elevador | 06- | | 4131 |
| FH 16 | 16.1 FH 16.660 6x2 26 Ton Eje Elevador | 06- | | 4131 |
| FH 16 | 16.1 FH 16.660 6x4 25 Ton Eje Elevador | 06- | | 4131 |
| FH 16 | 16.1 FH 16.660 8x2 35 Ton Eje Elevador | 06- | | 4131 |
| FH 16 | 16.1 FH 16.660 8x4 37 Ton Eje Elevador | 06- | | 4131 |
| FL 6 | 5.5 FL 618 4x2 18 Ton | *00-* | 3845 | 3845 |
| FL 6 | 5.5 FL 618 4x2 18 Ton | *00-* | 3845 | 3845 |
| FL 6 | 5.5 FL 618 4x2 18 Ton | *00-* | 3845 | 3845 |
| FL 6 | 5.5 FL 618 4x2 18 Ton | *00-* | 3845 | 3845 |
| FL 6 | 5.5 FL 618 4x2 18 Ton | *00-* | 3845 | 3845 |
| FL 6 | 5.5 FL 618 4x2 18 Ton | *00-* | 3845 | 3845 |
| FL 6 | 5.5 FL 618 4x2 18 Ton | *00-* | 3845 | 3845 |
| FL 6 | 5.5 FL 618 4x2 18 Ton | *00-* | 3845 | 3845 |
| FL 6 | | *11/91-03/00* | 3845 | 3845 |
| FL-Serie | 5.5 FL 180 4x2 18 Ton | *00-* | 3845 | 3845 |
| FL-Serie | 5.5 FL 220 4x2 18 Ton | *00-* | 3845 | 3845 |
| FL-Serie | 5.5 FL 260 4x2 18 Ton | *00-* | 3845 | 3845 |
| FL-Serie II | 7.1 FL 240.12 4x2 12 Ton | *09-* | 3818 | 3818 |
| FL-Serie II | 7.1 FL 240.12 4x2 12 Ton | *09-* | 3818 | 3818 |
| FL-Serie II | 7.1 FL 240.12 4x2 12 Ton | 06- | 4047 | 4047 |

| MAKE & MODEL | | YEAR | 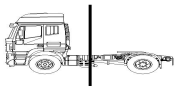 | |
|---|---|---|---|---|
| **VOLVO** | | | | |
| FL-Serie II | 7.1 FL 240.12 4x2 12 Ton | 06- | 4047 | 4047 |
| FL-Serie II | 7.1 FL 240.15 4x2 15 Ton | 09- | 3818 | 3818 |
| FL-Serie II | 7.1 FL 240.15 4x2 15 Ton | 06- | 4047 | 4047 |
| FL-Serie II | 7.1 FL 240.16 4x2 16 Ton | 09- | 3818 | 3818 |
| FL-Serie II | 7.1 FL 240.16 4x2 16 Ton | 06- | 4047 | 4047 |
| FL-Serie II | 7.1 FL 240.16 4x2 16 Ton | 06- | 4047 | 4047 |
| FL-Serie II | 7.1 FL 240.18 4x2 18 Ton | 09- | 3818 | 3818 |
| FL-Serie II | 7.1 FL 240.18 4x2 18 Ton | 06- | 4047 | 4047 |
| FL-Serie II | 7.1 FL 280.12 4x2 12 Ton | 09- | 3818 | 3818 |
| FL-Serie II | 7.1 FL 280.12 4x2 12 Ton | 09- | 3818 | 3818 |
| FL-Serie II | 7.1 FL 280.12 4x2 12 Ton | 06- | 4047 | 4047 |
| FL-Serie II | 7.1 FL 280.12 4x2 12 Ton | 06- | 4047 | 4047 |
| FL-Serie II | 7.1 FL 280.15 4x2 15 Ton | 09- | 3818 | 3818 |
| FL-Serie II | 7.1 FL 280.15 4x2 15 Ton | 06- | 4047 | 4047 |
| FL-Serie II | 7.1 FL 280.16 4x2 16 Ton | 09- | 3818 | 3818 |
| FL-Serie II | 7.1 FL 280.16 4x2 16 Ton | 09- | 3818 | 3818 |
| FL-Serie II | 7.1 FL 280.16 4x2 16 Ton | 06- | 4047 | 4047 |
| FL-Serie II | 7.1 FL 280.16 4x2 16 Ton | 06- | 4047 | 4047 |
| FL-Serie II | 7.1 FL 280.18 4x2 18 Ton | 09- | 3818 | 3818 |
| FL-Serie II | 7.1 FL 280.18 4x2 18 Ton | 06- | 4047 | 4047 |
| FM | 12.8 FM 400 4x2 18 Ton | 05- | 3917 | 3917 |
| FM | 12.8 FM 400 4x2 18 Ton | 05- | 3917/1 | 3917/1 |
| FM | 12.8 FM 440 4x2 18 Ton | 05- | 3917 | 3917 |
| FM | 12.8 FM 440 4x2 18 Ton | 05- | 3917/1 | 3917/1 |
| FM | 12.8 FM 480 4x2 18 Ton | 05- | 3917 | 3917 |
| FM | 12.8 FM 480 4x2 18 Ton | 05- | 3917/1 | 3917/1 |
| FM | 9.3 FM 300 4x2 18 Ton | 05- | 3917 | 3917 |
| FM | 9.3 FM 300 4x2 18 Ton | 05- | 3917/1 | 3917/1 |
| FM | 9.3 FM 340 4x2 18 Ton | 05- | 3917 | 3917 |
| FM | 9.3 FM 340 4x2 18 Ton | 05- | 3917/1 | 3917/1 |
| FM | 9.3 FM 380 4x2 18 Ton | 05- | 3917 | 3917 |
| FM | 9.3 FM 380 4x2 18 Ton | 05- | 3917/1 | 3917/1 |
| FM 12 | 12.1 340 4x2 18 Ton | 00-05 | 3845 | 3845 |
| FM 12 | 12.1 340 4x2 18 Ton | 00-05 | 3845 | 3845 |
| FM 12 | 12.1 340 6x2 25 Ton | 00-05 | 3845 | 3845 |
| FM 12 | 12.1 340 6x2 26 Ton | 00-05 | 3845 | 3845 |
| FM 12 | 12.1 340 6x4 26 Ton | 00-05 | 3845 | 3845 |
| FM 12 | 12.1 340 6x4 26 Ton | 00-05 | 3845 | 3845 |
| FM 12 | 12.1 340 8x2/4 32 Ton | 00-05 | 3845 | 3845 |
| FM 12 | 12.1 340 8x4/4 32 Ton | 00-05 | 3845 | 3845 |
| FM 12 | 12.1 340 8x4/4 32 Ton | 00-05 | 3845 | 3845 |
| FM 12 | 12.1 380 4x2 18 Ton | 00-05 | 3845 | 3845 |
| FM 12 | 12.1 380 4x2 18 Ton | 00-05 | 3845 | 3845 |
| FM 12 | 12.1 380 6x2 25 Ton | 00-05 | 3845 | 3845 |
| FM 12 | 12.1 380 6x2 26 Ton | 00-05 | 3845 | 3845 |
| FM 12 | 12.1 380 6x4 26 Ton | 00-05 | 3845 | 3845 |
| FM 12 | 12.1 380 6x4 26 Ton | 00-05 | 3845 | 3845 |
| FM 12 | 12.1 380 8x2/4 32 Ton | 00-05 | 3845 | 3845 |
| FM 12 | 12.1 380 8x4/4 32 Ton | 00-05 | 3845 | 3845 |
| FM 12 | 12.1 380 8x4/4 32 Ton | 00-05 | 3845 | 3845 |
| FM 12 | 12.1 420 4x2 18 Ton | 00-05 | 3845 | 3845 |
| FM 12 | 12.1 420 4x2 18 Ton | 00-05 | 3845 | 3845 |
| FM 12 | 12.1 420 6x2 25 Ton | 00-05 | 3845 | 3845 |
| FM 12 | 12.1 420 6x2 26 Ton | 00-05 | 3845 | 3845 |
| FM 12 | 12.1 420 6x4 26 Ton | 00-05 | 3845 | 3845 |
| FM 12 | 12.1 420 6x4 26 Ton | 00-05 | 3845 | 3845 |
| FM 12 | 12.1 420 8x2/4 32 Ton | 00-05 | 3845 | 3845 |
| FM 12 | 12.1 420 8x4/4 32 Ton | 00-05 | 3845 | 3845 |
| FM 12 | 12.1 420 8x4/4 32 Ton | 00-05 | 3845 | 3845 |
| FM 12 | | 08/98- | 3845 | 3845 |
| FM 9 | 9.4 260 4x2 18 Ton | 01-05 | 3845 | 3845 |
| FM 9 | 9.4 260 4x2 18 Ton | 01-05 | 3845 | 3845 |
| FM 9 | 9.4 260 6x2 26 Ton | 01-05 | 3845 | 3845 |

| MAKE & MODEL | | YEAR | 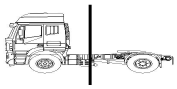 | |
|---|---|---|---|---|
| **VOLVO** | | | | |
| **FM 9** | **9.4 260 6x2 26 Ton** | ***01-05*** | **3845** | **3845** |
| **FM 9** | **9.4 300 4x2 18 Ton** | ***01-05*** | **3845** | **3845** |
| **FM 9** | **9.4 300 4x2 18 Ton** | ***01-05*** | **3845** | **3845** |
| **FM 9** | **9.4 300 6x2 26 Ton** | ***01-05*** | **3845** | **3845** |
| **FM 9** | **9.4 300 6x2 26 Ton** | ***01-05*** | **3845** | **3845** |
| **FM 9** | **9.4 340 4x2 18 Ton** | ***01-05*** | **3845** | **3845** |
| **FM 9** | **9.4 340 4x2 18 Ton** | ***01-05*** | **3845** | **3845** |
| **FM 9** | **9.4 340 6x2 26 Ton** | ***01-05*** | **3845** | **3845** |
| **FM 9** | **9.4 340 6x2 26 Ton** | ***01-05*** | **3845** | **3845** |
| **FM 9** | **9.4 380 4x2 18 Ton** | ***01-05*** | **3845** | **3845** |
| **FM 9** | **9.4 380 4x2 18 Ton** | ***01-05*** | **3845** | **3845** |
| **FM 9** | **9.4 380 6x2 26 Ton** | ***01-05*** | **3845** | **3845** |
| **FM 9** | **9.4 380 6x2 26 Ton** | ***01-05*** | **3845** | **3845** |
| | | | | |
| **WABCO** | | | | |
| **Ng22 Max Caliper** | | | **4129** | **4129** |
| **YORK TRAILERS** | | | | |
| **Eje/Axle** | **Llanta 22" SB 7000** | | **3664** | **3664** |

# BRAKE PAD ILLUSTRATIONS

| REFERENCE | T (mm) | REMARKS | MAKE | F/R | WVA No |
|---|---|---|---|---|---|
| 3497 | 28 | 2 PADS WITH WEAR SENSOR (A+B+C) | MERCEDES BENZ | F/R | 29084 |
| 3497/1 | 28 | 4 PADS PLAIN (A+C) | MERCEDES BENZ | F/R | 29084 |

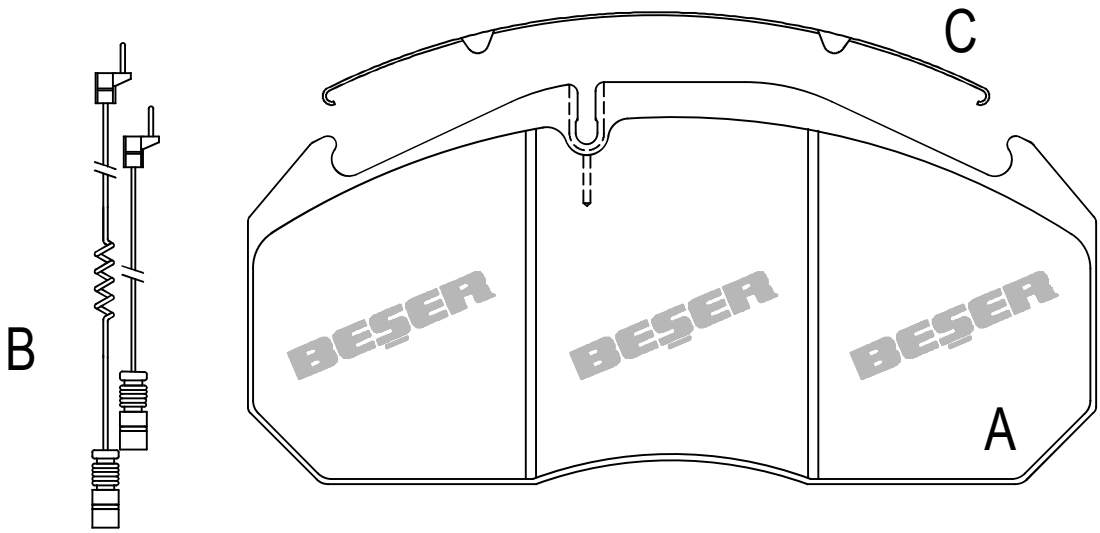


249,6 X 118,4

| REFERENCE | T (mm) | REMARKS | MAKE | F/R | WVA No |
|---|---|---|---|---|---|
| 3498 | 28 | 2 PADS WITH WEAR SENSOR | KASBOHRER<br>MAN | F/R | 29053<br>29030<br>29084 |

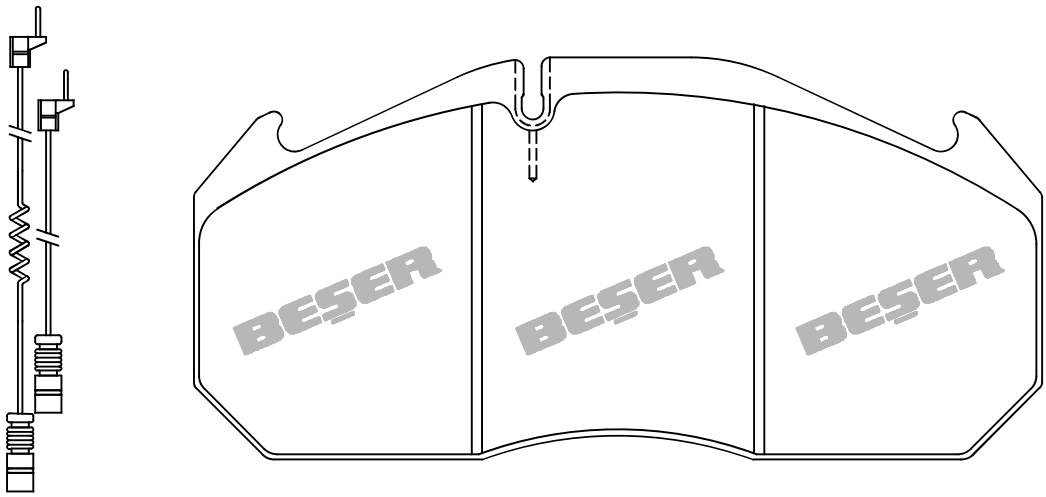

249,6 X 118,4

| REFERENCE | T (mm) | REMARKS | MAKE | F/R | WVA No |
|---|---|---|---|---|---|
| 3525 | 25 | 2 PADS WITH WEAR SENSOR | IVECO,EUROCARGO EUROSTAR,EUROTECH | F | 29011 |

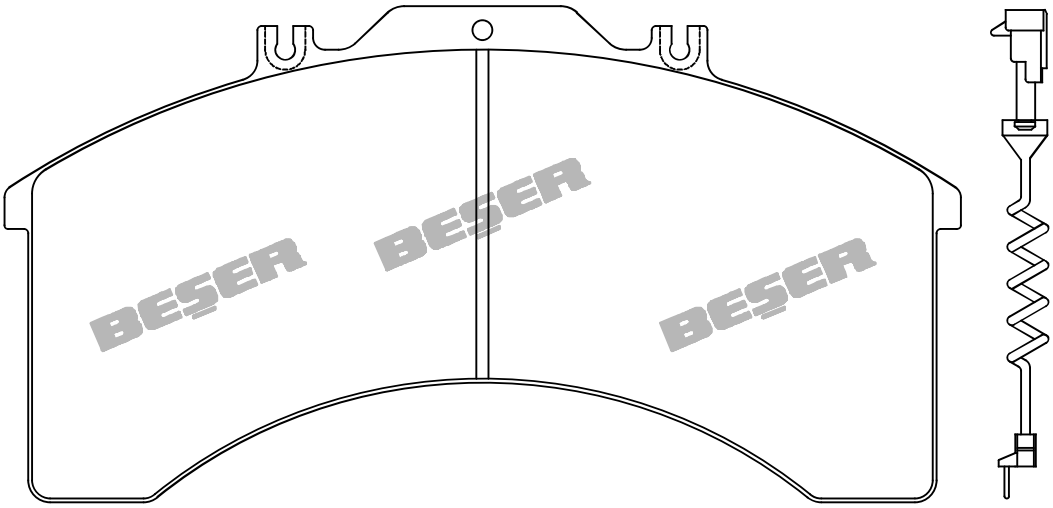


241 X 124,5

| REFERENCE | T (mm) | REMARKS | MAKE | F/R | WVA No |
|---|---|---|---|---|---|
| 3525/A | 25 | 4 PADS PLAIN | IVECO,EUROCARGO EUROSTAR,EUROTECH | F | 29011 |

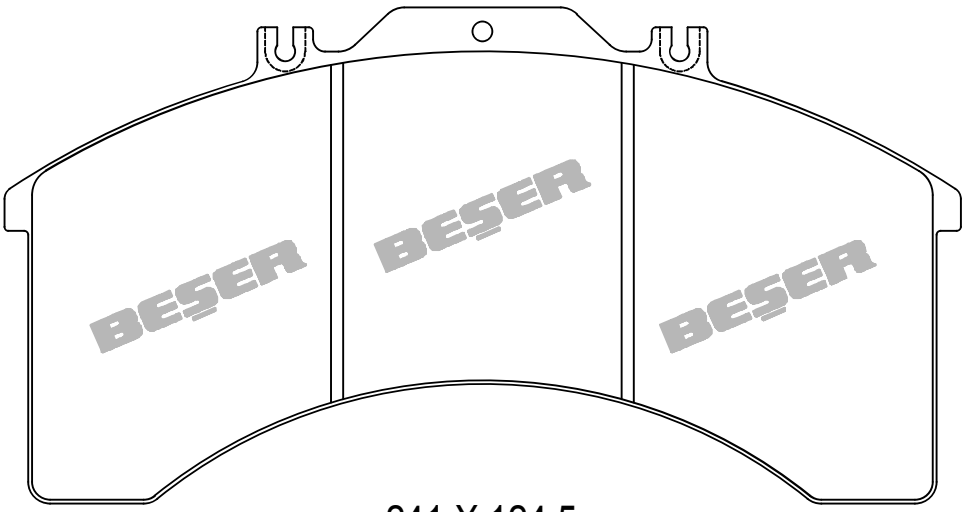


241 X 124,5

| REFERENCE | T (mm) | REMARKS | MAKE | F/R | WVA No |
|---|---|---|---|---|---|
| 3565 | 25 | 4 PADS PLAIN (A+B+D+E) | MAN M2000.12.164/224 | F/R | 29088 |
| 3565/1 | 25 | 2 PADS WITH WEAR SENSOR (A+B+C+D+E) | MAN | F/R | 29088 |
| 3565/2 | 25 | 2 PADS WITH WEAR SENSOR (F) | MAN | F/R | 29088 |
| 3565/3 | 25 | 2 PADS WITH WEAR SENSOR (C) | MAN | F/R | 29088 |
| 3565/4 | 25 | 2 PADS WITH WEAR SENSOR (G) | OTOKAR | F/R | 29088 |
| 3565/A | 25 | 4 PADS PLAIN | MAN | F/R | 29088 |

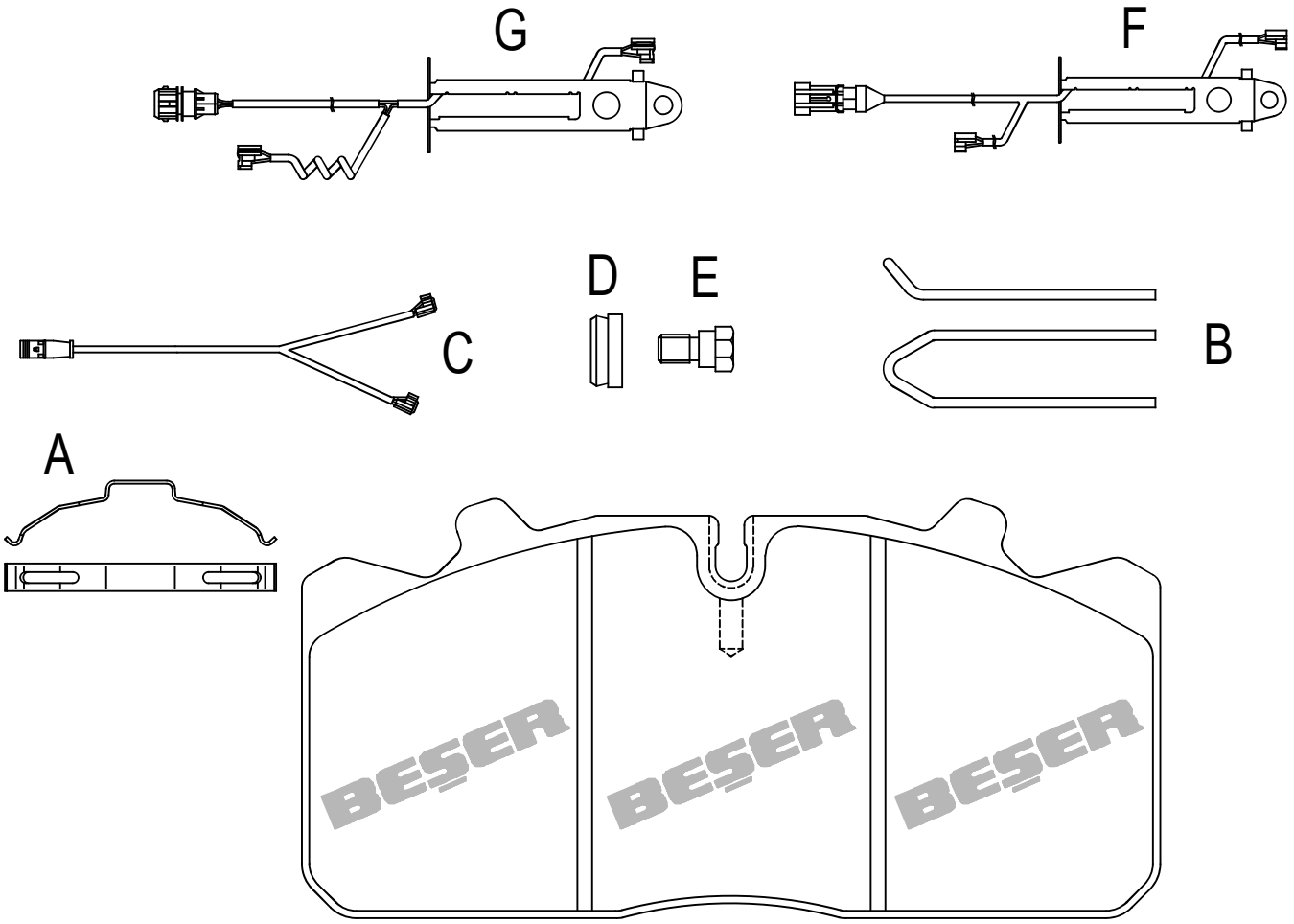


175,5 X 85,75

| REFERENCE | T (mm) | REMARKS | MAKE | F/R | WVA No |
|---|---|---|---|---|---|
| 3664 | 30 | 4 PADS PLAIN (A+D+F+G+H+I+J) | AUWARTER,BOVA,KASSBOHRER LIAZ,MERCEDES BENZ | F/R | 29087 29109 29105 29163 29106 29179 29108 |
| 3664/1 | 30 | 4 PADS PLAIN (B+D+F+G+H+I+J) | DAF,MAN,MERCEDES,SCANIA,SETRA | F | 29105 |
| 3664/2 | 30 | 4 PADS PLAIN (C+E+F+G+H+I+J) | BPW | F/R | 29167 |
| 3664/4 | 30 | 4 PADS PLAIN (A+D+F+G+H+I+K+L+M) | BOVA,MAN,MERCEDES SCANIA,SETRA | F/R | 29087 |

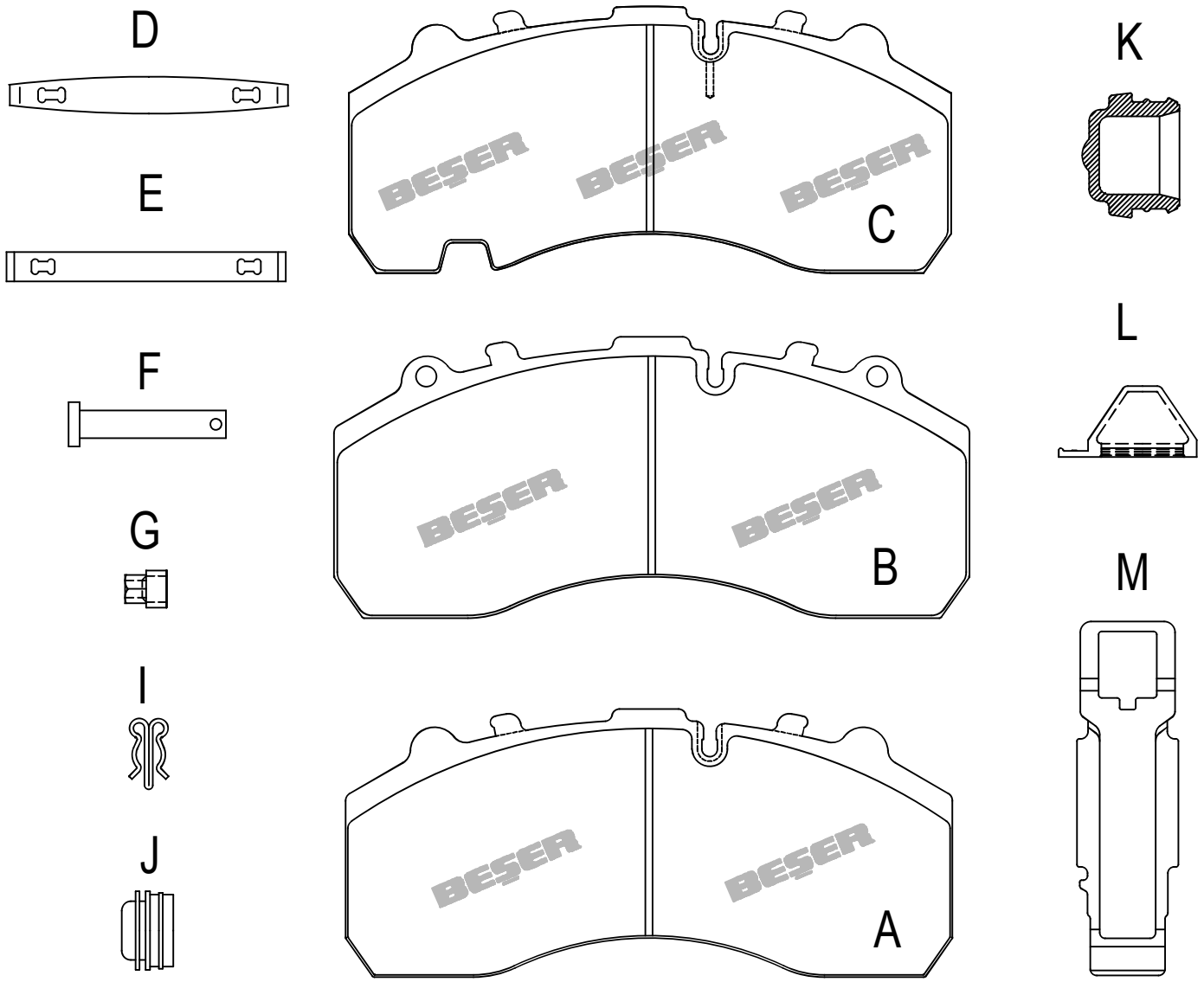


247,5 X 109,5

| REFERENCE | T (mm) | REMARKS | MAKE | F/R | WVA No |
|---|---|---|---|---|---|
| 3669 | 30 | 4 PADS PLAIN | NEOPLAN | F/R | 29146 |

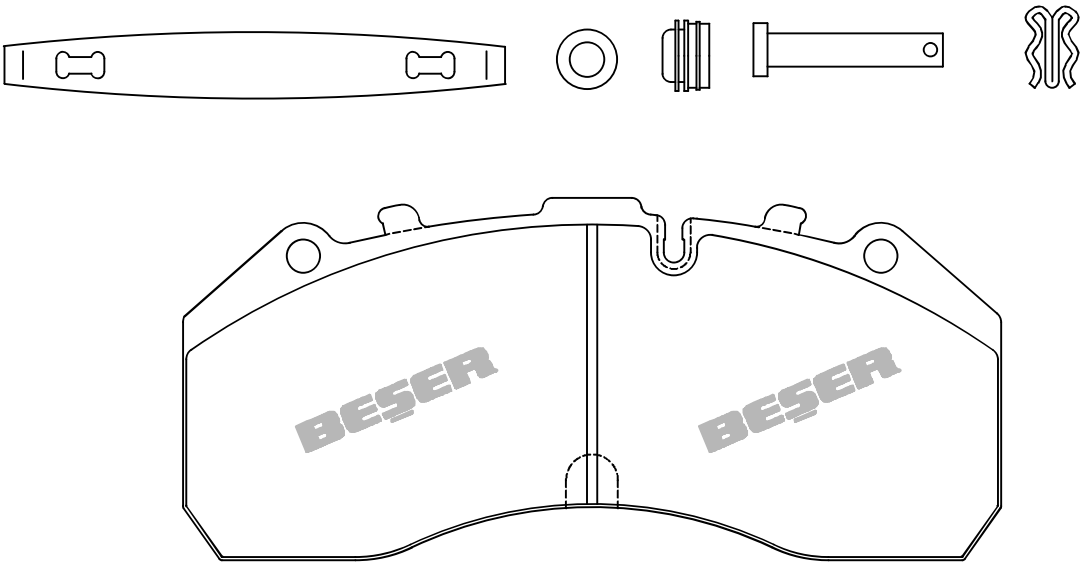


247,5 X 109,5

| REFERENCE | T (mm) | REMARKS | MAKE | F/R | WVA No |
|---|---|---|---|---|---|
| 3770 | 28 | 2 PADS WITH WEAR SENSOR (A+B+C+D+E) | RENAULT MAGNUM,PREMIUM | F | 29090 |
| 3770/1 | 28 | 4 PADS PLAIN (A+B+D+E) | RENAULT MAGNUM,PREMIUM | F | 29090 |

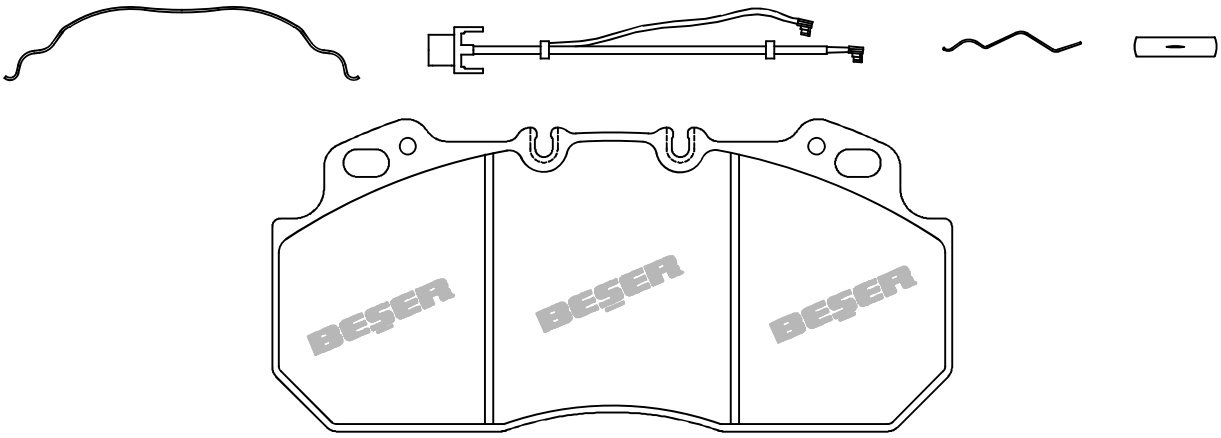


249 X 114,4

| REFERENCE | T (mm) | REMARKS | MAKE | F/R | WVA No |
|---|---|---|---|---|---|
| 3789 | 30 | 4 PADS PLAIN (A+C) | MERCEDES ATEGO,M2000 | F/R | 29093 29197 |
| 3789/1 | 30 | 4 PADS PLAIN (B+C) | BPW | R | 29165 |
| 3789/2 | 30 | 4 PADS PLAIN (B+D+E+F+G+H+I+J) | MERCEDES ATEGO | R | 29165 |

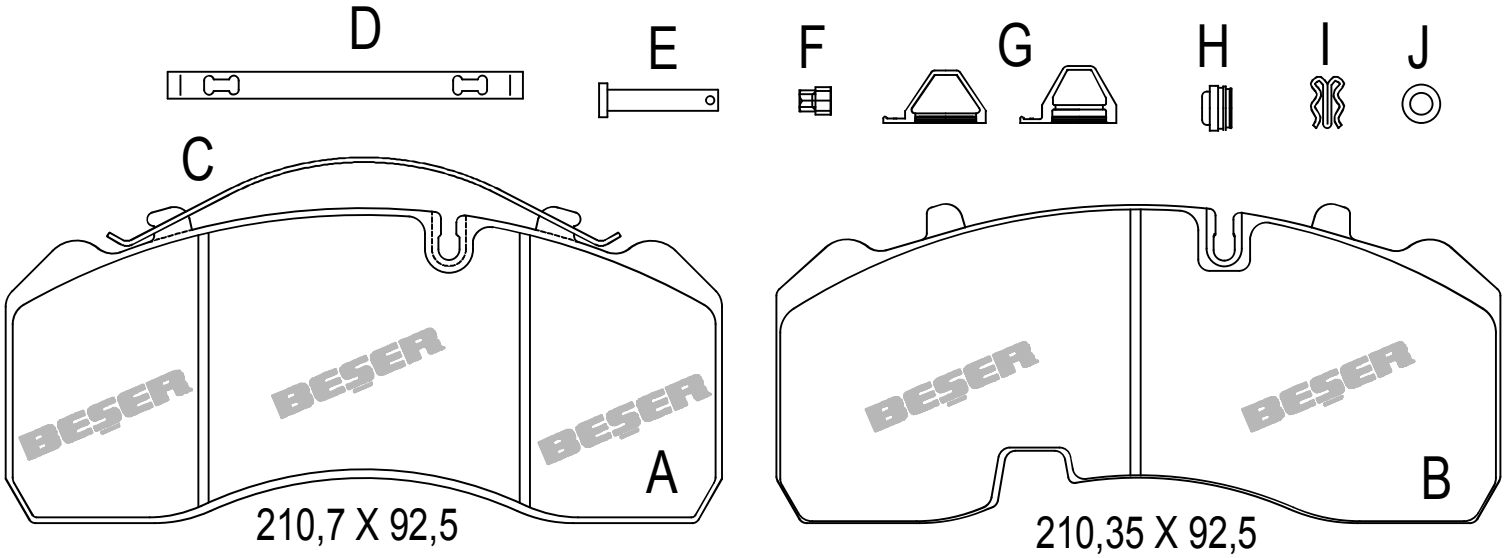


| REFERENCE | T (mm) | REMARKS | MAKE | F/R | WVA No |
|---|---|---|---|---|---|
| 3818 | 30 | 4 PADS PLAIN | DORSEY | F/R | 29175 |

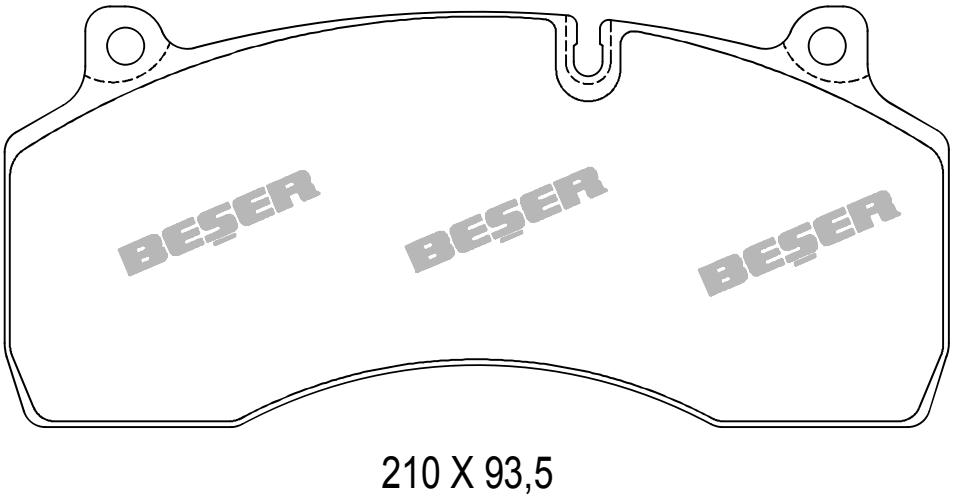

| REFERENCE | T (mm) | REMARKS | MAKE | F/R | WVA No |
|---|---|---|---|---|---|
| 3828 | 30 | 4 PADS PLAIN (A) | RENAULT | F | 29131 |
| 3828/1 | 30 | 4 PADS PLAIN (A+B+C) | RENAULT PREMIER | F/R | 29131 |
| 3828/2 | 30 | 2 PADS WITH WEAR SENSOR (A+B+D) | MAN TGA | F/R | 29131 |
| 3828/3 | 30 | 4 PADS PLAIN (A+B) | ERF,MAN TGA,RENAULT | F/R | 29131 |

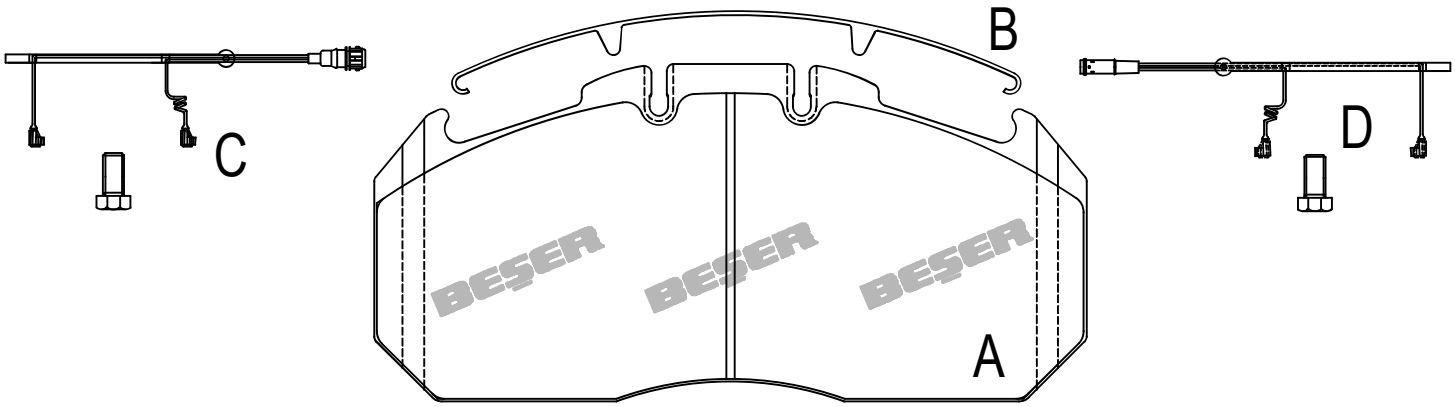


249,45 X 118,2

| REFERENCE | T (mm) | REMARKS | MAKE | F/R | WVA No |
|---|---|---|---|---|---|
| 3837 | 25 | 4 PADS PLAIN | RENAULT | F | 29100 |

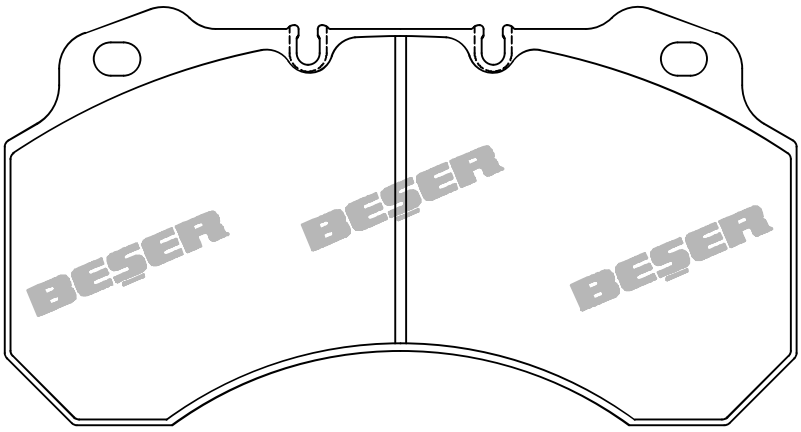

213,8 X 112,93

| REFERENCE | T (mm) | REMARKS | MAKE | F/R | WVA No |
|---|---|---|---|---|---|
| 3839 | 30,55 | 4 PADS PLAIN (A+B+C+D+E) | SAF | R | 29162 |
| 3839/1 | 30,55 | 4 PADS PLAIN (A) | SAF | R | 29162 |
| 3839/2 | 30,55 | 4 PADS PLAIN (A+D) | SAF | R | 29162 |

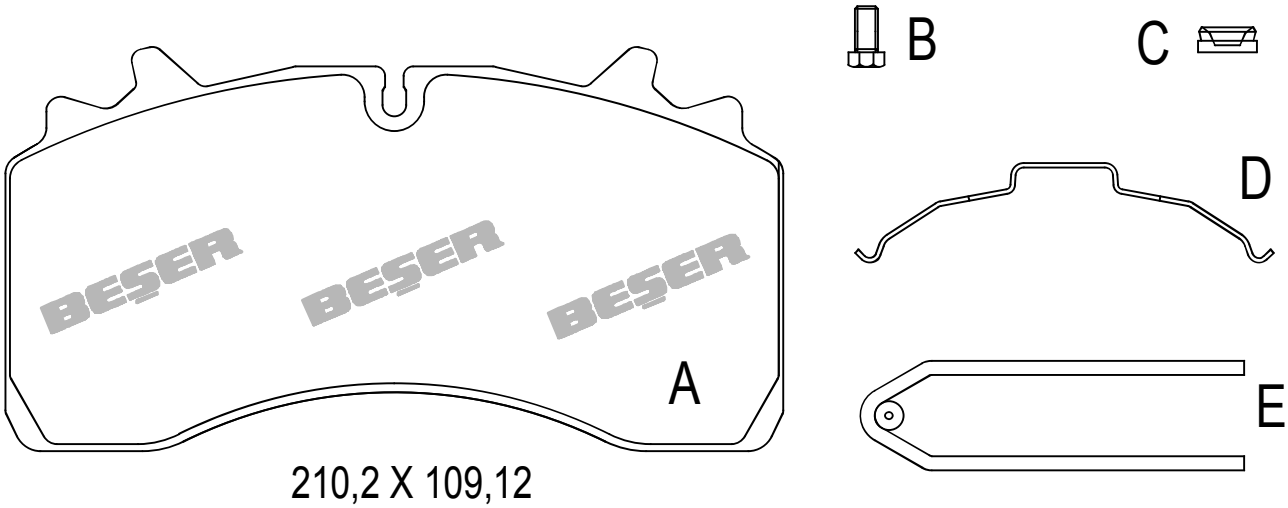


| REFERENCE | T (mm) | REMARKS | MAKE | F/R | WVA No |
|---|---|---|---|---|---|
| 3844 | 30 | 4 PADS PLAIN | DAF - SAF | F/R | 29126<br>29159 |

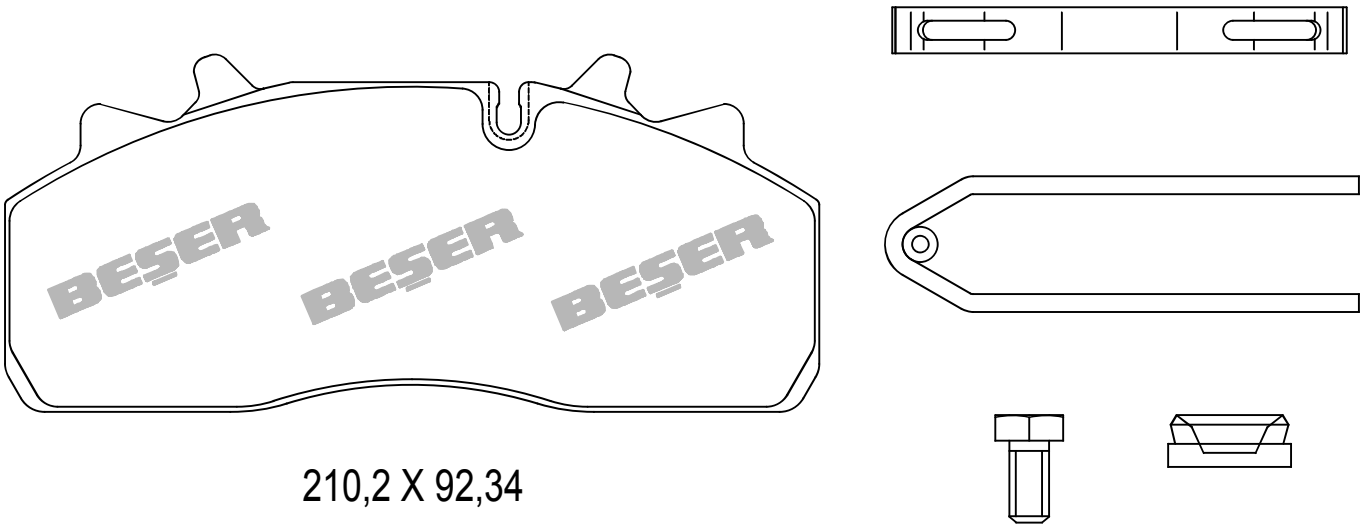

| REFERENCE | T (mm) | REMARKS | MAKE | F/R | WVA No |
|---|---|---|---|---|---|
| 3845 | 29 | 4 PADS PLAIN | VOLVO | F/R | 29125<br>29277 |

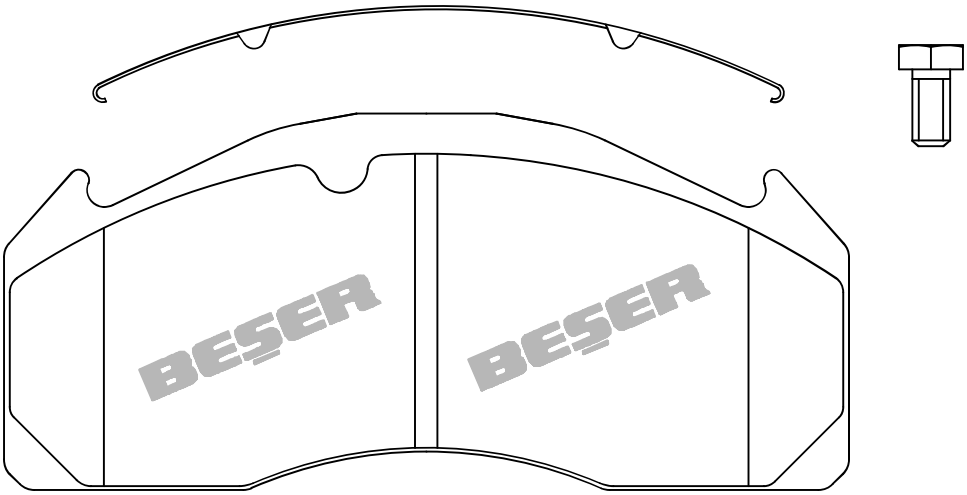


249,1 X 110,85

| REFERENCE | T (mm) | REMARKS | MAKE | F/R | WVA No |
|---|---|---|---|---|---|
| 3870 | 29,7 | 4 PADS PLAIN<br>(A+B+C+D) | RENAULT MIDLUM | F/R | 29141<br>29142<br>29119 |
| 3870/1 | 29,7 | 4 PADS PLAIN<br>(A) | RENAULT MIDLUM | F/R | 29141<br>29142<br>29119 |
| 3870/2 | 29,7 | 4 PADS PLAIN<br>(A+B+C) | RENAULT MIDLUM | F/R | 29141<br>29142<br>29119 |

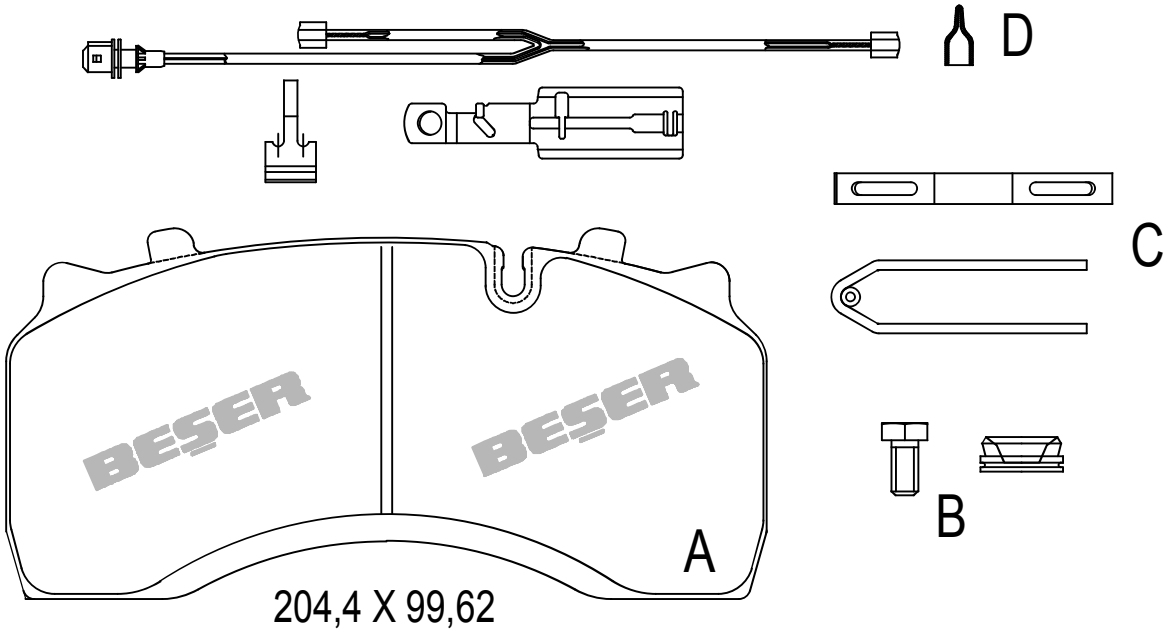


204,4 X 99,62

| REFERENCE | T (mm) | REMARKS | MAKE | F/R | WVA No |
|---|---|---|---|---|---|
| 3902 | 30 | 4 PADS PLAIN (A+B) | KOGEL DORSE | R | 29171 |
| 3902/1 | 30 | 4 PADS PLAIN (A+B+C) | KOGEL DORSE | R | 29171 |

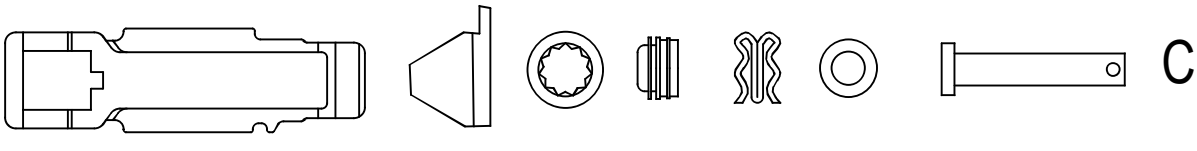


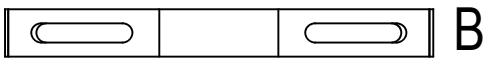


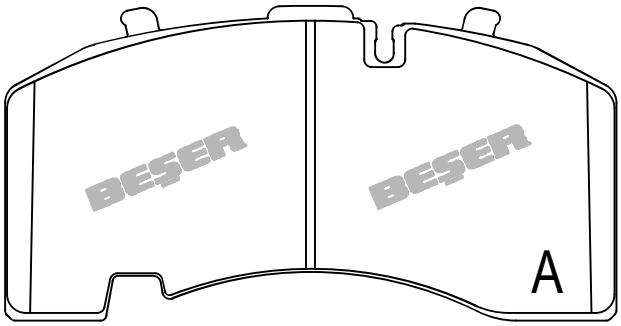


210,21 X 108,11

| REFERENCE | T (mm) | REMARKS | MAKE | F/R | WVA No |
|---|---|---|---|---|---|
| 3908 | 26,7<br>34 | 2 PADS RIGHT & 2 PADS LEFT (A+B+C+D) | MAN,MERCEDES BENZ | F/R | 29115<br>29116<br>29148<br>29183 |
| 3908/1 | 26,7<br>34 | 2 PADS RIGHT & 2 PADS LEFT (A+B+C+D+E) | MAN,MERCEDES BENZ | F/R | 29115<br>29116<br>29148<br>29183 |
| 3908/A | 26,7<br>34 | 4 PADS PLAIN (A+B) | MAN,MERCEDES BENZ,OTOKAR | F/R | 29115<br>29116<br>29148<br>29183 |

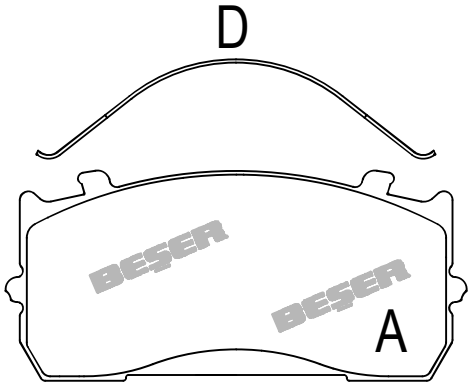


183,8 X 82,4

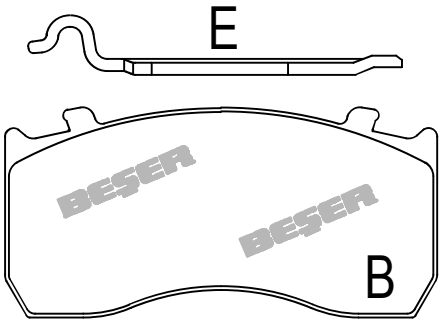


173,35 X 84,23

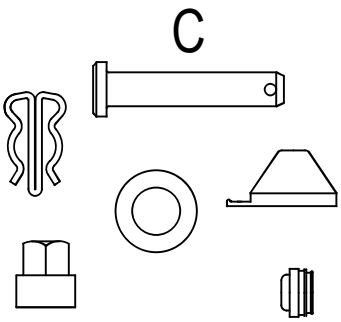

| REFERENCE | T (mm) | REMARKS | MAKE | F/R | WVA No |
|---|---|---|---|---|---|
| 3917 | 28 | 2 PADS WITH WEAR SENSOR (A+B+C+D) | RENAULT 440,VOLVO | R | 29174 |
| 3917/1 | 28 | 4 PADS PLAIN (A+B+D) | RENAULT 440,VOLVO | R | 29174<br>29187 |

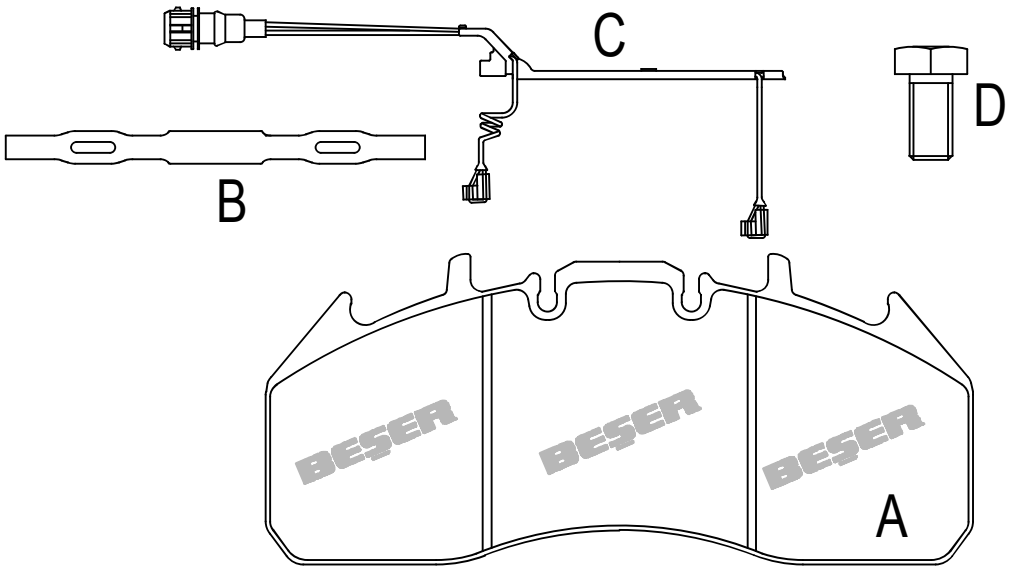


249,3 X 109,4

| REFERENCE | T (mm) | REMARKS | MAKE | F/R | WVA No |
|---|---|---|---|---|---|
| 4047 | 29 | 4 PADS PLAIN | RENAULT IV,VOLVO | F/R | 29173 |

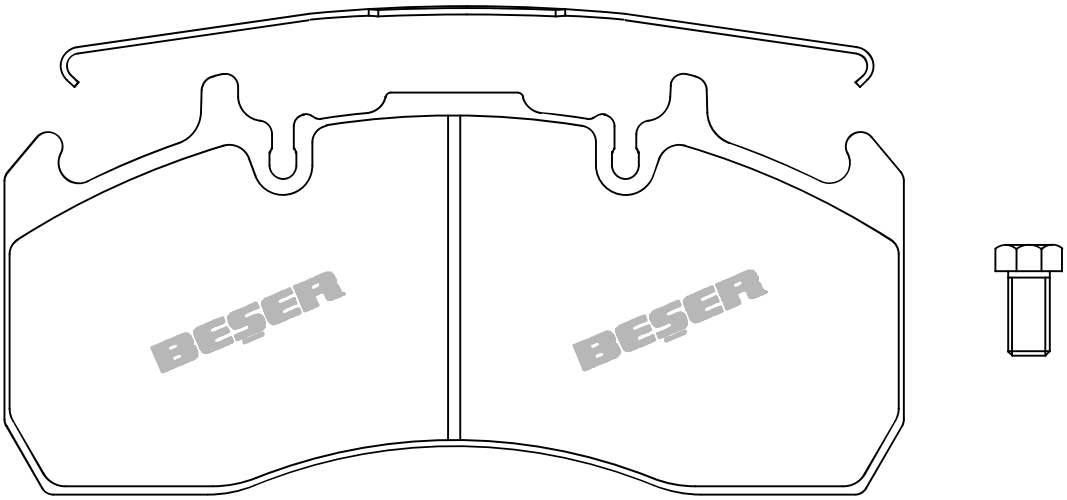

215,85 X 101

| REFERENCE | T (mm) | REMARKS | MAKE | F/R | WVA No |
|---|---|---|---|---|---|
| 4050 | 30 | 4 PADS PLAIN (A+B+D) | FORD GRANADA,CONSUL | F | 20252 20407 |
| 4050/1 | 30 | 4 PADS PLAIN (A+B+C+D) | FORD GRANADA,CONSUL | F | 20252 20407 |

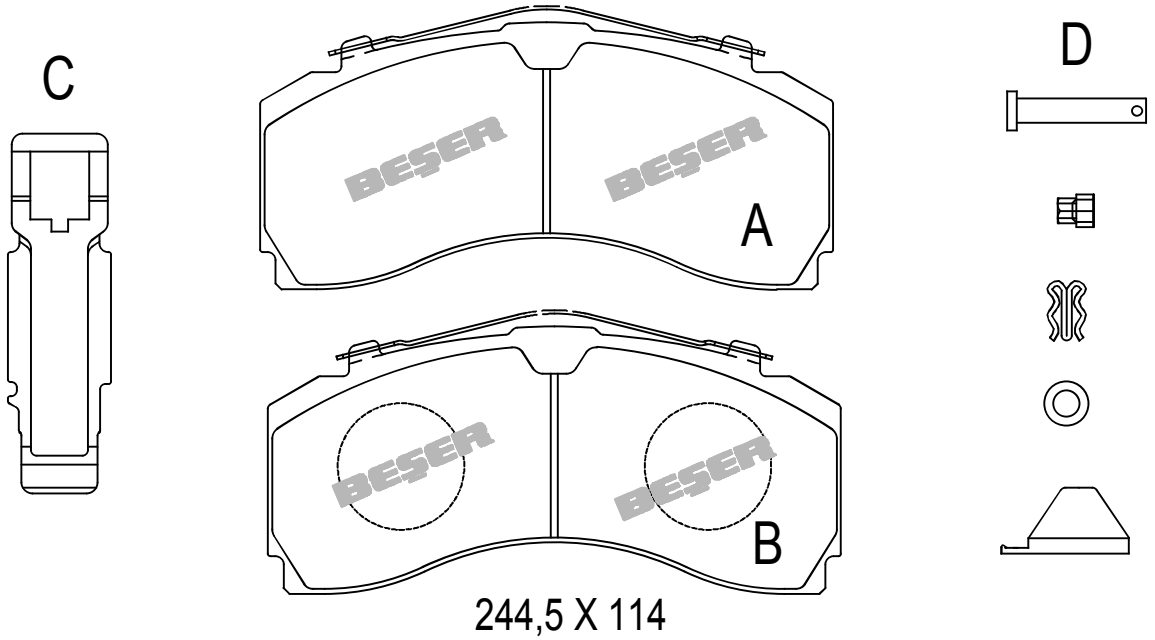


| REFERENCE | T (mm) | REMARKS | MAKE | F/R | WVA No |
|---|---|---|---|---|---|
| 4051 | 30 | 4 PADS PLAIN (A+B+D) | TOYOTA CARINA,CELICA | F | 20599 |
| 4051/1 | 30 | 4 PADS PLAIN (A+B+C+D) | TOYOTA CARINA,CELICA | F | 20599 |

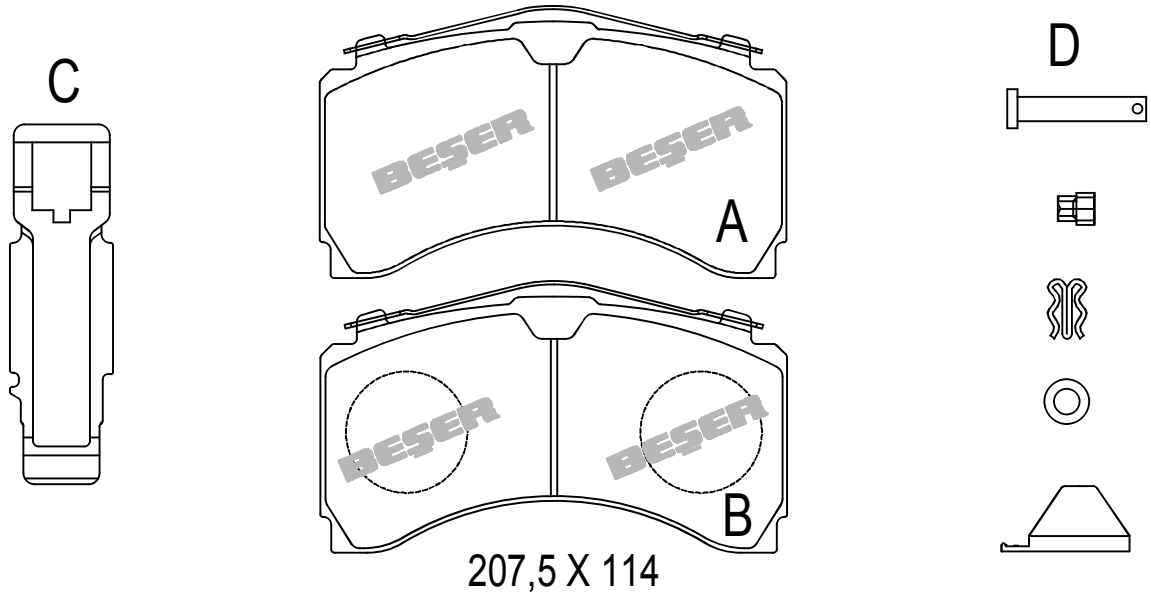

| REFERENCE | T (mm) | REMARKS | MAKE | F/R | WVA No |
|---|---|---|---|---|---|
| 4052 | 30 | 4 PADS PLAIN | BPW | F/R | 29227 |

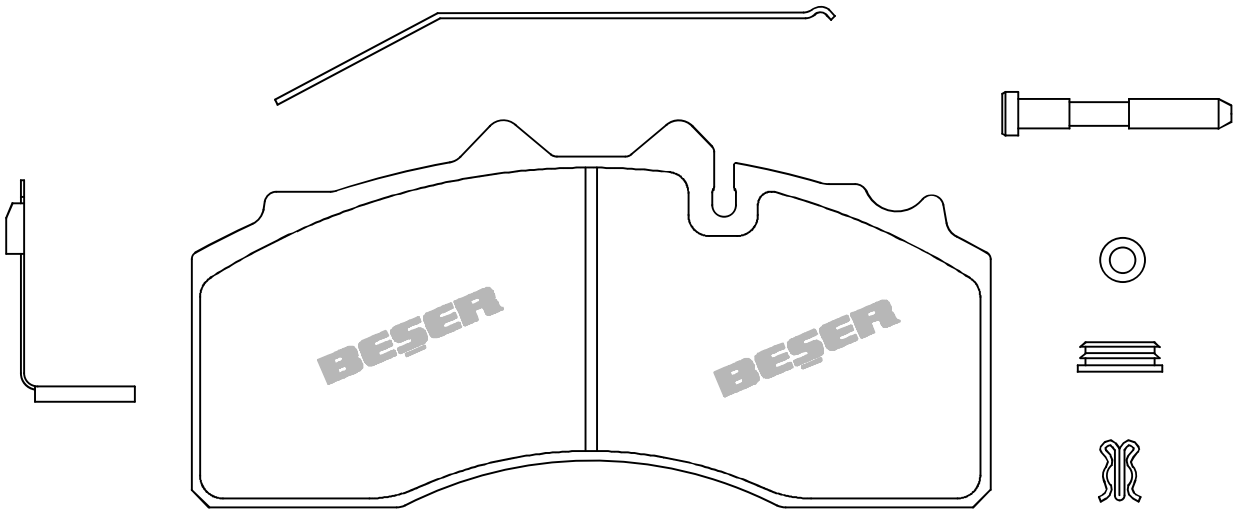


210,15 X 101,8

| REFERENCE | T (mm) | REMARKS | MAKE | F/R | WVA No |
|---|---|---|---|---|---|
| 4053 | 30 | 4 PADS PLAIN | BPW | F/R | 29228 |

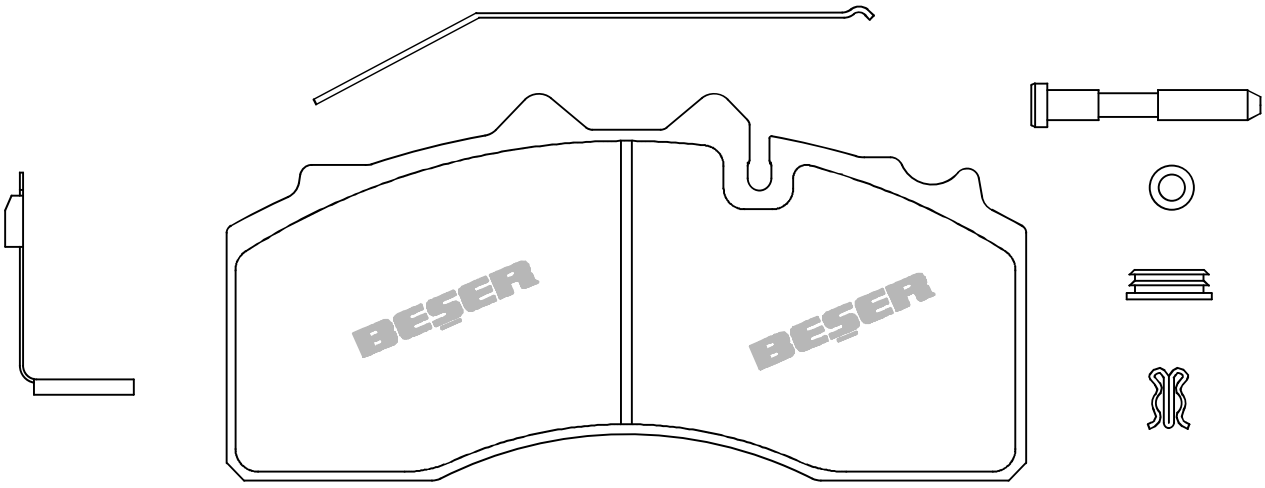


210,6 X 113,8

| REFERENCE | T (mm) | REMARKS | MAKE | F/R | WVA No |
|---|---|---|---|---|---|
| 4091 | 30 | 4 PADS PLAIN | MAN TGA,TGX | F/R | 29253 |

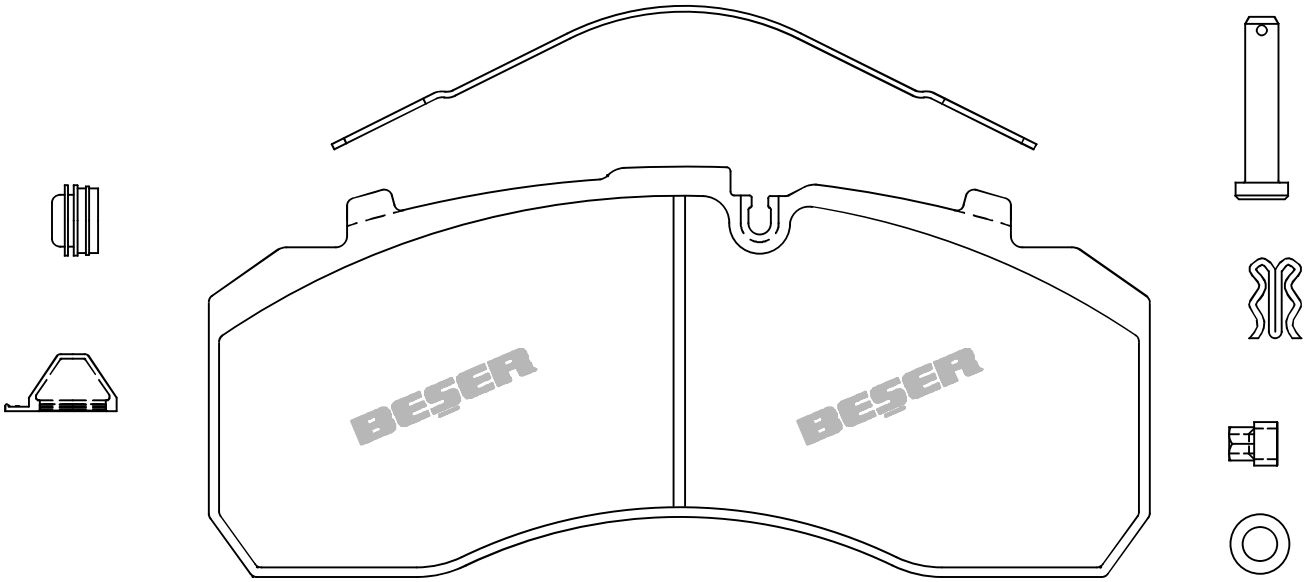


247,7 X 107,9

| REFERENCE | T (mm) | REMARKS | MAKE | F/R | WVA No |
|---|---|---|---|---|---|
| 4129 | 30 | 4 PADS PLAIN | MAN TGX, WABCO NG22 | F/R | 29223<br>29279<br>29337 |

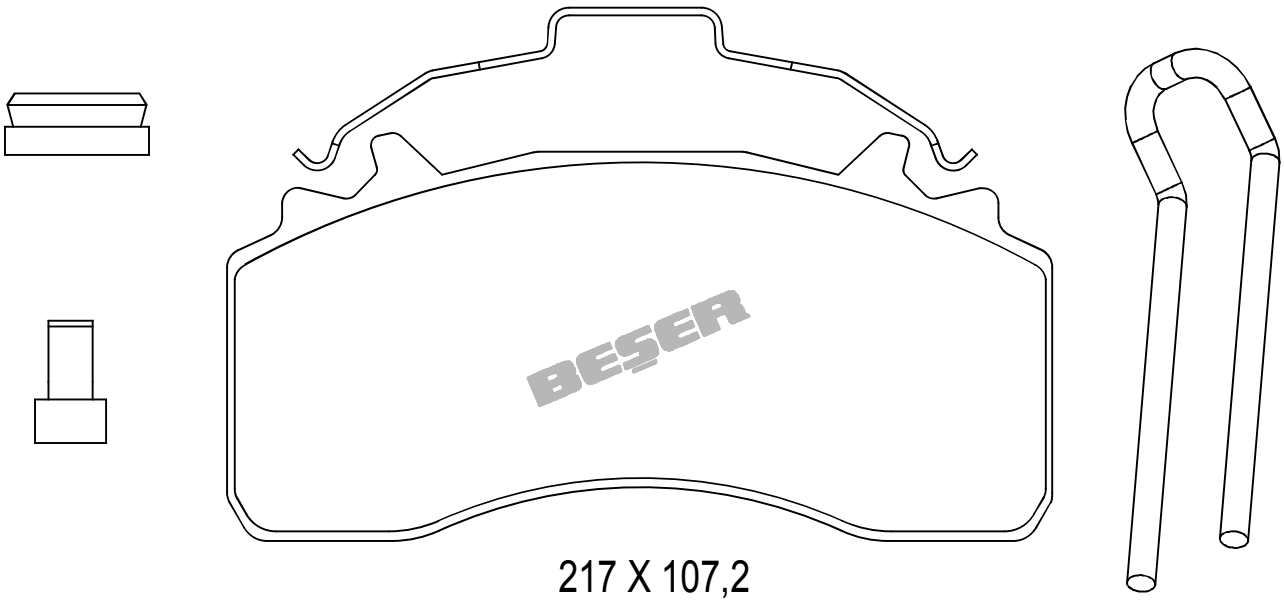


217 X 107,2

| REFERENCE | T (mm) | REMARKS | MAKE | F/R | WVA No |
|---|---|---|---|---|---|
| 4130 | 30 | 4 PADS PLAIN | SAF | R | 29175<br>29195 |

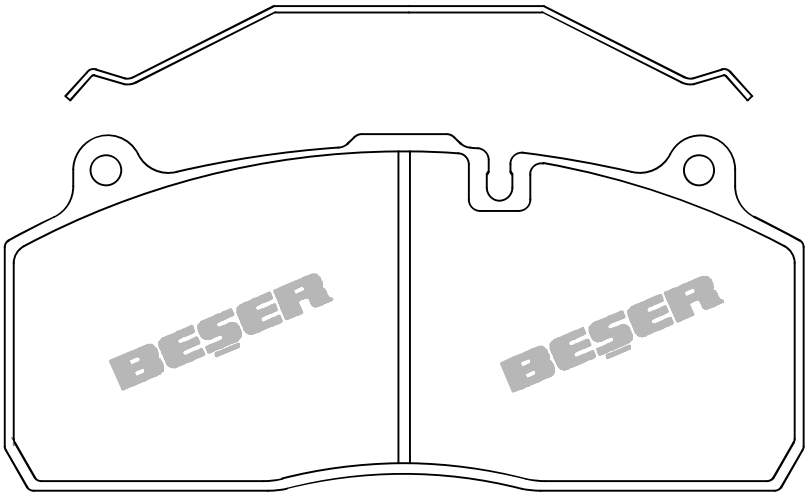


210 X 93,8

| REFERENCE | T (mm) | REMARKS | MAKE | F/R | WVA No |
|---|---|---|---|---|---|
| 4131 | 30 | 4 PADS PLAIN | RENAULT,ROR,VOLVO | R | 29169<br>29177 |

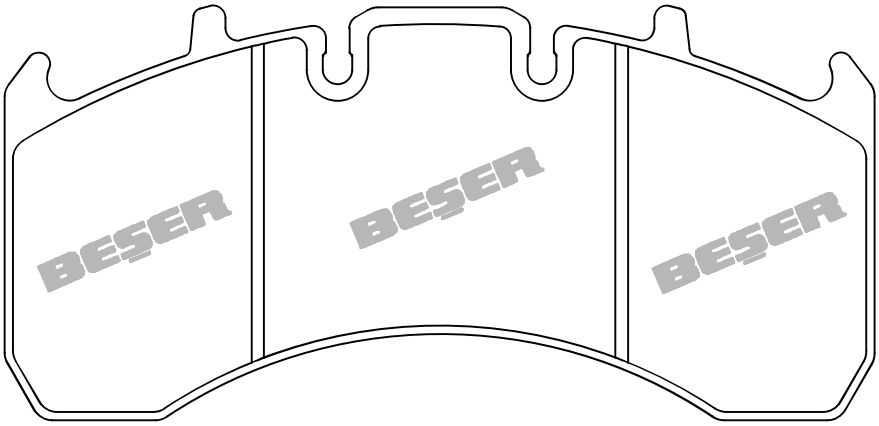


210,3 X 99,8

| REFERENCE | T (mm) | REMARKS | MAKE | F/R | WVA No |
|---|---|---|---|---|---|
| 4164 | 29 | 4 PADS PLAIN | R.O.R | R | 29211 |

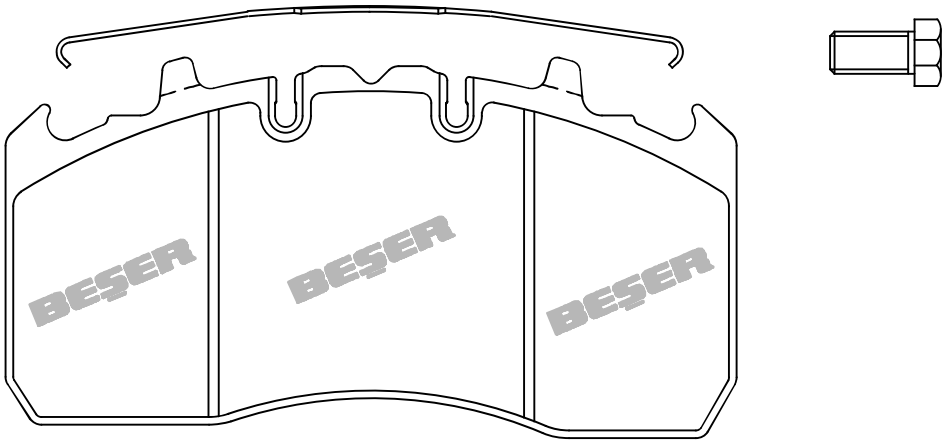


216 X 112,3

| REFERENCE | T (mm) | REMARKS | MAKE | F/R | WVA No |
|---|---|---|---|---|---|
| 4169 | 27 | 4 PADS PLAIN | IVECO EUROCARGO | F/R | 29256 |

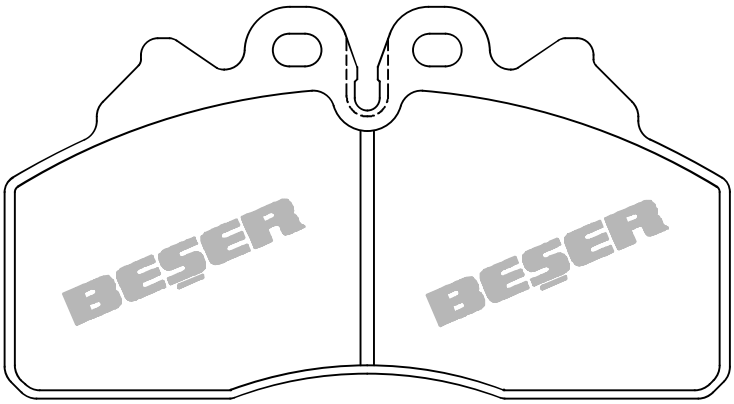


175,5 X 94,8

# BRAKE PAD KITS

| CODE | REFERENCE | PCS /PACK | WVA NO |
|---|---|---|---|
| *78101035* | 3525 | 2 | 29011 |

| CODE | REFERENCE | PCS /PACK | WVA NO |
|---|---|---|---|
| *78101059* | 3770 | 2 | 29090 |

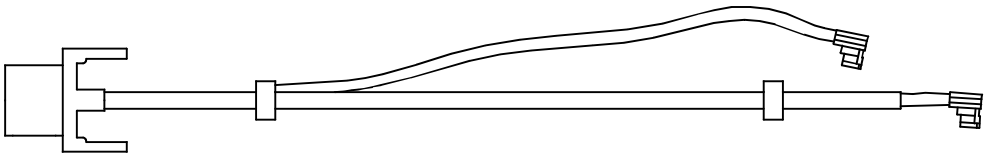

| CODE | REFERENCE | PCS /PACK | WVA NO |
|---|---|---|---|
| *78101064* | 3565/1-3565/3 | 2 | 29088-29091 |

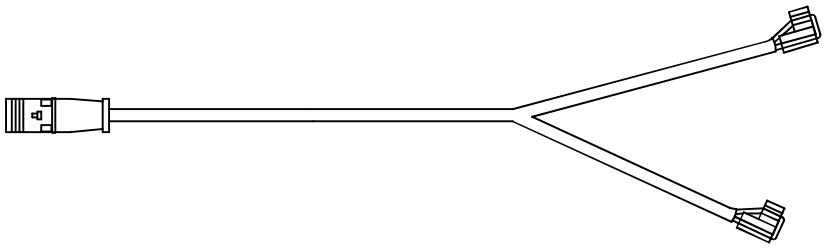

| CODE | REFERENCE | PCS /PACK | WVA NO |
|---|---|---|---|
| *78101065* | 3828/1 | 2 | 29131-29156 |

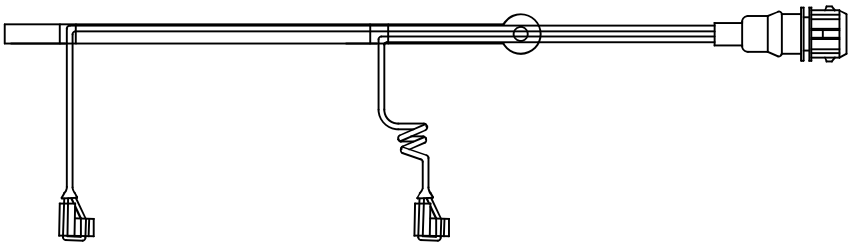

| CODE | REFERENCE | PCS /PACK | WVA NO |
|---|---|---|---|
| *78101068* | 3828/2 | 2 | 29131 |

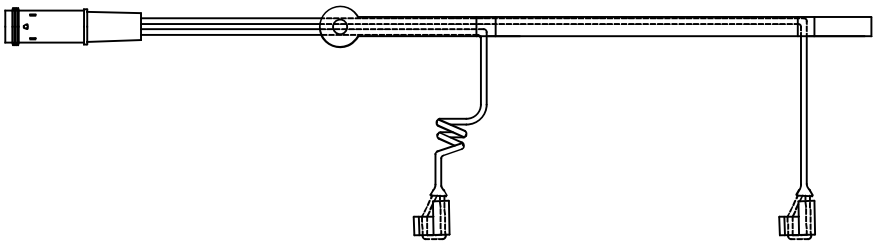

| CODE | REFERENCE | PCS /PACK | WVA NO |
|---|---|---|---|
| *78101090* | 3870 | 2 | 29119-29141-29142 |

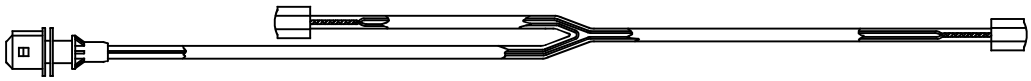

| CODE | REFERENCE | PCS /PACK | WVA NO |
|---|---|---|---|
| *78101097* | 3917 | 2 | 29174-29204-29218-29219-29226 |

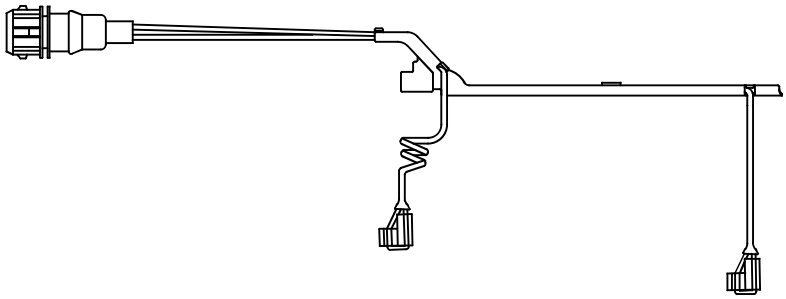

| CODE | REFERENCE | PCS /PACK | WVA NO |
|---|---|---|---|
| *78101098* | 3565/4 | 2 | 29088 |

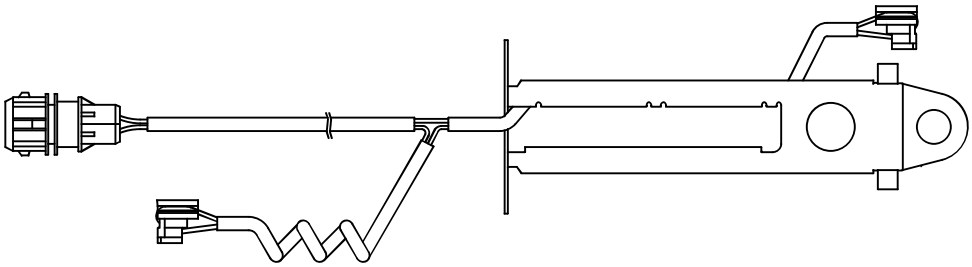

| CODE | REFERENCE | PCS /PACK | WVA NO |
|---|---|---|---|
| *78102020* | 3565/2 | 2 | 29088 |

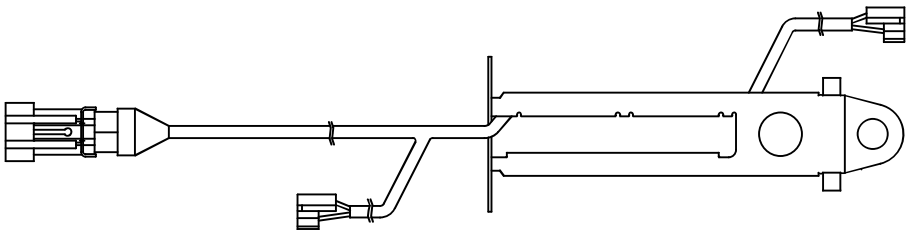

| CODE | REFERENCE | PCS /PACK | WVA NO |
|---|---|---|---|
| *78103001* | 3497 - 3498 | 2 | 29030-29053-29083-29084-29113<br>29114-29210 |

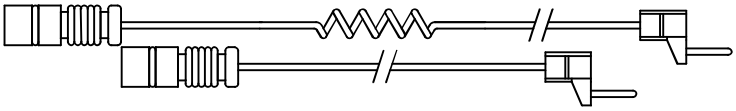

| CODE | REFERENCE | PCS /PACK | WVA NO |
|---|---|---|---|
| *78103021* | 3565/2 | 2 | 29088 |

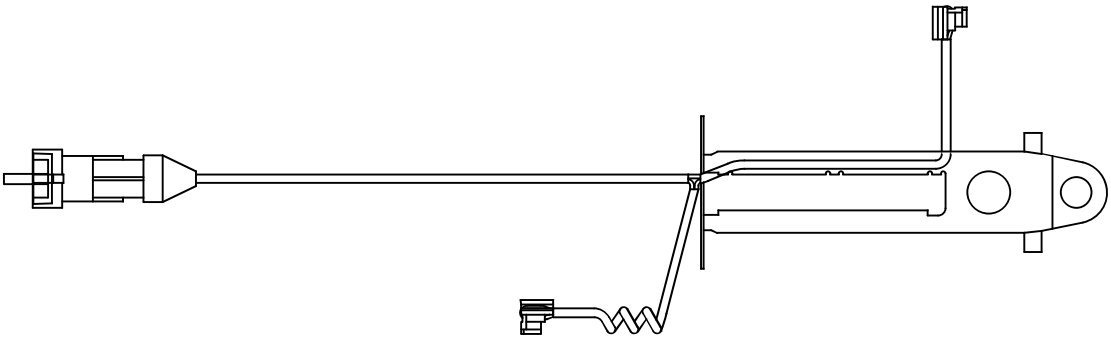

| CODE | REFERENCE | PCS /PACK | WVA NO |
|---|---|---|---|
| *78201015* | 3497 - 3497/1 - 3828/1 - 3828/2 -3828/3 | 4 | 29030-29053-29083-29084-29113-29114<br>29131-29156-29210 |

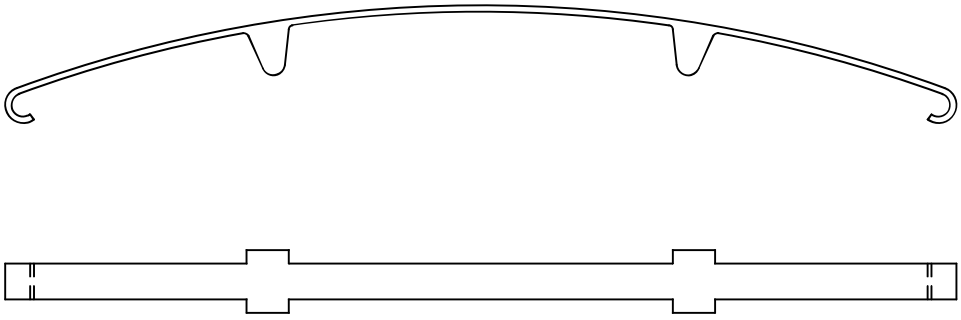

| CODE | REFERENCE | PCS /PACK | WVA NO |
|---|---|---|---|
| *78201048* | 3565-3565/1-3565/2-3565/4 | 4 | 29088-29091 |

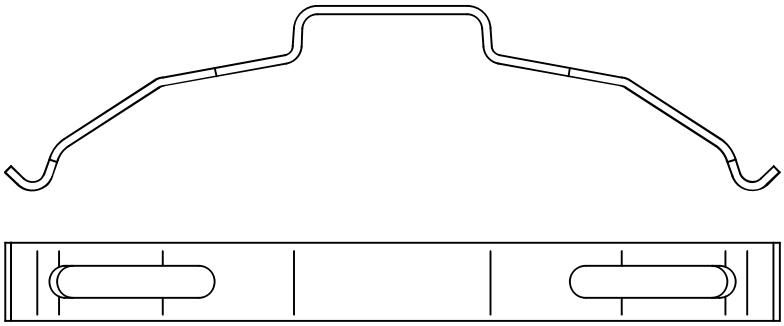

| CODE | REFERENCE | PCS /PACK | WVA NO |
|---|---|---|---|
| *78201049* | 3565-3565/1-3565/2-3565/4 | 2 | 29088-29091 |

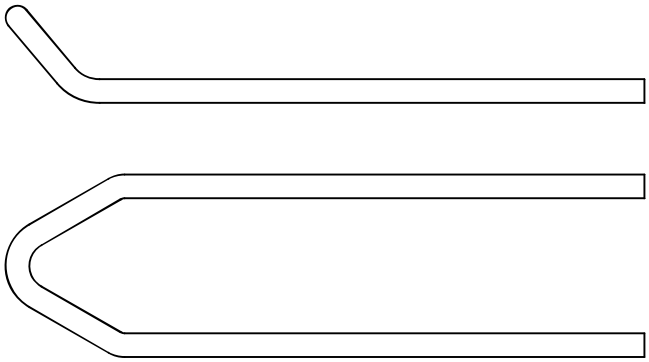

| CODE | REFERENCE | PCS /PACK | WVA NO |
|---|---|---|---|
| *78201085* | 3669-3789 | 4 | 29093-29094-29095-29096<br>29145-29146-29184-29197 |

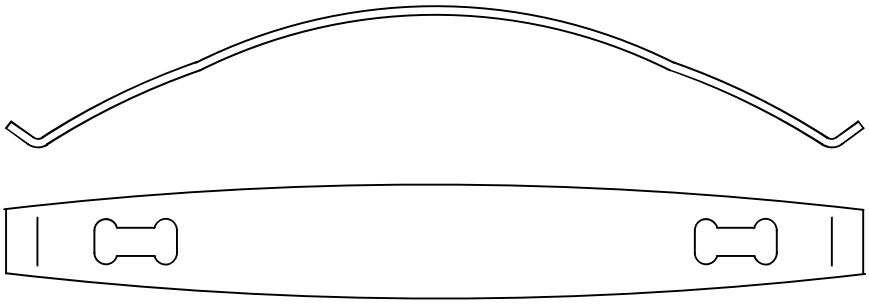

| CODE | REFERENCE | PCS /PACK | WVA NO |
|---|---|---|---|
| *78201140* | 3770-3770/1 | 2 | 29090 |

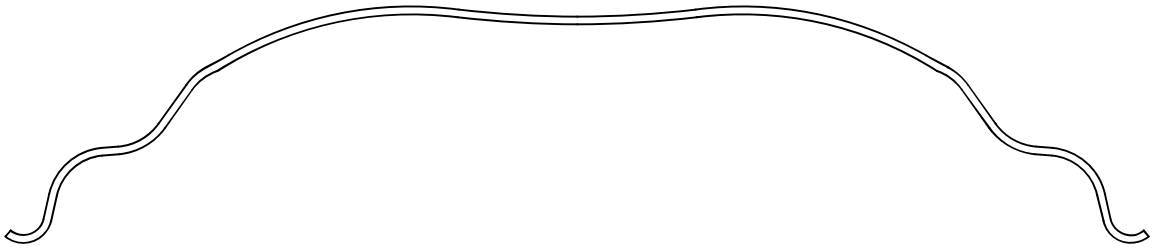

| CODE | REFERENCE | PCS /PACK | WVA NO |
|---|---|---|---|
| *78201141* | 3770-3770/1 | 8 | 29090 |

| CODE | REFERENCE | PCS /PACK | WVA NO |
|---|---|---|---|
| *78201160* | 3839-3839/2-4129 | 4 (3839-3839/2)<br>6 (4129) | 29162-29223-29279-29337 |

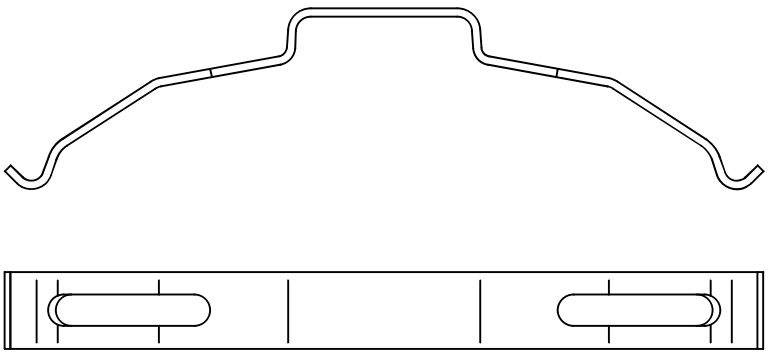

| CODE | REFERENCE | PCS /PACK | WVA NO |
|---|---|---|---|
| *78201165* | 3664-3664/1-3664/2 | 4 | 29042-29046-29056-29059-29061-29087<br>29105-29106-29108-29109-29163-29167<br>29179-29201-29202 |

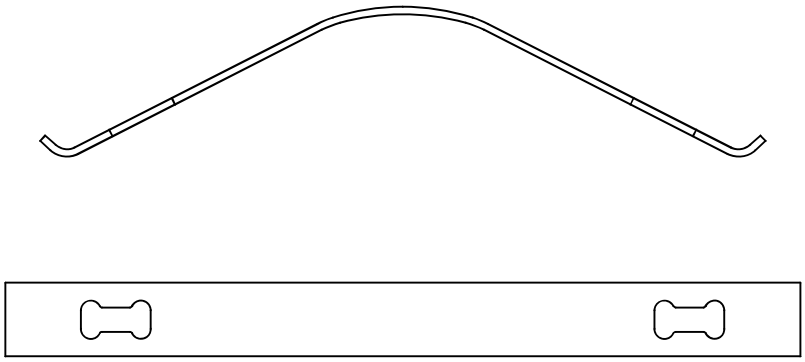

| CODE | REFERENCE | PCS /PACK | WVA NO |
|---|---|---|---|
| *78201170* | 3844 | 6 | 29126-29159 |

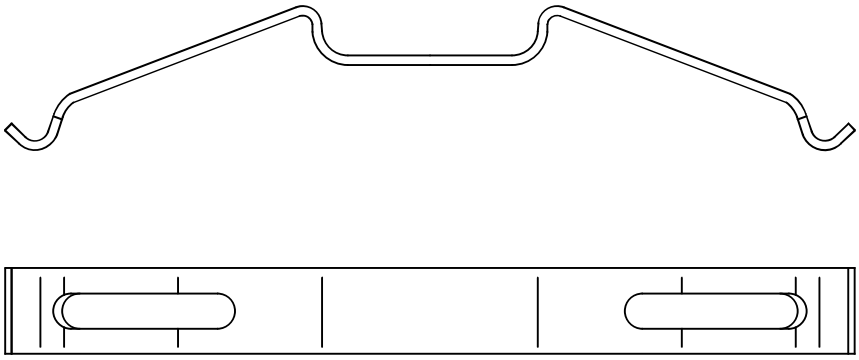

| CODE | REFERENCE | PCS /PACK | WVA NO |
|---|---|---|---|
| *78201171* | 3839 | 2 | 29162 |

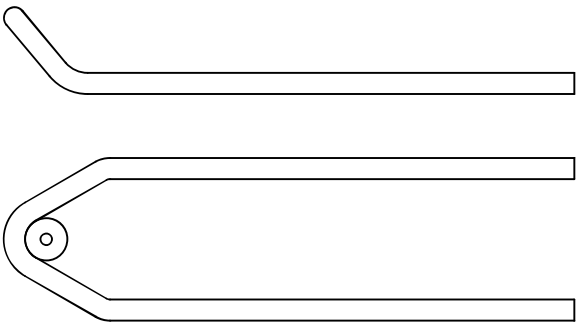

| CODE | REFERENCE | PCS /PACK | WVA NO |
|---|---|---|---|
| *78201172* | 3844-3870-3870/2 | 2 | 29119-29141-29142-29126-29159 |

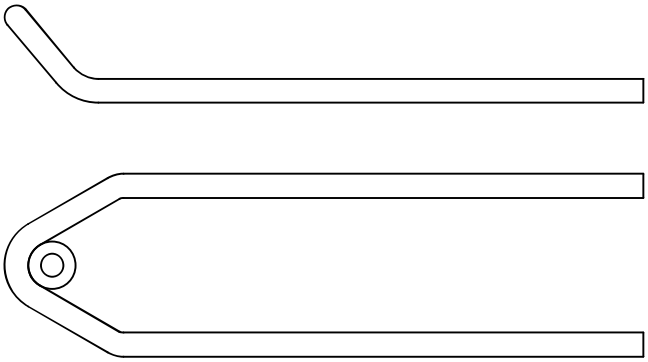

| CODE | REFERENCE | PCS /PACK | WVA NO |
|---|---|---|---|
| *78201173* | 3845 | 4 | 29022-29125-29224-29277 |

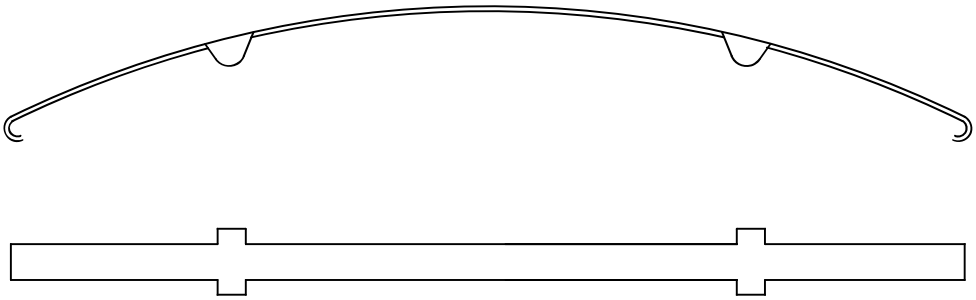

| CODE | REFERENCE | PCS /PACK | WVA NO |
|---|---|---|---|
| *78201179* | 3870-3870/2 | 4 | 29119-29141-29142 |

| CODE | REFERENCE | PCS /PACK | WVA NO |
|---|---|---|---|
| *78201180* | 3664/4-3664/5-3789/1-3789/2 | 4 | 29059-29061-29087-29106-29108-29109<br>29163-29165-29179-29201-29202-29215 |

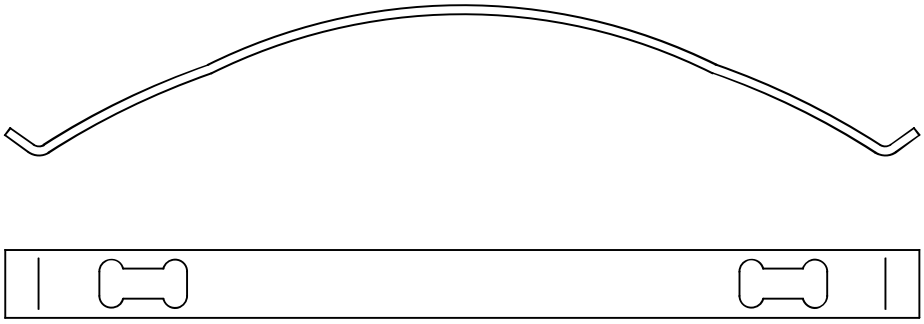

| CODE | REFERENCE | PCS /PACK | WVA NO |
|---|---|---|---|
| *78201207* | 3870 | 2 | 29119-29141-29142 |

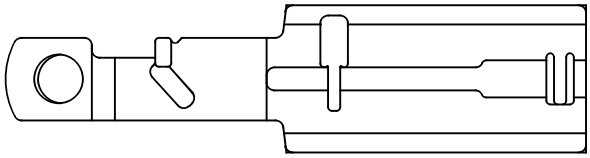

| CODE | REFERENCE | PCS /PACK | WVA NO |
|---|---|---|---|
| *78201208* | 3870 | 2 | 29119-29141-29142 |

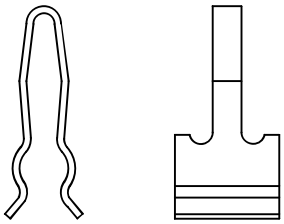

| CODE | REFERENCE | PCS /PACK | WVA NO |
|---|---|---|---|
| *78201211* | 3917-3917/1-4047 | 4 | 29173-29174-29203-29204-29218-29219<br>29226-29272 |

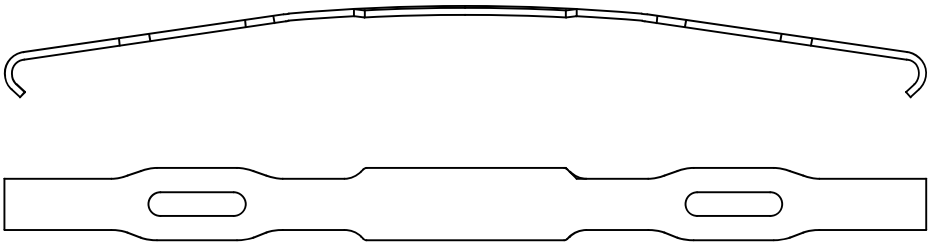

| CODE | REFERENCE | PCS /PACK | WVA NO |
|---|---|---|---|
| *78202010* | 3902-3902/1-3908-3908/1 | 4 | 29115-29116-29148-29158-29171<br>29183-29271-29308 |

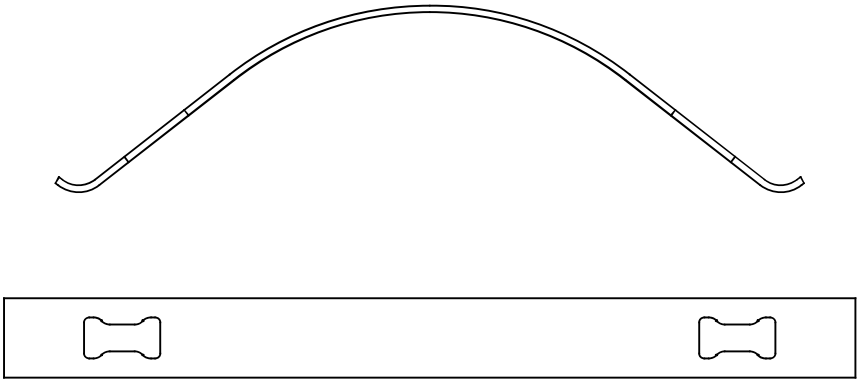

| CODE | REFERENCE | PCS /PACK | WVA NO |
|---|---|---|---|
| *78202011* | 3902/1-3908 | 2 | 29115-29116-29148-29158-29171<br>29183-29271-29308 |

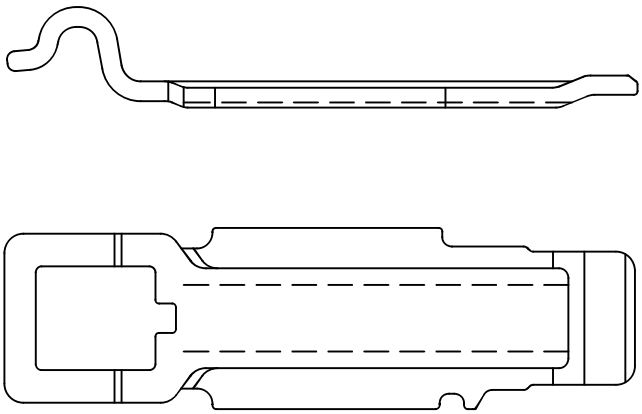

| CODE | REFERENCE | PCS /PACK | WVA NO |
|---|---|---|---|
| *78202043* | 4050-4050/1-4051-4051/1-4091 | 4 | 29244-29245-29246-29247-29252<br>29253-29255-29266-29278-29293 |

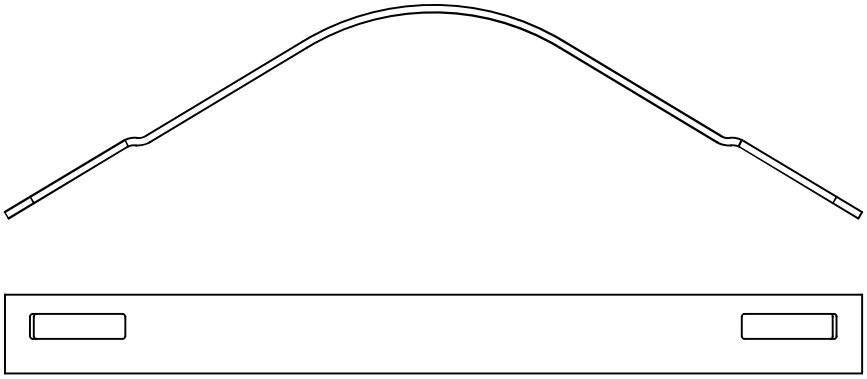

| CODE | REFERENCE | PCS /PACK | WVA NO |
|---|---|---|---|
| *78202044* | 4052-4053 | 2 | 29227-29228-29316-29317-29355 |

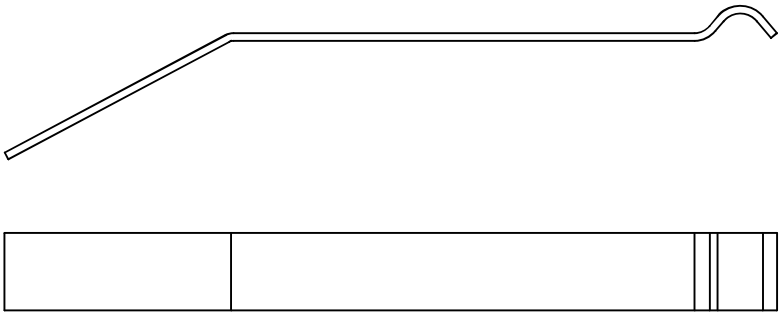

| CODE | REFERENCE | PCS /PACK | WVA NO |
|---|---|---|---|
| *78202053* | 4052 | 4 | 29227-29316 |

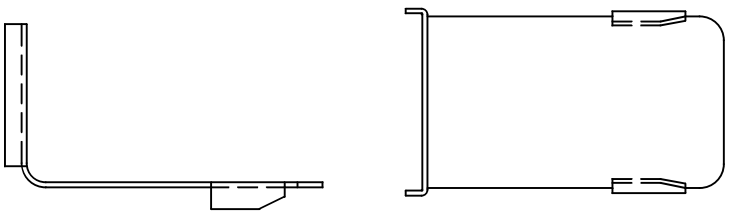

| CODE | REFERENCE | PCS /PACK | WVA NO |
|---|---|---|---|
| *78202057* | 4053 | 4 | 29228-29317-29355 |

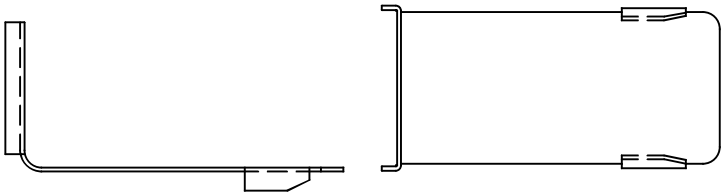

| CODE | REFERENCE | PCS /PACK | WVA NO |
|---|---|---|---|
| *78202080* | 4129 | 2 | 29223-29279-29337 |

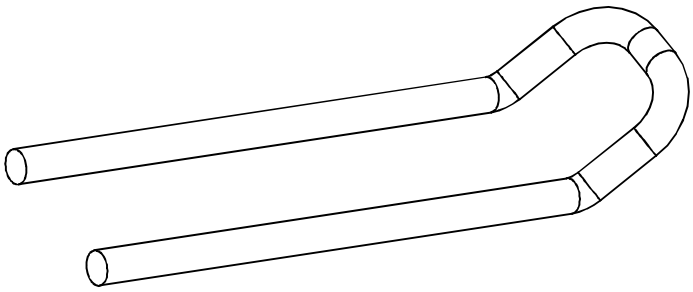

| CODE | REFERENCE | PCS /PACK | WVA NO |
|---|---|---|---|
| *78202081* | 4129 | 2 | 29223-29279-29337 |

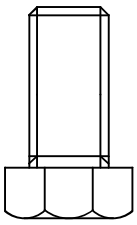

| CODE | REFERENCE | PCS /PACK | WVA NO |
|---|---|---|---|
| *78203664* | 3664/4-4050/1-4051/1 | 2 | 29059-29061-29087-29106-29108-29109<br>29163-29179-29201-29202-29246-29247 |

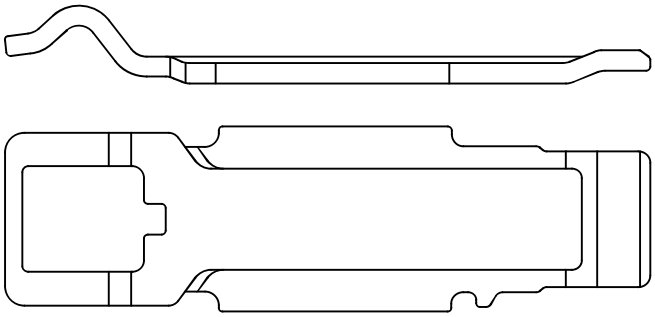

| CODE | REFERENCE | PCS /PACK | WVA NO |
|---|---|---|---|
| *78301022* | 3664-3664/1-3664/2-3669-3789/2-3908<br>3908/1-4050-4050/1-4051-4051/1-4091 | 2 | 29042-29046-29056-29059-29061-29105-29106-29108<br>29109-29115-29116-29146-29148-29163-29165-29167<br>29179-29183-29196-29201-29202-29215-29244-29245<br>29246-29247-29252-29253-29255-29266-29278-29293 |

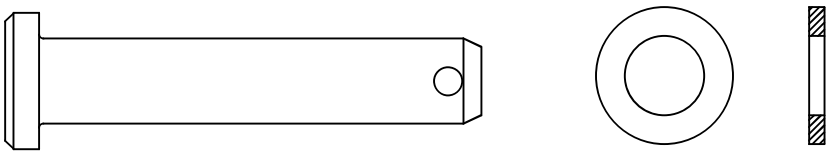

| CODE | REFERENCE | PCS /PACK | WVA NO |
|---|---|---|---|
| *78301029* | 3770-3770/1 | 8 | 29090 |

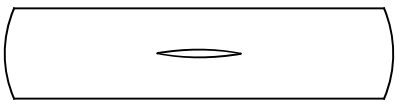

| CODE | REFERENCE | PCS /PACK | WVA NO |
|---|---|---|---|
| *78301117* | 3870 | 2 | 29119-29141-29142 |

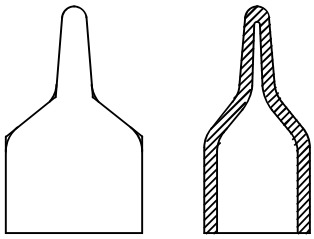

| CODE | REFERENCE | PCS /PACK | WVA NO |
|---|---|---|---|
| *78301118* | 3565/2-3870-3870/2 | 2 (3565/2)<br>4 (3870-3870/2) | 29088-29119-29141-29142 |

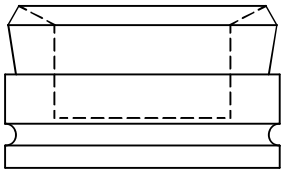

| CODE | REFERENCE | PCS /PACK | WVA NO |
|---|---|---|---|
| *78301121* | 3902/1-3908-3908/1 | 2 | 29115-29116-29148-29158-29171<br>29183-29271-29308 |

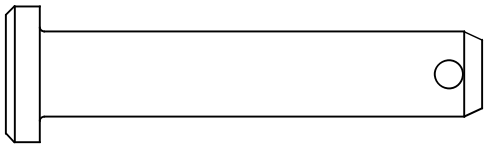

| CODE | REFERENCE | PCS /PACK | WVA NO |
|---|---|---|---|
| *78301122* | 3902/1-3908-3908/1 | 2 | 29115-29116-29148-29158-29171<br>29183-29271-29308 |

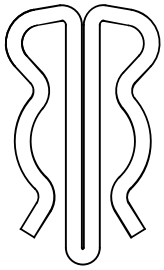

| CODE | REFERENCE | PCS /PACK | WVA NO |
|---|---|---|---|
| *78301132* | 3902/1 | 2 | 29158-29171-29271-29308 |

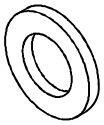

| CODE | REFERENCE | PCS /PACK | WVA NO |
|---|---|---|---|
| *78302019* | 3664-3664/1-3664/2-3669-3789/2<br>4050-4050/1-4051-4051/1-4091 | 2 | 29042-29046-29056-29059-29061-29105-29106<br>29108-29109-29146-29163-29165-29167-29179<br>29196-29201-29202-29215-29244-29245-29246<br>29247-29252-29253-29255-29266-29278-29293 |

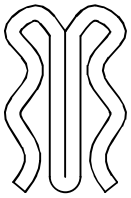

| CODE | REFERENCE | PCS /PACK | WVA NO |
|---|---|---|---|
| *78302515* | 4130 | 4 | 29175-29195-29198-29274-29294 |

| CODE | REFERENCE | PCS /PACK | WVA NO |
|---|---|---|---|
| *78303002* | 3565-3565/1-3565/2-3565/4 | 2 | 29088-29091 |

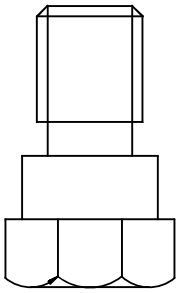

| CODE | REFERENCE | PCS /PACK | WVA NO |
|---|---|---|---|
| *78303003* | 3565-3565/1-3565/2-3565/4 | 2 | 29088-29091 |

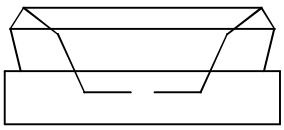

| CODE | REFERENCE | PCS /PACK | WVA NO |
|---|---|---|---|
| *78303004* | 3664-3664/1-3664/2-3669-4091 | 2 | 29042-29046-29056-29059-29061-29105-29106 29108-29109-29146-29163-29167-29179-29196 29201-29202-29252-29253-29255-29266-29278 29293 |

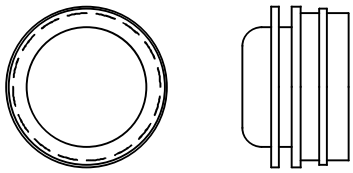

| CODE | REFERENCE | PCS /PACK | WVA NO |
|---|---|---|---|
| *78303006* | 3839-3844 | 2 | 29126-29159-29162 |

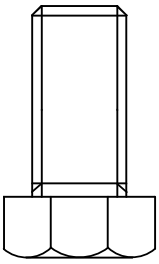

| CODE | REFERENCE | PCS /PACK | WVA NO |
|---|---|---|---|
| *78303007* | 3839-3844-4129 | 2 | 29126-29159-29162-29223-29279-29337 |

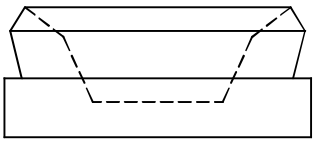

| CODE | REFERENCE | PCS /PACK | WVA NO |
|---|---|---|---|
| *78303053* | 4052-4053 | 2 | 29227-29228-29316-29317-29355 |

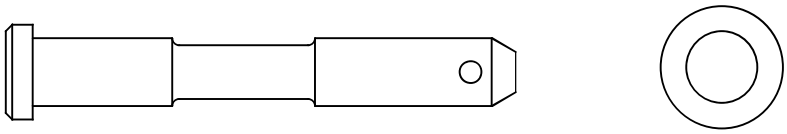

| CODE | REFERENCE | PCS /PACK | WVA NO |
|---|---|---|---|
| *78303054* | 4052-4053 | 2 | 29227-29228-29316-29317-29355 |

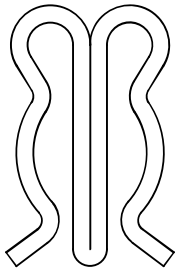

| CODE | REFERENCE | PCS /PACK | WVA NO |
|---|---|---|---|
| *78303055* | 4052-4053 | 2 | 29227-29228-29316-29317-29355 |

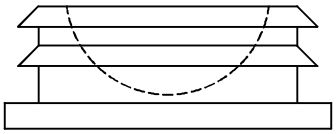

| CODE | REFERENCE | PCS /PACK | WVA NO |
|---|---|---|---|
| *78400010* | 3828/1-3828/2-3845-3870-3870/2<br>3917-3917/1-4047-4164 | 2 | 29022-29119-29125-29131-29141-29142-29156<br>29224-29277-29022-29125-29131-29156-29173<br>29174-29203-29204-29218-29211-29219-29224<br>29226-29272-29277-29291 |

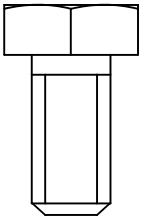

| CODE | REFERENCE | PCS /PACK | WVA NO |
|---|---|---|---|
| *79900101* | 3789/2-3902/1 | 2 | 29158-29165-29171-29215-29271-29308 |

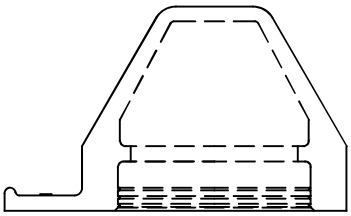

| CODE | REFERENCE | PCS /PACK | WVA NO |
|---|---|---|---|
| *79900102* | 3664-3789/2-3908-3908/1<br>4050-4050/1-4051-4051/1-4091 | 2 | 29042-29046-29056-29059-29061-29087-29105-29106<br>29108-29109-29115-29116-29148-29163-29165-29179<br>29183-29196-29201-29202-29215-29244-29245-29246<br>29247-29252-29253-29255-29266-29278-29293 |

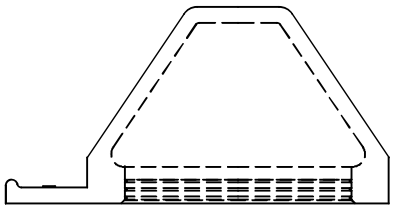

| CODE | REFERENCE | PCS /PACK | WVA NO |
|---|---|---|---|
| *79900103* | 3664-3664/1-3664/2-3789/2-3902/1-3908<br>3908/1-4050-4050/1-4051-4051/1-4091 | 1 (All)<br>2 (3789/2) | 29042-29046-29056-29059-29061-29087-29105-29106<br>29108-29109-29115-29116-29148-29163-29165-29167<br>29179-29183-29196-29201-29202-29215-29244-29245<br>29246-29247-29252-29253-29255-29266-29278-29293 |

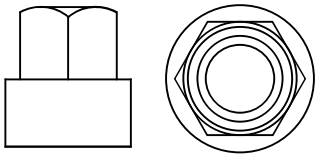

| CODE | REFERENCE | PCS /PACK | WVA NO |
|---|---|---|---|
| *79900104* | 3789/2-3902/1-3908-3908/1 | 2 | 29115-29116-29148-29158-29165-29171<br>29183-29215-29271-29308 |

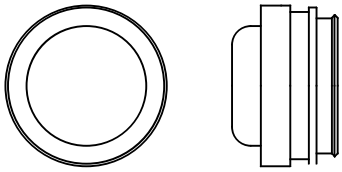

# MANUFACTURERS
# CROOS REFERENCE TABLE

| FERODO | BESER® |
|---|---|
| FCV1086B | 3497 |
| FCV1086B | 3497/1 |
| FCV1279B | 3565/4 |
| FCV1328BFE | 3664 |
| FCV1624 | 4131 |
| FCV1678B | 3789/1 |
| FCV1678B | 3789/2 |
| FCV1814BFE | 4130 |
| FCV1828 | 3839 |
| FCV1828 | 3839/1 |
| FCV1828 | 3839/2 |
| FCV1855BFE | 3917 |
| FCV1855BFE | 3917/1 |
| FCV4254 | 4169 |
| FCV4344PTS | 4091 |
| FCV4417PTS | 4050 |
| FCV4417PTS | 4050/1 |
| FCV4418PTS | 4051 |
| FCV4418PTS | 4051/1 |
| FDB760 | 3498 |
| FDB1047 | 3770 |
| FDB1047 | 3770/1 |
| FDB1136 | 3837 |
| FDB1275 | 3789 |
| FDB1277BFE | 3908 |
| FDB1277BFE | 3908/1 |
| FDB1279 | 3565 |
| FDB1279 | 3565/1 |
| FDB1279 | 3565/A |
| FDB1388B | 3845 |
| FDB1404 | 3828 |
| FDB1404 | 3828/1 |
| FDB1406B | 3844 |

| FERODO | BESER® |
|---|---|
| FDB1825B | 3902 |
| FDB1825B | 3902/1 |

| FMSI | BESER® |
|---|---|
| D1203-8323 | 3664 |
| D1310-8425 | 3828/2 |
| D1310-8425 | 3828/3 |
| D1312-8427 | 3770 |
| D1312-8427 | 3770/1 |
| D1438-8556 | 3844 |
| D1517-8726 | 3870 |
| D1517-8726 | 3870/1 |
| D1517-8726 | 3870/2 |
| D1583-8795 | 4130 |
| D1708-8931 | 3917 |
| D1708-8931 | 3917/1 |
| D1758-8986 | 3917 |
| D1758-8986 | 3917/1 |

| FRI.TECH | BESER® |
|---|---|
| 598.1W | 3565/3 |
| 598.2W | 3565/4 |
| 599.0 | 3908 |
| 599.0 | 3908/1 |
| 601.0 | 3664 |
| 602.0 | 3497/1 |
| 602.0 | 3497 |
| 603.0 | 3828/3 |
| 603.1W | 3828/2 |
| 611.0 | 3789/1 |
| 611.0 | 3789/2 |
| 666.0 | 4131 |
| 668.0 | 3902 |
| 668.0 | 3902/1 |
| 867.0 | 4169 |

| ICER | BESER |
|---|---|
| 151040 | 3497 |
| 141043 | 3525 |
| 141043 | 3525/A |
| 151040 | 3497/1 |
| 151194 | 3664 |
| 151405 | 3828 |
| 151405 | 3828/1 |
| 151427 | 3845 |
| 151430 | 3870 |
| 151430 | 3870/1 |
| 151430 | 3870/2 |
| 151629 | 3789/1 |
| 151629 | 3789/2 |
| 151958 | 4169 |
| 151163-119 | 3770 |
| 151163-119 | 3770/1 |
| 151253-067 | 3565 |
| 151253-067 | 3565/A |
| 151253-120 | 3565/3 |
| 151253-124 | 3565/2 |
| 151253-124 | 3565/4 |
| 151254-072 | 3789 |
| 151404-066 | 3908 |
| 151404-066 | 3908/1 |
| 151405-067 | 3828/3 |
| 151405-120 | 3828/2 |
| 151623-066 | 3844 |
| 151631-066 | 3839 |
| 151631-066 | 3839/1 |
| 151631-066 | 3839/2 |
| 151830-066 | 3902 |
| 151830-066 | 3902/1 |
| 151831-066 | 3917 |

| ICER | BESER |
|---|---|
| 151831-066 | 3917/1 |
| 151841-066 | 4047 |
| 151842-066 | 4131 |
| 151977-066 | 3818 |
| 152122-066 | 4164 |
| 152150-066 | 4130 |
| 152150-208 | 4130 |
| 152154-066 | 4129 |

| OE | BESER |
|---|---|
| 93200 | 4130 |
| 93327 | 3818 |
| 204552 | 3664 |
| 204552 | 3664 |
| 693887 | 4130 |
| 993887 | 4130 |
| 1439324 | 3664 |
| 1617343 | 3664 |
| 1906439 | 3664 |
| 2992348 | 3664 |
| 2992476 | 3664 |
| 2995637 | 3664 |
| 2995819 | 3664 |
| 2995938 | 3664 |
| 2996378 | 4091 |
| 2996515 | 3664 |
| 3095396 | 3845 |
| 9291024 | 3789 |
| 9291037 | 3664 |
| 9291045 | 3908 |
| 9291045 | 3908/1 |
| 9291048 | 3908 |
| 9291048 | 3908/1 |
| 9291049 | 3908 |
| 9291049 | 3908/1 |
| 9291072 | 4130 |
| 12182091 | 3498 |
| 12182145 | 3565 |
| 12182145 | 3565/A |
| 12999577 | 3565 |
| 12999577 | 3565/A |
| 12999667 | 3565 |
| 12999667 | 3565/A |

| OE | BESER |
|---|---|
| 12999743 | 3565 |
| 12999743 | 3565/A |
| 20568711 | 3917 |
| 20568711 | 3917/1 |
| 20568712 | 4047 |
| 20568713 | 4131 |
| 20568714 | 3917 |
| 20568714 | 3917/1 |
| 20765963 | 4131 |
| 20768092 | 3845 |
| 20918891 | 3845 |
| 21024702 | 3917 |
| 21024702 | 3917/1 |
| 21352570 | 3917 |
| 21352570 | 3917/1 |
| 21496550 | 3917 |
| 21496550 | 3917/1 |
| 24070005 | 3565 |
| 24070005 | 3565/3 |
| 24070005 | 3565/A |
| 68326055 | 4164 |
| 501215084 | 3664/4 |
| 3057008500 | 3902 |
| 3057008500 | 3902/1 |
| 5001864363 | 3917 |
| 5001864363 | 3917/1 |
| 5001864364 | 3917 |
| 5001864364 | 3917/1 |
| 5001864380 | 4131 |
| 6403229242 | 4129 |
| 6403229302 | 4129 |
| 6403229332 | 4129 |
| 6409058232 | 4129 |

| OE | BESER® |
|---|---|
| 81508205108 | 4129 |
| 81508206030 | 4091 |
| 81508206065 | 4129 |
| 81508206066 | 4129 |
| 000 420 02 76 | 3498 |
| 000 421 05 10 | 3664 |
| 000 421 07 10 | 3789 |
| 000 421 10 10 | 3908 |
| 000 421 10 10 | 3908/1 |
| 000 421 12 10 | 3908 |
| 000 421 12 10 | 3908/1 |
| 000 421 43 10 | 3664 |
| 0004210510 | 3664 |
| 001 421 05 10 | 3908 |
| 001 421 05 10 | 3908/1 |
| 001 421 06 10 | 3908 |
| 001 421 06 10 | 3908/1 |
| 001 421 25 10 | 3908 |
| 001 421 25 10 | 3908/1 |
| 001 421 26 10 | 3908 |
| 001 421 26 10 | 3908/1 |
| 002 420 08 20 | 3498 |
| 002 420 22 20 10 | 3664 |
| 002 420 49 20 | 3664 |
| 002 420 55 20 | 3498 |
| 002 420 78 20 | 3789 |
| 002 420 79 20 | 3789 |
| 0024204920 | 3664 |
| 0024204920 | 3664/4 |
| 003 420 10 20 | 3664 |
| 003 420 11 20 | 3908 |
| 003 420 11 20 | 3908/1 |
| 003 420 12 20 | 3908 |

| OE | BESER® |
|---|---|
| 003 420 12 20 | 3908/1 |
| 003 420 16 20 | 3664 |
| 003 420 20 20 | 3664 |
| 003 420 22 20 | 3664 |
| 003 420 35 20 | 3664 |
| 003 420 55 20 | 3498 |
| 003 420 66 20 | 3908 |
| 003 420 66 20 | 3908/1 |
| 003 420 72 20 | 3908 |
| 003 420 72 20 | 3908/1 |
| 003 420 73 20 | 3908 |
| 003 420 73 20 | 3908/1 |
| 003 420 77 20 | 3908 |
| 003 420 77 20 | 3908/1 |
| 0034201020 | 3664/4 |
| 0034201620 | 3664/4 |
| 0034202020 | 3664/4 |
| 0034202220 | 3664 |
| 0034202220 | 3664/4 |
| 004 420 61 20 | 3908 |
| 004 420 61 20 | 3908/1 |
| 004 420 70 20 | 3902 |
| 004 420 70 20 | 3902/1 |
| 0044202220 | 3664 |
| 0044206020 | 3664 |
| 0044206020 | 4091 |
| 0044206020 | 3664/4 |
| 0044206120 | 3908 |
| 0044206120 | 3908/1 |
| 0044207020 | 3902 |
| 0044207020 | 3902/1 |
| 006 420 14 20 | 4050 |
| 006 420 14 20 | 4050/1 |

| OE | BESER® |
|---|---|
| 006 420 1420 | 4050 |
| 006 420 1420 | 4050/1 |
| 006 420 15 20 | 4051 |
| 006 420 15 20 | 4051/1 |
| 006 420 1520 | 4051 |
| 006 420 1520 | 4051/1 |
| 0064201020 | 3664/4 |
| 0064201120 | 4091 |
| 0064201420 | 4050 |
| 0064201420 | 4050/1 |
| 0064201520 | 4051 |
| 0064201520 | 4051/1 |
| 02.0312.15.00 | 3789 |
| 02.0312.15.00 | 3789/1 |
| 02.0312.15.00 | 3789/2 |
| 02.3350.13.09 | 3839 |
| 02.3350.13.09 | 3839/1 |
| 02.3350.13.09 | 3839/2 |
| 03057007700 | 3664/4 |
| 05.092.90.04.0 | 3789/1 |
| 05.092.90.04.0 | 3789/2 |
| 05.092.90.05.0 | 3789/1 |
| 05.092.90.05.0 | 3789/2 |
| 05.092.90.06.0 | 3902 |
| 05.092.90.06.0 | 3902/1 |
| 05.092.90.08.0 | 3902 |
| 05.092.90.08.0 | 3902/1 |
| 05.092.90.08.0 | 3902 |
| 05.092.90.08.0 | 3902/1 |
| 05.092.90.10.0 | 3789/1 |
| 05.092.90.10.0 | 3789/2 |
| 05.092.90.12.0 | 4052 |
| 05.092.90.13.0 | 4053 |

| OE | BESER® |
|---|---|
| 05.092.90.23.0 | 3902 |
| 05.092.90.23.0 | 3902/1 |
| 05.362.70.02.0 | 3664 |
| 0501 215 084 | 3664/4 |
| 0509290060 | 3902 |
| 0509290060 | 3902/1 |
| 0509290080 | 3902 |
| 0509290080 | 3902/1 |
| 0509290230 | 3902 |
| 0509290230 | 3902/1 |
| 0821.340.00 | 3664 |
| 0821.351.00 | 3664 |
| 082134000 | 3664/4 |
| 082135100 | 3664 |
| 082135100 | 3664/4 |
| 09.000.61.79.0 | 4052 |
| 09.000.61.79.1 | 4053 |
| 09.801.02.57.0 | 3664 |
| 09.801.02.75.0 | 3789 |
| 09.801.02.75.0 | 3789/1 |
| 09.801.02.75.0 | 3789/2 |
| 09.801.02.92.0 | 3664 |
| 09.801.02.93.0 | 3789 |
| 09.801.02.93.0 | 3789/1 |
| 09.801.02.93.0 | 3789/2 |
| 09.801.06.20.0 | 3664 |
| 09.801.06.21.0 | 3789 |
| 09.801.06.21.0 | 3789/1 |
| 09.801.06.21.0 | 3789/2 |
| 09.801.06.35.0 | 3789/1 |
| 09.801.06.35.0 | 3789/2 |
| 09.801.06.43.0 | 3789/1 |
| 09.801.06.43.0 | 3789/2 |

| OE | BESER® |
|---|---|
| 09.801.06.44.0 | 3902 |
| 09.801.06.44.0 | 3902/1 |
| 09.801.06.45.0 | 3664 |
| 09.801.06.95.0 | 3902 |
| 09.801.06.95.0 | 3902/1 |
| 09.801.06.96.0 | 3664 |
| 09.801.07.09.0 | 3789/1 |
| 09.801.07.09.0 | 3789/2 |
| 09.801.07.26.0 | 3902 |
| 09.801.07.26.0 | 3902/1 |
| 09.801.07.55.0 | 4052 |
| 09.801.07.57.0 | 4053 |
| 09.801.07.58.1 | 4053 |
| 09.801.07.96.0 | 4053 |
| 09291072 | 4130 |
| 0980106200 | 3664 |
| 0980106440 | 3902 |
| 0980106440 | 3902/1 |
| 0980106950 | 3902 |
| 0980106950 | 3902/1 |
| 0980107260 | 3902 |
| 0980107260 | 3902/1 |
| 1 057 0044 00 | 3498 |
| 1 078 439 | 3845 |
| 1 390 428 | 3664 |
| 1105624 | 3664/4 |
| 12182145 | 3565/3 |
| 12182192 | 3844 |
| 12999577 | 3565/3 |
| 12999667 | 3565/3 |
| 12999737 | 3844 |
| 12999743 | 3565/3 |
| 1390428 | 3664 |

| OE | BESER® |
|---|---|
| 1390428 | 3664/4 |
| 143 6901 | 3565 |
| 143 6901 | 3565/2 |
| 143 6901 | 3565/4 |
| 143 6901 | 3565/A |
| 1433011 | 3664/4 |
| 1439324 | 3664 |
| 152 27 419 T | 3828 |
| 152 27 419 T | 3828/1 |
| 152 27 419 T | 3828/3 |
| 1527633 | 3664 |
| 1527633 | 3664/4 |
| 1617343 | 3664 |
| 1617343 | 3664/4 |
| 162 8064 | 3844 |
| 1734529 | 3664 |
| 1734529 | 3664/4 |
| 190 6191 | 3525 |
| 190 6191 | 3525/A |
| 190 6439 | 3664 |
| 190 6456 | 3525 |
| 190 6456 | 3525/A |
| 190 6459 | 3525 |
| 190 6459 | 3525/A |
| 190 6467 | 3565 |
| 190 6467 | 3664 |
| 190 6467 | 3565/A |
| 190 7631 | 3525 |
| 190 7631 | 3525/A |
| 190 8614 | 3525 |
| 190 8614 | 3525/A |
| 1906439 | 3664/4 |
| 2 056 871 1 | 3917 |

| OE | BESER® |
|---|---|
| 2 056 871 1 | 3917/1 |
| 2 056 871 2 | 4047 |
| 2 056 871 4 | 3917 |
| 2 056 871 4 | 3917/1 |
| 2 056 871 5 | 4047 |
| 2 076 809 2 | 3845 |
| 2 078 078 8 | 3818 |
| 2 084 490 3 | 3818 |
| 2 102 470 1 | 3917 |
| 2 102 470 1 | 3917/1 |
| 2 102 470 1 | 3917 |
| 2 102 470 1 | 3917/1 |
| 2 102 470 2 | 3917 |
| 2 102 470 2 | 3917/1 |
| 2 135 257 0 | 3917 |
| 2 135 257 0 | 3917/1 |
| 2 149 655 0 | 3917 |
| 2 149 655 0 | 3917/1 |
| 204552 | 3664/4 |
| 205 687 11 | 3917 |
| 205 687 11 | 3917/1 |
| 211433057008000 | 3844 |
| 2611-12999747VT | 3870 |
| 2611-12999747VT | 3870/1 |
| 2611-12999747VT | 3870/2 |
| 299 2336 | 3789 |
| 299 2479 | 3525 |
| 299 2479 | 3525/A |
| 299 651 8 | 4169 |
| 299 652 0 | 4169 |
| 2992348 | 3664/4 |
| 2992476 | 3664/4 |
| 2995637 | 3664/4 |

| OE | BESER® |
|---|---|
| 2995809 | 3664/4 |
| 2995819 | 3664/4 |
| 2995938 | 3664/4 |
| 2996189 | 3664/4 |
| 2996378 | 3664/4 |
| 2996515 | 3664/4 |
| 3 057 0077 00 | 3664 |
| 3 057 0078 00 | 3789 |
| 3 057 0079 00 | 3664 |
| 3 057 0080 00 | 3844 |
| 3 057 0084 00 | 3839 |
| 3 057 0084 00 | 3839/1 |
| 3 057 0084 00 | 3839/2 |
| 3 057 0085 00 | 3902 |
| 3 057 0085 00 | 3902/1 |
| 3 093 919 | 3770 |
| 3 093 919 | 3770/1 |
| 3 095 396 | 3845 |
| 34202020 | 3664/4 |
| 356 421 02 10 | 3498 |
| 37 779 8138 40 | 3789 |
| 37 780 0062 00 | 3789 |
| 41211278 | 3664/4 |
| 41211279 | 3664/4 |
| 41212279 | 3664/4 |
| 425 592 48 | 4169 |
| 425 592 49 | 4169 |
| 44 0504 | 3870 |
| 44 0504 | 3870/1 |
| 44 0504 | 3870/2 |
| 485 6912 | 3525 |
| 485 6912 | 3525/A |
| 5 317 0023 00 | 3664 |

| OE | BESER® |
|---|---|
| 5 317 0024 00 | 3789 |
| 500054632 | 3664 |
| 500054632 | 3664/4 |
| 5001 823 000 | 3498 |
| 5001 831 161 | 3770 |
| 5001 831 161 | 3770/1 |
| 5001 833 104 | 3837 |
| 5001 833 114 | 3770 |
| 5001 833 114 | 3770/1 |
| 5001 834 075 | 3498 |
| 5001 846 034 | 3770 |
| 5001 846 034 | 3770/1 |
| 5001 855 646 | 3828 |
| 5001 855 646 | 3828/1 |
| 5001 855 646 | 3828/3 |
| 5001 855 902 | 3870 |
| 5001 855 902 | 3870/1 |
| 5001 855 902 | 3870/2 |
| 5001 857 615 | 3837 |
| 5001 864 363 | 3917 |
| 5001 864 363 | 3917/1 |
| 5001 864 363 | 3917 |
| 5001 864 363 | 3917/1 |
| 5001 864 364 | 3917 |
| 5001 864 364 | 3917/1 |
| 5001 864 365 | 4047 |
| 5001 866 914 | 3818 |
| 5010 216 437 | 3498 |
| 5010 598 372 | 3818 |
| 5010 848 607 | 3565 |
| 5010 848 607 | 3565/A |
| 5317002300 | 3664/4 |
| 5317002400 | 3664/4 |

| OE | BESER® |
|---|---|
| 683 26 055 | 4164 |
| 683 26 055 | 4164 |
| 68320504NGZ | 3498 |
| 68321345 | 3770 |
| 68321345 | 3770/1 |
| 68321799 | 3498 |
| 7073453861 | 3498 |
| 717 3317 | 3525 |
| 717 3317 | 3525/A |
| 7421 399 929 | 3917 |
| 7421 399 929 | 3917/1 |
| 7421 496 555 | 3917 |
| 7421 496 555 | 3917/1 |
| 790-22040 | 4130 |
| 8 285 000 571 | 3664 |
| 8 285 388 435 | 3497 |
| 8 285 388 435 | 3498 |
| 8 285 388 435 | 3497/1 |
| 8 285 388 436 | 3497 |
| 8 285 388 436 | 3498 |
| 8 285 388 436 | 3497/1 |
| 8 285 388 533 | 3497 |
| 8 285 388 533 | 3498 |
| 8 285 388 533 | 3497/1 |
| 8 285 388 535 | 3497 |
| 8 285 388 535 | 3498 |
| 8 285 388 535 | 3497/1 |
| 8 285 408 463 | 3497 |
| 8 285 408 463 | 3498 |
| 8 285 408 463 | 3497/1 |
| 8 285 408 464 | 3497 |
| 8 285 408 464 | 3498 |
| 8 285 408 464 | 3497/1 |

| OE | BESER® |
|---|---|
| 8 285 408 532 | 3498 |
| 8 285 408 534 | 3497 |
| 8 285 408 534 | 3498 |
| 8 285 408 534 | 3497/1 |
| 8 285 515 573 | 3664 |
| 8 285 521 000 | 3497 |
| 8 285 521 000 | 3498 |
| 8 285 521 000 | 3497/1 |
| 8 285 522 000 | 3497 |
| 8 285 522 000 | 3498 |
| 8 285 522 000 | 3497/1 |
| 8 285 525 000 | 3497 |
| 8 285 525 000 | 3498 |
| 8 285 525 000 | 3497/1 |
| 8 285 526 000 | 3497 |
| 8 285 526 000 | 3498 |
| 8 285 526 000 | 3497/1 |
| 8 550 611-1 | 3770 |
| 8 550 611-1 | 3770/1 |
| 81 50820 5005 | 3498 |
| 81 50820 5006 | 3497 |
| 81 50820 5006 | 3498 |
| 81 50820 5006 | 3497/1 |
| 81 50820 5007 | 3498 |
| 81 50820 5011 | 3565 |
| 81 50820 5011 | 3565/3 |
| 81 50820 5011 | 3565/A |
| 81 50820 5017 | 3789 |
| 81 50820 5020 | 3497 |
| 81 50820 5020 | 3498 |
| 81 50820 5020 | 3497/1 |
| 81 50820 5021 | 3497 |
| 81 50820 5021 | 3498 |

| OE | BESER® |
|---|---|
| 81 50820 5021 | 3497/1 |
| 81 50820 5022 | 3565 |
| 81 50820 5022 | 3565/3 |
| 81 50820 5022 | 3565/A |
| 81 50820 5023 | 3565 |
| 81 50820 5023 | 3565/3 |
| 81 50820 5023 | 3565/A |
| 81 50820 5024 | 3565 |
| 81 50820 5024 | 3565/3 |
| 81 50820 5024 | 3565/A |
| 81 50820 5025 | 3565 |
| 81 50820 5025 | 3565/3 |
| 81 50820 5025 | 3565/A |
| 81 50820 5029 | 3565 |
| 81 50820 5029 | 3565/3 |
| 81 50820 5029 | 3565/A |
| 81 50820 5030 | 3565 |
| 81 50820 5030 | 3565/3 |
| 81 50820 5030 | 3565/A |
| 81 50820 5040 | 3497 |
| 81 50820 5040 | 3498 |
| 81 50820 5040 | 3497/1 |
| 81 50820 5041 | 3497 |
| 81 50820 5041 | 3498 |
| 81 50820 5041 | 3497/1 |
| 81 50820 5047 | 3497 |
| 81 50820 5047 | 3498 |
| 81 50820 5047 | 3497/1 |
| 81 50820 5048 | 3497 |
| 81 50820 5048 | 3498 |
| 81 50820 5048 | 3497/1 |
| 81 50820 5064 | 3498 |
| 81 50820 5066 | 3498 |

| OE | BESER® |
|---|---|
| 81 50820 5072 | 3828 |
| 81 50820 5072 | 3828/1 |
| 81 50820 5072 | 3828/2 |
| 81 50820 5072 | 3828/3 |
| 81 50820 5085 | 3908 |
| 81 50820 5085 | 3908/1 |
| 81 50820 6000 | 3497 |
| 81 50820 6000 | 3498 |
| 81 50820 6000 | 3497/1 |
| 81 50820 6001 | 3497 |
| 81 50820 6001 | 3498 |
| 81 50820 6001 | 3497/1 |
| 81 50820 6002 | 3497 |
| 81 50820 6002 | 3498 |
| 81 50820 6002 | 3497/1 |
| 81 50820 6003 | 3497 |
| 81 50820 6003 | 3498 |
| 81 50820 6003 | 3497/1 |
| 81 50820 6004 | 3497 |
| 81 50820 6004 | 3498 |
| 81 50820 6004 | 3497/1 |
| 81 50820 6005 | 3497 |
| 81 50820 6005 | 3498 |
| 81 50820 6005 | 3497/1 |
| 81 50820 6006 | 3565 |
| 81 50820 6006 | 3565/3 |
| 81 50820 6006 | 3565/A |
| 81 50820 6007 | 3565 |
| 81 50820 6007 | 3565/3 |
| 81 50820 6007 | 3565/A |
| 81 50820 6008 | 3789 |
| 81 50820 6014 | 3497 |
| 81 50820 6014 | 3498 |

| OE | BESER® |
|---|---|
| 81 50820 6014 | 3497/1 |
| 81 50820 6015 | 3497 |
| 81 50820 6015 | 3498 |
| 81 50820 6015 | 3497/1 |
| 81 50820 6016 | 3497 |
| 81 50820 6016 | 3498 |
| 81 50820 6016 | 3497/1 |
| 81 50820 6017 | 3498 |
| 81 50820 6019 | 3498 |
| 81 50820 6020 | 3565 |
| 81 50820 6020 | 3565/3 |
| 81 50820 6020 | 3565/A |
| 81 50820 6021 | 3565 |
| 81 50820 6021 | 3565/3 |
| 81 50820 6021 | 3565/A |
| 81 50820 6022 | 3789 |
| 81 50820 6024 | 3498 |
| 81 50820 6025 | 3497 |
| 81 50820 6025 | 3498 |
| 81 50820 6025 | 3497/1 |
| 81 50820 6026 | 3498 |
| 81 50820 6034 | 3498 |
| 81 50820 6035 | 3497 |
| 81 50820 6035 | 3498 |
| 81 50820 6035 | 3497/1 |
| 81 50820 6036 | 3497 |
| 81 50820 6036 | 3498 |
| 81 50820 6036 | 3497/1 |
| 81 50820 6041 | 3828 |
| 81 50820 6041 | 3828/1 |
| 81 50820 6041 | 3828/2 |
| 81 50820 6041 | 3828/3 |
| 81 50820 6042 | 3565 |

| OE | BESER® |
|---|---|
| 81 50820 6042 | 3565/3 |
| 81 50820 6042 | 3565/A |
| 81 50820 6043 | 3908 |
| 81 50820 6043 | 3908/1 |
| 81 50820 6044 | 3498 |
| 81 50820 6046 | 3498 |
| 81 50820 6051 | 3828 |
| 81 50820 6051 | 3828/1 |
| 81 50820 6051 | 3828/2 |
| 81 50820 6051 | 3828/3 |
| 81 50820 6052 | 3828/3 |
| 81 50820 6054 | 3908 |
| 81 50820 6054 | 3908/1 |
| 81 50820 8085 | 3908 |
| 81 50820 8085 | 3908/1 |
| 81.50820.6030 | 3664 |
| 81.50820-5112 | 4129 |
| 81.50820-6065 | 4129 |
| 81.50820-6066 | 4129 |
| 81508206030 | 3664 |
| 81508206030 | 3664/4 |
| 81508206032 | 3664/4 |
| 81508206033 | 3664/4 |
| 81508206055 | 3664/4 |
| 81508206056 | 3664 |
| 81508206056 | 3664/4 |
| 81508206061 | 3664 |
| 81508206066 | 3664/4 |
| 82134000 | 3664/4 |
| 82135100 | 3664/4 |
| 8285000571 | 3664/4 |
| 8285515573 | 3664/4 |
| 9291037 | 3664/4 |

| OE | BESER® |
|---|---|
| 9291072 | 4130 |
| 99476098 | 3664/4 |
| A 006 420 14 20 | 4050 |
| A 006 420 14 20 | 4050/1 |
| A 006 420 15 20 | 4051 |
| A 006 420 15 20 | 4051/1 |
| A0024204920 | 3664/4 |
| A0034201020 | 3664/4 |
| A0034201620 | 3664/4 |
| A0034202020 | 3664/4 |
| A0034202220 | 3664/4 |
| A0044206020 | 3664/4 |
| A0064201020 | 3664/4 |
| K 003 965 | 3789/1 |
| K 003 965 | 3789/2 |
| K011234 | 3902 |
| K011234 | 3902/1 |
| MDP5093 | 4131 |
| MDP5101 | 3917 |
| MDP5101 | 3917/1 |
| MDP-5101 | 3917 |
| MDP-5101 | 3917/1 |
| MDP5117 | 4164 |
| Q8285515573 | 3664/4 |
| RD37-010 | 4164 |
| V2992348 | 3664/4 |

| REMSA | BESER® |
|---|---|
| 498.02 | 3525 |
| 498.02 | 3525/A |
| 506.02 | 3497 |
| 506.02 | 3497/1 |
| 622.00 | 3770 |
| 622.00 | 3770/1 |
| 658.00 | 3565 |
| 658.00 | 3565/1 |
| 658.00 | 3565/A |
| 1074.00 | 3902 |
| 1074.00 | 3902/1 |
| 1074.80 | 3902 |
| 1074.80 | 3902/1 |
| 1156.00 | 4131 |
| 1399.00 | 4169 |
| JCA 637.00 | 3664 |
| JCA658.80 | 3565/3 |
| JCA 680.00 | 3837 |
| JCA 1032.00 | 3870/1 |
| JCA 1032.30 | 3870/2 |
| JCA 1033.00 | 3845 |
| JCA 1084.00 | 3789/1 |
| JCA 1084.00 | 3789/2 |
| JCA 1254.80 | 3844 |
| JCA 1257.00 | 3917 |
| JCA 1257.00 | 3917/1 |
| JCA 1316.00 | 4130 |
| JCA 1383.80 | 4164 |
| JCA 1479.00 | 4051 |
| JCA 1479.00 | 4051/1 |
| JCA 1480.00 | 4050 |
| JCA 1480.00 | 4050/1 |
| JCA 1526.00 | 4129 |

| TEXTAR | BESER® |
|---|---|
| 2901105 | 3525 |
| 2905301 | 3498 |
| 2908402 | 3497 |
| 2908871 | 3565/3 |
| 2909006 | 3770 |
| 2910004 | 3837 |
| 2912503 | 3845 |
| 2913103 | 3828/3 |
| 2914106 | 3870 |
| 2915901 | 3844 |
| 2916201 | 3839 |
| 2917501 | 4130 |
| 2917501 | 3818 |
| 2917701 | 4131 |
| 2924401 | 4051 |
| 2924401 | 4051/1 |
| 2924601 | 4050 |
| 2924601 | 4050/1 |
| 2925601 | 4169 |
| 2927801 | 4091 |
| 2927901 | 4129 |
| 29084302 | 3497/1 |
| 29087300 | 3664 |
| 29088260 | 3565/4 |
| 29148340 | 3908 |
| 29148340 | 3908/1 |
| 29165300 | 3789/1 |
| 29165300 | 3789/2 |
| 29171300 | 3902 |
| 29171300 | 3902/1 |
| 29174292 | 3917 |
| 29174292 | 3917/1 |
| 29202300 | 3664 |

| TRW/LUCAS | BESER® |
|---|---|
| GDB5000 | 3497 |
| GDB5000 | 3497/1 |
| GDB5019 | 3770 |
| GDB5019 | 3770/1 |
| GDB5024 | 3525 |
| GDB5024 | 3525/A |
| GDB5067 | 3664 |
| GDB5067 | 3565 |
| GDB5067 | 4129 |
| GDB5069 | 3565/A |
| GDB5071 | 3837 |
| GDB5072 | 3789 |
| GDB5073 | 3908 |
| GDB5073 | 3908/1 |
| GDB5084 | 3870 |
| GDB5084 | 3870/1 |
| GDB5084 | 3870/2 |
| GDB5085 | 3845 |
| GDB5086 | 3828 |
| GDB5086 | 3828/1 |
| GDB5086 | 3828/3 |
| GDB5091 | 3664/2 |
| GDB5092 | 3789/1 |
| GDB5092 | 3789/2 |
| GDB5093 | 3902 |
| GDB5093 | 3902/1 |
| GDB5094 | 3839 |
| GDB5094 | 3839/1 |
| GDB5094 | 3839/2 |
| GDB5095 | 3844 |
| GDB5096 | 3917 |
| GDB5096 | 3917/1 |
| GDB5098 | 4131 |

| TRW/LUCAS | BESER® |
|---|---|
| GDB5104 | 4052 |
| GDB5105 | 4053 |
| GDB5110 | 4051 |
| GDB5111 | 4050 |
| GDB5112 | 4164 |
| GDB5113 | 4169 |
| GDB5114 | 4129 |
| GDB5115 | 4130 |

| WVA | BESER® |
|---|---|
| 29011 | 3525 |
| 29011 | 3525/A |
| 29022 | 3845 |
| 29030 | 3497 |
| 29030 | 3498 |
| 29030 | 3497/1 |
| 29042 | 3664 |
| 29046 | 3664 |
| 29053 | 3497 |
| 29053 | 3498 |
| 29053 | 3497/1 |
| 29056 | 3664 |
| 29059 | 3664 |
| 29061 | 3664 |
| 29083 | 3497 |
| 29083 | 3498 |
| 29083 | 3497/1 |
| 29084 | 3497 |
| 29084 | 3498 |
| 29084 | 3497/1 |
| 29087 | 3664 |
| 29088 | 3565 |
| 29088 | 3565/1 |
| 29088 | 3565/2 |
| 29088 | 3565/3 |
| 29088 | 3565/4 |
| 29088 | 3565/A |
| 29090 | 3770 |
| 29090 | 3770/1 |
| 29091 | 3565 |
| 29091 | 3565/1 |
| 29091 | 3565/A |
| 29093 | 3789 |

| WVA | BESER® |
|---|---|
| 29094 | 3789 |
| 29095 | 3789 |
| 29096 | 3789 |
| 29100 | 3837 |
| 29105 | 3664 |
| 29105 | 3664/1 |
| 29106 | 3664 |
| 29108 | 3664 |
| 29109 | 3664 |
| 29113 | 3497 |
| 29113 | 3498 |
| 29113 | 3497/1 |
| 29114 | 3497 |
| 29114 | 3498 |
| 29114 | 3497/1 |
| 29115 | 3908 |
| 29115 | 3908/1 |
| 29116 | 3908 |
| 29116 | 3908/1 |
| 29119 | 3870 |
| 29119 | 3870/1 |
| 29119 | 3870/2 |
| 29125 | 3845 |
| 29126 | 3844 |
| 29131 | 3828 |
| 29131 | 3828/1 |
| 29131 | 3828/2 |
| 29131 | 3828/3 |
| 29141 | 3870 |
| 29141 | 3870/1 |
| 29141 | 3870/2 |
| 29142 | 3870 |
| 29142 | 3870/1 |

| WVA | BESER® |
|---|---|
| 29142 | 3870/2 |
| 29145 | 3789 |
| 29146 | 3669 |
| 29147 | 3818 |
| 29148 | 3908 |
| 29148 | 3908/1 |
| 29156 | 3828 |
| 29156 | 3828/1 |
| 29158 | 3902 |
| 29158 | 3902/1 |
| 29159 | 3844 |
| 29162 | 3839 |
| 29162 | 3839/1 |
| 29162 | 3839/2 |
| 29163 | 3664 |
| 29165 | 3789/1 |
| 29165 | 3789/2 |
| 29167 | 3664/2 |
| 29169 | 4131 |
| 29171 | 3902 |
| 29171 | 3902/1 |
| 29173 | 4047 |
| 29174 | 3917 |
| 29174 | 3917/1 |
| 29175 | 4130 |
| 29177 | 4131 |
| 29179 | 3664 |
| 29181 | 3818 |
| 29183 | 3908 |
| 29183 | 3908/1 |
| 29184 | 3789 |
| 29195 | 4130 |
| 29196 | 3664 |

| WVA | BESER® |
|---|---|
| 29197 | 3789 |
| 29198 | 4130 |
| 29201 | 3664 |
| 29202 | 3664 |
| 29203 | 4047 |
| 29204 | 3917 |
| 29204 | 3917/1 |
| 29207 | 3818 |
| 29210 | 3497 |
| 29210 | 3498 |
| 29210 | 3497/1 |
| 29211 | 4164 |
| 29215 | 3789/1 |
| 29215 | 3789/2 |
| 29218 | 3917 |
| 29218 | 3917/1 |
| 29219 | 3917 |
| 29219 | 3917/1 |
| 29223 | 4129 |
| 29224 | 3845 |
| 29226 | 3917 |
| 29226 | 3917/1 |
| 29227 | 4052 |
| 29228 | 4053 |
| 29244 | 4051 |
| 29244 | 4051/1 |
| 29245 | 4051 |
| 29245 | 4051/1 |
| 29246 | 4050 |
| 29246 | 4050/1 |
| 29247 | 4050 |
| 29247 | 4050/1 |
| 29252 | 4091 |

| WVA | BESER® | | BESER® | | BESER® | | BESER® |
|---|---|---|---|---|---|---|---|
| 29253 | 4091 | | | | | | |
| 29255 | 4091 | | | | | | |
| 29256 | 4169 | | | | | | |
| 29266 | 4091 | | | | | | |
| 29271 | 3902 | | | | | | |
| 29271 | 3902/1 | | | | | | |
| 29272 | 4047 | | | | | | |
| 29274 | 4130 | | | | | | |
| 29277 | 3845 | | | | | | |
| 29278 | 4091 | | | | | | |
| 29279 | 4129 | | | | | | |
| 29291 | 4164 | | | | | | |
| 29293 | 4091 | | | | | | |
| 29294 | 4130 | | | | | | |
| 29308 | 3902 | | | | | | |
| 29308 | 3902/1 | | | | | | |
| 29316 | 4052 | | | | | | |
| 29317 | 4053 | | | | | | |
| 29337 | 4129 | | | | | | |
| 29355 | 4053 | | | | | | |

Ayhan Sk. No: 20 Aegean Free Zone Gaziemir - Izmir / TURKEY
Tel: +90 232 252 54 20 • Fax: +90 232 252 54 22
export@beser.com.tr • www.beser.com.tr