BEŞER®

Balatacılık San. ve Tic. A.Ş.

CATALOGUE/CATALOGO/КАТАЛОГ/قائمة مبوبة/KATALOG

BRAKE PAD ILLUSTRATIONS

CONTENTS

VEHICLE APPLICATION 1

BRAKE PAD ILLUSTRATIONS 721

MANUFACTURERS CROSS REFERENCE TABLE 767

CROSS REFERENCE 1249

VEHICLE APPLICATION

MAKE & MODEL   		KW	YEAR		
ABARTH					
RITMO (138A_)	125 TC 2.0	92	11/81 – 12/87	3329/1	
RITMO (138A_)	125 TC 2.0	92	11/81 – 12/87	3348	
RITMO (138A_)	125 TC 2.0	92	11/81 – 12/87	3349	
RITMO (138A_)	125 TC 2.0	92	11/81 – 12/87	3466	
RITMO (138A_)	125 TC 2.0	92	11/81 – 12/87	3468	
RITMO (138A_)	130 TC 2.0	96	04/83 – 12/87	3329/1	
RITMO (138A_)	130 TC 2.0	96	04/83 – 12/87	3348	
RITMO (138A_)	130 TC 2.0	96	04/83 – 12/87	3349	
RITMO (138A_)	130 TC 2.0	96	04/83 – 12/87	3466	
RITMO (138A_)	130 TC 2.0	96	04/83 – 12/87	3468	
ACURA					
INTEGRA Coupe	15	63	01/85 – 12/90	3582	
INTEGRA Coupe	15	63	01/85 – 12/90		4212
INTEGRA Coupe	16	74	01/85 – 12/90	3582	
INTEGRA Coupe	16	74	01/85 – 12/90		4212
INTEGRA Coupe	1.6 i	88	01/85 – 12/90	3582	
INTEGRA Coupe	1.6 i	88	01/85 – 12/90		4212
INTEGRA Hatchback	15	63	01/85 – 12/90	3582	
INTEGRA Hatchback	15	63	01/85 – 12/90		4212
INTEGRA Hatchback	16	74	01/85 – 12/90	3582	
INTEGRA Hatchback	16	74	01/85 – 12/90		4212
INTEGRA Hatchback	1.6 i	88	01/85 – 12/90	3582	
INTEGRA Hatchback	1.6 i	88	01/85 – 12/90		4212
INTEGRA Saloon	15	63	01/85 – 12/90	3582	
INTEGRA Saloon	15	63	01/85 – 12/90		4212
INTEGRA Saloon	16	74	01/85 – 12/90	3582	
INTEGRA Saloon	16	74	01/85 – 12/90		4212
INTEGRA Saloon	1.6 i	88	01/85 – 12/90	3582	
INTEGRA Saloon	1.6 i	88	01/85 – 12/90		4212
LEGEND	20	107	01/88 – 08/91	3631	
LEGEND	20	107	01/88 – 08/91		4148
LEGEND	25	122	01/86 – 12/87	3631	
LEGEND	25	122	01/86 – 12/87		4148
LEGEND	27	130	01/87 – 08/91	3631	
LEGEND	27	130	01/87 – 08/91		4148
LEGEND	2.0 Turbo	140	01/88 – 08/91	3631	
LEGEND	2.0 Turbo	140	01/88 – 08/91		4148
LEGEND Coupe	27	130	01/87 – 08/91	3631	
LEGEND Coupe	27	130	01/87 – 08/91		4148
LEGEND II	32	151	08/91 – 08/96	3704	
LEGEND II Coupe	32	151	08/91 08/96	3704	
LEGEND III	35	151	08/96 -	3704	
LEGEND III	35	151	08/96 -		4148
MDX (YD1)	3.5 All-wheel Drive	179	03/01 – 12/05	3932	
MDX (YD1)	3.5 All-wheel Drive	186	08/05 – 09/06	3932	
MDX (YD1)	3.5 All-wheel Drive	193	08/00 – 12/05	3932	
MDX (YD2)	3.7 AWD	220	10/06 -	3932	
MDX (YD2)	3.7 AWD	224	10/06 -	3932	
MDX (YD2)	3.7 AWD	227	10/06 -	3932	
MDX (YD3)	35	216	11/13 -		4148
NSX	30	201	01/90 – 08/97	3704	
NSX	32	206	08/97 -	3704	
NSX	R 3.0	188	01/92 – 08/97	3704	
NSX Targa (NA1)	30	201	01/95 – 12/96	3704	
NSX Targa (NA1)	T 3.0	188	01/95 – 12/97	3704	
SLX	3.2 4WD	140	11/95 – 09/99	3674	
SLX	3.2 4WD	140	11/95 – 09/99	3743	
SLX	3.2 4WD	140	11/95 – 09/99		3887
SLX	3.5 4WD	151	11/97 – 09/99	3674	
SLX	3.5 4WD	151	11/97 – 09/99	3743	
SLX	3.5 4WD	151	11/97 – 09/99		3887
TL	32	168	10/98 – 09/03	4109	
TL	32	168	10/98 – 09/03		4148
TL	32	168	10/98 – 09/03	4232	
TL	3.2 Type S	191	06/01 – 09/03	4109	
TL	3.2 Type S	191	06/01 – 09/03		4148
TL	3.2 Type S	191	06/01 – 09/03	4232	
TL (UC_)	32	190	08/05 – 12/08	4109	
TL (UC_)	32	190	08/05 – 12/08	4232	
TL (UC_)	35	210	11/06 – 11/12	4109	
TL (UC_)	35	210	11/06 – 11/12	4232	

MAKE & MODEL		KW	YEAR		
ACURA					
TL (UC_)	3.2 S	198	10/03 – 12/08	4109	
TL (UC_)	3.2 S	198	10/03 – 12/08	4232	
VIGOR	25	131	09/91 – 09/94		4148
VIGOR	25	140	09/91 – 09/94		4148
AIXAM					
400	0.4	4	06/00 – 08/02	3748	
400	0.5	4	01.00 -		3747
500	0.5 (LGW 523)	15	09/03 – 07/05	3748	
500	0.5 (LWG 523)	15	09/03 – 07/05	3748	
500 Box Body / Hatchback	0.5	15	09.03 - 12.04		3747
500 Convertible	0.5 D	10	10.96 - 09.02		3747
500 Hatchback	0.5	15	09.03 - 07.05		3747
500 Hatchback	0.5 D	10	12.97 - 03.04		3747
A.721	0.4 D	4	01/05 -	3748	
A.721	0.4 D	4	01.05 -		3747
A.741	0.4 D	4	01/05 -	3748	
A.741	0.4 D	4	01.05 -		3747
A.751	0.5 (LGW 523)	15	07/05 – 03/10	3748	
A.751	0.5 (LWG 523)	15	07/05 – 03/10	3748	
A.751	0.5 D (Z 482)	10	01/05 -	3748	
A.751	0.5 D	10	01.05 -		3747
ALFA ROMEO					
145 (930_)	1.4 i.e.	66	07/94 – 12/96	3466	
145 (930_)	1.4 i.e.	66	07/94 – 12/96	3468	
145 (930_)	1.6 i.e.	76	10/94 – 12/96	3466	
145 (930_)	1.6 i.e.	76	10/94 – 12/96	3468	
145 (930_)	1.7 i.e. 16V	95	10/94 – 12/96	3466	
145 (930_)	1.7 i.e. 16V	95	10/94 – 12/96	3468	
145 (930_)	1.8 i.e. 16V T.S.	103	12/96 – 12/98	3466	
145 (930_)	1.8 i.e. 16V T.S.	103	12/96 – 12/98	3468	
145 (930_)	1.9 JTD	77	02/99 – 01/01	3618	
145 (930_)	1.9 TD	66	10/94 – 02/99	3466	
145 (930_)	1.9 TD	66	10/94 – 02/99	3468	
146 (930_)	1.4 i.e.	66	12/94 – 12/96	3466	
146 (930_)	1.4 i.e.	66	12/94 – 12/96	3468	
146 (930_)	1.6 i.e.	76	12/94 – 12/96	3466	
146 (930_)	1.6 i.e.	76	12/94 – 12/96	3468	
146 (930_)	1.7 i.e. 16V	95	12/94 – 12/96	3466	
146 (930_)	1.7 i.e. 16V	95	12/94 – 12/96	3468	
146 (930_)	1.9 JTD	77	02/99 – 01/01	3618	
146 (930_)	1.9 TD	66	12/94 – 02/99	3466	
146 (930_)	1.9 TD	66	12/94 – 02/99	3468	
147 (937_)	20	121	07/02 – 05/05		4123
147 (937_)	1.6 16V T.SPARK (937AXB1A)	88	01/01 – 03/10		4123
147 (937_)	1.6 16V T.SPARK ECO (937AXA1A)	77	01/01 – 03/10		4123
147 (937_)	1.9 JTD	74	06/03 – 03/10		4123
147 (937_)	1.9 JTD (937AXD1A)	85	04/01 – 03/10		4123
147 (937_)	1.9 JTD 16V	93	09/03 – 09/04		4123
147 (937_)	1.9 JTD 16V	100	10/04 – 03/10		4123
147 (937_)	1.9 JTDM	85	10/04 – 03/10		4123
147 (937_)	1.9 JTDM 16V	110	09/04 – 03/10		4123
147 (937_)	1.9 JTDM 16V	125	06/08 – 03/10		4123
147 (937_)	1.9 JTDM 8V	88	07/05 – 03/10		4123
147 (937_)	2.0 16V T.SPARK (937AXC1_)	110	01/01 – 03/10		4123
147 (937_)	3.2 GTA	184	02/03 – 03/10		4123
155 (167_)	1.6 16V T.S.	88	05/96 – 12/97	3466	
155 (167_)	1.6 16V T.S.	88	05/96 – 12/97	3468	
155 (167_)	1.7 T.S.	83	04/93 – 04/96	3466	
155 (167_)	1.7 T.S.	83	04/93 – 04/96	3468	
155 (167_)	1.7 T.S. (167.A4D, 167.A4H)	85	04/93 – 04/96	3466	
155 (167_)	1.7 T.S. (167.A4D, 167.A4H)	85	04/93 – 04/96	3468	
155 (167_)	1.7 T.S. 16V	103	05/96 – 12/97	3466	
155 (167_)	1.7 T.S. 16V	103	05/96 – 12/97	3468	
155 (167_)	1.8 T.S.	77	02/92 – 12/97	3466	
155 (167_)	1.8 T.S.	77	02/92 – 12/97	3468	
155 (167_)	1.8 T.S.	95	02/92 – 06/93	3466	
155 (167_)	1.8 T.S.	95	02/92 – 06/93	3468	
155 (167_)	1.8 T.S. Sport (167.A4A, 167.A4C, 167.A4E)	93	01/92 – 12/96	3466	
155 (167_)	1.8 T.S. Sport (167.A4A, 167.A4C, 167.A4E)	93	01/92 – 12/96	3468	
155 (167_)	1.9 TD (167.A3)	66	04/93 – 12/97	3466	

MAKE & MODEL		KW	YEAR		
ALFA ROMEO					
155 (167_)	1.9 TD (167.A3)	66	04/93 – 12/97	3468	
155 (167_)	2.0 T.S. (167.A2)	106	02/92 – 04/93	3466	
155 (167_)	2.0 T.S. (167.A2)	106	02/92 – 04/93	3468	
155 (167_)	2.0 T.S. (167.A2A)	104	02/92 – 02/95	3466	
155 (167_)	2.0 T.S. (167.A2A)	104	02/92 – 02/95	3468	
155 (167_)	2.0 T.S. 16V (167.A2G)	110	03/95 – 12/97	3466	
155 (167_)	2.0 T.S. 16V (167.A2G)	110	03/95 – 12/97	3468	
156 (932_)	1.6 16V T.SPARK	82	09/97 – 09/05		4123
156 (932_)	1.6 16V T.SPARK (932A4)	88	09/97 – 09/05		4123
156 (932_)	1.8 16V T.SPARK (932A31_)	103	10/00 – 09/05		4123
156 (932_)	1.9 JTD	93	11/03 – 09/05		4123
156 (932_)	1.9 JTD	100	11/02 – 11/04		4123
156 (932_)	1.9 JTD	110	07/04 – 09/05		4123
156 (932_)	1.9 JTD (932A2B, 932A2C)	85	05/01 – 09/05		4123
156 (932_)	1.9 JTD 16V	103	11/02 – 09/05		4123
156 (932_)	2.0 16V T.SPARK (932A21_)	110	10/00 – 03/02		4123
156 (932_)	2.0 JTS (932AXA)	122	03/02 – 09/05		4123
156 (932_)	2.4 JTD	120	06/03 – 09/05		4123
156 (932_)	2.4 JTD	129	10/03 – 09/05		4123
156 (932_)	2.4 JTD (932A1B_)	103	10/00 – 09/05		4123
156 (932_)	2.4 JTD (932AXC)	110	03/02 – 09/05		4123
156 (932_)	2.5 V6 24V (932A11_)	141	10/00 – 09/05		4123
156 (932_)	3.2 GTA (932AXB)	184	03/02 – 09/05		4123
156 Sportwagon (932_)	1.6 16V T.SPARK	82	01/00 – 09/05		4123
156 Sportwagon (932_)	1.6 16V T.SPARK. (932A4)	88	05/00 – 05/06		4123
156 Sportwagon (932_)	1.8 16V T.SPARK (932B31_)	103	10/00 – 05/06		4123
156 Sportwagon (932_)	1.9 JTD	93	11/03 – 05/06		4123
156 Sportwagon (932_)	1.9 JTD	100	11/02 – 11/04		4123
156 Sportwagon (932_)	1.9 JTD	110	03/05 – 05/06		4123
156 Sportwagon (932_)	1.9 JTD (932B2B, 932B2C)	85	05/01 – 05/06		4123
156 Sportwagon (932_)	1.9 JTD 16V	103	11/02 – 05/06		4123
156 Sportwagon (932_)	1.9 JTD 16V Q4	110	07/04 – 05/06		4123
156 Sportwagon (932_)	2.0 16V T.SPARK (932B21_)	110	10/00 – 03/02		4123
156 Sportwagon (932_)	2.0 JTS	119	03/02 – 05/06		4123
156 Sportwagon (932_)	2.0 JTS (932BXA)	122	03/02 – 05/06		4123
156 Sportwagon (932_)	2.4 JTD	120	06/03 – 05/06		4123
156 Sportwagon (932_)	2.4 JTD	129	10/03 – 05/06		4123
156 Sportwagon (932_)	2.4 JTD (932B1B_)	103	10/00 – 05/06		4123
156 Sportwagon (932_)	2.4 JTD (932BXC)	110	03/02 – 05/06		4123
156 Sportwagon (932_)	2.5 V6 24V (932B11_)	141	10/00 – 05/06		4123
156 Sportwagon (932_)	3.2 GTA (932BXB)	184	03/02 – 05/06		4123
164 (164_)	20	102	06/87 – 09/98		3536
164 (164_)	20	105	11/87 – 10/92		3536
164 (164_)	30	138	11/87 – 09/91		3536
164 (164_)	30	145	10/94 – 08/97		3536
164 (164_)	30	156	09/93 – 12/95		3536
164 (164_)	30	157	03/95 – 10/97		3536
164 (164_)	30	168	04/93 – 02/95		3536
164 (164_)	30	170	03/95 – 08/97		3536
164 (164_)	2.0 T.S. (164.A2C, 164.A2L)	105	06/87 – 09/92		3536
164 (164_)	2.0 T.S. (164.A2H)	109	06/87 – 12/90		3536
164 (164_)	2.0 T.S. (164.H3)	106	09/92 – 09/98		3536
164 (164_)	2.0 Turbo	128	10/87 – 09/98		3536
164 (164_)	2.0 Turbo	129	02/88 – 10/92		3536
164 (164_)	2.0 Turbo	152	07/90 – 10/92		3536
164 (164_)	2.0 Twin Spark	105	07/90 – 10/92		3536
164 (164_)	2.0 Twin Spark	109	06/87 – 06/90		3536
164 (164_)	2.0 V6 Turbo (164.A2G, 164.A2F)	150	03/91 – 09/92		3536
164 (164_)	2.0 V6 Turbo (164.K3)	148	09/92 – 09/98		3536
164 (164_)	2.5 TD (164.A1A)	84	06/87 – 09/92		3536
164 (164_)	2.5 TD (164.K2A, 164.K2B)	92	09/92 – 09/98		3536
164 (164_)	2.5 V6	120	09/92 – 09/98		3536
164 (164_)	3.0 24V	154	03/95 – 10/97		3536
164 (164_)	3.0 24V (164.K1)	155	09/92 – 09/98		3536
164 (164_)	3.0 24V QV (164.H1)	171	09/92 – 09/98		3536
164 (164_)	3.0 i.e. QV (164.AG)	147	09/90 – 09/92		3536
164 (164_)	3.0 V6 (164.A)	141	06/87 – 09/92		3536
164 (164_)	3.0 V6 (164.AD, 164.AH,164.AB)	135	06/87 – 09/92		3536
164 (164_)	3.0 V6 (164.H1A, 164.H1B,164.K1P)	132	09/92 – 09/98		3536
166 (936_)	2.0 T.Spark (936A3A_)	114	09/98 – 10/00	3617	
166 (936_)	2.0 T.Spark (936A3B_)	110	10/00 – 06/07	3617	

MAKE & MODEL		KW	YEAR		
ALFA ROMEO					
166 (936_)	2.4 JTD	110	04/02 – 06/07	3617	
166 (936_)	2.4 JTD	120	10/03 – 06/07	3617	
166 (936_)	2.4 JTD (936A2A_)	100	09/98 – 10/00	3617	
166 (936_)	2.4 JTD (936A2B_)	103	10/00 – 06/07	3617	
6 (119_)	20	99	07/81 – 12/86	3331/1	
6 (119_)	2.5 i.e.	116	04/79 – 06/84	3331/1	
6 (119_)	2.5 i.e. (119.AA, 119.AB)	110	10/83 – 12/86	3331/1	
6 (119_)	2.5 TD	77	07/81 – 05/86	3331/1	
75 (162B_)	16	76	05/85 – 09/89	3353	
75 (162B_)	18	95	05/89 – 12/92	3353	
75 (162B_)	1.6 (162.B2B, 162.B2C)	81	05/85 – 09/89	3353	
75 (162B_)	1.6 (162.B2B, 162.B2C) CAT	81	05/89 – 02/92	3353	
75 (162B_)	1.8 (162.B1A, 162.B1B)	85	09/85 – 06/89	3353	
75 (162B_)	1.8 (162.B1H)	90	08/89 – 02/92	3353	
75 (162B_)	1.8 (162.B1H)	95	08/89 – 02/92	3353	
75 (162B_)	1.8 (162.B1L, 162.B1F)	88	09/88 – 02/92	3353	
75 (162B_)	1.8 Turbo i.e. (162.B1E)	114	02/86 – 01/90	3353	
ALFASUD (902.A)	1.3 (AR 30184)	55	09/76 – 12/81	3325	
ALFASUD (902.A)	1.4 (AR 30164)	55	05/78 – 02/80	3325	
ALFASUD (902.A)	1.4 (AR 30168)	63	07/79 – 12/89	3325	
ALFASUD (902.A)	1.5 (AR 30124)	61	05/78 – 12/81	3325	
ALFASUD (902.A)	1.5 (AR 30128)	70	07/79 – 01/87	3325	
ALFASUD (902.A)	1.5 (AR 30146)	77	01/83 – 12/88	3325	
ALFASUD (902.A)	1.5 Veloce (AR 30146)	75	01/80 – 12/89	3325	
ALFETTA (116_)	18	85	07/74 – 12/77	3318	
ALFETTA (116_)	18	85	07/74 – 12/77	3338	
ALFETTA (116_)	18	85	07/74 – 12/77	3353	
ALFETTA (116_)	18	85	07/74 – 12/77	3362	
ALFETTA (116_)	18	89	10/79 – 12/84	3318	
ALFETTA (116_)	18	89	10/79 – 12/84	3338	
ALFETTA (116_)	18	89	10/79 – 12/84	3353	
ALFETTA (116_)	18	89	10/79 – 12/84	3362	
ALFETTA (116_)	1.6 (116.B1A)	79	01/75 – 12/84	3318	
ALFETTA (116_)	1.6 (116.B1A)	79	01/75 – 12/84	3338	
ALFETTA (116_)	1.6 (116.B1A)	79	01/75 – 12/84	3353	
ALFETTA (116_)	1.6 (116.B1A)	79	01/75 – 12/84	3362	
ALFETTA (116_)	1.8 (116.B2)	90	10/79 – 12/84	3318	
ALFETTA (116_)	1.8 (116.B2)	90	10/79 – 12/84	3338	
ALFETTA (116_)	1.8 (116.B2)	90	10/79 – 12/84	3353	
ALFETTA (116_)	1.8 (116.B2)	90	10/79 – 12/84	3362	
ALFETTA (116_)	2.0 (116.55F, 116.56F,116.55N, 116.56N)	97	07/78 – 12/84	3318	
ALFETTA (116_)	2.0 (116.55F, 116.56F,116.55N, 116.56N)	97	07/78 – 12/84	3338	
ALFETTA (116_)	2.0 (116.55F, 116.56F,116.55N, 116.56N)	97	07/78 – 12/84	3353	
ALFETTA (116_)	2.0 (116.55F, 116.56F,116.55N, 116.56N)	97	07/78 – 12/84	3362	
ALFETTA (116_)	2.0 (116.55G, 116.56G)	89	03/77 – 02/80	3318	
ALFETTA (116_)	2.0 (116.55G, 116.56G)	89	03/77 – 02/80	3338	
ALFETTA (116_)	2.0 (116.55G, 116.56G)	89	03/77 – 02/80	3353	
ALFETTA (116_)	2.0 (116.55G, 116.56G)	89	03/77 – 02/80	3362	
ALFETTA (116_)	2.0 TD (116.BA)	60	10/79 – 03/83	3318	
ALFETTA (116_)	2.0 TD (116.BA)	60	10/79 – 03/83	3338	
ALFETTA (116_)	2.0 TD (116.BA)	60	10/79 – 03/83	3353	
ALFETTA (116_)	2.0 TD (116.BA)	60	10/79 – 03/83	3362	
ALFETTA GT (116_)	16	79	01/76 – 09/82	3318	
ALFETTA GT (116_)	16	79	01/76 – 09/82	3338	
ALFETTA GT (116_)	16	79	01/76 – 09/82	3353	
ALFETTA GT (116_)	16	79	01/76 – 09/82	3362	
ALFETTA GT (116_)	18	85	01/74 – 12/76	3318	
ALFETTA GT (116_)	18	85	01/74 – 12/76	3338	
ALFETTA GT (116_)	18	85	01/74 – 12/76	3353	
ALFETTA GT (116_)	18	85	01/74 – 12/76	3362	
ALFETTA GT (116_)	18	89	01/74 – 12/76	3318	
ALFETTA GT (116_)	18	89	01/74 – 12/76	3338	
ALFETTA GT (116_)	18	89	01/74 – 12/76	3353	
ALFETTA GT (116_)	18	89	01/74 – 12/76	3362	
ALFETTA GT (116_)	20	89	07/78 – 01/86	3318	
ALFETTA GT (116_)	20	89	07/78 – 01/86	3338	
ALFETTA GT (116_)	20	89	07/78 – 01/86	3353	
ALFETTA GT (116_)	20	89	07/78 – 01/86	3362	
ALFETTA GT (116_)	20	96	06/77 – 12/84	3318	
ALFETTA GT (116_)	20	96	06/77 – 12/84	3338	
ALFETTA GT (116_)	20	96	06/77 – 12/84	3353	

MAKE & MODEL   		KW	YEAR		
ALFA ROMEO					
ALFETTA GT (116_)	20	96	06/77 – 12/84	3362	
AR 6 Box (280_)	1.9 D	51	04/85 – 12/89	3440	
AR 6 Box (280_)	1.9 D	51	04/85 – 12/89	3440	
AR 6 Box (280_)	2.4 D	53	04/85 – 02/86	3440	
AR 6 Box (280_)	2.4 D	53	04/78 – 08/86	3423	
AR 6 Bus (280_)	2.4 TD	68	09/86 – 12/89	3440	
AR 8 Box (280_)	2.4 TD	68	04/85 – 12/89	3423	
AR 8 Box (280_)	2.4 TD	68	04/85 – 12/89	3423/1	
AR 8 Box (280_)	2.4 TD	68	04/85 – 12/89	3523	
AR 8 Box (280_)	2.4 TD	68	04/85 – 12/89	3524	
AR 8 Box (280_)	2.5 D	55	03/86 – 12/89	3440	
AR 8 Box (280_)	2.5 D	55	09/86 – 12/89	3423	
AR 8 Box (280_)	2.5 D	55	09/86 – 12/89	3423/1	
AR 8 Box (280_)	2.5 D	55	09/86 – 12/89	3523	
AR 8 Box (280_)	2.5 D	55	09/86 – 12/89	3524	
AR 8 Platform/Chassis (280_)	1.8 D	38	06/76 – 12/78	3318	
AR 8 Platform/Chassis (280_)	2.4 D	53	04/78 – 08/86	3423	
AR 8 Platform/Chassis (280_)	2.4 TD	68	04/85 – 12/88	3423	
AR 8 Platform/Chassis (280_)	2.5 D	55	09/86 – 12/89	3423	
AR 8 Platform/Chassis (280_)	2.5 D	55	09/86 – 12/89	3423/1	
AR 8 Platform/Chassis (280_)	2.5 D	55	09/86 – 12/89	3523	
GIULIA (105_)	1.8 D	38	06/76 – 12/78		3326
GIULIA (105_)	1.8 D	38	06/76 – 12/78	3338	
GIULIA (105_)	1.8 D	38	06/76 – 12/78	3353	
GIULIA (105_)	1.8 D	38	06/76 – 12/78	3360	
GIULIA (105_)	1.8 D	38	06/76 – 12/78	3361	
GIULIA (105_)	1.8 D	38	06/76 – 12/78	3362	
GIULIA (105_)	1300 Super (115)	64	01/74 – 12/78	3318	
GIULIA (105_)	1300 Super (115)	64	01/74 – 12/78		3326
GIULIA (105_)	1300 Super (115)	64	01/74 – 12/78	3338	
GIULIA (105_)	1300 Super (115)	64	01/74 – 12/78	3353	
GIULIA (105_)	1300 Super (115)	64	01/74 – 12/78	3360	
GIULIA (105_)	1300 Super (115)	64	01/74 – 12/78	3361	
GIULIA (105_)	1300 Super (115)	64	01/74 – 12/78	3362	
GIULIA (105_)	1300 TI (105,39)	62	04/69 – 07/75	3318	
GIULIA (105_)	1300 TI (105,39)	62	04/69 – 07/75		3326
GIULIA (105_)	1300 TI (105,39)	62	04/69 – 07/75	3338	
GIULIA (105_)	1300 TI (105,39)	62	04/69 – 07/75	3353	
GIULIA (105_)	1300 TI (105,39)	62	04/69 – 07/75	3360	
GIULIA (105_)	1300 TI (105,39)	62	04/69 – 07/75	3361	
GIULIA (105_)	1300 TI (105,39)	62	04/69 – 07/75	3362	
GIULIA (105_)	1600 Super (105,14)	71	06/64 – 08/69	3318	
GIULIA (105_)	1600 Super (105,14)	71	06/64 – 08/69		3326
GIULIA (105_)	1600 Super (105,14)	71	06/64 – 08/69	3338	
GIULIA (105_)	1600 Super (105,14)	71	06/64 – 08/69	3353	
GIULIA (105_)	1600 Super (105,14)	71	06/64 – 08/69	3360	
GIULIA (105_)	1600 Super (105,14)	71	06/64 – 08/69	3361	
GIULIA (105_)	1600 Super (105,14)	71	06/64 – 08/69	3362	
GIULIA (105_)	1600 Super (115)	76	01/74 – 12/78	3318	
GIULIA (105_)	1600 Super (115)	76	01/74 – 12/78		3326
GIULIA (105_)	1600 Super (115)	76	01/74 – 12/78	3338	
GIULIA (105_)	1600 Super (115)	76	01/74 – 12/78	3353	
GIULIA (105_)	1600 Super (115)	76	01/74 – 12/78	3360	
GIULIA (105_)	1600 Super (115)	76	01/74 – 12/78	3361	
GIULIA (105_)	1600 Super (115)	76	01/74 – 12/78	3362	
GIULIA (105_)	2.5 D	55	09/86 – 12/89	3524	
GIULIETTA (116_)	1.3 (116.44A)	66	10/77 – 06/83	3318	
GIULIETTA (116_)	1.3 (116.44A)	66	10/77 – 06/83	3338	
GIULIETTA (116_)	1.3 (116.44A)	66	10/77 – 06/83	3353	
GIULIETTA (116_)	1.3 (116.44A)	66	10/77 – 06/83	3362	
GIULIETTA (116_)	1.6 (116.50B)	79	10/77 – 04/85	3318	
GIULIETTA (116_)	1.6 (116.50B)	79	10/77 – 04/85	3338	
GIULIETTA (116_)	1.6 (116.50B)	79	10/77 – 04/85	3353	
GIULIETTA (116_)	1.6 (116.50B)	79	10/77 – 04/85	3362	
GIULIETTA (116_)	1.8 (116.AA, 116.AB)	90	04/79 – 04/85	3318	
GIULIETTA (116_)	1.8 (116.AA, 116.AB)	90	04/79 – 04/85	3338	
GIULIETTA (116_)	1.8 (116.AA, 116.AB)	90	04/79 – 04/85	3353	
GIULIETTA (116_)	1.8 (116.AA, 116.AB)	90	04/79 – 04/85	3362	
GIULIETTA (116_)	2.0 (116.A1A)	96	06/80 – 04/85	3318	
GIULIETTA (116_)	2.0 (116.A1A)	96	06/80 – 04/85	3338	
GIULIETTA (116_)	2.0 (116.A1A)	96	06/80 – 04/85	3353	

MAKE & MODEL		KW	YEAR		
ALFA ROMEO					
GIULIETTA (116_)	2.0 (116.A1A)	96	06/80 – 04/85	3362	
GIULIETTA (116_)	2.0 TD	61	01/83 – 12/85	3318	
GIULIETTA (116_)	2.0 TD	61	01/83 – 12/85	3338	
GIULIETTA (116_)	2.0 TD	61	01/83 – 12/85	3353	
GIULIETTA (116_)	2.0 TD	61	01/83 – 12/85	3362	
GT (105_)	1300 Junior (105)	64	01/66 – 12/77	3318	
GT (105_)	1300 Junior (105)	64	01/66 – 12/77		3326
GT (105_)	1300 Junior (105)	64	01/66 – 12/77	3338	
GT (105_)	1300 Junior (105)	64	01/66 – 12/77	3353	
GT (105_)	1300 Junior (105)	64	01/66 – 12/77	3360	
GT (105_)	1300 Junior (105)	64	01/66 – 12/77	3361	
GT (105_)	1300 Junior (105)	64	01/66 – 12/77	3362	
GT (105_)	1600 (105)	75	03/63 – 12/66	3318	
GT (105_)	1600 (105)	75	03/63 – 12/66		3326
GT (105_)	1600 (105)	75	03/63 – 12/66	3338	
GT (105_)	1600 (105)	75	03/63 – 12/66	3353	
GT (105_)	1600 (105)	75	03/63 – 12/66	3360	
GT (105_)	1600 (105)	75	03/63 – 12/66	3361	
GT (105_)	1600 (105)	75	03/63 – 12/66	3362	
GT (105_)	1600 (105)	80	01/66 – 12/68	3318	
GT (105_)	1600 (105)	80	01/66 – 12/68		3326
GT (105_)	1600 (105)	80	01/66 – 12/68	3338	
GT (105_)	1600 (105)	80	01/66 – 12/68	3353	
GT (105_)	1600 (105)	80	01/66 – 12/68	3360	
GT (105_)	1600 (105)	80	01/66 – 12/68	3361	
GT (105_)	1600 (105)	80	01/66 – 12/68	3362	
GT (105_)	1600 (115)	76	09/72 – 12/77	3318	
GT (105_)	1600 (115)	76	09/72 – 12/77		3326
GT (105_)	1600 (115)	76	09/72 – 12/77	3338	
GT (105_)	1600 (115)	76	09/72 – 12/77	3353	
GT (105_)	1600 (115)	76	09/72 – 12/77	3360	
GT (105_)	1600 (115)	76	09/72 – 12/77	3361	
GT (105_)	1600 (115)	76	09/72 – 12/77	3362	
GT (105_)	1600 (115)	80	06/71 – 12/77	3318	
GT (105_)	1600 (115)	80	06/71 – 12/77		3326
GT (105_)	1600 (115)	80	06/71 – 12/77	3338	
GT (105_)	1600 (115)	80	06/71 – 12/77	3353	
GT (105_)	1600 (115)	80	06/71 – 12/77	3360	
GT (105_)	1600 (115)	80	06/71 – 12/77	3361	
GT (105_)	1600 (115)	80	06/71 – 12/77	3362	
GT (105_)	A 1600 (105)	83	01/65 – 12/70	3318	
GT (105_)	A 1600 (105)	83	01/65 – 12/70		3326
GT (105_)	A 1600 (105)	83	01/65 – 12/70	3338	
GT (105_)	A 1600 (105)	83	01/65 – 12/70	3353	
GT (105_)	A 1600 (105)	83	01/65 – 12/70	3360	
GT (105_)	A 1600 (105)	83	01/65 – 12/70	3361	
GT (105_)	A 1600 (105)	83	01/65 – 12/70	3362	
GT (105_)	V 1750 (105)	83	01/67 – 12/72	3318	
GT (105_)	V 1750 (105)	83	01/67 – 12/72		3326
GT (105_)	V 1750 (105)	83	01/67 – 12/72	3338	
GT (105_)	V 1750 (105)	83	01/67 – 12/72	3353	
GT (105_)	V 1750 (105)	83	01/67 – 12/72	3360	
GT (105_)	V 1750 (105)	83	01/67 – 12/72	3361	
GT (105_)	V 1750 (105)	83	01/67 – 12/72	3362	
GT (105_)	V 2000 (105)	96	01/71 - 12/77	3320	
GT (105_)	V 2000 (105)	96	01/71 – 12/77		3326
GT (105_)	V 2000 (105)	96	01/71 – 12/77	3350	
GT (105_)	V 2000 (105)	96	01/71 – 12/77	3360	
GT (105_)	V 2000 (105)	96	01/71 – 12/77	3361	
GT (937_)	1.8 TS	103	11/03 – 09/10		4123
GT (937_)	1.9 JTD	110	11/03 – 09/10		4123
GT (937_)	1.9 JTD	125	05/08 – 09/10		4123
GT (937_)	2.0 JTS	119	12/06 – 09/10		4123
GT (937_)	2.0 JTS	121	11/03 – 09/10		4123
GT (937_)	3.2 GTA	176	11/03 – 09/10		4123
GTV (116_)	20	96	07/78 – 01/86	3318	
GTV (116_)	20	96	07/78 – 01/86	3338	
GTV (116_)	20	96	07/78 – 01/86	3353	
GTV (116_)	20	96	07/78 – 01/86	3362	
MONTREAL (105_)	2.6 (105,64)	143	12/72 – 03/79	3320	
MONTREAL (105_)	2.6 (105,64)	143	12/72 – 03/79		3326

MAKE & MODEL   		KW	YEAR		
ALFA ROMEO					
MONTREAL (105_)	2.6 (105,64)	143	12/72 – 03/79	3350	
MONTREAL (105_)	2.6 (105,64)	143	12/72 – 03/79	3360	
MONTREAL (105_)	2.6 (105,64)	143	12/72 – 03/79	3361	
SPIDER (105_)	1300	64	01/68 – 12/77	3318	
SPIDER (105_)	1300	64	01/68 – 12/77		3326
SPIDER (105_)	1300	64	01/68 – 12/77	3338	
SPIDER (105_)	1300	64	01/68 – 12/77	3353	
SPIDER (105_)	1300	64	01/68 – 12/77	3360	
SPIDER (105_)	1300	64	01/68 – 12/77	3361	
SPIDER (105_)	1300	64	01/68 – 12/77	3362	
SPIDER (105_)	1750	83	01/67 – 12/71	3320	
SPIDER (105_)	1750	83	01/67 – 12/71		3326
SPIDER (105_)	1750	83	01/67 – 12/71	3350	
SPIDER (105_)	1750	83	01/67 – 12/71	3360	
SPIDER (105_)	1750	83	01/67 – 12/71	3361	
SPIDER (105_)	2000	96	01/71 – 12/77	3320	
SPIDER (105_)	2000	96	01/71 – 12/77		3326
SPIDER (105_)	2000	96	01/71 – 12/77	3350	
SPIDER (105_)	2000	96	01/71 – 12/77	3360	
SPIDER (105_)	2000	96	01/71 – 12/77	3361	
SPIDER (115_)	1600	76	03/76 – 12/90	3318	
SPIDER (115_)	1600	76	03/76 – 12/90		3326
SPIDER (115_)	1600	76	03/76 – 12/90	3338	
SPIDER (115_)	1600	76	03/76 – 12/90	3353	
SPIDER (115_)	1600	76	03/76 – 12/90	3360	
SPIDER (115_)	1600	76	03/76 – 12/90	3361	
SPIDER (115_)	1600	76	03/76 – 12/90	3362	
SPIDER (115_)	1600	79	01/90 – 12/93	3318	
SPIDER (115_)	1600	79	01/90 – 12/93		3326
SPIDER (115_)	1600	79	01/90 – 12/93	3338	
SPIDER (115_)	1600	79	01/90 – 12/93	3353	
SPIDER (115_)	1600	79	01/90 – 12/93	3360	
SPIDER (115_)	1600	79	01/90 – 12/93	3361	
SPIDER (115_)	1600	79	01/90 – 12/93	3362	
SPIDER (115_)	1600	80	03/71 – 12/79	3318	
SPIDER (115_)	1600	80	03/71 – 12/79		3326
SPIDER (115_)	1600	80	03/71 – 12/79	3338	
SPIDER (115_)	1600	80	03/71 – 12/79	3353	
SPIDER (115_)	1600	80	03/71 – 12/79	3360	
SPIDER (115_)	1600	80	03/71 – 12/79	3361	
SPIDER (115_)	1600	80	03/71 – 12/79	3362	
SPIDER (115_)	2000	85	08/86 – 12/90	3320	
SPIDER (115_)	2000	85	08/86 – 12/90		3326
SPIDER (115_)	2000	85	08/86 – 12/90	3350	
SPIDER (115_)	2000	85	08/86 – 12/90	3360	
SPIDER (115_)	2000	85	08/86 – 12/90	3361	
SPIDER (115_)	2000	88	01/90 – 12/93	3320	
SPIDER (115_)	2000	88	01/90 – 12/93		3326
SPIDER (115_)	2000	88	01/90 – 12/93	3350	
SPIDER (115_)	2000	88	01/90 – 12/93	3360	
SPIDER (115_)	2000	88	01/90 – 12/93	3361	
SPIDER (115_)	2000	92	08/86 – 12/90	3320	
SPIDER (115_)	2000	92	08/86 – 12/90		3326
SPIDER (115_)	2000	92	08/86 – 12/90	3350	
SPIDER (115_)	2000	92	08/86 – 12/90	3360	
SPIDER (115_)	2000	92	08/86 – 12/90	3361	
SPIDER (115_)	2000 Veloce	93	01/77 – 12/93	3320	
SPIDER (115_)	2000 Veloce	93	01/77 – 12/93		3326
SPIDER (115_)	2000 Veloce	93	01/77 – 12/93	3350	
SPIDER (115_)	2000 Veloce	93	01/77 – 12/93	3360	
SPIDER (115_)	2000 Veloce	93	01/77 – 12/93	3361	
SPIDER (916_)	2.0 T.SPARK 16V (916S2C00)	110	06/95 – 04/05	3466	
SPIDER (916_)	2.0 T.SPARK 16V (916S2C00)	110	06/95 – 04/05	3468	
ALPINA					
B10 (E39)	4.6 V8	250	12/96 – 10/98		3656
B10 (E39)	4.6 V8	250	12/96 – 10/98	3881	
B10 (E39)	4.6 V8	255	10/98 – 09/02		3656
B10 (E39)	4.6 V8	255	10/98 – 09/02	3881	
B10 Estate (E39)	4.6 V8	250	01/97 – 10/98		3656
B10 Estate (E39)	4.6 V8	250	01/97 – 10/98	3881	
B10 Estate (E39)	4.6 V8	255	10/98 – 09/02		3656

MAKE & MODEL		KW	YEAR		
ALPINA					
B10 Estate (E39)	4.6 V8	255	10/98 – 09/02	3881	
B7 III (E65)	4.4 (N62B44A19)	368	12/03 – 06/08		4179
ROADSTER (Z8)	4.8 V8	280	06/02 – 10/03		3879
ALPINE					
610	3.0 TURBO	184	01/91 – 04/95	3492	
610	3.0 TURBO	184	01/91 – 04/95	3493	
1300	1.3	54	01.74 – 12.75	3342	
1300	1.3	60	01.70 – 12.73	3342	
1600	16	75	01.70 – 12.71	3342	
1600	1.6 S	101	01.69 – 12.73	3342	
1600	1.6 SC-SI	93	01.73 – 12.75	3342	
1600	1.6 SC-SI	103	01.73 – 12.75	3342	
A310	16	93	01.71 – 12.77	3342	
A310	17	70	01.71 – 12.77	3342	
A310	1.6 Injection	94	01.76 – 12.77	3342	
A310	2.7 V6	110	01.76 – 12.84	3342	
A610	3.0 TURBO	184	01/91 – 04/95	3431	
A610	3.0 TURBO	184	01/91 – 04/95	3494	
A610	3.0 TURBO	184	01/91 – 04/95	3503	
A610	3.0 TURBO	184	01/91 – 04/95	3587	
BERLINETTE	1.3 1300	50	01.76 – 12.77	3342	
BERLINETTE	1.7 1600 SX	70	01.76 -12.77	3342	
LNA	0.6 (R06 627)	24	11.76 – 07.79	3342	
LNA	0.6 (V06 630)	26	11.78 – 07.86	3342	
LNA	0.6 (V06 644)	26	11.78 – 07.86	3342	
V6	2.5 TURBO	136	01/85 – 12/90	3431	
V6	2.5 TURBO	136	01/85 – 12/90	3442	
V6	2.5 TURBO	136	01/85 – 12/90	3503	
V6	2.5 TURBO	147	01/88 – 12/90	3431	
V6	2.5 TURBO	147	01/88 – 12/90	3503	
V6	2.9 GT	116	01/85 – 12/90	3431	
V6	2.9 GT	116	01/85 – 12/90	3442	
V6	2.9 GT	116	01/85 – 12/90	3503	
VISA	0.6 (V06 630)	25	09.78 – 06.88	3342	
VISA	0.6 (V06 644)	25	09.78 – 06.88	3342	
VISA	0.6 (V06/665)	24	07.82 – 03.91	3342	
VISA	1.0 (XV8)	33	09.84 – 06.88	3342	
VISA	1.1 11 E (109/5)	42	09.78 – 03.91	3342	
VISA	1.1 11 E (109/5F)	37	07.82 – 03.91	3342	
VISA	1.1 11 E (109K)	35	09.78 – 06.88	3342	
VISA	1.1 11 RE (109/5F)	37	03.83 – 10.88	3342	
VISA	1.2 II Super X (129/5)	47	07.80 – 06.82	3342	
ASIA MOTORS					
HI-TOPIC AM 725	2.7 15 STD	51	01/98 – 12/99	3574	
HI-TOPIC AM 725	2.7 D Rear Wheel Drive	55	06/93 – 12/99	3574	
RETONA Closed Off-Road Vehicle	20	94	06/95 – 06/00	4009	
RETONA Closed Off-Road Vehicle	20	100	06/95 – 06/00	4009	
RETONA Closed Off-Road Vehicle	2.0 TD	61	06/95 – 06/00	4009	
TOWNER Box (AS_)	08	33	07/92 – 12/02	3746	
TOWNER Bus (AS_)	08	33	07/92 – 12/02	3746	
ASTON MARTIN					
CYGNET	13	72	04/11 – 10/13		3954
DBS II	5.9 V12	380	09.07-	3370	
LAGONDA I	53	250	01/76 – 12/97	3455	
LAGONDA I	53	250	01/76 – 12/97	3471	
LAGONDA I Estate	53	228	01/76 – 12/97	3455	
LAGONDA I Estate	53	228	01/76 – 12/97	3471	
V8 Convertible	53	250	01/78 – 12/89	3455	
V8 Convertible	53	250	01/78 – 12/89	3471	
V8 Convertible	53	276	01/78 – 12/89	3455	
V8 Convertible	53	276	01/78 – 12/89	3471	
V8 Coupe	53	250	01/69 – 12/89	3455	
V8 Coupe	53	250	01/69 – 12/89	3471	
V8 Coupe	53	376	01/69 – 12/89	3455	
V8 Coupe	53	376	01/69 – 12/89	3471	
VIRAGE Convertible	53	246	09/90 – 12/95	3455	
VIRAGE Convertible	53	246	09/90 – 12/95	3471	
VIRAGE Convertible	53	261	01/97 12/00	3455	
VIRAGE Convertible	53	261	01/97 – 12/00	3471	

MAKE & MODEL		KW	YEAR		
ASTON MARTIN					
VIRAGE Coupe	53	246	01/88 – 12/92	3455	
VIRAGE Coupe	53	246	01/88 – 12/92	3471	
VIRAGE Coupe	53	410	10/92 – 10/00	3455	
VIRAGE Coupe	53	410	10/92 – 10/00	3471	
VIRAGE Estate	53	246	01/93 – 12/95	3455	
VIRAGE Estate	53	246	01/93 – 12/95	3471	
VIRAGE Limited Edition	53	246	01/95 – 12/95	3455	
VIRAGE Limited Edition	53	246	01/95 – 12/95	3471	
VIRAGE Saloon	53	246	01/94 – 12/95	3455	
VIRAGE Saloon	53	246	01/94 – 12/95	3471	
AUDI					
100 (43, C2)	16	63	08/76 – 07/82	3378	
100 (43, C2)	16	63	08/76 – 07/82	3490	
100 (43, C2)	19	74	08/80 – 07/82	3378	
100 (43, C2)	19	74	08/80 – 07/82	3490	
100 (43, C2)	20	85	06/76 – 08/78	3378	
100 (43, C2)	20	85	06/76 – 08/78	3490	
100 (43, C2)	21	85	10/77 – 07/82	3378	
100 (43, C2)	21	85	10/77 – 07/82	3490	
100 (43, C2)	2.0 D	51	08/78 – 07/82	3378	
100 (43, C2)	2.0 D	51	08/78 – 07/82	3490	
100 (43, C2)	2.1	85	10.77 - 07.82	3650	
100 (44, 44Q, C3)	18	55	08/82 – 12/87		3536
100 (44, 44Q, C3)	18	55	08/82 – 12/87	3619	
100 (44, 44Q, C3)	18	65	02/86 – 07/88		3536
100 (44, 44Q, C3)	18	65	02/86 – 07/88	3619	
100 (44, 44Q, C3)	18	66	08/83 – 07/89		3536
100 (44, 44Q, C3)	18	66	08/83 – 07/89	3619	
100 (44, 44Q, C3)	19	74	08/82 – 07/84		3536
100 (44, 44Q, C3)	19	74	08/82 – 07/84	3619	
100 (44, 44Q, C3)	20	83	08/86 – 11/87		3536
100 (44, 44Q, C3)	20	83	08/86 – 11/87	3619	
100 (44, 44Q, C3)	20	85	08/84 – 12/87		3536
100 (44, 44Q, C3)	20	85	08/84 – 12/87	3619	
100 (44, 44Q, C3)	21	100	08/82 – 07/84		3536
100 (44, 44Q, C3)	21	100	08/82 – 07/84	3619	
100 (44, 44Q, C3)	22	79	08/82 – 07/84		3536
100 (44, 44Q, C3)	22	79	08/82 – 07/84	3619	
100 (44, 44Q, C3)	22	85	10/84 – 09/86		3536
100 (44, 44Q, C3)	22	85	10/84 – 09/86	3619	
100 (44, 44Q, C3)	22	96	08/82 – 07/84		3536
100 (44, 44Q, C3)	22	96	08/82 – 07/84	3619	
100 (44, 44Q, C3)	22	101	08/84 – 12/88		3536
100 (44, 44Q, C3)	22	101	08/84 – 12/88	3619	
100 (44, 44Q, C3)	1.8 CAT	66	03/85 – 11/90		3536
100 (44, 44Q, C3)	1.8 CAT	66	03/85 – 11/90	3619	
100 (44, 44Q, C3)	1.8 quattro	65	08/86 – 07/90		3536
100 (44, 44Q, C3)	1.8 quattro	65	08/86 – 07/90	3619	
100 (44, 44Q, C3)	1.8 quattro	66	10/84 – 07/88		3536
100 (44, 44Q, C3)	1.8 quattro	66	10/84 – 07/88	3619	
100 (44, 44Q, C3)	1.8 quattro CAT	66	08/85 – 11/90		3536
100 (44, 44Q, C3)	1.8 quattro CAT	66	08/85 – 11/90	3619	
100 (44, 44Q, C3)	2.0 CAT	85	01/88 – 11/90		3536
100 (44, 44Q, C3)	2.0 CAT	85	01/88 – 11/90	3619	
100 (44, 44Q, C3)	2.0 D	51	08/82 – 07/88		3536
100 (44, 44Q, C3)	2.0 D	51	08/82 – 07/88	3619	
100 (44, 44Q, C3)	2.0 D Turbo	64	08/82 – 02/88		3536
100 (44, 44Q, C3)	2.0 D Turbo	64	08/82 – 02/88	3619	
100 (44, 44Q, C3)	2.0 D Turbo	74	03/88 – 11/90		3536
100 (44, 44Q, C3)	2.0 D Turbo	74	03/88 – 11/90	3619	
100 (44, 44Q, C3)	2.2 CAT	101	06/89 – 11/90		3536
100 (44, 44Q, C3)	2.2 CAT	101	06/89 – 11/90	3619	
100 (44, 44Q, C3)	2.2 E quattro	88	08/85 – 07/86		3536
100 (44, 44Q, C3)	2.2 E quattro	88	08/85 – 07/86	3619	
100 (44, 44Q, C3)	2.2 E Turbo quattro	121	08/86 – 11/90		3536
100 (44, 44Q, C3)	2.2 quattro	101	08/84 – 12/88		3536
100 (44, 44Q, C3)	2.2 quattro	101	08/84 – 12/88	3619	
100 (44, 44Q, C3)	2.2 quattro CAT	101	06/89 – 11/90		3536
100 (44, 44Q, C3)	2.2 quattro CAT	101	06/89 – 11/90	3619	
100 (44, 44Q, C3)	2.2 Turbo	121	08/86 – 11/90		3536
100 (44, 44Q, C3)	2.3 E	98	01/90 – 11/90		3536

MAKE & MODEL		KW	YEAR		
AUDI					
100 (44, 44Q, C3)	2.3 E	98	01/90 – 11/90	3619	
100 (44, 44Q, C3)	2.3 E	100	10/86 – 11/90		3536
100 (44, 44Q, C3)	2.3 E	100	10/86 – 11/90	3619	
100 (44, 44Q, C3)	2.3 E quattro	100	08/86 – 11/90		3536
100 (44, 44Q, C3)	2.3 E quattro	100	08/86 – 11/90	3619	
100 (44, 44Q, C3)	2.3 quattro	98	01/90 – 11/90		3536
100 (44, 44Q, C3)	2.3 quattro	98	01/90 – 11/90	3619	
100 (44, 44Q, C3)	2.4 D	60	08/89 – 07/91		3536
100 (44, 44Q, C3)	2.4 D	60	08/89 – 07/91	3619	
100 (44, 44Q, C3)	2.5 TDI	88	01/90 – 11/90		3536
100 (443, 4A2)	18	66	08/88 – 12/90		3536
100 (443, 4A2)	20	79	11/93 – 07/94		3536
100 (443, 4A2)	22	96	08/89 – 12/90		3536
100 (443, 4A2)	26	102	01/93 – 06/95		3536
100 (4A, C4)	20	74	12/90 – 06/94		3536
100 (4A, C4)	26	102	07/93 – 06/94		3536
100 (4A, C4)	26	110	03/92 – 06/94		3536
100 (4A, C4)	2.0 E	85	12/90 – 06/94		3536
100 (4A, C4)	2.0 E 16V	103	01/92 – 06/94		3536
100 (4A, C4)	2.0 E 16V quattro	103	07/92 – 06/94		3536
100 (4A, C4)	2.0 E quattro	85	12/90 – 07/92		3536
100 (4A, C4)	2.3 E	98	12/90 – 06/94		3536
100 (4A, C4)	2.3 E quattro	98	12/90 – 06/94		3536
100 (4A, C4)	2.4 D	60	12/90 – 06/94		3536
100 (4A, C4)	2.5 TDI	85	12/90 – 06/94		3536
100 (4A, C4)	2.6 quattro	110	04/92 – 06/94		3536
100 (4A, C4)	2.8 E	128	12/90 – 06/94		3536
100 (4A, C4)	2.8 E quattro	128	12/90 – 06/94		3536
100 (4A, C4)	S4 Turbo quattro	169	08/91 – 06/94		3536
100 (4A, C4)	S4 V8 quattro	206	10/92 – 06/94		3536
100 (C1)	16	63	01/75 – 07/76	3327	
100 (C1)	16	63	01/75 – 07/76	3343	
100 (C1)	16	63	01/75 – 07/76	3483	
100 (C1)	18	63	09/71 – 07/74	3327	
100 (C1)	18	63	09/71 – 07/74	3343	
100 (C1)	18	63	09/71 – 07/74	3483	
100 (C1)	18	74	10/70 – 07/76	3327	
100 (C1)	18	74	10/70 – 07/76	3343	
100 (C1)	18	74	10/70 – 07/76	3483	
100 (C1)	19		09.70 -	3344	
100 (C1)	1.6 (YM)	63	01.75 – 07.76	3344	
100 (C1)	1.8 (ZZ)	74	10.70 – 07.76	3344	
100 (C1)	1.8 (ZU)	63	09.71 – 07.74	3344	
100 (C1)	1.8 (ZV)	59	11.68 – 11.71	3344	
100 (C1)	1.8 (ZX)	66	11.68 – 11.71	3344	
100 (C1)	1.9 (ZJ)	82	08.71 – 12.76	3344	
100 (C1)	1.9 (ZJ)	82	09.71 – 07.76	3344	
100 (C1)	1.9 (ZP)	85	07.70 – 07.71	3344	
100 (C1) Coupe	1.9 (ZJ)	82	08/71 – 12/76	3313	
100 (C1) Coupe	1.9 (ZP)	85	07/70 – 07/71	3313	
100 (C1) Sedan	19		09/70 -	3313	
100 (C1) Sedan	1.6 (YM)	63	01/75 – 07/76	3313	
100 (C1) Sedan	1.8 (ZZ)	74	10/70 – 07/76	3313	
100 (C1) Sedan	1.8 (ZU)	63	09/71 – 07/74	3313	
100 (C1) Sedan	1.8 (ZV)	59	11/68 – 11/71	3313	
100 (C1) Sedan	1.8 (ZX)	66	11/68 – 11/71	3313	
100 (C1) Sedan	1.9 (ZJ)	82	09/71 – 07/76	3313	
100 Avant (43, C2)	16	63	07/77 – 02/83	3378	
100 Avant (43, C2)	16	63	07/77 – 02/83	3490	
100 Avant (43, C2)	19	74	08/80 – 07/82	3378	
100 Avant (43, C2)	19	74	08/80 – 07/82	3490	
100 Avant (43, C2)	20	85	08/77 – 07/80	3378	
100 Avant (43, C2)	20	85	08/77 – 07/80	3490	
100 Avant (43, C2)	21	85	07/77 – 02/83	3378	
100 Avant (43, C2)	21	85	07/77 – 02/83	3490	
100 Avant (43, C2)	2.0 D	51	08/78 – 02/83	3378	
100 Avant (43, C2)	2.0 D	51	08/78 – 02/83	3490	
100 Avant (43, C2)	2.1	85	07.77 - 02.83	3650	
100 Avant (44, 44Q, C3)	18	55	08/82 – 12/87		3536
100 Avant (44, 44Q, C3)	18	55	08/82 – 12/87	3619	
100 Avant (44, 44Q, C3)	18	65	02/86 – 07/90		3536

MAKE & MODEL   		KW	YEAR		
AUDI					
100 Avant (44, 44Q, C3)	18	65	02/86 – 07/90	3619	
100 Avant (44, 44Q, C3)	18	66	08/83 – 07/89		3536
100 Avant (44, 44Q, C3)	18	66	08/83 – 07/89	3619	
100 Avant (44, 44Q, C3)	19	74	02/83 – 07/84		3536
100 Avant (44, 44Q, C3)	19	74	02/83 – 07/84	3619	
100 Avant (44, 44Q, C3)	20	83	09/86 – 11/87		3536
100 Avant (44, 44Q, C3)	20	83	09/86 – 11/87	3619	
100 Avant (44, 44Q, C3)	21	96	08/82 – 07/84		3536
100 Avant (44, 44Q, C3)	21	96	08/82 – 07/84	3619	
100 Avant (44, 44Q, C3)	21	100	08/82 – 07/84		3536
100 Avant (44, 44Q, C3)	21	100	08/82 – 07/84	3619	
100 Avant (44, 44Q, C3)	22	85	10/84 – 09/86		3536
100 Avant (44, 44Q, C3)	22	85	10/84 – 09/86	3619	
100 Avant (44, 44Q, C3)	22	101	08/84 – 12/88		3536
100 Avant (44, 44Q, C3)	22	101	08/84 – 12/88	3619	
100 Avant (44, 44Q, C3)	23	98	03/90 – 11/90		3536
100 Avant (44, 44Q, C3)	23	98	03/90 – 11/90	3619	
100 Avant (44, 44Q, C3)	23	100	08/86 – 11/90		3536
100 Avant (44, 44Q, C3)	23	100	08/86 – 11/90	3619	
100 Avant (44, 44Q, C3)	1.8 CAT	66	03/85 – 11/90		3536
100 Avant (44, 44Q, C3)	1.8 CAT	66	03/85 – 11/90	3619	
100 Avant (44, 44Q, C3)	1.8 quattro	65	08/86 – 07/90		3536
100 Avant (44, 44Q, C3)	1.8 quattro	65	08/86 – 07/90	3619	
100 Avant (44, 44Q, C3)	1.8 quattro	66	10/84 – 07/88		3536
100 Avant (44, 44Q, C3)	1.8 quattro	66	10/84 – 07/88	3619	
100 Avant (44, 44Q, C3)	1.8 quattro CAT	66	08/85 – 10/90		3536
100 Avant (44, 44Q, C3)	1.8 quattro CAT	66	08/85 – 10/90	3619	
100 Avant (44, 44Q, C3)	2.0 D	51	03/83 – 11/90		3536
100 Avant (44, 44Q, C3)	2.0 D	51	03/83 – 11/90	3619	
100 Avant (44, 44Q, C3)	2.0 E	85	01/85 – 12/87		3536
100 Avant (44, 44Q, C3)	2.0 E	85	01/85 – 12/87	3619	
100 Avant (44, 44Q, C3)	2.0 E CAT	85	01/88 – 11/90		3536
100 Avant (44, 44Q, C3)	2.0 E CAT	85	01/88 – 11/90	3619	
100 Avant (44, 44Q, C3)	2.0 TD	64	03/83 – 10/87		3536
100 Avant (44, 44Q, C3)	2.0 TD	64	03/83 – 10/87	3619	
100 Avant (44, 44Q, C3)	2.0 TD	74	03/88 – 11/90		3536
100 Avant (44, 44Q, C3)	2.0 TD	74	03/88 – 11/90	3619	
100 Avant (44, 44Q, C3)	2.2 CAT	101	06/89 – 11/90		3536
100 Avant (44, 44Q, C3)	2.2 CAT	101	06/89 – 11/90	3619	
100 Avant (44, 44Q, C3)	2.2 E quattro	88	08/85 – 07/86		3536
100 Avant (44, 44Q, C3)	2.2 E quattro	88	08/85 – 07/86	3619	
100 Avant (44, 44Q, C3)	2.2 quattro	101	08/84 – 12/88		3536
100 Avant (44, 44Q, C3)	2.2 quattro	101	08/84 – 12/88	3619	
100 Avant (44, 44Q, C3)	2.2 quattro CAT	101	06/89 – 11/90		3536
100 Avant (44, 44Q, C3)	2.2 quattro CAT	101	06/89 – 11/90	3619	
100 Avant (44, 44Q, C3)	2.2 Turbo	121	08/86 – 11/90		3536
100 Avant (44, 44Q, C3)	2.2 Turbo quattro	121	08/86 – 11/90		3536
100 Avant (44, 44Q, C3)	2.3 E quattro	100	08/86 – 11/90		3536
100 Avant (44, 44Q, C3)	2.3 E quattro	100	08/86 – 11/90	3619	
100 Avant (44, 44Q, C3)	2.3 quattro	98	01/90 – 11/90		3536
100 Avant (44, 44Q, C3)	2.3 quattro	98	01/90 – 11/90	3619	
100 Avant (44, 44Q, C3)	2.4 D	60	08/89 – 11/90		3536
100 Avant (44, 44Q, C3)	2.4 D	60	08/89 – 11/90	3619	
100 Avant (44, 44Q, C3)	2.5 TDI	88	01/90 – 11/90		3536
100 Avant (4A, C4)	26	102	07/93 – 06/94		3536
100 Avant (4A, C4)	26	110	03/92 – 06/94		3536
100 Avant (4A, C4)	2.0 E	74	09/91 – 06/94		3536
100 Avant (4A, C4)	2.0 E	85	09/91 – 06/94		3536
100 Avant (4A, C4)	2.0 E 16V	103	07/92 – 06/94		3536
100 Avant (4A, C4)	2.0 E 16V quattro	103	07/92 – 06/94		3536
100 Avant (4A, C4)	2.0 E quattro	85	12/90 – 07/92		3536
100 Avant (4A, C4)	2.3 E	98	09/91 – 06/94		3536
100 Avant (4A, C4)	2.3 E quattro	98	09/91 – 06/94		3536
100 Avant (4A, C4)	2.4 D	60	12/90 – 06/94		3536
100 Avant (4A, C4)	2.5 TDI	85	12/90 – 06/94		3536
100 Avant (4A, C4)	2.6 E quattro	102	08/93 – 07/94		3536
100 Avant (4A, C4)	2.6 quattro	110	07/92 – 06/94		3536
100 Avant (4A, C4)	2.8 E	128	09/91 – 06/94		3536
100 Avant (4A, C4)	2.8 E quattro	128	09/91 – 06/94		3536
100 Avant (4A, C4)	S4 Turbo quattro	169	09/91 – 06/94		3536
100 Avant (4A, C4)	S4 V8 quattro	206	10/92 – 06/94		3536

MAKE & MODEL		KW	YEAR		
AUDI					
200 (43)	2.1 5E	100	10/79 – 09/82		3536
200 (43)	2.1 5E	100	10/79 – 09/82	3619	
200 (43)	2.1 5E	100	10.79 - 09.82	3650	
200 (43)	2.1 5T	125	10/79 – 08/82		3536
200 (43)	2.1 5T	125	10/79 – 08/82	3619	
200 (43)	2.1 5T	125	10.79 - 08.82	3650	
200 (44, 44Q)	22	101	08/84 – 07/85		3536
200 (44, 44Q)	22	101	08/84 – 07/85	3619	
200 (44, 44Q)	23	100	11/86 – 09/91		3536
200 (44, 44Q)	2.1 5E	100	08/83 – 07/84		3536
200 (44, 44Q)	2.1 5E	100	08/83 – 07/84	3619	
200 (44, 44Q)	2.1 Turbo	134	08/83 – 01/88		3536
200 (44, 44Q)	2.1 Turbo	134	08/83 – 01/88	3619	
200 (44, 44Q)	2.1 Turbo quattro	134	08/83 – 09/86		3536
200 (44, 44Q)	2.1 Turbo quattro	134	08/83 – 09/86	3619	
200 (44, 44Q)	2.2 20V Turbo quattro	162	03/89 – 12/90		3536
200 (44, 44Q)	2.2 Turbo	121	08/85 – 09/91		3536
200 (44, 44Q)	2.2 Turbo	121	08/85 – 09/91	3619	
200 (44, 44Q)	2.2 Turbo	140	02/88 – 12/90		3536
200 (44, 44Q)	2.2 Turbo	147	02/88 – 12/90		3536
200 (44, 44Q)	2.2 Turbo quattro	121	01/85 – 12/91		3536
200 (44, 44Q)	2.2 Turbo quattro	121	01/85 – 12/91	3619	
200 (44, 44Q)	2.2 Turbo quattro	147	02/88 – 11/90		3536
200 (44, 44Q)	2.2 Turbo quattro	121	01.85 - 12.91	3650	
200 (447)	24	110	09/98 – 09/99	3531	
200 (447)	26	102	11/95 – 09/99	3531	
200 (447)	1.8 Turbo	110	05/98 – 09/99	3531	
200 (447)	2.2 Turbo	121	08/88 – 11/90	3531	
200 Avant (44, 44Q)	23	100	11/86 – 09/91		3536
200 Avant (44, 44Q)	2.1 Turbo quattro	134	09/83 – 01/88		3536
200 Avant (44, 44Q)	2.1 Turbo quattro	134	09/83 – 01/88	3619	
200 Avant (44, 44Q)	2.2 20V Turbo quattro	162	07/89 – 12/90		3536
200 Avant (44, 44Q)	2.2 Turbo	121	08/85 – 09/91		3536
200 Avant (44, 44Q)	2.2 Turbo	121	08/85 – 09/91	3619	
200 Avant (44, 44Q)	2.2 Turbo quattro	121	09/83 – 12/90		3536
200 Avant (44, 44Q)	2.2 Turbo quattro	121	09/83 – 12/90	3619	
200 Avant (44, 44Q)	2.2 Turbo quattro	147	02/88 – 12/91		3536
50 (86)	08	25	01/76 – 07/78	3327	
50 (86)	08	25	01/76 – 07/78	3343	
50 (86)	08	25	01/76 – 07/78	3483	
50 (86)	11	37	08/74 – 07/78	3327	
50 (86)	11	37	08/74 – 07/78	3343	
50 (86)	11	37	08/74 – 07/78	3483	
50 (86)	11	44	08/74 – 07/77	3327	
50 (86)	11	44	08/74 – 07/77	3343	
50 (86)	11	44	08/74 – 07/77	3483	
50 (86)	13	43	01/77 – 07/78	3327	
50 (86)	13	43	01/77 – 07/78	3343	
50 (86)	13	43	01/77 – 07/78	3483	
50 (86)	13	44	08/77 – 07/78	3327	
50 (86)	13	44	08/77 – 07/78	3343	
50 (86)	13	44	08/77 – 07/78	3483	
80 (80, 82, B1)	13	40	05/72 – 07/78	3327	
80 (80, 82, B1)	13	40	05/72 – 07/78	3343	
80 (80, 82, B1)	13	40	05/72 – 07/78	3483	
80 (80, 82, B1)	15	55	05/72 – 08/75	3327	
80 (80, 82, B1)	15	55	05/72 – 08/75	3343	
80 (80, 82, B1)	15	55	05/72 – 08/75	3483	
80 (80, 82, B1)	15	63	05/72 – 07/76	3327	
80 (80, 82, B1)	15	63	05/72 – 07/76	3343	
80 (80, 82, B1)	15	63	05/72 – 07/76	3483	
80 (80, 82, B1)	16	55	09/75 – 07/78	3327	
80 (80, 82, B1)	16	55	09/75 – 07/78	3343	
80 (80, 82, B1)	16	55	09/75 – 07/78	3483	
80 (81, 85, B2)	13	40	09/78 – 07/81	3327	
80 (81, 85, B2)	13	40	09/78 – 07/81	3343	
80 (81, 85, B2)	13	40	09/78 – 07/81	3483	
80 (81, 85, B2)	13	44	09/78 – 07/86	3327	
80 (81, 85, B2)	13	44	09/78 – 07/86	3343	
80 (81, 85, B2)	13	44	09/78 – 07/81	3378	
80 (81, 85, B2)	13	44	09/78 – 07/86	3378	

MAKE & MODEL		KW	YEAR		
AUDI					
80 (81, 85, B2)	13	44	09/78 – 07/86	3483	
80 (81, 85, B2)	13	44	09/78 – 07/81	3490	
80 (81, 85, B2)	13	44	09/78 – 07/86	3490	
80 (81, 85, B2)	16	51	08/78 – 07/81	3378	
80 (81, 85, B2)	16	51	08/78 – 07/81	3490	
80 (81, 85, B2)	16	54	02/86 – 07/86	3378	
80 (81, 85, B2)	16	54	02/86 – 07/86	3490	
80 (81, 85, B2)	16	55	08/78 – 07/86	3327	
80 (81, 85, B2)	16	55	08/78 – 07/86	3343	
80 (81, 85, B2)	16	55	08/78 – 07/86	3378	
80 (81, 85, B2)	16	55	08/78 – 07/86	3378	
80 (81, 85, B2)	16	55	08/78 – 07/86	3483	
80 (81, 85, B2)	16	55	08/78 – 07/86	3490	
80 (81, 85, B2)	16	55	08/78 – 07/86	3490	
80 (81, 85, B2)	16	63	08/78 – 02/83	3327	
80 (81, 85, B2)	16	63	08/78 – 02/83	3343	
80 (81, 85, B2)	16	63	08/78 – 02/83	3378	
80 (81, 85, B2)	16	63	08/78 – 02/83	3483	
80 (81, 85, B2)	16	63	08/78 – 02/83	3490	
80 (81, 85, B2)	18	65	02/86 – 07/86	3378	
80 (81, 85, B2)	18	65	02/86 – 07/86	3490	
80 (81, 85, B2)	18	66	01/83 – 08/86	3378	
80 (81, 85, B2)	18	66	01/83 – 08/86	3490	
80 (81, 85, B2)	18	68	08/83 – 08/86	3378	
80 (81, 85, B2)	18	68	08/83 – 08/86	3490	
80 (81, 85, B2)	20	85	10/83 – 09/84	3378	
80 (81, 85, B2)	20	85	10/83 – 09/84	3490	
80 (81, 85, B2)	22	85	10/80 – 07/83	3378	
80 (81, 85, B2)	22	85	10/80 – 07/83	3490	
80 (81, 85, B2)	1.6 D	40	08/80 – 08/86	3327	
80 (81, 85, B2)	1.6 D	40	08/80 – 08/86	3343	
80 (81, 85, B2)	1.6 D	40	08/80 – 08/86	3378	
80 (81, 85, B2)	1.6 D	40	08/80 – 08/86	3483	
80 (81, 85, B2)	1.6 D	40	08/80 – 08/86	3490	
80 (81, 85, B2)	1.6 GLE	81	08/78 – 07/82	3327	
80 (81, 85, B2)	1.6 GLE	81	08/78 – 07/82	3343	
80 (81, 85, B2)	1.6 GLE	81	08/78 – 07/82	3378	
80 (81, 85, B2)	1.6 GLE	81	08/78 – 07/82	3483	
80 (81, 85, B2)	1.6 GLE	81	08/78 – 07/82	3490	
80 (81, 85, B2)	1.6 TD	51	08/81 – 05/86	3327	
80 (81, 85, B2)	1.6 TD	51	08/81 – 05/86	3343	
80 (81, 85, B2)	1.6 TD	51	08/81 – 05/86	3378	
80 (81, 85, B2)	1.6 TD	51	08/81 – 05/86	3483	
80 (81, 85, B2)	1.6 TD	51	08/81 – 05/86	3490	
80 (81, 85, B2)	1.8 CC quattro (85Q)	66	08/84 – 08/86	3378	
80 (81, 85, B2)	1.8 CC quattro (85Q)	66	08/84 – 08/86	3490	
80 (81, 85, B2)	1.8 CC quattro (85Q)	68	08/85 – 08/86	3378	
80 (81, 85, B2)	1.8 CC quattro (85Q)	68	08/85 – 08/86	3490	
80 (81, 85, B2)	1.8 CC quattro (85Q)	68	08/85 – 08/86		3536
80 (81, 85, B2)	1.8 CC quattro (85Q)	68	08/85 – 08/86	3635	
80 (81, 85, B2)	1.8 CC quattro (85Q)	68	08/85 – 08/86	3649	
80 (81, 85, B2)	1.8 GTE	82	10/84 – 08/86	3378	
80 (81, 85, B2)	1.8 GTE	82	10/84 – 08/86	3490	
80 (81, 85, B2)	1.8 GTE quattro (85Q)	81	03/85 – 08/86		3536
80 (81, 85, B2)	1.8 GTE quattro (85Q)	81	03/85 – 08/86	3635	
80 (81, 85, B2)	1.8 GTE quattro (85Q)	81	03/85 – 08/86	3649	
80 (81, 85, B2)	1.8 GTE quattro (85Q)	82	08/84 – 08/86	3378	
80 (81, 85, B2)	1.8 GTE quattro (85Q)	82	08/84 – 08/86	3490	
80 (81, 85, B2)	1.9 CD-5S	85	09/81 – 07/83	3378	
80 (81, 85, B2)	1.9 CD-5S	85	09/81 – 07/83	3490	
80 (81, 85, B2)	1.9 CD-5S	85	09.81 - 07.83	3650	
80 (81, 85, B2)	2.0 quattro (85Q)	85	10/83 – 09/84	3378	
80 (81, 85, B2)	2.0 quattro (85Q)	85	10/83 – 09/84	3490	
80 (81, 85, B2)	2.0 quattro (85Q)	85	10/83 – 09/84		3536
80 (81, 85, B2)	2.0 quattro (85Q)	85	10/83 – 09/84	3635	
80 (81, 85, B2)	2.0 quattro (85Q)	85	10/83 – 09/84	3649	
80 (81, 85, B2)	2.2 quattro	96	08/82 – 07/84		3536
80 (81, 85, B2)	2.2 quattro	96	08/82 – 07/84	3635	
80 (81, 85, B2)	2.2 quattro	96	08/82 – 07/84	3649	
80 (81, 85, B2)	2.2 quattro	100	08/82 – 07/84		3536
80 (81, 85, B2)	2.2 quattro	100	08/82 – 07/84	3635	

MAKE & MODEL   		KW	YEAR		
AUDI					
80 (81, 85, B2)	2.2 quattro	100	08/82 – 07/84	3649	
80 (81, 85, B2)	2.2 quattro (85Q)	100	08/82 – 07/84		3536
80 (81, 85, B2)	2.2 quattro (85Q)	100	08/82 – 07/84	3635	
80 (81, 85, B2)	2.2 quattro (85Q)	100	08/82 – 07/84	3649	
80 (89, 89Q, 8A, B3)	16	75	08/90 – 10/91		3536
80 (89, 89Q, 8A, B3)	18	83	09/86 – 07/88		3536
80 (89, 89Q, 8A, B3)	20	82	10/90 – 08/91		3536
80 (89, 89Q, 8A, B3)	1.4	48	08.86 - 07.88	3650	
80 (89, 89Q, 8A, B3)	1.6	51	08.87 - 09.91	3650	
80 (89, 89Q, 8A, B3)	1.6	55	09.86 - 08.91	3650	
80 (89, 89Q, 8A, B3)	1.6 D	40	02.87 - 07.89	3650	
80 (89, 89Q, 8A, B3)	1.6 TD	59	09.86 - 08.91	3650	
80 (89, 89Q, 8A, B3)	1.8	55	10.86 - 01.90	3650	
80 (89, 89Q, 8A, B3)	1.8	83	09.86 - 07.88	3650	
80 (89, 89Q, 8A, B3)	1.8 E	82	06/86 – 08/91		3536
80 (89, 89Q, 8A, B3)	1.8 E	82	06.86 - 08.91	3650	
80 (89, 89Q, 8A, B3)	1.8 E quattro	82	09/86 – 08/91		3536
80 (89, 89Q, 8A, B3)	1.8 E quattro	82	09/86 – 08/91	3619	
80 (89, 89Q, 8A, B3)	1.8 E quattro	82	09.86 - 08.91	3650	
80 (89, 89Q, 8A, B3)	1.8 quattro	83	09/86 – 08/90		3536
80 (89, 89Q, 8A, B3)	1.8 quattro	83	09/86 – 08/90	3619	
80 (89, 89Q, 8A, B3)	1.8 quattro	83	09.86 - 08.90	3650	
80 (89, 89Q, 8A, B3)	1.8 S	65	08.86 - 01.90	3650	
80 (89, 89Q, 8A, B3)	1.8 S	66	09.86 - 10.91	3650	
80 (89, 89Q, 8A, B3)	1.8 S quattro	65	09/86 – 07/90		3536
80 (89, 89Q, 8A, B3)	1.8 S quattro	65	09/86 – 07/90	3619	
80 (89, 89Q, 8A, B3)	1.8 S quattro	66	09/86 – 09/91		3536
80 (89, 89Q, 8A, B3)	1.8 S quattro	66	09/86 – 09/91	3619	
80 (89, 89Q, 8A, B3)	1.8 S quattro	65	09.86 - 07.90	3650	
80 (89, 89Q, 8A, B3)	1.8 S quattro	66	09.86 - 09.91	3650	
80 (89, 89Q, 8A, B3)	2.0 E	83	08/88 – 10/90		3536
80 (89, 89Q, 8A, B3)	2.0 E	83	08.88 - 10.90	3650	
80 (89, 89Q, 8A, B3)	2.0 E 16V	101	03/90 – 09/91		3536
80 (89, 89Q, 8A, B3)	2.0 E 16V quattro	101	03/90 – 08/91		3536
80 (89, 89Q, 8A, B3)	2.0 E 16V quattro	101	03/90 – 08/91	3619	
80 (89, 89Q, 8A, B3)	2.0 E 16V quattro	101	03.90 - 08.91	3650	
80 (89, 89Q, 8A, B3)	2.0 E quattro	83	08/88 – 09/90		3536
80 (89, 89Q, 8A, B3)	2.0 E quattro	83	08/88 – 09/90	3619	
80 (89, 89Q, 8A, B3)	2.0 E quattro	83	08.88 - 09.90	3650	
80 (89, 89Q, 8A, B3)	2.0 quattro	82	08/88 – 07/90		3536
80 (89, 89Q, 8A, B3)	2.0 quattro	82	08/88 – 07/90	3619	
80 (89, 89Q, 8A, B3)	2.0 quattro	82	08.88 - 07.90	3650	
80 (89, 89Q, 8A, B3)	2.0 quattro	85	10/90 – 08/91	3378	
80 (89, 89Q, 8A, B3)	2.0 quattro	85	10/90 – 08/91	3490	
80 (89, 89Q, 8A, B3)	2.0 quattro	85	10/90 – 08/91		3536
80 (89, 89Q, 8A, B3)	2.0 quattro	85	10/90 – 08/91	3619	
80 (89, 89Q, 8A, B3)	2.0 quattro	85	10.90 - 08.91	3650	
80 (89, 89Q, 8A, B3)	2.3 quattro	98	10.87 - 07.89	3650	
80 (8C, B4)	16	52	09/91 – 12/94		3536
80 (8C, B4)	20	66	09/91 – 12/94		3536
80 (8C, B4)	26	110	07/92 – 12/94		3536
80 (8C, B4)	28	128	09/91 – 12/94		3536
80 (8C, B4)	1.6 E	74	06/93 – 12/94		3536
80 (8C, B4)	1.9 TD	55	09/91 – 12/94		3536
80 (8C, B4)	1.9 TDI	66	09/91 – 12/94		3536
80 (8C, B4)	2.0 E	85	09/91 – 12/94		3536
80 (8C, B4)	2.0 E 16V	103	08/92 – 12/94		3536
80 (8C, B4)	2.0 E 16V quattro	103	04/92 – 12/94		3536
80 (8C, B4)	2.0 E quattro	85	09/91 – 12/94		3536
80 (8C, B4)	2.3 E	98	09/91 – 12/94		3536
80 (8C, B4)	2.3 E quattro	98	09/91 – 12/94		3536
80 (8C, B4)	2.6 quattro	110	06/92 – 12/94		3536
80 (8C, B4)	2.8 quattro	128	09/91 – 12/94		3536
80 (8C, B4)	S2 quattro	169	02/93 – 12/94		3536
80 (8C2, B4)	1.6	52	09.91 - 12.94	3650	
80 (8C2, B4)	1.6 E	74	06.93 - 12.94	3650	
80 (8C2, B4)	1.9 TD	55	09.91 - 12.94	3650	
80 (8C2, B4)	1.9 TDI	66	09.91 - 12.94	3650	
80 (8C2, B4)	2.0	66	09.91 - 12.94	3650	
80 (8C2, B4)	2.0 E	85	09.91 - 12.94	3650	
80 (8C2, B4)	2.0 E 16V	101	09.91 - 07.92	3650	

MAKE & MODEL   		KW	YEAR		
AUDI					
80 (8C2, B4)	2.0 E 16V	103	08.92 - 12.94	3650	
80 (8C2, B4)	2.0 E 16V quattro	103	04.92 - 12.94	3650	
80 (8C2, B4)	2.0 E quattro	85	09.91 - 12.94	3650	
80 (8C2, B4)	2.3 E	98	09.91 - 12.94	3650	
80 (8C2, B4)	2.3 E quattro	98	09.91 - 12.94	3650	
80 (8C2, B4)	2.6	110	07.92 - 12.94	3650	
80 Avant (8C, B4)	20	66	07/92 - 01/96		3536
80 Avant (8C, B4)	26	110	07/92 – 01/96		3536
80 Avant (8C, B4)	28	128	09/91 – 01/96		3536
80 Avant (8C, B4)	1.6 E	74	06/93 – 01/96		3536
80 Avant (8C, B4)	1.9 TD	55	09/91 – 12/94		3536
80 Avant (8C, B4)	1.9 TDI	66	07/92 – 01/96		3536
80 Avant (8C, B4)	2.0 E	85	07/92 – 01/96		3536
80 Avant (8C, B4)	2.0 E 16V	103	02/93 – 01/96		3536
80 Avant (8C, B4)	2.0 E 16V quattro	103	12/92 – 07/95		3536
80 Avant (8C, B4)	2.0 quattro	79	11/93 – 01/96		3536
80 Avant (8C, B4)	2.3 E	98	07/92 – 01/96		3536
80 Avant (8C, B4)	2.3 E quattro	98	09/91 – 11/94		3536
80 Avant (8C, B4)	2.6 quattro	110	07/92 – 07/95		3536
80 Avant (8C, B4)	2.8 quattro	128	08/92 – 07/95		3536
80 Avant (8C, B4)	S2 quattro	169	02/93 – 07/95		3536
80 Avant (8C5, B4)	1.6 E	74	06.93 - 01.96	3650	
80 Avant (8C5, B4)	1.9 TD	55	09.91 - 12.94	3650	
80 Avant (8C5, B4)	1.9 TDI	66	07.92 - 01.96	3650	
80 Avant (8C5, B4)	2.0	66	07.92 - 01.96	3650	
80 Avant (8C5, B4)	2.0 E	85	07.92 - 01.96	3650	
80 Avant (8C5, B4)	2.0 E 16V	103	02.93 - 01.96	3650	
80 Avant (8C5, B4)	2.0 E 16V quattro	103	12.92 - 07.95	3650	
80 Avant (8C5, B4)	2.0 quattro	79	11.93 - 01.96	3650	
80 Avant (8C5, B4)	2.3 E	98	07.92 - 01.96	3650	
80 Avant (8C5, B4)	2.3 E quattro	98	09.91 - 11.94	3650	
80 Avant (8C5, B4)	2.6	110	07.92 - 01.96	3650	
90 (81, 85, B2)	20	83	03/86 – 03/87	3635	
90 (81, 85, B2)	20	83	03/86 – 03/87	3649	
90 (81, 85, B2)	20	85	10/84 – 03/87	3635	
90 (81, 85, B2)	20	85	10/84 – 03/87	3649	
90 (81, 85, B2)	22	85	01/85 – 03/87	3635	
90 (81, 85, B2)	22	85	01/85 – 03/87	3649	
90 (81, 85, B2)	22	100	10/84 – 03/87		3536
90 (81, 85, B2)	22	100	10/84 – 03/87	3635	
90 (81, 85, B2)	22	100	10/84 – 03/87	3649	
90 (81, 85, B2)	2.0	83	03.86 - 03.87	3650	
90 (81, 85, B2)	2.2 E quattro	88	08/85 – 03/87		3536
90 (81, 85, B2)	2.2 E quattro	88	08/85 – 03/87	3635	
90 (81, 85, B2)	2.2 E quattro	88	08/85 – 03/87	3649	
90 (81, 85, B2)	2.2 E quattro	100	11/84 – 03/87		3536
90 (81, 85, B2)	2.2 E quattro	100	11/84 – 03/87	3635	
90 (81, 85, B2)	2.2 E quattro	100	11/84 – 03/87	3649	
90 (89, 89Q, 8A, B3)	20	85	07/88 – 09/91		3536
90 (89, 89Q, 8A, B3)	1.6 TD	59	04.87 - 09.91	3650	
90 (89, 89Q, 8A, B3)	2.0	85	07.88 - 09.91	3650	
90 (89, 89Q, 8A, B3)	2.0 20 V	118	08/89 – 07/91		3536
90 (89, 89Q, 8A, B3)	2.0 20 V	118	08.89 - 07.91	3650	
90 (89, 89Q, 8A, B3)	2.0 20 V quattro	118	08/88 – 09/91		3536
90 (89, 89Q, 8A, B3)	2.0 20 V quattro	118	08/88 – 09/91	3619	
90 (89, 89Q, 8A, B3)	2.0 20 V quattro	118	08.88 - 09.91	3650	
90 (89, 89Q, 8A, B3)	2.0 quattro	101	08/89 – 07/90		3536
90 (89, 89Q, 8A, B3)	2.0 quattro	101	08/89 – 07/90	3619	
90 (89, 89Q, 8A, B3)	2.0 quattro	101	08.89 - 07.90	3650	
90 (89, 89Q, 8A, B3)	2.2 E	100	04/87 – 07/91		3536
90 (89, 89Q, 8A, B3)	2.2 E	100	04.87 - 07.91	3650	
90 (89, 89Q, 8A, B3)	2.2 E quattro	100	04/87 – 09/91		3536
90 (89, 89Q, 8A, B3)	2.2 E quattro	100	04/87 – 09/91	3619	
90 (89, 89Q, 8A, B3)	2.2 E quattro	100	04.87 - 09.91	3650	
90 (89, 89Q, 8A, B3)	2.3 E	98	04/87 – 09/91		3536
90 (89, 89Q, 8A, B3)	2.3 E	98	04.87 - 09.91	3650	
90 (89, 89Q, 8A, B3)	2.3 E	100	04/87 – 07/91		3536
90 (89, 89Q, 8A, B3)	2.3 E	100	04.87 - 07.91	3650	
90 (89, 89Q, 8A, B3)	2.3 E 20V	123	04/90 – 07/91		3536
90 (89, 89Q, 8A, B3)	2.3 E 20V	125	08/88 – 07/91		3536
90 (89, 89Q, 8A, B3)	2.3 E 20V quattro	123	04/90 – 9/91		3536

MAKE & MODEL		KW	YEAR		
AUDI					
90 (89, 89Q, 8A, B3)	2.3 E 20V quattro	125	06/88 – 09/91		3536
90 (89, 89Q, 8A, B3)	2.3 E quattro	98	04/87 – 09/91		3536
90 (89, 89Q, 8A, B3)	2.3 E quattro	98	04/87 – 09/91	3619	
90 (89, 89Q, 8A, B3)	2.3 E quattro	98	04.87 - 09.91	3650	
90 (89, 89Q, 8A, B3)	2.3 E quattro	100	04/87 – 07/91		3536
90 (89, 89Q, 8A, B3)	2.3 E quattro	100	04/87 – 07/91	3619	
90 (89, 89Q, 8A, B3)	2.3 E quattro	100	04.87 - 07.91	3650	
A1 (8X1, 8XK)	1.0 TFSI	60	01/16 -		3529/1
A1 (8X1, 8XK)	1.0 TFSI	60	01/16 -	3782/1	
A1 (8X1, 8XK)	1.0 TFSI	60	01/16 -	3904	
A1 (8X1, 8XK)	1.0 TFSI	70	03/15 -		3529/1
A1 (8X1, 8XK)	1.0 TFSI	70	03/15 -	3782/1	
A1 (8X1, 8XK)	1.0 TFSI	60	01/16 -		4336
A1 (8X1, 8XK)	1.0 TFSI	70	03/15 -		4336
A1 (8X1, 8XK)	1.2 TFSI	63	05/10 -		3529/1
A1 (8X1, 8XK)	1.2 TFSI	63	05/10 -	3782/1	
A1 (8X1, 8XK)	1.2 TFSI	63	05/10 -		4135
A1 (8X1, 8XK)	1.4 TDI	66	11/14 -		3529/1
A1 (8X1, 8XK)	1.4 TDI	66	11/14 -	3782/1	
A1 (8X1, 8XK)	1.4 TDI	66	11/14 -		4336
A1 (8X1, 8XK)	1.4 TFSI	90	05/10 -		3529/1
A1 (8X1, 8XK)	1.4 TFSI	90	05/10 -	3782/1	
A1 (8X1, 8XK)	1.4 TFSI	90	05/10 -		4135
A1 (8X1, 8XK)	1.4 TFSI	92	11/14 -		3529/1
A1 (8X1, 8XK)	1.4 TFSI	92	11/14 -	3782/1	
A1 (8X1, 8XK)	1.4 TFSI	103	04/12 -		3529/1
A1 (8X1, 8XK)	1.4 TFSI	103	04/12 -	3782/1	
A1 (8X1, 8XK)	1.4 TFSI	103	04/12 -	3904	
A1 (8X1, 8XK)	1.4 TFSI	103	04/12 -		4135
A1 (8X1, 8XK)	1.4 TFSI	110	11/14 -		3529/1
A1 (8X1, 8XK)	1.4 TFSI	110	11/14 -	3782/1	
A1 (8X1, 8XK)	1.4 TFSI	136	01/11 -		3529/1
A1 (8X1, 8XK)	1.4 TFSI	136	01/11 -	3782/1	
A1 (8X1, 8XK)	1.4 TFSI	136	01/11 -	3904	
A1 (8X1, 8XK)	1.4 TFSI	136	01/11 -		4135
A1 (8X1, 8XK)	1.4 TFSI	92	11/14 -		4336
A1 (8X1, 8XK)	1.4 TSI	110	11/14 -		4336
A1 (8X1, 8XK)	1.6 TDI	66	03/11 -		3529/1
A1 (8X1, 8XK)	1.6 TDI	66	03/11 -	3782/1	
A1 (8X1, 8XK)	1.6 TDI	66	03/11 -		4135
A1 (8X1, 8XK)	1.6 TDI	77	05/10 -		3529/1
A1 (8X1, 8XK)	1.6 TDI	77	05/10 -	3782/1	
A1 (8X1, 8XK)	1.6 TDI	77	05/10 -		4135
A1 (8X1, 8XK)	1.6 TDI	85	11/14 -		3529/1
A1 (8X1, 8XK)	1.6 TDI	85	11/14 -	3782/1	
A1 (8X1, 8XK)	1.6 TDI	85	11/14 -		4336
A1 (8X1, 8XK)	1.8 TFSI	141	02/15 -		3529/1
A1 (8X1, 8XK)	1.8 TFSI	141	02/15 -	3782/1	
A1 (8X1, 8XK)	1.8 TFSI	141	02/15 -		4336
A1 (8X1, 8XK)	2.0 TDI	100	05/12 -		3529/1
A1 (8X1, 8XK)	2.0 TDI	100	05/12 -	3782/1	
A1 (8X1, 8XK)	2.0 TDI	100	05/12 -	3904	
A1 (8X1, 8XK)	2.0 TDI	105	09/11 -		3529/1
A1 (8X1, 8XK)	2.0 TDI	105	09/11 -	3782/1	
A1 (8X1, 8XK)	2.0 TDI	105	09/11 -	3904	
A1 (8X1, 8XK)	2.0 TDI	100	05/12 -		4135
A1 (8X1, 8XK)	2.0 TDI	105	09/11 -		4135
A1 (8X1, 8XK)	2.0 TFSI quattro	188	03/12 -		3529/1
A1 (8X1, 8XK)	2.0 TFSI quattro	188	03/12 -	3782/1	
A1 (8X1, 8XK)	2.0 TFSI quattro	188	03/12 -		4135
A1 (8X1, 8XK)	S1 quattro	170	03/14 -		4135
A1 Sportback (8XA, 8XF)	1.0 TFSI	60	01/16 -		3529/1
A1 Sportback (8XA, 8XF)	1.0 TFSI	60	01/16 -	3782/1	
A1 Sportback (8XA, 8XF)	1.0 TFSI	60	01/16 -	3904	
A1 Sportback (8XA, 8XF)	1.0 TFSI	70	03/15 -		3529/1
A1 Sportback (8XA, 8XF)	1.0 TFSI	70	03/15 -	3782/1	
A1 Sportback (8XA, 8XF)	1.0 TFSI	60	01/16 -		4336
A1 Sportback (8XA, 8XF)	1.0 TFSI	70	03/15 -		4336
A1 Sportback (8XA, 8XF)	1.2 TFSI	63	01/12 -		3529/1
A1 Sportback (8XA, 8XF)	1.2 TFSI	63	01/12 -	3782/1	
A1 Sportback (8XA, 8XF)	1.2 TFSI	63	01/12 -		4135

MAKE & MODEL		KW	YEAR		
AUDI					
A1 Sportback (8XA, 8XF)	1.4 TDI	66	11/14 -		3529/1
A1 Sportback (8XA, 8XF)	1.4 TDI	66	11/14 -	3782/1	
A1 Sportback (8XA, 8XF)	1.4 TDI	66	11/14 -		4336
A1 Sportback (8XA, 8XF)	1.4 TFSI	90	11/11 -		3529/1
A1 Sportback (8XA, 8XF)	1.4 TFSI	90	11/11 -	3782/1	
A1 Sportback (8XA, 8XF)	1.4 TFSI	90	11/11 -		4135
A1 Sportback (8XA, 8XF)	1.4 TFSI	92	11/14 -		3529/1
A1 Sportback (8XA, 8XF)	1.4 TFSI	92	11/14 -	3782/1	
A1 Sportback (8XA, 8XF)	1.4 TFSI	103	04/12 -		3529/1
A1 Sportback (8XA, 8XF)	1.4 TFSI	103	04/12 -	3782/1	
A1 Sportback (8XA, 8XF)	1.4 TFSI	103	04/12 -	3904	
A1 Sportback (8XA, 8XF)	1.4 TFSI	103	04/12 -		4135
A1 Sportback (8XA, 8XF)	1.4 TFSI	110	11/14 -		3529/1
A1 Sportback (8XA, 8XF)	1.4 TFSI	110	11/14 -	3782/1	
A1 Sportback (8XA, 8XF)	1.4 TFSI	136	11/11 -		3529/1
A1 Sportback (8XA, 8XF)	1.4 TFSI	136	11/11 -	3782/1	
A1 Sportback (8XA, 8XF)	1.4 TFSI	136	11/11 -	3904	
A1 Sportback (8XA, 8XF)	1.4 TFSI	136	11/11 -		4135
A1 Sportback (8XA, 8XF)	1.4 TFSI	92	11/14 -		4336
A1 Sportback (8XA, 8XF)	1.4 TSI	110	11/14 -		4336
A1 Sportback (8XA, 8XF)	1.6 TDI	66	11/11 -		3529/1
A1 Sportback (8XA, 8XF)	1.6 TDI	66	11/11 -	3782/1	
A1 Sportback (8XA, 8XF)	1.6 TDI	66	11/11 -		4135
A1 Sportback (8XA, 8XF)	1.6 TDI	77	11/11 -		3529/1
A1 Sportback (8XA, 8XF)	1.6 TDI	77	11/11 -	3782/1	
A1 Sportback (8XA, 8XF)	1.6 TDI	77	11/11 -		4135
A1 Sportback (8XA, 8XF)	1.6 TDI	85	11/14 -		3529/1
A1 Sportback (8XA, 8XF)	1.6 TDI	85	11/14 -	3782/1	
A1 Sportback (8XA, 8XF)	1.6 TDI	85	11/14 -		4336
A1 Sportback (8XA, 8XF)	1.8 TFSI	141	02/15 -		3529/1
A1 Sportback (8XA, 8XF)	1.8 TFSI	141	02/15 -	3782/1	
A1 Sportback (8XA, 8XF)	1.8 TFSI	141	02/15 -		4336
A1 Sportback (8XA, 8XF)	2.0 TDI	100	05/12 -		3529/1
A1 Sportback (8XA, 8XF)	2.0 TDI	105	09/11 -		3529/1
A1 Sportback (8XA, 8XF)	2.0 TDI	100	05/12 -	3782/1	
A1 Sportback (8XA, 8XF)	2.0 TDI	100	05/12 -	3904	
A1 Sportback (8XA, 8XF)	2.0 TDI	100	05/12 -		4135
A1 Sportback (8XA, 8XF)	2.0 TDI	105	09/11 -	3782/1	
A1 Sportback (8XA, 8XF)	2.0 TDI	105	09/11 -	3904	
A1 Sportback (8XA, 8XF)	2.0 TDI	105	09/11 -		4135
A1 Sportback (8XA, 8XF)	S1 quattro	170	03/14 -		4135
A2 (8Z0)	14	55	02/00 – 08/05	3782	
A2 (8Z0)	1.4 TDI	55	02/00 – 08/05	3782	
A2 (8Z0)	1.4 TDI	66	11/03 – 08/05		3529/1
A2 (8Z0)	1.4 TDI	66	11/03 – 08/05	3782	
A2 (8Z0)	1.6 FSI	81	05/02 – 08/05		3529/1
A2 (8Z0)	1.6 FSI	81	05/02 – 08/05	3782	
A3 III (8V7, 8VE)	1.4 TFSI (CPTA)	103	10/13 -	4228	
A3 III (8V7, 8VE)	1.4 TFSI (CPTA)	103	10/13 -		4241
A3 III (8V7, 8VE)	1.4 TFSI (CXSB)	92	02/14 -	4228	
A3 III (8V7, 8VE)	1.4 TFSI (CXSB)	92	02/14 -		4241
A3 III (8V7, 8VE)	1.4 TFSI (CZCC)	85	02/16 -		4241
A3 III (8V7, 8VE)	1.4 TFSI (CZEA)	110	05/14 -	4228	
A3 III (8V7, 8VE)	1.4 TFSI (CZEA)	110	05/14 -		4241
A3 III (8V7, 8VE)	1.6 TDI (CRKB)	81	02/14 -	4228	
A3 III (8V7, 8VE)	1.6 TDI (CRKB)	81	02/14 -		4241
A3 III (8V7, 8VE)	1.8 TFSI (CJSA)	132	10/13 -	4228	
A3 III (8V7, 8VE)	1.8 TFSI (CJSA)	132	10/13 -		4241
A3 III (8V7, 8VE)	1.8 TFSI (CJSB)	132	03/14 -	4228	
A3 III (8V7, 8VE)	1.8 TFSI (CJSB)	132	03/14 -		4241
A3 III (8V7, 8VE)	1.8 TFSI (CNSB)	125	05/14 -	4228	
A3 III (8V7, 8VE)	1.8 TFSI (CNSB)	125	05/14 -		4241
A3 III (8V7, 8VE)	2.0 TDI (CRLB)	110	10/13 -	4228	
A3 III (8V7, 8VE)	2.0 TDI (CRLB)	110	10/13 -		4241
A3 III (8V7, 8VE)	2.0 TDI (CRLB)	110	03/14 -		4241
A3 III (8V7, 8VE)	2.0 TDI (CRLC)	100	10/13 -	4228	
A3 III (8V7, 8VE)	2.0 TDI (CRLC)	100	10/13 -		4241
A3 III (8V7, 8VE)	2.0 TDI (CUNA)	135	05/14 -	4228	
A3 III (8V7, 8VE)	2.0 TDI (CUNA)	135	05/14 -	4228	
A3 III (8V7, 8VE)	2.0 TDI (CUNA)	135	05/14 -		4241
A3 III (8V7, 8VE)	2.0 TDI (CUNA)	135	05/14 -		4241

MAKE & MODEL		KW	YEAR		
AUDI					
A3 III (8V7, 8VE)	2.0 TDI (CRLB)	110	03/14 -	4228	
A3 III (8V7, 8VE)	2.0 TFSI (CNTC)	162	05/14 -		4241
A3 III (8V7, 8VE)	2.0 TFSI (CZPB)	140	05/16 -	4228	
A3 III (8V7, 8VE)	2.0 TFSI (CZPB)	140	05/16 -	4228	
A3 III (8V7, 8VE)	2.0 TFSI (CZPB)	140	05/16 -		4241
A3 III (8V7, 8VE)	2.0 TFSI (CZPB)	140	05/16 -		4241
A3 III (8V7, 8VE)	S3 (CJXC)	221	04/14 -	4228	
A3 III (8V7, 8VE)	S3 (CJXC)	221	04/14 -		4241
A3 III (8V7, 8VE)	S3 (CJXG)	228	07/16 -	4228	
A3 III (8V7, 8VE)	S3 (CJXG)	228	07/16 -		4241
A3 III (8V7, 8VE)	S3 (DJHA)	228	07/16 -	4228	
A3 III (8V7, 8VE)	S3 (DJHB)	213	07/16 -	4228	
A3 III (8V7, 8VE)	S3 (DJHB)	213	07/16 -		4241
A3 III (8V7, 8VE)	S3 (CJXF)	210	03/14 -	4228	
A3 III (8V7, 8VE)	S3 (CJXF)	210	03/14 -		4241
A3 III (8V7, 8VE)	S3 (DJHA)	228	07/16 -		4241
A3 III (8VS, 8VM)	1.0 TFSI (CHZD)	85	07/16 -	4228	
A3 III (8VS, 8VM)	1.0 TFSI (CHZD)	85	07/16 -		4241
A3 III (8VS, 8VM)	1.2 TFSI (CJZA)	77	10/13 -	4228	
A3 III (8VS, 8VM)	1.2 TFSI (CJZA)	77	10/13 -		4241
A3 III (8VS, 8VM)	1.2 TFSI (CYVB)	81	05/14 -	4228	
A3 III (8VS, 8VM)	1.2 TFSI (CYVB)	81	05/14 -		4241
A3 III (8VS, 8VM)	1.4 TFSI (CPTA)	103	05/13 -	4228	
A3 III (8VS, 8VM)	1.4 TFSI (CPTA)	103	05/13 -		4241
A3 III (8VS, 8VM)	1.4 TFSI (CXSA)	90	09/13 -	4228	
A3 III (8VS, 8VM)	1.4 TFSI (CXSA)	90	09/13 -		4241
A3 III (8VS, 8VM)	1.4 TFSI (CXSB)	92	09/13 -	4228	
A3 III (8VS, 8VM)	1.4 TFSI (CXSB)	92	09/13 -		4241
A3 III (8VS, 8VM)	1.4 TFSI (CZEA)	110	05/14 -	4228	
A3 III (8VS, 8VM)	1.4 TFSI (CZEA)	110	05/14 -		4241
A3 III (8VS, 8VM)	1.6 TDI (CLHA)	77	09/13 -	4228	
A3 III (8VS, 8VM)	1.6 TDI (CLHA)	77	09/13 -		4241
A3 III (8VS, 8VM)	1.6 TDI (CRKB)	81	05/14 -	4228	
A3 III (8VS, 8VM)	1.6 TDI (CRKB)	81	05/14 -		4241
A3 III (8VS, 8VM)	1.6 TDI (CXXB)	81	05/14 -	4228	
A3 III (8VS, 8VM)	1.6 TDI (CXXB)	81	05/15 -	4228	
A3 III (8VS, 8VM)	1.6 TDI (CXXB)	81	05/14 -		4241
A3 III (8VS, 8VM)	1.6 TDI (CXXB)	81	05/15 -		4241
A3 III (8VS, 8VM)	1.6 TDI (DBKA)	81	05/14 -	4228	
A3 III (8VS, 8VM)	1.6 TDI (DBKA)	81	05/14 -		4241
A3 III (8VS, 8VM)	1.8 TFSI (CJSA)	132	05/13 -	4228	
A3 III (8VS, 8VM)	1.8 TFSI (CJSA)	132	05/13 -		4241
A3 III (8VS, 8VM)	1.8 TFSI (CJSB)	132	11/13 -	4228	
A3 III (8VS, 8VM)	1.8 TFSI (CJSB)	132	11/13 -		4241
A3 III (8VS, 8VM)	1.8 TFSI (CNSB)	125	11/13 -	4228	
A3 III (8VS, 8VM)	1.8 TFSI (CNSB)	125	11/13 -		4241
A3 III (8VS, 8VM)	2.0 TDI (CRBC)	110	05/13 -	4228	
A3 III (8VS, 8VM)	2.0 TDI (CRBC)	110	10/13 -	4228	
A3 III (8VS, 8VM)	2.0 TDI (CRBC)	110	05/13 -		4241
A3 III (8VS, 8VM)	2.0 TDI (CRBC)	110	10/13 -		4241
A3 III (8VS, 8VM)	2.0 TDI (CRBD)	100	09/13 -	4228	
A3 III (8VS, 8VM)	2.0 TDI (CRBD)	100	09/13 -		4241
A3 III (8VS, 8VM)	2.0 TDI (CRFA)	81	05/13 -	4228	
A3 III (8VS, 8VM)	2.0 TDI (CRFA)	81	05/13 -		4241
A3 III (8VS, 8VM)	2.0 TDI (CRFC)	105	10/13 -	4228	
A3 III (8VS, 8VM)	2.0 TDI (CRFC)	105	10/13 -		4241
A3 III (8VS, 8VM)	2.0 TDI (CRLB)	110	05/13 -	4228	
A3 III (8VS, 8VM)	2.0 TDI (CRLB)	110	05/13 -		4241
A3 III (8VS, 8VM)	2.0 TDI (CUNA)	135	05/14 -	4228	
A3 III (8VS, 8VM)	2.0 TDI (CUNA)	135	05/14 -	4228	
A3 III (8VS, 8VM)	2.0 TDI (CUNA)	135	05/14 -		4241
A3 III (8VS, 8VM)	2.0 TDI (CUNA)	135	05/14 -		4241
A3 III (8VS, 8VM)	2.0 TFSI (CZPB)	140	05/16 -	4228	
A3 III (8VS, 8VM)	2.0 TFSI (CZPB)	140	05/16 -	4228	
A3 III (8VS, 8VM)	2.0 TFSI (CZPB)	140	05/16 -		4241
A3 III (8VS, 8VM)	2.0 TFSI (CZPB)	140	05/16 -		4241
A3 III (8VS, 8VM)	S3 (CJXB)	206	10/13 -	4228	
A3 III (8VS, 8VM)	S3 (CJXB)	206	10/13 -		4241
A3 III (8VS, 8VM)	S3 (CJXC)	221	10/13 -	4228	
A3 III (8VS, 8VM)	S3 (CJXD)	213	08/16 -	4228	
A3 III (8VS, 8VM)	S3 (CJXD)	213	08/16 -		4241

MAKE & MODEL		KW	YEAR		
AUDI					
A3 III (8VS, 8VM)	S3 (CJXG)	228	06/16 -	4228	
A3 III (8VS, 8VM)	S3 (CJXG)	228	06/16 -		4241
A3 III (8VS, 8VM)	S3 (CYFB)	215	05/14 -	4228	
A3 III (8VS, 8VM)	S3 (CYFB)	215	05/14 -		4241
A3 III (8VS, 8VM)	S3 (DJHA)	228	06/16 -	4228	
A3 III (8VS, 8VM)	S3 (DJHA)	228	06/16 -		4241
A3 III (8VS, 8VM)	S3 (DJHB)	213	08/16 -	4228	
A3 III (8VS, 8VM)	S3 (DJHB)	213	08/16 -		4241
A3 III (8VS, 8VM)	S3 (CJXF)	210	05/14 -	4228	
A3 III (8VS, 8VM)	S3 (CJXF)	210	05/14 -		4241
A3 III (8VS, 8VM)	S3 (CJXC)	221	10/13 -		4241
A3 (8L1)	16	74	09/96 – 05/03		3529/1
A3 (8L1)	16	74	09/96 – 05/03	3782	
A3 (8L1)	16	74	09/96 – 05/03	3782/1	
A3 (8L1)	16	75	08/00 – 05/03		3529/1
A3 (8L1)	16	75	08/00 – 05/03	3782	
A3 (8L1)	16	75	08/00 – 05/03	3782/1	
A3 (8L1)	18	92	09/96 – 05/03		3529/1
A3 (8L1)	18	92	09/96 – 05/03	3782	
A3 (8L1)	18	92	09/96 – 05/03	3782/1	
A3 (8L1)	1.6 (AEH)	74	09/96 – 05/03	3682	
A3 (8L1)	1.6 (AKL)	74	09/96 – 05/03	3682	
A3 (8L1)	1.6 (APF)	74	09/96 – 05/03	3682	
A3 (8L1)	1.8 T	110	12/96 – 05/03		3529/1
A3 (8L1)	1.8 T	110	12/96 – 05/03	3590/1	
A3 (8L1)	1.8 T	132	12/98 – 05/03		3529/1
A3 (8L1)	1.8 T	132	12/98 – 05/03	3590/1	
A3 (8L1)	1.8 T quattro	110	12/96 – 05/03		3529/1
A3 (8L1)	1.8 T quattro	110	12/96 – 05/03	3590/1	
A3 (8L1)	1.8 T quattro	132	10/98 – 05/03		3529/1
A3 (8L1)	1.8 T quattro	132	10/98 – 05/03	3590/1	
A3 (8L1)	1.9 TDI	66	09/96 – 07/01		3529/1
A3 (8L1)	1.9 TDI	66	09/96 – 07/01	3782	
A3 (8L1)	1.9 TDI	66	09/96 – 07/01	3782/1	
A3 (8L1)	1.9 TDI	74	10/00 – 05/03		3529/1
A3 (8L1)	1.9 TDI	74	10/00 – 05/03	3782	
A3 (8L1)	1.9 TDI	74	10/00 – 05/03	3782/1	
A3 (8L1)	1.9 TDI	81	08/97 – 07/01		3529/1
A3 (8L1)	1.9 TDI	81	08/97 – 07/01	3782	
A3 (8L1)	1.9 TDI	81	08/97 – 07/01	3782/1	
A3 (8L1)	1.9 TDI	96	08/00 – 05/03		3529/1
A3 (8L1)	1.9 TDI	96	08/00 – 05/03	3590/1	
A3 (8L1)	1.9 TDI quattro	96	08/00 – 05/03		3529/1
A3 (8L1)	1.9 TDI quattro	96	08/00 – 05/03	3590/1	
A3 (8L1)	S3 quattro	154	03/99 – 04/02		3529/1
A3 (8L1)	S3 quattro	154	03/99 – 04/02	3590/1	
A3 (8L1)	S3 quattro	165	10/01 – 05/03		3529/1
A3 (8L1)	S3 quattro	165	10/01 – 05/03	3590/1	
A3 (8P1)	16	75	05/03 – 08/12		3529/1
A3 (8P1)	16	75	05/03 – 08/12	3782	
A3 (8P1)	16	75	05/03 08/12	3904	
A3 (8P1)	16	75	05/03 – 08/12		3905
A3 (8P1)	16	75	05/03 – 08/12		4135
A3 (8P1)	20	120	06/06 – 08/12		3529/1
A3 (8P1)	20	120	06/06 – 08/12	3904	
A3 (8P1)	20	120	06/06 – 08/12		3905
A3 (8P1)	20	120	06/06 – 08/12		4135
A3 (8P1)	1.2 TSI	77	04/10 – 08/12		3529/1
A3 (8P1)	1.2 TSI	77	04/10 – 08/12	3782	
A3 (8P1)	1.2 TSI	77	04/10 – 08/12		3905
A3 (8P1)	1.2 TSI	77	04/10 – 08/12		4135
A3 (8P1)	1.4 TFSI	92	09/07 – 08/12		3529/1
A3 (8P1)	1.4 TFSI	92	09/07 – 08/12	3782	
A3 (8P1)	1.4 TFSI	92	09/07 08/12	3904	
A3 (8P1)	1.4 TFSI	92	09/07 – 08/12		3905
A3 (8P1)	1.4 TFSI	92	09/07 – 08/12		4135
A3 (8P1)	1.6 E-Power	75	01/11 – 08/12		3529/1
A3 (8P1)	1.6 E-Power	75	01/11 – 08/12	3782	
A3 (8P1)	1.6 E-Power	75	01/11 08/12	3904	
A3 (8P1)	1.6 E-Power	75	01/11 – 08/12		3905
A3 (8P1)	1.6 E-Power	75	01/11 – 08/12		4135

MAKE & MODEL		KW	YEAR		
AUDI					
A3 (8P1)	1.6 FSI	85	08/03 – 09/07		3529/1
A3 (8P1)	1.6 FSI	85	08/03 – 09/07	3782	
A3 (8P1)	1.6 FSI	85	08/03 09/07	3904	
A3 (8P1)	1.6 FSI	85	08/03 – 09/07		3905
A3 (8P1)	1.6 FSI	85	08/03 – 09/07		4135
A3 (8P1)	1.6 TDI	66	05/09 – 08/12		3529/1
A3 (8P1)	1.6 TDI	66	05/09 – 08/12	3782	
A3 (8P1)	1.6 TDI	66	05/09 08/12	3904	
A3 (8P1)	1.6 TDI	66	05/09 – 08/12		3905
A3 (8P1)	1.6 TDI	66	05/09 – 08/12		4135
A3 (8P1)	1.6 TDI	77	05/09 – 08/12		3529/1
A3 (8P1)	1.6 TDI	77	05/09 – 08/12	3782	
A3 (8P1)	1.6 TDI	77	05/09 – 08/12	3904	
A3 (8P1)	1.6 TDI	77	05/09 – 08/12		3905
A3 (8P1)	1.6 TDI	77	05/09 – 08/12		4135
A3 (8P1)	1.8 T	110	08/06 – 08/12		3529/1
A3 (8P1)	1.8 T	110	08/06 – 08/12	3904	
A3 (8P1)	1.8 T	110	08/06 – 08/12		3905
A3 (8P1)	1.8 T	110	08/06 – 08/12		4135
A3 (8P1)	1.8 TFSI	118	11/06 – 08/12		3529/1
A3 (8P1)	1.8 TFSI	118	11/06 – 08/12	3904	
A3 (8P1)	1.8 TFSI	118	11/06 – 08/12		3905
A3 (8P1)	1.8 TFSI	118	11/06 – 08/12		4135
A3 (8P1)	1.8 TFSI quattro	118	07/08 – 08/12		3529/1
A3 (8P1)	1.8 TFSI quattro	118	07/08 – 08/12	3904	
A3 (8P1)	1.8 TFSI quattro	118	07/08 – 08/12		3905
A3 (8P1)	1.8 TFSI quattro	118	07/08 – 08/12		4135
A3 (8P1)	1.9 TDI	77	05/03 – 05/10		3529/1
A3 (8P1)	1.9 TDI	77	05/03 – 05/10	3782	
A3 (8P1)	1.9 TDI	77	05/03 – 05/10	3904	
A3 (8P1)	1.9 TDI	77	05/03 – 05/10		3905
A3 (8P1)	1.9 TDI	77	05/03 – 05/10		4135
A3 (8P1)	2.0 FSI	110	05/03 – 06/08		3529/1
A3 (8P1)	2.0 FSI	110	05/03 – 06/08	3904	
A3 (8P1)	2.0 FSI	110	05/03 – 06/08		3905
A3 (8P1)	2.0 FSI	110	05/03 – 06/08		4135
A3 (8P1)	2.0 TDI	100	05/03 – 08/12		3529/1
A3 (8P1)	2.0 TDI	100	05/03 – 08/12	3904	
A3 (8P1)	2.0 TDI	100	05/03 – 08/12		3905
A3 (8P1)	2.0 TDI	100	05/03 – 08/12		4135
A3 (8P1)	2.0 TDI	103	06/05 – 06/08		3529/1
A3 (8P1)	2.0 TDI	103	06/05 – 06/08	3904	
A3 (8P1)	2.0 TDI	103	06/05 – 06/08		3905
A3 (8P1)	2.0 TDI	103	06/05 – 06/08		4135
A3 (8P1)	2.0 TDI	120	06/06 – 06/08		3529/1
A3 (8P1)	2.0 TDI	120	06/06 – 06/08	3904	
A3 (8P1)	2.0 TDI	120	06/06 – 06/08		3905
A3 (8P1)	2.0 TDI	120	06/06 – 06/08		4135
A3 (8P1)	2.0 TDI	125	03/06 – 08/12		3529/1
A3 (8P1)	2.0 TDI	125	03/06 – 08/12	3904	
A3 (8P1)	2.0 TDI	125	03/06 – 08/12		3905
A3 (8P1)	2.0 TDI	125	03/06 – 08/12		4135
A3 (8P1)	2.0 TDI 16V	103	05/03 – 08/12		3529/1
A3 (8P1)	2.0 TDI 16V	103	05/03 – 08/12	3904	
A3 (8P1)	2.0 TDI 16V	103	05/03 – 08/12		3905
A3 (8P1)	2.0 TDI 16V	103	05/03 – 08/12		4135
A3 (8P1)	2.0 TDI 16V quattro	103	08/04 – 08/12		3529/1
A3 (8P1)	2.0 TDI 16V quattro	103	08/04 – 08/12	3904	
A3 (8P1)	2.0 TDI 16V quattro	103	08/04 – 08/12		3905
A3 (8P1)	2.0 TDI 16V quattro	103	08/04 – 08/12		4135
A3 (8P1)	2.0 TDI quattro	100	05/03 – 06/08		3529/1
A3 (8P1)	2.0 TDI quattro	100	05/03 – 06/08	3904	
A3 (8P1)	2.0 TDI quattro	100	05/03 – 06/08		3905
A3 (8P1)	2.0 TDI quattro	100	05/03 – 06/08		4135
A3 (8P1)	2.0 TDI quattro	103	01/06 – 06/08		3529/1
A3 (8P1)	2.0 TDI quattro	103	01/06 – 06/08	3904	
A3 (8P1)	2.0 TDI quattro	103	01/06 – 06/08		3905
A3 (8P1)	2.0 TDI quattro	103	01/06 – 06/08		4135
A3 (8P1)	2.0 TDI quattro	125	03/06 – 08/12		3529/1
A3 (8P1)	2.0 TDI quattro	125	03/06 – 08/12	3904	
A3 (8P1)	2.0 TDI quattro	125	03/06 – 08/12		3905

MAKE & MODEL   		KW	YEAR		
AUDI					
A3 (8P1)	2.0 TDI quattro	125	03/06 – 08/12		4135
A3 (8P1)	2.0 TFSI	147	09/04 – 08/12		3529/1
A3 (8P1)	2.0 TFSI	147	09/04 – 08/12	3904	
A3 (8P1)	2.0 TFSI	147	09/04 – 08/12		3905
A3 (8P1)	2.0 TFSI	147	09/04 – 08/12		4135
A3 (8P1)	2.0 TFSI quattro	147	09/04 – 08/12		3529/1
A3 (8P1)	2.0 TFSI quattro	147	09/04 – 08/12	3904	
A3 (8P1)	2.0 TFSI quattro	147	09/04 – 08/12		3905
A3 (8P1)	2.0 TFSI quattro	147	09/04 – 08/12		4135
A3 (8VS)	35 TFSI	110	09/14 -	4295	
A3 (8VS)	40 TFSI	132	01/15 -	4295	
A3 Convertible (8P7)	16	75	09/08 – 05/10		3529/1
A3 Convertible (8P7)	16	75	09/08 – 05/10	3782	
A3 Convertible (8P7)	16	75	09/08 – 05/10		3905
A3 Convertible (8P7)	16	75	09/08 – 05/10		4135
A3 Convertible (8P7)	1.2 TFSI	77	03/10 – 05/13		3529/1
A3 Convertible (8P7)	1.2 TFSI	77	03/10 – 05/13	3782	
A3 Convertible (8P7)	1.2 TFSI	77	03/10 – 05/13		3905
A3 Convertible (8P7)	1.2 TFSI	77	03/10 – 05/13		4135
A3 Convertible (8P7)	1.4 TFSI	92	02/11 – 05/13		3529/1
A3 Convertible (8P7)	1.4 TFSI	92	02/11 – 05/13	3904	
A3 Convertible (8P7)	1.4 TFSI	92	02/11 – 05/13		3905
A3 Convertible (8P7)	1.4 TFSI	92	02/11 – 05/13		4135
A3 Convertible (8P7)	1.6 TDI	77	05/09 – 05/13		3529/1
A3 Convertible (8P7)	1.6 TDI	77	05/09 – 05/13	3782	
A3 Convertible (8P7)	1.6 TDI	77	05/09 – 05/13		3905
A3 Convertible (8P7)	1.6 TDI	77	05/09 – 05/13		4135
A3 Convertible (8P7)	1.8 TFSI	118	04/08 – 05/13		3529/1
A3 Convertible (8P7)	1.8 TFSI	118	04/08 – 05/13	3904	
A3 Convertible (8P7)	1.8 TFSI	118	04/08 – 05/13		3905
A3 Convertible (8P7)	1.8 TFSI	118	04/08 – 05/13		4135
A3 Convertible (8P7)	1.9 TDI	77	04/08 – 10/09		3529/1
A3 Convertible (8P7)	1.9 TDI	77	04/08 – 10/09	3782	
A3 Convertible (8P7)	1.9 TDI	77	04/08 – 10/09		3905
A3 Convertible (8P7)	1.9 TDI	77	04/08 – 10/09		4135
A3 Convertible (8P7)	2.0 TDI	100	04/08 – 05/13		3529/1
A3 Convertible (8P7)	2.0 TDI	100	04/08 – 05/13	3904	
A3 Convertible (8P7)	2.0 TDI	100	04/08 – 05/13		3905
A3 Convertible (8P7)	2.0 TDI	100	04/08 – 05/13		4135
A3 Convertible (8P7)	2.0 TDI	103	04/08 – 05/13		3529/1
A3 Convertible (8P7)	2.0 TDI	103	04/08 – 05/13	3904	
A3 Convertible (8P7)	2.0 TDI	103	04/08 – 05/13		3905
A3 Convertible (8P7)	2.0 TDI	103	04/08 – 05/13		4135
A3 Convertible (8P7)	2.0 TFSI	147	04/08 – 05/13		3529/1
A3 Convertible (8P7)	2.0 TFSI	147	04/08 – 05/13	3904	
A3 Convertible (8P7)	2.0 TFSI	147	04/08 – 05/13		3905
A3 Convertible (8P7)	2.0 TFSI	147	04/08 – 05/13		4135
A3 Convertible (8V7, 8VE)	1.4 TFSI	85	02/16 -	4295	
A3 Convertible (8V7, 8VE)	2.0 TFSI quattro	162	05/14 -	4295	
A3 III (8V1)	1.0 TFSI (CHZD)	85	07/16 -	4228	
A3 III (8V1)	1.0 TFSI (CHZD)	85	07/16 -		4241
A3 III (8V1)	1.2 TFSI (CJZA)	77	02/13 -	4228	
A3 III (8V1)	1.2 TFSI (CJZA)	77	02/13 -		4241
A3 III (8V1)	1.2 TFSI (CYVB)	81	05/14 -	4228	
A3 III (8V1)	1.2 TFSI (CYVB)	81	05/14 -		4241
A3 III (8V1)	1.4 TFSI (CPTA)	103	03/13 -	4228	
A3 III (8V1)	1.4 TFSI (CPTA)	103	03/13 -		4241
A3 III (8V1)	1.4 TFSI (CXSA)	90	04/12 -	4228	
A3 III (8V1)	1.4 TFSI (CXSA)	90	04/12 -		4241
A3 III (8V1)	1.4 TFSI (CXSB)	92	05/14 -	4228	
A3 III (8V1)	1.4 TFSI (CXSB)	92	05/14 -		4241
A3 III (8V1)	1.4 TFSI (CZCA)	92	05/14 -	4228	
A3 III (8V1)	1.4 TFSI (CZCA)	92	05/14 -		4241
A3 III (8V1)	1.4 TFSI (CZEA)	110	05/14 -	4228	
A3 III (8V1)	1.4 TFSI (CZEA)	110	05/14 -		4241
A3 III (8V1)	1.4 TFSI (CMBA)	90	04/12 -	4228	
A3 III (8V1)	1.4 TFSI (CMBA)	90	04/12 -		4241
A3 III (8V1)	1.6 TDI (CLHA)	77	10/12 -	4228	
A3 III (8V1)	1.6 TDI (CRKB)	81	09/13 -	4228	
A3 III (8V1)	1.6 TDI (CRKB)	81	09/13 -		4241
A3 III (8V1)	1.6 TDI (CLHA)	77	10/12 -		4241

MAKE & MODEL		KW	YEAR		
AUDI					
A3 III (8V1)	1.8 TFSI (CJSA)	132	04/12 -	4228	
A3 III (8V1)	1.8 TFSI (CJSA)	132	04/12 -		4241
A3 III (8V1)	1.8 TFSI (CJSB)	132	08/12 -	4228	
A3 III (8V1)	1.8 TFSI (CJSB)	132	08/12 -		4241
A3 III (8V1)	2.0 TDI (CRBC)	110	04/12 -	4228	
A3 III (8V1)	2.0 TDI (CRBC)	110	10/12 -	4228	
A3 III (8V1)	2.0 TDI (CRBC)	110	04/12 -		4241
A3 III (8V1)	2.0 TDI (CRBC)	110	10/12 -		4241
A3 III (8V1)	2.0 TDI (CRBD)	100	05/13 -	4228	
A3 III (8V1)	2.0 TDI (CRBD)	100	05/13 -		4241
A3 III (8V1)	2.0 TDI (CRFA)	81	01/13 -	4228	
A3 III (8V1)	2.0 TDI (CRFA)	81	01/13 -		4241
A3 III (8V1)	2.0 TDI (CRFC)	105	09/12 -	4228	
A3 III (8V1)	2.0 TDI (CRFC)	105	09/12 -		4241
A3 III (8V1)	2.0 TDI (CRLB)	110	04/12 -	4228	
A3 III (8V1)	2.0 TDI (CRLB)	110	04/12 -		4241
A3 III (8V1)	2.0 TDI (CUNA)	135	05/13 -	4228	
A3 III (8V1)	2.0 TDI (CUNA)	135	12/12 -	4228	
A3 III (8V1)	2.0 TDI (CUNA)	135	05/13 -		4241
A3 III (8V1)	2.0 TDI (CUNA)	135	12/12 -		4241
A3 III (8V1)	2.0 TFSI (CZPB)	140	05/16 -	4228	
A3 III (8V1)	2.0 TFSI (CZPB)	140	05/16 -	4228	
A3 III (8V1)	2.0 TFSI (CZPB)	140	05/16 -		4241
A3 III (8V1)	2.0 TFSI (CZPB)	140	05/16 -		4241
A3 III (8V1)	S3 (CJXB)	206	02/13 -	4228	
A3 III (8V1)	S3 (CJXB)	206	02/13 -		4241
A3 III (8V1)	S3 (CJXC)	221	11/12 -	4228	
A3 III (8V1)	S3 (CJXC)	221	11/12 -		4241
A3 III (8V1)	S3 (CJXD)	213	07/16 -	4228	
A3 III (8V1)	S3 (CJXD)	213	07/16 -		4241
A3 III (8V1)	S3 (CJXG)	228	06/16 -	4228	
A3 III (8V1)	S3 (CJXG)	228	06/16 -		4241
A3 III (8V1)	S3 (DJHA)	228	06/16 -	4228	
A3 III (8V1)	S3 (DJHA)	228	06/16 -		4241
A3 III (8V1)	S3 (DJHB)	213	07/16 -	4228	
A3 III (8V1)	S3 (DJHB)	213	07/16 -		4241
A3 III (8V1)	S3 (CJXF)	210	05/14 -	4228	
A3 III (8V1)	S3 (CJXF)	210	05/14 -		4241
A3 III Sportback (8VA, 8VF)	1.0 TFSI (CHZD)	85	07/16 -	4228	
A3 III Sportback (8VA, 8VF)	1.0 TFSI (CHZD)	85	07/16 -		4241
A3 III Sportback (8VA, 8VF)	1.2 TFSI (CJZA)	77	05/13 -	4228	
A3 III Sportback (8VA, 8VF)	1.2 TFSI (CJZA)	77	05/13 -		4241
A3 III Sportback (8VA, 8VF)	1.2 TFSI (CYVB)	81	05/14 -		4241
A3 III Sportback (8VA, 8VF)	1.4 TFSI (CPTA)	103	03/13 -	4228	
A3 III Sportback (8VA, 8VF)	1.4 TFSI (CPTA)	103	03/13 -		4241
A3 III Sportback (8VA, 8VF)	1.4 TFSI (CXSB)	92	05/14 -		4241
A3 III Sportback (8VA, 8VF)	1.4 TFSI (CZCA)	92	05/14 -		4241
A3 III Sportback (8VA, 8VF)	1.4 TFSI (CZEA)	110	05/14 -		4241
A3 III Sportback (8VA, 8VF)	1.4 TFSI (CMBA)	90	09/12 -	4228	
A3 III Sportback (8VA, 8VF)	1.4 TFSI (CMBA)	90	09/12 -		4241
A3 III Sportback (8VA, 8VF)	1.4 TFSI e-tron (CUKB)	110	05/14 -	4228	
A3 III Sportback (8VA, 8VF)	1.4 TFSI e-tron (CUKB)	110	05/14 -		4241
A3 III Sportback (8VA, 8VF)	1.4 TFSI e-tron (CXUA)	110	05/14 -	4228	
A3 III Sportback (8VA, 8VF)	1.4 TFSI e-tron (CXUA)	110	05/14 -		4241
A3 III Sportback (8VA, 8VF)	1.4 TFSI g-tron (CPWA)	81	11/13 -	4228	
A3 III Sportback (8VA, 8VF)	1.4 TFSI g-tron (CPWA)	81	11/13 -		4241
A3 III Sportback (8VA, 8VF)	1.6 TDI (CLHA)	77	10/12 -	4228	
A3 III Sportback (8VA, 8VF)	1.6 TDI (CLHA)	77	10/12 -		4241
A3 III Sportback (8VA, 8VF)	1.6 TDI (CRKB)	81	09/13 -	4228	
A3 III Sportback (8VA, 8VF)	1.6 TDI (CRKB)	81	09/13 -		4241
A3 III Sportback (8VA, 8VF)	1.6 TDI (CXXB)	81	05/15 -	4228	
A3 III Sportback (8VA, 8VF)	1.6 TDI (CXXB)	81	05/15 -		4241
A3 III Sportback (8VA, 8VF)	1.8 TFSI (CJSA)	132	09/12 -	4228	
A3 III Sportback (8VA, 8VF)	1.8 TFSI (CJSA)	132	09/12 -		4241
A3 III Sportback (8VA, 8VF)	1.8 TFSI (CJSB)	132	05/13 -	4228	
A3 III Sportback (8VA, 8VF)	1.8 TFSI (CJSB)	132	05/13 -		4241
A3 III Sportback (8VA, 8VF)	2.0 TDI (CRBC)	110	09/12 -	4228	
A3 III Sportback (8VA, 8VF)	2.0 TDI (CRBC)	110	02/13 -	4228	
A3 III Sportback (8VA, 8VF)	2.0 TDI (CRBC)	110	09/12 -		4241
A3 III Sportback (8VA, 8VF)	2.0 TDI (CRBC)	110	02/13 -		4241
A3 III Sportback (8VA, 8VF)	2.0 TDI (CRBD)	100	05/13 -	4228	

MAKE & MODEL		KW	YEAR		
AUDI					
A3 III Sportback (8VA, 8VF)	2.0 TDI (CRBD)	100	05/13 -		4241
A3 III Sportback (8VA, 8VF)	2.0 TDI (CRFA)	81	05/13 -	4228	
A3 III Sportback (8VA, 8VF)	2.0 TDI (CRFA)	81	05/13 -		4241
A3 III Sportback (8VA, 8VF)	2.0 TDI (CRFC)	105	03/13 -	4228	
A3 III Sportback (8VA, 8VF)	2.0 TDI (CRFC)	105	03/13 -		4241
A3 III Sportback (8VA, 8VF)	2.0 TDI (CRLB)	110	09/12 -	4228	
A3 III Sportback (8VA, 8VF)	2.0 TDI (CRLB)	110	09/12 -		4241
A3 III Sportback (8VA, 8VF)	2.0 TDI (CUNA)	135	05/13 -	4228	
A3 III Sportback (8VA, 8VF)	2.0 TDI (CUNA)	135	05/13 -	4228	
A3 III Sportback (8VA, 8VF)	2.0 TDI (CUNA)	135	05/13 -		4241
A3 III Sportback (8VA, 8VF)	2.0 TDI (CUNA)	135	05/13 -		4241
A3 III Sportback (8VA, 8VF)	2.0 TFSI (CZPB)	140	05/16 -	4228	
A3 III Sportback (8VA, 8VF)	2.0 TFSI (CZPB)	140	05/16 -	4228	
A3 III Sportback (8VA, 8VF)	2.0 TFSI (CZPB)	140	05/16 -		4241
A3 III Sportback (8VA, 8VF)	2.0 TFSI (CHHB)	162	02/15 -	4228	
A3 III Sportback (8VA, 8VF)	2.0 TFSI (CHHB)	162	02/15 -		4241
A3 III Sportback (8VA, 8VF)	2.0 TFSI (CZPB)	140	05/16 -		4241
A3 III Sportback (8VA, 8VF)	S3 (CJXB)	206	05/13 -	4228	
A3 III Sportback (8VA, 8VF)	S3 (CJXB)	206	05/13 -		4241
A3 III Sportback (8VA, 8VF)	S3 (CJXC)	221	11/12 -	4228	
A3 III Sportback (8VA, 8VF)	S3 (CJXC)	221	11/12 -		4241
A3 III Sportback (8VA, 8VF)	S3 (CJXD)	213	07/16 -	4228	
A3 III Sportback (8VA, 8VF)	S3 (CJXD)	213	07/16 -		4241
A3 III Sportback (8VA, 8VF)	S3 (CJXG)	228	06/16 -	4228	
A3 III Sportback (8VA, 8VF)	S3 (CJXG)	228	06/16 -		4241
A3 III Sportback (8VA, 8VF)	S3 (DJHA)	228	06/16 -	4228	
A3 III Sportback (8VA, 8VF)	S3 (DJHA)	228	06/16 -		4241
A3 III Sportback (8VA, 8VF)	S3 (DJHB)	213	07/16 -	4228	
A3 III Sportback (8VA, 8VF)	S3 (DJHB)	213	07/16 -		4241
A3 III Sportback (8VA, 8VF)	S3 (CJXF)	210	05/14 -		4241
A3 Limousine (8VS, 8VM)	1.6 TDI quattro	81	05/15 -	4295	
A3 Sportback (8PA)	16	75	09/04 – 03/13		3529/1
A3 Sportback (8PA)	16	75	09/04 – 03/13	3782	
A3 Sportback (8PA)	16	75	09/04 – 03/13		3905
A3 Sportback (8PA)	16	75	09/04 – 03/13		4135
A3 Sportback (8PA)	20	120	06/06 – 03/13		3529/1
A3 Sportback (8PA)	20	120	06/06 – 03/13	3904	
A3 Sportback (8PA)	20	120	06/06 – 03/13		3905
A3 Sportback (8PA)	20	120	06/06 – 03/13		4135
A3 Sportback (8PA)	1.2 TSI	77	04/10 – 03/13		3529/1
A3 Sportback (8PA)	1.2 TSI	77	04/10 – 03/13	3782	
A3 Sportback (8PA)	1.2 TSI	77	04/10 – 03/13		3905
A3 Sportback (8PA)	1.2 TSI	77	04/10 – 03/13		4135
A3 Sportback (8PA)	1.4 TFSI	92	09/07 – 03/13		3529/1
A3 Sportback (8PA)	1.4 TFSI	92	09/07 – 03/13	3782	
A3 Sportback (8PA)	1.4 TFSI	92	09/07 – 03/13	3904	
A3 Sportback (8PA)	1.4 TFSI	92	09/07 – 03/13		3905
A3 Sportback (8PA)	1.4 TFSI	92	09/07 – 03/13		4135
A3 Sportback (8PA)	1.6 E-Power	75	01/11 – 03/13		3529/1
A3 Sportback (8PA)	1.6 E-Power	75	01/11 – 03/13	3782	
A3 Sportback (8PA)	1.6 E-Power	75	01/11 – 03/13	3904	
A3 Sportback (8PA)	1.6 E-Power	75	01/11 – 03/13		3905
A3 Sportback (8PA)	1.6 E-Power	75	01/11 – 03/13		4135
A3 Sportback (8PA)	1.6 FSI	85	09/04 – 09/07		3529/1
A3 Sportback (8PA)	1.6 FSI	85	09/04 – 09/07	3782	
A3 Sportback (8PA)	1.6 FSI	85	09/04 – 09/07		3905
A3 Sportback (8PA)	1.6 FSI	85	09/04 – 09/07		4135
A3 Sportback (8PA)	1.6 TDI	66	05/09 – 03/13		3529/1
A3 Sportback (8PA)	1.6 TDI	66	05/09 – 03/13	3782	
A3 Sportback (8PA)	1.6 TDI	66	05/09 – 03/13		3905
A3 Sportback (8PA)	1.6 TDI	66	05/09 – 03/13		4135
A3 Sportback (8PA)	1.6 TDI	77	05/09 – 03/13		3529/1
A3 Sportback (8PA)	1.6 TDI	77	05/09 – 03/13	3782	
A3 Sportback (8PA)	1.6 TDI	77	05/09 – 03/13		3905
A3 Sportback (8PA)	1.6 TDI	77	05/09 – 03/13		4135
A3 Sportback (8PA)	1.8 TFSI	118	11/06 – 03/13		3529/1
A3 Sportback (8PA)	1.8 TFSI	118	11/06 – 03/13	3904	
A3 Sportback (8PA)	1.8 TFSI	118	11/06 – 03/13		3905
A3 Sportback (8PA)	1.8 TFSI	118	11/06 – 03/13		4135
A3 Sportback (8PA)	1.8 TFSI quattro	118	07/08 – 03/13		3529/1
A3 Sportback (8PA)	1.8 TFSI quattro	118	07/08 – 03/13	3904	

MAKE & MODEL		KW	YEAR		
AUDI					
A3 Sportback (8PA)	1.8 TFSI quattro	118	07/08 – 03/13		3905
A3 Sportback (8PA)	1.8 TFSI quattro	118	07/08 – 03/13		4135
A3 Sportback (8PA)	1.9 TDI	77	09/04 – 05/10		3529/1
A3 Sportback (8PA)	1.9 TDI	77	09/04 – 05/10	3782	
A3 Sportback (8PA)	1.9 TDI	77	09/04 – 05/10		3905
A3 Sportback (8PA)	1.9 TDI	77	09/04 – 05/10		4135
A3 Sportback (8PA)	2.0 FSI	110	09/04 – 06/08		3529/1
A3 Sportback (8PA)	2.0 FSI	110	09/04 – 06/08	3904	
A3 Sportback (8PA)	2.0 FSI	110	09/04 – 06/08		3905
A3 Sportback (8PA)	2.0 FSI	110	09/04 – 06/08		4135
A3 Sportback (8PA)	2.0 TDI	100	09/04 – 03/13		3529/1
A3 Sportback (8PA)	2.0 TDI	100	09/04 – 03/13	3904	
A3 Sportback (8PA)	2.0 TDI	100	09/04 – 03/13		3905
A3 Sportback (8PA)	2.0 TDI	100	09/04 – 03/13		4135
A3 Sportback (8PA)	2.0 TDI	103	06/05 – 06/08		3529/1
A3 Sportback (8PA)	2.0 TDI	103	06/05 – 06/08	3904	
A3 Sportback (8PA)	2.0 TDI	103	06/05 – 06/08		3905
A3 Sportback (8PA)	2.0 TDI	103	06/05 – 06/08		4135
A3 Sportback (8PA)	2.0 TDI	120	06/06 – 06/08		3529/1
A3 Sportback (8PA)	2.0 TDI	120	06/06 – 06/08	3904	
A3 Sportback (8PA)	2.0 TDI	120	06/06 – 06/08		3905
A3 Sportback (8PA)	2.0 TDI	120	06/06 – 06/08		4135
A3 Sportback (8PA)	2.0 TDI	125	03/06 – 03/13		3529/1
A3 Sportback (8PA)	2.0 TDI	125	03/06 – 03/13	3904	
A3 Sportback (8PA)	2.0 TDI	125	03/06 – 03/13		3905
A3 Sportback (8PA)	2.0 TDI	125	03/06 – 03/13		4135
A3 Sportback (8PA)	2.0 TDI 16V	103	09/04 – 03/13		3529/1
A3 Sportback (8PA)	2.0 TDI 16V	103	09/04 – 03/13	3904	
A3 Sportback (8PA)	2.0 TDI 16V	103	09/04 – 03/13		3905
A3 Sportback (8PA)	2.0 TDI 16V	103	09/04 – 03/13		4135
A3 Sportback (8PA)	2.0 TDI 16V quattro	103	11/05 – 03/13		3529/1
A3 Sportback (8PA)	2.0 TDI 16V quattro	103	11/05 – 03/13	3904	
A3 Sportback (8PA)	2.0 TDI 16V quattro	103	11/05 – 03/13		3905
A3 Sportback (8PA)	2.0 TDI 16V quattro	103	11/05 – 03/13		4135
A3 Sportback (8PA)	2.0 TDI quattro	103	01/06 – 06/08	3904	
A3 Sportback (8PA)	2.0 TDI quattro	103	01/06 – 06/08		3905
A3 Sportback (8PA)	2.0 TDI quattro	103	01/06 – 06/08		4135
A3 Sportback (8PA)	2.0 TDI quattro	125	03/06 – 03/13	3904	
A3 Sportback (8PA)	2.0 TDI quattro	125	03/06 – 03/13		3905
A3 Sportback (8PA)	2.0 TDI quattro	125	03/06 – 03/13		4135
A3 Sportback (8PA)	2.0 TFSI	147	09/04 – 03/13		3529/1
A3 Sportback (8PA)	2.0 TFSI	147	09/04 – 03/13	3904	
A3 Sportback (8PA)	2.0 TFSI	147	09/04 – 03/13		3905
A3 Sportback (8PA)	2.0 TFSI	147	09/04 – 03/13		4135
A3 Sportback (8PA)	2.0 TFSI quattro	147	09/04 – 03/13	3904	
A3 Sportback (8PA)	2.0 TFSI quattro	147	09/04 – 03/13		3905
A3 Sportback (8PA)	2.0 TFSI quattro	147	09/04 – 03/13		4135
A3 Sportback (8VA)	35 TFSI	110	09/14 -	4295	
A3 Sportback (8VA)	40 TFSI	132	01/15 -	4295	
A3 Sportback (8VA, 8VF)	1.6 TDI quattro	81	05/15 -	4295	
A3 Sportback (8VA, 8VF)	2.0 TFSI	162	02/15 -	4295	
A4 (8D2, B5)	16	74	11/94 – 10/00		3529/1
A4 (8D2, B5)	16	74	11/94 – 10/00		3536
A4 (8D2, B5)	16	74	11/94 – 10/00	3896	
A4 (8D2, B5)	16	75	07/00 – 11/00		3529/1
A4 (8D2, B5)	16	75	07/00 – 11/00		3536
A4 (8D2, B5)	16	75	07/00 – 11/00	3896	
A4 (8D2, B5)	18	85	04/95 – 11/00		3529/1
A4 (8D2, B5)	18	85	04/95 – 11/00		3536
A4 (8D2, B5)	18	85	04/95 – 11/00	3590	
A4 (8D2, B5)	18	85	04/95 – 11/00	3896	
A4 (8D2, B5)	18	92	11/94 – 11/00		3529/1
A4 (8D2, B5)	18	92	11/94 – 11/00		3536
A4 (8D2, B5)	18	92	11/94 – 11/00	3590	
A4 (8D2, B5)	18	92	11/94 – 11/00	3896	
A4 (8D2, B5)	18	125	05/00 – 09/00		3529/1
A4 (8D2, B5)	18	125	05/00 – 09/00		3536
A4 (8D2, B5)	18	125	05/00 – 09/00	3590	
A4 (8D2, B5)	18	125	05/00 – 09/00	3590/2	
A4 (8D2, B5)	24	110	07/95 – 07/97		3529/1
A4 (8D2, B5)	24	110	07/95 – 07/97		3536

MAKE & MODEL   		KW	YEAR		
AUDI					
A4 (8D2, B5)	24	110	07/95 – 07/97	3590	
A4 (8D2, B5)	24	110	07/95 – 07/97	3590/2	
A4 (8D2, B5)	24	120	08/97 – 11/00		3529/1
A4 (8D2, B5)	24	120	08/97 – 11/00		3536
A4 (8D2, B5)	24	120	08/97 – 11/00	3590	
A4 (8D2, B5)	24	120	08/97 – 11/00	3590/2	
A4 (8D2, B5)	24	121	03/97 – 11/00		3529/1
A4 (8D2, B5)	24	121	03/97 – 11/00		3536
A4 (8D2, B5)	24	121	03/97 – 11/00	3590	
A4 (8D2, B5)	24	121	03/97 – 11/00	3590/2	
A4 (8D2, B5)	26	102	01/96 – 07/97		3529/1
A4 (8D2, B5)	26	102	01/96 – 07/97		3536
A4 (8D2, B5)	26	102	01/96 – 07/97	3590	
A4 (8D2, B5)	26	102	01/96 – 07/97	3590/2	
A4 (8D2, B5)	26	110	01/95 – 11/00		3529/1
A4 (8D2, B5)	26	110	01/95 – 11/00		3536
A4 (8D2, B5)	26	110	01/95 – 11/00	3590	
A4 (8D2, B5)	26	110	01/95 – 11/00	3590/2	
A4 (8D2, B5)	28	128	09/95 – 07/97		3529/1
A4 (8D2, B5)	28	128	09/95 – 07/97		3536
A4 (8D2, B5)	28	128	09/95 – 07/97	3590	
A4 (8D2, B5)	28	128	09/95 – 07/97	3590/2	
A4 (8D2, B5)	28	142	10/96 – 07/99		3529/1
A4 (8D2, B5)	28	142	10/96 – 11/00		3529/1
A4 (8D2, B5)	28	142	10/96 – 07/99		3536
A4 (8D2, B5)	28	142	10/96 – 11/00		3536
A4 (8D2, B5)	28	142	10/96 – 07/99	3590	
A4 (8D2, B5)	28	142	10/96 – 11/00	3590	
A4 (8D2, B5)	28	142	10/96 – 07/99	3590/2	
A4 (8D2, B5)	28	142	10/96 – 11/00	3590/2	
A4 (8D2, B5)	1.8 quattro	85	07/95 – 11/00		3529/1
A4 (8D2, B5)	1.8 quattro	85	07/95 – 11/00		3536
A4 (8D2, B5)	1.8 quattro	85	07/95 – 11/00	3590	
A4 (8D2, B5)	1.8 quattro	85	07/95 – 11/00	3896	
A4 (8D2, B5)	1.8 quattro	92	01/95 – 11/00		3529/1
A4 (8D2, B5)	1.8 quattro	92	01/95 – 11/00		3536
A4 (8D2, B5)	1.8 quattro	92	01/95 – 11/00	3590	
A4 (8D2, B5)	1.8 quattro	92	01/95 – 11/00	3896	
A4 (8D2, B5)	1.8 T	110	01/95 – 11/00		3529/1
A4 (8D2, B5)	1.8 T	110	01/95 – 11/00		3536
A4 (8D2, B5)	1.8 T	110	01/95 – 11/00	3590	
A4 (8D2, B5)	1.8 T	110	01/95 – 11/00	3590/2	
A4 (8D2, B5)	1.8 T	132	12/97 – 11/00		3529/1
A4 (8D2, B5)	1.8 T	132	12/97 – 11/00		3536
A4 (8D2, B5)	1.8 T	132	12/97 – 11/00	3590	
A4 (8D2, B5)	1.8 T	132	12/97 – 11/00	3590/2	
A4 (8D2, B5)	1.8 T quattro	110	01/95 – 11/00		3529/1
A4 (8D2, B5)	1.8 T quattro	110	01/95 – 11/00		3536
A4 (8D2, B5)	1.8 T quattro	110	01/95 – 11/00	3590	
A4 (8D2, B5)	1.8 T quattro	110	01/95 – 11/00	3590/2	
A4 (8D2, B5)	1.8 T quattro	132	12/97 – 11/00		3529/1
A4 (8D2, B5)	1.8 T quattro	132	12/97 – 11/00		3536
A4 (8D2, B5)	1.8 T quattro	132	12/97 – 11/00	3590	
A4 (8D2, B5)	1.8 T quattro	132	12/97 – 11/00	3590/2	
A4 (8D2, B5)	1.9 TDI	55	12/95 – 11/00		3529/1
A4 (8D2, B5)	1.9 TDI	55	12/95 – 11/00		3536
A4 (8D2, B5)	1.9 TDI	55	12/95 – 11/00	3896	
A4 (8D2, B5)	1.9 TDI	66	01/95 – 11/00		3529/1
A4 (8D2, B5)	1.9 TDI	66	01/95 – 11/00		3536
A4 (8D2, B5)	1.9 TDI	66	01/95 – 11/00	3896	
A4 (8D2, B5)	1.9 TDI	81	10/95 – 11/00		3529/1
A4 (8D2, B5)	1.9 TDI	81	10/95 – 11/00		3536
A4 (8D2, B5)	1.9 TDI	81	10/95 – 11/00	3590	
A4 (8D2, B5)	1.9 TDI	81	10/95 – 11/00	3590/2	
A4 (8D2, B5)	1.9 TDI	85	03/00 – 11/00		3529/1
A4 (8D2, B5)	1.9 TDI	85	03/00 – 11/00		3536
A4 (8D2, B5)	1.9 TDI	85	03/00 – 11/00	3590	
A4 (8D2, B5)	1.9 TDI	85	03/00 – 11/00	3590/2	
A4 (8D2, B5)	1.9 TDI quattro	81	09/96 – 11/00		3529/1
A4 (8D2, B5)	1.9 TDI quattro	81	09/96 – 11/00		3536
A4 (8D2, B5)	1.9 TDI quattro	81	09/96 – 11/00	3590	

MAKE & MODEL		KW	YEAR		
AUDI					
A4 (8D2, B5)	1.9 TDI quattro	81	09/96 – 11/00	3590/2	
A4 (8D2, B5)	1.9 TDI quattro	85	03/00 – 11/00		3529/1
A4 (8D2, B5)	1.9 TDI quattro	85	03/00 – 11/00		3536
A4 (8D2, B5)	1.9 TDI quattro	85	03/00 – 11/00	3590	
A4 (8D2, B5)	1.9 TDI quattro	85	03/00 – 11/00	3590/2	
A4 (8D2, B5)	2.4 quattro	120	08/97 – 11/00		3529/1
A4 (8D2, B5)	2.4 quattro	120	08/97 – 11/00		3536
A4 (8D2, B5)	2.4 quattro	120	08/97 – 11/00	3590	
A4 (8D2, B5)	2.4 quattro	120	08/97 – 11/00	3590/2	
A4 (8D2, B5)	2.4 quattro	121	03/97 – 11/00		3529/1
A4 (8D2, B5)	2.4 quattro	121	03/97 – 11/00		3536
A4 (8D2, B5)	2.4 quattro	121	03/97 – 11/00	3590	
A4 (8D2, B5)	2.4 quattro	121	03/97 – 11/00	3590/2	
A4 (8D2, B5)	2.5 TDI	110	09/97 – 11/00		3529/1
A4 (8D2, B5)	2.5 TDI	110	09/97 – 11/00		3536
A4 (8D2, B5)	2.5 TDI	110	09/97 – 11/00	3590	
A4 (8D2, B5)	2.5 TDI	110	09/97 – 11/00	3590/2	
A4 (8D2, B5)	2.5 TDI quattro	110	09/97 – 11/00		3529/1
A4 (8D2, B5)	2.5 TDI quattro	110	09/97 – 11/00		3536
A4 (8D2, B5)	2.5 TDI quattro	110	09/97 – 11/00	3590	
A4 (8D2, B5)	2.5 TDI quattro	110	09/97 – 11/00	3590/2	
A4 (8D2, B5)	2.6 quattro	110	01/95 – 11/00		3529/1
A4 (8D2, B5)	2.6 quattro	110	01/95 – 11/00		3536
A4 (8D2, B5)	2.6 quattro	110	01/95 – 11/00	3590	
A4 (8D2, B5)	2.6 quattro	110	01/95 – 11/00	3590/2	
A4 (8D2, B5)	2.7 Turbo quattro	169	02/99 – 09/00		3529/1
A4 (8D2, B5)	2.8 quattro	128	01/95 – 07/97		3529/1
A4 (8D2, B5)	2.8 quattro	128	01/95 – 07/97		3536
A4 (8D2, B5)	2.8 quattro	128	01/95 – 07/97	3590	
A4 (8D2, B5)	2.8 quattro	128	01/95 – 07/97	3590/2	
A4 (8D2, B5)	2.8 quattro	142	10/96 – 08/01		3529/1
A4 (8D2, B5)	2.8 quattro	142	10/96 – 08/01		3536
A4 (8D2, B5)	2.8 quattro	142	10/96 – 08/01	3590	
A4 (8D2, B5)	2.8 quattro	142	10/96 – 08/01	3590/2	
A4 (8D2, B5)	S4 quattro	187	10/97 – 12/98		3529/1
A4 (8D2, B5)	S4 quattro	195	09/97 – 09/01		3529/1
A4 (8E2, B6)	16	75	11/00 – 12/04		3529/1
A4 (8E2, B6)	16	75	11/00 – 12/04	3590/2	
A4 (8E2, B6)	16	75	11/00 – 12/04	3896	
A4 (8E2, B6)	20	96	11/00 – 12/04		3529/1
A4 (8E2, B6)	20	96	11/00 – 12/04	3590/2	
A4 (8E2, B6)	24	120	09/01 – 12/04		3529/1
A4 (8E2, B6)	24	120	09/01 – 12/04	3590/2	
A4 (8E2, B6)	24	125	09/01 – 12/04		3529/1
A4 (8E2, B6)	24	125	09/01 – 12/04	3590/2	
A4 (8E2, B6)	30	160	04/01 – 12/04		3529/1
A4 (8E2, B6)	30	160	04/01 – 12/04	3590/2	
A4 (8E2, B6)	30	162	11/00 – 12/04		3529/1
A4 (8E2, B6)	30	162	11/00 – 12/04	3590/2	
A4 (8E2, B6)	1.8 T	110	11/00 – 07/02		3529/1
A4 (8E2, B6)	1.8 T	110	11/00 – 07/02	3590/2	
A4 (8E2, B6)	1.8 T	120	07/02 – 12/04		3529/1
A4 (8E2, B6)	1.8 T	120	07/02 – 12/04	3590/2	
A4 (8E2, B6)	1.8 T	125	07/01 – 12/04		3529/1
A4 (8E2, B6)	1.8 T	125	07/01 – 12/04	3590/2	
A4 (8E2, B6)	1.8 T	140	11/02 – 12/04		3529/1
A4 (8E2, B6)	1.8 T	140	11/02 – 12/04	3590/2	
A4 (8E2, B6)	1.8 T quattro	110	11/00 – 07/02		3529/1
A4 (8E2, B6)	1.8 T quattro	110	11/00 – 07/02	3590/2	
A4 (8E2, B6)	1.8 T quattro	120	07/02 – 12/04		3529/1
A4 (8E2, B6)	1.8 T quattro	120	07/02 – 12/04	3590/2	
A4 (8E2, B6)	1.8 T quattro	125	07/01 – 12/04		3529/1
A4 (8E2, B6)	1.8 T quattro	125	07/01 – 12/04	3590/2	
A4 (8E2, B6)	1.8 T quattro	140	11/02 – 12/04		3529/1
A4 (8E2, B6)	1.8 T quattro	140	11/02 – 12/04	3590/2	
A4 (8E2, B6)	1.9 TDI	74	05/01 – 12/04		3529/1
A4 (8E2, B6)	1.9 TDI	74	05/01 – 12/04	3590/2	
A4 (8E2, B6)	1.9 TDI	74	05/01 – 12/04	3896	
A4 (8E2, B6)	1.9 TDI	85	06/04 – 12/04		3529/1
A4 (8E2, B6)	1.9 TDI	85	06/04 – 12/04	3590/2	
A4 (8E2, B6)	1.9 TDI	85	06/04 – 12/04	3896	

MAKE & MODEL   		KW	YEAR		
AUDI					
A4 (8E2, B6)	1.9 TDI	96	11/00 – 12/04		3529/1
A4 (8E2, B6)	1.9 TDI	96	11/00 – 12/04	3590/2	
A4 (8E2, B6)	1.9 TDI quattro	96	11/01 – 12/04		3529/1
A4 (8E2, B6)	1.9 TDI quattro	96	11/01 – 12/04	3590/2	
A4 (8E2, B6)	2.0 FSI	110	07/02 – 12/04		3529/1
A4 (8E2, B6)	2.0 FSI	110	07/02 – 12/04	3590/2	
A4 (8E2, B6)	2.5 TDI	114	08/01 – 07/02		3529/1
A4 (8E2, B6)	2.5 TDI	114	08/01 – 07/02	3590/2	
A4 (8E2, B6)	2.5 TDI	120	07/02 – 12/04		3529/1
A4 (8E2, B6)	2.5 TDI	120	07/02 – 12/04	3590/2	
A4 (8E2, B6)	2.5 TDI quattro	132	11/00 – 12/04		3529/1
A4 (8E2, B6)	2.5 TDI quattro	132	11/00 – 12/04	3590/2	
A4 (8E2, B6)	3.0 quattro	160	04/01 – 12/04		3529/1
A4 (8E2, B6)	3.0 quattro	160	04/01 – 12/04	3590/2	
A4 (8E2, B6)	3.0 quattro	162	11/00 – 12/04		3529/1
A4 (8E2, B6)	3.0 quattro	162	11/00 – 12/04	3590/2	
A4 (8EC, B7)	16	75	11/04 – 06/08		3529
A4 (8EC, B7)	16	75	11/04 – 06/08	3590/2	
A4 (8EC, B7)	16	75	11/04 – 06/08	3896	
A4 (8EC, B7)	20	96	11/04 – 06/08		3529
A4 (8EC, B7)	20	96	11/04 – 06/08	3590/2	
A4 (8EC, B7)	30	160	11/04 – 05/06		3905
A4 (8EC, B7)	1.8 T	120	11/04 – 06/08		3529
A4 (8EC, B7)	1.8 T	120	11/04 – 06/08	3590/2	
A4 (8EC, B7)	1.8 T quattro	120	11/04 – 06/08		3529
A4 (8EC, B7)	1.8 T quattro	120	11/04 – 06/08	3590/2	
A4 (8EC, B7)	1.9 TDI	85	11/04 – 06/08		3529
A4 (8EC, B7)	1.9 TDI	85	11/04 – 06/08	3590/2	
A4 (8EC, B7)	1.9 TDI	85	11/04 – 06/08	3896	
A4 (8EC, B7)	2.0 TDI	89	09/05 – 09/06		3529
A4 (8EC, B7)	2.0 TDI	89	09/05 – 09/06	3590/2	
A4 (8EC, B7)	2.0 TDI	89	09/05 – 09/06	3896	
A4 (8EC, B7)	2.0 TDI	93	11/05 – 11/06		3529
A4 (8EC, B7)	2.0 TDI	93	11/05 – 11/06	3590/2	
A4 (8EC, B7)	2.0 TDI	93	11/05 – 11/06	3896	
A4 (8EC, B7)	2.0 TDI	100	11/04 – 06/08		3529
A4 (8EC, B7)	2.0 TDI	100	11/04 – 06/08	3590/2	
A4 (8EC, B7)	2.0 TDI	103	11/04 – 06/08		3529
A4 (8EC, B7)	2.0 TDI	103	11/04 – 06/08	3590/2	
A4 (8EC, B7)	2.0 TDI	120	06/06 – 06/08		3529
A4 (8EC, B7)	2.0 TDI	120	06/06 – 06/08	3590/2	
A4 (8EC, B7)	2.0 TDI	125	06/06 – 06/08		3529
A4 (8EC, B7)	2.0 TDI	125	06/06 – 06/08	3590/2	
A4 (8EC, B7)	2.0 TDI 16V	103	11/04 – 06/08		3529
A4 (8EC, B7)	2.0 TDI 16V	103	11/04 – 06/08	3590/2	
A4 (8EC, B7)	2.0 TDI quattro	103	01/06 – 06/08		3529
A4 (8EC, B7)	2.0 TDI quattro	103	01/06 – 06/08	3590/2	
A4 (8EC, B7)	2.0 TDI quattro	120	06/06 – 06/08		3529
A4 (8EC, B7)	2.0 TDI quattro	120	06/06 – 06/08	3590/2	
A4 (8EC, B7)	2.0 TDI quattro	125	06/06 – 06/08		3529
A4 (8EC, B7)	2.0 TDI quattro	125	06/06 – 06/08	3590/2	
A4 (8EC, B7)	2.0 TFSI	125	10/06 – 06/08		3529
A4 (8EC, B7)	2.0 TFSI	125	10/06 – 06/08	3590/2	
A4 (8EC, B7)	2.0 TFSI	147	11/04 – 06/08		3905
A4 (8EC, B7)	2.0 TFSI	162	06/05 – 06/08		3905
A4 (8EC, B7)	2.0 TFSI quattro	147	11/04 – 06/08		3905
A4 (8EC, B7)	2.0 TFSI quattro	162	06/05 – 06/08		3905
A4 (8EC, B7)	2.5 TDI	120	11/04 – 05/06		3905
A4 (8EC, B7)	2.7 TDI	120	11/05 – 06/08		3905
A4 (8EC, B7)	2.7 TDI	132	01/06 – 06/08		3905
A4 (8EC, B7)	3.0 quattro	160	11/04 – 07/06		3905
A4 (8EC, B7)	3.0 TDI quattro	150	11/04 – 06/08		3905
A4 (8EC, B7)	3.0 TDI quattro	171	01/06 – 06/08		3905
A4 (8EC, B7)	3.2 FSI	188	01/05 – 06/08		3905
A4 (8EC, B7)	3.2 FSI quattro	188	01/05 – 06/08		3905
A4 Avant (8D5, B5)	16	74	11/94 – 09/01		3529/1
A4 Avant (8D5, B5)	16	74	11/94 – 09/01		3536
A4 Avant (8D5, B5)	16	74	11/94 – 09/01	3896	
A4 Avant (8D5, B5)	16	75	07/00 – 09/01		3529/1
A4 Avant (8D5, B5)	16	75	07/00 – 09/01		3536
A4 Avant (8D5, B5)	16	75	07/00 – 09/01	3896	

MAKE & MODEL   		KW	YEAR		
AUDI					
A4 Avant (8D5, B5)	18	85	07/95 – 09/01		3529/1
A4 Avant (8D5, B5)	18	85	07/95 – 09/01		3536
A4 Avant (8D5, B5)	18	85	07/95 – 09/01	3590	
A4 Avant (8D5, B5)	18	85	07/95 – 09/01	3896	
A4 Avant (8D5, B5)	18	92	02/96 – 09/01		3529/1
A4 Avant (8D5, B5)	18	92	02/96 – 09/01		3536
A4 Avant (8D5, B5)	18	92	02/96 – 09/01	3590	
A4 Avant (8D5, B5)	18	92	02/96 – 09/01	3896	
A4 Avant (8D5, B5)	24	110	07/95 – 07/97		3529/1
A4 Avant (8D5, B5)	24	110	07/95 – 07/97		3536
A4 Avant (8D5, B5)	24	110	07/95 – 07/97	3590	
A4 Avant (8D5, B5)	24	110	07/95 – 07/97	3590/2	
A4 Avant (8D5, B5)	24	120	08/97 – 09/01		3529/1
A4 Avant (8D5, B5)	24	120	08/97 – 09/01		3536
A4 Avant (8D5, B5)	24	120	08/97 – 09/01	3590	
A4 Avant (8D5, B5)	24	120	08/97 – 09/01	3590/2	
A4 Avant (8D5, B5)	24	121	03/97 – 09/01		3529/1
A4 Avant (8D5, B5)	24	121	03/97 – 09/01		3536
A4 Avant (8D5, B5)	24	121	03/97 – 09/01	3590	
A4 Avant (8D5, B5)	24	121	03/97 – 09/01	3590/2	
A4 Avant (8D5, B5)	26	110	02/96 – 09/01		3529/1
A4 Avant (8D5, B5)	26	110	02/96 – 09/01		3536
A4 Avant (8D5, B5)	26	110	02/96 – 09/01	3590	
A4 Avant (8D5, B5)	26	110	02/96 – 09/01	3590/2	
A4 Avant (8D5, B5)	28	128	03/96 – 09/96		3529/1
A4 Avant (8D5, B5)	28	128	03/96 – 09/96		3536
A4 Avant (8D5, B5)	28	128	03/96 – 09/96	3590	
A4 Avant (8D5, B5)	28	128	03/96 – 09/96	3590/2	
A4 Avant (8D5, B5)	28	140	03/99 – 09/00		3529/1
A4 Avant (8D5, B5)	28	140	03/99 – 09/00		3536
A4 Avant (8D5, B5)	28	140	03/99 – 09/00	3590	
A4 Avant (8D5, B5)	28	140	03/99 – 09/00	3590/2	
A4 Avant (8D5, B5)	28	142	10/96 – 09/01		3529/1
A4 Avant (8D5, B5)	28	142	10/96 – 09/01		3536
A4 Avant (8D5, B5)	28	142	10/96 – 09/01	3590	
A4 Avant (8D5, B5)	28	142	10/96 – 09/01	3590/2	
A4 Avant (8D5, B5)	1.8 quattro	85	07/95 – 09/01		3529/1
A4 Avant (8D5, B5)	1.8 quattro	85	07/95 – 09/01		3536
A4 Avant (8D5, B5)	1.8 quattro	85	07/95 – 09/01	3590	
A4 Avant (8D5, B5)	1.8 quattro	85	07/95 – 09/01	3896	
A4 Avant (8D5, B5)	1.8 quattro	92	01/96 – 09/01		3529/1
A4 Avant (8D5, B5)	1.8 quattro	92	01/96 – 09/01		3536
A4 Avant (8D5, B5)	1.8 quattro	92	01/96 – 09/01	3590	
A4 Avant (8D5, B5)	1.8 quattro	92	01/96 – 09/01	3896	
A4 Avant (8D5, B5)	1.8 T	110	03/96 – 09/01		3529/1
A4 Avant (8D5, B5)	1.8 T	110	03/96 – 09/01		3536
A4 Avant (8D5, B5)	1.8 T	110	03/96 – 09/01	3590	
A4 Avant (8D5, B5)	1.8 T	110	03/96 – 09/01	3590/2	
A4 Avant (8D5, B5)	1.8 T	132	12/97 – 09/01		3529/1
A4 Avant (8D5, B5)	1.8 T	132	12/97 – 09/01		3536
A4 Avant (8D5, B5)	1.8 T	132	12/97 – 09/01	3590	
A4 Avant (8D5, B5)	1.8 T	132	12/97 – 09/01	3590/2	
A4 Avant (8D5, B5)	1.8 T quattro	110	01/96 – 09/01		3529/1
A4 Avant (8D5, B5)	1.8 T quattro	110	01/96 – 09/01		3536
A4 Avant (8D5, B5)	1.8 T quattro	110	01/96 – 09/01	3590	
A4 Avant (8D5, B5)	1.8 T quattro	110	01/96 – 09/01	3590/2	
A4 Avant (8D5, B5)	1.8 T quattro	132	12/97 – 09/01		3529/1
A4 Avant (8D5, B5)	1.8 T quattro	132	12/97 – 09/01		3536
A4 Avant (8D5, B5)	1.8 T quattro	132	12/97 – 09/01	3590	
A4 Avant (8D5, B5)	1.8 T quattro	132	12/97 – 09/01	3590/2	
A4 Avant (8D5, B5)	1.9 DUO	66	03/98 – 09/01		3529/1
A4 Avant (8D5, B5)	1.9 DUO	66	03/98 – 09/01		3536
A4 Avant (8D5, B5)	1.9 DUO	66	03/98 – 09/01	3896	
A4 Avant (8D5, B5)	1.9 TDI	55	03/96 – 09/01		3529/1
A4 Avant (8D5, B5)	1.9 TDI	55	03/96 – 09/01		3536
A4 Avant (8D5, B5)	1.9 TDI	55	03/96 – 09/01	3896	
A4 Avant (8D5, B5)	1.9 TDI	66	02/96 – 09/01		3529/1
A4 Avant (8D5, B5)	1.9 TDI	66	02/96 – 09/01		3536
A4 Avant (8D5, B5)	1.9 TDI	66	02/96 – 09/01	3896	
A4 Avant (8D5, B5)	1.9 TDI	81	02/96 – 09/01		3529/1
A4 Avant (8D5, B5)	1.9 TDI	81	02/96 – 09/01		3536

MAKE & MODEL   		KW	YEAR		
AUDI					
A4 Avant (8D5, B5)	1.9 TDI	81	02/96 – 09/01	3590	
A4 Avant (8D5, B5)	1.9 TDI	81	02/96 – 09/01	3590/2	
A4 Avant (8D5, B5)	1.9 TDI	85	03/00 – 09/01		3529/1
A4 Avant (8D5, B5)	1.9 TDI	85	03/00 – 09/01		3536
A4 Avant (8D5, B5)	1.9 TDI	85	03/00 – 09/01	3590	
A4 Avant (8D5, B5)	1.9 TDI	85	03/00 – 09/01	3590/2	
A4 Avant (8D5, B5)	1.9 TDI quattro	81	09/96 – 09/01		3529/1
A4 Avant (8D5, B5)	1.9 TDI quattro	81	09/96 – 09/01		3536
A4 Avant (8D5, B5)	1.9 TDI quattro	81	09/96 – 09/01	3590	
A4 Avant (8D5, B5)	1.9 TDI quattro	81	09/96 – 09/01	3590/2	
A4 Avant (8D5, B5)	1.9 TDI quattro	85	03/00 – 09/01		3529/1
A4 Avant (8D5, B5)	1.9 TDI quattro	85	03/00 – 09/01		3536
A4 Avant (8D5, B5)	1.9 TDI quattro	85	03/00 – 09/01	3590	
A4 Avant (8D5, B5)	1.9 TDI quattro	85	03/00 – 09/01	3590/2	
A4 Avant (8D5, B5)	2.4 quattro	120	08/97 – 09/01		3529/1
A4 Avant (8D5, B5)	2.4 quattro	120	08/97 – 09/01		3536
A4 Avant (8D5, B5)	2.4 quattro	120	08/97 – 09/01	3590	
A4 Avant (8D5, B5)	2.4 quattro	120	08/97 – 09/01	3590/2	
A4 Avant (8D5, B5)	2.4 quattro	121	03/97 – 09/01		3529/1
A4 Avant (8D5, B5)	2.4 quattro	121	03/97 – 09/01		3536
A4 Avant (8D5, B5)	2.4 quattro	121	03/97 – 09/01	3590	
A4 Avant (8D5, B5)	2.4 quattro	121	03/97 – 09/01	3590/2	
A4 Avant (8D5, B5)	2.5 TDI	110	09/97 – 09/01		3529/1
A4 Avant (8D5, B5)	2.5 TDI	110	09/97 – 09/01		3536
A4 Avant (8D5, B5)	2.5 TDI	110	09/97 – 09/01	3590	
A4 Avant (8D5, B5)	2.5 TDI	110	09/97 – 09/01	3590/2	
A4 Avant (8D5, B5)	2.5 TDI quattro	110	09/97 – 09/01		3529/1
A4 Avant (8D5, B5)	2.5 TDI quattro	110	09/97 – 09/01		3536
A4 Avant (8D5, B5)	2.5 TDI quattro	110	09/97 – 09/01	3590	
A4 Avant (8D5, B5)	2.5 TDI quattro	110	09/97 – 09/01	3590/2	
A4 Avant (8D5, B5)	2.6 quattro	110	01/96 – 09/01		3529/1
A4 Avant (8D5, B5)	2.6 quattro	110	01/96 – 09/01		3536
A4 Avant (8D5, B5)	2.6 quattro	110	01/96 – 09/01	3590	
A4 Avant (8D5, B5)	2.6 quattro	110	01/96 – 09/01	3590/2	
A4 Avant (8D5, B5)	2.8 quattro	128	01/96 – 09/96		3529/1
A4 Avant (8D5, B5)	2.8 quattro	128	01/96 – 09/96		3536
A4 Avant (8D5, B5)	2.8 quattro	128	01/96 – 09/96	3590	
A4 Avant (8D5, B5)	2.8 quattro	128	01/96 – 09/96	3590/2	
A4 Avant (8D5, B5)	2.8 quattro	140	03/99 – 09/00		3529/1
A4 Avant (8D5, B5)	2.8 quattro	140	03/99 – 09/00		3536
A4 Avant (8D5, B5)	2.8 quattro	140	03/99 – 09/00	3590	
A4 Avant (8D5, B5)	2.8 quattro	140	03/99 – 09/00	3590/2	
A4 Avant (8D5, B5)	2.8 quattro	142	10/96 – 09/01		3529/1
A4 Avant (8D5, B5)	2.8 quattro	142	10/96 – 09/01		3536
A4 Avant (8D5, B5)	2.8 quattro	142	10/96 – 09/01	3590	
A4 Avant (8D5, B5)	2.8 quattro	142	10/96 – 09/01	3590/2	
A4 Avant (8D5, B5)	S4 quattro	195	09/97 – 09/01		3529/1
A4 Avant (8E5, B6)	16	75	09/01 – 12/04		3529/1
A4 Avant (8E5, B6)	16	75	09/01 – 12/04	3590/2	
A4 Avant (8E5, B6)	16	75	09/01 – 12/04	3896	
A4 Avant (8E5, B6)	20	96	09/01 – 12/04		3529/1
A4 Avant (8E5, B6)	20	96	09/01 – 12/04	3590/2	
A4 Avant (8E5, B6)	24	120	09/01 – 12/04		3529/1
A4 Avant (8E5, B6)	24	120	09/01 – 12/04	3590/2	
A4 Avant (8E5, B6)	24	125	09/01 – 12/04		3529/1
A4 Avant (8E5, B6)	24	125	09/01 – 12/04	3590/2	
A4 Avant (8E5, B6)	30	160	04/01 – 12/04		3529/1
A4 Avant (8E5, B6)	30	160	04/01 – 12/04	3590/2	
A4 Avant (8E5, B6)	30	162	09/01 – 12/04		3529/1
A4 Avant (8E5, B6)	30	162	09/01 – 12/04	3590/2	
A4 Avant (8E5, B6)	1.8 T	110	09/01 – 07/02		3529/1
A4 Avant (8E5, B6)	1.8 T	110	09/01 – 07/02	3590/2	
A4 Avant (8E5, B6)	1.8 T	120	07/02 – 12/04		3529/1
A4 Avant (8E5, B6)	1.8 T	120	07/02 – 12/04	3590/2	
A4 Avant (8E5, B6)	1.8 T	140	11/02 – 12/04		3529/1
A4 Avant (8E5, B6)	1.8 T	140	11/02 – 12/04	3590/2	
A4 Avant (8E5, B6)	1.8 T quattro	110	09/01 – 07/02		3529/1
A4 Avant (8E5, B6)	1.8 T quattro	110	09/01 – 07/02	3590/2	
A4 Avant (8E5, B6)	1.8 T quattro	120	07/02 – 12/04		3529/1
A4 Avant (8E5, B6)	1.8 T quattro	120	07/02 – 12/04	3590/2	
A4 Avant (8E5, B6)	1.8 T quattro	125	09/01 – 12/04		3529/1

MAKE & MODEL		KW	YEAR		
AUDI					
A4 Avant (8E5, B6)	1.8 T quattro	125	09/01 – 12/04	3590/2	
A4 Avant (8E5, B6)	1.8 T quattro	140	11/02 – 12/04		3529/1
A4 Avant (8E5, B6)	1.8 T quattro	140	11/02 – 12/04	3590/2	
A4 Avant (8E5, B6)	1.9 TDI	74	11/01 – 12/04		3529/1
A4 Avant (8E5, B6)	1.9 TDI	74	11/01 – 12/04	3590/2	
A4 Avant (8E5, B6)	1.9 TDI	74	11/01 – 12/04	3896	
A4 Avant (8E5, B6)	1.9 TDI	85	06/04 – 12/04		3529/1
A4 Avant (8E5, B6)	1.9 TDI	85	06/04 – 12/04	3590/2	
A4 Avant (8E5, B6)	1.9 TDI	85	06/04 – 12/04	3896	
A4 Avant (8E5, B6)	1.9 TDI	96	09/01 – 12/04		3529/1
A4 Avant (8E5, B6)	1.9 TDI	96	09/01 – 12/04	3590/2	
A4 Avant (8E5, B6)	1.9 TDI quattro	96	11/01 – 12/04		3529/1
A4 Avant (8E5, B6)	1.9 TDI quattro	96	11/01 – 12/04	3590/2	
A4 Avant (8E5, B6)	2.0 FSI	110	07/02 – 12/04		3529/1
A4 Avant (8E5, B6)	2.0 FSI	110	07/02 – 12/04	3590/2	
A4 Avant (8E5, B6)	2.5 TDI	114	09/01 – 07/02		3529/1
A4 Avant (8E5, B6)	2.5 TDI	114	09/01 – 07/02	3590/2	
A4 Avant (8E5, B6)	2.5 TDI	120	07/02 – 12/04		3529/1
A4 Avant (8E5, B6)	2.5 TDI	120	07/02 – 12/04	3590/2	
A4 Avant (8E5, B6)	2.5 TDI quattro	132	09/01 – 12/04		3529/1
A4 Avant (8E5, B6)	2.5 TDI quattro	132	09/01 – 12/04	3590/2	
A4 Avant (8E5, B6)	3.0 quattro	160	04/01 – 12/04		3529/1
A4 Avant (8E5, B6)	3.0 quattro	160	04/01 – 12/04	3590/2	
A4 Avant (8E5, B6)	3.0 quattro	162	09/01 – 12/04		3529/1
A4 Avant (8E5, B6)	3.0 quattro	162	09/01 – 12/04	3590/2	
A4 Avant (8ED, B7)	16	75	11/04 – 06/08		3529
A4 Avant (8ED, B7)	16	75	11/04 – 06/08	3590/2	
A4 Avant (8ED, B7)	16	75	11/04 – 06/08	3896	
A4 Avant (8ED, B7)	20	96	11/04 – 06/08		3529
A4 Avant (8ED, B7)	20	96	11/04 – 06/08	3590/2	
A4 Avant (8ED, B7)	30	160	11/04 – 05/06		3905
A4 Avant (8ED, B7)	1.8 T	120	11/04 – 06/08		3529
A4 Avant (8ED, B7)	1.8 T	120	11/04 – 06/08	3590/2	
A4 Avant (8ED, B7)	1.8 T quattro	120	11/04 – 06/08		3529
A4 Avant (8ED, B7)	1.8 T quattro	120	11/04 – 06/08	3590/2	
A4 Avant (8ED, B7)	1.9 TDI	85	11/04 – 06/08		3529
A4 Avant (8ED, B7)	1.9 TDI	85	11/04 – 06/08	3590/2	
A4 Avant (8ED, B7)	1.9 TDI	85	11/04 – 06/08	3896	
A4 Avant (8ED, B7)	2.0 TDI	89	09/05 – 09/06		3529
A4 Avant (8ED, B7)	2.0 TDI	89	09/05 – 09/06	3590/2	
A4 Avant (8ED, B7)	2.0 TDI	89	09/05 – 09/06	3896	
A4 Avant (8ED, B7)	2.0 TDI	93	11/05 – 11/06		3529
A4 Avant (8ED, B7)	2.0 TDI	93	11/05 – 11/06	3590/2	
A4 Avant (8ED, B7)	2.0 TDI	93	11/05 – 11/06	3896	
A4 Avant (8ED, B7)	2.0 TDI	100	11/04 – 06/08		3529
A4 Avant (8ED, B7)	2.0 TDI	100	11/04 – 06/08	3590/2	
A4 Avant (8ED, B7)	2.0 TDI	103	11/04 – 06/08		3529
A4 Avant (8ED, B7)	2.0 TDI	103	11/04 – 06/08	3590/2	
A4 Avant (8ED, B7)	2.0 TDI	120	06/06 – 06/08		3529
A4 Avant (8ED, B7)	2.0 TDI	120	06/06 – 06/08	3590/2	
A4 Avant (8ED, B7)	2.0 TDI	125	06/06 – 06/08		3529
A4 Avant (8ED, B7)	2.0 TDI	125	06/06 – 06/08	3590/2	
A4 Avant (8ED, B7)	2.0 TDI 16V	103	11/04 – 06/08		3529
A4 Avant (8ED, B7)	2.0 TDI 16V	103	11/04 – 06/08	3590/2	
A4 Avant (8ED, B7)	2.0 TDI quattro	103	01/06 – 06/08		3529
A4 Avant (8ED, B7)	2.0 TDI quattro	103	01/06 – 06/08	3590/2	
A4 Avant (8ED, B7)	2.0 TDI quattro	120	06/06 – 06/08		3529
A4 Avant (8ED, B7)	2.0 TDI quattro	120	06/06 – 06/08	3590/2	
A4 Avant (8ED, B7)	2.0 TDI quattro	125	06/06 – 06/08		3529
A4 Avant (8ED, B7)	2.0 TDI quattro	125	06/06 – 06/08	3590/2	
A4 Avant (8ED, B7)	2.0 TFSI	125	10/06 – 06/08		3529
A4 Avant (8ED, B7)	2.0 TFSI	125	10/06 – 06/08	3590/2	
A4 Avant (8ED, B7)	2.0 TFSI	147	11/04 – 06/08		3905
A4 Avant (8ED, B7)	2.0 TFSI	162	06/05 – 06/08		3905
A4 Avant (8ED, B7)	2.0 TFSI quattro	147	11/04 – 06/08		3905
A4 Avant (8ED, B7)	2.0 TFSI quattro	162	06/05 – 06/08		3905
A4 Avant (8ED, B7)	2.5 TDI	120	11/04 – 05/06		3905
A4 Avant (8ED, B7)	2.7 TDI	132	01/06 – 06/08		3905
A4 Avant (8ED, B7)	2.7 TDi	120	11/05 – 03/08		3905
A4 Avant (8ED, B7)	3.0 quattro	160	11/04 – 07/06		3905
A4 Avant (8ED, B7)	3.0 TDI quattro	150	11/04 – 06/08		3905

MAKE & MODEL		KW	YEAR		
AUDI					
A4 Avant (8ED, B7)	3.0 TDI quattro	171	01/06 – 06/08		3905
A4 Avant (8ED, B7)	3.2 FSI	188	01/05 – 06/08		3905
A4 Avant (8ED, B7)	3.2 FSI quattro	188	01/05 – 06/08		3905
A4 Convertible (8H7, B6, 8HE, B7)	20	96	09/04 – 12/05		3529/1
A4 Convertible (8H7, B6, 8HE, B7)	20	96	09/04 – 12/05	3590/2	
A4 Convertible (8H7, B6, 8HE, B7)	24	120	04/02 – 12/05		3529/1
A4 Convertible (8H7, B6, 8HE, B7)	24	120	04/02 – 12/05	3590/2	
A4 Convertible (8H7, B6, 8HE, B7)	24	125	04/02 – 12/05		3529/1
A4 Convertible (8H7, B6, 8HE, B7)	24	125	04/02 – 12/05	3590/2	
A4 Convertible (8H7, B6, 8HE, B7)	30	160	04/02 – 12/05		3529/1
A4 Convertible (8H7, B6, 8HE, B7)	30	160	04/02 – 12/05	3590/2	
A4 Convertible (8H7, B6, 8HE, B7)	30	160	04/02 – 12/05		3905
A4 Convertible (8H7, B6, 8HE, B7)	30	162	04/02 – 12/05		3529/1
A4 Convertible (8H7, B6, 8HE, B7)	30	162	04/02 – 12/05	3590/2	
A4 Convertible (8H7, B6, 8HE, B7)	1.8 T	120	07/02 – 03/09		3529/1
A4 Convertible (8H7, B6, 8HE, B7)	1.8 T	120	07/02 – 03/09	3590/2	
A4 Convertible (8H7, B6, 8HE, B7)	1.8 T	125	10/02 – 10/05		3529/1
A4 Convertible (8H7, B6, 8HE, B7)	1.8 T	125	10/02 – 10/05	3590/2	
A4 Convertible (8H7, B6, 8HE, B7)	1.8 T quattro	120	05/03 – 03/09		3529/1
A4 Convertible (8H7, B6, 8HE, B7)	1.8 T quattro	120	05/03 – 03/09	3590/2	
A4 Convertible (8H7, B6, 8HE, B7)	2.0 TDI	100	01/06 – 03/09		3529/1
A4 Convertible (8H7, B6, 8HE, B7)	2.0 TDI	100	01/06 – 03/09	3590/2	
A4 Convertible (8H7, B6, 8HE, B7)	2.0 TDI	103	01/06 – 03/09		3529/1
A4 Convertible (8H7, B6, 8HE, B7)	2.0 TDI	103	01/06 – 03/09	3590/2	
A4 Convertible (8H7, B6, 8HE, B7)	2.0 TFSI 16V	147	01/06 – 03/09		3529/1
A4 Convertible (8H7, B6, 8HE, B7)	2.0 TFSI quattro	147	11/05 – 03/09		3529/1
A4 Convertible (8H7, B6, 8HE, B7)	2.5 TDI	120	08/02 – 12/05		3529/1
A4 Convertible (8H7, B6, 8HE, B7)	2.5 TDI	120	08/02 – 12/05	3590/2	
A4 Convertible (8H7, B6, 8HE, B7)	2.7 TDI	132	06/06 – 03/09		3529/1
A4 Convertible (8H7, B6, 8HE, B7)	3.0 quattro	162	05/03 – 12/05		3529/1
A4 Convertible (8H7, B6, 8HE, B7)	3.0 quattro	162	05/03 – 12/05	3590/2	
A4 Convertible (8H7, B6, 8HE, B7)	3.0 TDI quattro	150	01/06 – 03/09		3529/1
A4 Convertible (8H7, B6, 8HE, B7)	3.0 TDI quattro	171	01/06 – 03/09		3529/1
A4 Convertible (8H7, B6, 8HE, B7)	3.2 FSI	188	01/06 – 03/09		3529/1
A4 Convertible (8H7, B6, 8HE, B7)	3.2 FSI quattro	188	01/06 – 03/09		3529/1
A4 Saloon (8E2, B6)	24	125	01/04 – 07/05		3529/1
A4 Saloon (8E2, B6)	1.8 TURBO	120	02/03 – 07/05		3529/1
A4 Saloon (8E2, B6)	3.0 quattro	160	02/03 – 07/05		3529/1
A6 IV (4G2, C7, 4GC)	1.8 TFSI (CYGA)	140	09/14 -	4259	
A6 IV (4G2, C7, 4GC)	2.0 TDI (CGLC)	130	03/11 -	4259	
A6 IV (4G2, C7, 4GC)	2.0 TDI (CGLD)	120	03/11 -	4259	
A6 IV (4G2, C7, 4GC)	2.0 TDI (CSUD)	110	09/14 -	4259	
A6 IV (4G2, C7, 4GC)	2.0 TDI (CGLE)	100	01/12 -	4259	
A6 IV (4G2, C7, 4GC)	2.0 TDI (CMGB)	130	03/11 -	4259	
A6 IV (4G2, C7, 4GC)	2.0 TDI (CNHA)	140	11/13 -	4259	
A6 IV (4G2, C7, 4GC)	2.0 TDI (CNHA)	140	04/15 -	4259	
A6 IV (4G2, C7, 4GC)	2.0 TDI (DDDA)	140	04/15 -	4259	
A6 IV (4G2, C7, 4GC)	2.0 TFSI (CAEB)	155	03/11 – 05/13	4259	
A6 IV (4G2, C7, 4GC)	2.0 TFSI (CAEB)	155	05/12 – 05/13	4259	
A6 IV (4G2, C7, 4GC)	2.0 TFSI (CAED)	162	05/13 -	4259	
A6 IV (4G2, C7, 4GC)	2.0 TFSI (CAED)	162	05/13 -	4259	
A6 IV (4G2, C7, 4GC)	2.0 TFSI (CYPA)	185	09/14 -	4259	
A6 IV (4G2, C7, 4GC)	2.0 TFSI (CYPA)	185	05/14 -	4259	
A6 IV (4G2, C7, 4GC)	2.0 TFSI (CYPB)	183	05/15 -	4259	
A6 IV (4G2, C7, 4GC)	2.0 TFSI (CDNB)	132	05/11 -	4259	
A6 IV (4G2, C7, 4GC)	2.0 TFSI (CYNB)	185	09/14 -	4259	
A6 IV (4G2, C7, 4GC)	2.0 TFSI (CYNB)	185	05/14 -	4259	
A6 IV (4G2, C7, 4GC)	2.0 TFSI hybrid (CHJA)	155	11/11 -	4259	
A6 IV (4G2, C7, 4GC)	2.8 FSI (CHVA)	150	11/10 – 04/15	4259	
A6 IV (4G2, C7, 4GC)	2.8 FSI (CHVA)	150	11/10 – 04/15	4259	
A6 IV (4G2, C7, 4GC)	2.8 FSI (CVPA)	162	09/14 -	4259	
A6 IV (4G2, C7, 4GC)	3.0	213	11/11 -	4259	
A6 IV (4G2, C7, 4GC)	3.0	213	11/11 -	4259	
A6 IV (4G2, C7, 4GC)	3.0 TDI (CDUC)	180	03/11 -	4259	
A6 IV (4G2, C7, 4GC)	3.0 TDI (CDUD)	180	03/11 -	4259	
A6 IV (4G2, C7, 4GC)	3.0 TDI (CKVC)	180	03/11 -	4259	
A6 IV (4G2, C7, 4GC)	3.0 TDI (CGQB)	230	11/11 -	4259	
A6 IV (4G2, C7, 4GC)	3.0 TDI (CKVB)	180	03/11 -	4259	
A6 IV (4G2, C7, 4GC)	3.0 TDI (CLAA)	150	03/11 -	4259	
A6 IV (4G2, C7, 4GC)	3.0 TDI (CLAB)	150	11/10 -	4259	
A6 IV (4G2, C7, 4GC)	3.0 TDI (CPNB)	176	05/13 -	4259	

MAKE & MODEL		KW	YEAR		
AUDI					
A6 IV (4G2, C7, 4GC)	3.0 TDI (CRTD)	200	09/14 -	4259	
A6 IV (4G2, C7, 4GC)	3.0 TDI (CRTE)	160	09/14 -	4259	
A6 IV (4G2, C7, 4GC)	3.0 TDI (CRTF)	155	09/14 -	4259	
A6 IV (4G2, C7, 4GC)	3.0 TDI (CTCB)	155	09/14 -	4259	
A6 IV (4G2, C7, 4GC)	3.0 TDI (CTCC)	160	09/14 -	4259	
A6 IV (4G2, C7, 4GC)	3.0 TDI (CVUA)	235	09/14 -	4259	
A6 IV (4G2, C7, 4GC)	3.0 TDI (CVUB)	240	09/14 -	4259	
A6 IV (4G2, C7, 4GC)	3.0 TDI (CZVA)	160	09/14 -	4259	
A6 IV (4G2, C7, 4GC)	3.0 TDI (CZVB)	160	09/14 -	4259	
A6 IV (4G2, C7, 4GC)	3.0 TDI (CZVC)	155	09/14 -	4259	
A6 IV (4G2, C7, 4GC)	3.0 TDI (CZVD)	155	09/14 -	4259	
A6 IV (4G2, C7, 4GC)	3.0 TFSI (CGWB)	220	11/10 – 05/12	4259	
A6 IV (4G2, C7, 4GC)	3.0 TFSI (CGWD)	228	03/11 -	4259	
A6 IV (4G2, C7, 4GC)	3.0 TFSI (CGXB)	228	03/11 -	4259	
A6 IV (4G2, C7, 4GC)	3.0 TFSI (CREC)	245	09/14 -	4259	
A6 IV (4G2, C7, 4GC)	3.0 TFSI (CTUA)	228	03/11 -	4259	
A6 IV (4G2, C7, 4GC)	4.0 S6 (CEUC)	309	02/12 -	4259	
A6 IV (4G2, C7, 4GC)	S6 (CTGE)	331	10/14 -	4259	
A6 IV Allroad (4GH, 4GJ C7)	3.0 TDI (CDUD)	180	01/12 -	4259	
A6 IV Allroad (4GH, 4GJ C7)	3.0 TDI (CGQB)	230	01/12 -	4259	
A6 IV Allroad (4GH, 4GJ C7)	3.0 TDI (CKVC)	180	01/12 -	4259	
A6 IV Allroad (4GH, 4GJ C7)	3.0 TDI (CLAA)	150	01/12 -	4259	
A6 IV Allroad (4GH, 4GJ C7)	3.0 TDI (CRTD)	200	09/14 -	4259	
A6 IV Allroad (4GH, 4GJ C7)	3.0 TDI (CRTE)	160	09/14 -	4259	
A6 IV Allroad (4GH, 4GJ C7)	3.0 TDI (CRTF)	155	09/14 -	4259	
A6 IV Allroad (4GH, 4GJ C7)	3.0 TDI (CVUA)	235	01/12 -	4259	
A6 IV Allroad (4GH, 4GJ C7)	3.0 TDI (CZVA)	160	09/14 -	4259	
A6 IV Allroad (4GH, 4GJ C7)	3.0 TDI (CZVC)	155	09/14 -	4259	
A6 IV Allroad (4GH, 4GJ C7)	3.0 TDI (CZVF)	140	11/15 -	4259	
A6 IV Allroad (4GH, 4GJ C7)	3.0 TFSI (CGWD)	228	01/12 -	4259	
A6 IV Allroad (4GH, 4GJ C7)	3.0 TFSI (CREC)	245	09/14 -	4259	
A6 (4A, C4)	18	92	12/95 – 10/97		3536
A6 (4A, C4)	20	74	06/94 – 10/97		3536
A6 (4A, C4)	20	79	08/95 – 07/96		3536
A6 (4A, C4)	20	85	06/94 – 10/97		3536
A6 (4A, C4)	23	98	06/94 – 12/95		3536
A6 (4A, C4)	24	110	07/95 – 06/96		3536
A6 (4A, C4)	26	102	06/94 – 10/97		3536
A6 (4A, C4)	26	110	06/94 – 10/97		3536
A6 (4A, C4)	28	120	08/95 – 07/96		3536
A6 (4A, C4)	28	128	06/94 – 10/97		3536
A6 (4A, C4)	28	142	12/95 – 10/97		3536
A6 (4A, C4)	1.8 quattro	92	12/95 – 10/97		3536
A6 (4A, C4)	1.9 TDI	66	06/94 – 10/97		3536
A6 (4A, C4)	2.0 16V	103	06/94 – 10/97		3536
A6 (4A, C4)	2.0 16V quattro	103	06/94 – 10/97		3536
A6 (4A, C4)	2.3 quattro	98	06/94 – 12/95		3536
A6 (4A, C4)	2.5 TDI	84	01/95 – 10/97		3536
A6 (4A, C4)	2.5 TDI	85	06/94 – 10/97		3536
A6 (4A, C4)	2.5 TDI	103	08/94 – 10/97		3536
A6 (4A, C4)	2.5 TDI quattro	103	10/95 – 10/97		3536
A6 (4A, C4)	2.6 quattro	110	06/94 – 10/97		3536
A6 (4A, C4)	2.8 quattro	128	06/94 – 10/97		3536
A6 (4A, C4)	2.8 quattro	142	12/95 – 10/97		3536
A6 (4A, C4)	S6 4.2 quattro	213	06/94 – 10/97		3536
A6 (4A, C4)	S6 Plus quattro	240	04/96 – 10/97		3536
A6 (4A, C4)	S6 Turbo quattro	169	06/94 – 10/97		3536
A6 (4B2, C5)	18	85	05/97 – 01/05		3529
A6 (4B2, C5)	18	85	05/97 – 01/05		3529/1
A6 (4B2, C5)	18	85	05/97 – 01/05	3590/2	
A6 (4B2, C5)	18	92	07/97 – 01/05		3529
A6 (4B2, C5)	18	92	07/97 – 01/05		3529/1
A6 (4B2, C5)	18	92	07/97 – 01/05	3590/2	
A6 (4B2, C5)	20	96	08/01 – 01/05		3529
A6 (4B2, C5)	20	96	08/01 – 01/05		3529/1
A6 (4B2, C5)	20	96	08/01 – 01/05	3590/2	
A6 (4B2, C5)	24	100	07/98 – 01/05		3529
A6 (4B2, C5)	24	100	07/98 – 01/05		3529/1
A6 (4B2, C5)	24	100	07/98 – 01/05	3590/2	
A6 (4B2, C5)	24	115	02/97 – 01/05		3529
A6 (4B2, C5)	24	115	02/97 – 01/05		3529/1

MAKE & MODEL   		KW	YEAR		
AUDI					
A6 (4B2, C5)	24	115	02/97 – 01/05	3590/2	
A6 (4B2, C5)	24	120	02/97 – 01/05		3529
A6 (4B2, C5)	24	120	02/97 – 01/05		3529/1
A6 (4B2, C5)	24	120	02/97 – 01/05	3590/2	
A6 (4B2, C5)	24	121	02/97 – 01/05		3529
A6 (4B2, C5)	24	121	02/97 – 01/05		3529/1
A6 (4B2, C5)	24	121	02/97 – 01/05	3590/2	
A6 (4B2, C5)	24	125	08/01 – 01/05		3529
A6 (4B2, C5)	24	125	08/01 – 01/05		3529/1
A6 (4B2, C5)	24	125	08/01 – 01/05	3590/2	
A6 (4B2, C5)	27	187	05/01 – 07/04		3529
A6 (4B2, C5)	27	187	05/01 – 07/04		3529/1
A6 (4B2, C5)	27	187	05/01 – 07/04	4096	
A6 (4B2, C5)	28	132	10/97 – 05/00		3529/1
A6 (4B2, C5)	28	132	10/97 – 05/00	3590/2	
A6 (4B2, C5)	28	140	07/99 – 01/05		3529
A6 (4B2, C5)	28	140	07/99 – 01/05		3529/1
A6 (4B2, C5)	28	140	07/99 – 01/05	3590/2	
A6 (4B2, C5)	28	142	02/97 – 01/05		3529
A6 (4B2, C5)	28	142	02/97 – 01/05		3529/1
A6 (4B2, C5)	28	142	02/97 – 01/05	3590/2	
A6 (4B2, C5)	30	162	08/01 – 01/05		3529
A6 (4B2, C5)	30	162	08/01 – 01/05		3529/1
A6 (4B2, C5)	30	162	08/01 – 01/05	4096	
A6 (4B2, C5)	37	191	03/99 – 01/05		3529
A6 (4B2, C5)	37	191	03/99 – 01/05		3529/1
A6 (4B2, C5)	37	191	03/99 – 01/05	4096	
A6 (4B2, C5)	1.8 T	110	01/97 – 01/05		3529
A6 (4B2, C5)	1.8 T	110	01/97 – 01/05		3529/1
A6 (4B2, C5)	1.8 T	110	01/97 – 01/05	3590/2	
A6 (4B2, C5)	1.8 T	132	12/97 – 01/05		3529
A6 (4B2, C5)	1.8 T	132	12/97 – 01/05		3529/1
A6 (4B2, C5)	1.8 T	132	12/97 – 01/05	3590/2	
A6 (4B2, C5)	1.8 T quattro	110	02/97 – 01/05		3529
A6 (4B2, C5)	1.8 T quattro	110	02/97 – 01/05		3529/1
A6 (4B2, C5)	1.8 T quattro	110	02/97 – 01/05	3590/2	
A6 (4B2, C5)	1.8 T quattro	132	12/97 – 01/05		3529
A6 (4B2, C5)	1.8 T quattro	132	12/97 – 01/05		3529/1
A6 (4B2, C5)	1.8 T quattro	132	12/97 – 01/05	3590/2	
A6 (4B2, C5)	1.9 TDI	81	04/97 – 10/00		3529/1
A6 (4B2, C5)	1.9 TDI	81	04/97 – 10/00	3590/2	
A6 (4B2, C5)	1.9 TDI	85	07/00 – 01/05		3529
A6 (4B2, C5)	1.9 TDI	85	07/00 – 01/05		3529/1
A6 (4B2, C5)	1.9 TDI	85	07/00 – 01/05	3590/2	
A6 (4B2, C5)	1.9 TDI	96	08/01 – 01/05		3529
A6 (4B2, C5)	1.9 TDI	96	08/01 – 01/05		3529/1
A6 (4B2, C5)	1.9 TDI	96	08/01 – 01/05	3590/2	
A6 (4B2, C5)	2.4 quattro	115	08/98 – 07/99		3529/1
A6 (4B2, C5)	2.4 quattro	115	08/98 – 07/99	3590/2	
A6 (4B2, C5)	2.4 quattro	120	02/97 – 01/05		3529
A6 (4B2, C5)	2.4 quattro	120	02/97 – 01/05		3529/1
A6 (4B2, C5)	2.4 quattro	120	02/97 – 01/05	3590/2	
A6 (4B2, C5)	2.4 quattro	121	02/97 – 01/05		3529
A6 (4B2, C5)	2.4 quattro	121	02/97 – 01/05		3529/1
A6 (4B2, C5)	2.4 quattro	121	02/97 – 01/05	3590/2	
A6 (4B2, C5)	2.4 quattro	125	08/01 – 01/05		3529
A6 (4B2, C5)	2.4 quattro	125	08/01 – 01/05		3529/1
A6 (4B2, C5)	2.4 quattro	125	08/01 – 01/05	3590/2	
A6 (4B2, C5)	2.5 TDI	110	07/97 – 01/05		3529
A6 (4B2, C5)	2.5 TDI	110	07/97 – 01/05		3529/1
A6 (4B2, C5)	2.5 TDI	110	07/97 – 01/05	3590/2	
A6 (4B2, C5)	2.5 TDI	110	07/97 – 01/05	4096	
A6 (4B2, C5)	2.5 TDI	114	08/01 – 01/05		3529
A6 (4B2, C5)	2.5 TDI	114	08/01 – 01/05		3529/1
A6 (4B2, C5)	2.5 TDI	114	08/01 – 01/05	3590/2	
A6 (4B2, C5)	2.5 TDI	114	08/01 – 01/05	4096	
A6 (4B2, C5)	2.5 TDI	120	07/02 – 01/05		3529
A6 (4B2, C5)	2.5 TDI	120	07/02 – 01/05		3529/1
A6 (4B2, C5)	2.5 TDI	120	07/02 – 01/05	3590/2	
A6 (4B2, C5)	2.5 TDI	120	07/02 – 01/05	4096	
A6 (4B2, C5)	2.5 TDI	132	02/00 – 01/05		3529

MAKE & MODEL		KW	YEAR		
AUDI					
A6 (4B2, C5)	2.5 TDI	132	02/00 – 01/05		3529/1
A6 (4B2, C5)	2.5 TDI	132	02/00 – 01/05	3590/2	
A6 (4B2, C5)	2.5 TDI	132	02/00 – 01/05	4096	
A6 (4B2, C5)	2.5 TDI quattro	110	07/97 – 01/05		3529
A6 (4B2, C5)	2.5 TDI quattro	110	07/97 – 01/05		3529/1
A6 (4B2, C5)	2.5 TDI quattro	110	07/97 – 01/05	3590/2	
A6 (4B2, C5)	2.5 TDI quattro	110	07/97 – 01/05	4096	
A6 (4B2, C5)	2.5 TDI quattro	132	02/00 – 01/05		3529
A6 (4B2, C5)	2.5 TDI quattro	132	02/00 – 01/05		3529/1
A6 (4B2, C5)	2.5 TDI quattro	132	02/00 – 01/05	3590/2	
A6 (4B2, C5)	2.5 TDI quattro	132	02/00 – 01/05	4096	
A6 (4B2, C5)	2.7 quattro	187	05/01 – 07/04		3529
A6 (4B2, C5)	2.7 quattro	187	05/01 – 07/04		3529/1
A6 (4B2, C5)	2.7 quattro	187	05/01 – 07/04	4096	
A6 (4B2, C5)	2.7 quattro	195	11/03 – 07/04		3529
A6 (4B2, C5)	2.7 quattro	195	11/03 – 07/04		3529/1
A6 (4B2, C5)	2.7 quattro	195	11/03 – 07/04	4096	
A6 (4B2, C5)	2.7 T	169	02/99 – 01/05		3529
A6 (4B2, C5)	2.7 T	169	02/99 – 01/05		3529/1
A6 (4B2, C5)	2.7 T	169	02/99 – 01/05	4096	
A6 (4B2, C5)	2.7 T quattro	169	12/97 – 01/05		3529
A6 (4B2, C5)	2.7 T quattro	169	12/97 – 01/05		3529/1
A6 (4B2, C5)	2.7 T quattro	169	12/97 – 01/05	4096	
A6 (4B2, C5)	2.7 T quattro	184	08/01 – 01/05		3529
A6 (4B2, C5)	2.7 T quattro	184	08/01 – 01/05		3529/1
A6 (4B2, C5)	2.7 T quattro	184	08/01 – 01/05	4096	
A6 (4B2, C5)	2.8 quattro	132	01/98 – 04/00		3529/1
A6 (4B2, C5)	2.8 quattro	132	01/98 – 04/00	3590/2	
A6 (4B2, C5)	2.8 quattro	140	07/99 – 05/01		3529/1
A6 (4B2, C5)	2.8 quattro	140	07/99 – 05/01	3590/2	
A6 (4B2, C5)	2.8 quattro	142	02/97 – 01/05		3529
A6 (4B2, C5)	2.8 quattro	142	02/97 – 01/05		3529/1
A6 (4B2, C5)	2.8 quattro	142	02/97 – 01/05	3590/2	
A6 (4B2, C5)	3.0 quattro	160	06/01 – 07/04		3529
A6 (4B2, C5)	3.0 quattro	160	06/01 – 07/04		3529/1
A6 (4B2, C5)	3.0 quattro	160	06/01 – 07/04	4096	
A6 (4B2, C5)	3.0 quattro	162	08/01 – 01/05		3529
A6 (4B2, C5)	3.0 quattro	162	08/01 - 01/05		3529/1
A6 (4B2, C5)	3.0 quattro	162	08/01 – 01/05	4096	
A6 (4B2, C5)	3.7 quattro	191	03/99 – 01/05		3529
A6 (4B2, C5)	3.7 quattro	191	03/99 – 01/05		3529/1
A6 (4B2, C5)	3.7 quattro	191	03/99 – 01/05	4096	
A6 (4B2, C5)	4.2 quattro	220	11/98 – 01/05		3529
A6 (4B2, C5)	4.2 quattro	220	11/98 – 01/05		3529/1
A6 (4B2, C5)	4.2 quattro	220	11/98 – 01/05	4096	
A6 (4B2, C5)	S6 quattro	250	09/99 – 01/05		3529
A6 (4B2, C5)	S6 quattro	250	09/99 – 01/05		3529/1
A6 (4B2, C5)	S6 quattro	250	09/99 – 01/05	4096	
A6 (4F2, C6)	24	130	05/04 – 10/08		3905
A6 (4F2, C6)	30	160	08/04 – 05/06		3905
A6 (4F2, C6)	2.0 TDI	89	09/05 – 06/06		3905
A6 (4F2, C6)	2.0 TDI	100	07/04 – 03/11		3905
A6 (4F2, C6)	2.0 TDI	103	07/04 – 10/08		3905
A6 (4F2, C6)	2.0 TDI	120	04/09 – 03/11		3905
A6 (4F2, C6)	2.0 TDI	125	11/08 – 03/11		3905
A6 (4F2, C6)	2.0 TFSI	125	06/05 – 03/11		3905
A6 (4F2, C6)	2.4 quattro	130	01/05 – 10/08		3905
A6 (4F2, C6)	2.7 TDI	120	11/04 – 03/11		3905
A6 (4F2, C6)	2.7 TDI	132	11/04 – 10/08		3905
A6 (4F2, C6)	2.7 TDI	140	10/08 – 03/11		3905
A6 (4F2, C6)	2.7 TDI quattro	120	06/05 – 03/11		3905
A6 (4F2, C6)	2.7 TDI quattro	132	11/04 – 10/08		3905
A6 (4F2, C6)	2.7 TDI quattro	140	10/08 – 03/11		3905
A6 (4F2, C6)	2.8 FSI	140	10/08 – 03/11		3905
A6 (4F2, C6)	2.8 FSI	154	11/06 – 10/08		3905
A6 (4F2, C6)	2.8 FSI	162	10/08 – 03/11		3905
A6 (4F2, C6)	2.8 FSI quattro	140	10/08 – 03/11		3905
A6 (4F2, C6)	2.8 FSI quattro	154	06/07 – 10/08		3905
A6 (4F2, C6)	2.8 FSI quattro	162	10/08 – 03/11		3905
A6 (4F2, C6)	3.0 quattro	160	05/04 – 05/06		3905
A6 (4F2, C6)	3.0 TDI quattro	155	05/04 – 03/11		3905

MAKE & MODEL		KW	YEAR		
AUDI					
A6 (4F2, C6)	3.0 TDI quattro	165	05/04 – 05/06		3905
A6 (4F2, C6)	3.0 TDI quattro	171	06/06 – 10/08		3905
A6 (4F2, C6)	3.0 TDI quattro	176	10/08 – 03/11		3905
A6 (4F2, C6)	3.0 TFSI quattro	213	10/08 – 03/11		3905
A6 (4F2, C6)	3.0 TFSI quattro	220	10/08 – 03/11		3905
A6 (4F2, C6)	3.2 FSI	188	05/04 – 05/09		3905
A6 (4F2, C6)	3.2 FSI	195	05/09 – 03/11		3905
A6 (4F2, C6)	3.2 FSI quattro	183	09/06 – 10/08		3905
A6 (4F2, C6)	3.2 FSI quattro	188	05/04 – 10/08		3905
A6 (4G2, C7, 4GC)	1.8 TFSI	140	09/14 -		4260
A6 (4G2, C7, 4GC)	2.0 TDI	100	01/12 -		4260
A6 (4G2, C7, 4GC)	2.0 TDI	110	09/14 -		4260
A6 (4G2, C7, 4GC)	2.0 TDI	120	03/11 -		4260
A6 (4G2, C7, 4GC)	2.0 TDI	130	03/11 -		4260
A6 (4G2, C7, 4GC)	2.0 TDI	140	11/13 -		4260
A6 (4G2, C7, 4GC)	2.0 TDI quattro	140	04/15 -		4260
A6 (4G2, C7, 4GC)	2.0 TFSI	132	05/11 -		4260
A6 (4G2, C7, 4GC)	2.0 TFSI	155	03/11 – 05/13		4260
A6 (4G2, C7, 4GC)	2.0 TFSI	162	05/13 -		4260
A6 (4G2, C7, 4GC)	2.0 TFSI	185	09/14 -		4260
A6 (4G2, C7, 4GC)	2.0 TFSI hybrid	155	11/11 -		4260
A6 (4G2, C7, 4GC)	2.0 TFSI quattro	155	05/12 – 05/13		4260
A6 (4G2, C7, 4GC)	2.0 TFSI quattro	162	05/13 -		4260
A6 (4G2, C7, 4GC)	2.0 TFSI quattro	183	05/15 -		4260
A6 (4G2, C7, 4GC)	2.0 TFSI quattro	185	05/14 -		4260
A6 (4G2, C7, 4GC)	2.8 FSI	150	11/10 – 04/15		4260
A6 (4G2, C7, 4GC)	2.8 FSI quattro	150	11/10 – 04/15		4260
A6 (4G2, C7, 4GC)	2.8 FSI quattro	162	09/14 -		4260
A6 (4G2, C7, 4GC)	3.0 TDI	150	11/10 -		4260
A6 (4G2, C7, 4GC)	3.0 TDI	155	09/14 -		4260
A6 (4G2, C7, 4GC)	3.0 TDI	160	09/14 -		4260
A6 (4G2, C7, 4GC)	3.0 TDI quattro	150	03/11 -		4260
A6 (4G2, C7, 4GC)	3.0 TDI quattro	155	09/14 -		4260
A6 (4G2, C7, 4GC)	3.0 TDI quattro	160	09/14 -		4260
A6 (4G2, C7, 4GC)	3.0 TDI quattro	176	05/13 -		4260
A6 (4G2, C7, 4GC)	3.0 TDI quattro	180	03/11 -		4260
A6 (4G2, C7, 4GC)	3.0 TDI quattro	200	09/14 -		4260
A6 (4G2, C7, 4GC)	3.0 TDI quattro	230	11/11 -		4260
A6 (4G2, C7, 4GC)	3.0 TDI quattro	235	09/14 -		4260
A6 (4G2, C7, 4GC)	3.0 TDI quattro	240	09/14 -		4260
A6 (4G2, C7, 4GC)	3.0 TFSI quattro	220	11/10 – 05/12		4260
A6 (4G2, C7, 4GC)	3.0 TFSI quattro	228	03/11 -		4260
A6 (4G2, C7, 4GC)	3.0 TFSI quattro	245	09/14 -		4260
A6 (4G2, C7, 4GC)	S6 quattro	331	10/14 -		4260
A6 Allroad (4FH, C6)	2.7 TDI quattro	120	05/06 – 08/11		3905
A6 Allroad (4FH, C6)	2.7 TDI quattro	132	05/06 – 10/08		3905
A6 Allroad (4FH, C6)	2.7 TDI quattro	140	10/08 – 08/11		3905
A6 Allroad (4FH, C6)	3.0 TDI quattro	155	05/06 – 08/11		3905
A6 Allroad (4FH, C6)	3.0 TDI quattro	171	05/06 – 10/08		3905
A6 Allroad (4FH, C6)	3.0 TDI quattro	176	10/08 – 08/11		3905
A6 Allroad (4FH, C6)	3.0 TFSI quattro	213	10/08 – 08/11		3905
A6 Allroad (4FH, C6)	3.2 FSI quattro	188	05/06 – 10/08		3905
A6 Avant (4A, C4)	18	92	12/95 – 12/97		3536
A6 Avant (4A, C4)	20	74	06/94 – 12/97		3536
A6 Avant (4A, C4)	20	85	06/94 – 12/97		3536
A6 Avant (4A, C4)	23	98	06/94 – 12/95		3536
A6 Avant (4A, C4)	24	110	07/96 – 12/97		3536
A6 Avant (4A, C4)	26	102	06/94 – 02/97		3536
A6 Avant (4A, C4)	26	110	06/94 – 12/97		3536
A6 Avant (4A, C4)	28	128	06/94 – 12/97		3536
A6 Avant (4A, C4)	28	142	12/95 – 12/97		3536
A6 Avant (4A, C4)	1.8 quattro	92	12/95 – 12/97		3536
A6 Avant (4A, C4)	1.9 TDI	66	06/94 – 12/97		3536
A6 Avant (4A, C4)	2.0 16V	103	06/94 – 12/97		3536
A6 Avant (4A, C4)	2.0 16V quattro	103	06/94 – 12/97		3536
A6 Avant (4A, C4)	2.3 quattro	98	06/94 – 12/95		3536
A6 Avant (4A, C4)	2.5 TDI	84	01/95 – 12/97		3536
A6 Avant (4A, C4)	2.5 TDI	85	06/94 – 12/97		3536
A6 Avant (4A, C4)	2.5 TDI	103	08/94 – 12/97		3536
A6 Avant (4A, C4)	2.5 TDI quattro	103	07/95 – 12/97		3536
A6 Avant (4A, C4)	2.6 quattro	110	06/94 – 12/97		3536

MAKE & MODEL   		KW	YEAR		
AUDI					
A6 Avant (4A, C4)	2.8 quattro	128	06/94 – 12/97		3536
A6 Avant (4A, C4)	2.8 quattro	142	12/95 – 12/97		3536
A6 Avant (4A, C4)	S6 4.2 quattro	213	06/94 – 12/97		3536
A6 Avant (4A, C4)	S6 Plus quattro	240	04/96 – 12/97		3536
A6 Avant (4A, C4)	S6 Turbo quattro	169	06/94 – 12/97		3536
A6 Avant (4B5, C5)	18	85	02/98 – 01/05		3529
A6 Avant (4B5, C5)	18	85	02/98 – 01/05		3529/1
A6 Avant (4B5, C5)	18	85	02/98 – 01/05	3590/2	
A6 Avant (4B5, C5)	18	92	12/97 – 01/05		3529
A6 Avant (4B5, C5)	18	92	12/97 – 01/05		3529/1
A6 Avant (4B5, C5)	18	92	12/97 – 01/05	3590/2	
A6 Avant (4B5, C5)	20	96	08/01 – 01/05		3529
A6 Avant (4B5, C5)	20	96	08/01 – 01/05		3529/1
A6 Avant (4B5, C5)	20	96	08/01 – 01/05	3590/2	
A6 Avant (4B5, C5)	24	100	07/98 – 01/05		3529
A6 Avant (4B5, C5)	24	100	07/98 – 01/05		3529/1
A6 Avant (4B5, C5)	24	100	07/98 – 01/05	3590/2	
A6 Avant (4B5, C5)	24	115	12/97 – 01/05		3529
A6 Avant (4B5, C5)	24	115	12/97 – 01/05		3529/1
A6 Avant (4B5, C5)	24	115	12/97 – 01/05	3590/2	
A6 Avant (4B5, C5)	24	120	12/97 – 01/05		3529
A6 Avant (4B5, C5)	24	120	12/97 – 01/05		3529/1
A6 Avant (4B5, C5)	24	120	12/97 – 01/05	3590/2	
A6 Avant (4B5, C5)	24	121	12/97 – 01/05		3529
A6 Avant (4B5, C5)	24	121	12/97 – 01/05		3529/1
A6 Avant (4B5, C5)	24	121	12/97 – 01/05	3590/2	
A6 Avant (4B5, C5)	24	125	08/01 – 01/05		3529
A6 Avant (4B5, C5)	24	125	08/01 – 01/05		3529/1
A6 Avant (4B5, C5)	24	125	08/01 – 01/05	3590/2	
A6 Avant (4B5, C5)	28	132	12/97 – 05/00		3529
A6 Avant (4B5, C5)	28	132	12/97 – 05/00		3529/1
A6 Avant (4B5, C5)	28	132	12/97 – 05/00	3590/2	
A6 Avant (4B5, C5)	28	140	07/99 – 01/05		3529
A6 Avant (4B5, C5)	28	140	07/99 – 01/05		3529/1
A6 Avant (4B5, C5)	28	140	07/99 – 01/05	3590/2	
A6 Avant (4B5, C5)	28	142	12/97 – 01/05		3529
A6 Avant (4B5, C5)	28	142	12/97 – 01/05		3529/1
A6 Avant (4B5, C5)	28	142	12/97 – 01/05	3590/2	
A6 Avant (4B5, C5)	30	162	08/01 – 01/05		3529
A6 Avant (4B5, C5)	30	162	08/01 – 01/05		3529/1
A6 Avant (4B5, C5)	30	162	08/01 – 01/05	4096	
A6 Avant (4B5, C5)	37	191	03/99 – 01/05		3529
A6 Avant (4B5, C5)	37	191	03/99 – 01/05		3529/1
A6 Avant (4B5, C5)	37	191	03/99 – 01/05	4096	
A6 Avant (4B5, C5)	1.8 T	110	12/97 – 01/05		3529
A6 Avant (4B5, C5)	1.8 T	110	12/97 – 01/05		3529/1
A6 Avant (4B5, C5)	1.8 T	110	12/97 – 01/05	3590/2	
A6 Avant (4B5, C5)	1.8 T	132	04/99 – 01/05		3529
A6 Avant (4B5, C5)	1.8 T	132	04/99 – 01/05		3529/1
A6 Avant (4B5, C5)	1.8 T	132	04/99 – 01/05	3590/2	
A6 Avant (4B5, C5)	1.8 T quattro	110	12/97 – 01/05		3529
A6 Avant (4B5, C5)	1.8 T quattro	110	12/97 – 01/05		3529/1
A6 Avant (4B5, C5)	1.8 T quattro	110	12/97 – 01/05	3590/2	
A6 Avant (4B5, C5)	1.8 T quattro	132	12/97 – 01/05		3529
A6 Avant (4B5, C5)	1.8 T quattro	132	12/97 – 01/05		3529/1
A6 Avant (4B5, C5)	1.8 T quattro	132	12/97 – 01/05	3590/2	
A6 Avant (4B5, C5)	1.9 TDI	81	02/98 – 04/01		3529/1
A6 Avant (4B5, C5)	1.9 TDI	81	02/98 – 04/01	3590/2	
A6 Avant (4B5, C5)	1.9 TDI	85	07/00 – 01/05		3529
A6 Avant (4B5, C5)	1.9 TDI	85	07/00 – 01/05		3529/1
A6 Avant (4B5, C5)	1.9 TDI	85	07/00 – 01/05	3590/2	
A6 Avant (4B5, C5)	1.9 TDI	96	08/01 – 01/05		3529
A6 Avant (4B5, C5)	1.9 TDI	96	08/01 – 01/05		3529/1
A6 Avant (4B5, C5)	1.9 TDI	96	08/01 – 01/05	3590/2	
A6 Avant (4B5, C5)	2.4 quattro	115	08/98 – 05/01		3529
A6 Avant (4B5, C5)	2.4 quattro	115	08/98 – 05/01		3529/1
A6 Avant (4B5, C5)	2.4 quattro	115	08/98 – 05/01	3590/2	
A6 Avant (4B5, C5)	2.4 quattro	120	12/97 – 01/05		3529
A6 Avant (4B5, C5)	2.4 quattro	120	12/97 – 01/05		3529/1
A6 Avant (4B5, C5)	2.4 quattro	120	12/97 – 01/05	3590/2	
A6 Avant (4B5, C5)	2.4 quattro	121	12/97 – 01/05		3529

MAKE & MODEL   		KW	YEAR		
AUDI					
A6 Avant (4B5, C5)	2.4 quattro	121	12/97 – 01/05		3529/1
A6 Avant (4B5, C5)	2.4 quattro	121	12/97 – 01/05	3590/2	
A6 Avant (4B5, C5)	2.4 quattro	125	08/01 – 01/05		3529
A6 Avant (4B5, C5)	2.4 quattro	125	08/01 – 01/05		3529/1
A6 Avant (4B5, C5)	2.4 quattro	125	08/01 – 01/05	3590/2	
A6 Avant (4B5, C5)	2.5 TDI	110	12/97 – 01/05		3529
A6 Avant (4B5, C5)	2.5 TDI	110	12/97 – 01/05		3529/1
A6 Avant (4B5, C5)	2.5 TDI	110	12/97 – 01/05	3590/2	
A6 Avant (4B5, C5)	2.5 TDI	110	12/97 – 01/05	4096	
A6 Avant (4B5, C5)	2.5 TDI	114	08/01 – 01/05		3529
A6 Avant (4B5, C5)	2.5 TDI	114	08/01 – 01/05		3529/1
A6 Avant (4B5, C5)	2.5 TDI	114	08/01 – 01/05	3590/2	
A6 Avant (4B5, C5)	2.5 TDI	114	08/01 – 01/05	4096	
A6 Avant (4B5, C5)	2.5 TDI	120	07/02 – 01/05		3529
A6 Avant (4B5, C5)	2.5 TDI	120	07/02 – 01/05		3529/1
A6 Avant (4B5, C5)	2.5 TDI	120	07/02 – 01/05	3590/2	
A6 Avant (4B5, C5)	2.5 TDI	120	07/02 – 01/05	4096	
A6 Avant (4B5, C5)	2.5 TDI	132	02/00 – 01/05		3529
A6 Avant (4B5, C5)	2.5 TDI	132	02/00 – 01/05		3529/1
A6 Avant (4B5, C5)	2.5 TDI	132	02/00 – 01/05	3590/2	
A6 Avant (4B5, C5)	2.5 TDI	132	02/00 – 01/05	4096	
A6 Avant (4B5, C5)	2.5 TDI quattro	110	12/97 – 01/05		3529
A6 Avant (4B5, C5)	2.5 TDI quattro	110	12/97 – 01/05		3529/1
A6 Avant (4B5, C5)	2.5 TDI quattro	110	12/97 – 01/05	3590/2	
A6 Avant (4B5, C5)	2.5 TDI quattro	110	12/97 – 01/05	4096	
A6 Avant (4B5, C5)	2.5 TDI quattro	132	02/00 – 01/05		3529
A6 Avant (4B5, C5)	2.5 TDI quattro	132	02/00 – 01/05		3529/1
A6 Avant (4B5, C5)	2.5 TDI quattro	132	02/00 – 01/05	3590/2	
A6 Avant (4B5, C5)	2.5 TDI quattro	132	02/00 – 01/05	4096	
A6 Avant (4B5, C5)	2.7 T	169	02/99 – 01/05		3529
A6 Avant (4B5, C5)	2.7 T	169	02/99 – 01/05		3529/1
A6 Avant (4B5, C5)	2.7 T	169	02/99 – 01/05	4096	
A6 Avant (4B5, C5)	2.7 T quattro	169	12/97 – 01/05		3529
A6 Avant (4B5, C5)	2.7 T quattro	169	12/97 – 01/05		3529/1
A6 Avant (4B5, C5)	2.7 T quattro	169	12/97 – 01/05	4096	
A6 Avant (4B5, C5)	2.7 T quattro	184	08/01 – 01/05		3529
A6 Avant (4B5, C5)	2.7 T quattro	184	08/01 – 01/05		3529/1
A6 Avant (4B5, C5)	2.7 T quattro	184	08/01 – 01/05	4096	
A6 Avant (4B5, C5)	2.8 quattro	142	12/97 – 01/05		3529
A6 Avant (4B5, C5)	2.8 quattro	142	12/97 – 01/05		3529/1
A6 Avant (4B5, C5)	2.8 quattro	142	12/97 – 01/05	3590/2	
A6 Avant (4B5, C5)	3.0 quattro	162	08/01 – 01/05		3529
A6 Avant (4B5, C5)	3.0 quattro	162	08/01 – 01/05		3529/1
A6 Avant (4B5, C5)	3.0 quattro	162	08/01 – 01/05	4096	
A6 Avant (4B5, C5)	3.7 quattro	191	03/99 – 01/05		3529
A6 Avant (4B5, C5)	3.7 quattro	191	03/99 – 01/05		3529/1
A6 Avant (4B5, C5)	3.7 quattro	191	03/99 – 01/05	4096	
A6 Avant (4B5, C5)	4.2 quattro	220	11/98 – 01/05		3529
A6 Avant (4B5, C5)	4.2 quattro	220	11/98 – 01/05		3529/1
A6 Avant (4B5, C5)	4.2 quattro	220	11/98 – 01/05	4096	
A6 Avant (4B5, C5)	S6 quattro	250	09/99 – 01/05		3529
A6 Avant (4B5, C5)	S6 quattro	250	09/99 – 01/05		3529/1
A6 Avant (4B5, C5)	S6 quattro	250	09/99 – 01/05	4096	
A6 Avant (4F5, C6)	24	130	03/05 – 10/08		3905
A6 Avant (4F5, C6)	30	160	03/05 – 05/06		3905
A6 Avant (4F5, C6)	2.0 TDI	89	09/05 – 06/06		3905
A6 Avant (4F5, C6)	2.0 TDI	100	06/05 – 08/11		3905
A6 Avant (4F5, C6)	2.0 TDI	103	06/05 – 10/08		3905
A6 Avant (4F5, C6)	2.0 TDI	120	04/09 – 08/11		3905
A6 Avant (4F5, C6)	2.0 TDI	125	10/08 – 08/11		3905
A6 Avant (4F5, C6)	2.0 TFSI	125	06/05 – 08/11		3905
A6 Avant (4F5, C6)	2.4 quattro	130	03/05 – 10/08		3905
A6 Avant (4F5, C6)	2.7 TDI	120	03/05 – 08/11		3905
A6 Avant (4F5, C6)	2.7 TDI	132	03/05 – 10/08		3905
A6 Avant (4F5, C6)	2.7 TDI	140	10/08 – 08/11		3905
A6 Avant (4F5, C6)	2.7 TDI quattro	120	06/05 – 08/11		3905
A6 Avant (4F5, C6)	2.7 TDI quattro	132	03/05 – 10/08		3905
A6 Avant (4F5, C6)	2.7 TDI quattro	140	10/08 – 08/11		3905
A6 Avant (4F5, C6)	2.8 FSI	140	10/08 – 08/11		3905
A6 Avant (4F5, C6)	2.8 FSI	154	11/06 – 10/08		3905
A6 Avant (4F5, C6)	2.8 FSI	162	10/08 – 08/11		3905

MAKE & MODEL		KW	YEAR		
AUDI					
A6 Avant (4F5, C6)	2.8 FSI quattro	140	10/08 – 08/11		3905
A6 Avant (4F5, C6)	2.8 FSI quattro	154	06/07 – 10/08		3905
A6 Avant (4F5, C6)	2.8 FSI quattro	162	10/08 – 08/11		3905
A6 Avant (4F5, C6)	3.0 quattro	160	03/05 – 05/06		3905
A6 Avant (4F5, C6)	3.0 TDI quattro	155	03/05 – 08/11		3905
A6 Avant (4F5, C6)	3.0 TDI quattro	165	03/05 – 05/06		3905
A6 Avant (4F5, C6)	3.0 TDI quattro	171	06/06 – 10/08		3905
A6 Avant (4F5, C6)	3.0 TDI quattro	176	10/08 – 08/11		3905
A6 Avant (4F5, C6)	3.0 TDi	171	06/06 – 08/11		3905
A6 Avant (4F5, C6)	3.0 TFSI quattro	213	10/08 – 08/11		3905
A6 Avant (4F5, C6)	3.0 TFSI quattro	220	10/08 – 08/11		3905
A6 Avant (4F5, C6)	3.2 FSI	188	03/05 – 10/08		3905
A6 Avant (4F5, C6)	3.2 FSI quattro	188	03/05 – 10/08		3905
A6 Avant (4G5, C7, 4GD)	1.8 TFSI	140	09/14 -		4260
A6 Avant (4G5, C7, 4GD)	2.0 TDI	100	01/12 -		4260
A6 Avant (4G5, C7, 4GD)	2.0 TDI	110	09/14 -		4260
A6 Avant (4G5, C7, 4GD)	2.0 TDI	120	05/11 -		4260
A6 Avant (4G5, C7, 4GD)	2.0 TDI	130	05/11 -		4260
A6 Avant (4G5, C7, 4GD)	2.0 TDI	140	11/13 -		4260
A6 Avant (4G5, C7, 4GD)	2.0 TDI quattro	140	04/15 -		4260
A6 Avant (4G5, C7, 4GD)	2.0 TFSI	132	06/11 -		4260
A6 Avant (4G5, C7, 4GD)	2.0 TFSI	185	09/14 -		4260
A6 Avant (4G5, C7, 4GD)	2.0 TFSI quattro	183	05/15 -		4260
A6 Avant (4G5, C7, 4GD)	2.0 TFSI quattro	185	05/15 -		4260
A6 Avant (4G5, C7, 4GD)	2.8 FSI	150	05/11 – 04/15		4260
A6 Avant (4G5, C7, 4GD)	2.8 FSI quattro	150	05/11 – 04/15		4260
A6 Avant (4G5, C7, 4GD)	2.8 FSI quattro	162	09/14 -		4260
A6 Avant (4G5, C7, 4GD)	3.0 TDI	150	05/11 -		4260
A6 Avant (4G5, C7, 4GD)	3.0 TDI	155	09/14 -		4260
A6 Avant (4G5, C7, 4GD)	3.0 TDI	160	09/14 -		4260
A6 Avant (4G5, C7, 4GD)	3.0 TDI quattro	150	05/11 -		4260
A6 Avant (4G5, C7, 4GD)	3.0 TDI quattro	155	09/14 -		4260
A6 Avant (4G5, C7, 4GD)	3.0 TDI quattro	160	09/14 -		4260
A6 Avant (4G5, C7, 4GD)	3.0 TDI quattro	180	05/11 -		4260
A6 Avant (4G5, C7, 4GD)	3.0 TDI quattro	200	09/14 -		4260
A6 Avant (4G5, C7, 4GD)	3.0 TDI quattro	230	11/11 -		4260
A6 Avant (4G5, C7, 4GD)	3.0 TDI quattro	235	09/14 -		4260
A6 Avant (4G5, C7, 4GD)	3.0 TDI quattro	240	09/14 -		4260
A6 Avant (4G5, C7, 4GD)	3.0 TFSI quattro	220	05/11 – 05/12		4260
A6 Avant (4G5, C7, 4GD)	3.0 TFSI quattro	228	11/11 -		4260
A6 Avant (4G5, C7, 4GD)	3.0 TFSI quattro	245	09/14 -		4260
A6 Avant (4G5, C7, 4GD)	S6 quattro	331	10/14 -		4260
A6 IV Avant (4G5, C7, 4GD)	1.8 TFSI (CYGA)	140	09/14 -	4259	
A6 IV Avant (4G5, C7, 4GD)	2.0 TDI (CGLC)	130	05/11 -	4259	
A6 IV Avant (4G5, C7, 4GD)	2.0 TDI (CGLD)	120	05/11 -	4259	
A6 IV Avant (4G5, C7, 4GD)	2.0 TDI (CSUD)	110	09/14 -	4259	
A6 IV Avant (4G5, C7, 4GD)	2.0 TDI (CGLE)	100	01/12 -	4259	
A6 IV Avant (4G5, C7, 4GD)	2.0 TDI (CMGB)	130	05/11 -	4259	
A6 IV Avant (4G5, C7, 4GD)	2.0 TDI (CNHA)	140	11/13 -	4259	
A6 IV Avant (4G5, C7, 4GD)	2.0 TDI (CNHA)	140	04/15 -	4259	
A6 IV Avant (4G5, C7, 4GD)	2.0 TDI (DDDA)	140	04/15 -	4259	
A6 IV Avant (4G5, C7, 4GD)	2.0 TFSI (CYPA)	185	09/14 -	4259	
A6 IV Avant (4G5, C7, 4GD)	2.0 TFSI (CYPA)	185	05/15 -	4259	
A6 IV Avant (4G5, C7, 4GD)	2.0 TFSI (CYPB)	183	05/15 -	4259	
A6 IV Avant (4G5, C7, 4GD)	2.0 TFSI (CDNB)	132	06/11 -	4259	
A6 IV Avant (4G5, C7, 4GD)	2.0 TFSI (CYNB)	185	09/14 -	4259	
A6 IV Avant (4G5, C7, 4GD)	2.8 FSI (CHVA)	150	05/11 – 04/15	4259	
A6 IV Avant (4G5, C7, 4GD)	2.8 FSI (CHVA)	150	05/11 – 04/15	4259	
A6 IV Avant (4G5, C7, 4GD)	2.8 FSI (CVPA)	162	09/14 -	4259	
A6 IV Avant (4G5, C7, 4GD)	3.0 TDI (CDUC)	180	05/11 -	4259	
A6 IV Avant (4G5, C7, 4GD)	3.0 TDI (CDUD)	180	05/11 -	4259	
A6 IV Avant (4G5, C7, 4GD)	3.0 TDI (CKVC)	180	05/11 -	4259	
A6 IV Avant (4G5, C7, 4GD)	3.0 TDI (CGQB)	230	11/11 -	4259	
A6 IV Avant (4G5, C7, 4GD)	3.0 TDI (CLAA)	150	05/11 -	4259	
A6 IV Avant (4G5, C7, 4GD)	3.0 TDI (CLAB)	150	05/11 -	4259	
A6 IV Avant (4G5, C7, 4GD)	3.0 TDI (CRTD)	200	09/14 -	4259	
A6 IV Avant (4G5, C7, 4GD)	3.0 TDI (CRTE)	160	09/14 -	4259	
A6 IV Avant (4G5, C7, 4GD)	3.0 TDI (CRTF)	155	09/14 -	4259	
A6 IV Avant (4G5, C7, 4GD)	3.0 TDI (CTCB)	155	09/14 -	4259	
A6 IV Avant (4G5, C7, 4GD)	3.0 TDI (CTCC)	160	09/14 -	4259	
A6 IV Avant (4G5, C7, 4GD)	3.0 TDI (CVUA)	235	09/14 -	4259	

MAKE & MODEL   		KW	YEAR		
AUDI					
A6 IV Avant (4G5, C7, 4GD)	3.0 TDI (CVUB)	240	09/14 -	4259	
A6 IV Avant (4G5, C7, 4GD)	3.0 TDI (CZVA)	160	09/14 -	4259	
A6 IV Avant (4G5, C7, 4GD)	3.0 TDI (CZVB)	160	09/14 -	4259	
A6 IV Avant (4G5, C7, 4GD)	3.0 TDI (CZVC)	155	09/14 -	4259	
A6 IV Avant (4G5, C7, 4GD)	3.0 TDI (CZVD)	155	09/14 -	4259	
A6 IV Avant (4G5, C7, 4GD)	3.0 TDI (CKVB)	180	05/11 -	4259	
A6 IV Avant (4G5, C7, 4GD)	3.0 TFSI (CGWB)	220	05/11 – 05/12	4259	
A6 IV Avant (4G5, C7, 4GD)	3.0 TFSI (CGWD)	228	11/11 -	4259	
A6 IV Avant (4G5, C7, 4GD)	3.0 TFSI (CREC)	245	09/14 -	4259	
A6 IV Avant (4G5, C7, 4GD)	4.0 S6 (CEUC)	309	02/12 -	4259	
A6 IV Avant (4G5, C7, 4GD)	S6 (CTGE)	331	10/14 -	4259	
A6L Saloon (4F2, C6)	24	130	03/05 – 12/11		3905
A6L Saloon (4F2, C6)	28	154	11/07 – 12/11		3905
A6L Saloon (4F2, C6)	30	160	03/05 – 12/06		3905
A6L Saloon (4F2, C6)	2.8 quattro	162	06/09 – 12/11		3905
A6L Saloon (4F2, C6)	3.0 TFSI quattro	213	01/09 – 12/11		3905
A6L Saloon (4F2, C6)	3.1 FSI	188	09/05 – 12/08		3905
A6L Saloon (4F2, C6)	3.1 FSI quattro	188	09/05 – 12/08		3905
A7 Sportback (4GA, 4GF)	1.8 TFSI	140	04/15 -		4260
A7 Sportback (4GA, 4GF)	1.8 TFSI (CYGA)	140	04/15 -	4259	
A7 Sportback (4GA, 4GF)	2.0 TFSI	185	09/14 -		4260
A7 Sportback (4GA, 4GF)	2.0 TFSI (CYPA)	185	09/14 -	4259	
A7 Sportback (4GA, 4GF)	2.0 TFSI (CYPA)	185	05/15 -	4259	
A7 Sportback (4GA, 4GF)	2.0 TFSI (CYPB)	183	05/15 -	4259	
A7 Sportback (4GA, 4GF)	2.0 TFSI (CYNB)	185	05/15 -	4259	
A7 Sportback (4GA, 4GF)	2.0 TFSI quattro	183	05/15 -		4260
A7 Sportback (4GA, 4GF)	2.0 TFSI quattro	185	05/15 -		4260
A7 Sportback (4GA, 4GF)	2.5 FSI	150	02/14 -		4260
A7 Sportback (4GA, 4GF)	2.8 FSI	150	02/11 -		4260
A7 Sportback (4GA, 4GF)	2.8 FSI (CHVA)	150	02/11 -	4259	
A7 Sportback (4GA, 4GF)	2.8 FSI (CHVA)	150	10/10 -	4259	
A7 Sportback (4GA, 4GF)	2.8 FSI (CNYA)	150	10/10 -	4259	
A7 Sportback (4GA, 4GF)	2.8 FSI quattro	150	10/10 -		4260
A7 Sportback (4GA, 4GF)	3.0 TDI	140	11/15 -		4260
A7 Sportback (4GA, 4GF)	3.0 TDI	150	11/10 -		4260
A7 Sportback (4GA, 4GF)	3.0 TDI	155	11/15 -		4260
A7 Sportback (4GA, 4GF)	3.0 TDI	160	07/14 -		4260
A7 Sportback (4GA, 4GF)	3.0 TDI (CDUC)	180	10/10 -	4259	
A7 Sportback (4GA, 4GF)	3.0 TDI (CDUD)	180	10/10 -	4259	
A7 Sportback (4GA, 4GF)	3.0 TDI (CKVC)	180	10/10 -	4259	
A7 Sportback (4GA, 4GF)	3.0 TDI (CZVF)	140	11/15 -	4259	
A7 Sportback (4GA, 4GF)	3.0 TDI (CGQB)	230	11/11 -	4259	
A7 Sportback (4GA, 4GF)	3.0 TDI (CKVB)	180	10/10 -	4259	
A7 Sportback (4GA, 4GF)	3.0 TDI (CLAA)	150	12/10 -	4259	
A7 Sportback (4GA, 4GF)	3.0 TDI (CLAB)	150	11/10 -	4259	
A7 Sportback (4GA, 4GF)	3.0 TDI (CPNB)	176	05/13 -	4259	
A7 Sportback (4GA, 4GF)	3.0 TDI (CRTD)	200	05/14 -	4259	
A7 Sportback (4GA, 4GF)	3.0 TDI (CRTE)	160	07/14 -	4259	
A7 Sportback (4GA, 4GF)	3.0 TDI (CRTF)	155	07/14 -	4259	
A7 Sportback (4GA, 4GF)	3.0 TDI (CTCB)	155	07/14 -	4259	
A7 Sportback (4GA, 4GF)	3.0 TDI (CTCC)	160	07/14 -	4259	
A7 Sportback (4GA, 4GF)	3.0 TDI (CVUA)	235	05/14 -	4259	
A7 Sportback (4GA, 4GF)	3.0 TDI (CVUB)	240	09/14 -	4259	
A7 Sportback (4GA, 4GF)	3.0 TDI (CZVD)	155	11/15 -	4259	
A7 Sportback (4GA, 4GF)	3.0 TDI (CZVE)	140	11/15 -	4259	
A7 Sportback (4GA, 4GF)	3.0 TDI quattro	140	11/15 -		4260
A7 Sportback (4GA, 4GF)	3.0 TDI quattro	150	12/10 -		4260
A7 Sportback (4GA, 4GF)	3.0 TDI quattro	155	07/14 -		4260
A7 Sportback (4GA, 4GF)	3.0 TDI quattro	160	07/14 -		4260
A7 Sportback (4GA, 4GF)	3.0 TDI quattro	176	05/13 -		4260
A7 Sportback (4GA, 4GF)	3.0 TDI quattro	180	10/10 -		4260
A7 Sportback (4GA, 4GF)	3.0 TDI quattro	200	05/14 -		4260
A7 Sportback (4GA, 4GF)	3.0 TDI quattro	230	11/11 -		4260
A7 Sportback (4GA, 4GF)	3.0 TDI quattro	235	05/14 -		4260
A7 Sportback (4GA, 4GF)	3.0 TDI quattro	240	09/14 -		4260
A7 Sportback (4GA, 4GF)	3.0 TFSI (CGWB)	220	10/10 -	4259	
A7 Sportback (4GA, 4GF)	3.0 TFSI (CGWD)	228	01/11 -	4259	
A7 Sportback (4GA, 4GF)	3.0 TFSI (CGXB)	228	01/11 -	4259	
A7 Sportback (4GA, 4GF)	3.0 TFSI (CHMA)	220	10/10 -	4259	
A7 Sportback (4GA, 4GF)	3.0 TFSI (CTTA)	228	01/11 -	4259	
A7 Sportback (4GA, 4GF)	3.0 TFSI (CTUA)	228	01/11 -	4259	

MAKE & MODEL   		KW	YEAR		
AUDI					
A7 Sportback (4GA, 4GF)	3.0 TFSI (CREC)	245	05/14 -	4259	
A7 Sportback (4GA, 4GF)	3.0 TFSI quattro	220	10/10 -		4260
A7 Sportback (4GA, 4GF)	3.0 TFSI quattro	228	01/11 -		4260
A7 Sportback (4GA, 4GF)	3.0 TFSI quattro	245	05/14 -		4260
A7 Sportback (4GA, 4GF)	4.0 S7 (CEUC)	309	02/12 -	4259	
A7 Sportback (4GA, 4GF)	RS7 performance quattro	445	11/15 -		4260
A7 Sportback (4GA, 4GF)	RS7 quattro	412	10/13 -		4260
A7 Sportback (4GA, 4GF)	S7 (CTGE)	331	07/14 -	4259	
A8 (4D2, 4D8)	28	120	07/95 – 03/96		3536
A8 (4D2, 4D8)	28	128	03/94 – 03/96		3536
A8 (4D2, 4D8)	28	142	04/96 – 09/02		3529/1
A8 (4D2, 4D8)	28	142	04/96 – 09/02		3536
A8 (4D2, 4D8)	28	142	04/96 – 09/02	4222	
A8 (4D2, 4D8)	37	169	07/95 – 12/98		3529/1
A8 (4D2, 4D8)	37	169	07/95 – 12/98		3536
A8 (4D2, 4D8)	37	169	07/95 – 12/98	4222	
A8 (4D2, 4D8)	37	191	11/98 – 09/02		3529/1
A8 (4D2, 4D8)	37	191	11/98 – 09/02		3536
A8 (4D2, 4D8)	37	191	11/98 – 09/02	4222	
A8 (4D2, 4D8)	2.5 TDI	110	01/97 – 04/00		3529/1
A8 (4D2, 4D8)	2.5 TDI	110	01/97 – 04/00		3536
A8 (4D2, 4D8)	2.5 TDI	110	01/97 – 04/00	4222	
A8 (4D2, 4D8)	2.5 TDI	132	09/00 – 09/02		3529/1
A8 (4D2, 4D8)	2.5 TDI	132	09/00 – 09/02	4222	
A8 (4D2, 4D8)	2.5 TDI quattro	110	07/97 – 04/00		3529/1
A8 (4D2, 4D8)	2.5 TDI quattro	110	07/97 – 04/00		3536
A8 (4D2, 4D8)	2.5 TDI quattro	110	07/97 – 04/00	4222	
A8 (4D2, 4D8)	2.5 TDI quattro	132	09/00 – 09/02		3529/1
A8 (4D2, 4D8)	2.5 TDI quattro	132	09/00 – 09/02	4222	
A8 (4D2, 4D8)	2.8 quattro	120	07/95 – 03/96		3536
A8 (4D2, 4D8)	2.8 quattro	128	03/94 – 03/96		3536
A8 (4D2, 4D8)	2.8 quattro	142	04/96 – 09/02		3529/1
A8 (4D2, 4D8)	2.8 quattro	142	04/96 – 09/02		3536
A8 (4D2, 4D8)	2.8 quattro	142	04/96 – 09/02	4222	
A8 (4D2, 4D8)	3.3 TDI quattro	165	06/00 – 09/02		3529/1
A8 (4D2, 4D8)	3.3 TDI quattro	165	06/00 – 09/02	4222	
A8 (4D2, 4D8)	3.7 quattro	169	07/95 – 11/98		3536
A8 (4D2, 4D8)	3.7 quattro	191	11/98 – 09/02		3529/1
A8 (4D2, 4D8)	3.7 quattro	191	11/98 – 09/02	4222	
A8 (4D2, 4D8)	4.2 quattro	175	02/99 – 04/00		3529/1
A8 (4D2, 4D8)	4.2 quattro	175	02/99 – 04/00	4222	
A8 (4D2, 4D8)	4.2 quattro	180	03/94 – 07/96		3536
A8 (4D2, 4D8)	4.2 quattro	210	07/95 – 09/98		3536
A8 (4D2, 4D8)	4.2 quattro	220	03/94 – 11/98		3536
A8 (4D2, 4D8)	4.2 quattro	228	11/98 – 09/02		3529/1
A8 (4D2, 4D8)	4.2 quattro	228	11/98 – 09/02	4222	
A8 (4D2, 4D8)	6.0 W12 quattro	309	01/01 – 09/02		3529/1
A8 (4D2, 4D8)	S 8 quattro	265	06/99 – 09/02		3529/1
A8 (4D2, 4D8)	S 8 quattro	265	06/99 – 09/02	4222	
A8 (4D2, 4D8)	S8 quattro	250	07/96 – 06/99		3529/1
A8 (4D2, 4D8)	S8 quattro	250	07/96 – 06/99		3536
A8 (4D2, 4D8)	S8 quattro	250	07/96 – 06/99	4222	
ALLROAD (4BH, C5)	2.5 TDI quattro	120	05/03 – 08/05		3529/1
ALLROAD (4BH, C5)	2.5 TDI quattro	120	05/03 – 08/05	4096	
ALLROAD (4BH, C5)	2.5 TDI quattro	132	05/00 – 08/05		3529/1
ALLROAD (4BH, C5)	2.5 TDI quattro	132	05/00 – 08/05	4096	
ALLROAD (4BH, C5)	2.7 quattro	187	09/00 – 08/05		3529/1
ALLROAD (4BH, C5)	2.7 quattro	187	09/00 – 08/05	4096	
ALLROAD (4BH, C5)	2.7 T quattro	184	05/00 – 08/05		3529/1
ALLROAD (4BH, C5)	2.7 T quattro	184	05/00 – 08/05	4096	
ALLROAD (4BH, C5)	4.2 V8 quattro	220	07/02 – 08/05		3529/1
ALLROAD (4BH, C5)	4.2 V8 quattro	220	07/02 – 08/05	4096	
CABRIOLET (8G7, B4)	18	92	01/97 – 08/00		3536
CABRIOLET (8G7, B4)	26	102	05/95 – 08/00		3536
CABRIOLET (8G7, B4)	26	110	06/93 – 08/00		3536
CABRIOLET (8G7, B4)	28	128	11/92 – 08/00		3536
CABRIOLET (8G7, B4)	1.9 TDI	66	06/95 – 08/00		3536
CABRIOLET (8G7, B4)	2.0 16V	103	06/95 – 07/96		3536
CABRIOLET (8G7, B4)	2.0 E	85	01/93 – 07/98		3536
CABRIOLET (8G7, B4)	2.3 E	98	05/91 – 07/94		3536
CABRIOLET (8G7, B4)	2.3 E	98	05.91 - 07.94	3650	

MAKE & MODEL		KW	YEAR		
AUDI					
CABRIOLET (8G7, B4)	2.6	110	06.93 - 08.00	3650	
COUPE (81, 85)	16	55	07/80 – 08/81	3378	
COUPE (81, 85)	16	55	07/80 – 08/81	3490	
COUPE (81, 85)	18	55	08/81 – 07/83	3378	
COUPE (81, 85)	18	55	08/81 – 07/83	3490	
COUPE (81, 85)	19	85	08/80 – 07/83	3378	
COUPE (81, 85)	19	85	08/80 – 07/83	3490	
COUPE (81, 85)	20	83	03/86 – 04/88	3635	
COUPE (81, 85)	20	83	03/86 – 04/88	3649	
COUPE (81, 85)	20	85	09/83 – 07/86	3378	
COUPE (81, 85)	20	85	09/83 – 07/86	3490	
COUPE (81, 85)	20	85	09/83 – 07/86	3635	
COUPE (81, 85)	20	85	09/83 – 07/86	3649	
COUPE (81, 85)	23	100	01/87 – 10/88		3536
COUPE (81, 85)	1.8 GT	66	09/82 – 10/88	3378	
COUPE (81, 85)	1.8 GT	66	09/82 – 10/88	3490	
COUPE (81, 85)	1.8 GT	68	01/85 – 07/88	3378	
COUPE (81, 85)	1.8 GT	68	01/85 – 07/88	3490	
COUPE (81, 85)	2.0	85	09.83 - 07.86	3650	
COUPE (81, 85)	2.1 GT	96	09/82 – 10/87	3378	
COUPE (81, 85)	2.1 GT	96	09/82 – 10/87	3490	
COUPE (81, 85)	2.2 GT	85	07/81 – 10/87	3378	
COUPE (81, 85)	2.2 GT	85	07/81 – 10/87	3490	
COUPE (81, 85)	2.2 GT	100	09/84 – 10/88		3536
COUPE (81, 85)	2.2 GT	100	09/84 – 10/88	3635	
COUPE (81, 85)	2.2 GT	100	09/84 – 10/88	3649	
COUPE (81, 85)	2.2 quattro	88	08/85 – 10/88		3536
COUPE (81, 85)	2.2 quattro	88	08/85 – 10/88	3635	
COUPE (81, 85)	2.2 quattro	88	08/85 – 10/88	3649	
COUPE (81, 85)	2.2 quattro	100	10/84 – 10/88		3536
COUPE (81, 85)	2.2 quattro	100	10/84 – 10/88	3635	
COUPE (81, 85)	2.2 quattro	100	10/84 – 10/88	3649	
COUPE (81, 85)	2.3 quattro	100	01/87 – 10/88		3536
COUPE (81, 85)	2.3 quattro	100	01/87 – 10/88	3635	
COUPE (81, 85)	2.3 quattro	100	01/87 – 10/88	3649	
COUPE (89, 8B)	18	82	08/89 – 07/91		3536
COUPE (89, 8B)	18	82	08/89 – 07/91	3619	
COUPE (89, 8B)	20	82	03/90 – 07/90		3536
COUPE (89, 8B)	20	82	03/90 – 07/90	3619	
COUPE (89, 8B)	20	83	05/89 – 03/90		3536
COUPE (89, 8B)	20	83	05/89 – 03/90	3619	
COUPE (89, 8B)	20	85	05/89 – 12/96		3536
COUPE (89, 8B)	20	85	05/89 – 12/96	3619	
COUPE (89, 8B)	23	98	03/90 – 12/96		3536
COUPE (89, 8B)	23	98	03/90 – 12/96	3619	
COUPE (89, 8B)	23	100	10/88 – 07/94		3536
COUPE (89, 8B)	23	100	10/88 – 07/94	3619	
COUPE (89, 8B)	26	110	08/92 – 12/96		3536
COUPE (89, 8B)	28	128	09/91 – 12/96		3536
COUPE (89, 8B)	1.8	82	08.89 - 07.91	3650	
COUPE (89, 8B)	2.0	82	03.90 - 07.90	3650	
COUPE (89, 8B)	2.0	83	05.89 - 03.90	3650	
COUPE (89, 8B)	2.0	85	05.89 - 12.96	3650	
COUPE (89, 8B)	2.0 16 V	101	01/92 – 07/92		3536
COUPE (89, 8B)	2.0 16 V	101	01/92 – 07/92	3619	
COUPE (89, 8B)	2.0 16 V	101	01.92 - 07.92	3650	
COUPE (89, 8B)	2.0 16 V	103	08/92 – 12/96		3536
COUPE (89, 8B)	2.0 16 V	103	08/92 – 12/96	3619	
COUPE (89, 8B)	2.0 16 V	103	08.92 - 12.96	3650	
COUPE (89, 8B)	2.0 20 V	118	08/89 – 07/91		3536
COUPE (89, 8B)	2.0 20 V	118	08/89 – 07/91	3619	
COUPE (89, 8B)	2.0 20 V quattro	118	08/89 – 07/91		3536
COUPE (89, 8B)	2.2	100	11.88 - 07.91	3650	
COUPE (89, 8B)	2.2 quattro	100	11/88 – 07/91		3536
COUPE (89, 8B)	2.2 quattro	100	11/88 – 07/91	3619	
COUPE (89, 8B)	2.2 quattro	100	11.88 - 07.91	3650	
COUPE (89, 8B)	2.3	98	03.90 - 12.96	3650	
COUPE (89, 8B)	2.3	100	10.88 - 07.94	3650	
COUPE (89, 8B)	2.3 20V	123	08/90 – 07/91		3536
COUPE (89, 8B)	2.3 20V	125	08/89 – 07/91		3536
COUPE (89, 8B)	2.3 20V quattro	123	05/90 – 12/96		3536

MAKE & MODEL		KW	YEAR		
AUDI					
COUPE (89, 8B)	2.3 20V quattro	125	11/88 – 07/91		3536
COUPE (89, 8B)	2.3 quattro	98	05/90 – 12/96		3536
COUPE (89, 8B)	2.3 quattro	98	05/90 – 12/96	3619	
COUPE (89, 8B)	2.3 quattro	98	05.90 - 12.96	3650	
COUPE (89, 8B)	2.3 quattro	100	11/88 – 12/92		3536
COUPE (89, 8B)	2.3 quattro	100	11/88 – 12/92	3619	
COUPE (89, 8B)	2.3 quattro	100	11.88 - 12.92	3650	
COUPE (89, 8B)	2.6 quattro	110	08/92 – 12/96		3536
COUPE (89, 8B)	2.6 quattro	110	08/92 – 12/96	3619	
COUPE (89, 8B)	2.6 quattro	110	08.92 - 12.96	3650	
COUPE (89, 8B)	2.8 quattro	128	08/91 – 12/96		3536
COUPE (89, 8B)	S2 quattro	162	09/90 – 09/92		3536
COUPE (89, 8B)	S2 quattro	169	10/92 – 12/96		3536
Q2 (GA)	1.0 TFSI (CHZJ)	85	09/16 -	4228	
Q2 (GA)	1.4 TFSI	110	09/16 -	4228	
Q2 (GA)	1.4 TFSI (CZEA)	110	06/16 -	4228	
Q2 (GA)	1.6 TDI (DDYA)	85	06/16 -	4228	
Q2 (GA)	2.0 TDI (DCYA)	110	09/16 -	4228	
Q2 (GA)	2.0 TDI (DFGA)	110	10/16 -	4228	
Q2 (GA)	2.0 TDI (DFHA)	140	07/16 -	4228	
Q2 (GA)	2.0 TFSI	140	09/16 -	4228	
Q5 (8R)	2.0 TDI (CGLC)	130	06/12 -	4259	
Q5 (8R)	2.0 TDI (CGLD)	120	11/08 -	4259	
Q5 (8R)	2.0 TDI (CJCA)	105	11/10 -	4259	
Q5 (8R)	2.0 TDI (CJCA)	105	08/09 -	4259	
Q5 (8R)	2.0 TDI (CJCB)	100	11/10 -	4259	
Q5 (8R)	2.0 TDI (CJCB)	100	08/09 -	4259	
Q5 (8R)	2.0 TDI (CJCD)	110	05/13 -	4259	
Q5 (8R)	2.0 TDI (CJCD)	110	05/13 -	4259	
Q5 (8R)	2.0 TDI (CAGA)	105	08/09 -	4259	
Q5 (8R)	2.0 TDI (CAGB)	100	08/09 -	4259	
Q5 (8R)	2.0 TDI (CAHA)	125	11/08 -	4259	
Q5 (8R)	2.0 TDI (CAHB)	120	11/08 -	4259	
Q5 (8R)	2.0 TDI (CGLA)	120	11/08 -	4259	
Q5 (8R)	2.0 TDI (CGLB)	125	11/08 -	4259	
Q5 (8R)	2.0 TDI (CMGA)	125	11/08 -	4259	
Q5 (8R)	2.0 TDI (CMGB)	130	06/12 -	4259	
Q5 (8R)	2.0 TDI (CNHA)	140	11/13 -	4259	
Q5 (8R)	2.0 TDI (CNHA)	140	09/15 -	4259	
Q5 (8R)	2.0 TFSI (CAEB)	155	11/08 -	4259	
Q5 (8R)	2.0 TFSI (CDNC)	155	11/08 -	4259	
Q5 (8R)	2.0 TFSI (CNCD)	165	06/12 -	4259	
Q5 (8R)	2.0 TFSI (CNCB)	132	08/09 -	4259	
Q5 (8R)	2.0 TFSI (CNCE)	169	08/15 -	4259	
Q5 (8R)	2.0 TFSI (CPMA)	155	11/08 -	4259	
Q5 (8R)	2.0 TFSI (CPMB)	162	05/13 -	4259	
Q5 (8R)	2.0 TFSI (CDNB)	132	08/09 -	4259	
Q5 (8R)	2.0 TFSI hybrid (CHJA)	155	06/11 -	4259	
Q5 (8R)	3.0 TDI (CDUD)	180	06/12 -	4259	
Q5 (8R)	3.0 TDI (CCWA)	176	11/08 -	4259	
Q5 (8R)	3.0 TDI (CCWB)	155	11/08 -	4259	
Q5 (8R)	3.0 TDI (CTBA)	190	11/13 -	4259	
Q5 (8R)	3.0 TDI (CTBC)	184	06/12 -	4259	
Q5 (8R)	3.0 TFSI (CTUC)	200	06/12 -	4259	
Q5 (8R)	3.0 TFSI (CTVA)	200	06/12 -	4259	
Q5 (8R)	3.2 FSI (CALB)	199	11/08 -	4259	
Q5 (8R)	3.5 TSFI (CDZ)	132	04/13 -	4259	
Q5 (8R)	SQ5 TFSI	264	03/14 -	4259	
Q5 (8R)	SQ5 TFSI (CTUD)	260	05/13 -	4259	
Q5 (8R)	SQ5 TFSI (CTXA)	260	05/13 -	4259	
Q7 (4L)	3.0 TDI quattro	150	05/10 – 08/15	4075	
Q7 (4L)	3.0 TDI quattro	150	05/10 – 08/15		4076
Q7 (4L)	3.0 TDI quattro	155	03/06 – 05/10	4075	
Q7 (4L)	3.0 TDI quattro	155	03/06 – 05/10		4076
Q7 (4L)	3.0 TDI quattro	165	06/09 – 05/12	4075	
Q7 (4L)	3.0 TDI quattro	165	06/09 – 05/12		4076
Q7 (4L)	3.0 TDI quattro	171	03/06 – 05/08	4075	
Q7 (4L)	3.0 TDI quattro	171	03/06 – 05/08		4076
Q7 (4L)	3.0 TDI quattro	176	11/07 – 08/15	4075	
Q7 (4L)	3.0 TDI quattro	176	11/07 – 08/15		4076
Q7 (4L)	3.0 TDI quattro	180	05/11 – 08/15	4075	

MAKE & MODEL		KW	YEAR		
AUDI					
Q7 (4L)	3.0 TDI quattro	180	05/11 – 08/15		4076
Q7 (4L)	3.0 TFSI quattro	200	05/10 – 08/15	4075	
Q7 (4L)	3.0 TFSI quattro	200	05/10 – 08/15		4076
Q7 (4L)	3.0 TFSI quattro	206	05/11 – 08/15	4075	
Q7 (4L)	3.0 TFSI quattro	206	05/11 – 08/15		4076
Q7 (4L)	3.0 TFSI quattro	245	05/10 – 08/15	4075	
Q7 (4L)	3.0 TFSI quattro	245	05/10 – 08/15		4076
Q7 (4L)	3.6 FSI quattro	206	08/06 – 05/10	4075	
Q7 (4L)	4.2 FSI quattro	257	03/06 – 05/10	4075	
Q7 (4L)	4.2 TDI quattro	240	03/07 – 06/09	4075	
Q7 (4L)	4.2 TDI quattro	250	05/09 – 08/15	4075	
Q7 (4L)	6.0 TDI quattro	368	09/08 – 05/14	4075	
QUATTRO (85)	2.1 20V Turbo	225	05/84 – 07/87		3536
QUATTRO (85)	2.1 20V Turbo	225	05/84 – 07/87	3619	
QUATTRO (85)	2.1 Turbo	147	07/80 – 07/87		3536
QUATTRO (85)	2.1 Turbo	147	07/80 – 07/87	3619	
QUATTRO (85)	2.1 Turbo quattro	119	02/82 – 07/89		3536
QUATTRO (85)	2.1 Turbo quattro	119	02/82 – 07/89	3619	
QUATTRO (85)	2.2 20V Turbo	162	08/89 – 07/91		3536
QUATTRO (85)	2.2 quattro	89	12/84 – 07/87		3536
QUATTRO (85)	2.2 quattro	89	12/84 – 07/87	3619	
QUATTRO (85)	2.2 quattro	100	12/84 – 07/87		3536
QUATTRO (85)	2.2 quattro	100	12/84 – 07/87	3619	
QUATTRO (85)	2.2 Turbo	147	08/87 – 07/89		3536
TT III Roadster (FV9 8S)	1.8 TFSI (CJSA)	132	08/15 -	4228	
TT III Roadster (FV9 8S)	1.8 TFSI (CJSA)	132	08/15 -		4241
TT III Roadster (FV9 8S)	1.8 TFSI (CJSB)	132	08/15 -	4228	
TT III Roadster (FV9 8S)	1.8 TFSI (CJSB)	132	08/15 -		4241
TT III Roadster (FV9 8S)	2.0 TDI (CUNA)	135	11/14 -	4228	
TT III Roadster (FV9 8S)	2.0 TDI (CUNA)	135	11/14 -		4241
TT III Roadster (FV9 8S)	2.0 TFSI (CHHC)	169	11/14 -	4228	
TT III Roadster (FV9 8S)	2.0 TFSI (CHHC)	169	11/14 -	4228	
TT III Roadster (FV9 8S)	2.0 TFSI (CHHC)	169	11/14 -		4241
TT III Roadster (FV9 8S)	2.0 TFSI (CHHC)	169	11/14 -		4241
TT III Roadster (FV9 8S)	2.0 TFSI (CYFB)	215	07/15 -	4228	
TT III Roadster (FV9 8S)	2.0 TFSI (CYFB)	215	07/15 -		4241
TT III Roadster (FV9 8S)	2.0 TTS (CJXF)	210	02/15 -	4228	
TT III Roadster (FV9 8S)	2.0 TTS (CJXF)	210	02/15 -		4241
TT III Roadster (FV9 8S)	2.0 TTS (CJXG)	228	11/14 -	4228	
TT III Roadster (FV9 8S)	2.0 TTS (CJXG)	228	11/14 -		4241
TT III Roadster (FV9 8S)	2.5 RS (DAZA)	294	10/16 -	4228	
TT III Roadster (FV9 8S)	2.5 RS (DAZA)	294	10/16 -		4241
TT (8J3)	1.8 TFSI	118	06/08 – 06/14		3905
TT (8J3)	2.0 TDI quattro	125	06/08 – 06/14		3905
TT (8J3)	2.0 TFSI	147	08/06 – 06/10		3905
TT (8J3)	2.0 TFSI	155	05/10 – 06/14		3905
TT (8N3)	1.8 T	110	09/02 – 06/06		3529/1
TT (8N3)	1.8 T	110	09/02 – 06/06	3590/1	
TT (8N3)	1.8 T	120	09/05 – 06/06		3529/1
TT (8N3)	1.8 T	120	09/05 – 06/06	3590/1	
TT (8N3)	1.8 T	132	10/98 – 06/06		3529/1
TT (8N3)	1.8 T	132	10/98 – 06/06	3590/1	
TT (8N3)	1.8 T	140	09/05 – 06/06		3529/1
TT (8N3)	1.8 T	140	09/05 – 06/06	3590/1	
TT (8N3)	1.8 T quattro	132	10/98 – 06/06		3529/1
TT (8N3)	1.8 T quattro	132	10/98 – 06/06	3590/1	
TT (8N3)	1.8 T quattro	140	09/05 – 06/06		3529/1
TT (8N3)	1.8 T quattro	140	09/05 – 06/06	3590/1	
TT (8N3)	1.8 T quattro	165	10/98 – 06/06		3529/1
TT (8N3)	1.8 T quattro	165	10/98 – 06/06	3590/1	
TT (8N3)	1.8 T quattro	176	03/05 – 06/06		3529/1
TT (8N3)	1.8 T quattro	176	03/05 – 06/06	3590/1	
TT (8N3)	3.2 VR6 quattro	184	07/03 – 06/06		3529/1
TT III (FV3 8S)	1.8 TFSI (CJSA)	132	08/15 -	4228	
TT III (FV3 8S)	1.8 TFSI (CJSA)	132	08/15 -		4241
TT III (FV3 8S)	1.8 TFSI (CJSB)	132	08/15 -	4228	
TT III (FV3 8S)	1.8 TFSI (CJSB)	132	08/15 -		4241
TT III (FV3 8S)	2.0 TDI (CUNA)	135	07/14 -	4228	
TT III (FV3 8S)	2.0 TDI (CUNA)	135	07/14 -		4241
TT III (FV3 8S)	2.0 TFSI (CHHC)	169	07/14 -	4228	
TT III (FV3 8S)	2.0 TFSI (CHHC)	169	07/14 -	4228	

MAKE & MODEL		KW	YEAR		
AUDI					
TT III (FV3 8S)	2.0 TFSI (CHHC)	169	07/14 -		4241
TT III (FV3 8S)	2.0 TFSI (CHHC)	169	07/14 -		4241
TT III (FV3 8S)	2.0 TFSI (CYFB)	215	07/15 -	4228	
TT III (FV3 8S)	2.0 TFSI (CYFB)	215	07/15 -		4241
TT III (FV3 8S)	2.0 TTS (CJXF)	210	02/15 -	4228	
TT III (FV3 8S)	2.0 TTS (CJXF)	210	02/15-		4241
TT III (FV3 8S)	2.0 TTS (CJXG)	228	11/14 -	4228	
TT III (FV3 8S)	2.0 TTS (CJXG)	228	11/14 -		4241
TT III (FV3 8S)	2.5 RS (DAZA)	294	10/16 -	4228	
TT III (FV3 8S)	2.5 RS (DAZA)	294	10/16 -		4241
TT Roadster (8J9)	1.8 TFSI	118	06/08 – 06/14		3905
TT Roadster (8J9)	2.0 TDI quattro	125	06/08 – 06/14		3905
TT Roadster (8J9)	2.0 TFSI	147	03/07 – 06/10		3905
TT Roadster (8J9)	2.0 TFSI	155	05/10 – 06/14		3905
TT Roadster (8N9)	1.8 T	110	01/01 – 06/06		3529/1
TT Roadster (8N9)	1.8 T	110	01/01 – 06/06	3590/1	
TT Roadster (8N9)	1.8 T	120	09/05 – 06/06		3529/1
TT Roadster (8N9)	1.8 T	120	09/05 – 06/06	3590/1	
TT Roadster (8N9)	1.8 T	132	10/99 – 06/06		3529/1
TT Roadster (8N9)	1.8 T	132	10/99 – 06/06	3590/1	
TT Roadster (8N9)	1.8 T	140	09/05 – 06/06		3529/1
TT Roadster (8N9)	1.8 T	140	09/05 – 06/06	3590/1	
TT Roadster (8N9)	1.8 T quattro	132	02/00 – 06/06		3529/1
TT Roadster (8N9)	1.8 T quattro	132	02/00 – 06/06	3590/1	
TT Roadster (8N9)	1.8 T quattro	140	09/05 – 06/06		3529/1
TT Roadster (8N9)	1.8 T quattro	140	09/05 – 06/06	3590/1	
TT Roadster (8N9)	1.8 T quattro	165	10/99 – 06/06		3529/1
TT Roadster (8N9)	1.8 T quattro	165	10/99 – 06/06	3590/1	
TT Roadster (8N9)	3.2 VR6 quattro	184	07/03 – 06/06		3529/1
V8 (44_, 4C_)	3.6 quattro	180	04/93 – 02/94		3536
V8 (44_, 4C_)	3.6 quattro	184	10/88 – 02/94		3536
V8 (44_, 4C_)	4.2 quattro	206	10/91 – 02/94		3536
AUSTIN					
MAESTRO (XC)	13	46	03/83 – 08/85	3624	
MAESTRO (XC)	13	47	01/86 – 09/92	3624	
MAESTRO (XC)	13	50	01/86 – 09/92	3624	
MAESTRO (XC)	16	59	03/83 – 10/84	3624	
MAESTRO (XC)	1.3 LS	49	03/83 – 08/90	3624	
MAESTRO (XC)	1.6 Mayfair HLS	61	03/83 – 08/90	3624	
MAESTRO (XC)	1.6 MG	72	03/83 – 08/85	3624	
MAESTRO (XC)	1.6 MG	73	03/83 – 08/90	3624	
MAESTRO (XC)	1.9 D	44	01/86 – 09/92	3624	
MAESTRO (XC)	2.0 EFi	83	10/84 – 08/90	3624	
MONTEGO (XE)	13	46	04/84 – 12/85	3624	
MONTEGO (XE)	13	50	10/84 – 08/88	3624	
MONTEGO (XE)	20	74	04/84 – 08/88	3624	
MONTEGO (XE)	1.6 LS,HL	61	04/84 – 08/88	3624	
MONTEGO (XE)	2.0 Mayfair	83	04/84 – 08/88	3624	
MONTEGO (XE)	2.0 Turbo	110	04/84 – 08/88	3624	
MONTEGO Estate (XE)	13	51	10/84 – 10/88	3624	
MONTEGO Estate (XE)	20	74	10/84 – 08/91	3624	
MONTEGO Estate (XE)	1.6 LS	61	10/84 – 08/88	3624	
MONTEGO Estate (XE)	1.9 D	61	12/88 – 09/92	3624	
MONTEGO Estate (XE)	2.0 HLI	83	10/84 – 08/88	3624	
AUTO UNION					
DKW F12	09	29	10/63 – 06/65	3360	
DKW F12	09	29	10/63 – 06/65	3361	
DKW F12	09	33	01/65 – 08/66	3360	
DKW F12	09	33	01/65 – 08/66	3361	
DKW F12	09	29	10/63 – 06/65		3326
DKW F12	09	33	01/65 – 08/66		3326
DKW F12 Convertible	09	33	11/62 – 06/65	3360	
DKW F12 Convertible	09	33	11/62 – 06/65	3361	
DKW F12 Convertible	09	33	11/62 – 06/65		3326
AUTOBIANCHI					
A 111 Sedán (Compact car-C Segment)	1.4 (FIAT BLC.000)		69-72	3357	
A 112	09	32	10/69 – 12/72	3316	
A 112	09	32	10/69 – 12/72	3485	
A 112	09	33	01/76 – 12/78	3316	

MAKE & MODEL		KW	YEAR		
AUTOBIANCHI					
A 112	09	33	01/76 – 12/78	3485	
A 112	0.9 E	34	01/73 – 12/77	3316	
A 112	0.9 E	34	01/73 – 12/77	3485	
A 112	0.9 Junior	31	07/75 – 12/85	3316	
A 112	0.9 Junior	31	07/75 – 12/85	3485	
A 112	1.0 Abarth	43	09/71 – 12/75	3316	
A 112	1.0 Abarth	43	09/71 – 12/75	3485	
A 112	1.0 Abarth	51	01/74 – 12/84	3316	
A 112	1.0 Abarth	51	01/74 – 12/84	3485	
A 112	1.0 E,Elite,LX	35	11/77 – 12/85	3316	
A 112	1.0 E,Elite,LX	35	11/77 – 12/85	3485	
A 112 Fastback (Subcompact car-B Segment)	1.0 Abarth (A112A1.000)		71-75	3357	
A 112 Fastback (Subcompact car-B Segment)	1.0 Abarth (A112A2.000)		74-84	3357	
A 112 Fastback (Subcompact car-B Segment)	1.0 E,Elite,LX (A112B1.000)		77-85	3357	
PRIMULA Coupé (Subcompact car-B Segment)	1.2		64-67	3357	
PRIMULA Coupé (Subcompact car-B Segment)	1.2		68-70	3357	
PRIMULA Sedán (Subcompact car-B Segment)	1.2		64-67	3357	
PRIMULA Sedán (Subcompact car-B Segment)	1.4		68-70	3357	
Y10	10	33	03/85 – 10/95	3424/1	
Y10	10	41	03/85 – 10/95	3424/1	
Y10	11	42	06/89 – 10/95	3424/1	
Y10	1.0 4WD	37	12/86 – 10/95	3424/1	
Y10	1.0 CAT	33	10/87 – 10/95	3424/1	
Y10	1.0 Turbo	63	03/85 – 10/95	3466	
Y10	1.0 Turbo	63	03/85 – 10/95	3468	
Y10	1.1 4WD	42	06/89 – 10/95	3424/1	
Y10	1.1 i.e. CAT	42	09/90 – 10/95	3424/1	
Y10	1.3 i.e. GT	54	06/89 – 10/95	3466	
Y10	1.3 i.e. GT	54	06/89 – 10/95	3468	
Y10	1.3 i.e. GT	57	06/89 – 10/95	3466	
Y10	1.3 i.e. GT	57	06/89 – 10/95	3468	
Y10 (156)	1.0 (156A2.000)	33	03/85 – 10/95	3439	
Y10 (156)	1.0 (156A3.000)	37	12/86 – 10/95	3439	
Y10 (156)	1.0 (156A.000)	41	03/85 – 10/95	3439	
Y10 (156)	1.0 Cat (156A2.246)	33	10/87 – 10/95	3439	
Y10 (156)	1.0 Turbo (156A1.000)	63	03/85 – 10/95	3439	
Y10 (156)	1.1 (156C.000)	42	06/89 – 10/95	3439	
Y10 (156)	1.1 (156C.000)	42	06/89 – 10/95	3439	
Y10 (156)	1.1 i.e. Cat (156C.046)	42	09/90 – 10/95	3439	
BEDFORD					
ASTRA VAN Estate	13	34	09/84 – 09/89	3410	
ASTRA VAN Estate	13	44	09/84 – 09/89	3410	
ASTRA VAN Estate	13	55	09/84 – 09/89	3410	
ASTRA VAN Estate	14	44	09/89 – 08/91	3410	
ASTRA VAN Estate	16	66	09/84 – 08/91	3410	
ASTRA VAN Estate	1.6 D	40	07/82 – 08/84	3410	
ASTRA VAN Estate	1.6 D	40	09/85 – 08/88	3410	
ASTRA VAN Estate	1.6 D	42	09/87 – 08/89	3410	
ASTRA VAN Estate	1.7 D	42	09/88 – 08/91	3410	
ASTRAMAX Estate	13	44	09/85 – 06/90	3410	
ASTRAMAX Estate	14	44	09/89 – 06/90	3410	
ASTRAMAX Estate	1.6 D	40	09/85 – 08/88	3410	
ASTRAMAX Estate	1.6 D	42	09/85 – 08/88	3410	
ASTRAMAX Estate	1.7 D	42	09/88 – 06/90	3410	
CHEVANNE	13	39	06/76 – 02/80	3318	
CHEVANNE	13	39	06/76 – 02/80	3338	
CHEVANNE	13	39	06/76 – 02/80	3353	
CHEVANNE	13	39	06/76 – 02/80	3362	
CHEVANNE	13	40	03/80 – 12/82	3318	
CHEVANNE	13	40	03/80 – 12/82	3338	
CHEVANNE	13	40	03/80 – 12/82	3353	
CHEVANNE	13	40	03/80 – 12/82	3362	
MIDI Box	09	30	07/86 – 06/90	3462	
MIDI Box	18	63	09/84 – 05/88	3462	
MIDI Box	18	63	09/84 – 05/88	3462	
MIDI Box	20	60	09/84 – 08/92	3462	
MIDI Box	20	62	06/88 – 08/92	3462	
MIDI Box	20	62	06/88 – 08/92	3462	
MIDI Box	1.0 All-wheel Drive	34	07/86 – 10/88	3462	
MIDI Box	2.0 4WD	62	06/88 – 08/92	3462	

MAKE & MODEL		KW	YEAR		
BEDFORD					
MIDI Box	2.0 4x4	60	09/84 – 08/92	3462	
MIDI Bus	2.0 D	42	08/84 – 05/88	3462	
MIDI Bus	2.0 TD	51	06/88 – 08/92	3462	
MIDI Bus	2.0 TD	51	09/84 – 08/92	3462	
MIDI Bus	2.2 D	45	06/88 – 08/92	3462	
MIDI Bus	2.2 D 4WD	45	06/88 – 08/92	3462	
MIDI Bus	2.2 D 4WD	45	09/84 – 08/92	3462	
RASCAL Box	10	34	07/86 – 06/90	3509	
RASCAL Bus	10	34	07/86 – 06/90	3509	
RASCAL Pickup	08	30	07/86 – 06/90	3509	
RASCAL Pickup	10	34	06/86 – 06/90	3509	
RASCAL Pickup	1.0 All-wheel Drive	34	07/86 – 06/90	3509	
RASCAL Platform/Chassis	08	30	07/86 – 06/90	3509	
RASCAL Platform/Chassis	10	34	06/86 – 06/90	3509	
RASCAL Platform/Chassis	1.0 All-wheel Drive	34	07/86 – 06/90	3509	
BENTLEY					
ARNAGE (RBS_)	4.4 V8 (M62408S3)	260	04/98 – 01/02		4179
ARNAGE (RBS_)	4.4 V8 (M62448S3)	260	04/98 – 01/02		4179
ARNAGE (RBS_)	6.7 V8 (L 410 IT)	298	09/99 – 10/09		4179
ARNAGE (RBS_)	6.7 V8 T (L 410 M1T5)	336	02/02 – 10/09		4179
AZURE	6.75 V8 (L 410 M1T2)	300	08/99 – 06/06		4179
AZURE	6.75 V8 Mulliner (L 410 M1T3)	313	08/99 – 06/06		4179
AZURE	6.8 V8	286	09/95 – 08/99	3312	
CONTINENTAL	6.75 V8 R	265	10/91 – 08/99	3312	
CONTINENTAL	6.8 V8 S	286	05/94 – 12/95	3312	
CONTINENTAL II	6.75 V8 T Mulline r (L 410 M1T3)	313	08/99 – 10/02		4179
CONTINENTAL III FLYING SPUR (3W_)	6.0 (MTBHT)	412	03/05 -		4179
CONTINENTAL III (3W_)	6.0 (BEB)	412	06/03 – 12/11		4179
CONTINENTAL III (3W_)	6.0 (BWR)	412	06/03 – 12/11		4179
BERTONE					
FREECLIMBER 2	1.6 (BMW 161 E1)	74	03/92 – 12/99	3436	
BMC					
LEVENT	2.5 – 3.0		98 -	3443	
LEVENT	2.5 – 3.0		98 -	3456	
LEVENT MEGASTAR (YAYLI)	1.8 – 3.0		2003 -	3708/1	
LEVENT MEGASTAR (YAYSIZ)	1.8 – 3.0		2003 -	3708	
MEGASTAR (ALTTAN FİŞLİ 18.0 mm)				3871	
MEGASTAR (ÜSTTEN FİŞLİ,YAYLI 17.0 mm)				3871/1	
MEGASTAR (ÜSTTEN FİŞLİ,YAYSIZ 17.0 mm)				3871/2	
BMW					
02 (E10)	1502	55	01/75 – 07/77	3318	
02 (E10)	1502	55	01/75 – 07/77	3338	
02 (E10)	1502	55	01/75 – 07/77	3353	
02 (E10)	1502	55	01/75 – 07/77	3362	
02 (E10)	2002 Ti	88	06/68 – 04/72	3331/1	
02 (E10)	2002 Tii	96	05/71 – 07/75	3331/1	
02 (E10)	2002 Turbo	125	01/74 – 07/75	3331/1	
1 Serie (E82)	M 3.0 (N54 B30 A)	250	04/11-06.12		4179
3 Serie V (E90)	M3 4.0 (S65 B40 A)	309	03/07 – 12/11		4179
3 Serie V (E92)	M (S65 B40 A)	309	03/07 – 12/13		4179
3 Serie V (E93)	M3 (S65 B40 A)	309	03/07 – 10/13		4179
3 Serie (E21)	1.8 318i (M10 B18)	77	11/79 – 08/82		3706
3 Serie (E21)	2.0 320 (M10 B20)	80	08/75 – 08/77		3706
3 Serie (E21)	2.0 320/6 (M20 B20)	90	09/77 – 08/82		3706
3 Serie (E21)	2.0 320i (M10 B20)	92	06/75 – 08/82		3706
3 Serie (E21)	2.3 323 i	105	06/75 -		3706
3 Serie (E21)	2.3 323 i (M20 B23)	105	01/78 – 08/82		3706
3 (E21)	315	55	03/81 – 3/84	3365	
3 (E21)	316	66	08/75 – 08/80	3365	
3 (E21)	316	66	09/80 – 08/82	3365	
3 (E21)	318	72	08/75 – 08/80	3365	
3 (E21)	320	80	08/75 – 08/77	3365	
3 (E21)	318 i	77	11/79 – 08/82	3365	
3 (E21)	320 i	92	06/75 – 08/82	3365	
3 (E21)	320/6	90	09/77 – 08/82	3365	
3 (E21)	323 i	105	01/78 – 08/82	3365	
3 (E30)	315	55	09/82 – 12/91	3365	
3 (E30)	316	66	09/82 – 12/87		3572
3 (E30)	316	66	09/82 – 12/87	3609	

MAKE & MODEL   		KW	YEAR		
BMW					
3 (E30)	316 (Ecotronic)	66	09/83 – 12/90		3572
3 (E30)	316 (Ecotronic)	66	09/83 – 12/90	3609	
3 (E30)	316 i	73	09/87 – 06/91		3572
3 (E30)	316 i	73	09/87 – 06/91	3609	
3 (E30)	316 i	75	07/88 – 06/91		3572
3 (E30)	316 i	75	08/87 – 08/88		3572
3 (E30)	316 i	75	07/88 - 06/91	3609	
3 (E30)	316 i	75	08/87 – 08/88	3609	
3 (E30)	318 i	75	12/84 – 08/88		3572
3 (E30)	318 i	75	12/84 – 08/88	3609	
3 (E30)	318 i	77	09/82 – 08/87		3572
3 (E30)	318 i	77	09/82 – 08/87	3609	
3 (E30)	318 i	83	09/87 – 06/91		3572
3 (E30)	318 i	83	09/87 – 06/91	3609	
3 (E30)	318 i	85	09/87 – 06/91		3572
3 (E30)	318 i	85	09/87 – 06/91	3609	
3 (E30)	318 is	100	09/89 – 08/91		3572
3 (E30)	318 is	100	09/89 – 08/91	3609	
3 (E30)	320 i	92	09/82 – 12/85		3572
3 (E30)	320 i	92	09/82 – 12/85	3609	
3 (E30)	320 i	95	12/85 – 06/91		3572
3 (E30)	320 i	95	12/85 – 06/91	3609	
3 (E30)	320 i	110	12/85 – 06/90		3572
3 (E30)	320 i	110	12/85 – 06/90	3609	
3 (E30)	320 is	141	05/88 – 12/90		3572
3 (E30)	320 is	141	05/88 – 12/90	3609	
3 (E30)	323 i	102	09/82 – 08/83		3572
3 (E30)	323 i	102	09/82 – 08/83	3609	
3 (E30)	323 i	110	09/83 – 08/86		3572
3 (E30)	323 i	110	09/83 – 08/86	3609	
3 (E30)	324 d	63	09/85 – 08/91		3572
3 (E30)	324 d	63	09/85 – 08/91	3609	
3 (E30)	324 td	85	09/87 – 08/91		3572
3 (E30)	324 td	85	09/87 – 08/91	3609	
3 (E30)	325 e 2.7	90	10/83 – 12/88		3572
3 (E30)	325 e 2.7	90	10/83 – 12/88	3609	
3 (E30)	325 e 2.7	95	01/85 – 08/87		3572
3 (E30)	325 e 2.7	95	01/85 – 08/87	3609	
3 (E30)	325 i	125	12/86 – 06/91		3572
3 (E30)	325 i	125	12/86 – 06/91	3609	
3 (E30)	325 i	126	09/83 – 11/89		3572
3 (E30)	325 i	126	09/83 – 11/89	3609	
3 (E30)	325 i X	125	12/86 – 08/91		3572
3 (E30)	325 i X	125	12/86 – 08/91	3609	
3 (E30)	325 i X	126	03/86 – 12/87		3572
3 (E30)	325 i X	126	03/86 – 12/87	3609	
3 (E30)	M3 2.3	143	07/86 – 06/91	3573	
3 (E30)	M3 2.3	143	07/86 – 06/91		3578
3 (E30)	M3 2.3	147	02/87 – 05/89	3573	
3 (E30)	M3 2.3	147	02/87 – 05/89		3578
3 (E30)	M3 2.3	158	06/89 – 06/91	3573	
3 (E30)	M3 2.3	158	06/89 – 06/91		3578
3 (E30)	M3 EVO I 2.3	162	10/88 – 10/90	3573	
3 (E30)	M3 EVO I 2.3	162	10/88 – 10/90		3578
3 (E30)	M3 EVO II 2.5	175	01/90 – 01/92	3573	
3 (E30)	M3 EVO II 2.5	175	01/90 – 01/92		3578
3 (E36)	M3 3.0	210	08/94 – 09/95	3564/1	
3 (E36)	M3 3.0	210	08/94 – 09/95		3578
3 (E36)	M3 3.2	236	09/95 – 02/98	3564/1	
3 (E36)	M3 3.2	236	09/95 – 02/98		3578
3 (E46)	330 d	135	10/99-02/05	4347	
3 (E46)	330 d	150	03/03-02/05	4347	
3 (E46)	330 i	168	01/01-04/05	4347	
3 (E46)	330 i	170	06/00-02/05	4347	
3 (E46)	330 xd	135	01/00-02/03	4347	
3 (E46)	330 xd	150	09/02-12/04	4347	
3 (E46)	330 xi	170	06/00-02/05	4347	
3 Convertible (E30)	318 i	83	09/90 – 10/93		3572
3 Convertible (E30)	318 i	83	09/90 – 10/93	3609	
3 Convertible (E30)	318 i	103	06/88 – 02/92		3572
3 Convertible (E30)	318 i	103	06/88 – 02/92	3609	

MAKE & MODEL		KW	YEAR		
BMW					
3 Convertible (E30)	320 i	93	04/86 – 10/93		3572
3 Convertible (E30)	320 i	93	04/86 – 10/93	3609	
3 Convertible (E30)	320 i	95	04/86 – 10/93		3572
3 Convertible (E30)	320 i	95	04/86 – 10/93	3609	
3 Convertible (E30)	325 i	125	09/87 – 10/93		3572
3 Convertible (E30)	325 i	125	09/87 – 10/93	3609	
3 Convertible (E30)	325 i	126	12/85 – 12/87		3572
3 Convertible (E30)	325 i	126	12/85 – 12/87	3609	
3 Convertible (E30)	M3 2.3	143	06/88 – 06/91	3573	
3 Convertible (E30)	M3 2.3	143	06/88 – 06/91		3578
3 Convertible (E36)	M3 3.0	210	01/94 – 10/95	3564/1	
3 Convertible (E36)	M3 3.0	210	01/94 – 10/95		3578
3 Convertible (E36)	M3 3.2	236	10/95 – 04/99	3564/1	
3 Convertible (E36)	M3 3.2	236	10/95 – 04/99		3578
3 Convertible (E46)	330 Cd	150	08/05-12/07	4347	
3 Convertible (E46)	330 Ci	168	06/00-12/06	4347	
3 Convertible (E46)	330 Ci	170	06/00-12/07	4347	
3 Convertible (E46)	M3 3.2	252	04/01 – 12/07	3564/1	
3 Convertible (E46)	M3 3.2	252	04/01 – 12/07		3879
3 Coupe (E36)	M3 3.0	210	10/92 – 01/95	3564/1	
3 Coupe (E36)	M3 3.0	210	10/92 – 01/95		3578
3 Coupe (E36)	M3 3.0	217	01/95 – 10/95	3564/1	
3 Coupe (E36)	M3 3.0	217	01/95 – 10/95		3578
3 Coupe (E36)	M3 3.2	236	10/95 – 04/99	3564/1	
3 Coupe (E36)	M3 3.2	236	10/95 – 04/99		3578
3 Coupe (E46)	330 Cd	150	03/03-07/06	4347	
3 Coupe (E46)	330 Ci	168	06/00-07/06	4347	
3 Coupe (E46)	330 Ci	170	06/00-07/06	4347	
3 Coupe (E46)	330 xi	170	06/00-07/06	4347	
3 Coupe (E46)	M3	252	06/00 – 07/06	3564/1	
3 Coupe (E46)	M3	252	06/00 – 07/06		3879
3 Coupe (E46)	M3	265	06/03 – 07/06	3564/1	
3 Coupe (E46)	M3	265	06/03 – 07/06		3879
3 Serie II (E30)	1.8 316 (M10 B18)	66	09/82 – 12/87	3430	
3 Serie II (E30)	1.8 316 (Ecotronic) (M10 B18)	66	09/83 – 12/90	3430	
3 Serie II (E30)	1.8 318i (M10 B18)	75	12/84 – 08/88	3430	
3 Serie II (E30)	1.8 318i (M10 B18)	77	09/82 – 08/87	3430	
3 Serie II (E30)	2.0 320i (M20 B20)	92	09/82 – 12/85	3430	
3 Serie II (E30)	2.0 320i (M20 B20)	95	12/85 – 06/91	3430	
3 Serie II (E30)	2.3 323 i (M20 B23)	102	09/82 – 08/83	3430	
3 Serie II (E30)	2.3 323 i (M20 B23)	110	09/83 – 08/86	3430	
3 Serie II (E30)	2.5 325i (M20 B25)	126	09/83 – 11/89	3430	
3 Serie II (E30)	2.7 325 e (M20 B27)	90	10/83 – 12/88	3430	
3 Serie III (E36)	1.6 316 i	75	09.93-04.99	3563	
3 Serie III (E36)	1.6 316 i (M40 B16)	73	09.90-09.93	3563	
3 Serie III (E36)	1.6 316 i (M40 B16)	75	09.90-09.93	3563	
3 Serie III (E36)	1.6 316 i (M43 B16)	75	01.96-10.99	3563	
3 Serie III (E36)	1.6 316 i (M43 B16)	75	03.94-08.00	3563	
3 Serie III (E36)	1.6 316 i (M43 B16)	75	07.93-02.98	3563	
3 Serie III (E36)	1.6 316 i (M43 B16)	75	09.90-09.93	3563	
3 Serie III (E36)	1.7 318 tds (M41 D18 (INTER.))	66	01.95-10.99	3563	
3 Serie III (E36)	1.7 318 tds (M41 D18 (INTER.))	66	01.95-08.00	3563	
3 Serie III (E36)	1.7 318 tds (M41 D18 (INTER.))	66	01.95-02.98	3563	
3 Serie III (E36)	1.8 318 is (M42 B18)	103	03.92-10.95	3563	
3 Serie III (E36)	1.8 318 is (M42 B18)	103	03.93-02.98	3563	
3 Serie III (E36)	1.8 318 ti (M42 B18)	103	11.94-08.95	3563	
3 Serie III (E36)	1.8 318i (M43 B18)	85	07.95-10.99	3563	
3 Serie III (E36)	1.8 318i (M43 B18)	85	10.93-02.98	3563	
3 Serie III (E36)	1.8 318i (M40 B18)	83	12.90-10.93	3563	
3 Serie III (E36)	1.8 318i(M43 B18)	85	01.94 – 04.99	3563	
3 Serie III (E36)	1.9 318 is (M44 B19)	103	09.95-04.99	3563	
3 Serie III (E36)	1.9 318 is (M44 B19)	103	09.95-02.98	3563	
3 Serie III (E36)	1.9 318 ti (M44 B19)	103	07.95-08.00	3563	
3 Serie III (E36)	2.0 320i (M50 B(20 6 S1))	110	03.92-04.99	3563	
3 Serie III (E36)	2.0 320i (M50 B(20 6 S1))	110	09.90-02.98	3563	
3 Serie III (E36)	2.0 320i (M50 B(20 6 S2) VANOS)	110	12.93 – 04.99	3563	
3 Serie III (E36)	2.0 320i (M50 B(20 6 S2) VANOS)	110	09.90-02.98	3563	
3 Serie III (E36)	2.0 320i (M50 B20 TU)	110	01.95-10.99	3563	
3 Serie III (E36)	2.0 320i (M50 B20 TU)	110	03.92-04.99	3563	
3 Serie III (E36)	2.0 320i (M50 B20 TU)	110	12.93 – 04.99	3563	
3 Serie III (E36)	2.0 320i (M50 B20 TU)	110	09.90-02.98	3563	

MAKE & MODEL		KW	YEAR		
BMW					
3 Serie III (E36)	2.0 320i (M50 B20)	110	01.95-10.99	3563	
3 Serie III (E36)	2.0 320i (M50 B20)	110	03.92-04.99	3563	
3 Serie III (E36)	2.0 320i (M50 B20)	110	12.93 – 04.99	3563	
3 Serie III (E36)	2.0 320i (M50 B20)	110	09.90-02.98	3563	
3 Serie III (E36)	2.0 320i (M52 B(20 6 S3) VANOS)	110	01.95-10.99	3563	
3 Serie III (E36)	2.0 320i (M52 B(20 6 S3) VANOS)	110	03.92-04.99	3563	
3 Serie III (E36)	2.0 320i (M52 B(20 6 S3) VANOS)	110	12.93 – 04.99	3563	
3 Serie III (E36)	2.0 320i (M52 B(20 6 S3) VANOS)	110	09.90-02.98	3563	
3 Serie III (E36)	2.0 320i (M52 B20)	110	01.95-10.99	3563	
3 Serie III (E36)	2.0 320i (M52 B20)	110	03.92-04.99	3563	
3 Serie III (E36)	2.0 320i (M52 B20)	110	12.93 – 04.99	3563	
3 Serie III (E36)	2.0 320i (M52 B20)	110	09.90-02.98	3563	
3 Serie III (E36)	2.0 320i (M50 B(20 6 S2) VANOS)	110	03.92-04.99	3563	
3 Serie III (E36)	2.5 323 ti (M52 B25 (VANOS))	125	08.97-08.00	3563	
3 Serie III (E36)	2.5 323i (M52 B25 (VANOS))	125	09.95-10.99	3563	
3 Serie III (E36)	2.5 323i (M52 B25 (VANOS))	125	03.95-04.99	3563	
3 Serie III (E36)	2.5 323i (M52 B25 (VANOS))	125	06.95 – 04.99	3563	
3 Serie III (E36)	2.5 323i (M52 B25 (VANOS))	125	03.95-02.98	3563	
3 Serie III (E36)	2.5 325 td (M51 D25)	85	09.91-02.98	3563	
3 Serie III (E36)	2.5 325 tds (M51 D25 (INTER.))	105	01.95-10.99	3563	
3 Serie III (E36)	2.5 325 tds (M51 D25 (INTER.))	105	05.93-02.98	3563	
3 Serie III (E36)	2.5 325i (M50 B25 (VANOS))	141	03.92-04.99	3563	
3 Serie III (E36)	2.5 325i (M50 B25 (VANOS))	141	09.90-09.95	3563	
3 Serie III (E36)	2.5 325i (M50 B25 TU)	141	03.92-04.99	3563	
3 Serie III (E36)	2.5 325i (M50 B25 TU)	141	03.93-03.95	3563	
3 Serie III (E36)	2.5 325i (M50 B25 TU)	141	09.90-09.95	3563	
3 Serie III (E36)	2.5 325i (M50 B25)	141	03.92-04.99	3563	
3 Serie III (E36)	2.5 325i (M50 B25)	141	03.93 – 03.95	3563	
3 Serie III (E36)	2.5 325i (M50 B25)	141	09.90-09.95	3563	
3 Serie III (E36)	2.8 328 i (M52 B28 TU)	142	01.95-10.99	3563	
3 Serie III (E36)	2.8 328 i (M52 B28 TU)	142	01.95-04.99	3563	
3 Serie III (E36)	2.8 328 i (M52 B28 TU)	142	03.95-04.99	3563	
3 Serie III (E36)	2.8 328 i (M52 B28 TU)	142	01.95-02.98	3563	
3 Serie III (E36)	2.8 328 i (M52 B28)	142	01.95-10.99	3563	
3 Serie III (E36)	2.8 328 i (M52 B28)	142	01.95-04.99	3563	
3 Serie III (E36)	2.8 328 i (M52 B28)	142	03.95-04.99	3563	
3 Serie III (E36)	2.8 328 i (M52 B28)	142	01.95-02.98	3563	
3 Serie III (E36)	316 g (M43 B16)	75	03.94-08.00	3563	
3 Touring (E30)	316 i	73	09/91 – 06/94		3572
3 Touring (E30)	316 i	73	09/91 – 06/94	3609	
3 Touring (E30)	316 i	75	09/91 – 06/94		3572
3 Touring (E30)	316 i	75	09/91 – 06/94	3609	
3 Touring (E30)	318 i	83	04/89 – 06/94		3572
3 Touring (E30)	318 i	83	04/89 – 06/94	3609	
3 Touring (E30)	318 i	85	09/87 – 06/91		3572
3 Touring (E30)	318 i	85	09/87 – 06/91	3609	
3 Touring (E30)	320 i	95	01/88 – 12/91		3572
3 Touring (E30)	320 i	95	01/88 – 12/91	3609	
3 Touring (E30)	324 td	85	01/88 – 06/93		3572
3 Touring (E30)	324 td	85	01/88 – 06/93	3609	
3 Touring (E30)	325 i	125	07/87 – 03/93		3572
3 Touring (E30)	325 i	125	07/87 – 03/93	3609	
3 Touring (E30)	325 i X	125	06/88 – 10/93		3572
3 Touring (E30)	325 i X	125	06/88 – 10/93	3609	
3 Touring (E46)	330 d	135	10/99-02/05	4347	
3 Touring (E46)	330 d	150	03/03-02/05	4347	
3 Touring (E46)	330 i	170	06/00-02/05	4347	
3 Touring (E46)	330 xd	150	08/02-05/05	4347	
3 Touring (E46)	330 xd	135	01/00-03/03	4347	
3 Touring (E46)	330 xi	170	06/00-02/05	4347	
5 Serie V (E60)	523 i (N52 B25 A)	140	01/07 – 03/10		4179
5 Serie V (E60)	523 i (N53 B25 A)	140	01/07 – 03/10		4179
5 Serie V (E60)	525 xd (M57 306 D3)	145	11/06 – 08/07		4179
5 Serie V (E60)	525d (M57 306 D3)	145	01/07 – 03/10		4179
5 Serie V (E60)	525i (N53 B30 A)	160	01/07 – 03/10		4179
5 Serie V (E60)	525i (M54 256 S5)	137	09/07 – 12/09		4179
5 Serie V (E60)	525i (N53 B30)	160	01/07 – 03/10		4179
5 Serie V (E60)	530 d (M57 306 D3)	170	02/05 – 02/07		4179
5 Serie V (E60)	530 d (M57 D30 (306D2))	155	02/02 – 12/09		4179
5 Serie V (E60)	530 d (M57 D30 (306D2))	160	02/02 – 09/05		4179
5 Serie V (E60)	530 d (M57 D30 (306D3))	155	02/02 – 12/09		4179

MAKE & MODEL		KW	YEAR		
BMW					
5 Serie V (E60)	530 d (M57 D30 (306D3))	173	09/06 – 12/09		4179
5 Serie V (E60)	530 xd (M57 306 D3)	170	02/05 – 02/07		4179
5 Serie V (E60)	530i (N52 B30 A)	200	09/06 – 12/09		4179
5 Serie V (E60)	530i (N53 B30 A)	200	09/06 – 12/09		4179
5 Serie V (E60)	530i (N52 B30)	190	09/04 – 02/07		4179
5 Serie V (E60)	530i (N52 B30 A)	190	09/04 – 02/07		4179
5 Serie V (E60)	535 d (M57 D30 (306D4))	200	09/04 – 03/10		4179
5 Serie V (E60)	535 d (M57 D30 (306D5))	210	01/07 – 03/10		4179
5 Serie V (E60)	540 i (N54 B30 A)	225	08/05 – 03/10		4179
5 Serie V (E60)	540 i (N62 B40 A)	225	07/05 – 03/10		4179
5 Serie V (E60)	545 i (N62 B44 A)	245	09/03 – 03/10		4179
5 Serie V (E60)	550i (N62 B48 B)	270	07/05 – 03/10		4179
5 Serie V (E60)	M (S85 B50 A)	373	09/04 – 03/10		4179
5 Serie V (E61)	525 xd (M57 306 D3)	145	01/07 – 12/10		4179
5 Serie V (E61)	525d (M57 D30 (306D3))	145	01/07 – 12/10		4179
5 Serie V (E61)	525i (N53 B30 A)	160	01/07 – 12/10		4179
5 Serie V (E61)	525i (N53 B30)	160	01/07 – 12/10		4179
5 Serie V (E61)	530 d (M57 306 D3)	170	07/05 – 12/10		4179
5 Serie V (E61)	530 d (M57 D30 (306D2))	160	06/04 – 12/10		4179
5 Serie V (E61)	530 d (M57 D30 (306D3))	173	01/07 – 12/10		4179
5 Serie V (E61)	530 xd (M57 306 D3)	170	07/05 – 12/10		4179
5 Serie V (E61)	530i (N52 B30 A)	200	01/07 – 12/10		4179
5 Serie V (E61)	530i (N53 B30 A)	200	01/07 – 12/10		4179
5 Serie V (E61)	535 d (M57 D30 (306D4))	200	09/04 – 12/10		4179
5 Serie V (E61)	535 d (M57 D30 (306D5))	210	01/07 – 12/10		4179
5 Serie V (E61)	545 i (N62 B44 A)	245	06/04 – 12/10		4179
5 Serie V (E61)	550i (N62 B48 A)	270	07/05 – 12/10		4179
5 Serie V (E61)	550i (N62 B48 B)	270	07/05 – 12/10		4179
5 Serie V (E61)	M5 (S85 B50 A)	373	02/07 – 12/10		4179
5 (E12)	525	107	08/73 – 10/76		3326/1
5 (E12)	525	107	08/73 – 10/76	3331/1	
5 (E12)	525	107	08/73 – 10/76	3332/1	
5 (E12)	528	121	01/75 – 08/77		3326/1
5 (E12)	528	125	01/75 – 08/77		3326/1
5 (E12)	520 i	92	10/75 – 05/77	3331/1	
5 (E12)	520 i	92	10/75 – 05/77	3332/1	
5 (E12)	520 i	96	08/72 – 10/75	3331/1	
5 (E12)	528 i	130	04/77 – 05/81		3326/1
5 (E12)	528 i	130	04/77 – 05/81	3332/1	
5 (E12)	528 i	135	04/77 – 05/81		3326/1
5 (E12)	528 i	135	04/77 – 05/81	3332/1	
5 (E12)	M535 i	160	06/80 – 08/81		3326/1
5 (E12)	M535 i	160	06/80 – 08/81	3332/1	
5 (E28)	518	66	06/81 – 08/84	3573	
5 (E28)	518 i	75	05/81 – 12/87	3573	
5 (E28)	518 i	77	05/81 – 12/87	3573	
5 (E28)	520 i	92	06/81 – 12/87		3572
5 (E28)	520 i	92	06/81 – 12/87	3573	
5 (E28)	520 i	95	08/85 – 12/87		3572
5 (E28)	520 i	95	08/85 – 12/87	3573	
5 (E28)	520 i	110	12/86 – 12/87		3572
5 (E28)	520 i	110	12/86 – 12/87	3573	
5 (E28)	524 d	63	03/86 – 12/87		3572
5 (E28)	524 d	63	03/86 – 12/87	3573	
5 (E28)	524 td	85	09/83 – 12/87		3572
5 (E28)	524 td	85	09/83 – 12/87	3573	
5 (E28)	525 e	90	09/81 – 12/87		3572
5 (E28)	525 e	90	09/81 – 12/87	3573	
5 (E28)	525 e	92	05/83 – 12/87		3572
5 (E28)	525 e	92	05/83 – 12/87	3573	
5 (E28)	525 e	95	12/84 – 12/87		3572
5 (E28)	525 e	95	12/84 – 12/87	3573	
5 (E28)	525 i	110	06/81 – 12/87		3572
5 (E28)	525 i	110	06/81 – 12/87	3573	
5 (E28)	528 i	135	06/81 – 12/87		3572
5 (E28)	528 i	135	06/81 – 12/87	3573	
5 (E28)	535 i	210	01/85 – 12/87		3572
5 (E28)	535 i, M 535 i	136	01/85 – 12/87		3572
5 (E28)	535 i, M 535 i	136	01/85 – 12/87	3573	
5 (E28)	535 i, M 535 i	141	01/85 – 12/87		3572
5 (E28)	535 i, M 535 i	141	01/85 – 12/87	3573	

MAKE & MODEL   		KW	YEAR		
BMW					
5 (E28)	535 i, M 535 i	160	01/85 – 12/87		3572
5 (E28)	535 i, M 535 i	160	01/85 – 12/87	3573	
5 (E28)	M5	211	08/85 – 12/87	3332/1	
5 (E28)	M5	211	08/85 – 12/87		3572
5 (E34)	518 i	83	08/89 – 09/95	3564	
5 (E34)	518 i	83	08/89 – 09/95		3578
5 (E34)	518 i	85	08/89 – 09/95	3564	
5 (E34)	518 i	85	08/89 – 09/95		3578
5 (E34)	520 i	95	01/88 – 08/91	3564	
5 (E34)	520 i	95	01/88 – 08/91		3578
5 (E34)	520 i 24V	110	09/89 – 09/95	3564	
5 (E34)	520 i 24V	110	09/89 – 09/95		3578
5 (E34)	524 td	85	03/88 – 09/95	3564	
5 (E34)	524 td	85	03/88 – 09/95		3578
5 (E34)	525 i	125	01/88 – 08/91	3564	
5 (E34)	525 i	125	01/88 – 08/91		3578
5 (E34)	525 i 24V	141	09/89 – 09/95	3564	
5 (E34)	525 i 24V	141	09/89 – 09/95		3578
5 (E34)	525 iX 24V	141	10/91 – 09/95	3564	
5 (E34)	525 iX 24V	141	10/91 – 09/95		3578
5 (E34)	525 td	85	04/93 – 09/95	3564	
5 (E34)	525 td	85	04/93 – 09/95		3578
5 (E34)	525 tds	105	09/91 – 09/95	3564	
5 (E34)	525 tds	105	09/91 – 09/95		3578
5 (E34)	530 i	138	01/88 – 08/91	3564	
5 (E34)	530 i	138	01/88 – 08/91		3578
5 (E34)	530 i V8	160	09/92 - 09/95	3564	
5 (E34)	530 i V8	160	09/92 – 09/95		3578
5 (E34)	535 i	155	01/88 – 09/95	3564	
5 (E34)	535 i	155	01/88 – 09/95		3578
5 (E34)	540 i V8	210	09/92 – 09/95	3564	
5 (E34)	540 i V8	210	09/92 – 09/95		3578
5 (E34)	M5	210	12/87 – 12/88	3564/1	
5 (E34)	M5	210	12/87 – 12/88		3578
5 (E34)	M5	232	10/88 – 05/92	3564/1	
5 (E34)	M5	232	10/88 – 05/92		3578
5 (E34)	M5	232	10/88 – 05/92		3879
5 (E34)	M5	250	03/92 – 09/95	3564/1	
5 (E34)	M5	250	03/92 – 09/95		3578
5 (E34)	M5	250	03/92 – 09/95		3879
5 (E34)	M5 CAT	232	10/88 – 05/92	3564/1	
5 (E34)	M5 CAT	232	10/88 – 05/92		3578
5 (E34)	M5 Cat	232	10/88 – 05/92		3879
5 (E39)	520 d	100	02/00 – 06/03		3656
5 (E39)	520 d	100	02/00 – 06/03	3881	
5 (E39)	520 i	100	04/99 – 06/03		3656
5 (E39)	520 i	110	01/96 – 09/00		3656
5 (E39)	520 i	125	09/00 – 06/03		3656
5 (E39)	520 i	125	09/00 – 06/03	3881	
5 (E39)	523 i	125	11/95 – 09/00		3656
5 (E39)	525 d	120	02/00 – 06/03		3656
5 (E39)	525 d	120	02/00 – 06/03	3881	
5 (E39)	525 i	141	09/00 – 06/03		3656
5 (E39)	525 i	141	09/00 – 06/03	3881	
5 (E39)	525 td	85	01/97 – 06/03		3656
5 (E39)	525 tds	105	01/96 – 06/03		3656
5 (E39)	528 i	142	11/95 – 09/00		3656
5 (E39)	530 d	135	08/98 – 09/00		3656
5 (E39)	530 d	142	09/00 – 06/03		3656
5 (E39)	530 d	142	09/00 – 06/03	3881	
5 (E39)	530 i	170	09/00 – 06/03		3656
5 (E39)	530 i	170	09/00 – 06/03	3881	
5 (E39)	535 i	173	04/96 – 03/99		3656
5 (E39)	535 i	173	04/96 – 03/99	3881	
5 (E39)	535 i	180	04/99 – 06/03		3656
5 (E39)	535 i	180	04/99 – 06/03	3881	
5 (E39)	540 i	210	04/96 – 06/03		3656
5 (E39)	540 i	210	04/96 – 06/03	3881	
5 (E39)	M5	294	10/98 – 06/03		3879
5 (E39)	M5	294	10/98 – 06/03	3881	
5 (E60)	520 d	110	09/05 – 03/10	4180	

MAKE & MODEL		KW	YEAR		
BMW					
5 (E60)	520 d	110	09/05 – 03/10		4181
5 (E60)	520 d	120	07/05 – 03/10	4180	
5 (E60)	520 d	120	07/05 – 03/10		4181
5 (E60)	520 d	130	09/07 – 03/10	4180	
5 (E60)	520 d	130	09/07 – 03/10		4181
5 (E60)	520 d	110	02/05-02/08	4346	
5 (E60)	520 d	120	02/05-02/08	4346	
5 (E60)	520 d	130	04/06-12/09	4346	
5 (E60)	520 i	115	04/06 – 12/09	4180	
5 (E60)	520 i	115	04/06 – 12/09		4181
5 (E60)	520 i	120	12/06 – 03/10	4180	
5 (E60)	520 i	120	12/06 – 03/10		4181
5 (E60)	520 i	125	07/03 – 03/10	4180	
5 (E60)	520 i	125	09/07 – 03/10	4180	
5 (E60)	520 i	125	07/03 – 03/10		4181
5 (E60)	520 i	125	09/07 – 03/10		4181
5 (E60)	520 i	115	04/06-12/09	4346	
5 (E60)	520 i	120	12/06-03/10	4346	
5 (E60)	520 i	125	09/07-03/10	4346	
5 (E60)	520 i	125	07/03-03/10	4346	
5 (E60)	523 i	130	07/05 – 03/10	4180	
5 (E60)	523 i	130	07/05 – 03/10		4181
5 (E60)	523 i	140	01/07 – 03/10	4180	
5 (E60)	523 i	140	01/07 – 03/10		4181
5 (E60)	523 i	140	01/07-03/10	4346	
5 (E60)	523 i	130	10/04-02/07	4346	
5 (E60)	525 d	120	12/04 – 03/10	4180	
5 (E60)	525 d	120	12/04 – 03/10		4181
5 (E60)	525 d	130	06/04 – 03/10	4180	
5 (E60)	525 d	130	06/04 – 03/10		4181
5 (E60)	525 d	145	01/07 – 03/10	4180	
5 (E60)	525 d	145	01/07 – 03/10		4181
5 (E60)	525 d	130	06/04-03/10	4346	
5 (E60)	525 d	120	12/04-03/10	4346	
5 (E60)	525 d xDrive	145	09/08 – 03/10	4180	
5 (E60)	525 d xDrive	145	09/08 – 03/10		4181
5 (E60)	525 i	141	09/03 – 03/10	4180	
5 (E60)	525 i	141	09/03 – 03/10		4181
5 (E60)	525 i	160	01/07 – 03/10	4180	
5 (E60)	525 i	160	07/05 – 03/10	4180	
5 (E60)	525 i	160	01/07 – 03/10		4181
5 (E60)	525 i	160	07/05 – 03/10		4181
5 (E60)	525 i	137	07/03-12/09	4346	
5 (E60)	525 i	141	09/03-03/10	4346	
5 (E60)	525 i	160	10/04-12/09	4346	
5 (E60)	525 i xDrive	160	09/08 – 03/10	4180	
5 (E60)	525 i xDrive	160	09/08 – 03/10		4181
5 (E60)	525 xd	145	01/07 – 03/10	4180	
5 (E60)	525 xd	145	01/07 – 03/10		4181
5 (E60)	525 xi	160	01/07 – 03/10	4180	
5 (E60)	525 xi	160	07/05 – 03/10	4180	
5 (E60)	525 xi	160	01/07 – 03/10		4181
5 (E60)	525 xi	160	07/05 – 03/10		4181
5 (E60)	530 d	155	07/03 – 03/10	4180	
5 (E60)	530 d	155	07/03 – 03/10		4181
5 (E60)	530 d	160	07/03 – 03/10	4180	
5 (E60)	530 d	160	07/03 – 03/10		4181
5 (E60)	530 d	170	07/03 – 03/10	4180	
5 (E60)	530 d	170	07/03 – 03/10		4181
5 (E60)	530 d	173	01/07 – 03/10	4180	
5 (E60)	530 d	173	01/07 – 03/10		4181
5 (E60)	530 d xDrive	173	09/08 – 03/10	4180	
5 (E60)	530 d xDrive	173	09/08 – 03/10		4181
5 (E60)	530 i	170	07/03 – 03/10	4180	
5 (E60)	530 i	170	07/03 – 03/10		4181
5 (E60)	530 i	187	03/05 – 03/10	4180	
5 (E60)	530 i	187	03/05 – 03/10		4181
5 (E60)	530 i	190	07/05 – 03/10	4180	
5 (E60)	530 i	190	07/05 – 03/10		4181
5 (E60)	530 i	200	01/07 – 03/10	4180	
5 (E60)	530 i xDrive	200	09/08 – 03/10	4180	

MAKE & MODEL		KW	YEAR		
BMW					
5 (E60)	530 i xDrive	200	09/08 – 03/10		4181
5 (E60)	530 xd	170	07/05 – 03/10	4180	
5 (E60)	530 xd	173	01/07 – 03/10	4180	
5 (E60)	530 xd	170	07/05 – 03/10		4181
5 (E60)	530 xd	173	01/07 – 03/10		4181
5 (E60)	530 xi	190	07/05 – 03/10	4180	
5 (E60)	530 xi	190	07/05 – 03/10		4181
5 (E60)	530 xi	200	01/07 – 03/10	4180	
5 (E60)	530 xi	200	01/07 – 03/10		4181
5 (E60)	535 d	200	09/04 – 03/10	4208	
5 (E60)	535 d	210	01/07 – 03/10	4208	
5 (E60)	540 i	225	07/05 – 03/10	4180	
5 (E60)	540 i	225	08/05 – 03/10	4180	
5 (E60)	545 i	245	09/03 – 03/10	4180	
5 (E60)	550 i	270	07/05 – 03/10	4180	
5 (E60)	550 i	270	07/05 – 03/10	4208	
5 (E60)	M5	373	09/04 – 03/10	4208	
5 (F10)	518 d	105	02/13 - 06/14		4325
5 (F10)	518 d	100	02/13 - 06/14		4325
5 (F10)	518 d	110	10/13 - 10/16		4325
5 (F10)	518 d	120	10/13 - 10/16		4325
5 (F10)	520 d	120	01/09 - 10/16		4325
5 (F10)	520 d	135	03/10 - 06/14		4325
5 (F10)	520 d	140	10/13 - 10/16		4325
5 (F10)	520 d	155	10/13 - 10/16		4325
5 (F10)	520 d	100	01/13 - 06/14		4325
5 (F10)	520 d	147	01/13 - 06/14		4325
5 (F10)	520 d xDrive	155	10/13 - 10/16		4325
5 (F10)	520 d xDrive	100	01/13 - 06/14		4325
5 (F10)	520 d xDrive	120	10/13 - 10/16		4325
5 (F10)	520 d xDrive	135	01/13 - 06/14		4325
5 (F10)	520 d xDrive	140	10/13 - 10/16		4325
5 (F10)	520 d xDrive	147	01/13 - 06/14		4325
5 (F10)	520 i	120	10/10 - 10/16		4325
5 (F10)	520 i	125	07/13 - 10/16		4325
5 (F10)	520 i	135	10/10 - 10/16		4325
5 (F10)	523 i	150	01/09 - 08/11		4325
5 (F10)	523 i	150	06/09 - 08/11		4325
5 (F10)	523 i	155	06/09 - 08/11		4325
5 (F10)	523 i	160	06/09 - 08/11		4325
5 (F10)	525 d	155	01/11 - 10/16		4325
5 (F10)	525 d	160	01/11 - 10/16		4325
5 (F10)	525 d	150	03/10 - 08/11		4325
5 (F10)	525 d xDrive	155	01/11 - 10/16		4325
5 (F10)	525 d xDrive	160	01/11 - 10/16		4325
5 (F10)	528 i	180	10/10 - 10/16		4325
5 (F10)	528 i	190	01/09 - 08/11		4325
5 (F10)	528 i xDrive	180	10/10 - 10/16		4325
5 (F10)	530 d	180	01/09 - 08/11		4325
5 (F10)	530 d	190	01/11 - 10/16		4325
5 (F10)	530 d	210	09/10 - 10/16		4325
5 (F10)	530 d xDrive	210	09/10 - 10/16		4325
5 (F10)	530 d xDrive	190	03/11 - 10/16		4325
5 (F10)	530 i	190	06/09 - 06/13		4325
5 (F10)	530 i	200	05/11 - 06/13		4325
5 (F10)	535 i	225	01/09 - 10/16		4325
5 (F10)	535 i	240	07/13 - 10/16		4325
5 (F10)	535 i xDrive	225	03/10 - 10/16		4325
5 (F10)	535 i xDrive	240	07/13 - 10/16		4325
5 (F10)	ActiveHybrid	225	09/10 - 08/16		4325
5 (F10)	ActiveHybrid	250	09/10 - 08/16		4325
5 (G30, F90)	520 d	120	09/16 -		4325
5 (G30, F90)	520 d	140	09/16 -		4325
5 (G30, F90)	520 d xDrive	120	09/16 -		4325
5 (G30, F90)	520 d xDrive	140	09/16 -		4325
5 (G30, F90)	520 i	120	07/17 -		4325
5 (G30, F90)	520 i	125	07/17 -		4325
5 (G30, F90)	520 i	135	07/17 -		4325
5 (G30, F90)	525 d	155	07/17 -		4325
5 (G30, F90)	525 d	170	07/17 -		4325
5 (G30, F90)	530 d	195	09/16 -		4325

MAKE & MODEL		KW	YEAR		
BMW					
5 (G30, F90)	530 d xDrive	195	09/16 -		4325
5 (G30, F90)	530 e iPerformance	185	03/17 -		4325
5 (G30, F90)	530 i	185	09/16 -		4325
5 (G30, F90)	530 i xDrive	185	09/16 -		4325
5 SERIES (E60)	520 i	127	05/04 – 12/06		3656
5 SERIES (E60)	520 i	127	05/04-12/06	4346	
5 SERIES (E60)	520 Li	115	06/09 – 09/10	4180	
5 SERIES (E60)	520 Li	115	06/09 – 09/10		4181
5 SERIES (E60)	520 Li	115	06/09-09/10	4346	
5 SERIES (E60)	523 i	130	07/03 – 12/07		3656
5 SERIES (E60)	523 i	130	07/03-12/07	4346	
5 SERIES (E60)	523 Li	120	01/08 – 08/10	4180	
5 SERIES (E60)	523 Li	120	01/08 – 08/10		4181
5 SERIES (E60)	523 Li	130	10/06 – 12/10		4181
5 SERIES (E60)	523 Li	120	01/08-08/10	4346	
5 SERIES (E60)	523 Li	130	10/06-12/10	4346	
5 SERIES (E60)	525 i	141	04/04 – 02/06	4180	
5 SERIES (E60)	525 i	141	04/04 – 02/06		4181
5 SERIES (E60)	525 i	141	04/04-02/06	4346	
5 SERIES (E60)	525 Li	160	01/07 – 04/10	4180	
5 SERIES (E60)	525 Li	160	01/07 – 04/10		4181
5 SERIES (E60)	525 Li	160	11/06-04/10	4346	
5 SERIES (E60)	530 i	170	10/03 – 06/05		3656
5 SERIES (E60)	530 Li	190	03/07 – 05/10	4180	
5 SERIES (E60)	530 Li	190	03/07 – 05/10		4181
5 SERIES (F10, F18)	520 Li	130	12/10 - 12/12		4325
5 SERIES (F10, F18)	520 Li	135	09/13 - 05/17		4325
5 SERIES (F10, F18)	520 Li	150	03/12 - 05/17		4325
5 SERIES (F10, F18)	523 Li	150	08/10 - 12/12		4325
5 SERIES (F10, F18)	525 Li	160	06/13 - 05/17		4325
5 SERIES (F10, F18)	525 Li	178	08/12 - 05/17		4325
5 SERIES (F10, F18)	528 i	180	05/14 - 05/17		4325
5 SERIES (F10, F18)	528 Li	180	05/14 - 05/17		4325
5 SERIES (F10, F18)	528 Li	190	08/10 - 11/11		4325
5 SERIES (F10, F18)	528 Li xDrive	180	05/14 - 05/17		4325
5 SERIES (F10, F18)	530 Le Hybrid	160	01/15 - 05/17		4325
5 SERIES (F10, F18)	530 Li	190	11/11 - 05/14		4325
5 SERIES (F10, F18)	535 Li	225	08/10 - 05/17		4325
5 SERIES (G38)	528 Li	165	06/17 - 12/17		4325
5 SERIES (G38)	530 Li	185	06/17 -		4325
5 SERIES (G38)	530 Li xDrive	185	06/17 -		4325
5 Touring (E34)	518 g	85	11/95 - 06/96	3564	
5 Touring (E34)	518 g	85	11/95 – 06/96		3578
5 Touring (E34)	518 i	83	03/93 – 09/94	3564	
5 Touring (E34)	518 i	83	03/93 – 09/94		3578
5 Touring (E34)	518 i	85	09/94 – 01/97	3564	
5 Touring (E34)	518 i	85	09/94 – 01/97		3578
5 Touring (E34)	520 i	110	11/91 – 01/97	3564	
5 Touring (E34)	520 i	110	11/91 – 01/97		3578
5 Touring (E34)	525 i	141	11/91 – 01/97	3564	
5 Touring (E34)	525 i	141	11/91 – 01/97		3578
5 Touring (E34)	525 ix	141	02/92 – 01/97	3564	
5 Touring (E34)	525 ix	141	02/92 – 01/97		3578
5 Touring (E34)	525 td	85	03/93 – 01/97	3564	
5 Touring (E34)	525 td	85	03/93 – 01/97		3578
5 Touring (E34)	525 tds	105	12/91 - 01/97	3564	
5 Touring (E34)	525 tds	105	12/91 – 01/97		3578
5 Touring (E34)	530 i V8	160	09/92 – 01/97	3564	
5 Touring (E34)	530 i V8	160	09/92 – 01/97		3578
5 Touring (E34)	540 i	210	09/93 – 01/97	3564	
5 Touring (E34)	540 i	210	09/93 – 01/97		3578
5 Touring (E34)	M5	250	09/94 – 01/97		3879
5 Touring (E39)	520 d	100	02/00 – 09/03		3656
5 Touring (E39)	520 d	100	02/00 – 09/03	3881	
5 Touring (E39)	520 i	100	04/99 – 05/04		3656
5 Touring (E39)	520 i	110	01/97 – 09/00		3656
5 Touring (E39)	520 i	125	09/00 – 05/04		3656
5 Touring (E39)	520 i	125	09/00 – 05/04	3881	
5 Touring (E39)	523 i	125	01/97 – 09/00		3656
5 Touring (E39)	525 d	120	02/00 – 05/04		3656
5 Touring (E39)	525 d	120	02/00 – 05/04	3881	

MAKE & MODEL   		KW	YEAR		
BMW					
5 Touring (E39)	525 i	141	09/00 – 05/04		3656
5 Touring (E39)	525 i	141	09/00 – 05/04	3881	
5 Touring (E39)	525 tds	105	03/97 – 05/04		3656
5 Touring (E39)	528 i	142	01/97 – 09/00		3656
5 Touring (E39)	530 d	135	08/98 – 09/00		3656
5 Touring (E39)	530 d	142	09/00 – 05/04		3656
5 Touring (E39)	530 d	142	09/00 – 05/04	3881	
5 Touring (E39)	530 i	170	09/00 – 05/04		3656
5 Touring (E39)	530 i	170	09/00 – 05/04	3881	
5 Touring (E39)	540 i	210	01/97 – 05/04		3656
5 Touring (E39)	540 i	210	01/97 – 05/04	3881	
5 Touring (E61)	520 d	110	09/05 – 12/10	4180	
5 Touring (E61)	520 d	110	09/05 – 12/10		4181
5 Touring (E61)	520 d	120	07/05 – 12/10	4180	
5 Touring (E61)	520 d	120	07/05 – 12/10		4181
5 Touring (E61)	520 d	130	09/07 – 12/10	4180	
5 Touring (E61)	520 d	130	09/07 – 12/10		4181
5 Touring (E61)	520 d	110	04/05-02/08	4346	
5 Touring (E61)	520 d	120	04/05-02/08	4346	
5 Touring (E61)	520 i	120	07/07 – 08/10	4180	
5 Touring (E61)	520 i	120	07/07 – 08/10		4181
5 Touring (E61)	520 i	125	09/07 – 12/10	4180	
5 Touring (E61)	520 i	125	09/07 – 12/10		4181
5 Touring (E61)	520 i	120	07/07-08/10	4346	
5 Touring (E61)	520 i	125	09/07-12/10	4346	
5 Touring (E61)	523 i	130	07/05 – 12/10	4180	
5 Touring (E61)	523 i	130	07/05 – 12/10		4181
5 Touring (E61)	523 i	140	01/07 – 12/10	4180	
5 Touring (E61)	523 i	140	01/07 – 12/10		4181
5 Touring (E61)	523 i	130	10/04-02/07	4346	
5 Touring (E61)	523 i	140	03/07-01/10	4346	
5 Touring (E61)	525 d	120	12/04 – 12/10	4180	
5 Touring (E61)	525 d	120	12/04 – 12/10		4181
5 Touring (E61)	525 d	130	06/04 – 12/10	4180	
5 Touring (E61)	525 d	130	06/04 – 12/10		4181
5 Touring (E61)	525 d	145	01/07 – 12/10	4180	
5 Touring (E61)	525 d	145	01/07 – 12/10		4181
5 Touring (E61)	525 d	120	03/04-03/07	4346	
5 Touring (E61)	525 d	130	03/04-03/07	4346	
5 Touring (E61)	525 d	145	03/07-05/10	4346	
5 Touring (E61)	525 d xDrive	145	09/08 – 12/10	4180	
5 Touring (E61)	525 d xDrive	145	09/08 – 12/10		4181
5 Touring (E61)	525 i	141	06/04 – 12/10	4180	
5 Touring (E61)	525 i	141	06/04 – 12/10		4181
5 Touring (E61)	525 i	160	01/07 – 12/10	4180	
5 Touring (E61)	525 i	160	07/05 – 12/10	4180	
5 Touring (E61)	525 i	160	01/07 – 12/10		4181
5 Touring (E61)	525 i	160	07/05 – 12/10		4181
5 Touring (E61)	525 i	141	06/04-12/10	4346	
5 Touring (E61)	525 i xDrive	160	09/08 – 12/10	4180	
5 Touring (E61)	525 i xDrive	160	09/08 – 12/10		4181
5 Touring (E61)	525 xd	145	01/07 – 12/10	4180	
5 Touring (E61)	525 xd	145	01/07 – 12/10		4181
5 Touring (E61)	525 xi	160	01/07 – 12/10	4180	
5 Touring (E61)	525 xi	160	07/05 – 12/10	4180	
5 Touring (E61)	525 xi	160	01/07 – 12/10		4181
5 Touring (E61)	525 xi	160	07/05 – 12/10		4181
5 Touring (E61)	530 d	155	11/05 – 12/10	4180	
5 Touring (E61)	530 d	155	11/05 – 12/10		4181
5 Touring (E61)	530 d	160	06/04 – 12/10	4180	
5 Touring (E61)	530 d	160	06/04 – 12/10		4181
5 Touring (E61)	530 d	170	07/05 – 12/10	4180	
5 Touring (E61)	530 d	170	07/05 – 12/10		4181
5 Touring (E61)	530 d	173	01/07 – 12/10	4180	
5 Touring (E61)	530 d	173	01/07 – 12/10		4181
5 Touring (E61)	530 d xDrive	173	09/08 – 12/10	4180	
5 Touring (E61)	530 d xDrive	173	09/08 – 12/10		4181
5 Touring (E61)	530 i	190	07/05 – 12/10	4180	
5 Touring (E61)	530 i	190	07/05 – 12/10		4181
5 Touring (E61)	530 i	200	01/07 – 12/10	4180	
5 Touring (E61)	530 i	200	01/07 – 12/10		4181

MAKE & MODEL		KW	YEAR		
BMW					
5 Touring (E61)	530 i xDrive	200	09/08 – 12/10	4180	
5 Touring (E61)	530 i xDrive	200	09/08 – 12/10		4181
5 Touring (E61)	530 xd	170	07/05 – 12/10	4180	
5 Touring (E61)	530 xd	170	07/05 – 12/10		4181
5 Touring (E61)	530 xd	173	01/07 – 12/10	4180	
5 Touring (E61)	530 xd	173	01/07 – 12/10		4181
5 Touring (E61)	530 xi	200	01/07 – 12/10	4180	
5 Touring (E61)	530 xi	190	07/05 – 12/10	4180	
5 Touring (E61)	530 xi	190	07/05 – 12/10		4181
5 Touring (E61)	530 xi	200	01/07 – 12/10		4181
5 Touring (E61)	535 d	200	09/04 – 12/10		4181
5 Touring (E61)	535 d	200	09/04 – 12/10	4208	
5 Touring (E61)	535 d	210	01/07 – 12/10	4208	
5 Touring (E61)	545 i	245	06/04 – 12/10	4180	
5 Touring (E61)	550 i	270	07/05 – 12/10	4180	
5 Touring (E61)	550 i	270	07/05 – 12/10	4208	
5 Touring (E61)	M5	373	02/07 – 12/10	4208	
5 Touring (F11)	518 d	110	01/14 -		4325
5 Touring (F11)	518 d	100	10/12 -		4325
5 Touring (F11)	518 d	105	10/12 - 07/14		4325
5 Touring (F11)	518 d	120	05/14 -		4325
5 Touring (F11)	520 d	120	11/09 -		4325
5 Touring (F11)	520 d	155	10/13 -		4325
5 Touring (F11)	520 d	100	11/09 - 10/16		4325
5 Touring (F11)	520 d	135	11/09 - 10/16		4325
5 Touring (F11)	520 d	140	10/13 -		4325
5 Touring (F11)	520 d	147	11/09 - 10/16		4325
5 Touring (F11)	520 d xDrive	135	02/13 - 07/14		4325
5 Touring (F11)	520 d xDrive	147	02/13 07/14		4325
5 Touring (F11)	520 d xDrive	155	10/13 -		4325
5 Touring (F11)	520 d xDrive	100	07/13 - 07/14		4325
5 Touring (F11)	520 d xDrive	120	10/13 -		4325
5 Touring (F11)	520 d xDrive	140	10/13 -		4325
5 Touring (F11)	520 i	120	09/11 - 02/17		4325
5 Touring (F11)	520 i	135	10/10 -		4325
5 Touring (F11)	523 i	150	11/09 - 08/11		4325
5 Touring (F11)	523 i	150	11/09 08/11		4325
5 Touring (F11)	525 d	150	11/09 - 08/11		4325
5 Touring (F11)	525 d	155	03/11 -		4325
5 Touring (F11)	525 d	160	03/11 -		4325
5 Touring (F11)	525 d xDrive	160	02/11 -		4325
5 Touring (F11)	525 d xDrive	155	02/11 -		4325
5 Touring (F11)	528 i	180	10/10 -		4325
5 Touring (F11)	528 i	190	11/09 - 08/11		4325
5 Touring (F11)	528 i xDrive	180	03/11 -		4325
5 Touring (F11)	530 d	190	02/11 -		4325
5 Touring (F11)	530 d	180	11/09 - 08/11		4325
5 Touring (F11)	530 d xDrive	190	07/10 -		4325
5 Touring (F11)	530 i	190	03/10 - 05/13		4325
5 Touring (F11)	530 i	200	07/11 - 06/13		4325
5 Touring (F11)	535 i	225	11/09 -		4325
5 Touring (F11)	535 i xDrive	225	07/10 -		4325
5 Touring (G31)	520 d	120	03/17 -		4325
5 Touring (G31)	520 d	140	03/17 -		4325
5 Touring (G31)	520 d xDrive	120	07/17 -		4325
5 Touring (G31)	520 d xDrive	140	07/17 -		4325
5 Touring (G31)	520 i	120	07/17 -		4325
5 Touring (G31)	520 i	135	07/17 -		4325
5 Touring (G31)	525 d	155	07/17 -		4325
5 Touring (G31)	525 d	170	07/17 -		4325
5 Touring (G31)	530 d	195	03/17-		4325
5 Touring (G31)	530 d xDrive	195	03/17 -		4325
5 Touring (G31)	530 i	185	03/17 -		4325
5 Touring (G31)	530 i xDrive	185	07/17 -		4325
6 (E24)	628 CSi	135	09/79 – 08/87		3326/1
6 (E24)	628 CSi	135	09/79 – 08/87	3332/1	
6 (E24)	628 CSi	135	09/79 – 08/87		3572
6 (E24)	628 CSi	135	09/79 – 08/87	3573	
6 (E24)	630 CS	135	04/76 – 08/79		3326/1
6 (E24)	630 CS	135	04/76 – 08/79	3331/1	
6 (E24)	630 CS	135	04/76 – 08/79	3332/1	

MAKE & MODEL		KW	YEAR		
BMW					
6 (E24)	630 CS	136	04/76 – 08/79		3326/1
6 (E24)	630 CS	136	04/76 – 08/79	3331/1	
6 (E24)	630 CS	136	04/76 – 08/79	3332/1	
6 (E24)	633 CSi	145	09/78 – 08/84		3326/1
6 (E24)	633 CSi	145	09/78 – 08/84	3332/1	
6 (E24)	633 CSi	147	10/75 – 12/81		3326/1
6 (E24)	633 CSi	147	10/75 – 12/81	3331/1	
6 (E24)	633 CSi	147	10/75 – 12/81	3332/1	
6 (E24)	635 CSi	136	12/77 – 04/89		3572
6 (E24)	635 CSi	136	12/77 – 04/89	3573	
6 (E24)	635 CSi	141	12/77 – 04/89		3572
6 (E24)	635 CSi	141	12/77 – 04/89	3573	
6 (E24)	635 CSi	155	08/87 – 04/89		3572
6 (E24)	635 CSi	155	08/87 – 04/89	3573	
6 (E24)	635 CSi	160	06/78 – 08/88		3326/1
6 (E24)	635 CSi	160	11/81 – 04/89		3326/1
6 (E24)	635 CSi	160	06/78 – 08/88	3332/1	
6 (E24)	635 CSi	160	11/81 – 04/89	3332/1	
6 (E24)	635 CSi	160	06/78 – 08/88		3572
6 (E24)	635 CSi	160	11/81 – 04/89		3572
6 (E24)	635 CSi	160	06/78 – 08/88	3573	
6 (E24)	635 CSi	160	11/81 – 04/89	3573	
6 (E24)	M 635 CSi	191	03/83 – 04/89		3572
6 (E24)	M 635 CSi	191	04/86 – 02/89		3572
6 (E24)	M 635 CSi	191	03/83 – 04/89	3573	
6 (E24)	M 635 CSi	191	04/86 – 02/89	3573	
6 (E24)	M 635 CSi	210	04/84 – 12/88		3572
6 (E24)	M 635 CSi	210	04/84 – 12/88	3573	
6 (E63)	630 i	190	09/04 – 07/10	4180	
6 (E63)	630 i	190	09/04 – 07/10		4181
6 (E63)	630 i	200	07/07 – 07/10	4180	
6 (E63)	635 d	210	07/07 – 07/10	4208	
6 (E63)	645 Ci	245	01/04 – 08/05	4180	
6 (E63)	650 i	270	07/05 – 07/10	4180	
6 (E63)	650 i	270	07/05 – 07/10	4208	
6 (E63)	M	373	09/05 – 07/10	4208	
6 Convertible (E64)	630 i	190	09/04 – 07/10	4180	
6 Convertible (E64)	630 i	190	09/04 – 07/10		4181
6 Convertible (E64)	630 i	200	07/07 – 07/10	4180	
6 Convertible (E64)	635 d	210	07/07 – 07/10	4208	
6 Convertible (E64)	645 Ci	245	04/04 – 08/05	4180	
6 Convertible (E64)	650 i	270	07/05 – 07/10	4180	
6 Convertible (E64)	650 i	270	07/05 – 07/10	4208	
6 Convertible (E64)	M	373	07/06 – 07/10	4208	
6 Serie II (E63)	630 i (N52 B30 A)	190	09/04 – 07/10		4179
6 Serie II (E63)	630 i (N52 B30 A)	200	07/07 – 07/10		4179
6 Serie II (E63)	630 i (N53 B30)	200	07/07 – 07/10		4179
6 Serie II (E63)	630 i (N53 B30)	200	07/07 – 07/10		4179
6 Serie II (E63)	630 i (N52 B30 A)	200	07/07 – 07/10		4179
6 Serie II (E63)	630 i (N52 B30)	190	09/04 – 07/10		4179
6 Serie II (E63)	635 d (M57 D30 (306D5))	210	07/07 – 07/10		4179
6 Serie II (E63)	635 d (M57 D30 (306D5))	210	07/07 – 07/10		4179
6 Serie II (E63)	645 Ci (N62 B44 A)	245	01/04 – 08/05		4179
6 Serie II (E64)	645 Ci (N62 B44 A)	245	04/04 – 08/05		4179
6 Serie II (E64)	645 Ci (N62 B44)	245	01/04 – 08/05		4179
6 Serie II (E64)	645 Ci (N62 B44)	245	04/04 – 08/05		4179
6 Serie II (E64)	650 i (N62 B48 B)	270	07/05 – 07/10		4179
6 Serie II (E64)	650 i (N62 B48 B)	270	07/05 – 07/10		4179
6 Serie II (E64)	M (S85 B50 A)	373	09/05 – 07/10		4179
6 Serie II (E64)	M (S85 B50 A)	373	07/06 – 07/10		4179
7 Serie IV (E65, E66, E67)	4.4 745 d (M67 D44 (448D1))	220	03/05 – 08/05		4179
7 Serie IV (E65, E66, E67)	6.0 760	320	02/03 – 08/05		4179
7 Serie IV (E65, E66, E67)	730 Ld (M57 D30 (306D3))	170	07/05 – 12/09		4179
7 Serie IV (E65, E66, E67)	730 Ld (N57N 306 D2)	170	07/05 – 12/09		4179
7 Serie IV (E65, E66, E67)	735 i (N62 B40 A)	225	03/05 – 12/09		4179
7 Serie IV (E65, E66, E67)	740 d (M67 D39 (398D1))	190	10/02 – 02/05		4179
7 Serie IV (E65, E66, E67)	740 i, Li (N62 B40 A)	225	07/05 – 07/08		4179
7 Serie IV (E65, E66, E67)	745 d (N67N 448 D2)	242	07/05 – 07/08		4179
7 Serie IV (E65, E66, E67)	745 d (M67 D44 (448D1))	242	07/05 – 07/08		4179
7 Serie IV (E65, E66, E67)	745 i, Li (N62 B44 A)	245	11/01 – 07/08		4179
7 Serie IV (E65, E66, E67)	745 i, Li (N62 B44)	245	11/01 – 07/08		4179

MAKE & MODEL		KW	YEAR		
BMW					
7 Serie IV (E65, E66, E67)	750 i, Li (N62 B48 B)	270	07/05 – 07/08		4179
7 Serie IV (E65, E66, E67)	760 i, Li (N73 B60 A)	327	01/03 – 07/08		4179
7 (E23)	728	125	05/77 – 08/79	3331/1	
7 (E23)	730	135	05/77 – 08/79	3331/1	
7 (E23)	725 i	110	07/77 – 06/86	3331/1	
7 (E23)	728 i	135	07/78 – 08/86	3331/1	
7 (E23)	728 i	135	07/78 – 08/86		3572
7 (E23)	732 i	145	09/79 – 08/86	3331/1	
7 (E23)	733 i	145	05/77 – 08/86	3331/1	
7 (E23)	735 i	136	01/85 – 08/86	3331/1	
7 (E23)	735 i	136	01/85 – 08/86		3572
7 (E23)	735 i	141	04/85 – 8/86	3331/1	
7 (E23)	735 i	141	04/85 – 08/86		3572
7 (E23)	735 i	160	06/82 – 06/86	3331/1	
7 (E23)	735 i	160	09/79 – 08/86	3331/1	
7 (E23)	735 i	160	06/82 – 06/86		3572
7 (E23)	735 i	160	09/79 – 08/86		3572
7 (E23)	745 i	185	04/80 – 04/83	3331/1	
7 (E23)	745 i	185	05/83 – 08/86	3331/1	
7 (E23)	745 i	185	04/80 – 04/83		3572
7 (E23)	745 i	185	05/83 – 08/86		3572
7 (E32)	730 i,iL	138	12/86 – 09/94	3564	
7 (E32)	730 i,iL	138	12/86 – 09/94		3578
7 (E32)	730 i,iL	145	12/86 – 09/94	3564	
7 (E32)	730 i,iL	145	12/86 – 09/94		3578
7 (E32)	730 i,iL V8	160	04/92 – 9/94	3564	
7 (E32)	730 i,iL V8	160	04/92 – 09/94		3578
7 (E32)	735 i,iL	155	09/86 – 09/92	3564	
7 (E32)	735 i,iL	155	09/86 – 09/92		3578
7 (E32)	735 i,iL	162	09/86 – 12/87	3564	
7 (E32)	735 i,iL	162	09/86 – 12/87		3578
7 (E32)	740 i,iL V8	210	04/92 – 09/94	3564	
7 (E32)	740 i,iL V8	210	04/92 – 09/94		3578
7 (E32)	750 i,iL V12	220	09/87 – 09/94	3564	
7 (E32)	750 i,iL V12	220	09/87 – 09/94		3578
7 (E38)	725 tds	105	04/96 – 11/01		3879
7 (E38)	725 tds	105	04/96 – 11/01	3909	
7 (E38)	728 i, iL	142	08/95 – 11/01		3879
7 (E38)	728 i, iL	142	08/95 – 11/01	3909	
7 (E38)	728i X	142	11/95 – 09/01		3879
7 (E38)	728i X	142	11/95 – 09/01	3909	
7 (E38)	730 d	135	08/98 – 04/00		3879
7 (E38)	730 d	135	08/98 – 04/00	3909	
7 (E38)	730 d	142	04/00 – 11/01		3879
7 (E38)	730 d	142	04/00 – 11/01	3909	
7 (E38)	730 i, iL	155	10/94 – 11/01		3879
7 (E38)	730 i, iL	155	10/94 – 11/01	3909	
7 (E38)	730 i, iL	160	10/94 – 11/01		3879
7 (E38)	730 i, iL	160	10/94 – 11/01	3909	
7 (E38)	735 i, iL	173	01/96 – 12/98		3879
7 (E38)	735 i, iL	173	01/96 – 12/98	3909	
7 (E38)	740 d	180	05/99 – 11/01		3879
7 (E38)	740 i, iL	210	01/96 – 11/01		3879
7 (E38)	740 i, iL	210	10/94 – 11/01		3879
7 (E38)	740 i, iL	210	01/96 – 11/01	3881	
7 (E38)	740 i, iL	210	10/94 – 11/01	3881	
7 (E38)	750 i, iL	240	12/94 – 11/01		3879
7 (E65, E66, E67)	730 d	155	10/02 – 07/08		3879
7 (E65, E66, E67)	730 d	155	10/02 – 07/08	4180	
7 (E65, E66, E67)	730 d	160	10/02 – 07/08		3879
7 (E65, E66, E67)	730 d	160	10/02 – 07/08	4180	
7 (E65, E66, E67)	730 i, Li	170	03/03 – 07/08		3879
7 (E65, E66, E67)	730 i, Li	170	03/03 – 07/08	4180	
7 (E65, E66, E67)	730 i, Li	184	03/05 – 07/08		3879
7 (E65, E66, E67)	730 i, Li	184	03/05 – 07/08	4180	
7 (E65, E66, E67)	730 i, Li	190	03/05 – 07/08		3879
7 (E65, E66, E67)	730 i, Li	190	03/05 – 07/08	4180	
7 (E65, E66, E67)	730 Ld	170	07/05 – 12/09	4180	
7 (E65, E66, E67)	735 i	225	03/05 – 12/09		3879
7 (E65, E66, E67)	735 i	225	03/05 – 12/09	4180	
7 (E65, E66, E67)	735 i, Li	200	11/01 – 02/05		3879

MAKE & MODEL   		KW	YEAR		
BMW					
7 (E65, E66, E67)	735 i, Li	200	11/01 – 02/05	4180	
7 (E65, E66, E67)	740 d	190	10/02 – 02/05	4180	
7 (E65, E66, E67)	740 i, Li	225	07/05 – 07/08	4180	
7 (E65, E66, E67)	745 d	220	03/05 – 08/05	4208	
7 (E65, E66, E67)	745 d	242	07/05 – 07/08	4208	
7 (E65, E66, E67)	745 i, Li	245	11/01 – 07/08	4180	
7 (E65, E66, E67)	750 i, Li	270	07/05 – 07/08	4208	
7 (E65, E66, E67)	760 i, Li	327	01/03 – 07/08	4208	
7 (G11, G12)	725 d, Ld	155	07/17 -		4325
7 (G11, G12)	725 d, Ld	170	09/15 -		4325
7 (G11, G12)	730 d	155	09/15 -		4325
7 (G11, G12)	730 d	195	09/15 -		4325
7 (G11, G12)	730 d xDrive	155	09/15 -		4325
7 (G11, G12)	730 d, Ld xDrive	195	09/15 -		4325
8 (E31)	840 Ci	210	01/96 – 12/99		3879
8 (E31)	840 Ci	210	01/96 – 12/99	3909	
8 (E31)	840 i	210	02/93 – 02/96		3879
8 (E31)	840 i	210	02/93 – 02/96	3909	
8 (E31)	850 Ci	240	09/94 – 12/99		3879
8 (E31)	850 Ci	240	09/94 – 12/99	3909	
8 (E31)	850 CSi	280	04/93 – 12/96		3879
8 (E31)	850 CSi	280	04/93 – 12/96	3909	
8 (E31)	850 i,Ci	220	04/90 – 10/94		3879
8 (E31)	850 i,Ci	220	04/90 – 10/94	3909	
i8 (I12)	hybrid	170	03/14 -		4325
i8 (I12)	hybrid	266	03/14 - 02/18		4325
M1 (E26)	35	204	05/79 – 05/83	3331/1	
M1 (E26)	35	204	05/79 – 05/83	3365	
X3 (E83)	2.0 d	110	11/03-08/07	4347	
X3 (E83)	2.0 d	130	03/07-03/09	4347	
X3 (E83)	2.0 i	110	07/05-08/08	4347	
X3 (E83)	2.5 i	137	01/04-12/06	4347	
X3 (E83)	2.5 i	141	01/04-08/06	4347	
X3 (E83)	2.5 si	160	08/06-08/08	4347	
X3 (E83)	2.5 si xDrive	155	07/06 – 12/08		3879
X3 (E83)	2.5 si xDrive	155	08/06-08/08	4347	
X3 (E83)	3.0 d	150	01/04-08/05	4347	
X3 (E83)	3.0 d	155	09/05-08/08	4347	
X3 (E83)	3.0 d	160	09/05-08/08	4347	
X3 (E83)	3.0 i	168	01/04-12/06	4347	
X3 (E83)	3.0 i xDrive	170	01/04-08/06	4347	
X3 (E83)	3.0 sd	210	09/06 – 08/08	3881	
X3 (E83)	3.0 si	194	09/06-08/08	4347	
X3 (E83)	3.0 si	200	09/06-08/08	4347	
X3 (E83)	xDrive 18 d	100	04/09 – 12/11		3879
X3 (E83)	xDrive 35 d	210	09/08 – 08/11	3881	
X3 (E83) xDrive	18 d	100	04/09-12/11	4347	
X3 (E83) xDrive	18 d	105	09/08-12/11	4347	
X3 (E83) xDrive	20 d	130	09/07-08/10	4347	
X3 (E83) xDrive	20 d	120	09/07-08/10	4347	
X3 (E83) xDrive	20 i	110	09/08-08/11	4347	
X3 (E83) xDrive	25 i	160	09/08-08/10	4347	
X3 (E83) xDrive	28 i	171	09/08-12/10	4347	
X3 (E83) xDrive	30 d	155	09/08-08/10	4347	
X3 (E83) xDrive	30 d	160	09/08-08/10	4347	
X3 (E83) xDrive	30 i	194	09/08-12/10	4347	
X3 (E83) xDrive	30 i	200	09/08-12/11	4347	
X3 (E83) xDrive	30 i	160	03/06-07/10	4347	
X3 (F25)	sDrive 18 d	100	08/11 -		4325
X3 (F25)	sDrive 18 d	110	02/14 -		4325
X3 (F25)	sDrive 18 d	105	08/11 -		4325
X3 (F25)	sDrive 18 i	125	07/13 -		4325
X3 (F25)	sDrive 20 i	135	02/14 -		4325
X3 (F25)	xDrive 20 d	140	02/14 -		4325
X3 (F25)	xDrive 20 d	120	09/10 -		4325
X3 (F25)	xDrive 20 d	135	09/10 -		4325
X3 (F25)	xDrive 20 i	135	09/11 -		4325
X3 (F25)	xDrive 28 i	190	04/11 -		4325
X3 (F25)	xDrive 28 i	180	08/11 -		4325
X3 (F25)	xDrive 30 d	190	05/11 -		4325
X3 (F25)	xDrive 30 d	155	05/11 -		4325

MAKE & MODEL		KW	YEAR		
BMW					
X3 (F25)	xDrive 30 d	183	04/15 -		4325
X3 (F25)	xDrive 30 d	204	06/16 -		4325
X3 (F25)	xDrive 30 d	210	04/14 -		4325
X3 (F25)	xDrive 35 d	230	09/11 -		4325
X3 (F25)	xDrive 35 i	225	09/10 -		4325
X3 (G01)	xDrive 20 d	120	10/17 -		4325
X3 (G01)	xDrive 20 d	140	10/17 -		4325
X3 (G01)	xDrive 20 i	135	03/18 -		4325
X3 (G01)	xDrive 30 i	185	12/17 -		4325
X3 (G01)	xDrive 30d	195	08/17 -		4325
X4 (F26)	M 40 i	265	12/15 -	4207	
X4 (F26)	xDrive 20 d	140	04/14 - 03/18		4325
X4 (F26)	xDrive 20 d	120	04/14 - 03/18		4325
X4 (F26)	xDrive 20 i	135	04/14 - 03/18		4325
X4 (F26)	xDrive 28 i	180	04/14 - 03/18		4325
X4 (F26)	xDrive 30 d	183	04/15 - 03/18		4325
X4 (F26)	xDrive 30 d	155	04/14 - 03/18		4325
X4 (F26)	xDrive 30 d	190	04/14 - 03/18		4325
X4 (F26)	xDrive 30 d	204	04/14 - 03/18		4325
X4 (F26)	xDrive 30 d	210	04/14 - 03/18		4325
X4 (F26)	xDrive 35 d	230	04/14 - 03/18		4325
X4 (F26)	xDrive 35 i	225	04/14 03/18		4325
X5 II (E70)	3.0 D (M57 D30 (306D3))	173	02/07 – 09/08		4179
X5 II (E70)	3.0 sd (M57 D30 (306D5))	210	09/07 – 02/09		4179
X5 II (E70)	4.8 i (N62 B48 B)	261	02/07 – 09/08		4179
X5 II (E70)	M 50 d (N57 D30 C)	280	08/11 – 06/13		4179
X5 II (E70)	xDrive 30 d (N57 D30 A)	173	09/08 – 06/13		4179
X5 II (E70)	xDrive 30 d (N57 D30 A)	180	09/10 – 06/13		4179
X5 II (E70)	xDrive 35 d (M57N 306 D5)	210	09/08 – 06/13		4179
X5 II (E70)	xDrive 48 i (N62 B48 B)	261	09/08 – 06/13		4179
X5 II (E70)	xDrive 50 i (N63 B44 A)	298	09/09 -		4179
X5 II (E70)	xDrive 50 i (N63 B44 A)	300	06/10 – 06/13		4179
X5 (E53)	3.0 d	135	05/01 – 12/03		3879
X5 (E53)	3.0 d	135	05/01 – 12/03	3881	
X5 (E53)	3.0 d	155	09/03 – 12/06		3879
X5 (E53)	3.0 d	155	09/03 – 12/06	3881	
X5 (E53)	3.0 d	160	12/03 – 12/06		3879
X5 (E53)	3.0 d	160	12/03 – 12/06	3881	
X5 (E53)	3.0 i	163	05/00 – 12/06		3879
X5 (E53)	3.0 i	163	05/00 – 12/06	3881	
X5 (E53)	3.0 i	170	05/00 – 12/06		3879
X5 (E53)	3.0 i	170	05/00 – 12/06	3881	
X5 (E53)	4.4 i	210	05/00 – 12/03		3879
X5 (E53)	4.4 i	210	05/00 – 12/03	3881	
X5 (E53)	4.4 i	235	12/03 – 09/06		3879
X5 (E53)	4.4 i	235	12/03 – 09/06	3881	
X5 (E53)	4.6 is	255	02/02 – 12/03		3879
X5 (E53)	4.8 is	265	04/04 – 09/06		3879
X5 (E70)	3.0 d	155	02/07 – 09/08	4207	
X5 (E70)	3.0 d	173	02/07 – 09/08	4207	
X5 (E70)	3.0 si	200	02/06 – 09/08	4207	
X5 (E70)	4.8 i xDrive	261	02/07 – 09/08	4207	
X5 (E70)	xDrive 30 d	155	09/08 – 06/13	4207	
X5 (E70)	xDrive 30 d	173	09/08 – 06/13	4207	
X5 (E70)	xDrive 30 d	180	09/10 – 06/13	4207	
X5 (E70)	xDrive 30 i	200	09/08 – 03/10	4207	
X5 (E70)	xDrive 35 d	210	09/08 – 06/13	4207	
X5 (E70)	xDrive 35 i	225	09/10 – 06/13	4207	
X5 (E70)	xDrive 35 i	235	02/12 – 06/13	4207	
X5 (E70)	xDrive 40 d	225	09/10 – 06/13	4207	
X5 (E70)	xDrive 48 i	261	09/08 – 06/13	4207	
X5 (F15, F85)	sDrive 25 d	155	11/13 -	4207	
X5 (F15, F85)	sDrive 25 d	160	11/13 -	4207	
X5 (F15, F85)	sDrive 25 d	170	07/15 -	4207	
X5 (F15, F85)	xDrive 25 d	155	11/13 -	4207	
X5 (F15, F85)	xDrive 25 d	160	06/15 -	4207	
X5 (F15, F85)	xDrive 25 d	160	11/13 -	4207	
X5 (F15, F85)	xDrive 25 d	170	07/15 -	4207	
X5 (F15, F85)	xDrive 28 i	180	09/15 -	4207	
X5 (F15, F85)	xDrive 30 d	183	04/15 -	4207	
X5 (F15, F85)	xDrive 30 d	190	07/13 -	4207	

MAKE & MODEL		KW	YEAR		
BMW					
X5 (F15, F85)	xDrive 30 d	204	11/13 -	4207	
X5 (F15, F85)	xDrive 35 i	225	11/13 -	4207	
X5 (F15, F85)	xDrive 35 i	240	11/13 -	4207	
X5 (F15, F85)	xDrive 40 d	230	12/13 -	4207	
X5 (F15, F85)	xDrive 40e	155	09/15 -	4207	
X5 (F15, F85)	xDrive 40e	180	09/15 -	4207	
X5 (F15, F85)	xDrive 40e	205	09/15 -	4207	
X5 (F15, F85)	xDrive 40e	230	09/15 -	4207	
X6 (E71, E72)	30 d	173	05/08 – 08/08	4207	
X6 (E71, E72)	30d (M57N2 306 D3)	173	05/08 – 08/08		4179
X6 (E71, E72)	35 d	210	05/08 – 08/08	4207	
X6 (E71, E72)	35 d (M57 D30 (306D5))	210	05/08 – 08/08		4179
X6 (E71, E72)	35 i	225	05/08 – 08/08	4207	
X6 (E71, E72)	35 i (N54 B30 A)	225	05/08 – 08/08		4179
X6 (E71, E72)	50 i (N63 B44 A)	300	05/08 – 06/14		4179
X6 (E71, E72)	ActiveHybrid (N63 B44 A)	357	01/09 – 10/11		4179
X6 (E71, E72)	M 50 d (N57 D30 C)	280	08/11 – 06/14		4179
X6 (E71, E72)	xDrive 30 d	155	07/09 – 06/14	4207	
X6 (E71, E72)	xDrive 30 d	180	04/09 – 06/14	4207	
X6 (E71, E72)	xDrive 30 d	173	09/07 – 03/10	4207	
X6 (E71, E72)	xDrive 30 d (M57 D30 (306D3))	180	04/09 – 06/14		4179
X6 (E71, E72)	xDrive 30 d (N57 D30 A)	173	09/07 – 03/10		4179
X6 (E71, E72)	xDrive 30 d (N57 D30 A)	180	04/09 – 06/14		4179
X6 (E71, E72)	xDrive 35 d	210	06/07 – 03/10	4207	
X6 (E71, E72)	xDrive 35 d (M57 D30 (306D5))	210	06/07 -03/10		4179
X6 (E71, E72)	xDrive 35 i	225	06/07 – 03/10	4207	
X6 (E71, E72)	xDrive 35 i	235	07/09 – 06/14	4207	
X6 (E71, E72)	xDrive 35 i	240	06/07 – 03/10	4207	
X6 (E71, E72)	xDrive 35 i (N54 B30 A)	225	06/07 – 03/10		4179
X6 (E71, E72)	xDrive 35 i (N55 B30 A)	225	06/07 – 03/10		4179
X6 (E71, E72)	xDrive 40 d	225	07/09 – 06/14	4207	
X6 (E71, E72)	xDrive 50 i (N63 B44 A)	300	10/07 – 06/14		4179
X6 (F16, F86)	xDrive 28 i	180	09/15 -	4207	
X6 (F16, F86)	xDrive 30 d	155	08/14 -	4207	
X6 (F16, F86)	xDrive 30 d	160	09/16 -	4207	
X6 (F16, F86)	xDrive 30 d	183	12/15 -	4207	
X6 (F16, F86)	xDrive 30 d	190	08/14 -	4207	
X6 (F16, F86)	xDrive 30 d	204	02/15 -	4207	
X6 (F16, F86)	xDrive 35 i	225	12/14 -	4207	
X6 (F16, F86)	xDrive 35 i	240	02/15 -	4207	
X6 (F16, F86)	xDrive 40 d	230	12/14 -	4207	
X6 II (F16, F86)	M 50 d (N57 D30 C)	280	08/14 -		4179
X6 II (F16, F86)	xDrive 40 d (N57 D30 B)	230	12/14 -		4179
X6 II (F16, F86)	xDrive 50 i (N63 B44 B)	330	08/14 -		4179
Z1	25	125	06/88 – 06/91	3609	
Z3 (E36)	1.8 i (M43 B18)	85	10.95-10.98	3563	
Z3 (E36)	1.9 i (M44 B19)	103	10.95-03.99	3563	
Z3 (E36)	2.8 i (M52 B28 TU)	141	04.97-06.00	3563	
Z3 (E36)	2.8 i (M52 B28)	141	04.97-06.00	3563	
Z3 (E36)	M 3.2	236	03/97 – 06/01	3564/1	
Z3 (E36)	M 3.2	252	04/00 – 04/01	3564/1	
Z3 (E36)	M 3.2	236	03/97 – 06/01		3578
Z3 (E36)	M 3.2	239	06/01 – 01/03	3564/1	
Z3 (E36)	M 3.2	239	06/01 – 01/03		3578
Z3 (E36)	M 3.2	252	04/00 – 04/01		3578
Z3 Coupe (E36)	M	236	02/98 – 06/01	3564/1	
Z3 Coupe (E36)	M	236	02/98 – 06/01		3578
Z3 Coupe (E36)	M	239	06/01 – 06/03	3564/1	
Z3 Coupe (E36)	M	239	06/01 – 06/03		3578
Z3 Coupe (E36)	M	252	08/00 – 06/03	3564/1	
Z3 Coupe (E36)	M	252	08/00 – 06/03		3578
Z4 (E85)	M	252	03/06 – 02/09	3564/1	
Z4 (E85)	M	252	03/06 – 02/09		3879
Z4 Coupe (E86)	3.0 si	160	03/06-01/09	4347	
Z4 Coupe (E86)	3.0 si	190	03/06-08/08	4347	
Z4 Coupe (E86)	3.0 si	195	03/06-01/09	4347	
Z4 Coupe (E86)	M	252	03/06 – 01/09	3564/1	
Z4 Coupe (E86)	M	252	03/06 – 01/09		3879
Z4 Roadster (E85)	3.0 si	160	09/05-12/08	4347	
Z4 Roadster (E85)	3.0 si	190	01/06-08/08	4347	
Z4 Roadster (E85)	3.0 si	195	01/06-12/08	4347	

MAKE & MODEL		KW	YEAR		
BMW					
Z4 Roadster (E89)	sDrive 35 is	250	09/10 -		4325
Z4 Roadster (E89)	sDrive 35 i	225	05/09 -		4325
Z8 (E52)	49	294	06/00 – 06/03		3879
BUICK					
ELECTRA	4.1	92	10.81 - 09.84	3864	
ENCLAVE	3.6	205	04/07-12/08		4219
ENCLAVE	3.6	215	09/08-04/17		4219
ENCLAVE	3.6 AWD	215	09/08-04/17		4219
ENCLAVE	3.6 Flexfuel	227	04/17-		4219
ENCLAVE	3.6 Flexfuel AWD	227	04/17-		4219
ENCORE	1.4 T	103	10/12 -	4008	
ENCORE	1.4 T	103	10/12 -	4014	
ENCORE	1.4 T All-wheel Drive	103	10/12 -	4008	
ENCORE	1.4 T All-wheel Drive	103	10/12 -	4014	
EXCELLE	15	68	04/03 -	3687	
EXCELLE	15	68	04/03 -		3894
EXCELLE	16	78	04/03 -	3687	
EXCELLE	16	78	04/03 -		3894
EXCELLE	18	88	06/06 -	3687	
EXCELLE	18	88	06/06 -		3894
EXCELLE	18	90	08/03 -	3687	
EXCELLE	18	90	08/03 -		3894
EXCELLE GT	16	89	06/10 – 12/15	4230	
EXCELLE GT	18	108	06/10 – 12/15	4230	
EXCELLE GT	1.6	89	06/10 – 12/15	4014	
EXCELLE GT	1.6 T	135	06/10 – 12/15	4014	
EXCELLE GT	1.6 T	135	06/10 – 12/15	4230	
EXCELLE GT	1.8	108	06/10 – 12/15	4014	
EXCELLE XT	16	89	01/10 – 12/15	4230	
EXCELLE XT	18	108	01/10 – 12/12	4230	
EXCELLE XT	1.6	89	01/10 – 12/15	4014	
EXCELLE XT	1.6 T	135	01/10 – 12/15	4014	
EXCELLE XT	1.6 T	135	01/10 – 12/15	4230	
EXCELLE XT	1.8	108	01/10 – 12/15	4014	
ROADMASTER Sedan	5.7	135	10.92 - 09.93	3864	
ROADMASTER Sedan	5.7	194	10.93 - 09.96	3864	
ROADMASTER Station Wagon	5.0	127	10.90 - 09.92	3864	
ROADMASTER Station Wagon	5.7	132	09.92 - 12.96	3864	
BYD					
F3	15	78	09/07 – 12/10		3876
F3	16	74	09/05 – 12/13		3876
F3	18	90	05/07 – 12/08		3876
F3	DM 1.0	50	01/09 -		3876
F3R Hatchback	15	75	08/09 – 12/14		3876
F3R Hatchback	15	78	04/07 – 08/09		3876
F3R Hatchback	16	74	09/07 -		3876
CADILLAC					
ATS	20	201	02/13 -	4008	
ATS	20	203	02/13 -	4008	
ATS	2.0 AWD	203	02/13 -	4008	
ATS Coupe	20	203	02/13 -	4008	
ATS Coupe	2.0 AWD	203	02/13 -	4008	
BLS	1.9 D	110	04/06 -		3853/1
BLS	1.9 D	132	12/07 -		3853/1
BLS	1.9 D (Z 19 DTR)	132	12/07 -	4211	
BLS	1.9 D (Z 19 DTR)	132	12/07 -	4211	
BLS	1.9 D (Z19DTH)	110	12/07 -	4211	
BLS	1.9 D (Z19DTH)	110	04/06 -	4211	
BLS	1.9 TD 8V	88	04/06 -	4211	
BLS	2.0 T	129	04/06 -		3853/1
BLS	2.0 T	154	04/06 -		3853/1
BLS	2.0 T (LK9)	129	04/06 -	4211	
BLS	2.0 T (LK9)	154	04/06 -	4211	
BLS	2.0 T (B207R)	154	04/06 -	4211	
BLS	2.0 T (Z 20 NER)	154	12/07 -	4211	
BLS	2.0 T (B207L)	129	04/06 -	4211	
BLS	2.0 T (Z 20 NET)	129	12/07 -	4211	
BLS	2.0 T AWD	154	04/06 -		3853/1
BLS	2.0 T Flexpower	147	12/07 -		3853/1

MAKE & MODEL		KW	YEAR		
CADILLAC					
BLS	2.0 T Flexpower (Z 20 LER)	147	12.07-	4211	
BLS	2.0 T Flexpower (Z 20 LER)	147	12/07 -	4211	
BLS	2.8 T	188	04/06 -		3853/1
BLS	2.8 T	206	12/09 – 12/10		3853/1
BLS	2.8 T (B284L)	188	04/06 -	4211	
BLS	2.8 T (Z 28 NET)	188	12/07 -	4211	
BLS	2.8 T AWD	206	10/08 -		3853/1
BLS Wagon	1.9 D	110	12/07 -		3853/1
BLS Wagon	1.9 D	132	12/07 -		3853/1
BLS Wagon	2.0 T	129	12/07 -		3853/1
BLS Wagon	2.0 T	154	12/07 -		3853/1
BLS Wagon	2.0 T AWD	154	12/07 -		3853/1
BLS Wagon	2.0 T Flexpower	147	12/07 -		3853/1
BLS Wagon	2.8 T	188	12/07 -		3853/1
BLS Wagon	2.8 T	206	08/10 -		3853/1
BLS Wagon	2.8 T AWD	206	10/08 -		3853/1
CATERA Saloon	30	149	09/96 – 12/01	3717	
CATERA Saloon	30	149	09/96 – 12/01	3733	
DEVILLE 4.6		205	10/99 – 12/05	4021	
DEVILLE 4.6		224	10/99 – 07/04	4021	
ESCALADE	5.3	213	09.01 - 12.03	4022	
ESCALADE	5.3	220	09.03 - 12.05	4022	
ESCALADE	5.3 AWD	213	09.02 - 12.03	4022	
ESCALADE	5.3 AWD	220	09.03 - 12.05	4022	
ESCALADE	5.7 AWD	190	10/98 – 10/06	4190	
ESCALADE	5.7 AWD	190	10.98 - 10.06	4022	
ESCALADE	6.0	257	06/01 – 09/06	4190	
ESCALADE	6.0	257	06.01 - 09.06	4022	
ESCALADE	6.0	261	09.01 - 10.06	4022	
ESCALADE	6.0 AWD	257	10/00 – 09/06	4190	
ESCALADE	6.0 AWD	257	10.00 - 09.06	4022	
ESCALADE	6.0 AWD	261	09.01 - 10.06	4022	
ESCALADE	6.0 HYBRID	248	11.10 - 12.13		4184
ESCALADE	6.0 HYBRID	248	09.10 - 12.13		4184
ESCALADE	6.0 HYBRID	248	11.10 - 12.13	4185	
ESCALADE	6.0 HYBRID	248	09.10 - 12.13	4185	
ESCALADE	6.0 HYBRID AWD	248	11.10 - 12.13		4184
ESCALADE	6.0 HYBRID AWD	248	11.10 - 12.13	4185	
ESCALADE	6.0 HYBRID AWD	248	09.10 - 12.13	4185	
ESCALADE	6.2	301	10.06 - 12.14	4022	
ESCALADE	6.2	301	10.06 - 12.14		4184
ESCALADE	6.2	301	10.06 - 12.14	4185	
ESCALADE	6.2 AWD	296	10.06 - 12.14		4184
ESCALADE	6.2 AWD	296	10.06 - 12.14	4185	
ESCALADE	6.2 AWD	301	10/06 – 12/14	4190	
ESCALADE	6.2 AWD	301	10.06 - 12.14	4022	
ESCALADE	6.2 AWD	301	10.06 - 12.14		4184
ESCALADE	6.2 AWD	301	10.06 - 12.14	4185	
ESCALADE	6.2 AWD	313	09.14 -		4184
ESCALADE	6.2 FLEXFUEL	301	10.06 - 12.14		4184
ESCALADE	6.2 FLEXFUEL	301	10.06 - 12.14	4185	
ESCALADE	6.2 FLEXFUEL AWD	301	10.06 - 12.14		4184
ESCALADE	6.2 FLEXFUEL AWD	301	10.06 - 12.14	4185	
ESCALADE Crew Cab Pickup	6.0 AWD	257	09.01 - 12.06	4022	
ESCALADE II Closed SUV (Luxury Crossover SUV-J Segment)	16V V8 4WD	190	10.98-	3868	
ESCALADE II Closed SUV (Luxury Crossover SUV-J Segment)	16V V8 RWD	190	10.98-	3868	
ESCALADE II Closed SUV (Luxury Crossover SUV-J Segment)	5.7 AWD (LO5)	190	10.98-10.06	3868	
ESCALADE Pick-up	6.2 Flex	301	01.10 -		4184
ESCALADE Pick-up	6.2 Flex AWD	301	01.10 -		4184
FLEETWOOD Sedan	5.0	104	10.85 - 09.86	3864	
FLEETWOOD Sedan	5.0	127	09.88 - 09.90	3864	
FLEETWOOD Sedan	5.7	138	09.92 - 09.94	3864	
FLEETWOOD Sedan	5.7	194	10.94 - 09.97	3864	
FLEETWOOD Sedan	5.7 Brougham	130	10.89 - 09.93	3864	
FLEETWOOD Sedan	5.7 D	77	10.84 - 09.86	3864	
SEVILLE Sedan	5.7 D	77	08.79 - 12.85	3864	
CARBODIES					
FX FAIRWAY	2.5 D	59	01/89 – 12/96	3423/1	
FX FAIRWAY	2.5 D	59	01/89 12/96	3662	
FX FAIRWAY	2.7 TD	63	01/87 -	3423/1	
FX FAIRWAY	2.7 TD	63	01/87 -	3662	

MAKE & MODEL		KW	YEAR		
CHANGFENG					
LIEBAO Closed Off-Road Vehicle	2.4 All-wheel Drive	92	09/04 -	3809	
LIEBAO Closed Off-Road Vehicle	3.0 All-wheel Drive	130	09/04 -		3887
LIEBAO MPV	3.0 All-wheel Drive	133	01/99 – 01/10		3887
PAJERO Closed Off-Road Vehicle	3.0 All-wheel Drive	123	12/04 – 12/06	3685	
PAJERO Closed Off-Road Vehicle	3.0 All-wheel Drive	123	12/04 – 12/06		3887
CHERY					
A5	15	80	06/09 – 12/12		3911
A5	18	97	09/07 – 12/12		3911
A5	20	99	01/06 – 12/12		3911
A5	1.6 Hybrid	88	01/09 – 12/12		3911
A5	1.6 LPG	87	01/06 – 01/09		3911
V5 MPV	20	99	06/06 – 06/07		3911
V5 MPV	24	95	06/06 – 06/07		3911
CHEVROLET					
ASTRA Hatchback	18	81	09/98 -	3762	
ASTRA Hatchback	18	81	09/98 – 12/11		4040
ASTRA Hatchback	20	82	03/99 – 07/02	3762	
ASTRA Hatchback	20	82	03/99 – 07/02		4040
ASTRA Hatchback	20	85	08/02 -	3762	
ASTRA Hatchback	20	85	08/02 – 12/11		4040
ASTRA Hatchback	20	94	03/99 – 07/02	3762	
ASTRA Hatchback	20	94	03/99 – 07/02		4040
ASTRA Hatchback	20	100	08/02 -	3762	
ASTRA Hatchback	20	100	08/02 – 12/11		4040
ASTRA Hatchback	2.0 DTi	74	08/02 -	3762	
ASTRA Hatchback	2.0 DTi	74	08/02 – 12/11		4040
ASTRA Saloon	18	81	03/99 – 12/11	3762	
ASTRA Saloon	18	81	03/99 – 12/11		4040
ASTRA Saloon	2.0 DTi GLS	74	08/02 – 12/11	3762	
ASTRA Saloon	2.0 DTi GLS	74	08/02 – 12/11		4040
ASTRA Saloon	2.0 GL	82	03/99 – 07/02	3762	
ASTRA Saloon	2.0 GL	82	03/99 – 07/02		4040
ASTRA Saloon	2.0 GL	85	08/02 – 12/11	3762	
ASTRA Saloon	2.0 GL	85	08/02 – 12/11		4040
ASTRA Saloon	2.0 GLS	94	03/99 – 07/02	3762	
ASTRA Saloon	2.0 GLS	94	03/99 – 07/02		4040
ASTRA Saloon	2.0 GLS	100	08/02 – 12/11	3762	
ASTRA Saloon	2.0 GLS	100	08/02 – 12/11		4040
ASTRO Bus (Minibus-M2-Segment)	4.3 AWD (LB4)	112	04.92-09.94	3868	
ASTRO Bus (Minibus-M2-Segment)	4.3 AWD (LF6)	112	04.92-09.94	3868	
ASTRO Bus (Minibus-M2-Segment)	4.3 Luxury AWD (LB4)	119	10.89-09.94	3868	
ASTRO Bus (Minibus-M2-Segment)	4.3 Luxury AWD (LF6)	119	10.89-09.94	3868	
ASTRO Furgón (LCVs-N1 Segment)	4.3 AWD (LB4)	107	10.89-09.94	3868	
ASTRO Furgón (LCVs-N1 Segment)	4.3 AWD (LB4)	119	10.89-09.94	3868	
ASTRO II Furgón (LCVs-N1 Segment)	4.3 (L35)	142	09.94-12.05	3868	
ASTRO II Furgón (LCVs-N1 Segment)	4.3 AWD (LB4)	142	10.94-05.05	3868	
ASTRO Minibüs/Otobüs	4.3	112	04.92 - 09.94	3864	
ASTRO Minibüs/Otobüs	4.3	142	10.94 - 05.05	3864	
ASTRO Minibüs/Otobüs	4.3	142	10.94 - 05.05	4022	
ASTRO Minibüs/Otobüs	4.3	142	10.94 - 05.05	4022	
ASTRO Minibüs/Otobüs	4.3 AWD	142	10.94 - 05.05	3864	
ASTRO Minibüs/Otobüs	4.3 Luxury	119	10.86 - 09.94	3864	
ASTRO Panelvan/Van	4.3	103	10.84 - 09.85	3864	
ASTRO Panelvan/Van	4.3	119	10.84 - 09.94	3864	
ASTRO Panelvan/Van	4.3	127	10.94 - 09.95	3864	
ASTRO Panelvan/Van	4.3	142	10.94 - 05.05	3864	
ASTRO Panelvan/Van	4.3 AWD	119	10.89 - 09.94	3864	
ASTRO Panelvan/Van	4.3 AWD	142	10.94 - 05.05	3864	
ASTRO Standard Passenger Van	4.3	142	09.94 - 12.05	4022	
ASTRO Standard Passenger Van	4.3 AWD	142	09.94 - 12.05	4022	
AVALANCHE	5.3	220	10.00 - 09.06	4022	
AVALANCHE	5.3 AWD	220	10.00 - 09.06	4022	
AVALANCHE	5.3 Flex-Fuel	235	06.05 - 07.07		4184
AVALANCHE	5.3 Flex-Fuel AWD	231	01.07 -		4184
AVALANCHE	8.1	253	10.00 - 09.06	4022	
AVALANCHE 1500 Crew Cab Pickup	5.3	213	09.01 - 12.03	4022	
AVALANCHE 1500 Crew Cab Pickup	5.3	219	09.03 - 12.06	4022	
AVALANCHE 1500 Crew Cab Pickup	5.3 4WD	213	09.01 - 12.03	4022	
AVALANCHE 1500 Crew Cab Pickup	5.3 4WD	219	09.03 - 12.06	4022	
AVALANCHE 1500 Crew Cab Pickup	5.3 Flexfuel	213	09.01 - 12.03	4022	

MAKE & MODEL   		KW	YEAR		
CHEVROLET					
AVALANCHE 1500 Crew Cab Pickup	5.3 Flexfuel	219	09.01 - 12.06	4022	
AVALANCHE 1500 Crew Cab Pickup	5.3 Flexfuel 4WD	213	09.01 - 12.03	4022	
AVALANCHE 1500 Crew Cab Pickup	5.3 Flexfuel 4WD	219	09.01 - 12.06	4022	
AVALANCHE 2500 Crew Cab Pickup	8.1 4WD	239	09.03 - 12.05		4022
AVALANCHE 2500 Crew Cab Pickup	8.1 4WD	242	09.05 - 12.06		4022
AVEO (T250)	12	64	03/08 – 05/10	3951	
AVEO (T250)	16	78	03/08 – 05/10	3951	
AVEO Hatchback (T200)	12	53	01/04 – 05/08	3687	
AVEO Hatchback (T300)	12	51	03/11 -	4230	
AVEO Hatchback (T300)	12	63	03/11 -	4230	
AVEO Hatchback (T300)	14	74	03/11 -	4230	
AVEO Hatchback (T300)	14	76	12/12 -	4230	
AVEO Hatchback (T300)	14	76	05/11 -	4230	
AVEO Hatchback (T300)	16	85	03/11 -	4230	
AVEO Hatchback (T300)	16	89	12/12 -	4230	
AVEO Hatchback (T300)	16	89	05/11 -	4230	
AVEO Hatchback (T300)	1.2 LPG	63	11/12 -	4230	
AVEO Hatchback (T300)	1.3 D	55	07/11 -	4230	
AVEO Hatchback (T300)	1.3 D	70	07/11 -	4230	
AVEO Hatchback (T300)	1.4 Turbo	103	08/13 -	4230	
AVEO Saloon (T300)	12	51	03/11 -	4230	
AVEO Saloon (T300)	12	63	03/11 -	4230	
AVEO Saloon (T300)	14	74	07/11 -	4230	
AVEO Saloon (T300)	14	76	12/12 -	4230	
AVEO Saloon (T300)	14	76	05/11 -	4230	
AVEO Saloon (T300)	16	85	03/11 -	4230	
AVEO Saloon (T300)	16	89	12/12 -	4230	
AVEO Saloon (T300)	16	89	05/11 -	4230	
AVEO Saloon (T300)	1.2 LPG	63	11/12 -	4230	
AVEO Saloon (T300)	1.3 D	55	07/11 -	4230	
AVEO Saloon (T300)	1.3 D	70	07/11 -	4230	
BLAZER	5.7 4WD	157	10.91 - 09.96	3864	
BLAZER K5 II Closed SUV (Luxury Crossover SUV-J Segment)	5.7 4WD (LS9 (5,7L))	157	10.91-09.96	3868	
BLAZER K5 II Closed SUV (Luxury Crossover SUV-J Segment)	6.5 D	135	10.91-	3868	
BLAZER S10 II / GRAND BLAZER Closed SUV (Luxury Crossover SUV-J	4.3 AWD (LB4)	119	10.94-09.95	3868	
C1500 Break (LCVs-N1 Segment)	5.7 (LO5)	157	10.91-09.96	3868	
C1500 Break (LCVs-N1 Segment)	5.7 AWD (LO5)	157	10.91-09.96	3868	
C1500 (U.S.A.) Pick-up (Luxury Crossover SUV-J Segment)	4.3	106	01.88-	3868	
C1500 (U.S.A.) Pick-up (Luxury Crossover SUV-J Segment)	4.3 (LB4)	119	10.91-09.96	3868	
C1500 (U.S.A.) Pick-up (Luxury Crossover SUV-J Segment)	4.3 (LB4)	149	10.96-09.99	3868	
C1500 (U.S.A.) Pick-up (Luxury Crossover SUV-J Segment)	4.3 AWD (LB4)	119	10.91-09.96	3868	
C1500 (U.S.A.) Pick-up (Luxury Crossover SUV-J Segment)	5.0	126	09.87-	3868	
C1500 (U.S.A.) Pick-up (Luxury Crossover SUV-J Segment)	5.0 (L30)	172	09.95-12.98	3868	
C1500 (U.S.A.) Pick-up (Luxury Crossover SUV-J Segment)	6.5 TDiC (L56)	135	10.96-12.00	3868	
C2500 Break (LCVs-N1 Segment)	5.7 (LO5)	157	10.91-09.96	3868	
C2500 Break (LCVs-N1 Segment)	5.7 (LO5)	157	10.91-09.96	3868	
C2500 Break (LCVs-N1 Segment)	6.2 D	96	10.91-	3868	
C2500 Pick-up (Pick-Up Truck)	4.3	106	10.91-	3868	
C2500 Pick-up (Pick-Up Truck)	4.3 (LB4)	119	10.91-09.96	3868	
C2500 Pick-up (Pick-Up Truck)	4.3 AWD (LB4)	119	10.91-09.96	3868	
C2500 II Pick-up (Pick-Up Truck)	6.5 TDiC (L56)	135	10.96-12.01	3868	
CAMARO	36	227	09/09 – 12/10	4149	
CAMARO	36	232	01/11 – 12/15	4149	
CAMARO	36	241	09/11 – 12/15	4149	
CAMARO	5.0	110	01.70 - 12.81	3864	
CAMARO Convertible	36	232	01/11 -	4149	
CAPRICE	3.8	82	10.82 - 09.84	3864	
CAPRICE	4.3	106	10.86 - 09.89	3864	
CAPRICE	4.3	149	10.91 - 09.96	3864	
CAPRICE	5.0	104	10.86 - 09.89	3864	
CAPRICE	5.0	110	10.86 - 09.88	3864	
CAPRICE	5.0	114	10.86 - 09.88	3864	
CAPRICE	5.0	127	10.87 - 09.90	3864	
CAPRICE	5.0	127	10.90 - 09.93	3864	
CAPRICE	5.0	170	10.90 - 09.93	3864	
CAPRICE	5.7	138	10.90 - 09.92	3864	
CAPRICE	5.7	194	10.93 - 09.96	3864	
CAPRICE	5.7 D	78	10.79 - 12.85	3864	
CAPRICE	5.7 LS	183	10.93 - 09.96	3864	
CAPRICE Station Wagon	5.0	100	10.87 - 09.90	3864	
CAPRICE Station Wagon	5.0	104	10.86 - 09.89	3864	

MAKE & MODEL   		KW	YEAR		
CHEVROLET					
CAPRICE Station Wagon	5.0	112	09.80 - 12.84	3864	
CAPRICE Station Wagon	5.0	114	10.82 - 09.86	3864	
CAPRICE Station Wagon	5.0	127	10.90 - 09.91	3864	
CAPRICE Station Wagon	5.7	138	10.91 - 09.93	3864	
CAPRICE Station Wagon	5.7	194	10.93 - 09.96	3864	
CAPRICE Station Wagon	5.7	207	10.93 - 09.96	3864	
CAPTIVA (C100, C140)	24	100	06/06 -	3976	
CAPTIVA (C100, C140)	24	103	12/06 -	3976	
CAPTIVA (C100, C140)	24	123	03/11 -	3976	
CAPTIVA (C100, C140)	2.0 D	93	10/06 -	3976	
CAPTIVA (C100, C140)	2.0 D	110	09/07 -	3976	
CAPTIVA (C100, C140)	2.0 D 4WD	93	10/06 -	3976	
CAPTIVA (C100, C140)	2.0 D 4WD	110	10/06 -	3976	
CAPTIVA (C100, C140)	2.2 D	120	03/11 -	3976	
CAPTIVA (C100, C140)	2.2 D 4WD	120	03/11 -	3976	
CAPTIVA (C100, C140)	2.2 D 4WD	135	03/11 -	3976	
CAPTIVA (C100, C140)	2.4 4WD	100	06/06 -	3976	
CAPTIVA (C100, C140)	2.4 4WD	103	12/06 -	3976	
CAPTIVA (C100, C140)	2.4 4WD	123	03/11 -	3976	
CAPTIVA (C100, C140)	2.4 LPG	100	01/07 -	3976	
CAPTIVA (C100, C140)	2.4 LPG 4WD	100	01/07 -	3976	
CAPTIVA (C100, C140)	3.0 4WD	190	01/10 -	3976	
CAPTIVA (C100, C140)	3.2 4WD	169	06/06 -	3976	
CAPTIVA Closed Off-Road Vehicle	2.4 4x4	105	08/07 -	3976	
CAPTIVA Closed Off-Road Vehicle	3.2 4x4	169	01/09 -	3976	
COLORADO	29	139	10/06 -	3886	
COLORADO	35	164	05/05 – 09/06	3886	
COLORADO	37	181	10/06 -	3886	
COLORADO	2.9 AWD	139	10/06 -	3886	
COLORADO	3.5 AWD	164	05/05 – 09/06	3886	
COLORADO	3.7 AWD	181	10/06 -	3886	
COMBO	16	67	04/01 -	3623	
COMBO	1.7 D	44	04/01 -	3623	
CORSA Estate	1.6 GLS	68	08/97 – 07/02	3623	
CORSA Estate	1.6 GS	75	08/97 – 07/02	3623	
CORSA Estate	1.7 D	44	08/00 – 07/02	3623	
CRUZE	13	61	07/00 – 09/08	3928	
CRUZE	15	73	08/03 – 09/08	3928	
CRUZE	1.3	61	07/00 - 09/08		4303
CRUZE	1.3 AWD	61	07/00 - 09/08	3928	
CRUZE	1.3 AWD	61	07/00 - 09/08		4303
CRUZE	1.5 AWD	73	08/03 – 09/08	3928	
CRUZE (J300)	14	74	07/13 -	4230	
CRUZE (J300)	14	74	07/13 -	4008	
CRUZE (J300)	14	103	09/10 -	4230	
CRUZE (J300)	14	103	09/10 -	4008	
CRUZE (J300)	16	80	05/09 -	4230	
CRUZE (J300)	16	80	05/09 -	4008	
CRUZE (J300)	16	83	05/09 -	4230	
CRUZE (J300)	16	83	05/09 -	4008	
CRUZE (J300)	16	86	12/12 -	4230	
CRUZE (J300)	16	86	12/12 -	4008	
CRUZE (J300)	16	89	12/12 -	4230	
CRUZE (J300)	16	89	12/12 -	4008	
CRUZE (J300)	16	91	05/09 -	4230	
CRUZE (J300)	16	91	05/09 -	4008	
CRUZE (J300)	18	103	11/09 -	4230	
CRUZE (J300)	18	103	11/09 -	4008	
CRUZE (J300)	18	104	05/09 -	4230	
CRUZE (J300)	18	104	05/09 -	4008	
CRUZE (J300)	18	108	12/12 -	4008	
CRUZE (J300)	1.4	74	07/13 -	4014	
CRUZE (J300)	1.4	103	09/10 -	4014	
CRUZE (J300)	1.6	80	05/09 -	4014	
CRUZE (J300)	1.6	83	05/09 -	4014	
CRUZE (J300)	1.6	86	12/12 -	4014	
CRUZE (J300)	1.6	89	12/12 -	4014	
CRUZE (J300)	1.6	91	05/09 -	4014	
CRUZE (J300)	1.6 T	135	12/12 -	4014	
CRUZE (J300)	1.6 T	135	12/12 -	4008	
CRUZE (J300)	1.7 D	96	01/12 -	4014	

MAKE & MODEL		KW	YEAR		
CHEVROLET					
CRUZE (J300)	1.7 D	96	01/12 -	4230	
CRUZE (J300)	1.7 D	96	01/12 -	4008	
CRUZE (J300)	1.7 TD	81	11/13 -	4014	
CRUZE (J300)	1.7 TD	81	11/13 -	4230	
CRUZE (J300)	1.7 TD	81	11/13 -	4008	
CRUZE (J300)	1.8	103	11/09 -	4014	
CRUZE (J300)	1.8	104	05/09 -	4014	
CRUZE (J300)	1.8	108	12/12 -	4014	
CRUZE (J300)	1.8 LPG	104	06/11 -	4014	
CRUZE (J300)	1.8 LPG	104	06/11 -	4230	
CRUZE (J300)	1.8 LPG	104	06/11 -	4008	
CRUZE (J300)	2.0 CDI	90	05/09 -	4014	
CRUZE (J300)	2.0 CDI	90	05/09 -	4230	
CRUZE (J300)	2.0 CDI	90	05/09 -	4008	
CRUZE (J300)	2.0 CDI	92	05/09 -	4014	
CRUZE (J300)	2.0 CDI	92	05/09 -	4230	
CRUZE (J300)	2.0 CDI	92	05/09 -	4008	
CRUZE (J300)	2.0 CDI	110	05/09 -	4014	
CRUZE (J300)	2.0 CDI	110	05/09 -	4008	
CRUZE (J300)	2.0 CDI	120	08/10 -	4014	
CRUZE (J300)	2.0 CDI	120	08/10 -	4230	
CRUZE (J300)	2.0 CDI	120	08/10 -	4008	
CRUZE Hatchback (J305)	14	74	07/13 -	4230	
CRUZE Hatchback (J305)	14	74	07/13 -	4008	
CRUZE Hatchback (J305)	14	103	06/12 -	4230	
CRUZE Hatchback (J305)	14	103	06/12 -	4008	
CRUZE Hatchback (J305)	16	80	01/12 -	4230	
CRUZE Hatchback (J305)	16	80	01/12 -	4008	
CRUZE Hatchback (J305)	16	86	12/12 -	4230	
CRUZE Hatchback (J305)	16	86	12/12 -	4008	
CRUZE Hatchback (J305)	16	89	12/12 -	4230	
CRUZE Hatchback (J305)	16	89	12/12 -	4008	
CRUZE Hatchback (J305)	16	91	06/11 -	4230	
CRUZE Hatchback (J305)	16	91	06/11 -	4008	
CRUZE Hatchback (J305)	18	103	10/11 -	4230	
CRUZE Hatchback (J305)	18	103	10/11 -	4008	
CRUZE Hatchback (J305)	18	104	06/11 -	4230	
CRUZE Hatchback (J305)	18	104	06/11 -	4008	
CRUZE Hatchback (J305)	18	108	12/12 -	4008	
CRUZE Hatchback (J305)	1.4	74	07/13 -	4014	
CRUZE Hatchback (J305)	1.4	103	06/12 -	4014	
CRUZE Hatchback (J305)	1.6	80	01/12 -	4014	
CRUZE Hatchback (J305)	1.6	86	12/12 -	4014	
CRUZE Hatchback (J305)	1.6	89	12/12 -	4014	
CRUZE Hatchback (J305)	1.6	91	06/11 -	4014	
CRUZE Hatchback (J305)	1.6 T	135	12/12 -	4014	
CRUZE Hatchback (J305)	1.6 T	135	12/12 -	4008	
CRUZE Hatchback (J305)	1.7 D	96	01/12 -	4014	
CRUZE Hatchback (J305)	1.7 D	96	01/12 -	4230	
CRUZE Hatchback (J305)	1.7 D	96	01/12 -	4008	
CRUZE Hatchback (J305)	1.7 TD	81	08/13 -	4014	
CRUZE Hatchback (J305)	1.7 TD	81	08/13 -	4230	
CRUZE Hatchback (J305)	1.7 TD	81	08/13 -	4008	
CRUZE Hatchback (J305)	1.8	103	10/11 -	4014	
CRUZE Hatchback (J305)	1.8	104	06/11 -	4014	
CRUZE Hatchback (J305)	1.8	108	12/12 -	4014	
CRUZE Hatchback (J305)	1.8 LPG	104	06/11 -	4014	
CRUZE Hatchback (J305)	1.8 LPG	104	06/11 -	4230	
CRUZE Hatchback (J305)	1.8 LPG	104	06/11 -	4008	
CRUZE Hatchback (J305)	2.0 CDI	120	06/11 -	4014	
CRUZE Hatchback (J305)	2.0 CDI	120	06/11 -	4230	
CRUZE Hatchback (J305)	2.0 CDI	120	06/11 -	4008	
CRUZE Saloon	16	89	04/09 – 12/13	4230	
CRUZE Saloon	18	108	04/09 – 12/11	4230	
CRUZE Saloon	1.6	89	04/09 – 12/13	4014	
CRUZE Saloon	1.6 T	135	11/10 – 12/13	4014	
CRUZE Saloon	1.6 T	135	11/10 – 12/13	4230	
CRUZE Saloon	1.8	108	04/09 – 12/11	4014	
CRUZE Station Wagon (J308)	14	74	07/13 -	4230	
CRUZE Station Wagon (J308)	14	74	07/13 -	4008	
CRUZE Station Wagon (J308)	14	103	08/12 -	4230	

MAKE & MODEL		KW	YEAR		
CHEVROLET					
CRUZE Station Wagon (J308)	14	103	08/12 -	4008	
CRUZE Station Wagon (J308)	16	86	12/12 -	4230	
CRUZE Station Wagon (J308)	16	86	12/12 -	4008	
CRUZE Station Wagon (J308)	16	89	12/12 -	4230	
CRUZE Station Wagon (J308)	16	89	12/12 -	4008	
CRUZE Station Wagon (J308)	16	91	08/12 -	4230	
CRUZE Station Wagon (J308)	16	91	08/12 -	4008	
CRUZE Station Wagon (J308)	18	104	08/12 -	4230	
CRUZE Station Wagon (J308)	18	104	08/12 -	4008	
CRUZE Station Wagon (J308)	18	108	12/12 -	4008	
CRUZE Station Wagon (J308)	1.4	74	07/13 -	4014	
CRUZE Station Wagon (J308)	1.4	103	08/12 -	4014	
CRUZE Station Wagon (J308)	1.6	86	12/12 -	4014	
CRUZE Station Wagon (J308)	1.6	89	12/12 -	4014	
CRUZE Station Wagon (J308)	1.6	91	08/12 -	4014	
CRUZE Station Wagon (J308)	1.6 T	135	12/12 -	4008	
CRUZE Station Wagon (J308)	1.7 TD	81	11/13 -	4014	
CRUZE Station Wagon (J308)	1.7 TD	81	11/13 -	4230	
CRUZE Station Wagon (J308)	1.7 TD	81	11/13 -	4008	
CRUZE Station Wagon (J308)	1.7 TD	96	08/12 -	4014	
CRUZE Station Wagon (J308)	1.7 TD	96	08/12 -	4230	
CRUZE Station Wagon (J308)	1.7 TD	96	08/12 -	4008	
CRUZE Station Wagon (J308)	1.8	104	08/12 -	4014	
CRUZE Station Wagon (J308)	2.0 TD	120	08/12 -	4014	
CRUZE Station Wagon (J308)	2.0 TD	120	08/12 -	4230	
CRUZE Station Wagon (J308)	2.0 TD	120	08/12 -	4008	
EPICA (KL1_)	18	90	01/06 -	4073	
EPICA (KL1_)	20	85	08/06 -	4073	
EPICA (KL1_)	20	94	01/05 – 12/06	4073	
EPICA (KL1_)	20	96	08/06 -	4073	
EPICA (KL1_)	20	98	01/05 – 12/06	4073	
EPICA (KL1_)	20	105	06/06 -	4073	
EPICA (KL1_)	25	115	06/06 -	4073	
EPICA (KL1_)	2.0 D	110	01/07 -	4073	
EQUINOX	34	138	04/03 – 09/09	3976	
EQUINOX	3.4 AWD	138	04/03 – 09/09	3976	
EXPRESS Minibus/Otobus	5.3 Flex-Fuel	216	01/07 -		4191
G10 II (U.S.A.) Furgón (LCVs-N1 Segment)	4.3	121	09.70-	3868	
G20 II (G) Furgón (LCVs-N1 Segment)	4.3 AWD (LB4)	121	10.93-12.96	3868	
G20 II (G) Furgón (LCVs-N1 Segment)	6.5 D (L56)	135	10.93-12.96	3868	
G20 II (G) Furgón (LCVs-N1 Segment)	7.4 (L29)	176	10.93-12.96	3868	
HHR	2.2	108	01/06 - 12/11	4330	
HHR	2.2	111	09.05 - 12.08		4331
HHR	2.4	125	10/07 - 12/11	4330	
HHR	2.4	125	10.07 - 12.11		4331
HHR	2.4	128	01.06 - 12.11		4331
HHR	2.4	128	01/06 - 12/11	4330	
K2500 Pick-up (Pick-Up Truck)	4.3	119	09.87-12.92	3868	
K2500 Pick-up (Pick-Up Truck)	6.5 D (L65)	116	09.93-12.95	3868	
K2500 Pick-up (Pick-Up Truck)	6.5 D (L65)	116	09.93-12.95	3868	
LACETTI (J200)	16	80	03/05 -	3687	
LACETTI (J200)	16	80	03/05 -		3894
LACETTI (J200)	18	67	03/05 – 12/09	3687	
LACETTI (J200)	18	67	03/05 – 12/09		3894
LACETTI (J200)	18	89	08/05 -	3687	
LACETTI (J200)	18	89	08/05 -		3894
LACETTI (J200)	18	90	03/05 -	3687	
LACETTI (J200)	18	90	03/05 -		3894
LACETTI (J200)	1.4 16V	70	03/05 -	3687	
LACETTI (J200)	1.4 16V	70	03/05 -		3894
LACETTI (J200)	2.0 D	89	01/07 -	3687	
LACETTI Estate (J200)	14	70	03/05 -	3687	
LACETTI Estate (J200)	14	70	03/05 -		3894
LACETTI Estate (J200)	16	80	03/05 -	3687	
LACETTI Estate (J200)	16	80	03/05 -		3894
LACETTI Estate (J200)	18	89	08/05 -	3687	
LACETTI Estate (J200)	18	89	08/05 -		3894
LACETTI Estate (J200)	1.6 LPG	80	06/09 – 12/11	3687	
LACETTI Estate (J200)	2.0 D	89	01/07 -	3687	
LACETTI Saloon	14	69	03/05 – 03/13	3687	
LACETTI Saloon	14	69	03/05 – 03/13		3894

MAKE & MODEL   		KW	YEAR		
CHEVROLET					
LACETTI Saloon	16	80	03/05 – 03/13	3687	
LACETTI Saloon	16	80	03/05 – 03/13		3894
LANOS Saloon	14	55	11/05 -	3623	
LANOS Saloon	15	63	11/05 -	3623	
LANOS Saloon	1.6 16V	78	11/05 -	3470	
LANOS Saloon	1.6 16V	78	11/05 -	3505	
LANOS Saloon	1.6 16V	78	11/05 -	3615	
MALIBU (V300)	20	104	02/12 -	4149	
MALIBU (V300)	20	108	12/12 -	4149	
MALIBU (V300)	24	123	01/12 -	4149	
MALIBU (V300)	24	125	01/12 -	4149	
MALIBU (V300)	24	137	01/12 -	4149	
MALIBU (V300)	30	196	04/13 -	4149	
MALIBU (V300)	1.6 T	135	12/12 -	4149	
MALIBU (V300)	1.6 T	135	12/12 -		4150
MALIBU (V300)	2.0	104	02/12 -		4150
MALIBU (V300)	2.0	108	12/12 -		4150
MALIBU (V300)	2.0 D	118	04/12 -	4149	
MALIBU (V300)	2.0 D	118	04/12 -		4150
MALIBU (V300)	2.0 LPG	101	02/12 -	4149	
MALIBU (V300)	2.0 LPG	101	02/12 -		4150
MALIBU (V300)	2.4	123	01/12 -		4150
MALIBU (V300)	2.4	125	01/12 -		4150
MALIBU (V300)	2.4	137	01/12 -		4150
MALIBU (V300)	3.0	196	04/13 -		4150
MATIZ (M200, M250)	08	38	03/05 -		3744
MATIZ (M200, M250)	10	47	03/05 -		3744
MATIZ (M200, M250)	10	48	01/07 -		3744
MATIZ (M200, M250)	10	49	03/05 -		3744
MATIZ (M200, M250)	0.8 LPG	38	03/05 -		3744
MATIZ (M200, M250)	1.0 LPG	49	03/05 -		3744
MATIZ / SPARK (M200, M250)	0.8 (F8CV)	38	03/05 -	4211	
MATIZ / SPARK (M200, M250)	0.8 LPG (F8CV)	38	03/05 -	4211	
MATIZ / SPARK (M200, M250)	1.0 (LA2)	48	01/07 -	4211	
MATIZ / SPARK (M200, M250)	1.0 (B10S)	47	03/05 -	4211	
MATIZ / SPARK (M200, M250)	1.0 (B10S1)	49	03/05 -	4211	
MATIZ / SPARK (M200, M250)	1.0 LPG (B10S1)	49	03/05 -	4211	
MATIZ / SPARK (M200, M250)	1.0 LPG (LA2)	44	01/07 -	4211	
Minibus/Otobus	5.3 Flex-Fuel	216	01/07 -		4023
NUBIRA Estate	14	69	01/05 -	3687	
NUBIRA Estate	14	69	01/05 -		3894
NUBIRA Estate	14	70	01/06 -	3687	
NUBIRA Estate	14	70	01/06 -		3894
NUBIRA Estate	15	78	01/05 -	3687	
NUBIRA Estate	15	78	01/05 -		3894
NUBIRA Estate	15	78	01/05 -	3687	
NUBIRA Estate	15	78	01/05 -		3894
NUBIRA Estate	16	80	03/05 -	3687	
NUBIRA Estate	16	80	03/05 -		3894
NUBIRA Estate	16	80	03/05 -	3687	
NUBIRA Saloon	16	80	03/05 -		3894
NUBIRA Saloon	18	89	08/05 -	3687	
NUBIRA Saloon	18	89	08/05 -		3894
NUBIRA Saloon	18	89	01/06 -	3687	
NUBIRA Saloon	18	89	01/06 -		3894
NUBIRA Saloon	18	90	03/05 -	3687	
NUBIRA Saloon	18	90	03/05 -		3894
NUBIRA Saloon	18	90	03/05 -	3687	
NUBIRA Saloon	18	90	03/05 -		3894
NUBIRA Saloon	20	88	01/05 -	3687	
NUBIRA Saloon	20	88	01/05 -		3894
NUBIRA Saloon	20	88	01/05 -	3687	
NUBIRA Saloon	20	88	01/05 -		3894
NUBIRA Saloon	2.0 D	89	01/07 -	3687	
NUBIRA Saloon	2.0 D	89	01/05 -	3687	
NUBIRA Saloon	2.0 D	89	01/05 -		3894
OPTRA			08 -	4252	4252
OPTRA (1J_)	16	78	08/03 – 12/08	3687	
OPTRA (1J_)	16	78	08/03 – 12/08		3894
OPTRA (1J_)	16	80	08/03 – 12/08	3687	
OPTRA (1J_)	16	80	08/03 – 12/08		3894

MAKE & MODEL		KW	YEAR		
CHEVROLET					
OPTRA (1J_)	18	90	08/03 – 12/08	3687	
OPTRA (1J_)	18	90	08/03 – 2/08		3894
OPTRA (1J_)	20	97	08/03 – 12/08	3687	
OPTRA (1J_)	20	97	08/03 – 12/08		3894
OPTRA Estate	16	80	06/06 – 12/08	3687	
OPTRA Estate	16	80	06/06 – 12/08		3894
OPTRA Hatchback	1.8 SRV	90	06/06 -	3687	
OPTRA Hatchback	1.8 SRV	90	06/06 -		3894
ORLANDO (J309)	14	103	06/12 -	4008	
ORLANDO (J309)	18	104	02/11 -	4008	
ORLANDO (J309)	1.4	103	06/12 -	4014	
ORLANDO (J309)	1.8	104	02/11 -	4014	
ORLANDO (J309)	1.8 LPG	104	06/11 -	4014	
ORLANDO (J309)	1.8 LPG	104	06/11 -	4008	
ORLANDO (J309)	2.0 D	96	02/11 -	4014	
ORLANDO (J309)	2.0 D	96	02/11 -	4008	
ORLANDO (J309)	2.0 D	120	02/11 -	4014	
ORLANDO (J309)	2.0 D	120	02/11 -	4008	
ORLANDO (J309)	2.0 LPG	103	02/12 -	4014	
ORLANDO (J309)	2.0 LPG	103	02/12 -	4008	
REZZO	16	77	03/05 -	3687	
REZZO	16	79	08/05 -	3687	
REZZO	20	89	03/05 -	3687	
REZZO	20	90	08/05 -	3687	
SILVERADO 1500	5.3 AWD	232	01.07 -		4184
SILVERADO 1500	5.3 FlexFuel AWD	232	01.07 -		4184
SILVERADO 3500 Cab & Chassis	6.6 D	271	09.06 - 12.07		4022
SILVERADO 3500 Cab & Chassis	6.6 D 4WD	271	09.06 - 12.07		4022
SPARK	08	37	05/05 -		3744
SPARK	08	38	09/00 – 12/04		3744
SPARK	10	47	11/02 – 12/04		3744
SPARK	1.0 SX	44	06/09 -		3744
SPARK	1.0 SX	46	05/05 -		3744
SPARK	1.0 SX	49	05/05 -		3744
SPARK (M300)	1.2	60	03/10 -	4337	
SPARK (M300)	1.2 LPG	60	03/10 -	4337	
SPARK (M300)	1.0	48	07/10 -	4337	
SPARK (M300)	1.0 LPG	50	03/10 -	4337	
SPARK (M300)	1.0	50	03/10 -	4337	
SPARK (M300)	1.2	64	01/12 -	4337	
SPARK (M300)	1.0 LPG	48	07/10 -	4337	
SPARK (M400)	1.0	55	11/15 -	4337	
SPARK (M400)	1.0	54	11/15 -	4337	
SPARK (M400)	1.4	72	11/15 -	4337	
SUBURBAN	5.3	209	05.00 - 06.06	4022	
SUBURBAN	5.3 AWD	209	05.00 - 06.06	4022	
SUBURBAN	5.3 Flex	209	09.02 - 06.06	4022	
SUBURBAN	5.3 Flex	217	09.01 - 09.07	4022	
SUBURBAN	5.3 Flex AWD	209	09.02 - 06.06	4022	
SUBURBAN	5.3 Flex AWD	209	09.02 - 06.06		4022
SUBURBAN	5.7	123	10.84 - 09.86	3864	
SUBURBAN	5.7	136	10.84 - 09.86	3864	
SUBURBAN	5.7	138	10.86 - 09.89	3864	
SUBURBAN	5.7 AWD	136	10.84 - 09.86	3864	
SUBURBAN	5.7 AWD	138	10.86 - 09.89	3864	
SUBURBAN	5.7 D	78	10.78 - 09.81	3864	
SUBURBAN	5.7 Tailgate	123	10.78 - 09.84	3864	
SUBURBAN	6.0	235	05.00 - 09.03	4022	
SUBURBAN	6.0	235	05.00 - 09.03		4022
SUBURBAN	6.0	239	10.02 - 06.06	4022	
SUBURBAN	6.0	239	10.02 - 06.06		4022
SUBURBAN	6.0 AWD	235	05.00 - 09.03	4022	
SUBURBAN	6.0 AWD	235	05.00 - 09.03		4022
SUBURBAN	6.0 AWD	239	10.02 - 06.06	4022	
SUBURBAN	6.0 AWD	239	10.02 - 06.06		4022
SUBURBAN	7.4 AWD	170	10.86 - 09.91	3864	
SUBURBAN	8.1	254	05.00 - 06.06	4022	
SUBURBAN	8.1	254	05.00 - 06.06		4022
SUBURBAN	8.1 AWD	254	05.00 - 06.06	4022	
SUBURBAN	8.1 AWD	254	05.00 - 06.06		4022
SUBURBAN (GMT 900)	5.3 Flex-Fuel 4WD	228	01.07 -		4184

MAKE & MODEL		KW	YEAR		
CHEVROLET					
SUBURBAN 1500 IX (U.S.A.) Closed SUV (Pick-Up Truck)	5.7 (L31)	190	09.94-12.99	3868	
SUBURBAN IX Closed SUV (Pick-Up Truck)	5.7 (L31)	190	10.96-04.00	3868	
SUBURBAN IX Closed SUV (Pick-Up Truck)	5.7 (LO5)	157	10.91-09.96	3868	
SUBURBAN IX Closed SUV (Pick-Up Truck)	5.7 AWD (L31)	190	10.96-04.00	3868	
SUBURBAN IX Closed SUV (Pick-Up Truck)	5.7 AWD (LO5)	157	10.91-09.96	3868	
SUBURBAN IX Closed SUV (Pick-Up Truck)	6.2 D 4WD	96	10.91-	3868	
SUBURBAN IX Closed SUV (Pick-Up Truck)	6.5 D (L56)	135	10.93-09.96	3868	
SUBURBAN IX Closed SUV (Pick-Up Truck)	6.5 D AWD (L56)	135	10.93-09.96	3868	
SUBURBAN IX Closed SUV (Pick-Up Truck)	7.4	176	10.95-09.99	3868	
SUBURBAN IX Closed SUV (Pick-Up Truck)	7.4 AWD (L19)	170	10.91-09.95	3868	
TAHOE (B2W)	4.8	205	05.00 - 12.06	4022	
TAHOE (B2W)	4.8 V8	205	12.99 - 12.06	4022	
TAHOE (B2W)	4.8 VB	206	12/99 – 12/06		4187
TAHOE (B2W)	5.3	201	05.00 - 09.02	4022	
TAHOE (B2W)	5.3	213	10.02 - 12.06	4022	
TAHOE (B2W)	5.3	220	09.03 - 12.06	4022	
TAHOE (B2W)	5.3 AWD	213	10.02 - 12.06	4022	
TAHOE (B2W)	5.3 AWD	220	09.03 - 12.06	4022	
TAHOE (B2W)	5.3 V8 AWD	201	12.99 - 12.06	4022	
TAHOE (B2W)	5.3 va AWD	201	12/99 – 12/06		4187
TAHOE (B2W)	6.0 V8	224	12.99 - 12.06	4022	
TAHOE (B2W)	6.0 va	224	12/99 – 12/06		4187
TAHOE (GMT900)	5.3	239	01.07 - 12.13		4184
TAHOE (K2UC)	5.3 4WD	265	07.14 -		4184
TAHOE / GRAND BLAZER / SILVERADO (GMT400) Closed SUV	5.7 (LO5)	147	10.94-09.95	3868	
TAHOE / GRAND BLAZER / SILVERADO (GMT400) Closed SUV	5.7 (LO5)	184	10.95-09.96	3868	
TAHOE / GRAND BLAZER / SILVERADO (GMT400) Closed SUV	5.7 AWD (LO5)	147	10.94-09.95	3868	
TAHOE / GRAND BLAZER / SILVERADO (GMT400) Closed SUV	5.7 AWD (LO5)	184	10.95-09.96	3868	
TAHOE / GRAND BLAZER / SILVERADO (GMT400) Closed SUV	5.7 LS	190	10.94-	3868	
TAHOE / GRAND BLAZER / SILVERADO (GMT400) Closed SUV	5.7 V8 (LO5)	190	10.94-09.96	3868	
TAHOE / GRAND BLAZER / SILVERADO (GMT400) Closed SUV	6.5 TDiC (L56)	135	10.94-09.96	3868	
TAHOE / GRAND BLAZER / SILVERADO (GMT400) Closed SUV	6.5 TDiC AWD (L56)	135	10.94-09.96	3868	
TRAILBLAZER (KC_)	4.2 AWD	217	08.05 - 09.08	4218	
TRAILBLAZER (KC_)	4.2 AWD	201	09/01-09/08		4219
TRAILBLAZER (KC_)	4.2 AWD	201	09/01-09/08	4221	
TRAILBLAZER (KC_)	4.2 AWD	217	08/05-09/08		4219
TRAILBLAZER (KC_)	4.2 AWD	217	08/05-09/08	4221	
TRAILBLAZER (KC_)	6.0 AWD	295	08/05-12/07		4219
TRAVERSE	3.6	210	09/08-		4219
TRAVERSE	3.6	215	09/08-		4219
TRAX	14	103	12/12 -	4008	
TRAX	16	85	12/12 -	4008	
TRAX	18	103	03/13 -	4008	
TRAX	1.4	103	12/12 -	4014	
TRAX	1.4 AWD	103	12/12 -	4014	
TRAX	1.4 AWD	103	12/12 -	4008	
TRAX	1.4 LPG	103	04/13 -	4014	
TRAX	1.4 LPG	103	04/13 -	4008	
TRAX	1.6	85	12/12 -	4014	
TRAX	1.7 TD	96	12/12 -	4014	
TRAX	1.7 TD	96	12/12 -	4008	
TRAX	1.7 TD AWD	96	12/12 -	4014	
TRAX	1.7 TD AWD	96	12/12 -	4008	
TRAX	1.8	103	03/13 -	4014	
VECTRA	20	81	03/96 – 12/05	3470	
VECTRA	20	81	03/96 – 12/05	3505	
VECTRA	20	81	03/96 – 12/05	3615	
VECTRA	20	81	03/96 – 12/05	3665	
VECTRA	20	81	03/96 – 12/05	3717	
VECTRA	20	100	03/96 – 04/98	3687	
VECTRA	22	102	05/98 – 12/05	3665	
VECTRA	22	102	05/98 – 12/05	3717	
VECTRA	22	108	04/02 – 04/04		3853/1
VECTRA	22	114	01/05 – 07/06		3853/1
VECTRA	28	184	10/06 -		3853/1
VECTRA	28	188	11/05 – 09/06		3853/1
VIVA	18	90	09/03 – 03/08		4040
VIVA	18	90	09/03 – 03/08	4042	
VIVA	18	92	09/03 – 03/08		4040
VIVA	18	92	09/03 03/08	4042	
VIVANT	16	77	01/05 -	3687	

MAKE & MODEL		KW	YEAR		
CHEVROLET					
VIVANT	16	78	08/01 -	3687	
VIVANT	18	72	05/00 -	3687	
VIVANT	20	89	08/00 -	3687	
VIVANT	2.0 CX	89	01/05 -	3687	
VOLT	EV 150	111	11/11 -	4014	
VOLT	EV 150	111	11/11 -	4008	
ZAFIRA	22	110	07/05 -	4042	
ZAFIRA (F75)	18	92	07/00 – 06/05		4040
ZAFIRA (F75)	18	92	07/00 – 06/05	4042	
ZAFIRA (F75)	20	85	04/01 – 07/04		4040
ZAFIRA (F75)	20	85	04/01 – 07/04	4042	
ZAFIRA (F75)	20	89	08/04 – 12/06		4040
ZAFIRA (F75)	20	89	08/04 – 12/06	4042	
ZAFIRA (F75)	20	100	04/01 – 07/12		4040
ZAFIRA (F75)	20	100	04/01 – 07/12	4042	
CHRYSLER					
300 C	36	210	09/11 -	4006	
300 C	36	210	09/11 -		4018
300 C	36	215	07/11 -	4006	
300 C	36	215	07/11 -		4018
300 C	3.0 CRD	176	09/11 -	4198	
300 C	3.0 CRD	176	09/11 -	4006	
300 C	3.0 CRD	176	09/11 -		4018
300 C (LX)	27	130	01/07 – 11/12	4006	
300 C (LX)	27	130	01/07 – 11/12		4018
300 C (LX)	27	142	09/04 – 11/12	4006	
300 C (LX)	27	142	09/04 – 11/12		4018
300 C (LX)	35	183	09/04 – 11/12	4006	
300 C (LX)	35	183	09/04 – 11/12		4018
300 C (LX)	35	186	01/05 – 12/10	4006	
300 C (LX)	35	186	01/05 – 12/10		4018
300 C (LX)	57	250	09/04 – 12/08		4018
300 C (LX)	2.7	130	01/07 – 11/12	4198	
300 C (LX)	2.7	142	09/04 – 11/12	4198	
300 C (LX)	3.0 CRD	160	09/05 – 11/12	4198	
300 C (LX)	3.0 CRD	160	09/05 – 11/12	4006	
300 C (LX)	3.0 CRD	160	09/05 – 11/12		4018
300 C (LX)	3.0 V6 CRD	155	11/10 – 11/12	4198	
300 C (LX)	3.0 V6 CRD	155	11/10 – 11/12	4006	
300 C (LX)	3.0 V6 CRD	155	11/10 – 11/12		4018
300 C (LX)	3.5	183	09/04 – 11/12	4198	
300 C (LX)	3.5	186	01/05 – 12/10	4198	
300 C (LX)	5.7	250	09/04 – 12/08	4198	
300 C Touring (LX)	27	130	01/07 – 12/10	4006	
300 C Touring (LX)	27	130	01/07 – 12/10		4018
300 C Touring (LX)	27	142	09/04 – 12/10	4006	
300 C Touring (LX)	27	142	09/04 – 12/10		4018
300 C Touring (LX)	35	183	09/04 – 12/10	4006	
300 C Touring (LX)	35	183	09/04 – 12/10		4018
300 C Touring (LX)	57	250	09/04 – 12/10		4018
300 C Touring (LX)	2.7	130	01/07 – 12/10	4198	
300 C Touring (LX)	2.7	142	09/04 – 12/10	4198	
300 C Touring (LX)	3.0 CRD	160	09/05 – 12/10	4198	
300 C Touring (LX)	3.0 CRD	160	09/05 – 12/10	4006	
300 C Touring (LX)	3.0 CRD	160	09/05 – 12/10		4018
300 C Touring (LX)	3.5	183	09/04 – 12/10	4198	
300 C Touring (LX)	3.5 AWD	183	09/04 – 12/10	4198	
300 C Touring (LX)	3.5 AWD	183	09/04 – 12/10	4006	
300 C Touring (LX)	3.5 AWD	183	09/04 – 12/10		4018
300 C Touring (LX)	5.7	250	09/04 – 12/10	4198	
300 C Touring (LX)	5.7 AWD	250	04/05 – 12/10	4198	
300 C Touring (LX)	5.7 AWD	250	04/05 – 12/10		4018
300 M (LR)	2.7 V6 24V	149	11/98 – 08/00	4197	
300 M (LR)	2.7 V6 24V	150	08/00 – 09/04	4197	
300 M (LR)	3.5 V6 24V	185	08/00 – 09/04	4197	
300 M (LR)	3.5 V6 24V	187	07/98 – 08/00	4197	
300C	27	152	10/06 – 12/08		4018
300C	35	189	10/06 – 12/08		4018
300C	57	252	10/06 – 01/12		4018
300C	2.7	152	10/06 – 12/08	4198	
300C	3.5	189	10/06 – 12/08	4198	

MAKE & MODEL		KW	YEAR		
CHRYSLER					
300C	5.7	252	10/06 – 01/12	4198	
ASPEN (HG)	4.7	172	09.06 - 12.07		4329
ASPEN (HG)	4.7	226	09.07 - 12.09		4329
ASPEN (HG)	4.7 4WD	172	09.06 - 12.07		4329
ASPEN (HG)	4.7 AWD	226	01.08 -		4329
ASPEN (HG)	4.7 Flexfuel	172	09.06 - 12.07		4329
ASPEN (HG)	4.7 Flexfuel	226	09.08 - 12.09		4329
ASPEN (HG)	4.7 Flexfuel 4WD	172	09.06 - 12.07		4329
ASPEN (HG)	4.7 Flexfuel 4WD	226	09.07 - 12.09		4329
ASPEN (HG)	5.7	250	09.06 - 12.08		4329
ASPEN (HG)	5.7	254	02.06 - 12.09		4329
ASPEN (HG)	5.7	280	04.08 - 12.08		4329
ASPEN (HG)	5.7	287	09.08 - 12.09		4329
ASPEN (HG)	5.7	293	04.08 -		4329
ASPEN (HG)	5.7 4x4	293	04.08 -		4329
ASPEN (HG)	5.7 AWD	250	09.08 -		4329
ASPEN (HG)	5.7 AWD	254	02.06 - 12.09		4329
ASPEN (HG)	5.7 AWD	280	04.08 - 12.08		4329
ASPEN (HG)	5.7 Hybrid AWD	246	12.08 -		4329
CARAVAN	38	142	10/07 -	4005	
CIRRUS	20	104	09/00 – 04/07		4108
CIRRUS	24	112	09/00 – 04/07		4108
CONCORDE	2.7 LX	149	10/97 – 09/03	4197	
CONCORDE	3.3 LX	120	10/92 – 09/97	4197	
CONCORDE	3.5 LX	174	10/97 – 09/03	4197	
CONCORDE	3.5 LX Supercharged	186	10/97 – 09/03	4197	
CROSSFIRE	32	160	07/03 – 12/08		3676
CROSSFIRE	32	160	07/03 – 12/08	3863	
CROSSFIRE	SRT-6	246	09/04 – 12/07		3581
CROSSFIRE Roadster	32	160	05/04 – 12/08		3676
CROSSFIRE Roadster	32	160	05/04 – 12/08	3863	
CROSSFIRE Roadster	SRT-6	246	09/04 – 12/06		3581
DAYTONA Coupe	2.2 i Turbo	130	09/86 – 12/90	3867	
DAYTONA Coupe	2.5 i Turbo	110	01/89 – 10/92	3867	
DELTA	2.0 D Multijet	121	08/11 -	4121	
GALANT IV	GD		04/76 -	3709	
GALANT IV	GD		04/76 -	3709	
GALANT III (GC)	GC		07/74 -	3709	
GALANT III (GC)	GC		07/74 -	3709	
GRAND VOYAGER V (RT)	33	125	01/08 -	4005	
GRAND VOYAGER V (RT)	36	208	02/11 -	4005	
GRAND VOYAGER V (RT)	2.8 CRD	120	10/07 -	4005	
GRAND VOYAGER V (RT)	2.8 CRD	120	10/07 -	4005	
GRAND VOYAGER V (RT)	2.8 CRD	132	09/12 -	4005	
LANCER (LA)	LC, LB, LA All models		09/74 -	3709	
LE BARON Convertible	2.2 i Turbo	109	09/86 – 12/90	3867	
LE BARON Convertible	2.2 i Turbo	130	09/86 – 12/90	3867	
LE BARON Convertible	2.5 i	75	09/86 – 12/93	3867	
LE BARON Convertible	2.5 i Turbo	112	01/89 – 12/93	3867	
LE BARON Convertible	3.0 i V6	105	01/90 – 12/96	3867	
LE BARON Coupe	3.0 i V6	105	01/90 – 12/93	3867	
LE BARON Saloon	2.2 i	69	09/89 – 12/94	3867	
LE BARON Saloon	2.2 i Turbo	130	09/89 – 01/91	3867	
LE BARON Saloon	2.5 i	75	01/89 – 12/94	3867	
LE BARON Saloon	2.5 i Turbo	112	01/89 – 12/94	3867	
LE BARON Saloon	3.0 i V6	105	01/90 – 12/94	3867	
NEON (PL)	1.8 16V	85	09/97 – 08/99	4197	
NEON (PL)	2.0 16V	98	05/94 – 08/99	4197	
NEON (PL)	2.0 16V	107	06/94 – 08/99	4197	
NEON (PL)	2.0 16V	109	04/96 – 08/99	4197	
NEON II	16	85	11/01 – 12/06	4197	
NEON II	18	91	01/00 – 12/01	4197	
NEON II	2.0 16V	97	10/02 – 12/06	4197	
NEON II	2.0 16V	98	08/99 – 12/06	4197	
NEON II	2.0 16V R/T	110	10/01 – 12/06	4197	
NEW YORKER	3.3	110	10/89 – 12/93	3867	
NEW YORKER	3.5 i 24V	155	04/93 – 09/98	4197	
SARATOGA	2.5	72	10/89 – 09/91	3867	
SARATOGA	3.0	105	09/89 – 12/95	3867	
SCORPION	GE,GH,GJ,GK,GL		01/78 -	3376	
SEBRING	20	115	03/08 – 12/08	3982	

MAKE & MODEL		KW	YEAR		
CHRYSLER					
SEBRING	24	127	03/08 – 12/08	3982	
SEBRING	27	142	03/08 – 12/08	3982	
SEBRING (JR)	20	104	04/01 – 06/07		4108
SEBRING (JR)	24	105	04/01 – 06/07		4108
SEBRING (JR)	24	112	04/01 – 06/07		4108
SEBRING (JR)	2.7 V6 24V	149	04/01 – 06/07		4108
SEBRING (JS)	2.0 CRD	103	07/07 – 12/10		3893
SEBRING (JS)	2.0 CRD	103	07/07 – 12/10	3955	
SEBRING (JS)	2.0 CRD	103	07/07 – 12/10		4106
SEBRING (JS)	2.0 VVT	115	07/07 – 12/10		3893
SEBRING (JS)	2.0 VVT	115	07/07 – 12/10	3955	
SEBRING (JS)	2.0 VVT	115	07/07 – 12/10		4106
SEBRING (JS)	2.4 VVT	125	07/07 – 12/10		3893
SEBRING (JS)	2.4 VVT	125	07/07 – 12/10	3955	
SEBRING (JS)	2.4 VVT	125	07/07 – 12/10		4106
SEBRING (JS)	2.7 VVT	137	07/07 – 09/10		3893
SEBRING (JS)	2.7 VVT	137	07/07 – 09/10	3955	
SEBRING (JS)	2.7 VVT	137	07/07 – 09/10		4106
SEBRING (JS)	2.7 VVT	141	09/06 – 12/10		3893
SEBRING (JS)	2.7 VVT	141	09/06 – 12/10	3955	
SEBRING (JS)	2.7 VVT	141	09/06 – 12/10		4106
SEBRING (JS)	3.5 AWD	175	11/07 – 12/10		3893
SEBRING (JS)	3.5 AWD	175	11/07 – 12/10	3955	
SEBRING (JS)	3.5 AWD	175	11/07 – 12/10		4106
SEBRING Convertible (JR)	20	104	04/01 – 06/07		4108
SEBRING Convertible (JR)	24	112	04/01 – 06/07		4108
SEBRING Convertible (JR)	2.7 V6 24V	149	04/01 – 06/07		4108
SEBRING Convertible (JS)	27	137	07/07 – 12/10		3893
SEBRING Convertible (JS)	27	137	07/07 – 12/10	3955	
SEBRING Convertible (JS)	2.0 CRD	103	07/07 – 12/10		3893
SEBRING Convertible (JS)	2.0 CRD	103	07/07 – 12/10	3955	
SEBRING Convertible (JS)	2.4 VVT	125	07/07 – 12/10		3893
SEBRING Convertible (JS)	2.4 VVT	125	07/07 – 12/10	3955	
SEBRING Convertible (JS)	2.7 VVT	141	07/07 – 12/10		3893
SEBRING Convertible (JS)	2.7 VVT	141	07/07 – 12/10	3955	
SEBRING Coupe (FJ)	2.5 LE	120	05/95 – 12/96	3622	
SEBRING Coupe (FJ)	2.5 LE	120	05/95 – 12/96		4108
SIGMA (GE)	GE All models		10/77 -	3709	
VISION	3.5 TSi	155	09/93 – 12/97	4197	
VOYAGER I (AS)	3.0	101	10/87 – 09/90	3867	
VOYAGER I (AS)	3.3	112	10/89 – 09/90	3867	
VOYAGER II (ES)	2.5 i	72	01/91 – 09/95	3867	
VOYAGER II (ES)	2.5 i	74	08/90 – 09/95	3867	
VOYAGER II (ES)	2.5 TD	85	01/92 – 09/95	3867	
VOYAGER II (ES)	2.5 TD	87	01/92 – 09/95	3867	
VOYAGER II (ES)	3.0	104	10/90 – 09/95	3867	
VOYAGER II (ES)	3.0 i	108	01/91 – 09/95	3867	
VOYAGER II (ES)	3.3 i	110	08/90 – 09/95	3867	
VOYAGER II (ES)	3.3 i	120	08/90 – 09/95	3867	
VOYAGER II (ES)	3.3 i AWD	110	08/90 – 09/95	3867	
VOYAGER II (ES)	3.3 i AWD	120	08/90 – 09/95	3867	
VOYAGER III (GS)	30	112	01/95 – 03/01	4197	
VOYAGER III (GS)	2.0 i	98	01/95 – 03/01	4197	
VOYAGER III (GS)	2.4 AWD	111	02/97 – 03/01	4197	
VOYAGER III (GS)	2.4 i	111	01/95 – 03/01	4197	
VOYAGER III (GS)	2.5 TD	85	01/95 – 03/01	4197	
VOYAGER III (GS)	2.5 TDiC AWD	85	10/95 – 03/01	4197	
VOYAGER III (GS)	3.3 i	116	01/95 – 03/01	4197	
VOYAGER III (GS)	3.8 i AWD	122	01/95 – 03/01	4197	
VOYAGER III (GS)	3.8 i AWD	131	01/95 – 03/01	4197	
VOYAGER IV (RG, RS)	38	160	02/00 – 12/08	4012	
VOYAGER IV (RG, RS)	2.5 CRD	105	02/00 – 12/08	4012	
VOYAGER IV (RG, RS)	3.3 AWD	128	02/00 – 12/08	4012	
VOYAGER IV (RG, RS)	3.8 AWD	160	02/00 – 12/08	4012	
CITROËN					
AX	1.4 GTI		91-	3487	
AX	1.5D		93-	3487	
AX (ZA-_)	14	44	12/86 – 12/88	3380	
AX (ZA-_)	14	44	12/86 – 12/88	3381	
AX (ZA-_)	14	49	06/88 – 12/89	3380	

MAKE & MODEL		KW	YEAR		
CITROËN					
AX (ZA-_)	14	49	06/88 – 12/89	3381	
AX (ZA-_)	14	55	04/87 – 04/97	3380	
AX (ZA-_)	14	55	04/87 – 04/97	3381	
AX (ZA-_)	14	61	01/88 – 12/92	3380	
AX (ZA-_)	14	61	01/88 – 12/92	3381	
AX (ZA-_)	14	62	01/88 – 12/92	3380	
AX (ZA-_)	14	62	01/88 – 12/92	3381	
AX (ZA-_)	1.4 4x4	48	08/92 – 04/94	3380	
AX (ZA-_)	1.4 4x4	48	08/92 – 04/94	3381	
AX (ZA-_)	1.4 4x4	62	09/86 – 07/92	3380	
AX (ZA-_)	1.4 4x4	62	09/86 – 07/92	3381	
AX (ZA-_)	1.4 Allure	48	08/92 – 04/94	3380	
AX (ZA-_)	1.4 Allure	48	08/92 – 04/94	3381	
AX (ZA-_)	1.4 D 4x4	39	06/91 – 07/92	3380	
AX (ZA-_)	1.4 D 4x4	39	06/91 – 07/92	3381	
AX (ZA-_)	1.4 GTi	66	08/91 – 12/96	3556	
AX (ZA-_)	1.4 GTi	69	06/91 – 12/96	3556	
AX (ZA-_)	1.4 GTi	74	06/91 – 12/92	3556	
AX (ZA-_)	11 4x4	40	06/91 – 07/92	3380	
AX (ZA-_)	11 4x4	40	06/91 – 07/92	3381	
AX (ZA-_)	14 4x4	55	08/91 – 12/96	3380	
AX (ZA-_)	14 4x4	55	08/91 – 12/96	3381	
AX (ZA-_)	14 D	38	09/88 – 06/92	3380	
AX (ZA-_)	14 D	38	09/88 – 06/92	3381	
AX (ZA-_)	15 D	40	08/94 - 12/97	3380	
AX (ZA-_)	15 D	40	08/94 - 12/97	3381	
AX (ZA-_)	15 D	43	08/94 – 12/97	3380	
AX (ZA-_)	15 D	43	08/94 – 12/97	3381	
BERLINGO (B9)	16	66	04/08 -	3964	
BERLINGO (B9)	16	66	04/08 -		3971
BERLINGO (B9)	16	80	04/08 -	3964	
BERLINGO (B9)	16	80	04/08 -		3971
BERLINGO (B9)	1.2 PureTech 110	81	02/16 -	3964	
BERLINGO (B9)	1.2 PureTech 110	81	02/16 -		3971
BERLINGO (B9)	1.6 BlueHDi 100	73	12/14 -	3964	
BERLINGO (B9)	1.6 BlueHDi 100	73	12/14 -		3971
BERLINGO (B9)	1.6 BlueHDi 120	88	12/14 -	3964	
BERLINGO (B9)	1.6 BlueHDi 120	88	12/14 -		3971
BERLINGO (B9)	1.6 BlueHDi 75	55	04/15 -	3964	
BERLINGO (B9)	1.6 BlueHDi 75	55	04/15 -		3971
BERLINGO (B9)	1.6 HDi 110	80	04/08 -	3964	
BERLINGO (B9)	1.6 HDi 110	80	04/08 -		3971
BERLINGO (B9)	1.6 HDi 110	82	07/10 -	3964	
BERLINGO (B9)	1.6 HDi 110	82	07/10 -		3971
BERLINGO (B9)	1.6 HDi 115	84	07/10 -	3964	
BERLINGO (B9)	1.6 HDi 115	84	07/10 -		3971
BERLINGO (B9)	1.6 HDi 115 4x4	84	02/12 -	3964	
BERLINGO (B9)	1.6 HDi 115 4x4	84	02/12 -		3971
BERLINGO (B9)	1.6 HDi 75	55	04/08 -	3964	
BERLINGO (B9)	1.6 HDi 75	55	04/08 -		3971
BERLINGO (B9)	1.6 HDi 90	66	04/08 -	3964	
BERLINGO (B9)	1.6 HDi 90	66	04/08 -		3971
BERLINGO (B9)	1.6 HDi 90	68	07/10 -	3964	
BERLINGO (B9)	1.6 HDi 90	68	07/10 -		3971
BERLINGO (B9)	1.6 HDi 90 4x4	66	02/12 -	3964	
BERLINGO (B9)	1.6 HDi 90 4x4	66	02/12 -		3971
BERLINGO (B9)	1.6 VTi 120	88	11/09 -	3964	
BERLINGO (B9)	1.6 VTi 120	88	11/09 -		3971
BERLINGO (B9)	1.6 VTi 95	72	07/10 -	3964	
BERLINGO (B9)	1.6 VTi 95	72	07/10 -		3971
BERLINGO (MF)	14	53	11/02 – 10/05	3820	
BERLINGO (MF)	1.1 i (MFHDZ, MFHFX)	44	07/96 -	3636	
BERLINGO (MF)	1.1 i (MFHDZ, MFHFX)	44	07/96 -	3644	
BERLINGO (MF)	1.1 i (MFHDZ, MFHFX)	44	07/96 -	3820	
BERLINGO (MF)	1.4 bivalent	48	11/02 -		3529/1
BERLINGO (MF)	1.4 bivalent	48	11/02 -	3820	
BERLINGO (MF)	1.4 bivalent	53	11/02 – 10/05	3820	
BERLINGO (MF)	1.4 i (MFKFX, MFKFW)	55	07/96 – 10/08		3529/1
BERLINGO (MF)	1.4 i (MFKFX, MFKFW)	55	07/96 – 10/08	3636	
BERLINGO (MF)	1.4 i (MFKFX, MFKFW)	55	07/96 10/08	3644	
BERLINGO (MF)	1.4 i (MFKFX, MFKFW)	55	07/96 – 10/08	3820	

MAKE & MODEL		KW	YEAR		
CITROËN					
BERLINGO (MF)	1.4 i bivalent (MFKFW)	55	04/03 -		3529/1
BERLINGO (MF)	1.4 i bivalent (MFKFW)	55	04/03 -	3820	
BERLINGO (MF)	1.6 16V (MFNFU)	80	10/00 -		3529/1
BERLINGO (MF)	1.6 16V (MFNFU)	80	10/00 -	3820	
BERLINGO (MF)	1.6 16V (MFNFU)	81	11/02 -	3820	
BERLINGO (MF)	1.6 HDI 110	80	08/05 -		3529/1
BERLINGO (MF)	1.6 HDI 110	80	08/05 -	3820	
BERLINGO (MF)	1.6 HDI 75 (MF9HW)	55	07/05 -		3529/1
BERLINGO (MF)	1.6 HDI 75 (MF9HW)	55	07/05 -	3820	
BERLINGO (MF)	1.6 HDI 90 (MF9HX)	66	07/05 -		3529/1
BERLINGO (MF)	1.6 HDI 90 (MF9HX)	66	07/05 -	3820	
BERLINGO (MF)	1.8 D (MFA9A)	43	07/98 -	3636	
BERLINGO (MF)	1.8 D (MFA9A)	43	07/98 -	3644	
BERLINGO (MF)	1.8 D (MFA9A)	43	07/98 -	3820	
BERLINGO (MF)	1.8 i (MFLFX)	66	05/97 -		3529/1
BERLINGO (MF)	1.8 i (MFLFX)	66	05/97 -	3636	
BERLINGO (MF)	1.8 i (MFLFX)	66	05/97 -	3644	
BERLINGO (MF)	1.8 i (MFLFX)	66	05/97 -	3820	
BERLINGO (MF)	1.8 i 4WD (MFLFX)	66	04/97 -		3529/1
BERLINGO (MF)	1.8 i 4WD (MFLFX)	66	04/97 -	3636	
BERLINGO (MF)	1.8 i 4WD (MFLFX)	66	04/97 -	3644	
BERLINGO (MF)	1.8 i 4WD (MFLFX)	66	04/97 -	3820	
BERLINGO (MF)	1.9 D (MFDJY)	50	07/96 -		3529/1
BERLINGO (MF)	1.9 D (MFDJY)	50	07/96 -	3820	
BERLINGO (MF)	1.9 D (MFDJY)	51	07/96 – 10/99	3820	
BERLINGO (MF)	1.9 D (MFWJZ)	51	07/98 – 10/05		3529/1
BERLINGO (MF)	1.9 D (MFWJZ)	51	07/98 – 10/05	3820	
BERLINGO (MF)	1.9 D 4WD (MFWJZ)	51	07/98 -		3529/1
BERLINGO (MF)	1.9 D 4WD (MFWJZ)	51	07/98 -	3820	
BERLINGO (MF)	2.0 HDI 90 (MFRHY)	66	12/99 -		3529/1
BERLINGO (MF)	2.0 HDI 90 (MFRHY)	66	12/99 -	3636	
BERLINGO (MF)	2.0 HDI 90 (MFRHY)	66	12/99 -	3644	
BERLINGO (MF)	2.0 HDI 90 (MFRHY)	66	12/99 -	3820	
BERLINGO (MF)	2.0 HDi 4x4 (MFRHY)	66	11/02 – 10/05		3529/1
BERLINGO (MF)	2.0 HDi 4x4 (MFRHY)	66	11/02 – 10/05	3820	
BERLINGO (MF)	Electric	28	01/98 -	3820	
BERLINGO (MF)	electrique	16	01/00 -	3636	
BERLINGO (MF)	electrique	16	01/00 -	3644	
BERLINGO (MF)	electrique	16	01/00 -	3820	
BERLINGO Box (B9)	16	66	04/08 -	3964	
BERLINGO Box (B9)	16	66	04/08 -		3971
BERLINGO Box (B9)	16	80	04/08 -	3964	
BERLINGO Box (B9)	16	80	04/08 -		3971
BERLINGO Box (B9)	1.6 BlueHDi 100	73	12/14 -	3964	
BERLINGO Box (B9)	1.6 BlueHDi 100	73	12/14 -		3971
BERLINGO Box (B9)	1.6 BlueHDi 100 4x4	73	12/14 -	3964	
BERLINGO Box (B9)	1.6 BlueHDi 100 4x4	73	12/14 -		3971
BERLINGO Box (B9)	1.6 BlueHDi 120	88	12/14 -	3964	
BERLINGO Box (B9)	1.6 BlueHDi 120	88	12/14 -		3971
BERLINGO Box (B9)	1.6 HDi / BlueHDi 75	55	07/10 -	3964	
BERLINGO Box (B9)	1.6 HDi / BlueHDi 75	55	07/10 -		3971
BERLINGO Box (B9)	1.6 HDi 110	80	04/08 -	3964	
BERLINGO Box (B9)	1.6 HDi 110	80	04/08 -		3971
BERLINGO Box (B9)	1.6 HDi 110	82	07/10 -	3964	
BERLINGO Box (B9)	1.6 HDi 110	82	07/10 -		3971
BERLINGO Box (B9)	1.6 HDi 115	84	07/10 -	3964	
BERLINGO Box (B9)	1.6 HDi 115	84	07/10 -		3971
BERLINGO Box (B9)	1.6 HDi 115 4x4	84	02/12 -	3964	
BERLINGO Box (B9)	1.6 HDi 115 4x4	84	02/12 -		3971
BERLINGO Box (B9)	1.6 HDi 75	55	04/08 -	3964	
BERLINGO Box (B9)	1.6 HDi 75	55	04/08 -		3971
BERLINGO Box (B9)	1.6 HDi 75 4x4	55	02/12 -	3964	
BERLINGO Box (B9)	1.6 HDi 75 4x4	55	02/12 -		3971
BERLINGO Box (B9)	1.6 HDi 90	66	07/10 -	3964	
BERLINGO Box (B9)	1.6 HDi 90	66	07/10 -		3971
BERLINGO Box (B9)	1.6 HDi 90	68	07/10 -	3964	
BERLINGO Box (B9)	1.6 HDi 90	68	07/10 -		3971
BERLINGO Box (B9)	1.6 HDi 90 16V	66	04/08 -	3964	
BERLINGO Box (B9)	1.6 HDi 90 16V	66	04/08 -		3971
BERLINGO Box (B9)	1.6 HDi 90 4x4	66	02/12 -	3964	
BERLINGO Box (B9)	1.6 HDi 90 4x4	66	02/12 -		3971

MAKE & MODEL		KW	YEAR		
CITROËN					
BERLINGO Box (B9)	1.6 VTi 120	88	11/09 -	3964	
BERLINGO Box (B9)	1.6 VTi 120	88	11/09 -		3971
BERLINGO Box (B9)	1.6 VTi 95	72	07/10 -	3964	
BERLINGO Box (B9)	1.6 VTi 95	72	07/10 -		3971
BERLINGO Box (B9)	Electric	35	01/13 -	3964	
BERLINGO Box (B9)	Electric	35	01/13 -		3971
BERLINGO Box (B9)	Electric	42	09/11 -	3964	
BERLINGO Box (B9)	Electric	42	09/11 -		3971
BERLINGO Box (B9)	Electric	49	03/14 -	3964	
BERLINGO Box (B9)	Electric	49	03/14 -		3971
BERLINGO Box (M_)	2.0 HDI 90 (MBRHY, MCRHY)	66	12/99 -	3644	
BERLINGO Box (M_)	2.0 HDI 90 (MBRHY, MCRHY)	66	12/99 -		3529/1
BERLINGO Box (M_)	2.0 HDI 90 (MBRHY, MCRHY)	66	12/99 -	3820	
BERLINGO Box (M_)	1.1 i (MAHDZ, MBHDZ, MBHFX)	44	07/96 -		3529/1
BERLINGO Box (M_)	1.1 i (MAHDZ, MBHDZ, MBHFX)	44	07/96 -	3636	
BERLINGO Box (M_)	1.1 i (MAHDZ, MBHDZ, MBHFX)	44	07/96 -	3644	
BERLINGO Box (M_)	1.1 i (MAHDZ, MBHDZ, MBHFX)	44	07/96 -	3820	
BERLINGO Box (M_)	1.4 bivalent	48	11/02 -		3529/1
BERLINGO Box (M_)	1.4 bivalent	48	11/02 -	3820	
BERLINGO Box (M_)	1.4 CNG	48	11/02 -		3529/1
BERLINGO Box (M_)	1.4 CNG	48	11/02 -	3636	
BERLINGO Box (M_)	1.4 CNG	48	11/02 -	3644	
BERLINGO Box (M_)	1.4 CNG	48	11/02 -	3820	
BERLINGO Box (M_)	1.4 i (MBKFX, MBKFW)	55	07/96 -		3529/1
BERLINGO Box (M_)	1.4 i (MBKFX, MBKFW)	55	07/96 -	3636	
BERLINGO Box (M_)	1.4 i (MBKFX, MBKFW)	55	07/96 -	3644	
BERLINGO Box (M_)	1.4 i (MBKFX, MBKFW)	55	07/96 -	3820	
BERLINGO Box (M_)	1.4 i bivalent (MBKFW)	55	04/03 -		3529/1
BERLINGO Box (M_)	1.4 i bivalent (MBKFW)	55	04/03 -	3820	
BERLINGO Box (M_)	1.6 16V	81	08/05 – 12/07		3529/1
BERLINGO Box (M_)	1.6 16V	81	08/05 – 12/07	3820	
BERLINGO Box (M_)	1.6 16V (MBNFU)	80	10/00 -		3529/1
BERLINGO Box (M_)	1.6 16V (MBNFU)	80	10/00 -	3820	
BERLINGO Box (M_)	1.6 HDI 75 (MB9HW)	55	07/05 -		3529/1
BERLINGO Box (M_)	1.6 HDI 75 (MB9HW)	55	07/05 -	3820	
BERLINGO Box (M_)	1.6 HDI 90 (MB9HX, MC9HX)	66	07/05 -		3529/1
BERLINGO Box (M_)	1.6 HDI 90 (MB9HX, MC9HX)	66	07/05 -	3820	
BERLINGO Box (M_)	1.8 D (MBA9A, MCA9A)	43	07/96 -	3636	
BERLINGO Box (M_)	1.8 D (MBA9A, MCA9A)	43	07/96 -	3644	
BERLINGO Box (M_)	1.8 D (MBA9A, MCA9A)	43	07/96 -	3820	
BERLINGO Box (M_)	1.8 i	66	08/99 – 10/02	3636	
BERLINGO Box (M_)	1.8 i	66	08/99 10/02	3644	
BERLINGO Box (M_)	1.8 i	66	08/99 – 10/02	3820	
BERLINGO Box (M_)	1.9 D (MBDJY)	51	07/96 -		3529/1
BERLINGO Box (M_)	1.9 D (MBDJY)	51	07/96 -	3636	
BERLINGO Box (M_)	1.9 D (MBDJY)	51	07/96 -	3644	
BERLINGO Box (M_)	1.9 D (MBDJY)	51	07/96 -	3820	
BERLINGO Box (M_)	1.9 D 70 (MBWJZ, MCWJZ)	51	04/99 -		3529/1
BERLINGO Box (M_)	1.9 D 70 (MBWJZ, MCWJZ)	51	04/99 -	3636	
BERLINGO Box (M_)	1.9 D 70 (MBWJZ, MCWJZ)	51	04/99 -	3644	
BERLINGO Box (M_)	1.9 D 70 (MBWJZ, MCWJZ)	51	04/99 -	3820	
BERLINGO Box (M_)	1.9 D 70 4WD (MBWJZ, MCWJZ)	51	07/98 -		3529/1
BERLINGO Box (M_)	1.9 D 70 4WD (MBWJZ, MCWJZ)	51	07/98 -	3636	
BERLINGO Box (M_)	1.9 D 70 4WD (MBWJZ, MCWJZ)	51	07/98 -	3644	
BERLINGO Box (M_)	1.9 D 70 4WD (MBWJZ, MCWJZ)	51	07/98 -	3820	
BERLINGO Box (M_)	2.0 HDI 90 (MBRHY, MCRHY)	66	12/99 -	3636	
BERLINGO Box (M_)	2.0 HDI 90 4WD (MBRHY, MCRHY)	66	12/99 -		3529/1
BERLINGO Box (M_)	2.0 HDI 90 4WD (MBRHY, MCRHY)	66	12/99 -	3644	
BERLINGO Box (M_)	2.0 HDI 90 4WD (MBRHY, MCRHY)	66	12/99 -	3636	
BERLINGO Box (M_)	2.0 HDI 90 4WD (MBRHY, MCRHY)	66	11/00 -	3820	
BERLINGO Box (M_)	Electric	27	07/03 -	3820	
BERLINGO Platform/Chassis (B9)	1.6 BlueHDi 100	73	12/14 -	3964	
BERLINGO Platform/Chassis (B9)	1.6 BlueHDi 100	73	12/14 -		3971
BERLINGO Platform/Chassis (B9)	1.6 HDi 90	66	04/08 -	3964	
BERLINGO Platform/Chassis (B9)	1.6 HDi 90	66	04/08 -		3971
BERLINGO Platform/Chassis (B9)	1.6 HDi 92	68	07/10 -	3964	
BERLINGO Platform/Chassis (B9)	1.6 HDi 92	68	07/10 -		3971
BX (XB-_)	11	40	10/88 – 06/92	3492	
BX (XB-_)	11	40	10/88 – 06/92	3493	
BX (XB-_)	11	40	10/88 – 06/92	3494	
BX (XB-_)	11	40	10/88 – 06/92	3587	

MAKE & MODEL		KW	YEAR		
CITROËN					
BX (XB-_)	11	42	10/86 – 06/92	3492	
BX (XB-_)	11	42	10/86 – 06/92	3493	
BX (XB-_)	11	42	10/86 – 06/92	3494	
BX (XB-_)	11	42	10/86 – 06/92	3587	
BX (XB-_)	14	47	01/89 – 12/89	3492	
BX (XB-_)	14	47	01/89 – 12/89	3493	
BX (XB-_)	14	47	01/89 – 12/89	3494	
BX (XB-_)	14	47	01/89 – 12/89	3587	
BX (XB-_)	14	55	01/89 – 02/93	3492	
BX (XB-_)	14	55	01/89 – 02/93	3493	
BX (XB-_)	14	55	01/89 – 02/93	3494	
BX (XB-_)	14	55	01/89 – 02/93	3587	
BX (XB-_)	15	59	10/87 – 05/92	3492	
BX (XB-_)	15	59	10/87 – 05/92	3493	
BX (XB-_)	15	59	10/87 – 05/92	3494	
BX (XB-_)	15	59	10/87 – 05/92	3587	
BX (XB-_)	16	53	01/87 – 02/93	3492	
BX (XB-_)	16	53	01/87 – 02/93	3493	
BX (XB-_)	16	53	01/87 – 02/93	3494	
BX (XB-_)	16	53	01/87 – 02/93	3587	
BX (XB-_)	16	55	09/88 – 02/93	3492	
BX (XB-_)	16	55	09/88 – 02/93	3493	
BX (XB-_)	16	55	09/88 – 02/93	3494	
BX (XB-_)	16	55	09/88 – 02/93	3587	
BX (XB-_)	16	58	09/87 – 02/93	3492	
BX (XB-_)	16	58	09/87 – 02/93	3493	
BX (XB-_)	16	58	09/87 – 02/93	3494	
BX (XB-_)	16	58	09/87 – 02/93	3587	
BX (XB-_)	16	64	07/85 – 02/93	3492	
BX (XB-_)	16	64	07/85 – 02/93	3493	
BX (XB-_)	16	64	07/85 – 02/93	3494	
BX (XB-_)	16	64	07/85 – 02/93	3587	
BX (XB-_)	16	66	10/82 – 06/88	3492	
BX (XB-_)	16	66	10/82 – 06/88	3493	
BX (XB-_)	16	66	10/82 – 06/88	3494	
BX (XB-_)	16	66	10/82 – 06/88	3587	
BX (XB-_)	16	68	10/82 – 12/92	3492	
BX (XB-_)	16	68	10/82 – 12/92	3493	
BX (XB-_)	16	68	10/82 – 12/92	3494	
BX (XB-_)	16	68	10/82 – 12/92	3587	
BX (XB-_)	16	76	03/86 – 02/93	3492	
BX (XB-_)	16	76	03/86 – 02/93	3493	
BX (XB-_)	16	76	03/86 – 02/93	3494	
BX (XB-_)	16	76	03/86 – 02/93	3587	
BX (XB-_)	16	85	01/87 – 01/92	3492	
BX (XB-_)	16	85	01/87 – 01/92	3493	
BX (XB-_)	16	85	01/87 – 01/92	3494	
BX (XB-_)	16	85	01/87 – 01/92	3587	
BX (XB-_)	19	70	09/86 – 11/89	3492	
BX (XB-_)	19	70	09/86 – 11/89	3493	
BX (XB-_)	19	70	09/86 – 11/89	3494	
BX (XB-_)	19	70	09/86 – 11/89	3587	
BX (XB-_)	19	75	07/86 – 05/89	3492	
BX (XB-_)	19	75	07/86 – 05/89	3493	
BX (XB-_)	19	75	07/86 – 05/89	3494	
BX (XB-_)	19	75	07/86 – 05/89	3587	
BX (XB-_)	19	77	07/86 – 05/89	3492	
BX (XB-_)	19	77	07/86 – 05/89	3493	
BX (XB-_)	19	77	07/86 – 05/89	3494	
BX (XB-_)	19	77	07/86 – 05/89	3587	
BX (XB-_)	1.8 D	44	10/85 – 09/93	3492	
BX (XB-_)	1.8 D	44	10/85 – 09/93	3493	
BX (XB-_)	1.8 D	44	10/85 – 09/93	3494	
BX (XB-_)	1.8 D	44	10/85 – 09/93	3587	
BX (XB-_)	1.9 All-wheel Drive	92	02/92 – 06/94	3492	
BX (XB-_)	1.9 All-wheel Drive	92	02/92 – 06/94	3493	
BX (XB-_)	1.9 All-wheel Drive	92	02/92 – 06/94	3494	
BX (XB-_)	1.9 All-wheel Drive	92	02/92 – 06/94	3587	
BX (XB-_)	1.9 GTi	117	01/90 – 01/92	3492	
BX (XB-_)	1.9 GTi	117	01/90 – 01/92	3493	
BX (XB-_)	1.9 GTi	117	01/90 – 01/92	3494	

MAKE & MODEL		KW	YEAR		
CITROËN					
BX (XB-_)	1.9 GTi	117	01/90 – 01/92	3587	
BX (XB-_)	1.9 RD 4x4	52	01/87 – 01/92	3492	
BX (XB-_)	1.9 RD 4x4	52	01/87 – 01/92	3493	
BX (XB-_)	1.9 RD 4x4	52	01/87 – 01/92	3494	
BX (XB-_)	1.9 RD 4x4	52	01/87 – 01/92	3587	
BX (XB-_)	14 E	45	10/82 – 06/88	3492	
BX (XB-_)	14 E	45	10/82 – 06/88	3493	
BX (XB-_)	14 E	45	10/82 – 06/88	3494	
BX (XB-_)	14 E	45	10/82 – 06/88	3587	
BX (XB-_)	14 E	49	09/85 – 02/93	3492	
BX (XB-_)	14 E	49	09/85 – 02/93	3493	
BX (XB-_)	14 E	49	09/85 – 02/93	3494	
BX (XB-_)	14 E	49	09/85 – 02/93	3587	
BX (XB-_)	14 E	52	04/83 – 07/89	3492	
BX (XB-_)	14 E	52	04/83 – 07/89	3493	
BX (XB-_)	14 E	52	04/83 – 07/89	3494	
BX (XB-_)	14 E	52	04/83 – 07/89	3587	
BX (XB-_)	14 E	53	04/83 – 02/93	3492	
BX (XB-_)	14 E	53	04/83 – 02/93	3493	
BX (XB-_)	14 E	53	04/83 – 02/93	3494	
BX (XB-_)	14 E	53	04/83 – 02/93	3587	
BX (XB-_)	14 E	59	10/85 – 05/89	3492	
BX (XB-_)	14 E	59	10/85 – 05/89	3493	
BX (XB-_)	14 E	59	10/85 – 05/89	3494	
BX (XB-_)	14 E	59	10/85 – 05/89	3587	
BX (XB-_)	16 E	65	05/89 – 02/93	3492	
BX (XB-_)	16 E	65	05/89 – 02/93	3493	
BX (XB-_)	16 E	65	05/89 – 02/93	3494	
BX (XB-_)	16 E	65	05/89 – 02/93	3587	
BX (XB-_)	19 D	47	09/83 – 09/93	3492	
BX (XB-_)	19 D	47	09/83 – 09/93	3493	
BX (XB-_)	19 D	47	09/83 – 09/93	3494	
BX (XB-_)	19 D	47	09/83 – 09/93	3587	
BX (XB-_)	19 D	51	03/87 – 02/93	3492	
BX (XB-_)	19 D	51	03/87 – 02/93	3493	
BX (XB-_)	19 D	51	03/87 – 02/93	3494	
BX (XB-_)	19 D	51	03/87 – 02/93	3587	
BX (XB-_)	19 E	80	06/88 – 02/93	3492	
BX (XB-_)	19 E	80	06/88 – 02/93	3493	
BX (XB-_)	19 E	80	06/88 – 02/93	3494	
BX (XB-_)	19 E	80	06/88 – 02/93	3587	
BX (XB-_)	19 E 4x4	80	04/89 – 02/93	3492	
BX (XB-_)	19 E 4x4	80	04/89 – 02/93	3493	
BX (XB-_)	19 E 4x4	80	04/89 – 02/93	3494	
BX (XB-_)	19 E 4x4	80	04/89 – 02/93	3587	
BX (XB-_)	19 GTi	88	06/88 – 02/93	3492	
BX (XB-_)	19 GTi	88	06/88 – 02/93	3493	
BX (XB-_)	19 GTi	88	06/88 – 02/93	3494	
BX (XB-_)	19 GTi	88	06/88 – 02/93	3587	
BX (XB-_)	19 GTi	90	07/86 – 02/93	3492	
BX (XB-_)	19 GTi	90	07/86 – 02/93	3493	
BX (XB-_)	19 GTi	90	07/86 – 02/93	3494	
BX (XB-_)	19 GTi	90	07/86 – 02/93	3587	
BX (XB-_)	19 GTi 16V	108	03/88 – 02/93	3492	
BX (XB-_)	19 GTi 16V	108	03/88 – 02/93	3493	
BX (XB-_)	19 GTi 16V	108	03/88 – 02/93	3494	
BX (XB-_)	19 GTi 16V	108	03/88 – 02/93	3587	
BX (XB-_)	19 GTi 16V	116	09/87 – 12/88	3492	
BX (XB-_)	19 GTi 16V	116	09/87 – 12/88	3493	
BX (XB-_)	19 GTi 16V	116	09/87 – 12/88	3494	
BX (XB-_)	19 GTi 16V	116	09/87 – 12/88	3587	
BX (XB-_)	19 GTi 4x4	88	06/88 – 02/93	3492	
BX (XB-_)	19 GTi 4x4	88	06/88 – 02/93	3493	
BX (XB-_)	19 GTi 4x4	88	06/88 – 02/93	3494	
BX (XB-_)	19 GTi 4x4	88	06/88 – 02/93	3587	
BX (XB-_)	TRD Turbo	66	03/88 – 02/93	3492	
BX (XB-_)	TRD Turbo	66	03/88 – 02/93	3493	
BX (XB-_)	TRD Turbo	66	03/88 – 02/93	3494	
BX (XB-_)	TRD Turbo	66	03/88 – 02/93	3587	
BX Break (XB-_)	14	44	01/87 – 01/92	3492	
BX Break (XB-_)	14	44	01/87 – 01/92	3493	

MAKE & MODEL		KW	YEAR		
CITROËN					
BX Break (XB-_)	14	44	01/87 – 01/92	3494	
BX Break (XB-_)	14	44	01/87 – 01/92	3587	
BX Break (XB-_)	14	47	01/89 – 12/89	3492	
BX Break (XB-_)	14	47	01/89 – 12/89	3493	
BX Break (XB-_)	14	47	01/89 – 12/89	3494	
BX Break (XB-_)	14	47	01/89 – 12/89	3587	
BX Break (XB-_)	14	52	01/87 – 01/92	3492	
BX Break (XB-_)	14	52	01/87 – 01/92	3493	
BX Break (XB-_)	14	52	01/87 – 01/92	3494	
BX Break (XB-_)	14	52	01/87 – 01/92	3587	
BX Break (XB-_)	14	53	01/86 – 02/93	3492	
BX Break (XB-_)	14	53	01/86 – 02/93	3493	
BX Break (XB-_)	14	53	01/86 – 02/93	3494	
BX Break (XB-_)	14	53	01/86 – 02/93	3587	
BX Break (XB-_)	14	55	01/89 – 02/93	3492	
BX Break (XB-_)	14	55	01/89 – 02/93	3493	
BX Break (XB-_)	14	55	01/89 – 02/93	3494	
BX Break (XB-_)	14	55	01/89 – 02/93	3587	
BX Break (XB-_)	15	59	10/87 – 05/92	3492	
BX Break (XB-_)	15	59	10/87 – 05/92	3493	
BX Break (XB-_)	15	59	10/87 – 05/92	3494	
BX Break (XB-_)	15	59	10/87 – 05/92	3587	
BX Break (XB-_)	16	53	09/88 – 12/94	3492	
BX Break (XB-_)	16	53	09/88 – 12/94	3493	
BX Break (XB-_)	16	53	09/88 – 12/94	3494	
BX Break (XB-_)	16	53	09/88 – 12/94	3587	
BX Break (XB-_)	16	55	09/88 – 12/94	3492	
BX Break (XB-_)	16	55	09/88 – 12/94	3493	
BX Break (XB-_)	16	55	09/88 – 12/94	3494	
BX Break (XB-_)	16	55	09/88 – 12/94	3587	
BX Break (XB-_)	16	64	07/85 – 12/94	3492	
BX Break (XB-_)	16	64	07/85 – 12/94	3493	
BX Break (XB-_)	16	64	07/85 – 12/94	3494	
BX Break (XB-_)	16	64	07/85 – 12/94	3587	
BX Break (XB-_)	16	65	05/89 – 12/94	3492	
BX Break (XB-_)	16	65	05/89 – 12/94	3493	
BX Break (XB-_)	16	65	05/89 – 12/94	3494	
BX Break (XB-_)	16	65	05/89 – 12/94	3587	
BX Break (XB-_)	16	66	06/85 – 06/88	3492	
BX Break (XB-_)	16	66	06/85 – 06/88	3493	
BX Break (XB-_)	16	66	06/85 – 06/88	3494	
BX Break (XB-_)	16	66	06/85 – 06/88	3587	
BX Break (XB-_)	16	76	03/86 – 12/94	3492	
BX Break (XB-_)	16	76	03/86 – 12/94	3493	
BX Break (XB-_)	16	76	03/86 – 12/94	3494	
BX Break (XB-_)	16	76	03/86 – 12/94	3587	
BX Break (XB-_)	16	85	01/87 – 01/92	3492	
BX Break (XB-_)	16	85	01/87 – 01/92	3493	
BX Break (XB-_)	16	85	01/87 – 01/92	3494	
BX Break (XB-_)	16	85	01/87 – 01/92	3587	
BX Break (XB-_)	19	70	12/87 – 12/89	3492	
BX Break (XB-_)	19	70	12/87 – 12/89	3493	
BX Break (XB-_)	19	70	12/87 – 12/89	3494	
BX Break (XB-_)	19	70	12/87 – 12/89	3587	
BX Break (XB-_)	19	75	07/86 – 12/94	3492	
BX Break (XB-_)	19	75	07/86 – 12/94	3493	
BX Break (XB-_)	19	75	07/86 – 12/94	3494	
BX Break (XB-_)	19	75	07/86 – 12/94	3587	
BX Break (XB-_)	19	80	06/88 – 12/94	3492	
BX Break (XB-_)	19	80	06/88 – 12/94	3493	
BX Break (XB-_)	19	80	06/88 – 12/94	3494	
BX Break (XB-_)	19	80	06/88 – 12/94	3587	
BX Break (XB-_)	19	88	06/88 – 12/94	3492	
BX Break (XB-_)	19	88	06/88 – 12/94	3493	
BX Break (XB-_)	19	88	06/88 – 12/94	3494	
BX Break (XB-_)	19	88	06/88 – 12/94	3587	
BX Break (XB-_)	1.9 D	52	01/87 – 01/92	3492	
BX Break (XB-_)	1.9 D	52	01/87 – 01/92	3493	
BX Break (XB-_)	1.9 D	52	01/87 – 01/92	3494	
BX Break (XB-_)	1.9 D	52	01/87 – 01/92	3587	
BX Break (XB-_)	1.9 DT TXD	66	02/92 – 12/94	3492	

MAKE & MODEL		KW	YEAR		
CITROËN					
BX Break (XB-_)	1.9 DT TXD	66	02/92 – 12/94	3493	
BX Break (XB-_)	1.9 DT TXD	66	02/92 – 12/94	3494	
BX Break (XB-_)	1.9 DT TXD	66	02/92 – 12/94	3587	
BX Break (XB-_)	1.9 GTi 4x4	92	02/92 – 06/94	3492	
BX Break (XB-_)	1.9 GTi 4x4	92	02/92 – 06/94	3493	
BX Break (XB-_)	1.9 GTi 4x4	92	02/92 – 06/94	3494	
BX Break (XB-_)	1.9 GTi 4x4	92	02/92 – 06/94	3587	
BX Break (XB-_)	1.9 TZi	92	02/92 – 12/94	3492	
BX Break (XB-_)	1.9 TZi	92	02/92 – 12/94	3493	
BX Break (XB-_)	1.9 TZi	92	02/92 – 12/94	3494	
BX Break (XB-_)	1.9 TZi	92	02/92 – 12/94	3587	
BX Break (XB-_)	18 D	44	10/85 – 09/93	3492	
BX Break (XB-_)	18 D	44	10/85 – 09/93	3493	
BX Break (XB-_)	18 D	44	10/85 – 09/93	3494	
BX Break (XB-_)	18 D	44	10/85 – 09/93	3587	
BX Break (XB-_)	19 4x4	78	06/89 – 05/91	3492	
BX Break (XB-_)	19 4x4	78	06/89 – 05/91	3493	
BX Break (XB-_)	19 4x4	78	06/89 – 05/91	3494	
BX Break (XB-_)	19 4x4	78	06/89 – 05/91	3587	
BX Break (XB-_)	19 4x4	80	10/90 – 05/91	3492	
BX Break (XB-_)	19 4x4	80	10/90 – 05/91	3493	
BX Break (XB-_)	19 4x4	80	10/90 – 05/91	3494	
BX Break (XB-_)	19 4x4	80	10/90 – 05/91	3587	
BX Break (XB-_)	19 CAT	75	07/86 – 12/94	3492	
BX Break (XB-_)	19 CAT	75	07/86 – 12/94	3493	
BX Break (XB-_)	19 CAT	75	07/86 – 12/94	3494	
BX Break (XB-_)	19 CAT	75	07/86 – 12/94	3587	
BX Break (XB-_)	19 D	47	09/83 – 11/94	3492	
BX Break (XB-_)	19 D	47	09/83 – 11/94	3493	
BX Break (XB-_)	19 D	47	09/83 – 11/94	3494	
BX Break (XB-_)	19 D	47	09/83 – 11/94	3587	
BX Break (XB-_)	19 D	51	03/87 – 12/94	3492	
BX Break (XB-_)	19 D	51	03/87 – 12/94	3493	
BX Break (XB-_)	19 D	51	03/87 – 12/94	3494	
BX Break (XB-_)	19 D	51	03/87 – 12/94	3587	
BX Break (XB-_)	TRD Turbo	66	03/88 – 12/94	3492	
BX Break (XB-_)	TRD Turbo	66	03/88 – 12/94	3493	
BX Break (XB-_)	TRD Turbo	66	03/88 – 12/94	3494	
BX Break (XB-_)	TRD Turbo	66	03/88 – 12/94	3587	
C1 (PM_, PN_)	10	50	06/05 -	3987	
C1 (PM_, PN_)	1.4 HDi	40	06/05 -	3987	
C1 II	1.0 VTi 68	51	04/14 -	3987	
C1 II	1.2 VTi 82	60	04/14 -	3987	
C15 (VD-_)	10	33	10/84 – 12/97	3474	
C15 (VD-_)	11	35	10/84 – 12/96	3474	
C15 (VD-_)	11	40	10/84 – 07/87	3474	
C15 (VD-_)	11	40	11/88 – 07/96	3474	
C15 (VD-_)	13	47	07/87 – 05/88	3474	
C15 (VD-_)	14	49	07/87 – 12/96	3474	
C15 (VD-_)	1.0 E	37	11/92 – 07/96	3474	
C15 (VD-_)	1.1 i	44	07/88 – 12/96	3474	
C15 (VD-_)	1.4 E	40	07/87 – 12/96	3474	
C15 (VD-_)	1.4 E	44	05/87 – 12/96	3474	
C15 (VD-_)	1.4 i	55	05/91 – 12/96	3474	
C15 (VD-_)	1.8 D	44	07/86 – 12/00	3474	
C15 (VD-_)	1.9 D	44	12/00 – 12/05	3474	
C15 Estate	11	40	10/88 – 10/92	3474	
C15 Estate	11	44	08/88 – 07/96	3474	
C15 Estate	14	44	05/87 – 10/92	3474	
C15 Estate	14	49	05/87 – 09/92	3474	
C15 Estate	14	55	05/91 – 07/96	3474	
C15 Estate	1.8 D	44	04/87 – 08/00	3474	
C2 (JM_)	11	44	09/03 -	3854	
C2 (JM_)	14	54	09/03 -		3529/1
C2 (JM_)	14	54	09/03 -	3854	
C2 (JM_)	14	54	09/03 -	3931	
C2 (JM_)	14	55	10/06 -		3529/1
C2 (JM_)	14	55	10/06 -	3854	
C2 (JM_)	14	55	10/06 -	3931	
C2 (JM_)	16	80	09/03 -		3529/1
C2 (JM_)	16	80	09/03 -	3931	

MAKE & MODEL			KW	YEAR		
CITROËN						
C2 (JM_)	1.4 16V		65	06/06 -		3529/1
C2 (JM_)	1.4 16V		65	06/06 -	3854	
C2 (JM_)	1.4 16V		65	06/06 -	3931	
C2 (JM_)	1.4 HDi		50	09/03 -		3529/1
C2 (JM_)	1.4 HDi		50	09/03 -	3854	
C2 (JM_)	1.4 HDi		50	09/03 -	3931	
C2 (JM_)	1.6 HDi		80	09/05 -		3529/1
C2 (JM_)	1.6 VTS		90	01/05 -		3529/1
C2 (T11)	14		56	10/06 – 12/14	3938	
C2 (T11)	16		78	10/06 – 12/14	3820	
C2 ENTERPRISE	1.4 HDi		50	04/09 -		3529/1
C2 ENTERPRISE	1.4 HDi		50	04/09 -	3854	
C25 Box (280_, 290_)	1.8		50	11/81 – 01/94	3440	
C25 Box (280_, 290_)	1.9 D 1400		51	01/88 – 01/94	3440	
C25 Box (280_, 290_)	2.0		62	02/91 – 03/94	3440	
C25 Box (280_, 290_)	2.0 4x4		62	01/90 – 01/94	3440	
C25 Box (280_, 290_)	2.0 E		58	09/81 – 03/94	3440	
C25 Box (280_, 290_)	2.5 D		55	11/81 – 01/94	3440	
C25 Box (280_, 290_)	2.5 D		55	11/81 – 01/94	3543	
C25 Box (280_, 290_)	2.5 D 4x4		55	11/83 – 12/86	3440	
C25 Box (280_, 290_)	2.5 D 4x4		55	11/83 – 12/86	3543	
C25 Box (280_, 290_)	2.5 DT		70	08/91 – 01/94	3543	
C25 Box (280_, 290_)	2.5 DT 4x4		70	08/91 – 01/94	3543	
C25 Bus (280_, 290_)	1.8		50	11/81 – 01/94	3440	
C25 Bus (280_, 290_)	1.8 E		51	07/87 – 02/94	3440	
C25 Bus (280_, 290_)	1.9 D		51	07/87 – 02/94	3440	
C25 Bus (280_, 290_)	1.9 TD		60	04/92 – 02/94	3440	
C25 Bus (280_, 290_)	2.0		62	02/91 – 02/94	3440	
C25 Bus (280_, 290_)	2.0 E		58	09/81 – 02/94	3440	
C25 Bus (280_, 290_)	2.5 D		54	10/85 – 02/94	3440	
C25 Bus (280_, 290_)	2.5 D		54	10/85 – 02/94	3543	
C25 Bus (280_, 290_)	2.5 D		55	11/81 – 01/94	3440	
C25 Bus (280_, 290_)	2.5 D		55	11/81 - 01/94	3543	
C25 Bus (280_, 290_)	2.5 D 4x4		54	01/87 – 02/94	3440	
C25 Bus (280_, 290_)	2.5 D 4x4		54	01/87 – 02/94	3543	
C25 Bus (280_, 290_)	2.5 D Turbo		70	08/87 – 02/94	3543	
C25 Bus (280_, 290_)	2.5 D Turbo 4x4		70	08/87 – 02/94	3543	
C25 Platform/Chassis (280_, 290_)	1.9 DT		60	10/91 – 01/94	3440	
C25 Platform/Chassis (280_, 290_)	2.0		57	11/81 – 12/86	3440	
C25 Platform/Chassis (280_, 290_)	2.0		62	01/87 – 03/94	3440	
C25 Platform/Chassis (280_, 290_)	2.5 D		55	11/83 – 01/94	3440	
C25 Platform/Chassis (280_, 290_)	2.5 D		55	11/83 – 01/94	3543	
C25 Platform/Chassis (280_, 290_)	2.5 DT		70	01/87 – 01/94	3543	
C3 I (FC_)	1.1 i		44	02/02 -	3854	
C3 I (FC_)	1.4 16V		65	12/03 -		3529/1
C3 I (FC_)	1.4 16V		65	12/03 -	3931	
C3 I (FC_)	1.4 16V HDi		66	02/02 -		3529/1
C3 I (FC_)	1.4 16V HDi		66	02/02 -	3854	
C3 I (FC_)	1.4 16V HDi		66	02/02 -	3931	
C3 I (FC_)	1.4 HDi		50	02/02 -	3854	
C3 I (FC_)	1.4 HDi		50	02/02 -	3931	
C3 I (FC_)	1.4 HDi		52	07/03 -	3854	
C3 I (FC_)	1.4 HDi		52	07/03 -	3931	
C3 I (FC_)	1.4 HDi		55	05/05 -	3854	
C3 I (FC_)	1.4 HDi		55	05/05 -	3931	
C3 I (FC_)	1.4 i		54	02/02 -	3854	
C3 I (FC_)	1.4 i		54	02/02 -	3931	
C3 I (FC_)	1.4 i Bivalent		54	02/02 -	3854	
C3 I (FC_)	1.4 i Bivalent		54	02/02 -	3931	
C3 I (FC_)	1.6 16V		80	02/02 -		3529/1
C3 I (FC_)	1.6 16V		80	02/02 -	3800	
C3 I (FC_)	1.6 16V		80	02/02 -	3931	
C3 I (FC_)	1.6 16V		81	05/03 – 09/05		3529/1
C3 I (FC_)	1.6 16V		81	05/03 – 09/05	3800	
C3 I (FC_)	1.6 16V		81	05/03 – 09/05	3931	
C3 I (FC_)	1.6 16V HDi		66	10/05 -		3529/1
C3 I (FC_)	1.6 16V HDi		66	10/05 -	3931	
C3 I (FC_)	1.6 16V HDi		80	09/05 -		3529/1
C3 I (FC_)	1.6 16V HDi		80	09/05 -	3800	
C3 I (FC_)	1.6 16V HDi		80	09/05 -	3931	
C3 I (FC_)	1.6 Bioflex		83	06/05 -		3529/1

MAKE & MODEL   		KW	YEAR		
CITROËN					
C3 I (FC_)	1.6 Bioflex	83	06/05 -	3800	
C3 II	11	44	11/09 -		3529/1
C3 II	14	54	11/09 -		3529/1
C3 II	1.0 VTi 68	50	08/12 -		3529/1
C3 II	1.1 BiFuel	44	11/10 -		3529/1
C3 II	1.2 THP 110	81	10/14 -		3529/1
C3 II	1.2 VTi 82	60	06/12 -		3529/1
C3 II	1.4 HDi 70	50	11/09 -		3529/1
C3 II	1.4 LPG	70	06/13 -		3529/1
C3 II	1.4 LPG	70	06/13 -	3931	
C3 II	1.4 VTi 95	70	11/09 -		3529/1
C3 II	1.6 BlueHDi 100	73	07/14 -		3529/1
C3 II	1.6 BlueHDi 100	73	07/14 -	3820	
C3 II	1.6 BlueHDi 75	55	04/15 -		3529/1
C3 II	1.6 BlueHDi 75	55	04/15 -	3820	
C3 II	1.6 HDi	68	11/09 -		3529/1
C3 II	1.6 HDi 110	82	11/09 -		3529/1
C3 II	1.6 HDi 115	84	09/12 -		3529/1
C3 II	1.6 HDi 90	66	11/09 -		3529/1
C3 II	1.6 VTi 120	88	11/09 -		3529/1
C3 Picasso	1.2 THP 110	81	01/15 -		3529/1
C3 Picasso	1.4 VTi 95	70	02/09 -		3529/1
C3 Picasso	1.4 VTi 95 LPG	70	01/12 -		3529/1
C3 Picasso	1.6 BlueHDi 100	73	01/15 -		3529/1
C3 Picasso	1.6 HDI 90	68	07/10 -		3529/1
C3 Picasso	1.6 HDi	66	02/09 -		3529/1
C3 Picasso	1.6 HDi	80	02/09 -		3529/1
C3 Picasso	1.6 HDi 110	82	05/10 -		3529/1
C3 Picasso	1.6 HDi 115	84	01/13 -		3529/1
C3 Picasso	1.6 VTi 120	88	02/09 -		3529/1
C3 Pluriel (HB_)	14	54	05/03 -	3931	
C3 Pluriel (HB_)	16	80	05/03 -		3529/1
C3 Pluriel (HB_)	16	80	05/03 -	3931	
C3 Pluriel (HB_)	1.4 HDi	50	04/04 -	3931	
C3 Pluriel (HB_)	1.4 Hybrid	54	05/05 -	3931	
C4 AIRCROSS	16	86	04/12 -		3893
C4 AIRCROSS	20	110	04/12 -		3893
C4 AIRCROSS	1.6	86	04/12 -		4316
C4 AIRCROSS	1.6 HDi 115	84	04/12 -		3893
C4 AIRCROSS	1.6 HDi 115	84	04/12 -		4316
C4 AIRCROSS	2.0	110	04/12 -		4316
C4 AIRCROSS	2.0 AWC	110	04/12 -		4316
C4 AIRCROSS	1.6 HDi 115 AWC	84	05/12 -		3893
C4 AIRCROSS	1.6 HDi 115 AWC	84	05/12 -		4316
C4 AIRCROSS	1.8 HDi 150	110	04/12 -		3893
C4 AIRCROSS	1.8 HDi 150	110	04/12 -		4316
C4 AIRCROSS	1.8 HDi 150 AWC	110	04/12 -		3893
C4 AIRCROSS	1.8 HDi 150 AWC	110	04/12 -		4316
C4 AIRCROSS	2.0 AWC	110	04/12 -		3893
C4 CACTUS	1.2 THP 110	81	09/14 -		3529/1
C4 CACTUS	1.2 THP 110	81	09/14 -	4201	
C4 CACTUS	1.2 VTi 75	55	09/14 -		3529/1
C4 CACTUS	1.2 VTi 75	55	09/14 -	4201	
C4 CACTUS	1.2 VTi 82	60	09/14 -		3529/1
C4 CACTUS	1.2 VTi 82	60	09/14 -	4201	
C4 CACTUS	1.6 BlueHDi 100	73	09/14 -		3529/1
C4 CACTUS	1.6 BlueHDi 100	73	09/14 -	4201	
C4 CACTUS	1.6 HDi 90	68	09/14 -		3529/1
C4 CACTUS	1.6 HDi 90	68	09/14 -	4201	
C4 Coupe (LA_)	1.4 16V	65	11/04 – 07/11		3529/1
C4 Coupe (LA_)	1.4 16V	65	11/04 – 07/11	3800	
C4 Coupe (LA_)	1.4 16V	65	11/04 – 07/11		3984
C4 Coupe (LA_)	1.6 16V	80	11/04 – 07/11		3529/1
C4 Coupe (LA_)	1.6 16V	80	11/04 – 07/11	3800	
C4 Coupe (LA_)	1.6 16V	80	11/04 – 07/11		3984
C4 Coupe (LA_)	1.6 HDi	66	11/04 – 07/11		3529/1
C4 Coupe (LA_)	1.6 HDi	66	11/04 – 07/11	3800	
C4 Coupe (LA_)	1.6 HDi	66	11/04 – 07/11		3984
C4 Coupe (LA_)	1.6 HDi	80	11/04 – 07/11		3529/1
C4 Coupe (LA_)	1.6 HDi	80	11/04 – 07/11	3800	
C4 Coupe (LA_)	1.6 HDi	80	11/04 – 07/11		3984

MAKE & MODEL		KW	YEAR		
CITROËN					
C4 Coupe (LA_)	1.6 THP 150	110	07/08 – 07/11		3529/1
C4 Coupe (LA_)	1.6 THP 150	110	07/08 – 07/11	3800	
C4 Coupe (LA_)	1.6 THP 150	110	07/08 – 07/11		3984
C4 Coupe (LA_)	1.6 VTi 120	88	07/08 – 07/11		3529/1
C4 Coupe (LA_)	1.6 VTi 120	88	07/08 – 07/11	3800	
C4 Coupe (LA_)	1.6 VTi 120	88	07/08 – 07/11		3984
C4 Coupe (LA_)	2.0 16V	100	11/04 – 07/07		3529/1
C4 Coupe (LA_)	2.0 16V	100	11/04 – 07/07	3800	
C4 Coupe (LA_)	2.0 16V	100	11/04 – 07/07		3984
C4 Coupe (LA_)	2.0 16V	130	11/04 – 12/10		3529/1
C4 Coupe (LA_)	2.0 16V	130	11/04 – 12/10		3984
C4 Coupe (LA_)	2.0 HDi	100	11/04 – 12/10		3529/1
C4 Coupe (LA_)	2.0 HDi	100	11/04 – 12/10		3984
C4 Coupe (LA_)	2.0 HDi	103	07/08 – 07/11		3529/1
C4 Coupe (LA_)	2.0 HDi	103	07/08 – 07/11		3984
C4 Coupe (LA_)	2.0 VTR	103	10/06 – 12/07		3529/1
C4 Coupe (LA_)	2.0 VTR	103	10/06 – 12/07	3800	
C4 Grand Picasso I (UA_)	1.6 HDi	80	10/06 -	3964	
C4 Grand Picasso I (UA_)	1.6 HDi 110	82	09/10 -	3964	
C4 Grand Picasso I (UA_)	1.6 VTi 120	88	07/08 -	3964	
C4 Grand Picasso I (UA_)	1.8 i 16V	92	10/06 -	3964	
C4 I (LC_)	1.4 16V	65	11/04 – 07/11		3529/1
C4 I (LC_)	1.4 16V	65	11/04 – 07/11	3800	
C4 I (LC_)	1.4 16V	65	11/04 – 07/11		3984
C4 I (LC_)	1.6 16V	80	11/04 – 07/11		3529/1
C4 I (LC_)	1.6 16V	80	11/04 – 07/11	3800	
C4 I (LC_)	1.6 16V	80	11/04 – 07/11		3984
C4 I (LC_)	1.6 16V Bio-Flex	80	09/07 – 07/08		3529/1
C4 I (LC_)	1.6 16V Bio-Flex	80	09/07 – 07/08	3800	
C4 I (LC_)	1.6 16V Bio-Flex	80	09/07 – 07/08		3984
C4 I (LC_)	1.6 Flex	81	02/09 – 07/11		3529/1
C4 I (LC_)	1.6 Flex	81	02/09 – 07/11	3800	
C4 I (LC_)	1.6 Flex	81	02/09 – 07/11		3984
C4 I (LC_)	1.6 HDi	66	11/04 – 07/11		3529/1
C4 I (LC_)	1.6 HDi	66	11/04 – 07/11	3800	
C4 I (LC_)	1.6 HDi	66	11/04 – 07/11		3984
C4 I (LC_)	1.6 HDi	80	11/04 – 07/11		3529/1
C4 I (LC_)	1.6 HDi	80	11/04 – 07/11	3800	
C4 I (LC_)	1.6 HDi	80	11/04 – 07/11		3984
C4 I (LC_)	1.6 THP 140	103	07/08 – 07/11		3529/1
C4 I (LC_)	1.6 THP 140	103	07/08 – 07/11	3800	
C4 I (LC_)	1.6 THP 140	103	07/08 – 07/11		3984
C4 I (LC_)	1.6 THP 150	110	07/08 – 07/11		3529/1
C4 I (LC_)	1.6 THP 150	110	07/08 – 07/11	3800	
C4 I (LC_)	1.6 THP 150	110	07/08 – 07/11		3984
C4 I (LC_)	1.6 VTi 120	88	07/08 – 07/11		3529/1
C4 I (LC_)	1.6 VTi 120	88	07/08 – 07/11	3800	
C4 I (LC_)	1.6 VTi 120	88	07/08 – 07/11		3984
C4 I (LC_)	2.0 16V	100	11/04 – 07/07		3529/1
C4 I (LC_)	2.0 16V	100	11/04 – 07/07	3800	
C4 I (LC_)	2.0 16V	100	11/04 – 07/07		3984
C4 I (LC_)	2.0 16V	103	11/04 – 07/11		3529/1
C4 I (LC_)	2.0 16V	103	11/04 – 07/11	3800	
C4 I (LC_)	2.0 16V	103	11/04 – 07/11		3984
C4 I (LC_)	2.0 16V	130	11/04 – 07/08		3529/1
C4 I (LC_)	2.0 16V	130	11/04 – 07/08		3984
C4 I (LC_)	2.0 HDi	100	11/04 – 07/11		3529/1
C4 I (LC_)	2.0 HDi	100	11/04 – 07/11		3984
C4 I (LC_)	2.0 HDi	103	07/08 – 07/11		3529/1
C4 I (LC_)	2.0 HDi	103	07/08 – 07/11		3984
C4 II (B7)	1.2 THP 110	81	02/15 -		3529/1
C4 II (B7)	1.2 THP 110	81	02/15 -	4145	
C4 II (B7)	1.2 THP 130	96	04/14 -	3964	
C4 II (B7)	1.4 VTi 95	70	11/09 -		3529/1
C4 II (B7)	1.4 VTi 95	70	11/09 -	4145	
C4 II (B7)	1.6 BlueHDi 100	73	07/14 -		3529/1
C4 II (B7)	1.6 BlueHDi 100	73	07/14 -	4145	
C4 II (B7)	1.6 BlueHDi 115	85	08/14 -	3964	
C4 II (B7)	1.6 BlueHDi 120	88	02/15 -		3529/1
C4 II (B7)	1.6 BlueHDi 120	88	02/15 -	3964	
C4 II (B7)	1.6 HDi 110	82	11/09 -		3529/1

MAKE & MODEL		KW	YEAR		
CITROËN					
C4 II (B7)	1.6 HDi 110	82	11/09 -	3964	
C4 II (B7)	1.6 HDi 115	84	07/12 -		3529/1
C4 II (B7)	1.6 HDi 115	84	07/12 -	3964	
C4 II (B7)	1.6 HDi 90	68	11/09 -		3529/1
C4 II (B7)	1.6 HDi 90	68	11/09 -	3964	
C4 II (B7)	1.6 HDi 90	68	11/09 -	4145	
C4 II (B7)	1.6 VTi 120	88	11/09 -		3529/1
C4 II (B7)	1.6 VTi 120	88	11/09 -	3964	
C4 II (B7)	1.6 VTi 120 LPG	88	09/11 -		3529/1
C4 II (B7)	1.6 VTi 120 LPG	88	09/11 -	3964	
C4 II (B7)	2.0 BlueHDi 150	110	11/09 -		3529/1
C4 Picasso I (UD_)	1.6 HDi	80	02/07 – 08/13	3964	
C4 Picasso I (UD_)	1.6 HDi 110	82	09/10 – 08/13	3964	
C4 Picasso I (UD_)	1.6 VTi 120	88	07/08 – 08/13	3964	
C4 Picasso I (UD_)	1.8 Bifule	92	01/09 – 10/12	3964	
C4 Picasso I (UD_)	1.8 i 16V	92	02/07 – 12/11	3964	
C4 Saloon	1.6 16V	80	07/06 – 07/11		3529/1
C4 Saloon	1.6 16V	80	07/06 – 07/11	3800	
C4 Saloon	1.6 HDi	80	07/06 – 07/11		3529/1
C4 Saloon	1.6 HDi	80	07/06 07/11	3800	
C4 Saloon	2.0 16V	103	07/06 -		3529/1
C4 Saloon	2.0 16V	103	07/06 -	3800	
C5 (DC_)	2.0 16V (RFJ (EW10A))	103	09/04 -	3934	
C5 (DC_)	2.0 16V (RFN (EW10J4))	100	03/01 – 08/04	3934	
C5 (DC_)	2.0 16V HPi (RLZ (EW10D))	103	03/01 – 08/04	3934	
C5 (DC_)	2.0 Hdi (RHR (DW10BTED4))	100	09/04 -	3934	
C5 (DC_)	2.0 Hdi (RHS (DW10ATED))	79	03/01 – 08/04	3934	
C5 (DC_)	2.0 Hdi (RHY (DW10TD))	66	03/01 – 08/04	3934	
C5 (DC_)	2.0 Hdi (RHZ (DW10ATED))	79	03/01 – 08/04	3934	
C5 (DC_)	2.2 HDi (4HX (DW12TED4/FAP))	98	03/01 – 08/04	3934	
C5 (DC_)	2.2 HDi (4HX (DW12TED4/FAP))	98	09/04 -	3934	
C5 (DC_)	3.0 Carlsson HP	173	08/01 – 08/04	3934	
C5 (DC_)	3.0 Carlsson HP	173	09/04 -	3934	
C5 (DC_)	3.0 V6 (XFV (ES9A))	152	09/04 -	3934	
C5 (DC_)	3.0 V6 (XFX (ES9J4S))	152	03/01 – 08/04	3934	
C5 (DC_)	3.0 V6 (XFX (ES9J4S))	152	09/04 -	3934	
C5 (DE_)	1.8 16V (6FZ (EW7J4))	85	06/01 – 08/04	3935	
C5 (DE_)	2.0 16V (RFJ (EW10A))	103	09/04 -	3935	
C5 (DE_)	2.0 16V (RFN (EW10J4))	100	06/01 – 08/04	3935	
C5 (DE_)	2.0 16V HPi (RLZ (EW10D))	103	06/01 – 08/04	3935	
C5 (DE_)	2.0 Hdi (RHR (DW10BTED4))	100	09/04 -	3935	
C5 (DE_)	2.0 Hdi (RHS (DW10ATED))	79	06/01 – 08/04	3935	
C5 (DE_)	2.0 Hdi (RHY (DW10TD))	66	06/01 – 08/04	3935	
C5 (DE_)	2.0 Hdi (RHZ (DW10ATED))	79	06/01 – 08/04	3935	
C5 (DE_)	2.0 Hdi (RHZ (DW10ATED))	80	06/01 – 08/04	3935	
C5 (DE_)	2.2 HDi (4HT (DW12BTED4))	125	04/06 -	3935	
C5 (DE_)	2.2 HDi (4HX (DW12TED4/FAP))	98	06/01 – 08/04	3935	
C5 (DE_)	2.2 HDi (4HX (DW12TED4/FAP))	98	09/04 -	3935	
C5 (DE_)	3.0 (XFX (ES9J4S))	173	09/04 -	3935	
C5 (DE_)	3.0 Carlsson (XFX (ES9J4S))	173	09/03 – 08/04	3935	
C5 (DE_)	3.0 V6 (XFV (ES9A))	152	09/04 -	3935	
C5 (DE_)	3.0 V6 (XFX (ES9J4S))	152	06/01 – 08/04	3934	
C5 III (RD_)	30	152	02/08 -		3853/1
C5 III (RD_)	30	152	02/08 -		3946
C5 III (RD_)	1.6 HDi 110	80	02/08 -		3853/1
C5 III (RD_)	1.6 HDi 110	80	02/08 -		3946
C5 III (RD_)	1.6 HDi 110	82	07/10 -		3853/1
C5 III (RD_)	1.6 HDi 110	82	07/10 -		3946
C5 III (RD_)	1.6 HDi 115	84	01/12 -		3853/1
C5 III (RD_)	1.6 HDi 115	84	01/12 -		3946
C5 III (RD_)	1.6 THP 150	110	07/10 -		3853/1
C5 III (RD_)	1.6 THP 150	110	07/10 -		3946
C5 III (RD_)	1.6 THP 155	115	04/09 -		3853/1
C5 III (RD_)	1.6 THP 155	115	04/09 -		3946
C5 III (RD_)	1.6 VTi 120	88	07/10 -		3853/1
C5 III (RD_)	1.6 VTi 120	88	07/10 -		3946
C5 III (RD_)	1.8 16V	92	02/08 -		3853/1
C5 III (RD_)	1.8 16V	92	02/08 -		3946
C5 III (RD_)	2.0 16V	103	02/08 -		3853/1
C5 III (RD_)	2.0 16V	103	02/08 -		3946
C5 III (RD_)	2.0 16V BioFlex	103	02/08 -		3853/1

MAKE & MODEL		KW	YEAR		
CITROËN					
C5 III (RD_)	2.0 16V BioFlex	103	02/08 -		3946
C5 III (RD_)	2.0 HDi	100	02/08 -		3853/1
C5 III (RD_)	2.0 HDi	100	02/08 -		3946
C5 III (RD_)	2.0 HDi 140	103	04/09 -		3853/1
C5 III (RD_)	2.0 HDi 140	103	04/09 -		3946
C5 III (RD_)	2.0 HDi 150 / BlueHDi 150	110	04/09 -		3853/1
C5 III (RD_)	2.0 HDi 150 / BlueHDi 150	110	04/09 -		3946
C5 III (RD_)	2.0 HDi 165	120	04/09 -		3853/1
C5 III (RD_)	2.0 HDi 165	120	04/09 -		3946
C5 III (RD_)	2.0 HDi 180	133	03/15 -		3853/1
C5 III (RD_)	2.0 HDi 180	133	03/15 -		3946
C5 III (RD_)	2.2 HDi	125	02/08 -		3853/1
C5 III (RD_)	2.2 HDi	125	02/08 -		3946
C5 III (RD_)	2.2 HDi 200	150	07/10 -		3853/1
C5 III (RD_)	2.2 HDi 200	150	07/10 -	3940	
C5 III (RD_)	2.2 HDi 200	150	07/10 -		3946
C5 III (RD_)	2.7 HDi	150	02/08 -		3853/1
C5 III (RD_)	2.7 HDi	150	02/08 -		3946
C5 III (RD_)	3.0 HDi 240	177	04/09 -		3853/1
C5 III (RD_)	3.0 HDi 240	177	04/09 -		3946
C5 III (RD_)	3.0 V6	155	02/08 -		3853/1
C5 III (RD_)	3.0 V6	155	02/08 -		3946
C5 III Break (TD_)	30	152	02/08 -		3853/1
C5 III Break (TD_)	30	152	02/08 -		3946
C5 III Break (TD_)	1.6 HDi 110	80	02/08 -		3853/1
C5 III Break (TD_)	1.6 HDi 110	80	02/08 -		3946
C5 III Break (TD_)	1.6 HDi 110	82	07/10 -		3853/1
C5 III Break (TD_)	1.6 HDi 110	82	07/10 -		3946
C5 III Break (TD_)	1.6 HDi 115	84	01/12 -		3853/1
C5 III Break (TD_)	1.6 HDi 115	84	01/12 -		3946
C5 III Break (TD_)	1.6 THP 150	110	04/09 -		3853/1
C5 III Break (TD_)	1.6 THP 150	110	04/09 -		3946
C5 III Break (TD_)	1.6 THP 155	115	04/09 -		3853/1
C5 III Break (TD_)	1.6 THP 155	115	04/09 -		3946
C5 III Break (TD_)	1.6 VTI 120	88	07/10 -		3853/1
C5 III Break (TD_)	1.6 VTI 120	88	07/10 -		3946
C5 III Break (TD_)	1.8 16V	92	02/08 -		3853/1
C5 III Break (TD_)	1.8 16V	92	02/08 -		3946
C5 III Break (TD_)	2.0 16V	103	02/08 -		3853/1
C5 III Break (TD_)	2.0 16V	103	02/08 -		3946
C5 III Break (TD_)	2.0 16V BioFlex	103	02/08 -		3853/1
C5 III Break (TD_)	2.0 16V BioFlex	103	02/08 -		3946
C5 III Break (TD_)	2.0 HDi	100	02/08 -		3853/1
C5 III Break (TD_)	2.0 HDi	100	02/08 -		3946
C5 III Break (TD_)	2.0 HDi 140	103	04/09 -		3853/1
C5 III Break (TD_)	2.0 HDi 140	103	04/09 -		3946
C5 III Break (TD_)	2.0 HDi 150 / BlueHDi 150	110	04/09 -		3853/1
C5 III Break (TD_)	2.0 HDi 150 / BlueHDi 150	110	04/09 -		3946
C5 III Break (TD_)	2.0 HDi 165	120	04/09 -		3853/1
C5 III Break (TD_)	2.0 HDi 165	120	04/09 -		3946
C5 III Break (TD_)	2.0 HDi 180	133	03/15 -		3853/1
C5 III Break (TD_)	2.0 HDi 180	133	03/15 -		3946
C5 III Break (TD_)	2.2 HDi	125	02/08 -		3853/1
C5 III Break (TD_)	2.2 HDi	125	02/08 -		3946
C5 III Break (TD_)	2.2 HDi 165	120	02/08 -		3853/1
C5 III Break (TD_)	2.2 HDi 165	120	02/08 -	3940	
C5 III Break (TD_)	2.2 HDi 165	120	02/08 -		3946
C5 III Break (TD_)	2.2 HDi 200	150	07/10 -		3853/1
C5 III Break (TD_)	2.2 HDi 200	150	07/10 -	3940	
C5 III Break (TD_)	2.2 HDi 200	150	07/10 -		3946
C5 III Break (TD_)	2.7 HDi	150	02/08 -		3853/1
C5 III Break (TD_)	2.7 HDi	150	02/08 -		3946
C5 III Break (TD_)	3.0 HDi 240	177	04/09 -		3853/1
C5 III Break (TD_)	3.0 HDi 240	177	04/09 -		3946
C5 III Break (TD_)	3.0 V6	155	02/08 -		3853/1
C5 III Break (TD_)	3.0 V6	155	02/08 -		3946
C6 (TD_)	2.2 HDi	120	06/06 -	3940	
C8 (EA_, EB_)	20	100	07/02 -	3986	
C8 (EA_, EB_)	22	116	07/02 -	3986	
C8 (EA_, EB_)	2.0 16V	103	09/05 -	3986	
C8 (EA_, EB_)	2.0 16V	104	09/05 -	3986	

MAKE & MODEL		KW	YEAR		
CITROËN					
C8 (EA_, EB_)	2.0 HDi	79	07/02 -	3986	
C8 (EA_, EB_)	2.0 HDi	80	07/02 -	3986	
C8 (EA_, EB_)	2.0 HDi	88	07/06 -	3986	
C8 (EA_, EB_)	2.0 HDi 135	100	03/06 -	3986	
C8 (EA_, EB_)	2.2 HDi	94	07/02 -	3986	
C-CROSSER (EP_)	20	108	11/10 -	3685	
C-CROSSER (EP_)	20	108	11/10 -		3893
C-CROSSER (EP_)	2.0 All-wheel Drive	108	11/10 -	3685	
C-CROSSER (EP_)	2.0 All-wheel Drive	108	11/10 -		3893
C-CROSSER (EP_)	2.2 HDi	115	02/07 -	3685	
C-CROSSER (EP_)	2.2 HDi	115	02/07 -		3893
C-CROSSER (EP_)	2.4 16V	125	08/08 -	3685	
C-CROSSER (EP_)	2.4 16V	125	08/08 -		3893
C-CROSSER ENTERPRISE	2.2 HDi	115	01/09 -	3685	
C-CROSSER ENTERPRISE	2.2 HDi	115	01/09 -		3893
C-CROSSER ENTERPRISE	2.4 16V	125	01/09 -	3685	
C-CROSSER ENTERPRISE	2.4 16V	125	01/09 -		3893
C-ELYSEE	1.2 VTi 72	53	11/12 -	4201	
C-ELYSEE	1.2 VTi 82	60	12/14 -	4201	
C-ELYSEE	1.6 BlueHDi 100	73	11/14 -	4201	
C-ELYSEE	1.6 HDI 92	68	11/12 -	4201	
C-ELYSEE	1.6 VTi 115	85	11/12 -	4201	
C-QUATRE - SHI JIA	16	78	10/08 – 12/13		3529/1
C-QUATRE - SHI JIA	16	78	10/08 – 12/13	3800	
C-QUATRE - SHI JIA	20	108	10/08 – 12/13		3529/1
C-QUATRE - SHI JIA	20	108	10/08 – 12/13	3800	
C-QUATRE - SHI JIA Saloon	16	78	06/09 – 12/15		3529/1
C-QUATRE - SHI JIA Saloon	16	78	06/09 – 12/15	3800	
C-QUATRE - SHI JIA Saloon	20	108	06/09 – 12/15		3529/1
C-QUATRE - SHI JIA Saloon	20	108	06/09 – 12/15	3800	
C-TRIOMPHE	2.0 Exclusive Limousine	103	05/06 – 12/12		3529/1
C-TRIOMPHE	2.0 Exclusive Limousine	108	05/06 – 12/12	3800	
DS3	16	120	01/12 – 07/15		3529/1
DS3	1.2 VTi 82	60	01/13 – 03/15		3529/1
DS3	1.4 HDi 70	50	04/10 – 07/15		3529/1
DS3	1.4 VTi 95	70	04/10 – 07/15		3529/1
DS3	1.4 VTi 95 LPG	70	08/12 – 07/15		3529/1
DS3	1.4 VTi 98	72	11/09 – 07/15		3529/1
DS3	1.6 BlueHDi 100	73	07/14 – 07/15		3529/1
DS3	1.6 BlueHDi 120	88	10/13 – 07/15		3529/1
DS3	1.6 BlueHDi 75	55	03/15 – 07/15		3529/1
DS3	1.6 HDi 110	82	11/09 – 07/15		3529/1
DS3	1.6 HDi 115	84	08/12 – 07/15		3529/1
DS3	1.6 HDi 115	85	10/13 – 07/15		3529/1
DS3	1.6 HDi 90	68	11/09 – 07/15		3529/1
DS3	1.6 Racing	147	02/11 – 07/15		3529/1
DS3	1.6 Racing	152	02/11 – 07/15		3529/1
DS3	1.6 THP 150	110	01/10 – 07/15		3529/1
DS3	1.6 THP 155	115	04/10 – 07/15		3529/1
DS3	1.6 THP 165	121	10/14 – 06/15		3529/1
DS3	1.6 VTi 120	88	04/10 – 07/15		3529/1
DS3 Convertible	1.2 THP 110	81	10/14 – 07/15		3529/1
DS3 Convertible	1.2 VTi 82	60	01/13 – 07/15		3529/1
DS3 Convertible	1.6 BlueHDi 100	73	07/14 – 07/15		3529/1
DS3 Convertible	1.6 BlueHDi 120	88	07/14 – 07/15		3529/1
DS3 Convertible	1.6 HDi 90	69	01/13 – 07/15		3529/1
DS3 Convertible	1.6 Racing	152	03/14 -		3529/1
DS3 Convertible	1.6 Racing	152	03/14 – 07/15		3529/1
DS3 Convertible	1.6 THP 150	110	01/13 – 07/15		3529/1
DS3 Convertible	1.6 THP 155	115	01/13 – 07/15		3529/1
DS3 Convertible	1.6 THP 165	121	10/14 – 07/15		3529/1
DS3 Convertible	1.6 VTi 120	88	01/13 – 07/15		3529/1
DS4	1.2 THP 130	96	07/14 – 07/15		3529/1
DS4	1.2 THP 130	96	07/14 – 07/15	3964	
DS4	1.6 BlueHDi 115	85	08/14 – 07/15	3964	
DS4	1.6 BlueHDi 120	88	07/14 – 07/15		3529/1
DS4	1.6 BlueHDi 120	88	07/14 – 07/15	3964	
DS4	1.6 HDi 110	81	04/11 – 07/15		3529/1
DS4	1.6 HDi 110	81	04/11 – 07/15	3964	
DS4	1.6 HDi 110	81	04/11 – 07/15	4145	
DS4	1.6 HDi 110	82	04/11 – 07/15		3529/1

MAKE & MODEL		KW	YEAR		
CITROËN					
DS4	1.6 HDi 110	82	04/11 – 07/15	3964	
DS4	1.6 HDi 115	84	08/12 – 07/15		3529/1
DS4	1.6 HDi 115	84	08/12 – 07/15	3964	
DS4	1.6 HDi 90	68	05/11 – 07/15		3529/1
DS4	1.6 HDi 90	68	05/11 – 07/15	3964	
DS4	1.6 HDi 90	68	05/11 – 07/15	4145	
DS4	1.6 THP 155	115	04/11 – 07/15		3529/1
DS4	1.6 THP 160	120	04/12 – 07/15		3529/1
DS4	1.6 THP 200	147	04/11 – 07/15		3529/1
DS4	1.6 THP 210	155	07/15 – 07/15		3529/1
DS4	1.6 VTi 120	88	04/11 – 07/15		3529/1
DS4	1.6 VTi 120	88	04/11 – 07/15	3964	
DS4	2.0 BlueHDi 150	110	07/14 – 07/15	3964	
DS4	2.0 BlueHDi 180	133	07/14 – 07/15		3529/1
DS4	2.0 HDi 165	120	04/11 – 07/15		3529/1
DS5	1.6 BlueHDi 120	88	07/14 – 07/15	3964	
DS5	1.6 HDi	85	11/13 – 07/15	3964	
DS5	1.6 HDi 115	84	06/12 – 07/15	3964	
EVASION (22, U6)	18	73	05/97 07/02	3799	
EVASION (22, U6)	18	76	02/96 12/96	3799	
JUMPER Box (230L) / RELAY Box (230L)	20	80	03/94 04/02	3559	
JUMPER Box (230L) / RELAY Box (230L)	20	80	03/94 – 04/02	3595	
JUMPER Box (230L) / RELAY Box (230L)	20	80	03/94 – 04/02	3834	
JUMPER Box (230L) / RELAY Box (230L)	20	80	03/94 – 04/02	3835	
JUMPER Box (230L) / RELAY Box (230L)	20	80	03/94 – 04/02		3914
JUMPER Box (230L) / RELAY Box (230L)	1.9 D	50	07/99 04/02	3559	
JUMPER Box (230L) / RELAY Box (230L)	1.9 D	50	07/99 – 04/02	3595	
JUMPER Box (230L) / RELAY Box (230L)	1.9 D	50	07/99 – 04/02	3834	
JUMPER Box (230L) / RELAY Box (230L)	1.9 D	50	07/99 – 04/02	3835	
JUMPER Box (230L) / RELAY Box (230L)	1.9 D	50	07/99 – 04/02		3914
JUMPER Box (230L) / RELAY Box (230L)	1.9 D	51	02/94 04/02	3559	
JUMPER Box (230L) / RELAY Box (230L)	1.9 D	51	02/94 – 04/02	3595	
JUMPER Box (230L) / RELAY Box (230L)	1.9 D	51	02/94 – 04/02	3834	
JUMPER Box (230L) / RELAY Box (230L)	1.9 D	51	02/94 – 04/02	3835	
JUMPER Box (230L) / RELAY Box (230L)	1.9 D	51	02/94 – 04/02		3914
JUMPER Box (230L) / RELAY Box (230L)	1.9 TD	66	03/94 04/02	3559	
JUMPER Box (230L) / RELAY Box (230L)	1.9 TD	66	03/94 – 04/02	3595	
JUMPER Box (230L) / RELAY Box (230L)	1.9 TD	66	03/94 – 04/02	3834	
JUMPER Box (230L) / RELAY Box (230L)	1.9 TD	66	03/94 – 04/02	3835	
JUMPER Box (230L) / RELAY Box (230L)	1.9 TD	66	03/94 – 04/02		3914
JUMPER Box (230L) / RELAY Box (230L)	1.9 TD	68	03/94 04/02	3559	
JUMPER Box (230L) / RELAY Box (230L)	1.9 TD	68	03/94 – 04/02	3595	
JUMPER Box (230L) / RELAY Box (230L)	1.9 TD	68	03/94 – 04/02	3834	
JUMPER Box (230L) / RELAY Box (230L)	1.9 TD	68	03/94 – 04/02	3835	
JUMPER Box (230L) / RELAY Box (230L)	1.9 TD	68	03/94 – 04/02		3914
JUMPER Box (230L) / RELAY Box (230L)	2.0 4x4	80	10/96 01/02	3559	
JUMPER Box (230L) / RELAY Box (230L)	2.0 4x4	80	10/96 – 01/02	3595	
JUMPER Box (230L) / RELAY Box (230L)	2.0 4x4	80	10/96 – 01/02	3834	
JUMPER Box (230L) / RELAY Box (230L)	2.0 4x4	80	10/96 – 01/02	3835	
JUMPER Box (230L) / RELAY Box (230L)	2.0 4x4	80	10/96 – 01/02		3914
JUMPER Box (230L) / RELAY Box (230L)	2.0 HDI	62	11/01 04/02	3559	
JUMPER Box (230L) / RELAY Box (230L)	2.0 HDI	62	11/01 – 04/02	3595	
JUMPER Box (230L) / RELAY Box (230L)	2.0 HDI	62	11/01 – 04/02	3834	
JUMPER Box (230L) / RELAY Box (230L)	2.0 HDI	62	11/01 – 04/02	3835	
JUMPER Box (230L) / RELAY Box (230L)	2.0 HDI	62	11/01 – 04/02		3914
JUMPER Box (230L) / RELAY Box (230L)	2.5 D	63	03/94 04/02	3559	
JUMPER Box (230L) / RELAY Box (230L)	2.5 D	63	03/94 – 04/02	3595	
JUMPER Box (230L) / RELAY Box (230L)	2.5 D	63	03/94 – 04/02	3834	
JUMPER Box (230L) / RELAY Box (230L)	2.5 D	63	03/94 – 04/02	3835	
JUMPER Box (230L) / RELAY Box (230L)	2.5 D	63	03/94 – 04/02		3914
JUMPER Box (230L) / RELAY Box (230L)	2.5 D 4x4	63	03/00 04/02	3559	
JUMPER Box (230L) / RELAY Box (230L)	2.5 D 4x4	63	03/00 – 04/02	3595	
JUMPER Box (230L) / RELAY Box (230L)	2.5 D 4x4	63	03/00 – 04/02	3834	
JUMPER Box (230L) / RELAY Box (230L)	2.5 D 4x4	63	03/00 – 04/02	3835	
JUMPER Box (230L) / RELAY Box (230L)	2.5 D 4x4	63	03/00 – 04/02		3914
JUMPER Box (230L) / RELAY Box (230L)	2.5 DT 4x4	76	10/96 08/97	3559	
JUMPER Box (230L) / RELAY Box (230L)	2.5 DT 4x4	76	10/96 – 08/97	3595	
JUMPER Box (230L) / RELAY Box (230L)	2.5 DT 4x4	76	10/96 – 08/97		3914
JUMPER Box (230L) / RELAY Box (230L)	2.5 TD	76	03/94 04/02	3559	
JUMPER Box (230L) / RELAY Box (230L)	2.5 TD	76	03/94 – 04/02	3595	
JUMPER Box (230L) / RELAY Box (230L)	2.5 TD	76	03/94 – 04/02	3834	

MAKE & MODEL		KW	YEAR		
CITROËN					
JUMPER Box (230L) / RELAY Box (230L)	2.5 TD	76	03/94 – 04/02	3835	
JUMPER Box (230L) / RELAY Box (230L)	2.5 TD	76	03/94 – 04/02		3914
JUMPER Box (230L) / RELAY Box (230L)	2.5 TDi	79	12/96 11/00	3559	
JUMPER Box (230L) / RELAY Box (230L)	2.5 TDi	79	12/96 – 11/00	3595	
JUMPER Box (230L) / RELAY Box (230L)	2.5 TDi	79	12/96 – 11/00		3914
JUMPER Box (230L) / RELAY Box (230L)	2.5 TDi 4x4	79	03/00 11/00	3559	
JUMPER Box (230L) / RELAY Box (230L)	2.5 TDi 4x4	79	03/00 – 11/00	3595	
JUMPER Box (230L) / RELAY Box (230L)	2.5 TDi 4x4	79	03/00 – 11/00	3834	
JUMPER Box (230L) / RELAY Box (230L)	2.5 TDi 4x4	79	03/00 – 11/00	3835	
JUMPER Box (230L) / RELAY Box (230L)	2.5 TDi 4x4	79	03/00 – 11/00		3914
JUMPER Box (230L) / RELAY Box (230L)	2.8 D	64	01/99 02/02	3559	
JUMPER Box (230L) / RELAY Box (230L)	2.8 D	64	01/99 – 02/02	3595	
JUMPER Box (230L) / RELAY Box (230L)	2.8 D	64	01/99 – 02/02	3834	
JUMPER Box (230L) / RELAY Box (230L)	2.8 D	64	01/99 – 02/02	3835	
JUMPER Box (230L) / RELAY Box (230L)	2.8 D	64	01/99 – 02/02		3914
JUMPER Box (230L) / RELAY Box (230L)	2.8 HDi	94	09/00 04/02	3559	
JUMPER Box (230L) / RELAY Box (230L)	2.8 HDi	94	09/00 – 04/02	3595	
JUMPER Box (230L) / RELAY Box (230L)	2.8 HDi	94	09/00 – 04/02	3834	
JUMPER Box (230L) / RELAY Box (230L)	2.8 HDi	94	09/00 – 04/02	3835	
JUMPER Box (230L) / RELAY Box (230L)	2.8 HDi	94	09/00 – 04/02		3914
JUMPER Box (230L) / RELAY Box (230L)	2.8 HDi 4x4	94	09/00 04/02	3559	
JUMPER Box (230L) / RELAY Box (230L)	2.8 HDi 4x4	94	09/00 – 04/02	3595	
JUMPER Box (230L) / RELAY Box (230L)	2.8 HDi 4x4	94	09/00 – 04/02	3834	
JUMPER Box (230L) / RELAY Box (230L)	2.8 HDi 4x4	94	09/00 – 04/02	3835	
JUMPER Box (230L) / RELAY Box (230L)	2.8 HDi 4x4	94	09/00 – 04/02		3914
JUMPER Box (244) / RELAY Box (244)	20	81	04/02 -	3834	
JUMPER Box (244) / RELAY Box (244)	20	81	04/02 -	3835	
JUMPER Box (244) / RELAY Box (244)	20	81	04/02 -		3914
JUMPER Box (244) / RELAY Box (244)	2.0 bivalent	81	02/03 -	3834	
JUMPER Box (244) / RELAY Box (244)	2.0 bivalent	81	02/03 -	3835	
JUMPER Box (244) / RELAY Box (244)	2.0 bivalent	81	02/03 -		3914
JUMPER Box (244) / RELAY Box (244)	2.0 HDi	62	04/02 -	3834	
JUMPER Box (244) / RELAY Box (244)	2.0 HDi	62	04/02 -	3835	
JUMPER Box (244) / RELAY Box (244)	2.0 HDi	62	04/02 -		3914
JUMPER Box (244) / RELAY Box (244)	2.2 HDi	74	04/02 -	3834	
JUMPER Box (244) / RELAY Box (244)	2.2 HDi	74	04/02 -	3835	
JUMPER Box (244) / RELAY Box (244)	2.2 HDi	74	04/02 -		3914
JUMPER Box (244) / RELAY Box (244)	2.8 HDi	94	04/02 -	3834	
JUMPER Box (244) / RELAY Box (244)	2.8 HDi	94	04/02 -	3835	
JUMPER Box (244) / RELAY Box (244)	2.8 HDi	94	04/02 -		3914
JUMPER Box (244) / RELAY Box (244)	2.8 HDi	107	05/04 -	3834	
JUMPER Box (244) / RELAY Box (244)	2.8 HDi	107	05/04 -	3835	
JUMPER Box (244) / RELAY Box (244)	2.8 HDi	107	05/04 -		3914
JUMPER Box (244) / RELAY Box (244)	2.8 HDi 4x4	94	04/02 -	3834	
JUMPER Box (244) / RELAY Box (244)	2.8 HDi 4x4	94	04/02 -	3835	
JUMPER Box (244) / RELAY Box (244)	2.8 HDi 4x4	94	04/02 -		3914
JUMPER Box / RELAY Box	2.0 BlueHDi 110	81	04/16 -	3922	
JUMPER Box / RELAY Box	2.0 BlueHDi 110	81	04/16 -	3981	
JUMPER Box / RELAY Box	2.0 BlueHDi 110	81	04/16 -	4171	
JUMPER Box / RELAY Box	2.0 BlueHDi 130	96	04/16 -	3922	
JUMPER Box / RELAY Box	2.0 BlueHDi 130	96	04/16 -	3981	
JUMPER Box / RELAY Box	2.0 BlueHDi 130	96	04/16 -	4171	
JUMPER Box / RELAY Box	2.0 BlueHDi 160	120	04/16 -	3922	
JUMPER Box / RELAY Box	2.0 BlueHDi 160	120	04/16 -	3981	
JUMPER Box / RELAY Box	2.0 BlueHDi 160	120	04/16 -	4171	
JUMPER Box / RELAY Box	2.0 BlueHDi 160 4x4	120	04/16 -	3922	
JUMPER Box / RELAY Box	2.0 BlueHDi 160 4x4	120	04/16 -	3981	
JUMPER Box / RELAY Box	2.0 BlueHDi 160 4x4	120	04/16 -	4171	
JUMPER Box / RELAY Box	2.2 HDi 100	74	04/06 -	3922	
JUMPER Box / RELAY Box	2.2 HDi 100	74	04/06 -	3981	
JUMPER Box / RELAY Box	2.2 HDi 100	74	04/06 -	4171	
JUMPER Box / RELAY Box	2.2 HDi 110	81	07/11 -	3922	
JUMPER Box / RELAY Box	2.2 HDi 110	81	07/11 -	3981	
JUMPER Box / RELAY Box	2.2 HDi 110	81	07/11 -	4171	
JUMPER Box / RELAY Box	2.2 HDi 120	88	04/06 -	3922	
JUMPER Box / RELAY Box	2.2 HDi 120	88	04/06 -	3981	
JUMPER Box / RELAY Box	2.2 HDi 120	88	04/06 -	4171	
JUMPER Box / RELAY Box	2.2 HDi 130	96	07/11 -	3922	
JUMPER Box / RELAY Box	2.2 HDi 130	96	07/11 -	3981	
JUMPER Box / RELAY Box	2.2 HDi 130	96	07/11 -	4171	
JUMPER Box / RELAY Box	2.2 HDi 150	110	07/11 -	3922	

MAKE & MODEL		KW	YEAR		
CITROËN					
JUMPER Box / RELAY Box	2.2 HDi 150	110	07/11 -	3981	
JUMPER Box / RELAY Box	2.2 HDi 150	110	07/11 -	4171	
JUMPER Box / RELAY Box	3.0 HDi 145	107	07/10 -	3922	
JUMPER Box / RELAY Box	3.0 HDi 145	107	07/10 -	3981	
JUMPER Box / RELAY Box	3.0 HDi 145	107	07/10 -	4171	
JUMPER Box / RELAY Box	3.0 HDi 155	115	07/10 -	3922	
JUMPER Box / RELAY Box	3.0 HDi 155	115	07/10 -	3981	
JUMPER Box / RELAY Box	3.0 HDi 155	115	07/10 -	4171	
JUMPER Box / RELAY Box	3.0 HDi 160	116	09/06 -	3922	
JUMPER Box / RELAY Box	3.0 HDi 160	116	09/06 -	3981	
JUMPER Box / RELAY Box	3.0 HDi 160	116	09/06 -	4171	
JUMPER Box / RELAY Box	3.0 HDi 180	130	07/11 -	3922	
JUMPER Box / RELAY Box	3.0 HDi 180	130	07/11 -	3981	
JUMPER Box / RELAY Box	3.0 HDi 180	130	07/11 -	4171	
JUMPER Bus (230P) / RELAY Bus (230P)	20	80	02/94 04/02	3559	
JUMPER Bus (230P) / RELAY Bus (230P)	20	80	02/94 – 04/02	3595	
JUMPER Bus (230P) / RELAY Bus (230P)	20	80	02/94 – 04/02	3834	
JUMPER Bus (230P) / RELAY Bus (230P)	20	80	02/94 – 04/02	3835	
JUMPER Bus (230P) / RELAY Bus (230P)	20	80	02/94 – 04/02		3914
JUMPER Bus (230P) / RELAY Bus (230P)	1.9 D	51	01/99 04/02	3559	
JUMPER Bus (230P) / RELAY Bus (230P)	1.9 D	51	01/99 – 04/02	3595	
JUMPER Bus (230P) / RELAY Bus (230P)	1.9 D	51	01/99 – 04/02	3834	
JUMPER Bus (230P) / RELAY Bus (230P)	1.9 D	51	01/99 – 04/02	3835	
JUMPER Bus (230P) / RELAY Bus (230P)	1.9 D	51	01/99 – 04/02		3914
JUMPER Bus (230P) / RELAY Bus (230P)	1.9 TD	66	08/94 04/02	3559	
JUMPER Bus (230P) / RELAY Bus (230P)	1.9 TD	66	08/94 – 04/02	3595	
JUMPER Bus (230P) / RELAY Bus (230P)	1.9 TD	66	08/94 – 04/02	3834	
JUMPER Bus (230P) / RELAY Bus (230P)	1.9 TD	66	08/94 – 04/02	3835	
JUMPER Bus (230P) / RELAY Bus (230P)	1.9 TD	66	08/94 – 04/02		3914
JUMPER Bus (230P) / RELAY Bus (230P)	1.9 TD	68	02/94 04/02	3559	
JUMPER Bus (230P) / RELAY Bus (230P)	1.9 TD	68	02/94 – 04/02	3595	
JUMPER Bus (230P) / RELAY Bus (230P)	1.9 TD	68	02/94 – 04/02	3834	
JUMPER Bus (230P) / RELAY Bus (230P)	1.9 TD	68	02/94 – 04/02	3835	
JUMPER Bus (230P) / RELAY Bus (230P)	1.9 TD	68	02/94 – 04/02		3914
JUMPER Bus (230P) / RELAY Bus (230P)	1.9 TD 4x4	68	08/96 04/02	3559	
JUMPER Bus (230P) / RELAY Bus (230P)	1.9 TD 4x4	68	08/96 – 04/02	3595	
JUMPER Bus (230P) / RELAY Bus (230P)	1.9 TD 4x4	68	08/96 – 04/02	3834	
JUMPER Bus (230P) / RELAY Bus (230P)	1.9 TD 4x4	68	08/96 – 04/02	3835	
JUMPER Bus (230P) / RELAY Bus (230P)	1.9 TD 4x4	68	08/96 – 04/02		3914
JUMPER Bus (230P) / RELAY Bus (230P)	2.0 4x4	80	08/96 04/02	3559	
JUMPER Bus (230P) / RELAY Bus (230P)	2.0 4x4	80	08/96 – 04/02	3595	
JUMPER Bus (230P) / RELAY Bus (230P)	2.0 4x4	80	08/96 – 04/02	3834	
JUMPER Bus (230P) / RELAY Bus (230P)	2.0 4x4	80	08/96 – 04/02	3835	
JUMPER Bus (230P) / RELAY Bus (230P)	2.0 4x4	80	08/96 – 04/02		3914
JUMPER Bus (230P) / RELAY Bus (230P)	2.5 D	63	08/94 04/02	3559	
JUMPER Bus (230P) / RELAY Bus (230P)	2.5 D	63	08/94 – 04/02	3595	
JUMPER Bus (230P) / RELAY Bus (230P)	2.5 D	63	08/94 – 04/02	3834	
JUMPER Bus (230P) / RELAY Bus (230P)	2.5 D	63	08/94 – 04/02	3835	
JUMPER Bus (230P) / RELAY Bus (230P)	2.5 D	63	08/94 – 04/02		3914
JUMPER Bus (230P) / RELAY Bus (230P)	2.5 D 4x4	63	08/96 04/02	3559	
JUMPER Bus (230P) / RELAY Bus (230P)	2.5 D 4x4	63	08/96 – 04/02	3595	
JUMPER Bus (230P) / RELAY Bus (230P)	2.5 D 4x4	63	08/96 – 04/02	3834	
JUMPER Bus (230P) / RELAY Bus (230P)	2.5 D 4x4	63	08/96 – 04/02	3835	
JUMPER Bus (230P) / RELAY Bus (230P)	2.5 D 4x4	63	08/96 – 04/02		3914
JUMPER Bus (230P) / RELAY Bus (230P)	2.5 TD	76	08/94 04/02	3559	
JUMPER Bus (230P) / RELAY Bus (230P)	2.5 TD	76	08/94 – 04/02	3595	
JUMPER Bus (230P) / RELAY Bus (230P)	2.5 TD	76	08/94 – 04/02	3834	
JUMPER Bus (230P) / RELAY Bus (230P)	2.5 TD	76	08/94 – 04/02	3835	
JUMPER Bus (230P) / RELAY Bus (230P)	2.5 TD	76	08/94 – 04/02		3914
JUMPER Bus (230P) / RELAY Bus (230P)	2.5 TD 4x4	76	08/96 04/02	3559	
JUMPER Bus (230P) / RELAY Bus (230P)	2.5 TD 4x4	76	08/96 – 04/02	3595	
JUMPER Bus (230P) / RELAY Bus (230P)	2.5 TD 4x4	76	08/96 – 04/02	3834	
JUMPER Bus (230P) / RELAY Bus (230P)	2.5 TD 4x4	76	08/96 – 04/02	3835	
JUMPER Bus (230P) / RELAY Bus (230P)	2.5 TD 4x4	76	08/96 – 04/02		3914
JUMPER Bus (230P) / RELAY Bus (230P)	2.5 TDI 4x4	79	12/96 11/00	3559	
JUMPER Bus (230P) / RELAY Bus (230P)	2.5 TDI 4x4	79	12/96 – 11/00	3595	
JUMPER Bus (230P) / RELAY Bus (230P)	2.5 TDI 4x4	79	12/96 – 11/00	3834	
JUMPER Bus (230P) / RELAY Bus (230P)	2.5 TDI 4x4	79	12/96 – 11/00	3835	
JUMPER Bus (230P) / RELAY Bus (230P)	2.5 TDI 4x4	79	12/96 – 11/00		3914
JUMPER Bus (230P) / RELAY Bus (230P)	2.5 TDi	79	12/96 11/00	3559	
JUMPER Bus (230P) / RELAY Bus (230P)	2.5 TDi	79	12/96 – 11/00	3595	

MAKE & MODEL		KW	YEAR		
CITROËN					
JUMPER Bus (230P) / RELAY Bus (230P)	2.5 TDi	79	12/96 – 11/00	3834	
JUMPER Bus (230P) / RELAY Bus (230P)	2.5 TDi	79	12/96 – 11/00	3835	
JUMPER Bus (230P) / RELAY Bus (230P)	2.5 TDi	79	12/96 – 11/00		3914
JUMPER Bus (230P) / RELAY Bus (230P)	2.8 D	64	01/99 02/02	3559	
JUMPER Bus (230P) / RELAY Bus (230P)	2.8 D	64	01/99 – 02/02	3595	
JUMPER Bus (230P) / RELAY Bus (230P)	2.8 D	64	01/99 – 02/02	3834	
JUMPER Bus (230P) / RELAY Bus (230P)	2.8 D	64	01/99 – 02/02	3835	
JUMPER Bus (230P) / RELAY Bus (230P)	2.8 D	64	01/99 – 02/02		3914
JUMPER Bus (230P) / RELAY Bus (230P)	2.8 HDi	94	09/00 04/02	3559	
JUMPER Bus (230P) / RELAY Bus (230P)	2.8 HDi	94	09/00 – 04/02	3595	
JUMPER Bus (230P) / RELAY Bus (230P)	2.8 HDi	94	09/00 – 04/02	3834	
JUMPER Bus (230P) / RELAY Bus (230P)	2.8 HDi	94	09/00 – 04/02	3835	
JUMPER Bus (230P) / RELAY Bus (230P)	2.8 HDi	94	09/00 – 04/02		3914
JUMPER Bus (230P) / RELAY Bus (230P)	2.8 HDi 4x4	94	09/00 04/02	3559	
JUMPER Bus (230P) / RELAY Bus (230P)	2.8 HDi 4x4	94	09/00 – 04/02	3595	
JUMPER Bus (230P) / RELAY Bus (230P)	2.8 HDi 4x4	94	09/00 – 04/02	3834	
JUMPER Bus (230P) / RELAY Bus (230P)	2.8 HDi 4x4	94	09/00 – 04/02	3835	
JUMPER Bus (230P) / RELAY Bus (230P)	2.8 HDi 4x4	94	09/00 – 04/02		3914
JUMPER Bus (244, Z_) / RELAY Bus (244, Z_)	20	81	04/02 -	3834	
JUMPER Bus (244, Z_) / RELAY Bus (244, Z_)	20	81	04/02 -	3835	
JUMPER Bus (244, Z_) / RELAY Bus (244, Z_)	20	81	04/02 -		3914
JUMPER Bus (244, Z_) / RELAY Bus (244, Z_)	2.0 bivalent	81	02/03 -	3834	
JUMPER Bus (244, Z_) / RELAY Bus (244, Z_)	2.0 bivalent	81	02/03 -	3835	
JUMPER Bus (244, Z_) / RELAY Bus (244, Z_)	2.0 bivalent	81	02/03 -		3914
JUMPER Bus (244, Z_) / RELAY Bus (244, Z_)	2.0 HDi	62	04/02 -	3834	
JUMPER Bus (244, Z_) / RELAY Bus (244, Z_)	2.0 HDi	62	04/02 -	3835	
JUMPER Bus (244, Z_) / RELAY Bus (244, Z_)	2.0 HDi	62	04/02 -		3914
JUMPER Bus (244, Z_) / RELAY Bus (244, Z_)	2.2 HDi	74	04/02 -	3834	
JUMPER Bus (244, Z_) / RELAY Bus (244, Z_)	2.2 HDi	74	04/02 -	3835	
JUMPER Bus (244, Z_) / RELAY Bus (244, Z_)	2.2 HDi	74	04/02 -		3914
JUMPER Bus (244, Z_) / RELAY Bus (244, Z_)	2.8 HDi	94	04/02 -	3834	
JUMPER Bus (244, Z_) / RELAY Bus (244, Z_)	2.8 HDi	94	04/02 -	3835	
JUMPER Bus (244, Z_) / RELAY Bus (244, Z_)	2.8 HDi	94	04/02 -		3914
JUMPER Bus (244, Z_) / RELAY Bus (244, Z_)	2.8 HDi All-wheel Drive	94	04/02 -	3834	
JUMPER Bus (244, Z_) / RELAY Bus (244, Z_)	2.8 HDi All-wheel Drive	94	04/02 -		3914
JUMPER Bus (244, Z_) / RELAY Bus (244, Z_)	2.8 HDi All-wheel Drive	94	04/02 -	3835	
JUMPER Bus / RELAY Bus	2.0 BlueHDi 110	81	07/15 -	3922	
JUMPER Bus / RELAY Bus	2.0 BlueHDi 110	81	07/15 -	3981	
JUMPER Bus / RELAY Bus	2.0 BlueHDi 110	81	07/15 -	4171	
JUMPER Bus / RELAY Bus	2.0 BlueHDi 110	81	07/15 -		4224
JUMPER Bus / RELAY Bus	2.0 BlueHDi 130	96	07/15 -	3922	
JUMPER Bus / RELAY Bus	2.0 BlueHDi 130	96	07/15 -	3981	
JUMPER Bus / RELAY Bus	2.0 BlueHDi 130	96	07/15 -	4171	
JUMPER Bus / RELAY Bus	2.0 BlueHDi 130	96	07/15 -		4224
JUMPER Bus / RELAY Bus	2.0 BlueHDi 160	120	07/15 -	3922	
JUMPER Bus / RELAY Bus	2.0 BlueHDi 160	120	07/15 -	3981	
JUMPER Bus / RELAY Bus	2.0 BlueHDi 160	120	07/15 -	4171	
JUMPER Bus / RELAY Bus	2.0 BlueHDi 160	120	07/15 -		4224
JUMPER Bus / RELAY Bus	2.2 HDi 100	74	04/06 -	3922	
JUMPER Bus / RELAY Bus	2.2 HDi 100	74	04/06 -	3981	
JUMPER Bus / RELAY Bus	2.2 HDi 100	74	04/06 -	4171	
JUMPER Bus / RELAY Bus	2.2 HDi 110	81	07/11 -	3922	
JUMPER Bus / RELAY Bus	2.2 HDi 110	81	07/11 -	3981	
JUMPER Bus / RELAY Bus	2.2 HDi 110	81	07/11 -	4171	
JUMPER Bus / RELAY Bus	2.2 HDi 120	88	04/06 -	3922	
JUMPER Bus / RELAY Bus	2.2 HDi 120	88	04/06 -	3981	
JUMPER Bus / RELAY Bus	2.2 HDi 120	88	04/06 -	4171	
JUMPER Bus / RELAY Bus	2.2 HDi 130	96	07/11 -	3922	
JUMPER Bus / RELAY Bus	2.2 HDi 130	96	07/11 -	3981	
JUMPER Bus / RELAY Bus	2.2 HDi 130	96	07/11 -	4171	
JUMPER Bus / RELAY Bus	2.2 HDi 150	110	07/11 -	3922	
JUMPER Bus / RELAY Bus	2.2 HDi 150	110	07/11 -	3981	
JUMPER Bus / RELAY Bus	2.2 HDi 150	110	07/11 -	4171	
JUMPER Bus / RELAY Bus	3.0 HDi 155	115	07/10 -	3922	
JUMPER Bus / RELAY Bus	3.0 HDi 155	115	07/10 -	3981	
JUMPER Bus / RELAY Bus	3.0 HDi 155	115	07/10 -	4171	
JUMPER Bus / RELAY Bus	3.0 HDi 160	116	09/06 -	3922	
JUMPER Bus / RELAY Bus	3.0 HDi 160	116	09/06 -	3981	
JUMPER Bus / RELAY Bus	3.0 HDi 160	116	09/06 -	4171	
JUMPER Bus / RELAY Bus	3.0 HDi 180	130	07/11 -	3922	
JUMPER Bus / RELAY Bus	3.0 HDi 180	130	07/11 -	3981	

MAKE & MODEL		KW	YEAR		
CITROËN					
JUMPER Bus / RELAY Bus	3.0 HDi 180	130	07/11 -	4171	
JUMPER Platform/Chassis (230) / RELAY Platform/Chassis (230)	20	80	03/94 – 04/02	3834	
JUMPER Platform/Chassis (230) / RELAY Platform/Chassis (230)	2.0	80	03/94 – 04/02	3595	
JUMPER Platform/Chassis (230) / RELAY Platform/Chassis (230)	2.5 TD	76	03/94 – 04/02	3595	
JUMPER Platform/Chassis (230) / RELAY Platform/Chassis (230)	2.5 TDi	79	12/96 – 04/02	3595	
JUMPER Platform/Chassis (230) / RELAY Platform/Chassis (230)	1.9 TD	66	03/94 – 04/02		3914
JUMPER Platform/Chassis (230) / RELAY Platform/Chassis (230)	1.9 TD	68	03/94 – 04/02		3914
JUMPER Platform/Chassis (230) / RELAY Platform/Chassis (230)	2.0 HDi	62	04/02 -	3835	
JUMPER Platform/Chassis (230) / RELAY Platform/Chassis (230)	2.2 HDi	74	02/02 – 06/06	3835	
JUMPER Platform/Chassis (230) / RELAY Platform/Chassis (230)	2.2 HDi	74	04/02 -	3835	
JUMPER Platform/Chassis (230) / RELAY Platform/Chassis (230)	2.5 D	63	03/94 – 04/02	3595	
JUMPER Platform/Chassis (230) / RELAY Platform/Chassis (230)	2.5 D	63	03/94 – 04/02	3835	
JUMPER Platform/Chassis (230) / RELAY Platform/Chassis (230)	2.5 D 4x4	63	03/00 – 04/02	3835	
JUMPER Platform/Chassis (230) / RELAY Platform/Chassis (230)	2.5 TD	76	03/94 – 04/02		3914
JUMPER Platform/Chassis (230) / RELAY Platform/Chassis (230)	2.5 TD	76	03/94 – 04/02	3835	
JUMPER Platform/Chassis (230) / RELAY Platform/Chassis (230)	2.5 TDi	79	12/96 – 04/02		3914
JUMPER Platform/Chassis (230) / RELAY Platform/Chassis (230)	2.5 TDi 4x4	79	03/00 – 04/02	3835	
JUMPER Platform/Chassis (230) / RELAY Platform/Chassis (230)	2.5 TDi 4x4	79	03/00 04/02	3559	
JUMPER Platform/Chassis (230) / RELAY Platform/Chassis (230)	2.8 HDi	93	10/00 – 01/02	3835	
JUMPER Platform/Chassis (230) / RELAY Platform/Chassis (230)	2.8 HDi	94	09/00 – 04/02	3835	
JUMPER Platform/Chassis (230) / RELAY Platform/Chassis (230)	2.8 HDi 4x4	94	02/02 – 06/06	3835	
JUMPER Platform/Chassis (230) / RELAY Platform/Chassis (230)	1.9 TD	66	03/94 – 04/02	3834	
JUMPER Platform/Chassis (230) / RELAY Platform/Chassis (230)	1.9 TD	66	03/94 – 04/02	3595	
JUMPER Platform/Chassis (230) / RELAY Platform/Chassis (230)	1.9 TD	66	03/94 04/02	3559	
JUMPER Platform/Chassis (230) / RELAY Platform/Chassis (230)	1.9 TD	68	03/94 – 04/02	3834	
JUMPER Platform/Chassis (230) / RELAY Platform/Chassis (230)	1.9 TD	68	03/94 – 04/02	3595	
JUMPER Platform/Chassis (230) / RELAY Platform/Chassis (230)	1.9 TD	68	03/94 04/02	3559	
JUMPER Platform/Chassis (230) / RELAY Platform/Chassis (230)	1.9 TD	66	03/94 – 04/02	3835	
JUMPER Platform/Chassis (230) / RELAY Platform/Chassis (230)	1.9 TD	68	03/94 – 04/02	3835	
JUMPER Platform/Chassis (230) / RELAY Platform/Chassis (230)	2.0	80	03/94 – 04/02		3914
JUMPER Platform/Chassis (230) / RELAY Platform/Chassis (230)	2.0	80	03/94 – 04/02	3835	
JUMPER Platform/Chassis (230) / RELAY Platform/Chassis (230)	2.0	80	03/94 04/02	3559	
JUMPER Platform/Chassis (230) / RELAY Platform/Chassis (230)	2.0 HDi	62	04/02 -	3834	
JUMPER Platform/Chassis (230) / RELAY Platform/Chassis (230)	2.0 HDi	62	04/02 -		3914
JUMPER Platform/Chassis (230) / RELAY Platform/Chassis (230)	2.2 HDi	74	02/02 – 06/06	3834	
JUMPER Platform/Chassis (230) / RELAY Platform/Chassis (230)	2.2 HDi	74	04/02 -	3834	
JUMPER Platform/Chassis (230) / RELAY Platform/Chassis (230)	2.2 HDi	74	02/02 – 06/06		3914
JUMPER Platform/Chassis (230) / RELAY Platform/Chassis (230)	2.2 HDi	74	04/02 -		3914
JUMPER Platform/Chassis (230) / RELAY Platform/Chassis (230)	2.5 D	63	03/94 – 04/02	3834	
JUMPER Platform/Chassis (230) / RELAY Platform/Chassis (230)	2.5 D	63	03/94 04/02	3559	
JUMPER Platform/Chassis (230) / RELAY Platform/Chassis (230)	2.5 D	63	03/94 – 04/02		3914
JUMPER Platform/Chassis (230) / RELAY Platform/Chassis (230)	2.5 D 4x4	63	03/00 – 04/02	3834	
JUMPER Platform/Chassis (230) / RELAY Platform/Chassis (230)	2.5 D 4x4	63	03/00 – 04/02		3914
JUMPER Platform/Chassis (230) / RELAY Platform/Chassis (230)	2.5 D 4x4	63	03/00 – 04/02	3595	
JUMPER Platform/Chassis (230) / RELAY Platform/Chassis (230)	2.5 D 4x4	63	03/00 04/02	3559	
JUMPER Platform/Chassis (230) / RELAY Platform/Chassis (230)	2.5 TD	76	03/94 – 04/02	3834	
JUMPER Platform/Chassis (230) / RELAY Platform/Chassis (230)	2.5 TD	76	03/94 04/02	3559	
JUMPER Platform/Chassis (230) / RELAY Platform/Chassis (230)	2.5 TDi	79	12/96 – 04/02	3834	
JUMPER Platform/Chassis (230) / RELAY Platform/Chassis (230)	2.5 TDi	79	12/96 04/02	3559	
JUMPER Platform/Chassis (230) / RELAY Platform/Chassis (230)	2.5 TDi	79	12/96 – 04/02	3835	
JUMPER Platform/Chassis (230) / RELAY Platform/Chassis (230)	2.5 TDi 4x4	79	03/00 – 04/02	3834	
JUMPER Platform/Chassis (230) / RELAY Platform/Chassis (230)	2.5 TDi 4x4	79	03/00 – 04/02		3914
JUMPER Platform/Chassis (230) / RELAY Platform/Chassis (230)	2.5 TDi 4x4	79	03/00 – 04/02	3595	
JUMPER Platform/Chassis (230) / RELAY Platform/Chassis (230)	2.8 D	64	01/99 – 02/02	3834	
JUMPER Platform/Chassis (230) / RELAY Platform/Chassis (230)	2.8 D	64	01/99 – 02/02		3914
JUMPER Platform/Chassis (230) / RELAY Platform/Chassis (230)	2.8 D	64	01/99 – 02/02	3559	
JUMPER Platform/Chassis (230) / RELAY Platform/Chassis (230)	2.8 D	64	01/99 – 02/02	3595	
JUMPER Platform/Chassis (230) / RELAY Platform/Chassis (230)	2.8 D	64	01/99 – 02/02	3835	
JUMPER Platform/Chassis (230) / RELAY Platform/Chassis (230)	2.8 HDi	93	10/00 – 01/02	3834	
JUMPER Platform/Chassis (230) / RELAY Platform/Chassis (230)	2.8 HDi	94	09/00 – 04/02	3834	
JUMPER Platform/Chassis (230) / RELAY Platform/Chassis (230)	2.8 HDi	94	04/02 -	3834	
JUMPER Platform/Chassis (230) / RELAY Platform/Chassis (230)	2.8 HDi	94	09/00 – 04/02		3914
JUMPER Platform/Chassis (230) / RELAY Platform/Chassis (230)	2.8 HDi	94	04/02 -		3914
JUMPER Platform/Chassis (230) / RELAY Platform/Chassis (230)	2.8 HDi	107	05/04 -	3834	
JUMPER Platform/Chassis (230) / RELAY Platform/Chassis (230)	2.8 HDi	107	05/04 -		3914
JUMPER Platform/Chassis (230) / RELAY Platform/Chassis (230)	2.8 HDi	93	10/00 – 01/02	3559	
JUMPER Platform/Chassis (230) / RELAY Platform/Chassis (230)	2.8 HDi	94	04/02 -	3835	
JUMPER Platform/Chassis (230) / RELAY Platform/Chassis (230)	2.8 HDi	94	09/00 – 04/02	3559	
JUMPER Platform/Chassis (230) / RELAY Platform/Chassis (230)	2.8 HDi	107	05/04 -	3835	
JUMPER Platform/Chassis (230) / RELAY Platform/Chassis (230)	2.8 Hdi	93	10/00 – 01/02		3914
JUMPER Platform/Chassis (230) / RELAY Platform/Chassis (230)	2.8 HDi	93	10/00 – 01/02	3595	

MAKE & MODEL		KW	YEAR		
CITROËN					
JUMPER Platform/Chassis (230) / RELAY Platform/Chassis (230)	2.8 HDi	94	09/00 – 04/02	3595	
JUMPER Platform/Chassis (230) / RELAY Platform/Chassis (230)	2.8 HDi 4x4	94	02/02 – 06/06	3834	
JUMPER Platform/Chassis (230) / RELAY Platform/Chassis (230)	2.8 HDi 4x4	94	02/02 – 06/06		3914
JUMPER Platform/Chassis / RELAY Platform/Chassis	2.0 BlueHDi 110	81	04/16 -	3922	
JUMPER Platform/Chassis / RELAY Platform/Chassis	2.0 BlueHDi 110	81	04/16 -	3981	
JUMPER Platform/Chassis / RELAY Platform/Chassis	2.0 BlueHDi 110	81	04/16 -	4171	
JUMPER Platform/Chassis / RELAY Platform/Chassis	2.0 BlueHDi 130	96	04/16 -	3922	
JUMPER Platform/Chassis / RELAY Platform/Chassis	2.0 BlueHDi 130	96	04/16 -	3981	
JUMPER Platform/Chassis / RELAY Platform/Chassis	2.0 BlueHDi 130	96	04/16 -	4171	
JUMPER Platform/Chassis / RELAY Platform/Chassis	2.0 BlueHDi 130 4x4	96	04/16 -	3922	
JUMPER Platform/Chassis / RELAY Platform/Chassis	2.0 BlueHDi 130 4x4	96	04/16 -	3981	
JUMPER Platform/Chassis / RELAY Platform/Chassis	2.0 BlueHDi 130 4x4	96	04/16 -	4171	
JUMPER Platform/Chassis / RELAY Platform/Chassis	2.0 BlueHDi 160	120	04/16 -	3922	
JUMPER Platform/Chassis / RELAY Platform/Chassis	2.0 BlueHDi 160	120	04/16 -	3981	
JUMPER Platform/Chassis / RELAY Platform/Chassis	2.0 BlueHDi 160	120	04/16 -	4171	
JUMPER Platform/Chassis / RELAY Platform/Chassis	2.0 BlueHDi 160 4x4	120	04/16 -	3922	
JUMPER Platform/Chassis / RELAY Platform/Chassis	2.0 BlueHDi 160 4x4	120	04/16 -	3981	
JUMPER Platform/Chassis / RELAY Platform/Chassis	2.0 BlueHDi 160 4x4	120	04/16 -	4171	
JUMPER Platform/Chassis / RELAY Platform/Chassis	2.2 HDi 100	74	04/06 -	3922	
JUMPER Platform/Chassis / RELAY Platform/Chassis	2.2 HDi 100	74	04/06 -	3981	
JUMPER Platform/Chassis / RELAY Platform/Chassis	2.2 HDi 100	74	04/06 -	4171	
JUMPER Platform/Chassis / RELAY Platform/Chassis	2.2 HDi 110	81	07/11 -	3922	
JUMPER Platform/Chassis / RELAY Platform/Chassis	2.2 HDi 110	81	07/11 -	3981	
JUMPER Platform/Chassis / RELAY Platform/Chassis	2.2 HDi 110	81	07/11 -	4171	
JUMPER Platform/Chassis / RELAY Platform/Chassis	2.2 HDi 120	88	04/06 -	3922	
JUMPER Platform/Chassis / RELAY Platform/Chassis	2.2 HDi 120	88	04/06 -	3981	
JUMPER Platform/Chassis / RELAY Platform/Chassis	2.2 HDi 120	88	04/06 -	4171	
JUMPER Platform/Chassis / RELAY Platform/Chassis	2.2 HDi 130	96	07/11 -	3922	
JUMPER Platform/Chassis / RELAY Platform/Chassis	2.2 HDi 130	96	07/11 -	3981	
JUMPER Platform/Chassis / RELAY Platform/Chassis	2.2 HDi 130	96	07/11 -	4171	
JUMPER Platform/Chassis / RELAY Platform/Chassis	2.2 HDi 150	110	07/11 -	3922	
JUMPER Platform/Chassis / RELAY Platform/Chassis	2.2 HDi 150	110	07/11 -	3981	
JUMPER Platform/Chassis / RELAY Platform/Chassis	2.2 HDi 150	110	07/11 -	4171	
JUMPER Platform/Chassis / RELAY Platform/Chassis	3.0 HDi 145	107	07/10 -	3922	
JUMPER Platform/Chassis / RELAY Platform/Chassis	3.0 HDi 145	107	07/10 -	3981	
JUMPER Platform/Chassis / RELAY Platform/Chassis	3.0 HDi 145	107	07/10 -	4171	
JUMPER Platform/Chassis / RELAY Platform/Chassis	3.0 HDi 160	116	09/06 -	3922	
JUMPER Platform/Chassis / RELAY Platform/Chassis	3.0 HDi 160	116	09/06 -	3981	
JUMPER Platform/Chassis / RELAY Platform/Chassis	3.0 HDi 160	116	09/06 -	4171	
JUMPER Platform/Chassis / RELAY Platform/Chassis	3.0 HDi 180	130	07/11 -	3922	
JUMPER Platform/Chassis / RELAY Platform/Chassis	3.0 HDi 180	130	07/11 -	3981	
JUMPER Platform/Chassis / RELAY Platform/Chassis	3.0 HDi 180	130	07/11 -	4171	
JUMPY	1.6 HDi 90 16V	66	01/07 -	3972	
JUMPY	1.6 HDi 90 16V	66	01/07 -		4151
JUMPY	1.6 HDi 90 8V	66	01/07 -	3972	
JUMPY	1.6 HDi 90 8V	66	01/07 -		4151
JUMPY	2.0 HDi 120	88	01/07 -	3972	
JUMPY	2.0 HDi 120	88	01/07 -		4151
JUMPY	2.0 HDi 125	94	07/11 -	3972	
JUMPY	2.0 HDi 125	94	07/11 -		4151
JUMPY	2.0 HDi 140	100	01/07 -	3972	
JUMPY	2.0 HDi 140	100	01/07 -		4151
JUMPY	2.0 HDi 165	120	07/10 -	3972	
JUMPY	2.0 HDi 165	120	07/10 -		4151
JUMPY	2.0 HDi 95	72	07/11 -	3972	
JUMPY	2.0 HDi 95	72	07/11 -		4151
JUMPY	2.0 i	103	01/07 -	3972	
JUMPY	2.0 i	103	01/07 -		4151
JUMPY (U6U)	16	58	10/95 -	3799	
JUMPY (U6U)	16	58	10/95 -	3986	
JUMPY (U6U)	16	59	10/95 – 08/00	3799	
JUMPY (U6U)	16	59	10/95 – 08/00	3986	
JUMPY (U6U)	20	100	04/00 – 12/06	3799	
JUMPY (U6U)	20	100	04/00 – 12/06	3986	
JUMPY (U6U)	1.9 D	51	10/95 – 04/98	3799	
JUMPY (U6U)	1.9 D	51	10/95 – 04/98	3986	
JUMPY (U6U)	1.9 D 70	51	04/98 -	3799	
JUMPY (U6U)	1.9 D 70	51	04/98 -	3986	
JUMPY (U6U)	1.9 TD	66	10/95 -	3799	
JUMPY (U6U)	1.9 TD	66	10/95 -	3986	
JUMPY (U6U)	1.9 TD	68	04/96 -	3799	

MAKE & MODEL		KW	YEAR		
CITROËN					
JUMPY (U6U)	1.9 TD	68	04/96 -	3986	
JUMPY (U6U)	2.0 HDi 110	80	03/00 -	3799	
JUMPY (U6U)	2.0 HDi 110	80	03/00 -	3799	
JUMPY (U6U)	2.0 HDi 110	80	03/00 -	3986	
JUMPY (U6U)	2.0 HDi 110	80	03/00 -	3986	
JUMPY (U6U)	2.0 HDi 95	69	10/99 -	3799	
JUMPY (U6U)	2.0 HDi 95	69	10/99 -	3986	
JUMPY (U6U)	2.0 i 16V	102	03/00 -	3799	
JUMPY (U6U)	2.0 i 16V	102	03/00 -	3986	
JUMPY Box	1.6 HDi 90 16V	66	01/07 -	3972	
JUMPY Box	1.6 HDi 90 16V	66	01/07 -		4151
JUMPY Box	1.6 HDi 90 8V	66	01/07 -	3972	
JUMPY Box	1.6 HDi 90 8V	66	01/07 -		4151
JUMPY Box	2.0 HDi 120	88	01/07 -	3972	
JUMPY Box	2.0 HDi 120	88	01/07 -		4151
JUMPY Box	2.0 HDi 120 4x4	88	01/10 -	3972	
JUMPY Box	2.0 HDi 120 4x4	88	01/10 -		4151
JUMPY Box	2.0 HDi 125	94	07/11 -	3972	
JUMPY Box	2.0 HDi 125	94	07/11 -		4151
JUMPY Box	2.0 HDi 140	100	01/07 -	3972	
JUMPY Box	2.0 HDi 140	100	01/07 -		4151
JUMPY Box	2.0 HDi 165	120	07/10 -	3972	
JUMPY Box	2.0 HDi 165	120	07/10 -		4151
JUMPY Box	2.0 HDi 95	72	07/11 -	3972	
JUMPY Box	2.0 HDi 95	72	07/11 -		4151
JUMPY Box	2.0 i	103	01/07 -	3972	
JUMPY Box	2.0 i	103	01/07 -		4151
JUMPY Box (BS_, BT_, BY_, BZ_)	16	59	10/95 – 08/00	3799	
JUMPY Box (BS_, BT_, BY_, BZ_)	16	59	10/95 – 08/00	3986	
JUMPY Box (BS_, BT_, BY_, BZ_)	1.6 i	58	10/95 -	3799	
JUMPY Box (BS_, BT_, BY_, BZ_)	1.6 i	58	10/95 -	3986	
JUMPY Box (BS_, BT_, BY_, BZ_)	1.9 D	51	10/95 – 08/98	3799	
JUMPY Box (BS_, BT_, BY_, BZ_)	1.9 D	51	10/95 – 08/98	3986	
JUMPY Box (BS_, BT_, BY_, BZ_)	1.9 D 70	51	04/98 -	3799	
JUMPY Box (BS_, BT_, BY_, BZ_)	1.9 D 70	51	04/98 -	3986	
JUMPY Box (BS_, BT_, BY_, BZ_)	1.9 DT	65	10/95 – 08/00	3799	
JUMPY Box (BS_, BT_, BY_, BZ_)	1.9 DT	65	10/95 – 08/00	3986	
JUMPY Box (BS_, BT_, BY_, BZ_)	1.9 TD	66	10/95 -	3799	
JUMPY Box (BS_, BT_, BY_, BZ_)	1.9 TD	66	10/95 -	3986	
JUMPY Box (BS_, BT_, BY_, BZ_)	2.0 HDi 110	80	01/02 -	3799	
JUMPY Box (BS_, BT_, BY_, BZ_)	2.0 HDi 110	80	01/02 -	3799	
JUMPY Box (BS_, BT_, BY_, BZ_)	2.0 HDi 110	80	01/02 -	3986	
JUMPY Box (BS_, BT_, BY_, BZ_)	2.0 HDi 110	80	01/02 -	3986	
JUMPY Box (BS_, BT_, BY_, BZ_)	2.0 HDi 95	69	10/99 -	3799	
JUMPY Box (BS_, BT_, BY_, BZ_)	2.0 HDi 95	69	10/99 -	3986	
JUMPY Box (BS_, BT_, BY_, BZ_)	2.0 i 16V	102	03/00 -	3799	
JUMPY Box (BS_, BT_, BY_, BZ_)	2.0 i 16V	102	03/00 -	3986	
JUMPY Platform/Chassis	2.0 HDi 125	94	07/11 -	3972	
JUMPY Platform/Chassis	2.0 HDi 125	94	07/11 -		4151
JUMPY Platform/Chassis (BU_, BV_, BW_, BX_)	20	100	12/03 – 10/06	3986	
JUMPY Platform/Chassis (BU_, BV_, BW_, BX_)	1.9 TD	68	10/99 -	3986	
JUMPY Platform/Chassis (BU_, BV_, BW_, BX_)	2.0 HDi 110	80	12/03 – 10/06	3986	
JUMPY Platform/Chassis (BU_, BV_, BW_, BX_)	2.0 HDi 110 16V	80	12/03 – 10/06	3986	
JUMPY Platform/Chassis (BU_, BV_, BW_, BX_)	2.0 HDi 95	69	10/99 -	3986	
LNA	06	24	11/76 – 07/79	3329	
LNA	06	24	11/76 – 07/79	3542	
NEMO Box (AA_)	1.3 HDi 75	55	10/10 -	3826/3	
NEMO Estate	1.3 HDi 75	55	10/10 -	3826/3	
SAXO	1.4-1.5D-1.6 16V		96-	3488	
SAXO (S0, S1)	16	66	02/96 – 06/03		3496
SAXO (S0, S1)	16	66	02/96 – 06/03	3528	
SAXO (S0, S1)	16	74	02/01 – 04/04		3496
SAXO (S0, S1)	16	74	02/01 – 04/04	3528	
SAXO (S0, S1)	16	88	02/96 – 04/04		3496
SAXO (S0, S1)	16	88	02/96 – 04/04	3528	
SAXO (S0, S1)	1.0 X	33	05/96 – 11/98	3380	
SAXO (S0, S1)	1.0 X	33	05/96 – 11/98	3381	
SAXO (S0, S1)	1.0 X	37	05/98 – 06/03	3380	
SAXO (S0, S1)	1.0 X	37	05/98 – 06/03	3381	
SAXO (S0, S1)	1.1 X,SX	40	05/96 – 09/03	3380	
SAXO (S0, S1)	1.1 X,SX	40	05/96 – 09/03	3381	

BESER®

MAKE & MODEL   		KW	YEAR		
CITROËN					
SAXO (S0, S1)	1.1 X,SX	44	05/96 09/03	3580	
SAXO (S0, S1)	1.4 VTS	55	05/96 – 06/03	3380	
SAXO (S0, S1)	1.4 VTS	55	05/96 – 06/03	3381	
SAXO (S0, S1)	1.5 D	40	09/96 – 09/03	3380	
SAXO (S0, S1)	1.5 D	40	09/96 – 09/03	3381	
SAXO (S0, S1)	1.5 D	42	09/96 – 06/01	3380	
SAXO (S0, S1)	1.5 D	42	09/96 – 06/01	3381	
SAXO (S0, S1)	1.5 D	43	07/01 – 04/04	3380	
SAXO (S0, S1)	1.5 D	43	07/01 – 04/04	3381	
SAXO (S0, S1)	1.6 VTL,VTR	65	05/96 – 06/03		3496
SAXO (S0, S1)	1.6 VTL,VTR	65	05/96 – 06/03	3528	
SAXO (S0, S1)	1.6 VTR	80	05/96 – 07/99		3496
SAXO (S0, S1)	1.6 VTR	80	05/96 – 07/99	3528	
SAXO (S0, S1)	1.6 VTS	72	09/00 – 09/03		3496
SAXO (S0, S1)	1.6 VTS	72	09/00 – 09/03	3528	
SAXO (S0, S1)	1.6 VTS	87	06/96 – 09/03		3496
SAXO (S0, S1)	1.6 VTS	87	06/96 – 09/03	3528	
SAXO (S0, S1)	Electric	20	11/96 – 06/03	3380	
SAXO (S0, S1)	Electric	20	11/96 – 06/03	3381	
VISA	06	24	07/82 – 03/91	3329	
VISA	06	24	07/82 – 03/91	3542	
VISA	06	25	09/78 – 06/88	3329	
VISA	06	25	09/78 – 06/88	3542	
VISA	10	33	09/84 – 06/88	3329	
VISA	10	33	09/84 – 06/88	3542	
VISA	11 E	35	09/78 – 06/88	3329	
VISA	11 E	35	09/78 – 06/88	3542	
VISA	11 E	37	07/82 – 03/91	3329	
VISA	11 E	37	07/82 – 03/91	3542	
VISA	11 E	42	09/78 – 03/91	3329	
VISA	11 E	42	09/78 – 03/91	3542	
VISA	16 GTI	76	01/85 – 06/86	3474	
VISA	16 GTI	83	06/86 – 03/91	3474	
VISA	17 D	44	04/84 – 03/91	3474	
VISA	II Super X	47	07/80 – 06/82	3329	
VISA	II Super X	47	07/80 – 06/82	3542	
VISA Convertible	11 RE	37	03/83 – 10/88	3329	
VISA Convertible	11 RE	37	03/83 – 10/88	3542	
XANTIA (X1)	20	95	03/93 – 05/95	3819	
XANTIA (X1)	20	95	03/93 – 05/95		3873
XANTIA (X1)	1.6 i	65	03/93 – 01/98	3819	
XANTIA (X1)	1.6 i	65	03/93 – 01/98		3873
XANTIA (X1)	1.8 i	66	04/97 – 01/98	3819	
XANTIA (X1)	1.8 i	66	04/97 – 01/98		3873
XANTIA (X1)	1.8 i	74	03/93 – 01/98	3819	
XANTIA (X1)	1.8 i	74	03/93 – 01/98		3873
XANTIA (X1)	1.8 i 16V	81	06/95 – 01/98	3819	
XANTIA (X1)	1.8 i 16V	81	06/95 – 01/98		3873
XANTIA (X1)	1.9 D	50	06/94 – 01/98	3819	
XANTIA (X1)	1.9 D	50	06/94 – 01/98		3873
XANTIA (X1)	1.9 D	51	06/94 – 01/98	3819	
XANTIA (X1)	1.9 D	51	06/94 – 01/98		3873
XANTIA (X1)	1.9 SD	55	02/96 – 01/98	3819	
XANTIA (X1)	1.9 SD	55	02/96 – 01/98		3873
XANTIA (X1)	1.9 Turbo D	66	10/94 – 01/98	3819	
XANTIA (X1)	1.9 Turbo D	66	10/94 – 01/98		3873
XANTIA (X1)	1.9 Turbo D	66	10/94 – 01/98	3878	
XANTIA (X1)	2.0 i	89	03/93 – 01/98	3819	
XANTIA (X1)	2.0 i	89	03/93 – 01/98		3873
XANTIA (X1)	2.0 i	89	03/93 – 01/98	3878	
XANTIA (X1)	2.0 i 16V	97	06/95 – 01/98		3873
XANTIA (X1)	2.0 i 16V	97	06/95 – 01/98	3878	
XANTIA (X1)	2.0 i 16V	110	06/94 – 01/98		3873
XANTIA (X1)	2.0 i 16V	110	06/94 – 01/98	3878	
XANTIA (X1)	2.0 i 16V	112	03/93 – 01/98		3873
XANTIA (X1)	2.0 i 16V	112	03/93 – 01/98	3878	
XANTIA (X1)	2.0 Turbo	108	06/95 – 01/98		3873
XANTIA (X1)	2.1 Turbo D 12V	80	06/95 – 01/98		3873
XANTIA (X1)	3.0 i 24V	140	01/97 – 01/98		3873
XANTIA (X2)	1.6 i SX	65	01/98 – 03/01	3819	
XANTIA (X2)	1.6 i SX	65	01/98 – 03/01		3873

MAKE & MODEL		KW	YEAR		
CITROËN					
XANTIA (X2)	1.8 i	66	01/98 – 04/03	3819	
XANTIA (X2)	1.8 i	66	01/98 – 04/03		3873
XANTIA (X2)	1.8 i 16V	81	01/98 – 04/03	3819	
XANTIA (X2)	1.8 i 16V	81	01/98 – 04/03		3873
XANTIA (X2)	1.9 SD	55	01/98 – 04/03	3819	
XANTIA (X2)	1.9 SD	55	01/98 – 04/03		3873
XANTIA (X2)	1.9 Turbo D	66	01/98 – 04/03	3819	
XANTIA (X2)	1.9 Turbo D	66	01/98 – 04/03		3873
XANTIA (X2)	2.0 HDI 109	80	02/99 – 04/03		3873
XANTIA (X2)	2.0 HDI 90	66	03/99 – 04/03		3873
XANTIA (X2)	2.0 i	89	01/98 – 04/03	3819	
XANTIA (X2)	2.0 i	89	01/98 – 04/03		3873
XANTIA (X2)	2.0 i	89	01/98 – 04/03	3878	
XANTIA (X2)	2.0 i 16V	97	01/98 – 04/03		3873
XANTIA (X2)	2.0 i 16V	97	01/98 – 04/03	3878	
XANTIA (X2)	2.0 Turbo	108	01/98 – 04/03		3873
XANTIA (X2)	2.1 Turbo D 12V	80	01/98 – 02/99		3873
XANTIA (X2)	3.0 V6	140	01/98 – 04/03		3873
XANTIA Break (X1)	1.8 i	66	04/97 – 01/98	3819	
XANTIA Break (X1)	1.8 i	66	04/97 – 01/98	3878	
XANTIA Break (X1)	1.8 i	66	01/98 – 04/03	3819	
XANTIA Break (X1)	1.8 i	66	01/98 – 04/03	3878	
XANTIA Break (X1)	1.8 i	74	06/95 – 01/98	3819	
XANTIA Break (X1)	1.8 i	74	06/95 – 01/98	3878	
XANTIA Break (X1)	1.8 i 16V	81	06/95 – 01/98	3819	
XANTIA Break (X1)	1.8 i 16V	81	06/95 – 01/98	3878	
XANTIA Break (X1)	1.8 i 16V	81	01/98 – 04/03	3819	
XANTIA Break (X1)	1.8 i 16V	81	01/98 – 04/03	3878	
XANTIA Break (X2)	1.9 SD	55	04/97 – 01/98	3878	
XANTIA Break (X2)	1.9 SD	55	01/98 – 04/03	3878	
XANTIA Break (X2)	1.9 Turbo D	66	06/95 – 01/98	3878	
XANTIA Break (X2)	1.9 Turbo D	66	01/98 – 04/03	3878	
XANTIA Break (X2)	2.0 i	89	06/95 – 01/98	3878	
XANTIA Break (X2)	2.0 i	89	01/98 – 04/03	3878	
XANTIA Break (X2)	2.0 i 16V	97	06/95 – 01/98	3878	
XANTIA Break (X2)	2.0 i 16V	97	01/98 – 04/03	3878	
XM (Y3)	20	84	05/89 – 04/94		3873
XM (Y3)	20	94	05/89 – 06/94		3873
XM (Y3)	30	123	05/89 – 05/94		3873
XM (Y3)	30	147	05/89 – 06/94		3873
XM (Y3)	2.0 i	79	05/89 – 04/94		3873
XM (Y3)	2.0 i	89	05/89 – 06/94		3873
XM (Y3)	2.0 i Turbo	104	09/92 – 06/94		3873
XM (Y3)	2.1 D 12V	60	05/89 – 06/94		3873
XM (Y3)	2.1 TD 12V	80	05/89 – 06/94		3873
XM (Y3)	3.0 V6	123	05/89 – 06/94		3873
XM (Y3)	3.0 V6 24V	147	07/90 – 06/94		3873
XM (Y4)	2.0 i 16V	97	05/94 – 10/00		3873
XM (Y4)	2.0 Turbo	108	05/94 – 10/00		3873
XM (Y4)	2.1 D12 VSX	60	03/96 – 08/96		3873
XM (Y4)	2.1 TD 12V	80	05/94 – 10/00		3873
XM (Y4)	2.5 TD	95	05/94 – 10/00		3873
XM (Y4)	3.0 V6	123	05/94 – 10/00		3873
XM (Y4)	3.0 V6	140	04/97 – 10/00		3873
XM (Y4)	3.0 V6 24V	147	05/94 – 10/00		3873
XM Break (Y3)	20	94	05/89 – 06/94		3873
XSARA (N0)	1.4 i (KFW (TU3JP))	55	03/98 – 03/05	3659	
XSARA (N0)	1.4 i (KFX (TU3JP))	55	03/98 – 03/05	3659	
XSARA (N1)	1.4 HDi	50	01/03 – 03/05		3496
XSARA (N1)	1.4 i	55	04/97 – 03/05		3496
XSARA (N1)	1.4 i	55	04/97 – 03/05	3938	
XSARA (N1)	1.4 i (KFW (TU3JP))	55	04/97 – 03/05	3659	
XSARA (N1)	1.4 i (KFX (TU3JP))	55	04/97 – 03/05	3659	
XSARA (N1)	1.5 D	42	04/97 – 09/00		3496
XSARA (N1)	1.5 D	42	04/97 – 09/00	3938	
XSARA (N1)	1.5 D (VJZ (TUD5))	42	04/97 – 09/00	3659	
XSARA (N1)	1.6 16V	80	09/00 – 03/05		3496
XSARA (N1)	1.6 i	65	04/97 – 09/00		3496
XSARA (N1)	1.8 D	43	04/97 – 09/00		3496
XSARA (N1)	1.8 i	66	04/97 – 09/00		3496
XSARA (N1)	1.8 i 16V	81	04/97 – 09/00		3496

MAKE & MODEL   		KW	YEAR		
CITROËN					
XSARA (N1)	1.8 i 16V	81	04/97 – 09/00	3636	
XSARA (N1)	1.8 i 16V	81	04/97 – 09/00	3644	
XSARA (N1)	1.8 i Aut.	74	04/97 – 09/00		3496
XSARA (N1)	1.8 VTS	85	09/00 – 10/04		3496
XSARA (N1)	1.8 VTS	85	09/00 – 10/04	3636	
XSARA (N1)	1.8 VTS	85	09/00 – 10/04	3644	
XSARA (N1)	1.9 D	50	04/97 – 09/00		3496
XSARA (N1)	1.9 D	51	07/98 – 03/05		3496
XSARA (N1)	1.9 SD	55	01/98 – 09/00		3496
XSARA (N1)	1.9 TD	66	04/97 – 09/00		3496
XSARA (N1)	2.0 16V	97	07/98 – 09/00		3496
XSARA (N1)	2.0 16V	97	07/98 – 09/00	3636	
XSARA (N1)	2.0 16V	97	07/98 – 09/00	3644	
XSARA (N1)	2.0 16V	100	09/00 – 03/05		3496
XSARA (N1)	2.0 16V	100	09/00 – 03/05	3800	
XSARA (N1)	2.0 16V	120	04/97 – 09/00		3496
XSARA (N1)	2.0 HDi 109	80	05/01 – 03/05		3496
XSARA (N1)	2.0 HDi 109	80	05/01 – 03/05	3800	
XSARA (N1)	2.0 HDi 90	66	02/99 – 03/05		3496
XSARA (N1)	2.0 HDi 90	66	02/99 – 03/05	3636	
XSARA (N1)	2.0 HDi 90	66	02/99 – 03/05	3644	
XSARA Box	2.0 HDi	66	09/00 – 03/05		3496
XSARA Break (N2)	1.4 i	55	10/97 – 08/05	3636	
XSARA Break (N2)	1.4 i	55	10/97 – 08/05	3644	
XSARA Break (N2)	1.5 D	42	10/97 – 09/00	3636	
XSARA Break (N2)	1.5 D	42	10/97 – 09/00	3644	
XSARA Break (N2)	1.6 16V	80	09/00 – 08/05		3496
XSARA Break (N2)	1.6 i	65	10/97 – 09/00	3636	
XSARA Break (N2)	1.6 i	65	10/97 – 09/00	3644	
XSARA Break (N2)	1.8 D	43	10/97 – 09/00	3636	
XSARA Break (N2)	1.8 D	43	10/97 – 09/00	3644	
XSARA Break (N2)	1.8 i	66	10/97 – 09/00		3496
XSARA Break (N2)	1.8 i	66	10/97 – 09/00	3636	
XSARA Break (N2)	1.8 i	66	10/97 – 09/00	3644	
XSARA Break (N2)	1.8 i 16V	81	10/97 – 09/00		3496
XSARA Break (N2)	1.8 i 16V	81	10/97 – 09/00	3636	
XSARA Break (N2)	1.8 i 16V	81	10/97 – 09/00	3644	
XSARA Break (N2)	1.8 i Aut.	74	10/97 – 09/00		3496
XSARA Break (N2)	1.8 i Aut.	74	10/97 – 09/00	3636	
XSARA Break (N2)	1.8 i Aut.	74	10/97 – 09/00	3644	
XSARA Break (N2)	1.8 LPG	81	05/98 – 08/00		3496
XSARA Break (N2)	1.8 LPG	81	05/98 – 08/00	3636	
XSARA Break (N2)	1.8 LPG	81	05/98 – 08/00	3644	
XSARA Break (N2)	1.9 D	50	10/97 – 09/00	3636	
XSARA Break (N2)	1.9 D	50	10/97 – 09/00	3644	
XSARA Break (N2)	1.9 D	51	07/98 – 08/05	3636	
XSARA Break (N2)	1.9 D	51	07/98 – 08/05	3644	
XSARA Break (N2)	1.9 D	55	01/98 – 09/00	3636	
XSARA Break (N2)	1.9 D	55	01/98 – 09/00	3644	
XSARA Break (N2)	1.9 TD	66	10/97 – 09/00		3496
XSARA Break (N2)	1.9 TD	66	10/97 – 09/00	3636	
XSARA Break (N2)	1.9 TD	66	10/97 – 09/00	3644	
XSARA Break (N2)	2.0 16V	97	07/98 – 09/00		3496
XSARA Break (N2)	2.0 16V	97	07/98 – 09/00	3636	
XSARA Break (N2)	2.0 16V	97	07/98 – 09/00	3644	
XSARA Break (N2)	2.0 16V	100	09/00 – 08/05		3496
XSARA Break (N2)	2.0 16V	100	09/00 – 08/05	3800	
XSARA Break (N2)	2.0 HDI 90	66	02/99 – 08/05		3496
XSARA Break (N2)	2.0 HDI 90	66	02/99 – 08/05	3636	
XSARA Break (N2)	2.0 HDI 90	66	02/99 – 08/05	3644	
XSARA Break (N2)	2.0 HDi 109	80	05/01 – 08/05		3496
XSARA Break (N2)	2.0 HDi 109	80	05/01 – 08/05	3800	
XSARA Coupe (N0)	20	97	08/98 – 08/00		3496
XSARA Coupe (N0)	1.4 HDi	50	01/03 – 03/05		3496
XSARA Coupe (N0)	1.4 i	55	03/98 – 03/05		3496
XSARA Coupe (N0)	1.4 i	55	03/98 – 03/05	3759	
XSARA Coupe (N0)	1.6 16V	80	09/00 – 03/05		3496
XSARA Coupe (N0)	1.6 i	65	02/98 – 09/00		3496
XSARA Coupe (N0)	1.8 i	66	02/98 – 09/00		3496
XSARA Coupe (N0)	1.8 i	74	02/98 – 09/00		3496
XSARA Coupe (N0)	1.8 i 16V	81	02/98 – 09/00		3496

MAKE & MODEL		KW	YEAR		
CITROËN					
XSARA Coupe (N0)	1.8 i 16V	81	02/98 – 09/00	3636	
XSARA Coupe (N0)	1.8 i 16V	81	02/98 – 09/00	3644	
XSARA Coupe (N0)	1.8 VTS	85	09/00 – 10/04		3496
XSARA Coupe (N0)	1.8 VTS	85	09/00 – 10/04	3636	
XSARA Coupe (N0)	1.8 VTS	85	09/00 – 10/04	3644	
XSARA Coupe (N0)	1.9 D	50	02/98 – 09/00		3496
XSARA Coupe (N0)	1.9 D	51	02/99 – 03/05		3496
XSARA Coupe (N0)	1.9 TD	66	02/98 – 09/00		3496
XSARA Coupe (N0)	2.0 16V	100	09/00 – 03/05		3496
XSARA Coupe (N0)	2.0 16V	100	09/00 – 03/05	3800	
XSARA Coupe (N0)	2.0 HDI 90	66	02/99 – 03/05		3496
XSARA Coupe (N0)	2.0 HDI 90	66	02/99 – 03/05	3636	
XSARA Coupe (N0)	2.0 HDI 90	66	02/99 – 03/05	3644	
XSARA Coupe (N0)	2.0 HDi 109	80	05/01 – 03/05		3496
XSARA Coupe (N0)	2.0 HDi 109	80	05/01 – 03/05	3800	
XSARA Coupe (N0)	2.0 i 16V	120	02/98 – 03/05		3496
XSARA Coupe (N0)	2.0 i 16V	120	02/98 – 03/05	3800	
XSARA PICASSO (N68)	16	65	12/99 -		3529/1
XSARA PICASSO (N68)	16	65	12/99 -	3800	
XSARA PICASSO (N68)	16	67	06/02 -		3529/1
XSARA PICASSO (N68)	16	67	06/02 -	3800	
XSARA PICASSO (N68)	16	70	12/99 -		3529/1
XSARA PICASSO (N68)	16	70	12/99 -	3800	
XSARA PICASSO (N68)	1.6 16V	80	09/05 -		3529/1
XSARA PICASSO (N68)	1.6 16V	80	09/05 -	3800	
XSARA PICASSO (N68)	1.6 16V	81	06/05 – 09/06		3529/1
XSARA PICASSO (N68)	1.6 16V	81	06/05 – 09/06	3800	
XSARA PICASSO (N68)	1.6 Chrono	74	04/01 – 10/04		3529/1
XSARA PICASSO (N68)	1.6 Chrono	74	04/01 – 10/04	3800	
XSARA PICASSO (N68)	1.6 HDi	66	09/05 -		3529/1
XSARA PICASSO (N68)	1.6 HDi	66	09/05 -	3800	
XSARA PICASSO (N68)	1.6 HDi	80	05/04 -		3529/1
XSARA PICASSO (N68)	1.6 HDi	80	05/04 -	3800	
XSARA PICASSO (N68)	1.8 16V	85	02/00 -		3529/1
XSARA PICASSO (N68)	1.8 16V	85	02/00 -	3800	
XSARA PICASSO (N68)	1.8 SX	76	06/00 – 08/05		3529/1
XSARA PICASSO (N68)	1.8 SX	76	06/00 – 08/05	3800	
XSARA PICASSO (N68)	2.0 16V	100	01/03 -		3529/1
XSARA PICASSO (N68)	2.0 16V	100	01/03 -	3800	
XSARA PICASSO (N68)	2.0 HDi	66	12/99 -		3529/1
XSARA PICASSO (N68)	2.0 HDi	66	12/99 -	3800	
XSARA PICASSO (N68)	2.0 HDi	80	12/99 -		3529/1
XSARA PICASSO (N68)	2.0 HDi	80	12/99 -	3800	
XSARA PICASSO MPV (N68)	20	85	04/02 – 03/07	3800	
XSARA PICASSO MPV (N68)	20	99	03/04 – 03/07	3800	
XSARA PICASSO MPV (N68)	1.6 Chrono	65	09/01 – 03/07		3496
XSARA Saloon	20	97	05/03 – 12/05		3496
XSARA Saloon	20	97	05/03 – 12/05	3800	
ZX	1.1		91-	3487	
ZX	1.4		91-	3487	
ZX	1.6		91-	3487	
ZX	1.8		92-	3487	
ZX	1.9 D		91-	3487	
ZX	1.9 TD VOLCANE		91-	3487	
ZX (N2)	16	66	07/94 – 10/97		3496
ZX (N2)	16	66	07/94 – 10/97	3555	
ZX (N2)	18	76	07/94 – 10/97		3496
ZX (N2)	18	76	07/94 – 10/97	3555	
ZX (N2)	18	82	04/96 – 10/97		3496
ZX (N2)	18	82	04/96 – 10/97	3555	
ZX (N2)	19	93	03/91 – 06/97		3496
ZX (N2)	19	93	03/91 – 06/97	3555	
ZX (N2)	19	96	03/91 – 09/93		3496
ZX (N2)	19	96	03/91 – 09/93	3555	
ZX (N2)	20	90	07/94 – 10/97		3496
ZX (N2)	20	90	07/94 – 10/97	3555	
ZX (N2)	20	122	09/96 – 10/97		3496
ZX (N2)	1.6 i	65	03/91 – 06/97		3496
ZX (N2)	1.6 i	65	03/91 – 06/97	3555	
ZX (N2)	1.8 D	44	06/93 – 06/97	3556	
ZX (N2)	1.8 i	74	07/92 – 06/97		3496

MAKE & MODEL   		KW	YEAR		
CITROËN					
ZX (N2)	1.8 i	74	07/92 – 06/97	3555	
ZX (N2)	1.8 i 16V	81	01/96 – 06/97		3496
ZX (N2)	1.8 i 16V	81	01/96 – 06/97	3555	
ZX (N2)	1.9 D	47	03/91 – 06/97	3556	
ZX (N2)	1.9 D	50	07/93 – 06/97	3556	
ZX (N2)	1.9 DT	65	07/94 – 10/97		3496
ZX (N2)	1.9 DT	65	07/94 – 10/97	3555	
ZX (N2)	1.9 DT	68	06/92 – 06/94		3496
ZX (N2)	1.9 DT	68	06/92 – 06/94	3555	
ZX (N2)	1.9 i	88	03/91 – 06/97		3496
ZX (N2)	1.9 i	88	03/91 – 06/97	3555	
ZX (N2)	1.9 TD	66	07/92 – 06/97		3496
ZX (N2)	1.9 TD	66	07/92 – 06/97	3555	
ZX (N2)	2.0 i	89	07/92 – 06/97		3496
ZX (N2)	2.0 i	89	07/92 – 06/97	3555	
ZX (N2)	2.0 i 16V	110	06/94 – 06/97		3496
ZX (N2)	2.0 i 16V	110	06/94 – 06/97	3610	
ZX (N2)	2.0 i 16V	112	07/92 – 10/94		3496
ZX (N2)	2.0 i 16V	112	07/92 – 10/94	3610	
ZX (N2)	2.0 i 16V	120	05/96 – 06/97		3496
ZX (N2)	2.0 i 16V	110	06/94-06/97	3557	
ZX (N2)	2.0 i 16V	112	07/92-10/94	3557	
ZX Break (N2)	1.6 i	65	10/93 – 10/97		3496
ZX Break (N2)	1.6 i	65	10/93 – 10/97	3555	
ZX Break (N2)	1.8 D	44	10/93 – 10/97	3555	
ZX Break (N2)	1.8 i	74	10/93 – 10/97		3496
ZX Break (N2)	1.8 i	74	10/93 – 10/97	3555	
ZX Break (N2)	1.8 i 16V	81	01/96 – 02/98		3496
ZX Break (N2)	1.8 i 16V	81	01/96 – 02/98	3555	
ZX Break (N2)	1.9 D	47	10/93 – 10/97	3555	
ZX Break (N2)	1.9 D	50	06/94 – 10/97	3555	
ZX Break (N2)	1.9 TD	66	10/93 – 10/97		3496
ZX Break (N2)	1.9 TD	66	10/93 – 10/97	3555	
CVEHROLET					
AVEO Hatchback (T200)	15	62	01/05 – 05/08	3951	
AVEO Hatchback (T250, T255)	12	53	10/08 -	3951	
AVEO Hatchback (T250, T255)	12	55	04/08 -	3951	
AVEO Hatchback (T250, T255)	12	56	01/07 -	3951	
AVEO Hatchback (T250, T255)	12	62	04/08 -	3951	
AVEO Hatchback (T250, T255)	14	74	04/08 -	3951	
AVEO Hatchback (T250, T255)	1.2 LPG	62	04/08 -	3951	
AVEO Saloon (T200)	14	69	05/03 – 01/07	3951	
AVEO Saloon (T200)	16	77	09/03 – 12/08	3951	
AVEO Saloon (T250, T255)	12	53	03/06 – 12/07	3951	
AVEO Saloon (T250, T255)	12	55	01/08 -	3951	
AVEO Saloon (T250, T255)	12	62	01/08 -	3951	
AVEO Saloon (T250, T255)	14	69	03/06 – 12/07	3951	
AVEO Saloon (T250, T255)	14	74	09/08 -	3951	
AVEO Saloon (T250, T255)	15	62	05/05 -	3951	
AVEO Saloon (T250, T255)	16	76	05/05 -	3951	
AVEO Saloon (T250, T255)	1.2 LPG	62	01/09 -	3951	
KALOS	12	53	03/05 -	3951	
KALOS	14	61	03/05 -	3951	
KALOS	16	77	06/06 – 05/08	3951	
KALOS	1.4 16V	69	03/05 -	3951	
KALOS Saloon	12	53	03/05 -	3951	
KALOS Saloon	14	61	03/05 -	3951	
KALOS Saloon	1.4 16V	69	03/05 -	3951	
DACIA					
1210	1.2 (103-00)	36	06.83 – 12.94	3341	
1210	1.2 (103-00)	36	06.83 – 12.94	3345	
1300	13	40	12/72 – 05/83	3329	
1300	13	40	12/72 – 05/83	3542	
1300	1.3 (810-02/-99)	40	12.72 – 05.83	3341	
1300	1.3 (810-02/-99)	40	12.72 – 05.83	3341	
1300	1.3 (810-02/-99)	40	12.72 – 05.83	3345	
1300	1.3 (810-02/-99)	40	12.72 – 05.83	3345	
1304	1.3 (810-02/-99)	40	06.83 – 08.90	3341	
1304	1.3 (810-02/-99)	40	06.83 – 08.90	3345	
1307	14	48	06.84 – 11.94	3341	

MAKE & MODEL		KW	YEAR		
DACIA					
1307	14	48	06.84 – 11.94	3345	
1309	14	48	09.90 – 11.94	3341	
1309	14	48	09.90 – 11.94	3345	
1309	16	53	12.94 – 08.01	3341	
1309	16	53	12.94 – 08.01	3345	
1310	14	46	01.95 – 07.04	3341	
1310	14	46	01.95 – 07.04	3345	
1310	15	46	01.95 – 07.04	3341	
1310	15	46	01.95 – 07.04	3345	
1310	1.3 (810-02/-99)	40	05.83 – 07.04	3341	
1310	1.3 (810-02/-99)	40	05.83 – 07.04	3345	
1410	1.4 (102-00)	48	09.85 – 12.98	3341	
1410	1.4 (102-00)	48	06.94 – 12.98	3341	
1410	1.4 (102-00)	48	09.85 – 12.98	3341	
1410	1.4 (102-00)	48	09.85 – 12.98	3345	
1410	1.4 (102-00)	48	06.94 – 12.98	3345	
1410	1.4 (102-00)	48	09.85 – 12.98	3345	
1300 Estate	13	40	12/72 – 05/83	3329	
1300 Estate	13	40	12/72 – 05/83	3542	
1310 (U, X)	14	48	09.85 – 12.94	3341	
1310 (U, X)	14	48	09.85 – 12.94	3345	
1310 (U, X)	15	46	01.95 – 07.04	3341	
1310 (U, X)	15	46	01.95 – 07.04	3345	
1310 (U, X)	1.3 (810-02/-99)	40	05.83 – 07.04	3341	
1310 (U, X)	1.3 (810-02/-99)	40	05.83 – 07.04	3345	
1310 (U, X)	1.4 Classic	46	01.95 – 07.04	3341	
1310 (U, X)	1.4 Classic	46	01.95 – 07.04	3345	
1310 (U, X)	1.9 D	48	01.03 – 07.04	3341	
1310 (U, X)	1.9 D	48	01.03 – 07.04	3345	
1310 Estate	13	40	05/83 – 07/04	3329	
1310 Estate	13	40	05/83 – 07/04	3542	
1310 Estate	14	46	01/95 – 07/04	3329	
1310 Estate	14	46	01/95 – 07/04	3542	
1310 Saloon (U, X)	13	40	05/83 – 07/04	3329	
1310 Saloon (U, X)	13	40	05/83 – 07/04	3542	
1310 Saloon (U, X)	14	48	09/85 – 12/94	3329	
1310 Saloon (U, X)	14	48	09/85 – 12/94	3542	
1310 Saloon (U, X)	15	46	01/95 – 07/04	3329	
1310 Saloon (U, X)	15	46	01/95 – 07/04	3542	
1310 Saloon (U, X)	1.4 Classic	46	01/95 – 07/04	3329	
1310 Saloon (U, X)	1.4 Classic	46	01/95 – 07/04	3542	
1410 Estate	14	48	06/94 – 12/98	3329	
1410 Estate	14	48	09/85 – 12/98	3329	
1410 Estate	14	48	06/94 – 12/98	3542	
1410 Estate	14	48	09/85 – 12/98	3542	
1410 Saloon	14	48	09/85 – 12/98	3329	
1410 Saloon	14	48	09/85 – 12/98	3542	
DENEM	1.3 GL, GLX		01.79 – 12.94	3341	
DENEM	1.3 GL, GLX		01.79 – 12.94	3345	
DOKKER	16	61	11/12 -	3964/1	
DOKKER	16	61	11/12 -	3983	
DOKKER	16	75	04/15 -	3964/1	
DOKKER	16	75	04/15 -	3983	
DOKKER	1.2 TCe	85	11/12 -	3964/1	
DOKKER	1.2 TCe	85	11/12 -	3983	
DOKKER	1.5 dCi	55	11/12 -	3964/1	
DOKKER	1.5 dCi	55	11/12 -	3983	
DOKKER	1.5 dCi	66	11/12 -	3964/1	
DOKKER	1.5 dCi	66	11/12 -	3983	
DOKKER	1.6 LPG	61	11/13 -	3964/1	
DOKKER	1.6 LPG	61	11/13 -	3983	
DOKKER	1.6 LPG	75	04/15 -	3964/1	
DOKKER	1.6 LPG	75	04/15 -	3983	
DOKKER Express	16	61	12/12 -	3964/1	
DOKKER Express	16	61	12/12 -	3983	
DOKKER Express	16	75	04/15 -	3964/1	
DOKKER Express	16	75	04/15 -	3983	
DOKKER Express	1.2 TCe 115	84	12/12 -	3964/1	
DOKKER Express	1.2 TCe 115	84	12/12 -	3983	
DOKKER Express	1.2 TCe 115	85	07/15 -	3964/1	
DOKKER Express	1.2 TCe 115	85	07/15 -	3983	

MAKE & MODEL		KW	YEAR		
DACIA					
DOKKER Express	1.5 dCi	55	12/12 -	3964/1	
DOKKER Express	1.5 dCi	55	12/12 -	3983	
DOKKER Express	1.5 dCi	66	12/12 -	3964/1	
DOKKER Express	1.5 dCi	66	12/12 -	3983	
DOKKER Express	1.6 LPG	61	11/13 -	3964/1	
DOKKER Express	1.6 LPG	61	11/13 -	3983	
DOKKER Express	1.6 LPG	75	04/15 -	3964/1	
DOKKER Express	1.6 LPG	75	04/15 -	3983	
DUSTER	1.2 TCe 125	92	10/13 -	3964/1	
DUSTER	1.2 TCe 125 4x4	92	06/15 -	3964/1	
DUSTER	1.5 dCi	63	04/10 -	3964/1	
DUSTER	1.5 dCi	63	04/10 -	3983	
DUSTER	1.5 dCi	66	10/10 -	3964/1	
DUSTER	1.5 dCi	66	10/10 -	3983	
DUSTER	1.5 dCi	79	06/10 -	3964/1	
DUSTER	1.5 dCi	79	06/10 -	3983	
DUSTER	1.5 dCi	80	08/13 -	3964/1	
DUSTER	1.5 dCi	80	08/13 -	3983	
DUSTER	1.5 dCi 4x4	66	10/10 -	3964/1	
DUSTER	1.5 dCi 4x4	66	10/10 -	3983	
DUSTER	1.5 dCi 4x4	79	06/10 -	3964/1	
DUSTER	1.5 dCi 4x4	79	06/10 -	3983	
DUSTER	1.5 dCi 4x4	80	08/13 -	3964/1	
DUSTER	1.5 dCi 4x4	80	08/13 -	3983	
DUSTER	1.5 dCi 4x4	81	10/10 -	3964/1	
DUSTER	1.5 dCi 4x4	81	10/10 -	3983	
DUSTER	1.6 16V	77	04/10 -	3964/1	
DUSTER	1.6 16V	77	04/10 -	3983	
DUSTER	1.6 16V 4x4	77	06/10 -	3964/1	
DUSTER	1.6 16V 4x4	77	06/10 -	3983	
DUSTER	1.6 16V Hi-Flex	77	08/10 -	3964/1	
DUSTER	1.6 16V Hi-Flex	77	08/10 -	3983	
DUSTER	1.6 16V LPG	77	04/11 -	3964/1	
DUSTER	1.6 16V LPG	77	04/11 -	3983	
DUSTER	1.6 SCe 115	84	06/15 -	3964/1	
DUSTER	1.6 SCe 115 4x4	84	06/15 -	3964/1	
DUSTER	1.6 SCe 115 LPG	84	06/15 -	3964/1	
DUSTER Box	1.2 TCe 125 4x4	92	10/13 -	3964/1	
DUSTER Box	1.2 TCe 125 4x4	92	10/13 -	3983	
DUSTER Box	1.5 dCi	66	04/11 -	3964/1	
DUSTER Box	1.5 dCi	66	04/11 -	3983	
DUSTER Box	1.5 dCi	80	04/13 -	3964/1	
DUSTER Box	1.5 dCi	80	04/13 -	3983	
DUSTER Box	1.5 dCi 4x4	66	04/11 -	3964/1	
DUSTER Box	1.5 dCi 4x4	66	04/11 -	3983	
DUSTER Box	1.5 dCi 4x4	80	04/13 -	3983	
DUSTER Box	1.6 16V 4x4	77	04/11 -	3964/1	
DUSTER Box	1.6 16V 4x4	77	04/11 -	3983	
DUSTER Box	1.6 16V Hi-Flex	77	04/11 -	3964/1	
DUSTER Box	1.6 16V Hi-Flex	77	04/11 -	3983	
DUSTER Box	1.6 SCe 115	84	06/15 -	3964/1	
DUSTER Box	1.6 SCe 115 4x4	84	06/15 -	3964/1	
LODGY	16	61	03/12 -	3964/1	
LODGY	16	61	03/12 -	3983	
LODGY	1.2 TCe	85	03/12 -	3964/1	
LODGY	1.2 TCe	85	03/12 -	3983	
LODGY	1.5 dCi	66	03/12 -	3964/1	
LODGY	1.5 dCi	66	03/12 -	3983	
LODGY	1.5 dCi	79	01/13 -	3964/1	
LODGY	1.5 dCi	79	01/13 -	3983	
LODGY	1.5 dCi	80	06/15 -	3983	
LODGY	1.5 dCi	81	03/12 -	3964/1	
LODGY	1.5 dCi	81	03/12 -	3983	
LODGY	1.6 LPG	61	11/13 -	3964/1	
LODGY	1.6 LPG	61	11/13 -	3983	
LODGY	1.6 LPG	75	04/15 -	3983	
LODGY	1.6 SCe 115	75	06/15 -	3983	
LOGAN II MCV (K52)	1.5 DCI (K9K 612)	55	02/13 -	4253	
LOGAN II MCV (K52)	1.5 DCI (K9K 612)	66	02/13 -	4253	
LOGAN II MCV (K52)	1.5 DCI (K9K 830)	63	02/13 -	4253	
LOGAN II MCV (K52)	TCe 90 (H4B 400)	66	02/13 -	4253	

MAKE & MODEL		KW	YEAR		
DACIA					
LOGAN II MCV (K52)	TCe 90 LPG	66	09/15 -	4253	
LOGAN II (L52)	1.5 DCI (K9K 612)	55	10/12 -	4253	
LOGAN II (L52)	1.5 DCI (K9K 612)	66	10/12 -	4253	
LOGAN II (L52)	1.5 DCI (K9K 830)	63	01/13 -	4253	
LOGAN II (L52)	1.6 16V	75	04/15 -	4253	
LOGAN II (L52)	1.6 16V (K4M 842)	77	01/13 -	4253	
LOGAN II (L52)	TCe 90 (H4B 400)	66	10/12 -	4253	
LOGAN (LS_)	1.2 16V	55	02/06 -	3431	
LOGAN (LS_)	1.2 16V	55	02/06 -	3503	
LOGAN (LS_)	1.2 16V LPG	55	02/06 -	3431	
LOGAN (LS_)	1.2 16V LPG	55	02/06 -	3503	
LOGAN (LS_)	1.4 (LSOA, LSOC, LSOE,LSOG)	55	09/04 -	3503	
LOGAN (LS_)	1.4 (LSOA, LSOC, LSOE,LSOG)	55	09/04 -	3431	
LOGAN (LS_)	1.4 MPI LPG (LS0C)	55	02/06 -	3503	
LOGAN (LS_)	1.4 MPI LPG (LS0C)	55	02/06 -	3431	
LOGAN (LS_)	1.5 dCi (LS04)	55	05/10 -	3431	
LOGAN (LS_)	1.5 dCi (LS04)	55	05/10 -	3503	
LOGAN (LS_)	1.5 dCi (LS04)	65	05/10 -	3431	
LOGAN (LS_)	1.5 dCi (LS04)	65	05/10 -	3503	
LOGAN (LS_)	1.5 dCi (LS0J, LS0Y)	48	09/05 -	3431	
LOGAN (LS_)	1.5 dCi (LS0J, LS0Y)	48	09/05 -	3503	
LOGAN (LS_)	1.5 dCi (LS0K)	50	01/06 -	3431	
LOGAN (LS_)	1.5 dCi (LS0K)	50	01/06 -	3503	
LOGAN (LS_)	1.5 dCi (LS0W)	63	09/07 -	3431	
LOGAN (LS_)	1.5 dCi (LS0W)	63	09/07 -	3503	
LOGAN (LS_)	1.6 (LSOB, LSOD, LSOF, LSOH)	64	09/04 -	3431	
LOGAN (LS_)	1.6 (LSOB, LSOD, LSOF, LSOH)	64	09/04 -	3503	
LOGAN (LS_)	1.6 16V (LS0M)	77	02/06 -	3431	
LOGAN (LS_)	1.6 16V (LS0M)	77	02/06 -	3503	
LOGAN (LS_)	1.6 16V Flexifuel	77	07/10 -	3431	
LOGAN (LS_)	1.6 16V Flexifuel	77	07/10 -	3503	
LOGAN (LS_)	1.6 Bifuel	62	05/10 -	3431	
LOGAN (LS_)	1.6 Bifuel	62	05/10 -	3503	
LOGAN (LS_)	1.6 MPI 85	62	05/10 -	3431	
LOGAN (LS_)	1.6 MPI 85	62	05/10 -	3503	
LOGAN EXPRESS (FS_)	14	55	03/09 -	3983	
LOGAN EXPRESS (FS_)	14	55	03/09 -	4141/1	
LOGAN EXPRESS (FS_)	16	64	03/09 -	3983	
LOGAN EXPRESS (FS_)	16	64	03/09 -	4141/1	
LOGAN EXPRESS (FS_)	1.5 dCi	55	05/10 -	3983	
LOGAN EXPRESS (FS_)	1.5 dCi	55	05/10 -	4141/1	
LOGAN EXPRESS (FS_)	1.5 dCi	65	05/10 -	3983	
LOGAN EXPRESS (FS_)	1.5 dCi	65	05/10 -	4141/1	
LOGAN EXPRESS (FS_)	1.5 dCi (FS0K)	50	03/09 -	3983	
LOGAN EXPRESS (FS_)	1.5 dCi (FS0K)	50	03/09 -	4141/1	
LOGAN EXPRESS (FS_)	1.5 dCi (FS0W)	63	03/09 -	3983	
LOGAN EXPRESS (FS_)	1.5 dCi (FS0W)	63	03/09 -	4141/1	
LOGAN EXPRESS (FS_)	1.6 MPI 85	62	05/10 -	3983	
LOGAN EXPRESS (FS_)	1.6 MPI 85	62	05/10 -	4141/1	
LOGAN II	1.2 LPG	55	10/12 -	4140	
LOGAN II	1.5 dCi	55	10/12 -	4140	
LOGAN II	1.5 dCi	63	01/13 -	4140	
LOGAN II	1.5 dCi	66	10/12 -	4140	
LOGAN II	1.6 16V	77	01/13 -	4140	
LOGAN II	TCe 90	66	10/12 -	4140	
LOGAN MCV (KS_)	14	55	02/07 -	3983	
LOGAN MCV (KS_)	14	55	02/07 -	4141/1	
LOGAN MCV (KS_)	16	64	02/07 -	3983	
LOGAN MCV (KS_)	16	64	02/07 -	4141/1	
LOGAN MCV (KS_)	1.5 dCi (KS04)	55	05/10 -	3983	
LOGAN MCV (KS_)	1.5 dCi (KS04)	55	05/10 -	4141/1	
LOGAN MCV (KS_)	1.5 dCi (KS04)	65	05/10 -	3983	
LOGAN MCV (KS_)	1.5 dCi (KS04)	65	05/10 -	4141/1	
LOGAN MCV (KS_)	1.5 dCi (KS0K)	50	02/07 -	3983	
LOGAN MCV (KS_)	1.5 dCi (KS0K)	50	02/07 -	4141/1	
LOGAN MCV (KS_)	1.5 dCi (KS0W)	63	09/07 -	3983	
LOGAN MCV (KS_)	1.5 dCi (KS0W)	63	09/07 -	4141/1	
LOGAN MCV (KS_)	1.6 16V	77	02/07 -	3983	
LOGAN MCV (KS_)	1.6 16V	77	02/07 -	4141/1	
LOGAN MCV (KS_)	1.6 16V Hi-Flex	77	11/09 -	3983	
LOGAN MCV (KS_)	1.6 16V Hi-Flex	77	11/09 -	4141/1	

MAKE & MODEL		KW	YEAR		
DACIA					
LOGAN MCV (KS_)	1.6 Bifuel	64	11/08 -	3983	
LOGAN MCV (KS_)	1.6 Bifuel	64	02/07 -	4141/1	
LOGAN MCV (KS_)	1.6 MPI 85	62	05/10 -	3983	
LOGAN MCV (KS_)	1.6 MPI 85	62	05/10 -	4141/1	
LOGAN MCV II	12	55	02/13 -	4140	
LOGAN MCV II	1.2 LPG	55	02/13 -	4140	
LOGAN MCV II	1.5 dCi	55	02/13 -	4140	
LOGAN MCV II	1.5 dCi	63	02/13 -	4140	
LOGAN MCV II	1.5 dCi	66	02/13 -	4140	
LOGAN MCV II	TCe 90	66	02/13 -	4140	
LOGAN Pickup (US_)	14	55	01/09 -	3983	
LOGAN Pickup (US_)	14	55	01/09 -	4141/1	
LOGAN Pickup (US_)	16	64	03/08 -	3983	
LOGAN Pickup (US_)	16	64	03/08 -	4141/1	
LOGAN Pickup (US_)	1.5 dCi	55	05/10 -	3983	
LOGAN Pickup (US_)	1.5 dCi	55	05/10 -	4141/1	
LOGAN Pickup (US_)	1.5 dCi	65	05/10 -	3983	
LOGAN Pickup (US_)	1.5 dCi	65	05/10 -	4141/1	
LOGAN Pickup (US_)	1.5 dCi (US0K)	50	03/08 -	3983	
LOGAN Pickup (US_)	1.5 dCi (US0K)	50	03/08 -	4141/1	
LOGAN Pickup (US_)	1.5 dCi (US0W)	63	03/08 -	3983	
LOGAN Pickup (US_)	1.5 dCi (US0W)	63	03/08 -	4141/1	
LOGAN Pickup (US_)	1.6 Bifuel	62	05/10 -	3983	
LOGAN Pickup (US_)	1.6 Bifuel	62	05/10 -	4141/1	
LOGAN Pickup (US_)	1.6 MPI 85	62	05/10 -	3983	
LOGAN Pickup (US_)	1.6 MPI 85	62	05/10 -	4141/1	
NOVA	14	48	04/96 – 03/01	3329/1	
NOVA	14	48	04/96 – 03/01	3348	
NOVA	14	48	04/96 – 03/01	3349	
NOVA	16	53	04/96 – 03/03	3329/1	
NOVA	16	53	04/96 – 03/03	3348	
NOVA	16	53	04/96 – 03/03	3349	
PICK UP / SHIFTER	14	48	09.89 – 09.00	3341	
PICK UP / SHIFTER	14	48	09.89 – 09.00	3345	
SANDERO	14	55	06/08 -	3431	
SANDERO	14	55	06/08 -	3503	
SANDERO	16	64	06/08 -	3431	
SANDERO	16	64	06/08 -	3503	
SANDERO	1.2 16V	55	11/08 -	3431	
SANDERO	1.2 16V	55	11/08 -	3503	
SANDERO	1.2 16V LPG	55	11/08 -	3431	
SANDERO	1.2 16V LPG	55	11/08 -	3503	
SANDERO	1.4 MPI LPG	53	01/09 -	3431	
SANDERO	1.4 MPI LPG	53	01/09 -	3503	
SANDERO	1.5 dCi	50	11/08 -	3431	
SANDERO	1.5 dCi	50	11/08 -	3503	
SANDERO	1.5 dCi	55	05/10 -	3431	
SANDERO	1.5 dCi	55	05/10 -	3503	
SANDERO	1.5 dCi	63	11/08 -	3431	
SANDERO	1.5 dCi	63	11/08 -	3503	
SANDERO	1.5 dCi	65	05/10 -	3431	
SANDERO	1.5 dCi	65	05/10 -	3503	
SANDERO	1.6 16V	77	07/11 -	3431	
SANDERO	1.6 16V	77	07/11 -	3503	
SANDERO	1.6 16V Bifuel	77	01/11 -	3431	
SANDERO	1.6 16V Bifuel	77	01/11 -	3503	
SANDERO	1.6 MPI 85	62	05/10 -	3431	
SANDERO	1.6 MPI 85	62	05/10 -	3503	
SANDERO II (B52)	1.5 DCI (K9K 612)	55	10/12 -	4253	
SANDERO II (B52)	1.5 DCI (K9K 612)	66	10/12 -	4253	
SANDERO II (B52)	1.5 DCI (K9K 830)	63	01/13 -	4253	
SANDERO II (B52)	1.6 16V	75	04/15 -	4253	
SANDERO II (B52)	1.6 16V (K4M 845)	77	01/13 -	4253	
SANDERO II (B52)	1.6 16V (K4M 694)	77	01/13 -	4253	
SANDERO II (B52)	1.6 16V (K4M 842)	77	01/13 -	4253	
SANDERO II	12	54	05/15 -	3431	
SANDERO II	12	54	05/15 -	3503	
SANDERO II	12	55	10/12 -	3431	
SANDERO II	12	55	10/12 -	3503	
SANDERO II	12	55	10/12 -	4140	
SANDERO II	1.2 LPG	55	10/12 -	3431	

MAKE & MODEL		KW	YEAR		
DACIA					
SANDERO II	1.2 LPG	55	10/12 -	3503	
SANDERO II	1.5 dCi	55	10/12 -	3431	
SANDERO II	1.5 dCi	55	10/12 -	3503	
SANDERO II	1.5 dCi	63	01/13 -	4140	
SANDERO II	1.5 dCi	66	10/12 -	3431	
SANDERO II	1.5 dCi	66	10/12 -	3503	
SANDERO II	TCe 90	66	10/12 -	4140	
SANDERO II	TCe 90 LPG	66	09/15 -	4140	
SOLENZA (B41_)	1.4 (B41A, B41B, B41C)	55	02/03 -	3431	
SOLENZA (B41_)	1.4 (B41A, B41B, B41C)	55	02/03 -	3503	
SOLENZA (B41_)	1.9 D (B41E, B41F, B41G)	46	02/03 -	3431	
SOLENZA (B41_)	1.9 D (B41E, B41F, B41G)	46	02/03 -	3503	
DAEWOO					
ARANOS	15	66	01/95 – 11/97	3470	
ARANOS	15	66	01/95 – 11/97	3505	
ARANOS	15	66	01/95 – 11/97	3615	
ARANOS	18	70	01/95 – 11/97	3470	
ARANOS	18	70	01/95 – 11/97	3505	
ARANOS	18	70	01/95 – 11/97	3615	
ARANOS	20	77	01/95 – 11/97	3470	
ARANOS	20	77	01/95 – 11/97	3505	
ARANOS	20	77	01/95 – 11/97	3615	
ARANOS	1.8 (Y18L)	70	01/95 – 11/97	3510	
CIELO	15	55	04/95 – 07/97	3470	
CIELO	15	55	04/95 – 07/97	3505	
CIELO	15	55	04/95 – 07/97	3615	
CIELO	15	66	06/94 – 07/98	3470	
CIELO	15	66	06/94 – 07/98	3505	
CIELO	15	66	06/94 – 07/98	3615	
CIELO	1.5 (V15L)	66	06/94 – 07/98	3510	
CIELO	1.5 (Y15L)	55	04/95 – 07/97	3510	
ESPERO (KLEJ)	18	66	02/95 – 09/99	3470	
ESPERO (KLEJ)	18	66	02/95 – 09/99	3505	
ESPERO (KLEJ)	18	66	02/95 – 09/99	3615	
ESPERO (KLEJ)	18	66	02/95 – 09/99	3687	
ESPERO (KLEJ)	18	70	02/95 – 06/99	3470	
ESPERO (KLEJ)	18	70	02/95 – 06/99	3505	
ESPERO (KLEJ)	18	70	02/95 – 06/99	3615	
ESPERO (KLEJ)	18	70	02/95 – 06/99	3687	
ESPERO (KLEJ)	20	74	10/91 – 09/93	3470	
ESPERO (KLEJ)	20	74	10/91 – 09/93	3505	
ESPERO (KLEJ)	20	74	10/91 – 09/93	3615	
ESPERO (KLEJ)	20	77	02/95 – 06/99	3470	
ESPERO (KLEJ)	20	77	02/95 – 06/99	3505	
ESPERO (KLEJ)	20	77	02/95 – 06/99	3615	
ESPERO (KLEJ)	20	77	02/95 – 06/99	3687	
ESPERO (KLEJ)	20	81	10/93 – 09/94	3470	
ESPERO (KLEJ)	20	81	10/93 – 09/94	3505	
ESPERO (KLEJ)	20	81	10/93 – 09/94	3615	
ESPERO (KLEJ)	1.5 16V	65	10/93 – 09/94	3470	
ESPERO (KLEJ)	1.5 16V	65	10/93 – 09/94	3505	
ESPERO (KLEJ)	1.5 16V	65	10/93 – 09/94	3615	
ESPERO (KLEJ)	1.5 16V	66	02/95 – 06/99	3470	
ESPERO (KLEJ)	1.5 16V	66	02/95 – 06/99	3505	
ESPERO (KLEJ)	1.5 16V	66	02/95 – 06/99	3615	
ESPERO (KLEJ)	1.5 16V	66	02/95 – 06/99	3687	
ESPERO (KLEJ)	1.5 i	55	10/91 -	3510	
EVANDA (KLAL)	20	96	08/02 -	3687	
GENTRA Saloon	15	79	06/13 -	3687	
KALOS (KLAS)	12	53	04/03 -	3951	
KALOS (KLAS)	14	61	09/02 -	3951	
KALOS (KLAS)	15	62	11/02 – 12/04	3951	
KALOS (KLAS)	1.4 16V	69	04/03 -	3951	
KALOS Saloon (KLAS)	14	61	11/02 – 12/04	3951	
KALOS Saloon (KLAS)	14	69	05/03 – 12/04	3951	
KALOS Saloon (KLAS)	15	62	11/02 – 12/04	3951	
LACETTI Hatchback (KLAN)	14	70	02/04 -	3687	
LACETTI Hatchback (KLAN)	14	70	02/04 -		3894
LACETTI Hatchback (KLAN)	16	80	02/04 -	3687	
LACETTI Hatchback (KLAN)	16	80	02/04 -		3894

MAKE & MODEL   		KW	YEAR		
DAEWOO					
LACETTI Hatchback (KLAN)	18	90	02/04 -	3687	
LACETTI Hatchback (KLAN)	18	90	02/04 -		3894
LACETTI Saloon	16	78	06/99 – 07/03	3687	
LACETTI Saloon	16	78	06/99 – 07/03		3894
LACETTI Saloon (J200)	1.8 CDX	90	08/03 – 12/04	3687	
LACETTI Saloon (J200)	1.8 CDX	90	08/03 – 12/04		3894
LACETTI Saloon (J200)	1.8 CDX (J200)	67	08/03 – 12/04	3687	
LACETTI Saloon (J200)	1.8 CDX (J200)	67	08/03 – 12/04		3894
LANOS (KLAT)	13	55	05/97 -	3623	
LANOS (KLAT)	13	55	05/97 -		3744
LANOS (KLAT)	15	63	05/97 -	3623	
LANOS (KLAT)	15	63	05/97 -		3744
LANOS (KLAT)	15	73	10/97 – 06/99	3623	
LANOS (KLAT)	15	73	10/97 – 06/99		3744
LANOS (KLAT)	1.6 16V	78	05/97 -	3470	
LANOS (KLAT)	1.6 16V	78	05/97 -	3505	
LANOS (KLAT)	1.6 16V	78	05/97 -	3615	
LANOS (KLAT)	1.6 16V	78	05/97 -	3687	
LANOS / SENS (KLAT)	15		05/97 -	3510	
LANOS / SENS (KLAT)	15		05/97 -	3510	
LANOS Saloon (KLAT)	13	55	05/97 -	3623	
LANOS Saloon (KLAT)	13	55	05/97 -		3744
LANOS Saloon (KLAT)	15	63	05/97 -	3623	
LANOS Saloon (KLAT)	15	63	05/97 -		3744
LANOS Saloon (KLAT)	15	73	10/97 – 06/99	3623	
LANOS Saloon (KLAT)	15	73	10/97 – 06/99		3744
LANOS Saloon (KLAT)	1.6 16V	78	02/97 -	3470	
LANOS Saloon (KLAT)	1.6 16V	78	02/97 -	3505	
LANOS Saloon (KLAT)	1.6 16V	78	02/97 -	3615	
LANOS Saloon (KLAT)	1.6 16V	78	02/97 -	3687	
LEGANZA (KLAV)	20	85	06/97 – 12/02	3687	
LEGANZA (KLAV)	2.0 16V	93	07/00 – 04/04	3687	
LEGANZA (KLAV)	2.0 16V	98	06/97 – 12/02	3687	
LEGANZA (KLAV)	2.2 16V	100	04/99 – 12/02	3687	
LUBLIN II Box	2.4 D (3302)	52	04/97 -	3539	
LUBLIN II Box	2.4 D (3302)	52	04/97 -	3546	
LUBLIN II Box	2.4 TD (3304)	66	04/97 -	3539	
LUBLIN II Box	2.4 TD (3304)	66	04/97 -	3546	
LUBLIN II Platform/Chassis	2.4 D (3352)	52	04/97 -	3539	
LUBLIN II Platform/Chassis	2.4 D (3352)	52	04/97 -	3546	
LUBLIN II Platform/Chassis	2.4 TD (3354)	66	04/97 -	3539	
LUBLIN II Platform/Chassis	2.4 TD (3354)	66	04/97 -	3546	
MATIZ (KLYA)	08	38	09/98 -		3744
MATIZ (KLYA)	10	47	01/03 -		3744
NEXIA (KLETN)	15	44	08/96 – 08/97	3623	
NEXIA (KLETN)	15	52	02/95 – 08/97	3623	
NEXIA (KLETN)	15	55	02/95 – 08/97	3623	
NEXIA (KLETN)	1.5 16V	66	02/95 – 08/97	3470	
NEXIA (KLETN)	1.5 16V	66	02/95 – 08/97	3505	
NEXIA (KLETN)	1.5 16V	66	02/95 – 08/97	3615	
NEXIA / CIELO (KLETN)	1.5 (G15MF)	55	02/95 – 08/97	3510	
NEXIA / CIELO (KLETN)	1.5 (G15MF)	55	02/95 – 08/97	3510	
NEXIA / CIELO (KLETN)	1.5 16V (A15MF)	66	02/95 – 08/97	3510	
NEXIA Saloon (KLETN)	15	44	08/96 – 08/97	3623	
NEXIA Saloon (KLETN)	15	52	02/95 – 08/97	3623	
NEXIA Saloon (KLETN)	15	55	02/95 – 08/97	3623	
NEXIA Saloon (KLETN)	1.5 16V	66	02/95 – 08/97	3470	
NEXIA Saloon (KLETN)	1.5 16V	66	02/95 – 08/97	3505	
NEXIA Saloon (KLETN)	1.5 16V	66	02/95 – 08/97	3615	
NUBIRA (KLAJ)	16	76	08/02 – 07/03	3687	
NUBIRA (KLAJ)	16	76	08/02 – 07/03		3894
NUBIRA (KLAJ)	1.6 16V	78	05/97 -	3687	
NUBIRA (KLAJ)	1.6 16V	78	05/97 -		3894
NUBIRA (KLAJ)	2.0 16V	98	05/97 -	3687	
NUBIRA (KLAJ)	2.0 16V	98	05/97 -		3894
NUBIRA (KLAJ)	2.0 CDX	93	08/02 – 07/03	3687	
NUBIRA (KLAJ)	2.0 CDX	93	08/02 – 07/03		3894
NUBIRA Saloon (KLAJ)	14	69	10/03 – 12/04	3687	
NUBIRA Saloon (KLAJ)	14	69	10/03 – 12/04		3894
NUBIRA Saloon (KLAJ)	16	80	07/03 -	3687	
NUBIRA Saloon (KLAJ)	16	80	07/03 -		3894

MAKE & MODEL		KW	YEAR		
DAEWOO					
NUBIRA Saloon (KLAJ)	18	90	07/03 -	3687	
NUBIRA Saloon (KLAJ)	18	90	07/03 -		3894
NUBIRA Saloon (KLAJ)	20	81	06/99 – 07/03	3687	
NUBIRA Saloon (KLAJ)	20	81	06/99 – 07/03		3894
NUBIRA Saloon (KLAJ)	1.5 SE	81	06/99 – 07/03	3687	
NUBIRA Saloon (KLAJ)	1.5 SE	81	06/99 – 07/03		3894
NUBIRA Saloon (KLAJ)	1.6 16V	76	07/00 -	3687	
NUBIRA Saloon (KLAJ)	1.6 16V	78	05/97 -	3687	
NUBIRA Saloon (KLAN)	1.6 16V	66	06/97 -	3687	
NUBIRA Saloon (KLAN)	1.6 16V	76	07/00 -		3894
NUBIRA Saloon (KLAN)	1.6 16V	76	12/00 -	3687	
NUBIRA Saloon (KLAN)	1.6 16V	78	05/97 -		3894
NUBIRA Saloon (KLAN)	1.6 16V	78	05/97 -	3687	
NUBIRA Saloon (KLAN)	1.6 16V	78	05/97 -		3894
NUBIRA Wagon (KLAJ)	1.6 16V	66	06/97 -		3894
NUBIRA Wagon (KLAJ)	1.6 16V	76	12/00 -		3894
NUBIRA Wagon (KLAJ)	2.0 16V	93	12/00 -	3687	
NUBIRA Wagon (KLAJ)	2.0 16V	93	12/00 -		3894
NUBIRA Wagon (KLAJ)	2.0 16V	93	12/00 -	3687	
NUBIRA Wagon (KLAJ)	2.0 16V	93	12/00 -		3894
NUBIRA Wagon (KLAJ)	2.0 16V	98	05/97 -	3687	
NUBIRA Wagon (KLAJ)	2.0 16V	98	05/97 -		3894
NUBIRA Wagon (KLAJ)	2.0 16V	98	05/97 -	3687	
NUBIRA Wagon (KLAJ)	2.0 16V	98	05/97 -		3894
NUBIRA Wagon (KLAN)	16	80	07/03 -	3687	
NUBIRA Wagon (KLAN)	16	80	07/03 -		3894
NUBIRA Wagon (KLAN)	18	70	06/04 -	3687	
NUBIRA Wagon (KLAN)	18	70	06/04 -		3894
NUBIRA Wagon (KLAN)	18	90	07/03 -	3687	
NUBIRA Wagon (KLAN)	18	90	07/03 -		3894
RACER	1.5 (G15MF)	52	03/95 – 12/97	3510	
REXTON (GAB_)	2.3 RX230 4x4	110	05/02 -	3843	
REXTON (GAB_)	2.3 RX230 4x4	110	05/02 -		3895
REXTON (GAB_)	2.7 D All-wheel Drive	137	05/06 -	3843	
REXTON (GAB_)	2.7 D All-wheel Drive	137	05/06 -		3895
REXTON (GAB_)	2.8 RX280 4x4	142	03/03 -	3843	
REXTON (GAB_)	2.8 RX280 4x4	142	03/03 -		3895
REXTON (GAB_)	2.9 TD	88	04/02 -	3843	
REXTON (GAB_)	2.9 TD	88	04/02 -		3895
REXTON (GAB_)	3.2 V6	162	04/02 -	3843	
REXTON (GAB_)	3.2 V6	162	04/02 -		3895
REZZO (KLAU)	16	77	09/00 -	3687	
REZZO (KLAU)	18	67	09/00 -	3687	
REZZO (KLAU)	18	72	09/00 -	3687	
REZZO (KLAU)	18	74	09/00 -	3687	
REZZO (KLAU)	20	89	09/01 -	3687	
REZZO (KLAU)	20	94	09/00 -	3687	
REZZO (KLAU)	1.6 SX	66	08/01 – 12/04	3687	
TICO (KLY3)	08	35	02/95 – 12/00	3511	
TICO (KLY3)	08	38	01/96 – 12/00	3511	
WINSTORM	24	104	12/06 -	3976	
WINSTORM	2.4 4x4	104	12/06 -	3976	
WINSTORM	2.4 LS	103	12/06 -	3976	
WINSTORM	2.4 LT 4x4	103	12/06 -	3976	
WINSTORM	3.2 Executive 4x4	167	12/06 -	3976	
DAF					
55	11	33	10/67 – 09/72		3326
55	11	33	10/67 – 09/72	3360	
55	11	33	10/67 – 09/72	3361	
55	1.1 MARATHON	40	12/71 – 09/72		3326
55	1.1 MARATHON	40	12/71 – 09/72	3360	
55	1.1 MARATHON	40	12/71 – 09/72	3361	
66	11	35	10/72 – 08/75		3326
66	11	35	10/72 – 08/75	3360	
66	11	35	10/72 – 08/75	3361	
66	1.1 SL	40	10/72 – 08/75		3326
66	1.1 SL	40	10/72 – 08/75	3360	
66	1.1 SL	40	10/72 – 08/75	3361	
66	1300 MARATHON	42	09/73 – 08/75		3326
66	1300 MARATHON	42	09/73 – 08/75	3360	
66	1300 MARATHON	42	09/73 – 08/75	3361	

MAKE & MODEL   		KW	YEAR		
DAF					
45 01.91-12.00	FA 45.120-035 (CD 85)	85	05/91 – 12/00	3433	
45 01.91-12.00	FA 45.120-06 (CD 85)	85	05/91 – 12/00	3433	
45 01.91-12.00	FA 45.130 B06,FA 45.130 C06 (CS 97 M)	97	05/91 – 12/00	3433	
45 01.91-12.00	FA 45.130 B06,FA 45.130 C06 (CT 97)	97	05/91 – 12/00	3433	
45 01.91-12.00	FA 45.130 B08,FA 45.130 C08 (CN 96)	96	05/91 – 12/00	3433	
45 01.91-12.00	FA 45.130 B08,FA 45.130 C08 (CS 97 M)	96	05/91 – 12/00	3433	
45 01.91-12.00	FA 45.130 B08,FA 45.130 C08 (CT 97)	96	05/91 – 12/00	3433	
45 01.91-12.00	FA 45.150 B08,FA 45.150 C08 (CB 108)	107	05/91 – 12/00	3433	
45 01.91-12.00	FA 45.150 B08,FA 45.150 C08 (CS 107 M)	107	05/91-12/00	3433	
45 01.91-12.00	FA 45.150 B08,FA 45.150 C08 (CT 108)	107	05/91 – 12/00	3433	
45 01.91-12.00	FA 45.150 B11,FA 45.150 C11 (CB 108)	107	05/91 – 12/00	3433	
45 01.91-12.00	FA 45.150 B11,FA 45.150 C11 (CS 107 M)	107	05/91 – 12/00	3433	
45 01.91-12.00	FA 45.150 B11,FA 45.150 C11 (CT 108)	107	05/91 – 12/00	3433	
45 01.91-12.00	FA 45.150 C09 (CT 108)	108	05/91 – 12/00	3433	
45 01.91-12.00	FA 45.150-10,FA 45.150 B10 (CB 108)	107	05/91 – 12/00	3433	
45 01.91-12.00	FA 45.150-10,FA 45.150 B10 (CS 107 M)	107	05/91 – 12/00	3433	
45 01.91-12.00	FA 45.160 -10 (CT 119)	119	05/91 – 12/00	3433	
45 01.91-12.00	FA 45.160 C08 (CS 119)	119	05/91 – 12/00	3433	
45 01.91-12.00	FA 45.160 C08 (CT 119)	119	05/91 – 12/00	3433	
45 01.91-12.00	FA 45.160 C09 (CS 119)	119	05/91 – 12/00	3433	
45 01.91-12.00	FA 45.160 C11 (CS 119)	119	05/91 – 12/00	3433	
45 01.91-12.00	FA 45.160 C11 (CT 119)	119	05/91 – 12/00	3433	
45 01.91-12.00	FA 45.180 B08 (CS 133 M)	133	05/95 – 12/00	3433	
45 01.91-12.00	FA 45.180 B10 (CS 133 M)	133	05/95 – 12/00	3433	
45 01.91-12.00	FA 45.180 B11 (CS 133 M)	133	05/95 – 12/00	3433	
45 01.91-12.00	FA 45.210 B11 (CS 158 M)	158	05/95 – 12/00	3433	
55 Coupe	11	33	05/68 – 09/72		3326
55 Coupe	11	33	05/68 – 09/72	3360	
55 Coupe	11	33	05/68 – 09/72	3361	
55 Coupe	1.1 MARATHON	40	12/71 – 09/72		3326
55 Coupe	1.1 MARATHON	40	12/71 – 09/72	3360	
55 Coupe	1.1 MARATHON	40	12/71 – 09/72	3361	
55 Estate	11	33	10/68 – 09/72		3326
55 Estate	11	33	10/68 – 09/72	3360	
55 Estate	11	33	10/68 – 09/72	3361	
66 Coupe	1300 MARATHON	42	09/73 – 08/75		3326
66 Coupe	1300 MARATHON	42	09/73 – 08/75	3360	
66 Coupe	1300 MARATHON	42	09/73 – 08/75	3361	
66 Estate	11	35	10/72 – 08/75		3326
66 Estate	11	35	10/72 – 08/75	3360	
66 Estate	11	35	10/72 – 08/75	3361	
66 Estate	1.1 MARATHON	40	10/72 – 08/75		3326
66 Estate	1.1 MARATHON	40	10/72 – 08/75	3360	
66 Estate	1.1 MARATHON	40	10/72 – 08/75	3361	
66 Estate	1300 MARATHON	42	09/73 – 08/75		3326
66 Estate	1300 MARATHON	42	09/73 – 08/75	3360	
66 Estate	1300 MARATHON	42	09/73 – 08/75	3361	
DAIHATSU					
55 WIDE Box	0.5 (S60)	20	09/77 – 04/83	3746	
55 WIDE Pickup	0.5 (S60)	20	04/80 – 04/83	3746	
55 WIDE Platform/Chassis	0.5 (S60)	20	04/80 – 04/83	3746	
ALTIS II 05.12- Sedán (Executive car-E Segment)	2.5 Hybrid (2AR-FXE)	118	05.12-	4019	
APPLAUSE I (A101, A111)	1.6 16V (A101)	66	06/89 – 07/97	3600	
APPLAUSE I (A101, A111)	1.6 16V (A101)	77	06/89 – 07/97	3600	
APPLAUSE I (A101, A111)	1.6 16V 4WD (A111)	77	06/89 – 07/97	3600	
BEGO	1.3 DVVT 4x4	63	11/05 -	3604	
CHARADE	1.33 16V	73	05/11 -	3958	
CHARADE (L2_)	1.0 (L251S)	43	03/03 -	3928	
CHARADE II (G11, G30)	1.0 (G11)	38	10/83 – 03/87	3620	
CHARADE II (G11, G30)	1.0 D (G30)	27	10/83 – 03/87	3620	
CHARADE II (G11, G30)	1.0 TD (G30)	34	02/85 – 03/87	3620	
CHARADE II (G11, G30)	1.0 Turbo (G11)	50	10/83 – 03/87	3620	
CHARADE III (G100, G101, G102)	1.0 (G100)	38	03/87 – 12/92	3600	
CHARADE III (G100, G101, G102)	1.0 (G100)	40	11/90 – 12/92	3600	
CHARADE III (G100, G101, G102)	1.0 (G100)	41	04/89 – 12/92	3600	
CHARADE III (G100, G101, G102)	1.0 D (G101)	27	03/87 – 12/92	3600	
CHARADE III (G100, G101, G102)	1.0 GTi (G100)	74	03/87 – 12/92	3600	
CHARADE III (G100, G101, G102)	1.0 TD (G101)	35	03/87 – 12/92	3600	
CHARADE III (G100, G101, G102)	1.0 Turbo (G100)	50	03/87 – 10/90	3600	
CHARADE III (G100, G101, G102)	1.3 i (G102)	66	06/88 – 12/92	3600	
CHARADE III (G100, G101, G102)	1.3 i 4WD (G102)	66	06/88 – 01/93	3600	

MAKE & MODEL		KW	YEAR		
DAIHATSU					
CHARADE III Saloon (G102)	13	66	11/90 – 02/93	3600	
CHARADE IV (G200, G202)	10	38	09/94 – 03/96	3898	
CHARADE IV (G200, G202)	13	44	09/96 – 11/99	3898	
CHARADE IV (G200, G202)	1.0 i	42	03/93 – 03/96	3898	
CHARADE IV (G200, G202)	1.3 16V	55	05/96 – 11/99	3898	
CHARADE IV (G200, G202)	1.3 i 16V	62	01/93 – 09/00	3898	
CHARADE IV (G200, G202)	1.5 HG	55	06/94 – 03/96	3898	
CHARADE IV (G200, G202)	1.5 i 16V	66	01/97 – 11/99	3898	
CHARADE IV (G200, G202)	1.6 GTi	77	03/93 – 11/99	3898	
CHARADE IV Saloon (G203)	1.5 16V	55	10/94 – 01/01	3898	
CHARADE IV Saloon (G203)	1.5 i 16V	66	06/94 – 11/99	3898	
CHARADE IV Saloon (G203)	1.6 GS	77	03/93 – 03/96	3898	
CHARMANT	14	61	01.74 -	3336	
CHARMANT	1.2	40	01/74 -	3601	
CHARMANT	14	61	01/74 -	3314	
CHARMANT II (A)	1.6 Altair	61	10/81 -	3709	
CHARMANT II (A)	1.6 LE, LC, LD, LX	27	10/81 -	3314	
CHARMANT II (A)	1.6 LE, LC, LD, LX	57	10.81 -	3336	
CHARMANT II (A)	13 (4K)	48	11/81 – 07/87	3709	
CHARMANT II (A)	16 (2T)	55	12/81 – 09/84	3709	
COO	10	40	10/06 -	3928	
COO	10	43	10/06 -	3928	
COO	13	67	10/06 -	3928	
COO	15	76	10/06 -	3928	
COO	1.3 Turbo	95	10/06 -	3928	
COO	1.5 4x4	76	10/06 -	3928	
COPEN (L880_, L881_)	07	47	09/03 – 09/12	3928	
COPEN (L880_, L881_)	13	64	03/06 – 09/12	3928	
COPEN (L880_, L881_)	0.7 (L880)	50	09/03 – 12/07	3928	
CUORE II (L80, L81)	07	30	10/87 – 08/90	3746	
CUORE II (L80, L81)	0.8 (L80)	29	11/89 – 12/90	3746	
CUORE II (L80, L81)	0.8 (L80)	32	09/85 – 06/90	3746	
CUORE II (L80, L81)	0.8 4WD (L81)	32	09/86 – 10/88	3746	
CUORE IV (L501)	07	32	12/94 – 10/98	3746	
CUORE VI (L251, L250_, L260_)	07	35	03/03 -	3928	
CUORE VI (L251, L250_, L260_)	07	43	03/03 -	3928	
CUORE VI (L251, L250_, L260_)	07	47	03/03 -	3928	
CUORE VI (L251, L250_, L260_)	10	43	05/03 -	3928	
CUORE VI (L251, L250_, L260_)	0.7 All-wheel Drive	43	03/03 -	3928	
CUORE VI (L251, L250_, L260_)	0.7 Turbo Avy All-wheel Drive	47	03/03 -	3928	
CUORE VII (L275_, L285_, L276_)	10	51	04/07 -	3928	
EXTOL Bus (S22_, S23_)	13	63	07/00 – 11/11	3604	
FEROZA Hard Top / SPORTRAK (F300)	0.7 DX	47	09/96 – 12/97	3436	
FEROZA Hard Top / SPORTRAK (F300)	1.6 16V (HDC)	63	10/88 – 12/99	3436	
FEROZA Hard Top / SPORTRAK (F300)	1.6 i 16V (HD-E)	70	10/88 – 12/99	3436	
FEROZA Soft Top / SPORTRAK (F300)	1.6 16V (HDC)	63	10/88 – 12/99	3436	
FEROZA Soft Top / SPORTRAK (F300)	1.6 i 16V (HD-E)	70	10/88 – 12/99	3436	
GRAN MOVE (G3)	1.5 16V (G303)	66	10/96 – 07/98	3898	
GRAN MOVE (G3)	1.5 GLX	71	10/96 – 08/98	3898	
GRAN MOVE (G3)	1.5 GX	55	10/96 – 08/98	3898	
GRAN MOVE (G3)	1.6 16V (G301)	67	05/98 -	3898	
GRAN MOVE (G3)	1.6 GLX	77	06/98 – 07/02	3898	
GRAN MOVE (G3)	1.6 GX	67	06/98 – 07/02	3898	
HIJET Box	08	29	06/86 – 12/89	3746	
HIJET Box	10	33	06/86 – 12/89	3746	
HIJET Box (S85)	10	33	12/92 – 05/98	3746	
HIJET Box (S85)	1.0 i	35	07/94 – 05/98	3746	
HIJET Box (S85)	1.2 D	26	05/95 – 03/98	3746	
HIJET Box (S85)	1.3 i 16V	48	05/98 -	3746	
HIJET Box (S85)	1.4 D	28	03/98 -	3746	
HIJET Bus	08	29	06/86 – 12/89	3746	
HIJET Bus	10	33	06/86 – 12/89	3746	
HIJET Bus (S85)	1.0 i	35	07/94 – 05/98	3746	
HIJET Pickup	13	48	06/98 -	3746	
HIJET Pickup	1.4 D	28	04/98 – 12/99	3746	
HIJET Pickup (_U60)	10	35	10/94 – 05/98	3746	
HIJET Pickup (_U60)	1.2 D	27	01/96 – 03/98	3746	
MATERIA (M4_)	10	40	10/06 -	4122	
MATERIA (M4_)	13	67	10/06 -	4122	
MATERIA (M4_)	15	76	10/06 -	4122	
MATERIA (M4_)	1.0 DVVT	43	10/06 -	4122	

MAKE & MODEL   		KW	YEAR		
DAIHATSU					
MATERIA (M4_)	1.3 DVVT Turbo	95	10/06 -	4122	
MATERIA (M4_)	1.5 ECO 4WD	76	10/06 -	4122	
MOVE (L6_, L9_)	1.0 i	41	10/98 – 09/02	3746	
ROCKY Hard Top / FOURTRAK (F7, F8)	2.0 (3Y)	65	02/85 – 04/93	3436	
ROCKY Hard Top / FOURTRAK (F7, F8)	2.8 D (DL)	54	02/85 – 12/98	3436	
ROCKY Hard Top / FOURTRAK (F7, F8)	2.8 TD (DL 51)	67	12/87 – 04/93	3436	
ROCKY Soft Top / FOURTRAK (F7, F8)	2.0 (3Y)	65	02/85 – 04/93	3436	
ROCKY Soft Top / FOURTRAK (F7, F8)	2.8 D (DL)	54	02/85 – 12/98	3436	
RUGGER / FOURTRAK	2.0	67	10/87 – 12/89	3436	
RUGGER / FOURTRAK	2.0 (3Y)	65	04/84 – 10/88	3436	
RUGGER / FOURTRAK	2.8 D (DL)	54	04/84 – 04/93	3436	
RUGGER / FOURTRAK	2.8 TDiC (DLT)	67	04/84 – 04/93	3436	
RUSH	13	63	11/05 -	3604	
RUSH	15	77	11/05 -	3604	
RUSH	1.5 4x4	77	11/05 -	3604	
SIRION (M1)	10	40	04/98 – 10/00	3901	
SIRION (M1)	0.7 Turbo 4WD	88	09/98 – 01/05	3901	
SIRION (M1)	1.0 i	43	09/00 – 01/05	3901	
SIRION (M1)	1.0 i (M100)	41	04/98 – 09/00	3901	
SIRION (M1)	1.0 i 4WD	41	04/99 – 09/00	3901	
SIRION (M1)	1.0 i 4WD	43	09/00 – 01/05	3901	
SIRION (M1)	1.3 Rally	81	06/02 – 03/05	3901	
SIRION (M1)	1.3 Rally 4WD	81	06/02 – 03/05	3901	
SIRION (M1)	1.3 Sport	75	08/00 – 01/05	3901	
SIRION (M1)	1.3 Sport 4WD	75	08/00 – 03/05	3901	
SIRION (M3_)	10	51	01/05 -	3928	
SIRION (M3_)	10	51	01/05 -	4122	
SIRION (M3_)	13	64	01/05 -	3928	
SIRION (M3_)	13	64	01/05 -	4122	
SIRION (M3_)	13	67	03/08 -	3928	
SIRION (M3_)	15	76	03/08 -	3928	
SIRION (M3_)	15	76	03/08 -	4122	
SIRION (M3_)	1.0 DVVT 4WD	51	04/05 -	3928	
SIRION (M3_)	1.0 DVVT 4WD	51	04/05 -	4122	
SIRION (M3_)	1.3 4WD	64	04/05 -	3928	
SIRION (M3_)	1.3 4WD	67	03/08 -	3928	
SIRION (M3_)	1.5 4WD	76	05/06 – 10/08	3928	
SIRION (M3_)	1.5 4WD	76	05/06 – 10/08	4122	
SPARCAR Box (S7_)	08	29	09/83 – 05/86	3746	
SPARCAR Box (S7_)	10	33	09/83 – 05/86	3746	
SPARCAR Bus (S7_)	08	29	09/83 – 05/86	3746	
SPARCAR Bus (S7_)	10	33	09/83 – 05/86	3746	
TERIOS (J1_)	13	63	09/01 – 10/05	3604	
TERIOS (J1_)	15	63	05/99 – 10/05	3604	
TERIOS (J1_)	16	66	05/99 – 10/05	3604	
TERIOS (J1_)	1.3 4WD	61	10/97 – 10/00	3604	
TERIOS (J1_)	1.3 4WD	63	10/00 – 10/05	3604	
TERIOS (J1_)	1.3 VVT-i FWD	63	10/02 – 10/05	3604	
TERIOS (J1_)	1.3 VVT-i Turbo 4WD	103	10/02 – 10/05	3604	
TERIOS (J2_)	1.3 VVT-i	63	11/05 -	3604	
TERIOS (J2_)	1.3 VVT-i 4x4	63	11/05 -	3604	
TERIOS (J2_)	1.5 4x4	77	05/06 -	3604	
TERIOS (J2_)	1.5 VVT-i	75	09/10 -	3604	
TERIOS (J2_)	1.5 VVT-i	77	11/05 -	3604	
TERIOS (J2_)	1.5 VVT-i [RWD]	75	09/10 -	3604	
TERIOS (J2_)	1.5 VVT-i [RWD]	77	11/05 -	3604	
TERIOS (J2_)	1.5 VVT-i 4x4	75	09/10 -	3604	
TERIOS KID (J11_, J13_)	07	44	09/00 – 10/05	3604	
TERIOS KID (J11_, J13_)	07	47	09/00 – 05/12	3604	
TERIOS KID (J11_, J13_)	0.7 4WD	44	10/98 – 10/05	3604	
TERIOS KID (J11_, J13_)	0.7 4WD	47	05/97 – 08/00	3604	
TREVIS	10	43	06/06 -	3928	
YRV (M2)	10	43	02/01 -	3901	
YRV (M2)	13	64	02/01 -	3901	
YRV (M2)	1.3 4WD	64	02/01 -	3901	
YRV (M2)	1.3 GTti	95	07/02 -	3901	
DAIMLER					
2.8 - 5.3	36	156	10/86 – 09/89	3526	
2.8 - 5.3	Double Six / Vanden 5.3	186	09/73 – 05/75	3526	
2.8 - 5.3	Double Six / Vanden 5.3	198	07/72 – 09/73	3526	
2.8 - 5.3	Double Six 5.3	194	10/86 – 02/93	3526	

MAKE & MODEL		KW	YEAR		
DAIMLER					
2.8 - 5.3	Double Six 5.3	197	07/81 – 02/93	3526	
2.8 - 5.3	Double Six 5.3	211	05/75 – 07/81	3526	
2.8 - 5.3	Double Six H.E. 5.3	217	07/81 – 10/86	3526	
2.8 - 5.3	Sovereign 2.8	110	10/69 – 05/75	3526	
2.8 - 5.3	Sovereign 3.4	120	05/75 – 12/78	3526	
2.8 - 5.3	Sovereign 4.2	124	06/76 – 03/79	3526	
2.8 - 5.3	Sovereign 4.2	127	09/73 – 03/79	3526	
2.8 - 5.3	Sovereign 4.2	137	10/69 – 09/73	3526	
2.8 - 5.3	Sovereign 4.2	151	03/79 – 10/86	3526	
COUPE	Double Six 5.3	213	05/75 – 12/77	3526	
COUPE	Sovereign 4.2	127	09/73 – 12/77	3526	
DAIMLER (XJ4_)	40	163	10/89 – 09/94	3584	
DAIMLER (XJ4_)	4.0 Super	183	09/92 – 09/94	3584	
DAIMLER XJ (X30_)	4.0 Long	216	10/97 – 06/03	3584	
DAIMLER XJ (X30_)	Double Six 6.0	229	10/94 – 06/03	3584	
DAIMLER XJ (X30_)	Six 4.0	177	10/94 – 06/03	3584	
DAIMLER XJ (X30_)	Six 4.0	209	07/97 – 12/02	3584	
LANDAULETTE	42	123	03/74 – 12/91	3526	
LANDAULETTE	42	131	01/88 – 12/91	3526	
LIMOUSINE	42	123	06/68 – 12/91	3526	
LIMOUSINE	42	131	01/88 – 12/91	3526	
XJ 40, 81	Sovereign 3.6	136	10/86 – 09/89	3526	
XJ 40, 81	Sovereign 3.6	145	10/86 – 07/89	3526	
XJ 40, 81	Sovereign 4.0	163	09/89 – 09/94	3584	
DALLAS					
FUN	1.4 i	55	01/94 -	3474	
FUN	1.4 i	55	01/94 -	3580	
FUN	1.8 D	43	01/94 -	3474	
FUN	1.8 D	43	01/94 -	3580	
DODGE					
ATTITUDE	1.4	81	09/11 -		4343
ATTITUDE	1.6	91	01/12 -		4343
AVENGER	20	115	06/07 -		3893
AVENGER	20	115	06/07 -	3955	
AVENGER	20	115	06/07 -		4106
AVENGER	24	125	06/07 -		3893
AVENGER	24	125	06/07 -	3955	
AVENGER	24	125	06/07 -		4106
AVENGER	24	129	06/07 -		3893
AVENGER	24	129	06/07 -	3955	
AVENGER	24	129	06/07 -		4106
AVENGER	27	137	06/07 -		3893
AVENGER	27	137	06/07 -	3955	
AVENGER	27	137	06/07 -		4106
AVENGER	2.0 CRD	103	06/07 -		3893
AVENGER	2.0 CRD	103	06/07 -	3955	
AVENGER	2.0 CRD	103	06/07 -		4106
AVENGER	2.7 Flex-Fuel	139	06/07 -		3893
AVENGER	2.7 Flex-Fuel	139	06/07 -	3955	
AVENGER	2.7 Flex-Fuel	139	06/07 -		4106
CALIBER	18	110	06/06 -	3955	
CALIBER	18	110	06/06 -		4106
CALIBER	20	115	06/06 -		3893
CALIBER	20	115	06/06 -	3955	
CALIBER	20	115	06/06 -		4106
CALIBER	24	125	10/06 -	3955	
CALIBER	24	125	10/06 -		4106
CALIBER	24	126	10/06 -	3955	
CALIBER	24	126	10/06 -		4106
CALIBER	2.0 CRD	103	06/06 -	3955	
CALIBER	2.0 CRD	103	06/06 -		4106
CALIBER	2.2 CRD	120	07/10 -	3955	
CALIBER	2.2 CRD	120	07/10 -		4106
CALIBER	2.4 AWD	125	10/06 -		3893
CALIBER	2.4 AWD	125	10/06 -	3955	
CALIBER	2.4 AWD	125	10/06 -		4106
CALIBER	2.4 Turbo	217	12/07 -	3955	
CALIBER	2.4 Turbo	217	12/07 -		4106
CARAVAN	30	112	01/95 – 03/01	4197	
CARAVAN	33	131	01/08 -	4005	

MAKE & MODEL   		KW	YEAR		
DODGE					
CARAVAN	36	208	01/12 -	4005	
CARAVAN	38	142	01/08 -	4005	
CARAVAN	40	189	01/09 -	4005	
CARAVAN	2.0 i	98	01/95 – 03/01	4197	
CARAVAN	2.4 i	111	01/95 – 03/01	4197	
CARAVAN	2.5 TD	85	01/95 – 03/01	4197	
CARAVAN	2.8 CRD	120	01/09 -	4005	
CARAVAN	3.3 i	116	01/95 – 03/01	4197	
CARAVAN	3.8 i	122	01/95 – 03/01	4197	
CARAVAN	3.8 i	131	01/95 – 03/01	4197	
CARAVAN	3.8 i AWD	122	01/95 – 03/01	4197	
CARAVAN	3.8 i AWD	131	01/95 – 03/01	4197	
CARAVAN (RG_)	24	111	02/00 – 12/07	4012	
CARAVAN (RG_)	33	128	02/00 – 12/07	4012	
CARAVAN (RG_)	33	132	04/01 – 05/07	4012	
CARAVAN (RG_)	38	154	04/01 – 05/07	4012	
CARAVAN (RG_)	38	160	02/00 – 12/07	4012	
CARAVAN (RG_)	3.3 AWD	128	02/00 – 12/07	4012	
CARAVAN (RG_)	3.8 AWD	154	04/01 – 05/07	4012	
CARAVAN (RG_)	3.8 AWD	160	02/00 – 12/07	4012	
CARAVAN (RG_)	3.8 Turbo AWD	153	04/01 – 12/07	4012	
CHALLENGER II (U.S.A.)	1.6 1600		09/77 -	3376	
CHALLENGER Coupe	35	186	09/08 – 12/10	4006	
CHALLENGER Coupe	35	186	09/08 – 12/10		4018
CHALLENGER Coupe	36	227	01/11 -	4006	
CHALLENGER Coupe	36	227	01/11 -		4018
CHALLENGER Coupe	57	277	09/08 -	4006	
CHALLENGER Coupe	57	277	09/08 -		4018
CHALLENGER Coupe	57	280	01/10 -	4006	
CHALLENGER Coupe	57	280	01/10 -		4018
CHALLENGER Coupe	3.5	186	09/08 – 12/10	4198	
CHALLENGER Coupe	3.6	227	01/11 -	4198	
CHALLENGER Coupe	5.7	277	09/08 -	4198	
CHALLENGER Coupe	5.7	280	01/10 -	4198	
CHARGER	27	141	04/06 – 12/10	4006	
CHARGER	27	141	04/06 – 12/10		4018
CHARGER	35	186	06/05 – 12/10	4006	
CHARGER	35	186	06/05 – 12/10		4018
CHARGER	36	218	09/11 – 12/14		4018
CHARGER	2.7	141	04/06 – 12/10	4198	
CHARGER	3.5	186	06/05 – 12/10	4198	
CHARGER	5.7 Flexfuel AWD	276	11/11 -		4018
CHARGER	5.7 R/T	254	06/05 – 12/08	4006	
CHARGER	5.7 R/T	254	06/05 – 12/08		4018
CHARGER	5.7 R/T	254	06/05 – 12/08	4198	
CHARGER	5.7 R/T	276	09/11 -		4018
CHARGER	5.7 R/T AWD	276	09/11 -		4018
DURANGO (DN)	4.7 4WD	175	09.97 - 12.03	4327	
DURANGO (DN)	4.7 4WD	175	09.97 - 12.03		4329
DURANGO (DN)	5.9	183	09.98 - 10.03	4327	
DURANGO (DN)	5.9	183	09.98 - 10.03		4329
DURANGO (DN)	5.9 4WD	183	09.97 - 12.03	4327	
DURANGO (DN)	5.9 4WD	183	09.97 - 12.03		4329
DURANGO (DN)	6.0 4WD	184	12.97 - 10.03	4327	
DURANGO (DN)	6.0 4WD	184	12.97 - 10.03		4329
DURANGO (HB)	3.7	157	11.03 - 12.10	4327	
DURANGO (HB)	3.7	157	11.03 - 12.10		4329
DURANGO (HB)	3.7 AWD	157	11.03 - 12.10	4327	
DURANGO (HB)	3.7 AWD	157	11.03 - 12.10		4329
DURANGO (HB)	4.7	172	11.03 - 12.09	4327	
DURANGO (HB)	4.7	172	11.03 - 12.09		4329
DURANGO (HB)	4.7	175	09.06 - 12.07		4329
DURANGO (HB)	4.7	226	09.07 - 12.08		4329
DURANGO (HB)	4.7 4WD	175	09.06 - 12.07	4327	
DURANGO (HB)	4.7 4WD	175	09.06 - 12.07		4329
DURANGO (HB)	4.7 4WD	226	09.07 - 12.08		4329
DURANGO (HB)	4.7 AWD	172	11.03 - 12.09	4327	
DURANGO (HB)	4.7 AWD	172	11.03 - 12.09		4329
DURANGO (HB)	4.7 Flexfuel	172	09.05 - 12.09	4327	
DURANGO (HB)	4.7 Flexfuel	172	09.05 - 12.09		4329
DURANGO (HB)	4.7 Flexfuel	175	09.06 - 12.07	4327	

MAKE & MODEL		KW	YEAR		
DODGE					
DURANGO (HB)	4.7 Flexfuel	175	09.06 - 12.07		4329
DURANGO (HB)	4.7 Flexfuel	226	09.08 - 12.09		4329
DURANGO (HB)	4.7 Flexfuel 4WD	172	09.05 - 12.09	4327	
DURANGO (HB)	4.7 Flexfuel 4WD	172	09.05 - 12.09		4329
DURANGO (HB)	4.7 Flexfuel 4WD	175	09.06 - 12.07	4327	
DURANGO (HB)	4.7 Flexfuel 4WD	175	09.06 - 12.07		4329
DURANGO (HB)	4.7 Flexfuel 4WD	226	09.07 - 12.08		4329
DURANGO (HB)	5.7	250	09.03 - 12.09	4327	
DURANGO (HB)	5.7	250	09.03 - 12.09		4329
DURANGO (HB)	5.7 4WD	250	09.03 - 12.09	4327	
DURANGO (HB)	5.7 4WD	250	09.03 - 12.09		4329
DURANGO (HB)	5.7 AWD	257	11.03 - 12.10	4327	
DURANGO (HB)	5.7 AWD	257	11.03 - 12.10		4329
DURANGO (HB)	5.7 Hybrid 4WD	287	09.08 - 12.09		4329
DURANGO (WD)	3.6	216	01/11 -		4339
DURANGO (WD)	3.6 AWD	216	01/11 -		4339
DURANGO (WD)	5.7	268	01/11 -		4339
DURANGO (WD)	3.6 FLEX AWD	220	09/13 -		4339
DURANGO (WD)	5.7 AWD	268	01/11 -		4339
GRAND CARAVAN	33	127	06/07 -	4005	
GRAND CARAVAN	33	131	06/07 – 12/08	4005	
GRAND CARAVAN	38	148	06/07 -	4005	
GRAND CARAVAN	40	173	06/07 -	4005	
INTREPID	27	149	10/97 – 09/04	4197	
INTREPID	32	168	04/98 – 09/04	4197	
INTREPID	33	110	10/92 – 12/94	4197	
INTREPID	33	120	01/95 – 12/98	4197	
INTREPID	35	160	10/92 – 12/98	4197	
INTREPID	3.5 ES	187	04/98 – 09/04	4197	
JOURNEY	24	125	01/09 -	4005	
JOURNEY	24	129	09/08 -	4005	
JOURNEY	27	136	01/09 -	4005	
JOURNEY	35	173	06/08 -	4005	
JOURNEY	36	211	01/12 -	4005	
JOURNEY	2.0 CRD	103	06/08 -	4005	
JOURNEY	2.4 ECO+	125	03/09 -	4005	
JOURNEY	2.7 FLEXFUEL	136	01/09 -	4005	
JOURNEY	3.5 AWD	173	06/08 -	4005	
NEON	2.0 16V	98	05/94 – 08/99	4197	
NEON	2.0 16V	107	06/94 – 08/99	4197	
NEON	2.0 16V	109	04/96 – 08/99	4197	
NEON	2.0 16V	112	04/96 – 08/99	4197	
NEON Coupe	2.0 Highline	98	01/94 – 09/99	4197	
NEON II	2.0 16V	98	08/99 -	4197	
NEON II	2.0 16V	112	08/99 -	4197	
NITRO	37	157	09/06 – 12/12		4004
NITRO	2.8 CRD	130	06/07 – 12/12		4004
NITRO	2.8 CRD 4WD	130	06/07 – 12/12		4004
NITRO	3.7 4WD	157	09/06 – 12/12		4004
NITRO	3.7 V6	154	06/07 – 12/12		4004
NITRO	3.7 V6 4WD	151	06/07 – 12/12		4004
NITRO	4.0 4WD	191	09/06 – 12/07		4004
RAM Furgón (LCVs-N1 Segment)	5.2 LT, ST	168	08.93-	3868	
RAM Furgón (LCVs-N1 Segment)	5.9 LT, ST	140	08.93-	3868	
RAM 1500 (BE, BR) Pick-up (Pick-Up Truck)	3.9	128	01.93-05.01	3868	
RAM 1500 (BE, BR) Pick-up (Pick-Up Truck)	5.2	172	01.93-09.01	3868	
RAM 1500 (BE, BR) Pick-up (Pick-Up Truck)	5.9 4WD (EML)	183	09.94-12.01	3868	
RAM 1500 Crew Cab Pickup (DS)	3.0 TD	179	09.13 -		4329
RAM 1500 Crew Cab Pickup (DS)	3.0 TD 4WD	179	09.13 -		4329
RAM 1500 Crew Cab Pickup (DS)	3.6	227	09.15 -		4329
RAM 1500 Crew Cab Pickup (DS)	3.6 4WD	227	09.14 -		4329
RAM 1500 Crew Cab Pickup (DS)	3.6 FLEX	227	09.12 -		4329
RAM 1500 Crew Cab Pickup (DS)	3.6 FLEX 4WD	227	09.12 -		4329
RAM 1500 Crew Cab Pickup (DS)	3.7	160	09.10 - 12.15		4329
RAM 1500 Crew Cab Pickup (DS)	3.7 4WD	160	09.10 - 12.15		4329
RAM 1500 Crew Cab Pickup (DS)	4.7 FLEX	231	09.10 -		4329
RAM 1500 Crew Cab Pickup (DS)	4.7 FLEX 4WD	231	09.10 -		4329
RAM 1500 Crew Cab Pickup (DS)	5.7	291	09.10 - 12.12		4329
RAM 1500 Crew Cab Pickup (DS)	5.7	295	09.12 -		4329
RAM 1500 Crew Cab Pickup (DS)	5.7 4WD	291	09.10 - 12.12		4329
RAM 1500 Crew Cab Pickup (DS)	5.7 4WD	295	09.12 -		4329

MAKE & MODEL		KW	YEAR		
DODGE					
RAM 1500 Extended Cab Pickup (DS)	3.0 TD	179	09.13 -		4329
RAM 1500 Extended Cab Pickup (DS)	3.0 TD 4WD	179	09.13 -		4329
RAM 1500 Extended Cab Pickup (DS)	3.6 FLEX	227	09.12 -		4329
RAM 1500 Extended Cab Pickup (DS)	3.6 FLEX 4WD	227	09.12 -		4329
RAM 1500 Extended Cab Pickup (DS)	3.7	160	09.10 - 12.12		4329
RAM 1500 Extended Cab Pickup (DS)	3.7 4WD	160	09.10 - 12.13		4329
RAM 1500 Extended Cab Pickup (DS)	4.7 FLEX	231	09.10 -		4329
RAM 1500 Extended Cab Pickup (DS)	4.7 FLEX 4WD	231	09.10 -		4329
RAM 1500 Extended Cab Pickup (DS)	5.7	291	09.10 - 12.12		4329
RAM 1500 Extended Cab Pickup (DS)	5.7	295	09.12 -		4329
RAM 1500 Extended Cab Pickup (DS)	5.7 4WD	291	09.10 - 12.12		4329
RAM 1500 Extended Cab Pickup (DS)	5.7 4WD	295	09.12 -		4329
RAM 1500 Pick-up (D1, DC, DH, DM, DR)	5.7	257	06.01 - 09.08		4329
RAM 1500 Pick-up (D1, DC, DH, DM, DR)	5.7	257	06.01 - 09.08	4327	
RAM 1500 Pick-up (D1, DC, DH, DM, DR)	5.7 4x4	257	06.01 - 09.08	4327	
RAM 1500 Pick-up (D1, DC, DH, DM, DR)	5.7 4x4	257	06.01 - 09.08		4329
RAM 1500 Standard Cab Pickup	8.3 SRT-10	373	09.03 - 12.06	4327	
RAM 1500 Standard Cab Pickup (DS)	3.0 TD	179	09.13 -		4329
RAM 1500 Standard Cab Pickup (DS)	3.0 TD 4WD	179	09.13 -		4329
RAM 1500 Standard Cab Pickup (DS)	3.6	227	09.15 -		4329
RAM 1500 Standard Cab Pickup (DS)	3.6 4WD	227	09.15 -		4329
RAM 1500 Standard Cab Pickup (DS)	3.6 FLEX	227	09.12 -		4329
RAM 1500 Standard Cab Pickup (DS)	3.6 FLEX 4WD	227	09.12 -		4329
RAM 1500 Standard Cab Pickup (DS)	3.7	160	09.09 - 12.15		4329
RAM 1500 Standard Cab Pickup (DS)	3.7 4WD	160	09.09 - 12.14		4329
RAM 1500 Standard Cab Pickup (DS)	4.7	231	09.09 -		4329
RAM 1500 Standard Cab Pickup (DS)	4.7 4WD	231	09.09 -		4329
RAM 1500 Standard Cab Pickup (DS)	4.7 FLEX	231	09.10 -		4329
RAM 1500 Standard Cab Pickup (DS)	4.7 FLEX 4WD	231	09.10 -		4329
RAM 1500 Standard Cab Pickup (DS)	5.7	291	09.10 - 12.12		4329
RAM 1500 Standard Cab Pickup (DS)	5.7	295	09.12 -		4329
RAM 1500 Standard Cab Pickup (DS)	5.7 4WD	291	09.10 -		4329
RAM 1500 Standard Cab Pickup (DS)	5.7 4WD	295	09.12 -		4329
SPRINTER (U.S.A.) Furgón (LCVs-N1 Segment)	2.5 2500		01.03 -	3670	
DONGNAN (SOUEAST)					
LANCER	1.6	74	05.06 - 12.17	4033	
DR					
DR 1	10	50	03/10 -	4027	
DR 1	13	61	03/10 -	4027	
DR 1	1.0 Bifuel	50	03/10 -	4027	
DR 1	1.0 LPG	50	03/10 -	4027	
DR 1	1.3 Bifuel	61	03/10 -	4027	
DR 1	1.3 LPG	61	03/10 -	4027	
DR 2	13	61	09/10 -	4027	
DR 2	1.3 Bifuel	61	09/10 -	4027	
DR 2	1.3 LPG	61	09/10 -	4027	
DR 5	16	80	01/11 -		4153
DR 5	16	87	01/11 -		4153
DR 5	18	97	01/11 -		4153
DR 5	20	94	01/11 -		4153
DR 5	20	102	01/11 -		4153
DR 5	1.6 Bifuel	80	01/11 -		4153
DR 5	1.6 LPG	80	01/11 -		4153
DR 5	1.9 D	88	01/11 -		4153
DR 5	2.0 4WD	102	01/11 -		4153
DR 5	2.0 Bifuel	94	01/11 -		4153
DR 5	2.0 LPG	94	01/11 -		4153
DS					
DS 3	1.2 VTi 110	81	04/15 -		3529/1
DS 3	1.6 BlueHDi 100	73	04/15 -		3529/1
DS 3	1.6 BlueHDi 120	88	07/15 -		3529/1
DS 3	1.6 THP 165	121	07/15 -		3529/1
DS 3 Convertible	1.2 VTi 110	81	07/15 -		3529/1
DS 3 Convertible	1.6 BlueHDi 100	73	07/15 -		3529/1
DS 3 Convertible	1.6 BlueHDi 120	88	07/15 -		3529/1
DS 3 Convertible	1.6 THP 165	121	07/15 -		3529/1
DS 4 / DS 4 CROSSBACK	1.2 THP 130	96	07/15 -	3964	
DS 4 / DS 4 CROSSBACK	1.6 BlueHDi 120	88	07/15 -		3529/1
DS 4 / DS 4 CROSSBACK	1.6 BlueHDi 120	88	07/15 -	3964	

MAKE & MODEL		KW	YEAR		
DS					
DS 4 / DS 4 CROSSBACK	1.6 THP 210	155	07/15 -		3529/1
DS 4 / DS 4 CROSSBACK	2.0 BlueHDi 150	110	07/15 -	3964	
DS 4 / DS 4 CROSSBACK	2.0 BlueHDi 180	133	07/15 -		3529/1
EUNOS					
500 Saloon	20	105	01/92 – 10/99	3832	
500 Saloon	20	105	01/92 – 10/99	3833	
FENGXING (DONGFENG)					
FUTURE MPV	18	103	12/07 -	3809	
FUTURE MPV	18	118	12/07 -	3809	
FUTURE MPV	20	93	03/01 -	3809	
FUTURE MPV	24	97	03/01 -	3809	
FERRARI					
208/308	208 Turbo	162	06/82 – 10/89	3320	
208/308	208 Turbo	162	06/82 – 10/89	3350	
208/308	308 GTB	188	09/75 – 06/80	3320	
208/308	308 GTB	188	09/75 – 06/80	3350	
208/308	308 GTB Qv	177	09/82 – 06/85	3320	
208/308	308 GTB Qv	177	09/82 – 06/85	3350	
208/308	308 GTS	188	09/77 – 06/80	3320	
208/308	308 GTS	188	09/77 – 06/80	3350	
208/308	308 GTS Qv	177	09/82 – 06/85	3320	
208/308	308 GTS Qv	177	09/82 – 06/85	3350	
400 i	48	232	05/79 – 03/85	3331/1	
412 i	49	250	04/85 – 12/88	3331/1	
512 BB	49	237	07/81 – 08/84	3331/1	
512 BB	49	250	08/76 – 12/81	3331/1	
DINO GT (206/246)	206	132	02/69 – 10/69	3320	
DINO GT (206/246)	206	132	02/69 – 10/69	3350	
DINO GT (206/246)	246	143	10/69 – 10/73	3320	
DINO GT (206/246)	246	143	10/69 – 10/73	3350	
DINO GT4 (208/308)	208	125	02/75 – 06/80	3320	
DINO GT4 (208/308)	208	125	02/75 – 06/80	3350	
DINO GT4 (208/308)	308	188	02/74 – 06/80	3320	
DINO GT4 (208/308)	308	188	02/74 – 06/80	3350	
DINO GTS (206/246)	246	143	04/72 – 10/73	3320	
DINO GTS (206/246)	246	143	04/72 – 10/73	3350	
TESTAROSSA	50	272	08/86 – 10/91	3331/1	
TESTAROSSA	50	287	05/84 – 12/91	3331/1	
FIAT					
147	10	37	04/80 – 12/95	3625	
147	10	37	10/76 – 12/95	3625	
147	13	41	07/80 – 07/83	3625	
147	13	45	01/82 – 12/86	3625	
147	13	45	07/80 – 08/84	3625	
147	14	46	10/80 – 10/96	3625	
147	1.3 D	33	07/82 – 07/83	3625	
147	1.3 D	33	07/82 – 06/84	3625	
147	1.3 D	36	07/84 – 12/86	3625	
147	1.3 D	36	10/80 – 10/95	3625	
147	1.3 Rallye	53	07/80 – 07/83	3625	
850	0.8 (100 G.000)	25	07.64 – 10.72	3346	
850	0.8 (100 G.002)	27	07.64 – 10.72	3346	
850	0.8 (126G100)	36	10.65 – 10.68	3346	
850	0.8 Special (100 GB.000)	35	03.68 – 10.72	3346	
850	0.9 Sport (100 GL.040)	38	03.68 – 12.72	3346	
124 (124_)	1.2 1200 (124 A.000)	44	04.67 – 05.73	3346	
124 (124_)	1.2 1200 (124 A.000)	44	07.66 – 10.73	3346	
124 (124_)	1.4 1500 Sport (124 AC.000)	66	01.66 – 12.72	3346	
124 (124_) Cabrío (Large family car-D Segment)	1.2 1200 (124 A.000)		67-73	3357	
124 (124_) Cabrío (Large family car-D Segment)	1.2 1200 (124 A.000)		73-75	3357	
124 (124_) Cabrío (Large family car-D Segment)	1.2 1200 (124 A.000)		66-73	3357	
124 (124_) Cabrío (Large family car-D Segment)	1.2 1200 (124 A.000)		73-75	3357	
124 (124_) Cabrío (Large family car-D Segment)	1.4 (124 B.000)		67-71	3357	
124 (124_) Cabrío (Large family car-D Segment)	1.4 1400 Special (124 B2.000)		68-72	3357	
124 (124_) Cabrío (Large family car-D Segment)	1.4 1400 Sport (124 AC.000)		67-72	3357	
124 (124_) Cabrío (Large family car-D Segment)	1.4 1500 Special (124 B2.000)		73-75	3357	
124 (124_) Cabrío (Large family car-D Segment)	1.4 1500 Special T (124 AC.000)		71-75	3357	
124 (124_) Cabrío (Large family car-D Segment)	1.4 1500 Sport (124 AC.000)		66-72	3357	
124 (124_) Coupé (Large family car-D Segment)	1.6 1600 (125 B.000)		71-73	3357	

MAKE & MODEL		KW	YEAR		
FIAT					
124 (124_) Coupé (Large family car-D Segment)	1.6 1600 (132 AC.000)		71-73	3357	
124 (124_) Coupé (Large family car-D Segment)	1.6 1600 Special T (124A9000)		73-75	3357	
124 (124_) Coupé (Large family car-D Segment)	1.6 1600 Special T (132 AC.000)		73-75	3357	
124 (124_) Coupé (Large family car-D Segment)	1.6 1600 Sport (132 AC.000)		69-73	3357	
124 (124_) Coupé (Large family car-D Segment)	1.6 1600 Sport (132 AC.000)		72-75	3357	
124 (124_) Coupé (Large family car-D Segment)	1.6 1600 Sport (132 AC.000)		72-75	3357	
124 (124_) Estate (Large family car-D Segment)	1.7 1800 Rally Abarth (132 AC1.000)		72-75	3357	
124 (124_) Estate (Large family car-D Segment)	1.7 1800 Sport		73-75	3357	
124 (124_) Estate (Large family car-D Segment)	1.7 1800 Sport		73-76	3357	
124 (124_) Sedán (Large family car-D Segment)	1.8 1800 Sport (132 AC1.000)		72-77	3357	
124 (124_) Sedán (Large family car-D Segment)	1600 Sport (BS) (125 B.000)		69-73	3357	
124 (124_) Sedán (Large family car-D Segment)	1600 Sport (BS) (132 AC.000)		69-73	3357	
124 (124_) Sedán (Large family car-D Segment)	1600 Sport (BS1) (132 AC.000)		69-74	3357	
124 (124_) Sedán (Large family car-D Segment)	1600 Sport (CS) (132 AC.000)		69-74	3357	
124 (124_) Sedán (Large family car-D Segment)	1800 Sport		73-76	3357	
124 (124_) Sedán (Large family car-D Segment)	2.0 2000 (132 C3.031)		82-85	3357	
125 (125_)	1.6 Special (125 B.000)	74	05.69 – 10.73	3346	
125 (125_) Sedán (Large family car-D Segment)	1.3		67-	3357	
125 (125_) Sedán (Large family car-D Segment)	1.5		67-	3357	
125 (125_) Sedán (Large family car-D Segment)	1.6 (125 A.000)		67-74	3357	
125 (125_) Sedán (Large family car-D Segment)	1.6 Special (125 B.000)		69-73	3357	
127 (127_)	09	29	06/71 – 05/83	3316	
127 (127_)	09	29	06/71 – 05/83	3485	
127 (127_)	09	33	06/71 – 12/86	3316	
127 (127_)	09	33	06/71 – 12/86	3485	
127 (127_)	10	37	04/77 – 12/86	3316	
127 (127_)	10	37	04/77 – 12/86	3485	
127 (127_)	1.0 Sport	51	07/78 – 02/82	3316	
127 (127_)	1.0 Sport	51	07/78 – 02/82	3485	
127 (127_)	1.3 Diesel	33	04/81 – 12/86	3485	
127 (127_)	1.3 Sport	55	12/81 – 05/83	3485	
127 (127_) Fastback (Subcompact car-B Segment)	0.9 (100 GL.048)		71-83	3357	
127 (127_) Fastback (Subcompact car-B Segment)	1.0 Sport (127 A1.000)		78-82	3357	
127 (127_) Fastback (Subcompact car-B Segment)	1.3 Sport (127 A3.000)		81-83	3357	
127 (127_) Estate (Subcompact car-B Segment)	1.0 (127 A.000)		77-86	3357	
127 (127_) Estate (Subcompact car-B Segment)	1.3 Diesel (127 A5.000)		81-86	3357	
127 Panorama (127_)	10	37	01/77 – 12/86	3316	
127 Panorama (127_)	10	37	01/77 – 12/86	3625	
127 Panorama (127_)	1.3 D	33	06/81 – 12/86	3316	
127 Panorama (127_)	1.3 D	33	06/81 – 12/86	3625	
128 (128_)	11	33	02/75 – 09/81	3316	
128 (128_)	11	40	03/69 – 12/84	3316	
128 (128_)	1.1 (128 A.000)	40	03.69 – 12.84	3346	
128 (128_)	1.3 Rally (AR)	49	09/71 – 02/76	3316	
128 (128_)	1.3 Sport	44	08/74 – 12/84	3316	
128 (128_) Coupé (Compact car-C Segment)	1.1 (128 AC5.000)		75-81	3357	
128 (128_) Coupé (Compact car-C Segment)	1.1 (128 AC5.000)		72-81	3357	
128 (128_) Coupé (Compact car-C Segment)	1.3 (128 AC.000)		72-79	3357	
128 (128_) Coupé (Compact car-C Segment)	1.3 Berlinetta (128 AC.000)		75-79	3357	
128 (128_) Estate (Compact car-C Segment)	1.1 (128 A.000)		69-82	3357	
128 (128_) Estate (Compact car-C Segment)	1.1 (128 A.048)		75-81	3357	
128 (128_) Estate (Compact car-C Segment)	1.3 (128 A1.000)		74-82	3357	
128 (128_) Sedán (Compact car-C Segment)	1.1 (128 A.000)		69-84	3357	
128 (128_) Sedán (Compact car-C Segment)	1.1 (128 A.048)		75-81	3357	
128 (128_) Sedán (Compact car-C Segment)	1.3 Rally (128 AR.000)		71-76	3357	
128 (128_) Sedán (Compact car-C Segment)	1.3 Sport (128 A1.000)		74-84	3357	
128 Coupe (128_)	1.1 (AC 5)	47	03/72 – 02/81	3316	
128 Coupe (128_)	1.1 (AC 5)	48	08/75 – 02/81	3316	
128 Coupe (128_)	1.3 (AC)	55	03/72 – 12/79	3316	
128 Coupe (128_)	1.3 Berlinetta (AC)	54	06/75 – 12/79	3316	
128 Familiare (128_)	1.1 (AF)	33	02/75 – 02/81	3316	
128 Familiare (128_)	1.1 (AF)	40	10/69 – 10/82	3316	
128 Familiare (128_)	1.3 (AF1)	44	12/74 – 10/82	3316	
131 (131_)	16	63	11/76 – 12/84	3316	
131 (131_)	16	63	11/76 – 12/84	3424/1	
131 (131_)	16	63	11/76 – 12/84	3485	
131 (131_)	1.3 Mirafiori	40	10/74 – 09/81	3316	
131 (131_)	1.3 Mirafiori	40	10/74 – 09/81	3485	
131 (131_)	1.3 Mirafiori	48	10/74 – 12/82	3316	
131 (131_)	1.3 Mirafiori	48	10/74 – 12/82	3424/1	
131 (131_)	1.3 Mirafiori	48	10/74 – 12/82	3485	

MAKE & MODEL		KW	YEAR		
FIAT					
131 (131_)	1.3 Super Mirafiori	57	03/78 – 12/80	3316	
131 (131_)	1.3 Super Mirafiori	57	03/78 – 12/80	3485	
131 (131_)	1.4 Mirafiori	51	11/80 – 01/84	3424/1	
131 (131_)	1.4 Mirafiori	51	11/80 – 01/84	3485	
131 (131_)	1.4 Super Mirafiori	55	04/81 – 12/83	3424/1	
131 (131_)	1.4 Super Mirafiori	55	04/81 – 12/83	3485	
131 (131_)	1.6 (S)	55	10/74 – 09/81	3316	
131 (131_)	1.6 (S)	55	10/74 – 09/81	3485	
131 (131_)	1.6 Super	71	03/78 – 01/84	3316	
131 (131_)	1.6 Super	71	03/78 – 01/84	3424/1	
131 (131_)	1.6 Super	71	03/78 – 01/84	3485	
131 (131_)	1.6 Super Mirafiori (A)	72	03/79 – 03/82	3316	
131 (131_)	1.6 Super Mirafiori (A)	72	03/79 – 03/82	3485	
131 (131_)	2.0 Abarth Rally	103	01/76 – 07/80	3316	
131 (131_)	2.0 Abarth Rally	103	01/76 – 07/80	3485	
131 (131_)	2.0 D	44	07/78 – 08/84	3316	
131 (131_)	2.0 D	44	07/78 – 08/84	3424/1	
131 (131_)	2.0 D	44	07/78 – 08/84	3485	
131 (131_)	2.0 Racing	85	06/78 – 12/81	3316	
131 (131_)	2.0 Racing	85	06/78 – 12/81	3485	
131 (131_)	2.0 Super	83	01/81 – 12/84	3424/1	
131 (131_)	2.0 Super	83	01/81 – 12/84	3485	
131 (131_)	2.5 D	53	06/78 – 02/84	3316	
131 (131_)	2.5 D	53	06/78 – 02/84	3424/1	
131 (131_)	2.5 D	53	06/78 – 02/84	3485	
131 (131_) Estate (Compact car-C Segment)	1.3 Mirafiori (131 A.000)		75-82	3357	
131 (131_) Estate (Compact car-C Segment)	1.3 Mirafiori (131 A6.000)		75-78	3357	
131 (131_) Estate (Compact car-C Segment)	1.4 Mirafiori (131 C.000)		81-84	3357	
131 (131_) Estate (Compact car-C Segment)	1.4 Mirafiori (131 C1.000)		81-84	3357	
131 (131_) Estate (Compact car-C Segment)	1.6 (131 C2.000)		80-84	3357	
131 (131_) Estate (Compact car-C Segment)	1.6 CL (131 A1.000)		75-78	3357	
131 (131_) Estate (Compact car-C Segment)	1.6 Super (131 C3.000)		79-81	3357	
131 (131_) Estate (Compact car-C Segment)	2.0 D (8144.65)		78-84	3357	
131 (131_) Estate (Compact car-C Segment)	2.0 Super (131 C4.000)		81-84	3357	
131 (131_) Estate (Compact car-C Segment)	2.5 Super Diesel (8144.61)		79-84	3357	
131 (131_) Sedán (Compact car-C Segment)	1.3 Mirafiori (131 A.000)		74-82	3357	
131 (131_) Sedán (Compact car-C Segment)	1.3 Mirafiori (131 A6.000)		74-81	3357	
131 (131_) Sedán (Compact car-C Segment)	1.3 Super Mirafiori (131 B.000)		78-80	3357	
131 (131_) Sedán (Compact car-C Segment)	1.4 Mirafiori (131 C.000)		80-84	3357	
131 (131_) Sedán (Compact car-C Segment)	1.4 Mirafiori (131 C1.000)		80-84	3357	
131 (131_) Sedán (Compact car-C Segment)	1.4 Super Mirafiori (131 C1.000)		81-83	3357	
131 (131_) Sedán (Compact car-C Segment)	1.6 (131 A1.000)		74-81	3357	
131 (131_) Sedán (Compact car-C Segment)	1.6 (131 C2.000)		76-84	3357	
131 (131_) Sedán (Compact car-C Segment)	1.6 Super (131 C3.000)		78-84	3357	
131 (131_) Sedán (Compact car-C Segment)	1.6 Super Mirafiori (131 B1.000)		79-82	3357	
131 (131_) Sedán (Compact car-C Segment)	2.0 Abarth Rally (131 B2.000)		76-80	3357	
131 (131_) Sedán (Compact car-C Segment)	2.0 D (8144.65)		78-84	3357	
131 (131_) Sedán (Compact car-C Segment)	2.0 Racing (131 B2.000)		78-81	3357	
131 (131_) Sedán (Compact car-C Segment)	2.0 Super (131 C4.000)		81-84	3357	
131 (131_) Sedán (Compact car-C Segment)	2.5 Diesel (8144.61)		78-84	3357	
131 Familiare/Panorama (131_)	16	63	11/80 – 12/84	3424/1	
131 Familiare/Panorama (131_)	16	63	11/80 – 12/84	3485	
131 Familiare/Panorama (131_)	1.3 Mirafiori (AF)	40	03/75 – 12/78	3316	
131 Familiare/Panorama (131_)	1.3 Mirafiori (AF)	48	03/75 – 03/82	3316	
131 Familiare/Panorama (131_)	1.3 Mirafiori (AF)	48	03/75 – 03/82	3485	
131 Familiare/Panorama (131_)	1.4 Mirafiori	51	11/81 – 01/84	3424/1	
131 Familiare/Panorama (131_)	1.4 Mirafiori	51	11/81 – 01/84	3485	
131 Familiare/Panorama (131_)	1.6 CL (AF1)	55	03/75 – 12/78	3316	
131 Familiare/Panorama (131_)	1.6 Super	72	12/79 – 12/81	3485	
131 Familiare/Panorama (131_)	2.0 D	44	07/78 – 08/84	3316	
131 Familiare/Panorama (131_)	2.0 D	44	07/78 – 08/84	3424/1	
131 Familiare/Panorama (131_)	2.0 D	44	07/78 – 08/84	3485	
131 Familiare/Panorama (131_)	2.0 Super	83	01/81 – 12/84	3424/1	
131 Familiare/Panorama (131_)	2.0 Super	83	01/81 – 12/84	3485	
131 Familiare/Panorama (131_)	2.5 Super Diesel (AF)	53	03/79 – 12/84	3316	
131 Familiare/Panorama (131_)	2.5 Super Diesel (AF)	53	03/79 – 12/84	3424/1	
131 Familiare/Panorama (131_)	2.5 Super Diesel (AF)	53	03/79 – 12/84	3485	
132 (132_)	16	65	05/77 – 09/82	3316	
132 (132_)	16	65	05/77 – 09/82		3317
132 (132_)	16	65	05/77 – 09/82	3351	
132 (132_)	16	65	05/77 – 09/82	3485	

BESER®

MAKE & MODEL   		KW	YEAR		
FIAT					
132 (132_)	16	66	03/77 – 12/81	3316	
132 (132_)	16	66	03/77 – 12/81		3317
132 (132_)	16	66	03/77 – 12/81	3351	
132 (132_)	16	72	01/76 – 12/82	3316	
132 (132_)	16	72	04/72 – 01/76	3316	
132 (132_)	16	72	01/76 – 12/82		3317
132 (132_)	16	72	04/72 – 01/76		3317
132 (132_)	16	72	01/76 – 12/82	3351	
132 (132_)	16	72	04/72 – 01/76	3351	
132 (132_)	16	72	01/76 – 12/82	3485	
132 (132_)	20	82	05/77 – 06/81	3316	
132 (132_)	20	82	05/77 – 06/81		3317
132 (132_)	20	82	05/77 – 06/81	3351	
132 (132_)	20	82	05/77 – 06/81	3485	
132 (132_)	1.7 GLS (A1)	79	04/74 – 12/75	3316	
132 (132_)	1.7 GLS (A1)	79	04/74 – 12/75		3317
132 (132_)	1.7 GLS (A1)	79	04/74 – 12/75	3351	
132 (132_)	1.7 GLS (A1)	82	11/75 – 01/77	3316	
132 (132_)	1.7 GLS (A1)	82	11/75 – 01/77		3317
132 (132_)	1.7 GLS (A1)	82	11/75 – 01/77	3351	
132 (132_)	1.7 Special (A1)	77	04/72 – 01/74	3316	
132 (132_)	1.7 Special (A1)	77	04/72 – 01/74		3317
132 (132_)	1.7 Special (A1)	77	04/72 – 01/74	3351	
132 (132_)	2.0 D	44	07/78 – 07/82	3485	
132 (132_)	2.0 i.e.	90	01/80 – 12/82	3485	
132 (132_)	2.5 D	53	07/78 – 07/82	3485	
132 (132_) Sedán (Large family car-D Segment)	1.6 (132 BB OA O)		72-76	3357	
132 (132_) Sedán (Large family car-D Segment)	1.6 (132 C.000)		77-82	3357	
132 (132_) Sedán (Large family car-D Segment)	1.6 (132 C.000)		76-82	3357	
132 (132_) Sedán (Large family car-D Segment)	1.6 (132 C6.000)		77-81	3357	
132 (132_) Sedán (Large family car-D Segment)	1.7 GLS (132 B1.000)		74-75	3357	
132 (132_) Sedán (Large family car-D Segment)	1.7 GLS (132 B1.000)		75-77	3357	
132 (132_) Sedán (Large family car-D Segment)	1.7 Special (132 B1.000)		72-74	3357	
132 (132_) Sedán (Large family car-D Segment)	1.8 GLS		72-	3357	
132 (132_) Sedán (Large family car-D Segment)	1.8 Special		72-	3357	
132 (132_) Sedán (Large family car-D Segment)	2.0 (132 C2.000)		77-81	3357	
132 (132_) Sedán (Large family car-D Segment)	2.0 D (8144.65)		78-82	3357	
132 (132_) Sedán (Large family car-D Segment)	2.0 GLS (132 C2.000)		76-76	3357	
132 (132_) Sedán (Large family car-D Segment)	2.5 D (8144.61)		78-82	3357	
133 Fastback (City car-A Segment)	0.8		74-	3357	
500 (312_)	09	59	12/13 -	3826/3	
500 (312_)	09	77	10/13 -	3826/3	
500 (312_)	12	51	10/07 -	4173	
500 (312_)	1.2 LPG	51	12/10 -	4173	
500 (312_)	1.3 D Multijet	55	10/07 -	4173	
500 C (312_)	09	77	12/13 -	3826/3	
500 C (312_)	12	51	09/09 -	4173	
500 C (312_)	1.3 D Multijet	55	09/09 -	4173	
850 Cabrío (Subcompact car-B Segment)	0.9 Sport (100 GL.040)		68-72	3357	
850 Sedán (Subcompact car-B Segment)	0.8 (100 G.000)		64-72	3357	
850 Sedán (Subcompact car-B Segment)	0.8 (100 G.002)		64-72	3357	
850 Sedán (Subcompact car-B Segment)	0.8 Special (100 GB.000)		68-72	3357	
850 (100_)	0.9 Sport (100 GL.040)	38	02.68 – 10.72	3346	
850 (100_) Coupé (Subcompact car-B Segment)	0.9 Sport (100 GL.040)		68-72	3357	
850 Spider	08	36	10/65 – 10/68	3316	
900 T/E Panorama (200_)	09	26	01/78 – 01/86	3316	
900 T/E Panorama (200_)	09	26	01/78 – 01/86	3424/1	
900 T/E Panorama (200_) Estate (Subcompact car-B Segment)	0.9 (100 GF 000)		78-86	3357	
900 T/E Pulmino (200_)	09	26	01/78 – 01/86	3316	
900 T/E Pulmino (200_)	09	26	01/78 – 01/86	3424/1	
900 T/E Pulmino (200_) 01.78-01.86 Estate (Subcompact car-B	0.9 (100 GF 000)		78-86	3357	
ARGENTA (132_)	1600	72	04/81 – 12/85		3317
ARGENTA (132_)	1600	72	04/81 – 12/85	3351	
ARGENTA (132_)	1600	72	04/81 – 12/85	3466	
ARGENTA (132_)	1600	72	04/81 – 12/85	3468	
ARGENTA (132_)	2000	83	06/78 – 12/85		3317
ARGENTA (132_)	2000	83	06/78 – 12/85	3351	
ARGENTA (132_)	2000	83	06/78 – 12/85	3466	
ARGENTA (132_)	2000	83	06/78 – 12/85	3468	
ARGENTA (132_)	1600 i.e	66	04/81 – 12/85		3317
ARGENTA (132_)	1600 i.e	66	04/81 – 12/85	3351	

BESER

MAKE & MODEL		KW	YEAR		
FIAT					
ARGENTA (132_)	1600 i.e	66	04/81 – 12/85	3351	
ARGENTA (132_)	1600 i.e	66	04/81 – 12/85	3466	
ARGENTA (132_)	1600 i.e	66	04/81 – 12/85	3468	
ARGENTA (132_)	2000 i.e.	90	06/81 – 07/86		3317
ARGENTA (132_)	2000 i.e.	90	06/81 – 07/86	3351	
ARGENTA (132_)	2000 i.e.	90	06/81 – 07/86	3466	
ARGENTA (132_)	2000 i.e.	90	06/81 – 07/86	3468	
ARGENTA (132_)	2000 Volumex	99	06/84 – 07/85		3317
ARGENTA (132_)	2000 Volumex	99	06/84 – 07/85	3351	
ARGENTA (132_)	2000 Volumex	99	06/84 – 07/85	3466	
ARGENTA (132_)	2000 Volumex	99	06/84 – 07/85	3468	
ARGENTA (132_)	2500 Diesel	53	06/81 – 11/85		3317
ARGENTA (132_)	2500 Diesel	53	06/81 – 11/85	3351	
ARGENTA (132_)	2500 Diesel	53	06/81 – 11/85	3466	
ARGENTA (132_)	2500 Diesel	53	06/81 – 11/85	3468	
ARGENTA (132_)	2500 Turbodiesel	66	07/83 – 08/85		3317
ARGENTA (132_)	2500 Turbodiesel	66	07/83 – 08/85	3351	
ARGENTA (132_)	2500 Turbodiesel	66	07/83 – 08/85	3466	
ARGENTA (132_)	2500 Turbodiesel	66	07/83 – 08/85	3468	
ARGENTA (132A) Sedán (Large family car-D Segment)	1.6 1600 (132 D.000)		81-85	3357	
ARGENTA (132A) Sedán (Large family car-D Segment)	1.6 1600 i.e (132 D.000)		81-85	3357	
BARCHETTA (183_)	1.8 16V	96	04/95 – 05/05	3466	
BARCHETTA (183_)	1.8 16V	96	04/95 – 05/05	3468	
BRAVA (182_)	1.6 16V (182.BB)	76	02/96 – 10/01	3618	
BRAVA (182_)	1.6 16V (182.BH)	66	10/95 – 10/01	3618	
BRAVA (182_)	1.6 16V (182.BU)	76	01/99 – 12/02	3618	
BRAVA (182_)	1.8 GT 16V (182.BC)	83	10/95 – 10/01	3618	
BRAVA (182_)	1.9 JTD	74	09/00 – 10/01	3618	
BRAVA (182_)	1.9 JTD	79	01/01 – 12/02	3618	
BRAVA (182_)	1.9 JTD 105	77	12/98 – 10/01	3618	
BRAVA (182_)	1.9 TD 100 S (182.BF)	74	03/96 – 10/01	3618	
BRAVO I (182_)	16	76	09/00 – 10/01	3618	
BRAVO I (182_)	1.6 16V (182.AB)	76	03/96 – 10/01	3618	
BRAVO I (182_)	1.6 16V (182.AH)	66	10/95 – 10/01	3618	
BRAVO I (182_)	1.8 GT (182.AC)	83	10/95 – 10/01	3618	
BRAVO I (182_)	1.9 JTD	74	09/00 – 10/01	3618	
BRAVO I (182_)	1.9 JTD 105	77	12/98 – 10/01	3618	
BRAVO I (182_)	1.9 TD 100 S (182.AF)	74	03/96 – 10/01	3618	
BRAVO II (198_)	14	66	04/07 -	3826/1	
BRAVO II (198_)	1.4 16V	103	03/08 -	3826/1	
BRAVO II (198_)	1.4 LPG	66	12/08 – 12/14	3826/1	
BRAVO II (198_)	1.4 T-Jet	110	09/07 -	3826/1	
BRAVO II (198_)	1.9 D Multijet	110	04/07 -	3826/1	
BRAVO II (198_)	2.0 D Multijet	120	09/08 -	3826/1	
BRAVO II (198_)	2.0 D Multijet	121	09/08 -	3826/1	
CAMPAGNOLA Closed SUV (Off-Road SUV-J Segment)	2.0 (6132 AZ 2.000)		74-89	3357	
CAMPAGNOLA Closed SUV (Off-Road SUV-J Segment)	2.4 D (8144.61.200)		74-89	3357	
CROMA II (194)	1.8 16V (939 A4.000)	103	12/05 -	4211	
CROMA II (194)	1.9 D Multijet (939 A1.000)	88	06/05 -	4211	
CROMA II (194)	1.9 D Multijet (939 A7.000)	85	06/05 -	4211	
CROMA II (194)	1.9 D Multijet (939 A8.000)	136	12/05 -	4211	
CROMA II (194)	2.2 16V (194 A1.000)	108	06/05 -	4211	
CROMA (154_)	1600	61	12/85 – 12/90	3425	3425
CROMA (154_)	1600	61	12/85 – 12/90	3467	
CROMA (154_)	1600	61	12/85 – 12/90		3536
CROMA (154_)	1.8 16V	103	12/05 -	3986	
CROMA (154_)	1.9 D Multijet	85	06/05 -	3986	
CROMA (154_)	1.9 D Multijet	88	06/05 -	3986	
CROMA (154_)	1.9 D Multijet	100	12/05 -	3986	
CROMA (154_)	1.9 D Multijet	110	06/05 -	3986	
CROMA (154_)	1900 Turbo D i.d.	69	11/92 – 12/96	3425	3425
CROMA (154_)	1900 Turbo D i.d.	69	11/92 – 12/96		3536
CROMA (154_)	1900 Turbo D i.d. (154.LL,154.PL)	66	05/89 – 10/92	3425	3425
CROMA (154_)	1900 Turbo D i.d. (154.LL,154.PL)	66	05/89 – 10/92		3536
CROMA (154_)	2.2 16V	108	06/05 -	3986	
CROMA (154_)	2.4 D Multijet	147	06/05 -	3986	
CROMA (154_)	2000 16V	101	08/92 – 08/96	3425	3425
CROMA (154_)	2000 16V	101	08/92 – 08/96	3536	3536
CROMA (154_)	2000 CHT	74	01/91 – 09/92	3425	3425
CROMA (154_)	2000 CHT	74	01/91 – 09/92		3536
CROMA (154_)	2000 CHT (154.AC)	66	12/85 – 02/89	3425	3425

MAKE & MODEL   		KW	YEAR		
FIAT					
CROMA (154_)	2000 CHT (154.AC)	66	12/85 – 02/89	3467	
CROMA (154_)	2000 CHT (154.AC)	66	12/85 – 02/89	3536	3536
CROMA (154_)	2000 i.e. (154.AD)	88	03/87 – 09/92	3425	3425
CROMA (154_)	2000 i.e. (154.AD)	88	03/87 – 09/92	3467	
CROMA (154_)	2000 i.e. (154.AD)	88	03/87 – 09/92		3536
CROMA (154_)	2000 i.e. (154.AM)	83	03/86 – 09/90	3425	3425
CROMA (154_)	2000 i.e. (154.AM)	83	03/86 – 09/90	3467	
CROMA (154_)	2000 i.e. (154.AM)	83	03/86 – 09/90		3536
CROMA (154_)	2000 i.e. (154.AM, 154.LM)	85	10/87 – 08/96	3425	3425
CROMA (154_)	2000 i.e. (154.AM, 154.LM)	85	10/87 – 08/96	3467	
CROMA (154_)	2000 i.e. (154.AM, 154.LM)	85	10/87 – 08/96		3536
CROMA (154_)	2000 i.e. Turbo	111	11/86 – 11/88	3425	3425
CROMA (154_)	2000 i.e. Turbo	111	11/86 – 11/88	3467	
CROMA (154_)	2000 i.e. Turbo	111	11/86 – 11/88		3536
CROMA (154_)	2000 i.e. Turbo (154.AM)	114	12/85 – 06/90	3425	3425
CROMA (154_)	2000 i.e. Turbo (154.AM)	114	12/85 – 06/90	3467	
CROMA (154_)	2000 i.e. Turbo (154.AM)	114	12/85 – 06/90		3536
CROMA (154_)	2000 i.e. Turbo (154.AM,154.LM)	110	06/87 – 08/96	3425	3425
CROMA (154_)	2000 i.e. Turbo (154.AM,154.LM)	110	06/87 – 08/96	3467	
CROMA (154_)	2000 i.e. Turbo (154.AM,154.LM)	110	06/87 – 08/96		3536
CROMA (154_)	2500 D	55	12/85 – 12/89	3425	3425
CROMA (154_)	2500 D	55	12/85 – 12/89	3467	
CROMA (154_)	2500 D	55	12/85 – 12/89		3536
CROMA (154_)	2500 TD (154.AE)	74	12/85 – 08/89	3425	3425
CROMA (154_)	2500 TD (154.AE)	74	12/85 – 08/89	3467	
CROMA (194_)	2500 TD (154.AE)	74	12/85 – 08/89		3536
CROMA (194_)	2500 TD (154.LL, 154.PL)	85	05/89 – 08/96	3425	3425
CROMA (194_)	2500 TD (154.LL, 154.PL)	85	05/89 – 08/96		3536
CROMA (194_)	2500 TDE	77	12/91 – 08/96	3425	3425
CROMA (194_)	2500 TDE	77	12/91 – 08/96		3536
CROMA (194_)	2500 V6	119	06/93 – 08/96	3425	3425
CROMA (194_)	2500 V6	119	06/93 – 08/96		3536
DOBLO Box Body / Estate (263_)	14	70	02/10 -	4121	
DOBLO Box Body / Estate (263_)	14	88	10/11 -	4121	
DOBLO Box Body / Estate (263_)	1.3 D Multijet	66	02/10 -	4121	
DOBLO Box Body / Estate (263_)	1.4 Natural Power	88	06/10 -	4121	
DOBLO Box Body / Estate (263_)	1.6 D Multijet	66	02/10 -	4121	
DOBLO Box Body / Estate (263_)	1.6 D Multijet	74	02/10 -	4121	
DOBLO Box Body / Estate (263_)	1.6 D Multijet	77	02/10 -	4121	
DOBLO Box Body / Estate (263_)	2.0 D Multijet	99	02/10 -	4121	
DOBLO Cargo (223_)	14	57	10/05 -	3790/1	
DOBLO Cargo (223_)	1.2 (223ZXA1A)	48	03/01 -	3790/1	
DOBLO Cargo (223_)	1.3 D Multijet	55	10/05 – 01/10	3790/1	
DOBLO Cargo (223_)	1.3 JTD 16V	51	05/04 – 12/06	3790/1	
DOBLO Cargo (223_)	1.3 JTD 16V Multijet	62	08/06 -	3790/1	
DOBLO Cargo (223_)	1.6 16V (223ZXD1A)	76	10/01 -	3790/1	
DOBLO Cargo (223_)	1.6 Natural Power	76	09/02 -	3790/1	
DOBLO Cargo (223_)	1.9 D (223ZXB1A)	46	03/01 -	3790/1	
DOBLO Cargo (223_)	1.9 JTD	77	07/03 -	3790/1	
DOBLO Cargo (223_)	1.9 JTD (223ZXE1A)	74	10/01 -	3790/1	
DOBLO Cargo (223_)	1.9 JTD Multijet	88	12/06 -	3790/1	
DOBLO MPV (119_, 223_)	14	57	10/05 -	3790/1	
DOBLO MPV (119_, 223_)	16	68	09/02 -	3790/1	
DOBLO MPV (119_, 223_)	1.2 (223AXA1A)	48	03/01 -	3790/1	
DOBLO MPV (119_, 223_)	1.3 D Multijet	62	10/05 -	3790/1	
DOBLO MPV (119_, 223_)	1.3 JTD	55	05/05 -	3790/1	
DOBLO MPV (119_, 223_)	1.6 16V (223AXD1A)	76	10/01 -	3790/1	
DOBLO MPV (119_, 223_)	1.6 Natural Power	76	09/02 -	3790/1	
DOBLO MPV (119_, 223_)	1.9 D (223AXB1A)	46	03/01 -	3790/1	
DOBLO MPV (119_, 223_)	1.9 D Multijet	88	10/05 -	3790/1	
DOBLO MPV (119_, 223_)	1.9 JTD	77	07/03 -	3790/1	
DOBLO MPV (119_, 223_)	1.9 JTD (223AXE1A)	74	10/01 -	3790/1	
DOBLO MPV (263_)	14	70	02/10 -	4121	
DOBLO MPV (263_)	1.3 D Multijet	66	02/10 -	4121	
DOBLO MPV (263_)	1.4 Natural Power	88	02/10 -	4121	
DOBLO MPV (263_)	1.6 D Multijet	70	03/015 -	4121	
DOBLO MPV (263_)	1.6 D Multijet	77	02/10 -	4121	
DOBLO MPV (263_)	2.0 D Multijet	99	02/10 -	4121	
DOBLO Platform/Chassis (263_)	14	70	04/10 -	4121	
DOBLO Platform/Chassis (263_)	1.3 D Multijet	55	11/13 -	4121	
DOBLO Platform/Chassis (263_)	1.3 D Multijet	66	02/10 -	4121	

MAKE & MODEL		KW	YEAR		
FIAT					
DOBLO Platform/Chassis (263_)	1.6 D Multijet	66	02/10 -	4121	
DOBLO Platform/Chassis (263_)	1.6 D Multijet	74	02/11 -	4121	
DOBLO Platform/Chassis (263_)	1.6 D Multijet	77	02/10 -	4121	
DOBLO Platform/Chassis (263_)	2.0 D Multijet	99	02/10 -	4121	
DUCATO Box (230_)	20	80	03/94 – 04/02	3559	
DUCATO Box (230_)	20	80	03/94 – 04/02	3595	
DUCATO Box (230_)	20	80	03/94 – 04/02	3834	
DUCATO Box (230_)	20	80	03/94 – 04/02	3835	
DUCATO Box (230_)	20	80	03/94 – 04/02		3914
DUCATO Box (230_)	20	81	04/02 -	3834	
DUCATO Box (230_)	1.9 D	50	04/98 – 04/02	3559	
DUCATO Box (230_)	1.9 D	50	04/98 – 04/02	3595	
DUCATO Box (230_)	1.9 D	50	03/94 – 04/02	3834	
DUCATO Box (230_)	1.9 D	50	04/98 – 04/02	3835	
DUCATO Box (230_)	1.9 D	50	04/98 – 04/02		3914
DUCATO Box (230_)	1.9 D	51	03/94 – 04/02	3559	
DUCATO Box (230_)	1.9 D	51	03/94 – 04/02	3595	
DUCATO Box (230_)	1.9 D	51	03/94 – 04/02	3834	
DUCATO Box (230_)	1.9 D	51	03/94 – 04/02	3835	
DUCATO Box (230_)	1.9 D	51	03/94 – 04/02		3914
DUCATO Box (230_)	1.9 TD	59	05/98 – 11/01	3559	
DUCATO Box (230_)	1.9 TD	59	05/98 – 11/01	3595	
DUCATO Box (230_)	1.9 TD	59	05/98 – 11/01	3834	
DUCATO Box (230_)	1.9 TD	59	05/98 – 11/01	3835	
DUCATO Box (230_)	1.9 TD	59	05/98 – 11/01		3914
DUCATO Box (230_)	1.9 TD	60	03/94 – 04/02	3559	
DUCATO Box (230_)	1.9 TD	60	03/94 – 04/02	3595	
DUCATO Box (230_)	1.9 TD	60	03/94 – 02/04	3834	
DUCATO Box (230_)	1.9 TD	60	03/94 – 04/02	3835	
DUCATO Box (230_)	1.9 TD	60	03/94 – 04/02		3914
DUCATO Box (230_)	1.9 TD	66	04/98 – 04/02	3559	
DUCATO Box (230_)	1.9 TD	66	04/98 – 04/02	3595	
DUCATO Box (230_)	1.9 TD	66	04/98 – 04/02	3834	
DUCATO Box (230_)	1.9 TD	66	04/98 – 04/02	3835	
DUCATO Box (230_)	1.9 TD	66	04/98 – 04/02		3914
DUCATO Box (230_)	1.9 TD CAT	59	08/94 – 04/02	3559	
DUCATO Box (230_)	1.9 TD CAT	59	08/94 – 04/02	3595	
DUCATO Box (230_)	1.9 TD CAT	59	08/94 – 04/02	3834	
DUCATO Box (230_)	1.9 TD CAT	59	08/94 – 04/02	3835	
DUCATO Box (230_)	1.9 TD CAT	59	08/94 – 04/02		3914
DUCATO Box (230_)	2.0 4x4	80	11/94 – 04/02	3559	
DUCATO Box (230_)	2.0 4x4	80	11/94 – 04/02	3595	
DUCATO Box (230_)	2.0 4x4	80	11/94 – 04/02	3834	
DUCATO Box (230_)	2.0 4x4	80	11/94 – 04/02	3835	
DUCATO Box (230_)	2.0 4x4	80	11/94 – 04/02		3914
DUCATO Box (230_)	2.0 4x4	81	05/02 – 07/06	3834	
DUCATO Box (230_)	2.0 Bipower	81	11/02 -	3834	
DUCATO Box (230_)	2.0 JTD	62	10/01 – 04/02	3834	
DUCATO Box (230_)	2.0 JTD	62	04/02 -	3834	
DUCATO Box (230_)	2.0 JTD	62	10/01 – 04/02	3835	
DUCATO Box (230_)	2.0 JTD	62	10/01 – 04/02		3914
DUCATO Box (230_)	2.3 JTD	81	04/02 -	3834	
DUCATO Box (230_)	2.5 D	62	03/94 – 04/02	3559	
DUCATO Box (230_)	2.5 D	62	03/94 – 04/02	3595	
DUCATO Box (230_)	2.5 D	62	03/94 – 04/02	3834	
DUCATO Box (230_)	2.5 D	62	03/94 – 04/02	3835	
DUCATO Box (230_)	2.5 D	62	03/94 – 04/02		3914
DUCATO Box (230_)	2.5 TD	80	06/94 – 08/98	3559	
DUCATO Box (230_)	2.5 TD	80	06/94 – 08/98	3595	
DUCATO Box (230_)	2.5 TD 4x4	80	11/94 – 04/98	3559	
DUCATO Box (230_)	2.5 TD 4x4	80	11/94 – 04/98	3595	
DUCATO Box (230_)	2.5 TD 4x4	85	11/94 – 04/98	3559	
DUCATO Box (230_)	2.5 TD 4x4	85	11/94 – 04/98	3595	
DUCATO Box (230_)	2.5 TDI	80	03/94 – 04/02	3559	
DUCATO Box (230_)	2.5 TDI	80	03/94 – 04/02	3595	
DUCATO Box (230_)	2.5 TDI	80	03/94 – 04/02	3834	
DUCATO Box (230_)	2.5 TDI	80	03/94 – 04/02	3835	
DUCATO Box (230_)	2.5 TDI	80	03/94 – 04/02		3914
DUCATO Box (230_)	2.5 TDI	85	03/94 – 04/02	3559	
DUCATO Box (230_)	2.5 TDI	85	03/94 – 04/02	3595	
DUCATO Box (230_)	2.5 TDI	85	03/94 – 04/02	3834	

MAKE & MODEL   		KW	YEAR		
FIAT					
DUCATO Box (230_)	2.5 TDI	85	03/94 – 04/02	3835	
DUCATO Box (230_)	2.5 TDI	85	03/94 – 04/02		3914
DUCATO Box (230_)	2.5 TDI 4x4	85	05/98 – 04/02	3559	
DUCATO Box (230_)	2.5 TDI 4x4	85	05/98 – 04/02	3595	
DUCATO Box (230_)	2.5 TDI 4x4	85	05/98 – 04/02	3834	
DUCATO Box (230_)	2.5 TDI 4x4	85	05/98 – 04/02	3835	
DUCATO Box (230_)	2.5 TDI 4x4	85	05/98 – 04/02		3914
DUCATO Box (230_)	2.8 D	64	05/98 – 04/02	3559	
DUCATO Box (230_)	2.8 D	64	05/98 – 04/02	3595	
DUCATO Box (230_)	2.8 D	64	05/98 – 04/02	3834	
DUCATO Box (230_)	2.8 D	64	05/98 – 04/02	3835	
DUCATO Box (230_)	2.8 D	64	05/98 – 04/02		3914
DUCATO Box (230_)	2.8 D 4x4	64	08/98 – 04/02	3559	
DUCATO Box (230_)	2.8 D 4x4	64	08/98 – 04/02	3595	
DUCATO Box (230_)	2.8 D 4x4	64	08/98 – 04/02	3834	
DUCATO Box (230_)	2.8 D 4x4	64	08/98 – 04/02	3835	
DUCATO Box (230_)	2.8 D 4x4	64	08/98 – 04/02		3914
DUCATO Box (230_)	2.8 JTD	94	11/00 – 04/02	3559	
DUCATO Box (230_)	2.8 JTD	94	11/00 – 04/02	3595	
DUCATO Box (230_)	2.8 JTD	94	11/00 – 04/02	3834	
DUCATO Box (230_)	2.8 JTD	94	11/00 – 04/02	3835	
DUCATO Box (230_)	2.8 JTD	94	11/00 – 04/02		3914
DUCATO Box (230_)	2.8 JTD 4x4	94	11/00 – 04/02	3559	
DUCATO Box (230_)	2.8 JTD 4x4	94	11/00 – 04/02	3595	
DUCATO Box (230_)	2.8 JTD 4x4	94	11/00 – 04/02	3834	
DUCATO Box (230_)	2.8 JTD 4x4	94	11/00 – 04/02	3835	
DUCATO Box (230_)	2.8 JTD 4x4	94	11/00 – 04/02		3914
DUCATO Box (230_)	2.8 TD 4x4	90	05/98 – 09/01	3559	
DUCATO Box (230_)	2.8 TD 4x4	90	05/98 – 09/01	3595	
DUCATO Box (230_)	2.8 TDI	90	10/97 – 04/02	3559	
DUCATO Box (230_)	2.8 TDI	90	10/97 – 04/02	3595	
DUCATO Box (230_)	2.8 TDI	90	10/97 – 04/02	3834	
DUCATO Box (230_)	2.8 TDI	90	10/97 – 04/02	3835	
DUCATO Box (230_)	2.8 TDI	90	10/97 – 04/02		3914
DUCATO Box (230_)	2.8 TDI 4x4	90	06/99 – 04/02	3559	
DUCATO Box (230_)	2.8 TDI 4x4	90	06/99 – 04/02	3595	
DUCATO Box (230_)	2.8 TDI 4x4	90	06/99 – 04/02	3834	
DUCATO Box (230_)	2.8 TDI 4x4	90	06/99 – 04/02	3835	
DUCATO Box (230_)	2.8 TDI 4x4	90	06/99 – 04/02		3914
DUCATO Box (244_)	20	81	04/02 -	3835	
DUCATO Box (244_)	20	81	04/02 -		3914
DUCATO Box (244_)	2.0 4x4	81	05/02 – 07/06	3835	
DUCATO Box (244_)	2.0 4x4	81	05/02 – 07/06		3914
DUCATO Box (244_)	2.0 Bipower	81	11/02 -	3835	
DUCATO Box (244_)	2.0 Bipower	81	11/02 -		3914
DUCATO Box (244_)	2.0 JTD	62	04/02 -	3835	
DUCATO Box (244_)	2.0 JTD	62	04/02 -		3914
DUCATO Box (244_)	2.3 JTD	81	04/02 -	3835	
DUCATO Box (244_)	2.3 JTD	81	04/02 -		3914
DUCATO Box (244_)	2.8 JTD	94	04/02 -	3834	
DUCATO Box (244_)	2.8 JTD	94	04/02 -	3835	
DUCATO Box (244_)	2.8 JTD	94	04/02 -		3914
DUCATO Box (244_)	2.8 JTD 4x4	94	07/02 -	3834	
DUCATO Box (244_)	2.8 JTD 4x4	94	07/02 -	3835	
DUCATO Box (244_)	2.8 JTD 4x4	94	07/02 -		3914
DUCATO Box (244_)	2.8 JTD Power	107	05/04 -	3834	
DUCATO Box (244_)	2.8 JTD Power	107	05/04 -	3835	
DUCATO Box (244_)	2.8 JTD Power	107	05/04 -		3914
DUCATO Box (244_)	2.8 TD	90	04/02 – 07/06	3834	
DUCATO Box (244_)	2.8 TD	90	04/02 – 07/06	3835	
DUCATO Box (244_)	2.8 TD	90	04/02 – 07/06		3914
DUCATO Box (244_)	2.8 TD 4x4	90	11/03 – 07/06	3834	
DUCATO Box (244_)	2.8 TD 4x4	90	11/03 – 07/06	3835	
DUCATO Box (244_)	2.8 TD 4x4	90	11/03 – 07/06		3914
DUCATO Box (250_, 290_)	100 Multijet 2,2 D	74	07/06 -	3922	
DUCATO Box (250_, 290_)	100 Multijet 2,2 D	74	07/06 -	3981	
DUCATO Box (250_, 290_)	100 Multijet 2,2 D	74	07/06 -	4171	
DUCATO Box (250_, 290_)	110 Multijet 2,3 D	83	10/11 -	3922	
DUCATO Box (250_, 290_)	110 Multijet 2,3 D	83	10/11 -	3981	
DUCATO Box (250_, 290_)	110 Multijet 2,3 D	83	10/11 -	4171	
DUCATO Box (250_, 290_)	115 Multijet 2,0 D	85	06/11 -	3922	

MAKE & MODEL		KW	YEAR		
FIAT					
DUCATO Box (250_, 290_)	115 Multijet 2,0 D	85	06/11 -	3981	
DUCATO Box (250_, 290_)	115 Multijet 2,0 D	85	06/11 -	4171	
DUCATO Box (250_, 290_)	120 Multijet 2,3 D	88	07/06 -	3922	
DUCATO Box (250_, 290_)	120 Multijet 2,3 D	88	07/06 -	3981	
DUCATO Box (250_, 290_)	120 Multijet 2,3 D	88	07/06 -	4171	
DUCATO Box (250_, 290_)	120 Multijet 2,3 D 4x4	88	03/10 -	3922	
DUCATO Box (250_, 290_)	120 Multijet 2,3 D 4x4	88	03/10 -	3981	
DUCATO Box (250_, 290_)	120 Multijet 2,3 D 4x4	88	03/10 -	4171	
DUCATO Box (250_, 290_)	130 Multijet 2,3 D	93	08/06 -	3922	
DUCATO Box (250_, 290_)	130 Multijet 2,3 D	93	08/06 -	3981	
DUCATO Box (250_, 290_)	130 Multijet 2,3 D	93	08/06 -	4171	
DUCATO Box (250_, 290_)	130 Multijet 2,3 D	96	01/07 -	3922	
DUCATO Box (250_, 290_)	130 Multijet 2,3 D	96	01/07 -	3981	
DUCATO Box (250_, 290_)	130 Multijet 2,3 D	96	01/07 -	4171	
DUCATO Box (250_, 290_)	140 Natural Power	100	04/09 -	3922	
DUCATO Box (250_, 290_)	140 Natural Power	100	04/09 -	3981	
DUCATO Box (250_, 290_)	140 Natural Power	100	04/09 -	4171	
DUCATO Box (250_, 290_)	150 Multijet 2,3 D	109	06/11 -	3922	
DUCATO Box (250_, 290_)	150 Multijet 2,3 D	109	06/11 -	3981	
DUCATO Box (250_, 290_)	150 Multijet 2,3 D	109	06/11 -	4171	
DUCATO Box (250_, 290_)	150 Multijet 3,0 D	107	04/10 -	3922	
DUCATO Box (250_, 290_)	150 Multijet 3,0 D	107	04/10 -	3981	
DUCATO Box (250_, 290_)	150 Multijet 3,0 D	107	04/10 -	4171	
DUCATO Box (250_, 290_)	160 Multijet 3,0 D	115	07/06 – 12/11	3922	
DUCATO Box (250_, 290_)	160 Multijet 3,0 D	115	07/06 – 12/11	3981	
DUCATO Box (250_, 290_)	160 Multijet 3,0 D	115	07/06 – 12/11	4171	
DUCATO Box (250_, 290_)	160 Multijet 3,0 D	116	07/06 -	3922	
DUCATO Box (250_, 290_)	160 Multijet 3,0 D	116	07/06 -	3981	
DUCATO Box (250_, 290_)	160 Multijet 3,0 D	116	07/06 -	4171	
DUCATO Box (250_, 290_)	180 Multijet 3,0 D	130	06/11 -	3922	
DUCATO Box (250_, 290_)	180 Multijet 3,0 D	130	06/11 -	3981	
DUCATO Box (250_, 290_)	180 Multijet 3,0 D	130	06/11 -	4171	
DUCATO Box (280_)	18	49	01/82 – 10/88	3543	
DUCATO Box (280_)	20	55	07/85 – 08/90	3543	
DUCATO Box (280_)	20	58	01/82 – 08/90	3440	
DUCATO Box (280_)	20	58	01/82 – 08/90	3543	
DUCATO Box (280_)	20	62	03/89 – 08/90	3440	
DUCATO Box (280_)	20	62	03/89 – 08/90	3543	
DUCATO Box (280_)	1.8	49	01/82 – 10/88	3440	
DUCATO Box (280_)	1.9 D	52	01/88 – 08/90	3440	
DUCATO Box (280_)	1.9 D	52	01/88 – 08/90	3543	
DUCATO Box (280_)	1.9 TD	60	03/89 – 08/90	3440	
DUCATO Box (280_)	1.9 TD	60	03/89 – 08/90	3543	
DUCATO Box (280_)	2.0	55	07/85 – 08/90	3440	
DUCATO Box (280_)	2.4 D	53	01/82 – 08/90	3440	
DUCATO Box (280_)	2.4 D	53	01/82 – 08/90	3543	
DUCATO Box (280_)	2.5 D	55	01/82 – 08/90	3440	
DUCATO Box (280_)	2.5 D	55	01/82 – 08/90	3543	
DUCATO Box (280_)	2.5 D 4x4	53	09/86 – 10/87	3440	
DUCATO Box (280_)	2.5 D 4x4	53	09/86 – 10/87	3543	
DUCATO Box (280_)	2.5 D 4x4	55	03/89 – 08/90	3440	
DUCATO Box (280_)	2.5 D 4x4	55	09/86 – 05/90	3440	
DUCATO Box (280_)	2.5 D 4x4	55	03/89 – 08/90	3543	
DUCATO Box (280_)	2.5 D 4x4	55	09/86 – 05/90	3543	
DUCATO Box (280_)	2.5 TD 4x4	68	09/86 – 09/90	3543	
DUCATO Box (280_)	2.5 TD 4x4	70	09/86 – 05/90	3543	
DUCATO Box (290_)	20	63	06/90 – 05/94	3543	
DUCATO Box (290_)	1.9 D	52	07/90 – 03/94	3440	
DUCATO Box (290_)	1.9 D	52	07/90 – 03/94	3543	
DUCATO Box (290_)	1.9 TD	60	03/89 – 03/94	3440	
DUCATO Box (290_)	1.9 TD	60	03/89 – 03/94	3543	
DUCATO Box (290_)	2.0	63	06/90 – 05/94	3440	
DUCATO Box (290_)	2.5 D	55	06/90 – 05/94	3440	
DUCATO Box (290_)	2.5 D	55	06/90 – 05/94	3543	
DUCATO Box (290_)	2.5 D 4x4	55	07/90 – 03/94	3440	
DUCATO Box (290_)	2.5 D 4x4	55	07/90 – 03/94	3543	
DUCATO Box (290_)	2.5 TD	70	07/90 – 03/94	3543	
DUCATO Box (290_)	2.5 TD 4x4	70	07/90 – 03/94	3543	
DUCATO Bus (230_)	1.9 D	50	04/98 – 04/02	3559	
DUCATO Bus (230_)	1.9 D	50	04/98 – 04/02	3595	
DUCATO Bus (230_)	1.9 D	50	04/98 – 04/02	3834	

MAKE & MODEL		KW	YEAR		
FIAT					
DUCATO Bus (230_)	1.9 D	50	04/98 – 04/02	3835	
DUCATO Bus (230_)	1.9 D	50	04/98 – 04/02		3914
DUCATO Bus (230_)	1.9 D Combinato	51	06/95 – 04/02	3559	
DUCATO Bus (230_)	1.9 D Combinato	51	06/95 – 04/02	3595	
DUCATO Bus (230_)	1.9 D Combinato	51	06/95 – 04/02	3834	
DUCATO Bus (230_)	1.9 D Combinato	51	06/95 – 04/02	3835	
DUCATO Bus (230_)	1.9 D Combinato	51	06/95 – 04/02		3914
DUCATO Bus (230_)	1.9 TD	66	04/98 – 04/02	3559	
DUCATO Bus (230_)	1.9 TD	66	04/98 – 04/02	3595	
DUCATO Bus (230_)	1.9 TD	66	04/98 – 04/02	3834	
DUCATO Bus (230_)	1.9 TD	66	04/98 – 04/02	3835	
DUCATO Bus (230_)	1.9 TD	66	04/98 – 04/02		3914
DUCATO Bus (230_)	1.9 TD Combinato	59	08/94 – 04/02	3559	
DUCATO Bus (230_)	1.9 TD Combinato	59	08/94 – 04/02	3595	
DUCATO Bus (230_)	1.9 TD Combinato	59	08/94 – 04/02	3834	
DUCATO Bus (230_)	1.9 TD Combinato	59	08/94 – 04/02	3835	
DUCATO Bus (230_)	1.9 TD Combinato	59	08/94 – 04/02		3914
DUCATO Bus (230_)	1.9 TD Panorama/Combinato	60	03/94 – 04/02	3559	
DUCATO Bus (230_)	1.9 TD Panorama/Combinato	60	03/94 – 04/02	3595	
DUCATO Bus (230_)	1.9 TD Panorama/Combinato	60	03/94 – 04/02	3834	
DUCATO Bus (230_)	1.9 TD Panorama/Combinato	60	03/94 – 04/02	3835	
DUCATO Bus (230_)	1.9 TD Panorama/Combinato	60	03/94 – 04/02		3914
DUCATO Bus (230_)	2.0 4x4	80	11/94 – 11/01	3559	
DUCATO Bus (230_)	2.0 4x4	80	11/94 – 11/01	3595	
DUCATO Bus (230_)	2.0 4x4	80	11/94 – 11/01	3834	
DUCATO Bus (230_)	2.0 4x4	80	11/94 – 11/01	3835	
DUCATO Bus (230_)	2.0 4x4	80	11/94 – 11/01		3914
DUCATO Bus (230_)	2.0 JTD	62	10/01 – 04/02	3834	
DUCATO Bus (230_)	2.0 JTD	62	10/01 – 04/02	3835	
DUCATO Bus (230_)	2.0 JTD	62	10/01 – 04/02		3914
DUCATO Bus (230_)	2.0 Panorama/Combinato	80	03/94 – 04/02	3559	
DUCATO Bus (230_)	2.0 Panorama/Combinato	80	03/94 – 04/02	3595	
DUCATO Bus (230_)	2.0 Panorama/Combinato	80	03/94 – 04/02	3834	
DUCATO Bus (230_)	2.0 Panorama/Combinato	80	03/94 – 04/02	3835	
DUCATO Bus (230_)	2.0 Panorama/Combinato	80	03/94 – 04/02		3914
DUCATO Bus (230_)	2.5 D Combinato	62	08/94 – 04/02	3559	
DUCATO Bus (230_)	2.5 D Combinato	62	08/94 – 04/02	3595	
DUCATO Bus (230_)	2.5 D Combinato	62	08/94 – 04/02	3834	
DUCATO Bus (230_)	2.5 D Combinato	62	08/94 – 04/02	3835	
DUCATO Bus (230_)	2.5 D Combinato	62	08/94 – 04/02		3914
DUCATO Bus (230_)	2.5 TD	80	06/94 – 08/98	3559	
DUCATO Bus (230_)	2.5 TD	80	06/94 – 08/98	3595	
DUCATO Bus (230_)	2.5 TD 4x4	80	11/94 – 04/98	3559	
DUCATO Bus (230_)	2.5 TD 4x4	80	11/94 – 04/98	3595	
DUCATO Bus (230_)	2.5 TDI 4x4	85	04/97 – 04/02	3559	
DUCATO Bus (230_)	2.5 TDI 4x4	85	04/97 – 04/02	3595	
DUCATO Bus (230_)	2.5 TDI 4x4	85	04/97 – 04/02	3834	
DUCATO Bus (230_)	2.5 TDI 4x4	85	04/97 – 04/02	3835	
DUCATO Bus (230_)	2.5 TDI 4x4	85	04/97 – 04/02		3914
DUCATO Bus (230_)	2.5 TDI Panorama/Combinato	80	07/94 – 04/02	3559	
DUCATO Bus (230_)	2.5 TDI Panorama/Combinato	80	07/94 – 04/02	3595	
DUCATO Bus (230_)	2.5 TDI Panorama/Combinato	80	07/94 – 04/02	3834	
DUCATO Bus (230_)	2.5 TDI Panorama/Combinato	80	07/94 – 04/02	3835	
DUCATO Bus (230_)	2.5 TDI Panorama/Combinato	80	07/94 – 04/02		3914
DUCATO Bus (230_)	2.5 TDI Panorama/Combinato	85	03/94 – 04/02	3559	
DUCATO Bus (230_)	2.5 TDI Panorama/Combinato	85	03/94 – 04/02	3595	
DUCATO Bus (230_)	2.5 TDI Panorama/Combinato	85	03/94 – 04/02	3834	
DUCATO Bus (230_)	2.5 TDI Panorama/Combinato	85	03/94 – 04/02	3835	
DUCATO Bus (230_)	2.5 TDI Panorama/Combinato	85	03/94 – 04/02		3914
DUCATO Bus (230_)	2.8 D	64	02/98 – 04/02	3559	
DUCATO Bus (230_)	2.8 D	64	02/98 – 04/02	3595	
DUCATO Bus (230_)	2.8 D	64	02/98 – 04/02	3834	
DUCATO Bus (230_)	2.8 D	64	02/98 – 04/02	3835	
DUCATO Bus (230_)	2.8 D	64	02/98 – 04/02		3914
DUCATO Bus (230_)	2.8 JTD	94	11/00 – 04/02	3559	
DUCATO Bus (230_)	2.8 JTD	94	11/00 – 04/02	3595	
DUCATO Bus (230_)	2.8 JTD	94	11/00 – 04/02	3834	
DUCATO Bus (230_)	2.8 JTD	94	11/00 – 04/02	3835	
DUCATO Bus (230_)	2.8 JTD	94	11/00 – 04/02		3914
DUCATO Bus (230_)	2.8 JTD 4x4	94	11/00 – 04/02	3559	
DUCATO Bus (230_)	2.8 JTD 4x4	94	11/00 – 04/02	3595	

MAKE & MODEL   		KW	YEAR		
FIAT					
DUCATO Bus (230_)	2.8 JTD 4x4	94	11/00 – 04/02	3834	
DUCATO Bus (230_)	2.8 JTD 4x4	94	11/00 – 04/02	3835	
DUCATO Bus (230_)	2.8 JTD 4x4	94	11/00 – 04/02		3914
DUCATO Bus (230_)	2.8 TDI	90	10/97 – 04/02	3559	
DUCATO Bus (230_)	2.8 TDI	90	10/97 – 04/02	3595	
DUCATO Bus (230_)	2.8 TDI	90	10/97 – 04/02	3834	
DUCATO Bus (230_)	2.8 TDI	90	10/97 – 04/02	3835	
DUCATO Bus (230_)	2.8 TDI	90	10/97 – 04/02		3914
DUCATO Bus (230_)	2.8 TDI 4x4	90	07/99 – 04/02	3559	
DUCATO Bus (230_)	2.8 TDI 4x4	90	07/99 – 04/02	3595	
DUCATO Bus (230_)	2.8 TDI 4x4	90	07/99 – 04/02	3834	
DUCATO Bus (230_)	2.8 TDI 4x4	90	07/99 – 04/02	3835	
DUCATO Bus (230_)	2.8 TDI 4x4	90	07/99 – 04/02		3914
DUCATO Bus (244_)	20	81	04/02 -	3834	
DUCATO Bus (244_)	20	81	04/02 -	3835	
DUCATO Bus (244_)	20	81	04/02 -		3914
DUCATO Bus (244_)	2.0 4x4	81	05/02 – 07/06	3834	
DUCATO Bus (244_)	2.0 4x4	81	05/02 – 07/06	3835	
DUCATO Bus (244_)	2.0 4x4	81	05/02 – 07/06		3914
DUCATO Bus (244_)	2.0 Bipower	81	11/02 -	3834	
DUCATO Bus (244_)	2.0 Bipower	81	11/02 -	3835	
DUCATO Bus (244_)	2.0 Bipower	81	11/02 -		3914
DUCATO Bus (244_)	2.0 JTD	62	04/02 -	3834	
DUCATO Bus (244_)	2.0 JTD	62	04/02 -	3835	
DUCATO Bus (244_)	2.0 JTD	62	04/02 -		3914
DUCATO Bus (244_)	2.3 JTD	81	04/02 -	3834	
DUCATO Bus (244_)	2.3 JTD	81	04/02 -	3835	
DUCATO Bus (244_)	2.3 JTD	81	04/02 -		3914
DUCATO Bus (244_)	2.8 JTD	94	04/02 -	3834	
DUCATO Bus (244_)	2.8 JTD	94	04/02 -	3835	
DUCATO Bus (244_)	2.8 JTD	94	04/02 -		3914
DUCATO Bus (244_)	2.8 JTD	107	04/04 – 07/06	3834	
DUCATO Bus (244_)	2.8 JTD	107	04/04 – 07/06	3835	
DUCATO Bus (244_)	2.8 JTD	107	04/04 – 07/06		3914
DUCATO Bus (244_)	2.8 JTD 4x4	94	07/02 -	3834	
DUCATO Bus (244_)	2.8 JTD 4x4	94	07/02 -	3835	
DUCATO Bus (244_)	2.8 JTD 4x4	94	07/02 -		3914
DUCATO Bus (244_)	2.8 TD	90	11/03 – 07/06	3834	
DUCATO Bus (244_)	2.8 TD	90	11/03 – 07/06	3835	
DUCATO Bus (244_)	2.8 TD	90	11/03 – 07/06		3914
DUCATO Bus (244_)	2.8 TD 4x4	90	11/03 – 07/06	3834	
DUCATO Bus (244_)	2.8 TD 4x4	90	11/03 – 07/06	3835	
DUCATO Bus (244_)	2.8 TD 4x4	90	11/03 – 07/06		3914
DUCATO Bus (250_, 290_)	100 Multijet 2,2 D	74	07/06 -	3922	
DUCATO Bus (250_, 290_)	100 Multijet 2,2 D	74	07/06 -	3981	
DUCATO Bus (250_, 290_)	100 Multijet 2,2 D	74	07/06 -	4171	
DUCATO Bus (250_, 290_)	110 Multijet 2,3 D	83	10/11 -	3922	
DUCATO Bus (250_, 290_)	110 Multijet 2,3 D	83	10/11 -	3981	
DUCATO Bus (250_, 290_)	110 Multijet 2,3 D	83	10/11 -	4171	
DUCATO Bus (250_, 290_)	115 Multijet 2,0 D	85	06/11 -	3922	
DUCATO Bus (250_, 290_)	115 Multijet 2,0 D	85	06/11 -	3981	
DUCATO Bus (250_, 290_)	115 Multijet 2,0 D	85	06/11 -	4171	
DUCATO Bus (250_, 290_)	120 Multijet 2,3 D	88	07/06 -	3922	
DUCATO Bus (250_, 290_)	120 Multijet 2,3 D	88	07/06 -	3981	
DUCATO Bus (250_, 290_)	120 Multijet 2,3 D	88	07/06 -	4171	
DUCATO Bus (250_, 290_)	130 Multijet 2,3 D	93	01/10 -	3922	
DUCATO Bus (250_, 290_)	130 Multijet 2,3 D	93	01/10 -	3981	
DUCATO Bus (250_, 290_)	130 Multijet 2,3 D	93	01/10 -	4171	
DUCATO Bus (250_, 290_)	130 Multijet 2,3 D	96	01/07 -	3922	
DUCATO Bus (250_, 290_)	130 Multijet 2,3 D	96	01/07 -	3981	
DUCATO Bus (250_, 290_)	130 Multijet 2,3 D	96	01/07 -	4171	
DUCATO Bus (250_, 290_)	140 Natural Power	100	04/09 -	3922	
DUCATO Bus (250_, 290_)	140 Natural Power	100	04/09 -	3981	
DUCATO Bus (250_, 290_)	140 Natural Power	100	04/09 -	4171	
DUCATO Bus (250_, 290_)	150 Multijet 2,3 D	109	06/11 -	3922	
DUCATO Bus (250_, 290_)	150 Multijet 2,3 D	109	06/11 -	3981	
DUCATO Bus (250_, 290_)	150 Multijet 2,3 D	109	06/11 -	4171	
DUCATO Bus (250_, 290_)	150 Multijet 2,3 D	110	04/15 -	3922	
DUCATO Bus (250_, 290_)	150 Multijet 2,3 D	110	04/15 -	3981	
DUCATO Bus (250_, 290_)	150 Multijet 2,3 D	110	04/15 -	4171	
DUCATO Bus (250_, 290_)	150 Multijet 3,0 D	107	04/10 -	3922	

MAKE & MODEL   		KW	YEAR		
FIAT					
DUCATO Bus (250_, 290_)	150 Multijet 3,0 D	107	04/10 -	3981	
DUCATO Bus (250_, 290_)	150 Multijet 3,0 D	107	04/10 -	4171	
DUCATO Bus (250_, 290_)	160 Multijet 3,0 D	115	10/06 -	3922	
DUCATO Bus (250_, 290_)	160 Multijet 3,0 D	115	10/06 -	3981	
DUCATO Bus (250_, 290_)	160 Multijet 3,0 D	115	10/06 -	4171	
DUCATO Bus (250_, 290_)	160 Multijet 3,0 D	116	07/06 -	3922	
DUCATO Bus (250_, 290_)	160 Multijet 3,0 D	116	07/06 -	3981	
DUCATO Bus (250_, 290_)	160 Multijet 3,0 D	116	07/06 -	4171	
DUCATO Bus (250_, 290_)	180 Multijet 3,0 D	130	06/11 -	3922	
DUCATO Bus (250_, 290_)	180 Multijet 3,0 D	130	06/11 -	3981	
DUCATO Bus (250_, 290_)	180 Multijet 3,0 D	130	06/11 -	4171	
DUCATO Panorama (280_)	18	51	07/82 – 12/88	3543	
DUCATO Panorama (280_)	20	55	01/86 – 08/90	3543	
DUCATO Panorama (280_)	20	58	07/82 – 05/85	3543	
DUCATO Panorama (280_)	20	62	09/88 – 08/90	3543	
DUCATO Panorama (280_)	1.8	51	07/82 – 12/88	3440	
DUCATO Panorama (280_)	1.9 D	52	02/87 – 08/90	3440	
DUCATO Panorama (280_)	1.9 D	52	02/87 – 08/90	3543	
DUCATO Panorama (280_)	1.9 TD	60	03/89 – 08/90	3440	
DUCATO Panorama (280_)	1.9 TD	60	03/89 – 08/90	3543	
DUCATO Panorama (280_)	2.0	55	01/86 – 08/90	3440	
DUCATO Panorama (280_)	2.0	58	07/82 – 05/85	3440	
DUCATO Panorama (280_)	2.0	62	09/88 – 08/90	3440	
DUCATO Panorama (280_)	2.4 D	53	07/82 – 12/85	3440	
DUCATO Panorama (280_)	2.4 D	53	07/82 – 12/85	3543	
DUCATO Panorama (280_)	2.5 D	55	01/86 – 08/90	3440	
DUCATO Panorama (280_)	2.5 D	55	01/86 – 08/90	3543	
DUCATO Panorama (280_)	2.5 D 4x4	55	01/87 – 08/90	3440	
DUCATO Panorama (280_)	2.5 D 4x4	55	01/87 – 08/90	3543	
DUCATO Panorama (280_)	2.5 TD	68	01/87 – 08/90	3543	
DUCATO Panorama (280_)	2.5 TD 4x4	68	01/86 – 08/90	3543	
DUCATO Panorama (290_)	20	62	07/90 – 03/94	3543	
DUCATO Panorama (290_)	1.9 D	52	07/90 – 03/94	3440	
DUCATO Panorama (290_)	1.9 D	52	07/90 – 03/94	3543	
DUCATO Panorama (290_)	1.9 TD	60	07/90 – 03/94	3440	
DUCATO Panorama (290_)	1.9 TD	60	07/90 – 03/94	3543	
DUCATO Panorama (290_)	2.0	62	07/90 – 03/94	3440	
DUCATO Panorama (290_)	2.0 4x4	63	06/90 – 05/94	3440	
DUCATO Panorama (290_)	2.0 4x4	63	06/90 – 05/94	3543	
DUCATO Panorama (290_)	2.5 D	55	07/90 – 03/94	3440	
DUCATO Panorama (290_)	2.5 D	55	07/90 – 03/94	3543	
DUCATO Panorama (290_)	2.5 D 4x4	55	07/90 – 03/94	3440	
DUCATO Panorama (290_)	2.5 D 4x4	55	07/90 – 03/94	3543	
DUCATO Panorama (290_)	2.5 TD	70	08/90 – 03/94	3543	
DUCATO Panorama (290_)	2.5 TD 4x4	70	01/91 – 03/94	3543	
DUCATO Platform/Chassis (230_)	20	80	03/94 – 04/02	3559	
DUCATO Platform/Chassis (230_)	20	80	03/94 – 04/02	3595	
DUCATO Platform/Chassis (230_)	20	80	03/94 – 04/02	3834	
DUCATO Platform/Chassis (230_)	20	80	03/94 – 04/02	3835	
DUCATO Platform/Chassis (230_)	20	80	03/94 – 04/02		3914
DUCATO Platform/Chassis (230_)	1.9 D	50	04/98 – 04/02	3559	
DUCATO Platform/Chassis (230_)	1.9 D	50	04/98 – 04/02	3595	
DUCATO Platform/Chassis (230_)	1.9 D	50	04/98 – 04/02	3834	
DUCATO Platform/Chassis (230_)	1.9 D	50	04/98 – 04/02	3835	
DUCATO Platform/Chassis (230_)	1.9 D	50	04/98 – 04/02		3914
DUCATO Platform/Chassis (230_)	1.9 D	51	03/94 – 04/02	3559	
DUCATO Platform/Chassis (230_)	1.9 D	51	03/94 – 04/02	3595	
DUCATO Platform/Chassis (230_)	1.9 D	51	03/94 – 04/02	3834	
DUCATO Platform/Chassis (230_)	1.9 D	51	03/94 – 04/02	3835	
DUCATO Platform/Chassis (230_)	1.9 D	51	03/94 – 04/02		3914
DUCATO Platform/Chassis (230_)	1.9 TD	60	03/94 – 04/02	3559	
DUCATO Platform/Chassis (230_)	1.9 TD	60	03/94 – 04/02	3595	
DUCATO Platform/Chassis (230_)	1.9 TD	60	03/94 – 04/02	3834	
DUCATO Platform/Chassis (230_)	1.9 TD	60	03/94 – 04/02	3835	
DUCATO Platform/Chassis (230_)	1.9 TD	60	03/94 – 04/02		3914
DUCATO Platform/Chassis (230_)	1.9 TD	66	04/98 – 04/02	3559	
DUCATO Platform/Chassis (230_)	1.9 TD	66	04/98 – 04/02	3595	
DUCATO Platform/Chassis (230_)	1.9 TD	66	04/98 – 04/02	3834	
DUCATO Platform/Chassis (230_)	1.9 TD	66	04/98 – 04/02	3835	
DUCATO Platform/Chassis (230_)	1.9 TD	66	04/98 – 04/02		3914
DUCATO Platform/Chassis (230_)	1.9 TD CAT	59	08/94 – 04/02	3559	

MAKE & MODEL		KW	YEAR		
FIAT					
DUCATO Platform/Chassis (230_)	1.9 TD CAT	59	08/94 – 04/02	3595	
DUCATO Platform/Chassis (230_)	1.9 TD CAT	59	08/94 – 04/02	3834	
DUCATO Platform/Chassis (230_)	1.9 TD CAT	59	08/94 – 04/02	3835	
DUCATO Platform/Chassis (230_)	1.9 TD CAT	59	08/94 – 04/02		3914
DUCATO Platform/Chassis (230_)	2.0 JTD	62	07/01 – 04/02	3559	
DUCATO Platform/Chassis (230_)	2.0 JTD	62	07/01 – 04/02	3595	
DUCATO Platform/Chassis (230_)	2.0 JTD	62	07/01 – 04/02	3834	
DUCATO Platform/Chassis (230_)	2.0 JTD	62	07/01 – 04/02	3835	
DUCATO Platform/Chassis (230_)	2.0 JTD	62	07/01 – 04/02		3914
DUCATO Platform/Chassis (230_)	2.5 D	62	03/94 – 04/02	3559	
DUCATO Platform/Chassis (230_)	2.5 D	62	03/94 – 04/02	3595	
DUCATO Platform/Chassis (230_)	2.5 D	62	03/94 – 04/02	3834	
DUCATO Platform/Chassis (230_)	2.5 D	62	03/94 – 04/02	3835	
DUCATO Platform/Chassis (230_)	2.5 D	62	03/94 – 04/02		3914
DUCATO Platform/Chassis (230_)	2.5 D 4x4	62	03/94 – 04/02	3559	
DUCATO Platform/Chassis (230_)	2.5 D 4x4	62	03/94 – 04/02	3595	
DUCATO Platform/Chassis (230_)	2.5 D 4x4	62	03/94 – 04/02	3834	
DUCATO Platform/Chassis (230_)	2.5 D 4x4	62	03/94 – 04/02	3835	
DUCATO Platform/Chassis (230_)	2.5 D 4x4	62	03/94 – 04/02		3914
DUCATO Platform/Chassis (230_)	2.5 TD	80	06/94 – 08/98	3559	
DUCATO Platform/Chassis (230_)	2.5 TD	80	06/94 – 08/98	3595	
DUCATO Platform/Chassis (230_)	2.5 TD	85	06/94 – 04/98	3559	
DUCATO Platform/Chassis (230_)	2.5 TD	85	06/94 – 04/98	3595	
DUCATO Platform/Chassis (230_)	2.5 TD 4x4	80	11/94 – 04/98	3559	
DUCATO Platform/Chassis (230_)	2.5 TD 4x4	80	11/94 – 04/98	3595	
DUCATO Platform/Chassis (230_)	2.5 TD 4x4	85	11/94 – 04/98	3559	
DUCATO Platform/Chassis (230_)	2.5 TD 4x4	85	11/94 – 04/98	3595	
DUCATO Platform/Chassis (230_)	2.5 TDI	80	03/94 – 04/02	3559	
DUCATO Platform/Chassis (230_)	2.5 TDI	80	03/94 – 04/02	3595	
DUCATO Platform/Chassis (230_)	2.5 TDI	80	03/94 – 04/02	3834	
DUCATO Platform/Chassis (230_)	2.5 TDI	80	03/94 – 04/02	3835	
DUCATO Platform/Chassis (230_)	2.5 TDI	80	03/94 – 04/02		3914
DUCATO Platform/Chassis (230_)	2.5 TDI	85	03/94 – 04/02	3559	
DUCATO Platform/Chassis (230_)	2.5 TDI	85	03/94 – 04/02	3595	
DUCATO Platform/Chassis (230_)	2.5 TDI	85	03/94 – 04/02	3834	
DUCATO Platform/Chassis (230_)	2.5 TDI	85	03/94 – 04/02	3835	
DUCATO Platform/Chassis (230_)	2.5 TDI	85	03/94 – 04/02		3914
DUCATO Platform/Chassis (230_)	2.5 TDI 4x4	85	06/98 – 04/02	3559	
DUCATO Platform/Chassis (230_)	2.5 TDI 4x4	85	06/98 – 04/02	3595	
DUCATO Platform/Chassis (230_)	2.5 TDI 4x4	85	06/98 – 04/02	3834	
DUCATO Platform/Chassis (230_)	2.5 TDI 4x4	85	06/98 – 04/02	3835	
DUCATO Platform/Chassis (230_)	2.5 TDI 4x4	85	06/98 – 04/02		3914
DUCATO Platform/Chassis (230_)	2.8 D	64	02/98 – 04/02	3559	
DUCATO Platform/Chassis (230_)	2.8 D	64	02/98 – 04/02	3595	
DUCATO Platform/Chassis (230_)	2.8 D	64	02/98 – 04/02	3834	
DUCATO Platform/Chassis (230_)	2.8 D	64	02/98 – 04/02	3835	
DUCATO Platform/Chassis (230_)	2.8 D	64	02/98 – 04/02		3914
DUCATO Platform/Chassis (230_)	2.8 iDTD 4x4	90	05/98 – 09/01	3559	
DUCATO Platform/Chassis (230_)	2.8 iDTD 4x4	90	05/98 – 09/01	3595	
DUCATO Platform/Chassis (230_)	2.8 JTD	94	03/01 – 04/02	3559	
DUCATO Platform/Chassis (230_)	2.8 JTD	94	11/00 – 04/02	3559	
DUCATO Platform/Chassis (230_)	2.8 JTD	94	03/01 – 04/02	3595	
DUCATO Platform/Chassis (230_)	2.8 JTD	94	11/00 – 04/02	3595	
DUCATO Platform/Chassis (230_)	2.8 JTD	94	03/01 – 04/02	3834	
DUCATO Platform/Chassis (230_)	2.8 JTD	94	11/00 – 04/02	3834	
DUCATO Platform/Chassis (230_)	2.8 JTD	94	03/01 – 04/02	3835	
DUCATO Platform/Chassis (230_)	2.8 JTD	94	11/00 – 04/02	3835	
DUCATO Platform/Chassis (230_)	2.8 JTD	94	03/01 – 04/02		3914
DUCATO Platform/Chassis (230_)	2.8 JTD	94	11/00 – 04/02		3914
DUCATO Platform/Chassis (230_)	2.8 JTD 4x4	94	10/01 – 04/02	3559	
DUCATO Platform/Chassis (230_)	2.8 JTD 4x4	94	10/01 – 04/02	3595	
DUCATO Platform/Chassis (230_)	2.8 JTD 4x4	94	10/01 – 04/02	3834	
DUCATO Platform/Chassis (230_)	2.8 JTD 4x4	94	10/01 – 04/02	3835	
DUCATO Platform/Chassis (230_)	2.8 JTD 4x4	94	10/01 – 04/02		3914
DUCATO Platform/Chassis (230_)	2.8 TD 4x4	64	05/98 – 11/01	3559	
DUCATO Platform/Chassis (230_)	2.8 TD 4x4	64	05/98 – 11/01	3595	
DUCATO Platform/Chassis (230_)	2.8 TD 4x4	64	05/98 – 11/01	3834	
DUCATO Platform/Chassis (230_)	2.8 TD 4x4	64	05/98 – 11/01	3835	
DUCATO Platform/Chassis (230_)	2.8 TD 4x4	64	05/98 – 11/01		3914
DUCATO Platform/Chassis (230_)	2.8 TDI	90	12/98 – 04/02	3559	
DUCATO Platform/Chassis (230_)	2.8 TDI	90	12/98 – 04/02	3595	

MAKE & MODEL		KW	YEAR		
FIAT					
DUCATO Platform/Chassis (230_)	2.8 TDI	90	12/98 – 04/02	3834	
DUCATO Platform/Chassis (230_)	2.8 TDI	90	12/98 – 04/02	3835	
DUCATO Platform/Chassis (230_)	2.8 TDI	90	12/98 – 04/02		3914
DUCATO Platform/Chassis (244_)	20	81	04/02 – 07/06	3834	
DUCATO Platform/Chassis (244_)	20	81	04/02 – 07/06	3835	
DUCATO Platform/Chassis (244_)	20	81	04/02 – 07/06		3914
DUCATO Platform/Chassis (244_)	2.0 JTD	62	04/02 – 07/06	3834	
DUCATO Platform/Chassis (244_)	2.0 JTD	62	04/02 – 07/06	3835	
DUCATO Platform/Chassis (244_)	2.0 JTD	62	04/02 – 07/06		3914
DUCATO Platform/Chassis (244_)	2.3 JTD	81	04/02 – 07/06	3834	
DUCATO Platform/Chassis (244_)	2.3 JTD	81	04/02 – 07/06	3835	
DUCATO Platform/Chassis (244_)	2.3 JTD	81	04/02 – 07/06		3914
DUCATO Platform/Chassis (244_)	2.8 JTD	90	11/03 – 07/06	3834	
DUCATO Platform/Chassis (244_)	2.8 JTD	90	11/03 – 07/06	3835	
DUCATO Platform/Chassis (244_)	2.8 JTD	90	11/03 – 07/06		3914
DUCATO Platform/Chassis (244_)	2.8 JTD	94	04/02 – 07/06	3834	
DUCATO Platform/Chassis (244_)	2.8 JTD	94	04/02 – 07/06	3835	
DUCATO Platform/Chassis (244_)	2.8 JTD	94	04/02 – 07/06		3914
DUCATO Platform/Chassis (244_)	2.8 JTD 4x4	94	10/02 – 07/06	3834	
DUCATO Platform/Chassis (244_)	2.8 JTD 4x4	94	10/02 – 07/06	3835	
DUCATO Platform/Chassis (244_)	2.8 JTD 4x4	94	10/02 – 07/06		3914
DUCATO Platform/Chassis (244_)	2.8 JTD Power	107	05/04 – 07/06	3834	
DUCATO Platform/Chassis (244_)	2.8 JTD Power	107	05/04 – 07/06	3835	
DUCATO Platform/Chassis (244_)	2.8 JTD Power	107	05/04 – 07/06		3914
DUCATO Platform/Chassis (250_, 290_)	100 Multijet 2,2 D	74	07/06 -	3922	
DUCATO Platform/Chassis (250_, 290_)	100 Multijet 2,2 D	74	07/06 -	3981	
DUCATO Platform/Chassis (250_, 290_)	100 Multijet 2,2 D	74	07/06 -	4171	
DUCATO Platform/Chassis (250_, 290_)	110 Multijet 2,3 D	83	10/11 -	3922	
DUCATO Platform/Chassis (250_, 290_)	110 Multijet 2,3 D	83	10/11 -	3981	
DUCATO Platform/Chassis (250_, 290_)	110 Multijet 2,3 D	83	10/11 -	4171	
DUCATO Platform/Chassis (250_, 290_)	115 Multijet 2,0 D	85	06/11 -	3922	
DUCATO Platform/Chassis (250_, 290_)	115 Multijet 2,0 D	85	06/11 -	3981	
DUCATO Platform/Chassis (250_, 290_)	115 Multijet 2,0 D	85	06/11 -	4171	
DUCATO Platform/Chassis (250_, 290_)	120 Multijet 2,3 D	88	07/06 -	3922	
DUCATO Platform/Chassis (250_, 290_)	120 Multijet 2,3 D	88	07/06 -	3981	
DUCATO Platform/Chassis (250_, 290_)	120 Multijet 2,3 D	88	07/06 -	4171	
DUCATO Platform/Chassis (250_, 290_)	120 Multijet 2,3 D 4x4	88	03/10 -	3922	
DUCATO Platform/Chassis (250_, 290_)	120 Multijet 2,3 D 4x4	88	03/10 -	3981	
DUCATO Platform/Chassis (250_, 290_)	120 Multijet 2,3 D 4x4	88	03/10 -	4171	
DUCATO Platform/Chassis (250_, 290_)	130 Multijet 2,3 D	93	08/06 -	3922	
DUCATO Platform/Chassis (250_, 290_)	130 Multijet 2,3 D	93	08/06 -	3981	
DUCATO Platform/Chassis (250_, 290_)	130 Multijet 2,3 D	93	08/06 -	4171	
DUCATO Platform/Chassis (250_, 290_)	130 Multijet 2,3 D	96	01/07 -	3922	
DUCATO Platform/Chassis (250_, 290_)	130 Multijet 2,3 D	96	01/07 -	3981	
DUCATO Platform/Chassis (250_, 290_)	130 Multijet 2,3 D	96	01/07 -	4171	
DUCATO Platform/Chassis (250_, 290_)	140 Natural Power	100	04/09 -	3922	
DUCATO Platform/Chassis (250_, 290_)	140 Natural Power	100	04/09 -	3981	
DUCATO Platform/Chassis (250_, 290_)	140 Natural Power	100	04/09 -	4171	
DUCATO Platform/Chassis (250_, 290_)	150 Multijet 2,3 D	109	06/11 -	3922	
DUCATO Platform/Chassis (250_, 290_)	150 Multijet 2,3 D	109	06/11 -	3981	
DUCATO Platform/Chassis (250_, 290_)	150 Multijet 2,3 D	109	06/11 -	4171	
DUCATO Platform/Chassis (250_, 290_)	150 Multijet 3,0 D	107	04/10 -	3922	
DUCATO Platform/Chassis (250_, 290_)	150 Multijet 3,0 D	107	04/10 -	3981	
DUCATO Platform/Chassis (250_, 290_)	150 Multijet 3,0 D	107	04/10 -	4171	
DUCATO Platform/Chassis (250_, 290_)	160 Multijet 3,0 D	115	07/06 – 12/11	3922	
DUCATO Platform/Chassis (250_, 290_)	160 Multijet 3,0 D	115	07/06 – 12/11	3981	
DUCATO Platform/Chassis (250_, 290_)	160 Multijet 3,0 D	115	07/06 – 12/11	4171	
DUCATO Platform/Chassis (250_, 290_)	160 Multijet 3,0 D	116	07/06 -	3922	
DUCATO Platform/Chassis (250_, 290_)	160 Multijet 3,0 D	116	07/06 -	3981	
DUCATO Platform/Chassis (250_, 290_)	160 Multijet 3,0 D	116	07/06 -	4171	
DUCATO Platform/Chassis (250_, 290_)	180 Multijet 3,0 D	130	06/11 -	3922	
DUCATO Platform/Chassis (250_, 290_)	180 Multijet 3,0 D	130	06/11 -	3981	
DUCATO Platform/Chassis (250_, 290_)	180 Multijet 3,0 D	130	06/11 -	4171	
DUCATO Platform/Chassis (280_)	20	55	07/85 – 08/90	3543	
DUCATO Platform/Chassis (280_)	20	62	08/88 – 08/90	3543	
DUCATO Platform/Chassis (280_)	1.9 D	52	01/88 – 08/90	3440	
DUCATO Platform/Chassis (280_)	1.9 D	52	01/88 – 08/90	3543	
DUCATO Platform/Chassis (280_)	1.9 TD	60	03/89 – 08/90	3440	
DUCATO Platform/Chassis (280_)	1.9 TD	60	03/89 – 08/90	3543	
DUCATO Platform/Chassis (280_)	2.0	55	07/85 – 08/90	3440	
DUCATO Platform/Chassis (280_)	2.0	62	08/88 – 08/90	3440	

MAKE & MODEL		KW	YEAR		
FIAT					
DUCATO Platform/Chassis (280_)	2.5 D	55	07/82 – 08/90	3440	
DUCATO Platform/Chassis (280_)	2.5 D	55	07/82 – 08/90	3543	
DUCATO Platform/Chassis (280_)	2.5 D 4x4	55	03/89 – 08/90	3440	
DUCATO Platform/Chassis (280_)	2.5 D 4x4	55	03/89 – 08/90	3543	
DUCATO Platform/Chassis (280_)	2.5 TD	68	01/86 – 08/90	3543	
DUCATO Platform/Chassis (290_)	20	62	07/90 – 03/94	3543	
DUCATO Platform/Chassis (290_)	1.9 TD	60	03/89 – 03/94	3440	
DUCATO Platform/Chassis (290_)	1.9 TD	60	03/89 – 03/94	3543	
DUCATO Platform/Chassis (290_)	2.0	62	07/90 – 03/94	3440	
DUCATO Platform/Chassis (290_)	2.0 4x4	63	06/90 – 05/94	3440	
DUCATO Platform/Chassis (290_)	2.0 4x4	63	06/90 – 05/94	3543	
DUCATO Platform/Chassis (290_)	2.5 D	55	03/89 – 03/94	3440	
DUCATO Platform/Chassis (290_)	2.5 D	55	03/89 – 03/94	3543	
DUCATO Platform/Chassis (290_)	2.5 D 4x4	55	07/90 – 03/94	3440	
DUCATO Platform/Chassis (290_)	2.5 D 4x4	55	07/90 – 03/94	3543	
DUCATO Platform/Chassis (290_)	2.5 TD	70	07/90 – 03/94	3543	
DUCATO Platform/Chassis (290_)	2.5 TD 4x4	70	07/90 – 03/94	3543	
DUNA	ONLY SOUTH AMERICA		90-	3460	
DUNA	ONLY SOUTH AMERICA			3516	
DUNA	ONLY SOUTH AMERICA			3519	
DUNA	ONLY SOUTH AMERICA			3586	
DUNA (146_)	1.7 DS	44	01/87 – 12/91	3459	
DUNA (146_)	1.7 DS	44	01/87 – 12/91	3461	
DUNA (146_)	60 1.1	43	01/87 – 12/91	3459	
DUNA (146_)	60 1.1	43	01/87 – 12/91	3461	
DUNA (146_)	70 1.3	49	01/87 – 12/91	3459	
DUNA (146_)	70 1.3	49	01/87 – 12/91	3461	
DUNA Weekend (146_)	1.7 DS	44	01/87 – 12/91	3459	
DUNA Weekend (146_)	1.7 DS	44	01/87 – 12/91	3461	
DUNA Weekend (146_)	60 1.1	43	01/87 – 12/91	3459	
DUNA Weekend (146_)	60 1.1	43	01/87 – 12/91	3461	
DUNA Weekend (146_)	70 1.3	49	01/87 – 12/91	3459	
DUNA Weekend (146_)	70 1.3	49	01/87 – 12/91	3461	
EGEA Hatchback (357)	1.4	88	03/16 -	4301	
EGEA Hatchback (357)	1.4 LPG	88	05/16 -	4301	
EGEA Hatchback (357)	1.6	81	07/16 -	4301	
EGEA Hatchback (357)	1.6 D	84	09/16 -	4301	
EGEA Hatchback (357)	1.6 D	88	03/16 -	4301	
EGEA Sedan (356)	1.4 LPG	88	05/16 -	4301	
EGEA Sedan (356)	1.6 D	88	10/15 -	4301	
EGEA Sedan (356)	1.6 D	84	09/16 -	4301	
EGEA Station Wagon (357)	1.4	88	03/16 -	4301	
EGEA Station Wagon (357)	1.4 LPG	88	05/16 -	4301	
EGEA Station Wagon (357)	1.6	81	07/16 -	4301	
EGEA Station Wagon (357)	1.6 D	84	09/16 -	4301	
EGEA Station Wagon (357)	1.6 D	88	03/16 -	4301	
ELBA (146_)	13	43	04/86 – 12/93	3459	
ELBA (146_)	13	43	04/86 – 12/93	3461	
ELBA (146_)	15	49	01/92 – 12/96	3459	
ELBA (146_)	15	49	01/92 – 12/96	3461	
ELBA (146_)	15	52	04/86 – 10/92	3459	
ELBA (146_)	15	52	04/86 – 10/92	3461	
ELBA (146_)	1.3 D	33	04/86 – 10/92	3459	
ELBA (146_)	1.3 D	33	04/86 – 10/92	3461	
ELBA (146_)	1.7 D	43	04/89 – 12/96	3459	
ELBA (146_)	1.7 D	43	04/89 – 12/96	3461	
FIORINO (127_)	900	33	10/77 – 12/84	3316	
FIORINO (127_)	900	33	10/77 – 12/84	3625	
FIORINO (127_)	1050	37	01/80 – 12/87	3316	
FIORINO (127_)	1050	37	01/80 – 12/87	3625	
FIORINO (127_) Furgón (LCVs-N1 Segment)	0.9 900 (100 GL.000)		77-84	3357	
FIORINO (127_) Furgón (LCVs-N1 Segment)	1.0 (127 A.000)		80-87	3357	
FIORINO (127_) Furgón (LCVs-N1 Segment)	1.0 1050 (127 A.000)		80-87	3357	
FIORINO (127_) Furgón (LCVs-N1 Segment)	1.3 Diesel (127 A5.000)		82-87	3357	
FIORINO (147_)	10	37	01/80 – 12/87	3316	
FIORINO (147_)	10	37	01/80 – 12/87	3625	
FIORINO (147_)	10	41	12/86 – 04/88	3316	
FIORINO (147_)	10	41	12/86 – 04/88	3625	
FIORINO (147_)	13	49	12/87 – 08/93	3316	
FIORINO (147_)	13	49	12/87 – 08/93	3459	
FIORINO (147_)	13	49	12/87 – 08/93	3461	

MAKE & MODEL   		KW	YEAR		
FIAT					
FIORINO (147_)	13	49	12/87 – 08/93	3625	
FIORINO (147_)	15	55	01/88 – 08/93	3316	
FIORINO (147_)	15	55	01/88 – 08/93	3459	
FIORINO (147_)	15	55	01/88 – 08/93	3461	
FIORINO (147_)	15	55	01/88 – 08/93	3625	
FIORINO (147_)	1.1 60	40	11/86 – 04/88	3316	
FIORINO (147_)	1.1 60	40	11/86 – 04/88	3625	
FIORINO (147_)	1.3 D	33	03/82 – 12/87	3316	
FIORINO (147_)	1.3 D	33	03/82 – 12/87	3625	
FIORINO (147_)	1.7 D	42	01/88 – 10/93	3316	
FIORINO (147_)	1.7 D	42	01/88 – 10/93	3458	
FIORINO (147_)	1.7 D	42	01/88 – 10/93	3459	
FIORINO (147_)	1.7 D	42	01/88 – 10/93	3461	
FIORINO (147_)	1.7 D	42	01/88 – 10/93	3625	
FIORINO (147_)	1.7 D	44	12/87 – 12/90	3316	
FIORINO (147_)	1.7 D	44	12/87 – 12/90	3459	
FIORINO (147_)	1.7 D	44	12/87 – 12/90	3461	
FIORINO (147_)	1.7 D	44	12/87 – 12/90	3625	
FIORINO Box (146_)	14	52	11/92 – 10/96	3458	
FIORINO Box (146_)	14	52	11/92 – 10/96	3459	
FIORINO Box (146_)	14	52	11/92 – 10/96	3461	
FIORINO Box (146_)	1.0 iE	33	11/92 – 04/96	3458	
FIORINO Box (146_)	1.0 iE	33	11/92 – 04/96	3459	
FIORINO Box (146_)	1.0 iE	33	11/92 – 04/96	3461	
FIORINO Box (146_)	1.7 D	44	01/88 – 10/99	3316	
FIORINO Box (146_)	1.7 D	44	01/88 – 10/99	3458	
FIORINO Box (146_)	1.7 D	44	01/88 – 10/99	3459	
FIORINO Box (146_)	1.7 D	44	01/88 – 10/99	3461	
FIORINO Box (146_)	1.7 D	44	01/88 – 10/99	3625	
FIORINO Box (146_)	1.7 TD	46	11/96 – 05/00	3458	
FIORINO Box (146_)	60 1.1	40	05/88 – 12/93	3316	
FIORINO Box (146_)	60 1.1	40	05/88 – 12/93	3458	
FIORINO Box (146_)	60 1.1	40	05/88 – 12/93	3459	
FIORINO Box (146_)	60 1.1	40	05/88 – 12/93	3461	
FIORINO Box (146_)	60 1.1	40	05/88 – 12/93	3625	
FIORINO Box (146_)	60 1.7 D	42	05/88 – 10/96	3316	
FIORINO Box (146_)	60 1.7 D	42	05/88 – 10/96	3458	
FIORINO Box (146_)	60 1.7 D	42	05/88 – 10/96	3459	
FIORINO Box (146_)	60 1.7 D	42	05/88 – 10/96	3461	
FIORINO Box (146_)	60 1.7 D	42	05/88 – 10/96	3625	
FIORINO Box (146_)	60 1.7 D	44	05/88 – 05/00	3316	
FIORINO Box (146_)	60 1.7 D	44	05/88 – 05/00	3458	
FIORINO Box (146_)	60 1.7 D	44	05/88 – 05/00	3459	
FIORINO Box (146_)	60 1.7 D	44	05/88 – 05/00	3461	
FIORINO Box (146_)	60 1.7 D	44	05/88 – 05/00	3625	
FIORINO Box (146_)	65 1.7 TD	46	01/97 – 05/01	3458	
FIORINO Box (146_)	70 1.3	49	01/88 – 12/94	3316	
FIORINO Box (146_)	70 1.3	49	01/88 – 12/94	3458	
FIORINO Box (146_)	70 1.3	49	01/88 – 12/94	3459	
FIORINO Box (146_)	70 1.3	49	01/88 – 12/94	3461	
FIORINO Box (146_)	70 1.3	49	01/88 – 12/94	3625	
FIORINO Box (146_)	70 i.e. 1.4	49	05/94 – 05/01	3458	
FIORINO Box (146_)	75 i.e. 1.5	55	05/88 – 12/93	3316	
FIORINO Box (146_)	75 i.e. 1.5	55	05/88 – 12/93	3458	
FIORINO Box (146_)	75 i.e. 1.5	55	05/88 – 12/93	3459	
FIORINO Box (146_)	75 i.e. 1.5	55	05/88 – 12/93	3461	
FIORINO Box (146_)	75 i.e. 1.5	55	05/88 – 12/93	3625	
FIORINO Box (146_)	75 i.e. 1.6	55	10/93 – 05/01	3458	
FIORINO Pick up (146_)	13	49	01/88 – 12/94	3316	
FIORINO Pick up (146_)	13	49	01/88 – 12/94	3458	
FIORINO Pick up (146_)	13	49	01/88 – 12/94	3459	
FIORINO Pick up (146_)	13	49	01/88 – 12/94	3461	
FIORINO Pick up (146_)	13	49	01/88 – 12/94	3625	
FIORINO Pick up (146_)	14	49	05/94 – 05/01	3458	
FIORINO Pick up (146_)	16	55	01/94 – 05/01	3458	
FIORINO Pick up (146_)	1.7 D	42	10/93 – 10/99	3458	
FIORINO Pick up (146_)	1.7 D	44	05/88 – 10/99	3316	
FIORINO Pick up (146_)	1.7 D	44	05/88 – 10/99	3458	
FIORINO Pick up (146_)	1.7 D	44	05/88 – 10/99	3459	
FIORINO Pick up (146_)	1.7 D	44	05/88 – 10/99	3461	
FIORINO Pick up (146_)	1.7 D	44	05/88 – 10/99	3625	

MAKE & MODEL		KW	YEAR		
FIAT					
FIORINO Pick up (146_)	1.7 TD	46	01/97 – 05/01	3458	
FIORINO Pick up (147_)	10	37	06/82 – 10/87	3316	
FIORINO Pick up (147_)	10	37	06/82 – 10/87	3625	
FIORINO Pick up (147_)	10	41	12/86 – 10/89	3316	
FIORINO Pick up (147_)	10	41	12/86 – 10/89	3459	
FIORINO Pick up (147_)	10	41	12/86 – 10/89	3461	
FIORINO Pick up (147_)	10	41	12/86 – 10/89	3625	
FIORINO Pick up (147_)	1.3 D	33	05/84 – 12/88	3316	
FIORINO Pick up (147_)	1.3 D	33	05/84 – 12/88	3459	
FIORINO Pick up (147_)	1.3 D	33	05/84 – 12/88	3461	
FIORINO Pick up (147_)	1.3 D	33	05/84 – 12/88	3625	
FREEMONT (JC_, JF_)	24	125	08/11 -	4005	
FREEMONT (JC_, JF_)	24	129	08/12 -	4005	
FREEMONT (JC_, JF_)	36	206	08/11 -	4005	
FREEMONT (JC_, JF_)	2.0 JTD	100	08/11 -	4005	
FREEMONT (JC_, JF_)	2.0 JTD	103	08/11 -	4005	
FREEMONT (JC_, JF_)	2.0 JTD	120	08/11 -	4005	
FREEMONT (JC_, JF_)	2.0 JTD	125	08/11 -	4005	
FREEMONT (JC_, JF_)	2.0 JTD 4x4	120	08/11 -	4005	
FREEMONT (JC_, JF_)	2.0 JTD 4x4	125	08/11 -	4005	
FREEMONT (JC_, JF_)	3.6 4x4	206	08/11 -	4005	
GRANDE PUNTO (199_)	12	48	10/05 -	3826/3	
GRANDE PUNTO (199_)	14	57	10/05 -	3826/3	
GRANDE PUNTO (199_)	1.3 D Multijet	55	10/05 -	3826/3	
GRANDE PUNTO (199_)	1.4 LPG	57	12/08 -	3826/3	
IDEA (350_)	14	57	10/05 -	3826	
IDEA (350_)	14	57	10/05 -	3826/1	
IDEA (350_)	14	66	12/03 -	3826/1	
IDEA (350_)	1.2 16V	59	01/04 -	3826	
IDEA (350_)	1.2 16V	59	01/04 -	3826/1	
IDEA (350_)	1.3 D Multijet	51	01/04 -	3826	
IDEA (350_)	1.3 D Multijet	51	01/04 -	3826/1	
IDEA (350_)	1.4 16V	70	01/04 -	3826	
IDEA (350_)	1.4 16V	70	01/04 -	3826/1	
IDEA (350_)	1.4 LPG	57	03/09 -	3826/1	
LINEA (323_)	14	57	06/07 -	3826/1	
LINEA (323_)	14	57	06/07 -	3826/3	
LINEA (323_)	16	80	07/08 -		4123
LINEA (323_)	1.3 D Multijet	66	06/07 -	3826/1	
LINEA (323_)	1.3 D Multijet	66	06/07 -	3826/3	
LINEA (323_)	1.3 D Multijet	70	09/09 -	3826/1	
LINEA (323_)	1.4 T-Jet	88	09/07 -		4123
LINEA (323_)	1.6 D Multijet	77	06/09 -		4123
LINEA (323_)	1.9 16V	94	07/08 -		4123
MAREA (185_)	16	68	03/99 – 08/00	3618	
MAREA (185_)	16	76	09/00 – 08/02	3618	
MAREA (185_)	1.6 100 16V	76	09/96 – 05/02	3618	
MAREA (185_)	1.6 100 16V Bipower	76	04/99 – 05/02	3618	
MAREA (185_)	1.6 16V	75	04/97 – 02/99	3618	
MAREA (185_)	1.6 SX	72	09/00 – 08/02	3618	
MAREA (185_)	1.8 115 16V	83	09/96 – 05/02	3618	
MAREA (185_)	1.9 JTD	79	01/01 – 12/07	3618	
MAREA (185_)	1.9 JTD 105	77	04/99 – 01/01	3618	
MAREA (185_)	1.9 JTD 110	81	01/01 – 05/02	3618	
MAREA (185_)	1.9 TD 100	74	09/96 – 05/02	3618	
MAREA Weekend (185_)	16	76	09/00 – 08/02	3618	
MAREA Weekend (185_)	1.2 16V	60	10/98 – 05/02	3618	
MAREA Weekend (185_)	1.4 80 12V	59	09/96 – 05/02	3618	
MAREA Weekend (185_)	1.6 100 16V	76	09/96 – 05/02	3618	
MAREA Weekend (185_)	1.8 115 16V	83	09/96 – 05/02	3618	
MAREA Weekend (185_)	1.9 JTD	79	01/01 – 12/07	3618	
MAREA Weekend (185_)	1.9 JTD 105	77	04/99 – 05/02	3618	
MAREA Weekend (185_)	1.9 TD 100	74	09/96 – 05/02	3618	
MAREA Weekend (185_)	1.9 TD 75	55	09/96 – 05/02	3618	
PALIO (178_)	1.0	45	04/96-10/03	3569	
PALIO (178_)	1.2	44	07/97-08/02	3569	
PALIO (178_)	1.4	51	04/96-10/02	3569	
PALIO (178_)	1.4 Cat	51	04/96-08/01	3569	
PALIO (178BX)	10	45	04/96 -	3568	
PALIO (178BX)	10	45	04/96 -	3690	
PALIO (178BX)	10	45	04/96 – 10/03	3790	

MAKE & MODEL		KW	YEAR		
FIAT					
PALIO (178BX)	11	40	07/97 – 10/03	3568	
PALIO (178BX)	11	40	07/97 – 10/03	3690	
PALIO (178BX)	11	40	07/97 – 10/03	3790	
PALIO (178BX)	12	44	07/97 – 08/02	3568	
PALIO (178BX)	12	44	07/97 – 08/02	3690	
PALIO (178BX)	12	44	07/97 – 08/02	3790	
PALIO (178BX)	12	50	06/99 – 10/00	3690	
PALIO (178BX)	12	50	06/99 – 10/00	3790	
PALIO (178BX)	12	54	06/98 -	3690	
PALIO (178BX)	12	54	06/98 -	3790	
PALIO (178BX)	12	59	09/01 -	3690	
PALIO (178BX)	12	59	09/01 -	3790	
PALIO (178BX)	14	51	04/96 -	3568	
PALIO (178BX)	14	51	04/96 -	3690	
PALIO (178BX)	14	51	04/96 – 10/02	3790	
PALIO (178BX)	1.2 (178 B7.045)	44	07.97 – 08.02	3827	
PALIO (178BX)	1.2 (178 C4.066)	44	07.97 – 08.02	3827	
PALIO (178BX)	1.2 (188 A4.000)	44	07.97 – 08.02	3827	
PALIO (178BX)	1.3 JTD Multijet	51	06/03 -	3690	
PALIO (178BX)	1.3 JTD Multijet	51	06/03 -	3790	
PALIO (178BX)	1.4 CAT	51	04/96 -	3568	
PALIO (178BX)	1.4 CAT	51	04/96 -	3690	
PALIO (178BX)	1.4 Cat	51	04/96 – 08/01	3790	
PALIO (178BX)	1.6 16V	74	04/96 -	3478	
PALIO (178BX)	1.6 16V	74	04/96 -	3479	
PALIO (178BX)	1.6 16V	74	04/96 -	3690	
PALIO (178BX)	1.6 16V	74	04/96 – 10/02	3790	
PALIO (178BX)	1.7 TD	53	09/01 -	3690	
PALIO (178BX)	1.7 TD	53	09/01 -	3790	
PALIO Estate	13	59	01/02 – 12/05	3690	
PALIO Estate	13	59	01/02 – 12/05	3790	
PALIO Estate	15	63	01/02 – 12/07	3790	
PALIO Estate	1.5	63	01/02 -	3690	
PALIO Hatchback	13	44	01/02 -	3826	
PALIO Hatchback	13	59	01/02 -	3826	
PALIO Hatchback	15	63	01/02 -	3826	
PALIO Weekend (178_)	12	59	09/01 -	3690	
PALIO Weekend (178_)	12	59	09/01 -	3790	
PALIO Weekend (178_)	15	62	02/02 -	3690	
PALIO Weekend (178_)	15	62	02/02 -	3790	
PALIO Weekend (178_)	1.2	54	04/96-02/01	3569	
PALIO Weekend (178_)	1.2 (178DX.G1A)	54	04/96 – 02/01	3568	
PALIO Weekend (178_)	1.2 (178DX.G1A)	54	04/96 – 02/01	3690	
PALIO Weekend (178_)	1.2 (178DX.G1A)	54	04/96 – 02/01	3790	
PALIO Weekend (178_)	1.2 (178DYA1A)	44	02/01 -	3690	
PALIO Weekend (178_)	1.2 (178DYA1A)	44	02/01 -	3790	
PALIO Weekend (178_)	1.2 Flex	44	07/97 – 08/02	3690	
PALIO Weekend (178_)	1.2 Flex	44	07/97 – 08/02	3790	
PALIO Weekend (178_)	1.2 LPG	44	07/97 – 08/02	3690	
PALIO Weekend (178_)	1.2 LPG	44	07/97 – 08/02	3790	
PALIO Weekend (178_)	1.6 16V	68	07/97 – 10/03	3690	
PALIO Weekend (178_)	1.6 16V	68	07/97 – 10/03	3790	
PALIO Weekend (178_)	1.6 16V (178DX.D1A)	74	04/96 – 02/01	3478	
PALIO Weekend (178_)	1.6 16V (178DX.D1A)	74	04/96 – 02/01	3479	
PALIO Weekend (178_)	1.6 16V (178DX.D1A)	74	04/96 – 02/01	3690	
PALIO Weekend (178_)	1.6 16V (178DX.D1A)	74	04/96 – 02/01	3790	
PALIO Weekend (178_)	1.6 16V (178DYC1A06)	76	02/01 -	3690	
PALIO Weekend (178_)	1.6 16V (178DYC1A06)	76	02/01 -	3790	
PALIO Weekend (178_)	1.7 TD	51	04/96-03/01	3569	
PALIO Weekend (178_)	1.7 TD (178DX.H1A)	51	04/96 – 03/01	3568	
PALIO Weekend (178_)	1.7 TD (178DX.H1A)	51	04/96 – 03/01	3690	
PALIO Weekend (178_)	1.7 TD (178DX.H1A)	51	04/96 – 03/01	3790	
PALIO Weekend (178_)	1.9 D (178DYD1A07)	46	03/01 -	3690	
PALIO Weekend (178_)	1.9 D (178DYD1A07)	46	03/01 -	3790	
PALIO Weekend (178_)	1.9 JTD	59	09/01 -	3690	
PALIO Weekend (178_)	1.9 JTD	59	09/01 -	3790	
PANDA (141_)	650	22	01/82 – 07/04	3424/1	
PANDA (141_)	650	22	01/82 – 07/04	3466	
PANDA (141_)	650	22	01/82 – 07/04	3468	
PANDA (141_)	750	25	01/86 – 10/03	3424/1	
PANDA (141_)	750	25	01/86 – 10/03	3466	

MAKE & MODEL		KW	YEAR		
FIAT					
PANDA (141_)	750	25	01/86 – 10/03	3468	
PANDA (141_)	800	25	02/81 – 12/85	3424/1	
PANDA (141_)	800	25	02/81 – 12/85	3466	
PANDA (141_)	800	25	02/81 – 12/85	3468	
PANDA (141_)	900	29	04/92 – 12/96	3424/1	
PANDA (141_)	900	29	04/92 – 12/96	3466	
PANDA (141_)	900	29	04/92 – 12/96	3468	
PANDA (141_)	900	33	10/80 – 06/94	3424/1	
PANDA (141_)	900	33	10/80 – 06/94	3466	
PANDA (141_)	900	33	10/80 – 06/94	3468	
PANDA (141_)	950	35	09/82 – 08/83	3424/1	
PANDA (141_)	950	35	09/82 – 08/83	3466	
PANDA (141_)	950	35	09/82 – 08/83	3468	
PANDA (141_)	1000	32	01/86 – 04/92	3424/1	
PANDA (141_)	1000	32	01/86 – 04/92	3466	
PANDA (141_)	1000	32	01/86 – 04/92	3468	
PANDA (141_)	1000	37	01/85 – 12/92	3424/1	
PANDA (141_)	1000	37	01/85 – 12/92	3466	
PANDA (141_)	1000	37	01/85 – 12/92	3468	
PANDA (141_)	1100	37	05/91 – 12/99	3424/1	
PANDA (141_)	1100	37	05/91 – 12/99	3466	
PANDA (141_)	1100	37	05/91 – 12/99	3468	
PANDA (141_)	1100	40	02/95 – 09/03	3424/1	
PANDA (141_)	1100	40	02/95 – 09/03	3466	
PANDA (141_)	1100	40	02/95 – 09/03	3468	
PANDA (141_)	0.8 750 (141 B.000)	25	01/86 – 07/92	3439	
PANDA (141_)	0.9 Fire S All-wheel Drive	33	10/80 – 04/86	3424/1	
PANDA (141_)	0.9 Fire S All-wheel Drive	33	10/80 – 04/86	3466	
PANDA (141_)	0.9 Fire S All-wheel Drive	33	10/80 – 04/86	3468	
PANDA (141_)	1.0 1000 (156 A2.100)	32	01/86 – 02/92	3439	
PANDA (141_)	1.0 1000 (156 A3.100)	32	01/86 – 02/92	3439	
PANDA (141_)	1.1 (156 C.046)	37	05/91 – 03/95	3439	
PANDA (141_)	1.1 (187 A1.000)	40	09/00 – 02/04	3439	
PANDA (141_)	1000 4x4	32	01/86 – 07/89	3424/1	
PANDA (141_)	1000 4x4	32	01/86 – 07/89	3466	
PANDA (141_)	1000 4x4	32	01/86 – 07/89	3468	
PANDA (141_)	1000 4x4	33	05/86 – 12/94	3424/1	
PANDA (141_)	1000 4x4	33	05/86 – 12/94	3466	
PANDA (141_)	1000 4x4	33	05/86 – 12/94	3468	
PANDA (141_)	1000 4x4	37	01/86 – 12/92	3424/1	
PANDA (141_)	1000 4x4	37	01/86 – 12/92	3466	
PANDA (141_)	1000 4x4	37	01/86 – 12/92	3468	
PANDA (141_)	1000 i.e. CAT	33	10/87 – 08/98	3424/1	
PANDA (141_)	1000 i.e. CAT	33	10/87 – 08/98	3466	
PANDA (141_)	1000 i.e. CAT	33	10/87 – 08/98	3468	
PANDA (141_)	1100 4x4	40	02/95 – 07/04	3424/1	
PANDA (141_)	1100 4x4	40	02/95 – 07/04	3466	
PANDA (141_)	1100 4x4	40	02/95 – 07/04	3468	
PANDA (141_)	1100 Trekking 4x4	37	10/91 – 07/04	3424/1	
PANDA (141_)	1100 Trekking 4x4	37	10/91 – 07/04	3466	
PANDA (141_)	1100 Trekking 4x4	37	10/91 – 07/04	3468	
PANDA (141_)	1300 D	27	04/86 – 12/92	3424/1	
PANDA (141_)	1300 D	27	04/86 – 12/92	3466	
PANDA (141_)	1300 D	27	04/86 – 12/92	3468	
PANDA (141_)	750 (141AI)	25	01/86 – 01/95	3424/1	
PANDA (141_)	750 (141AI)	25	01/86 – 01/95	3466	
PANDA (141_)	750 (141AI)	25	01/86 – 01/95	3468	
PANDA (141_)	750 (141AM) CAT	25	01/95 – 10/03	3424/1	
PANDA (141_)	750 (141AM) CAT	25	01/95 – 10/03	3466	
PANDA (141_)	750 (141AM) CAT	25	01/95 – 10/03	3468	
PANDA (141_)	950 4x4	35	09/83 – 12/86	3424/1	
PANDA (141_)	950 4x4	35	09/83 – 12/86	3466	
PANDA (141_)	950 4x4	35	09/83 – 12/86	3468	
PANDA (141_) Furgón (City car-A Segment)	0.8 750 (141 B.000)		86-92	3357	
PANDA (141_) Furgón (City car-A Segment)	1.0 1000 (156 A2.100)		86-92	3357	
PANDA (141_) Furgón (City car-A Segment)	1.0 1000 (156 A3.100)		86-92	3357	
PANDA (141A_)	650	22	01/82 – 07/04	3439	
PANDA (141A_)	0.7 650 (141 A.000)	22	01/82 – 07/04	3439	
PANDA (141A_)	0.9 900 (1170 A1.046)	29	04/92 – 12/96	3439	
PANDA (141A_)	0.9 900 (146 A.000)	33	10/80 – 06/94	3439	
PANDA (141A_)	0.9 900 (100 GL3.000)	33	10/80 – 06/94	3439	

MAKE & MODEL		KW	YEAR		
FIAT					
PANDA (141A_)	0.9 Fire S (146 A.048)	33	10/80 – 04/86	3439	
PANDA (141A_)	1.0 1000 (141 C2.000)	33	05/86 – 12/94	3439	
PANDA (141A_)	1.0 1000 (156 A2.100)	32	01/86 – 07/89	3439	
PANDA (141A_)	1.0 1000 (156 A2.100)	32	01/86 – 04/92	3439	
PANDA (141A_)	1.0 1000 (156 A2.246)	33	05/86 – 12/94	3439	
PANDA (141A_)	1.0 1000 (156 A3.000)	37	01/86 – 12/92	3439	
PANDA (141A_)	1.0 1000 (156 A3.000)	37	01/85 – 12/92	3439	
PANDA (141A_)	1.0 1000 (156 A3.100)	32	01/86 – 07/89	3439	
PANDA (141A_)	1.1 1100 (156 C.046)	37	05/91 – 12/99	3439	
PANDA (141A_)	1.1 1100 (176 B2.000)	40	02/95 – 09/03	3439	
PANDA (141A_)	1.1 1100 (176 B2.000)	40	02/95 – 07/04	3439	
PANDA (141A_)	1.1 1100 (187 A1.000)	40	02/95 – 09/03	3439	
PANDA (141A_)	1.1 1100 Trekking (156 C.046)	37	10/91 – 07/04	3439	
PANDA (141A_)	1.3 1300 D (156 A5.000)	27	04/86 – 12/92	3439	
PANDA (141A_)	1000 i.e. Cat (141 C2.000)	33	10/87 – 08/98	3439	
PANDA (141A_)	1000 i.e. Cat (156 A2.246)	33	10/87 – 08/98	3439	
PANDA (141A_)	750 (156 A4.000)	25	01/86 – 10/03	3439	
PANDA (141A_)	750 (141 B.000)	25	01/86 – 01/95	3439	
PANDA (141A_)	800 (100 GL6.000)	25	02/81 – 12/85	3439	
PANDA (141A_) Fastback (City car-A Segment)	650		82-04	3357	
PANDA (141A_) Fastback (City car-A Segment)	0.7 650 (141 A.000)		82-04	3357	
PANDA (141A_) Fastback (City car-A Segment)	0.8 750 (141 B.000)		86-95	3357	
PANDA (141A_) Fastback (City car-A Segment)	0.9 900 (100 GL3.000)		80-94	3357	
PANDA (141A_) Fastback (City car-A Segment)	0.9 900 (1170 A1.046)		92-96	3357	
PANDA (141A_) Fastback (City car-A Segment)	0.9 900 (146 A.000)		80-94	3357	
PANDA (141A_) Fastback (City car-A Segment)	0.9 950 (A 112 B1.054)		82-83	3357	
PANDA (141A_) Fastback (City car-A Segment)	0.9 Fire S (146 A.048)		80-86	3357	
PANDA (141A_) Fastback (City car-A Segment)	1.0 1000 (156 A2.100)		86-89	3357	
PANDA (141A_) Fastback (City car-A Segment)	1.0 1000 (156 A3.100)		86-89	3357	
PANDA (141A_) Fastback (City car-A Segment)	1.0 950 (A 112 B1.054)		83-86	3357	
PANDA (141A_) Fastback (City car-A Segment)	750 (156 A4.000)		86-03	3357	
PANDA (141A_) Fastback (City car-A Segment)	800 (100 GL6.000)		81-85	3357	
PANDA (169_)	11	40	09/03 -	3608	
PANDA (169_)	11	40	09/03 -	3643	
PANDA (169_)	12	44	09/03 -	3608	
PANDA (169_)	12	44	09/03 -	3643	
PANDA (169_)	12	51	03/10 -	3608	
PANDA (169_)	12	51	03/10 -	3643	
PANDA (169_)	14	74	10/06 -	3826/1	
PANDA (169_)	1.2 4x4	44	10/04 -	4173	
PANDA (169_)	1.2 4x4	51	11/09 -	4173	
PANDA (169_)	1.2 LPG	44	04/09 -	3608	
PANDA (169_)	1.2 LPG	44	04/09 -	3643	
PANDA (169_)	1.2 LPG	51	11/10 -	3608	
PANDA (169_)	1.2 LPG	51	11/10 -	3643	
PANDA (169_)	1.2 Natural Power	44	01/07 – 11/09	4173	
PANDA (169_)	1.3 D Multijet	51	09/03 -	4173	
PANDA (169_)	1.3 D Multijet	55	06/06 -	4173	
PANDA (169_)	1.3 D Multijet 4x4	51	10/04 -	3826/1	
PANDA (169_)	1.3 D Multijet 4x4	55	09/10 -	3826/1	
PANDA (169_)	1.4 Natural Power	51	01/10 -	3608	
PANDA (169_)	1.4 Natural Power	51	01/10 -	3643	
PANDA (169_)	1.4 Natural Power	57	09/10 -	4173	
PANDA Van (141_)	11	37	05/91 – 03/95	3424/1	
PANDA Van (141_)	11	37	05/91 – 03/95	3466	
PANDA Van (141_)	11	37	05/91 – 03/95	3468	
PANDA Van (141_)	11	40	09/00 – 02/04	3424/1	
PANDA Van (141_)	11	40	09/00 – 02/04	3466	
PANDA Van (141_)	11	40	09/00 – 02/04	3468	
PANDA Van (141_)	750	25	01/86 – 07/92	3424/1	
PANDA Van (141_)	750	25	01/86 – 07/92	3466	
PANDA Van (141_)	750	25	01/86 – 07/92	3468	
PANDA Van (141_)	1000	32	01/86 – 02/92	3424/1	
PANDA Van (141_)	1000	32	01/86 – 02/92	3466	
PANDA Van (141_)	1000	32	01/86 – 02/92	3468	
PANDA Van (141_)	1.1 4x4	40	09/00 – 02/04	3424/1	
PANDA Van (141_)	1.1 4x4	40	09/00 – 02/04	3466	
PANDA Van (141_)	1.1 4x4	40	09/00 – 02/04	3468	
PANDA Van (141_)	1000 i.e	33	08/92 – 02/04	3424/1	
PANDA Van (141_)	1000 i.e	33	08/92 – 02/04	3466	
PANDA Van (141_)	1000 i.e	33	08/92 – 02/04	3468	

MAKE & MODEL		KW	YEAR		
FIAT					
PANDA Van (169_)	11	40	09/04 -	3608	
PANDA Van (169_)	11	40	09/04 -	3643	
PANDA Van (169_)	12	44	09/04 -	3608	
PANDA Van (169_)	12	44	09/04 -	3643	
PANDA Van (169_)	12	51	09/10 -	3608	
PANDA Van (169_)	12	51	09/10 -	3643	
PANDA Van (169_)	1.2 4x4	44	09/04 -	4173	
PANDA Van (169_)	1.2 4x4	51	09/10 -	4173	
PANDA Van (169_)	1.2 LPG	44	04/09 -	3608	
PANDA Van (169_)	1.2 LPG	44	04/09 -	3643	
PANDA Van (169_)	1.2 LPG	51	09/10 -	3608	
PANDA Van (169_)	1.2 LPG	51	09/10 -	3643	
PANDA Van (169_)	1.2 Natural Power	44	01/07 – 11/09	4173	
PANDA Van (169_)	1.3 D Multijet	51	03/04 -	4173	
PANDA Van (169_)	1.3 D Multijet	55	01/06 -	4173	
PANDA Van (169_)	1.3 D Multijet 4x4	51	10/04 – 12/06	4173	
PANDA Van (169_)	1.3 D Multijet 4x4	55	01/06 -	3826/1	
PANDA Van (169_)	1.4 Natural Power	57	10/09 -	3826/1	
PENNY VAN (257_)	11	43	01/86 – 12/90	3459	
PENNY VAN (257_)	11	43	01/86 – 12/90	3461	
PENNY VAN (257_)	13	49	01/86 – 12/90	3459	
PENNY VAN (257_)	13	49	01/86 – 12/90	3461	
PENNY VAN (257_)	1.7 D	44	01/86 – 12/90	3459	
PENNY VAN (257_)	1.7 D	44	01/86 – 12/90	3461	
PREMIO	13	43	03/85 – 06/92	3459	
PREMIO	13	43	03/85 – 06/92	3461	
PREMIO	15	49	03/85 – 12/96	3459	
PREMIO	15	49	03/85 – 12/96	3461	
PREMIO	16	62	03/85 – 12/96	3459	
PREMIO	16	62	03/85 – 12/96	3461	
PREMIO	1.5 i.e.	55	06/92 – 12/96	3459	
PREMIO	1.5 i.e.	55	06/92 – 12/96	3461	
PREMIO	1.6 i.e.	60	08/93 – 12/96	3459	
PREMIO	1.6 i.e.	60	08/93 – 12/96	3461	
PUNTO (176_)	16	65	01/94 – 04/97	3466	
PUNTO (176_)	16	65	01/94 – 04/97	3468	
PUNTO (176_)	1.2 16V	63	04/97 – 09/99	3466	
PUNTO (176_)	1.2 16V	63	04/97 – 09/99	3468	
PUNTO (176_)	1.2 16V	63	04/97 – 09/99	3897	
PUNTO (176_)	1.4 GT Turbo	96	09/96 – 09/99	3466	
PUNTO (176_)	1.4 GT Turbo	96	09/96 – 09/99	3468	
PUNTO (176_)	1.4 GT Turbo	98	01/94 – 09/96	3466	
PUNTO (176_)	1.4 GT Turbo	98	01/94 – 09/96	3468	
PUNTO (176_)	1.7 D	42	04/94 – 09/97	3466	
PUNTO (176_)	1.7 D	42	04/94 – 09/97	3468	
PUNTO (176_)	1.7 D	42	04/94 – 09/97	3608	
PUNTO (176_)	1.7 D	42	04/94 – 09/97	3643	
PUNTO (176_)	1.7 TD	46	09/96 – 09/99	3466	
PUNTO (176_)	1.7 TD	46	09/96 – 09/99	3468	
PUNTO (176_)	1.7 TD	46	09/96 – 09/99	3897	
PUNTO (176_)	1.7 TD	51	01/94 – 09/99	3466	
PUNTO (176_)	1.7 TD	51	01/94 – 09/99	3468	
PUNTO (176_)	1.7 TD	51	01/94 – 09/99	3897	
PUNTO (176_)	1.7 TD	52	01/94 – 09/99	3466	
PUNTO (176_)	1.7 TD	52	01/94 – 09/99	3468	
PUNTO (176_)	1.7 TD	52	01/94 – 09/99	3897	
PUNTO (176_)	55 1.1	40	09/93 – 09/99	3466	
PUNTO (176_)	55 1.1	40	09/93 – 09/99	3468	
PUNTO (176_)	55 1.1	40	09/93 – 09/99	3608	
PUNTO (176_)	55 1.1	40	09/93 – 09/99	3643	
PUNTO (176_)	60 1.2	43	01/94 – 09/99	3466	
PUNTO (176_)	60 1.2	43	01/94 – 09/99	3468	
PUNTO (176_)	60 1.2	43	01/94 – 09/99	3608	
PUNTO (176_)	60 1.2	43	01/94 – 09/99	3643	
PUNTO (176_)	60 1.2	44	03/94 – 09/99	3466	
PUNTO (176_)	60 1.2	44	03/94 – 09/99	3468	
PUNTO (176_)	60 1.2	44	03/94 – 09/99	3608	
PUNTO (176_)	60 1.2	44	03/94 – 09/99	3643	
PUNTO (176_)	75 1.2	54	10/93 – 09/99	3466	
PUNTO (176_)	75 1.2	54	10/93 – 09/99	3468	
PUNTO (176_)	75 1.2	54	10/93 – 09/99	3608	

MAKE & MODEL   		KW	YEAR		
FIAT					
PUNTO (176_)	75 1.2	54	10/93 – 09/99	3643	
PUNTO (188_)	1.2 16V 80 (188.233, .235,.253, .255, .333, .353,	59	09/99 – 12/06	3897	
PUNTO (188_)	1.2 60 (188.030, .050, .130,.150, .230, .250)	44	09/99 – 03/12	3608	
PUNTO (188_)	1.2 60 (188.030, .050, .130,.150, .230, .250)	44	09/99 – 03/12	3643	
PUNTO (188_)	1.2 Bifuel	44	08/07 – 03/12	3608	
PUNTO (188_)	1.2 Bifuel	44	08/07 – 03/12	3643	
PUNTO (188_)	1.2 Natural Power	44	09/03 – 03/12	3608	
PUNTO (188_)	1.2 Natural Power	44	09/03 – 03/12	3643	
PUNTO (188_)	1.8 130 HGT (188.738, .718)	96	09/99 – 03/12	3690	
PUNTO (188_)	1.8 130 HGT (188.738, .718)	96	09/99 – 03/12	3790	
PUNTO Convertible (176_)	60 1.2	43	04/94 – 06/00	3466	
PUNTO Convertible (176_)	60 1.2	43	04/94 – 06/00	3468	
PUNTO Convertible (176_)	60 1.2	43	04/94 – 06/00	3608	
PUNTO Convertible (176_)	60 1.2	43	04/94 – 06/00	3643	
PUNTO Convertible (176_)	60 1.2	44	05/95 – 06/00	3466	
PUNTO Convertible (176_)	60 1.2	44	05/95 – 06/00	3468	
PUNTO Convertible (176_)	60 1.2	44	05/95 – 06/00	3608	
PUNTO Convertible (176_)	60 1.2	44	05/95 – 06/00	3643	
PUNTO Convertible (176_)	85 16V 1.2	63	04/97 – 06/00	3466	
PUNTO Convertible (176_)	85 16V 1.2	63	04/97 – 06/00	3468	
PUNTO Convertible (176_)	85 16V 1.2	63	04/97 – 06/00	3897	
PUNTO Convertible (176_)	90 1.6	65	04/94 – 04/97	3466	
PUNTO Convertible (176_)	90 1.6	65	04/94 – 04/97	3468	
PUNTO EVO (199_)	12	48	10/09 – 02/12	3826/3	
PUNTO EVO (199_)	14	57	10/09 – 02/12	3826/3	
PUNTO EVO (199_)	1.3 D Multijet	55	10/09 – 02/12	3826/3	
PUNTO Van (176_)	11	40	04/96 – 02/00	3466	
PUNTO Van (176_)	11	40	04/96 – 02/00	3468	
PUNTO Van (176_)	11	40	04/96 – 02/00	3608	
PUNTO Van (176_)	11	40	04/96 – 02/00	3643	
PUNTO Van (176_)	1.7 D	42	04/96 – 02/00	3466	
PUNTO Van (176_)	1.7 D	42	04/96 – 02/00	3468	
PUNTO Van (176_)	1.7 D	42	04/96 – 02/00	3608	
PUNTO Van (176_)	1.7 D	42	04/96 – 02/00	3643	
PUNTO Van (176_)	1.7 TD	46	09/96 – 09/99	3466	
PUNTO Van (176_)	1.7 TD	46	09/96 – 09/99	3468	
PUNTO Van (176_)	1.7 TD	46	09/96 – 09/99	3897	
PUNTO Van (176_)	1.7 TD	52	04/96 – 02/00	3466	
PUNTO Van (176_)	1.7 TD	52	04/96 – 02/00	3468	
PUNTO Van (176_)	1.7 TD	52	04/96 – 02/00	3897	
PUNTO Van (188_)	1.2 60	44	02/00 – 10/09	3608	
PUNTO Van (188_)	1.2 60	44	02/00 – 10/09	3643	
PUNTO Van (188_)	1.3 D Multijet	55	02/05 – 10/09	3618	
PUNTO Van (199_)	14	57	02/06 – 06/13	3826/3	
PUNTO Van (199_)	1.3 D Multijet	55	04/08 -	3826/3	
PUNTO Van (199_)	1.4 LPG	57	03/09 -	3826/3	
PUNTO Van (199_)	1.4 Natural Power	57	03/09 -	3826/3	
REGATA	85/100 - ONLY S. AMERICA		93-	3460	
REGATA (138_)	100 Super 1.6	70	10/83 – 07/89	3424/1	
REGATA (138_)	100 Super 1.6	70	10/83 – 07/89	3466	
REGATA (138_)	100 Super 1.6	70	10/83 – 07/89	3468	
REGATA (138_)	100 Super 1.6	74	10/83 – 12/90	3424/1	
REGATA (138_)	100 Super 1.6	74	10/83 – 12/90	3466	
REGATA (138_)	100 Super 1.6	74	10/83 – 12/90	3468	
REGATA (138_)	60 Diesel 1.7	43	09/83 – 12/86	3424/1	
REGATA (138_)	60 Diesel 1.7	43	09/83 – 12/86	3466	
REGATA (138_)	60 Diesel 1.7	43	09/83 – 12/86	3468	
REGATA (138_)	60 Diesel 1.7	44	05/85 – 03/89	3424/1	
REGATA (138_)	60 Diesel 1.7	44	05/85 – 03/89	3466	
REGATA (138_)	60 Diesel 1.7	44	05/85 – 03/89	3468	
REGATA (138_)	65 Diesel 1.9	48	04/84 – 07/89	3424/1	
REGATA (138_)	65 Diesel 1.9	48	04/84 – 07/89	3466	
REGATA (138_)	65 Diesel 1.9	48	04/84 – 07/89	3468	
REGATA (138_)	70 1.3	48	09/83 – 07/89	3424/1	
REGATA (138_)	70 1.3	50	09/83 – 07/86	3424/1	
REGATA (138_)	75 1.5	55	12/83 – 07/89	3424/1	
REGATA (138_)	75 i.e. 1.5	55	07/85 – 07/89	3424/1	
REGATA (138_)	80 Turbo Diesel 1.9	59	05/86 – 07/89	3424/1	
REGATA (138_)	80 Turbo Diesel 1.9	59	05/86 – 07/89	3466	
REGATA (138_)	80 Turbo Diesel 1.9	59	05/86 – 07/89	3468	
REGATA (138_)	85 1.5	58	05/85 – 12/87	3424/1	

MAKE & MODEL		KW	YEAR		
FIAT					
REGATA (138_)	85 1.5	58	05/85 – 12/87	3466	
REGATA (138_)	85 1.5	58	05/85 – 12/87	3468	
REGATA (138_)	85 1.6	60	10/83 – 06/90	3424/1	
REGATA (138_)	85 1.6	60	10/83 – 06/90	3466	
REGATA (138_)	85 1.6	60	10/83 – 06/90	3468	
REGATA (138_)	85 Super 1.5	60	09/83 – 04/85	3424/1	
REGATA (138_)	85 Super 1.5	60	09/83 – 04/85	3466	
REGATA (138_)	85 Super 1.5	60	09/83 – 04/85	3468	
REGATA (138_)	90 i.e. 1.6	66	01/87 – 07/89	3424/1	
REGATA (138_)	90 i.e. 1.6	66	01/87 – 07/89	3466	
REGATA (138_)	90 i.e. 1.6	66	01/87 – 07/89	3468	
REGATA Weekend (138_)	100 1.6 (RF)	74	09/84 – 12/90	3466	
REGATA Weekend (138_)	100 1.6 (RF)	74	09/84 – 12/90	3468	
REGATA Weekend (138_)	100 i.e. 1.6	74	01/87 – 12/90	3466	
REGATA Weekend (138_)	100 i.e. 1.6	74	01/87 – 12/90	3468	
REGATA Weekend (138_)	60 Diesel 1.7	44	01/84 – 12/89	3466	
REGATA Weekend (138_)	60 Diesel 1.7	44	01/84 – 12/89	3468	
REGATA Weekend (138_)	65 Diesel 1.9	48	04/84 – 07/89	3466	
REGATA Weekend (138_)	65 Diesel 1.9	48	04/84 – 07/89	3468	
REGATA Weekend (138_)	70 1.3	50	01/84 – 07/89	3466	
REGATA Weekend (138_)	70 1.3	50	01/84 – 07/89	3468	
REGATA Weekend (138_)	75 1.5	55	09/84 – 07/89	3466	
REGATA Weekend (138_)	75 1.5	55	09/84 – 07/89	3468	
REGATA Weekend (138_)	75 1.5 i.e. CAT	55	12/86 – 07/89	3466	
REGATA Weekend (138_)	75 1.5 i.e. CAT	55	12/86 – 07/89	3468	
REGATA Weekend (138_)	80 Turbo Diesel 1.9	59	05/86 – 07/89	3466	
REGATA Weekend (138_)	80 Turbo Diesel 1.9	59	05/86 – 07/89	3468	
REGATA Weekend (138_)	85 1.5	60	01/84 – 04/89	3466	
REGATA Weekend (138_)	85 1.5	60	01/84 – 04/89	3468	
REGATA Weekend (138_)	90 i.e. 1.6	66	01/87 – 07/89	3466	
REGATA Weekend (138_)	90 i.e. 1.6	66	01/87 – 07/89	3468	
RITMO (138_)	10	44	09/78 – 09/82	3316	
RITMO (138_)	10	44	09/78 – 09/82	3424/1	
RITMO (138_)	11	40	10/82 – 12/87	3424/1	
RITMO (138_)	11	43	04/85 – 12/87	3424/1	
RITMO (138_)	13	48	01/78 – 08/85	3316	
RITMO (138_)	13	48	01/78 – 08/85	3424/1	
RITMO (138_)	13	48	11/83 – 08/85	3424/1	
RITMO (138_)	13	50	01/83 – 04/85	3424/1	
RITMO (138_)	13	55	01/81 – 09/82	3316	
RITMO (138_)	13	55	01/81 – 09/82	3424/1	
RITMO (138_)	15	55	01/78 – 12/88	3316	
RITMO (138_)	15	55	01/78 – 12/88	3424/1	
RITMO (138_)	15	55	10/85 – 05/87	3424/1	
RITMO (138_)	15	58	08/85 – 05/87	3424/1	
RITMO (138_)	15	60	01/83 – 12/87	3329/1	
RITMO (138_)	15	60	01/83 – 12/87	3348	
RITMO (138_)	15	60	01/83 – 12/87	3349	
RITMO (138_)	15	60	01/83 – 12/87	3424/1	
RITMO (138_)	15	60	01/83 – 12/87	3466	
RITMO (138_)	15	60	01/83 – 12/87	3468	
RITMO (138_)	15	63	01/81 – 05/87	3316	
RITMO (138_)	15	63	01/81 – 05/87	3424/1	
RITMO (138_)	16	66	09/85 – 12/87	3424/1	
RITMO (138_)	16	66	12/85 – 12/87	3424/1	
RITMO (138_)	16	74	01/83 – 12/87	3424/1	
RITMO (138_)	16	77	05/81 – 12/87	3485	
RITMO (138_)	1.7 Diesel	40	10/79 – 09/82	3316	
RITMO (138_)	1.7 Diesel	40	10/79 – 09/82	3424/1	
RITMO (138_)	1.7 Diesel	43	10/79 – 10/85	3316	
RITMO (138_)	1.7 Diesel	43	10/79 – 10/85	3424/1	
RITMO (138_)	1.7 Diesel	44	05/85 – 12/87	3424/1	
RITMO (138_)	1.9 TD	59	12/85 – 12/87	3466	
RITMO (138_)	1.9 TD	59	12/85 – 12/87	3468	
RITMO (138_)	125 TC Abarth 2.0	92	11/81 – 09/82	3329/1	
RITMO (138_)	125 TC Abarth 2.0	92	11/81 – 09/82	3348	
RITMO (138_)	125 TC Abarth 2.0	92	11/81 – 09/82	3349	
RITMO / STRADA (138A) Fastback (Compact car-C Segment)	1.0 (127 A6.000)		78-82	3357	
RITMO / STRADA (138A) Fastback (Compact car-C Segment)	1.3 (138 A1.000)		78-85	3357	
RITMO Bertone / STRADA (138_) Cabrío (Compact car-C	1.3 CL		79-	3357	
RITMO Bertone / STRADA (138_) Cabrío (Compact car-C	1.5 CL		79-	3357	

MAKE & MODEL   		KW	YEAR		
FIAT					
RITMO Convertible (138_)	13	48	10/79 – 09/83	3466	
RITMO Convertible (138_)	13	48	10/79 – 09/83	3468	
RITMO Convertible (138_)	13	48	10/79 – 09/83	3485	
RITMO Convertible (138_)	100 1.6	74	10/85 – 12/87	3466	
RITMO Convertible (138_)	100 1.6	74	10/85 – 12/87	3468	
RITMO Convertible (138_)	100 1.6	74	10/85 – 12/87	3485	
RITMO Convertible (138_)	100 1.6	77	10/85 – 12/87	3466	
RITMO Convertible (138_)	100 1.6	77	10/85 – 12/87	3468	
RITMO Convertible (138_)	100 1.6	77	10/85 – 12/87	3485	
RITMO Convertible (138_)	50 1.3	50	10/85 – 12/87	3466	
RITMO Convertible (138_)	50 1.3	50	10/85 – 12/87	3468	
RITMO Convertible (138_)	50 1.3	50	10/85 – 12/87	3485	
RITMO Convertible (138_)	85 1.5	60	03/83 – 12/86	3466	
RITMO Convertible (138_)	85 1.5	60	03/83 – 12/86	3468	
RITMO Convertible (138_)	85 1.5	60	03/83 – 12/86	3485	
RITMO Convertible (138_)	85 1.5	63	01/80 – 07/89	3466	
RITMO Convertible (138_)	85 1.5	63	01/80 – 07/89	3468	
RITMO Convertible (138_)	85 1.5	63	01/80 – 07/89	3485	
RITMO II (138_)	105 1.6	77	01/83 – 12/87	3466	
RITMO II (138_)	105 1.6	77	01/83 – 12/87	3468	
RITMO II (138_)	105 1.6	77	01/83 – 12/87	3485	
RITMO II (138_)	60 Diesel 1.7	43	10/82 – 10/85	3424/1	
RITMO II (138_)	75 1.5	55	09/85 – 12/88	3424/1	
RITMO II (138_)	75 1.5	55	09/85 – 12/88	3424/1	
SCUDO (270_, 272_)	1.6 D Multijet	66	01/07 -	3972	
SCUDO (270_, 272_)	1.6 D Multijet	66	01/07 -		4151
SCUDO (270_, 272_)	2.0 D Multijet	88	01/07 -	3972	
SCUDO (270_, 272_)	2.0 D Multijet	88	01/07 -		4151
SCUDO (270_, 272_)	2.0 D Multijet	94	04/11 -	3972	
SCUDO (270_, 272_)	2.0 D Multijet	94	04/11 -		4151
SCUDO (270_, 272_)	2.0 D Multijet	100	01/07 -	3972	
SCUDO (270_, 272_)	2.0 D Multijet	100	01/07 -		4151
SCUDO (270_, 272_)	2.0 D Multijet	120	07/10 -	3972	
SCUDO (270_, 272_)	2.0 D Multijet	120	07/10 -		4151
SCUDO (270_, 272_)	2.0 D Multijet 4x4	88	01/07 -	3972	
SCUDO (270_, 272_)	2.0 D Multijet 4x4	88	01/07 -		4151
SCUDO (270_, 272_)	2.0 D Multijet 4x4	94	04/11 -	3972	
SCUDO (270_, 272_)	2.0 D Multijet 4x4	94	04/11 -		4151
SCUDO Box (220_)	16	58	02/96 – 12/06	3799	
SCUDO Box (220_)	16	58	02/96 – 12/06	3986	
SCUDO Box (220_)	20	100	05/00 – 12/06	3799	
SCUDO Box (220_)	20	100	05/00 – 12/06	3986	
SCUDO Box (220_)	1.9 D	51	02/96 – 12/06	3799	
SCUDO Box (220_)	1.9 D	51	04/98 – 12/06	3799	
SCUDO Box (220_)	1.9 D	51	02/96 – 12/06	3986	
SCUDO Box (220_)	1.9 D	51	04/98 – 12/06	3986	
SCUDO Box (220_)	1.9 TD	66	02/96 12/06	3799	
SCUDO Box (220_)	1.9 TD	66	02/96 – 12/06	3986	
SCUDO Box (220_)	1.9 TD	68	02/98 – 12/06	3799	
SCUDO Box (220_)	1.9 TD	68	02/98 – 12/06	3986	
SCUDO Box (220_)	2.0 JTD	69	10/99 – 12/06	3799	
SCUDO Box (220_)	2.0 JTD	69	10/99 – 12/06	3986	
SCUDO Box (220_)	2.0 JTD	80	12/02 – 12/06	3799	
SCUDO Box (220_)	2.0 JTD	80	12/02 – 12/06	3986	
SCUDO Box (220_)	2.0 JTD 16V	80	05/99 – 12/06	3799	
SCUDO Box (220_)	2.0 JTD 16V	80	05/99 – 12/06	3986	
SCUDO Box (270_, 272_)	1.6 D Multijet	66	01/07 -	3972	
SCUDO Box (270_, 272_)	1.6 D Multijet	66	01/07 -		4151
SCUDO Box (270_, 272_)	2.0 D Multijet	88	01/07 -	3972	
SCUDO Box (270_, 272_)	2.0 D Multijet	88	01/07 -		4151
SCUDO Box (270_, 272_)	2.0 D Multijet	94	05/11 -	3972	
SCUDO Box (270_, 272_)	2.0 D Multijet	94	05/11 -		4151
SCUDO Box (270_, 272_)	2.0 D Multijet	100	01/07 -	3972	
SCUDO Box (270_, 272_)	2.0 D Multijet	100	01/07 -		4151
SCUDO Box (270_, 272_)	2.0 D Multijet	120	07/10 -	3972	
SCUDO Box (270_, 272_)	2.0 D Multijet	120	07/10 -		4151
SCUDO Box (270_, 272_)	2.0 D Multijet 4x4	88	01/07 -	3972	
SCUDO Box (270_, 272_)	2.0 D Multijet 4x4	88	01/07 -		4151
SCUDO Combinato (220_)	16	58	02/96 – 12/06	3799	
SCUDO Combinato (220_)	16	58	02/96 – 12/06	3986	
SCUDO Combinato (220_)	1.9 D	51	02/96 – 04/98	3799	

MAKE & MODEL		KW	YEAR		
FIAT					
SCUDO Combinato (220_)	1.9 D	51	04/98 – 12/06	3799	
SCUDO Combinato (220_)	1.9 D	51	04/98 – 12/06	3986	
SCUDO Combinato (220_)	1.9 TD	68	02/96 – 12/06	3799	
SCUDO Combinato (220_)	1.9 TD	68	02/96 – 12/06	3986	
SCUDO Combinato (220_)	1.9 TD Eco	66	02/96 – 12/06	3799	
SCUDO Combinato (220_)	1.9 TD Eco	66	02/96 – 12/06	3986	
SCUDO Combinato (220_)	2.0 16V	100	06/00 – 12/06	3799	
SCUDO Combinato (220_)	2.0 16V	100	06/00 – 12/06	3986	
SCUDO Combinato (220_)	2.0 JTD	69	01/04 – 12/06	3799	
SCUDO Combinato (220_)	2.0 JTD	69	01/04 – 12/06	3986	
SCUDO Combinato (220_)	2.0 JTD	80	12/99 – 12/06	3799	
SCUDO Combinato (220_)	2.0 JTD	80	12/99 – 12/06	3986	
SCUDO Combinato (220_)	2.0 JTD 16V	80	05/99 – 12/06	3799	
SCUDO Combinato (220_)	2.0 JTD 16V	80	05/99 – 12/06	3986	
SCUDO Platform/Chassis (270_, 272_)	1.6 D Multijet	66	01/07 -	3972	
SCUDO Platform/Chassis (270_, 272_)	1.6 D Multijet	66	01/07 -		4151
SCUDO Platform/Chassis (270_, 272_)	2.0 D Multijet	88	01/07 -	3972	
SCUDO Platform/Chassis (270_, 272_)	2.0 D Multijet	88	01/07 -		4151
SCUDO Platform/Chassis (270_, 272_)	2.0 D Multijet	94	05/11 -	3972	
SCUDO Platform/Chassis (270_, 272_)	2.0 D Multijet	94	05/11 -		4151
SCUDO Platform/Chassis (270_, 272_)	2.0 D Multijet	100	01/07 -	3972	
SCUDO Platform/Chassis (270_, 272_)	2.0 D Multijet	100	01/07 -		4151
SCUDO Platform/Chassis (270_, 272_)	2.0 D Multijet	120	07/10 -	3972	
SCUDO Platform/Chassis (270_, 272_)	2.0 D Multijet	120	07/10 -		4151
SEDICI (FY_)	1.6 16V	79	06/06 – 10/14		4148
SEDICI (FY_)	1.6 16V	88	06/06 – 10/14		4148
SEDICI (FY_)	1.6 16V 4x4	79	06/06 – 10/14		4148
SEDICI (FY_)	1.6 16V 4x4	88	06/06 – 10/14		4148
SEDICI (FY_)	1.9 D Multijet	88	06/06 – 10/14		4148
SEDICI (FY_)	1.9 D Multijet 4x4	88	06/06 – 10/14		4148
SEDICI (FY_)	2.0 D Multijet	99	06/06 – 10/14		4148
SEDICI (FY_)	2.0 D Multijet 4x4	99	06/06 – 10/14		4148
SEICENTO / 600 (187_)	0.9 (187AXA, 187AXA1A)	29	01/98 – 01/10	3608	
SEICENTO / 600 (187_)	0.9 (187AXA, 187AXA1A)	29	01/98 – 01/10	3643	
SEICENTO / 600 (187_)	1.1 (187AXB, 187AXB1A)	40	01/98 – 01/10	3608	
SEICENTO / 600 (187_)	1.1 (187AXB, 187AXB1A)	40	01/98 – 01/10	3643	
SEICENTO / 600 (187_)	Elektra (187AEA1A, 187BEA1A)	30	01/99 – 01/05	3466	
SEICENTO / 600 (187_)	Elektra (187AEA1A, 187BEA1A)	30	01/99 – 01/05	3468	
SEICENTO / 600 (187_)	Elettrica	21	06/98 – 02/00	3466	
SEICENTO / 600 (187_)	Elettrica	21	06/98 – 02/00	3468	
SEICENTO / 600 (187_)	Elettrica	22	03/00 – 10/02	3466	
SEICENTO / 600 (187_)	Elettrica	22	03/00 – 10/02	3468	
SEICENTO / 600 Van (287_)	0.9 (187AXA)	29	01/98 – 01/10	3608	
SEICENTO / 600 Van (287_)	0.9 (187AXA)	29	01/98 – 01/10	3643	
SEICENTO / 600 Van (287_)	1.1 (187CXB/C)	40	01/98 – 01/10	3608	
SEICENTO / 600 Van (287_)	1.1 (187CXB/C)	40	01/98 – 01/10	3643	
SIENA	ONLY SOUTH AMERiCA			3597	
SIENA (172_)	1.3 JTD	51	11/07 -	3690	
SIENA (172_)	1.3 JTD	51	11/07 -	3790	
SIENA (178_)	14	51	04/96 – 12/09	3568	
SIENA (178_)	1.3 JTD	51	09/03 – 12/09	3690	
SIENA (178_)	1.3 JTD	51	09/03 – 12/09	3790	
SIENA (178_)	1.4 CAT	51	04/96 – 12/09	3568	
SIENA (178_, 172_)	1.4	51	04/96-12/09	3569	
SIENA (178_, 172_)	1.4 Cat	51	04/96-12/09	3569	
STILO (192_)	16	100	04/05 – 11/06	3826/1	
STILO (192_)	1.2 16V (192_XA1B)	59	02/02 – 11/06	3826/1	
STILO (192_)	1.4 16V	66	03/05 – 11/06	3826/1	
STILO (192_)	1.4 16V	70	01/04 – 11/06	3826/1	
STILO (192_)	1.6 16V	77	05/05 – 11/06	3826/1	
STILO (192_)	1.6 16V (192_XB1A)	76	10/01 – 11/06	3826/1	
STILO (192_)	1.9 JTD (192AXS1B, 192BXS1B)	66	09/04 – 11/06	3826/1	
STILO Multi Wagon (192_)	1.4 16V	66	03/05 – 08/08	3826/1	
STILO Multi Wagon (192_)	1.4 16V	70	01/04 – 08/08	3826/1	
STILO Multi Wagon (192_)	1.6 16V	76	01/03 – 08/08	3826/1	
STILO Multi Wagon (192_)	1.6 16V	77	03/05 – 12/07	3826/1	
STRADA Pickup (178_)	12	44	04/03 -	3690	
STRADA Pickup (178_)	12	44	04/03 -	3790	
STRADA Pickup (178_)	12	54	06/99 -	3690	
STRADA Pickup (178_)	12	54	06/99 – 12/06	3790	
STRADA Pickup (178_)	1.2 Trekking	60	11/05 -	3690	

MAKE & MODEL		KW	YEAR		
FIAT					
STRADA Pickup (178_)	1.2 Trekking	60	11/05 -	3790	
STRADA Pickup (178_)	1.3 D Multijet	62	05/06 -	3690	
STRADA Pickup (178_)	1.3 D Multijet	62	05/06 -	3790	
STRADA Pickup (178_)	1.6 Trekking	76	11/05 -	3690	
STRADA Pickup (178_)	1.7 TD	51	06/99 -	3690	
STRADA Pickup (178_)	1.7 TD	51	06/99 – 12/06	3790	
STRADA Pickup (178_)	1.9 D	46	12/00 -	3690	
STRADA Pickup (178_)	1.9 D	46	12/00 -	3790	
STRADA Pickup (178_)	1.9 JTD	59	04/03 -	3690	
STRADA Pickup (178_)	1.9 JTD	59	04/03 -	3790	
STRADA Pickup (278_)	1.3 D Multijet	70	10/10 -	3690	
STRADA Pickup (278_)	1.3 D Multijet	70	10/10 -	3790	
TALENTO Box (290_)	1.9 D (290UEHK)	52	03/89 – 03/94	3440	
TALENTO Box (290_)	1.9 D (290UK)	52	03/89 – 03/94	3440	
TALENTO Bus (290_)	2.0 (290U4)	55	03/89 – 03/94	3440	
TALENTO Bus (290_)	2.0 (290UEH4)	55	03/89 – 03/94	3440	
TALENTO Platform/Chassis (290_)	1.9 D (290UAK, 290UTK)	52	03/89 – 03/94	3440	
TALENTO Platform/Chassis (290_)	2.0 (290UA4)	55	03/89 – 03/94	3440	
TEMPRA	TRASERA (ONLY SOUTH AMERiCA)			3612	
TEMPRA (159_)	16	51	04/90 – 06/93	3432	
TEMPRA (159_)	16	51	04/90 – 06/93	3466	
TEMPRA (159_)	16	51	04/90 – 06/93	3468	
TEMPRA (159_)	16	51	04/90 – 06/93	3491	
TEMPRA (159_)	1.4 i.e. (159.AC)	57	03/91 – 08/96	3432	
TEMPRA (159_)	1.4 i.e. (159.AC)	57	03/91 – 08/96	3466	
TEMPRA (159_)	1.4 i.e. (159.AC)	57	03/91 – 08/96	3468	
TEMPRA (159_)	1.4 i.e. (159.AC)	57	03/91 – 08/96	3491	
TEMPRA (159_)	1.4 i.e. (159.AC, 159.AX)	51	03/92 – 08/96	3432	
TEMPRA (159_)	1.4 i.e. (159.AC, 159.AX)	51	03/92 – 08/96	3466	
TEMPRA (159_)	1.4 i.e. (159.AC, 159.AX)	51	03/92 – 08/96	3468	
TEMPRA (159_)	1.4 i.e. (159.AC, 159.AX)	51	03/92 – 08/96	3491	
TEMPRA (159_)	1.6 (159.AD)	63	03/90 – 08/96	3432	
TEMPRA (159_)	1.6 (159.AD)	63	03/90 – 08/96	3466	
TEMPRA (159_)	1.6 (159.AD)	63	03/90 – 08/96	3468	
TEMPRA (159_)	1.6 (159.AD)	63	03/90 – 08/96	3491	
TEMPRA (159_)	1.6 i.e. (159.AE)	57	06/90 – 07/92	3432	
TEMPRA (159_)	1.6 i.e. (159.AE)	57	06/90 – 07/92	3466	
TEMPRA (159_)	1.6 i.e. (159.AE)	57	06/90 – 07/92	3468	
TEMPRA (159_)	1.6 i.e. (159.AE)	57	06/90 – 07/92	3491	
TEMPRA (159_)	1.6 i.e. (159.AJ)	63	06/94 – 08/96	3466	
TEMPRA (159_)	1.6 i.e. (159.AJ)	63	06/94 – 08/96	3468	
TEMPRA (159_)	1.6 i.e. (159.AJ)	66	06/94 – 08/96	3466	
TEMPRA (159_)	1.6 i.e. (159.AJ)	66	06/94 – 08/96	3468	
TEMPRA (159_)	1.6 i.e. (159.AS, 159.AT)	55	06/92 – 08/96	3432	
TEMPRA (159_)	1.6 i.e. (159.AS, 159.AT)	55	06/92 – 08/96	3466	
TEMPRA (159_)	1.6 i.e. (159.AS, 159.AT)	55	06/92 – 08/96	3468	
TEMPRA (159_)	1.6 i.e. (159.AS, 159.AT)	55	06/92 – 08/96	3491	
TEMPRA (159_)	1.8 i.e. (159.AN)	77	03/92 – 08/96	3466	
TEMPRA (159_)	1.8 i.e. (159.AN)	77	03/92 – 08/96	3468	
TEMPRA (159_)	1.8 i.e. (159.AN)	81	03/90 – 08/96	3466	
TEMPRA (159_)	1.8 i.e. (159.AN)	81	03/90 – 08/96	3468	
TEMPRA (159_)	1.8 i.e. (159.AV)	76	09/93 – 08/96	3466	
TEMPRA (159_)	1.8 i.e. (159.AV)	76	09/93 – 08/96	3468	
TEMPRA (159_)	1.8 i.e. (159.AZ)	66	09/93 – 08/96	3466	
TEMPRA (159_)	1.8 i.e. (159.AZ)	66	09/93 – 08/96	3468	
TEMPRA (159_)	1.8 i.e. (159.BY)	74	10/94 – 08/96	3466	
TEMPRA (159_)	1.8 i.e. (159.BY)	74	10/94 – 08/96	3468	
TEMPRA (159_)	1.9 D (159.AG)	48	07/91 – 08/96	3466	
TEMPRA (159_)	1.9 D (159.AG)	48	07/91 – 08/96	3468	
TEMPRA (159_)	1.9 TD (159.AQ)	59	07/92 – 08/96	3466	
TEMPRA (159_)	1.9 TD (159.AQ)	59	07/92 – 08/96	3468	
TEMPRA (159_)	1.9 TD (159.CU, 159.AU,159.AI, 159.BI)	66	05/90 – 08/96	3466	
TEMPRA (159_)	1.9 TD (159.CU, 159.AU,159.AI, 159.BI)	66	05/90 – 08/96	3468	
TEMPRA (159_)	2.0 i.e. (159.AP)	83	10/90 – 08/96	3466	
TEMPRA (159_)	2.0 i.e. (159.AP)	83	10/90 – 08/96	3468	
TEMPRA S.W. (159_)	16	63	12/90 – 04/93	3466	
TEMPRA S.W. (159_)	16	63	12/90 – 04/93	3468	
TEMPRA S.W. (159_)	1.4 i.e. (159.AC)	57	03/91 – 08/96	3466	
TEMPRA S.W. (159_)	1.4 i.e. (159.AC)	57	03/91 – 08/96	3468	
TEMPRA S.W. (159_)	1.4 i.e. (159.AC, 159.AX)	51	10/92 – 08/96	3466	
TEMPRA S.W. (159_)	1.4 i.e. (159.AC, 159.AX)	51	10/92 – 08/96	3468	

MAKE & MODEL		KW	YEAR		
FIAT					
TEMPRA S.W. (159_)	1.6 i.e. (159.AE)	57	10/90 – 08/96	3466	
TEMPRA S.W. (159_)	1.6 i.e. (159.AE)	57	10/90 – 08/96	3468	
TEMPRA S.W. (159_)	1.6 i.e. (159.AJ)	66	06/94 – 08/96	3466	
TEMPRA S.W. (159_)	1.6 i.e. (159.AJ)	66	06/94 – 08/96	3468	
TEMPRA S.W. (159_)	1.6 i.e. (159.AS, 159.AT)	55	10/92 – 08/96	3466	
TEMPRA S.W. (159_)	1.6 i.e. (159.AS, 159.AT)	55	10/92 – 08/96	3468	
TEMPRA S.W. (159_)	1.8 i.e. (159.AN)	77	03/92 – 12/93	3466	
TEMPRA S.W. (159_)	1.8 i.e. (159.AN)	77	03/92 – 12/93	3468	
TEMPRA S.W. (159_)	1.8 i.e. (159.AN)	81	03/90 – 08/96	3466	
TEMPRA S.W. (159_)	1.8 i.e. (159.AN)	81	03/90 – 08/96	3468	
TEMPRA S.W. (159_)	1.8 i.e. (159.AV)	76	09/93 – 08/96	3466	
TEMPRA S.W. (159_)	1.8 i.e. (159.AV)	76	09/93 – 08/96	3468	
TEMPRA S.W. (159_)	1.8 i.e. (159.AZ)	66	09/93 – 08/96	3466	
TEMPRA S.W. (159_)	1.8 i.e. (159.AZ)	66	09/93 – 08/96	3468	
TEMPRA S.W. (159_)	1.8 i.e. (159.BY)	74	10/94 – 08/96	3466	
TEMPRA S.W. (159_)	1.8 i.e. (159.BY)	74	10/94 – 08/96	3468	
TEMPRA S.W. (159_)	1.9 D (159.AG)	48	07/91 – 08/96	3466	
TEMPRA S.W. (159_)	1.9 D (159.AG)	48	07/91 – 08/96	3468	
TEMPRA S.W. (159_)	1.9 TD (159.AI, 159.BI,159.CU, 159.AU)	66	07/91 – 02/95	3466	
TEMPRA S.W. (159_)	1.9 TD (159.AI, 159.BI,159.CU, 159.AU)	66	07/91 – 02/95	3468	
TEMPRA S.W. (159_)	1.9 TD (159.AQ)	59	03/92 – 06/93	3466	
TEMPRA S.W. (159_)	1.9 TD (159.AQ)	59	03/92 – 06/93	3468	
TEMPRA S.W. (159_)	2.0 i.e. (159.AP)	83	01/91 – 03/95	3466	
TEMPRA S.W. (159_)	2.0 i.e. (159.AP)	83	01/91 – 03/95	3468	
TEMPRA S.W. (159_)	2.0 i.e. 4x4 (159.AP)	83	03/92 – 03/95	3466	
TEMPRA S.W. (159_)	2.0 i.e. 4x4 (159.AP)	83	03/92 – 03/95	3468	
TIPO (160_)	1.1 (160.AA)	41	01/88 – 10/91	3432	
TIPO (160_)	1.1 (160.AA)	41	01/88 – 10/91	3466	
TIPO (160_)	1.1 (160.AA)	41	01/88 – 10/91	3468	
TIPO (160_)	1.1 (160.AA)	41	01/88 – 10/91	3491	
TIPO (160_)	1.4 (160.AC)	52	07/87 – 12/89	3432	
TIPO (160_)	1.4 (160.AC)	52	07/87 – 12/89	3466	
TIPO (160_)	1.4 (160.AC)	52	07/87 – 12/89	3468	
TIPO (160_)	1.4 (160.AC)	52	07/87 – 12/89	3491	
TIPO (160_)	1.4 i.e.	57	05/89 – 04/95	3432	
TIPO (160_)	1.4 i.e.	57	05/89 – 04/95	3466	
TIPO (160_)	1.4 i.e.	57	05/89 – 04/95	3468	
TIPO (160_)	1.4 i.e.	57	05/89 – 04/95	3491	
TIPO (160_)	1.4 i.e. (160.AP, 160.AD,160.EA)	51	05/89 – 04/95	3432	
TIPO (160_)	1.4 i.e. (160.AP, 160.AD,160.EA)	51	05/89 – 04/95	3466	
TIPO (160_)	1.4 i.e. (160.AP, 160.AD,160.EA)	51	05/89 – 04/95	3468	
TIPO (160_)	1.4 i.e. (160.AP, 160.AD,160.EA)	51	05/89 – 04/95	3491	
TIPO (160_)	1.6 (160.AE)	61	01/88 – 10/91	3466	
TIPO (160_)	1.6 (160.AE)	61	01/88 – 10/91	3468	
TIPO (160_)	1.6 (160.AE)	61	01/88 – 10/91	3432	
TIPO (160_)	1.6 (160.AE)	61	01/88 – 10/91	3491	
TIPO (160_)	1.6 i.e.	66	02/88 – 05/91	3466	
TIPO (160_)	1.6 i.e.	66	02/88 – 05/91	3468	
TIPO (160_)	1.6 i.e. (160.A1, 160.EC,160.EB)	55	10/92 – 04/95	3466	
TIPO (160_)	1.6 i.e. (160.A1, 160.EC,160.EB)	55	10/92 – 04/95	3468	
TIPO (160_)	1.6 i.e. (160.A1, 160.EC,160.EB)	55	10/92 – 04/95	3432	
TIPO (160_)	1.6 i.e. (160.A1, 160.EC,160.EB)	55	10/92 – 04/95	3491	
TIPO (160_)	1.6 i.e. (160.AF)	57	07/90 – 01/93	3432	
TIPO (160_)	1.6 i.e. (160.AF)	57	07/90 – 01/93	3466	
TIPO (160_)	1.6 i.e. (160.AF)	57	07/90 – 01/93	3468	
TIPO (160_)	1.6 i.e. (160.AF)	57	07/90 – 01/93	3491	
TIPO (160_)	1.6 SX DGT	66	05/89 – 10/95	3466	
TIPO (160_)	1.6 SX DGT	66	05/89 – 10/95	3468	
TIPO (160_)	1.7 D (160.AG)	43	01/88 – 10/94	3432	
TIPO (160_)	1.7 D (160.AG)	43	01/88 – 10/94	3466	
TIPO (160_)	1.7 D (160.AG)	43	01/88 – 10/94	3468	
TIPO (160_)	1.7 D (160.AG)	43	01/88 – 10/94	3491	
TIPO (160_)	1.7 D (160.AG)	45	01/88 – 10/95	3432	
TIPO (160_)	1.7 D (160.AG)	45	01/88 – 10/95	3466	
TIPO (160_)	1.7 D (160.AG)	45	01/88 – 10/95	3468	
TIPO (160_)	1.7 D (160.AG)	45	01/88 – 10/95	3491	
TIPO (160_)	1.8 i.e	71	03/93 – 04/95	3466	
TIPO (160_)	1.8 i.e	71	03/93 – 04/95	3468	
TIPO (160_)	1.8 i.e.	66	09/93 – 04/95	3466	
TIPO (160_)	1.8 i.e.	66	09/93 – 04/95	3468	
TIPO (160_)	1.8 i.e.	81	10/90 – 06/93	3466	

MAKE & MODEL		KW	YEAR		
FIAT					
TIPO (160_)	1.8 i.e.	81	10/90 – 06/93	3468	
TIPO (160_)	1.8 i.e. (160.AY)	77	10/90 – 06/93	3466	
TIPO (160_)	1.8 i.e. (160.AY)	77	10/90 – 06/93	3468	
TIPO (160_)	1.8 i.e. (160.ED)	76	04/93 – 04/95	3466	
TIPO (160_)	1.8 i.e. (160.ED)	76	04/93 – 04/95	3468	
TIPO (160_)	1.8 i.e. (160.EQ, 160.AM)	74	10/94 – 10/95	3466	
TIPO (160_)	1.8 i.e. (160.EQ, 160.AM)	74	10/94 – 10/95	3468	
TIPO (160_)	1.8 i.e.16V Sport	100	11/89 – 06/92	3466	
TIPO (160_)	1.8 i.e.16V Sport	100	11/89 – 06/92	3468	
TIPO (160_)	1.9 D	48	07/91 – 08/95	3432	
TIPO (160_)	1.9 D	48	07/91 – 08/95	3466	
TIPO (160_)	1.9 D	48	07/91 – 08/95	3468	
TIPO (160_)	1.9 D	48	07/91 – 08/95	3491	
TIPO (160_)	1.9 TD (160.AW)	59	03/92 – 06/93	3466	
TIPO (160_)	1.9 TD (160.AW)	59	03/92 – 06/93	3468	
TIPO (160_)	1.9 TD (160.EL, 160.GL,160.AQ, 160.EI,	66	09/90 – 04/95	3466	
TIPO (160_)	1.9 TD (160.EL, 160.GL,160.AQ, 160.EI,	66	09/90 – 04/95	3468	
TIPO (160_)	2.0 i.e. (160.AJ)	80	06/90 – 03/92	3466	
TIPO (160_)	2.0 i.e. (160.AJ)	80	06/90 – 03/92	3468	
TIPO (160_)	2.0 i.e. (160.AT, 160.AJ)	83	03/90 – 04/95	3466	
TIPO (160_)	2.0 i.e. (160.AT, 160.AJ)	83	03/90 – 04/95	3468	
TIPO / EGEA (356_)	1.3 D (199 B1.000)	70	03/16 -	4234	
TIPO / EGEA (356_)	1.3 D (199 B1.000)	70	10/15 -	4234	
TIPO / EGEA (356_)	1.3 D (199 B1.000)	70	03/16 -		4246
TIPO / EGEA (356_)	1.3 D (199 B1.000)	70	10/15 -		4246
TIPO / EGEA (356_)	1.3 D (55266963)	70	03/16 -	4234	
TIPO / EGEA (356_)	1.3 D (55266963)	70	03/16 -	4234	
TIPO / EGEA (356_)	1.3 D (55266963)	70	10/15 -	4234	
TIPO / EGEA (356_)	1.3 D (55266963)	70	03/16 -		4246
TIPO / EGEA (356_)	1.3 D (55266963)	70	03/16 -		4246
TIPO / EGEA (356_)	1.3 D (55266963)	70	10/15 -		4246
TIPO / EGEA (356_)	1.4 (843 A1.000)	70	10/15 -	4234	
TIPO / EGEA (356_)	1.4 (843 A1.000)	70	10/15 -		4246
TIPO / EGEA (356_)	1.4 (940 B7.000)	88	03/16 -	4234	
TIPO / EGEA (356_)	1.4 (940 B7.000)	88	03/16 -	4234	
TIPO / EGEA (356_)	1.4 (940 B7.000)	88	03/16 -		4246
TIPO / EGEA (356_)	1.4 (940 B7.000)	88	03/16 -		4246
TIPO / EGEA (356_)	1.4 (843 A1.000)	70	03/16 -	4234	
TIPO / EGEA (356_)	1.4 (843 A1.000)	70	03/16 -	4234	
TIPO / EGEA (356_)	1.4 (843 A1.000)	70	03/16 -		4246
TIPO / EGEA (356_)	1.4 (843 A1.000)	70	03/16 -		4246
TIPO / EGEA (356_)	1.4 LPG (940 B7.000)	88	05/16 -	4234	
TIPO / EGEA (356_)	1.4 LPG (940 B7.000)	88	05/16 -	4234	
TIPO / EGEA (356_)	1.4 LPG (940 B7.000)	88	05/16 -	4234	
TIPO / EGEA (356_)	1.4 LPG (940 B7.000)	88	05/16 -		4246
TIPO / EGEA (356_)	1.4 LPG (940 B7.000)	88	05/16 -		4246
TIPO / EGEA (356_)	1.4 LPG (940 B7.000)	88	05/16 -		4246
TIPO / EGEA (356_)	1.6 (55268036)	81	07/16 -	4234	
TIPO / EGEA (356_)	1.6 (55268036)	81	07/16 -	4234	
TIPO / EGEA (356_)	1.6 (55268036)	81	10/15 -	4234	
TIPO / EGEA (356_)	1.6 (55268036)	81	07/16 -		4246
TIPO / EGEA (356_)	1.6 (55268036)	81	07/16 -		4246
TIPO / EGEA (356_)	1.6 (55268036)	81	10/15 -		4246
TIPO / EGEA (356_)	1.6 D (55260384)	84	09/16 -	4234	
TIPO / EGEA (356_)	1.6 D (55260384)	84	09/16 -	4234	
TIPO / EGEA (356_)	1.6 D (55260384)	84	09/16 -	4234	
TIPO / EGEA (356_)	1.6 D (55260384)	84	09/16 -		4246
TIPO / EGEA (356_)	1.6 D (55260384)	84	09/16 -		4246
TIPO / EGEA (356_)	1.6 D (55260384)	84	09/16 -		4246
TIPO / EGEA (356_)	1.6 D (55260384)	88	03/16 -	4234	
TIPO / EGEA (356_)	1.6 D (55260384)	88	03/16 -	4234	
TIPO / EGEA (356_)	1.6 D (55260384)	88	10/15 -	4234	
TIPO / EGEA (356_)	1.6 D (55260384)	88	03/16 -		4246
TIPO / EGEA (356_)	1.6 D (55260384)	88	03/16 -		4246
TIPO / EGEA (356_)	1.6 D (55260384)	88	10/15 -		4246
TIPO / EGEA (356_)	1.6 D (940 C1.000)	88	10/15 -	4234	
TIPO / EGEA (356_)	1.6 D (940 C1.000)	88	10/15 -		4246
TİPO	S.AMERICAN ONLY		96-97	3541	
ULYSSE (179_)	20	100	08/02 – 06/11	3986	
ULYSSE (179_)	2.0 D Multijet	88	05/06 – 06/11	3986	
ULYSSE (179_)	2.0 D Multijet	100	05/06 – 06/11	3986	

MAKE & MODEL		KW	YEAR		
FIAT					
ULYSSE (179_)	2.0 JTD	79	05/03 – 08/06	3986	
ULYSSE (179_)	2.0 JTD	80	08/02 – 08/06	3986	
ULYSSE (179_)	2.2 JTD	94	08/02 – 08/06	3986	
ULYSSE (220_)	1.8 (220.BB5)	73	05/97 – 08/02	3799	
ULYSSE (220_)	1.9 TD (220AH5)	66	02/95 – 08/02	3799	
ULYSSE (220_)	2.0 (220.AC5)	89	06/94 – 08/02	3799	
ULYSSE (220_)	2.0 16V	97	05/98 – 09/00	3799	
UNO	MONOPOLAR - ONLY S.AMERICA		93-	3460	
UNO	S.AMERICAN ONLY		96-97	3540	
UNO I-IV (146A/E)	1.0	35	08/90 – 06/01	3439	
UNO I-IV (146A/E)	1.0 iE (156 A2.246)	34	05/98 – 08/00	3439	
UNO IV Mondo (146D/146B)	1.0	33	01/94 -	3439	
UNO (146_)	10	31	06/89 – 02/92	3424/1	
UNO (146_)	10	35	08/90 – 06/01	3424/1	
UNO (146_)	11	41	04/86 – 06/06	3424/1	
UNO (146_)	11	43	10/88 – 06/06	3424/1	
UNO (146_)	14	51	07/91 – 07/96	3424/1	
UNO (146_)	14	74	01/89 – 12/91	3466	
UNO (146_)	14	74	01/89 – 12/91	3468	
UNO (146_)	16	65	12/89 – 04/93	3466	
UNO (146_)	16	65	12/89 – 04/93	3468	
UNO (146_)	1.0 iE	34	05/98 – 08/00	3424/1	
UNO (146_)	1.3 Super Diesel	33	06/83 – 03/92	3424/1	
UNO (146_)	1.3 Super Diesel	33	06/83 – 03/92	3466	
UNO (146_)	1.3 Super Diesel	33	06/83 – 03/92	3468	
UNO (146_)	1.3 Turbo i.e.	73	01/87 – 12/87	3466	
UNO (146_)	1.3 Turbo i.e.	73	01/87 – 12/87	3468	
UNO (146_)	1.3 Turbo i.e.	74	09/89 – 03/91	3466	
UNO (146_)	1.3 Turbo i.e.	74	09/89 – 03/91	3468	
UNO (146_)	1.3 Turbo i.e.	77	04/85 – 08/89	3466	
UNO (146_)	1.3 Turbo i.e.	77	04/85 – 08/89	3468	
UNO (146_)	1.4 Turbo i.e.	82	09/89 – 09/93	3466	
UNO (146_)	1.4 Turbo i.e.	82	09/89 – 09/93	3468	
UNO (146_)	1.4 Turbo i.e.	87	12/89 – 12/96	3466	
UNO (146_)	1.4 Turbo i.e.	87	12/89 – 12/96	3468	
UNO (146_)	1.6 R	66	12/92 – 12/95	3466	
UNO (146_)	1.6 R	66	12/92 – 12/95	3468	
UNO (146_)	1.7 D	43	11/94 – 08/00	3424/1	
UNO (146_)	1.7 D	43	11/94 – 08/00	3466	
UNO (146_)	1.7 D	43	11/94 – 08/00	3468	
UNO (146_)	1.9 D	44	09/89 – 03/94	3424/1	
UNO (146_)	1.9 D	44	09/89 – 03/94	3466	
UNO (146_)	1.9 D	44	09/89 – 03/94	3468	
UNO (146_)	1.9 D	58	01/89 – 12/91	3424/1	
UNO (146_)	1.9 D	58	01/89 – 12/91	3466	
UNO (146_)	1.9 D	58	01/89 – 12/91	3468	
UNO (146_)	45 0.9	33	03/83 – 09/92	3424/1	
UNO (146_)	45 0.9	34	02/84 – 12/88	3424/1	
UNO (146_)	45 1.0 (146A.ED)	32	06/86 – 12/93	3424/1	
UNO (146_)	45 i.e. 1.0	33	04/84 – 10/95	3424/1	
UNO (146_)	50 1.1	37	01/86 – 12/89	3424/1	
UNO (146_)	50 1.1	37	01/90 – 12/93	3424/1	
UNO (146_)	50 i.e. 1.1	36	06/92 – 12/93	3424/1	
UNO (146_)	55 1.1	40	01/83 – 08/89	3424/1	
UNO (146_)	60 1.1	42	04/89 – 12/92	3424/1	
UNO (146_)	60 1.1 (146A.EG)	43	05/85 – 08/89	3424/1	
UNO (146_)	60 Diesel 1.7	42	09/89 – 12/93	3424/1	
UNO (146_)	60 Diesel 1.7	42	09/89 – 12/93	3466	
UNO (146_)	60 Diesel 1.7	42	09/89 – 12/93	3468	
UNO (146_)	60 Diesel 1.7	44	07/86 – 08/89	3424/1	
UNO (146_)	60 Diesel 1.7	44	07/86 – 08/89	3466	
UNO (146_)	60 Diesel 1.7	44	07/86 – 08/89	3468	
UNO (146_)	70 1.3	48	05/85 – 08/89	3424/1	
UNO (146_)	70 1.3	50	01/83 – 04/85	3424/1	
UNO (146_)	70 i.e. 1.4	51	09/89 – 07/96	3424/1	
UNO (146_)	70 i.e. 1.4	53	09/89 – 12/93	3424/1	
UNO (146_)	70 S 1.4	52	09/89 – 10/92	3424/1	
UNO (146_)	70 TD 1.4	52	10/86 – 10/90	3424/1	
UNO (146_)	70 TD 1.4	52	10/86 – 10/90	3466	
UNO (146_)	70 TD 1.4	52	10/86 – 10/90	3468	
UNO (146_)	75 i.e. 1.5	55	10/85 – 12/93	3424/1	

MAKE & MODEL   		KW	YEAR		
FIAT					
VIVACE	ONLY SOUTH AMERCA			3519	
X 1/9 (128_)	13	54	10/75 – 06/78	3316	
X 1/9 (128_)	13	54	10/75 – 06/78		3317
X 1/9 (128_)	13	54	10/75 – 06/78	3351	
X 1/9 (128_)	13	55	05/73 – 12/79	3316	
X 1/9 (128_)	13	55	05/73 – 12/79		3317
X 1/9 (128_)	13	55	05/73 – 12/79	3351	
X 1/9 (128_)	15	56	06/85 – 12/89		3317
X 1/9 (128_)	15	56	06/85 – 12/89	3351	
X 1/9 (128_)	15	56	06/85 – 12/89	3485	
X 1/9 (128_)	15	63	11/78 – 12/89	3316	
X 1/9 (128_)	15	63	11/78 – 12/89		3317
X 1/9 (128_)	15	63	11/78 – 12/89	3351	
X 1/9 (128_)	15	63	11/78 – 12/89	3485	
X-1/9 (128 AS) Cabrío (Sports car-S Segment)	1.3 (128 AS.000)		75-78	3357	
X-1/9 (128 AS) Cabrío (Sports car-S Segment)	1.3 Exclusiv Serie (128 AS.000)		73-79	3357	
X-1/9 (128 AS) Cabrío (Sports car-S Segment)	1.5 Five Speed (138 AS.000)		78-89	3357	
FORD					
B-MAX (JK)	14	66	10/12 -	4204	
B-MAX (JK)	1.0 EcoBoost	74	10/12 -	4204	
B-MAX (JK)	1.0 EcoBoost	88	10/12 -	4204	
B-MAX (JK)	1.0 EcoBoost	92	10/12 -	4204	
B-MAX (JK)	1.0 EcoBoost	103	02/16 -	4204	
B-MAX (JK)	1.4 LPG	63	08/13 -	4204	
B-MAX (JK)	1.4 LPG	66	08/13 -	4204	
B-MAX (JK)	1.5 TDCi	55	10/12 -	4204	
B-MAX (JK)	1.5 TDCi	70	04/15 -	4204	
B-MAX (JK)	1.6 TDCi	70	10/12 -	4204	
B-MAX (JK)	1.6 Ti	77	10/12 -	4204	
B-MAX Van	14	66	10/12 -	4204	
B-MAX Van	1.0 EcoBoost	74	10/12 -	4204	
B-MAX Van	1.0 EcoBoost	92	10/12 -	4204	
B-MAX Van	1.5 TDCi	55	10/12 -	4204	
B-MAX Van	1.5 TDCi	70	04/15 -	4204	
B-MAX Van	1.6 TDCi	70	10/12 -	4204	
B-MAX Van	1.6 Ti	77	10/12 -	4204	
BRONCO / BRONCO II	3.0		87-89	3544	
BRONCO / BRONCO II	4.9		87-89	3544	
BRONCO / BRONCO II	5.8		87-89	3544	
CAPRI (ECJ)	1500	44	12/68 – 02/74	3484	
CAPRI (ECJ)	1500	44	12/68 – 02/74	3312	
CAPRI (ECJ)	1700	55	12/68 – 08/72	3484	
CAPRI (ECJ)	1700	55	12/68 – 08/72	3312	
CAPRI (ECJ)	2000	66	02/69 – 02/74	3484	
CAPRI (ECJ)	2000	66	02/69 – 02/74	3312	
CAPRI (ECJ)	2300	79	02/69 – 02/74	3484	
CAPRI (ECJ)	2300	79	02/69 – 02/74	3312	
CAPRI (ECJ)	3000	101	01/72 – 12/72	3484	
CAPRI (ECJ)	3000	101	01/72 – 12/72	3312	
CAPRI (ECJ)	3000	103	01/73 – 12/73	3484	
CAPRI (ECJ)	3000	103	08/72 – 02/74	3484	
CAPRI (ECJ)	3000	103	01/73 – 12/73	3312	
CAPRI (ECJ)	3000	103	08/72 – 02/74	3312	
CAPRI Convertible (SA II, SC, SE, SA I)	1.6 16V	77	09/89 – 07/94	3449	
CAPRI Convertible (SA II, SC, SE, SA I)	1.6 Turbo	100	09/89 – 07/94	3449	
CAPRI Coupe	16	53	08/72 – 03/74	3312	
CAPRI Coupe	16	53	08/72 – 03/74	3484	
CAPRI Coupe	16	60	01/69 – 03/74	3312	
CAPRI Coupe	16	60	01/69 – 03/74	3484	
CAPRI Coupe	30	94	01/70 – 03/74	3312	
CAPRI Coupe	30	94	01/70 – 03/74	3484	
CAPRI Coupe	3.0 GT	103	01/73 – 03/74	3312	
CAPRI Coupe	3.0 GT	103	01/73 – 03/74	3484	
CAPRI Coupe	3.0 RS3000	101	01/72 – 03/74	3312	
CAPRI Coupe	3.0 RS3000	101	01/72 – 03/74	3484	
CAPRI II (GECP)	13	40	02/74 – 08/77	3484	
CAPRI II (GECP)	13	40	02/74 – 08/77	3312	
CAPRI II (GECP)	13	42	02/74 – 08/77	3484	
CAPRI II (GECP)	13	42	02/74 – 08/77	3312	
CAPRI II (GECP)	16	50	09/74 – 12/77	3484	
CAPRI II (GECP)	16	50	09/74 – 12/77	3312	

MAKE & MODEL   		KW	YEAR		
FORD					
CAPRI II (GECP)	16	53	02/74 – 12/77	3484	
CAPRI II (GECP)	16	53	02/74 – 12/77	3312	
CAPRI II (GECP)	16	65	02/74 – 12/77	3484	
CAPRI II (GECP)	16	65	02/74 – 12/77	3312	
CAPRI II (GECP)	20	66	04/76 – 12/77	3484	
CAPRI II (GECP)	20	66	04/76 – 12/77	3312	
CAPRI II (GECP)	20	72	04/74 – 12/77	3484	
CAPRI II (GECP)	20	72	04/74 – 12/77	3312	
CAPRI II (GECP)	23	79	02/74 – 12/77	3484	
CAPRI II (GECP)	23	79	02/74 – 12/77	3312	
CAPRI II (GECP)	30	101	02/74 – 12/77	3484	
CAPRI II (GECP)	30	101	02/74 – 12/77	3484	
CAPRI II (GECP)	30	101	02/74 – 12/77	3312	
CAPRI II (GECP)	30	101	02/74 – 12/77	3312	
CAPRI III (GECP)	13	40	01/78 – 06/85	3484	
CAPRI III (GECP)	13	40	01/78 – 06/85	3312	
CAPRI III (GECP)	16	54	01/78 – 04/87	3484	
CAPRI III (GECP)	16	54	01/78 – 04/87	3312	
CAPRI III (GECP)	20	64	01/78 – 12/85	3484	
CAPRI III (GECP)	20	64	01/78 – 12/85	3312	
CAPRI III (GECP)	20	66	01/78 – 12/82	3484	
CAPRI III (GECP)	20	66	01/78 – 12/82	3312	
CAPRI III (GECP)	20	74	01/78 – 12/85	3484	
CAPRI III (GECP)	20	74	01/78 – 12/85	3312	
CAPRI III (GECP)	30	101	01/78 – 12/81	3484	
CAPRI III (GECP)	30	101	01/78 – 12/81	3312	
CAPRI III (GECP)	2.3 Super	84	06/79 – 12/85	3484	
CAPRI III (GECP)	2.3 Super	84	06/79 – 12/85	3312	
CAPRI III (GECP)	2.8 i Turbo	138	01/82 – 04/87	3484	
CAPRI III (GECP)	2.8 i Turbo	138	01/82 – 04/87	3312	
CAPRI III (GECP)	2.8 Super Injection	118	01/81 – 04/87	3484	
CAPRI III (GECP)	2.8 Super Injection	118	01/81 – 04/87	3312	
C-MAX (DM2)	16	74	02/07 – 09/10		3853/1
C-MAX (DM2)	16	74	02/07 – 09/10	3885	
C-MAX (DM2)	18	90	02/07 – 09/10		3853/1
C-MAX (DM2)	18	90	02/07 – 09/10	3885	
C-MAX (DM2)	18	92	02/07 – 09/10		3853/1
C-MAX (DM2)	18	92	02/07 – 09/10	3885	
C-MAX (DM2)	20	107	02/07 – 09/10		3853/1
C-MAX (DM2)	20	107	02/07 – 09/10	3885	
C-MAX (DM2)	1.6 TDCi	66	02/07 – 09/10		3853/1
C-MAX (DM2)	1.6 TDCi	66	02/07 – 09/10	3885	
C-MAX (DM2)	1.6 TDCi	74	02/07 – 09/10		3853/1
C-MAX (DM2)	1.6 TDCi	74	02/07 – 09/10	3885	
C-MAX (DM2)	1.6 TDCi	80	02/07 – 09/10		3853/1
C-MAX (DM2)	1.6 TDCi	80	02/07 – 09/10	3885	
C-MAX (DM2)	1.8 Flexifuel	92	02/07 – 09/10		3853/1
C-MAX (DM2)	1.8 Flexifuel	92	02/07 – 09/10	3885	
C-MAX (DM2)	1.8 TDCi	85	02/07 – 09/10		3853/1
C-MAX (DM2)	1.8 TDCi	85	02/07 – 09/10	3885	
C-MAX (DM2)	2.0 CNG	107	04/09 – 09/10		3853/1
C-MAX (DM2)	2.0 CNG	107	04/09 – 09/10	3885	
C-MAX (DM2)	2.0 LPG	107	06/08 – 09/10		3853/1
C-MAX (DM2)	2.0 LPG	107	06/08 – 09/10	3885	
C-MAX (DM2)	2.0 TDCi	81	02/08 – 09/10		3853/1
C-MAX (DM2)	2.0 TDCi	81	02/08 – 09/10	3885	
C-MAX (DM2)	2.0 TDCi	98	02/07 – 09/10		3853/1
C-MAX (DM2)	2.0 TDCi	98	02/07 – 09/10	3885	
C-MAX (DM2)	2.0 TDCi	100	02/07 – 09/10		3853/1
C-MAX (DM2)	2.0 TDCi	100	02/07 – 09/10	3885	
C-MAX II (DXA/CB7, DXA/CEU)	1.0 EcoBoost	74	10/12 -	3885	
C-MAX II (DXA/CB7, DXA/CEU)	1.0 EcoBoost	92	10/12 -	3885	
C-MAX II (DXA/CB7, DXA/CEU)	1.5 EcoBoost	110	03/15 -	3885	
C-MAX II (DXA/CB7, DXA/CEU)	1.5 EcoBoost	134	03/15 -	3885	
C-MAX II (DXA/CB7, DXA/CEU)	1.5 TDCi	70	03/15 -	3885	
C-MAX II (DXA/CB7, DXA/CEU)	1.5 TDCi	88	03/15 -	3885	
C-MAX II (DXA/CB7, DXA/CEU)	1.5 TDCi ECOnetic	77	03/15 -	3885	
C-MAX II (DXA/CB7, DXA/CEU)	1.6 CNG	86	01/13 -	3885	
C-MAX II (DXA/CB7, DXA/CEU)	1.6 EcoBoost	110	12/10 -	3885	
C-MAX II (DXA/CB7, DXA/CEU)	1.6 EcoBoost	134	12/10 -	3885	
C-MAX II (DXA/CB7, DXA/CEU)	1.6 Flexifuel	88	02/11 -	3885	

MAKE & MODEL   		KW	YEAR		
FORD					
C-MAX II (DXA/CB7, DXA/CEU)	1.6 LPG	86	02/12 -	3885	
C-MAX II (DXA/CB7, DXA/CEU)	1.6 LPG	88	02/12 -	3885	
C-MAX II (DXA/CB7, DXA/CEU)	1.6 TDCi	70	12/10 -	3885	
C-MAX II (DXA/CB7, DXA/CEU)	1.6 TDCi	85	12/10 -	3885	
C-MAX II (DXA/CB7, DXA/CEU)	1.6 Ti	63	12/10 -	3885	
C-MAX II (DXA/CB7, DXA/CEU)	1.6 Ti	77	12/10 -	3885	
C-MAX II (DXA/CB7, DXA/CEU)	1.6 Ti	88	02/12 -	3885	
C-MAX II (DXA/CB7, DXA/CEU)	1.6 Ti	92	12/10 -	3885	
C-MAX II (DXA/CB7, DXA/CEU)	2.0 TDCi	85	02/11 -	3885	
C-MAX II (DXA/CB7, DXA/CEU)	2.0 TDCi	100	02/11 -	3885	
C-MAX II (DXA/CB7, DXA/CEU)	2.0 TDCi	103	02/11 -	3885	
C-MAX II (DXA/CB7, DXA/CEU)	2.0 TDCi	110	03/15 -	3885	
C-MAX II (DXA/CB7, DXA/CEU)	2.0 TDCi	120	12/10 -	3885	
C-MAX II (DXA/CB7, DXA/CEU)	2.0 TDCi	125	03/15 -	3885	
C-MAX II Van	1.0 EcoBoost	74	10/12 -	3885	
C-MAX II Van	1.0 EcoBoost	92	10/12 -	3885	
C-MAX II Van	1.5 EcoBoost	110	03/15 -	3885	
C-MAX II Van	1.5 EcoBoost	134	03/15 -	3885	
C-MAX II Van	1.5 TDCi	88	03/15 -	3885	
C-MAX II Van	1.5 TDCi ECOnetic	77	03/15 -	3885	
C-MAX II Van	1.6 EcoBoost	110	12/10 -	3885	
C-MAX II Van	1.6 TDCi	70	12/10 -	3885	
C-MAX II Van	1.6 TDCi	85	12/10 -	3885	
C-MAX II Van	2.0 TDCi	85	02/11 -	3885	
C-MAX II Van	2.0 TDCi	103	02/11 -	3885	
C-MAX II Van	2.0 TDCi	110	03/15 -	3885	
C-MAX II Van	2.0 TDCi	120	12/10 -	3885	
C-MAX II Van	2.0 TDCi	125	03/15 -	3885	
CONSUL (GGCL)	3.0 3000 (EV 30 H)	101	01.72 – 12.74	3344	
CONSUL (GGCL) Coupé	3.0 3000	101	01/72 – 12/74	3313	
CONSUL (GGFL)	2000	73	01/72 – 12/75	3484	
CONSUL (GGFL)	2000	73	01/72 – 12/75	3312	
CONSUL (GGFL)	2.5 2500 (EV 25 HRB)	88	01.72 – 12.74	3344	
CONSUL (GGFL)	3.0 3000 (EV 30 H)	101	01.72 – 12.74	3344	
CONSUL (GGFL) Sedán	2.5 2500	88	01/72 – 12/74	3313	
CONSUL (GGFL) Sedán	3.0 3000	101	01/72 – 12/74	3313	
CONSUL (GGNL)	2.5 2500 (EV 25 HRB)	88	01.72 – 12.74	3344	
CONSUL (GGNL)	3.0 3000 (EV 30 H)	101	01.72 – 12.75	3344	
CONSUL (GGNL) Estate	2.5 2500	88	01/72 – 12/74	3313	
CONSUL (GGNL) Estate	3.0 3000	101	01/72 – 12/75	3313	
CONSUL Coupe (GGCL)	2000	73	01/72 – 12/75	3484	
CONSUL Coupe (GGCL)	2000	73	01/72 – 12/75	3312	
CONSUL Turnier (GGNL)	2000	73	01/72 – 12/75	3484	
CONSUL Turnier (GGNL)	2000	73	01/72 – 12/75	3312	
CONTOUR	20	96	09/97 – 08/00	3558	
CONTOUR	20	96	09/97 – 08/00	3593	
CONTOUR	25	127	09/97 – 08/00	3558	
CONTOUR	25	127	09/97 – 08/00	3593	
CONTOUR	2.5 SVT	149	09/97 – 08/00	3558	
CONTOUR	2.5 SVT	149	09/97 – 08/00	3593	
CONTOUR (U.S.A.)	2.0 S	93	08/93 – 08/96		4214
CONTOUR (U.S.A.)	2.5 SE	127	08/93 – 08/96		4214
CORSAIR Hatchback (UA)	2.4 i	96	10/89 – 09/92	3700	
CORSAIR Hatchback (UA)	2.4 i	96	10/89 – 09/92	4087	
CORSAIR Saloon (UA)	2.4 i	96	10/89 – 09/92	3700	
CORSAIR Saloon (UA)	2.4 i	96	10/89 – 09/92	4087	
CORTINA	1300	40	10/66 – 03/72	3484	
CORTINA	1300	40	10/66 – 03/72	3312	
CORTINA	2000	72	10/70 – 03/72	3484	
CORTINA	2000	72	10/70 – 03/72	3312	
CORTINA	1600 GT	63	10/70 – 03/72	3484	
CORTINA	1600 GT	63	10/70 – 03/72	3484	
CORTINA	1600 GT	63	10/70 – 03/72	3312	
CORTINA	1600 GT	63	10/70 – 03/72	3312	
CORTINA Coupe	1300	40	10/66 – 03/72	3484	
CORTINA Coupe	1300	40	10/66 – 03/72	3312	
CORTINA Coupe	2000	72	10/70 – 03/72	3484	
CORTINA Coupe	2000	72	10/70 – 03/72	3312	
CORTINA Coupe	1600 GT	63	10/70 – 03/72	3484	
CORTINA Coupe	1600 GT	63	10/70 – 03/72	3484	
CORTINA Coupe	1600 GT	63	10/70 – 03/72	3312	

MAKE & MODEL		KW	YEAR		
FORD					
CORTINA Coupe	1600 GT	63	10/70 – 03/72	3312	
CORTINA Estate	1300	40	10/66 – 03/72	3484	
CORTINA Estate	1300	40	10/66 – 03/72	3312	
CORTINA Estate	2000	72	10/70 – 03/72	3484	
CORTINA Estate	2000	72	10/70 – 03/72	3312	
CORTINA Estate (TC)	16	53	10/72 – 09/74	3312	
CORTINA Estate (TC)	16	53	10/72 – 09/74	3484	
CORTINA Estate (TC)	20	66	10/72 – 09/74	3312	
CORTINA Estate (TC)	20	66	10/72 – 09/74	3484	
CORTINA Estate (TC)	33	82	10/72 – 09/74	3312	
CORTINA Estate (TC)	33	82	10/72 – 09/74	3484	
CORTINA Estate (TD)	20	66	10/74 – 05/77	3312	
CORTINA Estate (TD)	20	66	10/74 – 05/77	3484	
CORTINA Estate (TD)	3.3 200ci	82	10/74 – 05/77	3312	
CORTINA Estate (TD)	3.3 200ci	82	10/74 – 05/77	3484	
CORTINA Estate (TD)	4.1 250ci	127	10/74 – 05/77	3312	
CORTINA Estate (TD)	4.1 250ci	127	10/74 – 05/77	3484	
CORTINA Saloon (TC)	3.3 200ci	82	10/72 – 09/74	3312	
CORTINA Saloon (TC)	3.3 200ci	82	10/72 – 09/74	3484	
CORTINA Saloon (TC)	4.1 250ci	127	10/72 – 09/74	3312	
CORTINA Saloon (TC)	4.1 250ci	127	10/72 – 09/74	3484	
CORTINA Saloon (TD)	20	66	10/74 – 05/77	3312	
CORTINA Saloon (TD)	20	66	10/74 – 05/77	3484	
CORTINA Saloon (TD)	3.3 200ci	82	10/74 – 05/77	3312	
CORTINA Saloon (TD)	3.3 200ci	82	10/74 – 05/77	3484	
CORTINA Saloon (TD)	4.1 250ci	127	10/74 – 05/77	3312	
CORTINA Saloon (TD)	4.1 250ci	127	10/74 – 05/77	3484	
COUGAR (EC_)	2.0 16V	96	08/98 – 12/01	3558	
COUGAR (EC_)	2.0 16V	96	08/98 – 12/01	3593	
COUGAR (EC_)	2.0 16V (EDBB)	96	08/98 – 12/01		4214
COUGAR (EC_)	2.0 16V (EDBC)	96	08/98 – 12/01		4214
COUGAR (EC_)	2.0 16V (EDBD)	96	08/98 – 12/01		4214
COUGAR (EC_)	2.0 16V (EDBA)	96	08/98 – 12/01		4214
COUGAR (EC_)	2.5 ST 200	151	01/00 – 12/01	3558	
COUGAR (EC_)	2.5 ST 200	151	01/00 – 12/01	3593	
COUGAR (EC_)	2.5 V6 24V	125	06/00 – 12/01	3558	
COUGAR (EC_)	2.5 V6 24V	125	08/98 – 12/01	3558	
COUGAR (EC_)	2.5 V6 24V	125	06/00 – 12/01	3593	
COUGAR (EC_)	2.5 V6 24V	125	08/98 – 12/01	3593	
COUGAR Coupe (SW, SX)	25	125	10/99 – 03/03	3558	
COUGAR Coupe (SW, SX)	25	125	10/99 – 03/03	3593	
COURIER Pickup (PD)	2.5 D All-wheel Drive	63	05/96 – 02/99	3781	
COURIER Pickup (PD)	2.6 i 4x4	92	05/96 – 02/99	3781	
COURIER Pickup (PE)	2.5 TD	86	02/99 – 11/02	3767	
COURIER Pickup (PE)	2.5 TD 4x4	86	02/99 – 11/02	3767	
COURIER Pickup (PE)	2.6 i	92	02/99 – 11/02	3767	
COURIER Pickup (PE)	2.6 i 4x4	92	02/99 – 11/02	3767	
COURIER Pickup (PG)	2.5 TD	86	11/02 – 07/04	3767	
COURIER Pickup (PG)	2.5 TD 4x4	86	11/02 – 07/04	3767	
COURIER Pickup (PG)	2.6 i	92	11/02 – 07/04	3767	
COURIER Pickup (PG)	2.6 i 4x4	92	11/02 – 07/04	3767	
COURIER Pickup (PH)	2.5 TD	86	08/04 – 12/06	3767	
COURIER Pickup (PH)	2.5 TD All-wheel Drive	86	08/04 – 12/06	3767	
COURIER Pickup (PH)	2.6 All-wheel Drive	92	08/04 – 02/06	3767	
COURIER Pickup (PH)	2.6 i	92	08/04 – 02/06	3767	
COURIER Pickup (PH)	4.0 i	154	02/05 – 12/06	3767	
COURIER Pickup (PH)	4.0 i 4x4	154	02/05 – 12/06	3767	
COURIER Pickup (PH)	4.0 i 4x4	154	02/05 – 12/06	3988	
COURIER Pickup (UF_, UN_)	22	60	02/99 – 10/02	3767	
COURIER Pickup (UF_, UN_)	2.5 D All-wheel Drive	63	03/96 – 01/99	3781	
COURIER Pickup (UF_, UN_)	2.5 TD All-wheel Drive	80	02/99 -	3767	
COURIER Pickup (UF_, UN_)	2.6 All-wheel Drive	90	07/93 – 01/99	3781	
COURIER Platform/Chassis (PE)	2.5 TD	86	02/99 – 11/02	3767	
COURIER Platform/Chassis (PE)	2.5 TD 4x4	86	02/99 – 11/02	3767	
COURIER Platform/Chassis (PE)	2.6 i	92	02/99 – 11/02	3767	
COURIER Platform/Chassis (PE)	2.6 i 4x4	92	02/99 – 11/02	3767	
COURIER Platform/Chassis (PG)	2.5 TD	86	11/02 – 07/04	3767	
COURIER Platform/Chassis (PG)	2.5 TD 4x4	86	11/02 – 07/04	3767	
COURIER Platform/Chassis (PG)	2.6 i	92	11/02 – 07/04	3767	
COURIER Platform/Chassis (PG)	2.6 i 4x4	92	11/02 – 07/04	3767	
COURIER Platform/Chassis (PH)	2.5 TD	86	08/04 – 12/06	3767	

MAKE & MODEL   		KW	YEAR		
FORD					
COURIER Platform/Chassis (PH)	2.5 TD 4x4	86	08/04 – 12/06	3767	
COURIER Platform/Chassis (PH)	2.5 TD 4x4	86	08/04 – 12/06	3988	
COURIER Platform/Chassis (PH)	2.6 i	92	08/04 – 02/06	3767	
COURIER Platform/Chassis (PH)	2.6 i 4x4	92	08/04 – 02/06	3767	
COURIER Platform/Chassis (PH)	2.6 i 4x4	92	08/04 – 02/06	3988	
CROWN VICTORIA			03-11	4195	
CROWN VICTORIA S SEDAN 4-Door	4.6L 281Cu. In. V8 CNG SOHC Naturally		03-05		4192
CROWN VICTORIA BASESEDAN 4-Door	4.6L 281Cu. In. V8 CNG SOHC Naturally		03-05		4192
CROWN VICTORIA BASESEDAN 4-Door	4.6L 281Cu. In. V8 FLEX SOHC Naturally		06-11		4192
CROWN VICTORIA BASESEDAN 4-Door	4.6L 281Cu. In. V8 GAS SOHC Naturally		03-08		4192
CROWN VICTORIA LWB SEDAN 4-Door	4.6L 281Cu. In. V8 CNG SOHC Naturally		03-		4192
CROWN VICTORIA LX SEDAN 4-Door	4.6L 281Cu. In. V8 CNG SOHC Naturally		03-05		4192
CROWN VICTORIA LX SEDAN 4-Door	4.6L 281Cu. In. V8 FLEX SOHC Naturally		06-11		4192
CROWN VICTORIA LX SEDAN 4-Door	4.6L 281Cu. In. V8 GAS SOHC Naturally		03-08		4192
CROWN VICTORIA LX SPORT SEDAN 4-Door	4.6L 281Cu. In. V8 CNG SOHC Naturally		04-06		4192
CROWN VICTORIA SPECIAL EDITIONSEDAN 4-Door	4.6L 281Cu. In. V8 CNG SOHC Naturally		05-		4192
E SERIES Box	42	147	01/95 – 12/98	3781	
E SERIES Box	50	149	01/93 – 12/95	3781	
E SERIES Box	58	156	01/93 – 12/98	3781	
E SERIES Box	75	210	01/93 – 12/98	3781	
E SERIES Box	7.3 TD	132	01/93 – 12/98	3781	
E SERIES Bus	49	107	01/93 – 10/96	3781	
E SERIES Bus	7.3 TD	132	01/93 – 12/98	3781	
ECOLINE	E150 4.9		86-93	3544	
ECONOVAN (KBA, KCA)	14	48	03/86 – 03/92	3463	
ECONOVAN (KBA, KCA)	14	48	03/86 – 03/92	3499	
ECONOVAN (KBA, KCA)	2.0 D	41	03/86 – 03/92	3463	
ECONOVAN (KBA, KCA)	2.0 D	41	03/86 – 03/92	3499	
ECONOVAN Box (JG)	20	63	06/97 – 01/00	3463	
ECONOVAN Box (JG)	20	63	06/97 – 01/00	3499	
ECONOVAN Box (JH)	ECONOVAN Box (JH)	63	01/00 – 02/03	3892	
ECONOVAN Box (JH)	ECONOVAN Box (JH)	67	03/03 – 07/06	3892	
ECONOVAN Box (JH)	ECONOVAN Box (JH)	71	03/03 – 07/06	3892	
ECONOVAN Box (KAA)	14	48	03/86 – 03/92	3463	
ECONOVAN Box (KAA)	14	48	03/86 – 03/92	3499	
ECONOVAN Box (KAA)	18	81	08/85 – 10/91	3463	
ECONOVAN Box (KAA)	18	81	08/85 – 10/91	3499	
ECONOVAN Box (KAA)	2.0 D	41	03/86 – 03/92	3463	
ECONOVAN Box (KAA)	2.0 D	41	03/86 – 03/92	3499	
ECONOVAN Platform/Chassis (JG)	20	63	06/97 – 01/00	3463	
ECONOVAN Platform/Chassis (JG)	20	63	06/97 – 01/00	3499	
ECOSPORT	1.0 EcoBoost	92	10/13 -	3885	
ECOSPORT	1.5 TDCi	66	10/13 -	3885	
ECOSPORT	1.5 TDCi	70	05/15 -	3885	
ECOSPORT	1.5 Ti	82	10/13 -	3885	
ECOSPORT	1.6 Ti-VCT	90	08/12 -	3885	
ECOSPORT	2.0 4x4	103	08/12 -	3885	
EDGE (U387)	3.5	198	08/06 -		4270
EDGE (U387)	3.5	198	08/06 -		4270
EDGE (U387)	3.5	213	01/10 -		4270
EDGE (U387)	3.5	213	01/10 -		4270
EDGE II (CD539)	2.0	183	09/14 -		4270
EDGE II (CD539)	2.0 AWD	183	09/14 -		4270
EDGE II (CD539)	2.0 TDCi (T8CC)	132	08/15 -		4270
EDGE II (CD539)	2.0 TDCi (T8CM)	132	08/15 -		4270
EDGE II (CD539)	2.0 TDCi Bi-Turbo (T9CE)	154	08/15 -		4270
EDGE II (CD539)	2.0 TDCi Bi-Turbo (T9CF)	154	08/15 -		4270
EDGE II (CD539)	2.7	239	09/14 -		4270
EDGE II (CD539)	2.7 AWD	239	09/14 -		4270
EDGE II (CD539)	3.5	213	09/14 -		4270
ESCAPE	20	91	01/01 – 02/04	4119	
ESCAPE	20	91	01/01 – 02/04		4215
ESCAPE	2.3 Hybrid 4x4	95	03/01 – 07/07	4119	
ESCAPE	2.3 Hybrid 4x4	95	03/01 – 07/07		4215
ESCAPE	2.3 Hybrid 4x4	110	04/04 – 07/07	4119	
ESCAPE	2.3 Hybrid 4x4	110	04/04 – 07/07		4215
ESCAPE	3.0 4x4	145	01/01 – 04/04	4119	
ESCAPE	3.0 4x4	145	01/01 – 04/04		4215
ESCAPE II (U.S.A.)	2.3	99	08/07 -		4270
ESCAPE II (U.S.A.)	2.3	99	08/07 -		4270
ESCAPE II (U.S.A.)	2.3	110	08/07 -		4270

BESER®

MAKE & MODEL		KW	YEAR		
FORD					
ESCAPE II (U.S.A.)	2.3	110	08/07 – 12/12		4270
ESCAPE II (U.S.A.)	2.3	114	09/07 – 12/08		4270
ESCAPE II (U.S.A.)	2.3	114	09/07 – 12/08		4270
ESCAPE II (U.S.A.)	2.5	114	01/09 – 12/12		4270
ESCAPE II (U.S.A.)	2.5	126	01/09 – 12/12		4270
ESCAPE II (U.S.A.)	2.5	126	01/09 – 12/12		4270
ESCAPE II (U.S.A.)	2.5	128	09/08 – 12/12		4270
ESCAPE II (U.S.A.)	3.0	149	08/07 -		4270
ESCAPE II (U.S.A.)	3.0	176	01/09 – 12/12		4270
ESCAPE II (U.S.A.)	3.0	176	01/09 – 12/12		4270
ESCAPE II (U.S.A.)	3.0	179	09/07 – 12/08		4270
ESCAPE II (U.S.A.)	3.0	179	09/07 – 12/08		4270
ESCAPE II (U.S.A.)	3.0	179	09/10 – 12/12		4270
ESCAPE (BA, ZA, ZB, ZC, ZD)	3.0 All-wheel Drive	150	03/01 – 03/04	4119	
ESCAPE (BA, ZA, ZB, ZC, ZD)	3.0 All-wheel Drive	150	03/01 – 03/04		4215
ESCORT '81 Express (AVA)	11	37	03/81 – 02/86	3570	
ESCORT '81 Express (AVA)	13	51	03/81 – 02/86	3570	
ESCORT '81 Express (AVA)	16	61	03/81 – 02/86	3570	
ESCORT '81 Express (AVA)	1.6 D	40	02/84 – 02/86	3570	
ESCORT '86 Express (AVF)	11	37	05/86 – 07/90	3570	
ESCORT '86 Express (AVF)	13	44	02/86 – 07/90	3570	
ESCORT '86 Express (AVF)	13	46	07/88 – 07/90	3570	
ESCORT '86 Express (AVF)	16	60	02/86 – 07/90	3570	
ESCORT '86 Express (AVF)	1.3	46	07/90-12/94	3464	
ESCORT '86 Express (AVF)	1.4	52	07/90-12/94	3464	
ESCORT '86 Express (AVF)	1.4 i	54	02/86 – 07/90	3570	
ESCORT '91 Express (AVF)	1.6 D	40	02/86 – 07/90	3570	
ESCORT '91 Express (AVF)	1.8 D	44	07/88 – 07/90	3570	
ESCORT '91 Express (AVF)	1.8 D	44	07/90-12/94	3464	
ESCORT '91 Express (AVL)	13	46	07/90 12/94	3465	
ESCORT '91 Express (AVL)	14	52	07/90 12/94	3465	
ESCORT '91 Express (AVL)	1.8 D	44	07/90 12/94	3465	
ESCORT '95 Box (AVL)	14	54	01/95 -	3465	
ESCORT '95 Box (AVL)	14	54	01/95 -	3722	
ESCORT '95 Box (AVL)	1.4	54	01/95-08/00	3464	
ESCORT '95 Box (AVL)	1.8 D	44	01/95-08/00	3464	
ESCORT '95 Box (AVL)	1.8 D	44	01/95 -	3465	
ESCORT '95 Box (AVL)	1.8 D	44	01/95 -	3722	
ESCORT '95 Box (AVL)	1.8 TD	66	01/95 -	3465	
ESCORT '95 Box (AVL)	1.8 TD	66	01/95 -	3722	
ESCORT '95 Box (AVL)	1.8 TD	66	01/95-08/00	3464	
ESCORT '95 Box (AVL)	1.8 Turbo D	51	12/95 – 06/01	3465	
ESCORT '95 Box (AVL)	1.8 Turbo D	51	12/95 – 06/01	3722	
ESCORT '95 Box (AVL)	1.8 Turbo D	51	12/95-06/01	3464	
ESCORT Box	13	40	12/74 – 08/80	3312	
ESCORT Box	13	40	12/74 – 08/80	3484	
ESCORT Box	13	42	06/70 – 02/76	3312	
ESCORT Box	13	42	06/70 – 02/76	3484	
ESCORT Box	16	62	01/74 – 01/80	3312	
ESCORT Box	16	62	01/74 – 01/80	3484	
ESCORT Box	20	80	08/75 – 08/80	3312	
ESCORT Box	20	80	08/75 – 08/80	3484	
ESCORT CLASSIC (AAL, ABL)	1.6 16V	66	10/98 – 07/00		3545
ESCORT CLASSIC (AAL, ABL)	1.6 16V	66	10/98 – 07/00	3722	
ESCORT CLASSIC (AAL, ABL)	1.8 TD	66	10/98 – 07/00		3545
ESCORT CLASSIC (AAL, ABL)	1.8 TD	66	10/98 – 07/00	3722	
ESCORT CLASSIC Turnier (ANL)	1.6 16V	66	02/99 – 07/00		3545
ESCORT CLASSIC Turnier (ANL)	1.6 16V	66	02/99 – 07/00	3722	
ESCORT CLASSIC Turnier (ANL)	1.8 TD	66	02/99 – 07/00		3545
ESCORT CLASSIC Turnier (ANL)	1.8 TD	66	02/99 – 07/00	3722	
ESCORT II (ATH)	13	40	12/74 – 08/80	3484	
ESCORT II (ATH)	13	40	12/74 – 08/80	3312	
ESCORT II (ATH)	13	42	12/74 – 08/80	3484	
ESCORT II (ATH)	13	42	12/74 – 08/80	3312	
ESCORT II (ATH)	13	51	12/74 – 08/80	3484	
ESCORT II (ATH)	13	51	12/74 – 08/80	3312	
ESCORT II (ATH)	1.6 RS	62	12/74 – 08/80	3484	
ESCORT II (ATH)	1.6 RS	62	12/74 – 08/80	3312	
ESCORT III (GAA)	11	37	08/83 – 12/85	3570	
ESCORT III (GAA)	11	40	09/80 – 08/83	3570	
ESCORT III (GAA)	11	43	09/80 – 08/83	3570	

MAKE & MODEL   		KW	YEAR		
FORD					
ESCORT III (GAA)	13	51	09/80 – 12/85	3570	
ESCORT III (GAA)	16	48	05/83 – 07/86	3570	
ESCORT III (GAA)	16	58	09/80 – 12/85	3570	
ESCORT III (GAA)	16	71	09/80 – 10/82	3570	
ESCORT III (GAA)	1.6 D	40	02/84 – 12/85	3570	
ESCORT III (GAA)	1.6 i (GAA)	66	07/85 – 12/85	3570	
ESCORT III (GAA)	1.6 RS Turbo	97	11/84 – 12/85	3570	
ESCORT III (GAA)	1.6 XR3i	77	10/82 – 12/85	3570	
ESCORT III (GAA)	RS 1600i	85	05/82 – 12/85	3570	
ESCORT III Convertible (ALD)	13	51	09/83 – 12/85	3570	
ESCORT III Convertible (ALD)	16	58	09/83 – 12/85	3570	
ESCORT III Convertible (ALD)	1.6 i	77	09/83 – 12/85	3570	
ESCORT III Estate (AWA)	11	37	08/83 – 12/85	3570	
ESCORT III Estate (AWA)	11	40	09/80 – 08/83	3570	
ESCORT III Estate (AWA)	13	51	03/81 – 12/85	3570	
ESCORT III Estate (AWA)	16	58	09/80 – 12/85	3570	
ESCORT III Estate (AWA)	1.6 D	40	02/84 12/85	3570	
ESCORT IV (GAF, AWF, ABFT)	11	37	12/85 – 07/90	3570	
ESCORT IV (GAF, AWF, ABFT)	13	44	01/86 – 07/90	3570	
ESCORT IV (GAF, AWF, ABFT)	13	51	11/86 – 07/88	3570	
ESCORT IV (GAF, AWF, ABFT)	14	51	10/85 – 10/90	3570	
ESCORT IV (GAF, AWF, ABFT)	14	54	01/86 – 07/90	3570	
ESCORT IV (GAF, AWF, ABFT)	14	55	01/86 – 07/90	3570	
ESCORT IV (GAF, AWF, ABFT)	16	58	01/86 – 12/88	3570	
ESCORT IV (GAF, AWF, ABFT)	16	65	04/89 – 07/90	3570	
ESCORT IV (GAF, AWF, ABFT)	1.3 (GAF)	46	07/88 – 10/90	3570	
ESCORT IV (GAF, AWF, ABFT)	1.6 D	40	01/86 – 01/89	3570	
ESCORT IV (GAF, AWF, ABFT)	1.6 i	66	01/86 – 05/90	3570	
ESCORT IV (GAF, AWF, ABFT)	1.6 i	75	08/89 – 07/90	3570	
ESCORT IV (GAF, AWF, ABFT)	1.6 Turbo RS	97	01/86 – 07/90	3548	
ESCORT IV (GAF, AWF, ABFT)	1.6 Turbo RS	97	01/86 – 07/90	3549	
ESCORT IV (GAF, AWF, ABFT)	1.6 XR3i	77	01/86 – 08/89	3570	
ESCORT IV (GAF, AWF, ABFT)	1.8 D	44	01/89 – 07/90	3570	
ESCORT IV Convertible (ALF)	14	54	02/87 – 07/90	3570	
ESCORT IV Convertible (ALF)	14	55	01/86 – 07/90	3570	
ESCORT IV Convertible (ALF)	16	58	01/86 – 12/87	3570	
ESCORT IV Convertible (ALF)	1.6 i	66	01/86 – 07/90	3570	
ESCORT IV Convertible (ALF)	1.6 i	75	08/89 – 07/90	3570	
ESCORT IV Convertible (ALF)	1.6 XR3i	77	01/86 – 07/90	3570	
ESCORT IV Estate (AWF, AVF)	11	37	10/85 – 09/90	3570	
ESCORT IV Estate (AWF, AVF)	13	44	01/86 – 07/90	3570	
ESCORT IV Estate (AWF, AVF)	13	51	11/86 – 07/88	3570	
ESCORT IV Estate (AWF, AVF)	14	51	10/85 – 10/90	3570	
ESCORT IV Estate (AWF, AVF)	14	54	01/86 – 07/90	3570	
ESCORT IV Estate (AWF, AVF)	14	55	01/86 – 07/90	3570	
ESCORT IV Estate (AWF, AVF)	16	58	01/86 – 07/90	3570	
ESCORT IV Estate (AWF, AVF)	1.6 D	40	01/86 – 01/89	3570	
ESCORT IV Estate (AWF, AVF)	1.6 i	66	01/86 – 07/90	3570	
ESCORT IV Estate (AWF, AVF)	1.8 D	44	01/89 – 07/90	3570	
ESCORT Saloon	11	32	01/68 – 12/74	3311	
ESCORT Saloon	13	40	12/74 – 08/80	3312	
ESCORT Saloon	13	40	12/74 – 08/80	3484	
ESCORT Saloon	13	42	06/70 – 02/76	3311	
ESCORT Saloon	16	62	12/74 – 08/80	3312	
ESCORT Saloon	16	62	12/74 – 08/80	3484	
ESCORT Saloon	20	80	08/75 – 08/80	3312	
ESCORT Saloon	20	80	08/75 – 08/80	3484	
ESCORT V (GAL)	13	44	07/90 – 09/92	3465	
ESCORT V (GAL)	14	52	07/90 – 09/92	3465	
ESCORT V (GAL)	16	66	07/90 – 08/92	3465	
ESCORT V (GAL)	16	66	07/90 – 08/92		3545
ESCORT V (GAL)	16	77	07/90 – 12/92	3465	
ESCORT V (GAL)	16	77	07/90 – 12/92		3545
ESCORT V (GAL)	1.3	44	07/90-09/92	3464	
ESCORT V (GAL)	1.4	52	07/90-09/92	3464	
ESCORT V (GAL)	1.6	66	07/90-08/92	3464	
ESCORT V (GAL)	1.6	77	07/90-12/92	3464	
ESCORT V (GAL)	1.8 16V XR3i	77	02/92 – 12/92	3465	
ESCORT V (GAL)	1.8 16V XR3i	77	02/92 – 12/92		3545
ESCORT V (GAL)	1.8 16V XR3i	96	02/92 – 12/92		3545
ESCORT V (GAL)	1.8 16V XR3i	96	02/92 – 12/92	3548	

MAKE & MODEL		KW	YEAR		
FORD					
ESCORT V (GAL)	1.8 16V XR3i	96	02/92 – 12/92	3549	
ESCORT V (GAL)	1.8 16V XR3i	77	02/92-12/92	3464	
ESCORT V (GAL)	1.8 D	44	07/90 – 12/92	3465	
ESCORT V (GAL)	1.8 D	44	07/90 – 12/92		3545
ESCORT V (GAL)	1.8 D	44	07/90-12/92	3464	
ESCORT V (GAL)	RS 2000	110	05/91 – 12/92		3545
ESCORT V (GAL)	RS 2000	110	05/91 – 12/92	3548	
ESCORT V (GAL)	RS 2000	110	05/91 – 12/92	3549	
ESCORT V Convertible (ALL)	14	52	07/90 – 12/92	3465	
ESCORT V Convertible (ALL)	16	77	07/90 – 12/92	3465	
ESCORT V Convertible (ALL)	16	77	07/90 – 12/92		3545
ESCORT V Convertible (ALL)	1.4	52	07/90-12/92	3464	
ESCORT V Convertible (ALL)	1.6	77	07/90-12/92	3464	
ESCORT V Convertible (ALL)	1.8 16V XR3i	77	02/92 – 12/92	3465	
ESCORT V Convertible (ALL)	1.8 16V XR3i	77	02/92 – 12/92		3545
ESCORT V Convertible (ALL)	1.8 16V XR3i	96	02/92 – 12/92		3545
ESCORT V Convertible (ALL)	1.8 16V XR3i	96	02/92 – 12/92	3548	
ESCORT V Convertible (ALL)	1.8 16V XR3i	96	02/92 – 12/92	3549	
ESCORT V Convertible (ALL)	1.8 16V XR3i	77	02/92-12/92	3464	
ESCORT V Estate (GAL, AVL)	13	44	09/91 – 09/92	3465	
ESCORT V Estate (GAL, AVL)	14	52	07/90 – 09/92	3465	
ESCORT V Estate (GAL, AVL)	16	66	07/90 – 08/92	3465	
ESCORT V Estate (GAL, AVL)	16	66	07/90 – 08/92		3545
ESCORT V Estate (GAL, AVL)	16	77	07/90 – 09/92	3465	
ESCORT V Estate (GAL, AVL)	16	77	07/90 – 09/92		3545
ESCORT V Estate (GAL, AVL)	1.8 16V	77	02/92 – 12/92	3465	
ESCORT V Estate (GAL, AVL)	1.8 16V	77	02/92 – 12/92		3545
ESCORT V Estate (GAL, AVL)	1.8 D	44	07/90 – 12/92	3465	
ESCORT V Estate (GAL, AVL)	1.8 D	44	07/90 – 12/92		3545
ESCORT V Estate (GAL, AVL)	1.8 TD	55	05/91 – 12/92	3465	
ESCORT V Estate (GAL, AVL)	1.8 TD	55	05/91 – 12/92		3545
ESCORT V Turnier (GAL, AVL)	1.3	44	09/91-09/92	3464	
ESCORT V Turnier (GAL, AVL)	1.4	52	07/90-09/92	3464	
ESCORT V Turnier (GAL, AVL)	1.6	66	07/90-08/92	3464	
ESCORT V Turnier (GAL, AVL)	1.6	77	07/90-09/92	3464	
ESCORT V Turnier (GAL, AVL)	1.8	77	02/92-12/92	3464	
ESCORT V Turnier (GAL, AVL)	1.8 D	44	07/90-12/92	3464	
ESCORT V Turnier (GAL, AVL)	1.8 TD	55	05/91-12/92	3464	
ESCORT VI (GAL)	13	44	09/92 – 01/95	3465	
ESCORT VI (GAL)	14	52	09/92 – 01/95	3465	
ESCORT VI (GAL)	14	55	01/94 – 01/95	3465	
ESCORT VI (GAL)	1.3	44	09/92-01/95	3464	
ESCORT VI (GAL)	1.4	52	09/92-01/95	3464	
ESCORT VI (GAL)	1.4	55	01/94-01/95	3464	
ESCORT VI (GAL)	1.6 i 16V	65	01/94 – 01/95	3465	
ESCORT VI (GAL)	1.6 i 16V	65	01/94 – 01/95		3545
ESCORT VI (GAL)	1.6 i 16V	66	09/92 – 01/95	3465	
ESCORT VI (GAL)	1.6 i 16V	66	09/92 – 01/95		3545
ESCORT VI (GAL)	1.6 i 16V	65	01/94-01/95	3464	
ESCORT VI (GAL)	1.6 i 16V	66	09/92-01/95	3464	
ESCORT VI (GAL)	1.8 16V XR3i	96	09/92 – 01/95		3545
ESCORT VI (GAL)	1.8 16V XR3i	96	09/92 – 01/95	3548	
ESCORT VI (GAL)	1.8 16V XR3i	96	09/92 – 01/95	3549	
ESCORT VI (GAL)	1.8 D	44	09/92 – 01/95	3465	
ESCORT VI (GAL)	1.8 D	44	09/92 – 01/95		3545
ESCORT VI (GAL)	1.8 D	44	09/92-01/95	3464	
ESCORT VI (GAL)	1.8 i 16V	77	09/92 – 01/95	3465	
ESCORT VI (GAL)	1.8 i 16V	77	09/92 – 01/95		3545
ESCORT VI (GAL)	1.8 i 16V	77	09/92-01/95	3464	
ESCORT VI (GAL)	1.8 TD	66	02/93 – 01/95	3465	
ESCORT VI (GAL)	1.8 TD	66	02/93 – 01/95		3545
ESCORT VI (GAL)	1.8 TD	66	02/93-01/95	3464	
ESCORT VI (GAL)	1.8 XR3i 16V 4x4	77	08/93 – 01/95		3545
ESCORT VI (GAL)	1.8 XR3i 16V 4x4	77	08/93 – 01/95	3548	
ESCORT VI (GAL)	1.8 XR3i 16V 4x4	77	08/93 – 01/95	3549	
ESCORT VI (GAL)	1.8 XR3i 16V 4x4	96	08/93 – 01/95		3545
ESCORT VI (GAL)	1.8 XR3i 16V 4x4	96	08/93 – 01/95	3548	
ESCORT VI (GAL)	1.8 XR3i 16V 4x4	96	08/93 – 01/95	3549	
ESCORT VI (GAL)	RS 2000	110	09/92 – 01/95		3545
ESCORT VI (GAL)	RS 2000	110	09/92 – 01/95	3548	
ESCORT VI (GAL)	RS 2000	110	09/92 – 01/95	3549	

MAKE & MODEL		KW	YEAR		
FORD					
ESCORT VI (GAL)	RS 2000 4x4	110	08/93 – 01/95		3545
ESCORT VI (GAL)	RS 2000 4x4	110	08/93 – 01/95	3548	
ESCORT VI (GAL)	RS 2000 4x4	110	08/93 – 01/95	3549	
ESCORT VI Convertible (ALL)	14	52	12/92 – 04/94	3465	
ESCORT VI Convertible (ALL)	1.4	52	12/92-04/94	3464	
ESCORT VI Convertible (ALL)	1.4 i	55	07/93 – 01/95	3465	
ESCORT VI Convertible (ALL)	1.4 i	55	07/93-01/95	3464	
ESCORT VI Convertible (ALL)	1.6 16V XR3i	66	12/92 – 01/95	3465	
ESCORT VI Convertible (ALL)	1.6 16V XR3i	66	12/92 – 01/95		3545
ESCORT VI Convertible (ALL)	1.6 16V XR3i	66	12/92-01/95	3464	
ESCORT VI Convertible (ALL)	1.6 i 16V	65	02/94 – 01/95	3465	
ESCORT VI Convertible (ALL)	1.6 i 16V	65	02/94 – 01/95		3545
ESCORT VI Convertible (ALL)	1.6 i 16V	65	02/94-01/95	3464	
ESCORT VI Convertible (ALL)	1.8 16V XR3i	77	12/92 – 01/95	3465	
ESCORT VI Convertible (ALL)	1.8 16V XR3i	77	12/92 – 01/95		3545
ESCORT VI Convertible (ALL)	1.8 16V XR3i	96	12/92 – 01/95		3545
ESCORT VI Convertible (ALL)	1.8 16V XR3i	96	12/92 – 01/95	3548	
ESCORT VI Convertible (ALL)	1.8 16V XR3i	96	12/92 – 01/95	3549	
ESCORT VI Convertible (ALL)	1.8 16V XR3i	77	12/92-01/95	3464	
ESCORT VI Estate (GAL)	13	44	09/92 – 01/95	3465	
ESCORT VI Estate (GAL)	14	52	09/92 – 01/95	3465	
ESCORT VI Estate (GAL)	14	55	01/94 – 01/95	3465	
ESCORT VI Estate (GAL)	1.6 i 16V	65	01/94 – 01/95	3465	
ESCORT VI Estate (GAL)	1.6 i 16V	65	01/94 – 01/95		3545
ESCORT VI Estate (GAL)	1.6 i 16V	66	09/92 – 01/95	3465	
ESCORT VI Estate (GAL)	1.6 i 16V	66	09/92 – 01/95		3545
ESCORT VI Estate (GAL)	1.8 D	44	09/92 – 01/95	3465	
ESCORT VI Estate (GAL)	1.8 D	44	09/92 – 01/95		3545
ESCORT VI Estate (GAL)	1.8 i 16V	77	01/93 – 01/95	3465	
ESCORT VI Estate (GAL)	1.8 i 16V	77	01/93 – 01/95		3545
ESCORT VI Estate (GAL)	1.8 i 16V	96	02/93 – 01/95		3545
ESCORT VI Estate (GAL)	1.8 i 16V	96	02/93 – 01/95	3548	
ESCORT VI Estate (GAL)	1.8 i 16V	96	02/93 – 01/95	3549	
ESCORT VI Estate (GAL)	1.8 TD	66	02/93 – 01/95	3465	
ESCORT VI Estate (GAL)	1.8 TD	66	02/93 – 01/95		3545
ESCORT VI Saloon (GAL)	13	44	08/93 – 01/95	3465	
ESCORT VI Saloon (GAL)	14	52	08/93 – 04/94	3465	
ESCORT VI Saloon (GAL)	14	55	08/93 – 01/95	3465	
ESCORT VI Saloon (GAL)	1.3	44	08/93-01/95	3464	
ESCORT VI Saloon (GAL)	1.4	52	08/93-04/94	3464	
ESCORT VI Saloon (GAL)	1.4	55	08/93-01/95	3464	
ESCORT VI Saloon (GAL)	1.6 i 16V	65	01/94 – 01/95	3465	
ESCORT VI Saloon (GAL)	1.6 i 16V	65	01/94 – 01/95		3545
ESCORT VI Saloon (GAL)	1.6 i 16V	66	08/93 – 01/95	3465	
ESCORT VI Saloon (GAL)	1.6 i 16V	66	08/93 – 01/95		3545
ESCORT VI Saloon (GAL)	1.6 i 16V	65	01/94-01/95	3464	
ESCORT VI Saloon (GAL)	1.6 i 16V	66	08/93-01/95	3464	
ESCORT VI Saloon (GAL)	1.8 D	44	08/93 – 01/95	3465	
ESCORT VI Saloon (GAL)	1.8 D	44	08/93 – 01/95		3545
ESCORT VI Saloon (GAL)	1.8 D	44	08/93-01/95	3464	
ESCORT VI Saloon (GAL)	1.8 i 16V	77	08/93 – 01/95	3465	
ESCORT VI Saloon (GAL)	1.8 i 16V	77	08/93 – 01/95		3545
ESCORT VI Saloon (GAL)	1.8 i 16V	77	08/93-01/95	3464	
ESCORT VI Saloon (GAL)	1.8 TD	66	08/93 – 01/95	3465	
ESCORT VI Saloon (GAL)	1.8 TD	66	08/93 – 01/95		3545
ESCORT VI Saloon (GAL)	1.8 TD	66	08/93-01/95	3464	
ESCORT VI Turnier (GAL)	1.6 i 16V	65	01/94-01/95	3464	
ESCORT VI Turnier (GAL)	1.6 i 16V	66	09/92-01/95	3464	
ESCORT VI Turnier (GAL)	1.8 D	44	09/92-01/95	3464	
ESCORT VI Turnier (GAL)	1.8 i 16V	77	01/93-01/95	3464	
ESCORT VI Turnier (GAL)	1.8 TD	66	02/93-01/95	3464	
ESCORT VII (GAL, AAL, ABL)	13	44	01/95 – 10/98	3465	
ESCORT VII (GAL, AAL, ABL)	13	44	01/95 – 10/98	3722	
ESCORT VII (GAL, AAL, ABL)	14	55	01/95 – 10/98	3465	
ESCORT VII (GAL, AAL, ABL)	14	55	01/95 – 10/98	3722	
ESCORT VII (GAL, AAL, ABL)	1.3	44	01/95-10/98	3464	
ESCORT VII (GAL, AAL, ABL)	1.4	55	01/95-10/98	3464	
ESCORT VII (GAL, AAL, ABL)	1.6 16V	66	01/95 – 10/98	3465	
ESCORT VII (GAL, AAL, ABL)	1.6 16V	66	01/95 – 10/98		3545
ESCORT VII (GAL, AAL, ABL)	1.6 16V	66	01/95 – 10/98	3722	
ESCORT VII (GAL, AAL, ABL)	1.6 16V	66	01/95-10/98	3464	

MAKE & MODEL		KW	YEAR		
FORD					
ESCORT VII (GAL, AAL, ABL)	1.6 16V 4x4	66	01/95 – 10/98	3465	
ESCORT VII (GAL, AAL, ABL)	1.6 16V 4x4	66	01/95 – 10/98		3545
ESCORT VII (GAL, AAL, ABL)	1.6 16V 4x4	66	01/95 – 10/98	3722	
ESCORT VII (GAL, AAL, ABL)	1.6 16V 4x4	66	01/95-10/98	3464	
ESCORT VII (GAL, AAL, ABL)	1.6 i 16V	65	01/95 – 08/95	3465	
ESCORT VII (GAL, AAL, ABL)	1.6 i 16V	65	01/95 – 08/95		3545
ESCORT VII (GAL, AAL, ABL)	1.6 i 16V	65	01/95-08/95	3464	
ESCORT VII (GAL, AAL, ABL)	1.8 16V	77	01/95 – 08/95	3465	
ESCORT VII (GAL, AAL, ABL)	1.8 16V	77	01/95 – 08/95		3545
ESCORT VII (GAL, AAL, ABL)	1.8 16V	85	01/95 – 10/98	3465	
ESCORT VII (GAL, AAL, ABL)	1.8 16V	85	01/95 – 10/98		3545
ESCORT VII (GAL, AAL, ABL)	1.8 16V	85	01/95 – 10/98	3722	
ESCORT VII (GAL, AAL, ABL)	1.8 16V	77	01/95-08/95	3464	
ESCORT VII (GAL, AAL, ABL)	1.8 16V	85	01/95-10/98	3464	
ESCORT VII (GAL, AAL, ABL)	1.8 D	44	01/95 – 12/96	3465	
ESCORT VII (GAL, AAL, ABL)	1.8 D	44	01/95 – 12/96		3545
ESCORT VII (GAL, AAL, ABL)	1.8 D	44	01/95-12/96	3464	
ESCORT VII (GAL, AAL, ABL)	1.8 TD	66	01/95 – 10/98	3465	
ESCORT VII (GAL, AAL, ABL)	1.8 TD	66	01/95 – 10/98		3545
ESCORT VII (GAL, AAL, ABL)	1.8 TD	66	01/95 – 10/98	3722	
ESCORT VII (GAL, AAL, ABL)	1.8 TD	66	01/95-10/98	3464	
ESCORT VII (GAL, AAL, ABL)	1.8 Turbo D	51	12/95 – 10/98	3465	
ESCORT VII (GAL, AAL, ABL)	1.8 Turbo D	51	12/95 – 10/98		3545
ESCORT VII (GAL, AAL, ABL)	1.8 Turbo D	51	12/95 – 10/98	3722	
ESCORT VII (GAL, AAL, ABL)	1.8 Turbo D	51	12/95-10/98	3464	
ESCORT VII (GAL, AAL, ABL)	RS 2000	110	02/95 – 02/98		3545
ESCORT VII (GAL, AAL, ABL)	RS 2000	110	02/95 – 02/98	3548	
ESCORT VII (GAL, AAL, ABL)	RS 2000	110	02/95 – 02/98	3549	
ESCORT VII (GAL, AAL, ABL)	RS 2000 4x4	110	02/95 – 10/98		3545
ESCORT VII (GAL, AAL, ABL)	RS 2000 4x4	110	02/95 – 10/98	3548	
ESCORT VII (GAL, AAL, ABL)	RS 2000 4x4	110	02/95 – 10/98	3549	
ESCORT VII Convertible (ALL)	14	55	02/95 – 08/98	3465	
ESCORT VII Convertible (ALL)	14	55	02/95 – 08/98	3722	
ESCORT VII Convertible (ALL)	1.4	55	02/95-08/98	3464	
ESCORT VII Convertible (ALL)	1.6 16V XR3i	65	02/95 – 12/96	3465	
ESCORT VII Convertible (ALL)	1.6 16V XR3i	65	02/95 – 12/96		3545
ESCORT VII Convertible (ALL)	1.6 16V XR3i	66	02/95 – 09/99	3465	
ESCORT VII Convertible (ALL)	1.6 16V XR3i	66	02/95 – 09/99		3545
ESCORT VII Convertible (ALL)	1.6 16V XR3i	66	02/95 – 09/99	3722	
ESCORT VII Convertible (ALL)	1.6 16V XR3i	65	02/95-12/96	3464	
ESCORT VII Convertible (ALL)	1.6 16V XR3i	66	02/95-09/99	3464	
ESCORT VII Convertible (ALL)	1.8 16V XR3i	77	02/95 – 08/98	3465	
ESCORT VII Convertible (ALL)	1.8 16V XR3i	77	02/95 – 08/98		3545
ESCORT VII Convertible (ALL)	1.8 16V XR3i	77	02/95 – 08/98	3722	
ESCORT VII Convertible (ALL)	1.8 16V XR3i	85	10/95 – 08/98	3465	
ESCORT VII Convertible (ALL)	1.8 16V XR3i	85	10/95 – 08/98		3545
ESCORT VII Convertible (ALL)	1.8 16V XR3i	85	10/95 – 08/98	3722	
ESCORT VII Convertible (ALL)	1.8 16V XR3i	96	02/95 – 08/00		3545
ESCORT VII Convertible (ALL)	1.8 16V XR3i	96	02/95 – 08/00	3548	
ESCORT VII Convertible (ALL)	1.8 16V XR3i	96	02/95 – 08/00	3549	
ESCORT VII Convertible (ALL)	1.8 16V XR3i	77	02/95-08/98	3464	
ESCORT VII Convertible (ALL)	1.8 16V XR3i	85	10/95-08/98	3464	
ESCORT VII Convertible (ALL)	1.8 TD	66	09/95 – 08/98	3465	
ESCORT VII Convertible (ALL)	1.8 TD	66	09/95 – 08/98		3545
ESCORT VII Convertible (ALL)	1.8 TD	66	09/95 – 08/98	3722	
ESCORT VII Convertible (ALL)	1.8 TD	66	09/95-08/98	3464	
ESCORT VII Convertible (ALL)	1.8 Turbo D	51	10/96 – 08/99	3465	
ESCORT VII Convertible (ALL)	1.8 Turbo D	51	10/96 – 08/99		3545
ESCORT VII Convertible (ALL)	1.8 Turbo D	51	10/96 – 08/99	3722	
ESCORT VII Convertible (ALL)	1.8 Turbo D	51	10/96-08/99	3464	
ESCORT VII Estate (GAL, ANL)	13	44	01/95 – 01/99	3465	
ESCORT VII Estate (GAL, ANL)	13	44	01/95 – 01/99	3722	
ESCORT VII Estate (GAL, ANL)	14	55	01/95 – 02/99	3465	
ESCORT VII Estate (GAL, ANL)	14	55	01/95 – 02/99	3722	
ESCORT VII Estate (GAL, ANL)	1.6 16V	66	01/95 – 02/99	3465	
ESCORT VII Estate (GAL, ANL)	1.6 16V	66	01/95 – 02/99		3545
ESCORT VII Estate (GAL, ANL)	1.6 16V	66	01/95 – 02/99	3722	
ESCORT VII Estate (GAL, ANL)	1.6 i 16V	65	01/95 – 08/95	3465	
ESCORT VII Estate (GAL, ANL)	1.6 i 16V	65	01/95 – 08/95		3545
ESCORT VII Estate (GAL, ANL)	1.8 16V	77	01/95 – 08/95	3465	
ESCORT VII Estate (GAL, ANL)	1.8 16V	77	01/95 – 08/95		3545

MAKE & MODEL		KW	YEAR		
FORD					
ESCORT VII Estate (GAL, ANL)	1.8 16V	85	01/95 – 02/99	3465	
ESCORT VII Estate (GAL, ANL)	1.8 16V	85	01/95 – 02/99		3545
ESCORT VII Estate (GAL, ANL)	1.8 16V	85	01/95 – 02/99	3722	
ESCORT VII Estate (GAL, ANL)	1.8 D	44	01/95 – 02/99	3465	
ESCORT VII Estate (GAL, ANL)	1.8 D	44	01/95 – 02/99		3545
ESCORT VII Estate (GAL, ANL)	1.8 D	44	01/95 – 02/99	3722	
ESCORT VII Estate (GAL, ANL)	1.8 TD	66	01/95 – 02/99	3465	
ESCORT VII Estate (GAL, ANL)	1.8 TD	66	01/95 – 02/99		3545
ESCORT VII Estate (GAL, ANL)	1.8 TD	66	01/95 – 02/99	3722	
ESCORT VII Estate (GAL, ANL)	1.8 Turbo D	51	12/95 – 02/99	3465	
ESCORT VII Estate (GAL, ANL)	1.8 Turbo D	51	12/95 – 02/99		3545
ESCORT VII Estate (GAL, ANL)	1.8 Turbo D	51	12/95 – 02/99	3722	
ESCORT VII Saloon (GAL, AFL)	13	44	01/95 – 02/99	3465	
ESCORT VII Saloon (GAL, AFL)	13	44	01/95 – 02/99	3722	
ESCORT VII Saloon (GAL, AFL)	14	55	01/95 – 02/99	3465	
ESCORT VII Saloon (GAL, AFL)	14	55	01/95 – 02/99	3722	
ESCORT VII Saloon (GAL, AFL)	1.3	44	01/95-02/99	3464	
ESCORT VII Saloon (GAL, AFL)	1.4	55	01/95-02/99	3464	
ESCORT VII Saloon (GAL, AFL)	1.6 i 16V	65	01/95 – 08/95	3465	
ESCORT VII Saloon (GAL, AFL)	1.6 i 16V	65	01/95 – 08/95		3545
ESCORT VII Saloon (GAL, AFL)	1.6 i 16V	65	01/95-08/95	3464	
ESCORT VII Saloon (GAL, AFL)	1.6 i 16V	66	01/95 – 02/99	3465	
ESCORT VII Saloon (GAL, AFL)	1.6 i 16V	66	01/95 – 02/99		3545
ESCORT VII Saloon (GAL, AFL)	1.6 i 16V	66	01/95 – 02/99	3722	
ESCORT VII Saloon (GAL, AFL)	1.6 i 16V	66	01/95-02/99	3464	
ESCORT VII Saloon (GAL, AFL)	1.8 16V	77	01/95 – 08/95	3465	
ESCORT VII Saloon (GAL, AFL)	1.8 16V	77	01/95 – 08/95		3545
ESCORT VII Saloon (GAL, AFL)	1.8 16V	85	01/95 – 02/99	3465	
ESCORT VII Saloon (GAL, AFL)	1.8 16V	85	01/95 – 02/99		3545
ESCORT VII Saloon (GAL, AFL)	1.8 16V	85	01/95 – 02/99	3722	
ESCORT VII Saloon (GAL, AFL)	1.8 16V	77	01/95-08/95	3464	
ESCORT VII Saloon (GAL, AFL)	1.8 16V	85	01/95-02/99	3464	
ESCORT VII Saloon (GAL, AFL)	1.8 D	44	01/95 – 12/96	3465	
ESCORT VII Saloon (GAL, AFL)	1.8 D	44	01/95 – 12/96		3545
ESCORT VII Saloon (GAL, AFL)	1.8 D	44	01/95-12/96	3464	
ESCORT VII Saloon (GAL, AFL)	1.8 TD	66	01/95 – 02/99	3465	
ESCORT VII Saloon (GAL, AFL)	1.8 TD	66	01/95 – 02/99		3545
ESCORT VII Saloon (GAL, AFL)	1.8 TD	66	01/95 – 02/99	3722	
ESCORT VII Saloon (GAL, AFL)	1.8 TD	66	01/95-02/99	3464	
ESCORT VII Saloon (GAL, AFL)	1.8 Turbo D	51	12/95 – 02/99	3465	
ESCORT VII Saloon (GAL, AFL)	1.8 Turbo D	51	12/95 – 02/99		3545
ESCORT VII Saloon (GAL, AFL)	1.8 Turbo D	51	12/95 – 02/99	3722	
ESCORT VII Saloon (GAL, AFL)	1.8 Turbo D	51	12/95-02/99	3464	
ESCORT VII Turnier (GAL, ANL)	1.3	44	01/95-01/99	3464	
ESCORT VII Turnier (GAL, ANL)	1.4	55	01/95-02/99	3464	
ESCORT VII Turnier (GAL, ANL)	1.6 16V	66	01/95-02/99	3464	
ESCORT VII Turnier (GAL, ANL)	1.6 i 16V	65	01/95-08/95	3464	
ESCORT VII Turnier (GAL, ANL)	1.8 16V	77	01/95-08/95	3464	
ESCORT VII Turnier (GAL, ANL)	1.8 16V	85	01/95-02/99	3464	
ESCORT VII Turnier (GAL, ANL)	1.8 D	44	01/95-02/99	3464	
ESCORT VII Turnier (GAL, ANL)	1.8 TD	66	01/95-02/99	3464	
ESCORT VII Turnier (GAL, ANL)	1.8 Turbo D	51	12/95-02/99	3464	
EVEREST (25N_)	2.5 TD	81	05/03 -	3767	
EVEREST (25N_)	2.5 TD	88	05/03 – 08/06	3767	
EVEREST (25N_)	2.5 TD	89	05/03 – 08/06	3767	
EVEREST (25N_)	2.5 TD All-wheel Drive	81	05/03 -	3767	
EVEREST (25N_)	3.0 TD All-wheel Drive	115	08/06 -	3767	
EXPLORER			07-		4196
EXPLORER (U_)	4.0 (UN, UP)	119	10/96 – 10/01	3781	
EXPLORER (U_)	4.0 (UN, UP, UQ, US)	152	09/96 – 10/01	3781	
EXPLORER (U2)	40	115	11/94 – 08/96	3781	
EXPLORER (U2)	40	150	10/99 – 12/01	3781	
EXPLORER (U2)	40	152	09/96 – 12/01	3781	
EXPLORER (U2)	4.0	150	10/99 – 12/01		4186
EXPLORER (U2)	4.0	152	09/96 – 12/01		4186
EXPLORER (U2)	4.0 4WD	150	10/99 – 12/01	3781	
EXPLORER (U2)	4.0 V6 4WD	115	03/95 – 12/01	3781	
EXPLORER (U2)	4.0 V6 4WD	152	10/96 – 12/01	3781	
EXPLORER (U2)	4.0 V6 4WD	115	03/95 – 12/01		4186
EXPLORER (U2)	4.0 V6 4WD	150	10/98 – 12/01	3781	
EXPLORER (U2)	4.0 V6 4WD	150	10/98 – 12/01		4186

MAKE & MODEL		KW	YEAR		
FORD					
EXPLORER (U2)	5.0 4WD	157	01/96 – 12/01	3781	
EXPLORER (U2)	5.0 4WD	157	01/96 – 12/01		4186
EXPLORER (UN46)	4.0 V6 4WD	121	01/93 – 12/94	3781	
EXPLORER (UN46)	4.0 V6 4WD	121	01/93 – 12/94		4186
F 1000	ONLY SOUTH AMERICA		92-	3534	
F 1000	ONLY SOUTH AMERICA		94-	3535	
F-150	4.2	157	10.03 - 09.07		4320
F-150	4.2 4x4	157	10.03 - 09.07		4320
F-150	4.6 4x4	170	10.03 - 09.07		4320
F-150	4.6 Lariat Supercab 4x4	248	10.03 - 09.07		4320
F-150	4.6 XL Styleside	170	10.03 - 09.07		4320
F-150	5.4 SVT 4x4	194	02.04 - 09.07		4320
F150 Pick-up	4.2	157	10.03 - 09.07		4320
F150 Pick-up	4.2 Tüm tekerlekleri çekisli	157	10.03 - 09.07		4320
F150 Pick-up	4.6 V8	170	10.03 - 09.07		4320
F150 Pick-up	4.6 V8 Tüm tekerlekleri çekisli	170	10.03 - 09.07		4320
F150 Pick-up	4.6 V8 Tüm tekerlekleri çekisli	248	10.03 - 09.07		4320
F150 Pick-up	5.4 V8 Tüm tekerlekleri çekisli	194	02.04 - 09.07		4320
F-150 Standard Cab Pickup	4.2	157	09.03 - 12.08		4320
F4000	ONLY SOUTH AMERiCA			3613	
FAIRLANE Saloon (ZB)	3.6 221ci	97	03/68 – 06/69	3312	
FAIRLANE Saloon (ZB)	3.6 221ci	97	03/68 – 06/69	3484	
FAIRLANE Saloon (ZB)	4.9 V8 302ci	157	03/68 – 06/69	3312	
FAIRLANE Saloon (ZB)	4.9 V8 302ci	157	03/68 – 06/69	3484	
FESTIVA (BA_2, BJ_2)	11	40	11/90 – 10/93	3723	
FESTIVA (BA_2, BJ_2)	13	54	11/90 – 09/03	3723	
FESTIVA (BA_2, BJ_2)	1.3 GLX	55	05/94 – 08/98	3723	
FESTIVA (WA)	13	46	10/91 – 03/94	3723	
FESTIVA (WB)	1.3 i	47	04/94 – 12/97	3522	
FESTIVA (WD)	1.3 i	47	01/97 – 12/97	3522	
FESTIVA (WD)	1.5 i	67	01/97 – 12/97	3522	
FESTIVA (WF)	1.3 i	47	01/98 – 04/01	3522	
FESTIVA (WF)	1.5 i	56	01/98 – 12/01	3522	
FIESTA Box (F3L, F5L)	13	44	09/91 – 02/96	3570	
FIESTA Box (F3L, F5L)	1.8 D	44	09/91 – 02/96	3570	
FIESTA Box (FVD)	10	33	08/83 – 11/89	3621	
FIESTA Box (FVD)	1.8 D (FVJ)	43	03/89 – 12/95	3570	
FIESTA Box (J5_, J3_)	13	44	02/96 -	3570	
FIESTA Box (J5_, J3_)	13	44	02/96 -	3589	
FIESTA Box (J5_, J3_)	13	44	02/96 – 08/03	3877	
FIESTA Box (J5_, J3_)	1.3	44	02/96-08/03	3594	
FIESTA Box (J5_, J3_)	1.4 i	66	04/96 – 10/99	3570	
FIESTA Box (J5_, J3_)	1.8 D	44	02/96 – 04/02	3570	
FIESTA Box (J5_, J3_)	1.8 D	44	02/96 – 04/02	3589	
FIESTA Box (J5_, J3_)	1.8 D	44	02/96 – 04/02	3877	
FIESTA Box (J5_, J3_)	1.8 D	44	02/96-04/02	3594	
FIESTA Box (J5_, J3_)	1.8 DI	55	09/00 – 08/03	3877	
FIESTA Box (JV_)	D 1.8	44	05/98 – 04/02	3570	
FIESTA Box (JV_)	D 1.8	44	05/98 – 04/02	3877	
FIESTA Box (JV_)	TD 1.8	55	03/00 – 08/03	3877	
FIESTA Box (WFVT)	1.0 (WFVT)	29	10/77 – 11/86	3621	
FIESTA Box (WFVT)	1.1 (WFVT)	39	10/77 – 11/86	3621	
FIESTA Hatchback (WP, WQ)	1.6 i	74	04/04 – 12/08	3877	
FIESTA Hatchback (WP, WQ)	2.0 i XR4	110	06/07 – 03/09		3755
FIESTA I (GFBT)	1.6 XR2	71	09/81 – 08/83	3570	
FIESTA II (FBD)	10	33	09/83 – 11/89	3621	
FIESTA II (FBD)	14	51	09/83 – 01/87	3621	
FIESTA II (FBD)	16	58	01/85 – 11/89	3621	
FIESTA II (FBD)	1.0 (FBD)	33	09/83 – 02/89	3621	
FIESTA II (FBD)	1.1 (FBD)	36	05/86 – 02/89	3621	
FIESTA II (FBD)	1.1 (FBD)	37	09/83 – 02/89	3621	
FIESTA II (FBD)	1.3 (FBD)	51	09/83 – 01/87	3621	
FIESTA II (FBD)	1.4 (FBD)	52	10/86 – 02/89	3621	
FIESTA II (FBD)	1.4 (FBD)	54	02/87 – 02/89	3621	
FIESTA II (FBD)	1.4 (FBD)	55	10/85 – 11/89	3621	
FIESTA II (FBD)	1.6 D (FBD)	40	04/84 – 02/89	3621	
FIESTA II (FBD)	1.6 XR2 (FBD)	70	03/84 – 02/89	3570	
FIESTA II (FBD)	1.6 XR2 (FBD)	71	04/84 – 02/89	3570	
FIESTA III (GFJ)	10	33	03/89 – 12/95	3570	
FIESTA III (GFJ)	11	37	03/89 – 12/95	3570	
FIESTA III (GFJ)	11	40	03/89 – 12/95	3570	

MAKE & MODEL		KW	YEAR		
FORD					
FIESTA III (GFJ)	13	44	03/89 – 12/92	3570	
FIESTA III (GFJ)	13	44	03/89 – 12/95	3570	
FIESTA III (GFJ)	14	52	03/89 – 12/95	3570	
FIESTA III (GFJ)	14	54	03/89 – 12/95	3570	
FIESTA III (GFJ)	14	55	11/92 – 12/96	3570	
FIESTA III (GFJ)	16	65	01/89 – 01/94	3570	
FIESTA III (GFJ)	16	66	03/89 – 12/92	3570	
FIESTA III (GFJ)	1.3 CAT	44	05/91 – 01/97	3570	
FIESTA III (GFJ)	1.4 CAT	54	03/89 – 12/95	3570	
FIESTA III (GFJ)	1.6 i 16V	65	01/94 – 12/95	3570	
FIESTA III (GFJ)	1.6 Turbo (FBJT)	96	03/90 – 10/92	3570	
FIESTA III (GFJ)	1.6 XR2i	76	03/89 – 03/93	3570	
FIESTA III (GFJ)	1.6 XR2i	81	03/89 – 01/94	3570	
FIESTA III (GFJ)	1.8 16V	77	02/92 – 12/95	3570	
FIESTA III (GFJ)	1.8 D	44	03/89 – 12/95	3570	
FIESTA III (GFJ)	1.8 TD	55	03/93 – 12/95	3570	
FIESTA III (GFJ)	1.8 XR2i 16V	96	02/92 – 12/95	3570	
FIESTA IV (JA_, JB_)	16	65	02/00 – 01/02	3877	
FIESTA IV (JA_, JB_)	1.0 i	48	09/99 – 01/02	3570	
FIESTA IV (JA_, JB_)	1.0 i	48	09/99 – 01/02	3877	
FIESTA IV (JA_, JB_)	1.25 i 16V	55	08/95 – 01/02	3570	
FIESTA IV (JA_, JB_)	1.25 i 16V	55	08/95 – 01/02	3877	
FIESTA IV (JA_, JB_)	1.3 i	37	08/95 – 01/02	3877	
FIESTA IV (JA_, JB_)	1.3 i	44	08/95 – 01/02	3877	
FIESTA IV (JA_, JB_)	1.4 i 16V	66	04/96 – 01/02	3570	
FIESTA IV (JA_, JB_)	1.4 i 16V	66	04/96 – 01/02	3877	
FIESTA IV (JA_, JB_)	1.6 16V Sport	76	02/00 – 01/02	3877	
FIESTA IV (JA_, JB_)	1.8 D	44	08/95 – 04/00	3877	
FIESTA IV (JA_, JB_)	1.8 DI	55	04/00 – 01/02	3877	
FIESTA V (JH_, JD_)	10	49	05/02 – 03/08	3877	
FIESTA V (JH_, JD_)	13	44	11/01 – 06/08	3877	
FIESTA V (JH_, JD_)	13	51	11/01 – 06/08	3877	
FIESTA V (JH_, JD_)	1.25 16V	51	03/03 – 06/08	3877	
FIESTA V (JH_, JD_)	1.25 16V	55	05/02 – 06/08	3877	
FIESTA V (JH_, JD_)	1.4 16V	59	11/01 – 06/08	3877	
FIESTA V (JH_, JD_)	1.4 TDCi	50	11/01 – 06/08	3877	
FIESTA V (JH_, JD_)	1.6 16V	74	11/01 – 06/08	3877	
FIESTA V (JH_, JD_)	1.6 TDCi	66	11/04 – 06/08	3877	
FIESTA V (JH_, JD_)	ST150	110	03/05 – 06/08		3755
FIESTA V Van	13	51	10/03 – 07/05	3877	
FIESTA V Van	1.4 TDCi	50	10/03 – 12/10	3877	
FIESTA VI	10	48	01/13 -		3755
FIESTA VI	10	48	01/13 -	4204	
FIESTA VI	10	59	10/12 -		3755
FIESTA VI	10	59	10/12 -	4204	
FIESTA VI	14	71	06/08 -		3755
FIESTA VI	14	71	06/08 -	4204	
FIESTA VI	16	70	06/08 -		3755
FIESTA VI	16	70	06/08 -	4204	
FIESTA VI	125	44	06/08 -		3755
FIESTA VI	125	44	06/08 -	4204	
FIESTA VI	125	60	06/08 -		3755
FIESTA VI	125	60	06/08 -	4204	
FIESTA VI	1.0 EcoBoost	74	01/13 -		3755
FIESTA VI	1.0 EcoBoost	74	01/13 -	4204	
FIESTA VI	1.0 EcoBoost	92	09/12 -		3755
FIESTA VI	1.0 EcoBoost	92	09/12 -	4204	
FIESTA VI	1.0 Sport	103	05/14 -		3755
FIESTA VI	1.0 Sport	103	05/14 -	4204	
FIESTA VI	1.4 LPG	68	01/09 -		3755
FIESTA VI	1.4 LPG	68	01/09 -	4204	
FIESTA VI	1.4 LPG	71	01/09 -		3755
FIESTA VI	1.4 LPG	71	01/09 -	4204	
FIESTA VI	1.4 TDCi	50	01/09 -		3755
FIESTA VI	1.4 TDCi	50	01/09 -	4204	
FIESTA VI	1.4 TDCi	51	07/10 -		3755
FIESTA VI	1.4 TDCi	51	07/10 -	4204	
FIESTA VI	1.5 TDCi	55	09/12 -		3755
FIESTA VI	1.5 TDCi	55	09/12 -	4204	
FIESTA VI	1.5 TDCi	70	05/15 -		3755
FIESTA VI	1.5 TDCi	70	05/15 -	4204	

MAKE & MODEL		KW	YEAR		
FORD					
FIESTA VI	1.6 ST	134	03/13 -		3755
FIESTA VI	1.6 ST	134	03/13 -	4204	
FIESTA VI	1.6 TDCi	55	06/08 -		3755
FIESTA VI	1.6 TDCi	55	06/08 -	4204	
FIESTA VI	1.6 TDCi	66	06/08 -		3755
FIESTA VI	1.6 TDCi	66	06/08 -	4204	
FIESTA VI	1.6 TDCi	70	02/10 -		3755
FIESTA VI	1.6 TDCi	70	02/10 -	4204	
FIESTA VI	1.6 Ti	77	09/12 -		3755
FIESTA VI	1.6 Ti	77	09/12 -	4204	
FIESTA VI	1.6 Ti	88	06/08 -		3755
FIESTA VI	1.6 Ti	88	06/08 -	4204	
FIESTA VI	1.6 Ti	99	12/10 -		3755
FIESTA VI	1.6 Ti	99	12/10 -	4204	
FIESTA VI Van	10	48	01/13 -		3755
FIESTA VI Van	10	48	01/13 -	4204	
FIESTA VI Van	10	59	10/12 -		3755
FIESTA VI Van	10	59	10/12 -	4204	
FIESTA VI Van	1.0 EcoBoost	74	01/13 -		3755
FIESTA VI Van	1.0 EcoBoost	74	01/13 -	4204	
FIESTA VI Van	1.0 EcoBoost	92	09/12 -		3755
FIESTA VI Van	1.0 EcoBoost	92	09/12 -	4204	
FIESTA VI Van	1.5 TDCi	55	10/12 -		3755
FIESTA VI Van	1.5 TDCi	55	10/12 -	4204	
FIESTA VI Van	1.5 TDCi	70	05/15 -		3755
FIESTA VI Van	1.5 TDCi	70	05/15 -	4204	
FIESTA VI Van	1.6 ST	134	03/13 -		3755
FIESTA VI Van	1.6 ST	134	03/13 -	4204	
FIVE HUNDRED	30	151	08/04 -		4058
FOCUS (DAW, DBW)	1.4 16V	55	10/98 – 11/04	3754	
FOCUS (DAW, DBW)	1.4 16V	55	10/98 – 11/04		3755
FOCUS (DAW, DBW)	1.6 16V	74	10/98 – 11/04	3754	
FOCUS (DAW, DBW)	1.6 16V	74	10/98 – 11/04		3755
FOCUS (DAW, DBW)	1.6 16V Flexifuel	75	01/02 – 11/04	3754	
FOCUS (DAW, DBW)	1.6 16V Flexifuel	75	01/02 – 11/04		3755
FOCUS (DAW, DBW)	1.8 16V	85	10/98 – 11/04	3754	
FOCUS (DAW, DBW)	1.8 16V	85	10/98 – 11/04		3755
FOCUS (DAW, DBW)	1.8 DI / TDDi	55	08/99 – 11/04	3754	
FOCUS (DAW, DBW)	1.8 DI / TDDi	55	08/99 – 11/04		3755
FOCUS (DAW, DBW)	1.8 TDCi	74	08/02 – 11/04	3754	
FOCUS (DAW, DBW)	1.8 TDCi	74	08/02 – 11/04		3755
FOCUS (DAW, DBW)	1.8 TDCi	85	03/01 – 11/04	3754	
FOCUS (DAW, DBW)	1.8 TDCi	85	03/01 – 11/04		3755
FOCUS (DAW, DBW)	1.8 Turbo DI / TDDi	66	10/98 – 11/04	3754	
FOCUS (DAW, DBW)	1.8 Turbo DI / TDDi	66	10/98 – 11/04		3755
FOCUS (DAW, DBW)	2.0 16V	96	10/98 – 11/04	3754	
FOCUS (DAW, DBW)	2.0 16V	96	10/98 – 11/04		3755
FOCUS (DAW, DBW)	RS	158	10/02 – 11/04		3755
FOCUS (DAW, DBW)	RS	158	10/02 – 11/04	3801	
FOCUS (DAW, DBW)	ST170	127	03/02 – 11/04		3755
FOCUS (DAW, DBW)	ST170	127	03/02 – 11/04	3801	
FOCUS C-MAX	16	74	10/03 – 03/07		3853/1
FOCUS C-MAX	16	74	10/03 – 03/07	3885	
FOCUS C-MAX	18	88	10/03 – 03/07		3853/1
FOCUS C-MAX	18	88	10/03 – 03/07	3885	
FOCUS C-MAX	18	90	09/05 – 03/07		3853/1
FOCUS C-MAX	18	90	09/05 – 03/07	3885	
FOCUS C-MAX	18	92	04/04 – 03/07		3853/1
FOCUS C-MAX	18	92	04/04 – 03/07	3885	
FOCUS C-MAX	20	107	03/04 – 03/07		3853/1
FOCUS C-MAX	20	107	03/04 – 03/07	3885	
FOCUS C-MAX	1.6 TDCi	66	02/05 – 03/07		3853/1
FOCUS C-MAX	1.6 TDCi	66	02/05 – 03/07	3885	
FOCUS C-MAX	1.6 TDCi	80	10/03 – 03/07		3853/1
FOCUS C-MAX	1.6 TDCi	80	10/03 – 03/07	3885	
FOCUS C-MAX	1.6 Ti	85	08/04 – 03/07		3853/1
FOCUS C-MAX	1.6 Ti	85	08/04 – 03/07	3885	
FOCUS C-MAX	1.8 Flexifuel	92	01/06 – 03/07		3853/1
FOCUS C-MAX	1.8 Flexifuel	92	01/06 – 03/07	3885	
FOCUS C-MAX	1.8 TDCi	85	01/05 – 03/07		3853/1
FOCUS C-MAX	1.8 TDCi	85	01/05 – 03/07	3885	

MAKE & MODEL		KW	YEAR		
FORD					
FOCUS C-MAX	2.0 TDCi	98	10/03 – 03/07		3853/1
FOCUS C-MAX	2.0 TDCi	98	10/03 – 03/07	3885	
FOCUS C-MAX	2.0 TDCi	100	10/03 – 03/07		3853/1
FOCUS C-MAX	2.0 TDCi	100	10/03 – 03/07	3885	
FOCUS Estate (DNW)	1.4 16V	55	02/99 – 11/04	3754	
FOCUS Estate (DNW)	1.4 16V	55	02/99 – 11/04		3755
FOCUS Estate (DNW)	1.6 16V	74	02/99 – 11/04	3754	
FOCUS Estate (DNW)	1.6 16V	74	02/99 – 11/04		3755
FOCUS Estate (DNW)	1.6 16V Flexifuel	75	01/02 – 11/04	3754	
FOCUS Estate (DNW)	1.6 16V Flexifuel	75	01/02 – 11/04		3755
FOCUS Estate (DNW)	1.8 16V	85	02/99 – 11/04	3754	
FOCUS Estate (DNW)	1.8 16V	85	02/99 – 11/04		3755
FOCUS Estate (DNW)	1.8 BiFuel	82	02/03 – 01/05	3754	
FOCUS Estate (DNW)	1.8 BiFuel	82	02/03 – 01/05		3755
FOCUS Estate (DNW)	1.8 DI / TDDi	55	08/99 – 11/04	3754	
FOCUS Estate (DNW)	1.8 DI / TDDi	55	08/99 – 11/04		3755
FOCUS Estate (DNW)	1.8 TDCi	74	08/02 – 11/04	3754	
FOCUS Estate (DNW)	1.8 TDCi	74	08/02 – 11/04		3755
FOCUS Estate (DNW)	1.8 TDCi	85	03/01 – 11/04	3754	
FOCUS Estate (DNW)	1.8 TDCi	85	03/01 – 11/04		3755
FOCUS Estate (DNW)	1.8 Turbo DI / TDDi	66	02/99 – 11/04	3754	
FOCUS Estate (DNW)	1.8 Turbo DI / TDDi	66	02/99 – 11/04		3755
FOCUS Estate (DNW)	2.0 16V	96	02/99 – 11/04	3754	
FOCUS Estate (DNW)	2.0 16V	96	02/99 – 11/04		3755
FOCUS Estate (DNW)	ST170	127	08/02 – 11/04		3755
FOCUS Estate (DNW)	ST170	127	08/02 – 11/04	3801	
FOCUS Hatchback (LR)	1.8 i	85	09/02 – 04/05		3755
FOCUS Hatchback (LR)	2.0 I ST170	127	04/03 – 04/05		3755
FOCUS Hatchback (LR)	2.0 I ST170	127	04/03 – 04/05	3801	
FOCUS Hatchback (LR)	2.0 i	96	09/02 – 04/05		3755
FOCUS Hatchback (LT)	2.0 i	107	05/05 – 03/09		3853/1
FOCUS Hatchback (LT)	2.0 i	107	05/05 – 03/09	3885	
FOCUS Hatchback (LT)	2.0 TDCi	100	04/07 – 03/09		3853/1
FOCUS Hatchback (LT)	2.0 TDCi	100	04/07 – 03/09	3885	
FOCUS Hatchback (LT)	2.5 i XR5 Turbo	166	04/06 – 05/08		3853/1
FOCUS Hatchback (LV)	2.0 i	107	03/09 – 08/11		3853/1
FOCUS Hatchback (LV)	2.0 i	107	03/09 – 08/11	3885	
FOCUS Hatchback (LV)	2.5 i XR5 Turbo	166	03/09 – 08/11		3853/1
FOCUS II (DA_)	14	59	07/04 – 09/12		3853/1
FOCUS II (DA_)	14	59	07/04 – 09/12	3885	
FOCUS II (DA_)	16	74	07/04 – 09/12		3853/1
FOCUS II (DA_)	16	74	07/04 – 09/12	3885	
FOCUS II (DA_)	18	92	03/06 – 09/12		3853/1
FOCUS II (DA_)	18	92	03/06 – 09/12	3885	
FOCUS II (DA_)	20	104	06/05 – 09/08		3853/1
FOCUS II (DA_)	20	104	06/05 – 09/08	3885	
FOCUS II (DA_)	20	105	04/10 – 09/12		3853/1
FOCUS II (DA_)	20	105	04/10 – 09/12	3885	
FOCUS II (DA_)	20	107	07/04 – 09/12		3853/1
FOCUS II (DA_)	20	107	07/04 – 09/12	3885	
FOCUS II (DA_)	1.6 LPG	85	10/09 – 07/11		3853/1
FOCUS II (DA_)	1.6 LPG	85	10/09 – 07/11	3885	
FOCUS II (DA_)	1.6 TDCi	66	01/05 – 09/12		3853/1
FOCUS II (DA_)	1.6 TDCi	66	01/05 – 09/12	3885	
FOCUS II (DA_)	1.6 TDCi	74	07/04 – 09/12		3853/1
FOCUS II (DA_)	1.6 TDCi	74	07/04 – 09/12	3885	
FOCUS II (DA_)	1.6 TDCi	80	07/04 – 09/12		3853/1
FOCUS II (DA_)	1.6 TDCi	80	07/04 – 09/12	3885	
FOCUS II (DA_)	1.6 Ti	85	07/04 – 09/12		3853/1
FOCUS II (DA_)	1.6 Ti	85	07/04 – 09/12	3885	
FOCUS II (DA_)	1.8 Flexifuel	92	01/06 – 09/12		3853/1
FOCUS II (DA_)	1.8 Flexifuel	92	01/06 – 09/12	3885	
FOCUS II (DA_)	1.8 Flexifuel	96	12/05 – 01/08		3853/1
FOCUS II (DA_)	1.8 Flexifuel	96	12/05 – 01/08	3885	
FOCUS II (DA_)	1.8 TDCi	85	01/05 – 09/12		3853/1
FOCUS II (DA_)	1.8 TDCi	85	01/05 – 09/12	3885	
FOCUS II (DA_)	2.0 CNG	107	04/09 – 07/11		3853/1
FOCUS II (DA_)	2.0 CNG	107	04/09 – 07/11	3885	
FOCUS II (DA_)	2.0 LPG	107	06/08 – 07/11		3853/1
FOCUS II (DA_)	2.0 LPG	107	06/08 – 07/11	3885	
FOCUS II (DA_)	2.0 TDCi	81	02/08 – 07/11		3853/1

MAKE & MODEL		KW	YEAR		
FORD					
FOCUS II (DA_)	2.0 TDCi	81	02/08 – 07/11	3885	
FOCUS II (DA_)	2.0 TDCi	98	07/04 – 01/08		3853/1
FOCUS II (DA_)	2.0 TDCi	98	07/04 – 01/08	3885	
FOCUS II (DA_)	2.0 TDCi	100	07/04 – 09/12		3853/1
FOCUS II (DA_)	2.0 TDCi	100	07/04 – 09/12	3885	
FOCUS II (DA_)	2.5 RS	224	01/09 – 07/11		4157
FOCUS II (DA_)	2.5 RS 500	257	05/10 – 07/11		4157
FOCUS II (DA_)	2.5 ST	166	10/05 – 09/12		3853/1
FOCUS II Convertible	16	74	10/06 – 07/11		3853/1
FOCUS II Convertible	16	74	10/06 – 07/11	3885	
FOCUS II Convertible	20	107	10/06 – 07/11		3853/1
FOCUS II Convertible	20	107	10/06 – 07/11	3885	
FOCUS II Convertible	2.0 TDCi	100	10/06 – 07/11		3853/1
FOCUS II Convertible	2.0 TDCi	100	10/06 – 07/11	3885	
FOCUS II Estate (DA_)	14	59	07/04 – 09/12		3853/1
FOCUS II Estate (DA_)	14	59	07/04 – 09/12	3885	
FOCUS II Estate (DA_)	16	74	07/04 – 07/11		3853/1
FOCUS II Estate (DA_)	16	74	07/04 – 07/11	3885	
FOCUS II Estate (DA_)	18	92	03/06 – 09/12		3853/1
FOCUS II Estate (DA_)	18	92	03/06 – 09/12	3885	
FOCUS II Estate (DA_)	20	107	07/04 – 09/12		3853/1
FOCUS II Estate (DA_)	20	107	07/04 – 09/12	3885	
FOCUS II Estate (DA_)	1.6 LPG	85	10/09 – 09/12		3853/1
FOCUS II Estate (DA_)	1.6 LPG	85	10/09 – 09/12	3885	
FOCUS II Estate (DA_)	1.6 TDCi	66	07/04 – 09/12		3853/1
FOCUS II Estate (DA_)	1.6 TDCi	66	07/04 – 09/12	3885	
FOCUS II Estate (DA_)	1.6 TDCi	74	07/04 – 09/12		3853/1
FOCUS II Estate (DA_)	1.6 TDCi	74	07/04 – 09/12	3885	
FOCUS II Estate (DA_)	1.6 TDCi	80	07/04 – 09/12		3853/1
FOCUS II Estate (DA_)	1.6 TDCi	80	07/04 – 09/12	3885	
FOCUS II Estate (DA_)	1.6 TDCi	81	12/07 – 09/12		3853/1
FOCUS II Estate (DA_)	1.6 TDCi	81	12/07 – 09/12	3885	
FOCUS II Estate (DA_)	1.6 Ti	85	07/04 – 09/12		3853/1
FOCUS II Estate (DA_)	1.6 Ti	85	07/04 – 09/12	3885	
FOCUS II Estate (DA_)	1.8 Flexifuel	92	01/06 – 09/12		3853/1
FOCUS II Estate (DA_)	1.8 Flexifuel	92	01/06 – 09/12	3885	
FOCUS II Estate (DA_)	1.8 Flexifuel	97	12/05 – 01/08		3853/1
FOCUS II Estate (DA_)	1.8 Flexifuel	97	12/05 – 01/08	3885	
FOCUS II Estate (DA_)	1.8 TDCi	85	07/04 – 09/12		3853/1
FOCUS II Estate (DA_)	1.8 TDCi	85	07/04 – 09/12	3885	
FOCUS II Estate (DA_)	2.0 LPG	107	06/08 – 07/11		3853/1
FOCUS II Estate (DA_)	2.0 LPG	107	06/08 – 07/11	3885	
FOCUS II Estate (DA_)	2.0 TDCi	81	02/08 – 07/11		3853/1
FOCUS II Estate (DA_)	2.0 TDCi	81	02/08 – 07/11	3885	
FOCUS II Estate (DA_)	2.0 TDCi	98	07/04 – 01/08		3853/1
FOCUS II Estate (DA_)	2.0 TDCi	98	07/04 – 01/08	3885	
FOCUS II Estate (DA_)	2.0 TDCi	100	07/04 – 09/12		3853/1
FOCUS II Estate (DA_)	2.0 TDCi	100	07/04 – 09/12	3885	
FOCUS II Saloon (DA_)	14	59	04/05 – 09/12		3853/1
FOCUS II Saloon (DA_)	14	59	04/05 – 09/12	3885	
FOCUS II Saloon (DA_)	16	74	04/05 – 09/12		3853/1
FOCUS II Saloon (DA_)	16	74	04/05 – 09/12	3885	
FOCUS II Saloon (DA_)	18	92	03/06 – 09/12		3853/1
FOCUS II Saloon (DA_)	18	92	03/06 – 09/12	3885	
FOCUS II Saloon (DA_)	20	104	02/08 -		3853/1
FOCUS II Saloon (DA_)	20	104	02/08 -	3885	
FOCUS II Saloon (DA_)	20	107	04/05 – 07/11		3853/1
FOCUS II Saloon (DA_)	20	107	04/05 – 07/11	3885	
FOCUS II Saloon (DA_)	1.6 TDCi	66	04/05 – 09/12		3853/1
FOCUS II Saloon (DA_)	1.6 TDCi	66	04/05 – 09/12	3885	
FOCUS II Saloon (DA_)	1.6 TDCi	74	04/05 – 09/12		3853/1
FOCUS II Saloon (DA_)	1.6 TDCi	74	04/05 – 09/12	3885	
FOCUS II Saloon (DA_)	1.6 TDCi	80	04/05 – 09/12		3853/1
FOCUS II Saloon (DA_)	1.6 TDCi	80	04/05 – 09/12	3885	
FOCUS II Saloon (DA_)	1.6 Ti	85	04/05 – 09/12		3853/1
FOCUS II Saloon (DA_)	1.6 Ti	85	04/05 – 09/12	3885	
FOCUS II Saloon (DA_)	1.8 Flexifuel	92	06/06 – 07/11		3853/1
FOCUS II Saloon (DA_)	1.8 Flexifuel	92	06/06 – 07/11	3885	
FOCUS II Saloon (DA_)	1.8 Flexifuel	96	12/05 – 01/08		3853/1
FOCUS II Saloon (DA_)	1.8 Flexifuel	96	12/05 – 01/08	3885	
FOCUS II Saloon (DA_)	1.8 TDCi	85	04/05 – 09/12		3853/1

MAKE & MODEL		KW	YEAR		
FORD					
FOCUS II Saloon (DA_)	1.8 TDCi	85	04/05 – 09/12	3885	
FOCUS II Saloon (DA_)	2.0 TDCi	81	02/08 – 07/11		3853/1
FOCUS II Saloon (DA_)	2.0 TDCi	81	02/08 – 07/11	3885	
FOCUS II Saloon (DA_)	2.0 TDCi	100	04/05 – 09/12		3853/1
FOCUS II Saloon (DA_)	2.0 TDCi	100	04/05 – 09/12	3885	
FOCUS III	20	110	10/13 -		3853/1
FOCUS III	20	110	10/13 -	3885	
FOCUS III	1.0 EcoBoost	74	02/12 -	3885	
FOCUS III	1.0 EcoBoost	92	02/12 -	3885	
FOCUS III	1.5 EcoBoost	110	09/14 -	3885	
FOCUS III	1.5 EcoBoost	134	09/14 -	3885	
FOCUS III	1.5 TDCi	70	09/14 -	3885	
FOCUS III	1.5 TDCi	88	09/14 -	3885	
FOCUS III	1.5 TDCi ECOnetic	77	09/14 -	3885	
FOCUS III	1.6 EcoBoost	110	07/10 -	3885	
FOCUS III	1.6 EcoBoost	134	07/10 -	3885	
FOCUS III	1.6 Flexifuel	88	07/10 -	3885	
FOCUS III	1.6 Flexifuel	110	07/13 -	3885	
FOCUS III	1.6 LPG	86	02/12 -	3885	
FOCUS III	1.6 LPG	88	02/12 -	3885	
FOCUS III	1.6 TDCi	70	07/10 -	3885	
FOCUS III	1.6 TDCi	85	07/10 -	3885	
FOCUS III	1.6 TDCi ECOnetic	77	05/12 -	3885	
FOCUS III	1.6 Ti	63	08/11 -	3885	
FOCUS III	1.6 Ti	77	07/10 -	3885	
FOCUS III	1.6 Ti	88	02/12 -	3885	
FOCUS III	1.6 Ti	92	07/10 -	3885	
FOCUS III	2.0 ST	184	07/12 -	4226	
FOCUS III	2.0 TDCi	85	07/10 -	3885	
FOCUS III	2.0 TDCi	100	07/10 -	3885	
FOCUS III	2.0 TDCi	103	07/10 -	3885	
FOCUS III	2.0 TDCi	110	11/14 -	3885	
FOCUS III	2.0 TDCi	120	07/10 -	3885	
FOCUS III	2.0 TDCi ST	136	11/14 -	4226	
FOCUS III	2.0 Ti-GDi	125	08/11 -	3885	
FOCUS III	Electric	107	07/13 -	3885	
FOCUS III Box Body / Estate	1.0 EcoBoost	74	02/12 -	3885	
FOCUS III Box Body / Estate	1.0 EcoBoost	92	02/12 -	3885	
FOCUS III Box Body / Estate	1.5 EcoBoost	110	09/14 -	3885	
FOCUS III Box Body / Estate	1.5 EcoBoost	134	09/14 -	3885	
FOCUS III Box Body / Estate	1.5 TDCi	70	09/14 -	3885	
FOCUS III Box Body / Estate	1.5 TDCi	88	09/14 -	3885	
FOCUS III Box Body / Estate	1.5 TDCi ECOnetic	77	09/14 -	3885	
FOCUS III Box Body / Estate	2.0 TDCi	110	11/14 -	3885	
FOCUS III Box Body / Hatchback	1.0 EcoBoost	74	02/12 -	3885	
FOCUS III Box Body / Hatchback	1.0 EcoBoost	92	02/12 -	3885	
FOCUS III Box Body / Hatchback	1.5 EcoBoost	110	09/14 -	3885	
FOCUS III Box Body / Hatchback	1.5 EcoBoost	134	09/14 -	3885	
FOCUS III Box Body / Hatchback	1.5 TDCi	70	09/14 -	3885	
FOCUS III Box Body / Hatchback	1.5 TDCi	88	09/14 -	3885	
FOCUS III Box Body / Hatchback	1.5 TDCi ECOnetic	77	09/14 -	3885	
FOCUS III Box Body / Hatchback	1.6 TDCi	85	02/12 -	3885	
FOCUS III Box Body / Hatchback	2.0 TDCi	110	11/14 -	3885	
FOCUS III Saloon	20	110	10/13 -		3853/1
FOCUS III Saloon	20	110	10/13 -	3885	
FOCUS III Saloon	1.0 EcoBoost	74	02/12 -	3885	
FOCUS III Saloon	1.0 EcoBoost	92	02/12 -	3885	
FOCUS III Saloon	1.5 EcoBoost	110	11/14 -	3885	
FOCUS III Saloon	1.5 EcoBoost	134	11/14 -	3885	
FOCUS III Saloon	1.5 TDCi	70	11/14 -	3885	
FOCUS III Saloon	1.5 TDCi	88	11/14 -	3885	
FOCUS III Saloon	1.5 TDCi ECOnetic	77	11/14 -	3885	
FOCUS III Saloon	1.6 EcoBoost	110	07/10 -	3885	
FOCUS III Saloon	1.6 EcoBoost	134	07/10 -	3885	
FOCUS III Saloon	1.6 Flexifuel	88	07/10 -	3885	
FOCUS III Saloon	1.6 Flexifuel	110	07/13 -	3885	
FOCUS III Saloon	1.6 TDCi	70	07/10 -	3885	
FOCUS III Saloon	1.6 TDCi	77	05/12 -	3885	
FOCUS III Saloon	1.6 TDCi	85	07/10 -	3885	
FOCUS III Saloon	1.6 Ti	63	08/11 -	3885	
FOCUS III Saloon	1.6 Ti	77	07/10 -	3885	

MAKE & MODEL		KW	YEAR		
FORD					
FOCUS III Saloon	1.6 Ti	92	07/10 -	3885	
FOCUS III Saloon	2.0 GDi	125	08/11 -	3885	
FOCUS III Saloon	2.0 TDCi	85	07/10 -	3885	
FOCUS III Saloon	2.0 TDCi	100	07/10 -	3885	
FOCUS III Saloon	2.0 TDCi	103	07/10 -	3885	
FOCUS III Saloon	2.0 TDCi	110	11/14 -	3885	
FOCUS III Saloon	2.0 TDCi	120	07/10 -	3885	
FOCUS III Turnier	20	110	10/13 -		3853/1
FOCUS III Turnier	20	110	10/13 -	3885	
FOCUS III Turnier	1.0 EcoBoost	74	02/12 -	3885	
FOCUS III Turnier	1.0 EcoBoost	92	02/12 -	3885	
FOCUS III Turnier	1.5 EcoBoost	110	09/14 -	3885	
FOCUS III Turnier	1.5 EcoBoost	134	09/14 -	3885	
FOCUS III Turnier	1.5 TDCi	70	09/14 -	3885	
FOCUS III Turnier	1.5 TDCi	88	09/14 -	3885	
FOCUS III Turnier	1.5 TDCi ECOnetic	77	09/14 -	3885	
FOCUS III Turnier	1.6 EcoBoost	110	07/10 -	3885	
FOCUS III Turnier	1.6 EcoBoost	134	07/10 -	3885	
FOCUS III Turnier	1.6 Flexifuel	88	07/10 -	3885	
FOCUS III Turnier	1.6 Flexifuel	110	07/13 -	3885	
FOCUS III Turnier	1.6 LPG	86	02/12 -	3885	
FOCUS III Turnier	1.6 LPG	88	02/12 -	3885	
FOCUS III Turnier	1.6 TDCi	70	07/10 -	3885	
FOCUS III Turnier	1.6 TDCi	85	07/10 -	3885	
FOCUS III Turnier	1.6 TDCi ECOnetic	77	05/12 -	3885	
FOCUS III Turnier	1.6 Ti	63	08/11 -	3885	
FOCUS III Turnier	1.6 Ti	77	07/10 -	3885	
FOCUS III Turnier	1.6 Ti	88	02/12 -	3885	
FOCUS III Turnier	1.6 Ti	92	07/10 -	3885	
FOCUS III Turnier	2.0 ST	184	07/12 -	4226	
FOCUS III Turnier	2.0 TDCi	85	07/10 -	3885	
FOCUS III Turnier	2.0 TDCi	100	07/10 -	3885	
FOCUS III Turnier	2.0 TDCi	103	07/10 -	3885	
FOCUS III Turnier	2.0 TDCi	110	11/14 -	3885	
FOCUS III Turnier	2.0 TDCi	120	07/10 -	3885	
FOCUS III Turnier	2.0 TDCi ST	136	11/14 -	4226	
FOCUS III Turnier	2.0 Ti-GDi	125	07/10 -	3885	
FOCUS Saloon (DFW)	1.4 16V	55	02/99 – 11/04	3754	
FOCUS Saloon (DFW)	1.4 16V	55	02/99 – 11/04		3755
FOCUS Saloon (DFW)	1.6 16V	74	02/99 – 11/04	3754	
FOCUS Saloon (DFW)	1.6 16V	74	02/99 – 11/04		3755
FOCUS Saloon (DFW)	1.8 16V	85	02/99 – 11/04	3754	
FOCUS Saloon (DFW)	1.8 16V	85	02/99 – 11/04		3755
FOCUS Saloon (DFW)	1.8 TDCi	74	08/02 – 11/04	3754	
FOCUS Saloon (DFW)	1.8 TDCi	74	08/02 – 11/04		3755
FOCUS Saloon (DFW)	1.8 TDCi	85	03/01 – 11/04	3754	
FOCUS Saloon (DFW)	1.8 TDCi	85	03/01 – 11/04		3755
FOCUS Saloon (DFW)	1.8 Turbo DI / TDDi	55	08/01 – 03/05	3754	
FOCUS Saloon (DFW)	1.8 Turbo DI / TDDi	55	08/01 – 03/05		3755
FOCUS Saloon (DFW)	1.8 Turbo DI / TDDi	66	02/99 – 11/04	3754	
FOCUS Saloon (DFW)	1.8 Turbo DI / TDDi	66	02/99 – 11/04		3755
FOCUS Saloon (DFW)	2.0 16V	96	02/99 – 11/04	3754	
FOCUS Saloon (DFW)	2.0 16V	96	02/99 – 11/04		3755
FOCUS Saloon (LR)	1.8 i	85	09/02 – 04/05		3755
FOCUS Saloon (LR)	2.0 i	96	09/02 – 04/05		3755
FOCUS Saloon (LS, LT)	2.0 i	107	05/05 – 03/09		3853/1
FOCUS Saloon (LS, LT)	2.0 i	107	05/05 – 03/09	3885	
FOCUS Saloon (LV)	2.0 i	107	03/09 – 08/11		3853/1
FOCUS Saloon (LV)	2.0 i	107	03/09 – 08/11	3885	
FOCUS Saloon (LV)	2.0 TDCi	100	03/09 – 08/11		3853/1
FOCUS Saloon (LV)	2.0 TDCi	100	03/09 – 08/11	3885	
FUSION (JU_)	14	59	08/02 – 12/12	3877	
FUSION (JU_)	16	74	08/02 – 11/08	3877	
FUSION (JU_)	125	55	08/04 – 12/12	3877	
FUSION (JU_)	1.4 LPG	59	01/10 – 12/12	3877	
FUSION (JU_)	1.4 TDCi	50	08/02 – 12/12	3877	
FUSION (JU_)	1.6 TDCi	66	11/04 – 12/12	3877	
FUSION (U.S.A.)	2.3 16V	117	06/05 -		4270
FUSION (U.S.A.)	2.5	127	09/12 -		4270
FUSION (U.S.A.)	3.0	176	08/05 -		4270
FUSION (U.S.A.)	3.0 A las 4 ruedas	179	08/05 -		4270

MAKE & MODEL		KW	YEAR		
FORD					
FUSION (U.S.A.)	3.0 V6 24V	163	06/05 -		4270
FUSION (U.S.A.)	3.5	193	09/06 -		4270
GALAXY	ONLY SOUTH AMERICA			3616	
GALAXY (WA6)	20	107	05/06 – 06/15		4157
GALAXY (WA6)	20	107	05/06 – 06/15	4161	
GALAXY (WA6)	23	118	09/07 – 06/15		4157
GALAXY (WA6)	23	118	09/07 – 06/15	4161	
GALAXY (WA6)	1.6 EcoBoost	118	11/10 – 06/15		4157
GALAXY (WA6)	1.6 EcoBoost	118	11/10 – 06/15	4161	
GALAXY (WA6)	1.6 TDCi	85	02/11 – 06/15		4157
GALAXY (WA6)	1.6 TDCi	85	02/11 – 06/15	4161	
GALAXY (WA6)	1.8 TDCi	74	05/06 – 06/15		4157
GALAXY (WA6)	1.8 TDCi	74	05/06 – 06/15	4161	
GALAXY (WA6)	1.8 TDCi	92	05/06 – 06/15		4157
GALAXY (WA6)	1.8 TDCi	92	05/06 – 06/15	4161	
GALAXY (WA6)	2.0 EcoBoost	146	07/10 – 06/15		4157
GALAXY (WA6)	2.0 EcoBoost	149	03/10 – 06/15		4157
GALAXY (WA6)	2.0 Flexifuel	107	05/06 – 06/15		4157
GALAXY (WA6)	2.0 Flexifuel	107	05/06 – 06/15	4161	
GALAXY (WA6)	2.0 TDCi	85	11/07 – 06/15		4157
GALAXY (WA6)	2.0 TDCi	85	11/07 – 06/15	4161	
GALAXY (WA6)	2.0 TDCi	96	05/06 – 06/15		4157
GALAXY (WA6)	2.0 TDCi	96	05/06 – 06/15	4161	
GALAXY (WA6)	2.0 TDCi	100	05/06 – 06/15		4157
GALAXY (WA6)	2.0 TDCi	100	05/06 – 06/15	4161	
GALAXY (WA6)	2.0 TDCi	103	05/06 – 06/15		4157
GALAXY (WA6)	2.0 TDCi	103	05/06 – 06/15	4161	
GALAXY (WA6)	2.0 TDCi	120	03/10 – 06/15		4157
GALAXY (WA6)	2.0 TDCi	120	03/10 – 06/15	4161	
GALAXY (WA6)	2.2 TDCi	129	03/08 – 12/12		4157
GALAXY (WA6)	2.2 TDCi	129	03/08 – 12/12	4161	
GALAXY (WA6)	2.2 TDCi	147	11/10 – 06/15		4157
GALAXY (WA6)	2.2 TDCi	147	11/10 – 06/15	4161	
GALAXY (WGR)	1.9 TDI	66	03/95 – 05/06	3506	
GALAXY (WGR)	1.9 TDI	66	03/95 – 05/06		3529/1
GALAXY (WGR)	1.9 TDI	81	08/97 – 04/00	3506	
GALAXY (WGR)	1.9 TDI	81	08/97 – 04/00		3529/1
GALAXY (WGR)	1.9 TDI	110	05/05 – 05/06	4095	
GALAXY (WGR)	2.0 i	85	11/95 – 05/06	3506	
GALAXY (WGR)	2.0 i	85	11/95 – 05/06		3529/1
GALAXY (WGR)	2.3 16V	107	01/97 – 05/06	3506	
GALAXY (WGR)	2.3 16V	107	01/97 – 05/06		3529/1
GALAXY (WGR)	2.3 4x4	107	09/96 – 04/00	3506	
GALAXY (WGR)	2.3 4x4	107	09/96 – 04/00		3529/1
GALAXY (WGR)	2.8 i V6	128	11/95 – 04/00	3506	
GALAXY (WGR)	2.8 i V6	128	11/95 – 04/00		3529/1
GALAXY (WGR)	2.8 i V6 4x4	128	04/96 – 04/00	3506	
GALAXY (WGR)	2.8 i V6 4x4	128	04/96 – 04/00		3529/1
GALAXY (WGR)	2.8 V6	150	04/00 – 05/06	4095	
GALAXY III (CDR)	1.5 EcoBoost (UNCI)	118	01/15 -		4270
GALAXY III (CDR)	1.5 EcoBoost (UNCJ)	118	01/15 -		4270
GALAXY III (CDR)	2.0 EcoBoost (R9CD)	176	01/15 -		4270
GALAXY III (CDR)	2.0 EcoBoost (R9CI)	176	01/15 -		4270
GALAXY III (CDR)	2.0 TDCi (T7CI)	110	01/15 -		4270
GALAXY III (CDR)	2.0 TDCi (T7CI)	110	05/15 -		4270
GALAXY III (CDR)	2.0 TDCi (T7CJ)	110	01/15 -		4270
GALAXY III (CDR)	2.0 TDCi (T7CJ)	110	05/15 -		4270
GALAXY III (CDR)	2.0 TDCi (T7CK)	110	01/15 -		4270
GALAXY III (CDR)	2.0 TDCi (T7CL)	110	01/15 -		4270
GALAXY III (CDR)	2.0 TDCi (T7CL)	110	05/15 -		4270
GALAXY III (CDR)	2.0 TDCi (T8CG)	132	01/15 -		4270
GALAXY III (CDR)	2.0 TDCi (T8CG)	132	05/15 -		4270
GALAXY III (CDR)	2.0 TDCi (T8CH)	132	01/15 -		4270
GALAXY III (CDR)	2.0 TDCi (T8CH)	132	05/15 -		4270
GALAXY III (CDR)	2.0 TDCi (T8CI)	132	01/15 -		4270
GALAXY III (CDR)	2.0 TDCi (T8CI)	132	05/15 -		4270
GALAXY III (CDR)	2.0 TDCi (T8CJ)	132	05/15 -		4270
GALAXY III (CDR)	2.0 TDCi (UFCA)	88	01/15 -		4270
GALAXY III (CDR)	2.0 TDCi (UFCB)	88	01/15 -		4270
GALAXY III (CDR)	2.0 TDCi (T8CJ)	132	01/15 -		4270
GALAXY III (CDR)	2.0 TDCi Bi-Turbo (T9CB)	154	01/15 -		4270

MAKE & MODEL		KW	YEAR		
FORD					
GALAXY III (CDR)	2.0 TDCi Bi-Turbo (T9CC)	154	01/15 -		4270
GRANADA Estate (GGNL)	3.0 (EV 30 H)	101	01/72 – 02/76	3313	
GRANADA (GGNL)	3.0 (EV 30 H)	101	01.72 – 02.76	3344	
GRANADA (GGTL, GGFL)	17	51	12/74 – 08/77	3484	
GRANADA (GGTL, GGFL)	17	51	12/74 – 08/77	3312	
GRANADA (GGTL, GGFL)	20	66	01/75 – 08/77	3484	
GRANADA (GGTL, GGFL)	20	66	01/75 – 08/77	3312	
GRANADA (GGTL, GGFL)	30	101	01/72 – 02/76	3484	
GRANADA (GGTL, GGFL)	30	101	01/72 – 02/76	3312	
GRANADA (GGTL, GGFL)	3.0 (EV 30 H)	101	01.72 – 02.76	3344	
GRANADA (GU)	16	55	07/81 – 08/85	3484	
GRANADA (GU)	16	55	07/81 – 08/85	3312	
GRANADA (GU)	17	51	08/77 – 05/82	3484	
GRANADA (GU)	17	51	08/77 – 05/82	3312	
GRANADA (GU)	17	54	08/77 – 07/81	3484	
GRANADA (GU)	17	54	08/77 – 07/81	3312	
GRANADA (GU)	20	64	08/77 – 07/79	3484	
GRANADA (GU)	20	64	08/77 – 07/79	3312	
GRANADA (GU)	20	66	08/77 – 08/85	3484	
GRANADA (GU)	20	66	08/77 – 08/85	3312	
GRANADA (GU)	20	74	08/79 – 08/85	3484	
GRANADA (GU)	20	74	08/79 – 08/85	3312	
GRANADA (GU)	20	77	08/81 – 08/85	3484	
GRANADA (GU)	20	77	08/81 – 08/85	3312	
GRANADA (GU)	23	79	08/77 – 06/79	3484	
GRANADA (GU)	23	79	08/77 – 06/79	3312	
GRANADA (GU)	23	82	06/81 – 08/85	3484	
GRANADA (GU)	23	82	06/81 – 08/85	3312	
GRANADA (GU)	23	84	06/79 – 08/85	3484	
GRANADA (GU)	23	84	06/79 – 08/85	3312	
GRANADA (GU)	1.9 D	40	08/77 – 08/82	3484	
GRANADA (GU)	1.9 D	40	08/77 – 08/82	3312	
GRANADA (GU)	2.1 D	46	08/77 – 08/82	3484	
GRANADA (GU)	2.1 D	46	08/77 – 08/82	3312	
GRANADA (GU)	2.5 D	51	08/82 – 08/85	3484	
GRANADA (GU)	2.5 D	51	08/82 – 08/85	3312	
GRANADA (GU)	2.8 i	118	08/77 – 08/81	3480	
GRANADA Estate (GGNL)	20	66	01/75 – 08/77	3484	
GRANADA Estate (GGNL)	20	66	01/75 – 08/77	3312	
GRANADA Estate (GNU)	17	54	08/77 – 07/81	3484	
GRANADA Estate (GNU)	17	54	08/77 – 07/81	3312	
GRANADA Estate (GNU)	20	64	08/77 – 07/79	3484	
GRANADA Estate (GNU)	20	64	08/77 – 07/79	3312	
GRANADA Estate (GNU)	20	66	08/77 – 06/85	3484	
GRANADA Estate (GNU)	20	66	08/77 – 06/85	3312	
GRANADA Estate (GNU)	20	74	08/79 – 08/85	3484	
GRANADA Estate (GNU)	20	74	08/79 – 08/85	3312	
GRANADA Estate (GNU)	20	77	08/81 – 08/85	3484	
GRANADA Estate (GNU)	20	77	08/81 – 08/85	3312	
GRANADA Estate (GNU)	23	79	08/77 – 06/79	3484	
GRANADA Estate (GNU)	23	79	08/77 – 06/79	3312	
GRANADA Estate (GNU)	23	82	06/81 – 06/85	3484	
GRANADA Estate (GNU)	23	82	06/81 – 06/85	3312	
GRANADA Estate (GNU)	23	84	06/79 – 08/85	3484	
GRANADA Estate (GNU)	23	84	06/79 – 08/85	3312	
GRANADA Sedán (GGTL, GGFL)	3.0 (EV 30 H)	101	01/72 – 02/76	3313	
GRAND C-MAX (DXA/CB7, DXA/CEU)	1.0 EcoBoost	74	10/12 -	3885	
GRAND C-MAX (DXA/CB7, DXA/CEU)	1.0 EcoBoost	92	10/12 -	3885	
GRAND C-MAX (DXA/CB7, DXA/CEU)	1.5 EcoBoost	110	03/15 -	3885	
GRAND C-MAX (DXA/CB7, DXA/CEU)	1.5 EcoBoost	134	03/15 -	3885	
GRAND C-MAX (DXA/CB7, DXA/CEU)	1.5 TDCi	70	03/15 -	3885	
GRAND C-MAX (DXA/CB7, DXA/CEU)	1.5 TDCi	88	03/15 -	3885	
GRAND C-MAX (DXA/CB7, DXA/CEU)	1.6 EcoBoost	110	12/10 -	3885	
GRAND C-MAX (DXA/CB7, DXA/CEU)	1.6 EcoBoost	134	12/10 -	3885	
GRAND C-MAX (DXA/CB7, DXA/CEU)	1.6 TDCi	70	12/10 -	3885	
GRAND C-MAX (DXA/CB7, DXA/CEU)	1.6 TDCi	85	12/10 -	3885	
GRAND C-MAX (DXA/CB7, DXA/CEU)	1.6 Ti	77	12/10 -	3885	
GRAND C-MAX (DXA/CB7, DXA/CEU)	1.6 Ti	92	12/10 -	3885	
GRAND C-MAX (DXA/CB7, DXA/CEU)	2.0 TDCi	85	02/11 -	3885	
GRAND C-MAX (DXA/CB7, DXA/CEU)	2.0 TDCi	100	02/11 -	3885	
GRAND C-MAX (DXA/CB7, DXA/CEU)	2.0 TDCi	103	02/11 -	3885	

MAKE & MODEL		KW	YEAR		
FORD					
GRAND C-MAX (DXA/CB7, DXA/CEU)	2.0 TDCi	110	03/15 -	3885	
GRAND C-MAX (DXA/CB7, DXA/CEU)	2.0 TDCi	120	12/10 -	3885	
GRAND C-MAX (DXA/CB7, DXA/CEU)	2.0 TDCi	125	03/15 -	3885	
GRAND C-MAX Van	1.0 EcoBoost	74	10/12 -	3885	
GRAND C-MAX Van	1.0 EcoBoost	92	10/12 -	3885	
GRAND C-MAX Van	1.5 EcoBoost	110	03/15 -	3885	
GRAND C-MAX Van	1.5 TDCi	88	03/15 -	3885	
GRAND C-MAX Van	1.6 EcoBoost	110	12/10 -	3885	
GRAND C-MAX Van	1.6 TDCi	70	12/10 -	3885	
GRAND C-MAX Van	1.6 TDCi	85	12/10 -	3885	
GRAND C-MAX Van	2.0 TDCI	85	02/11 -	3885	
GRAND C-MAX Van	2.0 TDCi	103	12/10 -	3885	
GRAND C-MAX Van	2.0 TDCi	110	03/15 -	3885	
GRAND C-MAX Van	2.0 TDCi	120	12/10 -	3885	
GRAND C-MAX Van	2.0 TDCi	125	03/15 -	3885	
GRAND MARQUIS	4.6		95-96	4193	
KA (RB_)	16	68	10/06 – 12/07	3877	
KA (RB_)	16	70	09/00 – 11/08	3877	
KA (RB_)	1.6 i	70	07/03 – 11/08	3877	
KA (RB_)	1.6 i	71	11/05 – 09/08	3877	
KA (RU8)	1.3 TDCi	55	10/08 -	4173	
KUGA	1.6 GTDi	130	01/13 -	4226	
KUGA	1.6 GTDi AWD	130	01/13 -	4226	
KUGA	2.0 GTDi AWD	178	01/13 -	4226	
KUGA (TE)	1.6 EcoBoost	110	04/13 – 11/14	3885	
KUGA (TE)	1.6 EcoBoost AWD	134	04/13 – 11/14	3885	
KUGA I	25	147	03/09 – 11/12	3885	
KUGA I	25	147	03/09 – 11/12		4157
KUGA I	2.0 TDCi	100	03/08 – 11/12	3885	
KUGA I	2.0 TDCi	100	03/08 – 11/12		4157
KUGA I	2.0 TDCi	103	03/10 – 11/12	3885	
KUGA I	2.0 TDCi	103	03/10 – 11/12		4157
KUGA I	2.0 TDCi 4x4	100	03/08 – 11/12	3885	
KUGA I	2.0 TDCi 4x4	100	03/08 – 11/12		4157
KUGA I	2.0 TDCi 4x4	103	03/10 – 11/12	3885	
KUGA I	2.0 TDCi 4x4	103	03/10 – 11/12		4157
KUGA I	2.0 TDCi 4x4	120	03/10 – 11/12	3885	
KUGA I	2.0 TDCi 4x4	120	03/10 – 11/12		4157
KUGA I	2.5 4x4	147	03/09 -	3885	
KUGA I	2.5 4x4	147	03/09 -		4157
KUGA II (DM2)	1.5 EcoBoost 4x4	134	09/14 -	3885	
KUGA II (DM2)	1.6 EcoBoost	130	01/13 -	4226	
KUGA II (DM2)	1.6 EcoBoost 4x4	110	03/13 -	4226	
KUGA II (DM2)	2.0 TDCi	85	03/13 -	4226	
KUGA II (DM2)	2.0 TDCi	88	09/14 -	4226	
KUGA II (DM2)	2.0 TDCi	100	03/13 -	4226	
KUGA II (DM2)	2.0 TDCi	103	03/13 -	4226	
KUGA II (DM2)	2.0 TDCi	110	09/14 -	4226	
KUGA II (DM2)	2.0 TDCi 4x4	100	03/13 -	4226	
KUGA II (DM2)	2.0 TDCi 4x4	103	03/13 -	4226	
KUGA II (DM2)	2.0 TDCi 4x4	110	09/14 -	3885	
KUGA II (DM2)	2.0 TDCi 4x4	120	03/13 -	4226	
KUGA II (DM2)	2.0 TDCi 4x4	132	09/14 -	4226	
KUGA II Van	1.5 EcoBoost 4x4	134	09/14 -	3885	
KUGA II Van	2.0 TDCi	110	09/14 -	4226	
KUGA II Van	2.0 TDCi 4x4	110	09/14 -	4226	
KUGA II Van	2.0 TDCi 4x4	132	09/14 -	4226	
LASER Estate (KE)	16	54	03/87 – 12/94	3449	
LASER Estate (KE)	1.6 i	61	10/87 – 04/90	3449	
LASER Hatchback (KF)	16	64	03/90 – 09/91	3522	
LASER Hatchback (KF)	16	64	03/90 – 09/91	3640	
LASER Hatchback (KF)	1.8 i	76	03/90 – 09/91	3522	
LASER Hatchback (KF)	1.8 i	76	03/90 – 09/91	3640	
LASER Hatchback (KF)	1.8 i TX3	92	03/90 – 09/91	3640	
LASER Hatchback (KF)	1.8 i TX3 Turbo	117	06/90 – 09/91	3522	
LASER Hatchback (KF)	1.8 i TX3 Turbo	117	06/90 – 09/91	3640	
LASER Hatchback (KH)	16	64	10/91 – 10/94	3522	
LASER Hatchback (KH)	16	64	10/91 – 10/94	3640	
LASER Hatchback (KH)	1.8 i	76	10/91 – 10/94	3522	
LASER Hatchback (KH)	1.8 i	76	10/91 – 10/94	3640	
LASER Hatchback (KH)	1.8 i	92	10/92 – 10/94	3522	

MAKE & MODEL		KW	YEAR		
FORD					
LASER Hatchback (KH)	1.8 i	92	10/92 – 10/94	3640	
LASER Hatchback (KH)	1.8 i TX3 Turbo	117	10/91 – 07/93	3522	
LASER Hatchback (KH)	1.8 i TX3 Turbo	117	10/91 – 07/93	3640	
LASER Hatchback (KJ)	1.6 i	80	10/94 – 03/99	3640	
LASER Hatchback (KJ)	1.8 i	92	10/94 – 03/99	3640	
LASER Hatchback (KN)	1.6 i	78	03/99 – 04/01	3780	
LASER Hatchback (KN)	1.8 i	92	03/99 – 04/01	3832	
LASER Hatchback (KQ, KN III)	1.6 i	78	04/01 – 09/02	3780	
LASER Hatchback (KQ, KN III)	1.8 i	92	04/01 – 09/02	3832	
LASER Hatchback (KQ, KN III)	2.0 i	98	04/01 – 09/02	3832	
LASER Saloon (KF)	16	64	03/90 – 09/91	3522	
LASER Saloon (KF)	16	64	03/90 – 09/91	3640	
LASER Saloon (KF)	18	76	03/90 – 09/91	3522	
LASER Saloon (KF)	18	76	03/90 – 09/91	3640	
LASER Saloon (KH)	16	64	10/91 – 10/94	3522	
LASER Saloon (KH)	16	64	10/91 – 10/94	3640	
LASER Saloon (KH)	1.8 i	76	10/91 – 10/94	3522	
LASER Saloon (KH)	1.8 i	76	10/91 – 10/94	3640	
LASER Saloon (KJ)	1.6 i	80	10/94 – 03/99	3640	
LASER Saloon (KJ)	1.8 i	92	10/94 – 03/99	3640	
LASER Saloon (KN)	1.6 i	78	03/99 – 04/01	3780	
LASER Saloon (KN)	1.8 i	92	03/99 – 04/01	3832	
LASER Saloon (KQ)	1.6 i	78	04/01 – 09/02	3780	
LASER Saloon (KQ)	1.8 i	92	04/01 – 09/02	3832	
MAVERICK	2.0 16V	91	02/01 -	4119	
MAVERICK	2.0 16V	91	02/01 -		4215
MAVERICK	2.3 16V	110	03/04 -	4119	
MAVERICK	2.3 16V	110	03/04 -		4215
MAVERICK	3.0 V6 24V	145	02/01 -	4119	
MAVERICK	3.0 V6 24V	145	02/01 -		4215
MAVERICK	3.0 V6 24V	149	03/04 -	4119	
MAVERICK	3.0 V6 24V	149	03/04 -		4215
MAVERICK (UDS, UNS)	2.4 i	87	09/96 – 04/98	3692	
MAVERICK (UDS, UNS)	2.4 i	87	09/96 – 04/98	3760	
MAVERICK (UDS, UNS)	2.4 i	87	09/96 – 04/98	3888	
MAVERICK (UDS, UNS)	2.4 i	91	02/93 – 08/96	3692	
MAVERICK (UDS, UNS)	2.4 i	91	02/93 – 08/96	3760	
MAVERICK (UDS, UNS)	2.4 i	91	02/93 – 08/96	3888	
MAVERICK (UDS, UNS)	2.4 i (UDS)	85	09/96 – 04/98	3692	
MAVERICK (UDS, UNS)	2.4 i (UDS)	85	09/96 – 04/98	3760	
MAVERICK (UDS, UNS)	2.4 i (UDS)	85	09/96 – 04/98	3888	
MAVERICK (UDS, UNS)	2.7 TD	74	02/93 – 08/96	3692	
MAVERICK (UDS, UNS)	2.7 TD	74	02/93 – 08/96	3760	
MAVERICK (UDS, UNS)	2.7 TD	74	02/93 – 08/96	3888	
MAVERICK (UDS, UNS)	2.7 TD	92	09/96 – 04/98	3692	
MAVERICK (UDS, UNS)	2.7 TD	92	09/96 – 04/98	3760	
MAVERICK (UDS, UNS)	2.7 TD	92	09/96 – 04/98	3888	
MAVERICK / ESCAPE	2.0 16V (YF)	91	02/01 -	4220	
MAVERICK / ESCAPE	2.3 16V (GZ)	110	03/04 -	4220	
MAVERICK / ESCAPE	3.0 V6 24V (AJ)	145	02/01 -	4220	
MAVERICK / ESCAPE	3.0 V6 24V (AJ)	149	03/04 -	4220	
MAVERICK Closed Off-Road Vehicle (DA)	42	125	02/88 – 03/94	3415	
MAVERICK Closed Off-Road Vehicle (DA)	42	125	02/88 – 03/94	3667	
MAVERICK Closed Off-Road Vehicle (DA)	4.2 TD	75	02/88 – 03/94	3415	
MAVERICK Pickup (DA)	4.2 TD	75	02/88 – 03/94	3415	
MAVERICK Platform/Chassis (DA)	4.2 TD	75	02/88 – 03/94	3415	
MAVERICK VAN	2.7 TD	74	06/96 – 04/98	3692	
MAVERICK VAN	2.7 TD	74	06/96 – 04/98	3760	
MAVERICK VAN	2.7 TD	74	06/96 – 04/98	3888	
MAVERICK VAN	2.7 TD	92	06/96 – 04/98	3692	
MAVERICK VAN	2.7 TD	92	06/96 – 04/98	3760	
MAVERICK VAN	2.7 TD	92	06/96 – 04/98	3888	
METROSTAR	20	107	10/00 – 02/07		4058
METROSTAR	20	107	10/00 – 02/07		4093
METROSTAR	20	107	10/00 – 02/07	4100	
METROSTAR	25	125	10/00 – 02/07		4058
METROSTAR	25	125	10/00 – 02/07		4093
METROSTAR	25	125	10/00 – 02/07	4100	
MONDEO	20	105	05/03 -		4058
MONDEO	20	105	09/07 -		4058
MONDEO	20	105	05/03 -		4093

MAKE & MODEL   		KW	YEAR		
FORD					
MONDEO	20	105	09/07 -		4093
MONDEO	20	105	05/03 -	4100	
MONDEO	20	105	09/07 -	4100	
MONDEO	20	149	03/11 -		4157
MONDEO	20	149	03/11 -	4161	
MONDEO	20	176	03/11 -		4157
MONDEO	20	176	03/11 -	4161	
MONDEO	23	119	09/07 -		4058
MONDEO	23	119	09/07 -		4093
MONDEO	23	119	09/07 -	4100	
MONDEO	25	127	05/03 – 12/07		4058
MONDEO	25	127	05/03 – 12/07		4093
MONDEO	25	127	05/03 – 12/07	4100	
MONDEO II (BAP)	1.6 i (L1J)	66	08/96 – 09/00		4214
MONDEO II (BAP)	1.6 i 16V (L1L)	70	05/98 – 09/00		4214
MONDEO II (BAP)	1.6 i 16V (L1N)	70	05/98 – 09/00		4214
MONDEO II (BAP)	1.6 i 16V (L1Q)	70	05/98 – 09/00		4214
MONDEO II (BAP)	1.8 i (RKB)	85	08/96 – 09/00		4214
MONDEO II (BAP)	1.8 i (RKF)	85	08/96 – 09/00		4214
MONDEO II (BAP)	1.8 i (RKH)	85	08/96 – 09/00		4214
MONDEO II (BAP)	1.8 i (RKJ)	85	08/96 – 09/00		4214
MONDEO II (BAP)	1.8 i (RKK)	85	08/96 – 09/00		4214
MONDEO II (BAP)	1.8 TD (RFN)	66	08/96 – 09/00		4214
MONDEO II (BAP)	2.0 i (NGA)	96	08/96 – 09/00		4214
MONDEO II (BAP)	2.0 i (NGB)	96	08/96 – 09/00		4214
MONDEO II (BAP)	2.0 i (NGC)	96	08/96 – 09/00		4214
MONDEO II (BAP)	2.0 i (NGD)	96	08/96 – 09/00		4214
MONDEO II (BAP)	2.5 24V (SEA)	125	08/96 – 09/00		4214
MONDEO II (BAP)	2.5 24V (SEB)	125	06/00 – 09/00		4214
MONDEO II (BAP)	2.5 24V (SEC)	125	06/00 – 09/00		4214
MONDEO II (BAP)	2.5 ST 200 (SGA)	151	05/99 – 09/00		4214
MONDEO II (BNP)	1.6 i (L1J)	66	08/96 – 09/00		4214
MONDEO II (BNP)	1.6 i 16V (L1L)	70	05/98 – 09/00		4214
MONDEO II (BNP)	1.6 i 16V (L1N)	70	05/98 – 09/00		4214
MONDEO II (BNP)	1.6 i 16V (L1Q)	70	05/98 – 09/00		4214
MONDEO II (BNP)	1.8 i (RKB)	85	08/96 – 09/00		4214
MONDEO II (BNP)	1.8 i (RKF)	85	08/96 – 09/00		4214
MONDEO II (BNP)	1.8 i (RKH)	85	08/96 – 09/00		4214
MONDEO II (BNP)	1.8 i (RKJ)	85	08/96 – 09/00		4214
MONDEO II (BNP)	1.8 i (RKK)	85	08/96 – 09/00		4214
MONDEO II (BNP)	1.8 TD (RFN)	66	08/96 – 09/00		4214
MONDEO II (BNP)	2.0 i (NGA)	96	08/96 – 09/00		4214
MONDEO II (BNP)	2.0 i (NGB)	96	08/96 – 09/00		4214
MONDEO II (BNP)	2.0 i (NGD)	96	08/96 – 09/00		4214
MONDEO II (BNP)	2.0 i (NGC)	96	08/96 – 09/00		4214
MONDEO II (BNP)	2.5 24V (SEA)	125	08/96 – 09/00		4214
MONDEO II (BNP)	2.5 24V (SEB)	125	10/99 – 09/00		4214
MONDEO II (BNP)	2.5 24V (SEC)	125	10/99 – 09/00		4214
MONDEO II (BNP)	2.5 ST 200 (SGA)	151	05/99 – 09/00		4214
MONDEO (BNP)	1.6 i 16V (L1F)	66	04/93 – 08/96		4214
MONDEO (BNP)	1.6 i 16V (L1J)	65	07/94 – 08/96		4214
MONDEO (BNP)	1.8 i 16V (RKA)	85	04/93 – 08/96		4214
MONDEO (BNP)	1.8 i 16V (RKB)	82	07/94 – 08/96		4214
MONDEO (BNP)	1.8 TD (RFM)	65	06/93 – 08/96		4214
MONDEO (BNP)	1.8 TD (RFM)	66	11/95 – 08/96		4214
MONDEO (BNP)	1.8 TD (RFN)	65	06/93 – 08/96		4214
MONDEO (BNP)	1.8 TD (RFN)	66	11/95 – 08/96		4214
MONDEO (BNP)	2.0 i 16V (NGA)	97	01/93 – 08/96		4214
MONDEO (BNP)	2.0 i 16V (NGA)	100	04/93 – 08/96		4214
MONDEO (BNP)	2.5 i 24V (SEA)	125	07/94 – 08/96		4214
MONDEO (GBP)	1.6 i 16V (L1F)	66	02/93 – 08/96		4214
MONDEO (GBP)	1.6 i 16V (L1F)	66	02/93 – 08/96		4214
MONDEO (GBP)	1.6 i 16V (L1J)	65	07/94 – 08/96		4214
MONDEO (GBP)	1.6 i 16V (L1J)	65	07/94 – 08/96		4214
MONDEO (GBP)	1.8 (RKA)	85	02/93 – 08/96		4214
MONDEO (GBP)	1.8 i 16V (RKA)	85	02/93 – 08/96		4214
MONDEO (GBP)	1.8 i 16V (RKA)	85	02/93 – 08/96		4214
MONDEO (GBP)	1.8 i 16V (RKB)	82	07/94 – 08/96		4214
MONDEO (GBP)	1.8 i 16V (RKB)	82	01/94 – 08/96		4214
MONDEO (GBP)	1.8 TD (RFM)	65	06/93 – 08/96		4214
MONDEO (GBP)	1.8 TD (RFM)	65	06/93 – 08/96		4214

MAKE & MODEL		KW	YEAR		
FORD					
MONDEO (GBP)	1.8 TD (RFM)	66	10/95 – 08/96		4214
MONDEO (GBP)	1.8 TD (RFM)	66	10/95 – 08/96		4214
MONDEO (GBP)	1.8 TD (RFN)	65	06/93 – 08/96		4214
MONDEO (GBP)	1.8 TD (RFN)	65	06/93 – 08/96		4214
MONDEO (GBP)	1.8 TD (RFN)	66	10/95 – 08/96		4214
MONDEO (GBP)	1.8 TD (RFN)	66	10/95 – 08/96		4214
MONDEO (GBP)	2.0 i 16V (NGA)	97	12/94 – 08/96		4214
MONDEO (GBP)	2.0 i 16V (NGA)	100	02/93 – 08/96		4214
MONDEO (GBP)	2.0 i 16V (NGA)	100	02/93 – 08/96		4214
MONDEO (GBP)	2.5 i 24V (SEA)	125	07/94 – 08/96		4214
MONDEO (GBP)	2.5 i 24V (SEA)	125	07/94 – 08/96		4214
MONDEO Estate (HB, HC, HD)	2.0 i	96	07/95 – 12/99	3558	
MONDEO Estate (HB, HC, HD)	2.0 i	96	07/95 – 12/99	3593	
MONDEO Estate (MB, MC)	2.0 TDCi	103	03/12 – 01/15		4157
MONDEO Estate (MB, MC)	2.0 TDCi	103	03/12 – 01/15	4161	
MONDEO Estate (MB, MC)	2.3 i 16 V	118	06/09 – 01/15		4157
MONDEO Estate (MB, MC)	2.3 i 16 V	118	06/09 – 01/15	4161	
MONDEO Hatchback (HA, HB, HC)	20	96	07/95 – 02/00	3558	
MONDEO Hatchback (HA, HB, HC)	20	96	07/95 – 02/00	3593	
MONDEO Hatchback (HE)	20	94	02/00 – 04/01		4093
MONDEO Hatchback (HE)	20	94	02/00 – 04/01	4100	
MONDEO Hatchback (MA, MB, MC)	2.0 i 16V	149	03/12 – 01/15		4157
MONDEO Hatchback (MA, MB, MC)	2.0 i 16V	149	03/12 – 01/15	4161	
MONDEO Hatchback (MA, MB, MC)	2.0 TDCi	103	03/07 – 01/15		4157
MONDEO Hatchback (MA, MB, MC)	2.0 TDCi	103	03/07 – 01/15	4161	
MONDEO Hatchback (MA, MB, MC)	2.3 i 16V	118	03/07 – 07/10		4157
MONDEO Hatchback (MA, MB, MC)	2.3 i 16V	118	03/07 – 07/10	4161	
MONDEO Hatchback (MA, MB, MC)	XR5 Turbo	162	03/07 – 01/15		4157
MONDEO Hatchback (MA, MB, MC)	XR5 Turbo	162	03/07 – 01/15	4161	
MONDEO I (GBP)	1.6 i 16V	65	07/94 – 08/96	3558	
MONDEO I (GBP)	1.6 i 16V	65	07/94 – 08/96	3593	
MONDEO I (GBP)	1.6 i 16V	66	02/93 – 08/96	3558	
MONDEO I (GBP)	1.6 i 16V	66	02/93 – 08/96	3593	
MONDEO I (GBP)	1.8 i 16V	82	07/94 – 08/96	3558	
MONDEO I (GBP)	1.8 i 16V	82	07/94 – 08/96	3593	
MONDEO I (GBP)	1.8 i 16V	85	02/93 – 08/96	3558	
MONDEO I (GBP)	1.8 i 16V	85	02/93 – 08/96	3593	
MONDEO I (GBP)	1.8 TD	65	06/93 – 08/96	3558	
MONDEO I (GBP)	1.8 TD	65	06/93 – 08/96	3593	
MONDEO I (GBP)	1.8 TD	66	10/95 – 08/96	3558	
MONDEO I (GBP)	1.8 TD	66	10/95 – 08/96	3593	
MONDEO I (GBP)	2.0 i 16V	97	12/94 – 08/96	3558	
MONDEO I (GBP)	2.0 i 16V	97	12/94 – 08/96	3593	
MONDEO I (GBP)	2.0 i 16V	100	02/93 – 08/96	3558	
MONDEO I (GBP)	2.0 i 16V	100	02/93 – 08/96	3593	
MONDEO I (GBP)	2.0 i 16V 4x4	100	04/93 – 08/96	3558	
MONDEO I (GBP)	2.0 i 16V 4x4	100	04/93 – 08/96	3593	
MONDEO I Estate (BNP)	1.6 i 16V	65	07/94 – 08/96	3558	
MONDEO I Estate (BNP)	1.6 i 16V	65	07/94 – 08/96	3593	
MONDEO I Estate (BNP)	1.6 i 16V	66	04/93 – 08/96	3558	
MONDEO I Estate (BNP)	1.6 i 16V	66	04/93 – 08/96	3593	
MONDEO I Estate (BNP)	1.8 i 16V	82	07/94 – 08/96	3558	
MONDEO I Estate (BNP)	1.8 i 16V	82	07/94 – 08/96	3593	
MONDEO I Estate (BNP)	1.8 i 16V	85	04/93 – 08/96	3558	
MONDEO I Estate (BNP)	1.8 i 16V	85	04/93 – 08/96	3593	
MONDEO I Estate (BNP)	1.8 i 16V 4x4	85	04/93 – 08/96	3558	
MONDEO I Estate (BNP)	1.8 i 16V 4x4	85	04/93 – 08/96	3593	
MONDEO I Estate (BNP)	1.8 TD	65	06/93 – 08/96	3558	
MONDEO I Estate (BNP)	1.8 TD	65	06/93 – 08/96	3593	
MONDEO I Estate (BNP)	1.8 TD	66	11/95 – 08/96	3558	
MONDEO I Estate (BNP)	1.8 TD	66	11/95 – 08/96	3593	
MONDEO I Estate (BNP)	2.0 i 16V	97	01/93 – 08/96	3558	
MONDEO I Estate (BNP)	2.0 i 16V	97	01/93 – 08/96	3593	
MONDEO I Estate (BNP)	2.0 i 16V	100	04/93 – 08/96	3558	
MONDEO I Estate (BNP)	2.0 i 16V	100	04/93 – 08/96	3593	
MONDEO I Estate (BNP)	2.0 i 16V 4x4	100	04/93 – 08/96	3558	
MONDEO I Estate (BNP)	2.0 i 16V 4x4	100	04/93 – 08/96	3593	
MONDEO I Saloon (GBP)	1.6 i 16V	65	07/94 – 08/96	3558	
MONDEO I Saloon (GBP)	1.6 i 16V	65	07/94 – 08/96	3593	
MONDEO I Saloon (GBP)	1.6 i 16V	66	02/93 – 08/96	3558	
MONDEO I Saloon (GBP)	1.6 i 16V	66	02/93 – 08/96	3593	

MAKE & MODEL   		KW	YEAR		
FORD					
MONDEO I Saloon (GBP)	1.8 i 16V	82	01/94 – 08/96	3558	
MONDEO I Saloon (GBP)	1.8 i 16V	82	01/94 – 08/96	3593	
MONDEO I Saloon (GBP)	1.8 i 16V	85	02/93 – 08/96	3558	
MONDEO I Saloon (GBP)	1.8 i 16V	85	02/93 – 08/96	3593	
MONDEO I Saloon (GBP)	1.8 TD	65	06/93 – 08/96	3558	
MONDEO I Saloon (GBP)	1.8 TD	65	06/93 – 08/96	3593	
MONDEO I Saloon (GBP)	1.8 TD	66	10/95 – 08/96	3558	
MONDEO I Saloon (GBP)	1.8 TD	66	10/95 – 08/96	3593	
MONDEO I Saloon (GBP)	2.0 i 16V	100	02/93 – 08/96	3558	
MONDEO I Saloon (GBP)	2.0 i 16V	100	02/93 – 08/96	3593	
MONDEO I Saloon (GBP)	2.0 i 16V 4x4	100	02/93 – 08/96	3558	
MONDEO I Saloon (GBP)	2.0 i 16V 4x4	100	02/93 – 08/96	3593	
MONDEO II (BAP)	1.6 i	66	08/96 – 09/00	3558	
MONDEO II (BAP)	1.6 i	66	08/96 – 09/00	3593	
MONDEO II (BAP)	1.6 i 16V	70	05/98 – 09/00	3558	
MONDEO II (BAP)	1.6 i 16V	70	05/98 – 09/00	3593	
MONDEO II (BAP)	1.8 i	85	08/96 – 09/00	3558	
MONDEO II (BAP)	1.8 i	85	08/96 – 09/00	3593	
MONDEO II (BAP)	1.8 TD	66	08/96 – 09/00	3558	
MONDEO II (BAP)	1.8 TD	66	08/96 – 09/00	3593	
MONDEO II (BAP)	2.0 i	96	08/96 – 09/00	3558	
MONDEO II (BAP)	2.0 i	96	08/96 – 09/00	3593	
MONDEO II (BAP)	2.5 24V	125	06/00 – 09/00	3558	
MONDEO II (BAP)	2.5 24V	125	08/96 – 09/00	3558	
MONDEO II (BAP)	2.5 24V	125	06/00 – 09/00	3593	
MONDEO II (BAP)	2.5 24V	125	08/96 – 09/00	3593	
MONDEO II (BAP)	2.5 ST 200	151	05/99 – 09/00	3558	
MONDEO II (BAP)	2.5 ST 200	151	05/99 – 09/00	3593	
MONDEO II (BFP)	1.6 i (L1J)	66	08/96 – 09/00		4214
MONDEO II (BFP)	1.6 i 16V (L1L)	70	05/98 – 09/00		4214
MONDEO II (BFP)	1.6 i 16V (L1N)	70	05/98 – 09/00		4214
MONDEO II (BFP)	1.6 i 16V (L1Q)	70	05/98 – 09/00		4214
MONDEO II (BFP)	1.8 i (RKB)	85	08/96 – 09/00		4214
MONDEO II (BFP)	1.8 i (RKF)	85	08/96 – 09/00		4214
MONDEO II (BFP)	1.8 i (RKH)	85	08/96 – 09/00		4214
MONDEO II (BFP)	1.8 i (RKJ)	85	08/96 – 09/00		4214
MONDEO II (BFP)	1.8 i (RKK)	85	08/96 – 09/00		4214
MONDEO II (BFP)	1.8 TD (RFN)	66	08/96 – 09/00		4214
MONDEO II (BFP)	2.0 i (NGA)	96	08/96 – 09/00		4214
MONDEO II (BFP)	2.0 i (NGB)	96	08/96 – 09/00		4214
MONDEO II (BFP)	2.0 i (NGC)	96	08/96 – 09/00		4214
MONDEO II (BFP)	2.0 i (NGD)	96	08/96 – 09/00		4214
MONDEO II (BFP)	2.5 24V (LCBD)	125	06/00 – 09/00		4214
MONDEO II (BFP)	2.5 24V (SEA)	125	08/96 – 09/00		4214
MONDEO II (BFP)	2.5 24V (SEB)	125	06/00 – 09/00		4214
MONDEO II (BFP)	2.5 24V (SEC)	125	06/00 – 09/00		4214
MONDEO II (BFP)	2.5 ST 200 (SGA)	151	05/99 – 09/00		4214
MONDEO II Estate (BNP)	1.6 i	66	08/96 – 09/00	3558	
MONDEO II Estate (BNP)	1.6 i	66	08/96 – 09/00	3593	
MONDEO II Estate (BNP)	1.6 i 16V	70	05/98 – 09/00	3558	
MONDEO II Estate (BNP)	1.6 i 16V	70	05/98 – 09/00	3593	
MONDEO II Estate (BNP)	1.8 i	85	08/96 – 09/00	3558	
MONDEO II Estate (BNP)	1.8 i	85	08/96 – 09/00	3593	
MONDEO II Estate (BNP)	1.8 TD	66	08/96 – 09/00	3558	
MONDEO II Estate (BNP)	1.8 TD	66	08/96 – 09/00	3593	
MONDEO II Estate (BNP)	2.0 i	96	08/96 – 09/00	3558	
MONDEO II Estate (BNP)	2.0 i	96	08/96 – 09/00	3593	
MONDEO II Estate (BNP)	2.5 24V	125	08/96 – 09/00	3558	
MONDEO II Estate (BNP)	2.5 24V	125	10/99 – 09/00	3558	
MONDEO II Estate (BNP)	2.5 24V	125	08/96 – 09/00	3593	
MONDEO II Estate (BNP)	2.5 24V	125	10/99 – 09/00	3593	
MONDEO II Estate (BNP)	2.5 ST 200	151	05/99 – 09/00	3558	
MONDEO II Estate (BNP)	2.5 ST 200	151	05/99 – 09/00	3593	
MONDEO II Saloon (BFP)	1.6 i	66	08/96 – 09/00	3558	
MONDEO II Saloon (BFP)	1.6 i	66	08/96 – 09/00	3593	
MONDEO II Saloon (BFP)	1.6 i 16V	70	05/98 – 09/00	3558	
MONDEO II Saloon (BFP)	1.6 i 16V	70	05/98 – 09/00	3593	
MONDEO II Saloon (BFP)	1.8 i	85	08/96 – 09/00	3558	
MONDEO II Saloon (BFP)	1.8 i	85	08/96 – 09/00	3593	
MONDEO II Saloon (BFP)	1.8 TD	66	08/96 – 09/00	3558	
MONDEO II Saloon (BFP)	1.8 TD	66	08/96 – 09/00	3593	

MAKE & MODEL		KW	YEAR		
FORD					
MONDEO II Saloon (BFP)	2.0 i	96	08/96 – 09/00	3558	
MONDEO II Saloon (BFP)	2.0 i	96	08/96 – 09/00	3593	
MONDEO II Saloon (BFP)	2.5 24V	125	06/00 – 09/00	3558	
MONDEO II Saloon (BFP)	2.5 24V	125	08/96 – 09/00	3558	
MONDEO II Saloon (BFP)	2.5 24V	125	06/00 – 09/00	3593	
MONDEO II Saloon (BFP)	2.5 24V	125	08/96 – 09/00	3593	
MONDEO II Saloon (BFP)	2.5 ST 200	151	05/99 – 09/00	3558	
MONDEO II Saloon (BFP)	2.5 ST 200	151	05/99 – 09/00	3593	
MONDEO III (B5Y)	1.8 16V	81	10/00 – 03/07		4058
MONDEO III (B5Y)	1.8 16V	81	10/00 – 03/07		4093
MONDEO III (B5Y)	1.8 16V	81	10/00 – 03/07	4100	
MONDEO III (B5Y)	1.8 16V	92	10/00 – 03/07		4058
MONDEO III (B5Y)	1.8 16V	92	10/00 – 03/07		4093
MONDEO III (B5Y)	1.8 16V	92	10/00 – 03/07	4100	
MONDEO III (B5Y)	1.8 SCi	96	06/03 – 03/07		4058
MONDEO III (B5Y)	1.8 SCi	96	06/03 – 03/07		4093
MONDEO III (B5Y)	1.8 SCi	96	06/03 – 03/07	4100	
MONDEO III (B5Y)	2.0 16V	107	10/00 – 03/07		4058
MONDEO III (B5Y)	2.0 16V	107	10/00 – 03/07		4093
MONDEO III (B5Y)	2.0 16V	107	10/00 – 03/07	4100	
MONDEO III (B5Y)	2.0 16V DI / TDDi / TDCi	66	10/00 – 03/07		4058
MONDEO III (B5Y)	2.0 16V DI / TDDi / TDCi	66	10/00 – 03/07		4093
MONDEO III (B5Y)	2.0 16V DI / TDDi / TDCi	66	10/00 – 03/07	4100	
MONDEO III (B5Y)	2.0 16V TDDi / TDCi	85	10/00 – 03/07		4058
MONDEO III (B5Y)	2.0 16V TDDi / TDCi	85	10/00 – 03/07		4093
MONDEO III (B5Y)	2.0 16V TDDi / TDCi	85	10/00 – 03/07	4100	
MONDEO III (B5Y)	2.0 TDCi	92	02/03 – 06/05		4058
MONDEO III (B5Y)	2.0 TDCi	92	02/03 – 06/05		4093
MONDEO III (B5Y)	2.0 TDCi	92	02/03 – 06/05	4100	
MONDEO III (B5Y)	2.0 TDCi	96	10/01 – 03/07		4058
MONDEO III (B5Y)	2.0 TDCi	96	10/01 – 03/07		4093
MONDEO III (B5Y)	2.0 TDCi	96	10/01 – 03/07	4100	
MONDEO III (B5Y)	2.2 TDCi	110	09/04 – 03/07		4058
MONDEO III (B5Y)	2.2 TDCi	110	09/04 – 03/07	4100	
MONDEO III (B5Y)	2.2 TDCi	114	09/04 – 03/07		4058
MONDEO III (B5Y)	2.2 TDCi	114	09/04 – 03/07	4100	
MONDEO III (B5Y)	2.5 V6 24V	125	10/00 – 03/07		4058
MONDEO III (B5Y)	2.5 V6 24V	125	10/00 – 03/07		4093
MONDEO III (B5Y)	2.5 V6 24V	125	10/00 – 03/07	4100	
MONDEO III (B5Y)	3.0 V6 24V	150	09/04 – 03/07		4058
MONDEO III (B5Y)	3.0 V6 24V	150	09/04 – 03/07	4100	
MONDEO III (B5Y)	ST220	166	04/02 – 03/07		4058
MONDEO III (B5Y)	ST220	166	04/02 – 03/07		4093
MONDEO III (B5Y)	ST220	166	04/02 – 03/07	4100	
MONDEO III Estate (BWY)	1.8 16V	81	10/00 – 03/07		4058
MONDEO III Estate (BWY)	1.8 16V	81	10/00 – 03/07		4093
MONDEO III Estate (BWY)	1.8 16V	81	10/00 – 03/07	4100	
MONDEO III Estate (BWY)	1.8 16V	92	10/00 – 03/07		4058
MONDEO III Estate (BWY)	1.8 16V	92	10/00 – 03/07		4093
MONDEO III Estate (BWY)	1.8 16V	92	10/00 – 03/07	4100	
MONDEO III Estate (BWY)	1.8 SCi	96	06/03 – 03/07		4058
MONDEO III Estate (BWY)	1.8 SCi	96	06/03 – 03/07		4093
MONDEO III Estate (BWY)	1.8 SCi	96	06/03 – 03/07	4100	
MONDEO III Estate (BWY)	2.0 16V	107	10/00 – 03/07		4058
MONDEO III Estate (BWY)	2.0 16V	107	10/00 – 03/07		4093
MONDEO III Estate (BWY)	2.0 16V	107	10/00 – 03/07	4100	
MONDEO III Estate (BWY)	2.0 16V DI / TDDi / TDCi	66	10/00 – 03/07		4058
MONDEO III Estate (BWY)	2.0 16V DI / TDDi / TDCi	66	10/00 – 03/07		4093
MONDEO III Estate (BWY)	2.0 16V DI / TDDi / TDCi	66	10/00 – 03/07	4100	
MONDEO III Estate (BWY)	2.0 16V TDDi / TDCi	85	10/00 – 03/07		4058
MONDEO III Estate (BWY)	2.0 16V TDDi / TDCi	85	10/00 – 03/07		4093
MONDEO III Estate (BWY)	2.0 16V TDDi / TDCi	85	10/00 – 03/07	4100	
MONDEO III Estate (BWY)	2.0 TDCi	96	10/01 – 03/07		4058
MONDEO III Estate (BWY)	2.0 TDCi	96	10/01 – 03/07		4093
MONDEO III Estate (BWY)	2.0 TDCi	96	10/01 – 03/07	4100	
MONDEO III Estate (BWY)	2.2 TDCi	110	09/04 – 03/07		4058
MONDEO III Estate (BWY)	2.2 TDCi	110	09/04 – 03/07	4100	
MONDEO III Estate (BWY)	2.2 TDCi	114	09/04 – 03/07		4058
MONDEO III Estate (BWY)	2.2 TDCi	114	09/04 – 03/07	4100	
MONDEO III Estate (BWY)	2.5 V6 24V	125	10/00 – 03/07		4058
MONDEO III Estate (BWY)	2.5 V6 24V	125	10/00 – 03/07		4093

MAKE & MODEL   		KW	YEAR		
FORD					
MONDEO III Estate (BWY)	2.5 V6 24V	125	10/00 – 03/07	4100	
MONDEO III Estate (BWY)	3.0 V6 24V	150	09/04 – 03/07		4058
MONDEO III Estate (BWY)	3.0 V6 24V	150	09/04 – 03/07	4100	
MONDEO III Estate (BWY)	ST220	166	04/02 – 03/07		4058
MONDEO III Estate (BWY)	ST220	166	04/02 – 03/07		4093
MONDEO III Estate (BWY)	ST220	166	04/02 – 03/07	4100	
MONDEO III Saloon (B4Y)	1.8 16V	81	10/00 – 03/07		4058
MONDEO III Saloon (B4Y)	1.8 16V	81	10/00 – 03/07		4093
MONDEO III Saloon (B4Y)	1.8 16V	81	10/00 – 03/07	4100	
MONDEO III Saloon (B4Y)	1.8 16V	92	10/00 – 03/07		4058
MONDEO III Saloon (B4Y)	1.8 16V	92	10/00 – 03/07		4093
MONDEO III Saloon (B4Y)	1.8 16V	92	10/00 – 03/07	4100	
MONDEO III Saloon (B4Y)	1.8 SCi	96	06/03 – 03/07		4058
MONDEO III Saloon (B4Y)	1.8 SCi	96	06/03 – 03/07		4093
MONDEO III Saloon (B4Y)	1.8 SCi	96	06/03 – 03/07	4100	
MONDEO III Saloon (B4Y)	2.0 16V	107	10/00 – 03/07		4058
MONDEO III Saloon (B4Y)	2.0 16V	107	10/00 – 03/07		4093
MONDEO III Saloon (B4Y)	2.0 16V	107	10/00 – 03/07	4100	
MONDEO III Saloon (B4Y)	2.0 16V DI / TDDi / TDCi	66	10/00 – 03/07		4058
MONDEO III Saloon (B4Y)	2.0 16V DI / TDDi / TDCi	66	10/00 – 03/07		4093
MONDEO III Saloon (B4Y)	2.0 16V DI / TDDi / TDCi	66	10/00 – 03/07	4100	
MONDEO III Saloon (B4Y)	2.0 16V TDDi / TDCi	85	10/00 – 03/07		4058
MONDEO III Saloon (B4Y)	2.0 16V TDDi / TDCi	85	10/00 – 03/07		4093
MONDEO III Saloon (B4Y)	2.0 16V TDDi / TDCi	85	10/00 – 03/07	4100	
MONDEO III Saloon (B4Y)	2.0 TDCi	92	10/00 – 03/07		4058
MONDEO III Saloon (B4Y)	2.0 TDCi	92	10/00 – 03/07		4093
MONDEO III Saloon (B4Y)	2.0 TDCi	92	10/00 – 03/07	4100	
MONDEO III Saloon (B4Y)	2.0 TDCi	96	10/01 – 03/07		4058
MONDEO III Saloon (B4Y)	2.0 TDCi	96	10/01 – 03/07		4093
MONDEO III Saloon (B4Y)	2.0 TDCi	96	10/01 – 03/07	4100	
MONDEO III Saloon (B4Y)	2.2 TDCi	110	09/04 – 03/07		4058
MONDEO III Saloon (B4Y)	2.2 TDCi	110	09/04 – 03/07	4100	
MONDEO III Saloon (B4Y)	2.2 TDCi	114	09/04 – 03/07		4058
MONDEO III Saloon (B4Y)	2.2 TDCi	114	09/04 – 03/07	4100	
MONDEO III Saloon (B4Y)	2.5 V6 24V	125	10/00 – 03/07		4058
MONDEO III Saloon (B4Y)	2.5 V6 24V	125	10/00 – 03/07		4093
MONDEO III Saloon (B4Y)	2.5 V6 24V	125	10/00 – 03/07	4100	
MONDEO III Saloon (B4Y)	3.0 V6 24V	150	09/04 – 03/07		4058
MONDEO III Saloon (B4Y)	3.0 V6 24V	150	09/04 – 03/07	4100	
MONDEO III Saloon (B4Y)	ST220	166	04/02 – 03/07		4058
MONDEO III Saloon (B4Y)	ST220	166	04/02 – 03/07		4093
MONDEO III Saloon (B4Y)	ST220	166	04/02 – 03/07	4100	
MONDEO IV (BA7)	20	107	03/07 – 09/14		4157
MONDEO IV (BA7)	20	107	03/07 – 09/14	4161	
MONDEO IV (BA7)	23	118	07/07 – 09/14		4157
MONDEO IV (BA7)	23	118	07/07 – 09/14	4161	
MONDEO IV (BA7)	25	162	03/07 – 09/14		4157
MONDEO IV (BA7)	25	162	03/07 – 09/14	4161	
MONDEO IV (BA7)	1.6 EcoBoost	118	02/11 – 09/14		4157
MONDEO IV (BA7)	1.6 EcoBoost	118	02/11 – 09/14	4161	
MONDEO IV (BA7)	1.6 TDCi	85	02/11 – 09/14		4157
MONDEO IV (BA7)	1.6 TDCi	85	02/11 – 09/14	4161	
MONDEO IV (BA7)	1.6 Ti	81	03/07 – 09/14		4157
MONDEO IV (BA7)	1.6 Ti	81	03/07 – 09/14	4161	
MONDEO IV (BA7)	1.6 Ti	88	07/10 – 09/14		4157
MONDEO IV (BA7)	1.6 Ti	88	07/10 – 09/14	4161	
MONDEO IV (BA7)	1.6 Ti	92	03/07 – 09/14		4157
MONDEO IV (BA7)	1.6 Ti	92	03/07 – 09/14	4161	
MONDEO IV (BA7)	1.8 TDCi	74	03/07 – 09/14		4157
MONDEO IV (BA7)	1.8 TDCi	74	03/07 – 09/14	4161	
MONDEO IV (BA7)	1.8 TDCi	92	06/07 -		4157
MONDEO IV (BA7)	1.8 TDCi	92	06/07 -	4161	
MONDEO IV (BA7)	2.0 EcoBoost	176	07/10 – 09/14		4157
MONDEO IV (BA7)	2.0 EcoBoost	176	07/10 – 09/14	4161	
MONDEO IV (BA7)	2.0 Flexifuel	107	03/09 – 09/14		4157
MONDEO IV (BA7)	2.0 Flexifuel	107	03/09 – 09/14	4161	
MONDEO IV (BA7)	2.0 LPG	107	07/09 – 09/14		4157
MONDEO IV (BA7)	2.0 LPG	107	07/09 – 09/14	4161	
MONDEO IV (BA7)	2.0 SCTi	149	03/10 – 09/14		4157
MONDEO IV (BA7)	2.0 SCTi	149	03/10 – 09/14	4161	
MONDEO IV (BA7)	2.0 TDCi	85	11/07 – 09/14		4157

MAKE & MODEL		KW	YEAR		
FORD					
MONDEO IV (BA7)	2.0 TDCi	85	11/07 – 09/14	4161	
MONDEO IV (BA7)	2.0 TDCi	96	03/07 – 09/14		4157
MONDEO IV (BA7)	2.0 TDCi	96	03/07 – 09/14	4161	
MONDEO IV (BA7)	2.0 TDCi	100	03/07 – 09/14		4157
MONDEO IV (BA7)	2.0 TDCi	100	03/07 – 09/14	4161	
MONDEO IV (BA7)	2.0 TDCi	103	03/07 – 09/14		4157
MONDEO IV (BA7)	2.0 TDCi	103	03/07 – 09/14	4161	
MONDEO IV (BA7)	2.0 TDCi	120	03/10 – 09/14		4157
MONDEO IV (BA7)	2.0 TDCi	120	03/10 – 09/14	4161	
MONDEO IV (BA7)	2.2 TDCi	129	03/08 – 10/10		4157
MONDEO IV (BA7)	2.2 TDCi	129	03/08 – 10/10	4161	
MONDEO IV (BA7)	2.2 TDCi	147	07/10 – 09/14		4157
MONDEO IV (BA7)	2.2 TDCi	147	07/10 – 09/14	4161	
MONDEO IV Saloon (BA7)	20	107	03/07 – 09/14		4157
MONDEO IV Saloon (BA7)	20	107	03/07 – 09/14	4161	
MONDEO IV Saloon (BA7)	23	118	07/07 – 09/14		4157
MONDEO IV Saloon (BA7)	23	118	07/07 – 09/14	4161	
MONDEO IV Saloon (BA7)	25	162	03/07 – 09/14		4157
MONDEO IV Saloon (BA7)	25	162	03/07 – 09/14	4161	
MONDEO IV Saloon (BA7)	1.6 TDCi	85	12/10 – 09/14		4157
MONDEO IV Saloon (BA7)	1.6 TDCi	85	12/10 – 09/14	4161	
MONDEO IV Saloon (BA7)	1.6 Ti	81	03/07 – 09/14		4157
MONDEO IV Saloon (BA7)	1.6 Ti	81	03/07 – 09/14	4161	
MONDEO IV Saloon (BA7)	1.6 Ti	92	03/07 – 09/14		4157
MONDEO IV Saloon (BA7)	1.6 Ti	92	03/07 – 09/14	4161	
MONDEO IV Saloon (BA7)	1.8 TDCi	74	03/07 – 09/14		4157
MONDEO IV Saloon (BA7)	1.8 TDCi	74	03/07 – 09/14	4161	
MONDEO IV Saloon (BA7)	1.8 TDCi	92	06/07 – 09/14		4157
MONDEO IV Saloon (BA7)	1.8 TDCi	92	06/07 – 09/14	4161	
MONDEO IV Saloon (BA7)	2.0 Flexifuel	107	03/09 – 09/14		4157
MONDEO IV Saloon (BA7)	2.0 Flexifuel	107	03/09 – 09/14	4161	
MONDEO IV Saloon (BA7)	2.0 LPG	107	07/09 – 09/14		4157
MONDEO IV Saloon (BA7)	2.0 LPG	107	07/09 – 09/14	4161	
MONDEO IV Saloon (BA7)	2.0 TDCi	85	11/07 – 09/14		4157
MONDEO IV Saloon (BA7)	2.0 TDCi	85	11/07 – 09/14	4161	
MONDEO IV Saloon (BA7)	2.0 TDCi	96	03/07 – 09/14		4157
MONDEO IV Saloon (BA7)	2.0 TDCi	96	03/07 – 09/14	4161	
MONDEO IV Saloon (BA7)	2.0 TDCi	103	03/07 – 09/14		4157
MONDEO IV Saloon (BA7)	2.0 TDCi	103	03/07 – 09/14	4161	
MONDEO IV Saloon (BA7)	2.0 TDCi	120	03/10 – 09/14		4157
MONDEO IV Saloon (BA7)	2.0 TDCi	120	03/10 – 09/14	4161	
MONDEO IV Saloon (BA7)	2.2 TDCi	129	03/08 – 10/10		4157
MONDEO IV Saloon (BA7)	2.2 TDCi	129	03/08 – 10/10	4161	
MONDEO IV Turnier (BA7)	20	107	03/07 – 09/14		4157
MONDEO IV Turnier (BA7)	20	107	03/07 – 09/14	4161	
MONDEO IV Turnier (BA7)	23	118	07/07 – 09/14		4157
MONDEO IV Turnier (BA7)	23	118	07/07 – 09/14	4161	
MONDEO IV Turnier (BA7)	25	162	03/07 – 12/12		4157
MONDEO IV Turnier (BA7)	25	162	03/07 – 12/12	4161	
MONDEO IV Turnier (BA7)	1.6 EcoBoost	118	02/11 – 09/14		4157
MONDEO IV Turnier (BA7)	1.6 EcoBoost	118	02/11 – 09/14	4161	
MONDEO IV Turnier (BA7)	1.6 TDCi	85	02/11 – 09/14		4157
MONDEO IV Turnier (BA7)	1.6 TDCi	85	02/11 – 09/14	4161	
MONDEO IV Turnier (BA7)	1.6 Ti	81	03/07 – 12/12		4157
MONDEO IV Turnier (BA7)	1.6 Ti	81	03/07 – 12/12	4161	
MONDEO IV Turnier (BA7)	1.6 Ti	88	07/10 – 09/14		4157
MONDEO IV Turnier (BA7)	1.6 Ti	88	07/10 – 09/14	4161	
MONDEO IV Turnier (BA7)	1.6 Ti	92	03/07 – 12/10		4157
MONDEO IV Turnier (BA7)	1.6 Ti	92	03/07 – 12/10	4161	
MONDEO IV Turnier (BA7)	1.8 TDCi	74	03/07 – 12/12		4157
MONDEO IV Turnier (BA7)	1.8 TDCi	74	03/07 – 12/12	4161	
MONDEO IV Turnier (BA7)	1.8 TDCi	92	06/07 – 12/12		4157
MONDEO IV Turnier (BA7)	1.8 TDCi	92	06/07 – 12/12	4161	
MONDEO IV Turnier (BA7)	2.0 EcoBoost	176	07/10 – 09/14		4157
MONDEO IV Turnier (BA7)	2.0 EcoBoost	176	07/10 – 09/14	4161	
MONDEO IV Turnier (BA7)	2.0 Flexifuel	107	03/09 – 09/14		4157
MONDEO IV Turnier (BA7)	2.0 Flexifuel	107	03/09 – 09/14	4161	
MONDEO IV Turnier (BA7)	2.0 LPG	107	07/09 – 09/14		4157
MONDEO IV Turnier (BA7)	2.0 LPG	107	07/09 – 09/14	4161	
MONDEO IV Turnier (BA7)	2.0 SCTi	149	03/10 – 09/14		4157
MONDEO IV Turnier (BA7)	2.0 SCTi	149	03/10 – 09/14	4161	

MAKE & MODEL		KW	YEAR		
FORD					
MONDEO IV Turnier (BA7)	2.0 TDCi	85	11/07 – 09/14		4157
MONDEO IV Turnier (BA7)	2.0 TDCi	85	11/07 – 09/14	4161	
MONDEO IV Turnier (BA7)	2.0 TDCi	96	03/07 – 12/12		4157
MONDEO IV Turnier (BA7)	2.0 TDCi	96	03/07 – 12/12	4161	
MONDEO IV Turnier (BA7)	2.0 TDCi	100	03/07 – 09/14		4157
MONDEO IV Turnier (BA7)	2.0 TDCi	100	03/07 – 09/14	4161	
MONDEO IV Turnier (BA7)	2.0 TDCi	103	03/07 – 09/14		4157
MONDEO IV Turnier (BA7)	2.0 TDCi	103	03/07 – 09/14	4161	
MONDEO IV Turnier (BA7)	2.0 TDCi	120	03/10 – 09/14		4157
MONDEO IV Turnier (BA7)	2.0 TDCi	120	03/10 – 09/14	4161	
MONDEO IV Turnier (BA7)	2.2 TDCi	129	03/08 – 10/10		4157
MONDEO IV Turnier (BA7)	2.2 TDCi	129	03/08 – 10/10	4161	
MONDEO IV Turnier (BA7)	2.2 TDCi	147	07/10 – 09/14		4157
MONDEO IV Turnier (BA7)	2.2 TDCi	147	07/10 – 09/14	4161	
MONDEO Saloon (HA, HB)	20	96	07/95 – 02/00	3558	
MONDEO Saloon (HA, HB)	20	96	07/95 – 02/00	3593	
MONDEO Saloon (HE)	20	94	02/00 – 04/01		4093
MONDEO Saloon (HE)	20	94	02/00 – 04/01	4100	
MONDEO Saloon (HE)	25	125	02/00 – 04/01	3558	
MONDEO Saloon (HE)	25	125	02/00 – 04/01	3593	
MONDEO Saloon (MA, MB)	2.0 TDCi	103	03/07 – 01/15		4157
MONDEO Saloon (MA, MB)	2.0 TDCi	103	03/07 – 01/15	4161	
MONDEO Saloon (MA, MB)	2.3 i 16 V	118	03/07 – 01/15		4157
MONDEO Saloon (MA, MB)	2.3 i 16 V	118	03/07 – 01/15	4161	
MONDEO V	1.0 EcoBoost (M1CB)	92	02/15 -		4270
MONDEO V	1.0 EcoBoost (M1CA)	92	02/15 -		4270
MONDEO V	1.0 EcoBoost (M1CA)	92	02/15 -		4270
MONDEO V	1.0 EcoBoost (M1CB)	92	02/15 -		4270
MONDEO V	1.5 EcoBoost (UNCA)	118	09/14 -		4270
MONDEO V	1.5 EcoBoost (UNCB)	118	09/14 -		4270
MONDEO V	1.5 EcoBoost (UNCE)	118	09/14 -		4270
MONDEO V	1.5 EcoBoost (UNCF)	118	09/14 -		4270
MONDEO V	1.5 EcoBoost (UNCA)	118	09/14 -		4270
MONDEO V	1.5 EcoBoost (UNCB)	118	09/14 -		4270
MONDEO V	1.5 EcoBoost (UNCE)	118	09/14 -		4270
MONDEO V	1.5 EcoBoost (UNCF)	118	09/14 -		4270
MONDEO V	1.5 TDCi (UGCC)	88	03/15 -		4270
MONDEO V	1.5 TDCi (UGCC)	88	03/15 -		4270
MONDEO V	1.5 TDCi (XUCA)	88	03/15 -		4270
MONDEO V	1.5 TDCi (XUCA)	88	03/15 -		4270
MONDEO V	1.6 TDCi (NGCA)	85	09/14 -		4270
MONDEO V	1.6 TDCi (NGCA)	85	09/14 -		4270
MONDEO V	1.6 TDCi (U3CA)	85	09/14 -		4270
MONDEO V	1.6 TDCi (U3CA)	85	09/14 -		4270
MONDEO V	2.0 EcoBoost (R9CB)	176	09/14 -		4270
MONDEO V	2.0 EcoBoost (R9CB)	176	09/14 -		4270
MONDEO V	2.0 EcoBoost (R9CF)	176	09/14 -		4270
MONDEO V	2.0 EcoBoost (R9CF)	176	09/14 -		4270
MONDEO V	2.0 EcoBoost (R9CH)	176	09/14 -		4270
MONDEO V	2.0 EcoBoost (R9CH)	176	09/14 -		4270
MONDEO V	2.0 EcoBoost (TNCD)	149	09/14 -		4270
MONDEO V	2.0 EcoBoost (TNCF)	149	09/14 -		4270
MONDEO V	2.0 EcoBoost (TNCF)	149	09/14 -		4270
MONDEO V	2.0 EcoBoost (TNCD)	149	09/14 -		4270
MONDEO V	2.0 TDCi (T7CE)	110	09/14 -		4270
MONDEO V	2.0 TDCi (T7CE)	110	02/15 -		4270
MONDEO V	2.0 TDCi (T7CE)	110	09/14 -		4270
MONDEO V	2.0 TDCi (T7CE)	110	02/15 -		4270
MONDEO V	2.0 TDCi (T8CC)	132	09/14 -		4270
MONDEO V	2.0 TDCi (T8CC)	132	02/15 -		4270
MONDEO V	2.0 TDCi (T8CC)	132	09/14 -		4270
MONDEO V	2.0 TDCi (T8CC)	132	02/15 -		4270
MONDEO V	2.0 TDCi Bi-Turbo (T9CA)	154	03/15 -		4270
MONDEO V	2.0 TDCi Bi-Turbo (T9CA)	154	03/15 -		4270
MONDEO V / FUSION	2.0 EcoBoost	176	05/15 -		4270
MONDEO V / FUSION	2.0 EcoBoost	179	09/12 – 07/16		4270
MONDEO V / FUSION	2.0 EcoBoost	179	09/12 – 07/16		4270
MONDEO V / FUSION	2.0 EcoBoost (TNCC)	146	05/15 -		4270
MONDEO V / FUSION	2.0 EcoBoost (TNCD)	149	05/15 -		4270
MONDEO V / FUSION	2.0 EcoBoost (TNCF)	149	05/15 -		4270
MONDEO V / FUSION	2.0 Flex	131	10/13 -		4270

MAKE & MODEL		KW	YEAR		
FORD					
MONDEO V / FUSION	2.0 Hybrid	105	08/14 -		4270
MONDEO V / FUSION	2.0 Hybrid	130	09/14 -		4270
MONDEO V / FUSION	2.0 Hybrid	140	09/14 -		4270
MONDEO V / FUSION	2.0 TDCi	132	05/15 -		4270
MONDEO V / FUSION	2.0 TDCi (T8CC)	132	05/15 -		4270
MONDEO V / FUSION	2.0 TDCi (T9CA)	154	05/15 -		4270
MONDEO V / FUSION	2.5	130	09/13 -		4270
MONDEO V / FUSION	2.5 (S7CB)	110	05/15 -		4270
MONDEO V / FUSION	2.5 Hybrid	116	09/13 -		4270
MUSTANG Convertible	4.0 V6	157	12.05 - 12.10	4332	
MUSTANG Convertible	4.0 V6	157	12.05 - 12.10		4333
MUSTANG Convertible	4.6 V8	224	09.05 -	4332	
MUSTANG Convertible	4.6 V8	224	09.05-		4333
MUSTANG Convertible	4.6 V8	235	04.09 - 02.10		4333
MUSTANG Convertible	5.4 V8	355	01.06 -	4332	
MUSTANG Convertible	5.4 V8	355	01.06-		4333
MUSTANG Coupe	4.0 V6	157	12.04 - 12.10	4332	
MUSTANG Coupe	4.0 V6	157	12.04 - 12.10		4333
MUSTANG Coupe	4.6 V8	224	12.04 -	4332	
MUSTANG Coupe	4.6 V8	224	12.04 -		4333
MUSTANG Coupe	4.6 V8	235	09.08 - 02.10		4333
MUSTANG Coupe	5.4 V8	355	01.06 -	4332	
MUSTANG Coupe	5.4 V8	355	01.06 -		4333
ORION I (AFD)	13	51	07/83 – 03/86	3570	
ORION I (AFD)	16	58	07/83 – 03/86	3570	
ORION I (AFD)	1.6 D	40	02/84 – 03/86	3570	
ORION I (AFD)	1.6 i	77	07/83 – 03/86	3570	
ORION II (AFF)	13	44	12/85 – 07/90	3570	
ORION II (AFF)	13	51	11/86 – 07/88	3570	
ORION II (AFF)	14	52	03/86 – 07/90	3570	
ORION II (AFF)	14	54	01/86 – 07/90	3570	
ORION II (AFF)	14	55	12/85 – 07/90	3570	
ORION II (AFF)	16	58	04/86 – 12/88	3570	
ORION II (AFF)	16	66	12/85 – 07/90	3570	
ORION II (AFF)	1.4 CAT	54	02/87 – 07/90	3570	
ORION II (AFF)	1.6 D	40	12/85 – 01/89	3570	
ORION II (AFF)	1.6 i	75	08/89 – 07/90	3570	
ORION II (AFF)	1.6 i	77	03/86 – 07/90	3570	
ORION II (AFF)	1.6 i CAT	66	03/86 – 07/90	3570	
ORION II (AFF)	1.8 D	44	01/89 – 07/90	3570	
ORION III (GAL)	13	44	07/90 – 12/93	3465	
ORION III (GAL)	14	52	07/90 – 12/93	3465	
ORION III (GAL)	14	54	07/90 – 12/93	3465	
ORION III (GAL)	16	66	07/90 – 12/92	3465	
ORION III (GAL)	16	66	07/90 – 12/92		3545
ORION III (GAL)	1.3	44	07/90-12/93	3464	
ORION III (GAL)	1.4	52	07/90-12/93	3464	
ORION III (GAL)	1.4	54	07/90-12/93	3464	
ORION III (GAL)	1.6	66	07/90-12/92	3464	
ORION III (GAL)	1.6 i	77	07/90 – 09/92	3465	
ORION III (GAL)	1.6 i	77	07/90 – 09/92		3545
ORION III (GAL)	1.6 i	77	07/90-09/92	3464	
ORION III (GAL)	1.6 i 16V	66	07/92 – 12/93	3465	
ORION III (GAL)	1.6 i 16V	66	07/92 – 12/93		3545
ORION III (GAL)	1.6 i 16V	66	07/92-12/93	3464	
ORION III (GAL)	1.8 D	44	11/90 – 12/93	3465	
ORION III (GAL)	1.8 D	44	11/90 – 12/93		3545
ORION III (GAL)	1.8 D	44	11/90-12/93	3464	
ORION III (GAL)	1.8 i 16V	77	02/92 – 12/93	3465	
ORION III (GAL)	1.8 i 16V	77	02/92 – 12/93		3545
ORION III (GAL)	1.8 i 16V	96	01/92 – 12/93		3545
ORION III (GAL)	1.8 i 16V	96	01/92 – 12/93	3548	
ORION III (GAL)	1.8 i 16V	96	01/92 – 12/93	3549	
ORION III (GAL)	1.8 i 16V	77	02/92-12/93	3464	
ORION III (GAL)	1.8 TD	66	03/92 – 12/93	3465	
ORION III (GAL)	1.8 TD	66	03/92 – 12/93		3545
ORION III (GAL)	1.8 TD	66	03/92-12/93	3464	
P 100 I	16	54	04/82 – 09/87	3480	
P 100 II	20	DCCVV	10/87 – 12/92	3570	
P 100 II	1.8 TD	55	10/87 – 12/92	3570	
PROBE (ST, SU, SV)	25	120	07/94 – 01/98	3832	

BESER

MAKE & MODEL		KW	YEAR		
FORD					
PROBE (ST, SU, SV)	25	120	07/94 – 01/98		3833
PROBE I	2.2	82	08/88 0 – 7/93	3437	
PROBE I	2.2 GT	108	08/88 – 12/92	3437	
PROBE I	3.0 V6	104	08/88 – 07/93	3437	
PROBE II (ECP)	2.0 16V	85	10/93 – 03/98		3833
PROBE II (ECP)	2.0 16V	85	10/93 – 03/98	3832	
PROBE II (ECP)	2.5 V6 24V	119	10/93 – 03/98		3833
PROBE II (ECP)	2.5 V6 24V	119	10/93 – 03/98	3832	
PROBE II (ECP)	2.5 V6 24V	120	12/94 – 03/98		3833
PROBE II (ECP)	2.5 V6 24V	120	12/94 – 03/98	3832	
PRONTO Box (DA_V)	08	29	06/90 – 09/97	3509	
PRONTO Box (DA_V)	08	29	06/90 – 09/97	4034	
PRONTO Box (DA_V)	10	33	04/97 – 10/01	3509	
PRONTO Box (DA_V)	10	33	04/97 – 10/01	4034	
PRONTO Bus (DA_H)	08	29	06/90 – 09/97	3509	
PRONTO Bus (DA_H)	08	29	06/90 – 09/97	4034	
PRONTO Bus (DA_H)	10	33	04/97 – 10/01	3509	
PRONTO Bus (DA_H)	10	33	04/97 – 10/01	4034	
PUMA (EC_)	1.4 16V	66	11/97 – 10/00	3570	
PUMA (EC_)	1.4 16V	66	11/97 – 10/00	3877	
PUMA (EC_)	1.6 16V	76	08/00 – 06/02	3877	
PUMA (EC_)	1.7 16V	92	03/97 – 06/02	3570	
PUMA (EC_)	1.7 16V	92	03/97 – 06/02	3877	
PUMA (EC_)	ST 160	118	06/99 – 06/02	3570	
PUMA (EC_)	ST 160	118	06/99 – 06/02	3877	
RANGER	23	72	10/90 – 12/95	3781	
RANGER	30	99	10/90 – 12/96	3781	
RANGER	3.0 4x4	99	10/90 – 12/96	3781	
RANGER	4.0 4x4	114	10/90 – 12/98	3781	
RANGER (ER, EQ)	18	85	06/99 – 02/02	3767	
RANGER (ER, EQ)	22	78	03/02 – 09/05	3767	
RANGER (ER, EQ)	23	105	10/05 – 06/06	3767	
RANGER (ER, EQ)	23	114	10/01 – 09/05	3767	
RANGER (ER, EQ)	26	80	10/02 – 09/04	3767	
RANGER (ER, EQ)	30	109	06/99 – 06/06	3767	
RANGER (ER, EQ)	40	152	10/05 – 06/06	3767	
RANGER (ER, EQ)	2.3 4x4	114	10/01 – 09/05	3767	
RANGER (ER, EQ)	2.3 4x4	114	10/01 – 09/05	3988	
RANGER (ER, EQ)	2.5 D	57	10/99 – 04/02	3767	
RANGER (ER, EQ)	2.5 D 4x4	57	10/99 – 04/02	3767	
RANGER (ER, EQ)	2.5 TD	62	04/02 – 06/06	3767	
RANGER (ER, EQ)	2.5 TD 4x4	62	04/02 – 06/06	3767	
RANGER (ER, EQ)	2.5 TD 4x4	62	04/02 – 06/06	3988	
RANGER (ER, EQ)	2.5 TD 4x4	80	10/99 – 06/06	3767	
RANGER (ER, EQ)	2.5 TD 4x4	80	10/99 – 06/06	3988	
RANGER (ER, EQ)	2.5 TDdi	86	04/02 – 09/05	3767	
RANGER (ER, EQ)	2.5 TDdi 4x4	86	04/02 – 09/05	3767	
RANGER (ER, EQ)	2.5 TDdi 4x4	86	04/02 – 09/05	3988	
RANGER (ER, EQ)	2.9 D	70	06/99 – 02/02	3767	
RANGER (ER, EQ)	3.0 4x4	109	06/99 – 06/06	3988	
RANGER (ER, EQ)	4.0 4x4	152	10/05 – 06/06	3988	
RANGER (ET)	2.5 TDCi 4x4	105	05/06 – 07/12	3988	
RANGER (ET)	2.5 TDdi	105	05/06 – 07/12	3767	
RANGER (ET)	3.0 TDCi	115	05/06 – 07/12	3767	
RANGER (ET)	3.0 TDCi 4x4	115	05/06 – 07/12	3988	
RANGER Pickup (PJ)	2.5 TDdi	105	11/06 – 03/09	3767	
RANGER Pickup (PJ)	2.5 TDdi All-wheel Drive	105	11/06 – 03/09	3767	
RANGER Pickup (PJ)	3.0 TD	115	11/06 – 03/09	3988	
RANGER Pickup (PJ)	3.0 TD All-wheel Drive	115	11/06 – 03/09	3988	
RANGER Pickup (PK)	2.5 TDdi	105	03/09 – 11/11	3988	
RANGER Pickup (PK)	3.0 TDdi 4x4	115	03/09 – 11/11	3988	
RANGER Platform/Chassis (PJ)	2.5 TDdi	105	11/06 – 03/09	3767	
RANGER Platform/Chassis (PK)	2.5 TDdi 4x4	105	03/09 – 11/11	3988	
RANGER Platform/Chassis (PK)	3.0 TDdi	115	03/09 – 11/11	3988	
SCORPIO I (GAE, GGE)	18	66	04/85 – 02/92	3548	
SCORPIO I (GAE, GGE)	18	66	04/85 – 02/92	3549	
SCORPIO I (GAE, GGE)	20	77	04/85 – 08/89	3548	
SCORPIO I (GAE, GGE)	20	77	04/85 – 08/89	3549	
SCORPIO I (GAE, GGE)	20	80	11/88 – 10/92	3548	
SCORPIO I (GAE, GGE)	20	80	11/88 – 10/92	3549	
SCORPIO I (GAE, GGE)	20	80	11/88 – 10/92	3558	

MAKE & MODEL		KW	YEAR		
FORD					
SCORPIO I (GAE, GGE)	20	80	11/88 – 10/92	3593	
SCORPIO I (GAE, GGE)	2.0 i	74	10/85 – 12/90	3548	
SCORPIO I (GAE, GGE)	2.0 i	74	10/85 – 12/90	3549	
SCORPIO I (GAE, GGE)	2.0 i	85	02/92 – 09/94	3548	
SCORPIO I (GAE, GGE)	2.0 i	85	04/85 – 02/92	3548	
SCORPIO I (GAE, GGE)	2.0 i	85	02/92 – 09/94	3549	
SCORPIO I (GAE, GGE)	2.0 i	85	04/85 – 02/92	3549	
SCORPIO I (GAE, GGE)	2.0 i	85	02/92 – 09/94	3558	
SCORPIO I (GAE, GGE)	2.0 i	85	02/92 – 09/94	3593	
SCORPIO I (GAE, GGE)	2.0 i	88	05/89 – 09/94	3548	
SCORPIO I (GAE, GGE)	2.0 i	88	05/89 – 09/94	3549	
SCORPIO I (GAE, GGE)	2.0 i	88	05/89 – 09/94	3558	
SCORPIO I (GAE, GGE)	2.0 i	88	05/89 – 09/94	3593	
SCORPIO I (GAE, GGE)	2.4 i	92	10/88 – 02/92	3548	
SCORPIO I (GAE, GGE)	2.4 i	92	10/88 – 02/92	3549	
SCORPIO I (GAE, GGE)	2.4 i	96	09/86 - 09/88	3548	
SCORPIO I (GAE, GGE)	2.4 i	96	09/86 - 09/88	3549	
SCORPIO I (GAE, GGE)	2.4 i CAT	92	10/88 – 09/94	3548	
SCORPIO I (GAE, GGE)	2.4 i CAT	92	10/88 – 09/94	3549	
SCORPIO I (GAE, GGE)	2.4 i CAT	92	10/88 – 09/94	3558	
SCORPIO I (GAE, GGE)	2.4 i CAT	92	10/88 – 09/94	3593	
SCORPIO I (GAE, GGE)	2.5 D	51	12/85 – 02/92	3548	
SCORPIO I (GAE, GGE)	2.5 D	51	12/85 – 02/92	3549	
SCORPIO I (GAE, GGE)	2.5 TD	68	06/88 – 07/93	3548	
SCORPIO I (GAE, GGE)	2.5 TD	68	06/88 – 07/93	3549	
SCORPIO I (GAE, GGE)	2.5 TD	68	06/88 – 07/93	3558	
SCORPIO I (GAE, GGE)	2.5 TD	68	06/88 – 07/93	3593	
SCORPIO I (GAE, GGE)	2.5 TD	85	08/93 – 09/94	3558	
SCORPIO I (GAE, GGE)	2.5 TD	85	08/93 – 09/94	3593	
SCORPIO I (GAE, GGE)	2.8 i	110	04/85 – 11/86	3548	
SCORPIO I (GAE, GGE)	2.8 i	110	04/85 – 11/86	3549	
SCORPIO I (GAE, GGE)	2.8 i 4x4	110	10/85 – 11/86	3548	
SCORPIO I (GAE, GGE)	2.8 i 4x4	110	10/85 – 11/86	3549	
SCORPIO I (GAE, GGE)	2.9 i	107	09/86 – 09/94	3548	
SCORPIO I (GAE, GGE)	2.9 i	107	09/86 – 09/94	3549	
SCORPIO I (GAE, GGE)	2.9 i	107	09/86 – 09/94	3558	
SCORPIO I (GAE, GGE)	2.9 i	107	09/86 – 09/94	3593	
SCORPIO I (GAE, GGE)	2.9 i	110	09/86 – 09/94	3548	
SCORPIO I (GAE, GGE)	2.9 i	110	09/86 – 09/94	3549	
SCORPIO I (GAE, GGE)	2.9 i	110	09/86 – 09/94	3558	
SCORPIO I (GAE, GGE)	2.9 i	110	09/86 – 09/94	3593	
SCORPIO I (GAE, GGE)	2.9 i 24V	143	04/91 – 09/94	3548	
SCORPIO I (GAE, GGE)	2.9 i 24V	143	04/91 – 09/94	3549	
SCORPIO I (GAE, GGE)	2.9 i 4x4	107	05/88 – 02/93	3548	
SCORPIO I (GAE, GGE)	2.9 i 4x4	107	05/88 – 02/93	3549	
SCORPIO I (GAE, GGE)	2.9 i 4x4	107	05/88 – 02/93	3558	
SCORPIO I (GAE, GGE)	2.9 i 4x4	107	05/88 – 02/93	3593	
SCORPIO I (GAE, GGE)	2.9 i 4x4	110	09/86 – 09/94	3548	
SCORPIO I (GAE, GGE)	2.9 i 4x4	110	09/86 – 09/94	3549	
SCORPIO I (GAE, GGE)	2.9 i 4x4	110	09/86 – 09/94	3558	
SCORPIO I (GAE, GGE)	2.9 i 4x4	110	09/86 – 09/94	3593	
SCORPIO I (GAE, GGE)	2.9 i CAT	107	10/87 – 09/94	3548	
SCORPIO I (GAE, GGE)	2.9 i CAT	107	10/87 – 09/94	3549	
SCORPIO I (GAE, GGE)	2.9 i CAT	107	10/87 – 09/94	3558	
SCORPIO I (GAE, GGE)	2.9 i CAT	107	10/87 – 09/94	3593	
SCORPIO I Estate (GGE)	2.0 i	85	09/91 – 09/94	3548	
SCORPIO I Estate (GGE)	2.0 i	85	09/91 – 09/94	3549	
SCORPIO I Estate (GGE)	2.0 i	85	09/91 – 09/94	3558	
SCORPIO I Estate (GGE)	2.0 i	85	09/91 – 09/94	3593	
SCORPIO I Estate (GGE)	2.0 i	88	09/91 – 09/94	3548	
SCORPIO I Estate (GGE)	2.0 i	88	09/91 – 09/94	3549	
SCORPIO I Estate (GGE)	2.0 i	88	09/91 – 09/94	3558	
SCORPIO I Estate (GGE)	2.0 i	88	09/91 – 09/94	3593	
SCORPIO I Estate (GGE)	2.4 i	92	09/91 – 09/94	3548	
SCORPIO I Estate (GGE)	2.4 i	92	09/91 – 09/94	3549	
SCORPIO I Estate (GGE)	2.4 i	92	09/91 – 09/94	3558	
SCORPIO I Estate (GGE)	2.4 i	92	09/91 – 09/94	3593	
SCORPIO I Estate (GGE)	2.5 D	51	10/90 – 08/92	3548	
SCORPIO I Estate (GGE)	2.5 D	51	10/90 – 08/92	3549	
SCORPIO I Estate (GGE)	2.5 D	51	10/90 – 08/92	3558	
SCORPIO I Estate (GGE)	2.5 D	51	10/90 – 08/92	3593	

MAKE & MODEL		KW	YEAR		
FORD					
SCORPIO I Estate (GGE)	2.5 TD	68	09/91 – 07/93	3548	
SCORPIO I Estate (GGE)	2.5 TD	68	09/91 – 07/93	3549	
SCORPIO I Estate (GGE)	2.5 TD	68	09/91 – 07/93	3558	
SCORPIO I Estate (GGE)	2.5 TD	68	09/91 – 07/93	3593	
SCORPIO I Estate (GGE)	2.5 TD	85	08/93 – 09/94	3558	
SCORPIO I Estate (GGE)	2.5 TD	85	08/93 – 09/94	3593	
SCORPIO I Estate (GGE)	2.9 i	107	09/91 – 09/94	3548	
SCORPIO I Estate (GGE)	2.9 i	107	09/91 – 09/94	3549	
SCORPIO I Estate (GGE)	2.9 i	107	09/91 – 09/94	3558	
SCORPIO I Estate (GGE)	2.9 i	107	09/91 – 09/94	3593	
SCORPIO I Estate (GGE)	2.9 i 4x4	107	05/88 – 02/93	3548	
SCORPIO I Estate (GGE)	2.9 i 4x4	107	05/88 – 02/93	3549	
SCORPIO I Estate (GGE)	2.9 i 4x4	107	05/88 – 02/93	3558	
SCORPIO I Estate (GGE)	2.9 i 4x4	107	05/88 – 02/93	3593	
SCORPIO I Saloon (GGE)	18	66	01/86 – 10/88	3548	
SCORPIO I Saloon (GGE)	18	66	01/86 – 10/88	3549	
SCORPIO I Saloon (GGE)	19	85	11/92 – 09/93	3558	
SCORPIO I Saloon (GGE)	19	85	11/92 – 09/93	3593	
SCORPIO I Saloon (GGE)	20	77	03/90 – 08/92	3548	
SCORPIO I Saloon (GGE)	20	77	03/90 – 08/92	3549	
SCORPIO I Saloon (GGE)	20	77	03/90 – 08/92	3558	
SCORPIO I Saloon (GGE)	20	77	03/90 – 08/92	3593	
SCORPIO I Saloon (GGE)	20	80	06/89 – 03/93	3548	
SCORPIO I Saloon (GGE)	20	80	06/89 – 03/93	3549	
SCORPIO I Saloon (GGE)	20	80	06/89 – 03/93	3558	
SCORPIO I Saloon (GGE)	20	80	06/89 – 03/93	3593	
SCORPIO I Saloon (GGE)	29	107	09/92 – 09/94	3558	
SCORPIO I Saloon (GGE)	29	107	09/92 – 09/94	3593	
SCORPIO I Saloon (GGE)	2.0 i	85	02/92 – 09/94	3548	
SCORPIO I Saloon (GGE)	2.0 i	85	02/92 – 09/94	3549	
SCORPIO I Saloon (GGE)	2.0 i	85	02/92 – 09/94	3558	
SCORPIO I Saloon (GGE)	2.0 i	85	02/92 – 09/94	3593	
SCORPIO I Saloon (GGE)	2.0 i	88	05/89 – 09/94	3548	
SCORPIO I Saloon (GGE)	2.0 i	88	05/89 – 09/94	3549	
SCORPIO I Saloon (GGE)	2.0 i	88	05/89 – 09/94	3558	
SCORPIO I Saloon (GGE)	2.0 i	88	05/89 – 09/94	3593	
SCORPIO I Saloon (GGE)	2.0 i	92	05/89 – 02/92	3548	
SCORPIO I Saloon (GGE)	2.0 i	92	05/89 – 02/92	3549	
SCORPIO I Saloon (GGE)	2.4 i	92	10/88 – 10/94	3548	
SCORPIO I Saloon (GGE)	2.4 i	92	10/88 – 10/94	3549	
SCORPIO I Saloon (GGE)	2.4 i	92	10/88 – 10/94	3558	
SCORPIO I Saloon (GGE)	2.4 i	92	10/88 – 10/94	3593	
SCORPIO I Saloon (GGE)	2.5 D	51	12/89 – 12/94	3548	
SCORPIO I Saloon (GGE)	2.5 D	51	12/89 – 12/94	3549	
SCORPIO I Saloon (GGE)	2.5 D	51	12/89 – 12/94	3558	
SCORPIO I Saloon (GGE)	2.5 D	51	12/89 – 12/94	3593	
SCORPIO I Saloon (GGE)	2.5 TD	68	06/88 – 07/93	3548	
SCORPIO I Saloon (GGE)	2.5 TD	68	06/88 – 07/93	3549	
SCORPIO I Saloon (GGE)	2.5 TD	68	06/88 – 07/93	3558	
SCORPIO I Saloon (GGE)	2.5 TD	68	06/88 – 07/93	3593	
SCORPIO I Saloon (GGE)	2.5 TD	85	08/93 – 09/94	3558	
SCORPIO I Saloon (GGE)	2.5 TD	85	08/93 – 09/94	3593	
SCORPIO I Saloon (GGE)	2.9 i	107	09/86 – 12/94	3548	
SCORPIO I Saloon (GGE)	2.9 i	107	09/86 – 12/94	3549	
SCORPIO I Saloon (GGE)	2.9 i	107	09/86 – 12/94	3558	
SCORPIO I Saloon (GGE)	2.9 i	107	09/86 – 12/94	3593	
SCORPIO I Saloon (GGE)	2.9 i 24V	143	04/91 – 09/94	3548	
SCORPIO I Saloon (GGE)	2.9 i 24V	143	04/91 – 09/94	3549	
SCORPIO I Saloon (GGE)	2.9 i 4x4	107	12/89 – 10/94	3548	
SCORPIO I Saloon (GGE)	2.9 i 4x4	107	12/89 – 10/94	3549	
SCORPIO I Saloon (GGE)	2.9 i 4x4	107	12/89 – 10/94	3558	
SCORPIO I Saloon (GGE)	2.9 i 4x4	107	12/89 – 10/94	3593	
SCORPIO II (GFR, GGR)	2.0 i	85	10/94 – 08/98	3558	
SCORPIO II (GFR, GGR)	2.0 i	85	10/94 – 08/98	3593	
SCORPIO II (GFR, GGR)	2.0 i 16V	100	10/94 – 08/98	3558	
SCORPIO II (GFR, GGR)	2.0 i 16V	100	10/94 – 08/98	3593	
SCORPIO II (GFR, GGR)	2.3 i 16V	108	06/96 – 08/98	3558	
SCORPIO II (GFR, GGR)	2.3 i 16V	108	06/96 – 08/98	3593	
SCORPIO II (GFR, GGR)	2.5 TD	85	10/94 – 08/98	3558	
SCORPIO II (GFR, GGR)	2.5 TD	85	10/94 – 08/98	3593	
SCORPIO II (GFR, GGR)	2.5 TD	92	09/96 – 08/98	3558	

MAKE & MODEL		KW	YEAR		
FORD					
SCORPIO II (GFR, GGR)	2.5 TD	92	09/96 – 08/98	3593	
SCORPIO II (GFR, GGR)	2.9 i	110	02/95 – 08/98	3558	
SCORPIO II (GFR, GGR)	2.9 i	110	02/95 – 08/98	3593	
SCORPIO II (GFR, GGR)	2.9 i 24V	152	10/94 – 08/98	3558	
SCORPIO II (GFR, GGR)	2.9 i 24V	152	10/94 – 08/98	3593	
SCORPIO II Estate (GNR, GGR)	2.0 i	85	10/94 – 08/98	3558	
SCORPIO II Estate (GNR, GGR)	2.0 i	85	10/94 – 08/98	3593	
SCORPIO II Estate (GNR, GGR)	2.0 i 16V	100	10/94 – 08/98	3558	
SCORPIO II Estate (GNR, GGR)	2.0 i 16V	100	10/94 – 08/98	3593	
SCORPIO II Estate (GNR, GGR)	2.3 i 16V	108	06/96 – 08/98	3558	
SCORPIO II Estate (GNR, GGR)	2.3 i 16V	108	06/96 – 08/98	3593	
SCORPIO II Estate (GNR, GGR)	2.5 TD	85	10/94 – 08/98	3558	
SCORPIO II Estate (GNR, GGR)	2.5 TD	85	10/94 – 08/98	3593	
SCORPIO II Estate (GNR, GGR)	2.5 TD	92	09/96 – 08/98	3558	
SCORPIO II Estate (GNR, GGR)	2.5 TD	92	09/96 – 08/98	3593	
SCORPIO II Estate (GNR, GGR)	2.9 i	110	02/95 – 08/98	3558	
SCORPIO II Estate (GNR, GGR)	2.9 i	110	02/95 – 08/98	3593	
SCORPIO II Estate (GNR, GGR)	2.9 i 24V	152	10/94 – 08/98	3558	
SCORPIO II Estate (GNR, GGR)	2.9 i 24V	152	10/94 – 08/98	3593	
SIERRA (GBG, GB4)	16	53	01/88 – 02/93	3548	
SIERRA (GBG, GB4)	16	53	01/88 – 02/93	3549	
SIERRA (GBG, GB4)	16	53	01/88 – 02/93	3570	
SIERRA (GBG, GB4)	16	55	01/87 02/93	3548	
SIERRA (GBG, GB4)	16	55	01/87 02/93	3549	
SIERRA (GBG, GB4)	16	55	01/87 – 02/93	3570	
SIERRA (GBG, GB4)	18	59	10/87 – 09/89	3548	
SIERRA (GBG, GB4)	18	59	10/87 – 09/89	3549	
SIERRA (GBG, GB4)	18	59	10/87 – 09/89	3570	
SIERRA (GBG, GB4)	18	64	05/88 – 02/93	3548	
SIERRA (GBG, GB4)	18	64	05/88 – 02/93	3549	
SIERRA (GBG, GB4)	18	64	05/88 – 02/93	3570	
SIERRA (GBG, GB4)	18	66	01/87 – 05/88	3548	
SIERRA (GBG, GB4)	18	66	01/87 – 05/88	3549	
SIERRA (GBG, GB4)	18	66	01/87 – 05/88	3570	
SIERRA (GBG, GB4)	20	77	01/87 – 02/93	3548	
SIERRA (GBG, GB4)	20	77	01/87 – 02/93	3549	
SIERRA (GBG, GB4)	20	77	01/87 – 02/93	3570	
SIERRA (GBG, GB4)	20	80	07/89 – 12/92	3548	
SIERRA (GBG, GB4)	20	80	07/89 – 12/92	3549	
SIERRA (GBG, GB4)	20	80	07/89 – 12/92	3570	
SIERRA (GBG, GB4)	1.6 i	59	10/89 – 02/93	3548	
SIERRA (GBG, GB4)	1.6 i	59	10/89 – 02/93	3549	
SIERRA (GBG, GB4)	1.6 i	59	10/89 – 02/93	3570	
SIERRA (GBG, GB4)	1.8 TD	55	08/88 – 02/93	3548	
SIERRA (GBG, GB4)	1.8 TD	55	08/88 – 02/93	3549	
SIERRA (GBG, GB4)	1.8 TD	55	08/88 – 02/93	3570	
SIERRA (GBG, GB4)	2.0 4x4	88	01/90 – 02/93	3548	
SIERRA (GBG, GB4)	2.0 4x4	88	01/90 – 02/93	3549	
SIERRA (GBG, GB4)	2.0 4x4	88	01/90 – 02/93	3570	
SIERRA (GBG, GB4)	2.0 4x4	92	01/90 – 02/93	3548	
SIERRA (GBG, GB4)	2.0 4x4	92	01/90 – 02/93	3549	
SIERRA (GBG, GB4)	2.0 4x4	92	01/90 – 02/93	3570	
SIERRA (GBG, GB4)	2.0 i	74	01/87 – 12/89	3548	
SIERRA (GBG, GB4)	2.0 i	74	01/87 – 12/89	3549	
SIERRA (GBG, GB4)	2.0 i	74	01/87 – 12/89	3570	
SIERRA (GBG, GB4)	2.0 i	85	01/87 – 02/93	3548	
SIERRA (GBG, GB4)	2.0 i	85	01/87 – 02/93	3549	
SIERRA (GBG, GB4)	2.0 i	85	01/87 – 02/93	3570	
SIERRA (GBG, GB4)	2.0 i	88	01/90 – 02/93	3548	
SIERRA (GBG, GB4)	2.0 i	88	01/90 – 02/93	3549	
SIERRA (GBG, GB4)	2.0 i	88	01/90 – 02/93	3570	
SIERRA (GBG, GB4)	2.0 i	92	01/90 – 02/93	3548	
SIERRA (GBG, GB4)	2.0 i	92	01/90 – 02/93	3549	
SIERRA (GBG, GB4)	2.0 i	92	01/90 – 02/93	3570	
SIERRA (GBG, GB4)	2.0 i CAT	74	01/87 – 02/93	3548	
SIERRA (GBG, GB4)	2.0 i CAT	74	01/87 – 02/93	3549	
SIERRA (GBG, GB4)	2.0 i CAT	74	01/87 – 02/93	3570	
SIERRA (GBG, GB4)	2.0 i DOHC	85	12/91 – 02/93	3548	
SIERRA (GBG, GB4)	2.0 i DOHC	85	12/91 – 02/93	3549	
SIERRA (GBG, GB4)	2.0 i DOHC	85	12/91 – 02/93	3570	
SIERRA (GBG, GB4)	2.3 D	49	01/87 – 09/89	3548	

MAKE & MODEL		KW	YEAR		
FORD					
SIERRA (GBG, GB4)	2.3 D	49	01/87 – 09/89	3549	
SIERRA (GBG, GB4)	2.3 D	49	01/87 – 09/89	3570	
SIERRA (GBG, GB4)	2.8 i	105	08/87 – 02/93	3548	
SIERRA (GBG, GB4)	2.8 i	105	08/87 – 02/93	3549	
SIERRA (GBG, GB4)	2.9 4x4	107	08/88 – 02/93	3548	
SIERRA (GBG, GB4)	2.9 4x4	107	08/88 – 02/93	3549	
SIERRA (GBG, GB4)	2.9 4x4	110	08/88 – 02/93	3548	
SIERRA (GBG, GB4)	2.9 4x4	110	08/88 – 02/93	3549	
SIERRA (GBG, GB4)	2.9 i	107	08/88 – 02/93	3548	
SIERRA (GBG, GB4)	2.9 i	107	08/88 – 02/93	3549	
SIERRA (GBG, GB4)	2.9 i	110	08/88 – 02/93	3548	
SIERRA (GBG, GB4)	2.9 i	110	08/88 – 02/93	3549	
SIERRA Estate (BNC)	16	55	08/82 – 12/86	3417/1	
SIERRA Estate (BNC)	16	55	08/82 – 12/86	3419	
SIERRA Estate (BNC)	16	55	08/82 – 12/86	3429	
SIERRA Estate (BNC)	16	55	08/82 – 12/86	3548	
SIERRA Estate (BNC)	16	55	08/82 – 12/86	3549	
SIERRA Estate (BNC)	16	55	08/82 – 12/86	3570	
SIERRA Estate (BNC)	16	55	08/82 – 12/86	3638	
SIERRA Estate (BNC)	18	66	10/84 – 12/86	3417/1	
SIERRA Estate (BNC)	18	66	10/84 – 12/86	3548	
SIERRA Estate (BNC)	18	66	10/84 – 12/86	3549	
SIERRA Estate (BNC)	18	66	10/84 – 12/86	3570	
SIERRA Estate (BNC)	18	66	10/84 – 12/86	3638	
SIERRA Estate (BNC)	20	66	08/82 – 10/84	3417/1	
SIERRA Estate (BNC)	20	66	08/82 – 10/84	3548	
SIERRA Estate (BNC)	20	66	08/82 – 10/84	3549	
SIERRA Estate (BNC)	20	66	08/82 – 10/84	3570	
SIERRA Estate (BNC)	20	66	08/82 – 10/84	3638	
SIERRA Estate (BNC)	20	74	10/85 – 12/86	3417/1	
SIERRA Estate (BNC)	20	74	10/85 – 12/86	3548	
SIERRA Estate (BNC)	20	74	10/85 – 12/86	3549	
SIERRA Estate (BNC)	20	74	10/85 – 12/86	3570	
SIERRA Estate (BNC)	20	74	10/85 – 12/86	3638	
SIERRA Estate (BNC)	20	77	08/82 – 12/86	3417/1	
SIERRA Estate (BNC)	20	77	08/82 – 12/86	3548	
SIERRA Estate (BNC)	20	77	08/82 – 12/86	3549	
SIERRA Estate (BNC)	20	77	08/82 – 12/86	3570	
SIERRA Estate (BNC)	20	77	08/82 – 12/86	3638	
SIERRA Estate (BNC)	20	85	03/85 – 12/86	3417/1	
SIERRA Estate (BNC)	20	85	03/85 – 12/86	3548	
SIERRA Estate (BNC)	20	85	03/85 – 12/86	3549	
SIERRA Estate (BNC)	20	85	03/85 – 12/86	3570	
SIERRA Estate (BNC)	20	85	03/85 – 12/86	3638	
SIERRA Estate (BNC)	23	84	08/82 – 12/86	3417/1	
SIERRA Estate (BNC)	23	84	08/82 – 12/86	3548	
SIERRA Estate (BNC)	23	84	08/82 – 12/86	3549	
SIERRA Estate (BNC)	23	84	08/82 – 12/86	3570	
SIERRA Estate (BNC)	23	84	08/82 – 12/86	3638	
SIERRA Estate (BNC)	2.3 D	49	08/82 – 12/86	3417/1	
SIERRA Estate (BNC)	2.3 D	49	08/82 – 12/86	3548	
SIERRA Estate (BNC)	2.3 D	49	08/82 – 12/86	3549	
SIERRA Estate (BNC)	2.3 D	49	08/82 – 12/86	3570	
SIERRA Estate (BNC)	2.3 D	49	08/82 – 12/86	3638	
SIERRA Estate (BNC)	2.8 i 4x4	105	08/82 – 12/86	3548	
SIERRA Estate (BNC)	2.8 i 4x4	105	08/82 – 12/86	3549	
SIERRA Estate (BNC)	2.8 i 4x4	107	08/82 – 12/86	3548	
SIERRA Estate (BNC)	2.8 i 4x4	107	08/82 – 12/86	3549	
SIERRA Estate (BNC)	2.8 XR4i	105	08/82 – 12/86	3548	
SIERRA Estate (BNC)	2.8 XR4i	105	08/82 – 12/86	3549	
SIERRA Estate (BNC)	2.8 XR4i	107	08/82 – 12/86	3548	
SIERRA Estate (BNC)	2.8 XR4i	107	08/82 – 12/86	3549	
SIERRA Estate (BNG)	16	53	01/88 – 02/93	3548	
SIERRA Estate (BNG)	16	53	01/88 – 02/93	3549	
SIERRA Estate (BNG)	16	53	01/88 – 02/93	3570	
SIERRA Estate (BNG)	16	55	01/87 – 02/93	3548	
SIERRA Estate (BNG)	16	55	01/87 – 02/93	3549	
SIERRA Estate (BNG)	16	55	01/87 – 02/93	3570	
SIERRA Estate (BNG)	18	59	10/87 – 05/88	3548	
SIERRA Estate (BNG)	18	59	10/87 – 05/88	3549	
SIERRA Estate (BNG)	18	59	10/87 – 05/88	3570	

MAKE & MODEL		KW	YEAR		
FORD					
SIERRA Estate (BNG)	18	64	05/88 – 02/93	3548	
SIERRA Estate (BNG)	18	64	05/88 – 02/93	3549	
SIERRA Estate (BNG)	18	64	05/88 – 02/93	3570	
SIERRA Estate (BNG)	18	66	01/87 – 05/88	3548	
SIERRA Estate (BNG)	18	66	01/87 – 05/88	3549	
SIERRA Estate (BNG)	18	66	01/87 – 05/88	3570	
SIERRA Estate (BNG)	19	80	10/88 – 09/91	3548	
SIERRA Estate (BNG)	19	80	10/88 – 09/91	3549	
SIERRA Estate (BNG)	19	80	10/88 – 09/91	3570	
SIERRA Estate (BNG)	20	77	01/87 – 02/93	3548	
SIERRA Estate (BNG)	20	77	01/87 – 02/93	3549	
SIERRA Estate (BNG)	20	77	01/87 – 02/93	3570	
SIERRA Estate (BNG)	29	107	08/88 – 02/93	3548	
SIERRA Estate (BNG)	29	107	08/88 – 02/93	3549	
SIERRA Estate (BNG)	1.6 i	59	10/89 – 02/93	3548	
SIERRA Estate (BNG)	1.6 i	59	10/89 – 02/93	3549	
SIERRA Estate (BNG)	1.6 i	59	10/89 – 02/93	3570	
SIERRA Estate (BNG)	1.8 TD	55	08/88 – 02/93	3548	
SIERRA Estate (BNG)	1.8 TD	55	08/88 – 02/93	3549	
SIERRA Estate (BNG)	1.8 TD	55	08/88 – 02/93	3570	
SIERRA Estate (BNG)	2.0 4x4	88	02/90 – 02/93	3548	
SIERRA Estate (BNG)	2.0 4x4	88	02/90 – 02/93	3549	
SIERRA Estate (BNG)	2.0 4x4	88	02/90 – 02/93	3570	
SIERRA Estate (BNG)	2.0 4x4	92	05/89 – 02/93	3548	
SIERRA Estate (BNG)	2.0 4x4	92	05/89 – 02/93	3549	
SIERRA Estate (BNG)	2.0 4x4	92	05/89 – 02/93	3570	
SIERRA Estate (BNG)	2.0 i	74	01/87 – 02/93	3548	
SIERRA Estate (BNG)	2.0 i	74	01/87 – 02/93	3549	
SIERRA Estate (BNG)	2.0 i	74	01/87 – 02/93	3570	
SIERRA Estate (BNG)	2.0 i	85	01/87 – 02/93	3548	
SIERRA Estate (BNG)	2.0 i	85	01/87 – 02/93	3549	
SIERRA Estate (BNG)	2.0 i	85	01/87 – 02/93	3570	
SIERRA Estate (BNG)	2.0 i	88	05/89 – 02/93	3548	
SIERRA Estate (BNG)	2.0 i	88	05/89 – 02/93	3549	
SIERRA Estate (BNG)	2.0 i	88	05/89 – 02/93	3570	
SIERRA Estate (BNG)	2.0 i	92	05/89 – 02/93	3548	
SIERRA Estate (BNG)	2.0 i	92	05/89 – 02/93	3549	
SIERRA Estate (BNG)	2.0 i	92	05/89 – 02/93	3570	
SIERRA Estate (BNG)	2.0 i CAT	74	01/87 – 02/93	3548	
SIERRA Estate (BNG)	2.0 i CAT	74	01/87 – 02/93	3549	
SIERRA Estate (BNG)	2.0 i CAT	74	01/87 – 02/93	3570	
SIERRA Estate (BNG)	2.0 i DOHC	85	12/91 – 02/93	3548	
SIERRA Estate (BNG)	2.0 i DOHC	85	12/91 – 02/93	3549	
SIERRA Estate (BNG)	2.0 i DOHC	85	12/91 – 02/93	3570	
SIERRA Estate (BNG)	2.3 D	49	01/87 – 02/93	3548	
SIERRA Estate (BNG)	2.3 D	49	01/87 – 02/93	3549	
SIERRA Estate (BNG)	2.3 D	49	01/87 – 02/93	3570	
SIERRA Estate (BNG)	2.8 4x4	110	01/87 – 08/88	3548	
SIERRA Estate (BNG)	2.8 4x4	110	01/87 – 08/88	3549	
SIERRA Estate (BNG)	2.8 i	105	01/87 – 02/93	3548	
SIERRA Estate (BNG)	2.8 i	105	01/87 – 02/93	3549	
SIERRA Estate (BNG)	2.8 i	107	01/87 – 02/93	3548	
SIERRA Estate (BNG)	2.8 i	107	01/87 – 02/93	3549	
SIERRA Estate (BNG)	2.8 i 4x4	107	01/87 – 02/93	3548	
SIERRA Estate (BNG)	2.8 i 4x4	107	01/87 – 02/93	3549	
SIERRA Estate (BNG)	2.9 4x4	107	08/88 – 02/93	3548	
SIERRA Estate (BNG)	2.9 4x4	107	08/88 – 02/93	3549	
SIERRA Estate (BNG)	2.9 4x4	110	08/88 – 02/93	3548	
SIERRA Estate (BNG)	2.9 4x4	110	08/88 – 02/93	3549	
SIERRA Estate (BNG)	2.9 i	110	08/88 – 02/93	3548	
SIERRA Estate (BNG)	2.9 i	110	08/88 – 02/93	3549	
SIERRA Hatchback (GBC)	13	44	08/82 – 12/86	3419	
SIERRA Hatchback (GBC)	13	44	08/82 – 12/86	3429	
SIERRA Hatchback (GBC)	13	44	08/82 – 12/86	3548	
SIERRA Hatchback (GBC)	13	44	08/82 – 12/86	3549	
SIERRA Hatchback (GBC)	16	51	10/82 – 02/87	3429	
SIERRA Hatchback (GBC)	16	51	10/82 – 02/87	3548	
SIERRA Hatchback (GBC)	16	51	10/82 – 02/87	3549	
SIERRA Hatchback (GBC)	16	55	08/82 – 12/86	3419	
SIERRA Hatchback (GBC)	16	55	08/82 – 12/86	3429	
SIERRA Hatchback (GBC)	16	55	08/82 – 12/86	3548	

MAKE & MODEL		KW	YEAR		
FORD					
SIERRA Hatchback (GBC)	16	55	08/82 – 12/86	3549	
SIERRA Hatchback (GBC)	16	58	08/84 – 12/86	3417/1	
SIERRA Hatchback (GBC)	16	58	08/84 – 12/86	3548	
SIERRA Hatchback (GBC)	16	58	08/84 – 12/86	3549	
SIERRA Hatchback (GBC)	16	58	08/84 – 12/86	3638	
SIERRA Hatchback (GBC)	18	66	10/84 – 12/86	3417/1	
SIERRA Hatchback (GBC)	18	66	10/84 – 12/86	3548	
SIERRA Hatchback (GBC)	18	66	10/84 – 12/86	3549	
SIERRA Hatchback (GBC)	18	66	10/84 – 12/86	3638	
SIERRA Hatchback (GBC)	20	66	08/82 – 10/84	3417/1	
SIERRA Hatchback (GBC)	20	66	08/82 – 10/84	3548	
SIERRA Hatchback (GBC)	20	66	08/82 – 10/84	3549	
SIERRA Hatchback (GBC)	20	66	08/82 – 10/84	3638	
SIERRA Hatchback (GBC)	20	74	10/85 – 12/86	3417/1	
SIERRA Hatchback (GBC)	20	74	10/85 – 12/86	3548	
SIERRA Hatchback (GBC)	20	74	10/85 – 12/86	3549	
SIERRA Hatchback (GBC)	20	74	10/85 – 12/86	3638	
SIERRA Hatchback (GBC)	20	77	08/82 – 12/86	3417/1	
SIERRA Hatchback (GBC)	20	77	08/82 – 12/86	3548	
SIERRA Hatchback (GBC)	20	77	08/82 – 12/86	3549	
SIERRA Hatchback (GBC)	20	77	08/82 – 12/86	3638	
SIERRA Hatchback (GBC)	23	84	08/82 – 12/86	3417/1	
SIERRA Hatchback (GBC)	23	84	08/82 – 12/86	3548	
SIERRA Hatchback (GBC)	23	84	08/82 – 12/86	3549	
SIERRA Hatchback (GBC)	23	84	08/82 – 12/86	3638	
SIERRA Hatchback (GBC)	2.0 i	85	03/85 – 12/86	3417/1	
SIERRA Hatchback (GBC)	2.0 i	85	03/85 – 12/86	3548	
SIERRA Hatchback (GBC)	2.0 i	85	03/85 – 12/86	3549	
SIERRA Hatchback (GBC)	2.0 i	85	03/85 – 12/86	3638	
SIERRA Hatchback (GBC)	2.3 D	49	08/82 – 12/86	3417/1	
SIERRA Hatchback (GBC)	2.3 D	49	08/82 – 12/86	3548	
SIERRA Hatchback (GBC)	2.3 D	49	08/82 – 12/86	3549	
SIERRA Hatchback (GBC)	2.3 D	49	08/82 – 12/86	3638	
SIERRA Hatchback (GBC)	2.8 i XR 4x4	107	09/83 – 12/86	3548	
SIERRA Hatchback (GBC)	2.8 i XR 4x4	107	09/83 – 12/86	3549	
SIERRA Hatchback (GBC)	2.8 XR 4x4	110	02/85 – 12/86	3548	
SIERRA Hatchback (GBC)	2.8 XR 4x4	110	02/85 – 12/86	3549	
SIERRA Hatchback (GBC)	2.8 XR4i	105	08/82 – 12/86	3548	
SIERRA Hatchback (GBC)	2.8 XR4i	105	08/82 – 12/86	3549	
SIERRA Hatchback (GBC)	2.8 XR4i	107	08/82 – 12/86	3548	
SIERRA Hatchback (GBC)	2.8 XR4i	107	08/82 – 12/86	3549	
SIERRA Hatchback (GBC)	2.8 XR4i	110	08/82 – 12/86	3548	
SIERRA Hatchback (GBC)	2.8 XR4i	110	08/82 – 12/86	3549	
SIERRA Hatchback (GBC, GBG)	16	53	01/88 – 02/93	3548	
SIERRA Hatchback (GBC, GBG)	16	53	01/88 – 02/93	3549	
SIERRA Hatchback (GBC, GBG)	16	53	01/88 – 02/93	3570	
SIERRA Hatchback (GBC, GBG)	16	55	01/87 – 02/93	3548	
SIERRA Hatchback (GBC, GBG)	16	55	01/87 – 02/93	3549	
SIERRA Hatchback (GBC, GBG)	16	55	01/87 – 02/93	3570	
SIERRA Hatchback (GBC, GBG)	18	59	10/87 – 05/88	3548	
SIERRA Hatchback (GBC, GBG)	18	59	10/87 – 05/88	3549	
SIERRA Hatchback (GBC, GBG)	18	59	10/87 – 05/88	3570	
SIERRA Hatchback (GBC, GBG)	18	64	05/88 – 02/93	3548	
SIERRA Hatchback (GBC, GBG)	18	64	05/88 – 02/93	3549	
SIERRA Hatchback (GBC, GBG)	18	64	05/88 – 02/93	3570	
SIERRA Hatchback (GBC, GBG)	18	66	01/87 – 05/88	3548	
SIERRA Hatchback (GBC, GBG)	18	66	01/87 – 05/88	3549	
SIERRA Hatchback (GBC, GBG)	18	66	01/87 – 05/88	3570	
SIERRA Hatchback (GBC, GBG)	20	77	01/87 – 02/93	3548	
SIERRA Hatchback (GBC, GBG)	20	77	01/87 – 02/93	3549	
SIERRA Hatchback (GBC, GBG)	20	77	01/87 – 02/93	3570	
SIERRA Hatchback (GBC, GBG)	28	110	03/87 – 09/89	3548	
SIERRA Hatchback (GBC, GBG)	28	110	03/87 – 09/89	3549	
SIERRA Hatchback (GBC, GBG)	1.6 i	59	10/89 – 02/93	3548	
SIERRA Hatchback (GBC, GBG)	1.6 i	59	10/89 – 02/93	3549	
SIERRA Hatchback (GBC, GBG)	1.6 i	59	10/89 – 02/93	3570	
SIERRA Hatchback (GBC, GBG)	1.8 TD	55	08/88 – 02/93	3548	
SIERRA Hatchback (GBC, GBG)	1.8 TD	55	08/88 – 02/93	3549	
SIERRA Hatchback (GBC, GBG)	1.8 TD	55	08/88 – 02/93	3570	
SIERRA Hatchback (GBC, GBG)	2.0 4x4	88	10/91 – 03/93	3548	
SIERRA Hatchback (GBC, GBG)	2.0 4x4	88	10/91 – 03/93	3549	

MAKE & MODEL		KW	YEAR		
FORD					
SIERRA Hatchback (GBC, GBG)	2.0 4x4	88	10/91 – 03/93	3570	
SIERRA Hatchback (GBC, GBG)	2.0 i	74	01/87 – 02/93	3548	
SIERRA Hatchback (GBC, GBG)	2.0 i	74	01/87 – 02/93	3549	
SIERRA Hatchback (GBC, GBG)	2.0 i	74	01/87 – 02/93	3570	
SIERRA Hatchback (GBC, GBG)	2.0 i	80	06/89 – 02/93	3548	
SIERRA Hatchback (GBC, GBG)	2.0 i	80	06/89 – 02/93	3549	
SIERRA Hatchback (GBC, GBG)	2.0 i	80	06/89 – 02/93	3570	
SIERRA Hatchback (GBC, GBG)	2.0 i	85	01/87 – 02/93	3548	
SIERRA Hatchback (GBC, GBG)	2.0 i	85	01/87 – 02/93	3549	
SIERRA Hatchback (GBC, GBG)	2.0 i	85	01/87 – 02/93	3570	
SIERRA Hatchback (GBC, GBG)	2.0 i	88	06/89 – 02/93	3548	
SIERRA Hatchback (GBC, GBG)	2.0 i	88	06/89 – 02/93	3549	
SIERRA Hatchback (GBC, GBG)	2.0 i	88	06/89 – 02/93	3570	
SIERRA Hatchback (GBC, GBG)	2.0 i	92	06/89 – 02/93	3548	
SIERRA Hatchback (GBC, GBG)	2.0 i	92	06/89 – 02/93	3549	
SIERRA Hatchback (GBC, GBG)	2.0 i	92	06/89 – 02/93	3570	
SIERRA Hatchback (GBC, GBG)	2.0 i CAT	74	01/87 – 02/93	3548	
SIERRA Hatchback (GBC, GBG)	2.0 i CAT	74	01/87 – 02/93	3549	
SIERRA Hatchback (GBC, GBG)	2.0 i CAT	74	01/87 – 02/93	3570	
SIERRA Hatchback (GBC, GBG)	2.0 i DOHC	85	12/91 – 02/93	3548	
SIERRA Hatchback (GBC, GBG)	2.0 i DOHC	85	12/91 – 02/93	3549	
SIERRA Hatchback (GBC, GBG)	2.0 i DOHC	85	12/91 – 02/93	3570	
SIERRA Hatchback (GBC, GBG)	2.3 D	49	01/87 – 09/89	3548	
SIERRA Hatchback (GBC, GBG)	2.3 D	49	01/87 – 09/89	3549	
SIERRA Hatchback (GBC, GBG)	2.3 D	49	01/87 – 09/89	3570	
SIERRA Hatchback (GBC, GBG)	2.8 i	105	01/87 – 02/93	3548	
SIERRA Hatchback (GBC, GBG)	2.8 i	105	01/87 – 02/93	3549	
SIERRA Hatchback (GBC, GBG)	2.8 i XR 4x4	107	01/87 – 02/93	3548	
SIERRA Hatchback (GBC, GBG)	2.8 i XR 4x4	107	01/87 – 02/93	3549	
SIERRA Hatchback (GBC, GBG)	2.8 i XR 4x4	110	01/87 – 08/88	3548	
SIERRA Hatchback (GBC, GBG)	2.8 i XR 4x4	110	01/87 – 08/88	3549	
SIERRA Hatchback (GBC, GBG)	2.9 i	107	08/88 – 02/93	3548	
SIERRA Hatchback (GBC, GBG)	2.9 i	107	08/88 – 02/93	3549	
SIERRA Hatchback (GBC, GBG)	2.9 i XR 4x4	107	08/88 – 02/93	3548	
SIERRA Hatchback (GBC, GBG)	2.9 i XR 4x4	107	08/88 – 02/93	3549	
SIERRA Hatchback (GBC, GBG)	2.9 i XR 4x4	110	08/88 – 02/93	3548	
SIERRA Hatchback (GBC, GBG)	2.9 i XR 4x4	110	08/88 – 02/93	3549	
S-MAX (WA6)	20	107	05/06 – 12/14		4157
S-MAX (WA6)	20	107	05/06 – 12/14	4161	
S-MAX (WA6)	23	118	07/07 – 12/14		4157
S-MAX (WA6)	23	118	07/07 – 12/14	4161	
S-MAX (WA6)	1.6 EcoBoost	118	02/11 – 12/14		4157
S-MAX (WA6)	1.6 EcoBoost	118	02/11 – 12/14	4161	
S-MAX (WA6)	1.6 TDCi	85	02/11 – 12/14		4157
S-MAX (WA6)	1.6 TDCi	85	02/11 – 12/14	4161	
S-MAX (WA6)	1.8 TDCi	74	01/07 – 12/10		4157
S-MAX (WA6)	1.8 TDCi	74	01/07 – 12/10	4161	
S-MAX (WA6)	1.8 TDCi	92	05/06 – 12/14		4157
S-MAX (WA6)	1.8 TDCi	92	05/06 – 12/14	4161	
S-MAX (WA6)	2.0 EcoBoost	146	07/10 – 12/14		4157
S-MAX (WA6)	2.0 EcoBoost	146	07/10 – 12/14	4161	
S-MAX (WA6)	2.0 EcoBoost	149	03/10 – 12/14		4157
S-MAX (WA6)	2.0 EcoBoost	149	03/10 – 12/14	4161	
S-MAX (WA6)	2.0 EcoBoost	176	07/10 – 12/14		4157
S-MAX (WA6)	2.0 EcoBoost	176	07/10 – 12/14	4161	
S-MAX (WA6)	2.0 Flexifuel	107	05/06 – 12/14		4157
S-MAX (WA6)	2.0 Flexifuel	107	05/06 – 12/14	4161	
S-MAX (WA6)	2.0 TDCi	85	11/07 – 12/14		4157
S-MAX (WA6)	2.0 TDCi	85	11/07 – 12/14	4161	
S-MAX (WA6)	2.0 TDCi	96	05/06 – 12/14		4157
S-MAX (WA6)	2.0 TDCi	96	05/06 – 12/14	4161	
S-MAX (WA6)	2.0 TDCi	100	05/06 – 12/14		4157
S-MAX (WA6)	2.0 TDCi	100	05/06 – 12/14	4161	
S-MAX (WA6)	2.0 TDCi	103	05/06 – 12/14		4157
S-MAX (WA6)	2.0 TDCi	103	05/06 – 12/14	4161	
S-MAX (WA6)	2.0 TDCi	120	03/10 – 12/14		4157
S-MAX (WA6)	2.0 TDCi	120	03/10 – 12/14	4161	
S-MAX (WA6)	2.2 TDCi	129	03/08 – 12/12		4157
S-MAX (WA6)	2.2 TDCi	129	03/08 – 12/12	4161	
S-MAX (WA6)	2.2 TDCi	147	07/10 – 12/14		4157
S-MAX (WA6)	2.2 TDCi	147	07/10 – 12/14	4161	

MAKE & MODEL   		KW	YEAR		
FORD					
S-MAX (WA6)	2.5 ST	162	05/06 – 12/14		4157
S-MAX II (CDR)	1.5 EcoBoost (UNCI)	118	01/15 -		4270
S-MAX II (CDR)	1.5 EcoBoost (UNCJ)	118	01/15 -		4270
S-MAX II (CDR)	1.5 EcoBoost (UNCK)	118	01/15 -		4270
S-MAX II (CDR)	2.0 EcoBoost (R9CI)	176	01/15 -		4270
S-MAX II (CDR)	2.0 EcoBoost (R9CD)	176	01/15 -		4270
S-MAX II (CDR)	2.0 TDCi (T7CI)	110	01/15 -		4270
S-MAX II (CDR)	2.0 TDCi (T7CI)	110	01/15 -		4270
S-MAX II (CDR)	2.0 TDCi (T7CJ)	110	01/15 -		4270
S-MAX II (CDR)	2.0 TDCi (T7CJ)	110	01/15 -		4270
S-MAX II (CDR)	2.0 TDCi (T7CK)	110	01/15 -		4270
S-MAX II (CDR)	2.0 TDCi (T7CK)	110	01/15 -		4270
S-MAX II (CDR)	2.0 TDCi (T7CL)	110	01/15 -		4270
S-MAX II (CDR)	2.0 TDCi (T7CL)	110	01/15 -		4270
S-MAX II (CDR)	2.0 TDCi (T8CG)	132	01/15 -		4270
S-MAX II (CDR)	2.0 TDCi (T8CG)	132	01/15 -		4270
S-MAX II (CDR)	2.0 TDCi (T8CH)	132	01/15 -		4270
S-MAX II (CDR)	2.0 TDCi (T8CH)	132	01/15 -		4270
S-MAX II (CDR)	2.0 TDCi (T8CI)	132	01/15 -		4270
S-MAX II (CDR)	2.0 TDCi (T8CI)	132	01/15 -		4270
S-MAX II (CDR)	2.0 TDCi (T8CJ)	132	01/15 -		4270
S-MAX II (CDR)	2.0 TDCi (T8CJ)	132	01/15 -		4270
S-MAX II (CDR)	2.0 TDCi (UFCA)	88	01/15 -		4270
S-MAX II (CDR)	2.0 TDCi (UFCB)	88	01/15 -		4270
S-MAX II (CDR)	2.0 TDCi Bi-Turbo (T9CB)	154	01/15 -		4270
S-MAX II (CDR)	2.0 TDCi Bi-Turbo (T9CC)	154	01/15 -		4270
S-MAX MPV (BWS)	23	118	01/07 – 12/14		4157
S-MAX MPV (BWS)	23	118	01/07 – 12/14	4161	
S-MAX MPV (BWS)	23	119	01/07 -		4157
S-MAX MPV (BWS)	23	119	01/07 -	4161	
SPECTRON Box	16	52	01/83 – 05/84	3574	
SPECTRON Box	18	59	05/84 – 12/89	3574	
SPECTRON Box	20	63	03/86 – 04/90	3574	
SPECTRON Box	2.0 4x4	63	03/86 – 04/90	3574	
STREET KA (RL2)	16	70	05/03 – 07/05	3877	
TAUNUS (GBFK)	1600	53	08/70 – 02/76	3484	
TAUNUS (GBFK)	1600	53	08/70 – 02/76	3312	
TAUNUS (GBFK)	2000 V6	66	08/70 – 02/76	3484	
TAUNUS (GBFK)	2000 V6	66	08/70 – 02/76	3312	
TAUNUS (GBTK)	1600	53	01/70 – 05/75	3484	
TAUNUS (GBTK)	1600	53	01/70 – 05/75	3312	
TAUNUS (GBTK)	2000 V6	66	08/70 – 02/76	3484	
TAUNUS (GBTK)	2000 V6	66	08/70 – 02/76	3312	
TAUNUS (GBTS, GBFS, CBTS)	16	53	05/75 – 07/79	3484	
TAUNUS (GBTS, GBFS, CBTS)	16	53	05/75 – 07/79	3312	
TAUNUS (GBTS, GBFS, CBTS)	20	66	05/75 – 07/79	3484	
TAUNUS (GBTS, GBFS, CBTS)	20	66	05/75 – 07/79	3312	
TAUNUS ´80 Turnier (GBNS)	13	46	07/79 – 07/82	3484	
TAUNUS ´80 Turnier (GBNS)	13	46	07/79 – 07/82	3312	
TAUNUS ´80 Turnier (GBNS)	16	51	07/79 – 07/82	3484	
TAUNUS ´80 Turnier (GBNS)	16	51	07/79 – 07/82	3312	
TAUNUS ´80 Turnier (GBNS)	16	54	07/79 – 07/82	3484	
TAUNUS ´80 Turnier (GBNS)	16	54	07/79 – 07/82	3312	
TAUNUS ´80 Turnier (GBNS)	20	66	07/79 – 07/82	3484	
TAUNUS ´80 Turnier (GBNS)	20	66	07/79 – 07/82	3312	
TAUNUS ´80 Turnier (GBNS)	20	74	07/79 – 07/82	3484	
TAUNUS ´80 Turnier (GBNS)	20	74	07/79 – 07/82	3312	
TAUNUS ´80 Turnier (GBNS)	23	84	07/79 – 07/82	3484	
TAUNUS ´80 Turnier (GBNS)	23	84	07/79 – 07/82	3312	
TAUNUS '80 (GBS, GBNS)	13	43	07/79 – 07/82	3484	
TAUNUS '80 (GBS, GBNS)	13	43	07/79 – 07/82	3312	
TAUNUS '80 (GBS, GBNS)	16	51	07/79 – 07/82	3484	
TAUNUS '80 (GBS, GBNS)	16	51	07/79 – 07/82	3312	
TAUNUS '80 (GBS, GBNS)	16	54	07/79 – 07/82	3484	
TAUNUS '80 (GBS, GBNS)	16	54	07/79 – 07/82	3312	
TAUNUS '80 (GBS, GBNS)	16	65	07/79 – 07/82	3484	
TAUNUS '80 (GBS, GBNS)	16	65	07/79 – 07/82	3312	
TAUNUS '80 (GBS, GBNS)	20	66	07/79 – 07/82	3484	
TAUNUS '80 (GBS, GBNS)	20	66	07/79 – 07/82	3312	
TAUNUS '80 (GBS, GBNS)	20	74	07/79 – 07/82	3484	
TAUNUS '80 (GBS, GBNS)	20	74	07/79 – 07/82	3312	

MAKE & MODEL		KW	YEAR		
FORD					
TAUNUS '80 (GBS, GBNS)	23	84	07/79 – 07/82	3484	
TAUNUS '80 (GBS, GBNS)	23	84	07/79 – 07/82	3312	
TELSTAR Hatchback (AT)	2.0 TX5	70	11/87 – 09/89	3437	
TELSTAR Hatchback (AT)	2.2	85	11/87 – 09/89	3437	
TELSTAR Hatchback (AT)	2.2 TX5 EFi Turbo	100	11/87 – 09/89	3437	
TELSTAR Hatchback (AV)	2.2 TX5 EFi	86	01/90 – 01/92	3437	
TELSTAR Hatchback (AV)	2.2 TX5 EFi Turbo	100	01/90 – 01/92	3437	
TELSTAR Hatchback (AX)	25	120	01/92 – 08/94	3832	
TELSTAR Hatchback (AX)	25	123	01/92 – 08/94	3832	
TELSTAR Hatchback (AX)	2.0 TX5 EFi	85	01/92 – 08/94	3832	
TELSTAR Hatchback (AY)	2.0 EFi	85	10/94 – 11/96	3832	
TELSTAR Hatchback (AY)	2.5 TX5 EFi	120	10/94 – 11/96	3832	
TELSTAR Saloon (AT)	2.0	70	11/87 – 09/89	3437	
TELSTAR Saloon (AT)	2.2	85	11/87 – 09/89	3437	
TELSTAR Saloon (AX)	20	85	01/92 – 08/94	3832	
TELSTAR Saloon (AX)	25	120	01/92 – 08/94	3832	
TELSTAR Saloon (AX)	25	123	08/94 – 10/95	3832	
TELSTAR Saloon (AY)	2.0 EFi	85	10/94 – 11/96	3832	
TORANA Saloon (LJ)	12	51	02/72 – 03/74	3311	
TOURNEO CONNECT	1.8 16V	85	06/02 – 12/13	3801	
TOURNEO CONNECT	1.8 16V	85	06/02 – 12/13		3853/1
TOURNEO CONNECT	1.8 TDCi	66	06/02 – 12/13	3801	
TOURNEO CONNECT	1.8 TDCi	66	06/02 – 12/13		3853/1
TOURNEO CONNECT	1.8 TDCi	81	08/06 – 12/13	3801	
TOURNEO CONNECT	1.8 TDCi	81	08/06 – 12/13		3853/1
TOURNEO CONNECT	1.8 TDCi /TDDi /DI	55	06/02 – 12/13	3801	
TOURNEO CONNECT	1.8 TDCi /TDDi /DI	55	06/02 – 12/13		3853/1
TOURNEO CONNECT / GRAND TOURNEO CONNECT Kombi	1.0 EcoBoost	74	11/13 -	4226	
TOURNEO CONNECT / GRAND TOURNEO CONNECT Kombi	1.5 TDCi	55	05/15 -	4226	
TOURNEO CONNECT / GRAND TOURNEO CONNECT Kombi	1.5 TDCi	74	05/15 -	4226	
TOURNEO CONNECT / GRAND TOURNEO CONNECT Kombi	1.5 TDCi	88	05/15 -	4226	
TOURNEO CONNECT / GRAND TOURNEO CONNECT Kombi	1.6 EcoBoost	110	11/13 -	4226	
TOURNEO CONNECT / GRAND TOURNEO CONNECT Kombi	1.6 TDCi	55	09/13 -	4226	
TOURNEO CONNECT / GRAND TOURNEO CONNECT Kombi	1.6 TDCi	70	09/13 -	4226	
TOURNEO CONNECT / GRAND TOURNEO CONNECT Kombi	1.6 TDCi	85	09/13 -	4226	
TOURNEO COURIER Kombi	1.0 EcoBoost	74	02/14 -	4204	
TOURNEO COURIER Kombi	1.5 TDCi	55	02/14 -	4204	
TOURNEO COURIER Kombi	1.5 TDCi	70	05/15 -	4204	
TOURNEO COURIER Kombi	1.6 TDCi	70	02/14 -	4204	
TOURNEO CUSTOM Bus	2.2 TDCi	74	04/12 -	4174	
TOURNEO CUSTOM Bus	2.2 TDCi	74	04/12 -		4175
TOURNEO CUSTOM Bus	2.2 TDCi	92	04/12 -	4174	
TOURNEO CUSTOM Bus	2.2 TDCi	92	04/12 -		4175
TOURNEO CUSTOM Bus	2.2 TDCi	114	04/12 -	4174	
TOURNEO CUSTOM Bus	2.2 TDCi	114	04/12 -		4175
TOURNEO CUSTOM Bus	2.2 TDCi	114	05/14 -	4174	
TOURNEO CUSTOM Bus	2.2 TDCi	114	05/14 -		4175
TRANSIT Box	2.0 TDCi	77	03/16 -	4174	
TRANSIT Box	2.0 TDCi	77	03/16 -		4175
TRANSIT Box	2.0 TDCi	96	03/16 -	4174	
TRANSIT Box	2.0 TDCi	96	03/16 -		4175
TRANSIT Box	2.0 TDCi	125	03/16 -	4174	
TRANSIT Box	2.0 TDCi	125	03/16 -		4175
TRANSIT Box	2.0 TDCi [RWD]	77	03/16 -	4174	
TRANSIT Box	2.0 TDCi [RWD]	77	03/16 -		4175
TRANSIT Box	2.0 TDCi [RWD]	96	03/16 -	4174	
TRANSIT Box	2.0 TDCi [RWD]	96	03/16 -		4175
TRANSIT Box	2.0 TDCi [RWD]	125	03/16 -	4174	
TRANSIT Box	2.0 TDCi [RWD]	125	03/16 -		4175
TRANSIT Box	2.2 TDCi	63	04/06 – 08/14	3906	
TRANSIT Box	2.2 TDCi	63	04/06 – 08/14		3907
TRANSIT Box	2.2 TDCi	63	04/06 – 08/14	3920	
TRANSIT Box	2.2 TDCi	74	10/11 – 08/14	3906	
TRANSIT Box	2.2 TDCi	74	10/11 – 08/14		3907
TRANSIT Box	2.2 TDCi	74	10/11 – 08/14	3920	
TRANSIT Box	2.2 TDCi	74	08/13 -	4174	
TRANSIT Box	2.2 TDCi	74	08/13 -		4175
TRANSIT Box	2.2 TDCi	81	04/06 – 08/14	3906	
TRANSIT Box	2.2 TDCi	81	04/06 – 08/14		3907
TRANSIT Box	2.2 TDCi	81	04/06 – 08/14	3920	
TRANSIT Box	2.2 TDCi	85	10/08 – 08/14	3906	

MAKE & MODEL		KW	YEAR		
FORD					
TRANSIT Box	2.2 TDCi	85	10/08 – 08/14		3907
TRANSIT Box	2.2 TDCi	85	10/08 – 08/14	3920	
TRANSIT Box	2.2 TDCi	92	10/11 – 08/14	3906	
TRANSIT Box	2.2 TDCi	92	10/11 – 08/14		3907
TRANSIT Box	2.2 TDCi	92	10/11 – 08/14	3920	
TRANSIT Box	2.2 TDCi	92	08/13 -	4174	
TRANSIT Box	2.2 TDCi	92	08/13 -		4175
TRANSIT Box	2.2 TDCi	96	04/06 – 08/14	3906	
TRANSIT Box	2.2 TDCi	96	04/06 – 08/14		3907
TRANSIT Box	2.2 TDCi	96	04/06 – 08/14	3920	
TRANSIT Box	2.2 TDCi	103	10/07 – 08/14	3906	
TRANSIT Box	2.2 TDCi	103	10/07 – 08/14		3907
TRANSIT Box	2.2 TDCi	103	10/07 – 08/14	3920	
TRANSIT Box	2.2 TDCi	114	08/13 -	4174	
TRANSIT Box	2.2 TDCi	114	08/13 -		4175
TRANSIT Box	2.2 TDCi [RWD]	74	10/11 – 08/14	3906	
TRANSIT Box	2.2 TDCi [RWD]	74	10/11 – 08/14		3907
TRANSIT Box	2.2 TDCi [RWD]	74	08/13 -	4174	
TRANSIT Box	2.2 TDCi [RWD]	74	08/13 -		4175
TRANSIT Box	2.2 TDCi [RWD]	92	10/11 – 08/14	3906	
TRANSIT Box	2.2 TDCi [RWD]	92	10/11 – 08/14		3907
TRANSIT Box	2.2 TDCi [RWD]	92	08/13 -	4174	
TRANSIT Box	2.2 TDCi [RWD]	92	08/13 -		4175
TRANSIT Box	2.2 TDCi [RWD]	100	10/11 – 08/14	3906	
TRANSIT Box	2.2 TDCi [RWD]	100	10/11 – 08/14		3907
TRANSIT Box	2.2 TDCi [RWD]	114	10/11 – 08/14	3906	
TRANSIT Box	2.2 TDCi [RWD]	114	10/11 – 08/14		3907
TRANSIT Box	2.2 TDCi [RWD]	114	08/13 -	4174	
TRANSIT Box	2.2 TDCi [RWD]	114	08/13 -		4175
TRANSIT Box	2.2 TDCi 4x4	92	10/11 – 08/14	3906	
TRANSIT Box	2.2 TDCi 4x4	92	10/11 – 08/14		3907
TRANSIT Box	2.2 TDCi 4x4	92	08/13 -	4174	
TRANSIT Box	2.2 TDCi 4x4	92	08/13 -		4175
TRANSIT Box	2.2 TDCi 4x4	114	08/13 -	4174	
TRANSIT Box	2.2 TDCi 4x4	114	08/13 -		4175
TRANSIT Box	2.3 16V [RWD]	107	04/06 – 08/14	3906	
TRANSIT Box	2.3 16V [RWD]	107	04/06 – 08/14		3907
TRANSIT Box	2.3 16V CNG [RWD]	100	04/06 – 08/14	3906	
TRANSIT Box	2.3 16V CNG [RWD]	100	04/06 – 08/14		3907
TRANSIT Box	2.3 16V LPG [RWD]	107	04/06 – 08/14	3906	
TRANSIT Box	2.3 16V LPG [RWD]	107	04/06 – 08/14		3907
TRANSIT Box	2.4 TDCi [RWD]	74	04/06 – 08/14	3906	
TRANSIT Box	2.4 TDCi [RWD]	74	04/06 – 08/14		3907
TRANSIT Box	2.4 TDCi [RWD]	85	04/06 – 08/14	3906	
TRANSIT Box	2.4 TDCi [RWD]	85	04/06 – 08/14		3907
TRANSIT Box	2.4 TDCi [RWD]	103	04/06 – 08/14	3906	
TRANSIT Box	2.4 TDCi [RWD]	103	04/06 – 08/14		3907
TRANSIT Box	2.4 TDCi 4x4	103	11/06 – 08/14	3906	
TRANSIT Box	2.4 TDCi 4x4	103	11/06 – 08/14		3907
TRANSIT Box	3.2 TDCi [RWD]	147	09/07 – 08/14	3906	
TRANSIT Box	3.2 TDCi [RWD]	147	09/07 – 08/14		3907
TRANSIT Box (125, 175)	41	94	01/77 – 12/83	3416	
TRANSIT Box (E_ _)	2.0 (EAL, EAS)	84	06/94 – 03/00	3445	
TRANSIT Box (E_ _)	2.0 (EAL, EAS)	84	06/94 03/00	3473	
TRANSIT Box (E_ _)	2.5 DI (EAL, EAS)	51	06/94 – 03/00	3445	
TRANSIT Box (E_ _)	2.5 DI (EAL, EAS)	51	06/94 03/00	3473	
TRANSIT Box (E_ _)	2.5 DI (EAL, EAS)	56	06/94 – 03/00	3445	
TRANSIT Box (E_ _)	2.5 DI (EAL, EAS)	56	06/94 03/00	3473	
TRANSIT Box (E_ _)	2.5 DI (EAL, EAS)	85	05/99 – 03/00	3445	
TRANSIT Box (E_ _)	2.5 DI (EAL, EAS)	85	05/99 03/00	3473	
TRANSIT Box (E_ _)	2.5 TD (EAL, EAS)	63	06/94 – 03/00	3445	
TRANSIT Box (E_ _)	2.5 TD (EAL, EAS)	63	06/94 03/00	3473	
TRANSIT Box (E_ _)	2.5 TD (EAS)	55	10/98 – 03/00	3445	
TRANSIT Box (E_ _)	2.5 TD (EAS)	55	10/98 03/00	3473	
TRANSIT Box (E_ _)	2.5 TDI (EAL, EAS)	74	06/94 – 03/00	3445	
TRANSIT Box (E_ _)	2.5 TDI (EAL, EAS)	74	06/94 03/00	3473	
TRANSIT Box (FA_ _)	23	105	03/01 – 03/06	3921	
TRANSIT Box (FA_ _)	23	107	03/01 – 03/06	3921	
TRANSIT Box (FA_ _)	2.4 DI [RWD] (FAA_, FAB_, FAC_, FAD_)	55	01/00 – 05/06	3784	
TRANSIT Box (FA_ _)	2.4 DI [RWD] (FAA_, FAB_, FAC_, FAD_)	88	01/00 – 05/06	3784	
TRANSIT Box (FA_ _)	2.0 DI (FAE_, FAF_, FAG_)	55	08/00 – 05/06	3784	

BEŞER

MAKE & MODEL		KW	YEAR		
FORD					
TRANSIT Box (FA_ _)	2.0 DI (FAE_, FAF_, FAG_)	55	08/00 – 05/06	3921	
TRANSIT Box (FA_ _)	2.0 DI (FAE_, FAF_, FAG_)	63	08/00 – 05/06	3784	
TRANSIT Box (FA_ _)	2.0 DI (FAE_, FAF_, FAG_)	63	08/00 – 05/06	3921	
TRANSIT Box (FA_ _)	2.0 DI (FAE_, FAF_, FAG_)	74	08/00 – 05/06	3784	
TRANSIT Box (FA_ _)	2.0 DI (FAE_, FAF_, FAG_)	74	08/00 – 05/06	3921	
TRANSIT Box (FA_ _)	2.0 TDCi	92	08/02 – 05/06	3784	
TRANSIT Box (FA_ _)	2.0 TDCi	92	08/02 – 05/06	3921	
TRANSIT Box (FA_ _)	2.3	105	03/01 – 03/06	3784	
TRANSIT Box (FA_ _)	2.3	107	03/01 – 03/06	3784	
TRANSIT Box (FA_ _)	2.3 16V [RWD] (FAA_, FAB_, FAC_)	107	04/01 – 05/06	3784	
TRANSIT Box (FA_ _)	2.4 DI (FAA_, FAB_, FAC_, FAD_)	66	01/00 – 05/06	3784	
TRANSIT Box (FA_ _)	2.4 TD	55	08/00 – 08/03	3784	
TRANSIT Box (FA_ _)	2.4 TD	55	08/00 – 08/03	3921	
TRANSIT Box (FA_ _)	2.4 TDCi	101	03/04 – 05/06	3784	
TRANSIT Box (FA_ _)	2.4 TDdi	88	08/00 – 08/03	3784	
TRANSIT Box (FA_ _)	2.4 TDdi	88	08/00 – 08/03	3921	
TRANSIT Box (FA_ _)	2.4 TDE	85	03/04 – 05/06	3784	
TRANSIT Box (FA_ _)	2.4 TDE	95	07/01 – 05/06	3784	
TRANSIT Box (T_ _)	1.6 (TAS)	46	09/85 – 09/92	3416	
TRANSIT Box (T_ _)	1.6 (TAS)	46	09/85 – 09/92	3603	
TRANSIT Box (T_ _)	2.0 (TAL, TAS, TGL, TWS)	57	09/85 – 09/92	3416	
TRANSIT Box (T_ _)	2.0 (TAL, TAS, TGL, TWS)	57	09/85 – 09/92	3603	
TRANSIT Box (T_ _)	2.5 D (TAL, TAS, TGL, TWS)	50	01/86 – 09/91	3416	
TRANSIT Box (T_ _)	2.5 D (TAL, TAS, TGL, TWS)	50	01/86 – 09/91	3603	
TRANSIT Box (T_ _)	2.5 D (TAL, TAS, TGL, TWS)	52	10/88 – 09/91	3416	
TRANSIT Box (T_ _)	2.5 D (TAL, TAS, TGL, TWS)	52	10/88 – 09/91	3603	
TRANSIT Box (V_ _)	1.6 (WS)	48	11/77 – 10/86	3416	
TRANSIT Box (V_ _)	2.0 (VHL, VVS)	57	11/77 – 10/86	3416	
TRANSIT Box (V_ _)	2.0 (VVL)	55	11/77 – 10/86	3416	
TRANSIT Box (V_ _)	2.0 (VVS)	43	11/77 – 07/82	3416	
TRANSIT Box (V_ _)	2.4 D (VVS)	46	11/77 – 10/86	3416	
TRANSIT Box (V_ _)	2.5 D (VVL)	50	10/83 – 10/86	3416	
TRANSIT Box (VM)	2.2 TD	81	09/06 – 12/14	3906	
TRANSIT Box (VM)	2.2 TD	81	09/06 – 12/14		3907
TRANSIT Box (VM)	2.2 TD	81	09/06 – 12/14	3920	
TRANSIT Box (VM)	2.2 TDCi [RWD]	114	10/11 – 12/14	3906	
TRANSIT Box (VM)	2.2 TDCi [RWD]	114	10/11 – 12/14		3907
TRANSIT Box (VM)	2.3 i	104	09/06 – 03/08	3906	
TRANSIT Box (VM)	2.3 i	104	09/06 – 03/08		3907
TRANSIT Box (VM)	2.4 D	74	07/06 – 12/14	3906	
TRANSIT Box (VM)	2.4 D	74	07/06 – 12/14		3907
TRANSIT Box (VM)	2.4 D	85	07/06 – 12/14	3906	
TRANSIT Box (VM)	2.4 D	85	07/06 – 12/14		3907
TRANSIT Box (VM)	2.4 TD	103	07/06 – 09/06	3906	
TRANSIT Box (VM)	2.4 TD	103	07/06 – 09/06		3907
TRANSIT Box (VM)	2.4 TD All-wheel Drive	103	11/06 – 12/14	3906	
TRANSIT Box (VM)	2.4 TD All-wheel Drive	103	11/06 – 12/14		3907
TRANSIT Box (VO)	2.2 TDCi [RWD]	114	09/14 -	4174	
TRANSIT Box (VO)	2.2 TDCi [RWD]	114	09/14 -		4175
TRANSIT Bus	2.0 TDCi	77	03/16 -	4174	
TRANSIT Bus	2.0 TDCi	77	03/16 -		4175
TRANSIT Bus	2.0 TDCi	96	03/16 -	4174	
TRANSIT Bus	2.0 TDCi	96	03/16 -		4175
TRANSIT Bus	2.0 TDCi	125	03/16 -	4174	
TRANSIT Bus	2.0 TDCi	125	03/16 -		4175
TRANSIT Bus	2.2 TDCi	63	04/06 – 08/14	3906	
TRANSIT Bus	2.2 TDCi	63	04/06 – 08/14		3907
TRANSIT Bus	2.2 TDCi	63	04/06 – 08/14	3920	
TRANSIT Bus	2.2 TDCi	74	10/11 – 08/14	3906	
TRANSIT Bus	2.2 TDCi	74	10/11 – 08/14		3907
TRANSIT Bus	2.2 TDCi	74	10/11 – 08/14	3920	
TRANSIT Bus	2.2 TDCi	74	08/13 -	4174	
TRANSIT Bus	2.2 TDCi	74	08/13 -		4175
TRANSIT Bus	2.2 TDCi	81	04/06 – 08/14	3906	
TRANSIT Bus	2.2 TDCi	81	04/06 – 08/14		3907
TRANSIT Bus	2.2 TDCi	81	04/06 – 08/14	3920	
TRANSIT Bus	2.2 TDCi	85	10/08 – 08/14	3906	
TRANSIT Bus	2.2 TDCi	85	10/08 – 08/14		3907
TRANSIT Bus	2.2 TDCi	85	10/08 – 08/14	3920	
TRANSIT Bus	2.2 TDCi	92	10/11 – 08/14	3906	
TRANSIT Bus	2.2 TDCi	92	10/11 – 08/14		3907

MAKE & MODEL		KW	YEAR		
FORD					
TRANSIT Bus	2.2 TDCi	92	10/11 – 08/14	3920	
TRANSIT Bus	2.2 TDCi	92	08/13 -	4174	
TRANSIT Bus	2.2 TDCi	92	08/13 -		4175
TRANSIT Bus	2.2 TDCi	96	04/06 – 08/14	3906	
TRANSIT Bus	2.2 TDCi	96	04/06 – 08/14		3907
TRANSIT Bus	2.2 TDCi	96	04/06 – 08/14	3920	
TRANSIT Bus	2.2 TDCi	103	10/07 – 08/14	3906	
TRANSIT Bus	2.2 TDCi	103	10/07 – 08/14		3907
TRANSIT Bus	2.2 TDCi	103	10/07 – 08/14	3920	
TRANSIT Bus	2.2 TDCi	114	12/14 -	4174	
TRANSIT Bus	2.2 TDCi	114	12/14 -		4175
TRANSIT Bus	2.2 TDCi [RWD]	74	10/11 – 08/14	3906	
TRANSIT Bus	2.2 TDCi [RWD]	74	10/11 – 08/14		3907
TRANSIT Bus	2.2 TDCi [RWD]	74	08/13 -	4174	
TRANSIT Bus	2.2 TDCi [RWD]	74	08/13 -		4175
TRANSIT Bus	2.2 TDCi [RWD]	92	10/11 – 08/14	3906	
TRANSIT Bus	2.2 TDCi [RWD]	92	10/11 – 08/14		3907
TRANSIT Bus	2.2 TDCi [RWD]	92	08/13 -	4174	
TRANSIT Bus	2.2 TDCi [RWD]	92	08/13 -		4175
TRANSIT Bus	2.2 TDCi [RWD]	100	09/11 – 08/14	3906	
TRANSIT Bus	2.2 TDCi [RWD]	100	09/11 – 08/14		3907
TRANSIT Bus	2.2 TDCi [RWD]	114	08/13 -	4174	
TRANSIT Bus	2.2 TDCi [RWD]	114	08/13 -		4175
TRANSIT Bus	2.2 TDCi 4x4	92	08/13 -	4174	
TRANSIT Bus	2.2 TDCi 4x4	92	08/13 -		4175
TRANSIT Bus	2.4 TDCi	74	04/06 – 08/14	3906	
TRANSIT Bus	2.4 TDCi	74	04/06 – 08/14		3907
TRANSIT Bus	2.4 TDCi	85	04/06 – 08/14	3906	
TRANSIT Bus	2.4 TDCi	85	04/06 – 08/14		3907
TRANSIT Bus	2.4 TDCi	103	04/06 – 08/14	3906	
TRANSIT Bus	2.4 TDCi	103	04/06 – 08/14		3907
TRANSIT Bus	2.4 TDCi 4x4	103	11/06 – 08/14	3906	
TRANSIT Bus	2.4 TDCi 4x4	103	11/06 – 08/14		3907
TRANSIT Bus	3.2 TDCi	147	02/08 – 08/14	3906	
TRANSIT Bus	3.2 TDCi	147	02/08 – 08/14		3907
TRANSIT Bus (115)	41	94	05/73 – 09/78	3416	
TRANSIT Bus (125)	41	94	01/77 – 12/83	3416	
TRANSIT Bus (E_ _)	2.5 TD (EB_, ED_, ES_)	55	08/91 – 06/00	3473	
TRANSIT Bus (E_ _)	2.5 TD (ECL, EDL, EDS, ESL, ESS, EUS)	74	07/94 – 03/00	3473	
TRANSIT Bus (E_ _)	2.0 (EBL, EBS, ECL, EDS, EDL, EGL, ESS, ESL,)	84	09/95 – 03/00	3445	
TRANSIT Bus (E_ _)	2.0 (EBL, EBS, ECL, EDS, EDL, EGL, ESS, ESL,)	84	09/95 03/00	3473	
TRANSIT Bus (E_ _)	2.0 CNG	84	06/94 – 03/00	3445	
TRANSIT Bus (E_ _)	2.0 CNG	84	06/94 03/00	3473	
TRANSIT Bus (E_ _)	2.5 DI (EBL, ECL, EDS, EDL)	56	07/94 – 03/00	3445	
TRANSIT Bus (E_ _)	2.5 DI (EBL, ECL, EDS, EDL)	56	07/94 03/00	3473	
TRANSIT Bus (E_ _)	2.5 DI (EBL, EDL, EDS, ESL, ESS)	85	08/97 – 03/00	3445	
TRANSIT Bus (E_ _)	2.5 DI (EBL, EDL, EDS, ESL, ESS)	85	08/97 03/00	3473	
TRANSIT Bus (E_ _)	2.5 DI (EBL, EDS, ESL, ESS, EUS)	51	08/94 – 03/00	3473	
TRANSIT Bus (E_ _)	2.5 DI (EBL, EDS, ESL, ESS, EUS)	51	08/09 – 03/00	3445	
TRANSIT Bus (E_ _)	2.5 TD (EB_, ED_, ES_)	55	08/09 – 06/00	3445	
TRANSIT Bus (E_ _)	2.5 TD (EBL, EDL, EDS, EGL, ESL, ESS, EUS)	63	01/95 – 02/00	3473	
TRANSIT Bus (E_ _)	2.5 TD (EBL, EDL, EDS, EGL, ESL, ESS, EUS)	63	01/95 – 03/00	3445	
TRANSIT Bus (E_ _)	2.5 TD (ECL, EDL, EDS, ESL, ESS, EUS)	74	07/94 – 03/00	3445	
TRANSIT Bus (FD_ _, FB_ _, FS_ _, FZ_ _, FC_ _)	23	107	08/00 – 03/06	3784	
TRANSIT Bus (FD_ _, FB_ _, FS_ _, FZ_ _, FC_ _)	23	107	08/00 – 03/06	3921	
TRANSIT Bus (FD_ _, FB_ _, FS_ _, FZ_ _, FC_ _)	2.0 DI (F_E_, F_F_, F_G_)	55	08/00 – 05/06	3784	
TRANSIT Bus (FD_ _, FB_ _, FS_ _, FZ_ _, FC_ _)	2.0 DI (F_E_, F_F_, F_G_)	55	08/00 – 05/06	3921	
TRANSIT Bus (FD_ _, FB_ _, FS_ _, FZ_ _, FC_ _)	2.0 DI (F_E_, F_F_, F_G_)	63	08/00 – 05/06	3784	
TRANSIT Bus (FD_ _, FB_ _, FS_ _, FZ_ _, FC_ _)	2.0 DI (F_E_, F_F_, F_G_)	63	08/00 – 05/06	3921	
TRANSIT Bus (FD_ _, FB_ _, FS_ _, FZ_ _, FC_ _)	2.0 DI (F_E_, F_F_, F_G_)	74	08/00 – 05/06	3784	
TRANSIT Bus (FD_ _, FB_ _, FS_ _, FZ_ _, FC_ _)	2.0 DI (F_E_, F_F_, F_G_)	74	08/00 – 05/06	3921	
TRANSIT Bus (FD_ _, FB_ _, FS_ _, FZ_ _, FC_ _)	2.0 TDCi (F_F_, F_E_, F_G_)	92	08/02 – 05/06	3784	
TRANSIT Bus (FD_ _, FB_ _, FS_ _, FZ_ _, FC_ _)	2.0 TDCi (F_F_, F_E_, F_G_)	92	08/02 – 05/06	3921	
TRANSIT Bus (FD_ _, FB_ _, FS_ _, FZ_ _, FC_ _)	2.3 16V [RWD] (F_B_, F_C_,F_A_)	107	08/00 – 05/06	3784	
TRANSIT Bus (FD_ _, FB_ _, FS_ _, FZ_ _, FC_ _)	2.4 DI (F_B_, F_C_, F_A_)	66	01/00 – 05/06	3784	
TRANSIT Bus (FD_ _, FB_ _, FS_ _, FZ_ _, FC_ _)	2.4 DI [RWD] (F_B_, F_C_)	55	01/00 – 05/06	3784	
TRANSIT Bus (FD_ _, FB_ _, FS_ _, FZ_ _, FC_ _)	2.4 DI [RWD] (F_B_, F_C_, F_A_)	88	01/00 – 05/06	3784	
TRANSIT Bus (FD_ _, FB_ _, FS_ _, FZ_ _, FC_ _)	2.4 TDCi	101	03/04 – 05/06	3784	
TRANSIT Bus (FD_ _, FB_ _, FS_ _, FZ_ _, FC_ _)	2.4 TDdi	66	10/01 – 03/06	3784	
TRANSIT Bus (FD_ _, FB_ _, FS_ _, FZ_ _, FC_ _)	2.4 TDdi	66	10/01 – 03/06	3921	
TRANSIT Bus (FD_ _, FB_ _, FS_ _, FZ_ _, FC_ _)	2.4 TDdi	88	08/00 – 08/03	3784	

BESER

MAKE & MODEL		KW	YEAR		
FORD					
TRANSIT Bus (FD_ _, FB_ _, FS_ _, FZ_ _, FC_ _)	2.4 TDdi	88	08/00 – 08/03	3921	
TRANSIT Bus (FD_ _, FB_ _, FS_ _, FZ_ _, FC_ _)	2.4 TDE	85	03/04 – 05/06	3784	
TRANSIT Bus (FD_ _, FB_ _, FS_ _, FZ_ _, FC_ _)	2.4 TDE (F_C_, F_B_, F_A_)	92	07/01 – 05/06	3784	
TRANSIT Bus (T_ _)	1.6 (TBL, TES)	46	12/85 – 01/89	3416	
TRANSIT Bus (T_ _)	1.6 (TBL, TES)	46	12/85 – 01/89	3603	
TRANSIT Bus (T_ _)	2.0 (TBS, TCL, TCS) CAT	57	12/85 – 09/92	3416	
TRANSIT Bus (T_ _)	2.0 (TBS, TCL, TCS) CAT	57	12/85 – 09/92	3603	
TRANSIT Bus (T_ _)	2.0 (TBS, TCL, TCS, TEL, TES)	57	11/85 – 09/92	3416	
TRANSIT Bus (T_ _)	2.0 (TBS, TCL, TCS, TEL, TES)	57	11/85 – 09/92	3603	
TRANSIT Bus (T_ _)	2.5 D (TBS, TCL, TCS, TEL, TES)	50	12/85 – 01/89	3416	
TRANSIT Bus (T_ _)	2.5 D (TBS, TCL, TCS, TEL, TES)	50	12/85 – 01/89	3603	
TRANSIT Bus (T_ _)	2.5 D (TBS, TEL, TES)	52	09/88 – 09/92	3416	
TRANSIT Bus (T_ _)	2.5 D (TBS, TEL, TES)	52	09/88 – 09/92	3603	
TRANSIT Bus (V_ _)	1.6 (VAS, VLS, VZS)	48	12/77 – 10/86	3416	
TRANSIT Bus (V_ _)	2.0 (VAS, VBLVIL, VLS, VUL, VZS)	43	12/77 – 07/82	3416	
TRANSIT Bus (V_ _)	2.0 (VAS, VIL, VLS, VUL, VZS)	57	11/77 – 10/86	3416	
TRANSIT Bus (V_ _)	2.0 (VAS, VLS, VZS)	55	11/77 – 10/86	3416	
TRANSIT Bus (V_ _)	2.4 D (VAS, VBL, VIL, VUL, VZS)	46	12/77 – 10/86	3416	
TRANSIT Bus (V_ _)	2.5 D (VAS, VBL, VIL, VUL, VZS)	50	10/83 – 10/86	3416	
TRANSIT Bus (VF, VG)	20	84	06/94 – 03/00	3445	
TRANSIT Bus (VF, VG)	20	84	09/95 – 03/00	3445	
TRANSIT Bus (VF, VG)	20	84	06/94 – 03/00	3473	
TRANSIT Bus (VF, VG)	20	84	09/95 – 03/00	3473	
TRANSIT Bus (VF, VG)	2.5 D	55	08/94 – 06/00	3445	
TRANSIT Bus (VF, VG)	2.5 D	55	08/94 – 06/00	3473	
TRANSIT Bus (VF, VG)	2.5 TD	63	01/95 – 03/00	3445	
TRANSIT Bus (VF, VG)	2.5 TD	63	01/95 – 03/00	3473	
TRANSIT Bus (VF, VG)	2.5 TD	74	07/94 – 03/00	3445	
TRANSIT Bus (VF, VG)	2.5 TD	74	07/94 – 03/00	3473	
TRANSIT Bus (VF, VG)	2.5 TD	85	08/97 – 03/00	3445	
TRANSIT Bus (VF, VG)	2.5 TD	85	08/97 – 03/00	3473	
TRANSIT Bus (VH, VJ)	23	107	08/00 – 09/06	3784	
TRANSIT Bus (VH, VJ)	2.4 D	55	01/00 – 09/06	3784	
TRANSIT Bus (VH, VJ)	2.4 D	66	01/00 – 09/06	3784	
TRANSIT Bus (VH, VJ)	2.4 D	85	03/04 – 09/06	3784	
TRANSIT Bus (VH, VJ)	2.4 D	88	01/00 – 09/06	3784	
TRANSIT Bus (VH, VJ)	2.4 D	92	07/01 – 09/06	3784	
TRANSIT Bus (VH, VJ)	2.4 D	101	03/04 – 09/06	3784	
TRANSIT Bus (VM)	2.2 TDCi [RWD]	114	10/11 – 12/14	3906	
TRANSIT Bus (VM)	2.2 TDCi [RWD]	114	10/11 – 12/14		3907
TRANSIT Bus (VM)	2.4 D	74	07/06 -	3906	
TRANSIT Bus (VM)	2.4 D	74	07/06 -		3907
TRANSIT Bus (VM)	2.4 D	85	07/06 -	3906	
TRANSIT Bus (VM)	2.4 D	85	07/06 -		3907
TRANSIT Bus (VM)	2.4 TD	103	07/06 -	3906	
TRANSIT Bus (VM)	2.4 TD	103	07/06 -		3907
TRANSIT Bus (VM)	2.4 TD All-wheel Drive	103	11/06 -	3906	
TRANSIT Bus (VM)	2.4 TD All-wheel Drive	103	11/06 -		3907
TRANSIT CONNECT (P65_, P70_, P80_)	1.8 16V	85	06/02 – 12/13	3801	
TRANSIT CONNECT (P65_, P70_, P80_)	1.8 16V	85	06/02 – 12/13		3853/1
TRANSIT CONNECT (P65_, P70_, P80_)	1.8 16V LPG	85	06/02 – 12/13	3801	
TRANSIT CONNECT (P65_, P70_, P80_)	1.8 16V LPG	85	06/02 – 12/13		3853/1
TRANSIT CONNECT (P65_, P70_, P80_)	1.8 Di	55	06/02 – 12/13	3801	
TRANSIT CONNECT (P65_, P70_, P80_)	1.8 Di	55	06/02 – 12/13		3853/1
TRANSIT CONNECT (P65_, P70_, P80_)	1.8 TDCi	66	06/02 – 12/13	3801	
TRANSIT CONNECT (P65_, P70_, P80_)	1.8 TDCi	66	06/02 – 12/13		3853/1
TRANSIT CONNECT (P65_, P70_, P80_)	1.8 TDCi	81	08/06 – 12/13	3801	
TRANSIT CONNECT (P65_, P70_, P80_)	1.8 TDCi	81	08/06 – 12/13		3853/1
TRANSIT CONNECT Box	1.0 EcoBoost	74	02/13 -	4226	
TRANSIT CONNECT Box	1.5 TDCi	55	08/15 -	4226	
TRANSIT CONNECT Box	1.5 TDCi	74	05/15 -	4226	
TRANSIT CONNECT Box	1.5 TDCi	88	05/15 -	4226	
TRANSIT CONNECT Box	1.6 EcoBoost	110	11/13 -	4226	
TRANSIT CONNECT Box	1.6 TDCi	55	02/13 -	4226	
TRANSIT CONNECT Box	1.6 TDCi	70	02/13 -	4226	
TRANSIT CONNECT Box	1.6 TDCi	85	02/13 -	4226	
TRANSIT CONNECT Kombi	1.5 TDCi	55	08/15 -	4226	
TRANSIT CONNECT Kombi	1.5 TDCi	74	05/15 -	4226	
TRANSIT CONNECT Kombi	1.5 TDCi	88	05/15 -	4226	
TRANSIT CONNECT Kombi	1.6 EcoBoost	110	02/13 -	4226	
TRANSIT CONNECT Kombi	1.6 TDCi	55	02/13 -	4226	

MAKE & MODEL		KW	YEAR		
FORD					
TRANSIT CONNECT Kombi	1.6 TDCi	70	02/13 -	4226	
TRANSIT CONNECT Kombi	1.6 TDCi	85	02/13 -	4226	
TRANSIT COURIER Box	1.0 EcoBoost	74	02/14 -	4204	
TRANSIT COURIER Box	1.5 TDCi	55	02/14 -	4204	
TRANSIT COURIER Box	1.5 TDCi	70	05/15 -	4204	
TRANSIT COURIER Box	1.6 TDCi	70	02/14 -	4204	
TRANSIT COURIER Kombi	1.0 EcoBoost	74	02/14 -	4204	
TRANSIT COURIER Kombi	1.5 TDCi	55	02/14 -	4204	
TRANSIT COURIER Kombi	1.5 TDCi	70	05/15 -	4204	
TRANSIT COURIER Kombi	1.6 TDCi	70	02/14 -	4204	
TRANSIT CUSTOM Box	2.0 TDCi	77	12/15 -	4174	
TRANSIT CUSTOM Box	2.0 TDCi	77	12/15 -		4175
TRANSIT CUSTOM Box	2.2 TDCi	74	04/12 -	4174	
TRANSIT CUSTOM Box	2.2 TDCi	74	04/12 -		4175
TRANSIT CUSTOM Box	2.2 TDCi	92	04/12 -	4174	
TRANSIT CUSTOM Box	2.2 TDCi	92	04/12 -		4175
TRANSIT CUSTOM Box	2.2 TDCi	114	04/12 -	4174	
TRANSIT CUSTOM Box	2.2 TDCi	114	04/12 -		4175
TRANSIT CUSTOM Bus	2.2 TDCi	74	04/12 -	4174	
TRANSIT CUSTOM Bus	2.2 TDCi	74	04/12 -		4175
TRANSIT CUSTOM Bus	2.2 TDCi	92	04/12 -	4174	
TRANSIT CUSTOM Bus	2.2 TDCi	92	04/12 -		4175
TRANSIT CUSTOM Bus	2.2 TDCi	114	04/12 -	4174	
TRANSIT CUSTOM Bus	2.2 TDCi	114	04/12 -		4175
TRANSIT Platform/Chassis	2.0 TDCi	77	03/16 -	4174	
TRANSIT Platform/Chassis	2.0 TDCi	77	03/16 -		4175
TRANSIT Platform/Chassis	2.0 TDCi	96	03/16 -	4174	
TRANSIT Platform/Chassis	2.0 TDCi	96	03/16 -		4175
TRANSIT Platform/Chassis	2.0 TDCi	125	03/16 -	4174	
TRANSIT Platform/Chassis	2.0 TDCi	125	03/16 -		4175
TRANSIT Platform/Chassis	2.0 TDCi [RWD]	77	03/16 -	4174	
TRANSIT Platform/Chassis	2.0 TDCi [RWD]	77	03/16 -		4175
TRANSIT Platform/Chassis	2.0 TDCi [RWD]	96	03/16 -	4174	
TRANSIT Platform/Chassis	2.0 TDCi [RWD]	96	03/16 -		4175
TRANSIT Platform/Chassis	2.0 TDCi [RWD]	125	03/16 -	4174	
TRANSIT Platform/Chassis	2.0 TDCi [RWD]	125	03/16 -		4175
TRANSIT Platform/Chassis	2.2 TDCi	63	04/06 – 08/14	3906	
TRANSIT Platform/Chassis	2.2 TDCi	63	04/06 – 08/14		3907
TRANSIT Platform/Chassis	2.2 TDCi	63	04/06 – 08/14	3920	
TRANSIT Platform/Chassis	2.2 TDCi	74	10/11 – 08/14	3906	
TRANSIT Platform/Chassis	2.2 TDCi	74	10/11 – 08/14		3907
TRANSIT Platform/Chassis	2.2 TDCi	74	10/11 – 08/14	3920	
TRANSIT Platform/Chassis	2.2 TDCi	74	08/13 -	4174	
TRANSIT Platform/Chassis	2.2 TDCi	74	08/13 -		4175
TRANSIT Platform/Chassis	2.2 TDCi	81	04/06 – 08/14	3906	
TRANSIT Platform/Chassis	2.2 TDCi	81	04/06 – 08/14		3907
TRANSIT Platform/Chassis	2.2 TDCi	81	04/06 – 08/14	3920	
TRANSIT Platform/Chassis	2.2 TDCi	85	10/08 – 08/14	3906	
TRANSIT Platform/Chassis	2.2 TDCi	85	10/08 – 08/14		3907
TRANSIT Platform/Chassis	2.2 TDCi	85	10/08 – 08/14	3920	
TRANSIT Platform/Chassis	2.2 TDCi	92	10/11 – 08/14	3906	
TRANSIT Platform/Chassis	2.2 TDCi	92	10/11 – 08/14		3907
TRANSIT Platform/Chassis	2.2 TDCi	92	10/11 – 08/14	3920	
TRANSIT Platform/Chassis	2.2 TDCi	92	08/13 -	4174	
TRANSIT Platform/Chassis	2.2 TDCi	92	08/13 -		4175
TRANSIT Platform/Chassis	2.2 TDCi	96	04/06 – 08/14	3906	
TRANSIT Platform/Chassis	2.2 TDCi	96	04/06 – 08/14		3907
TRANSIT Platform/Chassis	2.2 TDCi	96	04/06 – 08/14	3920	
TRANSIT Platform/Chassis	2.2 TDCi	103	10/07 – 09/11	3906	
TRANSIT Platform/Chassis	2.2 TDCi	103	10/07 – 09/11		3907
TRANSIT Platform/Chassis	2.2 TDCi	103	10/07 – 09/11	3920	
TRANSIT Platform/Chassis	2.2 TDCi	114	08/13 -	4174	
TRANSIT Platform/Chassis	2.2 TDCi	114	08/13 -		4175
TRANSIT Platform/Chassis	2.2 TDCi [RWD]	74	10/11 – 08/14	3906	
TRANSIT Platform/Chassis	2.2 TDCi [RWD]	74	10/11 – 08/14		3907
TRANSIT Platform/Chassis	2.2 TDCi [RWD]	74	08/13 -	4174	
TRANSIT Platform/Chassis	2.2 TDCi [RWD]	74	08/13 -		4175
TRANSIT Platform/Chassis	2.2 TDCi [RWD]	92	10/11 – 08/14	3906	
TRANSIT Platform/Chassis	2.2 TDCi [RWD]	92	10/11 – 08/14		3907
TRANSIT Platform/Chassis	2.2 TDCi [RWD]	92	08/13 -	4174	
TRANSIT Platform/Chassis	2.2 TDCi [RWD]	92	08/13 -		4175

MAKE & MODEL		KW	YEAR		
FORD					
TRANSIT Platform/Chassis	2.2 TDCi [RWD]	99	08/13 -	4174	
TRANSIT Platform/Chassis	2.2 TDCi [RWD]	99	08/13 -		4175
TRANSIT Platform/Chassis	2.2 TDCi [RWD]	114	10/11 – 08/14	3906	
TRANSIT Platform/Chassis	2.2 TDCi [RWD]	114	10/11 – 08/14		3907
TRANSIT Platform/Chassis	2.2 TDCi [RWD]	114	08/13 -	4174	
TRANSIT Platform/Chassis	2.2 TDCi [RWD]	114	08/13 -		4175
TRANSIT Platform/Chassis	2.2 TDCi 4x4	92	10/11 – 08/14	3906	
TRANSIT Platform/Chassis	2.2 TDCi 4x4	92	10/11 – 08/14		3907
TRANSIT Platform/Chassis	2.2 TDCi 4x4	92	08/13 -	4174	
TRANSIT Platform/Chassis	2.2 TDCi 4x4	92	08/13 -		4175
TRANSIT Platform/Chassis	2.2 TDCi 4x4	114	08/13 -	4174	
TRANSIT Platform/Chassis	2.2 TDCi 4x4	114	08/13 -		4175
TRANSIT Platform/Chassis	2.3 16V [RWD]	107	04/06 – 08/14	3906	
TRANSIT Platform/Chassis	2.3 16V [RWD]	107	04/06 – 08/14		3907
TRANSIT Platform/Chassis	2.3 16V CNG [RWD]	100	04/06 – 08/14	3906	
TRANSIT Platform/Chassis	2.3 16V CNG [RWD]	100	04/06 – 08/14		3907
TRANSIT Platform/Chassis	2.3 16V LPG [RWD]	107	04/06 – 08/14	3906	
TRANSIT Platform/Chassis	2.3 16V LPG [RWD]	107	04/06 – 08/14		3907
TRANSIT Platform/Chassis	2.4 TDCi [RWD]	74	04/06 – 08/14	3906	
TRANSIT Platform/Chassis	2.4 TDCi [RWD]	74	04/06 – 08/14		3907
TRANSIT Platform/Chassis	2.4 TDCi [RWD]	85	04/06 – 08/14	3906	
TRANSIT Platform/Chassis	2.4 TDCi [RWD]	85	04/06 – 08/14		3907
TRANSIT Platform/Chassis	2.4 TDCi [RWD]	103	04/06 – 08/14	3906	
TRANSIT Platform/Chassis	2.4 TDCi [RWD]	103	04/06 – 08/14		3907
TRANSIT Platform/Chassis	2.4 TDCi 4x4	103	11/06 – 08/14	3906	
TRANSIT Platform/Chassis	2.4 TDCi 4x4	103	11/06 – 08/14		3907
TRANSIT Platform/Chassis	3.2 TDCi [RWD]	147	09/07 – 08/14	3906	
TRANSIT Platform/Chassis	3.2 TDCi [RWD]	147	09/07 – 08/14		3907
TRANSIT Platform/Chassis (E_ _)	2.0 (EME/L/S, ENE/L/S)	84	08/94 – 03/00	3445	
TRANSIT Platform/Chassis (E_ _)	2.0 (EME/L/S, ENE/L/S)	84	08/94 – 03/00	3473	
TRANSIT Platform/Chassis (E_ _)	2.5 DI (EME/L/S, ENE/L/S)	56	08/94 – 03/00	3445	
TRANSIT Platform/Chassis (E_ _)	2.5 DI (EME/L/S, ENE/L/S)	56	08/94 – 03/00	3473	
TRANSIT Platform/Chassis (E_ _)	2.5 DI (EML, ENE/L)	85	05/99 – 03/00	3445	
TRANSIT Platform/Chassis (E_ _)	2.5 DI (EML, ENE/L)	85	08/94 – 03/00	3473	
TRANSIT Platform/Chassis (E_ _)	2.5 DI (EML/S, ENL/S)	51	08/94 – 03/00	3445	
TRANSIT Platform/Chassis (E_ _)	2.5 DI (EML/S, ENL/S)	51	05/99 – 03/00	3473	
TRANSIT Platform/Chassis (E_ _)	2.5 TD (EME/L/S, ENE/L/S)	55	10/98 – 07/00	3445	
TRANSIT Platform/Chassis (E_ _)	2.5 TD (EME/L/S, ENE/L/S)	55	08/94 – 03/00	3473	
TRANSIT Platform/Chassis (E_ _)	2.5 TD (EME/L/S, ENE/L/S)	63	08/94 – 03/00	3445	
TRANSIT Platform/Chassis (E_ _)	2.5 TD (EME/L/S, ENE/L/S)	63	08/94 – 03/00	3473	
TRANSIT Platform/Chassis (E_ _)	2.5 TD (EME/L/S, ENE/L/S)	74	08/94 – 03/00	3445	
TRANSIT Platform/Chassis (E_ _)	2.5 TD (EME/L/S, ENE/L/S)	74	08/94 – 03/00	3473	
TRANSIT Platform/Chassis (FM_ _, FN_ _)	2.0 DI (F_E_, F_F_)	55	08/00 – 05/06	3784	
TRANSIT Platform/Chassis (FM_ _, FN_ _)	2.0 DI (F_E_, F_F_)	55	08/00 – 05/06	3921	
TRANSIT Platform/Chassis (FM_ _, FN_ _)	2.0 DI (F_E_, F_F_)	63	08/00 – 05/06	3784	
TRANSIT Platform/Chassis (FM_ _, FN_ _)	2.0 DI (F_E_, F_F_)	63	08/00 – 05/06	3921	
TRANSIT Platform/Chassis (FM_ _, FN_ _)	2.0 DI (F_E_, F_F_)	74	08/00 – 05/06	3784	
TRANSIT Platform/Chassis (FM_ _, FN_ _)	2.0 DI (F_E_, F_F_)	74	08/00 – 05/06	3921	
TRANSIT Platform/Chassis (FM_ _, FN_ _)	2.0 TDCi (F_E_, F_F_)	92	08/02 – 05/06	3784	
TRANSIT Platform/Chassis (FM_ _, FN_ _)	2.0 TDCi (F_E_, F_F_)	92	08/02 – 05/06	3921	
TRANSIT Platform/Chassis (FM_ _, FN_ _)	2.3 16V (F_A_, F_B_, F_C_,F_D_)	107	04/01 – 05/06	3784	
TRANSIT Platform/Chassis (FM_ _, FN_ _)	2.4 DI (F_A_, F_B_, F_C_, F_D_)	55	01/00 – 05/06	3784	
TRANSIT Platform/Chassis (FM_ _, FN_ _)	2.4 DI (F_A_, F_B_, F_C_, F_D_)	66	01/00 – 05/06	3784	
TRANSIT Platform/Chassis (FM_ _, FN_ _)	2.4 DI (F_A_, F_B_, F_C_, F_D_)	88	01/00 – 05/06	3784	
TRANSIT Platform/Chassis (FM_ _, FN_ _)	2.4 TDCi	101	03/04 – 05/06	3784	
TRANSIT Platform/Chassis (FM_ _, FN_ _)	2.4 TDdi	88	08/00 – 08/03	3784	
TRANSIT Platform/Chassis (FM_ _, FN_ _)	2.4 TDdi	88	08/00 – 08/03	3921	
TRANSIT Platform/Chassis (FM_ _, FN_ _)	2.4 TDE	85	03/04 – 05/06	3784	
TRANSIT Platform/Chassis (FM_ _, FN_ _)	2.4 TDE	92	07/01 – 05/06	3784	
TRANSIT Platform/Chassis (T_ _)	1.6 (VCS, VDS)	48	11/77 – 10/86	3416	
TRANSIT Platform/Chassis (T_ _)	2.0 (TTE, TTL, TTS)	57	01/86 – 09/92	3416	
TRANSIT Platform/Chassis (T_ _)	2.0 (TTE, TTL, TTS)	57	01/86 – 09/92	3603	
TRANSIT Platform/Chassis (T_ _)	2.0 (TUL) CAT	57	11/85 – 09/92	3416	
TRANSIT Platform/Chassis (T_ _)	2.0 (TUL) CAT	57	11/85 – 09/92	3603	
TRANSIT Platform/Chassis (T_ _)	2.0 (VGL, VSL, VTL)	43	11/77 – 07/82	3416	
TRANSIT Platform/Chassis (T_ _)	2.5 D (TTL, TTS, TUL, TUS, TTE) CAT	50	01/86 – 01/89	3603	
TRANSIT Platform/Chassis (T_ _)	2.5 DI (TTE, TTL, TTS, TUL)	52	09/88 – 09/92	3603	
TRANSIT Platform/Chassis (V_ _)	2.0 (VGL, VSL, VTL, VCS, VDS)	57	11/77 – 10/86	3416	
TRANSIT Platform/Chassis (V_ _)	2.4 D (VGL, VSL, VTL, VCS, VDS)	46	11/77 – 09/85	3416	
TRANSIT Platform/Chassis (V_ _)	2.5 D (TTL, TTS, TUL, TUS, TTE) CAT	50	01/86 – 01/89	3416	
TRANSIT Platform/Chassis (V_ _)	2.5 D (VGL, VSL, VTL, VCS, VDS)	50	10/83 – 10/86	3416	

MAKE & MODEL   		KW	YEAR		
FORD					
TRANSIT Platform/Chassis (V_ _)	2.5 DI (TTE, TTL, TTS, TUL)	52	09/88 – 09/92	3416	
TRANSIT Platform/Chassis (VF, VG)	20	84	08/94 – 03/00	3445	
TRANSIT Platform/Chassis (VF, VG)	20	84	08/94 – 03/00	3473	
TRANSIT Platform/Chassis (VF, VG)	2.5 D	52	08/94 – 03/00	3445	
TRANSIT Platform/Chassis (VF, VG)	2.5 D	52	08/94 – 03/00	3473	
TRANSIT Platform/Chassis (VF, VG)	2.5 D	55	10/98 – 03/00	3445	
TRANSIT Platform/Chassis (VF, VG)	2.5 D	55	10/98 – 03/00	3473	
TRANSIT Platform/Chassis (VF, VG)	2.5 D	56	08/94 – 03/00	3445	
TRANSIT Platform/Chassis (VF, VG)	2.5 D	56	08/94 – 03/00	3473	
TRANSIT Platform/Chassis (VF, VG)	2.5 TD	63	08/94 – 03/00	3445	
TRANSIT Platform/Chassis (VF, VG)	2.5 TD	63	08/94 – 03/00	3473	
TRANSIT Platform/Chassis (VF, VG)	2.5 TD	74	08/94 – 03/00	3445	
TRANSIT Platform/Chassis (VF, VG)	2.5 TD	74	08/94 – 03/00	3473	
TRANSIT Platform/Chassis (VF, VG)	2.5 TD	85	05/99 – 03/00	3445	
TRANSIT Platform/Chassis (VF, VG)	2.5 TD	85	05/99 – 03/00	3473	
TRANSIT Platform/Chassis (VH, VJ)	2.4 D	55	01/00 – 09/06	3784	
TRANSIT Platform/Chassis (VH, VJ)	2.4 D	66	01/00 – 09/06	3784	
TRANSIT Platform/Chassis (VH, VJ)	2.4 D	85	03/04 – 07/06	3784	
TRANSIT Platform/Chassis (VH, VJ)	2.4 D	88	01/00 – 09/06	3784	
TRANSIT Platform/Chassis (VH, VJ)	2.4 D	92	07/01 – 09/06	3784	
TRANSIT Platform/Chassis (VH, VJ)	2.4 D	101	03/04 – 09/06	3784	
TRANSIT Platform/Chassis (VH, VJ)	2.4 D	88	08/00 – 08/03	3784	
TRANSIT Platform/Chassis (VM)	2.2 TDCi [RWD]	114	10/11 – 12/14	3906	
TRANSIT Platform/Chassis (VM)	2.2 TDCi [RWD]	114	10/11 – 12/14		3907
TRANSIT Platform/Chassis (VM)	2.4 D	74	07/06 – 12/14	3906	
TRANSIT Platform/Chassis (VM)	2.4 D	74	07/06 – 12/14		3907
TRANSIT Platform/Chassis (VM)	2.4 D	85	07/06 – 12/14	3906	
TRANSIT Platform/Chassis (VM)	2.4 D	85	07/06 – 12/14		3907
TRANSIT Platform/Chassis (VM)	2.4 TD	103	07/06 – 12/14	3906	
TRANSIT Platform/Chassis (VM)	2.4 TD	103	07/06 – 12/14		3907
TRANSIT Platform/Chassis (VM)	2.4 TD All-wheel Drive	103	11/06 – 12/14	3906	
TRANSIT Platform/Chassis (VM)	2.4 TD All-wheel Drive	103	11/06 – 12/14		3907
TRANSIT Platform/Chassis (VO)	2.2 TDCi [RWD]	114	09/14 -	4174	
TRANSIT Platform/Chassis (VO)	2.2 TDCi [RWD]	114	09/14 -		4175
TRANSIT TOURNEO	20	84	11/94 – 12/00	3445	
TRANSIT TOURNEO	20	84	10/98 – 07/00	3473	
TRANSIT TOURNEO	2.2 TDCi	81	07/06 – 08/14	3906	
TRANSIT TOURNEO	2.2 TDCi	81	07/06 – 08/14		3907
TRANSIT TOURNEO	2.2 TDCi	81	07/06 – 08/14	3920	
TRANSIT TOURNEO	2.2 TDCi	85	10/08 – 08/14	3906	
TRANSIT TOURNEO	2.2 TDCi	85	10/08 – 08/14		3907
TRANSIT TOURNEO	2.2 TDCi	85	10/08 – 08/14	3920	
TRANSIT TOURNEO	2.2 TDCi	96	07/06 – 08/14	3906	
TRANSIT TOURNEO	2.2 TDCi	96	07/06 – 08/14		3907
TRANSIT TOURNEO	2.2 TDCi	96	07/06 – 08/14	3920	
TRANSIT TOURNEO	2.2 TDCi	103	10/07 – 08/14	3906	
TRANSIT TOURNEO	2.2 TDCi	103	10/07 – 08/14		3907
TRANSIT TOURNEO	2.2 TDCi	103	10/07 – 08/14	3920	
TRANSIT TOURNEO	2.4 D	55	08/94 – 06/00	3445	
TRANSIT TOURNEO	2.4 D	55	11/94 – 12/00	3473	
TRANSIT TOURNEO	2.5 DI	51	11/94 – 12/00	3445	
TRANSIT TOURNEO	2.5 DI	51	08/94 – 06/00	3473	
TRANSIT TOURNEO	2.5 DI	56	11/94 – 12/00	3445	
TRANSIT TOURNEO	2.5 DI	56	11/94 – 12/00	3473	
TRANSIT TOURNEO	2.5 TD	63	11/94 – 12/00	3445	
TRANSIT TOURNEO	2.5 TD	63	04/98 – 12/00	3473	
TRANSIT TOURNEO	2.5 TD	74	04/98 – 12/00	3445	
TRANSIT TOURNEO	2.5 TD	74	11/94 – 12/00	3473	
TRUCK RANGER			10-11	4195	
TRUCK RANGER 4WD			11-	4195	
WINDSTAR (A3)	3.0 V6	108	02/99 – 12/00		4186
WINDSTAR (A3)	3.0 V6	109	03/95 – 02/99		4186
WINDSTAR (A3)	3.8 V6	149	01/95 – 06/98		4186
FSO					
125P	1.3 1300	47	10/67 – 08/92	3316	
125P	1.3 1300	47	10/67 – 08/92		3317
125P	1.3 1300	47	10/67 – 08/92	3351	
125P	1.5 1500	55	10/67 – 08/92	3316	
125P	1.5 1500	55	10/67 – 08/92		3317
125P	1.5 1500	55	10/67 – 08/92	3351	

MAKE & MODEL		KW	YEAR		
FSO					
125P Estate (Large family car-D Segment)	1.3 (116 C 076)		67-92	3357	
125P Estate (Large family car-D Segment)	1.5 (115 C 076)		67-92	3357	
125P Fastback (Large family car-D Segment)	1.3 (116 C 076)		67-92	3357	
125P Fastback (Large family car-D Segment)	1.5 (115 C 076)		67-92	3357	
125P Estate	13	47	10/67 – 08/92	3316	
125P Estate	13	47	10/67 – 08/92		3317
125P Estate	13	47	10/67 – 08/92	3351	
125P Estate	15	55	10/67 – 08/92	3316	
125P Estate	15	55	10/67 – 08/92		3317
125P Estate	15	55	10/67 – 08/92	3351	
125P Pickup	15	55	06/75 – 12/89	3316	
125P Pickup	15	55	06/75 – 12/89		3317
125P Pickup	15	55	06/75 – 12/89	3351	
127P Fastback (Subcompact car-B Segment)	0.9 (100 GL.000)		69-76	3357	
128 Fastback (Subcompact car-B Segment)	1.3		68-	3357	
132P Sedán (Large family car-D Segment)	1.6 (132 AB.0A.0)		74-78	3357	
132P Sedán (Large family car-D Segment)	1.8 (132 A1.000)		75-78	3357	
LANOS Hatchback	14	55	05/04 – 10/08	3623	
LANOS Hatchback	15	63	05/04 – 10/08	3623	
LANOS Hatchback	1.6 16V	78	05/04 – 10/08	3470	
LANOS Hatchback	1.6 16V	78	05/04 – 10/08	3505	
LANOS Hatchback	1.6 16V	78	05/04 – 10/08	3615	
LANOS Saloon	14	55	05/04 – 10/08	3623	
LANOS Saloon	15	63	05/04 – 10/08	3623	
LANOS Saloon	1.6 16V	78	05/04 – 10/08	3470	
LANOS Saloon	1.6 16V	78	05/04 – 10/08	3505	
LANOS Saloon	1.6 16V	78	05/04 – 10/08	3615	
PANDA Fastback (City car-A Segment)	0.7		80-	3357	
PANDA Fastback (City car-A Segment)	0.8		80-	3357	
POLONEZ Fastback (Compact car-C Segment)	1.3 (116 C 076)		78-80	3357	
POLONEZ Fastback (Compact car-C Segment)	1.5 (115 C.074)		78-88	3357	
POLONEZ Fastback (Compact car-C Segment)	1.5 (AA)		77-88	3357	
POLONEZ Fastback (Compact car-C Segment)	1.5 Turbo (115 C 082)		78-91	3357	
POLONEZ Fastback (Compact car-C Segment)	1.6 (CB)		86-88	3357	
POLONEZ I	13	48	01/78 – 12/80	3316	
POLONEZ I	13	48	01/78 – 12/80		3317
POLONEZ I	13	48	01/78 – 12/80	3351	
POLONEZ I	15	55	10/77 – 08/88	3316	
POLONEZ I	15	55	10/77 – 08/88		3317
POLONEZ I	15	55	10/77 – 08/88	3351	
POLONEZ I	15	60	01/78 – 08/88	3316	
POLONEZ I	15	60	01/78 – 08/88		3317
POLONEZ I	15	60	01/78 – 08/88	3351	
POLONEZ I	16	64	08/86 – 08/88	3316	
POLONEZ I	16	64	08/86 – 08/88		3317
POLONEZ I	16	64	08/86 – 08/88	3351	
POLONEZ I	1.5 Turbo	70	01/78 – 12/91	3316	
POLONEZ I	1.5 Turbo	70	01/78 – 12/91		3317
POLONEZ I	1.5 Turbo	70	01/78 – 12/91	3351	
POLONEZ II	15	55	08/88 – 08/92	3316	
POLONEZ II	15	55	08/88 – 08/92		3317
POLONEZ II	15	55	08/88 – 08/92	3351	
POLONEZ II	16	64	08/88 – 08/92	3316	
POLONEZ II	16	64	08/88 – 08/92		3317
POLONEZ II	16	64	08/88 – 08/92	3351	
POLONEZ II	1.5 i	55	08/88 – 08/92	3316	
POLONEZ II	1.5 i	55	08/88 – 08/92		3317
POLONEZ II	1.5 i	55	08/88 – 08/92	3351	
POLONEZ II	1.9 D	51	08/88 – 08/92	3316	
POLONEZ II	1.9 D	51	08/88 – 08/92		3317
POLONEZ II	1.9 D	51	08/88 – 08/92	3351	
POLONEZ II / PRIMA Fastback (Compact car-C Segment)	1.5 (AA)		88-92	3357	
POLONEZ II / PRIMA Fastback (Compact car-C Segment)	1.5 i (115 C.000)		88-92	3357	
POLONEZ II / PRIMA Fastback (Compact car-C Segment)	1.5 i (115 C.074)		88-92	3357	
POLONEZ II / PRIMA Fastback (Compact car-C Segment)	1.6 (CB)		88-92	3357	
POLONEZ II / PRIMA Fastback (Compact car-C Segment)	1.9 D (XUD 9A)		88-92	3357	
POLONEZ III	15	55	05/94 – 12/97	3316	
POLONEZ III	18	81	02/03 – 01/05	3316	
POLONEZ III	18	81	02/03 – 01/05		3317
POLONEZ III	18	81	02/03 – 01/05	3351	
POLONEZ III	1.4 i 16V	76	09/92 – 03/02	3316	

MAKE & MODEL   		KW	YEAR		
FSO					
POLONEZ III	1.4 i 16V	76	09/92 – 03/02		3317
POLONEZ III	1.4 i 16V	76	09/92 – 03/02	3351	
POLONEZ III	1.6 i	57	09/92 – 03/02	3316	
POLONEZ III	1.6 i	57	09/92 – 03/02		3317
POLONEZ III	1.6 i	57	09/92 – 03/02	3351	
POLONEZ III	1.9 D	51	09/92 – 03/02	3316	
POLONEZ III	1.9 D	51	09/92 – 03/02		3317
POLONEZ III	1.9 D	51	09/92 – 03/02	3351	
POLONEZ III / ATOU Sedán (Compact car-C Segment)	1.6 i (147CK46)		92-02	3357	
POLONEZ III / CARO Fastback (Compact car-C Segment)	1.4 i 16V (ROVER K16 DOHC)		92-02	3357	
POLONEZ III / CARO Fastback (Compact car-C Segment)	1.5		92-	3357	
POLONEZ III / CARO Fastback (Compact car-C Segment)	1.6 i (147CK46)		92-02	3357	
POLONEZ III / CARO Fastback (Compact car-C Segment)	1.8 (T18SED)		03-05	3357	
POLONEZ III / CARO Fastback (Compact car-C Segment)	1.9 D (XUD 9A)		92-02	3357	
POLONEZ III Saloon	1.6 GLi	59	03/96 – 03/02	3316	
POLONEZ III Saloon	1.6 GLi	59	03/96 – 03/02		3317
POLONEZ III Saloon	1.6 GLi	59	03/96 – 03/02	3351	
POLONEZ III Saloon	1.6 i	57	09/92 – 03/02	3316	
POLONEZ III Saloon	1.6 i	57	09/92 – 03/02		3317
POLONEZ III Saloon	1.6 i	57	09/92 – 03/02	3351	
POLONEZ Pickup	1.4 i 16V	76	04/94 – 09/98	3316	
POLONEZ Pickup	1.4 i 16V	76	04/94 – 09/98		3317
POLONEZ Pickup	1.4 i 16V	76	04/94 – 09/98	3351	
POLONEZ Pickup	1.6 i	57	04/94 – 09/98	3316	
POLONEZ Pickup	1.6 i	57	04/94 – 09/98		3317
POLONEZ Pickup	1.6 i	57	04/94 – 09/98	3351	
POLONEZ Pickup	1.9 D	51	04/94 – 09/98	3316	
POLONEZ Pickup	1.9 D	51	04/94 – 09/98		3317
POLONEZ Pickup	1.9 D	51	04/94 – 09/98	3351	
GAZ					
GAZELLE NEXT Minibüs/Otobüs	2.8 TD	88	04.13 -	4344	
GAZELLE NEXT Minibüs/Otobüs	2.9	78	04.13 -	4344	
GAZELLE NEXT Panelvan/Van	2.8 TD	88	04.13 -	4344	
GAZELLE NEXT Panelvan/Van	2.9	78	04.13 -	4344	
GAZELLE NEXT Platform şasi	2.8 TD	88	04.13 -	4344	
GAZELLE NEXT Platform şasi	2.9	78	04.13 -	4344	
GEELY					
MEIRI	1.3	63	06.99 - 08.04	3974	
VISION	15	102	05/09 – 12/13		3876
VISION	18	101	12/05 -		3876
VISION	18	102	08/06 – 12/12		3876
GM					
BLAZER	ONLY SOUTH AMERiCA			3547	
CHEVROLET MONZA	ONLY SOUTH AMERICA			3476	
CORSA	ONLY SOUTH AMERiCA			3530	
KADETT	ONLY SOUTH AMERICA		89-	3588	
GMC					
ACADIA	3.6	205	09/06-12/08		4219
ACADIA	3.6	215	09/08-12/13		4219
ACADIA	3.6 AWD	205	09/06-12/08		4219
ACADIA	3.6 AWD	215	09/08-12/13		4219
ACADIA	3.6 AWD	231	04/16-		4219
ACADIA	3.6 DI	215	09/13-		4219
ACADIA	3.6 DI AWD	215	09/13-		4219
SAFARI Standard Cargo Van	4.3	142	09.96 - 12.05	4022	
SAFARI Standard Cargo Van	4.3 AWD	142	09.96 - 12.05	4022	
SAFARI Standard Passenger Van	4.3	142	09.96 - 12.05	4022	
SAFARI Standard Passenger Van	4.3 AWD	142	09.96 - 12.05	4022	
SAVANA 1500 Standard Cargo Van	4.3	145	09.04 - 12.14	4022	
SAVANA 1500 Standard Cargo Van	4.3	149	09.02 - 12.04	4022	
SAVANA 1500 Standard Cargo Van	4.3 AWD	145	09.04 - 12.14	4022	
SAVANA 1500 Standard Cargo Van	4.3 AWD	149	09.02 - 12.04	4022	
SAVANA 1500 Standard Cargo Van	5.3	213	09.02 - 12.04	4022	
SAVANA 1500 Standard Cargo Van	5.3	220	09.04 - 12.07	4022	
SAVANA 1500 Standard Cargo Van	5.3 AWD	213	09.02 - 12.04	4022	
SAVANA 1500 Standard Cargo Van	5.3 AWD	220	09.04 - 12.07	4022	
SAVANA 1500 Standard Cargo Van	5.3 Flexfuel	220	09.06 - 12.07	4022	
SAVANA 1500 Standard Cargo Van	5.3 Flexfuel	224	09.07 - 12.09	4022	

MAKE & MODEL		KW	YEAR		
GMC					
SAVANA 1500 Standard Cargo Van	5.3 Flexfuel AWD	220	09.06 - 12.07	4022	
SAVANA 1500 Standard Cargo Van	5.3 Flexfuel AWD	224	09.07 - 12.09	4022	
SAVANA 1500 Standard Passenger Van	4.3	149	09.02 - 12.04	4022	
SAVANA 1500 Standard Passenger Van	4.3 AWD	149	09.02 - 12.04	4022	
SAVANA 1500 Standard Passenger Van	5.3	213	09.02 - 12.04	4022	
SAVANA 1500 Standard Passenger Van	5.3	220	09.04 - 12.07	4022	
SAVANA 1500 Standard Passenger Van	5.3	224	09.07 - 12.09	4022	
SAVANA 1500 Standard Passenger Van	5.3 AWD	213	09.02 - 12.04	4022	
SAVANA 1500 Standard Passenger Van	5.3 AWD	220	09.04 - 12.07	4022	
SAVANA 1500 Standard Passenger Van	5.3 AWD	224	09.07 - 12.09	4022	
SAVANA 1500 Standard Passenger Van	5.3 Flexfuel	220	09.06 - 12.07	4022	
SAVANA 1500 Standard Passenger Van	5.3 Flexfuel	224	09.07 - 12.09	4022	
SAVANA 1500 Standard Passenger Van	5.3 Flexfuel AWD	220	09.06 - 12.07	4022	
SAVANA 1500 Standard Passenger Van	5.3 Flexfuel AWD	224	09.07 - 12.09	4022	
YUKON	4.8	205	09.99 - 12.00	4022	
YUKON	4.8	205	09.99 - 12.05	4022	
YUKON	4.8	213	09.05 - 12.06	4022	
YUKON	4.8 4WD	205	09.99 - 12.00	4022	
YUKON	4.8 4WD	205	09.99 - 12.05	4022	
YUKON	4.8 4WD	213	09.05 - 12.06	4022	
YUKON	5.3	213	09.00 - 12.04	4022	
YUKON	5.3	220	09.03 - 12.06	4022	
YUKON	5.3 4WD	213	09.00 - 12.04	4022	
YUKON	5.3 4WD	220	09.03 - 12.06	4022	
YUKON	5.3 Flexfuel	213	09.01 - 12.04	4022	
YUKON	5.3 Flexfuel	220	09.03 - 12.06	4022	
YUKON	5.3 Flexfuel 4WD	213	09.01 - 12.04	4022	
YUKON	5.3 Flexfuel 4WD	220	09.03 - 12.06	4022	
YUKON	6.0 4WD	242	09.03 - 12.05	4022	
YUKON	6.0 4WD	250	09.05 - 12.06	4022	
YUKON (GMT900)	6.2 4WD	301	09.10 - 07.14		4184
YUKON XL 1500	5.3	220	09.03 - 12.05	4022	
YUKON XL 1500	5.3 4WD	220	09.03 - 12.05	4022	
YUKON XL 2500	6.0	242	09.03 - 12.05	4022	
YUKON XL 2500	6.0	250	09.05 - 12.06	4022	
YUKON XL 2500	6.0	262	09.07 - 12.09		4022
YUKON XL 2500	6.0	273	09.06 - 12.08		4022
YUKON XL 2500	6.0 4WD	242	09.03 - 12.05	4022	
YUKON XL 2500	6.0 4WD	250	09.05 - 12.06	4022	
YUKON XL 2500	6.0 4WD	262	09.07 - 12.09		4022
YUKON XL 2500	6.0 4WD	273	09.06 - 12.08		4022
YUKON XL 2500	6.0 FLEX	262	09.09 - 12.13		4022
YUKON XL 2500	6.0 FLEX 4WD	262	09.09 - 12.13		4022
YUKON XL 2500	8.1	254	09.00 - 12.03	4022	
YUKON XL 2500	8.1 4WD	254	09.00 - 12.03	4022	
GREAT WALL					
SING	2.2 DN	76	08/03 – 05/10	3714	
SING	2.8 DNX EGR	57	08/03 – 01/08	3714	
SING	2.8 Turbo	70	01/08 – 05/10	3714	
SING Closed Off-Road Vehicle	22	75	06/05 – 05/10	3714	
SING Closed Off-Road Vehicle	2.8 Turbo	70	01/09 – 05/10	3714	
HAFEI					
LOBO / LUBAO	1.1	48	06.03 - 12.10	3974	
SAIBAO 3 Saloon	16	74	04/05 12/10	3632	
SAIBAO 5 Saloon	16	74	01/07 -	3632	
SAIBAO 5 Saloon	18	98	01/07 – 12/08	3632	
HAIMA(FAW)					
3 Saloon	16	85	09/09 – 12/12	3832	
3 Saloon	18	90	06/07 12/10	3832	
FAMILY II	16	71	09/06 – 11/10		3875
FAMILY II	16	74	03/07 – 11/10		3875
FAMILY II	16	85	09/06 – 11/10		3875
FREEMA	18	90	09/10 -	3832	
HAPPIN Saloon	13	71	07/11 -	3832	
HAPPIN Saloon	16	74	06/07 – 05/09	3832	
HAPPIN Saloon	16	89	05/09 – 12/09	3832	
HUANDONG	16	88	04/09 – 12/13	3832	
HUANDONG	18	90	12/08 – 12/10	3832	
PREMACY MPV	16	85	10/09 -	3832	

MAKE & MODEL		KW	YEAR		
HAIMA(FAW)					
PREMACY MPV	18	90	03/07 – 10/09	3832	
HAWTAI					
SANTA FE C9	1.8 Turbo	118	09/09 – 12/11	3960	
SANTA FE C9	1.8 Turbo	118	09/09 – 12/11		3989
SANTA FE C9	2.0 TDI All-wheel Drive	93	09/09 – 12/10	3960	
SANTA FE C9	2.0 TDI All-wheel Drive	93	09/09 – 12/10		3989
SANTA FE C9	2.7 All-wheel Drive	132	09/09 – 12/11	3960	
SANTA FE C9	2.7 All-wheel Drive	132	09/09 – 12/11		3989
TERRACAN T9	24	93	11/09 – 12/11	4118	
TERRACAN T9	2.4 All-wheel Drive	93	11/09 – 12/11	4118	
HOLDEN					
ADVENTRA (VY)	3.6 i V6 (H7)	195	05/06 – 07/09	4189	
ADVENTRA (VY)	5.7 i V8 (LS1)	250	11/04 – 12/07	4189	
ADVENTRA (VY)	5.7 i V8 CX8/LX8 (LS1)	235	08/03 – 10/04	4189	
ADVENTRA Estate (VY)	5.7 i V8 CX8/LX8 AWD	235	08/03 – 10/04		4188
ADVENTRA Estate (VZ)	3.6 i V6 AWD	195	05/06 – 07/09		4188
ADVENTRA Estate (VZ)	5.7 i V8 AWD	250	11/04 – 12/07		4188
ADVENTRA Estate (VZ)	5.7 i V8 CX8/LX8 AWD	235	10/04 – 12/07		4188
APOLLO Estate (JK)	20	82	08/89 – 08/91		3776
APOLLO Estate (JK)	2.0 i	88	08/89 – 08/91		3776
APOLLO Estate (JL)	2.0 i	88	08/91 – 02/93		3776
APOLLO Estate (JM)	2.2 i	93	03/93 – 05/95	3554	
APOLLO Estate (JM)	2.2 i	93	03/93 – 05/95	3651	
APOLLO Estate (JM)	2.2 i	93	03/93 – 05/95		3776
APOLLO Estate (JM)	3.0 i	136	03/93 – 05/95		3776
APOLLO Estate (JM)	3.0 i	136	03/93 – 05/95	4086	
APOLLO Estate (JP)	3.0 i	136	01/95 – 05/97		3776
APOLLO Estate (JP)	3.0 i	136	01/95 – 05/97	4086	
APOLLO Saloon (JK)	20	82	08/89 – 07/91		3776
APOLLO Saloon (JK)	2.0 i	88	08/89 – 08/91		3776
APOLLO Saloon (JM)	2.2 i	93	03/93 – 05/95	3554	
APOLLO Saloon (JM)	2.2 i	93	03/93 – 05/95	3651	
APOLLO Saloon (JM)	2.2 i	93	03/93 – 05/95		3776
APOLLO Saloon (JM)	3.0 i	136	03/93 – 05/95		3776
APOLLO Saloon (JM)	3.0 i	136	03/93 – 05/95	4086	
ASTRA (AH)	1.8 i	92	07/05 – 03/07	4042	
ASTRA (AH)	1.8 i	103	04/07 – 03/10	4042	
ASTRA (AH)	1.9 CDTI	88	06/06 – 03/10	4042	
ASTRA (AH)	1.9 CDTI	110	06/06 – 03/10	4042	
ASTRA (AH)	2.2 i	109	12/06 – 03/08	4042	
ASTRA Convertible (TS)	2.0 i Turbo	147	06/02 – 07/04		4040
ASTRA Convertible (TS)	2.2 i	108	06/02 – 12/06	4042	
ASTRA Estate (AH)	1.8 i	103	04/07 – 03/10	4042	
ASTRA Estate (AH)	1.9 CDTI	88	08/08 – 03/10	4042	
ASTRA Hatchback (TR)	1.6 CD	74	08/95 – 09/98	3470	
ASTRA Hatchback (TR)	1.6 CD	74	08/95 – 09/98	3505	
ASTRA Hatchback (TR)	1.6 CD	74	08/95 – 09/98	3615	
ASTRA Hatchback (TR)	1.8 i	85	09/96 – 09/98		3469
ASTRA Hatchback (TR)	1.8 i	85	09/96 – 09/98	3470	
ASTRA Hatchback (TR)	1.8 i	85	09/96 – 09/98	3505	
ASTRA Hatchback (TR)	1.8 i	85	09/96 – 09/98	3615	
ASTRA Hatchback (TR)	2.0 GSi	100	08/95 – 09/98		3469
ASTRA Hatchback (TR)	2.0 GSi	100	08/95 – 09/98	3470	
ASTRA Hatchback (TR)	2.0 GSi	100	08/95 – 09/98	3505	
ASTRA Hatchback (TR)	2.0 GSi	100	08/95 – 09/98	3615	
ASTRA Hatchback (TS)	1.8 i	85	02/98 – 08/00	3762	
ASTRA Hatchback (TS)	1.8 i	85	02/98 – 08/00		4040
ASTRA Hatchback (TS)	1.8 i	85	02/98 – 08/00	4042	
ASTRA Hatchback (TS)	1.8 i	92	09/00 – 10/04	3762	
ASTRA Hatchback (TS)	1.8 i	92	09/00 – 10/04		4040
ASTRA Hatchback (TS)	1.8 i	92	09/00 – 10/04	4042	
ASTRA Hatchback (TS)	2.0 i Turbo	147	05/03 – 07/04		4040
ASTRA Hatchback (TS)	2.2 i	108	09/00 – 07/04		4040
ASTRA Hatchback (TS)	2.2 i	108	09/00 – 07/04	4042	
ASTRA Saloon (TR)	1.6 CD	74	08/95 – 01/98	3470	
ASTRA Saloon (TR)	1.6 CD	74	08/95 – 01/98	3505	
ASTRA Saloon (TR)	1.6 CD	74	08/95 – 01/98	3615	
ASTRA Saloon (TR)	1.8 SRi	85	09/96 – 09/98		3469
ASTRA Saloon (TR)	1.8 SRi	85	09/96 – 09/98	3470	
ASTRA Saloon (TR)	1.8 SRi	85	09/96 – 09/98	3505	

MAKE & MODEL		KW	YEAR		
HOLDEN					
ASTRA Saloon (TR)	1.8 SRi	85	09/96 – 09/98	3615	
ASTRA Saloon (TS)	1.8 i	92	09/00 – 10/04	3762	
ASTRA Saloon (TS)	1.8 i	92	09/00 – 10/04		4040
ASTRA Saloon (TS)	1.8 i	92	09/00 – 10/04	4042	
ASTRA SPORTSBACK (AH)	22	110	12/06 – 03/08	4042	
ASTRA SPORTSBACK (AH)	1.8 i	92	07/05 – 03/08	4042	
ASTRA SPORTSBACK (AH)	1.8 i	103	04/07 – 03/10	4042	
ASTRA SPORTSBACK (AH)	2.0 i Turbo	147	06/06 – 03/10	4042	
ASTRA SPORTSBACK (AH)	2.2 i	110	12/06 – 03/10	4042	
ASTRA TWINTOP (AH)	2.2 i	110	03/08 – 03/10	4042	
BARINA Convertible (SB)	1.2 i	33	04/94 – 07/97	3623	
BARINA Hatchback (SB)	1.4 i	44	04/94 – 07/97	3623	
BARINA Hatchback (SB)	1.4 i	60	11/97 – 11/00	3623	
BARINA Hatchback (SB)	1.4 i	60	09/97 – 02/01	3623	
BARINA Hatchback (SB)	1.6 i	78	04/94 – 08/98	3623	
BARINA Hatchback (TK)	1.6 i	77	03/05 – 06/12	3951	
BARINA Hatchback (XC)	1.4 Efi	66	01/04 – 02/05	3846	
BARINA Hatchback (XC)	1.4 Efi	66	01/04 – 02/05		4040
BARINA Hatchback (XC)	1.4 Sfi	66	09/00 – 12/05	3846	
BARINA Hatchback (XC)	1.8 SRi	92	09/00 – 02/05	3846	
BARINA Saloon (TK)	1.6 i	77	11/05 – 06/12	3951	
CALIBRA (YE)	2.0 i	85	10/91 – 07/95		3469
CALIBRA (YE)	2.0 i	85	10/91 – 07/95	3470	
CALIBRA (YE)	2.0 i	85	10/91 – 07/95	3505	
CALIBRA (YE)	2.0 i	85	10/91 – 07/95	3615	
CALIBRA (YE)	2.0 i 16V	100	07/95 – 11/97		3469
CALIBRA (YE)	2.0 i 16V	100	07/95 – 11/97	3470	
CALIBRA (YE)	2.0 i 16V	100	07/95 – 11/97	3505	
CALIBRA (YE)	2.0 i 16V	100	07/95 – 11/97	3615	
CALIBRA (YE)	2.0 i 16V	110	10/91 – 07/95		3469
CALIBRA (YE)	2.0 i 16V	110	10/91 – 07/95	3470	
CALIBRA (YE)	2.0 i 16V	110	10/91 – 07/95	3505	
CALIBRA (YE)	2.0 i 16V	110	10/91 – 07/95	3615	
CALIBRA (YE)	2.0 i Turbo AWD	150	03/92 – 11/97		3469
CALIBRA (YE)	2.0 i Turbo AWD	150	03/92 – 11/97	3665	
CALIBRA (YE)	2.0 i Turbo AWD	150	03/92 – 11/97	3736	
CALIBRA (YE)	2.5 i V6	125	07/95 – 11/97		3469
CALIBRA (YE)	2.5 i V6	125	07/95 – 11/97	3665	
CALIBRA (YE)	2.5 i V6	125	07/95 – 11/97	3736	
CAPRICE Saloon (WH)	3.8 i V6	147	06/99 – 08/01		4188
CAPRICE Saloon (WH)	3.8 i V6	152	08/01 – 04/03		4188
CAPRICE Saloon (WH)	3.8 i V6 Supercharged	171	06/99 – 08/01		4188
CAPRICE Saloon (WH)	5.7 i V8	220	06/99 – 10/00		4188
CAPRICE Saloon (WH)	5.7 i V8	225	10/00 – 04/03		4188
CAPRICE Saloon (WK)	3.8 i V6	152	05/03 – 07/04		4188
CAPRICE Saloon (WK)	3.8 i V6 Supercharged	171	05/03 – 07/04		4188
CAPRICE Saloon (WK)	5.7 i V8	245	05/03 – 07/04		4188
CAPRICE Saloon (WL)	3.6 i V6	190	08/04 – 07/06		4188
CAPRICE Saloon (WL)	5.7 i V8	250	08/04 – 01/06		4188
CAPRICE Saloon (WL)	6.0 i V8	260	02/06 – 07/06		4188
CAPTIVA (CG)	2.0 TD	110	08/08 – 12/11	3976	
CAPTIVA (CG)	2.0 TD AWD	110	03/07 – 12/11	3976	
CAPTIVA (CG)	2.4 i	103	12/09 – 12/11	3976	
CAPTIVA (CG)	2.4 i AWD	103	12/09 – 12/11	3976	
CAPTIVA (CG)	3.2 i AWD	167	12/06 – 09/08	3976	
CAPTIVA (CG)	3.2 i AWD	169	12/08 – 12/11	3976	
CAPTIVA 5 (CG5)	2.2 TD 4WD	135	03/11 -	3976	
CAPTIVA 5 (CG5)	2.4 i	123	03/11 -	3976	
CASCADA Convertible (CJ)	16	125	12/14 -	4149	
COLORADO Pickup (RC)	3.0 TD (TFS85)	120	03/08 – 06/12	4124	
COLORADO Pickup (RC)	3.0 TD 4x4 (TFR85)	120	03/08 – 06/12	4124	
COLORADO Pickup (RC)	3.6 i V6 (TFR27)	157	03/08 – 06/12	4124	
COLORADO Platform/Chassis (RC)	3.0 TD (TFR85)	120	03/08 – 06/12	4124	
COLORADO Platform/Chassis (RC)	3.0 TD 4x4 (TFS85)	120	03/08 – 06/12	4124	
COLORADO Platform/Chassis (RC)	3.6 i V6 (TFR27)	157	03/08 – 06/12	4124	
COMBO Box (SB)	1.4 i	44	03/96 – 07/97	3623	
COMBO Box (XC)	1.4 i	66	04/05 – 12/12	3846	
COMBO Box (XC)	1.4 i	66	04/05 – 12/12		4040
COMBO Box (XC)	1.4 i	66	04/05 – 12/12	4042	
COMBO Box (XC)	1.6 i	62	09/02 – 04/05	3846	
COMBO Box (XC)	1.6 i	62	09/02 – 04/05		4040

MAKE & MODEL		KW	YEAR		
HOLDEN					
COMBO Box (XC)	1.6 i	62	09/02 – 04/05	4042	
COMMODORE (VT)	3.8 i V6 (L36)	147	09/97 – 08/02	4189	
COMMODORE (VT)	3.8 i V6 (L36)	152	09/02 – 08/04	4189	
COMMODORE (VT)	3.8 i V6 Supercharged (L36)	171	09/97 – 08/00	4189	
COMMODORE (VT)	3.8 i V6 Supercharged (L36)	171	09/00 -08/02	4189	
COMMODORE (VT)	5.0 i V8	195	04/98 – 08/00	4189	
COMMODORE (VZ)	3.6 i V6 (H7)	190	09/04 – 08/07	4189	
COMMODORE Estate (VT)	3.8 i V6	147	09/97 – 08/02		4188
COMMODORE Estate (VT)	5.0 i V8	179	09/97 – 08/02		4188
COMMODORE Estate (VT)	5.7 i V8	220	06/99 – 08/00		4188
COMMODORE Estate (VX)	3.8 i V6	152	09/00 – 09/02		4188
COMMODORE Estate (VX)	5.7 i V8	225	09/00 – 09/02		4188
COMMODORE Estate (VY)	3.8 i V6	152	09/02 – 08/04		4188
COMMODORE Estate (VY)	5.7 i V8	235	09/02 – 08/03		4188
COMMODORE Estate (VZ)	3.6 i V6	175	09/04 – 07/06		4188
COMMODORE Estate (VZ)	3.6 i V6	180	09/04 – 07/07		4188
COMMODORE Estate (VZ)	3.6 i V6 Dual Fuel LPG	175	09/04 – 07/06		4188
COMMODORE Estate (VZ)	5.7 i V8	235	09/04 – 12/05		4188
COMMODORE Estate (VZ)	6.0 i V8	260	01/06 – 01/07		4188
COMMODORE Pickup (VU)	3.8 i V6	147	12/00 – 09/02		4188
COMMODORE Pickup (VU)	5.7 i V8	225	12/00 – 09/02		4188
COMMODORE Pickup (VY)	3.8 i V6	152	09/02 – 08/04		4188
COMMODORE Pickup (VY)	3.8 i V6 Supercharged	171	09/02 – 08/04		4188
COMMODORE Pickup (VY)	5.7 i V8	225	09/02 – 08/03		4188
COMMODORE Pickup (VY)	5.7 i V8	235	09/02 – 08/04		4188
COMMODORE Pickup (VY)	5.7 i V8	245	09/02 – 08/03		4188
COMMODORE Pickup (VZ)	3.6 i V6	175	09/04 – 07/06		4188
COMMODORE Pickup (VZ)	3.6 i V6 All-wheel Drive	190	09/04 – 08/07		4188
COMMODORE Pickup (VZ)	3.6 i V6 Dual Fuel LPG	175	10/06 – 08/07		4188
COMMODORE Pickup (VZ)	5.7 i V8	250	09/04 – 02/06		4188
COMMODORE Pickup (VZ)	6.0 i V8	260	11/05 – 08/07		4188
COMMODORE Saloon (VE)	3.6 i V6	210	09/09 – 05/13		4188
COMMODORE Saloon (VT)	3.8 i V6	147	09/97 – 08/00		4188
COMMODORE Saloon (VT)	3.8 i V6 Supercharged	171	09/97 – 08/00		4188
COMMODORE Saloon (VT)	5.0 i V8	179	09/97 – 06/99		4188
COMMODORE Saloon (VT)	5.0 i V8	195	04/98 – 08/00		4188
COMMODORE Saloon (VT)	5.7 i V8	220	06/99 – 08/00		4188
COMMODORE Saloon (VX)	3.8 i V6	152	09/00 – 09/02		4188
COMMODORE Saloon (VX)	3.8 i V6 Supercharged	171	09/00 – 08/02		4188
COMMODORE Saloon (VX)	5.7 i V8	225	09/00 – 09/02		4188
COMMODORE Saloon (VY)	3.8 i V6	152	09/02 – 08/04		4188
COMMODORE Saloon (VY)	3.8 i V6 Supercharched	171	09/02 – 08/04		4188
COMMODORE Saloon (VY)	5.7 i V8	235	09/02 – 08/03		4188
COMMODORE Saloon (VY)	5.7 i V8	245	09/02 – 08/03		4188
COMMODORE Saloon (VZ)	3.6 i V6	175	09/04 – 06/06		4188
COMMODORE Saloon (VZ)	3.6 i V6	190	09/04 – 06/06		4188
COMMODORE Saloon (VZ)	3.6 i V6 Dual Fuel LPG	175	08/05 – 06/06		4188
COMMODORE Saloon (VZ)	5.7 i V8	235	09/04 – 12/05		4188
COMMODORE Saloon (VZ)	5.7 i V8	250	09/04 – 12/05		4188
COMMODORE Saloon (VZ)	6.0 i V8	260	11/05 – 06/06		4188
CREWMAN Pickup (VY)	3.8 i V6	152	09/03 – 07/04		4188
CREWMAN Pickup (VZ)	3.6 i V6	180	09/06 – 12/07		4188
CREWMAN Pickup (VZ)	3.6 i V6 4x4	175	11/05 – 12/07		4188
CREWMAN Pickup (VZ)	5.7 i V8	235	08/04 – 02/06		4188
CREWMAN Pickup (VZ)	5.7 i V8 4x4	235	08/04 – 02/06		4188
CREWMAN Pickup (VZ)	6.0 i V8	270	06/06 – 12/07		4188
CREWMAN Pickup (VZ)	6.0 i V8 4x4	260	11/05 – 07/06		4188
CRUZE Hatchback (YG)	1.5 i AWD	73	08/02 – 06/06	3928	
CRUZE Saloon (JG)	1.8 i	104	06/09 – 03/11	4008	
CRUZE Saloon (JG)	1.8 i	104	06/09 – 03/11	4014	
CRUZE Saloon (JG)	2.0 DTFi	110	06/09 – 03/11	4008	
CRUZE Saloon (JG)	2.0 DTFi	110	06/09 – 03/11	4014	
CRUZE Saloon (JG)	2.0 DTFi	110	06/09 – 03/11	4230	
EPICA Saloon (EP)	2.0 i	105	03/07 – 06/08	4073	
EPICA Saloon (EP)	2.5 i	115	03/07 – 12/11	4073	
EPICA Saloon (EP)	TD	110	07/08 – 12/11	4073	
FRONTERA (UES)	2.0 i 4x4	85	10/95 – 03/99	3674	
FRONTERA (UES)	2.0 i 4x4	85	10/95 – 03/99	3743	
FRONTERA (UES)	2.0 i 4x4	85	10/95 – 03/99		3887
FRONTERA (UES)	2.2 i 4x4	96	02/99 – 07/02	3674	
FRONTERA (UES)	2.2 i 4x4	96	02/99 – 07/02	3743	

MAKE & MODEL		KW	YEAR		
HOLDEN					
FRONTERA (UES)	2.2 i 4x4	96	02/99 – 07/02		3887
FRONTERA (UES)	3.2 i 4x4	151	08/98 – 04/04	3674	
FRONTERA (UES)	3.2 i 4x4	151	08/98 – 04/04	3743	
FRONTERA (UES)	3.2 i 4x4	151	08/98 – 04/04		3887
INSIGNIA Saloon (GA)	2.8 VXR AWD	239	01/15 -		4150
JACKAROO (UBS)	2.6 4x4 (UBS17)	85	10/87 – 09/91	3657	
JACKAROO (UBS)	2.6 4x4 (UBS17)	85	10/87 – 09/91	3757	
JACKAROO (UBS)	2.6 4x4 (UBS17)	85	10/87 – 09/91	3857	
JACKAROO (UBS)	2.8 TD 4x4 (UBS55)	74	10/87 – 09/91	3657	
JACKAROO (UBS)	2.8 TD 4x4 (UBS55)	74	10/87 – 09/91	3757	
JACKAROO (UBS)	2.8 TD 4x4 (UBS55)	74	10/87 – 09/91	3857	
JACKAROO / MONTEREY (UBS)	3.0 TD 4x4 (UBS73)	117	03/98 – 09/04	3674	
JACKAROO / MONTEREY (UBS)	3.0 TD 4x4 (UBS73)	117	03/98 – 09/04	3743	
JACKAROO / MONTEREY (UBS)	3.0 TD 4x4 (UBS73)	117	03/98 – 09/04		3887
JACKAROO / MONTEREY (UBS)	3.1 TD 4x4 (UBS69)	84	04/92 – 02/98	3674	
JACKAROO / MONTEREY (UBS)	3.1 TD 4x4 (UBS69)	84	04/92 – 02/98	3743	
JACKAROO / MONTEREY (UBS)	3.1 TD 4x4 (UBS69)	84	04/92 – 02/98		3887
JACKAROO / MONTEREY (UBS)	3.2 i 4x4 (UBS25)	130	04/92 – 02/98	3674	
JACKAROO / MONTEREY (UBS)	3.2 i 4x4 (UBS25)	130	04/92 – 02/98	3743	
JACKAROO / MONTEREY (UBS)	3.2 i 4x4 (UBS25)	130	04/92 – 02/98		3887
JACKAROO / MONTEREY (UBS)	3.5 RS 4x4 (UBS26)	158	03/98 – 09/04	3674	
JACKAROO / MONTEREY (UBS)	3.5 RS 4x4 (UBS26)	158	03/98 – 09/04	3743	
JACKAROO / MONTEREY (UBS)	3.5 RS 4x4 (UBS26)	158	03/98 – 09/04		3887
MONARO (V2)	3.8 (L67)	171	12/01 – 08/03	4189	
MONARO (V2)	5.7 i V8 (LS1)	245	08/03 – 09/04	4189	
MONARO Coupe (V2)	38	171	12/01 – 08/03		4188
MONARO Coupe (V2)	5.7 i V8	225	12/01 – 01/03		4188
MONARO Coupe (V2)	5.7 i V8	235	01/03 – 08/03		4188
MONARO Coupe (V2)	5.7 i V8	245	08/03 – 09/04		4188
MONARO Coupe (VZ)	5.7 i V8	260	09/04 – 07/06		4188
NOVA Hatchback (LG)	16	78	10/94 – 12/97	3554	
NOVA Hatchback (LG)	16	78	10/94 – 12/97	3651	
NOVA Hatchback (LG)	1.8 i	85	10/94 – 12/97	3554	
NOVA Hatchback (LG)	1.8 i	85	10/94 – 12/97	3651	
NOVA Hatchback (LG)	1.8 i	85	10/94 – 12/97		3776
NOVA Saloon (LG)	1.6 i	78	10/94 – 12/97	3554	
NOVA Saloon (LG)	1.6 i	78	10/94 – 12/97	3651	
NOVA Saloon (LG)	1.8 i	85	10/94 – 12/97	3554	
NOVA Saloon (LG)	1.8 i	85	10/94 – 12/97	3651	
NOVA Saloon (LG)	1.8 i	85	10/94 – 12/97		3776
ONE TONNER Platform/Chassis (VY)	3.6 i V6	175	08/03 – 07/04		4188
ONE TONNER Platform/Chassis (VY)	3.8 i V6	152	06/03 – 12/04		4188
ONE TONNER Platform/Chassis (VY)	5.7 i V8	235	08/03 – 07/04		4188
ONE TONNER Platform/Chassis (VZ)	3.6 i V6	175	11/04 – 12/05		4188
ONE TONNER Platform/Chassis (VZ)	3.6 i V6 All-wheel Drive	175	11/04 – 12/05		4188
ONE TONNER Platform/Chassis (VZ)	5.7 i V8	235	11/04 – 12/05		4188
RANCHO	14	59	01/77 – 07/84	3311	
RODEO Pickup (RA)	2.4 i (TFR32)	94	02/03 – 07/08	3886	
RODEO Pickup (RA)	3.0 DiTD (TFR85)	117	01/07 – 10/08	3886	
RODEO Pickup (RA)	3.0 DiTD 4x4 (TFS85)	117	01/07 – 10/08	3886	
RODEO Pickup (RA)	3.0 TD (TFR77)	96	02/03 – 01/07	3886	
RODEO Pickup (RA)	3.0 TD 4x4 (TFS77)	96	02/03 – 01/07	3886	
RODEO Pickup (RA)	3.5 i (TFR26)	147	02/03 – 12/05	3674	
RODEO Pickup (RA)	3.5 i (TFR26)	147	02/03 – 12/05	3743	
RODEO Pickup (RA)	3.5 i (TFR26)	147	02/03 – 12/05		3887
RODEO Pickup (RA)	3.5 i 4x4 (TFS26)	147	02/03 – 12/05	3674	
RODEO Pickup (RA)	3.5 i 4x4 (TFS26)	147	02/03 – 12/05	3743	
RODEO Pickup (RA)	3.5 i 4x4 (TFS26)	147	02/03 – 12/05		3887
RODEO Pickup (RA)	3.6 i (TFR27)	157	01/06 – 06/08	3674	
RODEO Pickup (RA)	3.6 i (TFR27)	157	01/06 – 06/08	3743	
RODEO Pickup (RA)	3.6 i (TFR27)	157	01/06 – 06/08		3887
RODEO Pickup (RA)	3.6 i 4x4 (TFS27)	157	01/06 – 06/08	3674	
RODEO Pickup (RA)	3.6 i 4x4 (TFS27)	157	01/06 – 06/08	3743	
RODEO Pickup (RA)	3.6 i 4x4 (TFS27)	157	01/06 – 06/08		3887
RODEO Pickup (TF)	2.2 i (TFR30)	87	06/98 – 02/03	3657	
RODEO Pickup (TF)	2.2 i (TFR30)	87	06/98 – 02/03	3757	
RODEO Pickup (TF)	2.2 i (TFR30)	87	06/98 – 02/03	3857	
RODEO Pickup (TF)	2.3 i (TFR16)	69	06/91 – 08/03	3657	
RODEO Pickup (TF)	2.3 i (TFR16)	69	06/91 – 08/03	3757	
RODEO Pickup (TF)	2.3 i (TFR16)	69	06/91 – 08/03	3857	
RODEO Pickup (TF)	2.5 D (TFR54)	57	02/88 – 12/92	3657	

MAKE & MODEL		KW	YEAR		
HOLDEN					
RODEO Pickup (TF)	2.5 D (TFR54)	57	02/88 – 12/92	3757	
RODEO Pickup (TF)	2.5 D (TFR54)	57	02/88 – 12/92	3857	
RODEO Pickup (TF)	2.5 D 4x4 (TFS54)	57	02/88 – 12/92	3657	
RODEO Pickup (TF)	2.5 D 4x4 (TFS54)	57	02/88 – 12/92	3757	
RODEO Pickup (TF)	2.5 D 4x4 (TFS54)	57	02/88 – 12/92	3857	
RODEO Pickup (TF)	2.6 i (TFR17)	88	02/88 – 06/98	3657	
RODEO Pickup (TF)	2.6 i (TFR17)	88	02/88 – 06/98	3757	
RODEO Pickup (TF)	2.6 i (TFR17)	88	02/88 – 06/98	3857	
RODEO Pickup (TF)	2.6 i 4x4 (TFS17)	88	02/88 – 06/98	3657	
RODEO Pickup (TF)	2.6 i 4x4 (TFS17)	88	02/88 – 06/98	3757	
RODEO Pickup (TF)	2.6 i 4x4 (TFS17)	88	02/88 – 06/98	3857	
RODEO Pickup (TF)	2.8 TD (TFR55)	74	05/90 – 02/03	3657	
RODEO Pickup (TF)	2.8 TD (TFR55)	74	05/90 – 02/03	3757	
RODEO Pickup (TF)	2.8 TD (TFR55)	74	05/90 – 02/03	3857	
RODEO Pickup (TF)	2.8 TD 4x4 (TFS55)	74	05/90 – 02/03	3657	
RODEO Pickup (TF)	2.8 TD 4x4 (TFS55)	74	05/90 – 02/03	3757	
RODEO Pickup (TF)	2.8 TD 4x4 (TFS55)	74	05/90 – 02/03	3857	
RODEO Pickup (TF)	3.0 TD 4x4 (TFS77)	96	12/01 – 02/03	3657	
RODEO Pickup (TF)	3.0 TD 4x4 (TFS77)	96	12/01 – 02/03	3757	
RODEO Pickup (TF)	3.0 TD 4x4 (TFS77)	96	12/01 – 02/03	3857	
RODEO Pickup (TF)	3.2 4x4 (TFS25)	140	02/98 – 02/03	3674	
RODEO Pickup (TF)	3.2 4x4 (TFS25)	140	02/98 – 02/03	3743	
RODEO Pickup (TF)	3.2 4x4 (TFS25)	140	02/98 – 02/03		3887
RODEO Pickup (TF)	3.2 i (TFR25)	140	02/98 – 02/03	3674	
RODEO Pickup (TF)	3.2 i (TFR25)	140	02/98 – 02/03	3743	
RODEO Pickup (TF)	3.2 i (TFR25)	140	02/98 – 02/03		3887
RODEO Platform/Chassis (RA)	2.4 i (TFR32)	94	08/03 – 07/08	3886	
RODEO Platform/Chassis (RA)	3.0 DiTD (TFR85)	117	01/07 – 10/08	3886	
RODEO Platform/Chassis (RA)	3.5 i (TFR26)	147	02/03 – 12/05	3886	
RODEO Platform/Chassis (RA)	3.5 i 4x4 (TFS26)	147	02/03 – 12/05	3886	
RODEO Platform/Chassis (TF)	2.6 i (TFR17)	88	02/88 – 02/98	3657	
RODEO Platform/Chassis (TF)	2.6 i (TFR17)	88	02/88 – 02/98	3757	
RODEO Platform/Chassis (TF)	2.6 i (TFR17)	88	02/88 – 02/98	3857	
RODEO Platform/Chassis (TF)	2.6 i 4x4 (TFS17)	88	02/88 – 06/98	3657	
RODEO Platform/Chassis (TF)	2.6 i 4x4 (TFS17)	88	02/88 – 06/98	3757	
RODEO Platform/Chassis (TF)	2.6 i 4x4 (TFS17)	88	02/88 – 06/98	3857	
RODEO Platform/Chassis (TF)	2.8 TD (TFR55)	74	05/90 – 02/03	3657	
RODEO Platform/Chassis (TF)	2.8 TD (TFR55)	74	05/90 – 02/03	3757	
RODEO Platform/Chassis (TF)	2.8 TD (TFR55)	74	05/90 – 02/03	3857	
RODEO Platform/Chassis (TF)	3.2 i (TFR25)	140	02/98 – 02/03	3674	
RODEO Platform/Chassis (TF)	3.2 i (TFR25)	140	02/98 – 02/03	3743	
RODEO Platform/Chassis (TF)	3.2 i 4x4 (TFS25)	140	03/98 02/03	3674	
RODEO Platform/Chassis (TF)	3.2 i 4x4 (TFS25)	140	03/98 – 02/03	3743	
SCURRY Bus (NB)	10	33	07/85 – 12/87	3509	
SCURRY Bus (NB)	10	33	07/85 – 12/87	4034	
STATESMAN (WH)	3.6 VVT (H7)	190	08/04 – 07/06	4189	
STATESMAN (WH)	3.8 i V6	147	06/99 – 04/03	4189	
STATESMAN (WH)	3.8 i V6 (L36)	152	08/01 – 04/03	4189	
STATESMAN (WH)	3.8 i V6 Supercharged (L67)	171	08/01 – 04/03	4189	
STATESMAN (WH)	5.7 i V8 (LS1)	220	06/99 – 11/02	4189	
STATESMAN (WH)	5.7 i V8 (LS1)	225	11/02 – 04/03	4189	
STATESMAN Saloon (WH)	3.8 i V6	147	06/99 – 04/03		4188
STATESMAN Saloon (WH)	3.8 i V6	152	08/01 – 04/03		4188
STATESMAN Saloon (WH)	3.8 i V6 Supercharged	171	08/01 – 04/03		4188
STATESMAN Saloon (WH)	5.7 i V8	220	06/99 – 11/02		4188
STATESMAN Saloon (WH)	5.7 i V8	225	11/02 – 04/03		4188
STATESMAN Saloon (WK)	3.8 i V6	152	05/03 – 07/04		4188
STATESMAN Saloon (WK)	3.8 i V6 Supercharged	171	05/03 – 07/04		4188
STATESMAN Saloon (WK)	5.7 i V8	245	05/03 – 07/04		4188
STATESMAN Saloon (WL)	3.6 VVT	190	08/04 – 07/06		4188
STATESMAN Saloon (WL)	5.7 i V8	250	08/04 – 07/06		4188
STATESMAN Saloon (WL)	6.0 i V8	260	02/06 – 07/06		4188
TIGRA (XC)	18	92	09/05 – 12/07	3846	
TORANA GTR XU1 Saloon (LJ)	30	120	06/71 – 01/72	3312	
TORANA GTR XU1 Saloon (LJ)	30	120	06/71 – 01/72	3484	
TORANA Saloon (LC)	16	60	06/71 – 01/72	3312	
TORANA Saloon (LC)	16	60	06/71 – 01/72	3484	
TORANA Saloon (LC)	23	71	06/71 – 01/72	3312	
TORANA Saloon (LC)	23	71	06/71 – 01/72	3484	
TORANA Saloon (LC)	26	85	06/71 – 01/72	3312	
TORANA Saloon (LC)	26	85	06/71 – 01/72	3484	

MAKE & MODEL   		KW	YEAR		
HOLDEN					
TORANA Saloon (LJ)	16	60	02/72 – 03/74	3311	
TORANA Saloon (LJ)	26	88	02/72 – 03/74	3312	
TORANA Saloon (LJ)	26	88	02/72 – 03/74	3484	
TORANA Saloon (LJ)	30	141	02/72 – 03/74	3312	
TORANA Saloon (LJ)	30	141	02/72 – 03/74	3484	
TORANA Saloon (TA)	13	45	03/74 – 03/75	3311	
TRAX (TJ)	14	103	08/14 -	4008	
TRAX (TJ)	1.4	103	08/14 -	4014	
VECTRA (ZC)	2.2 i (Z 22 SE)	108	04/02 – 12/06	4211	
VECTRA Estate (JS)	2.2 i	104	08/98 – 03/03	3665	
VECTRA Estate (JS)	2.2 i	104	08/98 – 03/03	3717	
VECTRA Hatchback (JR)	2.0 i	100	06/97 – 12/98	3665	
VECTRA Hatchback (JR)	2.0 i	100	06/97 – 12/98	3717	
VECTRA Hatchback (JR)	2.5 i	125	06/97 – 12/98	3665	
VECTRA Hatchback (JR)	2.5 i	125	06/97 – 12/98	3717	
VECTRA Hatchback (JS)	2.0 i	100	12/98 – 11/00	3665	
VECTRA Hatchback (JS)	2.0 i	100	12/98 – 11/00	3717	
VECTRA Hatchback (JS)	2.2 i	104	11/00 – 03/03	3665	
VECTRA Hatchback (JS)	2.2 i	104	11/00 – 03/03	3717	
VECTRA Hatchback (JS)	2.5 i	125	08/98 – 12/02	3665	
VECTRA Hatchback (JS)	2.5 i	125	08/98 – 12/02	3717	
VECTRA Hatchback (JS)	2.6 i V6	125	11/00 – 12/02	3665	
VECTRA Hatchback (JS)	2.6 i V6	125	11/00 – 12/02	3717	
VECTRA Hatchback (ZC)	2.2 i	108	04/02 – 12/06		3853/1
VECTRA Hatchback (ZC)	3.2 i	155	08/02 – 12/06		3853/1
VECTRA Saloon (JR)	2.0 i	100	06/97 – 12/98	3665	
VECTRA Saloon (JR)	2.0 i	100	06/97 – 12/98	3717	
VECTRA Saloon (JR)	2.5 i	125	06/97 – 12/98	3665	
VECTRA Saloon (JR)	2.5 i	125	06/97 – 12/98	3717	
VECTRA Saloon (JS)	2.0 i	100	12/98 – 11/00	3665	
VECTRA Saloon (JS)	2.0 i	100	12/98 – 11/00	3717	
VECTRA Saloon (JS)	2.2 i	104	08/98 – 07/02	3665	
VECTRA Saloon (JS)	2.2 i	104	08/98 – 07/02	3717	
VECTRA Saloon (JS)	2.6 i V6	125	07/00 – 07/02	3665	
VECTRA Saloon (JS)	2.6 i V6	125	07/00 – 07/02	3717	
VECTRA Saloon (ZC)	2.2 i	108	04/02 – 12/06		3853/1
VECTRA Saloon (ZC)	3.2 i	155	08/02 – 12/06		3853/1
VIVA Estate (JF)	1.8 i	89	03/05 – 12/09	3687	
VIVA Estate (JF)	1.8 i	89	03/05 – 12/09		3894
VIVA Hatchback (JF)	1.8 i	89	03/05 – 12/09	3687	
VIVA Hatchback (JF)	1.8 i	89	03/05 – 12/09		3894
VIVA Saloon (JF)	1.8 i	89	03/05 – 12/09	3687	
VIVA Saloon (JF)	1.8 i	89	03/05 – 12/09		3894
ZAFIRA (TT)	2.2 i	108	06/01 – 02/06		4040
ZAFIRA (TT)	2.2 i	108	06/01 – 02/06	4042	
HONDA					
ACCORD			2013 – 2014		4279
ACCORD II (AC, AD)	1.6 EX (EZ)	65	09/83 – 10/85	3691	
ACCORD II (AC, AD)	1.8 EX (ET1)	74	09/83 – 10/85	3691	
ACCORD IV (CB)	2.2 i 16V (F22A3)	110	01/90 – 03/93	3695	
ACCORD IV (CB)	2.2 i 16V Automatik (F22A3)	108	01/90 – 03/93	3695	
ACCORD IV (CB, CC)	2.0 i 16V (F20A7)	98	01/92 – 09/93	3695	
ACCORD IX Saloon (CR)	3.5	207	09/12 -	4312	
ACCORD VII / ACCOR EURO (CL)	2.0 (CL7) (K20A6)	114	02/03 – 05/08	4159	
ACCORD VII / ACCOR EURO (CL)	2.0 A las 4 ruedas (CL8) (K20A6)	114	02/03 – 05/08	4159	
ACCORD VII / ACCOR EURO (CL)	2.0 EURO R	160	06/03 – 12/08	4159	
ACCORD VII / ACCOR EURO (CL)	2.2 i-CTDi (N22A1)	103	01/04 – 05/08	4159	
ACCORD VII / ACCOR EURO (CL)	2.4	132	01/08 – 09/12	4159	
ACCORD VII / ACCOR EURO (CL)	2.4 (K24A8)	113	09/06 – 05/08	4159	
ACCORD VII / ACCOR EURO (CL)	2.4 (CL9) (K24A)	140	02/03 – 05/08	4159	
ACCORD VII / ACCOR EURO (CL)	2.4 (CL9) (K24A3)	140	02/03 – 05/08	4159	
ACCORD VII / ACCOR EURO (CL)	2.4 Vtec	122	04/06 – 07/08	4159	
ACCORD VII / ACCOR EURO (CL)	2.4 Vtec E	125	06/06 – 01/08	4159	
ACCORD VII / ACCOR EURO (CL)	3.0 (J30A5)	182	04/06 – 05/08	4159	
ACCORD (SJ, SY)	1.6 L/EX (EG)	59	01/78 – 09/83	3705	
ACCORD (SJ, SY)	1.6 L/EX (EL)	59	01/78 – 09/83	3705	
ACCORD (SJ, SY) Fastback	1.6 L/EX	59	01/79 – 09/83	3324	
ACCORD (SJ, SY) Sedán	1.6 L/EX	59	01/78 – 09/83	3324	
ACCORD (SJ, SY) Sedán	1.6 L/EX	59	01/78 – 09/83	3324	
ACCORD II (AC, AD)	1.6 EX (AC)	65	09/83 – 10/85	3504	

MAKE & MODEL		KW	YEAR		
HONDA					
ACCORD II (AC, AD)	1.8 EX (AD)	74	09/83 – 10/85	3504	
ACCORD II Hatchback (AC, AD)	1.6 EX (AC)	65	09/83 – 10/85	3504	
ACCORD II Hatchback (AC, AD)	1.8 EX (AD)	74	09/83 – 10/85	3504	
ACCORD III (CA)	1.6 L (CA4)	65	11/85 – 12/89	3582	
ACCORD III (CA)	2.0 EX (CA5)	75	11/85 – 12/89	3582	
ACCORD III (CA)	2.0 EX (CA5)	75	11/85 – 12/89	3631	
ACCORD III (CA)	2.0 EX (CA5)	75	11/85 – 12/89		4212
ACCORD III (CA)	2.0 EX (CA5)	76	11/85 – 12/89	3582	
ACCORD III (CA)	2.0 EX (CA5)	76	11/85 – 12/89	3631	
ACCORD III (CA)	2.0 EX (CA5)	76	11/85 – 12/89		4212
ACCORD III (CA)	2.0 EX (CA5)	78	11/85 – 05/89	3582	
ACCORD III (CA)	2.0 EX (CA5)	78	11/85 – 05/89	3631	
ACCORD III (CA)	2.0 EX (CA5)	78	11/85 – 05/89		4212
ACCORD III (CA)	2.0 EXi (CA5)	85	01/86 – 12/89	3582	
ACCORD III (CA)	2.0 EXi (CA5)	85	01/86 – 12/89	3631	
ACCORD III (CA)	2.0 EXi (CA5)	85	01/86 – 12/89		4212
ACCORD III (CA)	2.0 EXi (CA5)	90	11/85 – 12/87	3582	
ACCORD III (CA)	2.0 EXi (CA5)	90	11/85 – 12/87		4212
ACCORD III (CA)	2.0 i 16V (CA5)	98	10/87 – 12/89	3631	
ACCORD III (CA)	2.0 i 16V (CA5)	98	10/87 – 12/89		4212
ACCORD III (CA)	2.0 i 16V (CA5)	101	01/87 – 12/87	3582	
ACCORD III (CA)	2.0 i 16V (CA5)	101	01/87 – 12/87	3631	
ACCORD III (CA)	2.0 i 16V (CA5)	101	01/87 – 12/87		4212
ACCORD III Aerodeck (CA)	1.6 L (CA4)	65	11/85 – 12/89	3582	
ACCORD III Aerodeck (CA)	2.0 EX	75	10/87 – 12/89	3582	
ACCORD III Aerodeck (CA)	2.0 EX	75	10/87 – 12/89	3631	
ACCORD III Aerodeck (CA)	2.0 EX	75	10/87 – 12/89		4212
ACCORD III Aerodeck (CA)	2.0 EX (CA5)	76	10/87 – 12/89	3582	
ACCORD III Aerodeck (CA)	2.0 EX (CA5)	76	10/87 – 12/89	3631	
ACCORD III Aerodeck (CA)	2.0 EX (CA5)	76	10/87 – 12/89		4212
ACCORD III Aerodeck (CA)	2.0 EX (CA5)	78	11/85 – 05/89	3582	
ACCORD III Aerodeck (CA)	2.0 EX (CA5)	78	11/85 – 05/89	3631	
ACCORD III Aerodeck (CA)	2.0 EX (CA5)	78	11/85 – 05/89		4212
ACCORD III Aerodeck (CA)	2.0 EXi (CA5)	85	10/87 – 12/89	3631	
ACCORD III Aerodeck (CA)	2.0 EXi (CA5)	85	10/87 – 12/89		4212
ACCORD III Aerodeck (CA)	2.0 EXi (CA5)	90	11/85 – 12/87	3582	
ACCORD III Aerodeck (CA)	2.0 EXi (CA5)	90	11/85 – 12/87	3631	
ACCORD III Aerodeck (CA)	2.0 EXi (CA5)	90	11/85 – 12/87		4212
ACCORD IV (CB)	2.0 16V (CB3)	66	01/90 – 03/93	3696	
ACCORD IV (CB)	2.0 16V (CB3)	66	01/90 – 03/93		4148
ACCORD IV (CB)	2.0 16V (CB3)	81	01/90 – 03/93	3696	
ACCORD IV (CB)	2.0 16V (CB3)	81	01/90 – 03/93		4148
ACCORD IV (CB)	2.0 i 16V (CB3)	98	01/90 – 03/93	3696	
ACCORD IV (CB)	2.0 i 16V (CB3)	98	01/90 – 03/93		4148
ACCORD IV (CB)	2.2 (CB3, CB7)	103	10/91 – 10/93	3622	
ACCORD IV (CB)	2.2 (CB3, CB7)	103	10/91 – 10/93		4148
ACCORD IV (CB)	2.2 i 16V (CB7)	110	01/90 – 03/93		4148
ACCORD IV (CB)	2.2 i 16V Automatik (CB7)	108	01/90 – 03/93		4148
ACCORD IV Aerodeck (CB)	2.0 i 16V (CC9)	98	03/93 – 12/93	3704	
ACCORD IV Aerodeck (CB)	2.0 i 16V (CC9)	98	03/93 – 12/93		4148
ACCORD IV Aerodeck (CB)	2.2 (CB8, CB9)	103	05/92 – 12/93	3704	
ACCORD IV Aerodeck (CB)	2.2 (CB8, CB9)	103	05/92 – 12/93		4148
ACCORD IV Aerodeck (CB)	2.2 i 16V (CB8)	108	01/91 – 12/93	3704	
ACCORD IV Aerodeck (CB)	2.2 i 16V (CB8)	108	01/91 – 12/93		4148
ACCORD IV Aerodeck (CB)	2.2 i 16V (CB8)	110	01/91 – 12/93	3704	
ACCORD IV Aerodeck (CB)	2.2 i 16V (CB8)	110	01/91 – 12/93		4148
ACCORD IV Coupe (CB, CC)	2.0 i 16V (CC1)	98	01/92 – 09/93	3696	
ACCORD IV Coupe (CB, CC)	2.0 i 16V (CC1)	98	01/92 – 09/93	3704	
ACCORD IV Coupe (CB, CC)	2.0 i 16V (CC1)	98	01/92 – 09/93		4148
ACCORD IX Coupe	2.4	138	09/12 -	4312	
ACCORD IX Saloon (CR)	3.5	204	09/13 -	4312	
ACCORD IX Saloon (CR)	2.0 Hybrid	105	01/13 - 04/16	4312	
ACCORD V (CC, CD)	2.0 i	85	03/93 – 01/96		4148
ACCORD V (CC, CD)	2.0 i S	96	03/93 – 01/96		4148
ACCORD V (CC, CD)	2.3 i SR	116	03/93 – 01/96	3704	
ACCORD V (CC, CD)	2.3 i SR	116	03/93 – 01/96		4148
ACCORD V (CE, CF)	1.9 i (CE7)	85	02/96 – 10/98	3704	
ACCORD V (CE, CF)	1.9 i (CE7)	85	02/96 – 10/98		4148
ACCORD V (CE, CF)	2.0 i LS (CE8)	96	02/96 – 10/98	3704	
ACCORD V (CE, CF)	2.0 i LS (CE8)	96	02/96 – 10/98		4148
ACCORD V (CE, CF)	2.0 TDi (CF1)	77	04/96 – 10/98	3704	

BESER®

MAKE & MODEL		KW	YEAR		
HONDA					
ACCORD V (CE, CF)	2.0 TDi (CF1)	77	04/96 – 10/98		4148
ACCORD V (CE, CF)	2.2 (CE1)	107	09/95 – 06/96	3622	
ACCORD V (CE, CF)	2.2 (CE1)	107	09/95 – 06/96		4148
ACCORD V (CE, CF)	2.2 i VTEC (CE9)	110	02/96 – 10/98	3704	
ACCORD V (CE, CF)	2.2 i VTEC (CE9)	110	02/96 – 10/98		4148
ACCORD V Aerodeck (CE)	2.0 i LS 16V (CE2)	100	09/93 – 02/98	3704	
ACCORD V Aerodeck (CE)	2.0 i LS 16V (CE2)	100	09/93 – 02/98		4148
ACCORD V Aerodeck (CE)	2.2 i ES (CE1)	110	09/93 – 02/98	3704	
ACCORD V Aerodeck (CE)	2.2 i ES (CE1)	110	09/93 – 02/98		4148
ACCORD V Coupe (CD)	2.0 (CD9)	100	09/93 – 12/97	3704	
ACCORD V Coupe (CD)	2.0 (CD9)	100	09/93 – 12/97		4148
ACCORD V Coupe (CD)	2.2 i ES (CD7)	110	09/93 – 02/98	3704	
ACCORD V Coupe (CD)	2.2 i ES (CD7)	110	09/93 – 02/98		4148
ACCORD VI	20	108	01/99 – 12/02		4148
ACCORD VI	20	110	01/99 – 12/07	3696	
ACCORD VI	2.0 Vtec	110	10/99 – 12/02	3696	
ACCORD VI	2.0 Vtec	110	01/03 – 12/07		4148
ACCORD VI	2.3 Vtec	110	06/00 – 12/02	3696	
ACCORD VI	2.3 Vtec	110	06/00 – 12/02		4148
ACCORD VI	3.0 Vtec	147	06/00 – 12/02	3704	
ACCORD VI	3.0 Vtec	147	06/00 – 12/02		4148
ACCORD VI (CF)	2.4 Vtec E (K24A2)	118	09/03 – 09/05	4159	
ACCORD VI (CG, CK)	2.2 Type-R	156	02/99 – 12/02	3704	
ACCORD VI (CG, CK)	3.0 Vtec (CK1)	147	03/97 – 12/03	3696	
ACCORD VI (CG, CK)	3.0 Vtec (CK1)	147	03/97 – 12/03	3704	
ACCORD VI (CH, CK, CG)	1.8 i (CG8)	100	10/98 – 12/02	4115	
ACCORD VI (CH, CK, CG)	1.8 i (CG8)	100	10/98 – 12/02		4155
ACCORD VI (CH, CK, CG)	2.0 i (CG9)	108	10/98 – 01/01	4115	
ACCORD VI (CH, CK, CG)	2.0 i (CG9)	108	10/98 – 01/01		4155
ACCORD VI (CH, CK, CG)	2.0 Turbo DI (CH2)	77	02/99 – 12/02	4115	
ACCORD VI (CH, CK, CG)	2.0 Turbo DI (CH2)	77	02/99 – 12/02		4155
ACCORD VI (CH, CK, CG)	2.2 Type-R (CH1)	156	02/99 – 12/02		4155
ACCORD VI (CH, CK, CG)	2.3 (CL3)	113	01/01 – 06/03	4115	
ACCORD VI (CH, CK, CG)	2.3 (CL3)	113	01/01 – 06/03		4155
ACCORD VI (CH, CK, CG)	3.0 Vtec (CK1)	147	03/97 – 12/03		4148
ACCORD VI Aerodeck (CF)	2.3 16 V	118	02/98 – 12/02	3704	
ACCORD VI Aerodeck (CF)	2.3 16 V	118	02/98 – 12/02		4155
ACCORD VI Coupe (CG)	20	107	11/99 – 10/02	3704	
ACCORD VI Coupe (CG)	20	107	11/99 – 10/02		4148
ACCORD VI Coupe (CG)	2.0 i 16V	108	02/98 – 06/03	3704	
ACCORD VI Coupe (CG)	2.0 i 16V	108	02/98 – 06/03		4148
ACCORD VI Coupe (CG)	3.0 V6 24V (CG2)	147	02/98 – 06/03	3704	
ACCORD VI Coupe (CG)	3.0 V6 24V (CG2)	147	02/98 – 06/03		4148
ACCORD VI Coupe (CG)	3.0 Vtec	152	10/01 – 06/03	3704	
ACCORD VI Coupe (CG)	3.0 Vtec	152	10/01 – 06/03		4148
ACCORD VI Hatchback (CH, CL)	1.6 (CH5)	85	12/99 – 12/02	4115	
ACCORD VI Hatchback (CH, CL)	1.6 (CH5)	85	12/99 – 12/02		4155
ACCORD VI Hatchback (CH, CL)	1.8 i (CH6)	100	12/99 – 12/02	4115	
ACCORD VI Hatchback (CH, CL)	1.8 i (CH6)	100	12/99 – 12/02		4155
ACCORD VI Hatchback (CH, CL)	2.0 (CH7)	108	12/99- 10/00	4115	
ACCORD VI Hatchback (CH, CL)	2.0 (CH7)	108	12/99 – 12/02		4155
ACCORD VI Hatchback (CH, CL)	2.0 TDi (CH8)	77	12/99 – 10/00	4115	
ACCORD VI Hatchback (CH, CL)	2.0 TDi (CH8)	77	12/99 – 10/00		4155
ACCORD VI Hatchback (CH, CL)	2.3 (CL4)	113	11/00 – 12/02	4115	
ACCORD VI Hatchback (CH, CL)	2.3 (CL4)	113	11/00 -12/02		4155
ACCORD VII	20	110	01/03 – 12/07	4109	
ACCORD VII	20	110	01/03 – 12/07		4148
ACCORD VII	20	110	01/03 – 12/07	4232	
ACCORD VII	24	119	01/03 – 12/07	4109	
ACCORD VII	24	119	01/03 – 12/07		4148
ACCORD VII	24	119	01/03 – 12/07	4232	
ACCORD VII	24	125	01/03 – 12/07	4109	
ACCORD VII	24	125	01/03 – 12/07		4148
ACCORD VII	24	125	01/03 – 12/07	4232	
ACCORD VII	30	177	01/03 – 12/07	4109	
ACCORD VII	30	177	01/03 – 12/07		4148
ACCORD VII	30	177	01/03 – 12/07	4232	
ACCORD VII (CL, CN)	24	113	09/06 – 05/08	3831	
ACCORD VII (CL, CN)	24	113	09/06 – 05/08		4148
ACCORD VII (CL, CN)	24	113	09/06 – 05/08		4155
ACCORD VII (CL, CN)	30	182	04/06 – 05/08	3831	

MAKE & MODEL		KW	YEAR		
HONDA					
ACCORD VII (CL, CN)	30	182	04/06 – 05/08		4148
ACCORD VII (CL, CN)	2.0 (CL7)	114	02/03 – 05/08	3831	
ACCORD VII (CL, CN)	2.0 (CL7)	114	02/03 – 05/08		4148
ACCORD VII (CL, CN)	2.0 (CL7)	114	02/03 – 05/08		4155
ACCORD VII (CL, CN)	2.0 All-wheel Drive (CL8)	114	02/03 – 05/08	3831	
ACCORD VII (CL, CN)	2.0 All-wheel Drive (CL8)	114	02/03 – 05/08		4148
ACCORD VII (CL, CN)	2.0 All-wheel Drive (CL8)	114	02/03 – 05/08		4155
ACCORD VII (CL, CN)	2.0 R	160	06/03 – 12/08		4155
ACCORD VII (CL, CN)	2.2 i-CTDi (CN1)	103	01/04 – 05/08		4155
ACCORD VII (CL, CN)	2.4 (CL9)	140	02/03 – 05/08	3831	
ACCORD VII (CL, CN)	2.4 (CL9)	140	02/03 – 05/08		4148
ACCORD VII (CL, CN)	2.4 (CL9)	140	02/03 – 05/08		4155
ACCORD VII (CM)	2.0 (CM1) (K20A6)	114	04/03 – 05/08	4159	
ACCORD VII (CM)	2.2 i-CTDi (N22A1)	103	01/04 – 05/08	4159	
ACCORD VII (CM)	2.4	118	07/03 – 03/06	4159	
ACCORD VII (CM)	2.4	122	04/06 – 07/08	4159	
ACCORD VII (CM)	2.4 (CM2) (K24A)	140	04/03 – 05/08	4159	
ACCORD VII (CM)	2.4 Vtec E (K24A2)	118	09/03 – 09/05	4159	
ACCORD VII (CM)	2.4 Vtec E (CM5)	118	09/02 – 12/05	3831	
ACCORD VII (CM)	2.4 Vtec E (CM5)	118	09/02 – 12/05		4148
ACCORD VII (CM)	2.4 Vtec E (CM5)	118	09/02 – 12/05		4155
ACCORD VII (CM)	2.4 Vtec E (CM5) (K24A2)	118	09/02 – 12/05	4159	
ACCORD VII (CM)	2.4 Vtec E (CM5) (K24A4)	118	09/02 – 12/05	4159	
ACCORD VII (CM)	2.4 Vtec T (K24A1)	147	09/03 – 09/05	4159	
ACCORD VII (CM)	3.0 (CM6)	177	05/03 – 12/05	3831	
ACCORD VII (CM)	3.0 (CM6)	177	05/03 – 12/05		4148
ACCORD VII (CM)	3.0 (CM6) (J30A4)	177	09/03 – 09/05	4159	
ACCORD VII (CM)	3.0 VTi- Vtec (J30A5)	177	04/06 -	4159	
ACCORD VII (CM)	3.5	202	01/12 -	4159	
ACCORD VII Tourer (CM, CN)	2.0 (CM1)	103	04/03 – 05/08		4155
ACCORD VII Tourer (CM, CN)	2.0 (CM1)	114	04/03 – 05/08	3831	
ACCORD VII Tourer (CM, CN)	2.0 (CM1)	114	04/03 – 05/08		4148
ACCORD VII Tourer (CM, CN)	2.2 i-CTDi (CN2)	103	01/04 – 05/08		4155
ACCORD VII Tourer (CM, CN)	2.4 (CM2)	140	04/03 – 05/08	3831	
ACCORD VII Tourer (CM, CN)	2.4 (CM2)	140	04/03 – 05/08		4148
ACCORD VII Tourer (CM, CN)	2.4 (CM2)	140	04/03 – 05/08		4155
ACCORD VII Tourer (CM, CN)	2.4 Vtec E	118	09/03 – 09/05	3831	
ACCORD VII Tourer (CM, CN)	2.4 Vtec E	118	09/03 – 09/05		4148
ACCORD VII Tourer (CM, CN)	2.4 Vtec E	118	09/03 – 09/05		4155
ACCORD VII Tourer (CM, CN)	2.4 Vtec T	147	09/03 – 05/08		4155
ACCORD VIII	20	115	03/08 – 12/13	4109	
ACCORD VIII	20	115	03/08 – 12/13	4232	
ACCORD VIII	24	132	01/08 – 12/13	4109	
ACCORD VIII	24	132	01/08 – 12/13	4232	
ACCORD VIII	35	206	03/08 – 12/12	4109	
ACCORD VIII	35	206	03/08 – 12/12	4232	
AIRWAVE	15	81	06/04 -	3607	
AIRWAVE	1.5 iDSi MDS 4x4	81	06/04 -	3607	
BEAT (PP_)	06	47	01/91 – 12/93		4212
BEAT (PP_)	07	47	05/91 – 09/96		4212
CAPA	1.5 16V	72	04/98 – 09/02	3686	
CAPA	1.5 4x4	72	01/98 – 09/02	3686	
CAPA	1.6 Vtec	125	01/98 – 09/02	3686	
CITY	13	60	04/06 – 12/08	3686	
CITY	15	79	04/06 – 12/08	3686	
CITY (GM)	15	88	12/08 – 12/15	3686	
CITY (GM)	18	103	12/08 – 12/14		4148
CITY Saloon (GM)	15	88	02/09 -		4212
CITY Saloon (GM)	1.4 i-V TEC	73	09/08 -	3686	
CIVIC II (WC)	1.3 1300 (EN1)	44	09/79 – 09/83	3709	
CIVIC II (WC) Estate	1.3 1300	44	09/79 – 09/83	3324	
CIVIC V (EE)	1.4 i 16V (D14A1)	66	01/88 – 12/92	3691	
CIVIC V (EE)	1.5 i 16V (D15B2)	69	01/88 – 11/91	3691	
CIVIC I Saloon (SF)	1300 L	33	09/80 – 09/83	3509	
CIVIC I Saloon (SF)	1300 L	44	09/80 – 09/83	3509	
CIVIC I Saloon (SF)	1300 S	52	10/79 – 12/84	3509	
CIVIC I Shuttle (AN, AR)	1.5 (AN)	63	10/83 – 10/87	3633	
CIVIC I Shuttle (AN, AR)	1.5 (AN)	63	10/83 – 10/87	3646	
CIVIC I Shuttle (AN, AR)	1.5 4WD (AR)	63	01/85 – 10/87	3633	
CIVIC I Shuttle (AN, AR)	1.5 4WD (AR)	63	01/85 – 10/87	3646	
CIVIC II Hatchback (SS, SL)	1300 L (SS)	44	09/79 – 09/83	3509	

MAKE & MODEL		KW	YEAR		
HONDA					
CIVIC III Hatchback (AL, AJ, AG, AH)	1.2 (AL)	40	01/84 – 10/87	3633	
CIVIC III Hatchback (AL, AJ, AG, AH)	1.2 (AL)	40	01/84 – 10/87	3646	
CIVIC III Hatchback (AL, AJ, AG, AH)	1.3 (AG)	52	10/83 – 10/87	3633	
CIVIC III Hatchback (AL, AJ, AG, AH)	1.3 (AG)	52	10/83 – 10/87	3646	
CIVIC III Hatchback (AL, AJ, AG, AH)	1.5 GL (AH)	63	10/83 – 10/87	3633	
CIVIC III Hatchback (AL, AJ, AG, AH)	1.5 GL (AH)	63	10/83 – 10/87	3646	
CIVIC III Hatchback (AL, AJ, AG, AH)	1.5 GL (AH)	63	10/83 – 10/87	3752	
CIVIC III Hatchback (AL, AJ, AG, AH)	1.5 GL (AH)	63	10/83 – 10/87	3501	
CIVIC III Hatchback (AL, AJ, AG, AH)	1.5 GT (AH)	74	01/85 – 10/87	3633	
CIVIC III Hatchback (AL, AJ, AG, AH)	1.5 GT (AH)	74	01/85 – 10/87	3646	
CIVIC III Hatchback (AL, AJ, AG, AH)	1.5 GT (AH)	74	01/85 – 10/87	3752	
CIVIC III Hatchback (AL, AJ, AG, AH)	1.5 GT (AH)	74	01/85 – 10/87	3501	
CIVIC III Hatchback (AL, AJ, AG, AH)	1.5 GTI (AH)	66	03/86 – 10/87	3752	
CIVIC III Hatchback (AL, AJ, AG, AH)	1.5 GTI (AH)	66	03/86 – 10/87	3501	
CIVIC III Saloon (AM, AK, AU)	12	40	01/85 – 10/87	3633	
CIVIC III Saloon (AM, AK, AU)	12	40	01/85 – 10/87	3646	
CIVIC III Saloon (AM, AK, AU)	13	52	10/83 – 10/87	3633	
CIVIC III Saloon (AM, AK, AU)	13	52	10/83 – 10/87	3646	
CIVIC III Saloon (AM, AK, AU)	1.5 GL	63	10/83 – 10/87	3633	
CIVIC III Saloon (AM, AK, AU)	1.5 GL	63	10/83 – 10/87	3646	
CIVIC III Saloon (AM, AK, AU)	1.5 GL	63	10/83 – 10/87	3752	
CIVIC III Saloon (AM, AK, AU)	1.5 GL	63	10/83 – 10/87	3501	
CIVIC III Saloon (AM, AK, AU)	1.5 GT	74	01/85 – 10/87	3633	
CIVIC III Saloon (AM, AK, AU)	1.5 GT	74	01/85 – 10/87	3646	
CIVIC III Saloon (AM, AK, AU)	1.5 GT	74	01/85 – 10/87	3752	
CIVIC III Saloon (AM, AK, AU)	1.5 GT	74	01/85 – 10/87	3501	
CIVIC III Saloon (AM, AK, AU)	1.5 GTI	66	03/86 – 10/87	3752	
CIVIC III Saloon (AM, AK, AU)	1.5 GTI	66	03/86 – 10/87	3501	
CIVIC IV Hatchback (EC, ED, EE)	1.6 i 16V	96	09/87 – 09/91		4212
CIVIC IV Hatchback (EC, ED, EE)	1.6 i 16V (ED7)	80	10/87 – 09/91		4212
CIVIC IV Hatchback (EC, ED, EE)	1.6 i 16V (ED7)	81	10/87 – 09/91		4212
CIVIC IV Hatchback (EC, ED, EE)	1.6 i 16V Vtec (EE9)	110	10/89 – 09/91		4212
CIVIC IV Saloon (ED)	1.4 L (ED2)	66	10/87 – 12/89	3752	
CIVIC IV Saloon (ED)	1.4 L (ED2)	66	10/87 – 12/89	3501	
CIVIC IV Saloon (ED)	1.6 i 16V	96	09/87 – 09/91		4212
CIVIC IV Saloon (ED)	1.6 i 16V (ED4)	80	11/87 – 09/91		4212
CIVIC IV Saloon (ED)	1.6 i 16V (ED4)	81	10/87 – 09/91		4212
CIVIC IV Saloon (ED)	1.6 i 16V 4x4	80	10/89 – 09/91		4212
CIVIC IX Saloon (FB, FG)	1.8 (FB2)	104	02/12 -	4109	
CIVIC IX Saloon (FB, FG)	1.8 (FB2)	104	02/12 -		4148
CIVIC IX Saloon (FB, FG)	1.8 (FB2)	104	02/12 -	4232	
CIVIC V Coupe (EJ)	1.5 i LSi (EJ2)	74	08/93 – 11/95	3686	
CIVIC V Coupe (EJ)	1.6 i (EJ6)	77	01/94 – 11/95	3607	
CIVIC V Coupe (EJ)	1.6 i (EJ6)	77	01/94 – 11/95	3686	
CIVIC V Coupe (EJ)	1.6 i Vtec	118	01/94 – 11/95	3607	
CIVIC V Coupe (EJ)	1.6 i Vtec (EJ1)	92	01/94 – 03/96	3607	
CIVIC V Hatchback (EG)	16	96	10/91 – 09/95	3686	
CIVIC V Hatchback (EG)	1.3 16V (EG3)	55	10/91 – 11/95	3686	
CIVIC V Hatchback (EG)	1.3 16V (EG3)	55	10/91 – 11/95	3752	
CIVIC V Hatchback (EG)	1.3 16V (EG3)	55	10/91 – 11/95	3501	
CIVIC V Hatchback (EG)	1.5 i 16V (EG4)	66	10/91 – 11/95	3686	
CIVIC V Hatchback (EG)	1.5 i 16V (EG4)	69	10/91 – 11/95	3686	
CIVIC V Hatchback (EG)	1.6 16V Vtec (EG5)	92	10/91 – 11/95	3686	
CIVIC V Hatchback (EG)	1.6 VTi 16V (EG6)	118	10/91 – 11/95	3607	
CIVIC V Saloon (EG, EH)	13	55	01/92 – 12/92	3686	
CIVIC V Saloon (EG, EH)	15	67	10/93 – 12/95	3686	
CIVIC V Saloon (EG, EH)	1.5 i 16V (EG8)	69	10/91 – 11/95	3686	
CIVIC V Saloon (EG, EH)	1.6 16V Vtec (EH9)	92	10/91 – 11/95	3686	
CIVIC V Saloon (EG, EH)	1.6 VTi (EG9)	118	10/91 – 11/95	3607	
CIVIC VI Aerodeck (MB, MC)	1.4 16V (MB8)	55	04/98 – 02/01	3683	
CIVIC VI Aerodeck (MB, MC)	1.4 16V (MB8)	55	04/98 – 02/01	3872	
CIVIC VI Aerodeck (MB, MC)	1.4 16V (MB8)	55	04/98 – 02/01		4148
CIVIC VI Aerodeck (MB, MC)	1.4 16V (MB8)	55	04/98 – 02/01		4212
CIVIC VI Aerodeck (MB, MC)	1.4 16V (MB8)	66	04/98 – 02/01	3683	
CIVIC VI Aerodeck (MB, MC)	1.4 16V (MB8)	66	04/98 – 02/01	3872	
CIVIC VI Aerodeck (MB, MC)	1.4 16V (MB8)	66	04/98 – 02/01		4148
CIVIC VI Aerodeck (MB, MC)	1.4 16V (MB8)	66	04/98 – 02/01		4212
CIVIC VI Aerodeck (MB, MC)	1.5 16V (MB9)	84	04/98 – 02/01	3683	
CIVIC VI Aerodeck (MB, MC)	1.5 16V (MB9)	84	04/98 – 02/01	3872	
CIVIC VI Aerodeck (MB, MC)	1.5 16V (MB9)	84	04/98 – 02/01		4148
CIVIC VI Aerodeck (MB, MC)	1.5 16V (MB9)	84	04/98 – 02/01		4212

MAKE & MODEL		KW	YEAR		
HONDA					
CIVIC VI Aerodeck (MB, MC)	1.6 16V (MC1)	85	04/98 – 02/01	3683	
CIVIC VI Aerodeck (MB, MC)	1.6 16V (MC1)	85	04/98 – 02/01	3872	
CIVIC VI Aerodeck (MB, MC)	1.6 16V (MC1)	85	04/98 – 02/01		4148
CIVIC VI Aerodeck (MB, MC)	1.6 16V (MC1)	85	04/98 – 02/01		4212
CIVIC VI Aerodeck (MB, MC)	1.6 16V (MC1)	92	04/98 – 02/01	3683	
CIVIC VI Aerodeck (MB, MC)	1.6 16V (MC1)	92	04/98 – 02/01	3872	
CIVIC VI Aerodeck (MB, MC)	1.6 16V (MC1)	92	04/98 – 02/01		4148
CIVIC VI Aerodeck (MB, MC)	1.6 16V (MC1)	92	04/98 – 02/01		4212
CIVIC VI Aerodeck (MB, MC)	1.8 16V (MC2)	124	04/98 – 02/01	3704	
CIVIC VI Aerodeck (MB, MC)	1.8 16V (MC2)	124	04/98 – 02/01		4148
CIVIC VI Aerodeck (MB, MC)	2.0 i D (MC3)	74	04/98 – 02/01	3683	
CIVIC VI Aerodeck (MB, MC)	2.0 i D (MC3)	74	04/98 – 02/01	3872	
CIVIC VI Aerodeck (MB, MC)	2.0 i D (MC3)	74	04/98 – 02/01		4212
CIVIC VI Aerodeck (MB, MC)	2.0 i D (MC3)	77	04/98 – 02/01	3683	
CIVIC VI Aerodeck (MB, MC)	2.0 i D (MC3)	77	04/98 – 02/01	3872	
CIVIC VI Aerodeck (MB, MC)	2.0 i D (MC3)	77	04/98 – 02/01		4212
CIVIC VI Coupe (EJ, EM1)	16	79	05/96 – 04/99	3607	
CIVIC VI Coupe (EJ, EM1)	1.6 i	77	03/96 – 03/00	3607	
CIVIC VI Coupe (EJ, EM1)	1.6 i Vtec	92	03/96 – 03/00	3607	
CIVIC VI Coupe (EJ, EM1)	1.6 i Vtec	118	04/99 – 12/00	3607	
CIVIC VI Fastback (MA, MB)	1.4 i (MA8, MB2)	55	09/95 – 02/01	3683	
CIVIC VI Fastback (MA, MB)	1.4 i (MA8, MB2)	55	09/95 – 02/01	3872	
CIVIC VI Fastback (MA, MB)	1.4 i (MA8, MB2)	55	09/95 – 02/01		4212
CIVIC VI Fastback (MA, MB)	1.4 i (MA8, MB2)	66	09/94 – 02/01	3683	
CIVIC VI Fastback (MA, MB)	1.4 i (MA8, MB2)	66	09/94 – 02/01	3872	
CIVIC VI Fastback (MA, MB)	1.4 i (MA8, MB2)	66	09/94 – 02/01		4212
CIVIC VI Fastback (MA, MB)	1.5 16V (MB3)	84	01/97 – 02/01	3683	
CIVIC VI Fastback (MA, MB)	1.5 16V (MB3)	84	01/97 – 02/01	3872	
CIVIC VI Fastback (MA, MB)	1.5 16V (MB3)	84	01/97 – 02/01		4148
CIVIC VI Fastback (MA, MB)	1.5 16V (MB3)	84	01/97 – 02/01		4212
CIVIC VI Fastback (MA, MB)	1.5 i Vtec-E (MA9)	66	09/94 – 01/97	3683	
CIVIC VI Fastback (MA, MB)	1.5 i Vtec-E (MA9)	66	09/94 – 01/97	3872	
CIVIC VI Fastback (MA, MB)	1.5 i Vtec-E (MA9)	66	09/94 – 01/97		4212
CIVIC VI Fastback (MA, MB)	1.6 16V (MB4)	85	01/97 – 02/01	3683	
CIVIC VI Fastback (MA, MB)	1.6 16V (MB4)	85	01/97 – 02/01	3872	
CIVIC VI Fastback (MA, MB)	1.6 16V (MB4)	85	01/97 – 02/01		4148
CIVIC VI Fastback (MA, MB)	1.6 16V (MB4)	85	01/97 – 02/01		4212
CIVIC VI Fastback (MA, MB)	1.6 i (MB1)	83	09/94 – 01/97	3683	
CIVIC VI Fastback (MA, MB)	1.6 i (MB1)	83	09/94 – 01/97	3872	
CIVIC VI Fastback (MA, MB)	1.6 i (MB1)	83	09/94 – 01/97		4212
CIVIC VI Fastback (MA, MB)	1.6 i Vtec (MB1)	93	09/94 – 01/97	3683	
CIVIC VI Fastback (MA, MB)	1.6 i Vtec (MB1)	93	09/94 – 01/97	3872	
CIVIC VI Fastback (MA, MB)	1.6 i Vtec (MB1)	93	09/94 – 01/97		4212
CIVIC VI Fastback (MA, MB)	1.6 VTi	118	01/97 – 02/01	3607	
CIVIC VI Fastback (MA, MB)	1.6 VTi	118	01/97 – 02/01		4148
CIVIC VI Fastback (MA, MB)	1.6 VTi	118	01/97 – 02/01		4212
CIVIC VI Fastback (MA, MB)	1.8 16V (MB6)	124	01/97 – 02/01	3704	
CIVIC VI Fastback (MA, MB)	1.8 16V (MB6)	124	01/97 – 02/01		4148
CIVIC VI Fastback (MA, MB)	1.8 16V (MB6)	124	01/97 – 02/01		4212
CIVIC VI Fastback (MA, MB)	2.0 i TD (MB7)	63	01/97 – 02/01	3683	
CIVIC VI Fastback (MA, MB)	2.0 i TD (MB7)	63	01/97 – 02/01	3872	
CIVIC VI Fastback (MA, MB)	2.0 i TD (MB7)	63	01/97 – 02/01		4148
CIVIC VI Fastback (MA, MB)	2.0 i TD (MB7)	63	01/97 – 02/01		4212
CIVIC VI Fastback (MA, MB)	2.0 TDiC	77	11/98 – 10/00	3683	
CIVIC VI Fastback (MA, MB)	2.0 TDiC (MB7)	74	11/98 – 10/00	3683	
CIVIC VI Fastback (MA, MB)	2.0 TDiC (MB7)	74	11/98 – 10/00	3872	
CIVIC VI Fastback (MA, MB)	2.0 TDiC (MB7)	74	11/98 – 10/00		4148
CIVIC VI Fastback (MA, MB)	2.0 TDiC (MB7)	77	11/98 – 10/00	3872	
CIVIC VI Fastback (MA, MB)	2.0 TDiC (MB7)	77	11/98 – 10/00		4148
CIVIC VI Hatchback (EJ, EK)	15	66	11/95 – 12/96	3686	
CIVIC VI Hatchback (EJ, EK)	16	92	11/98 – 10/00	3704	
CIVIC VI Hatchback (EJ, EK)	16	92	11/98 – 10/00		4148
CIVIC VI Hatchback (EJ, EK)	16	93	10/95 – 09/00	3683	
CIVIC VI Hatchback (EJ, EK)	16	93	10/95 – 09/00	3872	
CIVIC VI Hatchback (EJ, EK)	16	93	10/95 – 09/00		4212
CIVIC VI Hatchback (EJ, EK)	1.4 i (EJ9)	55	11/95 – 02/01	3607	
CIVIC VI Hatchback (EJ, EK)	1.4 i (EJ9)	55	11/95 – 02/01	3686	
CIVIC VI Hatchback (EJ, EK)	1.4 i S (EJ9)	66	11/95 – 02/01	3607	
CIVIC VI Hatchback (EJ, EK)	1.4 i S (EJ9)	66	11/95 – 02/01	3686	
CIVIC VI Hatchback (EJ, EK)	1.4 LPG	66	01/97 – 02/01	3607	
CIVIC VI Hatchback (EJ, EK)	1.4 LPG	66	01/97 – 02/01	3686	

MAKE & MODEL		KW	YEAR		
HONDA					
CIVIC VI Hatchback (EJ, EK)	1.5 i (EK3)	84	11/95 – 02/01	3607	
CIVIC VI Hatchback (EJ, EK)	1.6 i (EK1)	84	11/95 – 02/01	3607	
CIVIC VI Hatchback (EJ, EK)	1.6 VTi (EK4)	118	11/95 – 02/01	3607	
CIVIC VI Hatchback (EJ, EK)	2.0 TDiC	77	11/98 – 10/00	3683	
CIVIC VI Hatchback (EJ, EK)	2.0 TDiC	77	11/98 – 10/00	3872	
CIVIC VI Hatchback (EJ, EK)	2.0 TDiC	77	11/98 – 10/00		4212
CIVIC VI Saloon (EJ, EK)	14	55	11/95 – 10/98	3607	
CIVIC VI Saloon (EJ, EK)	14	55	11/95 – 10/98	3686	
CIVIC VI Saloon (EJ, EK)	16	93	10/95 – 12/00	3607	
CIVIC VI Saloon (EJ, EK)	16	93	10/95 – 12/00		4212
CIVIC VI Saloon (EJ, EK)	16	118	10/95 – 09/00	3607	
CIVIC VI Saloon (EJ, EK)	16	118	10/95 – 09/00		4212
CIVIC VI Saloon (EJ, EK)	1.4 i (EJ9)	66	11/95 – 02/01	3607	
CIVIC VI Saloon (EJ, EK)	1.4 i (EJ9)	66	11/95 – 02/01	3686	
CIVIC VI Saloon (EJ, EK)	1.5 i (EK3)	84	11/95 – 02/01	3607	
CIVIC VI Saloon (EJ, EK)	1.5 i (EK3)	84	11/95 – 02/01		4212
CIVIC VI Saloon (EJ, EK)	1.6 i Vtec	92	11/95 – 02/01	3607	
CIVIC VI Saloon (EJ, EK)	1.6 i Vtec	92	11/95 – 02/01		4212
CIVIC VI Saloon (EJ, EK)	1.6 VTi (EK4)	118	11/95 – 02/01	3607	
CIVIC VI Saloon (EJ, EK)	1.6 VTi (EK4)	118	11/95 – 02/01		4212
CIVIC VII Coupe (EM2)	1.6 i	81	02/01 – 12/05	3607	
CIVIC VII Coupe (EM2)	1.6 i	81	02/01 – 12/05	3683	
CIVIC VII Coupe (EM2)	1.6 i	81	02/01 – 12/05	3872	
CIVIC VII Coupe (EM2)	1.7 i	88	05/01 – 12/05	3607	
CIVIC VII Coupe (EM2)	1.7 i	88	05/01 – 12/05	3683	
CIVIC VII Coupe (EM2)	1.7 i	88	05/01 – 12/05	3872	
CIVIC VII Coupe (EM2)	1.7 i VTEC	92	05/01 – 12/05	3607	
CIVIC VII Coupe (EM2)	1.7 i VTEC	92	05/01 – 12/05	3683	
CIVIC VII Coupe (EM2)	1.7 i VTEC	92	05/01 – 12/05	3872	
CIVIC VII Hatchback (EU, EP, EV)	1.4 i	55	02/01 – 09/05	3607	
CIVIC VII Hatchback (EU, EP, EV)	1.4 i	55	02/01 – 09/05	3683	
CIVIC VII Hatchback (EU, EP, EV)	1.4 i	55	02/01 – 09/05	3872	
CIVIC VII Hatchback (EU, EP, EV)	1.4 iS (EP1)	66	02/01 – 09/05	3607	
CIVIC VII Hatchback (EU, EP, EV)	1.4 iS (EP1)	66	02/01 – 09/05	3683	
CIVIC VII Hatchback (EU, EP, EV)	1.4 iS (EP1)	66	02/01 – 09/05	3872	
CIVIC VII Hatchback (EU, EP, EV)	1.6 i	81	02/01 – 09/05	3607	
CIVIC VII Hatchback (EU, EP, EV)	1.6 i	81	02/01 – 09/05	3683	
CIVIC VII Hatchback (EU, EP, EV)	1.6 i	81	02/01 – 09/05	3872	
CIVIC VII Hatchback (EU, EP, EV)	1.6 i	81	02/01 – 09/05		4148
CIVIC VII Hatchback (EU, EP, EV)	1.7 (ES1)	92	01/00 – 08/05	3686	
CIVIC VII Hatchback (EU, EP, EV)	1.7 (ES1)	92	01/00 – 08/05		4148
CIVIC VII Hatchback (EU, EP, EV)	1.7 CTDi	74	01/02 – 09/05		4148
CIVIC VII Hatchback (EU, EP, EV)	2.0 i Sport	118	09/01 – 09/05	4109	
CIVIC VII Hatchback (EU, EP, EV)	2.0 i Sport	118	09/01 – 09/05	4232	
CIVIC VII Hatchback (EU, EP, EV)	2.0 Type-R	147	09/01 – 09/05	4110	
CIVIC VII Saloon (ES)	12	58	04/01 – 10/04	3607	
CIVIC VII Saloon (ES)	12	58	04/01 – 10/04	3683	
CIVIC VII Saloon (ES)	12	58	04/01 – 10/04	3872	
CIVIC VII Saloon (ES)	16	81	02/01 – 09/05	3607	
CIVIC VII Saloon (ES)	16	81	02/01 – 09/05	3683	
CIVIC VII Saloon (ES)	16	81	02/01 – 09/05	3872	
CIVIC VII Saloon (ES)	16	84	02/01 – 09/05	3607	
CIVIC VII Saloon (ES)	16	84	02/01 – 09/05	4109	
CIVIC VII Saloon (ES)	16	84	02/01 – 09/05	4232	
CIVIC VII Saloon (ES)	18	103	02/01 – 09/05	4109	
CIVIC VII Saloon (ES)	18	103	02/01 – 09/05	4232	
CIVIC VII Saloon (ES)	20	118	10/03 – 09/05	3607	
CIVIC VII Saloon (ES)	20	118	10/03 – 09/05		4148
CIVIC VII Saloon (ES)	1.3 IMA	61	10/03 – 09/05	3607	
CIVIC VII Saloon (ES)	1.3 IMA	61	10/03 – 09/05	3683	
CIVIC VII Saloon (ES)	1.3 IMA (ES9)	61	10/03 – 09/05	3872	
CIVIC VII Saloon (ES)	1.3 IMA (ES9)	61	10/03 – 09/05		4148
CIVIC VII Saloon (ES)	1.4 (ES4)	66	12/00 – 09/05	3607	
CIVIC VII Saloon (ES)	1.4 (ES4)	66	12/00 – 09/05	3683	
CIVIC VII Saloon (ES)	1.4 (ES4)	66	12/00 – 09/05	3872	
CIVIC VII Saloon (ES)	1.7 (EU3)	85	02/01 – 09/05	3607	
CIVIC VII Saloon (ES)	1.7 (EU3)	85	02/01 – 09/05	3683	
CIVIC VII Saloon (ES)	1.7 (EU3)	85	02/01 – 09/05	3872	
CIVIC VIII	18	103	04/06 – 12/12	4109	
CIVIC VIII	18	103	04/06 – 12/12		4148
CIVIC VIII	18	103	04/06 – 12/12	4232	

MAKE & MODEL   		KW	YEAR		
HONDA					
CIVIC VIII	18	104	10/11 -	4109	
CIVIC VIII	18	104	10/11 -		4148
CIVIC VIII	18	104	10/11 -	4232	
CIVIC VIII	20	114	10/11 -	4109	
CIVIC VIII	20	114	10/11 -		4148
CIVIC VIII	20	114	10/11 -	4232	
CIVIC VIII	1.3 Hybrid	70	01/09 – 12/13	4109	
CIVIC VIII	1.3 Hybrid	70	01/09 – 12/13		4148
CIVIC VIII	1.3 Hybrid	70	01/09 – 12/13	4232	
CIVIC VIII Hatchback (FN, FK)	Type R (FN2)	148	09/06 -	4110	
CIVIC VIII Saloon (FD, FA)	13	85	02/06 -	4109	
CIVIC VIII Saloon (FD, FA)	13	85	02/06 -		4148
CIVIC VIII Saloon (FD, FA)	13	85	02/06 -	4232	
CIVIC VIII Saloon (FD, FA)	16	84	09/05 -	3696	
CIVIC VIII Saloon (FD, FA)	16	84	09/05 -	4109	
CIVIC VIII Saloon (FD, FA)	16	84	09/05 -		4148
CIVIC VIII Saloon (FD, FA)	16	84	09/05 -	4232	
CIVIC VIII Saloon (FD, FA)	16	92	01/12 -	3696	
CIVIC VIII Saloon (FD, FA)	16	92	01/12 -	4109	
CIVIC VIII Saloon (FD, FA)	16	92	01/12 -		4148
CIVIC VIII Saloon (FD, FA)	16	92	01/12 -	4232	
CIVIC VIII Saloon (FD, FA)	18	103	02/06 -	3553/1	
CIVIC VIII Saloon (FD, FA)	18	103	09/05 – 02/12	3553/1	
CIVIC VIII Saloon (FD, FA)	18	103	02/06 -	3696	
CIVIC VIII Saloon (FD, FA)	18	103	09/05 – 02/12	3696	
CIVIC VIII Saloon (FD, FA)	20	114	02/06 – 02/12	4109	
CIVIC VIII Saloon (FD, FA)	20	114	02/06 – 02/12		4148
CIVIC VIII Saloon (FD, FA)	20	114	02/06 – 02/12	4232	
CIVIC VIII Saloon (FD, FA)	1.3 Hybrid	70	01/06 -	3607	
CIVIC VIII Saloon (FD, FA)	1.3 Hybrid (FA3, FD3)	70	01/06 -		4148
CIVIC VIII Saloon (FD, FA)	1.3 Hybrid (FD3)	85	01/10 – 02/12		4148
CIVIC VIII Saloon (FD, FA)	1.8 (FD1)	103	09/05 – 02/12	4109	
CIVIC VIII Saloon (FD, FA)	1.8 (FD1)	103	09/05 – 02/12		4148
CIVIC VIII Saloon (FD, FA)	1.8 (FD1)	103	09/05 – 02/12	4232	
CIVIC VIII Saloon (FD, FA)	2.0 i-VTEC Type R	165	08/07 – 09/10	4109	
CIVIC VIII Saloon (FD, FA)	2.0 i-VTEC Type R	165	08/07 – 09/10		4148
CIVIC VIII Saloon (FD, FA)	2.0 i-VTEC Type R	165	08/07 – 09/10	4232	
CONCERTO (HW, MA)	14	61	10/89 – 10/92	3683	
CONCERTO (HW, MA)	14	61	10/89 – 10/92	3872	
CONCERTO (HW, MA)	14	66	08/89 – 10/91	3683	
CONCERTO (HW, MA)	14	66	08/89 – 10/91	3872	
CONCERTO (HW, MA)	16	96	10/89 – 10/92	3683	
CONCERTO (HW, MA)	16	96	10/89 – 10/92	3872	
CONCERTO (HW, MA)	16	96	10/89 – 10/92		4212
CONCERTO (HW, MA)	1.5 i 16V	66	08/89 – 03/95	3683	
CONCERTO (HW, MA)	1.5 i 16V	66	08/89 – 03/95	3872	
CONCERTO (HW, MA)	1.6 16V	78	08/89 – 03/95	3683	
CONCERTO (HW, MA)	1.6 16V	78	08/89 – 03/95	3872	
CONCERTO (HW, MA)	1.6 16V	78	08/89 – 03/95		4212
CONCERTO (HW, MA)	1.6 i 16V	82	08/89 – 03/95	3683	
CONCERTO (HW, MA)	1.6 i 16V	82	08/89 – 03/95	3872	
CONCERTO (HW, MA)	1.6 i 16V	82	08/89 – 03/95		4212
CONCERTO (HW, MA)	1.6 i 16V	90	08/89 – 03/95	3683	
CONCERTO (HW, MA)	1.6 i 16V	90	08/89 – 03/95	3872	
CONCERTO (HW, MA)	1.6 i 16V	90	08/89 – 03/95		4212
CONCERTO Saloon (HWW)	14	61	10/89 – 10/92	3683	
CONCERTO Saloon (HWW)	14	61	10/89 – 10/92	3872	
CONCERTO Saloon (HWW)	14	66	08/89 – 10/91	3683	
CONCERTO Saloon (HWW)	14	66	08/89 – 10/91	3872	
CONCERTO Saloon (HWW)	16	96	10/89 – 10/92	3683	
CONCERTO Saloon (HWW)	16	96	10/89 – 10/92	3872	
CONCERTO Saloon (HWW)	16	96	10/89 – 10/92		4212
CONCERTO Saloon (HWW)	1.5 i 16V	66	08/89 – 05/95	3683	
CONCERTO Saloon (HWW)	1.5 i 16V	66	08/89 – 05/95	3872	
CONCERTO Saloon (HWW)	1.6 16V	78	08/89 – 03/95	3683	
CONCERTO Saloon (HWW)	1.6 16V	78	08/89 – 03/95	3872	
CONCERTO Saloon (HWW)	1.6 16V	78	08/89 – 03/95		4212
CONCERTO Saloon (HWW)	1.6 i 16V	82	08/89 – 03/95	3683	
CONCERTO Saloon (HWW)	1.6 i 16V	82	08/89 – 03/95	3872	
CONCERTO Saloon (HWW)	1.6 i 16V	82	08/89 – 03/95		4212
CONCERTO Saloon (HWW)	1.6 i 16V	90	08/89 – 03/95	3683	

MAKE & MODEL		KW	YEAR		
HONDA					
CONCERTO Saloon (HWW)	1.6 i 16V	90	08/89 – 03/95	3872	
CONCERTO Saloon (HWW)	1.6 i 16V	90	08/89 – 03/95		4212
CROSSROAD (RT_)	1.8 i-VTEC (RT1)	103	02/07 – 08/10	4109	
CROSSROAD (RT_)	1.8 i-VTEC (RT1)	103	02/07 – 08/10	4232	
CR-V	2.0 All-wheel Drive	110	06/04 – 02/07		4148
CR-V	2.4 All-wheel Drive	118	06/04 – 02/07		4148
CR-V I (RD)	20	98	04/99 – 02/02	3704	
CR-V I (RD)	2.0 16V 4WD (RD1, RD3)	94	10/95 – 12/01	3704	
CR-V I (RD)	2.0 16V 4WD (RD1, RD3)	108	01/99 – 02/02	3704	
CR-V II (RD_)	2.0 (RD4)	110	09/01 – 09/06	3831	
CR-V II (RD_)	2.2 CTDi (RD9)	103	02/05 – 09/06	3831	
CR-V II (RD_)	2.4 Vtec 4WD (RD7)	118	09/01 – 09/06	3831	
CR-V III (RE)	24	125	04/07 -		4156
CR-V III (RE)	24	125	04/07 -	4160	
CR-V III (RE)	2.0 i 4WD (RE5)	110	01/07 -		4156
CR-V III (RE)	2.0 i 4WD (RE5)	110	01/07 -	4160	
CR-V III (RE)	2.2 i-CTDi 4WD (RE6)	103	01/07 -		4156
CR-V III (RE)	2.2 i-CTDi 4WD (RE6)	103	01/07 -	4160	
CR-V III (RE)	2.2 i-DTEC 4WD (RE6)	110	01/07 -		4156
CR-V III (RE)	2.2 i-DTEC 4WD (RE6)	110	01/07 -	4160	
CR-V III (RE)	2.4 4WD (RE4)	124	09/06 -		4156
CR-V III (RE)	2.4 4WD (RE4)	124	09/06 -	4160	
CR-V III (RE)	2.4 i-Vtec 4WD	125	04/07 -		4156
CR-V III (RE)	2.4 i-Vtec 4WD	125	04/07 -	4160	
CR-V III (RE)	2.4 i-VTEC 4WD (RE4)	118	10/06 -		4156
CR-V III (RE)	2.4 i-VTEC 4WD (RE4)	118	10/06 -	4160	
CR-V III (RE)	2.4 i-VTEC 4WD (RE7)	122	09/09 -		4156
CR-V III (RE)	2.4 i-VTEC 4WD (RE7)	122	09/09 -	4160	
CR-V IV (RE_)	20	110	01/12 -		4156
CR-V IV (RE_)	20	110	01/12 -	4160	
CR-V IV (RE_)	24	129	09/12 -		4156
CR-V IV (RE_)	24	138	01/12 -		4156
CR-V IV (RE_)	1.6 i-DTEC (RE6)	88	10/13 -		4156
CR-V IV (RE_)	1.6 i-DTEC (RE6)	88	10/13 -	4160	
CR-V IV (RE_)	1.6 i-DTEC 4WD	118	02/15 -		4156
CR-V IV (RE_)	1.6 i-DTEC 4WD	118	02/15 -	4160	
CR-V IV (RE_)	2.0 (RE5)	114	10/12 -		4156
CR-V IV (RE_)	2.0 (RE5)	114	10/12 -	4160	
CR-V IV (RE_)	2.0 AWD (RE5)	114	10/12 -		4156
CR-V IV (RE_)	2.0 AWD (RE5)	114	10/12 -	4160	
CR-V IV (RE_)	2.2 i-DTEC AWD (RE6)	110	10/12 -		4156
CR-V IV (RE_)	2.4 4WD	129	09/12 -		4156
CR-V IV (RE_)	2.4 AWD	132	01/12 -		4156
CR-V IV (RE_)	2.4 AWD	140	01/12 -		4156
CRX I (AF, AS)	13	52	10/83 – 10/87	3633	
CRX I (AF, AS)	13	52	10/83 – 10/87	3646	
CRX I (AF, AS)	13	52	10/83 – 10/87	3752	
CRX I (AF, AS)	13	52	10/83 – 10/87	3501	
CRX I (AF, AS)	1.5 i (AF)	74	10/83 – 11/86	3633	
CRX I (AF, AS)	1.5 i (AF)	74	10/83 – 11/86	3646	
CRX I (AF, AS)	1.5 i (AF)	74	10/83 – 11/86	3752	
CRX I (AF, AS)	1.5 i (AF)	74	10/83 – 11/86	3501	
CRX I (AF, AS)	1.6 i 16V (AS)	92	03/86 – 10/87	3582	
CRX II (ED, EE)	1.6 i 16V	79	10/87 – 05/88		4212
CRX II (ED, EE)	1.6 i 16V (ED9)	91	10/87 – 02/92		4212
CRX II (ED, EE)	1.6 i 16V (ED9)	96	10/87 – 12/89		4212
CRX II (ED, EE)	1.6 i 16V Vtec (EE8)	110	10/89 – 02/92		4212
CRX III (EH, EG)	15	77	01/94 – 04/98	3607	
CRX III (EH, EG)	1.6 ESi (EH6)	92	03/92 – 12/98	3607	
CRX III (EH, EG)	1.6 i VTi (EG2)	118	03/92 – 12/98	3607	
ELEMENT (YH)	2.4 Vtec	118	07/02 – 12/11	3831	
ELEMENT (YH)	2.4 Vtec	118	07/02 – 12/11		4148
ELEMENT (YH)	2.4 Vtec 4x4	118	07/02 – 12/11	3831	
ELEMENT (YH)	2.4 Vtec 4x4	118	07/02 – 12/11		4148
FIT Hatchback	13	60	09/04 – 07/08	3686	
FIT Hatchback	13	73	07/08 – 12/14	3686	
FIT Hatchback	15	79	09/04 – 07/08	3686	
FIT Hatchback	15	88	07/08 – 12/14	3686	
FIT Saloon	13	60	09/03 – 04/06	3686	
FIT Saloon	15	79	06/04 – 04/06	3686	
HR-V (GH)	1.6 16V	77	03/99 -	3704	

MAKE & MODEL		KW	YEAR		
HONDA					
HR-V (GH)	1.6 16V 4WD	77	03/99 -	3704	
HR-V (GH)	1.6 16V 4WD	91	10/99 -	3704	
HR-V (RU)	1.5 (RU1)	96	08/15 -	4312	
HR-V (RU)	1.6 i-DTEC (RU8)	88	08/15 -	4312	
HR-V (RU)	1.8 (RU58)	105	01/15 -	4312	
HR-V (RU)	1.5 (RU1)	96	08/15 -		4279
INSIGHT (ZE_)	1.3 Hybrid (ZE2)	65	04/09 -		4148
INSIGHT (ZE_)	1.3 Hybrid (ZE2)	73	04/09 -		4148
INTEGRA (DA)	15	63	10/85 – 08/89	3582	
INTEGRA (DA)	1.6 (DA1, DA3)	88	03/86 – 08/89	3582	
INTEGRA (DA)	1.6 (DA6, DA8)	125	09/89 – 08/93	3631	
INTEGRA (DC5)	20	118	02/02 -	3704	
INTEGRA (DC5)	20	147	10/04 -	3607	
INTEGRA (DC5)	2.0 16V Type-R	162	02/02 -	3704	
INTEGRA Coupe (DC2, DC4)	18	107	07/93 – 11/01	3704	
INTEGRA Coupe (DC2, DC4)	18	107	07/93 – 11/01		4148
INTEGRA Coupe (DC2, DC4)	1.8 Type-R	140	11/97 – 10/01	3704	
INTEGRA Coupe (DC2, DC4)	1.8 Type-R	140	11/97 – 10/01		4148
INTEGRA Coupe (DC2, DC4)	1.8 Type-R (DC2)	147	09/93 – 08/01	3704	
INTEGRA Coupe (DC2, DC4)	1.8 Type-R (DC2)	147	09/93 – 08/01		4148
INTEGRA Coupe (DC5)	2.0 16V Type-R	162	02/02 -	3909	
INTEGRA Coupe (DC5)	2.0 16V Type-R	162	02/02 -		4148
INTEGRA Hatchback (DA)	15	63	10/85 – 08/89		4212
INTEGRA Hatchback (DA)	1.6 (DA1, DA3)	88	03/86 – 08/89		4212
INTEGRA Hatchback (DA)	1.6 (DA6, DA8)	125	09/89 – 08/93		4212
JAZZ II (GD_, GE3)	12	57	03/02 – 07/08	3686	
JAZZ II (GD_, GE3)	13	61	03/02 – 07/08	3686	
JAZZ II (GD_, GE3)	14	65	04/05 – 07/08	3686	
JAZZ II (GD_, GE3)	15	81	04/02 – 07/08	3686	
JAZZ II (GD_, GE3)	1.3 iDSi	63	03/02 – 09/07	3686	
JAZZ II (GD_, GE3)	1.5 FF	79	03/02 – 09/07	3686	
JAZZ Saloon (GD_)	1.3 (GD6)	63	05/03 – 07/08	3686	
JAZZ Saloon (GD_)	1.5 (GD8)	66	05/03 – 06/06	3686	
JAZZ Saloon (GD_)	1.5 (GD8)	81	10/04 – 07/08	3686	
LEGEND I (HS, KA)	2.5 i (HS)	110	01/86 – 12/87	3631	
LEGEND I (HS, KA)	2.5 i (HS)	110	01/86 – 12/87		4148
LEGEND I (HS, KA)	2.5 i (HS)	127	02/87 – 06/88	3631	
LEGEND I (HS, KA)	2.5 i (HS)	127	02/87 – 06/88		4148
LEGEND I (HS, KA)	2.7 i 24V (KA4)	124	01/88 – 12/90	3631	
LEGEND I (HS, KA)	2.7 i 24V (KA4)	124	01/88 – 12/90		4148
LEGEND I Coupe (KA_)	2.7 i 24V (KA3)	124	10/87 – 12/90		4148
LEGEND I Coupe (KA3)	2.7 i 24V	124	10/87 – 12/90	3631	
LEGEND II (KA)	3.2 i 24V (KA7)	151	01/91 – 02/96		4148
LEGEND II (KA7)	3.2 i 24V	151	01/91 – 02/96	3704	
LEGEND II Coupe (KA)	3.2 i 24V (KA8)	151	01/91 – 02/96		4148
LEGEND II Coupe (KA8)	3.2 i 24V	151	01/91 – 02/96	3704	
LEGEND III (KA)	35	221	10/04 -		4148
LEGEND III (KA)	3.5 i 24V (KA9)	151	02/96 -		4148
LEGEND III (KA)	3.5 i 24V (KA9)	153	11/97 – 09/04		4148
LEGEND III (KA9)	35	221	10/04 -	3704	
LEGEND III (KA9)	3.5 i 24V	151	02/96 -	3704	
LEGEND III (KA9)	3.5 i 24V	153	11/97 – 09/04	3704	
LOGO (GA3)	13	48	03/99 – 03/02	3686	
MOBILIO (GB_)	15	66	12/01 – 10/08	3607	
MOBILIO (GB_)	15	81	12/01 – 10/08	3607	
MOBILIO (GB_)	1.5 4WD	66	12/01 – 10/08	3607	
MOBILIO (GB_)	1.5 4WD	81	12/01 – 10/08	3607	
NSX Convertible (NA)	3.0 24V Vtec	201	03/95 – 09/05	3704	
NSX Convertible (NA)	3.0 24V Vtec Automatic	188	03/95 – 09/05	3704	
NSX Convertible (NA)	3.2 24V Vtec	206	01/97 – 09/05	3704	
NSX Coupe (NA)	3.0 24V Vtec (NA1)	201	06/90 – 09/05	3704	
NSX Coupe (NA)	3.0 24V Vtec Automatik (NA1)	188	06/90 – 09/05	3704	
NSX Coupe (NA)	3.2 24V Vtec (NA2)	206	01/97 – 09/05	3704	
ODYSSEY (RB_)	23	110	07/02 – 09/03	3704	
ODYSSEY (RB_)	23	110	07/02 – 09/03		4148
ODYSSEY (RB_)	24	118	10/03 -	4109	
ODYSSEY (RB_)	24	118	10/03 -	4232	
ODYSSEY (RB_)	24	140	10/05 -	4109	
ODYSSEY (RB_)	24	140	10/05 -	4232	
ODYSSEY (RB_)	2.3 4x4	110	07/02 – 09/03	3704	
ODYSSEY (RB_)	2.3 4x4	110	07/02 – 09/03		4148

MAKE & MODEL		KW	YEAR		
HONDA					
ODYSSEY MPV	24	118	03/05 – 08/09	4109	
ODYSSEY MPV	24	118	03/05 – 08/09	4232	
ODYSSEY MPV	24	133	08/09 – 12/14	4109	
ODYSSEY MPV	24	133	08/09 – 12/14	4232	
PRELUDE (SN)	1.6 (EL14)	59	11/78 – 10/82	3705	
PRELUDE (SN)	1.6 (EL)	59	11/78 – 10/82	3705	
PRELUDE II (AB)	1.8 EX	74	11/85 – 04/87	3752	
PRELUDE II (AB)	1.8 EX	74	11/85 – 04/87	3501	
PRELUDE II (AB)	1.8 EX	77	11/83 – 04/87	3752	
PRELUDE II (AB)	1.8 EX	77	11/83 – 04/87	3501	
PRELUDE III (BA)	2.0 (BA4)	84	08/87 – 01/92		4212
PRELUDE III (BA)	2.0 EX (BA4)	80	04/87 – 01/92		4212
PRELUDE III (BA)	2.0 i EX 16V	101	04/86 – 12/87	3631	
PRELUDE III (BA)	2.0 i EX 16V	101	04/86 – 12/87		4212
PRELUDE III (BA)	2.0 i EX 16V	110	10/87 – 12/90	3631	
PRELUDE III (BA)	2.0 i EX 16V	110	10/87 – 12/90		4212
PRELUDE III (BA)	2.0 i EX 16V (BA2)	101	04/86 – 12/87	3631	
PRELUDE III (BA)	2.0 i EX 16V (BA2)	101	04/86 – 12/87		4212
PRELUDE III (BA)	2.0 i EX 16V (BA4)	103	04/90 – 01/92	3631	
PRELUDE III (BA)	2.0 i EX 16V (BA4)	103	04/90 – 01/92		4212
PRELUDE III (BA)	2.0 i EX 16V (BA4) CAT	101	04/87 – 01/92	3631	
PRELUDE III (BA)	2.0 i EX 16V Cat (BA4)	101	04/87 – 01/92		4212
PRELUDE IV (BB)	2.0 16V (BB9)	98	10/96 – 10/00		4148
PRELUDE IV (BB)	2.0 i 16V (BB3)	98	02/92 – 09/96		4148
PRELUDE IV (BB)	2.2 16V	147	10/96 – 10/00	3704	
PRELUDE IV (BB)	2.2 16V	147	10/96 – 10/00		4148
PRELUDE IV (BB)	2.2 16V (BB6, BB8)	136	10/96 – 10/00	3704	
PRELUDE V (BB)	2.2 16V (BB6, BB8)	136	10/96 – 10/00		4148
PRELUDE V (BB)	2.2 i 16V Vtec (BB1)	136	02/93 – 09/96	3704	
PRELUDE V (BB)	2.2 i 16V Vtec (BB1)	136	02/93 – 09/96		4148
PRELUDE V (BB)	2.3 i 16V (BB2)	118	02/92 – 09/96	3704	
PRELUDE V (BB)	2.3 i 16V (BB2)	118	02/92 – 09/96		4148
QUINTET (SU)	1.6 EX (EL)	59	02/80 – 12/84	3705	
S2000 (AP)	2.0 (AP1)	177	06/99	4110	
S2000 (AP)	2.0 Vtec	170	03/99 – 10/03	4110	
S2000 (AP)	2.0 Vtec (AP1)	184	10/03 -	4110	
S2000 (AP)	2.2 Vtec	176	10/03 -	4110	
SHUTTLE (RA)	30	154	10/97 – 06/04	4109	
SHUTTLE (RA)	30	154	10/97 – 06/04	4232	
SHUTTLE (RA)	2.2 16V	110	10/94 – 02/98	3704	
SHUTTLE (RA)	2.3 16V	110	10/97 – 06/04	3704	
SMX	2.0 Lowdown	103	10/99 – 09/02	3704	
SPIRIOR	24	133	07/09 – 12/12	4109	
SPIRIOR	24	133	07/09 – 12/12	4232	
STEPWGN (DBA-RG_)	20	114	10/05 – 09/09	4109	
STEPWGN (DBA-RG_)	20	114	10/05 – 09/09	4232	
STEPWGN (DBA-RG_)	2.4 Z FF	119	10/05 – 09/09	4109	
STEPWGN (DBA-RG_)	2.4 Z FF	119	10/05 – 09/09	4232	
STEPWGN (LA-RF_, UA-RF_)	20	118	10/00 – 09/05	3704	
STEPWGN (LA-RF_, UA-RF_)	20	118	10/00 – 09/05		4148
STEPWGN (LA-RF_, UA-RF_)	24	119	10/00 – 09/05	3704	
STEPWGN (LA-RF_, UA-RF_)	24	119	10/00 – 09/05		4148
STEPWGN (LA-RF_, UA-RF_)	2.0 4WD	118	10/00 – 09/05	3704	
STEPWGN (LA-RF_, UA-RF_)	2.0 4WD	118	10/00 – 09/05		4148
STREAM	1.8 Vtec	103	10/05 -	4109	
STREAM	1.8 Vtec	103	10/05 -		4148
STREAM	1.8 Vtec	103	10/05 -	4232	
STREAM	2.0 Vtec	110	10/05 -	4109	
STREAM	2.0 Vtec	110	10/05 -		4148
STREAM	2.0 Vtec	110	10/05 -	4232	
STREAM (RN)	1.7 16V (RN1)	92	05/01 -	4109	
STREAM (RN)	1.7 16V (RN1)	92	05/01 -	4232	
STREAM (RN)	2.0 16V (RN3)	115	05/01 -	4109	
STREAM (RN)	2.0 16V (RN3)	115	05/01 -	4232	
VEZEL Closed Off-Road Vehicle	1.5 Hybrid	97	09/13 -	4312	
VEZEL Closed Off-Road Vehicle	1.5 Hybrid 4WD	97	09/13 -	4312	
VEZEL Closed Off-Road Vehicle	1.5 i-VTEC	96	09/13 -	4312	
VEZEL Closed Off-Road Vehicle	1.5 i-VTEC 4WD	96	09/13-	4312	
HONGQI					
FLAGSHIP (CA7460)	46	158	02/99 – 07/05		3529/1

MAKE & MODEL		KW	YEAR		
HONGQI					
HQ3	30	170	12/06 – 12/08	3910	
HQ3	43	206	12/06 – 12/08	3910	
MINGSHI (CA7180) Convertible	18	70	11/01 -		3529/1
HSV					
AVALANCHE Estate (VY)	5.7 i V8 4x4	260	10/03 – 04/06		4188
AVALANCHE Pickup (VY)	5.7 i V8 4x4	260	05/04 – 04/06		4188
CLUBSPORT Saloon (VT)	5.0 i V8	195	01/97 – 06/99		4188
CLUBSPORT Saloon (VT)	5.7 i V8	250	07/99 – 10/00		4188
CLUBSPORT Saloon (VX)	5.7 i V8	255	09/00 – 09/02		4188
CLUBSPORT Saloon (VY)	5.7 i V8	260	10/02 – 08/03		4188
CLUBSPORT Saloon (VY)	5.7 i V8	285	09/03 – 09/04		4188
CLUBSPORT Saloon (VZ)	6.0 i V8	297	10/04 – 12/06		4188
GRANGE Saloon (WH)	3.8 i V6 Supercharged	180	07/99 – 09/00		4188
GRANGE Saloon (WH)	5.7 i V8	250	07/99 – 11/00		4188
GRANGE Saloon (WH)	5.7 i V8	255	10/00 – 09/03		4188
GRANGE Saloon (WK)	5.7 i V8	285	10/03 – 09/04		4188
GRANGE Saloon (WL)	6.0 i V8	297	09/04 – 12/06		4188
SENATOR Saloon (VT)	5.0 i V8	195	09/97 – 06/99		4188
SENATOR Saloon (VT)	5.7 i V8	220	09/97 – 06/99		4188
SENATOR Saloon (VT)	5.7 i V8	230	09/97 – 06/99		4188
SENATOR Saloon (VT)	5.7 i V8	250	09/97 – 06/99		4188
HUALI					
TERIOS	13	63	07/04 -	3604	
HUMMER					
H2	6.0 AWD	232	09.02 - 09.04		4022
H2	6.0 AWD	242	10.04 - 12.09		4022
H2	6.2 AWD	293	10.04 -		4022
H2	6.2 FLEX AWD	293	09.08 - 12.09		4022
H2 Crew Cab Pickup	6.0 4WD	242	09.04 - 12.07		4022
H2 SUT	6.0 AWD	237	09.04 -		4022
H2 SUT	6.2 AWD	293	09.07 - 12.08		4022
H2 SUV	6.0 AWD	236	09.03 - 12.04		4022
HUMMER H3	3.5	162	04.05 -	4026	
HUMMER H3	3.7 4WD	180	09.06 -	4026	
HUMMER H3	3.7 4WD	180	01.07 -	4026	
HUMMER H3	5.3 Flexfuel 4WD	224	09.09 - 12.10	4026	
HUMMER H3	5.3 V8 AWD	224	10.08 -	4026	
HUMMER H3T	5.3 4WD	224	10.08 - 12.09	4026	
HYUNDAI					
ACCENT Hatchback (HCR)	1.6 VTVT	89	01/17 -		4343
ACCENT I (X-3) / SOLARIS I (X-3)	13	40	09/95 – 05/98	3502	
ACCENT I (X-3) / SOLARIS I (X-3)	13	44	10/94 – 01/00	3502	
ACCENT I (X-3) / SOLARIS I (X-3)	13	55	10/94 – 01/00	3502	
ACCENT I (X-3) / SOLARIS I (X-3)	1.3 i 12V	62	10/94 – 01/00	3502	
ACCENT I (X-3) / SOLARIS I (X-3)	1.5 16V	76	10/94 – 01/00	3502	
ACCENT I (X-3) / SOLARIS I (X-3)	1.5 i 12V	65	10/94 – 01/00	3502	
ACCENT I (X-3) / SOLARIS I (X-3)	1.5 i 16V	73	12/95 – 01/00	3502	
ACCENT II (LC) / SOLARIS II (LC)	13	55	01/00 – 11/05	3502	
ACCENT II (LC) / SOLARIS II (LC)	13	61	01/00 – 11/05	3502	
ACCENT II (LC) / SOLARIS II (LC)	13	62	08/02 – 11/05	3502	
ACCENT II (LC) / SOLARIS II (LC)	13	63	01/00 – 11/05	3502	
ACCENT II (LC) / SOLARIS II (LC)	15	65	09/99 – 10/02	3502	
ACCENT II (LC) / SOLARIS II (LC)	15	66	01/00 – 11/05	3502	
ACCENT II (LC) / SOLARIS II (LC)	15	75	09/00 – 11/05	3502	
ACCENT II (LC) / SOLARIS II (LC)	16	77	12/02 – 11/05	3502	
ACCENT II (LC) / SOLARIS II (LC)	1.5 CRDi	60	04/02 – 11/05	3502	
ACCENT II Saloon (LC) / SOLARIS II Saloon (LC)	13	55	01/00 – 11/05	3502	
ACCENT II Saloon (LC) / SOLARIS II Saloon (LC)	13	63	01/00 – 11/05	3502	
ACCENT II Saloon (LC) / SOLARIS II Saloon (LC)	15	66	01/00 – 11/05	3502	
ACCENT II Saloon (LC) / SOLARIS II Saloon (LC)	15	75	09/99 – 10/02	3502	
ACCENT II Saloon (LC) / SOLARIS II Saloon (LC)	16	77	12/02 – 11/05	3502	
ACCENT II Saloon (LC) / SOLARIS II Saloon (LC)	1.5 CRDi	60	01/02 – 11/05	3502	
ACCENT III (MC) / SOLARIS III (MC)	1.4 GL	71	11/05 – 11/10	3880	3880
ACCENT III (MC) / SOLARIS III (MC)	1.5 CRDi GLS	81	11/05 – 11/10	3880	3880
ACCENT III (MC) / SOLARIS III (MC)	1.6 GLS	82	11/05 – 11/10	3880	3880
ACCENT III Saloon (MC) / SOLARIS III Saloon (MC)	1.4 GL	71	11/05 – 11/10	3880	3880
ACCENT III Saloon (MC) / SOLARIS III Saloon (MC)	1.5 CRDi GLS	81	11/05 – 11/10	3880	3880
ACCENT III Saloon (MC) / SOLARIS III Saloon (MC)	1.6 GLS	82	11/05 – 11/10	3880	3880
ACCENT IV (RB) / SOLARIS IV (RB)	14	79	11/10 -		4061

MAKE & MODEL			KW	YEAR		
HYUNDAI						
ACCENT IV (RB) / SOLARIS IV (RB)	14		79	11/10 -	4136	
ACCENT IV (RB) / SOLARIS IV (RB)	16		91	11/10 -		4061
ACCENT IV (RB) / SOLARIS IV (RB)	16		91	11/10 -	4136	
ACCENT IV (RB) / SOLARIS IV (RB)	1.4		79	11/10 -		4343
ACCENT IV (RB) / SOLARIS IV (RB)	1.4		74	09/15 -		4343
ACCENT IV (RB) / SOLARIS IV (RB)	1.6		90	12/10 -		4343
ACCENT IV (RB) / SOLARIS IV (RB)	1.6		91	11/10 -		4343
ACCENT IV (RB) / SOLARIS IV (RB)	1.6 CRDi		94	07/11 -		4343
ACCENT IV (RB) / SOLARIS IV (RB)	1.6 CRDi		100	02/15 -		4343
ACCENT IV (RB) / SOLARIS IV (RB)	1.6 GDI		103	09/11 -		4343
ACCENT IV Saloon (RB) / SOLARIS IV Saloon (RB)	14		74	11/10 -	3880	3880
ACCENT IV Saloon (RB) / SOLARIS IV Saloon (RB)	14		74	11/10 -		4061
ACCENT IV Saloon (RB) / SOLARIS IV Saloon (RB)	14		74	11/10 -	4136	
ACCENT IV Saloon (RB) / SOLARIS IV Saloon (RB)	14		80	11/10 -		4061
ACCENT IV Saloon (RB) / SOLARIS IV Saloon (RB)	14		80	11/10 -	4136	
ACCENT IV Saloon (RB) / SOLARIS IV Saloon (RB)	16		90	11/10 -		4061
ACCENT IV Saloon (RB) / SOLARIS IV Saloon (RB)	16		90	11/10 -	4136	
ACCENT IV Saloon (RB) / SOLARIS IV Saloon (RB)	16		91	11/10 -		4061
ACCENT IV Saloon (RB) / SOLARIS IV Saloon (RB)	16		91	11/10 -	4136	
ACCENT IV Saloon (RB) / SOLARIS IV Saloon (RB)	1.4		74	11/10 -		4343
ACCENT IV Saloon (RB) / SOLARIS IV Saloon (RB)	1.4		80	11/10-12/14		4343
ACCENT IV Saloon (RB) / SOLARIS IV Saloon (RB)	1.6		90	11/10 -		4343
ACCENT IV Saloon (RB) / SOLARIS IV Saloon (RB)	1.6		91	11/10 -		4343
ACCENT IV Saloon (RB) / SOLARIS IV Saloon (RB)	1.4 CRDi		66	11/10 -		4061
ACCENT IV Saloon (RB) / SOLARIS IV Saloon (RB)	1.4 CRDi		66	11/10 -	4136	
ACCENT IV Saloon (RB) / SOLARIS IV Saloon (RB)	1.6 CCVT-I		92	11/10 -		4061
ACCENT IV Saloon (RB) / SOLARIS IV Saloon (RB)	1.6 CCVT-I		92	11/10 -	4136	
ACCENT IV Saloon (RB) / SOLARIS IV Saloon (RB)	1.6 CRDI		100	04/11 -		4061
ACCENT IV Saloon (RB) / SOLARIS IV Saloon (RB)	1.6 CRDI		100	04/11 -	4136	
ACCENT IV Saloon (RB) / SOLARIS IV Saloon (RB)	1.6 CRDI		100	04/11 -		4343
ACCENT IV Saloon (RB) / SOLARIS IV Saloon (RB)	1.6 CRDi		94	10/11 -		4061
ACCENT IV Saloon (RB) / SOLARIS IV Saloon (RB)	1.6 CRDi		94	10/11 -	4136	
ACCENT IV Saloon (RB) / SOLARIS IV Saloon (RB)	1.6 CRDi		94	11/10-12/15		4343
ACCENT IV Saloon (RB) / SOLARIS IV Saloon (RB)	1.6 GDI		103	09/11 -		4061
ACCENT IV Saloon (RB) / SOLARIS IV Saloon (RB)	1.6 GDI		103	09/11 -	4136	
ACCENT IV Saloon (RB) / SOLARIS IV Saloon (RB)	1.6 GDI		103	09/11 -		4343
ACCENT Saloon (X-3) / SOLARIS Saloon (X-3)	13		44	10/94 – 01/00	3502	
ACCENT Saloon (X-3) / SOLARIS Saloon (X-3)	13		55	10/94 – 01/00	3502	
ACCENT Saloon (X-3) / SOLARIS Saloon (X-3)	15		63	10/94 – 07/99	3502	
ACCENT Saloon (X-3) / SOLARIS Saloon (X-3)	1.3 i 12V		62	10/94 – 01/00	3502	
ACCENT Saloon (X-3) / SOLARIS Saloon (X-3)	1.5 i 12V		65	10/94 – 01/00	3502	
ACCENT Saloon (X-3) / SOLARIS Saloon (X-3)	1.5 i 16V		73	10/95 – 01/00	3502	
ATOS (MX)	08		38	04/99 – 07/03	3778	
ATOS (MX)	08		38	04/99 – 07/03	3985	
ATOS (MX)	11		43	08/03 – 05/05	3985	
ATOS (MX)	11		45	06/03 – 12/10	3985	
ATOS (MX)	11		46	01/97 – 12/14	3985	
ATOS (MX)	1.0 i		40	02/98 – 12/14	3778	
ATOS (MX)	1.0 i		40	02/98 – 12/14	3985	
ATOS (MX)	1.0 i		41	02/98 – 03/02	3778	
ATOS (MX)	1.0 i		41	02/98 – 03/02	3985	
ATOS (MX)	1.0 i		43	03/01 – 07/03	3778	
ATOS (MX)	1.0 i		43	03/01 – 07/03	3985	
ATOS PRIME (MX)	11		43	06/03 -	3985	
ATOS PRIME (MX)	11		46	09/05 -	3985	
ATOS PRIME (MX)	1.0 i		40	08/99 -	3778	
ATOS PRIME (MX)	1.0 i		40	08/99 -	3985	
ATOS PRIME (MX)	1.0 i		43	03/01 -	3778	
ATOS PRIME (MX)	1.0 i		43	03/01 -	3985	
COUPE (GK)	20		100	08/01 – 08/09	3959	
COUPE (GK)	20		100	08/01 – 08/09	4087	
COUPE (GK)	20		102	03/02 – 08/09	3959	
COUPE (GK)	20		102	03/02 – 08/09	4087	
COUPE (GK)	1.6 16V		77	03/02 – 08/09	3959	
COUPE (GK)	1.6 16V		77	03/02 – 08/09	4087	
COUPE (GK)	1.6 16V		79	03/02 – 08/09	3959	
COUPE (GK)	1.6 16V		79	03/02 – 08/09	4087	
COUPE (GK)	2.0 GLS		105	02/03 – 08/09	3959	
COUPE (GK)	2.0 GLS		105	02/03 – 08/09	4087	
COUPE (GK)	2.7 V6		121	01/07 – 08/09	3959	
COUPE (GK)	2.7 V6		121	01/07 – 08/09	4087	

BESER

MAKE & MODEL		KW	YEAR		
HYUNDAI					
COUPE (GK)	2.7 V6	123	03/02 – 08/09	3959	
COUPE (GK)	2.7 V6	123	03/02 – 08/09	4087	
COUPE (RD)	20	101	08/99 – 01/02	3632	
COUPE (RD)	20	101	08/99 – 01/02	4087	
COUPE (RD)	1.6 16V	85	03/98 – 04/02	3632	
COUPE (RD)	1.6 16V	85	03/98 – 04/02	4087	
COUPE (RD)	1.6 i 16V	79	08/00 – 01/02	3632	
COUPE (RD)	1.6 i 16V	79	08/00 – 01/02	4087	
COUPE (RD)	1.6 i 16V	84	12/96 – 04/02	3632	
COUPE (RD)	1.6 i 16V	84	12/96 – 04/02	4087	
COUPE (RD)	1.8 SX	94	07/96 – 04/02	3632	
COUPE (RD)	1.8 SX	94	07/96 – 04/02	4087	
COUPE (RD)	2.0 16V	99	03/01 – 04/02	3632	
COUPE (RD)	2.0 16V	99	03/01 – 04/02	4087	
COUPE (RD)	2.0 16V	102	08/96 – 04/02	3632	
COUPE (RD)	2.0 16V	102	08/96 – 04/02	4087	
COUPE (RD)	F2 Evolution	115	01/99 – 05/99	3632	
COUPE (RD)	F2 Evolution	115	01/99 – 05/99	4087	
CRETA / ix25 / CANTUS	20	110	01/16 -	4028	
CRETA / ix25 / CANTUS	20	110	01/16 -	4028	
ELANTRA IV / AVANTE (HD)	1.6 CVVT (G4FC)	90	06/06 – 06/11	4028	
ELANTRA IV / AVANTE (HD)	2.0 CVVT	103	06/06 – 05/10	4028	
ELANTRA IV / AVANTE (HD)	2.0 CVVT (G4GC)	105	06/06 – 06/11	4028	
ELANTRA (XD)	16	66	06/00 – 07/06	3961	
ELANTRA (XD)	16	66	06/00 – 07/06	4087	
ELANTRA (XD)	16	77	05/03 – 07/06	3961	
ELANTRA (XD)	16	77	05/03 – 07/06	4087	
ELANTRA (XD)	16	79	06/00 – 07/06	3961	
ELANTRA (XD)	16	79	06/00 – 07/06	4087	
ELANTRA (XD)	16	82	09/03 – 07/06	4087	
ELANTRA (XD)	18	79	06/00 – 07/03	3961	
ELANTRA (XD)	18	79	06/00 – 07/03	4087	
ELANTRA (XD)	18	97	06/00 – 07/06	3961	
ELANTRA (XD)	18	97	06/00 – 07/06	4087	
ELANTRA (XD)	18	98	11/02 – 07/06	3961	
ELANTRA (XD)	18	98	11/02 – 07/06	4087	
ELANTRA (XD)	20	102	06/00 – 07/06	3961	
ELANTRA (XD)	20	102	06/00 – 07/06	4087	
ELANTRA (XD)	20	104	06/00 – 07/06	3961	
ELANTRA (XD)	20	104	06/00 – 07/06	4087	
ELANTRA (XD)	20	105	10/03 – 07/06	4087	
ELANTRA (XD)	1.6		00-06	4217	
ELANTRA (XD)	2.0 CRDi	83	04/01 – 07/06	3961	
ELANTRA (XD)	2.0 CRDi	83	04/01 – 07/06	4087	
ELANTRA Coupe (JK)	1.6	96	12/14 -		4343
ELANTRA Coupe (JK)	1.6	96	12/14 -	4342	
ELANTRA Coupe (JK)	2.0	129	09/13-12/15	4342	
ELANTRA Coupe (JK)	2.0	129	09/13-12/15		4343
ELANTRA Hatchback	16	81	12/03 – 12/10	3961	
ELANTRA Hatchback	16	81	12/03 – 12/10	4087	
ELANTRA Saloon	16	82	12/03 – 12/14	3961	
ELANTRA Saloon	16	82	12/03 – 12/14	4087	
ELANTRA Saloon	18	96	12/03 – 12/08	3961	
ELANTRA Saloon	18	96	12/03 – 12/08	4087	
ELANTRA Saloon	1.6 LPG	81	12/03 -	3961	
ELANTRA Saloon	1.6 LPG	81	12/03 -	4087	
ELANTRA Saloon (HD)	1.6 CRDi	85	11/05 – 12/11	3959	
ELANTRA Saloon (HD)	1.6 CRDi	85	11/05 – 12/11	3993	
ELANTRA Saloon (HD)	1.6 CVVT	90	06/06 – 06/11	3959	
ELANTRA Saloon (HD)	2.0 CVVT	103	06/06 – 05/10	3993	
ELANTRA Saloon (HD)	2.0 CVVT	105	06/06 – 06/11	4087	
ELANTRA Saloon (MD, UD)	16	94	06/11 -		4061
ELANTRA Saloon (MD, UD)	16	97	06/11 – 12/15		4061
ELANTRA Saloon (MD, UD)	18	110	09/10 -		4061
ELANTRA Saloon (MD, UD)	1.6	96	06/11-12/15	4342	
ELANTRA Saloon (MD, UD)	1.6	97	06/11-12/15		4343
ELANTRA Saloon (MD, UD)	1.6	103	06/11-08/15		4343
ELANTRA Saloon (MD, UD)	1.6	94	06/11 -		4343
ELANTRA Saloon (MD, UD)	1.6	103	06/11-08/15	4342	
ELANTRA Saloon (MD, UD)	1.6	96	06/11-12/15		4343
ELANTRA Saloon (MD, UD)	1.8	108	09/10 -	4342	

MAKE & MODEL		KW	YEAR		
HYUNDAI					
ELANTRA Saloon (MD, UD)	2.0	124	06/15 -	4342	
ELANTRA Saloon (MD, UD)	2.0	129	09/13 -	4342	
ELANTRA Saloon (MD, UD)	1.6 CRDi	94	02/11 – 12/15		4061
ELANTRA Saloon (MD, UD)	1.6 Hybrid	84	09/10 -08/15	4342	
ELANTRA Saloon (XD)	16	66	06/00 – 07/06	3961	
ELANTRA Saloon (XD)	16	66	06/00 – 07/06	4087	
ELANTRA Saloon (XD)	16	77	05/03 – 07/06	3961	
ELANTRA Saloon (XD)	16	77	05/03 – 07/06	4087	
ELANTRA Saloon (XD)	16	79	06/00 – 07/06	3961	
ELANTRA Saloon (XD)	16	79	06/00 – 07/06	4087	
ELANTRA Saloon (XD)	18	79	06/00 – 07/03	3961	
ELANTRA Saloon (XD)	18	79	06/00 – 07/03	4087	
ELANTRA Saloon (XD)	18	97	06/00 – 07/06	3961	
ELANTRA Saloon (XD)	18	97	06/00 – 07/06	4087	
ELANTRA Saloon (XD)	20	102	06/00 – 07/06	3961	
ELANTRA Saloon (XD)	20	102	06/00 – 07/06	4087	
ELANTRA Saloon (XD)	20	104	06/00 – 07/06	3961	
ELANTRA Saloon (XD)	20	104	06/00 – 07/06	4087	
ELANTRA Saloon (XD)	20	105	10/03 – 07/06	4087	
ELANTRA Saloon (XD)	2.0 CRDi	83	04/01 – 07/06	3961	
ELANTRA Saloon (XD)	2.0 CRDi	83	04/01 – 07/06	4087	
ELANTRA SEDAN (XD)	1.5 16V		00-06	4217	
EQUUS / CENTENNIAL	35	155	10/99 – 03/09	3976/1	
EQUUS / CENTENNIAL	38	213	03/09 -	4166	
EQUUS / CENTENNIAL	45	195	10/99 – 09/03	3976/1	
EQUUS / CENTENNIAL	3.8	213	03/09 -	4342	
EQUUS / CENTENNIAL	4.6 V8	269	03/09 -	4166	
EQUUS / CENTENNIAL	4.6 V8	269	03/09 -	4342	
EQUUS / CENTENNIAL	5.0 GDI	320	09/11 -	4342	
GETZ (TB)	11	46	09/02 – 09/05	3502	
GETZ (TB)	11	46	09/02 – 09/05	3504	
GETZ (TB)	11	46	09/02 – 09/05	3993	
GETZ (TB)	11	49	09/05 – 06/09	3502	
GETZ (TB)	11	49	09/05 – 06/09	3504	
GETZ (TB)	11	49	09/05 – 06/09	3993	
GETZ (TB)	13	61	09/04 – 06/09	3504	
GETZ (TB)	13	61	09/04 – 06/09	3993	
GETZ (TB)	13	63	09/03 – 09/05	3502	
GETZ (TB)	13	63	09/03 – 09/05	3504	
GETZ (TB)	13	63	09/03 – 09/05	3993	
GETZ (TB)	16	77	09/02 – 09/05	3502	
GETZ (TB)	16	77	09/02 – 09/05	3504	
GETZ (TB)	16	77	09/02 – 09/05	3993	
GETZ (TB)	16	78	06/05 – 12/06	3502	
GETZ (TB)	16	78	06/05 – 12/06	3504	
GETZ (TB)	16	78	06/05 – 12/06	3993	
GETZ (TB)	1.3 i	60	09/02 – 03/04	3502	
GETZ (TB)	1.3 i	60	09/02 – 03/04	3504	
GETZ (TB)	1.3 i	60	09/02 – 03/04	3993	
GETZ (TB)	1.4 i	71	08/05 – 12/10	3502	
GETZ (TB)	1.4 i	71	08/05 – 12/10	3504	
GETZ (TB)	1.4 i	71	08/05 – 12/10	3993	
GETZ (TB)	1.5 CRDi	60	03/03 – 09/05	3502	
GETZ (TB)	1.5 CRDi	60	03/03 – 09/05	3504	
GETZ (TB)	1.5 CRDi	60	03/03 – 09/05	3993	
GETZ (TB)	1.5 CRDi	65	08/05 – 06/09	3502	
GETZ (TB)	1.5 CRDi	65	08/05 – 06/09	3504	
GETZ (TB)	1.5 CRDi	65	08/05 – 06/09	3993	
GETZ (TB)	1.5 CRDi GLS	75	07/04 – 08/05	3502	
GETZ (TB)	1.5 CRDi GLS	75	07/04 – 08/05	3504	
GETZ (TB)	1.5 CRDi GLS	75	07/04 – 08/05	3993	
GETZ (TB)	1.5 CRDi GLS	81	08/05 – 06/09	3502	
GETZ (TB)	1.5 CRDi GLS	81	08/05 – 06/09	3504	
GETZ (TB)	1.5 CRDi GLS	81	08/05 – 06/09	3993	
GETZ (TB)	1.5 i	73	03/03 – 09/05	3502	
GETZ (TB)	1.5 i	73	03/03 – 09/05	3504	
GETZ (TB)	1.5 i	73	03/03 – 09/05	3993	
GRACE Bus	2.5 D	55	07/93 – 06/94	3507	
GRACE Bus	2.5 TD	59	06/98 – 10/01	3507	
GRACE Bus	2.6 D	57	10/99 – 10/04	3507	
GRAND SANTA FÉ	2.2 CRDi All-wheel Drive	145	06/13 -	3960	

MAKE & MODEL		KW	YEAR		
HYUNDAI					
GRAND SANTA FÉ	2.2 CRDi All-wheel Drive	145	06/13 -		4060
GRAND SANTA FÉ	2.2 CRDi All-wheel Drive	147	10/15 -	3960	
GRAND SANTA FÉ	2.2 CRDi All-wheel Drive	147	10/15 -		4060
GRAND SANTA FÉ	3.3 GDi All-wheel Drive	210	07/13 -	3960	
GRAND SANTA FÉ	3.3 GDi All-wheel Drive	210	07/13 -		4060
GRAND SANTA FÉ	3.4 All-wheel Drive	199	02/14 -	3960	
GRAND SANTA FÉ	3.4 All-wheel Drive	199	02/14 -		4060
GRANDEUR (TG)	27	141	05/06 – 10/10	3993	
GRANDEUR (TG)	27	141	05/06 – 10/10		4061
GRANDEUR (TG)	33	173	04/05 – 12/10	3993	
GRANDEUR (TG)	33	173	04/05 – 12/10		4061
GRANDEUR (TG)	33	191	11/10 – 12/11		4061
GRANDEUR (TG)	38	195	06/05 – 12/11	3993	
GRANDEUR (TG)	38	195	06/05 – 12/11		4061
GRANDEUR (TG)	2.2 CRDi	110	06/06 – 12/11	3993	
GRANDEUR (TG)	2.2 CRDi	110	06/06 – 12/11		4061
GRANDEUR (TG)	2.2 CRDi	114	06/06 – 10/10	3993	
GRANDEUR (TG)	2.2 CRDi	114	06/06 – 10/10		4061
H-1 / STAREX	24	82	06/97 – 04/04	3648	
H-1 / STAREX	24	82	06/97 – 04/04	3843	
H-1 / STAREX	24	101	02/03 – 04/04	3843	
H-1 / STAREX	24	107	11/01 – 04/04	3648	
H-1 / STAREX	24	107	11/01 – 04/04	3843	
H-1 / STAREX	2.4 4WD	82	02/98 – 04/04	3648	
H-1 / STAREX	2.4 4WD	82	02/98 – 04/04	3843	
H-1 / STAREX	2.4 4WD	99	06/01 – 04/04	3648	
H-1 / STAREX	2.4 4WD	99	06/01 – 04/04	3843	
H-1 / STAREX	2.5 CRDi	81	06/06 – 12/07	3648	
H-1 / STAREX	2.5 CRDi	81	06/06 – 12/07	3843	
H-1 / STAREX	2.5 CRDi	85	06/97 – 04/04	4035	
H-1 / STAREX	2.5 CRDi	103	12/02 – 04/04	3843	
H-1 / STAREX	2.5 CRDi	120	12/02 – 04/04	3843	
H-1 / STAREX	2.5 CRDi 4WD	103	12/02 – 04/04	3843	
H-1 / STAREX	2.5 D	57	10/97 – 04/04	3648	
H-1 / STAREX	2.5 D	57	10/97 – 04/04	3843	
H-1 / STAREX	2.5 TCi	73	10/97 – 12/07	3648	
H-1 / STAREX	2.5 TCi	73	10/97 – 12/07	3843	
H-1 / STAREX	2.5 TCi	74	05/04 – 12/07	3843	
H-1 / STAREX	2.5 TD	59	06/97 – 04/04	3648	
H-1 / STAREX	2.5 TD	59	06/97 – 04/04	3843	
H-1 / STAREX	2.5 TD	62	10/97 – 04/04	3843	
H-1 / STAREX	2.5 TD 4WD	59	02/98 – 04/04	3648	
H-1 / STAREX	2.5 TD 4WD	59	02/98 – 04/04	3843	
H-1 / STAREX	2.5 TD 4WD	73	03/01 – 04/04	3648	
H-1 / STAREX	2.5 TD 4WD	73	03/01 – 04/04	3843	
H-1 / STAREX	2.5 TD 4WD	74	11/01 – 04/04	3648	
H-1 / STAREX	2.5 TD 4WD	74	11/01 – 04/04	3843	
H-1 / STAREX	2.6 TDiC	63	10/97 – 04/04	3648	
H-1 / STAREX	2.6 TDiC	63	10/97 – 04/04	3843	
H-1 Box	24	82	03/00 – 04/04	3648	
H-1 Box	24	82	03/00 – 04/04	3843	
H-1 Box	24	107	11/01 – 04/04	3648	
H-1 Box	24	107	11/01 – 04/04	3843	
H-1 Box	2.5 CRDi	81	07/01 – 04/04	3843	
H-1 Box	2.5 CRDi	81	07/01 – 04/04		3989
H-1 Box	2.5 CRDi	103	08/03 – 12/07	3843	
H-1 Box	2.5 TD	59	03/00 – 09/00	3648	
H-1 Box	2.5 TD	59	03/00 – 09/00		3989
H-1 Box	2.5 TD	73	03/00 – 04/04	3648	
H-1 Box	2.5 TD	73	03/00 – 04/04	3843	
H-1 Box	2.5 TD	74	10/01 – 04/04	3648	
H-1 Box	2.5 TD	74	10/01 – 04/04	3843	
H-1 Box	2.6 CRDi	79	10/97 – 12/07	3843	
H-1 Box	2.6 CRDi	79	10/97 – 12/07		3989
H-1 Cargo (TQ)	2.5 CRDi	81	02/08 -	4035	
H-1 Cargo (TQ)	2.5 CRDi	85	08/11 -	4035	
H-1 Cargo (TQ)	2.5 CRDi	100	08/09 -	4035	
H-1 Cargo (TQ)	2.5 CRDi	120	02/08 -	4035	
H-1 Cargo (TQ)	2.5 CRDi	125	02/08 -	4035	
H-1 Platform/Chassis	2.5 CRDi	103	12/02 – 10/05	3843	
H-1 Platform/Chassis	2.5 D	73	06/00 – 10/05	3648	

MAKE & MODEL		KW	YEAR		
HYUNDAI					
H-1 Platform/Chassis	2.5 D	73	06/00 – 10/05	3843	
H-1 Travel (TQ)	2.4 i	126	02/08 -	4035	
H-1 Travel (TQ)	2.4 i	129	02/08 -	4035	
H-1 Travel (TQ)	2.5 CRDI	100	07/08 -	4035	
H-1 Travel (TQ)	2.5 CRDi	81	07/10 -	4035	
H-1 Travel (TQ)	2.5 CRDi	85	08/11 -	4035	
H-1 Travel (TQ)	2.5 CRDi	120	05/08 -	4035	
H-1 Travel (TQ)	2.5 CRDi	125	05/08 -	4035	
H100 Box	24	82	10/97 – 12/04	3507	
H100 Box	2.5 D	55	07/93 – 12/94	3507	
H100 Box	2.5 D	57	12/94 – 03/00	3507	
H100 Box	2.5 TDiC	59	06/98 – 10/03	3507	
H100 Box	2.6 D	57	10/99 – 12/04	3507	
H100 Bus (P)	24	84	01/97 – 03/00	3507	
H100 Bus (P)	24	90	07/93 – 03/00	3507	
H100 Bus (P)	2.5 D	55	07/93 – 12/94	3507	
H100 Bus (P)	2.5 D	57	12/94 – 03/00	3507	
H100 Bus (P)	2.5 TD	59	07/93 – 03/00	3507	
H100 Bus (P)	2.6 D	57	10/99 – 10/04	3507	
H100 Pickup	2.5 D	57	05/96 – 10/01	3507	
H100 Platform/Chassis	24	84	05/96 – 12/97	3507	
H100 Platform/Chassis	2.5 CRDI	96	01/04 -	3648	
H100 Platform/Chassis	2.5 D	57	07/93 – 12/97	3507	
H100 Platform/Chassis	2.5 D	59	05/96 – 12/97	3507	
H100 Platform/Chassis	2.5 TD	74	11/06 -	3648	
H100 Platform/Chassis	2.6 D	58	01/04 – 10/06	3648	
H350 / SOLATI	2.5 CRDi (D4CB)	110	04/15 -	4251	
H350 / SOLATI	2.5 CRDi (D4CB)	110	04/15 -	4251	
H350 / SOLATI	2.5 CRDi (D4CB)	110	04/15 -	4251	
H350 / SOLATI	2.5 CRDi (D4CB)	125	04/15 -	4251	
H350 / SOLATI	2.5 CRDi (D4CB)	125	04/15 -	4251	
H350 / SOLATI	2.5 CRDi (D4CB)	125	04/15 -	4251	
HIGHWAY VAN	2.0 16V	100	03/00 – 03/04	3843	
HIGHWAY VAN	2.0 16V	100	03/00 – 03/04	3993	
HIGHWAY VAN	2.7 V6 24V	125	03/00 – 03/04	3843	
HIGHWAY VAN	2.7 V6 24V	125	03/00 – 03/04	3993	
i10 (BA, IA)	10	49	08/13 -		3969
i10 (BA, IA)	12	64	12/13 -		3969
i10 (BA, IA)	1,0 LPG	49	02/14 -		3969
i10 (PA)	10	51	01/11 – 12/13	3968	
i10 (PA)	10	51	01/11 – 12/13		3969
i10 (PA)	11	48	12/07 – 12/13	3968	
i10 (PA)	11	48	12/07 – 12/13		3969
i10 (PA)	11	49	01/08 – 12/13	3968	
i10 (PA)	11	49	01/08 – 12/13		3969
i10 (PA)	11	51	04/11 – 12/13	3968	
i10 (PA)	11	51	04/11 – 12/13		3969
i10 (PA)	12	57	11/08 – 12/11	3968	
i10 (PA)	12	57	11/08 – 12/11		3969
i10 (PA)	12	63	04/11 – 12/13	3968	
i10 (PA)	12	63	04/11 – 12/13		3969
i10 (PA)	1.1 CRDi	55	01/08 – 12/11	3968	
i10 (PA)	1.1 CRDi	55	01/08 – 12/11		3969
i30 (FD)	1.4 (G4FA)	77	10/07 – 11/11	4028	
i30 (FD)	1.4 (G4FA)	80	11/09 – 06/12	4028	
i30 (FD)	1.4 (G4FA)	80	10/07 – 11/11	4028	
i30 (FD)	1.6 (G4FC)	85	02/08 – 06/12	4028	
i30 (FD)	1.6 (G4FC)	85	10/07 – 11/11	4028	
i30 (FD)	1.6 (G4FC)	90	02/08 – 06/12	4028	
i30 (FD)	1.6 (G4FC)	90	10/07 – 11/11	4028	
i30 (FD)	1.6 (G4FC)	93	02/08 – 06/12	4028	
i30 (FD)	1.6 (G4FC)	93	02/08 – 11/11	4028	
i30 (FD)	1.6 CRDi (D4FB)	66	02/08 – 06/12	4028	
i30 (FD)	1.6 CRDi (D4FB)	66	10/07 – 11/11	4028	
i30 (FD)	1.6 CRDi (D4FB)	85	02/08 – 06/12	4028	
i30 (FD)	1.6 CRDi (D4FB)	85	10/07 – 11/11	4028	
i30 (FD)	1.6 CRDi Concept	66	10/07 -	4028	
i30 (FD)	1.6 CRDi Emotión	103	10/07 -	4028	
i30 (FD)	2.0 (G4GC)	105	02/08 – 06/12	4028	
i30 (FD)	2.0 (G4GC)	105	10/07 – 11/11	4028	
i30 (FD)	2.0 (G4GC-G)	105	02/08 – 06/12	4028	

MAKE & MODEL   		KW	YEAR		
HYUNDAI					
i30 (FD)	2.0 (G4GC-G)	105	10/07 – 11/11	4028	
i30 (FD)	2.0 CRDi (D4EA)	103	02/08 – 06/12	4028	
i30 (FD)	2.0 CRDi (D4EA)	103	10/07 – 11/11	4028	
i30 (GD)	14	73	12/11 -		4061
i30 (GD)	14	74	12/14 -		4061
i30 (GD)	14	74	12/14 -	4166	
i30 (GD)	16	88	01/12 -		4061
i30 (GD)	1.4	73	12/11-12/15	4342	
i30 (GD)	1.4	74	12/14-12/16	4342	
i30 (GD)	1.6	95	12/11-12/15		4343
i30 (GD)	1.6 16V Flex	94	11/11-12/16	4342	
i30 (GD)	1.8	107	08/13 -	4342	
i30 (GD)	1.8	107	08/13 -		4343
i30 (GD)	1.8	110	01/12 -		4343
i30 (GD)	2.0	124	12/14-02/17		4343
i30 (GD)	2.0	129	09/13 -		4343
i30 (GD)	2.0	124	12/14-02/17	4342	
i30 (GD)	1.4 CRDi	66	12/11 -		4061
i30 (GD)	1.4 CRDi	66	12/11-12/16	4342	
i30 (GD)	1.6 16V Flex	94	11/11-12/16		4343
i30 (GD)	1.6 CRDi	81	12/11 -		4061
i30 (GD)	1.6 CRDi	81	12/11 -	4166	
i30 (GD)	1.6 CRDi	94	12/11 -		4061
i30 (GD)	1.6 CRDi	100	11/11 -		4061
i30 (GD)	1.6 CRDi	100	11/11 -	4166	
i30 (GD)	1.6 CRDi	81	12/11 12/16	4342	
i30 (GD)	1.6 CRDi	81	12/11-12/16		4343
i30 (GD)	1.6 CRDi	94	12/11-12/15		4343
i30 (GD)	1.6 CRDi	100	11/11-12/16	4342	
i30 (GD)	1.6 CRDi	100	11/11-12/16		4343
i30 (GD)	1.6 CRDi	94	12/11-12/15	4342	
i30 (GD)	1.6 GDI	95	12/11 -		4061
i30 (GD)	1.6 GDI	99	12/11 -		4061
i30 (GD)	1.6 GDI	103	06/11 -	4342	
i30 (GD)	1.6 GDI	103	06/11 -		4343
i30 (GD)	1.6 GDI	99	12/11-12/16		4343
i30 (GD)	1.6 T-GDI	137	01/15 -		4061
i30 (GD)	1.6 T-GDI	137	01/15 -	4166	
i30 (GD)	1.6 T-GDI	137	01/15 -	4342	
i30 (GD)	1.6 T-GDI	137	01/15 -		4343
i30 (GD)	2.0	129	09/13 -	4342	
i30 Coupe	14	73	05/13 -		4061
i30 Coupe	1.4	74	12/14 -	4342	
i30 Coupe	1.4	73	05/13 -		4343
i30 Coupe	1.4	74	12/14 -		4343
i30 Coupe	1.4	73	05/13 -	4342	
i30 Coupe	1.4 CRDi	66	05/13 -		4343
i30 Coupe	1.4 CRDi	66	05/13 -	4342	
i30 Coupe	1.6 GDI	99	05/13 -		4343
i30 Coupe	1.4 CRDi	66	05/13 -		4061
i30 Coupe	1.6 CRDi	94	05/13 -		4061
i30 Coupe	1.6 CRDi	81	11/15 -	4342	
i30 Coupe	1.6 CRDi	81	11/15 -		4343
i30 Coupe	1.6 CRDi	94	05/13 -	4342	
i30 Coupe	1.6 CRDi	100	12/14 -	4342	
i30 Coupe	1.6 CRDi	100	12/14 -		4343
i30 Coupe	1.6 CRDi	94	05/13 -		4343
i30 Coupe	1.6 GDI	99	05/13 -		4061
i30 Coupe	1.6 GDI	99	05/13 -	4342	
i30 Coupe	1.6 MPI	88	11/16 -	4342	
i30 Coupe	1.6 MPI	88	11/16 -		4343
i30 Coupe	1.6 T-GDI	137	01/15 -		4061
i30 Coupe	1.6 T-GDI	137	01/15 -	4166	
i30 Coupe	1.6 T-GDI	137	01/15 -	4342	
i30 Coupe	1.6 T-GDI	137	01/15 -		4343
i30 CW (GD)	14	73	06/12 -		4061
i30 CW (GD)	14	73	06/12 -	4166	
i30 CW (GD)	14	74	01/15 -		4061
i30 CW (GD)	14	74	01/15 -	4166	
i30 CW (GD)	16	88	06/12 -		4061
i30 CW (GD)	16	88	06/12 -	4166	

MAKE & MODEL		KW	YEAR		
HYUNDAI					
i30 (FD)	2.0 (G4GC-G)	105	10/07 – 11/11	4028	
i30 (FD)	2.0 CRDi (D4EA)	103	02/08 – 06/12	4028	
i30 (FD)	2.0 CRDi (D4EA)	103	10/07 – 11/11	4028	
i30 (GD)	14	73	12/11 -		4061
i30 (GD)	14	74	12/14 -		4061
i30 (GD)	14	74	12/14 -	4166	
i30 (GD)	16	88	01/12 -		4061
i30 (GD)	1.4	73	12/11-12/15	4342	
i30 (GD)	1.4	74	12/14-12/16	4342	
i30 (GD)	1.6	95	12/11-12/15		4343
i30 (GD)	1.6 16V Flex	94	11/11-12/16	4342	
i30 (GD)	1.8	107	08/13 -	4342	
i30 (GD)	1.8	107	08/13 -		4343
i30 (GD)	1.8	110	01/12 -		4343
i30 (GD)	2.0	124	12/14-02/17		4343
i30 (GD)	2.0	129	09/13 -		4343
i30 (GD)	2.0	124	12/14-02/17	4342	
i30 (GD)	1.4 CRDi	66	12/11 -		4061
i30 (GD)	1.4 CRDi	66	12/11-12/16	4342	
i30 (GD)	1.6 16V Flex	94	11/11-12/16		4343
i30 (GD)	1.6 CRDi	81	12/11 -		4061
i30 (GD)	1.6 CRDi	81	12/11 -	4166	
i30 (GD)	1.6 CRDi	94	12/11 -		4061
i30 (GD)	1.6 CRDi	100	11/11 -		4061
i30 (GD)	1.6 CRDi	100	11/11 -	4166	
i30 (GD)	1.6 CRDi	81	12/11 12/16	4342	
i30 (GD)	1.6 CRDi	81	12/11-12/16		4343
i30 (GD)	1.6 CRDi	94	12/11-12/15		4343
i30 (GD)	1.6 CRDi	100	11/11-12/16	4342	
i30 (GD)	1.6 CRDi	100	11/11-12/16		4343
i30 (GD)	1.6 CRDi	94	12/11-12/15	4342	
i30 (GD)	1.6 GDI	95	12/11 -		4061
i30 (GD)	1.6 GDI	99	12/11 -		4061
i30 (GD)	1.6 GDI	103	06/11 -	4342	
i30 (GD)	1.6 GDI	103	06/11 -		4343
i30 (GD)	1.6 GDI	99	12/11-12/16		4343
i30 (GD)	1.6 T-GDI	137	01/15 -		4061
i30 (GD)	1.6 T-GDI	137	01/15 -	4166	
i30 (GD)	1.6 T-GDI	137	01/15 -	4342	
i30 (GD)	1.6 T-GDI	137	01/15 -		4343
i30 (GD)	2.0	129	09/13 -	4342	
i30 Coupe	14	73	05/13 -		4061
i30 Coupe	1.4	74	12/14 -	4342	
i30 Coupe	1.4	73	05/13 -		4343
i30 Coupe	1.4	74	12/14 -		4343
i30 Coupe	1.4	73	05/13 -	4342	
i30 Coupe	1.4 CRDi	66	05/13 -		4343
i30 Coupe	1.4 CRDi	66	05/13 -	4342	
i30 Coupe	1.6 GDI	99	05/13 -		4343
i30 Coupe	1.4 CRDi	66	05/13 -		4061
i30 Coupe	1.6 CRDi	94	05/13 -		4061
i30 Coupe	1.6 CRDi	81	11/15 -	4342	
i30 Coupe	1.6 CRDi	81	11/15 -		4343
i30 Coupe	1.6 CRDi	94	05/13 -	4342	
i30 Coupe	1.6 CRDi	100	12/14 -	4342	
i30 Coupe	1.6 CRDi	100	12/14 -		4343
i30 Coupe	1.6 CRDi	94	05/13 -		4343
i30 Coupe	1.6 GDI	99	05/13 -		4061
i30 Coupe	1.6 GDI	99	05/13 -	4342	
i30 Coupe	1.6 MPI	88	11/16 -	4342	
i30 Coupe	1.6 MPI	88	11/16 -		4343
i30 Coupe	1.6 T-GDI	137	01/15 -		4061
i30 Coupe	1.6 T-GDI	137	01/15 -	4166	
i30 Coupe	1.6 T-GDI	137	01/15 -	4342	
i30 Coupe	1.6 T-GDI	137	01/15 -		4343
i30 CW (GD)	14	73	06/12 -		4061
i30 CW (GD)	14	73	06/12 -	4166	
i30 CW (GD)	14	74	01/15 -		4061
i30 CW (GD)	14	74	01/15 -	4166	
i30 CW (GD)	16	88	06/12 -		4061
i30 CW (GD)	16	88	06/12 -	4166	

MAKE & MODEL		KW	YEAR		
HYUNDAI					
i30 CW (GD)	16	95	06/12 -		4061
i30 CW (GD)	16	95	06/12 -	4166	
i30 CW (GD)	1.4 CRDi	66	06/12 -		4061
i30 CW (GD)	1.4 CRDi	66	06/12 -	4166	
i30 CW (GD)	1.6 CRDi	81	06/12 -		4061
i30 CW (GD)	1.6 CRDi	81	06/12 -	4166	
i30 CW (GD)	1.6 CRDi	94	06/12 -		4061
i30 CW (GD)	1.6 CRDi	94	06/12 -	4166	
i30 CW (GD)	1.6 CRDi	100	01/15 -		4061
i30 CW (GD)	1.6 CRDi	100	01/15 -	4166	
i30 CW (GD)	1.6 GDI	99	06/12 -		4061
i30 CW (GD)	1.6 GDI	99	06/12 -	4166	
i30 Estate (GD)	1.4	74	01/15 -		4343
i30 Estate (GD)	1.4	74	01/15 -	4342	
i30 Estate (GD)	1.4	73	06/12-12/15	4342	
i30 Estate (GD)	1.4	73	06/12-12/15		4343
i30 Estate (GD)	1.6	88	06/12 -	4342	
i30 Estate (GD)	1.6	95	06/12-12/15		4343
i30 Estate (GD)	1.6	88	06/12 -		4343
i30 Estate (GD)	1.6	95	06/12-12/15	4342	
i30 Estate (GD)	1.6 GDI	99	06/12 -	4342	
i30 Estate (GD)	1.4 CRDi	66	06/12 -	4342	
i30 Estate (GD)	1.4 CRDi	66	06/12 -		4343
i30 Estate (GD)	1.6 CRDi	81	06/12 -	4342	
i30 Estate (GD)	1.6 CRDi	94	06/12-12/15	4342	
i30 Estate (GD)	1.6 CRDi	81	06/12 -		4343
i30 Estate (GD)	1.6 CRDi	94	06/12-12/15		4343
i30 Estate (GD)	1.6 CRDi	100	01/15 -	4342	
i30 Estate (GD)	1.6 CRDi	100	01/15 -		4343
i30 Estate (GD)	1.6 GDI	99	06/12 -		4343
i40 (VF)	20	123	03/12 -		4061
i40 (VF)	2.0	123	03/12 -		4343
i40 (VF)	1.6 GDI	99	03/12 -		4061
i40 (VF)	1.6 GDI	99	03/12 -		4343
i40 (VF)	1.7 CRDI	103	10/12 -		4343
i40 (VF)	1.7 CRDI	104	01/15 -		4061
i40 (VF)	1.7 CRDI	104	01/15 -		4343
i40 (VF)	1.7 CRDi	85	03/12 -		4061
i40 (VF)	1.7 CRDi	100	03/12 -		4061
i40 (VF)	1.7 CRDi	85	03/12 -		4343
i40 (VF)	1.7 CRDi	100	03/12 -		4343
i40 (VF)	2.0 CVVT	110	10/12 -		4061
i40 (VF)	2.0 CVVT	110	10/12 -		4343
i40 (VF)	2.0 GDI	131	03/12 -		4061
i40 (VF)	2.0 GDI	122	03/12 -		4343
i40 (VF)	2.0 GDI	130	03/12 -		4343
i40 (VF)	2.0 GDI	131	03/12 -		4343
i40 (VF)	2.0 GDi	121	12/14 -		4061
i40 (VF)	2.0 GDi	121	12/14 -		4343
i40 CW (VF)	20	122	03/12 -		4061
i40 CW (VF)	2.0	122	03/12 -		4343
i40 CW (VF)	1.6 GDI	99	07/11 -		4061
i40 CW (VF)	1.6 GDI	99	07/11 -		4343
i40 CW (VF)	1.7 CRDI	103	03/12 -		4343
i40 CW (VF)	1.7 CRDi	85	07/11 -		4061
i40 CW (VF)	1.7 CRDi	100	07/11 -		4061
i40 CW (VF)	1.7 CRDi	104	01/15 -		4061
i40 CW (VF)	1.7 CRDi	85	07/11 -		4343
i40 CW (VF)	1.7 CRDi	100	07/11 -		4343
i40 CW (VF)	1.7 CRDi	104	01/15 -		4343
i40 CW (VF)	2.0 CVVT	110	10/12 -		4061
i40 CW (VF)	2.0 CVVT	110	10/12 -		4343
i40 CW (VF)	2.0 GDI	130	07/11 -		4061
i40 CW (VF)	2.0 GDI	130	07/11 -		4343
i40 CW (VF)	2.0 GDi	121	12/14 -		4061
i40 CW (VF)	2.0 GDi	121	12/14 -		4343
ix20 (JC)	14	66	11/10 -	3959	
ix20 (JC)	14	66	11/10 -	4049	
ix20 (JC)	16	92	11/10 -	3959	
ix20 (JC)	16	92	11/10 -	4049	
ix20 (JC)	1.4 CRDi	57	06/11 -	3959	

MAKE & MODEL		KW	YEAR		
HYUNDAI					
ix20 (JC)	1.4 CRDi	57	06/11 -	4049	
ix20 (JC)	1.4 CRDi	66	11/10 -	3959	
ix20 (JC)	1.4 CRDi	66	11/10 -	4049	
ix20 (JC)	1.6 CRDI	85	06/11 -	3959	
ix20 (JC)	1.6 CRDI	85	06/11 -	4049	
ix20 (JC)	1.6 CRDI	94	06/11 -	3959	
ix20 (JC)	1.6 CRDI	94	06/11 -	4049	
ix35	20	120	04/10 -		3980
ix35	24	128	04/10 -		3980
ix35	2.0 All-wheel Drive	120	04/10 -		3980
ix35	2.4 All-wheel Drive	128	04/10 -		3980
ix35 (LM, EL, ELH)	16	99	11/10 -		3980
ix35 (LM, EL, ELH)	20	120	01/10 -		3980
ix35 (LM, EL, ELH)	1.7 CRDi	85	11/10 -		3980
ix35 (LM, EL, ELH)	2.0 4WD	120	01/10 -		3980
ix35 (LM, EL, ELH)	2.0 CRDi	100	01/10 -		3980
ix35 (LM, EL, ELH)	2.0 CRDi	130	01/12 -		3980
ix35 (LM, EL, ELH)	2.0 CRDi	135	01/12 -		3980
ix35 (LM, EL, ELH)	2.0 CRDi 4WD	100	01/10 -		3980
ix35 (LM, EL, ELH)	2.0 CRDi 4WD	135	01/10 -		3980
ix35 (LM, EL, ELH)	2.0 CVVT	110	08/09 -		3980
ix35 (LM, EL, ELH)	2.0 GDi	122	08/13 -		3980
ix35 (LM, EL, ELH)	2.0 GDi 4WD	122	08/13 -		3980
ix35 (LM, EL, ELH)	2.4 DCVVT-I 4WD	128	07/10 – 12/13		3980
ix35 (LM, EL, ELH)	2.4 GDi 4WD	136	01/13 -		3980
ix35 (LM, EL, ELH)	FCEV	53	10/12 -		3980
ix35 (LM, EL, ELH)	Fuel Cell	100	09/14 -		3980
LANTRA I (J-1)	1.5 i.e.	63	10/90 – 11/95	3502	
LANTRA I (J-1)	1.5 i.e.	63	10/90 – 11/95	4087	
LANTRA I (J-1)	1.6 i.e. 16V	78	10/90 – 11/95	3632	
LANTRA I (J-1)	1.6 i.e. 16V	78	10/90 – 11/95	4087	
LANTRA I (J-1)	1.6 i.e. 16V	84	10/90 – 11/95	3632	
LANTRA I (J-1)	1.6 i.e. 16V	84	10/90 – 11/95	4087	
LANTRA I (J-1)	1.8 i.e. 16V	93	10/90 – 11/95	3632	
LANTRA I (J-1)	1.8 i.e. 16V	93	10/90 – 11/95	4087	
LANTRA II (J-2)	20	100	04/97 – 05/00	3632	
LANTRA II (J-2)	20	100	04/97 – 05/00	4087	
LANTRA II (J-2)	1.5 12V	65	12/96 – 09/00	3632	
LANTRA II (J-2)	1.5 12V	65	12/96 – 09/00	4087	
LANTRA II (J-2)	1.5 16V	76	11/95 – 10/00	3502	
LANTRA II (J-2)	1.5 16V	76	11/95 – 10/00	3632	
LANTRA II (J-2)	1.5 16V	76	11/95 – 10/00	4087	
LANTRA II (J-2)	1.6 16V	76	11/95 - 10/00	3632	
LANTRA II (J-2)	1.6 16V	76	11/95 – 10/00	4087	
LANTRA II (J-2)	1.6 16V	84	11/95 – 09/00	3632	
LANTRA II (J-2)	1.6 16V	84	11/95 – 09/00	4087	
LANTRA II (J-2)	1.6 i	66	11/95 – 09/00	3632	
LANTRA II (J-2)	1.6 i	66	11/95 – 09/00	4087	
LANTRA II (J-2)	1.8 16V	94	11/95 – 09/00	3632	
LANTRA II (J-2)	1.8 16V	94	11/95 – 09/00	4087	
LANTRA II (J-2)	1.9 D	50	03/98 – 09/00	3632	
LANTRA II (J-2)	1.9 D	50	03/98 – 09/00	4087	
LANTRA II (J-2)	2.0 16V	102	08/96 – 09/00	3632	
LANTRA II (J-2)	2.0 16V	102	08/96 – 09/00	4087	
LANTRA II Wagon (J-2)	20	100	04/97 – 05/00	3632	
LANTRA II Wagon (J-2)	20	100	04/97 – 05/00	4087	
LANTRA II Wagon (J-2)	1.5 12V	65	04/97 – 10/00	3632	
LANTRA II Wagon (J-2)	1.5 12V	65	04/97 – 10/00	4087	
LANTRA II Wagon (J-2)	1.6 16V	84	02/96 – 10/00	3632	
LANTRA II Wagon (J-2)	1.6 16V	84	02/96 – 10/00	4087	
LANTRA II Wagon (J-2)	1.6 i	66	02/96 – 10/00	3632	
LANTRA II Wagon (J-2)	1.6 i	66	02/96 – 10/00	4087	
LANTRA II Wagon (J-2)	1.8 16V	94	02/96 – 10/00	3632	
LANTRA II Wagon (J-2)	1.8 16V	94	02/96 – 10/00	4087	
LANTRA II Wagon (J-2)	1.9 D	50	03/98 – 10/00	3632	
LANTRA II Wagon (J-2)	1.9 D	50	03/98 – 10/00	4087	
LANTRA II Wagon (J-2)	2.0 16V	102	12/96 – 10/00	3632	
LANTRA II Wagon (J-2)	2.0 16V	102	12/96 – 10/00	4087	
MATRIX (FC)	15	75	06/01 – 08/10	3632	
MATRIX (FC)	15	75	06/01 – 08/10	3961	
MATRIX (FC)	15	75	06/01 – 08/10	3993	

MAKE & MODEL		KW	YEAR		
HYUNDAI					
MATRIX (FC)	16	66	01/02 – 12/05	3961	
MATRIX (FC)	16	66	01/02 – 12/05	3993	
MATRIX (FC)	16	76	06/01 – 08/10	3632	
MATRIX (FC)	16	76	06/01 – 08/10	3961	
MATRIX (FC)	16	76	06/01 – 08/10	3993	
MATRIX (FC)	18	90	06/01 – 08/10	3632	
MATRIX (FC)	18	90	06/01 – 08/10	3961	
MATRIX (FC)	18	90	06/01 – 08/10	3993	
MATRIX (FC)	1.5 CRDi	60	10/01 – 08/10	3632	
MATRIX (FC)	1.5 CRDi	60	10/01 – 08/10	3961	
MATRIX (FC)	1.5 CRDi	60	10/01 – 08/10	3993	
MATRIX (FC)	1.5 CRDi	75	12/04 – 08/10	3961	
MATRIX (FC)	1.5 CRDi	75	12/04 – 08/10	3993	
MATRIX (FC)	1.5 CRDi VGT	81	08/05 – 08/10	3961	
MATRIX (FC)	1.5 CRDi VGT	81	08/05 – 08/10	3993	
MOINCA (MING YU)	18	96	08/09 – 12/14	3959	
MOINCA (MING YU)	18	96	08/09 – 12/14	3993	
MOINCA (MING YU)	20	101	08/09 – 12/15	3959	
MOINCA (MING YU)	20	101	08/09 – 12/15	3993	
PONY (X-2)	13	43	10/89 – 01/95	3502	
PONY (X-2)	13	43	10/89 – 01/95	3504	
PONY (X-2)	13	49	10/89 – 01/95	3502	
PONY (X-2)	13	49	10/89 – 01/95	3504	
PONY (X-2)	15	53	10/89 – 01/95	3502	
PONY (X-2)	15	53	10/89 – 01/95	3504	
PONY (X-2)	1.5 i	61	10/89 – 01/95	3502	
PONY (X-2)	1.5 i	61	10/89 – 01/95	3504	
PONY (X-2)	1.5 i	62	10/89 – 01/95	3502	
PONY (X-2)	1.5 i	62	10/89 – 01/95	3504	
PONY / EXCEL Saloon (X-2)	13	48	12/92 – 09/94	3502	
PONY / EXCEL Saloon (X-2)	13	48	12/92 – 09/94	3504	
PONY / EXCEL Saloon (X-2)	13	49	01/90 – 01/95	3502	
PONY / EXCEL Saloon (X-2)	13	49	01/90 – 01/95	3504	
PONY / EXCEL Saloon (X-2)	13	51	09/89 – 08/94	3502	
PONY / EXCEL Saloon (X-2)	13	51	09/89 – 08/94	3504	
PONY / EXCEL Saloon (X-2)	15	53	01/90 – 01/95	3502	
PONY / EXCEL Saloon (X-2)	15	53	01/90 – 01/95	3504	
PONY / EXCEL Saloon (X-2)	1.5 i	61	01/90 – 01/95	3502	
PONY / EXCEL Saloon (X-2)	1.5 i	61	01/90 – 01/95	3504	
PONY / EXCEL Saloon (X-2)	1.5 i	62	01/90 – 01/95	3502	
PONY / EXCEL Saloon (X-2)	1.5 i	62	01/90 – 01/95	3504	
PONY I-II	1.2 (J12G)	40	02/78 – 06/86	3709	
PONY I-II	1.2 (J12G)	40	06/74 – 12/82	3709	
PONY I-II	1.2 1200		06/74 -	3709	
PONY I-II	1.4 (4G33)	50	02/78 – 06/86	3709	
PONY I-II	1.4 (4G33)	50	08/77 – 12/82	3709	
PONY I-II	1.4 1400		06/74 -	3709	
PONY III / EXCEL (X-1)	1.3 (G4DG)	43	10/89 – 01/95	3709	
PONY III / EXCEL (X-1)	1.3 (G4DG)	49	10/89 – 01/95	3709	
PONY III / EXCEL (X-1)	1.3 (G13B)	50	10/85 – 09/89	3709	
PONY III / EXCEL (X-1)	1.5 (G4DJ)	53	10/85 – 09/89	3709	
PONY III / EXCEL (X-1)	1.5 (G4DJ)	53	10/89 – 01/95	3709	
PONY III / EXCEL (X-1)	1.5 (G15B)	53	10/85 – 09/89	3709	
PONY III / EXCEL (X-1)	1.5 (G15B)	53	10/89 – 01/95	3709	
PONY III / EXCEL (X-1)	1.5 i (G4DJ)	61	10/89 – 01/95	3709	
PONY III / EXCEL (X-1)	1.5 i (G4DJ)	62	10/89 – 01/95	3709	
PONY III / EXCEL (X-1)	1.5 i (G15B)	61	10/89 – 01/95	3709	
PONY III / EXCEL (X-1)	1.5 i (G15B)	62	10/89 – 01/95	3709	
PORTER Box	24	82	03/96 – 04/04	3507	
PORTER Box	2.5 CRDi	103	02/03 – 04/04	3507	
PORTER Box	2.5 CRDi	103	05/04 -	3843	
PORTER Box	2.5 TCi	74	05/04 -	3843	
PORTER Box	2.5 TD	57	07/94 – 04/04	3507	
PORTER Box	2.5 TD	73	07/94 – 04/04	3507	
PORTER Box	2.6 TD	63	07/94 – 04/04	3507	
PORTER Bus	24	82	03/96 – 04/04	3507	
PORTER Bus	2.5 CRDi	103	02/03 – 04/04	3507	
PORTER Bus	2.5 TD	57	07/94 – 04/04	3507	
PORTER Bus	2.5 TD	73	07/94 – 04/04	3507	
PORTER II ALÇAK KASA			04 -	4231	
PORTER II YÜKSEK KASA			04 -	4231	

MAKE & MODEL   		KW	YEAR		
HYUNDAI					
PORTER Pickup	24	82	03/96 – 04/04	3507	
PORTER Pickup	2.5 CRDi	103	02/03 – 04/04	3507	
PORTER Pickup	2.5 TD	57	07/94 – 04/04	3507	
PORTER Pickup	2.5 TD	73	07/94 – 04/04	3507	
PORTER Pickup	2.6 TD	63	07/94 – 04/04	3507	
S COUPE (SLC)	1.5 GS	57	03/90 – 12/92	3502	
S COUPE (SLC)	1.5 GS	57	03/90 – 12/92	3504	
S COUPE (SLC)	1.5 i	62	02/90 – 05/96	3502	
S COUPE (SLC)	1.5 i	62	02/90 – 05/96	3504	
S COUPE (SLC)	1.5 i	65	04/92 – 05/96	3502	
S COUPE (SLC)	1.5 i Turbo	85	04/91 – 05/96	3502	
S COUPE (SLC)	1.5 i Turbo	85	04/91 – 05/96	3504	
SANTA FE Closed Off-Road Vehicle	20	93	11/10 -	3960	
SANTA FE Closed Off-Road Vehicle	20	93	11/10 -		3989
SANTA FE Closed Off-Road Vehicle	1.8 Turbo	118	10/06 -	3843	
SANTA FE Closed Off-Road Vehicle	1.8 Turbo	118	10/06 -	3993	
SANTA FE Closed Off-Road Vehicle	2.0 TDI All-wheel Drive	93	10/06 -	3843	
SANTA FE Closed Off-Road Vehicle	2.0 TDI All-wheel Drive	93	10/06 -	3993	
SANTA FE Closed Off-Road Vehicle	2.7 All-wheel Drive	128	10/06 -	3843	
SANTA FE Closed Off-Road Vehicle	2.7 All-wheel Drive	128	10/06 -	3993	
SANTA FÉ I (SM)	20	99	08/01 – 03/06	3843	
SANTA FÉ I (SM)	20	99	08/01 – 03/06	3993	
SANTA FÉ I (SM)	27	129	08/04 – 03/06	3960	
SANTA FÉ I (SM)	27	129	08/04 – 03/06		3989
SANTA FÉ I (SM)	27	129	08/04 – 03/06		4060
SANTA FÉ I (SM)	35	147	09/03 – 02/06	3843	
SANTA FÉ I (SM)	35	147	09/03 – 02/06	3993	
SANTA FÉ I (SM)	2.0 CRDi	83	08/01 – 03/06	3843	
SANTA FÉ I (SM)	2.0 CRDi	83	08/01 – 03/06	3993	
SANTA FÉ I (SM)	2.0 CRDi 4x4	83	04/01 – 03/06	3843	
SANTA FÉ I (SM)	2.0 CRDi 4x4	83	04/01 – 03/06	3993	
SANTA FÉ I (SM)	2.0 CRDi 4x4	92	08/03 – 03/06	3843	
SANTA FÉ I (SM)	2.0 CRDi 4x4	92	08/03 – 03/06	3993	
SANTA FÉ I (SM)	2.0 CRDi All-wheel Drive	107	11/03 – 02/06	3843	
SANTA FÉ I (SM)	2.0 CRDi All-wheel Drive	107	11/03 – 02/06	3993	
SANTA FÉ I (SM)	2.4 16V	100	02/01 – 03/06	3843	
SANTA FÉ I (SM)	2.4 16V	100	02/01 – 03/06	3993	
SANTA FÉ I (SM)	2.4 16V	107	02/01 – 03/06	3843	
SANTA FÉ I (SM)	2.4 16V	107	02/01 – 03/06	3993	
SANTA FÉ I (SM)	2.4 16V 4x4	100	02/01 – 03/06	3843	
SANTA FÉ I (SM)	2.4 16V 4x4	100	02/01 – 03/06	3993	
SANTA FÉ I (SM)	2.4 16V 4x4	107	02/01 – 03/06	3843	
SANTA FÉ I (SM)	2.4 16V 4x4	107	02/01 – 03/06	3993	
SANTA FÉ I (SM)	2.7 4x4	129	09/02 – 12/04	3843	
SANTA FÉ I (SM)	2.7 4x4	129	09/02 – 12/04	3993	
SANTA FÉ I (SM)	2.7 4x4	132	11/00 – 03/06	3843	
SANTA FÉ I (SM)	2.7 4x4	132	11/00 – 03/06	3993	
SANTA FÉ I (SM)	2.7 V6 4x4	127	02/01 – 03/06	3843	
SANTA FÉ I (SM)	2.7 V6 4x4	127	02/01 – 03/06	3993	
SANTA FÉ I (SM)	3.5 4x4	147	09/03 – 02/06	3843	
SANTA FÉ I (SM)	3.5 4x4	147	09/03 – 02/06	3993	
SANTA FÉ II (CM)	24	128	11/10 – 12/12	3960	
SANTA FÉ II (CM)	24	128	11/10 – 12/12		4060
SANTA FÉ II (CM)	27	125	03/06 – 12/12	3960	
SANTA FÉ II (CM)	27	125	03/06 – 12/12		3989
SANTA FÉ II (CM)	27	125	03/06 – 12/12		4060
SANTA FÉ II (CM)	2.0 CRDi	110	12/10 – 12/12	3960	
SANTA FÉ II (CM)	2.0 CRDi	110	12/10 – 12/12		4060
SANTA FÉ II (CM)	2.0 CRDi 4x4	85	03/06 – 12/12	3960	
SANTA FÉ II (CM)	2.0 CRDi 4x4	85	03/06 – 12/12		3989
SANTA FÉ II (CM)	2.0 CRDi 4x4	85	03/06 – 12/12		4060
SANTA FÉ II (CM)	2.0 CRDi 4x4	110	12/10 – 12/12	3960	
SANTA FÉ II (CM)	2.0 CRDi 4x4	110	12/10 – 12/12		4060
SANTA FÉ II (CM)	2.0 CRDi 4x4	135	03/06 – 12/12	3960	
SANTA FÉ II (CM)	2.0 CRDi 4x4	135	03/06 – 12/12		3989
SANTA FÉ II (CM)	2.0 CRDi 4x4	135	03/06 – 12/12		4060
SANTA FÉ II (CM)	2.2 CRDi	102	03/06 – 12/12	3960	
SANTA FÉ II (CM)	2.2 CRDi	102	03/06 – 12/12		3989
SANTA FÉ II (CM)	2.2 CRDi	102	03/06 – 12/12		4060
SANTA FÉ II (CM)	2.2 CRDi	114	03/06 – 12/09	3960	
SANTA FÉ II (CM)	2.2 CRDi	114	03/06 – 12/09		3989

MAKE & MODEL		KW	YEAR		
HYUNDAI					
SANTA FÉ II (CM)	2.2 CRDi	114	03/06 – 12/09		4060
SANTA FÉ II (CM)	2.2 CRDi	145	01/09 – 12/12	3960	
SANTA FÉ II (CM)	2.2 CRDi	145	01/09 – 12/12		3989
SANTA FÉ II (CM)	2.2 CRDi	145	01/09 – 12/12		4060
SANTA FÉ II (CM)	2.2 CRDi 4x4	102	03/06 – 12/12	3960	
SANTA FÉ II (CM)	2.2 CRDi 4x4	102	03/06 – 12/12		3989
SANTA FÉ II (CM)	2.2 CRDi 4x4	102	03/06 – 12/12		4060
SANTA FÉ II (CM)	2.2 CRDi 4x4	114	03/06 – 12/09	3960	
SANTA FÉ II (CM)	2.2 CRDi 4x4	114	03/06 – 12/09		3989
SANTA FÉ II (CM)	2.2 CRDi 4x4	114	03/06 – 12/09		4060
SANTA FÉ II (CM)	2.2 CRDi 4x4	145	01/09 – 12/12	3960	
SANTA FÉ II (CM)	2.2 CRDi 4x4	145	01/09 – 12/12		3989
SANTA FÉ II (CM)	2.2 CRDi 4x4	145	01/09 – 12/12		4060
SANTA FÉ II (CM)	2.2 CRDi GLS	110	03/06 – 12/09	3960	
SANTA FÉ II (CM)	2.2 CRDi GLS	110	03/06 – 12/09		3989
SANTA FÉ II (CM)	2.2 CRDi GLS	110	03/06 – 12/09		4060
SANTA FÉ II (CM)	2.2 CRDi GLS 4x4	110	03/06 – 12/09	3960	
SANTA FÉ II (CM)	2.2 CRDi GLS 4x4	110	03/06 – 12/09		3989
SANTA FÉ II (CM)	2.2 CRDi GLS 4x4	110	03/06 – 12/09		4060
SANTA FÉ II (CM)	2.4 4x4	128	07/10 – 12/12	3960	
SANTA FÉ II (CM)	2.4 4x4	128	07/10 – 12/12		4060
SANTA FÉ II (CM)	2.7 4x4	125	03/06 – 12/12	3960	
SANTA FÉ II (CM)	2.7 4x4	125	03/06 – 12/12		3989
SANTA FÉ II (CM)	2.7 4x4	125	03/06 – 12/12		4060
SANTA FÉ II (CM)	2.7 V6 GLS	139	03/06 – 12/09	3960	
SANTA FÉ II (CM)	2.7 V6 GLS	139	03/06 – 12/09		3989
SANTA FÉ II (CM)	2.7 V6 GLS	139	03/06 – 12/09		4060
SANTA FÉ II (CM)	2.7 V6 GLS 4x4	139	03/06 – 12/09	3960	
SANTA FÉ II (CM)	2.7 V6 GLS 4x4	139	03/06 – 12/09		3989
SANTA FÉ II (CM)	2.7 V6 GLS 4x4	139	03/06 – 12/09		4060
SANTA FÉ II (CM)	3.3 Dynamic 4x4	173	03/06 – 12/12	3960	
SANTA FÉ II (CM)	3.3 Dynamic 4x4	173	03/06 – 12/12		3989
SANTA FÉ II (CM)	3.3 Dynamic 4x4	173	03/06 – 12/12		4060
SANTA FÉ III (DM)	24	141	09/12 – 12/15	3960	
SANTA FÉ III (DM)	24	141	09/12 – 12/15		4060
SANTA FÉ III (DM)	2.0 CRDi	110	09/12 -	3960	
SANTA FÉ III (DM)	2.0 CRDi	110	09/12 -		4060
SANTA FÉ III (DM)	2.0 CRDi 4WD	110	09/12 -	3960	
SANTA FÉ III (DM)	2.0 CRDi 4WD	110	09/12 -		4060
SANTA FÉ III (DM)	2.2 CRDi	145	09/12 – 12/15	3960	
SANTA FÉ III (DM)	2.2 CRDi	145	09/12 – 12/15		4060
SANTA FÉ III (DM)	2.2 CRDi 4WD	145	09/12 – 12/15	3960	
SANTA FÉ III (DM)	2.2 CRDi 4WD	145	09/12 – 12/15		4060
SANTA FÉ III (DM)	2.4 4WD	141	09/12 – 12/15	3960	
SANTA FÉ III (DM)	2.4 4WD	141	09/12 – 12/15		4060
SANTA FÉ III (DM)	2.4 CCVT	129	09/12 -	3960	
SANTA FÉ III (DM)	2.4 CCVT	129	09/12 -		4060
SANTA FÉ III (DM)	2.4 CCVT AWD	129	09/12 -	3960	
SANTA FÉ III (DM)	2.4 CCVT AWD	129	09/12 -		4060
SANTA FÉ III (DM)	3.3 4WD	199	03/14 -	3960	
SANTA FÉ III (DM)	3.3 4WD	199	03/14 -		4060
SANTAMO	2.0 16V	102	05/99 – 12/02	3622	
SANTAMO	2.0 16V	102	05/99 – 12/02		4108
SANTAMO	2.0 16V 4x4	102	05/99 – 12/02	3622	
SANTAMO	2.0 16V 4x4	102	05/99 – 12/02		4108
SONATA (EF)	20	101	12/02 – 12/10	3959	
SONATA (EF)	20	101	12/02 – 12/10	3993	
SONATA (EF)	25	121	12/02 – 07/07	3959	
SONATA (EF)	25	121	12/02 – 07/07	3993	
SONATA (EF)	27	128	12/02 – 07/07	3959	
SONATA (EF)	27	128	12/02 – 07/07	3993	
SONATA (NF)	20	107	09/05 – 12/10	3959	
SONATA (NF)	20	107	09/05 – 12/10	3993	
SONATA (NF)	24	121	09/05 – 12/10	3959	
SONATA (NF)	24	121	09/05 – 12/10	3993	
SONATA (NFC)	20	121	12/08 -	3959	
SONATA (NFC)	20	121	12/08 -	3993	
SONATA (NFC)	24	128	12/08 -	3959	
SONATA (NFC)	24	128	12/08 -	3993	
SONATA II (Y-2)	1.8 i	70	09/88 – 10/93	3632	
SONATA II (Y-2)	2.0 i	74	09/88 – 08/91	3632	

MAKE & MODEL		KW	YEAR		
HYUNDAI					
SONATA II (Y-2)	2.0 i	80	01/91 – 10/93	3632	
SONATA II (Y-2)	2.0 i 16V	96	01/91 – 10/93	3632	
SONATA II (Y-2)	2.4 i	83	09/88 – 08/91	3632	
SONATA II (Y-2)	3.0 i V6	107	01/91 – 10/93	3632	
SONATA III (Y-3)	1.8 i	72	05/93 – 06/98	3632	
SONATA III (Y-3)	2.0 i	70	08/96 – 06/98	3632	
SONATA III (Y-3)	2.0 i	77	06/94 – 08/96	3632	
SONATA III (Y-3)	2.0 i 16V	92	06/96 – 06/98	3632	
SONATA III (Y-3)	2.0 i 16V	102	05/93 – 06/98	3632	
SONATA III (Y-3)	3.0 i V6	107	05/93 – 06/98	3632	
SONATA IV (EF)	20	100	04/01 – 11/04	3959	
SONATA IV (EF)	20	100	04/01 – 11/04	3993	
SONATA IV (EF)	2.0 16V	96	10/01 – 11/04	3959	
SONATA IV (EF)	2.0 16V	96	10/01 – 11/04	3993	
SONATA IV (EF)	2.0 16V	100	06/98 – 10/01	3632	
SONATA IV (EF)	2.0 16V	100	06/98 – 10/01	3993	
SONATA IV (EF)	2.0 16V	106	10/01 – 11/04	3959	
SONATA IV (EF)	2.0 16V	106	10/01 – 11/04	3993	
SONATA IV (EF)	2.4 16V	105	03/98 – 10/01	3632	
SONATA IV (EF)	2.4 16V	105	03/98 – 10/01	3993	
SONATA IV (EF)	2.5 V6 24V	118	06/98 – 10/01	3632	
SONATA IV (EF)	2.5 V6 24V	118	06/98 – 10/01	3993	
SONATA IV (EF)	2.7 i V6	132	10/01 – 05/05	3959	
SONATA IV (EF)	2.7 i V6	132	10/01 – 05/05	3993	
SONATA IV (EF)	2.7 V6	127	10/01 – 11/04	3959	
SONATA IV (EF)	2.7 V6	127	10/01 – 11/04	3993	
SONATA IV (EF)	2.7 V6	129	11/02 – 11/04	3959	
SONATA IV (EF)	2.7 V6	129	11/02 – 11/04	3993	
SONATA V (NF)	24	119	01/05 – 12/10	3993	
SONATA V (NF)	24	119	01/05 – 12/10		4061
SONATA V (NF)	24	128	06/08 – 12/10		4061
SONATA V (NF)	33	171	01/05 – 12/10	3993	
SONATA V (NF)	33	171	01/05 – 12/10		4061
SONATA V (NF)	33	173	06/05 – 12/10	3993	
SONATA V (NF)	33	173	06/05 – 12/10		4061
SONATA V (NF)	33	184	01/08 – 12/10		4061
SONATA V (NF)	2.4	119	01/05-12/10		4343
SONATA V (NF)	2.4	128	06/08-12/10		4343
SONATA V (NF)	3.3	171	01/05-12/10		4343
SONATA V (NF)	3.3	173	06/05-12/10		4343
SONATA V (NF)	3.3	184	01/08-12/10		4343
SONATA V (NF)	3.3	186	09/07-12/08		4343
SONATA V (NF)	2.0 CRDi	100	02/06 – 12/10	3993	
SONATA V (NF)	2.0 CRDi	100	02/06 – 12/10		4061
SONATA V (NF)	2.0 CRDi	103	02/06 – 12/10	3993	
SONATA V (NF)	2.0 CRDi	103	02/06 – 12/10		4061
SONATA V (NF)	2.0 CRDi	110	03/09 – 12/10		4061
SONATA V (NF)	2.0 CRDi	110	03/09-12/10		4343
SONATA V (NF)	2.0 CRDi	103	02/06-12/10		4343
SONATA V (NF)	2.0 GLSI	119	07/08 – 12/10	3993	
SONATA V (NF)	2.0 GLSI	119	07/08 – 12/10		4061
SONATA V (NF)	2.0 GLSI	119	07/08-12/10		4343
SONATA V (NF)	2.0 VVTi GLS	106	05/05 – 12/10	3993	
SONATA V (NF)	2.0 VVTi GLS	106	05/05 – 12/10		4061
SONATA V (NF)	2.0 VVTi GLS	121	01/08 – 12/10		4061
SONATA V (NF)	2.0 VVTi GLS	106	05/05-12/10		4343
SONATA V (NF)	2.0 VVTi GLS	121	01/08-12/10		4343
SONATA V (NF) 2.0 CRDi	2.0 CRDi	100	02/06-12/10		4343
SONATA VII (LF)	2.4	126	03/17 -		4343
SONATA VII (LF)	2.0 MPI	115	06/14 -		4343
STELLAR (F31_, SF2_)	14	50	10/83 – 08/86	3312	
STELLAR (F31_, SF2_)	14	50	10/83 – 08/86	3484	
STELLAR (F31_, SF2_)	16	56	10/83 – 12/91	3312	
STELLAR (F31_, SF2_)	16	56	10/83 – 12/91	3484	
STELLAR (F31_, SF2_)	16	56	10/83 – 12/91	3504	
TERRACAN (HP)	2.9 CRDi 4WD	120	11/03 – 12/06	3976/1	
TERRACAN (HP)	3.5 i V6 4WD	143	12/01 – 12/06	3976/1	
TERRACAN Closed Off-Road Vehicle	24	90	10/06 – 11/09	4118	
TERRACAN Closed Off-Road Vehicle	2.5 Turbo	76	03/03 – 12/08	4118	
TERRACAN Closed Off-Road Vehicle	2.5 Turbo 4WD	76	03/03 – 12/08	4118	
TERRACAN Closed Off-Road Vehicle	2.9 Turbo 4WD	120	04/05 – 12/08	4118	

MAKE & MODEL		KW	YEAR		
HYUNDAI					
TERRACAN Closed Off-Road Vehicle	3.5 4WD	147	03/03 – 12/08	3993	
TIBURON Coupe	1.6 CVVT	78	10/06 – 12/08	3959	
TIBURON Coupe	1.6 CVVT	78	10/06 – 12/08	4087	
TIBURON Coupe	2.0 CVVT	105	10/06 – 12/08	3959	
TIBURON Coupe	2.0 CVVT	105	10/06 – 12/08	4087	
TRAJET (FO)	20	100	03/00 – 07/08	3843	
TRAJET (FO)	20	100	03/00 – 07/08	3993	
TRAJET (FO)	20	103	01/04 – 07/08	3843	
TRAJET (FO)	20	103	01/04 – 07/08	3993	
TRAJET (FO)	20	104	11/03 – 07/08	3843	
TRAJET (FO)	20	104	11/03 – 07/08	3993	
TRAJET (FO)	2.0 CRDi	83	04/01 – 07/08	3843	
TRAJET (FO)	2.0 CRDi	83	04/01 – 07/08	3993	
TRAJET (FO)	2.0 CRDi	92	08/05 – 07/08	3843	
TRAJET (FO)	2.0 CRDi	92	08/05 – 07/08	3993	
TRAJET (FO)	2.7 V6	127	09/00 – 07/08	3843	
TRAJET (FO)	2.7 V6	127	09/00 – 07/08	3993	
TUCSON (JM)	20	104	08/04 – 03/10	3959	
TUCSON (JM)	20	104	08/04 – 03/10	3993	
TUCSON (JM)	20	104	08/04 – 03/10		4061
TUCSON (JM)	20	105	01/10 – 03/10	3959	
TUCSON (JM)	20	105	01/10 – 03/10	3993	
TUCSON (JM)	20	105	01/10 – 03/10		4061
TUCSON (JM)	2.0 All-wheel Drive	104	08/04 – 03/10	3959	
TUCSON (JM)	2.0 All-wheel Drive	104	08/04 – 03/10	3993	
TUCSON (JM)	2.0 All-wheel Drive	104	08/04 – 03/10		4061
TUCSON (JM)	2.0 CRDi	83	08/04 – 03/10	3959	
TUCSON (JM)	2.0 CRDi	83	08/04 – 03/10	3993	
TUCSON (JM)	2.0 CRDi	83	08/04 – 03/10		4061
TUCSON (JM)	2.0 CRDi	88	01/07 – 03/10	3959	
TUCSON (JM)	2.0 CRDi	88	01/07 – 03/10	3993	
TUCSON (JM)	2.0 CRDi	88	01/07 – 03/10		4061
TUCSON (JM)	2.0 CRDi	100	01/06 – 03/10	3959	
TUCSON (JM)	2.0 CRDi	100	01/06 – 03/10	3993	
TUCSON (JM)	2.0 CRDi	100	01/06 – 03/10		4061
TUCSON (JM)	2.0 CRDi	103	01/06 – 03/10	3959	
TUCSON (JM)	2.0 CRDi	103	01/06 – 03/10	3993	
TUCSON (JM)	2.0 CRDi	103	01/06 – 03/10		4061
TUCSON (JM)	2.0 CRDi	110	01/09 – 03/10	3959	
TUCSON (JM)	2.0 CRDi	110	01/09 – 03/10	3993	
TUCSON (JM)	2.0 CRDi	110	01/09 – 03/10		4061
TUCSON (JM)	2.0 CRDi All-wheel Drive	83	08/04 – 03/10	3959	
TUCSON (JM)	2.0 CRDi All-wheel Drive	83	08/04 – 03/10	3993	
TUCSON (JM)	2.0 CRDi All-wheel Drive	83	08/04 – 03/10		4061
TUCSON (JM)	2.0 CRDi All-wheel Drive	88	01/07 – 03/10	3959	
TUCSON (JM)	2.0 CRDi All-wheel Drive	88	01/07 – 03/10	3993	
TUCSON (JM)	2.0 CRDi All-wheel Drive	88	01/07 – 03/10		4061
TUCSON (JM)	2.0 CRDi All-wheel Drive	100	01/06 – 03/10	3959	
TUCSON (JM)	2.0 CRDi All-wheel Drive	100	01/06 – 03/10	3993	
TUCSON (JM)	2.0 CRDi All-wheel Drive	100	01/06 – 03/10		4061
TUCSON (JM)	2.0 CRDi All-wheel Drive	103	01/06 – 03/10	3959	
TUCSON (JM)	2.0 CRDi All-wheel Drive	103	01/06 – 03/10	3993	
TUCSON (JM)	2.0 CRDi All-wheel Drive	103	01/06 – 03/10		4061
TUCSON (JM)	2.0 CRDi All-wheel Drive	110	01/09 – 03/10	3959	
TUCSON (JM)	2.0 CRDi All-wheel Drive	110	01/09 – 03/10	3993	
TUCSON (JM)	2.0 CRDi All-wheel Drive	110	01/09 – 03/10		4061
TUCSON (JM)	2.7 All-wheel Drive	129	08/04 – 03/10	3959	
TUCSON (JM)	2.7 All-wheel Drive	129	08/04 – 03/10	3993	
TUCSON (JM)	2.7 All-wheel Drive	129	08/04 – 03/10		4061
TUCSON (TL)	1.6 GDi	97	06/15 -		4343
TUCSON (TL)	1.6 T-GDi	130	06/15 -		4343
TUCSON (TL)	1.7 CRDi	85	06/15 -		4343
TUCSON (TL)	1.7 CRDi	104	06/15 -		4343
TUCSON (TLE)	1.6 GDi	97	06/15 -		3980
TUCSON (TLE)	1.6 T-GDI	130	06/15 -		3980
TUCSON (TLE)	1.6 T-GDI All-wheel Drive	130	06/15 -		3980
TUCSON (TLE)	1.7 CRDI	85	06/15 -		3980
TUCSON (TLE)	2.0 CRDI All-wheel Drive	136	06/15 -		3980
TUCSON (TLE)	2.0 CRDi	100	06/15 -		3980
TUCSON (TLE)	2.0 CRDi All-wheel Drive	100	06/15 -		3980
TUCSON Closed Off-Road Vehicle	20	104	05/05 – 12/15	3959	

MAKE & MODEL		KW	YEAR		
HYUNDAI					
TUCSON Closed Off-Road Vehicle	20	104	05/05 – 12/15	3993	
TUCSON Closed Off-Road Vehicle	2.0 All-wheel Drive	104	05/05 -	3959	
TUCSON Closed Off-Road Vehicle	2.0 All-wheel Drive	104	05/05 -	3993	
TUCSON Closed Off-Road Vehicle	2.7 All-wheel Drive	129	05/05 -	3959	
TUCSON Closed Off-Road Vehicle	2.7 All-wheel Drive	129	05/05 -	3993	
VELOSTER (FS)	16	94	06/11 -	4166	
VELOSTER (FS)	16	95	10/11 -	4166	
VELOSTER (FS)	1.6	95	10/11 -	4342	
VELOSTER (FS)	1.6 GDI	103	03/11 -	4166	
VELOSTER (FS)	1.6 GDI	103	03/11 -	4342	
VELOSTER (FS)	1.6 MPI	97	04/11 -	4166	
VELOSTER (FS)	1.6 MPI	97	04/11 -	4342	
VELOSTER (FS)	1.6 T-GDI	150	08/12 -	4342	
VERNA Saloon	1.6	90	08/10-12/14		4343
VERNA Saloon	1.6 TD	94	08/10 -		4343
VERNA Saloon	1.4	79	08/10-12/13		4343
VISTO	08	38	11/97 – 10/00	3778	
XG (XG)	30	138	12/98 – 12/05	3843	
XG (XG)	30	138	12/98 – 12/05	3993	
XG (XG)	250	120	12/98 – 12/05	3843	
XG (XG)	250	120	12/98 – 12/05	3993	
XG (XG)	300	145	09/99 – 09/03	3843	
XG (XG)	300	145	09/99 – 09/03	3993	
XG (XG)	350	145	10/02 – 12/05	3976/1	
XG (XG)	350	145	10/02 – 12/05	3993	
INFINITI					
EX	25	173	01/10 – 12/11	4143	
EX	37	228	10/08 -	4143	
EX	37	235	09/10 -	4143	
EX	25 AWD	173	07/12 – 12/13	4143	
EX	30d	175	04/10 -	4143	
EX	35 AWD	234	01/10 – 12/11		3933
EX	37 AWD	258	01/10 – 12/11	4143	
FX	35	206	02/03 – 12/08		3933
FX	35	206	02/03 – 12/08	4074	
FX	35	206	02/03 – 12/08	4143	
FX	35	226	10/08 – 12/11		3933
FX	35	226	10/08 – 12/11	4074	
FX	45	232	02/03 – 12/08		3933
FX	45	232	02/03 – 12/08	4074	
FX	45	232	02/03 – 12/08	4143	
FX	35 All-wheel Drive	206	01/03 – 12/08		3933
FX	35 All-wheel Drive	206	01/03 – 12/08	4074	
FX	35 All-wheel Drive	206	01/03 – 12/08	4143	
FX	35 AWD	223	01/12 -		3933
FX	35 AWD	223	01/12 -	4074	
FX	45 All-wheel Drive	232	01/03 – 12/08		3933
FX	45 All-wheel Drive	232	01/03 – 12/08	4074	
FX	45 All-wheel Drive	232	01/03 – 12/08	4143	
FX	45 AWD	241	10/08 -		3933
FX	45 AWD	241	10/08 -	4074	
G Coupe	37	235	09/10 -	4143	
G Coupe	37	245	09/08 – 12/12		3933
G Saloon	25	163	01/11 -	4143	
G Saloon	35	191	10/02 -		3933
G Saloon	35	191	10/02 -	4143	
G Saloon	35 X	228	01/07 – 12/08		3933
G Saloon	35 X	228	01/07 – 12/08	4143	
G20	20	85	01/90 – 12/97	3700	
I30	30	142	01/97 -	3699	
I30	30	142	01/97 -	3779	
M (Y51)	25	173	09/10 – 12/12	4143	
M (Y51)	37	235	03/10 -	4143	
M (Y51)	30d	175	03/10 -	4143	
M (Y51)	35h	225	04/11 -	4143	
M (Y51)	35h	240	04/11 -	4143	
M (Y51)	37 X	246	09/10 -	4143	
M30 Convertible	30	121	01/90 – 12/93	3397	
M30 Coupe	30	121	01/89 – 12/93	3397	
M35	35	206	01/05 -		3933

MAKE & MODEL   		KW	YEAR		
INFINITI					
M35	35	206	01/05 -	4074	
M35	35	206	01/05 -	4143	
M35	35	226	09/08 – 12/10		3933
M35	35	226	09/08 – 12/10	4143	
M35	3.5 X	206	01/05 -		3933
M35	3.5 X	206	01/05 -	4074	
M35	3.5 X	206	01/05 -	4143	
M35	3.5 X	226	09/08 – 12/10		3933
M35	3.5 X	226	09/08 – 12/10	4143	
M45	45	250	01/05 -		3933
M45	45	250	01/05 -	4074	
M45	45	250	01/05 -	4143	
Q60 Convertible	37	235	10/13 -	4143	
Q70 (Y51)	25	163	05/15 -	4143	
Q70 (Y51)	25	173	08/13 – 05/15	4143	
Q70 (Y51)	37	246	10/13 -	4143	
Q70 (Y51)	2.2 D	125	10/14 -	4143	
Q70 (Y51)	3.7 AWD	246	10/13 -	4143	
INNOCENTI					
ELBA (146)	1.3 (146CW)	49	08/91 – 12/96	3459	
ELBA (146)	1.3 (146CW)	49	08/91 – 12/96	3461	
ELBA (146)	1.4 i.e. (146EN, 146EQ)	49	09/94 – 12/96	3459	
ELBA (146)	1.4 i.e. (146EN, 146EQ)	49	09/94 – 12/96	3461	
ELBA (146)	1.5 i.e. (146C9)	55	08/92 – 09/94	3459	
ELBA (146)	1.5 i.e. (146C9)	55	08/92 – 09/94	3461	
ELBA (146)	1.6 i.e. (146EO, 146ER)	55	09/94 – 12/96	3459	
ELBA (146)	1.6 i.e. (146EO, 146ER)	55	09/94 – 12/96	3461	
ELBA (146)	1.7 D (146DI, 146EI)	42	08/91 – 12/96	3459	
ELBA (146)	1.7 D (146DI, 146EI)	42	08/91 – 12/96	3461	
KORAL	45	33	01/90 – 12/92	3316	
KORAL	55	40	01/90 – 12/92	3316	
KORAL Fastback (Subcompact car-B Segment)	0.9 45 (100 GL 064)		90-92	3357	
KORAL Fastback (Subcompact car-B Segment)	1.1 55 (146 A6.000)		90-92	3357	
INOKOM					
GETZ (TB)	14	52	09/06 -	3502	
IRISBUS					
DAILY TOURYS	16, 19	107	11/06 -	3994	
DAILY TOURYS	16, 19	130	11/06 -	3994	
DAILY TOURYS	16, 19	107	11/06 -		3995
DAILY TOURYS	16, 19	130	11/06 -		3995
ISUZU					
ASCENDER	4.2 4WD	217	03/03-		4219
ASCENDER	4.2 4WD	217	03/03-	4221	
ASCENDER	5.3 4WD	224	03/03-		4219
ASCENDER	5.3 4WD	224	03/03-	4221	
CAMPO (KB)	2.0 (KB23)	52	01/83 – 03/88	3657	
CAMPO (KB)	2.0 (KB23)	52	01/83 – 03/88	3757	
CAMPO (KB)	2.0 (KB23)	52	01/83 – 03/88	3857	
CAMPO (KB)	2.0 (KB28)	58	06/85 – 12/88	3657	
CAMPO (KB)	2.0 (KB28)	58	06/85 – 12/88	3757	
CAMPO (KB)	2.0 (KB28)	58	06/85 – 12/88	3857	
CAMPO (KB)	2.0 4WD (KB43, KB48)	52	01/83 – 03/88	3657	
CAMPO (KB)	2.0 4WD (KB43, KB48)	52	01/83 – 03/88	3757	
CAMPO (KB)	2.0 4WD (KB43, KB48)	52	01/83 – 03/88	3857	
CAMPO (KB)	2.0 4WD (KB48)	58	06/85 – 12/88	3657	
CAMPO (KB)	2.0 4WD (KB48)	58	06/85 – 12/88	3757	
CAMPO (KB)	2.0 4WD (KB48)	58	06/85 – 12/88	3857	
CAMPO (KB)	2.2 (TFS)	66	01/89 – 12/90	3657	
CAMPO (KB)	2.2 (TFS)	66	01/89 – 12/90	3757	
CAMPO (KB)	2.2 (TFS)	66	01/89 – 12/90	3857	
CAMPO (KB)	2.2 D (KBD27)	39	04/86 – 12/90	3657	
CAMPO (KB)	2.2 D (KBD27)	39	04/86 – 12/90	3757	
CAMPO (KB)	2.2 D (KBD27)	39	04/86 – 12/90	3857	
CAMPO (KB)	2.2 D (KBD27)	45	01/83 – 12/91	3657	
CAMPO (KB)	2.2 D (KBD27)	45	01/83 – 12/91	3757	
CAMPO (KB)	2.2 D (KBD27)	45	01/83 – 12/91	3857	
CAMPO (KB)	2.2 D 4WD (KBD42, KBD47)	39	01/83 – 12/90	3657	
CAMPO (KB)	2.2 D 4WD (KBD42, KBD47)	39	01/83 – 12/90	3757	
CAMPO (KB)	2.2 D 4WD (KBD42, KBD47)	39	01/83 – 12/90	3857	

MAKE & MODEL   		KW	YEAR		
ISUZU					
CAMPO (KB)	2.5 D (KBD27)	55	01/83 – 12/90	3657	
CAMPO (KB)	2.5 D (KBD27)	55	01/83 – 12/90	3757	
CAMPO (KB)	2.5 D (KBD27)	55	01/83 – 12/90	3857	
CAMPO (KB)	2.5 D 4WD (KBD47)	55	01/83 – 12/90	3657	
CAMPO (KB)	2.5 D 4WD (KBD47)	55	01/83 – 12/90	3757	
CAMPO (KB)	2.5 D 4WD (KBD47)	55	01/83 – 12/90	3857	
CAMPO / FASTER (KB)	2.0 (4ZC1)	52	01/83 – 03/88	3436	
CAMPO / FASTER (KB)	2.0 (G200Z)	58	06/85 – 12/88	3436	
D-MAX (8DH)	2.5 DiTD	74	10/02 -	3657	
D-MAX (8DH)	2.5 DiTD	74	10/02 -	3757	
D-MAX (8DH)	3.0 DiTD 4x4	96	05/02 -	3657	
D-MAX (8DH)	3.0 DiTD 4x4	96	05/02 -	3757	
D-MAX I (8DH)	2.5 DiTD	74	10/02 – 06/12	3857	
D-MAX I (8DH)	2.5 DiTD	74	10/02 – 06/12	3886	
D-MAX I (8DH)	2.5 DiTD	100	10/06 – 06/12	3886	
D-MAX I (8DH)	2.5 DiTD	100	10/06 – 06/12	4124	
D-MAX I (8DH)	2.5 DiTD 4x4	74	05/02 – 06/12	3886	
D-MAX I (8DH)	2.5 DiTD 4x4	100	01/07 – 06/12	3886	
D-MAX I (8DH)	2.5 DiTD 4x4	100	01/07 – 06/12	4124	
D-MAX I (8DH)	3.0 DiTD	96	10/02 – 06/12	3886	
D-MAX I (8DH)	3.0 DiTD	120	01/07 – 06/12	3886	
D-MAX I (8DH)	3.0 DiTD	120	01/07 – 06/12	4124	
D-MAX I (8DH)	3.0 DiTD 4x4	96	05/02 – 06/12	3857	
D-MAX I (8DH)	3.0 DiTD 4x4	96	05/02 – 06/12	3886	
D-MAX I (8DH)	3.0 DiTD 4x4	120	01/07 – 06/12	3886	
D-MAX I (8DH)	3.0 DiTD 4x4	120	01/07 – 06/12	4124	
D-MAX I Platform/Chassis (8DH)	3.0 D All-wheel Drive 4x4	120	01/07 – 06/12	3886	
D-MAX I Platform/Chassis (8DH)	3.0 D All-wheel Drive 4x4	120	01/07 – 06/12	4124	
D-MAX II (TFR, TFS)	2.5 CRDi	58	06/12 -	4124	
D-MAX II (TFR, TFS)	2.5 CRDi	80	06/12 -	4124	
D-MAX II (TFR, TFS)	2.5 CRDi	85	06/12 -	4124	
D-MAX II (TFR, TFS)	2.5 CRDi	100	06/12 -	4124	
D-MAX II (TFR, TFS)	2.5 CRDi	120	06/12 -	4124	
D-MAX II (TFR, TFS)	2.5 CRDi 4x4	80	06/12 -	4124	
D-MAX II (TFR, TFS)	2.5 CRDi 4x4	100	06/12 -	4124	
D-MAX II (TFR, TFS)	2.5 CRDi 4x4	120	06/12 -	4124	
D-MAX II Platform/Chassis (TFR, TFS)	2.5 CRDi	58	06/12 -	4124	
D-MAX II Platform/Chassis (TFR, TFS)	2.5 CRDi	85	06/12 -	4124	
D-MAX II Platform/Chassis (TFR, TFS)	2.5 CRDi	120	06/12 -	4124	
D-MAX II Platform/Chassis (TFR, TFS)	2.5 CRDi 4WD	120	06/12 -	4124	
ELF Platform/Chassis (NKR8_, NKQ8_)	3.0 Di	96	10/03 -	3886	
GEMINI (JT)	15	52	02/88 – 12/90	3446	
GEMINI (JT)	15	52	02/88 – 12/90	3450	
GEMINI (JT)	1.5 D	37	02/88 – 12/90	3446	
GEMINI (JT)	1.5 D	37	02/88 – 12/90	3450	
GEMINI (JT)	1.5 TD	49	02/88 – 12/90	3446	
GEMINI (JT)	1.5 TD	49	02/88 – 12/90	3450	
GEMINI (JT)	1.6 GTI 16V	84	08/88 – 12/90	3446	
GEMINI (JT)	1.6 GTI 16V	84	08/88 – 12/90	3450	
GEMINI Saloon (JT)	15	52	02/88 – 12/89	3446	
GEMINI Saloon (JT)	15	52	02/88 – 12/89	3450	
GEMINI Saloon (JT)	1.5 D	37	02/88 – 12/89	3446	
GEMINI Saloon (JT)	1.5 D	37	02/88 – 12/89	3450	
GEMINI Saloon (JT)	1.5 TD	49	02/88 – 12/89	3446	
GEMINI Saloon (JT)	1.5 TD	49	02/88 – 12/89	3450	
MIDI Box (98000N)	20	61	06/88 -	3462	
MIDI Box (98000N)	2.0 4WD	61	09/88 -	3462	
MIDI Box (98000N)	2.2 D	45	01/89 -	3462	
MIDI Box (98000N)	2.2 D 4WD	45	09/88 -	3462	
MIDI Box (98000N)	2.4 TD	56	02/94 -	3462	
MIDI Bus (94000, 98000)	2.0 (98000)	61	01/89 -	3462	
MIDI Bus (94000, 98000)	2.0 4WD (94000)	61	01/89 -	3462	
MIDI Bus (94000, 98000)	2.0 TD (98000)	51	01/89 -	3462	
MIDI Bus (94000, 98000)	2.2 D (98000)	45	01/89 -	3462	
MIDI Bus (94000, 98000)	2.2 D 4WD (94000)	45	01/89 -	3462	
MIDI Bus (94000, 98000)	2.4 D (98000)	56	01/94 -	3462	
MIDI Van (94000, 98000)	2.0 (98000)	61	01/89 -	3462	
MIDI Van (94000, 98000)	2.0 4WD (94000)	61	01/89 -	3462	
MIDI Van (94000, 98000)	2.0 TD (98000)	51	01/89 -	3462	
MIDI Van (94000, 98000)	2.2 D (98000)	45	01/89 -	3462	
MIDI Van (94000, 98000)	2.2 D 4WD (94000)	45	01/89 -	3462	

MAKE & MODEL   		KW	YEAR		
ISUZU					
MIDI Van (94000, 98000)	2.4 TD (98000)	56	01/94 -	3462	
MU 7 Closed Off-Road Vehicle	3.0 TD	120	01/13 -	4124	
MU-X Closed Off-Road Vehicle	2.5 CRDi	100	11/13 -	4124	
MU-X Closed Off-Road Vehicle	2.5 CRDi 4x4	100	11/13 -	4124	
MU-X Closed Off-Road Vehicle	3.0 CRDi	130	11/13 -	4124	
MU-X Closed Off-Road Vehicle	3.0 CRDi 4x4	130	11/13 -	4124	
RODEO Pickup	2.5 D	94	08/06 – 04/07	3886	
TFR/TFS Pickup (TF_)	2.8 D	74	09/91 – 08/99	3657	
TFR/TFS Pickup (TF_)	2.8 D	74	09/91 – 08/99	3757	
TFR/TFS Pickup (TF_)	2.8 D	74	09/91 – 08/99	3857	
TFR/TFS Pickup (TF_)	2.8 D All-wheel Drive	74	09/91 – 08/99	3657	
TFR/TFS Pickup (TF_)	2.8 D All-wheel Drive	74	09/91 – 08/99	3757	
TFR/TFS Pickup (TF_)	2.8 D All-wheel Drive	74	09/91 – 08/99	3857	
TROOPER	3.0 DTI	118	05/98 -	3674	
TROOPER	3.0 DTI	118	05/98 -	3743	
TROOPER	3.5 V6 24V	158	04/00 -	3674	
TROOPER	3.5 V6 24V	158	04/00 -	3743	
TROOPER (UB)	32	130	08/91 – 07/98	3674	
TROOPER (UB)	32	130	08/91 – 07/98	3743	
TROOPER (UB)	3.1 TD	84	08/91 – 07/98	3674	
TROOPER (UB)	3.1 TD	84	08/91 – 07/98	3743	
TROOPER (UBS)	2.2 D 4x4	39	05/84 – 12/89	3657	
TROOPER (UBS)	2.2 D 4x4	39	05/84 – 12/89	3757	
TROOPER (UBS)	2.8 TD (UBS55)	71	10/87 – 12/91	3657	
TROOPER (UBS)	2.8 TD (UBS55)	71	10/87 – 12/91	3757	
TROOPER (UBS)	2.8 TD (UBS55)	78	10/88 – 12/91	3657	
TROOPER (UBS)	2.8 TD (UBS55)	78	10/88 – 12/91	3757	
TROOPER I (UBS)	2.2 D 4x4	39	05/84 – 12/89	3857	
TROOPER I (UBS)	2.8 TD (UBS55)	71	10/87 – 12/91	3857	
TROOPER I (UBS)	2.8 TD (UBS55)	78	10/88 – 12/91	3857	
TROOPER I Open Off-Road Vehicle (UBS)	1.9 (UBS13)	58	01/83 – 12/85	3857	
TROOPER I Open Off-Road Vehicle (UBS)	2.2 D (UBS52)	45	01/83 – 12/83	3857	
TROOPER I Open Off-Road Vehicle (UBS)	2.2 D 4x4	39	05/84 – 07/89	3857	
TROOPER I Open Off-Road Vehicle (UBS)	2.2 TD (UBS52)	53	03/84 – 12/91	3857	
TROOPER I Open Off-Road Vehicle (UBS)	2.3 (UBS16)	66	11/85 – 12/91	3857	
TROOPER I Open Off-Road Vehicle (UBS)	2.6 i (UBS17)	85	10/87 – 12/91	3857	
TROOPER II (UB)	32	130	08/91 – 07/98		3887
TROOPER II (UB)	3.1 TD	84	08/91 – 07/98		3887
TROOPER II Open Off-Road Vehicle (UB)	32	130	08/91 – 07/98		3887
TROOPER II Open Off-Road Vehicle (UB)	3.1 TD	84	08/91 – 07/98		3887
TROOPER III	3.0 DTI	117	05/98 – 08/04		3887
TROOPER III	3.5 V6 24V	158	04/00 – 08/04		3887
TROOPER III Open Off-Road Vehicle	3.0 DTI	118	04/00 – 08/04		3887
TROOPER III Open Off-Road Vehicle	3.5 V6 24V	158	04/00 – 08/04		3887
TROOPER Open Off-Road Vehicle	3.0 DTI	118	04/00 -	3674	
TROOPER Open Off-Road Vehicle	3.0 DTI	118	04/00 -	3743	
TROOPER Open Off-Road Vehicle	3.5 V6 24V	158	04/00 -	3674	
TROOPER Open Off-Road Vehicle	3.5 V6 24V	158	04/00 -	3743	
TROOPER Open Off-Road Vehicle (UB)	32	130	08/91 – 07/98	3674	
TROOPER Open Off-Road Vehicle (UB)	32	130	08/91 – 07/98	3743	
TROOPER Open Off-Road Vehicle (UB)	3.1 TD	84	08/91 – 07/98	3674	
TROOPER Open Off-Road Vehicle (UB)	3.1 TD	84	08/91 – 07/98	3743	
TROOPER Open Off-Road Vehicle (UBS)	1.9 (UBS13)	58	01/83 – 12/85	3657	
TROOPER Open Off-Road Vehicle (UBS)	1.9 (UBS13)	58	01/83 – 12/85	3757	
TROOPER Open Off-Road Vehicle (UBS)	2.2 D (UBS52)	45	01/83 – 12/83	3657	
TROOPER Open Off-Road Vehicle (UBS)	2.2 D (UBS52)	45	01/83 – 12/83	3757	
TROOPER Open Off-Road Vehicle (UBS)	2.2 D 4x4	39	05/84 – 07/89	3657	
TROOPER Open Off-Road Vehicle (UBS)	2.2 D 4x4	39	05/84 – 07/89	3757	
TROOPER Open Off-Road Vehicle (UBS)	2.2 TD (UBS52)	53	03/84 – 12/91	3657	
TROOPER Open Off-Road Vehicle (UBS)	2.2 TD (UBS52)	53	03/84 – 12/91	3757	
TROOPER Open Off-Road Vehicle (UBS)	2.3 (UBS16)	66	11/85 – 12/91	3657	
TROOPER Open Off-Road Vehicle (UBS)	2.3 (UBS16)	66	11/85 – 12/91	3757	
TROOPER Open Off-Road Vehicle (UBS)	2.6 i (UBS17)	85	10/87 – 12/91	3657	
TROOPER Open Off-Road Vehicle (UBS)	2.6 i (UBS17)	85	10/87 – 12/91	3757	
VEHICROSS (_U_)	3.2 All-wheel Drive 4x4 (UGS25)	158	04/97 – 12/00	3674	
VEHICROSS (_U_)	3.2 All-wheel Drive 4x4 (UGS25)	158	04/97 – 12/00	3743	
VEHICROSS (_U_)	3.2 All-wheel Drive 4x4 (UGS25)	158	04/97 – 12/00		3887
IVECO					
DAILY I Box Body / Estate	30-8 (10014131, 10014132,10014137,	53	01/78 – 12/89	3423	
DAILY I Platform/Chassis	30-8 (10011131, 10011132,10011231,	53	01/78 – 12/89	3423	
DAILY II Box Body / Estate	30-8 (12914111, 12914112, 12914117,	55	01/89 – 08/98	3423/1	

BESER

MAKE & MODEL		KW	YEAR		
IVECO					
DAILY II Box Body / Estate	30-8 (12914111, 12914112, 12914117,	55	01/89 – 08/98	3423/1	
DAILY II Box Body / Estate	30-8 (12914111, 12914112, 12914117,	60	01/89 – 08/98	3423/1	
DAILY II Box Body / Estate	35-10 (12974212, 12974217, 13014111,	76	01/89 – 08/98	3423/1	
DAILY II Box Body / Estate	35-10 (12974212, 12974217, 13014111,	80	01/89 – 08/98	3423/1	
DAILY II Box Body / Estate	35-10 (12974212, 12974217,12974417)	68	09/96 – 08/98	3575	
DAILY II Box Body / Estate	35-10 (12974212, 12974217,12974417)	68	09/96 – 08/98	3645	
DAILY II Box Body / Estate	35-10 (12974212, 12974217,13014111, 13014131,13014204...)	76	01/89 – 08/98	3575	
DAILY II Box Body / Estate	35-10 (12974212, 12974217,13014111, 13014131,13014204...)	76	01/89 – 08/98	3645	
DAILY II Box Body / Estate	35-10 (12974212, 12974217,13014111, 13014131,13014204...)	80	01/89 – 08/98	3523	
DAILY II Box Body / Estate	35-10 (12974212, 12974217,13014111, 13014131,13014204...)	80	01/89 – 08/98	3524	
DAILY II Box Body / Estate	35-10 (12974212, 12974217,13014111, 13014131,13014204...)	80	01/89 – 08/98	3575	
DAILY II Box Body / Estate	35-10 (12974212, 12974217,13014111, 13014131,13014204...)	80	01/89 – 08/98	3645	
DAILY II Box Body / Estate	35-10 (12974212, 12974217,13014111,13014131,13014204...)	76	01/89 – 08/98	3523	
DAILY II Box Body / Estate	35-10 (12974212, 12974217,13014111,13014131,13014204...)	76	01/89 – 08/98	3524	
DAILY II Box Body / Estate	35-10 (15034111, 15034204,15034211, 15034215,15034217...)	76	01/96 – 05/99	3575	
DAILY II Box Body / Estate	35-10 (15034111, 15034204,15034211, 15034215,15034217...)	76	01/96 – 05/99	3645	
DAILY II Box Body / Estate	35-8 (12934104, 12934111, 12934112,	55	01/91 – 08/98	3423/1	
DAILY II Box Body / Estate	35-8 (12934104, 12934111, 12934112,	55	01/91 – 08/98	3423/1	
DAILY II Box Body / Estate	35-8 (12934104, 12934111, 12934112,	60	01/91 – 08/98	3423/1	
DAILY II Box Body / Estate	35-8 (12934104, 12934111,12934112, 12934117,12934124...)	55	01/91 – 08/98	3523	
DAILY II Box Body / Estate	35-8 (12934104, 12934111,12934112, 12934117,12934124...)	55	01/91 – 08/98	3523	
DAILY II Box Body / Estate	35-8 (12934104, 12934111,12934112, 12934117,12934124...)	55	01/91 – 08/98	3524	
DAILY II Box Body / Estate	35-8 (12934104, 12934111,12934112, 12934117,12934124...)	55	01/91 – 08/98	3524	
DAILY II Box Body / Estate	35-8 (12934104, 12934111,12934112, 12934117,12934124...)	55	01/91 – 08/98	3575	
DAILY II Box Body / Estate	35-8 (12934104, 12934111,12934112, 12934117,12934124...)	55	01/91 – 08/98	3645	
DAILY II Box Body / Estate	35-8 (12934104, 12934111,12934112,	60	01/91 – 08/98	3523	
DAILY II Box Body / Estate	35-8 (12934104, 12934111,12934112,	60	01/91 – 08/98	3524	
DAILY II Box Body / Estate	35-8 (12934104, 12934111,12934112, 12934117,12934124...)	60	01/91 – 08/98	3575	
DAILY II Box Body / Estate	35-8 (12934104, 12934111,12934112, 12934117,12934124...)	60	01/91 – 08/98	3645	
DAILY II Box Body / Estate	35-8 (14934104, 14934111,14934204, 14934205,14934211...)	62	09/98 – 05/99	3575	
DAILY II Box Body / Estate	35-8 (14934104, 14934111,14934204, 14934205,14934211...)	62	09/98 – 05/99	3645	
DAILY II Box Body / Estate	40-10 V	76	01/90 – 04/96	3423/1	
DAILY II Box Body / Estate	40-10 V	76	01/90 – 04/96	3523	
DAILY II Box Body / Estate	40-10 V	76	01/90 – 04/96	3524	
DAILY II Box Body / Estate	45-10 V (13034204, 13034211,13034212,	76	01/89 – 04/96	3423/1	
DAILY II Box Body / Estate	45-10 V (13034204, 13034211,13034212, 13034224...)	76	01/89 – 04/96	3523	
DAILY II Box Body / Estate	45-10 V (13034204, 13034211,13034212, 13034224...)	76	01/89 – 04/96	3524	
DAILY II Box Body / Estate	59-12 V (13154404, 13154411,13154412, 13154417...)	85	05/91 – 04/96	3749/1	
DAILY II Box Body / Estate	59-12 V (15174404, 15174411,15174415, 15174417)	90	05/96 – 05/99	3749	
DAILY II Bus	A 40-10 (94139111, 94139131, 94139311,	76	01/91 – 12/96	3423/1	
DAILY II Bus	A 40-10 (94139111, 94139131,94139311, 94139315...)	76	01/-1 – 12/96	3523	
DAILY II Bus	A 40-10 (94139111, 94139131,94139311, 94139315...)	76	01/-1 – 12/96	3524	
DAILY II Bus	A 45-10 (94159111, 94159131, 94159211,	76	01/91 – 04/96	3423/1	
DAILY II Bus	A 45-10 (94159111, 94159131,94159211, 94159311...)	76	01/96 – 04/96	3523	
DAILY II Bus	A 45-10 (94159111, 94159131,94159211, 94159311...)	76	01/96 – 04/96	3524	
DAILY II Dumptruck	45-10 (13031204, 13031211, 13031212,	76	01/92 – 04/96	3423/1	
DAILY II Dumptruck	45-10 (13031204, 13031211,13031212, 13031224,13031231...)	76	01/92 – 04/96	3523	
DAILY II Dumptruck	45-10 (13031204, 13031211,13031212, 13031224,13031231...)	76	01/92 – 04/96	3524	
DAILY II Dumptruck	35-10 K (15030111, 15030211,15030311, 15031111...)	76	01/97 – 05/99	3575	
DAILY II Dumptruck	35-10 K (15030111, 15030211,15030311, 15031111...)	76	01/97 – 05/99	3645	
DAILY II Dumptruck	35-12 K (15130311, 15130411,15131111, 15131204...)	90	09/06 – 08/98	3575	
DAILY II Dumptruck	35-12 K (15130311, 15130411,15131111, 15131204...)	90	09/96 – 08/98	3645	
DAILY II Dumptruck	35-8 K (14930304, 14931104,14931111, 14931115...)	62	09/98 – 05/99	3575	
DAILY II Dumptruck	35-8 K (14930304, 14931104,14931111, 14931115...)	62	09/98 – 05/99	3645	
DAILY II Dumptruck	59-12 K (13156211, 13156212,13156231, 13156311...)	85	05/91 – 04/96	3749/1	
DAILY II Dumptruck	59-12 K (15176211, 15176304,15176311, 15176315...)	90	05/96 – 05/99	3749	
DAILY II Platform/Chassis	30-8 (12910211, 12911111, 12911112,	55	01/92 – 08/98	3423/1	
DAILY II Platform/Chassis	30-8 (12910211, 12911111, 12911112,	55	01/92 – 08/98	3423/1	
DAILY II Platform/Chassis	30-8 (12910211, 12911111, 12911112,	60	01/92 – 08/98	3423/1	
DAILY II Platform/Chassis	30-8 (12910211, 12911111, 12911112,	60	01/92 – 08/98	3423/1	
DAILY II Platform/Chassis	35-10	80	01/89 – 12/96	3423/1	
DAILY II Platform/Chassis	35-10	80	01/89 – 12/96	3523	
DAILY II Platform/Chassis	35-10	80	01/89 – 12/96	3524	
DAILY II Platform/Chassis	35-10	80	01/89 – 12/96	3575	
DAILY II Platform/Chassis	35-10	80	01/89 – 12/96	3645	
DAILY II Platform/Chassis	35-10 (12971112, 12971212, 12971312,	68	01/89 – 12/96	3423/1	
DAILY II Platform/Chassis	35-10 (12971112, 12971212, 12971312,	76	01/89 – 12/96	3423/1	
DAILY II Platform/Chassis	35-10 (12971112, 12971212,12971312,	68	01/89 – 12/96	3523	
DAILY II Platform/Chassis	35-10 (12971112, 12971212,12971312,	68	01/89 – 12/96	3524	
DAILY II Platform/Chassis	35-10 (12971112, 12971212,12971312,	68	01/89 – 12/96	3575	
DAILY II Platform/Chassis	35-10 (12971112, 12971212,12971312, 12971317,12976112...)	68	01/89 – 12/96	3645	

MAKE & MODEL		KW	YEAR		
IVECO					
DAILY II Platform/Chassis	35-10 (12971112, 12971212,12971312,	76	01/89 – 12/96	3523	
DAILY II Platform/Chassis	35-10 (12971112, 12971212,12971312,	76	01/89 – 12/96	3524	
DAILY II Platform/Chassis	35-10 (15030111, 15030211,15030311,	76	01/96 – 05/99	3575	
DAILY II Platform/Chassis	35-10 (15030111, 15030211,15030311, 15031111,15031117...)	76	01/96 – 05/99	3645	
DAILY II Platform/Chassis	35-12 (15130311, 15130411,15131111,	90	05/96 – 05/99	3575	
DAILY II Platform/Chassis	35-12 (15130311, 15130411,15131111, 15131204,15131211...)	90	05/96 – 05/99	3645	
DAILY II Platform/Chassis	35-8 (12931102, 12931104,12931111,	55	01/89 – 08/98	3423/1	
DAILY II Platform/Chassis	35-8 (12931102, 12931104,12931111,	55	01/89 – 08/98	3423/1	
DAILY II Platform/Chassis	35-8 (12931102, 12931104,12931111,	55	01/89 – 08/98	3523	
DAILY II Platform/Chassis	35-8 (12931102, 12931104,12931111,	55	01/89 – 08/98	3523	
DAILY II Platform/Chassis	35-8 (12931102, 12931104,12931111,	55	01/89 – 08/98	3524	
DAILY II Platform/Chassis	35-8 (12931102, 12931104,12931111,	55	01/89 – 08/98	3524	
DAILY II Platform/Chassis	35-8 (12931102, 12931104,12931111,	55	01/89 – 08/98	3575	
DAILY II Platform/Chassis	35-8 (12931102, 12931104,12931111,	55	01/89 – 08/98	3575	
DAILY II Platform/Chassis	35-8 (12931102, 12931104,12931111, 12931112,12931117...)	55	01/89 – 08/98	3645	
DAILY II Platform/Chassis	35-8 (12931102, 12931104,12931111, 12931112,12931117...)	55	01/89 – 08/98	3645	
DAILY II Platform/Chassis	35-8 (12931102, 12931104,12931111,	60	01/89 – 08/98	3423/1	
DAILY II Platform/Chassis	35-8 (12931102, 12931104,12931111,	60	01/89 – 08/98	3423/1	
DAILY II Platform/Chassis	35-8 (12931102, 12931104,12931111, 12931112,12931117...)	60	01/89 – 08/98	3523	
DAILY II Platform/Chassis	35-8 (12931102, 12931104,12931111,	60	01/89 – 08/98	3523	
DAILY II Platform/Chassis	35-8 (12931102, 12931104,12931111, 12931112,12931117...)	60	01/89 – 08/98	3524	
DAILY II Platform/Chassis	35-8 (12931102, 12931104,12931111,	60	01/89 – 08/98	3524	
DAILY II Platform/Chassis	35-8 (12931102, 12931104,12931111,	60	01/89 – 08/98	3575	
DAILY II Platform/Chassis	35-8 (12931102, 12931104,12931111, 12931112,12931117...)	60	01/89 – 08/98	3575	
DAILY II Platform/Chassis	35-8 (12931102, 12931104,12931111, 12931112,12931117...)	60	01/89 – 08/98	3645	
DAILY II Platform/Chassis	35-8 (12931102, 12931104,12931111, 12931112,12931117...)	60	01/89 – 08/98	3645	
DAILY II Platform/Chassis	35-8 (14930304, 1493110,14931204...)	62	09/98 – 05/99	3645	
DAILY II Platform/Chassis	35-8 (14930304, 14931104,14931111, 14931115,14931204...)	62	09/98 – 05/99	3575	
DAILY II Platform/Chassis	45-10 (13031204, 13031211, 13031212,	76	01/89 – 04/96	3423/1	
DAILY II Platform/Chassis	45-10 (13031204, 13031211,13031212, 13031224,13031231...)	76	01/89 – 04/96	3523	
DAILY II Platform/Chassis	45-10 (13031204, 13031211,13031212, 13031224,13031231...)	76	01/89 – 04/96	3524	
DAILY II Platform/Chassis	59-12 (13150204, 13150211,13150231, 13150311,13150312...)	85	05/91 – 04/96	3749/1	
DAILY II Platform/Chassis	59-12 (15170211, 15170304,15170311, 15170504,15170511...)	90	05/96 – 05/99	3749	
DAILY III Box Body / Estate	29 L 12 V (ALKA41A2, ALLA52A2, ALKA42A2)	85	09/02 – 07/07	3645	
DAILY III Box Body / Estate	2.8 CNG	78	05/99 – 07/07	3575	
DAILY III Box Body / Estate	2.8 CNG	78	05/99 – 07/07	3645	
DAILY III Box Body / Estate	29 L 10 V (ALJA43A2, ALJA42A2, ALJA41A2)	70	09/02 – 07/07	3575	
DAILY III Box Body / Estate	29 L 10 V (ALJA43A2, ALJA42A2, ALJA41A2)	70	09/02 – 07/07	3645	
DAILY III Box Body / Estate	29 L 11 V	78	05/99 – 07/07	3645	
DAILY III Box Body / Estate	29 L 12 V (ALKA41A2, ALLA52A2, ALKA42A2)	85	09/02 – 07/07	3575	
DAILY III Box Body / Estate	29 L 13	92	05/01 – 07/07	3575	
DAILY III Box Body / Estate	29 L 13	92	05/01 – 07/07	3575/2	
DAILY III Box Body / Estate	29 L 13	92	05/01 – 07/07	3645	
DAILY III Box Body / Estate	29 L 13	92	05/01 – 07/07	3823	
DAILY III Box Body / Estate	29 L 14	100	01/05 – 04/06	3575/2	
DAILY III Box Body / Estate	29 L 14	100	01/05 – 04/06	3823	
DAILY III Box Body / Estate	29 L 9 V	62	05/99 – 07/07	3575	
DAILY III Box Body / Estate	29 L 9 V	62	05/99 – 07/07	3575/2	
DAILY III Box Body / Estate	29 L 9 V	62	05/99 – 07/07	3645	
DAILY III Box Body / Estate	29 L 9 V	62	05/99 – 07/07	3823	
DAILY III Box Body / Estate	29 L 9 V	66	11/01 – 04/06	3575/2	
DAILY III Box Body / Estate	29 L 9 V	66	11/01 – 04/06	3823	
DAILY III Box Body / Estate	35 C 12 V, 35 S 12 V (AGKA43A2, AGKB43A2,AGKB46A2...)	85	09/02 – 07/07	3575	
DAILY III Box Body / Estate	35 C 12 V, 35 S 12 V (AGKA43A2, AGKB43A2,AGKB46A2...)	85	09/02 – 07/07	3575/2	
DAILY III Box Body / Estate	35 C 12 V, 35 S 12 V (AGKA43A2,	85	09/02 – 07/07	3823	
DAILY III Box Body / Estate	35 C 12 V, 35 S 12 V(AGKA43A2, AGKB43A2,AGKB46A2...)	85	09/02 – 07/07	3645	
DAILY III Box Body / Estate	35 C 14	100	09/04 – 04/06	3575	
DAILY III Box Body / Estate	35 C 14	100	09/04 – 04/06	3575/2	
DAILY III Box Body / Estate	35 C 14	100	09/04 – 04/06	3645	
DAILY III Box Body / Estate	35 C 14	100	09/04 – 04/06	3823	
DAILY III Box Body / Estate	35 C 14, 35 S 14	100	01/05 – 04/06	3575	
DAILY III Box Body / Estate	35 C 14, 35 S 14	100	01/05 – 04/06	3575/2	
DAILY III Box Body / Estate	35 C 14, 35 S 14	100	01/05 – 04/06	3645	
DAILY III Box Body / Estate	35 C 14, 35 S 14	100	01/05 – 04/06	3823	
DAILY III Box Body / Estate	35 C 17, 35 S 17	122	01/05 – 04/06	3575	
DAILY III Box Body / Estate	35 C 17, 35 S 17	122	01/05 – 04/06	3575/2	
DAILY III Box Body / Estate	35 C 17, 35 S 17	122	01/05 – 04/06	3645	
DAILY III Box Body / Estate	35 C 17, 35 S 17	122	01/05 – 04/06	3823	
DAILY III Box Body / Estate	35 S 10 (ANJA41A1, ANJA42A2,	70	09/02 – 07/07	3575	
DAILY III Box Body / Estate	35 S 10 (ANJA41A1, ANJA42A2,	70	09/02 – 07/07	3575/2	
DAILY III Box Body / Estate	35 S 10 (ANJA41A1, ANJA42A2,	70	09/02 – 07/07	3645	

BESER

MAKE & MODEL		KW	YEAR		
IVECO					
DAILY III Box Body / Estate	35 S 10 (ANJA41A1, ANJA42A2,	70	09/02 – 07/07	3823	
DAILY III Box Body / Estate	35 S 11 V,35 C 11 V	78	05/99 – 07/07	3575	
DAILY III Box Body / Estate	35 S 11 V,35 C 11 V	78	05/99 – 07/07	3575/2	
DAILY III Box Body / Estate	35 S 11 V,35 C 11 V	78	05/99 – 07/07	3645	
DAILY III Box Body / Estate	35 S 11 V,35 C 11 V	78	05/99 – 07/07	3823	
DAILY III Box Body / Estate	35 S 13 V,35 C 13 V	92	05/99 – 07/07	3575	
DAILY III Box Body / Estate	35 S 13 V,35 C 13 V	92	05/99 – 07/07	3575/2	
DAILY III Box Body / Estate	35 S 13 V,35 C 13 V	92	05/99 – 07/07	3645	
DAILY III Box Body / Estate	35 S 13 V,35 C 13 V	92	05/99 – 07/07	3823	
DAILY III Box Body / Estate	35 S 15 V, 35 C 15 V (A6HCV3B2,	107	11/02 – 07/07	3575	
DAILY III Box Body / Estate	35 S 15 V, 35 C 15 V (A6HCV3B2,	107	11/02 – 07/07	3575/2	
DAILY III Box Body / Estate	35 S 15 V, 35 C 15 V (A6HCV3B2,	107	11/02 – 07/07	3645	
DAILY III Box Body / Estate	35 S 15 V, 35 C 15 V (A6HCV3B2,	107	11/02 – 07/07	3823	
DAILY III Box Body / Estate	35 S 9 V	66	11/01 – 04/06	3575	
DAILY III Box Body / Estate	35 S 9 V	66	11/01 – 04/06	3575/2	
DAILY III Box Body / Estate	35 S 9 V	66	11/01 – 04/06	3645	
DAILY III Box Body / Estate	35 S 9 V	66	11/01 – 04/06	3823	
DAILY III Box Body / Estate	35 S 9 V,35 C 9 V	62	05/99 – 07/07	3575	
DAILY III Box Body / Estate	35 S 9 V,35 C 9 V	62	05/99 – 07/07	3575/2	
DAILY III Box Body / Estate	35 S 9 V,35 C 9 V	62	05/99 – 07/07	3645	
DAILY III Box Body / Estate	35 S 9 V,35 C 9 V	62	05/99 – 07/07	3823	
DAILY III Box Body / Estate	40 C 13	92	05/99 – 04/06	3575	
DAILY III Box Body / Estate	40 C 13	92	05/99 – 04/06	3575/2	
DAILY III Box Body / Estate	40 C 13	92	05/99 – 04/06	3645	
DAILY III Box Body / Estate	40 C 13	92	05/99 – 04/06	3823	
DAILY III Box Body / Estate	40 C 14	100	01/05 – 04/06	3575	
DAILY III Box Body / Estate	40 C 14	100	09/04 – 04/06	3575	
DAILY III Box Body / Estate	40 C 14	100	01/05 – 04/06	3575/2	
DAILY III Box Body / Estate	40 C 14	100	09/04 – 04/06	3575/2	
DAILY III Box Body / Estate	40 C 14	100	01/05 – 04/06	3645	
DAILY III Box Body / Estate	40 C 14	100	09/04 – 04/06	3645	
DAILY III Box Body / Estate	40 C 14	100	01/05 – 04/06	3823	
DAILY III Box Body / Estate	40 C 14	100	09/04 – 04/06	3823	
DAILY III Box Body / Estate	40 C 15	107	11/01 – 04/06	3575	
DAILY III Box Body / Estate	40 C 15	107	11/01 – 04/06	3575/2	
DAILY III Box Body / Estate	40 C 15	107	11/01 – 04/06	3645	
DAILY III Box Body / Estate	40 C 15	107	11/01 – 04/06	3823	
DAILY III Box Body / Estate	40 C 17, 40 S 17	122	01/05 – 04/06	3575	
DAILY III Box Body / Estate	40 C 17, 40 S 17	122	01/05 – 04/06	3575/2	
DAILY III Box Body / Estate	40 C 17, 40 S 17	122	01/05 – 04/06	3645	
DAILY III Box Body / Estate	40 C 17, 40 S 17	122	01/05 – 04/06	3823	
DAILY III Box Body / Estate	45 C 14	100	07/99 – 04/06	3575	
DAILY III Box Body / Estate	45 C 14	100	07/99 – 04/06	3645	
DAILY III Box Body / Estate	50 C 11	78	05/99 – 07/07	3575	
DAILY III Box Body / Estate	50 C 11	78	05/99 – 07/07	3575/2	
DAILY III Box Body / Estate	50 C 11	78	05/99 – 07/07	3645	
DAILY III Box Body / Estate	50 C 11	78	05/99 – 07/07	3823	
DAILY III Box Body / Estate	50 C 13	92	05/99 – 07/07	3575	
DAILY III Box Body / Estate	50 C 13	92	05/99 – 07/07	3575/2	
DAILY III Box Body / Estate	50 C 13	92	05/99 – 07/07	3645	
DAILY III Box Body / Estate	50 C 13	92	05/99 – 07/07	3823	
DAILY III Box Body / Estate	50 C 14	100	09/04 – 04/06	3575	
DAILY III Box Body / Estate	50 C 14	100	09/04 – 04/06	3575/2	
DAILY III Box Body / Estate	50 C 14	100	09/04 – 04/06	3645	
DAILY III Box Body / Estate	50 C 14	100	09/04 – 04/06	3823	
DAILY III Box Body / Estate	50 C 15	107	01/01 – 04/06	3575	
DAILY III Box Body / Estate	50 C 15	107	01/01 – 04/06	3575/2	
DAILY III Box Body / Estate	50 C 15	107	01/01 – 04/06	3645	
DAILY III Box Body / Estate	50 C 15	107	01/01 – 04/06	3823	
DAILY III Box Body / Estate	50 C 17	122	09/04 – 04/06	3575	
DAILY III Box Body / Estate	50 C 17	122	09/04 – 04/06	3645	
DAILY III Box Body / Estate	50 C 17	122	09/04 – 04/06	3823	
DAILY III Box Body / Estate	65 C 14	100	09/04 – 04/06	3575	
DAILY III Box Body / Estate	65 C 14	100	09/04 – 04/06	3645	
DAILY III Box Body / Estate	65 C 14	100	09/04 – 04/06	3942/A	
DAILY III Box Body / Estate	65 C 15	107	11/01 – 04/06	3575	
DAILY III Box Body / Estate	65 C 15	107	11/01 – 04/06	3645	
DAILY III Box Body / Estate	65 C 15	107	11/01 – 04/06	3942/A	
DAILY III Box Body / Estate	65 C 17	122	09/04 – 04/06	3575	
DAILY III Box Body / Estate	65 C 17	122	09/04 – 04/06	3645	
DAILY III Box Body / Estate	65 C 17	122	09/04 – 04/06	3942/A	

MAKE & MODEL		KW	YEAR		
IVECO					
DAILY III Box Body / Estate	29 L 11 V	78	05/99 – 07/07	3575	
DAILY III Box Body / Estate	29 L 12 V (ALKA41A2, ALLA52A2, ALKA42A2)	85	09/02 – 07/07	3575/2	
DAILY III Box Body / Estate	29 L 10 V (ALJA43A2, ALJA42A2, ALJA41A2)	70	09/02 – 07/07	3575/2	
DAILY III Box Body / Estate	29 L 11 V	78	05/99 – 07/07	3575/2	
DAILY III Box Body / Estate	29 L 11 V	78	05/99 – 07/07	3823	
DAILY III Box Body / Estate	29 L 10 V (ALJA43A2, ALJA42A2, ALJA41A2)	70	09/02 – 07/07	3823	
DAILY III Box Body / Estate	29 L 12 V (ALKA41A2, ALLA52A2, ALKA42A2)	85	09/02 – 07/07	3823	
DAILY III Platform/Chassis	29 L 14 (AHRA11C1B1, AHRA14C1B1, AHRA64C1B1)	100	11/05 – 04/06	3575/2	
DAILY III Platform/Chassis	29 L 14 (AHRA11C1B1, AHRA14C1B1, AHRA64C1B1)	100	11/05 – 04/06	3645	
DAILY III Platform/Chassis	29 L 10 (ALJAV1A1, ALJA41AA,	70	09/02 – 04/06	3575	
DAILY III Platform/Chassis	29 L 10 (ALJAV1A1, ALJA41AA,	70	09/02 – 04/06	3575/2	
DAILY III Platform/Chassis	29 L 10 (ALJAV1A1, ALJA41AA,	70	09/02 – 04/06	3645	
DAILY III Platform/Chassis	29 L 10 (ALJAV1A1, ALJA41AA,	70	09/02 – 04/06	3823	
DAILY III Platform/Chassis	29 L 11	78	05/99 – 04/06	3575	
DAILY III Platform/Chassis	29 L 11	78	05/99 – 04/06	3575/2	
DAILY III Platform/Chassis	29 L 11	78	05/99 – 04/06	3645	
DAILY III Platform/Chassis	29 L 11	78	05/99 – 04/06	3823	
DAILY III Platform/Chassis	29 L 12 (ALKA41A1, AHKA64A1, ALLA51A1)	85	09/02 – 04/06	3575	
DAILY III Platform/Chassis	29 L 12 (ALKA41A1, AHKA64A1, ALLA51A1)	85	09/02 – 04/06	3645	
DAILY III Platform/Chassis	29 L 12 (ALKA41A1, AHKA64A1, ALLA51A1)	85	09/02 – 04/06	3823	
DAILY III Platform/Chassis	29 L 13	92	11/01 – 04/06	3645	
DAILY III Platform/Chassis	29 L 9	62	05/99 – 04/06	3575	
DAILY III Platform/Chassis	29 L 9	62	05/99 – 04/06	3575/2	
DAILY III Platform/Chassis	29 L 9	62	05/99 – 04/06	3645	
DAILY III Platform/Chassis	29 L 9	62	05/99 – 04/06	3823	
DAILY III Platform/Chassis	29 L 9	66	11/01 – 04/06	3575/2	
DAILY III Platform/Chassis	29 L 9	66	11/01 – 04/06	3823	
DAILY III Platform/Chassis	35 C 10 V , 35 S 10 V (AMJA14A1,	70	09/02 – 04/06	3575	
DAILY III Platform/Chassis	35 C 10 V , 35 S 10 V (AMJA14A1,	70	09/02 – 04/06	3575/2	
DAILY III Platform/Chassis	35 C 10 V , 35 S 10 V (AMJA14A1,	70	09/02 – 04/06	3645	
DAILY III Platform/Chassis	35 C 10 V , 35 S 10 V (AMJA14A1,	70	09/02 – 04/06	3823	
DAILY III Platform/Chassis	35 C 12 , 35 S 12 (AEKA14A1,AEKA14AA, AEKA64A1...)	85	09/02 – 04/06	3645	
DAILY III Platform/Chassis	35 C 12 , 35 S 12 (AEKA14A1,AEKA14AA,	85	09/02 – 04/06	3823	
DAILY III Platform/Chassis	35 C 12 , 35 S 12 (AEKA14A1,AEKA14AA, AEKA64A1...)	85	09/02 – 04/06	3575	
DAILY III Platform/Chassis	35 C 12 , 35 S 12 (AEKA14A1,AEKA14AA, AEKA64A1...)	85	09/02 – 04/06	3575/2	
DAILY III Platform/Chassis	35 C 14	100	09/04 – 04/06	3575	
DAILY III Platform/Chassis	35 C 14	100	09/04 – 04/06	3575/2	
DAILY III Platform/Chassis	35 C 14	100	09/04 – 04/06	3645	
DAILY III Platform/Chassis	35 C 14	100	09/04 – 04/06	3823	
DAILY III Platform/Chassis	35 C 14, 35 S 14	100	01/05 – 04/06	3575	
DAILY III Platform/Chassis	35 C 14, 35 S 14	100	01/05 – 04/06	3575/2	
DAILY III Platform/Chassis	35 C 14, 35 S 14	100	01/05 – 04/06	3645	
DAILY III Platform/Chassis	35 C 14, 35 S 14	100	01/05 – 04/06	3823	
DAILY III Platform/Chassis	35 C 15	107	11/01 – 04/06	3575	
DAILY III Platform/Chassis	35 C 15	107	11/01 – 04/06	3575/2	
DAILY III Platform/Chassis	35 C 15	107	11/01 – 04/06	3645	
DAILY III Platform/Chassis	35 C 15	107	11/01 – 04/06	3823	
DAILY III Platform/Chassis	35 C 17, 35 S 17	122	01/05 – 04/06	3575	
DAILY III Platform/Chassis	35 C 17, 35 S 17	122	01/05 – 04/06	3575/2	
DAILY III Platform/Chassis	35 C 17, 35 S 17	122	01/05 – 04/06	3645	
DAILY III Platform/Chassis	35 C 17, 35 S 17	122	01/05 – 04/06	3823	
DAILY III Platform/Chassis	35 C 9, 35 S 9	66	11/01 – 04/06	3575	
DAILY III Platform/Chassis	35 C 9, 35 S 9	66	11/01 – 04/06	3575/2	
DAILY III Platform/Chassis	35 C 9, 35 S 9	66	11/01 – 04/06	3645	
DAILY III Platform/Chassis	35 C 9, 35 S 9	66	11/01 – 04/06	3823	
DAILY III Platform/Chassis	35 S 11,35 C 11 (A2FC13AA, A6FBU4AB,)	78	05/99 – 04/06	3575	
DAILY III Platform/Chassis	35 S 11,35 C 11 (A2FC13AA, A6FBU4AB,)	78	05/99 – 04/06	3575/2	
DAILY III Platform/Chassis	35 S 11,35 C 11 (A2FC13AA, A6FBU4AB,)	78	05/99 – 04/06	3645	
DAILY III Platform/Chassis	35 S 11,35 C 11 (A2FC13AA, A6FBU4AB,)	78	05/99 – 04/06	3823	
DAILY III Platform/Chassis	35 S 13,35 C 13	92	05/99 – 04/06	3575	
DAILY III Platform/Chassis	35 S 13,35 C 13	92	05/99 – 04/06	3575/2	
DAILY III Platform/Chassis	35 S 13,35 C 13	92	05/99 – 04/06	3645	
DAILY III Platform/Chassis	35 S 13,35 C 13	92	05/99 – 04/06	3823	
DAILY III Platform/Chassis	35 S 9,35 C 9	62	05/99 – 04/06	3575	
DAILY III Platform/Chassis	35 S 9,35 C 9	62	05/99 – 04/06	3575/2	
DAILY III Platform/Chassis	35 S 9,35 C 9	62	05/99 – 04/06	3645	
DAILY III Platform/Chassis	35 S 9,35 C 9	62	05/99 – 04/06	3823	
DAILY III Platform/Chassis	40 C 13	92	05/99 – 04/06	3575	
DAILY III Platform/Chassis	40 C 13	92	05/99 – 04/06	3575/2	
DAILY III Platform/Chassis	40 C 13	92	05/99 – 04/06	3645	
DAILY III Platform/Chassis	40 C 13	92	05/99 – 04/06	3823	

MAKE & MODEL		KW	YEAR		
IVECO					
DAILY III Platform/Chassis	40 C 14	100	01/05 – 04/06	3575	
DAILY III Platform/Chassis	40 C 14	100	09/04 – 04/06	3575	
DAILY III Platform/Chassis	40 C 14	100	01/05 – 04/06	3575/2	
DAILY III Platform/Chassis	40 C 14	100	09/04 – 04/06	3575/2	
DAILY III Platform/Chassis	40 C 14	100	01/05 – 04/06	3645	
DAILY III Platform/Chassis	40 C 14	100	09/04 – 04/06	3645	
DAILY III Platform/Chassis	40 C 14	100	01/05 – 04/06	3823	
DAILY III Platform/Chassis	40 C 14	100	09/04 – 04/06	3823	
DAILY III Platform/Chassis	40 C 15	107	11/01 – 04/06	3575	
DAILY III Platform/Chassis	40 C 15	107	11/01 – 04/06	3575/2	
DAILY III Platform/Chassis	40 C 15	107	11/01 – 04/06	3645	
DAILY III Platform/Chassis	40 C 15	107	11/01 – 04/06	3823	
DAILY III Platform/Chassis	40 C 17, 40 S 17	122	01/05 – 04/06	3575	
DAILY III Platform/Chassis	40 C 17, 40 S 17	122	01/05 – 04/06	3575/2	
DAILY III Platform/Chassis	40 C 17, 40 S 17	122	01/05 – 04/06	3645	
DAILY III Platform/Chassis	40 C 17, 40 S 17	122	01/05 – 04/06	3823	
DAILY III Platform/Chassis	50 C 11	78	05/99 – 04/06	3575	
DAILY III Platform/Chassis	50 C 11	78	05/99 – 4/06	3575/2	
DAILY III Platform/Chassis	50 C 11	78	05/99 – 04/06	3645	
DAILY III Platform/Chassis	50 C 11	78	05/99 – 04/06	3823	
DAILY III Platform/Chassis	50 C 13	92	05/99 – 04/06	3575	
DAILY III Platform/Chassis	50 C 13	92	05/99 – 04/06	3575/2	
DAILY III Platform/Chassis	50 C 13	92	05/99 – 04/06	3645	
DAILY III Platform/Chassis	50 C 13	92	05/99 – 04/06	3823	
DAILY III Platform/Chassis	50 C 14	100	09/04 – 04/06	3575	
DAILY III Platform/Chassis	50 C 14	100	09/04 – 04/06	3575/2	
DAILY III Platform/Chassis	50 C 14	100	09/04 – 04/06	3645	
DAILY III Platform/Chassis	50 C 14	100	09/04 – 04/06	3823	
DAILY III Platform/Chassis	50 C 15	107	01/01 – 04/06	3575	
DAILY III Platform/Chassis	50 C 15	107	01/01 – 04/06	3575/2	
DAILY III Platform/Chassis	50 C 15	107	01/01 – 04/06	3645	
DAILY III Platform/Chassis	50 C 15	107	01/01 – 04/06	3823	
DAILY III Platform/Chassis	50 C 17	122	09/04 – 04/06	3575	
DAILY III Platform/Chassis	50 C 17	122	09/04 – 04/06	3575/2	
DAILY III Platform/Chassis	50 C 17	122	09/04 – 04/06	3575/2	
DAILY III Platform/Chassis	50 C 17	122	09/04 – 04/06	3645	
DAILY III Platform/Chassis	50 C 17	122	09/04 – 04/06	3823	
DAILY III Platform/Chassis	65 C 14	100	09/04 – 04/06	3575	
DAILY III Platform/Chassis	65 C 14	100	09/04 – 04/06	3645	
DAILY III Platform/Chassis	65 C 14	100	09/04 – 04/06	3942/A	
DAILY III Platform/Chassis	65 C 15	107	11/01 – 04/06	3575	
DAILY III Platform/Chassis	65 C 15	107	11/01 – 04/06	3645	
DAILY III Platform/Chassis	65 C 15	107	11/01 – 04/06	3942/A	
DAILY III Platform/Chassis	65 C 17	122	09/04 – 04/06	3575	
DAILY III Platform/Chassis	65 C 17	122	09/04 – 04/06	3645	
DAILY III Platform/Chassis	65 C 17	122	09/04 – 04/06	3942/A	
DAILY III Platform/Chassis	29 L 13	92	11/01 – 04/06	3575	
DAILY III Platform/Chassis	29 L 12 (ALKA41A1, AHKA64A1, ALLA51A1)	85	09/02 04/06	3575/2	
DAILY III Platform/Chassis	29 L 14 (AHRA11C1B1, AHRA14C1B1, AHRA64C1B1)	100	11/05 – 04/06	3575	
DAILY III Platform/Chassis	29 L 13	92	11/01 – 04/06	3575/2	
DAILY III Platform/Chassis	29 L 13	92	11/01 – 04/06	3823	
DAILY III Platform/Chassis	29 L 14 (AHRA11C1B1, AHRA14C1B1, AHRA64C1B1)	100	11/05 – 04/06	3823	
DAILY IV	60C15 (F1CE0481FA)	107	05/06 – 08/11		3995
DAILY IV	60C15 V (F1CE0481FA)	107	05/06 – 08/11		3995
DAILY IV	60C15, 60C15 /P, 60C15 D, 60C15 D/P	107	05/06 – 08/11		3995
DAILY IV	60C18 (F1CE0481HC)	130	05/06 – 08/11		3995
DAILY IV	60C18 (F1CE0481HC)	130	05/06 – 08/11		3995
DAILY IV	60C18 (F1CE0481HC)	130	05/06 – 08/11		3995
DAILY IV	65C15 (F1CE0481FA)	107	05/06 – 08/11		3995
DAILY IV	65C15, 65C15 /P, 65C15 D, 65C15 D/P	107	05/06 – 08/11		3995
DAILY IV	65C18 (F1CE0481HC)	130	05/06 – 08/11		3995
DAILY IV	65C18 (F1CE0481HC)	130	05/06 – 08/11		3995
DAILY IV Box Body / Estate	35C13 V, 35C13 V/P, 35S13 V, 35S13 V/P	93	07/07 – 08/11	3823	
DAILY IV Box Body / Estate	29L10 V	70	05/06 – 08/11	3823	
DAILY IV Box Body / Estate	29L10 V	70	05/06 – 08/11	3965	
DAILY IV Box Body / Estate	29L10 V	70	05/06 – 08/11		4092
DAILY IV Box Body / Estate	29L12 V, 29L12 V/P	85	05/06 – 08/11	3823	
DAILY IV Box Body / Estate	29L12 V, 29L12 V/P	85	05/06 – 08/11	3965	
DAILY IV Box Body / Estate	29L12 V, 29L12 V/P	85	05/06 – 08/11		4092
DAILY IV Box Body / Estate	29L14 C, 29L14 C/P, 29L14 V,29L14 V/P	100	05/06 – 08/11	3823	
DAILY IV Box Body / Estate	29L14 C, 29L14 C/P, 29L14 V,29L14 V/P	100	05/06 – 08/11		4092

MAKE & MODEL		KW	YEAR		
IVECO					
DAILY IV Box Body / Estate	29L14 C, 29L14 C/P, 29L14,29L14 V/P	100	05/06 – 08/11	3965	
DAILY IV Box Body / Estate	35C10 K	70	05/06 – 08/11		4092
DAILY IV Box Body / Estate	35C10, 35S10	70	05/06 – 08/11	3823	
DAILY IV Box Body / Estate	35C10, 35S10	70	05/06 – 08/11	3965	
DAILY IV Box Body / Estate	35C10, 35S10	70	05/06 – 08/11		4092
DAILY IV Box Body / Estate	35C11 V, 35S11 V	78	07/07 – 08/11	3823	
DAILY IV Box Body / Estate	35C11 V, 35S11 V	78	07/07 – 08/11	3965	
DAILY IV Box Body / Estate	35C11 V, 35S11 V	78	07/07 – 08/11		4092
DAILY IV Box Body / Estate	35C12 V, 35C12 V/P, 35S12 V,35S12 V/P	85	05/06 – 08/11	3823	
DAILY IV Box Body / Estate	35C12 V, 35C12 V/P, 35S12 V,35S12 V/P	85	05/06 – 08/11	3965	
DAILY IV Box Body / Estate	35C12 V, 35C12 V/P, 35S12 V,35S12 V/P	85	05/06 – 08/11		4092
DAILY IV Box Body / Estate	35C13 V, 35C13 V/P, 35S13 V, 35S13 V/P	93	07/07 – 08/11	3965	
DAILY IV Box Body / Estate	35C13 V, 35C13 V/P, 35S13 V, 35S13 V/P	93	07/07 – 08/11		4092
DAILY IV Box Body / Estate	35C14 GV, 35C14 GV/P, 35S14 GV, 35S14 GV/P	100	07/07 – 08/11	3823	
DAILY IV Box Body / Estate	35C14 GV, 35C14 GV/P, 35S14 GV, 35S14 GV/P	100	07/07 – 08/11	3965	
DAILY IV Box Body / Estate	35C14 GV, 35C14 GV/P, 35S14 GV, 35S14 GV/P	100	07/07 – 08/11		4092
DAILY IV Box Body / Estate	35C14 V, 35C14 V/P, 35S14 V, 35S14 V/P	103	07/07 – 08/11	3823	
DAILY IV Box Body / Estate	35C14 V, 35C14 V/P, 35S14 V, 35S14 V/P	103	07/07 – 08/11	3965	
DAILY IV Box Body / Estate	35C14 V, 35C14 V/P, 35S14 V, 35S14 V/P	103	07/07 – 08/11		4092
DAILY IV Box Body / Estate	35C15 V, 35C15 V/P	107	05/06 – 08/11		4092
DAILY IV Box Body / Estate	35C15 V, 35C15 V/P	107	05/06 – 08/11	3823	
DAILY IV Box Body / Estate	35C15 V, 35C15 V/P	107	05/06 – 08/11	3965	
DAILY IV Box Body / Estate	35C17 V, 35C17 V/P, 35S17 V, 35S17 V/P	125	07/07 – 08/11	3823	
DAILY IV Box Body / Estate	35C17 V, 35C17 V/P, 35S17 V, 35S17 V/P	125	07/07 – 08/11	3965	
DAILY IV Box Body / Estate	35C17 V, 35C17 V/P, 35S17 V, 35S17 V/P	125	07/07 – 08/11		4092
DAILY IV Box Body / Estate	35C18 V, 35C18 V/P, 35S18 V, 35S18 V/P	130	05/06 – 08/11	3823	
DAILY IV Box Body / Estate	35C18 V, 35C18 V/P, 35S18 V, 35S18 V/P	130	05/06 – 08/11	3965	
DAILY IV Box Body / Estate	35C18 V, 35C18 V/P, 35S18 V, 35S18 V/P	130	05/06 – 08/11		4092
DAILY IV Box Body / Estate	35S14 C, 35S14 C/P, 35S14 V,35S14 V/P, 35C14 V, 35C14	100	05/06 – 08/11		4092
DAILY IV Box Body / Estate	35S14 C, 35S14 C/P, 35S14 V,35S14 V/P, 35C14 V, 35C14 V/P	100	05/06 – 08/11	3965	
DAILY IV Box Body / Estate	35S14 C, 35S14 C/P, 35S14 V,35S14 V/P, 35C14 V, 35C14V/P	100	05/06 – 08/11	3823	
DAILY IV Box Body / Estate	35S15	110	06/06 – 08/11	3823	
DAILY IV Box Body / Estate	35S15	110	06/06 – 08/11	3965	
DAILY IV Box Body / Estate	40C10 V	70	05/06 – 08/11	3965	
DAILY IV Box Body / Estate	40C10 V	70	05/06 – 08/11		4092
DAILY IV Box Body / Estate	40C11 V	78	07/07 – 08/11	3965	
DAILY IV Box Body / Estate	40C11 V	78	07/07 – 08/11		4092
DAILY IV Box Body / Estate	40C12 V, 40C14 V/P	85	05/06 – 08/11	3965	
DAILY IV Box Body / Estate	40C12 V, 40C14 V/P	85	05/06 – 08/11		4092
DAILY IV Box Body / Estate	40C13 V, 40C13 V/P	93	07/07 – 08/11	3965	
DAILY IV Box Body / Estate	40C13 V, 40C13 V/P	93	07/07 – 08/11		4092
DAILY IV Box Body / Estate	40C14 GV, 40C14 GV/P	100	07/07 – 08/11	3965	
DAILY IV Box Body / Estate	40C14 GV, 40C14 GV/P	100	07/07 – 08/11		4092
DAILY IV Box Body / Estate	40C14 V, 40C14 V/P	103	07/07 – 08/11	3965	
DAILY IV Box Body / Estate	40C14 V, 40C14 V/P	103	07/07 – 08/11		4092
DAILY IV Box Body / Estate	40C15 V, 40C15 V/P	107	05/06 – 08/11	3965	
DAILY IV Box Body / Estate	40C15 V, 40C15 V/P	107	05/06 – 08/11		4092
DAILY IV Box Body / Estate	40C17 V, 40C17 V/P	125	07/07 – 08/11	3965	
DAILY IV Box Body / Estate	40C17 V, 40C17 V/P	125	07/07 – 08/11		4092
DAILY IV Box Body / Estate	40C18 V, 40C18 V/P	130	05/06 – 08/11	3965	
DAILY IV Box Body / Estate	40C18 V, 40C18 V/P	130	05/06 – 08/11		4092
DAILY IV Box Body / Estate	45C15 V	107	05/06 – 08/11	3965	
DAILY IV Box Body / Estate	45C15 V	107	05/06 – 08/11		4092
DAILY IV Box Body / Estate	45C17 V, 45C17 V/P	125	07/07 – 08/11	3965	
DAILY IV Box Body / Estate	45C17 V, 45C17 V/P	125	07/07 – 08/11		4092
DAILY IV Box Body / Estate	45C18	130	05/06 – 08/11	3965	
DAILY IV Box Body / Estate	45C18	130	05/06 – 08/11		4092
DAILY IV Box Body / Estate	50C14 GV, 50C14 GV/P	100	07/07 – 08/11	3965	
DAILY IV Box Body / Estate	50C14 GV, 50C14 GV/P	100	07/07 – 08/11		4092
DAILY IV Box Body / Estate	50C14 V, 50C14 V/P	103	07/07 – 08/11	3965	
DAILY IV Box Body / Estate	50C14 V, 50C14 V/P	103	07/07 – 08/11		4092
DAILY IV Box Body / Estate	50C15 V, 50C15 V/P	107	05/06 – 08/11	3965	
DAILY IV Box Body / Estate	50C15 V, 50C15 V/P	107	05/06 – 08/11		4092
DAILY IV Box Body / Estate	50C17 V, 50C17 V/P	125	07/07 – 08/11	3965	
DAILY IV Box Body / Estate	50C17 V, 50C17 V/P	125	07/07 – 08/11		4092
DAILY IV Box Body / Estate	50C18 V, 50C18 V/P	130	05/06 – 08/11	3575	
DAILY IV Box Body / Estate	50C18 V, 50C18 V/P	130	05/06 – 08/11	3645	
DAILY IV Box Body / Estate	50C18 V, 50C18 V/P	130	05/06 – 08/11	3965	
DAILY IV Box Body / Estate	50C18 V, 50C18 V/P	130	05/06 – 08/11		4092
DAILY IV Box Body / Estate	55C17	125	08/07 – 03/12	3575	
DAILY IV Box Body / Estate	55C17	125	08/07 – 03/12	3645	

MAKE & MODEL   		KW	YEAR		
IVECO					
DAILY IV Box Body / Estate	55C17	125	08/07 – 03/12	3965	
DAILY IV Box Body / Estate	55C17	125	08/07 – 03/12		4092
DAILY IV Box Body / Estate	60C15 V	107	05/06 – 08/11	3965	
DAILY IV Box Body / Estate	60C15 V	107	05/06 – 08/11		4092
DAILY IV Box Body / Estate	60C17 V, 60C17 V/P	125	07/07 – 08/11	3965	
DAILY IV Box Body / Estate	60C17 V, 60C17 V/P	125	07/07 – 08/11		4092
DAILY IV Box Body / Estate	60C18	130	05/06 – 08/11	3965	
DAILY IV Box Body / Estate	60C18	130	05/06 – 08/11		4092
DAILY IV Box Body / Estate	65C14 V, 65C14 V/P	103	07/07 – 08/11	3965	
DAILY IV Box Body / Estate	65C14 V, 65C14 V/P	103	07/07 – 08/11		4092
DAILY IV Box Body / Estate	65C15	107	05/06 – 08/11	3965	
DAILY IV Box Body / Estate	65C15	107	05/06 – 08/11		4092
DAILY IV Box Body / Estate	65C17 V, 65C17 V/P	125	07/07 – 08/11	3965	
DAILY IV Box Body / Estate	65C17 V, 65C17 V/P	125	07/07 – 08/11		4092
DAILY IV Box Body / Estate	65C18	130	05/06 – 08/11	3965	
DAILY IV Box Body / Estate	65C18	130	05/06 – 08/11		4092
DAILY IV Box Body / Estate	70C14 V, 70C14 V/P	103	07/07 – 08/11	3965	
DAILY IV Box Body / Estate	70C14 V, 70C14 V/P	103	07/07 – 08/11		4092
DAILY IV Box Body / Estate	70C17V, 70C17 V/P	125	07/07 – 08/11	3965	
DAILY IV Box Body / Estate	70C17V, 70C17 V/P	125	07/07 – 08/11		4092
DAILY IV Bus	35S14 G	100	07/09 – 08/11	3823	
DAILY IV Bus	35S14 G	100	07/09 – 08/11	3965	
DAILY IV Bus	35S14, 35S14 /P	100	05/06 – 08/11	3823	
DAILY IV Bus	35S14, 35S14 /P	100	05/06 – 08/11	3965	
DAILY IV Dumptruck	35C12	85	05/06 – 08/11	3965	
DAILY IV Dumptruck	35C13 K, 35C13 DK, 35S13 K, 35S13 DK	93	07/07 – 08/11	3823	
DAILY IV Dumptruck	35C14 K, 35C14 DK, 35S14 K, 35S14 DK	103	07/07 – 08/11	3965	
DAILY IV Dumptruck	35C10 K	70	05/06 – 08/11	3965	
DAILY IV Dumptruck	35C10, 35S10	70	05/06 – 08/11		4092
DAILY IV Dumptruck	35C11 K, 35C11 DK, 35S11 K, 35S11 DK	78	07/07 – 08/11	3823	
DAILY IV Dumptruck	35C11 K, 35C11 DK, 35S11 K,35S11 DK	78	07/07 – 08/11		4092
DAILY IV Dumptruck	35C11 K, 35C11 DK, 35S11 K,35S11 DK	78	07/07 – 08/11	3965	
DAILY IV Dumptruck	35C12	85	05/06 – 08/11		4092
DAILY IV Dumptruck	35C13 K, 35C13 DK, 35S13 K, 35S13 DK	93	07/07 – 08/11	3965	
DAILY IV Dumptruck	35C13 K, 35C13 DK, 35S13 K, 35S13 DK	93	07/07 – 08/11		4092
DAILY IV Dumptruck	35C14 K, 35C14 DK, 35S14 K, 35S14 DK	103	07/07 – 08/11		4092
DAILY IV Dumptruck	35C15	107	05/06 – 08/11		4092
DAILY IV Dumptruck	35C15	107	05/06 – 08/11	3965	
DAILY IV Dumptruck	35C17 K, 35C17 DK, 35S17 K, 35S17 DK	125	07/07 – 08/11	3965	
DAILY IV Dumptruck	35C17 K, 35C17 DK, 35S17 K, 35S17 DK	125	07/07 – 08/11		4092
DAILY IV Dumptruck	35C18	130	05/06 – 08/11	3965	
DAILY IV Dumptruck	35C18	130	05/06 – 08/11		4092
DAILY IV Dumptruck	35S14 K, 35S14 DK	100	07/07 – 08/11	3965	
DAILY IV Dumptruck	40C14 K, 40C14 DK	103	07/07 – 08/11	3965	
DAILY IV Dumptruck	40C14 K, 40C14 DK	103	07/07 – 08/11		4092
DAILY IV Dumptruck	40C17 K, 40C17 DK	125	07/07 – 08/11	3965	
DAILY IV Dumptruck	40C17 K, 40C17 DK	125	07/07 – 08/11		4092
DAILY IV Dumptruck	50C14 K, 50C14 DK	103	07/07 – 08/11	3965	
DAILY IV Dumptruck	50C14 K, 50C14 DK	103	07/07 – 08/11		4092
DAILY IV Dumptruck	50C15	107	05/06 – 08/11	3965	
DAILY IV Dumptruck	50C15	107	05/06 – 08/11		4092
DAILY IV Dumptruck	50C17 K, 50C17 DK	125	07/07 – 08/11	3965	
DAILY IV Dumptruck	50C17 K, 50C17 DK	125	07/07 – 08/11		4092
DAILY IV Dumptruck	50C18	130	05/06 – 08/11	3575	
DAILY IV Dumptruck	50C18	130	05/06 – 08/11	3645	
DAILY IV Dumptruck	50C18	130	05/06 – 08/11	3965	
DAILY IV Dumptruck	50C18	130	05/06 – 08/11		4092
DAILY IV Dumptruck	60C14 K, 60C14 DK	103	07/07 – 08/11	3965	
DAILY IV Dumptruck	60C14 K, 60C14 DK	103	07/07 – 08/11		4092
DAILY IV Dumptruck	60C15	107	05/06 – 08/11	3965	
DAILY IV Dumptruck	60C15	107	05/06 – 08/11		4092
DAILY IV Dumptruck	60C17 K, 60C17 DK	125	07/07 – 08/11	3965	
DAILY IV Dumptruck	60C17 K, 60C17 DK	125	07/07 – 08/11		4092
DAILY IV Dumptruck	60C18	130	05/06 – 08/11	3965	
DAILY IV Dumptruck	60C18	130	05/06 – 08/11		4092
DAILY IV Dumptruck	65C14 K, 65C14 DK	103	07/07 – 08/11	3965	
DAILY IV Dumptruck	65C14 K, 65C14 DK	103	07/07 – 08/11		4092
DAILY IV Dumptruck	65C17 K, 65C17 DK, 65C17KK	125	07/07 – 08/11	3965	
DAILY IV Dumptruck	65C17 K, 65C17 DK, 65C17KK	125	07/07 – 08/11		4092
DAILY IV Dumptruck	70C14 K, 70C14 DK, 70C14 KK	103	07/07 – 08/11	3965	
DAILY IV Dumptruck	70C14 K, 70C14 DK, 70C14 KK	103	07/07 – 08/11		4092

MAKE & MODEL		KW	YEAR		
IVECO					
DAILY IV Dumptruck	70C17 K, 70C17 DK, 70C17 KK	125	07/07 – 08/11	3965	
DAILY IV Dumptruck	70C17 K, 70C17 DK, 70C17 KK	125	07/07 – 08/11		4092
DAILY IV Dumptruck	35C17 K, 35C17 DK, 35S17 K, 35S17 DK	125	07/07 – 08/11	3823	
DAILY IV Dumptruck	35C14 K, 35C14 DK, 35S14 K, 35S14 DK	103	07/07 – 08/11	3823	
DAILY IV Dumptruck	35S14 K, 35S14 DK	100	07/07 – 08/11	3823	
DAILY IV Platform/Chassis	35C14, 35C14 /P, 35S14,	103	07/07 – 08/11	3965	
DAILY IV Platform/Chassis	35C14, 35C14 /P, 35S14, 35S14 /P, 35S14 D, 35S14 D/P	103	07/07 – 08/11	3823	
DAILY IV Platform/Chassis	50C14 G, 50C14 G/P, 50C14	100	07/07 – 08/11		4092
DAILY IV Platform/Chassis	65C14 G, 65C14 G/P, 65C14 GD, 65C14 GD/P	100	07/07 – 08/11	3965	
DAILY IV Platform/Chassis	65C15, 65C15 /P, 65C15 D, 65C15 D/P	107	07/07 – 08/11		4092
DAILY IV Platform/Chassis	29L10	70	05/06 – 08/11	3823	
DAILY IV Platform/Chassis	29L10	70	05/06 – 08/11	3965	
DAILY IV Platform/Chassis	29L11 V, 35C11 V, 35S11 V,	78	09/11 – 02/14		4092
DAILY IV Platform/Chassis	29L12	85	05/06 – 08/11	3823	
DAILY IV Platform/Chassis	29L12	85	05/06 – 08/11	3965	
DAILY IV Platform/Chassis	29L14	100	05/06 – 08/11	3823	
DAILY IV Platform/Chassis	29L14	100	05/06 – 08/11	3965	
DAILY IV Platform/Chassis	35C10, 35S10	70	05/06 – 08/11	3823	
DAILY IV Platform/Chassis	35C10, 35S10	70	05/06 – 08/11	3965	
DAILY IV Platform/Chassis	35C11, 35S11, 35S11 D,35S11 /P	78	07/07 – 08/11	3823	
DAILY IV Platform/Chassis	35C11, 35S11, 35S11 D,35S11 /P	78	07/07 – 08/11	3965	
DAILY IV Platform/Chassis	35C12, 35S12	85	05/06 – 08/11	3965	
DAILY IV Platform/Chassis	35C12, 35S12	85	05/06 – 08/11	3823	
DAILY IV Platform/Chassis	35C13, 35C13 /P, 35S13 D, 35S13, 35S13 /P	93	07/07 – 08/11	3823	
DAILY IV Platform/Chassis	35C13, 35C13 /P, 35S13 D,35S13, 35S13 /P	93	07/07 – 08/11	3965	
DAILY IV Platform/Chassis	35C14 G, 35C14 G/P, 35S14 G, 35S14 G/P, 35C14 GD, 35S14 GD	100	07/07 – 08/11	3823	
DAILY IV Platform/Chassis	35C14 G, 35C14 G/P, 35S14G, 35S14 G/P, 35C14 GD, 35S14 GD	100	07/07 – 08/11	3965	
DAILY IV Platform/Chassis	35C14, 35S14, 35S14 /P	100	05/06 – 08/11	3823	
DAILY IV Platform/Chassis	35C14, 35S14, 35S14 /P	100	05/06 – 08/11	3965	
DAILY IV Platform/Chassis	35C15	107	05/06 – 08/11	3965	
DAILY IV Platform/Chassis	35C15	107	05/06 – 08/11		4092
DAILY IV Platform/Chassis	35C17, 35C17 /P, 35S17, 35S17 /P, 35S17 D	125	07/07 – 08/11	3823	
DAILY IV Platform/Chassis	35C17, 35C17 /P, 35S17,35S17 /P, 35S17 D	125	07/07 – 08/11	3965	
DAILY IV Platform/Chassis	35C17, 35C17 /P, 35S17,35S17 /P, 35S17 D	125	07/07 – 08/11		4092
DAILY IV Platform/Chassis	35C18, 35S18	130	05/06 - 08/11	3823	
DAILY IV Platform/Chassis	35C18, 35S18	130	05/06 – 08/11	3965	
DAILY IV Platform/Chassis	35C18, 35S18	130	05/06 – 08/11		4092
DAILY IV Platform/Chassis	35S17 W, 35S17 WD	125	09/11 02/14	3823	
DAILY IV Platform/Chassis	35S17 W, 35S17 WD	125	07/07 – 08/11	3965	
DAILY IV Platform/Chassis	40C10	70	05/06 – 08/11	3965	
DAILY IV Platform/Chassis	40C10	70	05/06 – 08/11		4092
DAILY IV Platform/Chassis	40C11, 40C11 D	78	07/07 – 08/11	3965	
DAILY IV Platform/Chassis	40C11, 40C11 D	78	07/07 – 08/11		4092
DAILY IV Platform/Chassis	40C12	85	05/06 – 08/11	3965	
DAILY IV Platform/Chassis	40C12	85	05/06 – 08/11		4092
DAILY IV Platform/Chassis	40C13, 40C13 /P	93	07/07 – 08/11	3965	
DAILY IV Platform/Chassis	40C13, 40C13 /P	93	07/07 – 08/11		4092
DAILY IV Platform/Chassis	40C14 G, 40C14 G/P	100	07/07 – 08/11	3965	
DAILY IV Platform/Chassis	40C14 G, 40C14 G/P	100	07/07 – 08/11		4092
DAILY IV Platform/Chassis	40C14, 40C14 /P	103	07/07 – 08/11	3965	
DAILY IV Platform/Chassis	40C14, 40C14 /P	103	07/07 – 08/11		4092
DAILY IV Platform/Chassis	40C15	107	05/06 – 08/11	3965	
DAILY IV Platform/Chassis	40C15	107	05/06 – 08/11		4092
DAILY IV Platform/Chassis	40C17, 40C17 /P	125	07/07 – 08/11	3965	
DAILY IV Platform/Chassis	40C17, 40C17 /P	125	07/07 – 08/11		4092
DAILY IV Platform/Chassis	40C18	130	05/06 – 08/11	3965	
DAILY IV Platform/Chassis	40C18	130	05/06 – 08/11		4092
DAILY IV Platform/Chassis	45C14, 45C14 /P	103	07/07 – 08/11	3965	
DAILY IV Platform/Chassis	45C14, 45C14 /P	103	07/07 – 08/11		4092
DAILY IV Platform/Chassis	45C15	107	05/06 – 08/11	3965	
DAILY IV Platform/Chassis	45C15	107	05/06 – 08/11		4092
DAILY IV Platform/Chassis	45C17, 45C17 /P	125	07/07 – 08/11	3965	
DAILY IV Platform/Chassis	45C17, 45C17 /P	125	07/07 – 08/11		4092
DAILY IV Platform/Chassis	45C18, 45C18 /P, 45C18 D,45C18 D/P	130	05/06 – 08/11	3965	
DAILY IV Platform/Chassis	45C18, 45C18 /P, 45C18 D,45C18 D/P	130	05/06 – 08/11		4092
DAILY IV Platform/Chassis	50C14 G, 50C14 G/P, 50C14 GD, 50C14 GD/P	100	07/07 – 08/11	3965	
DAILY IV Platform/Chassis	50C14, 50C14 /P	103	07/07 – 08/11	3965	
DAILY IV Platform/Chassis	50C14, 50C14 /P	103	07/07 – 08/11		4092
DAILY IV Platform/Chassis	50C15	107	05/06 – 08/11	3965	
DAILY IV Platform/Chassis	50C15	107	05/06 – 08/11		4092
DAILY IV Platform/Chassis	50C17, 50C17 /P	125	07/07 – 08/11	3965	

BESER

MAKE & MODEL		KW	YEAR		
IVECO					
DAILY IV Platform/Chassis	50C17, 50C17 /P	125	07/07 – 08/11		4092
DAILY IV Platform/Chassis	50C18	130	05/06 – 08/11	3575	
DAILY IV Platform/Chassis	50C18	130	05/06 – 08/11	3645	
DAILY IV Platform/Chassis	50C18	130	05/06 – 08/11	3965	
DAILY IV Platform/Chassis	50C18	130	05/06 – 08/11		4092
DAILY IV Platform/Chassis	55S17 W, 55S17 WD	125	07/07 - 08/11	3823	
DAILY IV Platform/Chassis	55S17 W, 55S17 WD	125	07/07 – 08/11	3965	
DAILY IV Platform/Chassis	60C14, 60C14 /P	103	07/07 – 08/11	3965	
DAILY IV Platform/Chassis	60C14, 60C14 /P	103	07/07 – 08/11		4092
DAILY IV Platform/Chassis	60C15, 60C15 /P, 60C15 D,60C15 D/P	107	05/06 – 08/11	3965	
DAILY IV Platform/Chassis	60C15, 60C15 /P, 60C15 D,60C15 D/P	107	05/06 – 08/11		4092
DAILY IV Platform/Chassis	60C17, 60C17 /P	125	07/07 – 08/11	3965	
DAILY IV Platform/Chassis	60C17, 60C17 /P	125	07/07 – 08/11		4092
DAILY IV Platform/Chassis	60C18	130	05/06 – 08/11	3965	
DAILY IV Platform/Chassis	60C18	130	05/06 – 08/11		4092
DAILY IV Platform/Chassis	65C14 G, 65C14 G/P, 65C14 GD, 65C14 GD/P	100	07/07 – 08/11		4092
DAILY IV Platform/Chassis	65C14, 65C14 /P	103	07/07 – 08/11		4092
DAILY IV Platform/Chassis	65C14, 65C14 /P	103	07/07 – 08/11	3965	
DAILY IV Platform/Chassis	65C15, 65C15 /P, 65C15 D, 65C15 D/P	107	05/06 – 08/11	3965	
DAILY IV Platform/Chassis	65C17, 65C17 /P	125	07/07 – 08/11	3965	
DAILY IV Platform/Chassis	65C17, 65C17 /P	125	07/07 – 08/11		4092
DAILY IV Platform/Chassis	65C18	130	05/06 – 08/11	3965	
DAILY IV Platform/Chassis	65C18	130	05/06 – 08/11		4092
DAILY IV Platform/Chassis	70C14, 70C14 /P	103	07/07 – 08/11	3965	
DAILY IV Platform/Chassis	70C14, 70C14 /P	103	07/07 – 08/11		4092
DAILY IV Platform/Chassis	70C15	107	07/08 – 08/11	3965	
DAILY IV Platform/Chassis	70C15	107	07/08 – 08/11		4092
DAILY IV Platform/Chassis	70C17, 70C17 /P	125	07/07 – 08/11	3965	
DAILY IV Platform/Chassis	70C17, 70C17 /P	125	07/07 – 08/11		4092
DAILY IV Platform/Chassis	35C11, 35S11, 35S11 D, 35S11 /P	78	07/07 – 08/11		4092
DAILY IV Platform/Chassis	35C12, 35S12	85	05/06 – 08/11		4092
DAILY IV Platform/Chassis	35C13, 35C13 /P, 35S13 D, 35S13, 35S13 /P	93	07/07 – 08/11		4092
DAILY IV Platform/Chassis	35C14 G, 35C14 G/P, 35S14G, 35S14 G/P, 35C14 GD, 35S14 GD	100	07/07 – 08/11		4092
DAILY IV Platform/Chassis	35C14, 35C14 /P, 35S14, 35S14 /P, 35S14 D, 35S14 D/P	103	07/07 – 08/11		4092
DAILY IV Platform/Chassis	35C14, 35S14, 35S14 /P	100	05/06 – 08/11		4092
DAILY V Box Body / Estate	29L13 V, 35C13 V, 35S13 V, 40C13 V, 40S13 V	93	09/11 – 02/14	3965	
DAILY V Box Body / Estate	29L15 V, 35C15L V, 40C15L V, 50C15L V	107	09/11 – 02/14	3965	
DAILY V Box Body / Estate	35C15 V, 40C15 V	107	09/11 – 02/14		4092
DAILY V Box Body / Estate	35C21 V, 35S21 V, 40C21 V, 45C21 V, 50C21 V	150	09/11 – 02/14		4092
DAILY V Box Body / Estate	35C21 V, 35S21 V, 40C21 V,45C21 V, 50C21 V	150	09/11 – 02/14	3965	
DAILY V Box Body / Estate	29L11 V, 35C11 V, 35S11 V, 40C11 V	78	09/11 - 02/14	3823	
DAILY V Box Body / Estate	29L11 V, 35C11 V, 35S11, 40C11 V	78	09/11 – 02/14	3965	
DAILY V Box Body / Estate	29L13 V, 35C13 V, 35S13 V, 40C13 V, 40S13 V	93	09/11 – 02/14	3823	
DAILY V Box Body / Estate	29L13 V, 35C13 V, 35S13 V, 40C13 V, 40S13 V	93	09/11 – 02/14		4092
DAILY V Box Body / Estate	29L15 V, 35C15L V, 40C15L V, 50C15L V	107	09/11 – 02/14	3823	
DAILY V Box Body / Estate	29L15 V, 35C15L V, 40C15L V, 50C15L V	107	09/11 – 02/14		4092
DAILY V Box Body / Estate	35 S 14	110	04/12 – 02/14	3965	
DAILY V Box Body / Estate	35 S 14	110	04/12 – 02/14	3823	
DAILY V Box Body / Estate	35C11K, 35S11DKP	78	09/11 – 02/14		4092
DAILY V Box Body / Estate	35C15 V, 40C15 V	107	09/11 – 02/14	3965	
DAILY V Box Body / Estate	35C17 V, 35S17 V, 40C17 V, 45C17 V, 50C17 V, 60C17 V,	125	09/11 – 02/14		4092
DAILY V Box Body / Estate	35C17 V, 35S17 V, 40C17 V,45C17 V, 50C17 V,	125	09/11 – 02/14	3965	
DAILY V Box Body / Estate	35C21 V, 35S21 V, 40C21 V, 45C21 V, 50C21 V	150	09/11 – 02/14	3823	
DAILY V Box Body / Estate	50 C Electric	80	09/11 – 02/14	3575	
DAILY V Box Body / Estate	50 C Electric	80	09/11 – 02/14	3645	
DAILY V Box Body / Estate	50 C Electric	80	09/11 – 02/14	3965	
DAILY V Dumptruck	26L11, 26L11D, 35C11D, 35S11, 40C11	78	09/11 – 02/14		4092
DAILY V Dumptruck	35C11K, 35S11DKP	78	09/11 – 02/14	3965	
DAILY V Dumptruck	35C13K, 35C13DKP	93	09/11 – 02/14	3965	
DAILY V Dumptruck	35C13K, 35C13DKP	93	09/11 – 02/14		4092
DAILY V Dumptruck	35C15K, 35S15DKP, 50C15K,60C15K, 65C15DK, 70C15K	107	09/11 – 02/14		4092
DAILY V Dumptruck	35C15K, 35S15DKP, 50C15K,60C15K,	107	09/11 – 02/14	3965	
DAILY V Dumptruck	35C17K, 35S17DKP, 50C17K, 65C17DK 70C17K	125	09/11 – 02/14		4092
DAILY V Dumptruck	35C17K, 35S17DKP, 50C17K, 65C17DK 70C17K			3965	
DAILY V Dumptruck	35S21DKP	150	09/11 – 02/14	3965	
DAILY V Dumptruck	35S21DKP	150	09/11 – 02/14		4092
DAILY V Dumptruck	35C11K, 35S11DKP	78	09/11 – 02/14	3823	
DAILY V Dumptruck	35C15K, 35S15DKP, 50C15K, 60C15K, 65C15DK, 70C15K	107	09/11 – 02/14	3823	
DAILY V Dumptruck	35C17K, 35S17DKP, 50C17K, 65C17DK 70C17K	125	09/11 – 02/14	3823	
DAILY V Dumptruck	35S21DKP	150	09/11 – 02/14	3823	
DAILY V Platform/Chassis	35C15, 35C15D, 35S15,40C15, 45C15, 50C15, 60C15,70C15	107	09/11 – 02/14	3965	

MAKE & MODEL		KW	YEAR		
IVECO					
DAILY V Platform/Chassis	35C17, 35C17D, 35S17,40C17, 45C17, 50C17, 60C17,70C17	125	09/11 – 02/14	3965	
DAILY V Platform/Chassis	35C21, 35S21, 40C21, 45C21, 50C21, 60C21, 70C21	150	09/11 – 02/14	3823	
DAILY V Platform/Chassis	26L11, 26L11D, 35C11D, 35S11, 40C11	78	09/11 – 02/14	3823	
DAILY V Platform/Chassis	29L13, 29L13D, 35C13D, 40C13	93	09/11 – 02/14	3823	
DAILY V Platform/Chassis	29L15 V, 35C15L V, 40C15L V, 50C15L V	107	09/11 – 02/14	3823	
DAILY V Platform/Chassis	35C15, 35C15D, 35S15,40C15, 45C15, 50C15, 60C15,70C15	107	09/11 – 02/14	3823	
DAILY V Platform/Chassis	35C17, 35C17D, 35S17,40C17, 45C17, 50C17, 60C17,70C17	125	09/11 – 02/14	3823	
DAILY V Platform/Chassis	26L11, 26L11D, 35C11D, 35S11, 40C11	78	09/11 – 02/14	3965	
DAILY V Platform/Chassis	29L13, 29L13D, 35C13D, 40C13	93	09/11 – 02/14	3965	
DAILY V Platform/Chassis	29L15 V, 35C15L V, 40C15L V, 50C15L V	107	09/11 – 02/14	3965	
DAILY V Platform/Chassis	29L15 V, 35C15L V, 40C15L V, 50C15L V	107	09/11 – 02/14		4092
DAILY V Platform/Chassis	29L13, 29L13D, 35C13D, 40C13	93	09/11 – 02/14		4092
DAILY V Platform/Chassis	35C15, 35C15D, 35S15,40C15, 45C15, 50C15, 60C15,70C15	107	09/11 – 02/14		4092
DAILY V Platform/Chassis	35C17, 35C17D, 35S17,40C17, 45C17, 50C17, 60C17,70C17	125	09/11 – 02/14		4092
DAILY V Platform/Chassis	35C21, 35S21, 40C21, 45C21, 50C21, 60C21, 70C21	150	09/11 – 02/14		4092
DAILY V Platform/Chassis	35C21, 35S21, 40C21, 45C21,50C21, 60C21, 70C21	150	09/11 – 02/14	3965	
DAILY VI Box Body / Estate	Natural Power 35S14, 35C14, 40C14,	100	03/14 -	3823	
DAILY VI Box Body / Estate	35S17, 35C17, 40C17, 50C17, 55C17, 65C17, 70C17	125	03/14 -	3965	
DAILY VI Box Body / Estate	35S21, 35C21, 40C21, 50C21, 65C21, 70C21	150	03/14 -	3965	
DAILY VI Box Body / Estate	33-140, 35-140	100	04/16 -	3994	
DAILY VI Box Body / Estate	33-210, 35-210	150	04/16 -	3823	
DAILY VI Box Body / Estate	33-210, 35-210	150	04/16 -	3965	
DAILY VI Box Body / Estate	33S11, 35S11, 35C11	78	03/14 -	3823	
DAILY VI Box Body / Estate	33S11, 35S11, 35C11	78	03/14 -	3965	
DAILY VI Box Body / Estate	33S13, 35S13, 35C13	93	03/14 -	3823	
DAILY VI Box Body / Estate	33S13, 35S13, 35C13	93	03/14 -	3965	
DAILY VI Box Body / Estate	33S15, 35S15, 35C15	107	03/14 -	3823	
DAILY VI Box Body / Estate	33S15, 35S15, 35C15	107	03/14 -	3965	
DAILY VI Box Body / Estate	35S15, 35C15, 40C15, 50C1,65C15, 70C15	107	03/14 -	3965	
DAILY VI Box Body / Estate	35S17, 35C17, 40C17, 50C17 ,55C17, 65C17,	125	03/14 -	3823	
DAILY VI Box Body / Estate	Natural Power 35S14, 35C14, 40C14, 50C14, 65C14, 70C14	100	03/14 -	3965	
DAILY VI Box Body / Estate	35S15, 35C15, 40C15, 50C15, 65C15, 70C15	107	03/14 -		4092
DAILY VI Box Body / Estate	35S21, 35C21, 40C21, 50C21, 65C21, 70C21	150	03/14 -		4092
DAILY VI Box Body / Estate	33-210, 35-210	150	04/16 -		4092
DAILY VI Box Body / Estate	35S17, 35C17, 40C17, 50C17, 55C17, 65C17, 70C17	125	03/14 -		4092
DAILY VI Bus	45-150, 65-150	110	04/16 -	3994	
DAILY VI Bus	Natural Power 45-140, 65-140	100	04/16 -	3994	
DAILY VI Platform/Chassis	35S17, 35C17, 40C17, 45C17, 50C17, 55C17, 65C17, 70C17	125	03/14 -	3965	
DAILY VI Platform/Chassis	35S21, 35C21, 40C21, 50C21, 65C21, 70C21	150	03/14 -	3965	
DAILY VI Platform/Chassis	Natural Power 35S14, 35C14, 40C14, 50C14, 65C14, 70C14	100	03/14 -	3965	
DAILY VI Platform/Chassis	33-140, 35-140	100	04/16 -	3994	
DAILY VI Platform/Chassis	33S11, 35S11, 35C11	78	03/14 -	3823	
DAILY VI Platform/Chassis	33S11, 35S11, 35C11	78	03/14 -	3965	
DAILY VI Platform/Chassis	33S13, 35S13, 35C13	93	03/14 -	3823	
DAILY VI Platform/Chassis	33S13, 35S13, 35C13	93	03/14 -	3965	
DAILY VI Platform/Chassis	33S15, 35S15, 35C15	107	03/14 -	3823	
DAILY VI Platform/Chassis	33S15, 35S15, 35C15	107	03/14 -	3965	
DAILY VI Platform/Chassis	35S15, 35C15, 40C15, 50C1, 65C15, 70C15	107	03/14 -	3965	
DAILY VI Platform/Chassis	35S15, 35C15, 40C15, 50C15, 65C15, 70C15	107	03/14 -	3823	
DAILY VI Platform/Chassis	35S17, 35C17, 40C17, 45C17, 50C17, 55C17,	125	03/14 -	3823	
DAILY VI Platform/Chassis	35S21, 35C21, 40C21, 50C21, 65C21, 70C21	150	03/14 -	3823	
DAILY VI Platform/Chassis	Natural Power 35S14, 35C14, 40C14, 50C14, 65C14, 70C14	100	03/14 -	3823	
DAILY VI Platform/Chassis	Natural Power 52-140, 60-140,70-140, 72-140	100	04/16 -	3994	
EuroCargo I-III	120 E 24, 120 E 24 DP tector,120 E 25 FP tector	176	09/00 – 09/15	3994	
EuroCargo I-III	80 E 18 K tector, 80 E 18 DK tector	134	09/00 – 09/15	3994	
EuroCargo I-III	100 E 15 K (8060.25R.4200 LTC)	105	01/91 – 09/15	3773	3773
EuroCargo I-III	100 E 15, 100 E 15 P (8060.25R.4200 LTC)	105	01/91 – 09/15	3773	3773
EuroCargo I-III	100 E 15, 100 E 15 P (8060.45R.5000)	105	01/91 – 09/15	3773	3773
EuroCargo I-III	100 E 15, 100 E 15 P (8060.45R.5001)	105	01/91 – 09/15	3773	3773
EuroCargo I-III	100 E 15, 100 E 15 P (8060.45R.5003)	105	01/91 – 09/15	3773	3773
EuroCargo I-III	100 E 15, 100 E 15 P (8060.45R.5005)	105	01/91 – 09/15	3773	3773
EuroCargo I-III	100 E 17 K tector, 100 E 17 DK tector	125	09/00 – 09/15	3773	3773
EuroCargo I-III	100 E 17, 100 E 17 DP tector, 100 E 18 tector	125	09/00 – 09/15	3773	3773
EuroCargo I-III	100 E 17, 100 E 17 DP tector, 100 E 18 tector	125	09/00 – 09/15	3773	3773
EuroCargo I-III	100 E 18 K (8060.25V.4000)	130	01/91 – 09/15	3773	3773
EuroCargo I-III	100 E 18 K tector (F4AE3481B)	130	09/06 – 09/15	3773	3773
EuroCargo I-III	100 E 18 K tector, 100 E 18 DK tector	134	09/00 – 09/15	3773	3773
EuroCargo I-III	100 E 18 tector, 100 E 18 P tector, 100 E 18 FP	134	09/00 – 09/15	3773	3773
EuroCargo I-III	100 E 18 tector, 100 E 18 P tector, 100 E 18 FP	134	09/00 – 09/15	3773	3773
EuroCargo I-III	100 E 18 tector, 100 E 18 P tector, 100 E 18 FP	130	09/06 – 09/15	3773	3773
EuroCargo I-III	100 E 18 W tector, 100 E 18 WS tector	134	09/00 – 09/15	3773	3773

MAKE & MODEL   		KW	YEAR		
IVECO					
EuroCargo I-III	100 E 18 W tector, 100 E 18 WS tector	134	09/00 – 09/15	3773	3773
EuroCargo I-III	100 E 18, 100 E 18 P (8060.25V.4000)	130	01/91 – 09/15	3773	3773
EuroCargo I-III	100 E 21 K tector, 100 E 21 DK tector	154	09/00 – 09/15	3773	3773
EuroCargo I-III	100 E 21 W tector, 100 E 21 WS tector	154	09/00 – 09/15	3773	3773
EuroCargo I-III	100 E 21, 100 E 21 DP tector, 100 E 22 tector	154	09/00 – 09/15	3773	3773
EuroCargo I-III	100 E 21, 100 E 21 DP tector, 100 E 22 tector	154	09/00 – 09/15	3773	3773
EuroCargo I-III	100 E 21, 100 E 21 P (8060.45.4100 TCA)	152	01/91 – 09/15	3773	3773
EuroCargo I-III	100 E 21, 100 E 21 P (8060.45.4180)	152	01/91 – 09/15	3773	3773
EuroCargo I-III	110 E 22 W tector	160	05/06 – 09/15	3994	
EuroCargo I-III	110 E 22 WS tector	160	05/06 – 09/15	3994	
EuroCargo I-III	110 E 25 W tector	185	05/06 – 09/15	3994	
EuroCargo I-III	110 E 25 WS tector	185	05/06 – 09/15	3994	
EuroCargo I-III	120 E 18 K tector, 120 E 18 DK tector	134	09/00 – 09/15	3994	
EuroCargo I-III	120 E 18 K tector, 120 E 18 DK tector	134	09/06 – 09/15	3994	
EuroCargo I-III	120 E 18 tector, 120 E 18 D tector, 120 E 18 DP tector	134	09/00 – 09/15	3994	
EuroCargo I-III	120 E 20 CNG, 120 E 20 P CNG	147	09/06 – 09/15	3994	
EuroCargo I-III	120 E 21 K tector	154	09/00 – 09/15	3994	
EuroCargo I-III	120 E 21 tector, 120 E 21 P tector, 120 E 21 FP tector	154	09/06 – 09/15	3994	
EuroCargo I-III	120 E 22 D tector, 120 E 22 P tector, 120 E 22 FP tector	160	09/09 – 09/15	3994	
EuroCargo I-III	120 E 22 K tector	160	09/06 – 09/15	3994	
EuroCargo I-III	120 E 24 K tector, 120 E 24 DK tector	176	09/00– 09/15	3994	
EuroCargo I-III	120 E 25 K tector, 120 E 25 DK tector	185	09/06 – 09/15	3994	
EuroCargo I-III	180 E 21 K tector (F4AE0681D)	154	09/00 – 09/15	3773	3773
EuroCargo I-III	180 E 21 T (8060.45.4100 TCA)	152	01/91 – 09/15	3773	3773
EuroCargo I-III	60 E 13 K tector	95	09/00 – 09/15	3994	
EuroCargo I-III	60 E 13 tector, 60 E 13 P tector	95	09/00 – 09/15	3994	
EuroCargo I-III	60 E 14 K tector	103	09/06 – 09/15	3994	
EuroCargo I-III	60 E 14 tector, 60 E 14 P tector	103	09/06 – 09/15	3994	
EuroCargo I-III	60 E 15 K tector	110	09/00 – 09/15	3994	
EuroCargo I-III	60 E 15 tector, 60 E 15 P tector	110	09/00 – 09/15	3994	
EuroCargo I-III	60 E 16 K tector	118	09/06 – 09/15	3994	
EuroCargo I-III	60 E 16 tector, 60 E 16 P tector	118	09/06 – 09/15	3994	
EuroCargo I-III	65 E 12 K	85	01/91 – 09/15	3994	
EuroCargo I-III	65 E 12, 65 E 12 P	85	01/91 – 09/15	3994	
EuroCargo I-III	65 E 13 K tector	95	09/00 – 09/15	3994	
EuroCargo I-III	65 E 13 tector	95	09/00 – 09/15	3994	
EuroCargo I-III	65 E 14 K	100	01/91 – 09/15	3994	
EuroCargo I-III	65 E 14 K tector	103	09/06 – 09/15	3994	
EuroCargo I-III	65 E 14 tector, 65 E 14 P tector	103	09/06 – 09/15	3994	
EuroCargo I-III	65 E 14, 65 E 14 P	100	01/91 – 09/15	3994	
EuroCargo I-III	65 E 15 tector, 65 E 15 P tector	110	09/00 – 09/15	3994	
EuroCargo I-III	65 E 16 K tector	118	09/06 – 09/15	3994	
EuroCargo I-III	65 E 16 tector, 65 E 16 P tector	118	09/06 – 09/15	3994	
EuroCargo I-III	65 E15 K tector	110	09/00 – 09/15	3994	
EuroCargo I-III	75 E 12 K	85	01/91 – 09/15	3994	
EuroCargo I-III	75 E 12, 75 E 12 P	85	01/91 – 09/15	3994	
EuroCargo I-III	75 E 13 K tector	95	09/00 – 09/15	3994	
EuroCargo I-III	75 E 13 tector, 75 E 13 P tector	95	09/00 – 09/15	3994	
EuroCargo I-III	75 E 14 K	100	01/91 – 09/15	3994	
EuroCargo I-III	75 E 14 K tector	103	09/06 – 09/15	3994	
EuroCargo I-III	75 E 14 K tector (F4AE3481C)	103	09/06 – 09/15	4169	4169
EuroCargo I-III	75 E 14 tector, 75 E 14 P tector	103	09/06 – 09/15	3994	
EuroCargo I-III	75 E 14 tector, 75 E 14 P tector (F4AE3481C)	103	09/06 – 09/15	4169	4169
EuroCargo I-III	75 E 14, 75 E 14 P	100	01/91 – 09/15	3994	
EuroCargo I-III	75 E 15 K	105	01/91 – 09/15	3994	
EuroCargo I-III	75 E 15 K tector	110	09/00 – 09/15	3994	
EuroCargo I-III	75 E 15 tector, 75 E 15 P tector	110	09/00 – 09/15	3994	
EuroCargo I-III	75 E 15, 75 E 15 P, 80 E 15	105	01/91 – 09/15	3994	
EuroCargo I-III	75 E 16 K tector	118	09/06 – 09/15	3994	
EuroCargo I-III	75 E 16 K tector (F4AE3481D)	118	09/06 – 09/15	4169	4169
EuroCargo I-III	75 E 16 tector, 75 E 16 P tector	118	09/06 – 09/15	3994	
EuroCargo I-III	75 E 16 tector, 75 E 16 P tector (F4AE3481D)	118	09/06 – 09/15	4169	4169
EuroCargo I-III	75 E 17 K, 75 E 18 K tector	125	09/00 – 09/15	3994	
EuroCargo I-III	75 E 17, 75 E 17 P, 75 E 18 tector	125	09/00 – 09/15	3994	
EuroCargo I-III	75 E 18 K tector	134	09/00 – 09/15	3994	
EuroCargo I-III	75 E 18 K tector (F4AE0681E)	134	09/06 – 09/15	4169	4169
EuroCargo I-III	75 E 18 tector, 75 E 18 P tector	134	09/00 – 09/15	3994	
EuroCargo I-III	75 E 18 tector, 75 E 18 P tector (F4AE0681D)	134	09/06 – 09/15	4169	4169
EuroCargo I-III	75 E 18 tector, 75 E 18 P tector (F4AE0681E)	134	09/06 – 09/15	4169	4169
EuroCargo I-III	80 E 15 K (8060.25R.4200 LTC)	105	01/91 – 09/15	3773	3773
EuroCargo I-III	80 E 15 K (8060.25R.4200 LTC)	105	01/91 – 09/15	3773	3773

BESER

MAKE & MODEL		KW	YEAR		
IVECO					
EuroCargo I-III	80 E 15, 80 E 15 P (8060.25R.4200 LTC)	105	01/91 – 09/15	3773	3773
EuroCargo I-III	80 E 17 K, 80 E 17 DK tector, 80 E 18 K tector	125	09/00 – 09/15	3773	3773
EuroCargo I-III	80 E 17 K, 80 E 17 DK tector, 80 E 18 K tector	125	09/00 – 09/15	3773	3773
EuroCargo I-III	80 E 17 K, 80 E 17 DK tector,80 E 18 K tector	125	09/00 – 09/15	3994	
EuroCargo I-III	80 E 17, 80 E 17 D tector, 80 E 17 DP tector, 80	125	09/00 – 09/15	3773	3773
EuroCargo I-III	80 E 17, 80 E 17 D tector, 80 E 17 DP tector, 80	125	09/00 – 09/15	3773	3773
EuroCargo I-III	80 E 17, 80 E 17 D tector, 80 E17 DP tector, 80 E 18 tector	125	09/00 – 09/15	3994	
EuroCargo I-III	80 E 18 K (8060.25V.4000)	130	01/91 – 09/15	3773	3773
EuroCargo I-III	80 E 18 K (8060.25V.4000)	130	01/91 – 09/15	3773	3773
EuroCargo I-III	80 E 18 K tector	130	09/06 – 09/15	3994	
EuroCargo I-III	80 E 18 K tector, 80 E 18 DK tector	134	09/00 – 09/15	3773	3773
EuroCargo I-III	80 E 18 tector, 80 E 18 D tector, 80 E 18 DP tector	134	09/00 – 09/15	3994	
EuroCargo I-III	80 E 18 tector, 80 E 18 D tector, 80 E 18 DP	134	09/00 – 09/15	3773	3773
EuroCargo I-III	80 E 18 tector, 80 E 18 D tector, 80 E 18 DP	134	09/00 – 09/15	3773	3773
EuroCargo I-III	80 E 18 tector, 80 E 18 P tector, 80 E 18 FP tector	130	09/06 – 09/15	3994	
EuroCargo I-III	80 E 18 tector, 80 E 18 P tector, 80 E 18 FP	130	09/06 – 09/15	3773	3773
EuroCargo I-III	80 E 18 tector, 80 E 18 P tector, 80 E 18 FP	130	09/06 – 09/15	4169	4169
EuroCargo I-III	80 E 18, 80 E 18 P, 18 E 80 FP	130	01/91 – 09/15	3773	3773
EuroCargo I-III	80 E 18, 80 E 18 P, 18 E 80 FP	130	01/91 – 09/15	3773	3773
EuroCargo I-III	80 E 21 K, 80 E 21 DK tector, 80 E 22 K tector	154	09/00 – 09/15	3773	3773
EuroCargo I-III	80 E 21 K, 80 E 21 DK tector, 80 E 22 K tector	154	09/00 – 09/15	3773	3773
EuroCargo I-III	80 E 21, 80 E 21 D tector, 80 E 21 DP tector, 80	154	09/00 – 09/15	3773	3773
EuroCargo I-III	80 E 21, 80 E 21 D tector, 80 E 21 DP tector, 80	154	09/00 – 09/15	3773	3773
EuroCargo I-III	80 E 21, 80 E 21 P, 21 E 80 FP (8060.45.4100	152	01/91 – 09/15	3773	3773
EuroCargo I-III	80 E 21, 80 E 21 P, 21 E 80 FP (8060.45.4180)	152	01/91 – 09/15	3773	3773
EuroCargo I-III	80 E 21, 80 E 21 P, 80 E 21 FP (8060.45.4100	152	01/91 – 09/15	3773	3773
EuroCargo I-III	80 E 21, 80 E 21 P, 80 E 21 FP (8060.45.4180)	152	01/91 – 09/15	3773	3773
EuroCargo I-III	80 EL 15 tector (F4AE0481C)	110	09/00 – 09/15	3773	3773
EuroCargo I-III	80 EL 16 tector, 80 EL 16 P tector	118	09/06 – 09/15	3773	3773
EuroCargo I-III	90 E 17 K tector, 90 E 17 DK tector	125	09/00 – 09/15	3773	3773
EuroCargo I-III	90 E 17, 90 E 17D tector, 90 E 17 DP tector, 90	125	09/00 – 09/15	3773	3773
EuroCargo I-III	90 E 17, 90 E 17D tector, 90 E 17 DP tector, 90	125	09/00 – 09/15	3773	3773
EuroCargo I-III	90 E 18 K tector, 90 E 18 DK tector	134	09/00 – 09/15	3773	3773
EuroCargo I-III	90 E 18 tector, 90 E 18 D tector, 90 E 18 DP	130	09/00 – 09/15	3773	3773
EuroCargo I-III	90 E 21 K tector, 90 E 21 DK tector	154	09/00 – 09/15	3773	3773
EuroCargo I-III	90 E 21, 90 E 21 D tector, 90 E 21 DP tector, 90	154	09/00 – 09/15	3773	3773
EuroCargo I-III	90 E 21, 90 E 21 D tector, 90 E 21 DP tector, 90	154	09/00 – 09/15	3773	3773
EuroCargo I-III	90 E 22 K tector	160	09/06 – 09/15	3994	
EuroCargo I-III	95 E 15 W	105	01/91 – 09/15	3994	
EuroCargo I-III	95 E 21 W	152	01/91 – 09/15	3994	
EuroCargo I-III	100 E 18 tector, 100 E 18 Ptector, 100 E 18 FP tector	134	09/00 – 09/15	3994	
EuroCargo I-III	100 E 18 K tector, 100 E 18 DK tector	134	09/00 – 09/15	3994	
EuroCargo I-III	100 E 17 K tector, 100 E 17 DK tector	125	09/00 – 09/15	3994	
EuroCargo I-III	100 E 17, 100 E 17 DP tector,100 E 18 tector	125	09/00 – 09/15	3994	
EuroCargo I-III	100 E 18 W tector, 100 E 18 WS tector	134	09/00 – 09/15	3994	
EuroCargo I-III	100 E 21 W tector, 100 E 21 WS tector	154	09/00 – 09/15	3994	
EuroCargo I-III	100 E 21, 100 E 21 DP tector,100 E 22 tector	154	09/00 – 09/15	3994	
EuroCargo I-III	100 E 22 K tector	160	09/06 – 09/15	3994	
EuroCargo I-III	100 E 22 tector, 100 E 22 P tector, 100 E 22 FP tector	160	09/06 – 09/15	3994	
EuroCargo I-III	100 E 22 W tector, 100 E 22 WS tector	134	09/06 – 09/15	3994	
EuroCargo I-III	110 E 18 tector, 110 E 18 P tector, 110 EL 18 P tector	160	09/06 – 09/15	3994	
EuroCargo I-III	110 E 22 tector, 110 E 22 P tector, 110 EL 22 P tector	160	05/06 – 09/15	3994	
EuroCargo I-III	100 E 21 K tector, 100 E 21 DK tector	154	09/00 – 09/15	3994	
EuroCargo I-III	120 E 28 K tector	202	09/00 – 09/15	3994	
EuroCargo I-III	120 E 28 tector, 120 E 28 P tector, 120 E 28 FP tector	202	09/00 – 09/15	3994	
EuroCargo I-III	80 E 22 tector, 80 E 22 P tector, 80 E 22FP tector	160	09/06 – 09/15	3994	
EuroCargo I-III	80 EL 15 tector	110	09/00 – 09/15	3994	
EuroCargo I-III	90 E 17, 90 E 17D tector, 90 E 17 DP tector, 90 E 18 tector	125	09/00 – 09/15	3994	
EuroCargo I-III	90 E 18 K tector, 90 E 18 DK tector	134	09/00 – 09/15	3994	
EuroCargo I-III	90 E 18 tector, 90 E 18 D tector, 90 E 18 DP tector	130	09/00 – 09/15	3994	
EuroCargo I-III	90 E 21 K tector, 90 E 21 D Ktector	154	09/00 – 09/15	3994	
EuroCargo I-III	90 E 21, 90 E 21 D tector, 90 E 21 DP tector, 90 E 22 tector	154	09/00 – 09/15	3994	
EuroCargo I-III	80 E 21, 80 E 21 D tector, 80 E 21 DP tector, 80 E 22 tector	154	09/00 – 09/15	3994	
EuroCargo I-III	80 EL 17 tector, 80 EL 17 P tector	125	09/00 – 09/15	3994	
EuroCargo I-III	80 EL 18 tector, 80 EL 18 P tector	130	09/06 – 09/15	3994	
EuroCargo I-III	90 E 17 K tector, 90 E 17 DK tector	125	09/00 – 09/15	3994	
EuroCargo I-III	80 E 21 K, 80 E 21 DK tector,80 E 22 K tector	154	09/00 – 09/15	3994	
EuroFire	75 E 14	100	01/91 -	3994	
EuroFire	75 E 15 tector	110	09/00 -	3994	
EuroFire	80 E 18 tector	130	09/06 -	3994	
EuroFire	80 E 18 tector (F4AE3481B)	130	09/06-	4169	4169

MAKE & MODEL		KW	YEAR		
IVECO					
Zeta	109-14 (8060.05.289)	101	11/85 – 03/91	3773	
Zeta	109-14 H (8060.05.289)	101	11/85 – 03/91	3773	
Zeta	60-11 (8040.25.230 R)	74	01/87 – 03/91	3773	
Zeta	60-11 V (8040.25.230 R)	74	01/87 – 03/91	3773	
Zeta	65-12 (8040.25.200)	85	01/87 – 03/91	3773	
Zeta	65-12 H (8040.25.200)	85	01/87 – 03/91	3773	
Zeta	65-12 V (8040.25.200)	85	01/87 – 03/91	3773	
Zeta	65-9 (804.005.230)	65	01/87 – 03/91	3773	
Zeta	79-12 (8040.25.200)	85	01/87 – 03/91	3773	
Zeta	79-12 (8040.25.200)	85	01/87 – 03/91	3773	
Zeta	79-12 (8040.25.220)	85	01/87 – 03/91	3773	
Zeta	79-12 (8040.25.220)	85	01/87 – 03/91	3773	
Zeta	79-12 H (8040.25.200)	85	01/87 – 03/91	3773	
Zeta	79-12 H (8040.25.200)	85	01/87 – 03/91	3773	
Zeta	79-12 H (8040.25.220)	85	01/87 – 03/91	3773	
Zeta	79-12 H (8040.25.220)	85	01/87 – 03/91	3773	
Zeta	79-12 V (8040.25.200)	85	01/87 – 03/91	3773	
Zeta	79-12 V (8040.25.200)	85	01/87 – 03/91	3773	
Zeta	79-12 V (8040.25.220)	85	01/87 – 03/91	3773	
Zeta	79-12 V (8040.25.220)	85	01/87 – 03/91	3773	
Zeta	79-14 (8060.05.280)	101	12/85 – 03/91	3773	
Zeta	79-14 (8060.05.280)	101	12/85 – 03/91	3773	
Zeta	79-14 H (8060.05.280)	101	12/85 – 03/91	3773	
Zeta	79-14 H (8060.05.280)	101	12/85 – 03/91	3773	
Zeta	79-14 V (8060.05.280)	101	12/85 – 03/91	3773	
Zeta	79-14 V (8060.05.280)	101	12/85 – 03/91	3773	
Zeta	95-14 (8060.04.669)	101	11/85 – 03/91	3773	
Zeta	95-14 H (8060.04.669)	101	11/85 – 03/91	3773	
Zeta 01.79-12.92	60-11 (8040.25.230 R)	74	01/87 – 03/91	3433	
Zeta 01.79-12.92	60-11 V (8040.25.230 R)	74	01/87 – 03/91	3433	
Zeta 01.79-12.92	65-12 (8040.25.200)	85	01/87 – 03/91	3433	
Zeta 01.79-12.92	65-12 H (8040.25.200)	85	01/87 – 03/91	3433	
Zeta 01.79-12.92	65-12 V (8040.25.200)	85	01/87 – 03/91	3433	
Zeta 01.79-12.92	65-9 (04005230)	65	01/87 – 03/91	3433	
Zeta 01.79-12.92	79-12 (8040.25.200)	85	01/87 – 03/91	3433	
Zeta 01.79-12.92	79-12 (8040.25.200)	85	01/87 – 03/91	3433	
Zeta 01.79-12.92	79-12 (8040.25.220)	85	01/87 – 03/91	3433	
Zeta 01.79-12.92	79-12 (8040.25.220)	85	01/87 – 03/91	3433	
Zeta 01.79-12.92	79-12 H (8040.25.200)	85	01/87 – 03/91	3433	
Zeta 01.79-12.92	79-12 H (8040.25.200)	85	01/87 – 03/91	3433	
Zeta 01.79-12.92	79-12 H (8040.25.220)	85	01/87 – 03/91	3433	
Zeta 01.79-12.92	79-12 H (8040.25.220)	85	01/87 – 03/91	3433	
Zeta 01.79-12.92	79-12 V (8040.25.200)	85	01/87 – 03/91	3433	
Zeta 01.79-12.92	79-12 V (8040.25.200)	85	01/87 – 03/91	3433	
Zeta 01.79-12.92	79-12 V (8040.25.220)	85	01/87 – 03/91	3433	
Zeta 01.79-12.92	79-12 V (8040.25.220)	85	01/87 – 03/91	3433	
Zeta 01.79-12.92	79-14 (8060.05.280)	101	12/85 – 03/91	3433	
Zeta 01.79-12.92	79-14 (8060.05.280)	101	12/85 – 03/91	3433	
Zeta 01.79-12.92	79-14 H (8060.05.280)	101	12/85 – 03/91	3433	
Zeta 01.79-12.92	79-14 H (8060.05.280)	101	12/85 – 03/91	3433	
Zeta 01.79-12.92	79-14 V (8060.05.280)	101	12/85 – 03/91	3433	
Zeta 01.79-12.92	79-14 V (8060.05.280)	101	12/85 – 03/91	3433	
JAC					
REIN Closed Off-Road Vehicle	1.9 D Turbo	82	09/08 -	3993	
REIN Closed Off-Road Vehicle	20	101	06/07 -	3993	
REIN Closed Off-Road Vehicle	2.0 Turbo	130	03/11 -	3993	
REIN Closed Off-Road Vehicle	2.4 AWD	102	12/06 -	3993	
JAGUAR					
S-TYPE (CCX_)	2.5 V6	147	04/02 – 10/07		3853/1
S-TYPE (CCX_)	2.7 D	152	06/04 – 10/07		3853/1
S-TYPE (CCX_)	3.0 V6	175	01/99 – 10/07		3853/1
S-TYPE (CCX_)	4.0 V8	203	01/99 – 04/02		3853/1
S-TYPE (CCX_)	4.0 V8	209	09/99 – 12/02		3853/1
S-TYPE (CCX_)	4.2 Supercharged	298	11/01 – 12/08		3853/1
S-TYPE (CCX_)	4.2 V8	219	04/02 – 10/07		3853/1
S-TYPE (CCX_)	R 4,2 V8	291	04/02 – 10/07		3853/1
XF (CC9_)	20	177	06/12 – 04/15		3853/1
XF (CC9_)	30	175	03/08 – 04/15		3853/1
XF (CC9_)	30	179	03/08 – 04/15		3853/1
XF (CC9_)	30	250	03/12 – 04/15		3853/1

MAKE & MODEL   		KW	YEAR		
JAGUAR					
XF (CC9_)	42	219	03/08 – 04/15		3853/1
XF (CC9_)	50	283	03/09 – 04/15		3853/1
XF (CC9_)	2.2 D	120	04/11 – 04/15		3853/1
XF (CC9_)	2.2 D	140	05/11 – 04/15		3853/1
XF (CC9_)	2.2 D	147	03/12 – 04/15		3853/1
XF (CC9_)	2.7 D	152	03/08 – 04/15		3853/1
XF (CC9_)	3.0 AWD	250	10/12 – 04/15		3853/1
XF (CC9_)	3.0 D	155	03/09 – 04/15		3853/1
XF (CC9_)	3.0 D	177	03/09 – 04/15		3853/1
XF (CC9_)	3.0 D	202	03/09 – 04/15		3853/1
XF (CC9_)	4.2 Kompressor	306	03/08 – 04/15		3853/1
XF SPORTBRAKE (CC9_)	2.2 D	120	09/12 – 04/14		3853/1
XF SPORTBRAKE (CC9_)	2.2 D	147	09/12 – 04/14		3853/1
XF SPORTBRAKE (CC9_)	3.0 D	177	09/12 – 04/14		3853/1
XF SPORTBRAKE (CC9_)	3.0 D	202	09/12 – 04/14		3853/1
XJ	12 5.3	186	09/73 – 12/76	3526	
XJ	12 5.3	187	08/86 – 09/89	3526	
XJ	12 5.3	211	05/75 – 12/82	3526	
XJ	12 H.E.	217	09/81 – 12/92	3526	
XJ	6 3.4	119	05/75 – 10/86	3526	
XJ	6 4.2	124	01/75 – 09/79	3526	
XJ	6 4.2	127	01/75 – 12/79	3526	
XJ	6 4.2	130	09/85 – 12/86	3526	
XJ	6 4.2	133	09/85 – 12/86	3526	
XJ	6 4.2	151	09/79 – 12/87	3526	
XJ	Sovereign V12	194	10/86 – 12/92	3526	
XJ	Sovereign V12	197	07/85 – 12/92	3526	
XJ (N3_)	30	175	05/03 – 03/09		3853/1
XJ (N3_)	30	179	04/04 – 01/07		3853/1
XJ (N3_)	36	190	05/03 – 03/09		3853/1
XJ (N3_)	42	219	05/03 – 03/09		3853/1
XJ (N3_)	2,7 D	152	10/05 – 03/09		3853/1
XJ (N3_)	R 4.2	291	05/03 – 03/09		3853/1
XJ (NAW_, NBW_)	8 3.2	174	07/97 – 05/03	3584	
XJ (NAW_, NBW_)	8 4.0	209	07/97 – 05/03	3584	
XJ (NAW_, NBW_)	8 4.0	216	10/97 – 04/03	3584	
XJ (NNA_)	20	177	05/12 -		3853/1
XJ (NNA_)	30	175	01/11 -		3853/1
XJ (NNA_)	30	250	03/12 -		3853/1
XJ (NNA_)	3.0 AWD	250	10/12 -		3853/1
XJ (NNA_)	3.0 D	202	10/09 – 12/15		3853/1
XJ (NNA_)	3.0 D	221	04/15 -		3853/1
XJ (NNA_)	5.0 V 8	283	10/09 -		3853/1
XJ (X300_)	12 6.0	229	11/94 – 07/97	3584	
XJ (X300_)	12 6.0	229	11/94 – 07/97	3623	
XJ (X300_)	6 3.2	155	11/94 – 07/97	3584	
XJ (X300_)	6 3.2	155	11/94 – 07/97	3623	
XJ (X300_)	6 Sovereign 4.0	177	11/94 – 07/97	3584	
XJ (X300_)	6 Sovereign 4.0	177	11/94 – 07/97	3623	
XJ (X300_)	R Super Charged 4.0	235	11/94 – 07/97	3584	
XJ (X300_)	R Super Charged 4.0	235	11/94 – 07/97	3623	
XJ (XJ40_)	40	166	10/89 – 08/94	3584	
XJ (XJ40_)	40	187	10/89 – 08/94	3584	
XJ (XJ40_)	6 2.9	108	10/86 – 08/90	3526	
XJ (XJ40_)	6 2.9	108	10/86 – 08/90	3584	
XJ (XJ40_)	6 2.9	117	10/86 – 08/90	3526	
XJ (XJ40_)	6 2.9	117	10/86 – 08/90	3584	
XJ (XJ40_)	6 2.9	123	10/86 – 08/90	3526	
XJ (XJ40_)	6 2.9	123	10/86 – 08/90	3584	
XJ (XJ40_)	6 3.2 24V	146	09/90 – 11/94	3584	
XJ (XJ40_)	6 3.6	136	10/86 – 08/89	3526	
XJ (XJ40_)	6 3.6	145	10/86 – 08/89	3526	
XJ (XJ40_)	6 3.6	156	10/86 – 08/89	3526	
XJ (XJ40_)	6 4.0	163	09/89 – 11/94	3584	
XJ Coupe	36	136	01/88 – 05/92	3584	
XJ Coupe	36	146	01/88 – 05/91	3584	
XJ Coupe	36	156	08/87 – 12/89	3526	
XJ Coupe	36	156	08/87 – 12/89	3584	
XJ Coupe	36	162	10/83 – 12/88	3526	
XJ Coupe	40	163	05/91 – 09/94	3584	
XJ Coupe	40	171	07/94 – 03/96	3584	

MAKE & MODEL		KW	YEAR		
JAGUAR					
XJ Coupe	40	175	10/87 – 03/96	3584	
XJ Coupe	53	197	01/86 – 12/89	3526	
XJ Coupe	53	197	01/86 – 12/89	3584	
XJ Coupe	53	202	01/88 – 06/91	3584	
XJ Coupe	53	207	05/91 – 08/93	3584	
XJ Coupe	53	211	09/73 – 05/92	3584	
XJ Coupe	53	213	09/75 – 07/81	3526	
XJ Coupe	60	222	05/93 – 03/96	3584	
XJ Coupe	60	238	09/89 – 10/91	3584	
XJ Coupe	60	248	11/91 – 12/93	3584	
XJ Coupe	5.3 H.E.	194	01/86 – 12/89	3526	
XJ Coupe	5.3 H.E.	194	01/86 – 12/89	3584	
XJ Coupe	5.3 H.E.	217	07/81 – 12/87	3526	
XJSC Convertible	36	136	08/87 – 05/91	3526	
XJSC Convertible	36	136	08/87 – 05/91	3584	
XJSC Convertible	36	146	10/87 – 02/91	3584	
XJSC Convertible	36	156	08/87 – 05/91	3526	
XJSC Convertible	36	156	08/87 – 05/91	3584	
XJSC Convertible	36	162	10/86 – 12/88	3526	
XJSC Convertible	40	163	05/91 – 09/94	3584	
XJSC Convertible	40	171	07/94 – 03/96	3584	
XJSC Convertible	40	175	10/87 – 12/89	3584	
XJSC Convertible	53	197	01/86 – 05/88	3526	
XJSC Convertible	53	202	01/88 – 09/91	3584	
XJSC Convertible	53	207	05/91 – 08/93	3584	
XJSC Convertible	53	211	01/88 – 05/92	3584	
XJSC Convertible	60	222	05/93 – 03/96	3584	
XJSC Convertible	5.3 H.E.	194	07/85 – 05/92	3526	
XJSC Convertible	5.3 H.E.	194	07/85 – 05/92	3584	
XJSC Convertible	5.3 H.E.	217	09/85 – 12/90	3526	
XJSC Convertible	5.3 H.E.	217	09/85 – 12/90	3584	
XK 8 Convertible (QDV_)	40	209	03/96 – 07/05	3584	
XK 8 Convertible (QDV_)	40	216	05/96 – 07/99	3584	
XK 8 Convertible (QDV_)	40	267	02/98 – 07/05	3584	
XK 8 Convertible (QDV_)	42	219	08/02 – 07/05	3584	
XK 8 Convertible (QDV_)	4.0 XKR	276	05/98 – 07/05	3584	
XK 8 Convertible (QDV_)	R 4,2	291	08/02 – 07/05	3584	
XK 8 Coupe (QEV_)	40	209	03/96 – 07/05	3584	
XK 8 Coupe (QEV_)	40	216	05/96 – 07/05	3584	
XK 8 Coupe (QEV_)	40	267	02/98 – 07/05	3584	
XK 8 Coupe (QEV_)	42	219	08/02 – 07/05	3584	
XK 8 Coupe (QEV_)	4.0 XKR	276	05/98 – 07/05	3584	
XK 8 Coupe (QEV_)	R 4,2	291	08/02 – 07/05	3584	
XK Convertible (QQ6_)	36	190	10/07 – 07/14		3853/1
XK Convertible (QQ6_)	4.2 XK8	219	03/06 – 07/14		3853/1
XK Convertible (QQ6_)	4.2 XKR	306	03/06 – 07/14		3853/1
XK Convertible (QQ6_)	4.2 XKR	313	08/06 – 07/14		3853/1
XK Convertible (QQ6_)	5.0 V8	283	01/09 – 07/14		3853/1
XK Coupe (QQ6_)	36	190	07/07 – 07/14		3853/1
XK Coupe (QQ6_)	4.2 XK8	219	03/06 – 07/14		3853/1
XK Coupe (QQ6_)	4.2 XKR	291	03/06 – 07/14		3853/1
XK Coupe (QQ6_)	4.2 XKR	306	03/06 – 07/14		3853/1
XK Coupe (QQ6_)	4.2 XKR	313	08/06 – 07/14		3853/1
XK Coupe (QQ6_)	5.0 V8	283	01/09 – 07/14		3853/1
XK Coupe (QQ6_)	5.0 XKR	390	09/10 – 07/14		3853/1
X-TYPE (CF1_)	2.0 D	96	07/03 – 11/09		4058
X-TYPE (CF1_)	2.0 D	96	07/03 – 11/09		4093
X-TYPE (CF1_)	2.0 D	96	07/03 – 11/09	4100	
X-TYPE (CF1_)	2.1 V6	115	03/02 – 11/09		4058
X-TYPE (CF1_)	2.1 V6	115	03/02 – 11/09		4093
X-TYPE (CF1_)	2.1 V6	115	03/02 – 11/09	4100	
X-TYPE (CF1_)	2.2 D	107	01/07 – 11/09		4058
X-TYPE (CF1_)	2.2 D	107	01/07 – 11/09		4093
X-TYPE (CF1_)	2.2 D	107	01/07 – 11/09	4100	
X-TYPE (CF1_)	2.2 D	110	10/05 – 11/09		4058
X-TYPE (CF1_)	2.2 D	110	10/05 – 11/09		4093
X-TYPE (CF1_)	2.2 D	110	10/05 – 11/09	4100	
X-TYPE (CF1_)	2.2 D	114	10/05 – 11/09		4058
X-TYPE (CF1_)	2.2 D	114	10/05 – 11/09		4093
X-TYPE (CF1_)	2.2 D	114	10/05 - 11/09	4100	
X-TYPE (CF1_)	2.5 V6 All-wheel Drive	144	06/01 – 11/09		4058

MAKE & MODEL		KW	YEAR		
JAGUAR					
X-TYPE (CF1_)	2.5 V6 All-wheel Drive	144	06/01 – 11/09		4093
X-TYPE (CF1_)	2.5 V6 All-wheel Drive	144	06/01 – 11/09	4100	
X-TYPE (CF1_)	3.0 V6 All-wheel Drive	169	06/01 – 11/07		4058
X-TYPE (CF1_)	3.0 V6 All-wheel Drive	169	06/01 – 11/07		4093
X-TYPE (CF1_)	3.0 V6 All-wheel Drive	169	06/01 – 11/07	4100	
X-TYPE Estate (CF1_)	25	144	02/04 – 12/09		4058
X-TYPE Estate (CF1_)	25	144	02/04 – 12/09		4093
X-TYPE Estate (CF1_)	25	144	02/04 – 12/09	4100	
X-TYPE Estate (CF1_)	30	169	02/04 – 12/09		4058
X-TYPE Estate (CF1_)	30	169	02/04 – 12/09		4093
X-TYPE Estate (CF1_)	30	169	02/04 – 12/09	4100	
X-TYPE Estate (CF1_)	2.0 D	96	02/04 – 12/09		4058
X-TYPE Estate (CF1_)	2.0 D	96	02/04 – 12/09		4093
X-TYPE Estate (CF1_)	2.0 D	96	02/04 – 12/09	4100	
X-TYPE Estate (CF1_)	2.1 V6	115	11/03 – 03/09		4058
X-TYPE Estate (CF1_)	2.1 V6	115	11/03 – 03/09		4093
X-TYPE Estate (CF1_)	2.1 V6	115	11/03 – 03/09	4100	
X-TYPE Estate (CF1_)	2.2 D	107	01/07 – 12/09		4058
X-TYPE Estate (CF1_)	2.2 D	107	01/07 – 12/09		4093
X-TYPE Estate (CF1_)	2.2 D	107	01/07 – 12/09	4100	
X-TYPE Estate (CF1_)	2.2 D	110	10/05 – 12/09		4058
X-TYPE Estate (CF1_)	2.2 D	110	10/05 – 12/09		4093
X-TYPE Estate (CF1_)	2.2 D	110	10/05 – 12/09	4100	
X-TYPE Estate (CF1_)	2.2 D	114	10/05 – 12/09		4058
X-TYPE Estate (CF1_)	2.2 D	114	10/05 – 12/09		4093
X-TYPE Estate (CF1_)	2.2 D	114	10/05 – 12/09	4100	
JEEP					
CHEROKEE	2.5	81	10.83 - 09.86	3864	
CHEROKEE	2.8 4x4	81	10.83 - 09.86	3864	
CHEROKEE	4.2 4x4	76	10.80 - 09.86	3864	
CHEROKEE	4.2 4x4	81	10.83 - 09.86	3864	
CHEROKEE	5.9 4x4	128	10.80 - 09.86	3864	
CHEROKEE (KJ)	2.4 4x4	108	09/01 – 01/08	4012	
CHEROKEE (KJ)	2.4 Laredo	108	10/01 – 09/04	4012	
CHEROKEE (KJ)	2.5 CRD 4x4	105	09/01 – 01/08	4012	
CHEROKEE (KJ)	2.8 CRD 4x4	110	11/02 – 01/08	4012	
CHEROKEE (KJ)	2.8 CRD 4x4	120	11/04 – 01/08	4012	
CHEROKEE (KJ)	3.7 4x4	150	08/03 – 01/08	4012	
CHEROKEE (KJ)	3.7 4x4	155	09/01 – 01/08	4012	
CHEROKEE (KJ)	3.7 Laredo	150	10/01 – 09/04	4012	
CHEROKEE (KK)	2.8 CRD 4x4	130	05/08 -		4004
CHEROKEE (KK)	2.8 CRD 4x4	130	05/08 -	4005	
CHEROKEE (KK)	2.8 CRDi 4x4	147	01/10 -		4004
CHEROKEE (KK)	2.8 CRDi 4x4	147	01/10 -	4005	
CHEROKEE (KK)	3.7 V6	157	01/08 -		4004
CHEROKEE (KK)	3.7 V6	157	01/08 -	4005	
CHEROKEE (KK)	3.7 V6 4x4	151	01/08 -		4004
CHEROKEE (KK)	3.7 V6 4x4	151	01/08 -	4005	
CHEROKEE (KK)	3.7 V6 4x4	157	01/08 -		4004
CHEROKEE (KK)	3.7 V6 4x4	157	01/08 -	4005	
CHEROKEE (XJ)	25	89	10/90 – 09/96	4182	
CHEROKEE (XJ)	25	89	10/95 – 09/01	4182	
CHEROKEE (XJ)	25	90	10/86 – 09/90	4182	
CHEROKEE (XJ)	40	131	10/86 – 09/90	4182	
CHEROKEE (XJ)	2.1 D 4x4	59	10/86 – 09/92	4182	
CHEROKEE (XJ)	2.1 TD	59	06/89 – 03/92	4182	
CHEROKEE (XJ)	2.1 TD	64	10/84 – 09/01	4182	
CHEROKEE (XJ)	2.5 4x4	90	10/86 – 09/90	4182	
CHEROKEE (XJ)	2.5 i 4x4	87	10/84 – 09/01	4182	
CHEROKEE (XJ)	2.5 i 4x4	90	12/91 – 09/01	4182	
CHEROKEE (XJ)	2.5 SE	87	10/96 – 09/99	4182	
CHEROKEE (XJ)	2.5 TD 4x4	85	01/88 – 09/01	4182	
CHEROKEE (XJ)	2.5 Tdi 4x4	85	10/96 – 09/01	4182	
CHEROKEE (XJ)	4.0 4x4	131	10/86 – 09/90	4182	
CHEROKEE (XJ)	4.0 i	127	07/98 – 09/01	4011	
CHEROKEE (XJ)	4.0 i	135	02/99 – 09/01	4011	
CHEROKEE (XJ)	4.0 i	135	12/91 – 09/01	4182	
CHEROKEE (XJ)	4.0 i	136	01/88 – 09/01	4182	
CHEROKEE (XJ)	4.0 i 4x4	131	01/95 – 09/01	4182	
CHEROKEE (XJ)	2.5 4x4	87	10.84 - 09.86	3864	

BESER

MAKE & MODEL		KW	YEAR		
JEEP					
COMANCHE (MJ)	2.1 D	63	10/86 – 09/90	4182	
COMANCHE (MJ)	2.1 D 4x4	63	01/86 – 09/90	4182	
COMMANDER (XK)	3.0 CRD (EXL)	160	04/06 – 12/10		4030
COMMANDER (XK)	3.0 CRD 4x4	160	04/06 – 12/10	4016	
COMMANDER (XK)	3.7 V6 (EKG)	157	09/05 – 12/10		4030
COMMANDER (XK)	3.7 V6 4x4	157	09/05 – 12/10	4016	
COMMANDER (XK)	4.7 V8 (EVA)	170	09/05 – 12/10		4030
COMMANDER (XK)	4.7 V8 4x4	170	09/05 – 12/10	4016	
COMMANDER (XK)	5.7 V8 (EZB)	240	09/05 – 12/10		4030
COMMANDER (XK)	5.7 V8 4x4	240	09/05 – 12/10	4016	
COMPASS (MK49)	20	115	05/11 -		3893
COMPASS (MK49)	20	115	05/11 -		4106
COMPASS (MK49)	24	125	08/06 -	3955	
COMPASS (MK49)	24	125	08/06 -		4004
COMPASS (MK49)	24	125	08/06 -		4106
COMPASS (MK49)	2.0 CRD	103	08/06 -		3893
COMPASS (MK49)	2.0 CRD	103	08/06 -	3955	
COMPASS (MK49)	2.0 CRD	103	08/06 -		4106
COMPASS (MK49)	2.0 CRD 4x4	103	09/06 -		3893
COMPASS (MK49)	2.0 CRD 4x4	103	09/06 -	3955	
COMPASS (MK49)	2.0 CRD 4x4	103	09/06 -		4106
COMPASS (MK49)	2.2 CRD	100	05/11 -		3893
COMPASS (MK49)	2.2 CRD	100	05/11 -		4106
COMPASS (MK49)	2.2 CRD 4x4	100	05/11 -		3893
COMPASS (MK49)	2.2 CRD 4x4	100	05/11 -		4106
COMPASS (MK49)	2.2 CRD 4x4	120	12/10 -		3893
COMPASS (MK49)	2.2 CRD 4x4	120	12/10 -		4106
COMPASS (MK49)	2.4 4x4	125	09/06 -	3955	
COMPASS (MK49)	2.4 4x4	125	09/06 -		4106
GRAND CHEROKEE III (WH, WK)	3.7 V6 (EKG)	157	06/05 – 12/10		4030
GRAND CHEROKEE III (WH, WK)	4.7 FLEX (EVE)	228	09/07 – 02/10		4030
GRAND CHEROKEE III (WH, WK)	4.7 FLEX (EVE)	228	09/07 – 02/10		4030
GRAND CHEROKEE III (WH, WK)	4.7 V8 (EVA)	170	06/05 – 12/10		4030
GRAND CHEROKEE III (WH, WK)	4.7 V8 (EVA)	223	09/07 – 02/10		4030
GRAND CHEROKEE III (WH, WK)	4.7 V8 (EVE)	223	09/07 – 02/10		4030
GRAND CHEROKEE III (WH, WK)	4.7 V8 (EVE)	228	09/07 – 12/08		4030
GRAND CHEROKEE III (WH, WK)	4.7 V8 4WD	217	06/05 -		4030
GRAND CHEROKEE III (WH, WK)	5.7 V8	265	01/09 – 12/10		4030
GRAND CHEROKEE III (WH, WK)	5.7 V8 (EZB)	240	06/05 – 12/10		4030
GRAND CHEROKEE III (WH, WK)	6.1 SRT8 (ESF)	313	03/06 – 12/10		4030
GRAND CHEROKEE I (ZJ)	52	164	10/96 – 09/98	4182	
GRAND CHEROKEE I (ZJ)	2.5 TD 4x4 (Z)	85	10/95 – 04/99	4182	
GRAND CHEROKEE I (ZJ)	2.5 TD Laredo	85	10/96 – 09/98	4182	
GRAND CHEROKEE I (ZJ)	4.0 i 4x4 (Z)	130	10/95 – 04/99	4182	
GRAND CHEROKEE I (ZJ)	4.0 i 4x4 (ZJ)	132	09/91 – 04/99	4182	
GRAND CHEROKEE I (ZJ)	4.0 i 4x4 (ZJ)	135	09/91 – 04/99	4182	
GRAND CHEROKEE I (ZJ)	4.0 Laredo	131	10/96 – 09/98	4182	
GRAND CHEROKEE I (ZJ)	5.2 4x4	164	10/96 – 09/98	4182	
GRAND CHEROKEE I (ZJ)	5.2 4x4 (Z)	156	10/95 – 04/99	4182	
GRAND CHEROKEE I (ZJ)	5.2 i 4x4 (ZJ)	155	01/92 – 04/99	4182	
GRAND CHEROKEE I (ZJ)	5.2 i 4x4 (ZJ)	158	09/92 – 04/99	4182	
GRAND CHEROKEE I (ZJ)	5.2 Limited 4x4	136	10/96 – 09/98	4182	
GRAND CHEROKEE I (ZJ)	5.9 i 4x4	177	08/97 – 04/99	4182	
GRAND CHEROKEE II (WJ, WG)	40	140	10/98 – 09/04	4011	
GRAND CHEROKEE II (WJ, WG)	40	140	10/98 – 09/04	4031	
GRAND CHEROKEE II (WJ, WG)	2.7 CRD 4x4	120	10/01 – 09/05	4011	
GRAND CHEROKEE II (WJ, WG)	2.7 CRD 4x4	120	10/01 – 09/05	4031	
GRAND CHEROKEE II (WJ, WG)	2.7 CRD 4x4	120	10/04 – 09/05	4031	
GRAND CHEROKEE II (WJ, WG)	2.7 CRD Laredo	120	10/04 – 09/05	4031	
GRAND CHEROKEE II (WJ, WG)	3.1 TD 4x4	103	04/99 – 12/01	4011	
GRAND CHEROKEE II (WJ, WG)	3.1 TD 4x4	103	04/99 – 12/01	4031	
GRAND CHEROKEE II (WJ, WG)	4.0 4x4	140	04/99 – 09/05	4011	
GRAND CHEROKEE II (WJ, WG)	4.0 4x4	140	04/99 – 09/05	4031	
GRAND CHEROKEE II (WJ, WG)	4.7 V8	167	10/04 – 09/05	4031	
GRAND CHEROKEE II (WJ, WG)	4.7 V8 4x4	162	04/99 – 08/00	4011	
GRAND CHEROKEE II (WJ, WG)	4.7 V8 4x4	162	04/99 – 08/00	4031	
GRAND CHEROKEE II (WJ, WG)	4.7 V8 4x4	164	04/99 – 09/05	4011	
GRAND CHEROKEE II (WJ, WG)	4.7 V8 4x4	164	04/99 – 09/05	4031	
GRAND CHEROKEE II (WJ, WG)	4.7 V8 4x4	167	06/03 – 09/05	4031	
GRAND CHEROKEE II (WJ, WG)	4.7 V8 4x4	190	10/01 – 09/05	4011	
GRAND CHEROKEE II (WJ, WG)	4.7 V8 4x4	190	10/01 – 09/05	4031	

MAKE & MODEL   		KW	YEAR		
JEEP					
GRAND CHEROKEE III (WH, WK)	3.0 CRD 4x4	155	05/06 – 12/10	4016	
GRAND CHEROKEE III (WH, WK)	3.0 CRD 4x4	160	06/05 – 12/10	4016	
GRAND CHEROKEE III (WH, WK)	3.7 V6 4x4	148	01/08 – 12/10	4016	
GRAND CHEROKEE III (WH, WK)	3.7 V6 4x4	157	06/05 – 12/10	4016	
GRAND CHEROKEE III (WH, WK)	4.7 V8 4x4	170	06/05 – 12/10	4016	
GRAND CHEROKEE III (WH, WK)	4.7 V8 4x4	223	09/07 – 02/10	4016	
GRAND CHEROKEE III (WH, WK)	5.7 V8 4x4	240	06/05 – 12/10	4016	
GRAND CHEROKEE III (WH, WK)	5.7 V8 4x4	259	01/09 – 12/10	4016	
GRAND CHEROKEE IV (WK, WK2)	3.0 4x4	175	09/14 -		4339
GRAND CHEROKEE IV (WK, WK2)	3.0 CRD	179	09/13 -		4339
GRAND CHEROKEE IV (WK, WK2)	3.0 CRD V6 4x4	177	02/11 -		4339
GRAND CHEROKEE IV (WK, WK2)	3.0 CRD V6 4x4	140	02/11 -		4339
GRAND CHEROKEE IV (WK, WK2)	3.0 CRD V6 4x4	184	07/13 -		4339
GRAND CHEROKEE IV (WK, WK2)	3.0 TD V6 4x4	179	04/14 -		4339
GRAND CHEROKEE IV (WK, WK2)	3.0 V6 4x4	172	06/13 -		4339
GRAND CHEROKEE IV (WK, WK2)	3.6 V6	209	11/10 -		4339
GRAND CHEROKEE IV (WK, WK2)	3.6 V6 4x4	210	11/10 -		4339
GRAND CHEROKEE IV (WK, WK2)	3.6 V6 FlexFuel 4x4	210	11/10 -		4339
GRAND CHEROKEE IV (WK, WK2)	3.6 VVT 4x4	213	04/16 -		4339
GRAND CHEROKEE IV (WK, WK2)	5.7 V8 4x4	259	11/10 -		4339
GRAND CHEROKEE IV (WK, WK2)	6.4 SRT8 4x4	344	03/11 -		4339
JEEP 2500	24	94	06/03 – 02/06	4182	
JEEP 2500	25	78	06/03 – 12/06	4182	
JEEP 2500	2.4 All-wheel Drive	94	06/03 – 02/06	4182	
JEEP 2500	2.5 All-wheel Drive	78	06/03 – 12/06	4182	
PATRIOT (MK74)	20	115	01/11 -		3893
PATRIOT (MK74)	20	115	01/11 -	3955	
PATRIOT (MK74)	20	115	01/11 -		4106
PATRIOT (MK74)	24	125	06/09 -		3893
PATRIOT (MK74)	24	125	06/09 -	3955	
PATRIOT (MK74)	24	125	06/09 -		4106
PATRIOT (MK74)	2.0 CRD	103	02/07 -		3893
PATRIOT (MK74)	2.0 CRD	103	02/07 -	3955	
PATRIOT (MK74)	2.0 CRD	103	02/07 -		4106
PATRIOT (MK74)	2.0 CRD 4x4	103	02/07 -		3893
PATRIOT (MK74)	2.0 CRD 4x4	103	02/07 -	3955	
PATRIOT (MK74)	2.0 CRD 4x4	103	02/07 -		4106
PATRIOT (MK74)	2.2 CRD 4x4	100	01/11 -		3893
PATRIOT (MK74)	2.2 CRD 4x4	100	01/11 -	3955	
PATRIOT (MK74)	2.2 CRD 4x4	100	01/11 -		4106
PATRIOT (MK74)	2.2 CRD 4x4	120	01/11 -		3893
PATRIOT (MK74)	2.2 CRD 4x4	120	01/11 -	3955	
PATRIOT (MK74)	2.2 CRD 4x4	120	01/11 -		4106
PATRIOT (MK74)	2.4 4x4	125	01/08 -		3893
PATRIOT (MK74)	2.4 4x4	125	01/08 -	3955	
PATRIOT (MK74)	2.4 4x4	125	01/08 -		4106
PATRIOT (MK74)	2.4 Eco + 4x4	125	07/08 -		3893
PATRIOT (MK74)	2.4 Eco + 4x4	125	07/08 -	3955	
PATRIOT (MK74)	2.4 Eco + 4x4	125	07/08 -		4106
WRANGLER I (YJ, SJ_)	25	76	01/88 – 12/91	4182	
WRANGLER I (YJ, SJ_)	25	89	12/91 – 08/96	4182	
WRANGLER I (YJ, SJ_)	40	131	12/91 – 08/96	4182	
WRANGLER I (YJ, SJ_)	4.2 2WD	82	10/86 – 09/90	4182	
WRANGLER II (TJ)	24	105	11/02 – 04/07	4182	
WRANGLER II (TJ)	25	87	08/96 – 04/07	4182	
WRANGLER II (TJ)	38	153	02/06 – 12/08	4182	
WRANGLER II (TJ)	40	124	06/98 – 04/07	4182	
WRANGLER II (TJ)	40	130	08/96 – 04/07	4182	
WRANGLER II (TJ)	40	130	08/96 – 04/07	4182	
WRANGLER II (TJ)	2.8 CRDi	130	11/06 – 04/07	4005	
WRANGLER II (TJ)	4.0 Rubicon	128	08/03 – 04/07	4182	
WRANGLER III (JK)	38	146	04/07 -		4004
WRANGLER III (JK)	38	146	04/07 -	4005	
WRANGLER III (JK)	2.8 CRD	130	04/07 -		4004
WRANGLER III (JK)	2.8 CRD	130	04/07 -	4005	
WRANGLER III (JK)	2.8 CRD	147	11/10 -		4004
WRANGLER III (JK)	2.8 CRD	147	11/10 -	4005	
WRANGLER III (JK)	3.6 V6	209	10/11 -		4004
KARSAN					
J9	Premium	-	07-	3941	
J10	Premier	-	10-	3941	

MAKE & MODEL		KW	YEAR		
KIA MOTORS					
AVELLA	13	55	11/95 – 12/01	3522	
AVELLA	15	55	02/97 – 12/01	3522	
AVELLA Hatchback	13	55	11/95 – 12/01	3522	
AVELLA Hatchback	15	55	02/97 – 12/01	3522	
BESTA Box	2.2 D	48	02/96 – 12/03	3463	
BESTA Box	2.2 D	48	02/96 – 12/03	3499	
BONGO Bus	2.4 TDCi	69	10/03 -	3463	
BONGO Bus	2.4 TDCi	69	10/03 -	3499	
BONGO Bus	2.7 D	59	10/03 -	3463	
BONGO Bus	2.7 D	59	10/03 -	3499	
BONGO Bus	2.9 TDiC	90	10/03 -	3463	
BONGO Bus	2.9 TDiC	90	10/03 -	3499	
BONGO MPV	2.4 TDCi	69	10/03 -	3463	
BONGO MPV	2.4 TDCi	69	10/03 -	3499	
BONGO MPV	2.7 D	59	10/03 -	3463	
BONGO MPV	2.7 D	59	10/03 -	3499	
BONGO MPV	2.9 TDiC	90	10/03 -	3463	
BONGO MPV	2.9 TDiC	90	10/03 -	3499	
BONGO MPV	2.9 TDiC 4WD	90	10/03 -	3463	
BONGO MPV	2.9 TDiC 4WD	90	10/03 -	3499	
BONGO Platform/Chassis	2.4 TDCi	69	10/03 -	3463	
BONGO Platform/Chassis	2.4 TDCi	69	10/03 -	3499	
BONGO Platform/Chassis	2.9 TDiC	90	10/03 -	3463	
BONGO Platform/Chassis	2.9 TDiC	90	10/03 -	3499	
BONGO Platform/Chassis	2.9 TDiC 4WD	90	10/03 -	3463	
BONGO Platform/Chassis	2.9 TDiC 4WD	90	10/03 -	3499	
BORREGO	3.0 CRDi 4WD	184	11/07 -	3960	
BORREGO	3.0 CRDi 4WD	184	11/07 -		4060
BORREGO	3.8 4WD	202	06/08 -	3960	
BORREGO	3.8 4WD	202	06/08 -		4060
CADENZA	24	132	01/10 -		4061
CADENZA	27	147	01/10 -		4061
CADENZA	2.7 BiFuel	121	01/10 -		4061
CADENZA	3.0 GDI	175	01/10 -		4061
CADENZA	3.0 GDI	199	01/10 -		4061
CADENZA	3.3 GDI	216	01/10 -		4061
CADENZA	3.5 CVVT	213	01/10 -		4061
CADENZA I (VG)	2.7	147	01/10 -		4343
CADENZA I (VG)	2.4	127	06/13 -		4343
CADENZA I (VG)	2.4	132	01/10 -		4343
CADENZA I (VG)	2.4	148	01/10-12/15		4343
CADENZA I (VG)	2.4 700h	117	06/13 -		4343
CADENZA I (VG)	2.7 BiFuel	121	01/10 -		4343
CADENZA I (VG)	3.0 GDI	175	01/10 -		4343
CADENZA I (VG)	3.0 GDI	199	01/10 -		4343
CADENZA I (VG)	3.0 LPG	175	01/10 -		4343
CADENZA I (VG)	3.3 GDI	216	01/10 -		4343
CADENZA I (VG)	3.5 CVVT	213	01/10 -		4343
CADENZA II (YG)	3.0 LPG	173	01/16 -		4343
CADENZA II (YG)	3.3 GDI	209	01/16 -		4343
CADENZA II (YG)	3.3 GDi	213	01/16 -		4343
CADENZA II (YG)	3.3 MPI	199	01/16 -		4343
CARENS (FJ_RS)	20	111	01/09 -	4028	
CARENS (FJ_RS)	1.6 (GA6D)	77	07/02 -	4028	
CARENS (FJ_RS)	1.8 (TB)	93	07/02 -	4028	
CARENS (FJ_RS)	2.0 CRDi (D4EA)	83	07/02 -	4028	
CARENS (FJ_RS)	2.0 CRDi (D4EA)	103	11/05 -	4028	
CARENS (FJ_RS)	2.0 CVVT (G4GC)	102	08/04 -	4028	
CARENS I (FC)	1.8 i	81	11/00 – 07/02	4269	
CARENS I (FC)	2.0 GSX	100	10/01 – 06/02	4269	
CARENS I (FC)	1.8 i	81	11.00 - 07.02	3957	
CARENS I (FC)	1.8 i 16V	81	03.00 - 05.02	3957	
CARENS III (UN)	1.6 CRDi 110	85	10/10 -	4039	
CARENS III (UN)	1.6 CRDi 110	85	10/10 -		4165
CARENS III (UN)	1.6 CRDi 128	94	10/10 -	4039	
CARENS III (UN)	1.6 CRDi 128	94	10/10 -		4165
CARENS III (UN)	1.6 CVVT	93	10/10 -	4039	
CARENS III (UN)	1.6 CVVT	93	10/10 -		4165
CARENS III (UN)	1.6 CVVT	97	08/09 -	4039	
CARENS III (UN)	1.6 CVVT	97	08/09 -		4165
CARENS III (UN)	2.0 CRDi 115	85	05/07 -	4039	

MAKE & MODEL   		KW	YEAR		
KIA MOTORS					
CARENS III (UN)	2.0 CRDi 115	85	05/07 -		4165
CARENS III (UN)	2.0 CRDi 135	100	08/09 -	4039	
CARENS III (UN)	2.0 CRDi 135	100	08/09 -		4165
CARENS III (UN)	2.0 CRDi 140	103	09/06 -	4039	
CARENS III (UN)	2.0 CRDi 140	103	09/06 -		4165
CARENS III (UN)	2.0 CVVT	106	09/06 -	4039	
CARENS III (UN)	2.0 CVVT	106	09/06 -		4165
CARENS IV	1.6 GDi	99	03/13 -		4061
CARENS IV	1.7 CRDi	85	03/13 -		4061
CARENS IV	1.7 CRDi	100	03/13 -		4061
CARENS IV	2.0 GDi	122	03/13 -		4061
CARENS IV	2.0 GDi	130	03/13 -		4061
CARENS IV	1.6 GDi	99	03/13 -		4343
CARENS IV	1.7 CRDi	85	03/13 -		4343
CARENS IV	1.7 CRDi	99	03/13 -		4343
CARENS IV	1.7 CRDi	100	03/13 -		4343
CARENS IV	1.7 CRDi	104	07/15 -		4343
CARENS IV	2.0 GDi	122	03/13 -		4343
CARENS IV	2.0 LPI	113	03/13-08/16		4343
CARENS IV	2.0 MPI	112	01/14 -		4343
CARENS IV	2.0 GDi	130	03/13 -		4343
CARNIVAL / GRAND CARNIVAL III (VQ)	38	182	01/10 -	4035	
CARNIVAL / GRAND CARNIVAL III (VQ)	38	202	06/10 -	4035	
CARNIVAL / GRAND CARNIVAL III (VQ)	2.2 CRDi	110	01/10 -	4035	
CARNIVAL / GRAND CARNIVAL III (VQ)	2.2 CRDi	143	01/10 -	4035	
CARNIVAL / GRAND CARNIVAL III (VQ)	2.7 V6	139	06/06 -	4035	
CARNIVAL / GRAND CARNIVAL III (VQ)	2.9 CRDi	136	06/06 -	4035	
CARNIVAL / GRAND CARNIVAL III (VQ)	2.9 CRDi LX	141	09/06 -	4035	
CARNIVAL / GRAND CARNIVAL III (VQ)	3.5 CVVT	203	06/11 -	4035	
CARNIVAL I (UP)	2.5 i	132	10/00 – 10/01	3802	
CARNIVAL I (UP)	2.5 V6	121	08/99 – 10/01	3802	
CARNIVAL I (UP)	2.5 V6	121	08/99 – 10/01	4182	
CARNIVAL I (UP)	2.9 TD	93	08/99 – 10/01	3802	
CARNIVAL I (UP)	2.9 TD	93	08/99 – 10/01	4182	
CARNIVAL II (GQ)	24	109	12/01 – 10/06	3802	
CARNIVAL II (GQ)	35	143	07/02 – 04/06	3802	
CARNIVAL II (GQ)	2.5 V6	110	10/01 – 06/06	3802	
CARNIVAL II (GQ)	2.9 CRDi	106	10/01 – 06/06	3802	
CARNIVAL II (GQ)	2.9 TD	93	01/99 – 09/07	3802	
CARNIVAL MPV	27	124	04/06 – 12/10	3802	
CARNIVAL MPV	35	140	07/04 – 12/10	3802	
CEE`D Sportswagon (JD)	1.0 T-GDI	74	07/15 -		4061
CEE`D Sportswagon (JD)	1.0 T-GDI	74	07/15 -	4166	
CEE`D Sportswagon (JD)	1.0 T-GDI	88	07/15 -		4061
CEE`D Sportswagon (JD)	1.0 T-GDI	88	07/15 -	4166	
CEE`D Sportswagon (JD)	1.4 CRDi 90	66	09/12 -		4061
CEE`D Sportswagon (JD)	1.4 CRDi 90	66	09/12 -	4166	
CEE`D Sportswagon (JD)	1.4 CVVT	73	09/12 -		4061
CEE`D Sportswagon (JD)	1.4 CVVT	73	09/12 -	4166	
CEE`D Sportswagon (JD)	1.4 MPI	74	04/15 -		4061
CEE`D Sportswagon (JD)	1.4 MPI	74	04/15 -	4166	
CEE`D Sportswagon (JD)	1.6 CRDi 110	81	03/13 -		4061
CEE`D Sportswagon (JD)	1.6 CRDi 110	81	03/13 -	4166	
CEE`D Sportswagon (JD)	1.6 CRDi 128	94	09/12 -		4061
CEE`D Sportswagon (JD)	1.6 CRDi 128	94	09/12 -	4166	
CEE`D Sportswagon (JD)	1.6 CRDi 136	100	07/15 -		4061
CEE`D Sportswagon (JD)	1.6 CRDi 136	100	07/15 -	4166	
CEE`D Sportswagon (JD)	1.6 GDI	99	09/12 -		4061
CEE`D Sportswagon (JD)	1.6 GDI	99	09/12 -	4166	
CEE'D II (JD)	1.4 CRDi (D4FC)	66	09/12 -	4028	
CEE'D II (JD)	1.4 CRDi 90 (D4FC)	66	05/12 -	4028	
CEE'D II (JD)	1.4 CVVT (G4FA)	73	09/12 -	4028	
CEE'D II (JD)	1.4 CVVT (G4FA)	73	05/12 -	4028	
CEE'D II (JD)	1.4 CVVT (G4FA-L)	66	05/12 -	4028	
CEE'D II (JD)	1.6 CRDi (D4FB)	94	09/12 -	4028	
CEE'D II (JD)	1.6 CRDi 115 (D4FB)	85	05/12 -	4028	
CEE'D II (JD)	1.6 CRDi 128 (D4FB)	94	05/12 -	4028	
CEE'D II (JD)	1.6 CRDi 90 (D4FB-L)	66	05/12 -	4028	
CEE'D II (JD)	1.6 CVVT (G4FC)	92	05/12 -	4028	
CEE'D II (JD)	1.6 GDI (G4FD)	99	09/12 -	4028	
CEE'D II (JD)	1.6 GDI (G4FD)	99	05/12 -	4028	

BEŞER

MAKE & MODEL		KW	YEAR		
KIA MOTORS					
CEE'D (ED)	1.4 (G4FA)	77	10/10 – 12/12	4028	
CEE'D (ED)	1.4 (G4FA)	80	09/07 – 12/12	4028	
CEE'D (ED)	1.4 (G4FA)	80	12/06 – 12/12	4028	
CEE'D (ED)	1.4 CVVT (G4FA-L)	66	07/09 – 12/12	4028	
CEE'D (ED)	1.6 (G4FC)	85	09/07 – 11/12	4028	
CEE'D (ED)	1.6 (G4FC)	90	09/07 – 12/12	4028	
CEE'D (ED)	1.6 (G4FC)	90	12/06 – 12/12	4028	
CEE'D (ED)	1.6 (G4FC)	93	09/07 – 12/12	4028	
CEE'D (ED)	1.6 (G4FC)	93	02/08 – 12/12	4028	
CEE'D (ED)	1.6 CRDi 115 (D4FB)	85	09/07 – 12/12	4028	
CEE'D (ED)	1.6 CRDi 115 (D4FB)	85	12/06 – 12/12	4028	
CEE'D (ED)	1.6 CRDi 90 (D4FB-L)	66	09/07 – 12/12	4028	
CEE'D (ED)	1.6 CRDi 90 (D4FB-L)	66	12/06 – 12/12	4028	
CEE'D (ED)	1.6 CVVT (G4FC)	92	06/09 – 12/12	4028	
CEE'D (ED)	2.0 (G4GC)	105	09/07 – 12/12	4028	
CEE'D (ED)	2.0 (G4GC)	105	12/06 – 12/12	4028	
CEE'D (ED)	2.0 CRDi 140 (D4EA-F)	103	09/07 – 12/12	4028	
CEE'D (ED)	2.0 CRDi 140 (D4EA-F)	103	09/07 – 12/12	4028	
CEE'D (JD)	1.4 CVVT	73	05/12 -	4342	
CEE'D (JD)	1.6 CVVT	95	01/13 -	4342	
CEE'D (JD)	1.0 T-GDI	74	07/15 -		4061
CEE'D (JD)	1.0 T-GDI	74	07/15 -	4166	
CEE'D (JD)	1.0 T-GDI	88	07/15 -		4061
CEE'D (JD)	1.0 T-GDI	88	07/15 -	4166	
CEE'D (JD)	1.4 CRDi 90	66	05/12 -		4061
CEE'D (JD)	1.4 CRDi 90	66	05/12 -	4166	
CEE'D (JD)	1.4 CVVT	66	05/12 -		4061
CEE'D (JD)	1.4 CVVT	66	05/12 -	4166	
CEE'D (JD)	1.4 CVVT	73	05/12 -		4061
CEE'D (JD)	1.4 CVVT	73	05/12 -	4166	
CEE'D (JD)	1.4 CVVT	73	05/12 -		4343
CEE'D (JD)	1.4 MPI	74	04/15 -		4061
CEE'D (JD)	1.4 MPI	74	04/15 -	4166	
CEE'D (JD)	1.6 CRDi 115	85	05/12 -		4061
CEE'D (JD)	1.6 CRDi 115	85	05/12 -	4166	
CEE'D (JD)	1.6 CRDi 128	94	05/12 -		4061
CEE'D (JD)	1.6 CRDi 128	94	05/12 -	4166	
CEE'D (JD)	1.6 CRDi 136	100	07/15 -		4061
CEE'D (JD)	1.6 CRDi 136	100	07/15 -	4166	
CEE'D (JD)	1.6 CRDi 90	66	05/12 -		4061
CEE'D (JD)	1.6 CRDi 90	66	05/12 -	4166	
CEE'D (JD)	1.6 CVVT	92	05/12 -		4061
CEE'D (JD)	1.6 CVVT	92	05/12 -	4166	
CEE'D (JD)	1.6 CVVT	95	01/13 -		4343
CEE'D (JD)	1.6 CVVT	96	11/14 -		4343
CEE'D (JD)	1.6 GDI	99	05/12 -		4061
CEE'D (JD)	1.6 GDI	99	05/12 -	4166	
CEE'D (JD)	1.6 GT	150	06/13 -		4061
CEE'D (JD)	1.6 GT	150	06/13 -	4166	
CEE'D (JD)	1.0 T-GDI	88	07/15 -		4343
CEE'D (JD)	1.0 T-GDI	74	07/15 -	4342	
CEE'D (JD)	1.0 T-GDI	74	07/15 -		4343
CEE'D (JD)	1.0 T-GDI	88	07/15 -	4342	
CEE'D (JD)	1.4 CRDi 90	66	05/12 -	4342	
CEE'D (JD)	1.4 CRDi 90	66	05/12 -		4343
CEE'D (JD)	1.4 CVVT	66	05/12 -	4342	
CEE'D (JD)	1.4 CVVT	66	05/12 -		4343
CEE'D (JD)	1.4 MPI	74	04/15 -	4342	
CEE'D (JD)	1.4 MPI	74	04/15 -		4343
CEE'D (JD)	1.6 CRDi 110	81	05/12 -	4342	
CEE'D (JD)	1.6 CRDi 110	81	05/12 -		4343
CEE'D (JD)	1.6 CRDi 128	94	05/12 -		4343
CEE'D (JD)	1.6 CRDi 128	94	05/12 -	4342	
CEE'D (JD)	1.6 CRDi 136	100	07/15 -	4342	
CEE'D (JD)	1.6 CRDi 136	100	07/15 -		4343
CEE'D (JD)	1.6 CVVT	92	05/12 -	4342	
CEE'D (JD)	1.6 CVVT	92	05/12 -		4343
CEE'D (JD)	1.6 CVVT	96	11/14 -	4342	
CEE'D (JD)	1.6 GDI	99	05/12 -	4342	
CEE'D (JD)	1.6 GDI	99	05/12 -		4343
CEE'D (JD)	1.6 GT	150	06/13 -	4342	

MAKE & MODEL		KW	YEAR		
KIA MOTORS					
CEE'D (JD)	1.6 GT	150	06/13 -		4343
CEE'D Combi Van (JD)	1.0 T-GDI	74	04/15 -	4342	
CEE'D Combi Van (JD)	1.0 T-GDI	74	04/15 -		4343
CEE'D Combi Van (JD)	1.0 T-GDI	88	04/15 -	4342	
CEE'D Combi Van (JD)	1.0 T-GDI	88	04/15 -		4343
CEE'D Combi Van (JD)	1.4 CRDi	66	04/15 -		4343
CEE'D Combi Van (JD)	1.4 CRDi	66	04/15 -	4342	
CEE'D Combi Van (JD)	1.4 CVVT	73	04/15 -	4342	
CEE'D Combi Van (JD)	1.4 CVVT	73	04/15 -		4343
CEE'D Combi Van (JD)	1.6 CRDi	94	07/12 -		4343
CEE'D Combi Van (JD)	1.6 CRDi	94	07/12 -	4342	
CEE'D Combi Van (JD)	1.6 GDi	99	04/15 -		4343
CEE'D Combi Van (JD)	1.6 GDi	99	04/15 -	4342	
CEE'D Sportswagon (JD)	1.4 CVVT	73	09/12 -	4342	
CEE'D Sportswagon (JD)	1.0 T-GDI	74	07/15 -		4343
CEE'D Sportswagon (JD)	1.0 T-GDI	88	07/15 -		4343
CEE'D Sportswagon (JD)	1.0 T-GDI	74	07/15 -	4342	
CEE'D Sportswagon (JD)	1.0 T-GDI	88	07/15 -	4342	
CEE'D Sportswagon (JD)	1.4 CRDi 90	66	09/12 -	4342	
CEE'D Sportswagon (JD)	1.4 CRDi 90	66	09/12 -		4343
CEE'D Sportswagon (JD)	1.4 CVVT	73	09/12 -		4343
CEE'D Sportswagon (JD)	1.4 MPI	74	04/15 -		4343
CEE'D Sportswagon (JD)	1.6 CRDi 110	81	03/13 -		4343
CEE'D Sportswagon (JD)	1.6 CRDi 110	81	03/13 -	4342	
CEE'D Sportswagon (JD)	1.6 CRDi 128	94	09/12 -	4342	
CEE'D Sportswagon (JD)	1.6 CRDi 128	94	09/12 -		4343
CEE'D Sportswagon (JD)	1.6 CRDi 136	100	07/15 -	4342	
CEE'D Sportswagon (JD)	1.6 CRDi 136	100	07/15 -		4343
CEE'D Sportswagon (JD)	1.6 CVVT	95	11/14 -	4342	
CEE'D Sportswagon (JD)	1.6 CVVT	95	11/14 -		4343
CEE'D Sportswagon (JD)	1.6 CVVT	96	11/14 -	4342	
CEE'D Sportswagon (JD)	1.6 CVVT	96	11/14 -		4343
CEE'D Sportswagon (JD)	1.6 GDI	99	09/12 -	4342	
CEE'D Sportswagon (JD)	1.6 GDI	99	09/12 -		4343
CEE'D Sportswagon (JD)	1.4 MPI	74	04/15 -	4342	
CERATO	16	76	05/05 – 08/06	4001	
CERATO	16	76	05/05 – 08/06	4087	
CERATO	16	82	08/06 -	4001	
CERATO	16	82	08/06 -	4087	
CERATO	18	94	05/05 -	4001	
CERATO	18	94	05/05 -	4087	
CERATO II / FORTE II / K3 II (TD)	1.6 CVVT (G4FC)	91	02/09 -	4028	
CERATO II / FORTE II / K3 II (TD)	2.0	115	01/09 -	4028	
CERATO II / FORTE II / K3 II (TD)	2.0 (G4KD)	115	01/09 -	4028	
CERATO II KOUP / FORTE KOUP / K3 (TD)	1.6 CVVT (G4FC)	91	10/09 -	4028	
CERATO II KOUP / FORTE KOUP / K3 (TD)	2.0 (G4KD)	115	01/09 -	4028	
CERATO II KOUP / FORTE KOUP / K3 (TD)	2.4 (G4KE)	129	09/10 – 12/13	4028	
CERATO III / FORTE III / K3	1.6 CVVT	95	07/16 -	4028	
CERATO III / FORTE III / K3	1.6 CVVT	95	11/14 -	4028	
CERATO III / FORTE III / K3	1.6 Flex	94	06/13 -	4028	
CERATO III / FORTE III / K3	1.6 GDI (G4FD)	103	09/12 -	4028	
CERATO III / FORTE III / K3	1.6 GDI (G4FD)	103	09/12 -	4028	
CERATO III / FORTE III / K3	1.6 MPI (G4FC)	96	06/13 -	4028	
CERATO III / FORTE III / K3	1.6 VGT (D4FB)	94	09/12 -	4028	
CERATO III / FORTE III / K3	2.0 CVVT	118	07/16 -	4028	
CERATO III / FORTE III / K3	2.0 CVVT	118	07/16 -	4028	
CERATO III / FORTE III / K3	2.0 MPi (G4KD)	110	06/13 -	4028	
CERATO III KOUP / K3 KOUP	1.6 GDI (G4FD)	103	12/13 -	4028	
CERATO III KOUP / K3 KOUP	1.6 T-GDI (G4FJ)	150	12/13 -	4028	
CERATO III KOUP / K3 KOUP	1.6 T-GDI (G4FJ)	152	07/16 -	4028	
CERATO III KOUP / K3 KOUP	2.0 MPi	110	12/13 -	4028	
CERATO III KOUP / K3 KOUP	2.0 MPi	118	09/14 -	4028	
CERATO (LD)	16	77	07/04 -	4001	
CERATO (LD)	16	77	07/04 -	4087	
CERATO (LD)	16	90	05/06 -	4001	
CERATO (LD)	16	90	05/06 -	4087	
CERATO (LD)	18	93	08/05 -	4001	
CERATO (LD)	18	93	08/05 -	4087	
CERATO (LD)	20	105	04/04 -	4001	
CERATO (LD)	20	105	04/04 -	4087	
CERATO (LD)	1.5 CRDi	75	07/05 -	4001	

MAKE & MODEL		KW	YEAR		
KIA MOTORS					
CERATO (LD)	1.5 CRDi	75	07/05 -	4087	
CERATO (LD)	1.6 CRDi	85	06/05 -	4001	
CERATO (LD)	1.6 CRDi	85	06/05 -	4087	
CERATO (LD)	2.0 CRDi	83	04/04 -	4001	
CERATO (LD)	2.0 CRDi	83	04/04 -	4087	
CERATO Hatchback	16	82	12/07 -	4001	
CERATO Hatchback	16	82	12/07 -	4087	
CERATO Hatchback	1.6 GDI	103	09/12 -	4166	
CERATO Hatchback	1.8	110	09/15 -	4342	
CERATO Hatchback	1.6 CVVT	94	12/14 -	4342	
CERATO Hatchback	1.6 GDI	97	08/16 -	4342	
CERATO Hatchback	1.6 Turbo	150	09/13 -	4342	
CERATO Hatchback	2.0 CVVT	112	01/16 -	4342	
CERATO Hatchback	2.0 CVVT	118	07/16 -	4342	
CERATO Hatchback	2.0 GDI	129	06/13 -	4342	
CERATO Hatchback	2.0 GDI	129	06/13 -		4343
CERATO Hatchback	1.6 GDI	103	09/12 -	4342	
CERATO II Saloon (TD)	20	115	01/09 -		3980
CERATO II Saloon (TD)	20	116	07/10 -		3980
CERATO KOUP	1.6 GDI	103	12/13 -	4166	
CERATO KOUP	1.6 T-GDI	150	12/13 -	4166	
CERATO KOUP	2.0 MPi	110	12/13 -	4166	
CERATO KOUP (TD)	20	115	01/09 -		3980
CERATO KOUP (TD)	1.6 CVVT	91	10/09 -		3980
CERATO KOUP (TD)	1.6 CVVT	150	09/13 -	4166	
CERATO KOUP (TD)	1.6 CVVT	150	09/13 -	4342	
CERATO KOUP (YD)	1.6 GDI	103	12/13 -	4342	
CERATO KOUP (YD)	1.6 T-GDI	150	12/13 -	4342	
CERATO KOUP (YD)	2.0 GDi	118	09/14 -	4342	
CERATO KOUP (YD)	2.0 MPi	110	12/13 -	4342	
CERATO KOUP (YD)	1.6 GDI	97	12/13 -	4342	
CERATO Saloon	18	85	10/01 – 07/04	4269	
CERATO Saloon	1.8	110	06/13 -	4342	
CERATO Saloon	2.0 GDI	129	06/13 -	4342	
CERATO Saloon	1.6 GDI	103	09/12 -	4166	
CERATO Saloon	1.6 MPi	96	06/13 -	4166	
CERATO Saloon	1.6 VGT	94	09/12 -	4166	
CERATO Saloon	1.8	85	10.01 - 07.04	3957	
CERATO Saloon	2.0 MPi	110	06/13 -	4166	
CERATO Saloon	1.8	107	01/14 -	4342	
CERATO Saloon	1.6 16V Flex	94	06/13 -	4342	
CERATO Saloon	1.6 GDI	103	09/12 -	4342	
CERATO Saloon	1.6 MPi	96	06/13 -	4342	
CERATO Saloon	1.6 VGT	94	09/12-07/16	4342	
CERATO Saloon	2.0 CVVT	117	12/14 -	4342	
CERATO Saloon	2.0 CVVT	118	07/16 -	4342	
CERATO Saloon	2.0 MPi	112	03/16 -	4342	
CERATO Saloon	2.0 MPi	110	06/13 -	4342	
CERATO Saloon (LD)	16	77	04/04 -	4001	
CERATO Saloon (LD)	16	77	04/04 -	4087	
CERATO Saloon (LD)	16	90	05/06 -	4001	
CERATO Saloon (LD)	16	90	05/06 -	4087	
CERATO Saloon (LD)	20	105	04/04 -	4001	
CERATO Saloon (LD)	20	105	04/04 -	4087	
CERATO Saloon (LD)	1.5 CRDi	75	07/05 -	4001	
CERATO Saloon (LD)	1.5 CRDi	75	07/05 -	4087	
CERATO Saloon (LD)	1.6 CRDi	85	06/05 -	4001	
CERATO Saloon (LD)	1.6 CRDi	85	06/05 -	4087	
CERATO Saloon (LD)	1.8 CVVT	93	05/05 -	4001	
CERATO Saloon (LD)	1.8 CVVT	93	05/05 -	4087	
CERATO Saloon (LD)	2.0 CRDi	83	04/04 -	4001	
CERATO Saloon (LD)	2.0 CRDi	83	04/04 -	4087	
CERATO Saloon (LD)	1.6	75	04.04 - 12.09	3957	
CLARUS (K9A)	1.8 i 16V	85	07/96 -	4269	
CLARUS (K9A)	2.0 i 16V	98	07/96 -	4269	
CLARUS (K9A)	1.8 i 16V	85	07.96 - 08.01	3957	
CLARUS (K9A)	2.0 i 16V	98	07.96 - 11.01	3957	
CLARUS Estate (GC)	1.8 i 16V	85	05/98 -	4269	
CLARUS Estate (GC)	2.0 i 16V	98	05/98 -	4269	
CLARUS Estate (GC)	1.8 i 16V	85	05.98 -	3957	
CLARUS Estate (GC)	2.0 i 16V	98	05.98 -	3957	

MAKE & MODEL		KW	YEAR		
KIA MOTORS					
FORTE (U.S.A.)	20	116	09/09 -	4028	
FORTE (U.S.A.)	20	116	09/11 -	4028	
FORTE (U.S.A.)	20	116	09/09 -	4028	
FORTE (U.S.A.)	24	129	09/12 -	4028	
FORTE (U.S.A.)	24	129	09/09 -	4028	
FORTE (U.S.A.)	2.4 (G4KE)	127	09/09 -	4028	
JOICE	20	88	09/01 -	3632	
JOICE	20	102	02/00 -	3632	
K2500 (SD)	2.5 CRDi	96	01/10 -	3574	
K2500 (SD)	2.5 D	69	01/03 -	3574	
K2700 (K62W)	2.7 D	61	03/97 – 09/99	3574	
K2700 (SD)	2.7 D	59	10/99 -	3574	
K2900	2.9 D	92	01/08 -	3574	
KX5	1.6 T	130	03/16 -		4343
KX5	1.6 T AWD	130	03/16 -		4343
KX5	2.0 T	121	03/16 -		4343
MAGENTIS (GD, MS)	20	100	05/01 – 09/05	3959	
MAGENTIS (GD, MS)	20	100	05/01 – 09/05	3993	
MAGENTIS (GD, MS)	2.5 V6	124	05/01 -	3959	
MAGENTIS (GD, MS)	2.5 V6	124	05/01 -	3993	
MAGENTIS (GD, MS)	2.7 V6	132	04/04 -	3993	
MAGENTIS (MG)	20	106	11/05 -	3993	
MAGENTIS (MG)	20	121	07/09 -	3993	
MAGENTIS (MG)	27	138	11/05 -	3993	
MAGENTIS (MG)	2.0 CRDi	100	11/05 – 12/08	3993	
MAGENTIS (MG)	2.0 CRDi	103	04/06 -	3993	
MAGENTIS (MG)	2.0 CRDi	110	04/06 -	3993	
MAGENTIS (MG)	2.7 V6	142	07/09 -	3993	
NIRO	1.6 GDI Hybrid	77	09/16 -		4343
NIRO	1.6 GDI Hybrid	104	09/16 -		4343
OPIRUS (GH)	27	120	10/03 – 09/06	3976/1	
OPIRUS (GH)	27	120	10/03 – 09/06	3993	
OPIRUS (GH)	27	139	10/06 -	3976/1	
OPIRUS (GH)	27	139	10/06 -	3993	
OPIRUS (GH)	33	173	10/06 -	3976/1	
OPIRUS (GH)	33	173	10/06 -	3993	
OPIRUS (GH)	35	149	09/03 -	3976/1	
OPIRUS (GH)	35	149	09/03 -	3993	
OPIRUS (GH)	3.0 GH300	138	09/03 -	3976/1	
OPIRUS (GH)	3.8 V6	196	10/06 -	3976/1	
OPIRUS (GH)	3.8 V6	196	10/06 -	3993	
OPTIMA	18	94	08/05 -	3959	
OPTIMA	18	94	08/05 -	3993	
OPTIMA	20	101	09/04 -	3959	
OPTIMA	20	101	09/04 -	3993	
OPTIMA	20	125	03/12 -		4061
OPTIMA	20	125	03/12 -	4233	
OPTIMA	20	204	09/10 -		4061
OPTIMA	20	204	09/10 -	4233	
OPTIMA	24	132	03/12 -		4061
OPTIMA	24	132	03/12 -	4233	
OPTIMA	24	149	09/10 -		4061
OPTIMA	24	149	09/10 -	4233	
OPTIMA	1.6	133	09/15 -		4343
OPTIMA	2.0	204	09/10 -		4343
OPTIMA	2.4	149	09/10 -		4343
OPTIMA	1.7 CRDi	100	03/12 -		4061
OPTIMA	1.7 CRDi	100	03/12 -	4233	
OPTIMA	2.0 CVVL	121	03/12 -		4061
OPTIMA	2.0 CVVL	121	03/12 -	4233	
OPTIMA	2.0 CVVT Hybrid	110	03/12 -		4061
OPTIMA	2.0 CVVT Hybrid	110	03/12 -	4233	
OPTIMA	2.0 CVVT Hybrid	140	12/12 -		4061
OPTIMA	2.0 CVVT Hybrid	140	12/12 -	4233	
OPTIMA	2.4 Hybrid	154	09/11 -		4061
OPTIMA	2.4 Hybrid	154	09/11 -	4233	
OPTIMA	2.4 Hybrid	154	09/11 -		4343
OPTIMA	2.0	125	03/12 -		4343
OPTIMA	2.4	129	06/10-12/15		4343
OPTIMA	2.4	132	03/12 -		4343
OPTIMA	1.7 CRDi	100	03/12 -		4343

MAKE & MODEL		KW	YEAR		
KIA MOTORS					
OPTIMA	1.7 CRDi	100	03/12 -	4041	
OPTIMA	1.7 CRDi	104	11/15 -		4343
OPTIMA	1.7 CRDi	104	11/15 -	4041	
OPTIMA	2.0	125	03/12 -	4041	
OPTIMA	2.0 CVVL	120	09/15 -		4343
OPTIMA	2.0 CVVL	120	09/15 -	4041	
OPTIMA	2.0 CVVL	121	03/12 -		4343
OPTIMA	2.0 CVVT Hybrid	110	03/12 -		4343
OPTIMA	2.0 CVVT Hybrid	140	12/12 -		4343
OPTIMA	2.0 CVVT Hybrid	140	12/12 -	4041	
OPTIMA	2.4 GDI	138	09/15 -		4343
OPTIMA	2.0 T-GDi	180	09/15 -		4343
OPTIMA Sportswagon (JF)	1.7 CRDi	104	09/16 -		4343
OPTIMA Sportswagon (JF)	2.0 CVVL	120	09/16 -		4343
OPTIMA Sportswagon (JF)	2.0 GDi Hybrid	115	04/17 -		4343
OPTIMA Sportswagon (JF)	2.0 T-GDi	180	09/16 -		4343
PICANTO (BA)	10	45	04/04 -	3968	
PICANTO (BA)	10	45	04/04 -		3969
PICANTO (BA)	10	45	04/04 -	4265	
PICANTO (BA)	10	46	09/07 -	3968	
PICANTO (BA)	10	46	09/07 -		3969
PICANTO (BA)	10	46	09/07 -	4265	
PICANTO (BA)	11	48	04/04 -	3968	
PICANTO (BA)	11	48	04/04 -		3969
PICANTO (BA)	11	48	04/04 -	4265	
PICANTO (BA)	1.1 CRDi	55	11/05 -	3968	
PICANTO (BA)	1.1 CRDi	55	11/05 -		3969
PICANTO (BA)	1.1 CRDi	55	11/05 -	4265	
PICANTO (TA)	10	51	05/11 -	3968	
PICANTO (TA)	10	51	05/11 -		3969
PICANTO (TA)	10	51	05/11 -	4265	
PICANTO (TA)	12	63	09/11 -	3968	
PICANTO (TA)	12	63	09/11 -		3969
PICANTO (TA)	12	63	09/11 -	4265	
PICANTO (TA)	1.2	64	09/11 -		4343
PICANTO (TA)	1.0 Bi-Fuel	60	05/11 -	3968	
PICANTO (TA)	1.0 Bi-Fuel	60	05/11 -		3969
PICANTO (TA)	1.0 Bi-Fuel	60	05/11 -	4265	
PICANTO (TA)	1.0 LPG	49	08/13 -		3969
PICANTO (TA)	1.0 LPG	49	08/13 -	4265	
PREGIO Box (TB)	2.5 TCi D	69	09/02 -	3802	
PREGIO Box (TB)	2.7 D	60	10/97 -	3653	
PREGIO Box (TB)	2.7 D	60	10/97 -	3802	
PREGIO Bus	2.5 D	69	08/95 – 09/04	3653	
PREGIO Bus	2.5 D	69	08/95 – 09/04	3802	
PRIDE				4090	4090
PRIDE (DA)	13	54	05/94 – 05/97	3723	
PRIDE (DA)	1.1 i	38	01/91 -	3723	
PRIDE (DA)	1.3 16V	44	01/90 -	3723	
PRIDE (DA)	1.3 16V	47	10/96 -	3723	
PRIDE (DA)	1.3 16V	53	01/90 -	3723	
PRIDE (DA)	1.3 i	51	01/90 -	3723	
PRIDE (DA)	1.4 LX	71	03/05 -	3880	3880
PRIDE (DA)	1.5 CRDi LX	81	03/05 -	3880	3880
PRIDE (DA)	1.6 CVVT LX	82	03/05 -	3880	3880
PRIDE Estate	13	47	08/99 -	3723	
PRIDE Van (DA)	1.3 16V	44	04/92 – 10/96	3723	
PRIDE Van (DA)	1.3 16V	47	10/96 – 06/99	3723	
PRO CEE´D (JD)	1.4 CRDi 90	66	03/13 -	4342	
PRO CEE´D (JD)	1.0 T-GDI	74	07/15 -		4061
PRO CEE´D (JD)	1.0 T-GDI	74	07/15 -	4166	
PRO CEE´D (JD)	1.0 T-GDI	88	07/15 -		4061
PRO CEE´D (JD)	1.0 T-GDI	88	07/15 -	4166	
PRO CEE´D (JD)	1.4 CRDi 90	66	03/13 -		4061
PRO CEE´D (JD)	1.4 CRDi 90	66	03/13 -	4166	
PRO CEE´D (JD)	1.4 CVVT	73	03/13 -		4061
PRO CEE´D (JD)	1.4 CVVT	73	03/13 -	4166	
PRO CEE´D (JD)	1.4 MPI	74	04/15 -		4061
PRO CEE´D (JD)	1.4 MPI	74	04/15 -	4166	
PRO CEE´D (JD)	1.4 MPI	74	04/15 -		4343
PRO CEE´D (JD)	1.6 CRDi 110	81	03/13 -		4061

BESER

MAKE & MODEL   		KW	YEAR		
KIA MOTORS					
PRO CEE´D (JD)	1.6 CRDi 110	81	03/13 -	4166	
PRO CEE´D (JD)	1.6 CRDi 128	94	03/13 -		4061
PRO CEE´D (JD)	1.6 CRDi 128	94	03/13 -	4166	
PRO CEE´D (JD)	1.6 CRDi 136	100	07/15 -		4061
PRO CEE´D (JD)	1.6 CRDi 136	100	07/15 -	4166	
PRO CEE´D (JD)	1.6 GDI	99	03/13 -		4061
PRO CEE´D (JD)	1.6 GDI	99	03/13 -	4166	
PRO CEE´D (JD)	1.6 GT	150	06/13 -		4061
PRO CEE´D (JD)	1.6 GT	150	06/13 -	4166	
PRO CEE´D (JD)	1.0 T-GDI	74	07/15 -		4343
PRO CEE´D (JD)	1.0 T-GDI	88	07/15 -	4342	
PRO CEE´D (JD)	1.0 T-GDI	88	07/15 -		4343
PRO CEE´D (JD)	1.0 T-GDI	74	07/15 -	4342	
PRO CEE´D (JD)	1.4 CRDi 90	66	03/13 -		4343
PRO CEE´D (JD)	1.4 CVVT	73	03/13 -		4343
PRO CEE´D (JD)	1.4 CVVT	73	03/13 -	4342	
PRO CEE´D (JD)	1.4 MPI	73	07/13 -	4342	
PRO CEE´D (JD)	1.4 MPI	73	07/13 -		4343
PRO CEE´D (JD)	1.4 MPI	74	04/15 -	4342	
PRO CEE´D (JD)	1.6 CRDi 110	81	03/13 -	4342	
PRO CEE´D (JD)	1.6 CRDi 110	81	03/13 -		4343
PRO CEE´D (JD)	1.6 CRDi 128	94	03/13 -	4342	
PRO CEE´D (JD)	1.6 CRDi 128	94	03/13 -		4343
PRO CEE´D (JD)	1.6 CRDi 136	100	07/15 -	4342	
PRO CEE´D (JD)	1.6 CRDi 136	100	07/15 -		4343
PRO CEE´D (JD)	1.6 CVVT	95	03/13 -	4342	
PRO CEE´D (JD)	1.6 CVVT	95	03/13 -		4343
PRO CEE´D (JD)	1.6 GDI	99	03/13 -	4342	
PRO CEE´D (JD)	1.6 GDI	99	03/13 -		4343
PRO CEE´D (JD)	1.6 GT	150	06/13 -	4342	
PRO CEE´D (JD)	1.6 GT	150	06/13 -		4343
PRO CEE'D (ED)	1.4 (G4FA)	80	02/08 – 09/12	4028	
PRO CEE'D (ED)	1.4 CVVT (G4FA-L)	66	06/10 – 09/12	4028	
PRO CEE'D (ED)	1.6 (G4FC)	90	02/08 – 09/12	4028	
PRO CEE'D (ED)	1.6 (G4FC)	93	02/08 – 09/12	4028	
PRO CEE'D (ED)	1.6 CRDi 115 (D4FB)	85	02/08 – 09/12	4028	
PRO CEE'D (ED)	1.6 CRDi 90 (D4FB-L)	66	02/08 – 09/12	4028	
PRO CEE'D (ED)	2.0 (G4GC)	105	02/08 – 09/12	4028	
PRO CEE'D (ED)	2.0 CRDi 140 (D4EA-F)	103	02/08 – 09/12	4028	
PRO CEE'D (ED)	2.0 LPG (G4GC)	105	01/09 – 12/09	4028	
RETONA (CE)	2.0 16V	94	05/00 -	4009	
RETONA (CE)	2.0 TD	61	06/99 -	4009	
RIO Estate (DC)	13	55	08/00 – 02/05	3522	
RIO Estate (DC)	13	55	08/00 – 02/05	4269	
RIO Estate (DC)	13	60	08/00 – 02/05	3522	
RIO Estate (DC)	13	60	08/00 – 02/05	4269	
RIO Estate (DC)	1.5 16V	71	09/02 – 02/05	4269	
RIO Estate (DC)	1.5 16V	72	08/00 – 02/05	3522	
RIO Estate (DC)	1.5 16V	72	08/00 – 02/05	4269	
RIO Estate (DC)	1.3	55	08.00 - 02.05	3957	
RIO Estate (DC)	1.3	60	08.00 - 02.05	3957	
RIO Estate (DC)	1.5 16V	71	09.02 - 02.05	3957	
RIO Estate (DC)	1.5 16V	72	08.00 - 02.05	3957	
RIO II (JB)	1.4 16V	71	03/05 -	3880	3880
RIO II (JB)	1.5 CRDi	65	06/08 -	3880	3880
RIO II (JB)	1.5 CRDi	81	03/05 -	3880	3880
RIO II (JB)	1.6 CVVT	82	03/05 -	3880	3880
RIO II Saloon (JB)	1.4 16V	71	03/05 -	3880	3880
RIO II Saloon (JB)	1.5 CRDi	65	06/08 -	3880	3880
RIO II Saloon (JB)	1.5 CRDi	81	03/05 -	3880	3880
RIO II Saloon (JB)	1.6 16V	82	03/05 -	3880	3880
RIO III (UB)	1.1 CRDi	55	09/11 -		4061
RIO III (UB)	1.1 CRDi	55	09/11 -	4136	
RIO III (UB)	1.2 CVVT	62	11/14 -		4061
RIO III (UB)	1.2 CVVT	62	11/14 -	4136	
RIO III (UB)	1.25 CVVT	63	09/11 -		4061
RIO III (UB)	1.25 CVVT	63	09/11 -	4136	
RIO III (UB)	1.25 CVVT	65	09/11 -		4061
RIO III (UB)	1.25 CVVT	65	09/11 -	4136	
RIO III (UB)	1.25 CVVT	63	09/11 -		4343
RIO III (UB)	1.25 LPG	63	09/11 -		4061

MAKE & MODEL		KW	YEAR		
KIA MOTORS					
RIO III (UB)	1.25 LPG	63	09/11 -	4136	
RIO III (UB)	1.4 CRDi	66	09/11 -		4061
RIO III (UB)	1.4 CRDi	66	09/11 -	4136	
RIO III (UB)	1.4 CVVT	79	09/11 -		4061
RIO III (UB)	1.4 CVVT	79	09/11 -	4136	
RIO III (UB)	1.4 CVVT	80	09/11 -		4061
RIO III (UB)	1.4 CVVT	80	09/11 -	4136	
RIO III (UB)	1.6 CVVT	90	06/12 -		4061
RIO III (UB)	1.6 CVVT	90	06/12 -	4136	
RIO III (UB)	1.2	51	09/11 -		4343
RIO III (UB)	1.25	64	11/14 -		4343
RIO III (UB)	1.6	103	09/12 -		4343
RIO III (UB)	1.1 CRDi	55	09/11 -		4343
RIO III (UB)	1.2 CVVT	62	11/14 -		4343
RIO III (UB)	1.25 CVVT	65	09/11 -		4343
RIO III (UB)	1.25 LPG	63	09/11 -		4343
RIO III (UB)	1.4 CRDi	66	09/11 -		4343
RIO III (UB)	1.4 CVVT	79	09/11 -		4343
RIO III (UB)	1.4 CVVT	80	09/11 -		4343
RIO III (UB)	1.6 CVVT	90	06/12 -		4343
RIO III Saloon (UB)	1.6 CVVT 90	90	06/12 -		4343
RIO III Saloon (UB)	1.2 CVVT	62	11/14 -		4061
RIO III Saloon (UB)	1.2 CVVT	62	11/14 -	4136	
RIO III Saloon (UB)	1.25 CVVT	63	10/11 -		4061
RIO III Saloon (UB)	1.25 CVVT	63	10/11 -	4136	
RIO III Saloon (UB)	1.4 CVVT	80	10/11 -		4061
RIO III Saloon (UB)	1.4 CVVT	80	10/11 -	4136	
RIO III Saloon (UB)	1.6 CVVT	90	06/12 -		4061
RIO III Saloon (UB)	1.6 CVVT	90	06/12 -	4136	
RIO III Saloon (UB)	1.6	103	06/11 -		4343
RIO III Saloon (UB)	1.2 CVVT	62	11/14 -		4343
RIO III Saloon (UB)	1.25 CVVT	63	10/11 -		4343
RIO III Saloon (UB)	1.4 CVVT	80	10/11 -		4343
RIO III Saloon (UB)	1.4 CVVT	79	06/11 -		4343
RIO IV (YB, SC)	1.4	73	01/17 -		4343
RIO IV Saloon (SC, FB)	1.4	74	07/17 -		4343
RIO Saloon (DC_)	13	55	09/00 – 02/05	3522	
RIO Saloon (DC_)	13	55	09/00 – 02/05	4269	
RIO Saloon (DC_)	13	60	08/02 – 02/05	4269	
RIO Saloon (DC_)	15	70	09/02 – 02/05	4269	
RIO Saloon (DC_)	1.5 16V	71	09/02 – 02/05	4269	
RIO Saloon (DC_)	1.5 16V	72	09/00 – 02/05	3522	
RIO Saloon (DC_)	1.5 16V	72	09/00 – 02/05	4269	
RIO Saloon (DC_)	1.3	55	09.00 - 02.05	3957	
RIO Saloon (DC_)	1.3	60	08.02 - 02.05	3957	
RIO Saloon (DC_)	1.5 16V	71	09.02 - 02.05	3957	
RIO Saloon (DC_)	1.5 16V	72	09.00 - 02.05	3957	
SEPHIA (FA)	1.5 i	59	02/96 – 10/97		3545
SEPHIA (FA)	1.5 i	59	02/96 – 10/97	3570	
SEPHIA (FA)	1.5 i	59	02/96 – 10/97	3740	
SEPHIA (FA)	1.5 i	59	02/96 – 10/97	4269	
SEPHIA (FA)	1.6 i	59	01/95 – 10/97		3545
SEPHIA (FA)	1.6 i	59	01/95 – 10/97	3570	
SEPHIA (FA)	1.6 i	59	01/95 – 10/97	3740	
SEPHIA (FA)	1.6 i	59	01/95 – 10/97	4269	
SEPHIA (FA)	1.8 i 16V	82	01/95 – 10/97		3545
SEPHIA (FA)	1.8 i 16V	82	01/95 – 10/97	3570	
SEPHIA (FA)	1.8 i 16V	82	01/95 – 10/97	3740	
SEPHIA (FA)	1.8 i 16V	82	01/95 – 10/97	4269	
SEPHIA Saloon (FA)	1.5 i	59	02/96 – 10/97		3545
SEPHIA Saloon (FA)	1.5 i	59	02/96 – 10/97	3570	
SEPHIA Saloon (FA)	1.5 i	59	02/96 – 10/97	3740	
SEPHIA Saloon (FA)	1.5 i	59	02/96 – 10/97	4269	
SEPHIA Saloon (FA)	1.6 i	59	09/93 – 10/97		3545
SEPHIA Saloon (FA)	1.6 i	59	09/93 – 10/97	3570	
SEPHIA Saloon (FA)	1.6 i	59	09/93 – 10/97	3740	
SEPHIA Saloon (FA)	1.6 i	59	09/93 – 10/97	4269	
SEPHIA Saloon (FA)	1.8 i 16V	82	01/95 – 10/97		3545
SEPHIA Saloon (FA)	1.8 i 16V	82	01/95 – 10/97	3570	
SEPHIA Saloon (FA)	1.8 i 16V	82	01/95 – 10/97	3740	
SEPHIA Saloon (FA)	1.8 i 16V	82	01/95 – 10/97	4269	

BESER®

MAKE & MODEL   		KW	YEAR		
KIA MOTORS					
SHUMA (FB)	1.6	75	01.01 - 12.01	3957	
SHUMA (FB)	1.8 i 16V	81	10.97 - 03.01	3957	
SHUMA (FB) / SEPHIA (FB)	16	75	01/01 – 12/01	3740	
SHUMA (FB) / SEPHIA (FB)	1.5 i 16V	65	10/97 – 03/01	3740	
SHUMA (FB) / SEPHIA (FB)	1.8 i 16V	81	10/97 – 03/01	3740	
SHUMA II (FB)	1.6	75	05.01 - 08.04	3957	
SHUMA II (FB)	1.8	84	04.03 - 08.04	3957	
SHUMA II (FB) / SEPHIA II (FB)	16	75	05/01 – 08/04	4269	
SHUMA II (FB) / SEPHIA II (FB)	18	81	05/01 – 06/04	4269	
SHUMA II (FB) / SEPHIA II (FB)	18	84	04/03 – 08/04	4269	
SHUMA II Saloon (FB)	1.6	75	05.01 - 05.04	3957	
SHUMA II Saloon (FB) / SEPHIA II Saloon (FB)	16	75	05/01 – 05/04	4269	
SHUMA Saloon (FB) / SEPHIA Saloon (FB)	15	59	03/96 – 12/98	3740	
SHUMA Saloon (FB) / SEPHIA Saloon (FB)	1.5 i 16V	65	10/97 – 10/01	3740	
SHUMA Saloon (FB) / SEPHIA Saloon (FB)	1.8 GX	85	05/99 – 10/01	3740	
SORENTO I (JC)	24	102	08/02 -	3978	
SORENTO I (JC)	24	102	08/02 -		3979
SORENTO I (JC)	2.5 CRDi	103	08/02 -	3978	
SORENTO I (JC)	2.5 CRDi	103	08/02 -		3979
SORENTO I (JC)	2.5 CRDi	120	05/06 -	3978	
SORENTO I (JC)	2.5 CRDi	120	05/06 -		3979
SORENTO I (JC)	2.5 CRDi	125	12/06 -	3978	
SORENTO I (JC)	2.5 CRDi	125	12/06 -		3979
SORENTO I (JC)	3.3 V6	177	12/06 -	3978	
SORENTO I (JC)	3.3 V6	177	12/06 -		3979
SORENTO I (JC)	3.3 V6 4WD	182	02/07 -	3978	
SORENTO I (JC)	3.3 V6 4WD	182	02/07 -		3979
SORENTO I (JC)	3.5 V6 4WD	143	08/02 -	3978	
SORENTO I (JC)	3.5 V6 4WD	143	08/02 -		3979
SORENTO I (JC)	3.8 4WD	196	09/06 -	3978	
SORENTO I (JC)	3.8 4WD	196	09/06 -		3979
SORENTO II (XM)	35	204	05/13 -	3960	
SORENTO II (XM)	35	204	05/13 -		4060
SORENTO II (XM)	2.0 CRDi	110	11/10 -	3960	
SORENTO II (XM)	2.0 CRDi	110	11/10 -		4060
SORENTO II (XM)	2.0 CRDi 4WD	110	11/10 -	3960	
SORENTO II (XM)	2.0 CRDi 4WD	110	11/10 -		4060
SORENTO II (XM)	2.2 CRDi	145	11/09 -	3960	
SORENTO II (XM)	2.2 CRDi	145	11/09 -		4060
SORENTO II (XM)	2.2 CRDi 4WD	145	11/09 -	3960	
SORENTO II (XM)	2.2 CRDi 4WD	145	11/09 -		4060
SORENTO II (XM)	2.4 CVVT	128	11/09 -	3960	
SORENTO II (XM)	2.4 CVVT	128	11/09 -		4060
SORENTO II (XM)	2.4 CVVT	141	10/12 -	3960	
SORENTO II (XM)	2.4 CVVT	141	10/12 -		4060
SORENTO II (XM)	2.4 CVVT 4WD	128	11/09 -	3960	
SORENTO II (XM)	2.4 CVVT 4WD	128	11/09 -		4060
SORENTO II (XM)	2.4 CVVT 4WD	141	10/12 -	3960	
SORENTO II (XM)	2.4 CVVT 4WD	141	10/12 -		4060
SORENTO II (XM)	2.4 GDI	141	10/12 -	3960	
SORENTO II (XM)	2.4 GDI	141	10/12 -		4060
SORENTO II (XM)	2.4 GDI 4WD	141	10/12 -	3960	
SORENTO II (XM)	2.4 GDI 4WD	141	10/12 -		4060
SORENTO III (UM)	2.4 GDI	138	01/15 -		4060
SOUL (AM)	16	91	09/09 – 12/14	3959	
SOUL (AM)	1.6 CRDi 115	85	02/09 -	3959	
SOUL (AM)	1.6 CRDi 128	94	02/09 -	3959	
SOUL (AM)	1.6 CVVT	77	02/09 -	3959	
SOUL (AM)	1.6 CVVT	93	02/09 -	3959	
SOUL (AM)	1.6 CVVT	95	03/12 -	3959	
SOUL (AM)	1.6 GDI	103	06/11 -	3959	
SOUL Hatchback	16	91	12/09 -	3959	
SOUL Hatchback	20	105	12/09 -	3959	
SOUL II (PS)	1.6 CRDi 128	94	02/14 -	4049	
SOUL II (PS)	1.6 CRDi 128	94	02/14 -		4061
SOUL II (PS)	1.6 CRDi 128 (D4FB)	94	02/14 -	4028	
SOUL II (PS)	1.6 CRDi 136	100	04/15 -	4049	
SOUL II (PS)	1.6 CRDi 136 (D4FB)	100	04/15 -	4028	
SOUL II (PS)	1.6 CVVT	95	07/16 -	4028	
SOUL II (PS)	1.6 CVVT (G4FG)	91	02/14 -	4028	
SOUL II (PS)	1.6 CVVT Flex	94	09/14 -	4028	

MAKE & MODEL		KW	YEAR		
KIA MOTORS					
SOUL II (PS)	1.6 GDI	97	02/14 -	4049	
SOUL II (PS)	1.6 GDI	97	02/14 -		4061
SOUL II (PS)	1.6 GDI (G4FD)	97	02/14 -	4028	
SOUL II (PS)	2.0 CVVT (G4KD)	116	07/16 -	4028	
SOUL II (PS)	2.0 CVVT (G4NA)	113	02/14 -	4028	
SOUL II (PS)	EV Electric	25	09/14 -	4028	
SOUL II (PS)	EV Electric	81	09/14 -	4028	
SOUL II (PS)	1.6 CRDi 128	94	02/14 -		4343
SOUL II (PS)	1.6 CRDi 136	100	04/15 -		4343
SOUL II (PS)	1.6 CVVT	91	02/14 -		4343
SOUL II (PS)	1.6 CVVT	95	07/16 -		4343
SOUL II (PS)	1.6 GDI	97	02/14 -		4343
SOUL II (PS)	1.6 TGDI	150	11/16 -		4343
SOUL II (PS)	2.0 CVVT	113	02/14 -		4343
SOUL II (PS)	EV Electric	26	03/17 -		4343
SOUL II (PS)	EV Electric	25	09/14 -		4343
SOUL II (PS)	EV Electric	81	09/14 -		4343
SPORTAGE (JE_, KM_)	2.0 16V 4WD	104	09/04 -	3959	
SPORTAGE (JE_, KM_)	2.0 16V 4WD	104	09/04 -	3993	
SPORTAGE (JE_, KM_)	2.0 16V 4WD	104	09/04 -	4039	
SPORTAGE (JE_, KM_)	2.0 CRDi	83	02/05 -	3959	
SPORTAGE (JE_, KM_)	2.0 CRDi	83	02/05 -	3993	
SPORTAGE (JE_, KM_)	2.0 CRDi	83	02/05 -	4039	
SPORTAGE (JE_, KM_)	2.0 CRDi	100	01/06 -	3959	
SPORTAGE (JE_, KM_)	2.0 CRDi	100	01/06 -	3993	
SPORTAGE (JE_, KM_)	2.0 CRDi	100	01/06 -	4039	
SPORTAGE (JE_, KM_)	2.0 CRDi	103	01/06 -	3959	
SPORTAGE (JE_, KM_)	2.0 CRDi	103	01/06 -	3993	
SPORTAGE (JE_, KM_)	2.0 CRDi	103	01/06 -	4039	
SPORTAGE (JE_, KM_)	2.0 CRDi	110	09/08 -	4039	
SPORTAGE (JE_, KM_)	2.0 CRDi 4WD	83	09/04 -	3959	
SPORTAGE (JE_, KM_)	2.0 CRDi 4WD	83	09/04 -	3993	
SPORTAGE (JE_, KM_)	2.0 CRDi 4WD	83	09/04 -	4039	
SPORTAGE (JE_, KM_)	2.0 CRDi 4WD	100	01/06 -	3959	
SPORTAGE (JE_, KM_)	2.0 CRDi 4WD	100	01/06 -	3993	
SPORTAGE (JE_, KM_)	2.0 CRDi 4WD	100	01/06 -	4039	
SPORTAGE (JE_, KM_)	2.0 CRDi 4WD	103	01/06 -	3959	
SPORTAGE (JE_, KM_)	2.0 CRDi 4WD	103	01/06 -	3993	
SPORTAGE (JE_, KM_)	2.0 CRDi 4WD	103	01/06 -	4039	
SPORTAGE (JE_, KM_)	2.0 CRDi 4WD	110	09/08 -	4039	
SPORTAGE (JE_, KM_)	2.0 i 16V	104	09/04 -	3959	
SPORTAGE (JE_, KM_)	2.0 i 16V	104	09/04 -	3993	
SPORTAGE (JE_, KM_)	2.0 i 16V	104	09/04 -	4039	
SPORTAGE (JE_, KM_)	2.7 V6 4WD	129	09/04 -	3959	
SPORTAGE (JE_, KM_)	2.7 V6 4WD	129	09/04 -	3993	
SPORTAGE (JE_, KM_)	2.7 V6 4WD	129	09/04 -	4039	
SPORTAGE (K00)	20	87	10/00 – 08/03	4009	
SPORTAGE (K00)	2.0 4WD	87	10/00 – 08/03	4009	
SPORTAGE (K00)	2.0 i 16V	94	10/99 – 08/03	4009	
SPORTAGE (K00)	2.0 i 16V 4WD	94	04/94 – 08/03	3751	
SPORTAGE (K00)	2.0 i 16V 4WD	95	11/98 – 08/04	4009	
SPORTAGE (K00)	2.0 i 4WD	70	04/94 – 08/99	3751	
SPORTAGE (K00)	2.2 D 4WD	52	08/94 – 04/99	3751	
SPORTAGE (QL, QLE)	1.6 GDI	97	09/15 -		4343
SPORTAGE (QL, QLE)	1.6 GDI	130	09/15 -		4343
SPORTAGE (QL, QLE)	1.6 GDI AWD	130	09/15 -		4343
SPORTAGE (QL, QLE)	1.7 CRDi	85	09/15 -		4343
SPORTAGE (QL, QLE)	2.0 CRDi	100	09/15 -		4343
SPORTAGE (QL, QLE)	2.0 CRDi AWD	100	09/15 -		4343
SPORTAGE (QL, QLE)	2.0 CRDi AWD	136	09/15 -		4343
SPORTAGE (QL, QLE)	2.4 GDI	135	05/16 -		4343
SPORTAGE (QL, QLE)	2.4 GDI AWD	135	05/16 -		4343
SPORTAGE (SL)	1.6 GDI	99	02/11 -		3980
SPORTAGE (SL)	1.7 CRDi	85	12/10 -		3980
SPORTAGE (SL)	2.0 CRDi	100	07/10 -		3980
SPORTAGE (SL)	2.0 CRDi	135	08/10 -		3980
SPORTAGE (SL)	2.0 CRDi AWD	100	07/10 -		3980
SPORTAGE (SL)	2.0 CRDi AWD	135	08/10 -		3980
SPORTAGE (SL)	2.0 CVVT	120	07/10 -		3980
SPORTAGE (SL)	2.0 CVVT	122	07/10 -		3980
SPORTAGE (SL)	2.0 CVVT AWD	120	07/10 -		3980

MAKE & MODEL   		KW	YEAR		
KIA MOTORS					
SPORTAGE (SL)	2.0 CVVT AWD	122	07/10 -		3980
SPORTAGE (SL)	2.0 GDI	122	02/14 -		3980
SPORTAGE (SL)	2.0 GDI AWD	122	02/14 -		3980
SPORTAGE Closed Off-Road Vehicle	20	101	11/07 -	3959	
SPORTAGE Closed Off-Road Vehicle	20	101	11/07 -	3993	
SPORTAGE Closed Off-Road Vehicle	20	105	01/09 -	3959	
SPORTAGE Closed Off-Road Vehicle	20	105	01/09 -	3993	
SPORTAGE Closed Off-Road Vehicle	2.0 All-wheel Drive	104	11/07 -	3959	
SPORTAGE Closed Off-Road Vehicle	2.0 All-wheel Drive	104	11/07 -	3993	
SPORTAGE Closed Off-Road Vehicle	2.7 All-wheel Drive	127	11/07 -	3959	
SPORTAGE Closed Off-Road Vehicle	2.7 All-wheel Drive	127	11/07 -	3993	
TIBA				4090	4090
VENGA (YN)	1.4 CRDi 75	55	02/10 -	3959	
VENGA (YN)	1.4 CRDi 75	55	02/10 -		4040
VENGA (YN)	1.4 CRDi 75	57	02/10 -	3959	
VENGA (YN)	1.4 CRDi 75	57	02/10 -		4040
VENGA (YN)	1.4 CRDi 90	66	02/10 -	3959	
VENGA (YN)	1.4 CRDi 90	66	02/10 -		4040
VENGA (YN)	1.4 CVVT	66	02/10 -	3959	
VENGA (YN)	1.4 CVVT	66	02/10 -		4040
VENGA (YN)	1.6 CRDi 115	85	02/10 -	3959	
VENGA (YN)	1.6 CRDi 115	85	02/10 -		4040
VENGA (YN)	1.6 CRDi 128	94	02/10 -	3959	
VENGA (YN)	1.6 CRDi 128	94	02/10 -		4040
VENGA (YN)	1.6 CVVT	92	02/10 -	3959	
VENGA (YN)	1.6 CVVT	92	02/10 -		4040
LADA					
110 (2110)	15	52	01/95 – 12/05	3422	
110 (2110)	15	52	01/95 – 12/05	3552	
110 (2110)	15	57	01/95 – 12/05	3422	
110 (2110)	15	57	01/95 – 12/05	3552	
110 (2110)	1.5 16V	70	01/95 – 12/05	3422	
110 (2110)	1.5 16V	70	01/95 – 12/05	3552	
111 (2111)	1.5 16V	70	01/95 – 08/02	3422	
111 (2111)	1.5 16V	70	01/95 – 08/02	3552	
112 (2112)	15	54	01/95 -	3422	
112 (2112)	15	54	01/95 -	3552	
112 (2112)	15	57	01/95 – 09/04	3422	
112 (2112)	15	57	01/95 – 09/04	3552	
112 (2112)	1.5 16V	70	01/95 – 09/00	3422	
112 (2112)	1.5 16V	70	01/95 – 09/00	3552	
1200-1500 Estate	1200 (VAZ, WAS2102)	44	09/73 – 08/84	3393	
1200-1500 Estate	1300 (VAZ-21021)	49	01/81 – 12/82	3393	
1200-1500 Estate	1500 (VAZ2102)	54	09/73 – 06/85	3393	
1200-1600	1200 L/S (VAZ, WAS2101)	44	01/70 – 06/86	3393	
1200-1600	1300 (VAZ2101)	48	05/78 – 01/87	3393	
1200-1600	1300 (WAS21011)	51	08/74 – 08/84	3393	
1200-1600	1500 (WAS2103, WAS2106)	55	09/72 – 08/84	3393	
1200-1600	1500 N/S (VAZ2103)	55	11/75 – 10/86	3393	
1200-1600	1600 (WAS2106)	58	09/72 – 08/84	3393	
1200-1600	1600 N/L (VAZ2103)	57	03/79 – 10/86	3393	
IZH				3520	
KALINA Estate (1117)	16	60	10/04 – 12/13	3422	
KALINA Estate (1117)	16	60	10/04 – 12/13	3552	
KALINA Estate (1117)	16	62	01/10 -	3422	
KALINA Estate (1117)	16	62	01/10 -	3552	
KALINA Estate (1117)	1.4 16V	66	11/08 – 12/13	3422	
KALINA Estate (1117)	1.4 16V	66	11/08 – 12/13	3552	
KALINA Estate (1117)	1.4 16V LPG	65	11/08 -	3422	
KALINA Estate (1117)	1.4 16V LPG	65	11/08 -	3552	
KALINA Estate (2194)	16	64	11/13 -	3422	
KALINA Estate (2194)	16	64	11/13 -	3552	
KALINA Estate (2194)	16	72	11/13 -	3422	
KALINA Estate (2194)	16	72	11/13 -	3552	
KALINA Estate (2194)	16	78	11/13 -	3422	
KALINA Estate (2194)	16	78	11/13 -	3552	
KALINA Hatchback (1119)	16	60	10/04 – 12/13	3422	
KALINA Hatchback (1119)	16	60	10/04 – 12/13	3552	
KALINA Hatchback (1119)	16	62	01/10 – 12/13	3422	
KALINA Hatchback (1119)	16	62	01/10 – 12/13	3552	
KALINA Hatchback (1119)	1.4 16V	66	11/08 – 12/13	3422	

MAKE & MODEL		KW	YEAR		
LADA					
KALINA Hatchback (1119)	1.4 16V	66	11/08 – 12/13	3552	
KALINA Hatchback (1119)	1.4 16V LPG	65	11/08 – 12/13	3422	
KALINA Hatchback (1119)	1.4 16V LPG	65	11/08 – 12/13	3552	
KALINA Hatchback (1119)	1.6 16V	66	10/04 – 12/13	3422	
KALINA Hatchback (1119)	1.6 16V	66	10/04 – 12/13	3552	
KALINA Hatchback (2192)	16	64	06/13 -	3422	
KALINA Hatchback (2192)	16	64	06/13 -	3552	
KALINA Hatchback (2192)	16	72	06/13 -	3422	
KALINA Hatchback (2192)	16	72	06/13 -	3552	
KALINA Hatchback (2192)	16	78	06/13 -	3422	
KALINA Hatchback (2192)	16	78	06/13 -	3552	
KALINA Saloon (1118)	16	60	10/04 – 12/09	3422	
KALINA Saloon (1118)	16	60	10/04 – 12/09	3552	
KALINA Saloon (1118)	16	62	01/10 -	3422	
KALINA Saloon (1118)	16	62	01/10 -	3552	
KALINA Saloon (1118)	1.4 16V	66	11/08 – 12/09	3422	
KALINA Saloon (1118)	1.4 16V	66	11/08 – 12/09	3552	
KALINA Saloon (1118)	1.4 16V LPG	65	11/08 – 12/13	3422	
KALINA Saloon (1118)	1.4 16V LPG	65	11/08 – 12/13	3552	
KALINA Saloon (1118)	1.6 16V	66	10/04 -	3422	
KALINA Saloon (1118)	1.6 16V	66	10/04 -	3552	
LARGUS Box	16	62	03/12 -	3431	
LARGUS Box	16	62	03/12 -	3503	
LARGUS Box	16	62	03/12 -	3983	
LARGUS Box	16	77	03/12 -	3431	
LARGUS Box	16	77	03/12 -	3503	
LARGUS Box	16	77	03/12 -	3983	
LARGUS Estate	16	62	03/12 -	3431	
LARGUS Estate	16	62	03/12 -	3503	
LARGUS Estate	16	62	03/12 -	4141/1	
LARGUS Estate	16	77	03/12 -	3431	
LARGUS Estate	16	77	03/12 -	3503	
LARGUS Estate	16	77	03/12 -	4141/1	
NADESCHDA (2120)	17	60	12/97 – 12/06	3421	
NADESCHDA (2120)	18	60	12/97 – 12/06	3421	
NADESCHDA (2120)	1.7 i	59	12/97 – 12/06	3421	
NADESCHDA (2120)	1.8 i	67	12/97 – 12/06	3421	
NIVA (2121)	1600	56	04/80 – 12/87	3421	
NIVA (2121)	1600	56	12/76 – 05/87	3421	
NIVA (2121)	1600 4x4	54	01/87 – 03/95	3421	
NIVA (2121)	1600 4x4	63	10/86 – 12/91	3421	
NIVA (2121)	1700 i	59	06/96 – 12/06	3421	
NIVA (2121)	1700 i 4x4	60	10/00 – 12/10	3421	
NIVA (2121)	1700 i 4x4	61	09/10 -	3421	
NIVA (2121)	1900 Diesel	47	01/93 – 08/99	3421	
NIVA (2121)	1900 Diesel	55	01/99 – 12/06	3421	
NOVA (2105)	NOVA (2105)	49	05/93 – 04/04	3393	
NOVA (2105)	NOVA (2105)	52	06/89 – 04/12	3393	
NOVA (2105)	NOVA (2105)	55	03/85 – 04/12	3393	
NOVA (2105)	NOVA (2105)	56	01/88 – 10/01	3393	
NOVA (2105)	NOVA (2105)	62	06/96 – 04/12	3393	
NOVA (2105)	1200 Junior/L (VAZ, WAS2105	44	09/81 – 04/12	3393	
NOVA Estate (2104)	NOVA Estate (2104)	48	09/85 – 12/91	3393	
NOVA Estate (2104)	NOVA Estate (2104)	49	08/94 – 04/12	3393	
NOVA Estate (2104)	NOVA Estate (2104)	55	10/86 – 04/98	3393	
NOVA Estate (2104)	NOVA Estate (2104)	55	09/85 – 02/93	3393	
NOVA Estate (2104)	NOVA Estate (2104)	62	08/94 – 04/12	3393	
PRIORA Estate (2171)	16	60	10/09 -	3422	
PRIORA Estate (2171)	16	60	10/09 -	3552	
PRIORA Estate (2171)	16	72	10/09 -	3422	
PRIORA Estate (2171)	16	72	10/09 -	3552	
PRIORA Hatchback (2172)	16	60	12/08 -	3422	
PRIORA Hatchback (2172)	16	60	12/08 -	3552	
PRIORA Hatchback (2172)	16	72	12/08 -	3422	
PRIORA Hatchback (2172)	16	72	12/08 -	3552	
PRIORA Hatchback (2172)	1.6 LPG	71	12/08 -	3422	
PRIORA Hatchback (2172)	1.6 LPG	71	12/08 -	3552	
PRIORA Saloon (2170)	16	60	12/08 -	3422	
PRIORA Saloon (2170)	16	60	12/08 -	3552	
PRIORA Saloon (2170)	16	72	12/08 -	3422	
PRIORA Saloon (2170)	16	72	12/08 -	3552	

MAKE & MODEL   		KW	YEAR		
LADA					
PRIORA Saloon (2170)	1.6 LPG	71	03/09 -	3422	
PRIORA Saloon (2170)	1.6 LPG	71	03/09 -	3552	
SAMARA (2108, 2109, 2115)	1100	39	02/88 – 12/94	3422	
SAMARA (2108, 2109, 2115)	1100	39	02/88 – 12/94	3552	
SAMARA (2108, 2109, 2115)	1300	45	09/91 – 08/99	3422	
SAMARA (2108, 2109, 2115)	1300	45	09/91 – 08/99	3552	
SAMARA (2108, 2109, 2115)	1300	46	06/87 – 12/96	3422	
SAMARA (2108, 2109, 2115)	1300	46	06/87 – 12/96	3552	
SAMARA (2108, 2109, 2115)	1300	48	01/86 – 12/94	3422	
SAMARA (2108, 2109, 2115)	1300	48	01/86 – 12/94	3552	
SAMARA (2108, 2109, 2115)	1500	50	09/91 – 12/96	3422	
SAMARA (2108, 2109, 2115)	1500	50	09/91 – 12/96	3552	
SAMARA (2108, 2109, 2115)	1500	52	02/95 – 12/06	3422	
SAMARA (2108, 2109, 2115)	1500	52	02/95 – 12/06	3552	
SAMARA (2108, 2109, 2115)	1500	53	09/87 – 12/96	3422	
SAMARA (2108, 2109, 2115)	1500	53	09/87 – 12/96	3552	
SAMARA (2108, 2109, 2115)	1500	55	01/86 – 12/96	3422	
SAMARA (2108, 2109, 2115)	1500	55	01/86 – 12/96	3552	
SAMARA FORMA (21099)	1100	39	07/91 – 08/99	3422	
SAMARA FORMA (21099)	1100	39	07/91 – 08/99	3552	
SAMARA FORMA (21099)	1300	45	07/91 – 08/99	3422	
SAMARA FORMA (21099)	1300	45	07/91 – 08/99	3552	
SAMARA FORMA (21099)	1300	46	05/90 – 08/99	3422	
SAMARA FORMA (21099)	1300	46	05/90 – 08/99	3552	
SAMARA FORMA (21099)	1300	48	05/89 – 07/97	3422	
SAMARA FORMA (21099)	1300	48	05/89 – 07/97	3552	
SAMARA FORMA (21099)	1500	50	07/91 – 12/96	3422	
SAMARA FORMA (21099)	1500	50	07/91 – 12/96	3552	
SAMARA FORMA (21099)	1500	52	11/94 – 12/06	3422	
SAMARA FORMA (21099)	1500	52	11/94 – 12/06	3552	
SAMARA FORMA (21099)	1500	53	09/91 – 12/96	3422	
SAMARA FORMA (21099)	1500	53	09/91 – 12/96	3552	
TAVRIA	All Models			3447	
TOSCANA (2107)	TOSCANA (2107)	48	12/85 – 05/12	3393	
TOSCANA (2107)	TOSCANA (2107)	55	09/83 – 02/93	3393	
XRAY	1.6	78	02/16 -	4253	
XRAY	1.6	81	02/16 -	4253	
XRAY	1.8	90	02/16 -	4253	
LANCIA					
A 112	0.9 Junior (A112B/2)	29	03/81 – 06/86	3316	
A 112	0.9 Junior (A112B/2)	29	03/81 – 06/86	3485	
A 112	1.0 Abarth (A112B2/5)	51	03/78 – 02/84	3316	
A 112	1.0 Abarth (A112B2/5)	51	03/78 – 02/84	3485	
A 112	1.0 LX	35	03/84 – 12/86	3316	
A 112	1.0 LX	35	03/84 – 12/86	3485	
A 112 Fastback (Subcompact car-B Segment)	1.0 Abarth (A112 A2.000)		78-84	3357	
BETA MONTE CARLO (137_)	20	88	09/75 – 05/81	3316	
BETA MONTE CARLO (137_)	20	88	09/75 – 05/81	3351	
BETA MONTE CARLO (137_)	200 (123.020)	88	09/75 – 05/81		3317
BETA MONTE CARLO / SCORPION (137AS, 137BS) Targa	2.0 (134 AS.000)		75-81	3357	
DEDRA (835_)	1.6 16V (835EI)	76	01/96 – 07/99	3425	3425
DEDRA (835_)	1.6 16V (835EI)	76	01/96 – 07/99	3466	
DEDRA (835_)	1.6 16V (835EI)	76	01/96 – 07/99	3468	
DEDRA (835_)	1.6 i.e. (835AA)	66	08/89 – 06/94	3432	
DEDRA (835_)	1.6 i.e. (835AA)	66	08/89 – 06/94	3466	
DEDRA (835_)	1.6 i.e. (835AA)	66	08/89 – 06/94	3468	
DEDRA (835_)	1.6 i.e. (835AA)	66	08/89 – 06/94	3491	
DEDRA (835_)	1.6 i.e. (835AB)	57	08/89 – 03/93	3432	
DEDRA (835_)	1.6 i.e. (835AB)	57	08/89 – 03/93	3466	
DEDRA (835_)	1.6 i.e. (835AB)	57	08/89 – 03/93	3468	
DEDRA (835_)	1.6 i.e. (835AB)	57	08/89 – 03/93	3491	
DEDRA (835_)	1.6 i.e. (835AN)	55	04/93 – 07/99	3432	
DEDRA (835_)	1.6 i.e. (835AN)	55	04/93 – 07/99	3466	
DEDRA (835_)	1.6 i.e. (835AN)	55	04/93 – 07/99	3468	
DEDRA (835_)	1.6 i.e. (835AN)	55	04/93 – 07/99	3491	
DEDRA (835_)	1.6 LE (835EB) CAT	66	07/94 – 07/99	3432	
DEDRA (835_)	1.6 LE (835EB) CAT	66	07/94 – 07/99	3466	
DEDRA (835_)	1.6 LE (835EB) CAT	66	07/94 – 07/99	3468	
DEDRA (835_)	1.6 LE (835EB) CAT	66	07/94 – 07/99	3491	
DEDRA (835_)	1.8 16V LE (835FG)	83	03/96 – 07/99	3425	3425
DEDRA (835_)	1.8 16V LE (835FG)	83	03/96 – 07/99	3466	

BEŞER®

MAKE & MODEL		KW	YEAR		
LANCIA					
DEDRA (835_)	1.8 16V LE (835FG)	83	03/96 – 07/99	3468	
DEDRA (835_)	1.8 16V LE (835FG)	83	03/96 – 07/99	3618	
DEDRA (835_)	1.8 GT 16V (835EH)	96	03/96 – 07/99	3466	
DEDRA (835_)	1.8 GT 16V (835EH)	96	03/96 – 07/99	3468	
DEDRA (835_)	1.8 i.e. (835AC, 835BC)	80	09/89 – 06/94	3425	3425
DEDRA (835_)	1.8 i.e. (835AC, 835BC)	80	09/89 – 06/94	3466	
DEDRA (835_)	1.8 i.e. (835AC, 835BC)	80	09/89 – 06/94	3468	
DEDRA (835_)	1.8 i.e. (835AT)	66	08/93 – 07/99	3425	3425
DEDRA (835_)	1.8 i.e. (835AT)	66	08/93 – 07/99	3466	
DEDRA (835_)	1.8 i.e. (835AT)	66	08/93 – 07/99	3468	
DEDRA (835_)	1.8 i.e. (835BD, 835AD)	77	09/89 – 07/99	3425	3425
DEDRA (835_)	1.8 i.e. (835BD, 835AD)	77	09/89 – 07/99	3466	
DEDRA (835_)	1.8 i.e. (835BD, 835AD)	77	09/89 – 07/99	3468	
DEDRA (835_)	1.8 i.e. (835FA)	74	07/94 – 07/99	3425	3425
DEDRA (835_)	1.8 i.e. (835FA)	74	07/94 – 07/99	3466	
DEDRA (835_)	1.8 i.e. (835FA)	74	07/94 – 07/99	3468	
DEDRA (835_)	1.9 TDS (835EE, 835EF)	66	04/89 – 07/99	3425	3425
DEDRA (835_)	1.9 TDS (835EE, 835EF)	66	04/89 – 07/99	3466	
DEDRA (835_)	1.9 TDS (835EE, 835EF)	66	04/89 – 07/99	3468	
DEDRA (835_)	2.0 16V (835ED)	102	07/94 – 07/99	3466	
DEDRA (835_)	2.0 16V (835ED)	102	07/94 – 07/99	3468	
DEDRA (835_)	2.0 i.e. (835AI)	86	09/89 – 07/92	3425	3425
DEDRA (835_)	2.0 i.e. (835AI)	86	09/89 – 07/92	3466	
DEDRA (835_)	2.0 i.e. (835AI)	86	09/89 – 07/92	3468	
DEDRA (835_)	2.0 i.e. (835AI)	86	09/89 – 07/92	3618	
DEDRA (835_)	2.0 i.e. (835AL)	83	09/89 – 07/99	3425	3425
DEDRA (835_)	2.0 i.e. (835AL)	83	09/89 – 07/99	3466	
DEDRA (835_)	2.0 i.e. (835AL)	83	09/89 – 07/99	3468	
DEDRA (835_)	2.0 i.e. (835AL)	83	09/89 – 07/99	3618	
DEDRA SW (835_)	1.6 (835EB)	66	10/94 – 07/99	3466	
DEDRA SW (835_)	1.6 (835EB)	66	10/94 – 07/99	3468	
DEDRA SW (835_)	1.6 16V (835EI)	76	01/96 – 07/99	3466	
DEDRA SW (835_)	1.6 16V (835EI)	76	01/96 – 07/99	3468	
DEDRA SW (835_)	1.8 16V LE (835FG)	83	03/96 – 07/99	3466	
DEDRA SW (835_)	1.8 16V LE (835FG)	83	03/96 – 07/99	3468	
DEDRA SW (835_)	1.8 16V LE (835FG)	83	03/96 – 07/99	3618	
DEDRA SW (835_)	1.8 GT 16V (835EH)	96	03/96 – 07/99	3466	
DEDRA SW (835_)	1.8 GT 16V (835EH)	96	03/96 – 07/99	3468	
DEDRA SW (835_)	1.8 i.e. (835FA)	74	07/94 – 07/99	3466	
DEDRA SW (835_)	1.8 i.e. (835FA)	74	07/94 – 07/99	3468	
DEDRA SW (835_)	1.9 TDS (835EE, 835EF)	66	07/94 – 07/99	3466	
DEDRA SW (835_)	1.9 TDS (835EE, 835EF)	66	07/94 – 07/99	3468	
DEDRA SW (835_)	2.0 16V (835ED)	102	07/94 – 07/99	3466	
DEDRA SW (835_)	2.0 16V (835ED)	102	07/94 – 07/99	3468	
DELTA I (831_)	1.6 GT	77	11/82 – 04/86	3466	
DELTA I (831_)	1.6 GT	77	11/82 – 04/86	3468	
DELTA I (831_)	1.6 GT i.e. (831AB.010)	66	05/87 – 08/92	3425	3425
DELTA I (831_)	1.6 GT i.e. (831AB.010)	66	05/87 – 08/92	3466	
DELTA I (831_)	1.6 GT i.e. (831AB.010)	66	05/87 – 08/92	3468	
DELTA I (831_)	1.6 GT i.e. (831AB.016)	80	08/86 – 08/88	3466	
DELTA I (831_)	1.6 GT i.e. (831AB.016)	80	08/86 – 08/88	3468	
DELTA I (831_)	1.6 HF Turbo	96	10/83 – 12/86	3466	
DELTA I (831_)	1.6 HF Turbo	96	10/83 – 12/86	3468	
DELTA I (831_)	1.6 HF Turbo	122	08/86 – 05/93	3425	3425
DELTA I (831_)	1.6 HF Turbo (831AB.020)	103	08/86 – 08/88	3466	
DELTA I (831_)	1.6 HF Turbo (831AB.020)	103	08/86 – 08/88	3468	
DELTA I (831_)	1.6 HF Turbo (831AB.020S)	97	04/87 – 03/89	3425	3425
DELTA I (831_)	1.6 HF Turbo (831AB.020S)	97	04/87 – 03/89	3466	
DELTA I (831_)	1.6 HF Turbo (831AB.020S)	97	04/87 – 03/89	3468	
DELTA I (831_)	1.9 Turbo DS (831AB.021)	59	10/86 – 12/89	3466	
DELTA I (831_)	1.9 Turbo DS (831AB.021)	59	10/86 – 12/89	3468	
DELTA I (831_)	2.0 16V HF Evo Integrale (831AB.027)	155	06/93 01/94	3425	3425
DELTA I (831_)	2.0 16V HF Integrale	144	03/89 – 09/91	3425	3425
DELTA I (831_)	2.0 HF Integrale (831AB.024)	133	10/87 – 02/89	3425	3425
DELTA I (831_)	2.0 HF Integrale (831AB.024S,)	130	12/86 – 12/92	3425	3425
DELTA II (836_)	18	66	02/96 – 09/99	3466	
DELTA II (836_)	18	66	02/96 – 09/99	3468	
DELTA II (836_)	18	66	02/96 – 09/99	3618	
DELTA II (836_)	1.4 i.e. (836AF, 836AH)	51	10/94 – 08/99	3466	
DELTA II (836_)	1.4 i.e. (836AF, 836AH)	51	10/94 – 08/99	3468	
DELTA II (836_)	1.6 i.e. (836AD)	55	06/93 – 08/99	3466	

MAKE & MODEL		KW	YEAR		
LANCIA					
DELTA II (836_)	1.6 i.e. (836AD)	55	06/93 – 08/99	3468	
DELTA II (836_)	1.6 i.e. (836AP)	66	03/96 – 08/99	3466	
DELTA II (836_)	1.6 i.e. (836AP)	66	03/96 – 08/99	3468	
DELTA II (836_)	1.6 i.e. 16V (836AO)	76	01/96 – 08/99	3466	
DELTA II (836_)	1.6 i.e. 16V (836AO)	76	01/96 – 08/99	3468	
DELTA II (836_)	1.8 i.e. (836AE)	76	06/93 – 08/99	3466	
DELTA II (836_)	1.8 i.e. (836AE)	76	06/93 – 08/99	3468	
DELTA II (836_)	1.8 i.e. (836AE)	76	06/93 – 08/99	3618	
DELTA II (836_)	1.8 i.e. (836AG, 836AL)	66	07/94 – 08/99	3466	
DELTA II (836_)	1.8 i.e. (836AG, 836AL)	66	07/94 – 08/99	3468	
DELTA II (836_)	1.8 i.e. (836AG, 836AL)	66	07/94 – 08/99	3618	
DELTA II (836_)	1.8 i.e. 16V (836AQ)	83	03/96 – 08/99	3466	
DELTA II (836_)	1.8 i.e. 16V (836AQ)	83	03/96 – 08/99	3468	
DELTA II (836_)	1.8 i.e. 16V (836AQ)	83	03/96 – 08/99	3618	
DELTA II (836_)	1.9 TD (836AM, 836AN)	66	10/94 – 08/99	3466	
DELTA II (836_)	1.9 TD (836AM, 836AN)	66	10/94 – 08/99	3468	
DELTA II (836_)	1.9 TD (836AM, 836AN)	66	10/94 – 08/99	3618	
DELTA III (844_)	1.9 D Multijet	140	01/09 – 08/14	4121	
DELTA III (844_)	2.0 D Multijet	120	09/08 – 08/14	4121	
DELTA III (844_)	2.0 D Multijet	121	09/08 – 08/14	4121	
FLAVIA Convertible (JS_)	24	125	03/12 – 12/14		3893
FLAVIA Convertible (JS_)	24	129	03/12 – 12/14		3893
LYBRA (839_)	16	76	10/00 – 10/05		4123
LYBRA (839_)	1.6 16V (839AXA1A)	76	07/99 – 10/05		4123
LYBRA (839_)	1.8 16V (839AXB1A,839AXG1A)	96	07/99 – 10/05		4123
LYBRA (839_)	1.9 JTD	85	05/01 – 10/05		4123
LYBRA (839_)	1.9 JTD (839AXD1A)	77	07/99 – 09/00		4123
LYBRA (839_)	1.9 JTD (839AXI1A)	81	09/00 – 05/01		4123
LYBRA (839_)	2.0 20V (839AXC11,839AXC1A)	113	07/99 – 09/00		4123
LYBRA (839_)	2.0 20V (839AXH1A)	110	09/00 – 10/05		4123
LYBRA (839_)	2.4 20V	125	10/01 – 10/05		4123
LYBRA (839_)	2.4 JTD	110	05/02 – 10/05		4123
LYBRA (839_)	2.4 JTD (839AXE1A)	99	07/99 – 02/01		4123
LYBRA (839_)	2.4 JTD (839AXL1A)	103	09/00 – 05/02		4123
LYBRA SW (839_)	16	76	10/00 – 10/05		4123
LYBRA SW (839_)	1.6 16V (839BXA1A)	76	07/99 – 10/05		4123
LYBRA SW (839_)	1.8 16V (839BXB1A,839BXG1A)	96	07/99 – 10/05		4123
LYBRA SW (839_)	1.9 JTD (839BXD1A)	77	07/99 – 09/00		4123
LYBRA SW (839_)	1.9 JTD (839BXI1A)	81	09/00 – 05/01		4123
LYBRA SW (839_)	2.0 20V (839BXC11,839BXC1A)	113	07/99 – 09/00		4123
LYBRA SW (839_)	2.0 20V (839BXH1A)	110	09/00 – 10/05		4123
LYBRA SW (839_)	2.4 JTD	110	05/02 – 10/05		4123
LYBRA SW (839_)	2.4 JTD (839BXE1A)	99	10/99 – 09/00		4123
LYBRA SW (839_)	2.4 JTD (839BXL1A)	103	09/00 – 10/05		4123
LYBRA SW (839_)	1.9 JTD	85	05/01 – 10/05		4123
MUSA (350_)	14	57	09/05 – 09/12	3826/1	
MUSA (350_)	14	66	10/07 – 09/12	3826/1	
MUSA (350_)	14	70	10/04 – 09/12	3826/1	
MUSA (350_)	1.3 D Multijet	51	10/04 – 09/12	3826/1	
MUSA (350_)	1.3 D Multijet	70	03/09 – 09/12	3826/1	
MUSA (350_)	1.4 LPG	57	11/10 – 09/12	3826/1	
PHEDRA (179_)	2.0 (179AXA11)	100	09/02 – 11/10	3986	
PHEDRA (179_)	2.0 D Multijet	100	07/06 – 11/10	3986	
PHEDRA (179_)	2.0 JTD	79	07/03 – 11/10	3986	
PHEDRA (179_)	2.0 JTD	88	06/06 – 11/10	3986	
PHEDRA (179_)	2.0 JTD (179AXB1A)	80	09/02 – 11/10	3986	
PHEDRA (179_)	2.2 JTD (179AXC1A)	94	09/02 – 11/10	3986	
THEMA (834_)	2000 16V (834FA)	112	08/92 – 12/93	3425	3425
THEMA (834_)	2000 16V (834FA)	112	08/92 – 12/93		3536
THEMA (834_)	2000 16V Turbo (834AC)	133	12/88 – 06/90	3425	3425
THEMA (834_)	2000 16V Turbo (834AC)	133	12/88 – 06/90		3536
THEMA (834_)	2000 16V Turbo (834GC,834FC)	148	10/92 – 07/94	3425	3425
THEMA (834_)	2000 16V Turbo (834GC,834FC)	148	10/92 – 07/94		3536
THEMA (834_)	2000 i.e (834AB)	86	09/88 – 05/92	3425	3425
THEMA (834_)	2000 i.e (834AB)	86	09/88 – 05/92	3467	
THEMA (834_)	2000 i.e (834AB)	86	09/88 – 05/92		3536
THEMA (834_)	2000 i.e.	83	03/86 – 09/88	3467	
THEMA (834_)	2000 i.e.	83	03/86 – 09/88		3536
THEMA (834_)	2000 i.e. (834B)	88	11/84 – 09/88	3467	
THEMA (834_)	2000 i.e. (834B)	88	11/84 – 09/88		3536
THEMA (834_)	2000 i.e. (834BV)	85	09/87 – 05/92	3425	3425

MAKE & MODEL		KW	YEAR		
LANCIA					
THEMA (834_)	2000 i.e. (834BV)	85	09/87 – 05/92	3467	
THEMA (834_)	2000 i.e. (834BV)	85	09/87 – 05/92		3536
THEMA (834_)	2000 i.e. 16V (834AA)	108	05/88 – 08/92	3425	3425
THEMA (834_)	2000 i.e. 16V (834AA)	108	05/88 – 08/92	3467	
THEMA (834_)	2000 i.e. 16V (834AA)	108	05/88 – 08/92		3536
THEMA (834_)	2000 i.e. 16V (834AI)	104	02/89 – 05/92	3425	3425
THEMA (834_)	2000 i.e. 16V (834AI)	104	02/89 – 05/92		3536
THEMA (834_)	2000 i.e. 16V Turbo (834AL)	130	04/89 – 05/92	3425	3425
THEMA (834_)	2000 i.e. 16V Turbo (834AL)	130	04/89 – 05/92		3536
THEMA (834_)	2000 i.e. Turbo (834C)	122	11/84 – 12/87	3467	
THEMA (834_)	2000 i.e. Turbo (834C)	122	11/84 – 12/87		3536
THEMA (834_)	2000 i.e.Turbo (834CV)	110	07/86 – 05/90	3425	3425
THEMA (834_)	2000 i.e.Turbo (834CV)	110	07/86 – 05/90	3467	
THEMA (834_)	2000 i.e.Turbo (834CV)	110	07/86 – 05/90		3536
THEMA (834_)	2500 Turbo D (834D)	74	11/84 – 09/88	3467	
THEMA (834_)	2500 Turbo D (834D)	74	11/84 – 09/88		3536
THEMA (834_)	2500 Turbo DS (834AE)	85	06/88 – 05/92	3425	3425
THEMA (834_)	2500 Turbo DS (834AE)	85	06/88 – 05/92	3467	
THEMA (834_)	2500 Turbo DS (834AE)	85	06/88 – 05/92		3536
THEMA (834_)	2500 Turbo DS (834AM)	77	05/88 – 07/92	3425	3425
THEMA (834_)	2500 Turbo DS (834AM)	77	05/88 – 07/92	3467	
THEMA (834_)	2500 Turbo DS (834AM)	77	05/88 – 07/92		3536
THEMA (834_)	2500 Turbo DS (834FE,834LE)	85	05/92 – 07/94	3425	3425
THEMA (834_)	2500 Turbo DS (834FE,834LE)	85	05/92 – 07/94		3536
THEMA (834_)	2850 V6 i.e. (834AD, 834CD,834BD)	108	06/88 – 05/92	3425	3425
THEMA (834_)	2850 V6 i.e. (834AD, 834CD,834BD)	108	06/88 – 05/92	3467	
THEMA (834_)	2850 V6 i.e. (834AD, 834CD,834BD)	108	06/88 – 05/92		3536
THEMA (834_)	2850 V6 i.e. (834F)	110	11/84 – 09/88	3467	
THEMA (834_)	2850 V6 i.e. (834F)	110	11/84 – 09/88		3536
THEMA (834_)	3000 V6 (834GD, 834FD)	126	08/92 – 07/94	3425	3425
THEMA (834_)	3000 V6 (834GD, 834FD)	126	08/92 – 07/94		3536
THEMA (834_)	8.32 (834F)	158	09/87 – 05/89		3536
THEMA (834_)	8.32 (834FS)	151	10/87 – 05/92		3536
THEMA (LX_)	36	210	09/11 -	4006	
THEMA (LX_)	36	210	09/11 -		4018
THEMA (LX_)	3.0 D	140	09/11 -	4006	
THEMA (LX_)	3.0 D	140	09/11 -		4018
THEMA (LX_)	3.0 D	140	09/11 -	4198	
THEMA (LX_)	3.0 D	176	09/11 -	4006	
THEMA (LX_)	3.0 D	176	09/11 -		4018
THEMA (LX_)	3.0 D	176	09/11 -	4198	
THEMA (LX_)	3.6	210	09/11 -	4198	
THEMA (LX_)	3.6 4WD	210	09/11 -	4006	
THEMA (LX_)	3.6 4WD	210	09/11 -		4018
THEMA (LX_)	3.6 4WD	210	09/11 -	4198	
THEMA SW (834_)	3000 V6 (834GD, 834FD)	126	09/92 – 07/94		3536
THEMA SW (834_)	2000 16V (834FA)	112	05/92 – 07/94	3425	3425
THEMA SW (834_)	2000 16V (834FA)	112	05/92 – 07/94		3536
THEMA SW (834_)	2000 i.e. 16V (834AA)	108	05/89 – 08/92	3425	3425
THEMA SW (834_)	2000 i.e. 16V (834AA)	108	05/89 – 08/92		3536
THEMA SW (834_)	2000 i.e. 16V (834AI)	104	02/89 – 05/92	3425	3425
THEMA SW (834_)	2000 i.e. 16V (834AI)	104	02/89 – 05/92		3536
THEMA SW (834_)	2000 i.e. 16V Turbo (834AC)	133	12/88 – 06/90	3425	3425
THEMA SW (834_)	2000 i.e. 16V Turbo (834AC)	133	12/88 – 06/90		3536
THEMA SW (834_)	2000 i.e. 16V Turbo (834AL)	130	04/89 – 03/93	3425	3425
THEMA SW (834_)	2000 i.e. 16V Turbo (834AL)	130	04/89 – 03/93		3536
THEMA SW (834_)	2000 Turbo	110	01/89 – 03/92	3425	3425
THEMA SW (834_)	2000 Turbo	110	01/89 – 03/92		3536
THEMA SW (834_)	2000 Turbo 16V (834GC,834FC)	148	11/92 – 07/94	3425	3425
THEMA SW (834_)	2000 Turbo 16V (834GC,834FC)	148	11/92 – 07/94		3536
THEMA SW (834_)	2500 Turbo DS (834AE)	85	06/88 – 05/92	3425	3425
THEMA SW (834_)	2500 Turbo DS (834AE)	85	06/88 – 05/92	3467	
THEMA SW (834_)	2500 Turbo DS (834AE)	85	06/88 – 05/92		3536
THEMA SW (834_)	2500 Turbo DS (834AM)	77	05/88 – 07/92	3425	3425
THEMA SW (834_)	2500 Turbo DS (834AM)	77	05/88 – 07/92	3467	
THEMA SW (834_)	2500 Turbo DS (834AM)	77	05/88 – 07/92		3536
THEMA SW (834_)	2500 Turbo DS (834D)	74	03/87 – 09/90	3425	3425
THEMA SW (834_)	2500 Turbo DS (834D)	74	03/87 – 09/90	3467	
THEMA SW (834_)	2500 Turbo DS (834D)	74	03/87 – 09/90		3536
THEMA SW (834_)	2500 Turbo DS (834FE,834LE)	85	09/92 – 07/94	3425	3425
THEMA SW (834_)	2500 Turbo DS (834FE,834LE)	85	09/92 – 07/94		3536

MAKE & MODEL   		KW	YEAR		
LANCIA					
THEMA SW (834_)	3000 V6 (834GD, 834FD)	126	09/92 – 07/94	3425	3425
VOYAGER MPV (RT_)	2.8 CRD	120	09/11 – 12/14	4005	
VOYAGER MPV (RT_)	3.6 V6 VVT	208	09/11 – 12/14	4005	
Y (840_)	1.1 (840AE)	40	11/95 – 09/03	3608	
Y (840_)	1.1 (840AE)	40	11/95 – 09/03	3643	
Y (840_)	1.1 (840AE)	40	11/95 – 09/03	3897	
Y (840_)	1.2 (840AA, 840AF1A)	44	03/96 – 09/03	3608	
Y (840_)	1.2 (840AA, 840AF1A)	44	03/96 – 09/03	3643	
Y (840_)	1.2 (840AA, 840AF1A)	44	03/96 – 09/03	3897	
Y (840_)	1.2 16V (840AD)	63	04/97 – 09/03	3897	
Y (840_)	1.2 16V (840AG1A)	59	10/00 – 09/03	3897	
Y (840_)	1.4 12V (840AB)	59	10/96 – 09/03	3466	
Y (840_)	1.4 12V (840AB)	59	10/96 – 09/03	3468	
Y (840_)	1.4 12V (840AB)	59	10/96 – 09/03	3897	
Y (840_)	1.4 12V (840AC)	55	03/96 – 09/03	3466	
Y (840_)	1.4 12V (840AC)	55	03/96 – 09/03	3468	
Y (840_)	1.4 12V (840AC)	55	03/96 – 09/03	3897	
Y10 (156)	1.0 Fire (156 A.000)	41	03/85 – 07/89	3439	
Y10 (156)	1.0 Fire (156 A2.000)	33	03/85 – 06/89	3439	
Y10 (156)	1.0 Fire (156 A2.000)	37	12/87 – 02/90	3439	
Y10 (156)	1.0 Fire (156 A2.000)	37	03/85 – 02/90	3439	
Y10 (156)	1.0 Fire (156 A2.100)	32	06/85 – 06/91	3439	
Y10 (156)	1.0 Fire (156 A2.100)	32	12/86 – 02/89	3439	
Y10 (156)	1.0 Fire (156 A2.246)	33	12/87 – 02/92	3439	
Y10 (156)	1.0 Fire Catalytic-Conv (156AE) (156 A2.246)	33	10/87 – 02/92	3439	
Y10 (156)	1.0 Turbo (156 A1.000)	62	03/85 – 02/89	3439	
Y10 (156)	1.1 Avenue (176 B2.000)	40	01/95 – 12/95	3439	
Y10 (156)	1.1 Avenue (176 B2.000)	40	01/95 – 12/95	3439	
Y10 (156)	1.1 i.e (156 C.000)	42	08/89 – 06/92	3439	
Y10 (156)	1.1 i.e (156 C.000)	42	08/89 – 06/92	3439	
Y10 (156)	1.1 i.e. Fire (156 C.046)	37	07/89 – 09/95	3439	
Y10 (156)	1.1 i.e. Fire (156 C.046)	37	09/92 – 12/95	3439	
Y10 (156_)	1.1 Fire (156AG)	40	01/95 – 12/95	3424/1	
Y10 (156_)	1.1 i.e. Fire (156AG)	37	07/89 – 09/95	3424/1	
Y10 (156_)	1.0 (156C)	41	03/85 – 07/89	3424/1	
Y10 (156_)	1.0 Fire	37	03/85 – 02/90	3424/1	
Y10 (156_)	1.0 Fire (156AA)	33	03/85 – 06/89	3424/1	
Y10 (156_)	1.0 Fire (156AE) CAT	33	10/87 – 02/92	3424/1	
Y10 (156_)	1.0 Fire (156B, 156AD)	32	06/85 – 06/91	3424/1	
Y10 (156_)	1.0 Fire All-wheel Drive	32	12/86 – 02/89	3424/1	
Y10 (156_)	1.0 Fire All-wheel Drive	37	12/87 – 02/90	3424/1	
Y10 (156_)	1.0 Fire All-wheel Drive (156AE)	33	12/87 – 02/92	3424/1	
Y10 (156_)	1.0 Turbo (156D)	62	03/85 – 02/89	3466	
Y10 (156_)	1.0 Turbo (156D)	62	03/85 – 02/89	3468	
Y10 (156_)	1.1 Fire (156AG)	40	01/95 – 12/95	3466	
Y10 (156_)	1.1 Fire (156AG)	40	01/95 – 12/95	3468	
Y10 (156_)	1.1 Fire All-wheel Drive (156AG)	40	01/95 – 12/95	3466	
Y10 (156_)	1.1 Fire All-wheel Drive (156AG)	40	01/95 – 12/95	3468	
Y10 (156_)	1.1 i.e Fire (156AC)	42	08/89 – 06/92	3466	
Y10 (156_)	1.1 i.e Fire (156AC)	42	08/89 – 06/92	3468	
Y10 (156_)	1.1 i.e Fire (156AC)	42	08/89 – 06/92	3424/1	
Y10 (156_)	1.1 i.e Fire All-wheel Drive (156AC)	42	08/89 – 06/92	3466	
Y10 (156_)	1.1 i.e Fire All-wheel Drive (156AC)	42	08/89 – 06/92	3468	
Y10 (156_)	1.1 i.e. Fire All-wheel Drive (156AG)	37	07/89 – 09/95	3466	
Y10 (156_)	1.1 i.e. Fire All-wheel Drive (156AG)	37	07/89 – 09/95	3468	
Y10 (156_)	1.3 i.e. (156AB)	56	11/87 – 05/93	3466	
Y10 (156_)	1.3 i.e. (156AB)	56	11/87 – 05/93	3468	
Y10 (156_)	1.3 i.e. (156AF)	53	02/89 – 12/95	3466	
Y10 (156_)	1.3 i.e. (156AF)	53	02/89 – 12/95	3468	
LAND ROVER					
DEFENDER Cabrio (L316)	2.2 Td4 4x4 (L317)	90	08.11 - 02.16	3816	
DEFENDER Cabrio (L316)	2.4 Td4 4x4 (L317)	90	05.07 - 02.16	3816	
DEFENDER Cabrio (L316)	2.5 D 4x4 (L316)	51	09.90 - 09.01	3816	
DEFENDER Cabrio (L316)	2.5 Td5 4x4 (L316)	90	06.98 - 02.16	3816	
DEFENDER Cabrio (L316)	2.5 TDI 4x4 (L316)	83	08.90 - 12.01	3816	
DEFENDER Cabrio (L316)	3.5 4x4	86	09.90 - 08.93	3816	
DEFENDER Cabrio (L316)	3.5 4x4	100	09.90 - 12.98	3816	
DEFENDER Cabrio (LD_)	2.2 Td4 4x4	90	08/11 -	3412	
DEFENDER Cabrio (LD_)	2.2 Td4 4x4	90	08/11 -	3453	
DEFENDER Cabrio (LD_)	2.2 Td4 4x4	90	08/11 -		3512
DEFENDER Cabrio (LD_)	2.2 Td4 4x4	90	08/11 -		3512/2

MAKE & MODEL		KW	YEAR		
LAND ROVER					
DEFENDER Cabrio (LD_)	2.4 Td4 4x4	90	05/07 -	3412	
DEFENDER Cabrio (LD_)	2.4 Td4 4x4	90	05/07 -	3453	
DEFENDER Cabrio (LD_)	2.4 Td4 4x4	90	05/07 -		3512
DEFENDER Cabrio (LD_)	2.4 Td4 4x4	90	05/07 -		3512/2
DEFENDER Cabrio (LD_)	2.5 90 TDI 4x4	83	09/90 -	3412	
DEFENDER Cabrio (LD_)	2.5 90 TDI 4x4	83	09/90 -	3453	
DEFENDER Cabrio (LD_)	2.5 90 TDI 4x4	83	09/90 -		3512
DEFENDER Cabrio (LD_)	2.5 90 TDI 4x4	83	09/90 -		3512/2
DEFENDER Cabrio (LD_)	2.5 D 4x4	51	09/90 – 09/01	3412	
DEFENDER Cabrio (LD_)	2.5 D 4x4	51	09/90 – 09/01	3453	
DEFENDER Cabrio (LD_)	2.5 D 4x4	51	09/90 – 09/01		3512
DEFENDER Cabrio (LD_)	2.5 D 4x4	51	09/90 – 09/01		3512/2
DEFENDER Cabrio (LD_)	2.5 Td5 4x4	90	06/98 -	3412	
DEFENDER Cabrio (LD_)	2.5 Td5 4x4	90	06/98 -	3453	
DEFENDER Cabrio (LD_)	2.5 Td5 4x4	90	06/98 -		3512
DEFENDER Cabrio (LD_)	2.5 Td5 4x4	90	06/98 -		3512/2
DEFENDER Cabrio (LD_)	3.5 4x4	100	09/90 – 12/98	3412	
DEFENDER Cabrio (LD_)	3.5 4x4	100	09/90 – 12/98	3453	
DEFENDER Cabrio (LD_)	3.5 4x4	100	09/90 – 12/98		3512
DEFENDER Cabrio (LD_)	3.5 4x4	100	09/90 – 12/98		3512/2
DEFENDER Cabrio (LD_)	3.9 4x4	134	04/98 – 09/00	3412	
DEFENDER Cabrio (LD_)	3.9 4x4	134	04/98 – 09/00	3453	
DEFENDER Cabrio (LD_)	3.9 4x4	134	04/98 – 09/00		3512
DEFENDER Cabrio (LD_)	3.9 4x4	134	04/98 – 09/00		3512/2
DEFENDER Pick-up (L316)	2.2 Td4 4x4 (L317)	90	08.11 - 02.16	3816	
DEFENDER Pick-up (L316)	2.4 Td4 4x4 (L317)	90	05.07 - 02.16	3816	
DEFENDER Pick-up (L316)	2.5 Td5 4x4 (L316)	90	06.98 - 02.16	3816	
DEFENDER Pickup (LD_)	2.2 Td4 4x4	90	08/11 -	3412	
DEFENDER Pickup (LD_)	2.2 Td4 4x4	90	08/11 -	3453	
DEFENDER Pickup (LD_)	2.2 Td4 4x4	90	08/11 -		3512
DEFENDER Pickup (LD_)	2.2 Td4 4x4	90	08/11 -		3512/2
DEFENDER Pickup (LD_)	2.4 Td4 4x4	90	05/07 -	3412	
DEFENDER Pickup (LD_)	2.4 Td4 4x4	90	05/07 -	3453	
DEFENDER Pickup (LD_)	2.4 Td4 4x4	90	05/07 -		3512
DEFENDER Pickup (LD_)	2.4 Td4 4x4	90	05/07 -		3512/2
DEFENDER Pickup (LD_)	2.5 Td5 4x4	90	06/98 -	3412	
DEFENDER Pickup (LD_)	2.5 Td5 4x4	90	06/98 -	3453	
DEFENDER Pickup (LD_)	2.5 Td5 4x4	90	06/98 -		3512
DEFENDER Pickup (LD_)	2.5 Td5 4x4	90	06/98 -		3512/2
DEFENDER Pickup (LD_)	2.8 4x4	140	11/98 – 09/03	3412	
DEFENDER Pickup (LD_)	2.8 4x4	140	11/98 – 09/03	3453	
DEFENDER Pickup (LD_)	2.8 4x4	140	11/98 – 09/03		3512
DEFENDER Pickup (LD_)	2.8 4x4	140	11/98 – 09/03		3512/2
DEFENDER Pickup (LD_)	4.0 4x4	134	04/98 – 09/00	3412	
DEFENDER Pickup (LD_)	4.0 4x4	134	04/98 – 09/00	3453	
DEFENDER Pickup (LD_)	4.0 4x4	134	04/98 – 09/00		3512
DEFENDER Pickup (LD_)	4.0 4x4	134	04/98 – 09/00		3512/2
DEFENDER Platform şasi (L316)	2.2 Td4 4x4 (L317)	90	08.11 - 02.16	3816	
DEFENDER Platform/Chassis (LD_)	2.2 Td4 4x4	90	08/11 -	3412	
DEFENDER Platform/Chassis (LD_)	2.2 Td4 4x4	90	08/11 -	3453	
DEFENDER Platform/Chassis (LD_)	2.2 Td4 4x4	90	08/11 -		3512
DEFENDER Platform/Chassis (LD_)	2.2 Td4 4x4	90	08/11 -		3512/2
DEFENDER Station Wagon (L316)	2.2 Td4 4x4 (L317)	90	08.11 - 02.16	3816	
DEFENDER Station Wagon (L316)	2.2 Td4 4x4 (L317)	110	02.15 - 02.16	3816	
DEFENDER Station Wagon (L316)	2.4 Td4 4x4	103	07.07 - 02.16	3816	
DEFENDER Station Wagon (L316)	2.4 Td4 4x4 (L316)	90	05.07 - 02.16	3816	
DEFENDER Station Wagon (L316)	2.5 4x4	61	09.90 - 12.94	3816	
DEFENDER Station Wagon (L316)	2.5 D 4x4 (L316)	51	09.90 - 09.01	3816	
DEFENDER Station Wagon (L316)	2.5 Td5 4x4 (L316)	90	06.98 - 02.16	3816	
DEFENDER Station Wagon (L316)	2.5 TDI 4x4 (L316)	83	08.90 - 12.98	3816	
DEFENDER Station Wagon (L316)	3.5 4x4	86	09.90 - 08.93	3816	
DEFENDER Station Wagon (L316)	3.5 4x4	100	09.90 - 07.94	3816	
DEFENDER Station Wagon (L316)	3.5 4x4	100	09.90 - 12.98	3816	
DEFENDER Station Wagon (L316)	3.9 V8 4x4 (L316)	136	11.98 - 02.16	3816	
DEFENDER Station Wagon (LD_)	2.2 Td4 4x4	90	08/11 -	3412	
DEFENDER Station Wagon (LD_)	2.2 Td4 4x4	90	08/11 -	3453	
DEFENDER Station Wagon (LD_)	2.2 Td4 4x4	90	08/11 -		3512
DEFENDER Station Wagon (LD_)	2.2 Td4 4x4	90	08/11 -		3512/2
DEFENDER Station Wagon (LD_)	2.2 Td4 4x4	110	02/15 -	3412	
DEFENDER Station Wagon (LD_)	2.2 Td4 4x4	110	02/15 -	3453	
DEFENDER Station Wagon (LD_)	2.2 Td4 4x4	110	02/15 -		3512/2

MAKE & MODEL   		KW	YEAR		
LAND ROVER					
DEFENDER Station Wagon (LD_)	2.4 Td4 4x4	90	05/07 -	3412	
DEFENDER Station Wagon (LD_)	2.4 Td4 4x4	90	05/07 -	3453	
DEFENDER Station Wagon (LD_)	2.4 Td4 4x4	90	05/07 -		3512
DEFENDER Station Wagon (LD_)	2.4 Td4 4x4	90	05/07 -		3512/2
DEFENDER Station Wagon (LD_)	2.5 4x4	61	09/90 – 12/94	3412	
DEFENDER Station Wagon (LD_)	2.5 4x4	61	09/90 – 12/94	3453	
DEFENDER Station Wagon (LD_)	2.5 4x4	61	09/90 – 12/94		3512
DEFENDER Station Wagon (LD_)	2.5 4x4	61	09/90 – 12/94		3512/2
DEFENDER Station Wagon (LD_)	2.5 90,110 TDI 4x4	83	09/90 – 12/98	3412	
DEFENDER Station Wagon (LD_)	2.5 90,110 TDI 4x4	83	09/90 – 12/98	3453	
DEFENDER Station Wagon (LD_)	2.5 90,110 TDI 4x4	83	09/90 – 12/98		3512
DEFENDER Station Wagon (LD_)	2.5 90,110 TDI 4x4	83	09/90 – 12/98		3512/2
DEFENDER Station Wagon (LD_)	2.5 D 4x4	51	09/90 09/01	3412	
DEFENDER Station Wagon (LD_)	2.5 D 4x4	51	09/90 – 09/01	3453	
DEFENDER Station Wagon (LD_)	2.5 D 4x4	51	09/90 – 09/01		3512
DEFENDER Station Wagon (LD_)	2.5 D 4x4	51	09/90 – 09/01		3512/2
DEFENDER Station Wagon (LD_)	2.5 Td5 4x4	90	06/98 -	3412	
DEFENDER Station Wagon (LD_)	2.5 Td5 4x4	90	06/98 -	3453	
DEFENDER Station Wagon (LD_)	2.5 Td5 4x4	90	06/98 -		3512
DEFENDER Station Wagon (LD_)	2.5 Td5 4x4	90	06/98 -		3512/2
DEFENDER Station Wagon (LD_)	3.5 4x4	86	09/90 – 08/93	3412	
DEFENDER Station Wagon (LD_)	3.5 4x4	86	09/90 – 08/93	3453	
DEFENDER Station Wagon (LD_)	3.5 4x4	86	09/90 – 08/93		3512
DEFENDER Station Wagon (LD_)	3.5 4x4	86	09/90 – 08/93		3512/2
DEFENDER Station Wagon (LD_)	3.5 4x4	100	09/90 – 12/98	3412	
DEFENDER Station Wagon (LD_)	3.5 4x4	100	09/90 – 12/98	3453	
DEFENDER Station Wagon (LD_)	3.5 4x4	100	09/90 – 12/98		3512
DEFENDER Station Wagon (LD_)	3.5 4x4	100	09/90 – 12/98		3512/2
DEFENDER Station Wagon (LD_)	3.9 4x4	134	04/98 – 09/00	3412	
DEFENDER Station Wagon (LD_)	3.9 4x4	134	04/98 – 09/00	3453	
DEFENDER Station Wagon (LD_)	3.9 4x4	134	04/98 – 09/00		3512
DEFENDER Station Wagon (LD_)	3.9 4x4	134	04/98 – 09/00		3512/2
DEFENDER Station Wagon (LD_)	3.9 V8 4x4	136	11/98 -	3412	
DEFENDER Station Wagon (LD_)	3.9 V8 4x4	136	11/98 -	3453	
DEFENDER Station Wagon (LD_)	3.9 V8 4x4	136	11/98 -		3512
DEFENDER Station Wagon (LD_)	3.9 V8 4x4	136	11/98 -		3512/2
DISCOVERY I (LJ_)	2.0 16 V 4x4	99	06/89 – 10/98	3423/1	
DISCOVERY I (LJ_)	2.0 16 V 4x4	99	06/89 – 10/98		3661
DISCOVERY I (LJ_)	2.0 16 V 4x4	99	06/89 – 10/98		3771
DISCOVERY I (LJ_)	2.5 D 4x4	90	07/94 – 10/98	3423/1	
DISCOVERY I (LJ_)	2.5 D 4x4	90	07/94 – 10/98		3661
DISCOVERY I (LJ_)	2.5 D 4x4	90	06/93 – 10/98		3771
DISCOVERY I (LJ_)	2.5 TDI 4x4	83	10/89 – 10/98	3423/1	
DISCOVERY I (LJ_)	2.5 TDI 4x4	83	10/89 – 10/98		3661
DISCOVERY I (LJ_)	2.5 TDI 4x4	83	10/89 – 10/98		3771
DISCOVERY I (LJ_)	3.5 4x4	98	06/89 – 08/90	3423/1	
DISCOVERY I (LJ_)	3.5 4x4	98	06/89 – 08/90		3661
DISCOVERY I (LJ_)	3.5 4x4	98	06/89 – 08/90	3662	
DISCOVERY I (LJ_)	3.5 4x4	98	06/89 – 08/90		3771
DISCOVERY I (LJ_)	3.5 4x4	122	06/89 – 06/94	3423/1	
DISCOVERY I (LJ_)	3.5 4x4	122	06/89 – 06/94		3661
DISCOVERY I (LJ_)	3.5 4x4	122	06/89 – 06/94	3662	
DISCOVERY I (LJ_)	3.5 4x4	122	06/89 – 06/94		3771
DISCOVERY I (LJ_)	3.5 4x4 (SALLJG)	113	06/89 – 06/94	3423/1	
DISCOVERY I (LJ_)	3.5 4x4 (SALLJG)	113	06/89 – 06/94		3661
DISCOVERY I (LJ_)	3.5 4x4 (SALLJG)	113	06/89 – 06/94	3662	
DISCOVERY I (LJ_)	3.5 4x4 (SALLJG)	113	06/89 – 06/94		3771
DISCOVERY I (LJ_)	3.9 V8 4x4	134	09/93 – 10/98	3662	
DISCOVERY III (LA_)	2.7 TD 4x4	140	07/04 – 09/09		3944
DISCOVERY III (LA_)	2.7 TD 4x4	140	07/04 – 09/09	4293	
DISCOVERY III (LA_)	2.7 TD 4x4	140	07/04 – 09/09		4294
DISCOVERY III (LA_)	4.0 4x4	160	02/05 – 09/09		3944
DISCOVERY III (LA_)	4.0 4x4	160	02/05 – 09/09	4293	
DISCOVERY III (LA_)	4.0 4x4	160	02/05 – 09/09		4294
DISCOVERY III (LA_)	4.0 4x4	161	02/05 – 09/09		3944
DISCOVERY III (LA_)	4.0 4x4	161	02/05 – 09/09	4293	
DISCOVERY III (LA_)	4.0 4x4	161	02/05 – 09/09		4294
DISCOVERY III (LA_)	4.0 V6 4x4	160	10/04 – 09/09		3944
DISCOVERY III (LA_)	4.0 V6 4x4	160	10/04 – 09/09	4293	
DISCOVERY III (LA_)	4.0 V6 4x4	160	10/04 – 09/09		4294
DISCOVERY III (LA_)	4.4 4x4	220	07/04 – 09/09		3944

MAKE & MODEL		KW	YEAR		
LAND ROVER					
DISCOVERY III (LA_)	4.4 4x4	220	07/04 – 09/09	4293	
DISCOVERY III (LA_)	4.4 4x4	220	07/04 – 09/09		4294
DISCOVERY IV (L319)	5.0 V8 4x4	276	09/09 -	4314	
DISCOVERY IV (L319)	3.0 TD 4x4	183	07/12 -	4314	
DISCOVERY IV (L319)	3.0 4x4	250	08/13 -	4314	
DISCOVERY IV (L319)	3.0 TD 4x4	200	09/09 -	4314	
DISCOVERY IV (L319)	3.0 TD 4x4	155	05/10 -	4314	
DISCOVERY IV (L319)	3.0 SDV6 4x4	188	11/09 -	4314	
DISCOVERY IV (L319)	3.0 TD 4x4	180	09/09 -	4314	
DISCOVERY IV (L319)	4.0 4x4	160	09/09 -	4314	
DISCOVERY IV (LA_)	2.7 TD 4x4	140	09/09 -		3944
DISCOVERY IV (LA_)	2.7 TD 4x4	140	09/09 -	4293	
DISCOVERY IV (LA_)	2.7 TD 4x4	140	09/09 -		4294
DISCOVERY IV (LA_)	3.0 4x4	250	08/13 -		3944
DISCOVERY IV (LA_)	3.0 4x4	250	08/13 -		4294
DISCOVERY IV (LA_)	3.0 SDV6 4x4	188	11/09 -		3944
DISCOVERY IV (LA_)	3.0 SDV6 4x4	188	11/09 -	4293	
DISCOVERY IV (LA_)	3.0 SDV6 4x4	188	11/09 -		4294
DISCOVERY IV (LA_)	3.0 TD 4x4	155	05/10 -		3944
DISCOVERY IV (LA_)	3.0 TD 4x4	155	05/10 -		4294
DISCOVERY IV (LA_)	3.0 TD 4x4	180	09/09 -		3944
DISCOVERY IV (LA_)	3.0 TD 4x4	180	09/09 -		4294
DISCOVERY IV (LA_)	3.0 TD 4x4	183	07/12 -		3944
DISCOVERY IV (LA_)	3.0 TD 4x4	183	07/12 -		4294
DISCOVERY IV (LA_)	3.0 TD 4x4	200	09/09 -		3944
DISCOVERY IV (LA_)	3.0 TD 4x4	200	09/09 -		4294
DISCOVERY IV (LA_)	4.0 4x4	160	09/09 -		3944
DISCOVERY IV (LA_)	4.0 4x4	160	09/09 -	4293	
DISCOVERY IV (LA_)	4.0 4x4	160	09/09 -		4294
DISCOVERY IV (LA_)	5.0 V8 4x4	276	09/09 -		3944
DISCOVERY IV (LA_)	5.0 V8 4x4	276	09/09 -		4294
DISCOVERY SPORT (LC_)	2.0 D	110	08/15 -	4161	
DISCOVERY SPORT (LC_)	2.0 D 4x4	132	06/15 -	4161	
DISCOVERY V (L462)	3.0 4x4	250	09/16		4323
DISCOVERY V (L462)	3.0 D 4x4	155	09/16		4323
DISCOVERY V (L462)	3.0 D 4x4	190	09/16		4323
DISCOVERY V (L462)	2.0 D 4x4	132	09/16		4323
DISCOVERY V (L462)	2.0 D 4x4	177	09/17		4323
DISCOVERY V (L462)	3.0 D 4x4	183	09/16		4323
DISCOVERY V (L462)	2.0 D 4x4	132	09/16 -	4314	
DISCOVERY V (L462)	2.0 D 4x4	177	09/16 -	4314	
DISCOVERY V (L462)	3.0 4x4	250	09/16 -	4314	
DISCOVERY V (L462)	3.0 D 4x4	155	09/16 -	4314	
DISCOVERY V (L462)	3.0 D 4x4	183	09/16 -	4314	
DISCOVERY V (L462)	3.0 D 4x4	190	09/16 -	4314	
FREELANDER (LN_)	1.8 16V 4x4	86	11/00 – 10/06	3683	
FREELANDER (LN_)	1.8 16V 4x4	86	11/00 – 10/06	3872	
FREELANDER (LN_)	1.8 16V 4x4	86	11/00 – 10/06	4094	
FREELANDER (LN_)	1.8 i 16V 4x4	88	02/98 – 11/00	3683	
FREELANDER (LN_)	1.8 i 16V 4x4	88	02/98 – 11/00	3872	
FREELANDER (LN_)	1.8 i 16V 4x4	88	02/98 – 11/00	4094	
FREELANDER (LN_)	2.0 DI 4x4	72	02/98 – 11/00	3683	
FREELANDER (LN_)	2.0 DI 4x4	72	02/98 – 11/00	3872	
FREELANDER (LN_)	2.0 DI 4x4	72	02/98 – 11/00	4094	
FREELANDER (LN_)	2.0 Td4 4x4	80	03/01 – 10/06	3683	
FREELANDER (LN_)	2.0 Td4 4x4	80	03/01 – 10/06	3872	
FREELANDER (LN_)	2.0 Td4 4x4	80	03/01 – 10/06	4094	
FREELANDER (LN_)	2.0 Td4 4x4	82	11/00 – 10/06	3683	
FREELANDER (LN_)	2.0 Td4 4x4	82	11/00 – 10/06	3872	
FREELANDER (LN_)	2.0 Td4 4x4	82	11/00 – 10/06	4094	
FREELANDER (LN_)	2.5 V6 4x4	130	11/00 – 10/06	3683	
FREELANDER (LN_)	2.5 V6 4x4	130	11/00 – 10/06	3872	
FREELANDER (LN_)	2.5 V6 4x4	130	11/00 – 10/06	4094	
FREELANDER 2 (LF_)	2.0 Si4 4x4	177	10/11 – 10/14		4157
FREELANDER 2 (LF_)	2.0 Si4 4x4	177	10/11 – 10/14	4161	
FREELANDER 2 (LF_)	2.2 eD4	110	08/10 – 10/14		4157
FREELANDER 2 (LF_)	2.2 eD4	110	08/10 – 10/14	4161	
FREELANDER 2 (LF_)	2.2 SD4 4x4	140	08/10 – 10/14		4157
FREELANDER 2 (LF_)	2.2 SD4 4x4	140	08/10 – 10/14	4161	
FREELANDER 2 (LF_)	2.2 TD4 4x4	110	10/06 – 10/14		4157
FREELANDER 2 (LF_)	2.2 TD4 4x4	110	10/06 – 10/14	4161	

BESER

MAKE & MODEL		KW	YEAR		
LAND ROVER					
FREELANDER 2 (LF_)	2.2 TD4 4x4	112	01/07 – 10/14		4157
FREELANDER 2 (LF_)	2.2 TD4 4x4	112	01/07 – 10/14	4161	
FREELANDER 2 (LF_)	2.2 TD4 4x4	115	10/06 – 10/14		4157
FREELANDER 2 (LF_)	2.2 TD4 4x4	115	10/06 – 10/14	4161	
FREELANDER 2 (LF_)	2.2 TD4 4x4	118	10/06 – 10/14		4157
FREELANDER 2 (LF_)	2.2 TD4 4x4	118	10/06 – 10/14	4161	
FREELANDER 2 (LF_)	3.2 4x4	171	10/06 – 10/14	4161	
FREELANDER Soft Top (LN_)	1.8 i 16V 4x4	88	02/98 – 10/06	3683	
FREELANDER Soft Top (LN_)	1.8 i 16V 4x4	88	02/98 – 10/06	3872	
FREELANDER Soft Top (LN_)	1.8 i 16V 4x4	88	02/98 – 10/06	4094	
FREELANDER Soft Top (LN_)	2.0 DI 4x4	72	02/98 – 10/06	3683	
FREELANDER Soft Top (LN_)	2.0 DI 4x4	72	02/98 – 10/06	3872	
FREELANDER Soft Top (LN_)	2.0 DI 4x4	72	02/98 – 10/06	4094	
RANGE ROVER EVOQUE (LV_)	2.0 4x4	177	06/11 -	4161	
RANGE ROVER EVOQUE (LV_)	2.0 D	110	06/15 -	4161	
RANGE ROVER EVOQUE (LV_)	2.0 D 4x4	110	06/15 -	4161	
RANGE ROVER EVOQUE (LV_)	2.0 D 4x4	132	05/15 -	4161	
RANGE ROVER EVOQUE (LV_)	2.2 D	110	06/11 -	4161	
RANGE ROVER EVOQUE (LV_)	2.2 D 4x4	110	06/11 -	4161	
RANGE ROVER EVOQUE (LV_)	2.2 D 4x4	140	06/11 -	4161	
RANGE ROVER I (AE, AN, HAA, HAB, HAM, HBM, RE,RN)	3.5 4x4	97	07/70 – 08/81	3413	
RANGE ROVER I (AE, AN, HAA, HAB, HAM, HBM, RE,RN)	3.5 Vogue 4x4	93	08/81 – 09/90	3413	
RANGE ROVER I (AE, AN, HAA, HAB, HAM, HBM, RE,RN)	2.4 TD 4x4	78	04/86 – 12/90	3423/1	
RANGE ROVER I (AE, AN, HAA, HAB, HAM, HBM, RE,RN)	2.4 TD 4x4	89	10/89 – 02/92	3423/1	
RANGE ROVER I (AE, AN, HAA, HAB, HAM, HBM, RE,RN)	2.5 TD 4x4	89	10/89 – 04/94	3423/1	
RANGE ROVER I (AE, AN, HAA, HAB, HAM, HBM, RE,RN)	3.5 4x4	96	10/85 – 08/91	3423/1	
RANGE ROVER I (AE, AN, HAA, HAB, HAM, HBM, RE,RN)	3.5 4x4	107	01/87 – 09/90	3423/1	
RANGE ROVER I (AE, AN, HAA, HAB, HAM, HBM, RE,RN)	3.5 Vogue 4x4	93	08/81 – 09/90	3423/1	
RANGE ROVER I (AE, AN, HAA, HAB, HAM, HBM, RE,RN)	3.5 Vogue 4x4	120	10/85 – 09/90	3423/1	
RANGE ROVER I (AE, AN, HAA, HAB, HAM, HBM, RE,RN)	2.4 TD 4x4	83	04/86 – 07/94	3423/1	
RANGE ROVER I (AE, AN, HAA, HAB, HAM, HBM, RE,RN)	3.9 4x4 CAT	127	11/88 – 07/94	3423/1	
RANGE ROVER I (AE, AN, HAA, HAB, HAM, HBM, RE,RN)	3.9 Vogue SEI 4x4	134	11/88 – 07/94	3423/1	
RANGE ROVER I (AE, AN, HAA, HAB, HAM, HBM, RE,RN)	3.9 4x4 CAT	127	11/88 – 07/94		3661
RANGE ROVER I (AE, AN, HAA, HAB, HAM, HBM, RE,RN)	3.9 Vogue SEI 4x4	134	11/88 – 07/94		3661
RANGE ROVER I (AE, AN, HAA, HAB, HAM, HBM, RE,RN)	2.4 TD 4x4	78	04/86 – 12/90		3661
RANGE ROVER I (AE, AN, HAA, HAB, HAM, HBM, RE,RN)	2.4 TD 4x4	83	04/86 – 07/94		3661
RANGE ROVER I (AE, AN, HAA, HAB, HAM, HBM, RE,RN)	2.4 TD 4x4	83	04/86 – 07/94	3662	
RANGE ROVER I (AE, AN, HAA, HAB, HAM, HBM, RE,RN)	2.4 TD 4x4	89	10/89 – 02/92		3661
RANGE ROVER I (AE, AN, HAA, HAB, HAM, HBM, RE,RN)	2.4 TD 4x4	89	10/89 – 04/94		3661
RANGE ROVER I (AE, AN, HAA, HAB, HAM, HBM, RE,RN)	2.4 TD 4x4	89	10/89 – 02/92	3662	
RANGE ROVER I (AE, AN, HAA, HAB, HAM, HBM, RE,RN)	2.5 TD 4x4	89	10/89 – 04/94	3662	
RANGE ROVER I (AE, AN, HAA, HAB, HAM, HBM, RE,RN)	2.5 TDi 4x4	83	09/91 – 04/94	3662	
RANGE ROVER I (AE, AN, HAA, HAB, HAM, HBM, RE,RN)	2.5 TDi 4x4	83	09/91 – 04/94		3661
RANGE ROVER I (AE, AN, HAA, HAB, HAM, HBM, RE,RN)	3.5 4x4	96	10/85 – 08/91		3661
RANGE ROVER I (AE, AN, HAA, HAB, HAM, HBM, RE,RN)	3.5 4x4	107	01/87 – 09/90		3661
RANGE ROVER I (AE, AN, HAA, HAB, HAM, HBM, RE,RN)	3.5 Vogue 4x4	93	08/81 – 09/90		3661
RANGE ROVER I (AE, AN, HAA, HAB, HAM, HBM, RE,RN)	3.5 Vogue 4x4	120	10/85 – 09/90		3661
RANGE ROVER I (AE, AN, HAA, HAB, HAM, HBM, RE,RN)	3.9 4x4 CAT	127	11/88 – 07/94	3662	
RANGE ROVER I (AE, AN, HAA, HAB, HAM, HBM, RE,RN)	3.9 Vogue SEI 4x4	134	11/88 – 07/94	3662	
RANGE ROVER I (AE, AN, HAA, HAB, HAM, HBM, RE,RN)	4.3 Vogue LSE 4x4	149	09/92 – 07/94	3662	
RANGE ROVER I (AE, AN, HAA, HAB, HAM, HBM, RE,RN)	4.3 Vogue LSE 4x4	149	09/92 – 07/94		3661
RANGE ROVER I (AE, AN, HAA, HAB, HAM, HBM, RE,RN)	3.5 4x4	96	10/85 – 08/91		3771
RANGE ROVER I (AE, AN, HAA, HAB, HAM, HBM, RE,RN)	3.5 4x4	107	01/87 – 09/90		3771
RANGE ROVER I (AE, AN, HAA, HAB, HAM, HBM, RE,RN)	2.4 TD 4x4	78	04/86 – 12/90		3771
RANGE ROVER I (AE, AN, HAA, HAB, HAM, HBM, RE,RN)	2.4 TD 4x4	83	04/86 – 07/94		3771
RANGE ROVER I (AE, AN, HAA, HAB, HAM, HBM, RE,RN)	2.4 TD 4x4	89	10/89 – 02/92		3771
RANGE ROVER I (AE, AN, HAA, HAB, HAM, HBM, RE,RN)	2.5 TD 4x4	83	09/91 – 04/94		3771
RANGE ROVER I (AE, AN, HAA, HAB, HAM, HBM, RE,RN)	2.5 TD 4x4	89	10/89 – 04/94		3771
RANGE ROVER I (AE, AN, HAA, HAB, HAM, HBM, RE,RN)	3.5 Vogue 4x4	93	08/81 – 09/90		3771
RANGE ROVER I (AE, AN, HAA, HAB, HAM, HBM, RE,RN)	3.5 Vogue 4x4	120	10/85 – 09/90		3771
RANGE ROVER I (AE, AN, HAA, HAB, HAM, HBM, RE,RN)	3.9 Cat 4x4	127	11/88 – 07/94		3771
RANGE ROVER I (AE, AN, HAA, HAB, HAM, HBM, RE,RN)	3.9 Cat 4x4	134	11/88 – 07/94		3771
RANGE ROVER I (AE, AN, HAA, HAB, HAM, HBM, RE,RN)	4.3 Vogue LSE 4x4	149	09/92 – 07/94		3771
RANGE ROVER III (LM_)	3.0 D 4x4	130	03/02 – 08/12		3879
RANGE ROVER III (LM_)	3.0 D 4x4	130	03/02 – 08/12		3944
RANGE ROVER III (LM_)	3.0 D 4x4	130	03/02 – 08/12	4293	
RANGE ROVER III (LM_)	3.0 D 4x4	130	03/02 – 08/12		4294
RANGE ROVER III (LM_)	3.6 D 4x4	200	04/06 – 08/12		3944
RANGE ROVER III (LM_)	3.6 D 4x4	200	04/06 – 08/12	4292	
RANGE ROVER III (LM_)	3.6 D 4x4	200	04/06 – 08/12		4294
RANGE ROVER III (LM_)	4.2 4x4	291	05/05 – 08/12		3944

BEŞER

MAKE & MODEL		KW	YEAR		
LAND ROVER					
RANGE ROVER III (LM_)	4.2 4x4	291	05/05 – 08/12	4292	
RANGE ROVER III (LM_)	4.2 4x4	291	05/05 – 08/12		4294
RANGE ROVER III (LM_)	4.4 4x4	210	03/02 – 08/05		3944
RANGE ROVER III (LM_)	4.4 4x4	210	03/02 – 08/05		4294
RANGE ROVER III (LM_)	4.4 4x4	220	08/04 – 08/12		3944
RANGE ROVER III (LM_)	4.4 4x4	220	08/04 – 08/12	4293	
RANGE ROVER III (LM_)	4.4 4x4	220	08/04 – 08/12		4294
RANGE ROVER III (LM_)	4.4 4x4	225	05/05 – 08/12		3944
RANGE ROVER III (LM_)	4.4 4x4	225	05/05 – 08/12	4293	
RANGE ROVER III (LM_)	4.4 4x4	225	05/05 – 08/12		4294
RANGE ROVER III (LM_)	4.4 D 4x4	230	07/10 – 08/12		3944
RANGE ROVER III (LM_)	4.4 D 4x4	230	07/10 – 08/12	4291	
RANGE ROVER III (LM_)	5.0 4x4	276	09/09 – 08/12	4291	
RANGE ROVER III (LM_)	5.0 4x4	375	09/09 – 08/12	4291	
RANGE ROVER IV (L405)	3.0 4x4	280	06/15		4323
RANGE ROVER IV (L405)	3.0 4x4	250	10/13		4323
RANGE ROVER IV (L405)	3.0 D 4x4	155	10/13		4323
RANGE ROVER IV (L405)	3.0 D 4x4	183	08/12		4323
RANGE ROVER IV (L405)	3.0 D 4x4	190	08/12		4323
RANGE ROVER IV (L405)	3.0 D Hybrid 4x4	215	06/15		4323
RANGE ROVER IV (L405)	3.0 D Hybrid 4x4	225	06/15		4323
RANGE ROVER IV (L405)	5.0 4x4	405	06/15		4323
RANGE ROVER IV (L405)	3.0 D Hybrid 4x4	250	10/13		4323
RANGE ROVER IV (L405)	4.4 D 4x4	230	08/13		4323
RANGE ROVER IV (L405)	4.4 D V8 4x4	250	08/12		4323
RANGE ROVER IV (L405)	5.0 4x4	276	12/13		4323
RANGE ROVER IV (L405)	5.0 4x4	375	08/12		4323
RANGE ROVER IV (L405)	3.0 4x4	250	10/13 -	4314	
RANGE ROVER IV (L405)	3.0 4x4	280	06/15 -	4314	
RANGE ROVER IV (L405)	3.0 D 4x4	155	10/13 -	4314	
RANGE ROVER IV (L405)	5.0 4x4	276	12/13 -	4314	
RANGE ROVER IV (LG_)	3.0 4x4	250	10/13 -	4291	
RANGE ROVER IV (LG_)	3.0 4x4	280	06/15 -	4291	
RANGE ROVER IV (LG_)	3.0 D 4x4	155	10/13 -	4291	
RANGE ROVER IV (LG_)	3.0 D 4x4	183	08/12 -	4291	
RANGE ROVER IV (LG_)	3.0 D 4x4	190	08/12 -	4291	
RANGE ROVER IV (LG_)	3.0 D Hybrid 4x4	215	06/15 -	4291	
RANGE ROVER IV (LG_)	3.0 D Hybrid 4x4	225	06/15 -	4291	
RANGE ROVER IV (LG_)	3.0 D Hybrid 4x4	250	10/13 -	4291	
RANGE ROVER IV (LG_)	4.4 D V8 4x4	250	08/12 -	4291	
RANGE ROVER IV (LG_)	5.0 4x4	276	12/13 -	4291	
RANGE ROVER IV (LG_)	5.0 4x4	375	08/12 -	4291	
RANGE ROVER IV (LG_)	5.0 4x4	405	06/15 -	4291	
RANGE ROVER SPORT (L320)	3.0 D 4x4	188	06/11 - 03/13	4314	
RANGE ROVER SPORT (L320)	3.0 D 4x4	183	08/12 - 03/13	4314	
RANGE ROVER SPORT (L320)	3.6 D 4x4	200	04/06 - 03/13	4314	
RANGE ROVER SPORT (L320)	3.0 D 4x4	155	05/10 - 03/13	4314	
RANGE ROVER SPORT (L320)	3.0 D 4x4	180	09/09 - 03/13	4314	
RANGE ROVER SPORT (L320)	5.0 4x4	276	07/09 - 03/13	4314	
RANGE ROVER SPORT (L494)	3.0 4x4	250	04/13		4323
RANGE ROVER SPORT (L494)	3.0 4x4	280	06/15		4323
RANGE ROVER SPORT (L494)	3.0 D 4x4	155	04/13		4323
RANGE ROVER SPORT (L494)	3.0 D 4x4	183	04/13		4323
RANGE ROVER SPORT (L494)	3.0 D 4x4	190	04/13		4323
RANGE ROVER SPORT (L494)	3.0 D 4x4	215	04/13		4323
RANGE ROVER SPORT (L494)	2.0 D 4x4	177	08/16		4323
RANGE ROVER SPORT (L494)	3.0 D 4x4	225	09/14		4323
RANGE ROVER SPORT (L494)	3.0 D Hybrid 4x4	215	12/14		4323
RANGE ROVER SPORT (L494)	3.0 D Hybrid 4x4	225	06/15		4323
RANGE ROVER SPORT (L494)	3.0 D Hybrid 4x4	250	10/13		4323
RANGE ROVER SPORT (L494)	4.4 D 4x4	250	10/13		4323
RANGE ROVER SPORT (L494)	5.0 4x4	375	04/13		4323
RANGE ROVER SPORT (L494)	5.0 4x4	405	01/14		4323
RANGE ROVER SPORT (L494)	2.0 D 4x4	177	08/16 -	4314	
RANGE ROVER SPORT (L494)	3.0 4x4	250	04/13 -	4314	
RANGE ROVER SPORT (L494)	3.0 D 4x4	155	04/13 -	4314	
RANGE ROVER SPORT (L494)	3.0 D 4x4	183	04/13 -	4314	
RANGE ROVER SPORT (L494)	3.0 D 4x4	190	04/13 -	4314	
RANGE ROVER SPORT (L494)	3.0 D 4x4	215	04/13 -	4314	
RANGE ROVER SPORT (L494)	3.0 D 4x4	225	09/14 -	4314	
RANGE ROVER SPORT (LS_)	2.7 D 4x4	140	02/05 – 03/13		3944

MAKE & MODEL   		KW	YEAR		
LAND ROVER					
RANGE ROVER SPORT (LS_)	2.7 D 4x4	140	02/05 – 03/13	4292	
RANGE ROVER SPORT (LS_)	2.7 D 4x4	140	02/05 – 03/13	4293	
RANGE ROVER SPORT (LS_)	2.7 D 4x4	140	02/05 – 03/13		4294
RANGE ROVER SPORT (LS_)	3.0 D 4x4	155	05/10 – 03/13		3944
RANGE ROVER SPORT (LS_)	3.0 D 4x4	155	05/10 – 03/13		4294
RANGE ROVER SPORT (LS_)	3.0 D 4x4	180	09/09 – 03/13		3944
RANGE ROVER SPORT (LS_)	3.0 D 4x4	180	09/09 – 03/13		4294
RANGE ROVER SPORT (LS_)	3.0 D 4x4	183	08/12 – 03/13		3944
RANGE ROVER SPORT (LS_)	3.0 D 4x4	183	08/12 – 03/13		4294
RANGE ROVER SPORT (LS_)	3.0 D 4x4	188	06/11 – 03/13		3944
RANGE ROVER SPORT (LS_)	3.0 D 4x4	188	06/11 – 03/13		4294
RANGE ROVER SPORT (LS_)	3.6 D 4x4	200	04/06 – 03/13		3944
RANGE ROVER SPORT (LS_)	3.6 D 4x4	200	04/06 – 03/13	4292	
RANGE ROVER SPORT (LS_)	3.6 D 4x4	200	04/06 – 03/13		4294
RANGE ROVER SPORT (LS_)	4.2 4x4	287	02/05 – 03/13		3944
RANGE ROVER SPORT (LS_)	4.2 4x4	287	02/05 – 03/13	4292	
RANGE ROVER SPORT (LS_)	4.2 4x4	287	02/05 – 03/13		4294
RANGE ROVER SPORT (LS_)	4.4 4x4	220	02/05 – 03/13		3944
RANGE ROVER SPORT (LS_)	4.4 4x4	220	02/05 – 03/13	4292	
RANGE ROVER SPORT (LS_)	4.4 4x4	220	02/05 – 03/13	4293	
RANGE ROVER SPORT (LS_)	4.4 4x4	220	02/05 – 03/13		4294
RANGE ROVER SPORT (LS_)	5.0 4x4	276	07/09 – 03/13		3944
RANGE ROVER SPORT (LS_)	5.0 4x4	276	07/09 – 03/13		4294
RANGE ROVER SPORT (LS_)	5.0 4x4	372	04/09 – 03/13	4291	
RANGE ROVER SPORT (LS_)	5.0 4x4	375	09/09 – 03/13	4291	
RANGE ROVER SPORT (LW_)	3.0 4x4	280	06/15 -	4291	
RANGE ROVER SPORT (LW_)	3.0 D 4x4	225	09/14 -	4291	
RANGE ROVER SPORT (LW_)	3.0 D Hybrid 4x4	215	02/15 -	4291	
RANGE ROVER SPORT (LW_)	3.0 D Hybrid 4x4	225	06/15 -	4291	
RANGE ROVER SPORT (LW_)	3.0 D Hybrid 4x4	250	10/13 -	4291	
RANGE ROVER SPORT (LW_)	4.4 D 4x4	250	10/13 -	4291	
RANGE ROVER SPORT (LW_)	5.0 4x4	375	04/13 -	4291	
RANGE ROVER SPORT (LW_)	5.0 4x4	405	09/14 -	4291	
LANDWIND (JMC)					
X6 Closed Off-Road Vehicle	20	84	01/03 -	4118	
X6 Closed Off-Road Vehicle	20	84	06/01 -	4118	
X6 Closed Off-Road Vehicle	24	92	06/01 -	4118	
X6 Closed Off-Road Vehicle	2.4 All-wheel Drive	92	06/01 -	4118	
X6 Closed Off-Road Vehicle	2.5 D	105	07/07 -	4118	
X6 Closed Off-Road Vehicle	2.5 D All-wheel Drive	105	07/07 -	4118	
X6 Closed Off-Road Vehicle	2.8 TD	68	01/03 -	4118	
X6 Closed Off-Road Vehicle	2.8 TD	62	06/01 -	4118	
X6 Closed Off-Road Vehicle	2.8 TD All-wheel Drive	68	01/03 -	4118	
X6 Closed Off-Road Vehicle	2.8 TD All-wheel Drive	62	06/01 -	4118	
X8 Closed Off-Road Vehicle	20	98	09/11 -	3693	
X8 Closed Off-Road Vehicle	24	118	09/11 -	3693	
X8 Closed Off-Road Vehicle	2.4 4x4	118	09/11 -	3693	
X8 Closed Off-Road Vehicle	2.5 CRDI	105	08/09 – 08/12	3693	
X8 Closed Off-Road Vehicle	2.5 CRDI 4x4	105	08/09 – 08/12	3693	
X9 Closed Off-Road Vehicle	20	84	01/06 -	3657	
X9 Closed Off-Road Vehicle	20	84	06/04 -	3657	
X9 Closed Off-Road Vehicle	24	92	01/06 -	3657	
X9 Closed Off-Road Vehicle	24	92	06/04 -	3657	
X9 Closed Off-Road Vehicle	2.4 All-wheel Drive	92	01/06 -	3657	
X9 Closed Off-Road Vehicle	2.4 All-wheel Drive	92	06/04 -	3657	
X9 Closed Off-Road Vehicle	2.5 CRDI	105	04/06 -	3657	
X9 Closed Off-Road Vehicle	2.5 CRDI 4x4	105	08/09 -	3657	
X9 Closed Off-Road Vehicle	2.8 D	68	01/06 -	3657	
X9 Closed Off-Road Vehicle	2.8 D All-wheel Drive	68	01/06 -	3657	
X9 Closed Off-Road Vehicle	2.8 TD	62	06/04 -	3657	
X9 Closed Off-Road Vehicle	2.8 TD All-wheel Drive	62	06/04 -	3657	
X9 Closed Off-Road Vehicle	20	84	01/06 -	3757	
X9 Closed Off-Road Vehicle	20	84	06/04 -	3757	
X9 Closed Off-Road Vehicle	24	92	01/06 -	3757	
X9 Closed Off-Road Vehicle	24	92	06/04 -	3757	
X9 Closed Off-Road Vehicle	2.4 All-wheel Drive	92	01/06 -	3757	
X9 Closed Off-Road Vehicle	2.4 All-wheel Drive	92	06/04 -	3757	
X9 Closed Off-Road Vehicle	2.5 CRDI	105	04/06 -	3757	
X9 Closed Off-Road Vehicle	2.5 CRDI 4x4	105	08/09 -	3757	
X9 Closed Off-Road Vehicle	2.8 D	68	01/06 -	3757	
X9 Closed Off-Road Vehicle	2.8 D All-wheel Drive	68	01/06 -	3757	

MAKE & MODEL		KW	YEAR		
LANDWIND (JMC)					
X9 Closed Off-Road Vehicle	2.8 TD	62	06/04 -	3757	
X9 Closed Off-Road Vehicle	2.8 TD All-wheel Drive	62	06/04 -	3757	
X9 Closed Off-Road Vehicle	20	84	01/06 -	3857	
X9 Closed Off-Road Vehicle	20	84	06/04 -	3857	
X9 Closed Off-Road Vehicle	24	92	01/06 -	3857	
X9 Closed Off-Road Vehicle	24	92	06/04 -	3857	
X9 Closed Off-Road Vehicle	2.4 All-wheel Drive	92	01/06 -	3857	
X9 Closed Off-Road Vehicle	2.4 All-wheel Drive	92	06/04 -	3857	
X9 Closed Off-Road Vehicle	2.5 CRDI	105	04/06 -	3857	
X9 Closed Off-Road Vehicle	2.5 CRDI 4x4	105	08/09 -	3857	
X9 Closed Off-Road Vehicle	2.8 TD	68	01/06 -	3857	
X9 Closed Off-Road Vehicle	2.8 TD	62	06/04 -	3857	
X9 Closed Off-Road Vehicle	2.8 TD All-wheel Drive	68	01/06 -	3857	
X9 Closed Off-Road Vehicle	2.8 TD All-wheel Drive	62	06/04 -	3857	
LDV					
400 Box	2.5 D	51	11/86 – 03/89	3413	
400 Box	2.5 D	53	04/89 – 03/96	3413	
400 Box	2.5 D	71	04/89 – 03/96	3413	
400 Bus	2.5 D	53	04/89 – 03/96	3413	
400 Bus	2.5 TD	71	11/95 – 10/98	3413	
400 Platform/Chassis	2.5 D	51	11/86 – 03/89	3413	
400 Platform/Chassis	2.5 D	53	04/89 – 10/96	3413	
400 Platform/Chassis	2.5 TD	71	11/95 – 10/96	3413	
CONVOY Box	2.4 D	55	03/02 – 04/09	3413	
CONVOY Box	2.4 D	66	03/02 – 04/09	3413	
CONVOY Box	2.5 D	53	04/96 – 09/97	3413	
CONVOY Box	2.5 D	71	04/96 – 06/05	3413	
CONVOY Box	2.5 DI	56	10/98 – 04/09	3413	
CONVOY Box	2.5 TDI	74	10/98 – 04/09	3413	
CONVOY Bus	2.5 D	53	04/96 – 02/02	3413	
CONVOY Bus	2.5 D	56	10/97 – 04/09	3413	
CONVOY Bus	2.5 D	71	04/96 – 02/02	3413	
CONVOY Bus	2.5 D	74	10/97 – 04/09	3413	
CONVOY Platform/Chassis	2.5 D	53	04/96 – 09/97	3413	
CONVOY Platform/Chassis	2.5 D	71	04/96 – 06/06	3413	
CONVOY Platform/Chassis	2.5 DI	56	10/98 – 04/09	3413	
CONVOY Platform/Chassis	2.5 TDI	74	10/98 – 04/09	3413	
CUB	2.3 D	53	08/98 – 09/01	3888	
LEXUS					
ES (ACV40_, GSV40_)	240 (ACV40_)	123	08/09 – 06/12	3948	
ES (ACV40_, GSV40_)	240 (ACV40_)	123	08/09 – 06/12		3949
ES (ACV40_, GSV40_)	3.5 (GSV40_)	204	05/06 – 06/12	3948	
ES (ACV40_, GSV40_)	3.5 (GSV40_)	204	05/06 – 06/12		3949
ES (ASV60_, AVV60_, GSV60_)	200	123	08/15 -	3948	
ES (ASV60_, AVV60_, GSV60_)	200	123	08/15 -		3949
ES (ASV60_, AVV60_, GSV60_)	250 (AVV60_, ASV60_)	135	06/12 -	3948	
ES (ASV60_, AVV60_, GSV60_)	250 (AVV60_, ASV60_)	135	06/12 -		3949
ES (ASV60_, AVV60_, GSV60_)	300h (ASV60_, AVV60_)	118	06/12 -	3948	
ES (ASV60_, AVV60_, GSV60_)	300h (ASV60_, AVV60_)	118	06/12 -		3949
ES (ASV60_, AVV60_, GSV60_)	350 (GSV60_)	183	01/14 -	3948	
ES (ASV60_, AVV60_, GSV60_)	350 (GSV60_)	183	01/14 -		3949
ES (ASV60_, AVV60_, GSV60_)	350 (GSV60_)	204	06/12 -	3948	
ES (ASV60_, AVV60_, GSV60_)	350 (GSV60_)	204	06/12 -		3949
ES (ASV60_, AVV60_, GSV60_)	350 (GSV60_)	204	06/12 -	4255	
ES (MCV_, VZV_)	3.0 (MCV20_, MCV30_)	149	10/96 – 07/01		3776
ES (MCV_, VZV_)	3.0 (MCV20_, MCV30_)	149	10/96 – 07/01	3822	
ES (MCV_, VZV_)	3.0 (MCV20_, MCV30_)	149	10/96 – 07/01		3876
ES (MCV_, VZV_)	3.0 (MCV20_, MCV30_)	157	08/01 – 10/06		3911
ES (MCV_, VZV_)	3.0 (MCV20_, MCV30_)	157	08/01 – 10/06	4003	
ES (MCV_, VZV_)	3.0 (MCV20_, MCV30_)	158	10/01 – 06/08		3911
ES (MCV_, VZV_)	3.0 (MCV20_, MCV30_)	158	10/01 – 06/08	4003	
ES (MCV_, VZV_)	3.0 (MCV30_, MCV20_)	140	10/96 – 07/01		3776
ES (MCV_, VZV_)	3.0 (MCV30_, MCV20_)	140	10/96 – 07/01	3822	
ES (MCV_, VZV_)	3.0 (MCV30_, MCV20_)	140	10/96 – 07/01		3876
ES (MCV_, VZV_)	3.0 (MCV30_, MCV20_)	140	10/96 – 07/01	4086	
ES (MCV_, VZV_)	3.3 (MCV31_)	168	06/03 – 10/06		3911
ES (MCV_, VZV_)	3.3 (MCV31_)	168	06/03 – 10/06	4003	
ES (VCV10_, VZV21_)	300 (MCV10_, VCV10_)	138	09/91 – 12/97	4086	
GS (GRL1_, GWL1_)	200t	180	09/15 -	4276	
GS (GRL1_, GWL1_)	250 (GRL11_)	154	01/12 -	4276	

MAKE & MODEL		KW	YEAR		
LEXUS					
GS (GRL1_, GWL1_)	250 (GRL11_)	158	01/12 -	4276	
GS (GRL1_, GWL1_)	450h (GRL10_, GRL15_, GWL10_)	215	06/12 -	4276	
GS (GRL1_, GWL1_)	300h (AWL10_, GRL11_)	133	10/13 -	4276	
GS (GRL1_, GWL1_)	350 (GRL10_, GRL15_, GWL10_)	234	01/12 -	4276	
GS (GRL1_, GWL1_)	350 AWD (GRL10_, GRL15_, GWL10_)	232	09/15 -	4276	
GS (GRL1_, GWL1_)	350 AWD (GRL10_, GRL15_, GWL10_)	234	01/12 -	4276	
GS (GRL1_, GWL1_)	450h (GRL10_, GRL15_, GWL10_)	217	01/12 -	4276	
GS (GRS19_, UZS19_, URS19_)	300 (GRS195_, GRS190_)	170	04/05 – 11/11		4113
GS (GRS19_, UZS19_, URS19_)	300 (GRS195_, GRS190_)	170	04/05 11/11	4276	
GS (GRS19_, UZS19_, URS19_)	300 (GRS195_, GRS190_)	183	04/05 – 11/11		4113
GS (GRS19_, UZS19_, URS19_)	300 (GRS195_, GRS190_)	183	04/05 11/11	4276	
GS (GRS19_, UZS19_, URS19_)	350 (GRS191_)	232	05/08 – 11/11		4113
GS (GRS19_, UZS19_, URS19_)	350 (GRS191_)	232	05/08 11/11	4276	
GS (GRS19_, UZS19_, URS19_)	350 (GRS196_, GRS191_)	226	04/08 11/11	4276	
GS (GRS19_, UZS19_, URS19_)	350 AWD (GRS196_, GRS191_)	226	04/08 11/11	4276	
GS (GRS19_, UZS19_, URS19_)	350 AWD (GRS196_, GRS191_)	232	05/08- 11/11		4113
GS (GRS19_, UZS19_, URS19_)	350 AWD (GRS196_, GRS191_)	232	05/08 11/11	4276	
GS (GRS19_, UZS19_, URS19_)	4.3 VVTi (UZS190_)	221	04/05 – 11/11		4113
GS (GRS19_, UZS19_, URS19_)	4.3 VVTi (UZS190_)	221	04/05 11/11	4276	
GS (GRS19_, UZS19_, URS19_)	430 (UZS190_)	208	04/05 – 11/11		4113
GS (GRS19_, UZS19_, URS19_)	430 (UZS190_)	208	04/05 11/11	4276	
GS (GRS19_, UZS19_, URS19_)	450h (GRS196_, GRS191_, GWS191_)	218	02/06 – 11/11		4113
GS (GRS19_, UZS19_, URS19_)	450h (GRS196_, GRS191_, GWS191_)	218	02/06 11/11	4276	
GS (GRS19_, UZS19_, URS19_)	450h (GWS191_, GRS196_, GRS191_)	254	02/06 11/11	4276	
GS (GRS19_, UZS19_, URS19_)	460 (UZS190_, URS190_)	255	01/05 – 11/11		4113
GS (GRS19_, UZS19_, URS19_)	460 (UZS190_, URS190_)	255	01/05 11/11	4276	
GS (GRS19_, UZS19_, URS19_)	450h (GWS191_, GRS196_,GRS191_)	254	02/06 – 11/11		4113
GS (GRS19_, UZS19_, URS19_)	350 (GRS196_, GRS191_)	226	04/08 – 11/11		4113
GS (GRS19_, UZS19_, URS19_)	350 AWD (GRS196_, GRS191_)	226	04/08 – 11/11		4113
GS (JZS147_)	300 (JZS147_)	156	01/93 – 08/97	3915	
GS (JZS147_)	300 (JZS147_)	156	01/93 – 08/97		4099
GS (JZS160_, UZS161_, UZS160_)	300 (JZS160_)	161	10/00 – 12/04	3915	
GS (JZS160_, UZS161_, UZS160_)	300 (JZS160_)	161	10/00 – 12/04		4085
GS (JZS160_, UZS161_, UZS160_)	300 (JZS160_)	163	08/97 – 10/00	3915	
GS (JZS160_, UZS161_, UZS160_)	300 (JZS160_)	163	08/97 – 10/00		4085
GS (JZS160_, UZS161_, UZS160_)	400 (UZS160_)	216	12/97 – 11/00	3915	
GS (JZS160_, UZS161_, UZS160_)	400 (UZS160_)	216	12/97 – 11/00		4085
GS (JZS160_, UZS161_, UZS160_)	430 (UZS161_)	208	11/00 – 12/04	3915	
GS (JZS160_, UZS161_, UZS160_)	430 (UZS161_)	208	11/00 – 12/04		4085
GX (_J12_)	470	175	11/01 – 11/09	3693	
GX (_J12_)	470	199	11/01 – 11/09	3693	
GX (URJ15_)	460	218	11/09 -	3693	
GX (URJ15_)	460	218	11/09 -	3891	
GX (URJ15_)	460	225	01/10 -	3693	
GX (URJ15_)	460	225	01/10 -	3891	
GX (URJ15_)	400 4WD	202	09/13 -	3693	
GX (URJ15_)	400 4WD	202	09/13 -	3891	
HS (ANF10)	250h	110	07/09 -		3949
HS (ANF10)	250h	110	07/09 -	3953	
IS C (GSE2_)	250	153	04/09 -		4113
IS C (GSE2_)	250	157	08/10 -		4113
IS C (GSE2_)	300	170	11/10 -		4113
IS C (GSE2_)	300	170	11/10 -	4276	
IS C (GSE2_)	350	228	04/09 -		4113
IS C (GSE2_)	350	228	04/09 -	4276	
IS C (GSE2_)	350	234	11/10 -		4113
IS C (GSE2_)	350	234	11/10 -	4276	
IS I (JCE1_, GXE1_)	200	114	04/99 – 07/05	3915	
IS I (JCE1_, GXE1_)	200	114	04/99 – 07/05		4085
IS I (JCE1_, GXE1_)	300	157	09/01 – 07/05	3915	
IS I (JCE1_, GXE1_)	300	157	09/01 – 07/05		4085
IS II (GSE2_, ALE2_, USE2_)	250	158	11/10 – 03/13		4113
IS II (GSE2_, ALE2_, USE2_)	350	234	09/10 -03/13		4113
IS II (GSE2_, ALE2_, USE2_)	200d	110	07/10 – 03/13		4113
IS II (GSE2_, ALE2_, USE2_)	220d (ALE20)	130	10/05 – 03/13		4113
IS II (GSE2_, ALE2_, USE2_)	250 (GSE20)	153	10/05 – 03/13		4113
IS II (GSE2_, ALE2_, USE2_)	250 AWD	153	10/05 – 03/13		4113
IS II (GSE2_, ALE2_, USE2_)	250 AWD	158	11/10 – 03/13		4113
IS II (GSE2_, ALE2_, USE2_)	350 (GSE21_)	228	10/05 – 03/13		4113
IS II (GSE2_, ALE2_, USE2_)	350 AWD	228	10/05 – 03/13		4113
IS III (GSE3_, AVE3_)	350	233	04/13 -	4276	

MAKE & MODEL   		KW	YEAR		
LEXUS					
IS III (GSE3_, AVE3_)	200t	180	06/15 -	4276	
IS SportCross	200	114	10/02 – 10/05	3915	
IS SportCross	200	114	10/02 – 10/05		4085
IS SportCross	300	157	10/01 – 10/05	3915	
IS SportCross	300	157	10/01 – 10/05		4085
LS (UCF10)	400	180	12/89 – 12/94	4086	
LS (UCF10)	400	180	12/89 – 12/94		4275
LS (UCF20)	400	194	12/94 – 08/97	4274	
LS (UCF20)	400	194	12/94 – 08/97		4275
LS (UCF20)	400	203	09/98 – 10/00	4274	
LS (UCF20)	400	203	09/98 – 10/00		4275
LS (UCF20)	400	209	09/97 – 10/00	4274	
LS (UCF20)	400	209	09/97 – 10/00		4275
LS (UCF20)	400	216	10/97 – 07/00	4274	
LS (UCF20)	400	216	10/97 – 07/00		4275
LS (UCF30)	430	207	10/00 – 08/06		4083
LS (UCF30)	430	207	10/00 08/06	4276/1	
LS (UCF30)	430	208	10/00 08/06	4276/1	
LS (UVF4_, USF4_)	460	255	05/08 -		4277
LS (UVF4_, USF4_)	460	270	10/09 -		4277
LS (UVF4_, USF4_)	460	280	04/06 -		4277
LS (UVF4_, USF4_)	460	283	12/08 -		4277
LS (UVF4_, USF4_)	460	285	09/12 -		4277
LS (UVF4_, USF4_)	460 AWD	270	12/08 -		4277
LS (UVF4_, USF4_)	460 AWD	272	09/12 -		4277
LS (UVF4_, USF4_)	460 AWD	283	10/09 -		4277
LS (UVF4_, USF4_)	600h	290	08/07 -		4277
LX (URJ201)	460	234	01/12 -	3891	
LX (URJ201)	460	234	01/12 -		3997
LX (URJ201)	570	270	11/07 -	3891	
LX (URJ201)	570	270	11/07 -		3997
LX (URJ201)	570	282	11/07 -	3891	
LX (URJ201)	570	282	11/07 -		3997
LX (URJ201)	570	286	09/09 -	3996	
LX (URJ201)	570	286	09/09 -		3997
LX (UZJ100)	470	170	05/98 – 03/08	3829	
LX (UZJ100)	470	170	05/98 – 03/08	3830	
LX (UZJ100)	470	173	09/01 – 03/08	3829	
LX (UZJ100)	470	173	09/01 – 03/08	3830	
LX (UZJ100)	470	197	05/98 – 10/02	3829	
LX (UZJ100)	470	197	05/98 – 10/02	3830	
LX (UZJ100)	470	202	08/02 – 03/08	3829	
LX (UZJ100)	470	202	08/02 – 03/08	3830	
NX (ZGZ1_, AGZ1_, AYZ1_)	200	110	11/14 -	4255	
NX (ZGZ1_, AGZ1_, AYZ1_)	200 AWD	110	11/14 -	4255	
NX (ZGZ1_, AGZ1_, AYZ1_)	200t	175	07/14 -	4255	
NX (ZGZ1_, AGZ1_, AYZ1_)	200t AWD	175	07/14 -	4255	
NX (ZGZ1_, AGZ1_, AYZ1_)	300h	114	07/14 -	4255	
NX (ZGZ1_, AGZ1_, AYZ1_)	300h AWD	114	07/14 -	4255	
RC (AVC1_, GSC1_, USC1_)	350	234	08/14 -	4276	
RC (AVC1_, GSC1_, USC1_)	200t	180	08/15 -	4276	
RC (AVC1_, GSC1_, USC1_)	300h	133	08/14 -	4276	
RX (AGL2_, GGL2_)	200t	175	10/15 -	4255	
RX (AGL2_, GGL2_)	200t AWD	175	10/15 -	4255	
RX (AGL2_, GGL2_)	450h AWD	193	11/15 -	4255	
RX (AGL2_, GGL2_)	450h AWD	230	11/15 -	4255	
RX (GGL1_, GYL1_, AGL1_)	270 (AGL10_)	138	12/08 – 10/15	4255	
RX (GGL1_, GYL1_, AGL1_)	270 (AGL10_)	138	12/08 – 10/15		4256
RX (GGL1_, GYL1_, AGL1_)	350 (GYL10_)	206	12/08 – 10/15	4255	
RX (GGL1_, GYL1_, AGL1_)	350 (GYL10_)	206	12/08 – 10/15		4256
RX (GGL1_, GYL1_, AGL1_)	350 AWD (GGL15_)	204	12/08 – 02/12	4255	
RX (GGL1_, GYL1_, AGL1_)	350 AWD (GGL15_)	204	12/08 – 02/12		4256
RX (GGL1_, GYL1_, AGL1_)	350 AWD (GGL15_)	206	03/09 – 02/12	4255	
RX (GGL1_, GYL1_, AGL1_)	350 AWD (GGL15_)	206	03/09 – 02/12		4256
RX (GGL1_, GYL1_, AGL1_)	450h (GYL10_)	183	12/08 – 10/15	4255	
RX (GGL1_, GYL1_, AGL1_)	450h (GYL10_)	183	12/08 – 10/15		4256
RX (GGL1_, GYL1_, AGL1_)	450h (GYL10_)	220	12/08 – 10/15	4255	
RX (GGL1_, GYL1_, AGL1_)	450h (GYL10_)	220	12/08 – 10/15		4256
RX (GGL1_, GYL1_, AGL1_)	450h AWD (GYL15_)	183	12/08 – 10/15	4255	
RX (GGL1_, GYL1_, AGL1_)	450h AWD (GYL15_)	183	12/08 – 10/15		4256
RX (GGL1_, GYL1_, AGL1_)	450h AWD (GYL15_)	220	12/08 – 10/15	4255	

MAKE & MODEL		KW	YEAR		
LEXUS					
RX (GGL1_, GYL1_, AGL1_)	450h AWD (GYL15_)	220	12/08 – 10/15		4256
RX (MCU15)	300	148	07/00 – 03/03		3776
RX (MCU15)	300	148	07/00 – 03/03	4082	
RX (MCU15)	300 AWD	148	10/00 – 05/03		3776
RX (MCU15)	300 AWD	148	10/00 – 05/03	4082	
RX (MCU15)	300 AWD	164	07/00 – 05/03		3776
RX (MCU15)	300 AWD	164	07/00 – 05/03	4082	
RX (MHU3_, GSU3_, MCU3_)	300	150	05/03 – 12/08	4105	
RX (MHU3_, GSU3_, MCU3_)	300	150	05/03 – 12/08		4111
RX (MHU3_, GSU3_, MCU3_)	330	171	04/03 – 01/06	4105	
RX (MHU3_, GSU3_, MCU3_)	330	171	04/03 – 01/06		4111
RX (MHU3_, GSU3_, MCU3_)	350	203	01/06 – 12/08	4105	
RX (MHU3_, GSU3_, MCU3_)	350	203	01/06 – 12/08		4111
RX (MHU3_, GSU3_, MCU3_)	330 AWD	171	04/03 – 12/08	4105	
RX (MHU3_, GSU3_, MCU3_)	330 AWD	171	04/03 – 12/08		4111
RX (MHU3_, GSU3_, MCU3_)	350 AWD	203	02/06 – 12/08	4105	
RX (MHU3_, GSU3_, MCU3_)	350 AWD	203	02/06 – 12/08		4111
RX (MHU3_, GSU3_, MCU3_)	400h	155	09/05 – 12/08	4105	
RX (MHU3_, GSU3_, MCU3_)	400h	155	09/05 – 12/08		4111
RX (MHU3_, GSU3_, MCU3_)	400h AWD	155	09/04 – 12/08	4105	
RX (MHU3_, GSU3_, MCU3_)	400h AWD	155	09/04 – 12/08		4111
SC Convertible (UZZ40_)	430 (UZZ40_)	210	05/01 – 07/10	3915	
SC Convertible (UZZ40_)	430 (UZZ40_)	210	05/01 – 07/10		4085
SC Convertible (UZZ40_)	430 (UZZ40_)	215	05/01 – 07/10	3915	
SC Convertible (UZZ40_)	430 (UZZ40_)	215	05/01 – 07/10		4085
SC Convertible (UZZ40_)	430 (UZZ40_)	244	05/01 – 07/10	3915	
SC Convertible (UZZ40_)	430 (UZZ40_)	244	05/01 – 07/10		4085
SC Coupe (UZZ3_, JZZ3_)	300	168	08/91 – 06/00	4086	
SC Coupe (UZZ3_, JZZ3_)	300	168	08/91 – 06/00		4099
SC Coupe (UZZ3_, JZZ3_)	400	187	09/91 – 12/95	4086	
SC Coupe (UZZ3_, JZZ3_)	400	187	09/91 – 12/95		4099
SC Coupe (UZZ3_, JZZ3_)	400	194	08/91 – 06/00	4086	
SC Coupe (UZZ3_, JZZ3_)	400	194	08/91 – 06/00		4099
LEYLAND					
ROADRUNNER	10.12, 10.13, 10.15		01/86 -	3433	
LIFAN					
620 Saloon	1.6 TRITEC	85	11/08 -		3876
LIGIER					
AMBRA	0.5	14	12.96 - 12.06		3747
BE UP	0.5	14	08.02 - 12.06		3747
NOVA	400	5	08.02 -		3747
NOVA	500	4	08.02 -		3747
NOVA	650	14	08.02 -		3747
LINCOLN					
CONTINENTAL IX	4.6	202	06/98 – 12/02		4270
CONTINENTAL TOWN CAR	4.6		94-97	4193	
MKC	2.0	149	10/14 -		4270
MKC	2.0	149	10/14 -		4270
MKC	2.0	182	10/14 -		4270
MKC	2.0	182	06/16 -		4270
MKZ II (U.S.A.)	2.0	179	09/12 -		4270
MKZ II (U.S.A.)	2.0	183	06/16 -		4270
MKZ II (U.S.A.)	2.0	183	06/16 -		4270
MKZ II (U.S.A.)	2.0 Hybrid	140	09/12 -		4270
MKZ II (U.S.A.)	3.0	261	06/16 -		4270
MKZ II (U.S.A.)	3.0	261	06/16 -		4270
MKZ II (U.S.A.)	3.0	298	06/16 -		4270
MKZ II (U.S.A.)	3.0	298	06/16 -		4270
MKZ II (U.S.A.)	3.7	224	09/12 -		4270
TOWN CAR			03-04	4195	
TOWN CAR	4.6		95-98	4193	
TOWN CAR	4.6		95-06	4194	
TOWN CAR BASE LIMOUSINE 4-Door	4.6L 281Cu. In. V8 GAS SOHC Naturally		03-		4192
TOWN CAR CARTIER L SEDAN 4-Door	4.6L 281Cu. In. V8 GAS SOHC Naturally		03-		4192
TOWN CAR CARTIER SEDAN 4-Door	4.6L 281Cu. In. V8 GAS SOHC Naturally		03-		4192
TOWN CAR DESIGNER SERIES SEDAN 4-Door	4.6L 281Cu. In. V8 FLEX SOHC Naturally		06-07		4192
TOWN CAR DESIGNER SERIES SEDAN 4-Door	4.6L 281Cu. In. V8 GAS SOHC Naturally		06-07		4192
TOWN CAR EXECUTIVE L LIMOUSINE 4-Door	4.6L 281Cu. In. V8 FLEX SOHC Naturally		06-11		4192
TOWN CAR EXECUTIVE L LIMOUSINE 4-Door	4.6L 281Cu. In. V8 GAS SOHC Naturally		05-08		4192

MAKE & MODEL		KW	YEAR		
LINCOLN					
TOWN CAR EXECUTIVE L SEDAN 4-Door	4.6L 281Cu. In. V8 FLEX SOHC Naturally		06-11		4192
TOWN CAR EXECUTIVE L SEDAN 4-Door	4.6L 281Cu. In. V8 GAS SOHC Naturally		03-08		4192
TOWN CAR EXECUTIVE LIMOUSINE 4-Door	4.6L 281Cu. In. V8 FLEX SOHC Naturally		10-		4192
TOWN CAR EXECUTIVE LIMOUSINE 4-Door	4.6L 281Cu. In. V8 GAS SOHC Naturally		03-04		4192
TOWN CAR EXECUTIVE PROTECTION SERIES SEDAN 4-Door	4.6L 281Cu. In. V8 GAS SOHC Naturally		03-		4192
TOWN CAR EXECUTIVE SEDAN 4-Door	4.6L 281Cu. In. V8 FLEX SOHC Naturally		06-11		4192
TOWN CAR EXECUTIVE SEDAN 4-Door	4.6L 281Cu. In. V8 GAS SOHC Naturally		03-08		4192
TOWN CAR SIGNATURE L SEDAN 4-Door	4.6L 281Cu. In. V8 FLEX SOHC Naturally		06-11		4192
TOWN CAR SIGNATURE L SEDAN 4-Door	4.6L 281Cu. In. V8 GAS SOHC Naturally		05-08		4192
TOWN CAR SIGNATURE LIMITED SEDAN 4-Door	4.6L 281Cu. In. V8 FLEX SOHC Naturally		06-11		4192
TOWN CAR SIGNATURE LIMITED SEDAN 4-Door	4.6L 281Cu. In. V8 GAS SOHC Naturally		05-08		4192
TOWN CAR SIGNATURE SEDAN 4-Door	4.6L 281Cu. In. V8 FLEX SOHC Naturally		06-07		4192
TOWN CAR SIGNATURE SEDAN 4-Door	4.6L 281Cu. In. V8 GAS SOHC Naturally		03-07		4192
TOWN CAR ULTIMATE L SEDAN 4-Door	4.6L 281Cu. In. V8 GAS SOHC Naturally		04-		4192
TOWN CAR ULTIMATE SEDAN 4-Door	4.6L 281Cu. In. V8 GAS SOHC Naturally		04-		4192
LOTUS					
ECLAT	20	119	10/75 – 05/80	3312	
ECLAT	20	119	10/75 – 05/80	3484	
ECLAT	22	119	05/80 – 08/86	3312	
ECLAT	22	119	05/80 – 08/86	3484	
ESPRIT S4 (082)	22	158	09/90 – 01/92		3596
ESPRIT S4 (082)	22	168	09/90 – 10/91		3596
ESPRIT S4 (082)	22	209	10/94 – 08/96		3596
ESPRIT S4 (082)	22	221	05/93 – 07/96		3596
ESPRIT S4 (082)	22	222	11/94 – 07/96		3596
ESPRIT S4 (082)	2.0 GT3	179	09/96 – 06/00		3596
ESPRIT S4 (082)	2.2 16V Turbo SE	197	05/89 – 09/96		3596
ESPRIT S4 (082)	3.5 V8 32V Turbo	260	02/96 – 06/03		3596
LTI					
TX	2.4 TDi	66	10/02 -	3423/1	
TX	2.7 TD	60	01/97 -	3423/1	
MAHINDRA					
CJ 3 Wagon	2.1 D	46	10/88 – 09/92	3513	
CJ 3 Wagon	2.3 D	28	10/88 – 09/92	3513	
CJ 3 Wagon	2.5 D	29	10/88 – 09/92	3513	
MARUTI					
800	8	26	01/91 – 12/06	3509	
MASERATI					
GHIBLI II	2.0 24V Biturbo	225	05/92 -		3879
GHIBLI II	2.8 24V Biturbo	209	06/92 -		3879
QUATTROPORTE IV	2.0 Biturbo	211	03/94 -		3879
QUATTROPORTE IV	2.8 Biturbo	209	03/94 -		3879
QUATTROPORTE IV	3.2 V8 32V	247	12/95 -		3879
QUATTROPORTE V	42	295	03/04 -		4103
MAZDA					
2	13	68	10/07 -	4122	
2	15	76	10/07 -	4122	
808	All models		01/72 -	3709	
121 I (DA)	11	42	10/87 – 10/90	3723	
121 I (DA)	13	40	04/89 – 10/90	3723	
121 I (DA)	13	44	10/87 – 11/90	3723	
121 I (DA)	13	48	11/87 – 10/90	3723	
121 I (DA)	15	56	11/87 – 03/89	3723	
121 II (DB)	11	40	11/90 – 10/93	3522	
121 II (DB)	1.3 16V	39	11/90 – 03/96	3522	
121 II (DB)	1.3 i 16V	53	11/90 – 03/96	3522	
121 II (DB)	1.5 i	62	01/94 – 05/97	3522	
121 III (JASM, JBSM)	13	37	03/96 – 04/03	3570	
121 III (JASM, JBSM)	13	37	03/96 – 04/03	3877	
121 III (JASM, JBSM)	13	44	03/96 – 04/03	3570	
121 III (JASM, JBSM)	13	44	03/96 – 04/03	3877	
121 III (JASM, JBSM)	125	55	03/96 – 04/03	3570	
121 III (JASM, JBSM)	125	55	03/96 – 04/03	3877	
121 III (JASM, JBSM)	1.8 D	44	03/96 – 04/03	3570	
121 III (JASM, JBSM)	1.8 D	44	03/96 – 04/03	3877	
2 (DE)	13	55	10/07 – 06/15	4122	
2 (DE)	13	63	10/07 – 06/15	4122	

MAKE & MODEL		KW	YEAR		
MAZDA					
2 (DE)	15	76	10/07 – 06/15	4122	
2 (DE)	1.3 MZR	62	01/10 – 06/15	4122	
2 (DE)	1.4 MZR-CD	50	01/08 – 06/15	4122	
2 (DE)	1.5 MZR	75	06/11 – 06/15	4122	
2 (DE)	1.6 MZ-CD	66	10/08 – 06/15	4122	
2 (DE)	1.6 MZ-CD	70	06/11 – 06/15	4122	
2 (DY)	12	55	02/03 -	3877	
2 (DY)	14	59	02/03 -	3877	
2 (DY)	14	59	04/03 -	3877	
2 (DY)	15	82	04/03 -	3877	
2 (DY)	16	74	02/03 -	3877	
2 (DY)	16	74	04/03 -	3877	
2 (DY)	125	55	04/03 -	3877	
2 (DY)	1.3 L	67	04/03 – 06/07	3877	
2 (DY)	1.4 CD	50	04/03 -	3877	
2 Saloon	13	63	02/09 -	4122	
2 Saloon	13	68	06/08 -	4122	
2 Saloon	15	76	06/08 -	4122	
2 Saloon (DE)	1.5 i	76	05/10 – 06/15	4122	
3 (BK)	14	59	02/04 – 06/09		3853/1
3 (BK)	14	59	02/04 – 06/09	3885	
3 (BK)	14	62	10/03 – 06/09		3853/1
3 (BK)	14	62	10/03 – 06/09	3885	
3 (BK)	16	77	10/03 – 06/09		3853/1
3 (BK)	16	77	10/03 – 06/09	3885	
3 (BK)	20	110	10/03 – 06/09		3853/1
3 (BK)	20	110	10/03 – 06/09	3885	
3 (BK)	1.6 DI Turbo	80	06/04 – 06/09		3853/1
3 (BK)	1.6 DI Turbo	80	06/04 – 06/09	3885	
3 (BK)	1.6 MZ-CD	66	06/06 – 12/09		3853/1
3 (BK)	1.6 MZ-CD	66	06/06 – 12/09	3885	
3 (BK)	2.0 MZR-CD	105	12/06 – 06/09		3853/1
3 (BK)	2.0 MZR-CD	105	12/06 – 06/09	3885	
3 (BK)	2.3 DiSi Turbo MPS	184	06/06 – 06/09		3853/1
3 (BK)	2.3 DiSi Turbo MPS	184	06/06 – 06/09	3885	
3 (BK)	2.3 MPS Turbo	191	12/06 – 06/09		3853/1
3 (BK)	2.3 MPS Turbo	191	12/06 – 06/09	3885	
3 (BK)	2.3 MZR	115	03/04 – 03/09		3853/1
3 (BK)	2.3 MZR	115	03/04 – 03/09	3885	
3 (BK)	2.3 MZR Sport	126	10/03 – 06/09		3853/1
3 (BK)	2.3 MZR Sport	126	10/03 – 06/09	3885	
3 (BL)	25	122	06/09 -		3853/1
3 (BL)	25	122	06/09 -	3885	
3 (BL)	1.6 MZR	77	06/09 -		3853/1
3 (BL)	1.6 MZR	77	06/09 -	3885	
3 (BL)	1.6 MZR	79	01/10 – 12/13		3853/1
3 (BL)	1.6 MZR	79	01/10 – 12/13	3885	
3 (BL)	1.6 MZR CD	80	12/08 -		3853/1
3 (BL)	1.6 MZR CD	80	12/08 -	3885	
3 (BL)	1.6 MZR CD	85	11/10 -		3853/1
3 (BL)	1.6 MZR CD	85	11/10 -	3885	
3 (BL)	2.0 MZR	108	06/10 -		3853/1
3 (BL)	2.0 MZR	108	06/10 -	3885	
3 (BL)	2.0 MZR	110	06/09 -		3853/1
3 (BL)	2.0 MZR	110	06/09 -	3885	
3 (BL)	2.0 MZR DISI	111	06/09 -		3853/1
3 (BL)	2.0 MZR DISI	111	06/09 -	3885	
3 (BL)	2.2 MZR CD	110	06/09 -		3853/1
3 (BL)	2.2 MZR CD	110	06/09 -	3885	
3 (BL)	2.2 MZR CD	136	06/09 -		3853/1
3 (BL)	2.2 MZR CD	136	06/09 -	3885	
3 (BL)	2.3 MPS Turbo	191	06/09 -		3853/1
3 (BM, BN)	1.5	88	10/13 -	4317	
3 (BM, BN)	1.5 D	77	02/16 -		4318
3 (BM, BN)	1.6	77	09/13 -	4317	
3 (BM, BN)	1.6	77	09/13 -		4318
3 (BM, BN)	2.0	110	11/13 -	4317	
3 (BM, BN)	2.0	114	11/13 -	4317	
3 (BM, BN)	2.0	121	09/13 -	4317	
3 (BM, BN)	2.2 D	129	10/14 -	4317	
3 (BM, BN)	1.5	74	09/13 -		4318

MAKE & MODEL		KW	YEAR		
MAZDA					
3 (BM, BN)	1.5	82	10/14 -	4317	
3 (BM, BN)	1.5	82	10/14 -		4318
3 (BM, BN)	2.0	88	09/13 -	4317	
3 (BM, BN)	2.0	88	09/13 -		4318
3 (BM, BN)	2.0	110	11/13 -		4318
3 (BM, BN)	2.0	114	11/13 -		4318
3 (BM, BN)	2.0	121	09/13 -		4318
3 (BM, BN)	2.2 D	110	09/13 -	4317	
3 (BM, BN)	1.5 4WD	82	10/14 -	4317	
3 (BM, BN)	1.5 4WD	82	10/14 -		4318
3 (BM, BN)	2.2 D	110	09/13 -		4318
3 (BM, BN)	2.2 D	129	10/14 -		4318
3 (BM, BN)	1.5	74	09/13 -	4317	
3 (BM, BN)	1.5	88	10/13 -		4318
3 (BM, BN)	1.5 D	77	02/16 -	4317	
3 Saloon (BK)	16	77	02/04 – 06/09		3853/1
3 Saloon (BK)	16	77	02/04 – 06/09	3885	
3 Saloon (BK)	20	104	04/04 – 06/06		3853/1
3 Saloon (BK)	20	104	04/04 – 06/06	3885	
3 Saloon (BK)	20	110	02/04 – 06/09		3853/1
3 Saloon (BK)	20	110	02/04 – 06/09	3885	
3 Saloon (BK)	23	118	03/04 – 03/09		3853/1
3 Saloon (BK)	23	118	03/04 – 03/09	3885	
3 Saloon (BK)	23	126	06/00 – 03/03		3853/1
3 Saloon (BK)	23	126	06/00 – 03/03	3885	
3 Saloon (BK)	1.6 DI Turbo	80	06/04 – 06/09		3853/1
3 Saloon (BK)	1.6 DI Turbo	80	06/04 – 06/09	3885	
3 Saloon (BK)	2.0 MZR-CD	105	12/06 – 06/09		3853/1
3 Saloon (BK)	2.0 MZR-CD	105	12/06 – 06/09	3885	
3 Saloon (BL)	25	122	06/09 -		3853/1
3 Saloon (BL)	25	122	06/09 -	3885	
3 Saloon (BL)	1.6 MZR	77	06/09 -		3853/1
3 Saloon (BL)	1.6 MZR	77	06/09 -	3885	
3 Saloon (BL)	1.6 MZR CD	80	12/08 -		3853/1
3 Saloon (BL)	1.6 MZR CD	80	12/08 -	3885	
3 Saloon (BL)	1.6 MZR CD	85	11/10 -		3853/1
3 Saloon (BL)	1.6 MZR CD	85	11/10 -	3885	
3 Saloon (BL)	2.0 MZR	110	06/09 -		3853/1
3 Saloon (BL)	2.0 MZR	110	06/09 -	3885	
3 Saloon (BL)	2.0 MZR DISI	111	06/09 -		3853/1
3 Saloon (BL)	2.0 MZR DISI	111	06/09 -	3885	
3 Saloon (BL)	2.2 MZR CD	110	06/09 -		3853/1
3 Saloon (BL)	2.2 MZR CD	110	06/09 -	3885	
3 Saloon (BL)	2.2 MZR CD	136	06/09 -		3853/1
3 Saloon (BL)	2.2 MZR CD	136	06/09 -	3885	
3 Saloon (BM, BN)	1.5	82	09/13 -		4318
3 Saloon (BM, BN)	1.5	88	10/13 -	4317	
3 Saloon (BM, BN)	1.6	77	09/13 -	4317	
3 Saloon (BM, BN)	2.0	110	11/13 -	4317	
3 Saloon (BM, BN)	2.0	121	11/14 -	4317	
3 Saloon (BM, BN)	2.0	121	11/14 -		4318
3 Saloon (BM, BN)	2.0	110	11/13 -		4318
3 Saloon (BM, BN)	2.0	112	04/15 -	4317	
3 Saloon (BM, BN)	2.0	114	11/13 -		4318
3 Saloon (BM, BN)	1.5 D	77	06/16 -	4317	
3 Saloon (BM, BN)	1.5	74	10/14 -	4317	
3 Saloon (BM, BN)	1.5	74	10/14 -		4318
3 Saloon (BM, BN)	1.5	88	10/13 -		4318
3 Saloon (BM, BN)	1.5	82	09/13 -	4317	
3 Saloon (BM, BN)	1.6	77	09/13 -		4318
3 Saloon (BM, BN)	2.0	88	09/13 -	4317	
3 Saloon (BM, BN)	2.0	88	09/13 -		4318
3 Saloon (BM, BN)	2.0	112	04/15 -		4318
3 Saloon (BM, BN)	2.0	114	11/13 -	4317	
3 Saloon (BM, BN)	2.2	110	09/13 -		4318
3 Saloon (BM, BN)	1.5 4WD	82	10/14 -	4317	
3 Saloon (BM, BN)	1.5 4WD	82	10/14 -		4318
3 Saloon (BM, BN)	1.5 D	77	06/16 -		4318
3 Saloon (BM, BN)	2.0 Hybrid	60	10/14 -	4317	
3 Saloon (BM, BN)	2.0 Hybrid	60	10/14 -		4318
3 Saloon (BM, BN)	2.2 D	129	10/14 -	4317	

BESER

MAKE & MODEL		KW	YEAR		
MAZDA					
3 Saloon (BM, BN)	2.2 D	129	10/14 -		4318
3 Saloon (BM, BN)	2.0 Hybrid	73	10/14 -	4317	
3 Saloon (BM, BN)	2.0 Hybrid	73	10/14 -		4318
3 Saloon (BM, BN)	2.2 D	110	09/13 -	4317	
323 C IV (BG)	13	49	09/89 – 07/94	3522	
323 C IV (BG)	16	62	09/89 – 06/91	3522	
323 C IV (BG)	16	66	09/93 – 09/00	3522	
323 C IV (BG)	18	96	09/89 – 06/93	3522	
323 C IV (BG)	1.3 16V	54	09/89 – 07/94	3522	
323 C IV (BG)	1.6 16V	65	03/91 – 10/94	3522	
323 C IV (BG)	1.7 D	41	08/89 – 07/94	3522	
323 C IV (BG)	1.8 16V	103	09/89 – 03/93	3640	
323 C IV (BG)	1.8 16V 4WD	76	11/91 – 12/93	3640	
323 C IV (BG)	1.8 16V GT	94	09/89 – 03/93	3522	
323 C IV (BG)	1.8 16V Turbo 4WD	120	09/90 – 12/92	3640	
323 C IV (BG)	1.8 16V Turbo 4WD	136	01/93 – 07/94	3640	
323 C V (BA)	1.3 16V	54	08/94 – 09/98	3522	
323 C V (BA)	1.5 16V	65	08/94 – 09/98	3522	
323 C V (BA)	1.8 16V	84	08/94 – 09/98	3640	
323 F IV (BG)	16	62	09/89 – 06/91	3522	
323 F IV (BG)	16	66	04/91 – 04/94	3522	
323 F IV (BG)	16	77	04/87 – 08/93	3522	
323 F IV (BG)	1.6 16V	65	03/91 – 10/94	3522	
323 F IV (BG)	1.8 16V	76	08/89 – 07/94	3522	
323 F IV (BG)	1.8 16V	103	09/89 – 03/93	3640	
323 F IV (BG)	1.8 16V GT	94	08/89 – 07/94	3522	
323 F IV (BG)	1.8 4WD	76	01/91 – 04/94	3640	
323 F V (BA)	1.5 16V	65	07/94 – 09/98	3522	
323 F V (BA)	1.8 16V	84	08/94 – 09/98	3640	
323 F VI (BJ)	14	53	01/01 – 05/04	3780	
323 F VI (BJ)	16	70	01/01 – 05/04	3832	
323 F VI (BJ)	16	70	01/01 – 05/04		3875
323 F VI (BJ)	16	72	01/01 – 05/04	3832	
323 F VI (BJ)	16	72	01/01 – 05/04		3875
323 F VI (BJ)	20	96	01/01 – 05/04	3832	
323 F VI (BJ)	20	96	01/01 – 05/04		3875
323 F VI (BJ)	1.4 16V	54	09/98 – 01/01	3780	
323 F VI (BJ)	1.5 16V	65	09/98 – 01/01	3780	
323 F VI (BJ)	1.9 16V	84	09/98 – 01/01	3832	
323 F VI (BJ)	1.9 16V	84	09/98 – 01/01		3875
323 F VI (BJ)	2.0 D	52	09/98 – 05/04	3832	
323 F VI (BJ)	2.0 D	52	09/98 – 05/04		3875
323 F VI (BJ)	2.0 TD	66	09/98 – 12/01	3832	
323 F VI (BJ)	2.0 TD	66	09/98 – 12/01		3875
323 F VI (BJ)	2.0 TD	74	01/01 – 05/04	3832	
323 F VI (BJ)	2.0 TD	74	01/01 – 05/04		3875
323 III (BF)	11	40	08/85 – 04/90	3449	
323 III (BF)	13	44	08/85 – 05/89	3449	
323 III (BF)	14	44	04/87 – 07/89	3449	
323 III (BF)	15	54	09/87 – 10/89	3449	
323 III (BF)	15	55	08/85 – 05/89	3449	
323 III (BF)	1.5 i	70	08/85 – 05/89	3449	
323 III (BF)	1.5 i Turbo	85	08/85 – 05/89	3449	
323 III (BF)	1.6 GT	63	11/86 – 10/89	3449	
323 III (BF)	1.6 GT	77	01/86 – 12/88	3449	
323 III (BF)	1.6 GT Turbo	103	10/85 – 11/91	3449	
323 III (BF)	1.7 D	40	09/86 – 05/89	3449	
323 III (BF)	1.7 D	42	01/87 – 05/89	3449	
323 III Hatchback (BF)	11	40	09/85 – 10/89	3449	
323 III Hatchback (BF)	13	44	09/85 – 12/87	3449	
323 III Hatchback (BF)	14	44	09/87 – 10/89	3449	
323 III Hatchback (BF)	15	54	09/87 – 10/89	3449	
323 III Hatchback (BF)	15	55	08/85 – 05/89	3449	
323 III Hatchback (BF)	16	54	09/87 – 10/89	3449	
323 III Hatchback (BF)	1.3 i	49	09/85 – 08/89	3449	
323 III Hatchback (BF)	1.5 i	70	08/85 – 05/89	3449	
323 III Hatchback (BF)	1.5 i Turbo	85	08/85 – 05/89	3449	
323 III Hatchback (BF)	1.6 GT	63	09/87 – 10/89	3449	
323 III Hatchback (BF)	1.6 GT	77	08/85 – 08/93	3449	
323 III Hatchback (BF)	1.6 GT Turbo (BF1)	103	10/85 – 08/93	3449	
323 III Hatchback (BF)	1.6 GT Turbo 4WD (BF2)	103	10/87 – 11/91	3449	

MAKE & MODEL		KW	YEAR		
MAZDA					
323 III Hatchback (BF)	1.6 GT Turbo 4WD (BF2)	110	08/87 – 10/89	3449	
323 III Hatchback (BF)	1.7 D	40	04/86 – 05/89	3449	
323 III Hatchback (BF)	1.7 D	42	01/87 – 05/89	3449	
323 III Station Wagon (BW)	13	44	07/86 – 04/90	3449	
323 III Station Wagon (BW)	13	50	01/86 – 06/87	3449	
323 III Station Wagon (BW)	13	52	01/86 – 06/87	3449	
323 III Station Wagon (BW)	15	54	01/87 – 05/89	3449	
323 III Station Wagon (BW)	15	55	05/86 – 05/89	3449	
323 III Station Wagon (BW)	15	55	09/89 – 09/91	3449	
323 III Station Wagon (BW)	16	54	09/87 – 10/89	3449	
323 III Station Wagon (BW)	16	63	09/86 – 10/95	3449	
323 III Station Wagon (BW)	16	63	09/89 – 10/95	3449	
323 III Station Wagon (BW)	1.6 4x4	63	05/90 – 03/93	3449	
323 III Station Wagon (BW)	1.7 D	40	11/86 – 08/87	3449	
323 III Station Wagon (BW)	1.7 D	41	10/89 – 03/93	3449	
323 III Station Wagon (BW)	1.7 D	42	11/86 – 10/89	3449	
323 P V (BA)	1.3 16V	54	10/96 – 09/98	3522	
323 P V (BA)	1.5 16V	65	10/96 – 09/98	3522	
323 P V (BA)	2.0 D	52	10/96 – 09/98	3640	
323 S IV (BG)	13	49	09/89 – 06/91	3522	
323 S IV (BG)	16	62	09/89 – 06/91	3522	
323 S IV (BG)	16	64	06/89 – 03/91	3522	
323 S IV (BG)	16	66	04/91 – 10/94	3522	
323 S IV (BG)	1.3 16V	54	04/91 – 07/94	3522	
323 S IV (BG)	1.6 16V	65	08/89 – 10/94	3522	
323 S IV (BG)	1.7 D	41	08/89 – 07/94	3522	
323 S IV (BG)	1.8 16V	76	08/89 – 07/94	3522	
323 S IV (BG)	1.8 16V 4WD	76	09/91 – 07/94	3640	
323 S IV (BG)	1.8 16V GT	94	06/89 – 07/94	3522	
323 S IV (BG)	1.8 16V Turbo 4WD	120	01/91 – 07/94	3640	
323 S V (BA)	16	80	08/94 – 09/98	3640	
323 S V (BA)	18	92	07/94 – 09/98	3640	
323 S V (BA)	1.3 16V	54	08/94 – 09/98	3522	
323 S V (BA)	1.5 16V	65	08/94 – 09/98	3522	
323 S V (BA)	1.6 TD	60	05/94 – 09/98	3640	
323 S V (BA)	1.8 16V	84	08/94 – 09/98	3640	
323 S V (BA)	2.0 D	52	10/96 – 09/98	3640	
323 S VI (BJ)	14	53	01/01 – 05/04	3780	
323 S VI (BJ)	16	70	01/01 – 05/04	3832	
323 S VI (BJ)	16	70	01/01 – 05/04		3875
323 S VI (BJ)	16	72	01/01 – 05/04	3832	
323 S VI (BJ)	16	72	01/01 – 05/04		3875
323 S VI (BJ)	16	80	09/98 – 02/01	3780	
323 S VI (BJ)	16	80	09/98 – 02/01		3875
323 S VI (BJ)	20	96	01/01 – 05/04	3832	
323 S VI (BJ)	20	96	01/01 – 05/04		3875
323 S VI (BJ)	1.4 16V	54	09/98 – 01/01	3780	
323 S VI (BJ)	1.5 16V	65	09/98 – 01/01	3780	
323 S VI (BJ)	1.9 16V	84	09/98 – 05/04	3832	
323 S VI (BJ)	1.9 16V	84	09/98 – 05/04		3875
323 S VI (BJ)	2.0 D	52	09/98 – 05/04	3832	
323 S VI (BJ)	2.0 D	52	09/98 – 05/04		3875
323 S VI (BJ)	2.0 DiTD	74	10/00 – 10/02	3832	
323 S VI (BJ)	2.0 DiTD	74	10/00 – 10/02		3875
323 S VI (BJ)	2.0 TD	66	09/98 – 05/04	3832	
323 S VI (BJ)	2.0 TD	66	09/98 – 05/04		3875
5 (CR19)	18	85	03/05 -		3853/1
5 (CR19)	18	85	03/05 -	3885	
5 (CR19)	20	107	03/05 -		3853/1
5 (CR19)	20	107	03/05 -	3885	
5 (CR19)	23	122	02/05 -		3853/1
5 (CR19)	23	122	02/05 -	3885	
5 (CR19)	2.0 CD	81	03/05 -		3853/1
5 (CR19)	2.0 CD	81	03/05 -	3885	
5 (CR19)	2.0 CD	105	06/05 -		3853/1
5 (CR19)	2.0 CD	105	06/05 -	3885	
5 (CW)	20	106	01/11 -		3853/1
5 (CW)	20	106	01/11 -	3885	
5 (CW)	20	108	01/11 -		3853/1
5 (CW)	20	108	01/11 -	3885	
5 (CW)	20	110	09/10 -		3853/1

MAKE & MODEL		KW	YEAR		
MAZDA					
5 (CW)	20	110	09/10 -	3885	
5 (CW)	20	111	08/14 -		3853/1
5 (CW)	20	111	08/14 -	3885	
5 (CW)	1.6 CD	85	09/10 -		3853/1
5 (CW)	1.6 CD	85	09/10 -	3885	
5 (CW)	1.8 MZR	85	09/10 -		3853/1
5 (CW)	1.8 MZR	85	09/10 -	3885	
5 (CW)	2.0 4WD	102	08/14 -		3853/1
5 (CW)	2.0 4WD	102	08/14 -	3885	
6 (GG)	18	88	08/02 – 08/07		3875
6 (GG)	18	88	08/02 -	4118	
6 (GG)	20	104	06/02 – 08/07		3875
6 (GG)	20	104	06/02 – 08/07	3889	
6 (GG)	20	108	03/05 – 08/07		3875
6 (GG)	20	108	03/05 – 08/07	3889	
6 (GG)	23	120	03/05 – 07/07		3875
6 (GG)	23	120	03/05 – 07/07	3889	
6 (GG)	23	122	06/02 – 08/07		3875
6 (GG)	23	122	06/02 – 08/07	3889	
6 (GG)	2.0 DI	89	08/02 – 08/07		3875
6 (GG)	2.0 DI	89	08/02 – 08/07	3889	
6 (GG)	2.0 DI	100	06/02 – 08/07		3875
6 (GG)	2.0 DI	100	06/02 – 08/07	3889	
6 (GG)	2.0 DI	105	06/05 – 08/07		3875
6 (GG)	2.0 DI	105	06/05 – 08/07	3889	
6 (GG)	2.3 MPS Turbo	191	12/05 – 08/07		4242
6 (GH)	1.8 MZR	88	08/07 -		3875
6 (GH)	1.8 MZR	88	08/07 -	4029	
6 (GH)	2.0 MZR	108	08/07 -		3875
6 (GH)	2.0 MZR	108	08/07 -	4029	
6 (GH)	2.0 MZR	114	01/10 -		3875
6 (GH)	2.0 MZR	114	01/10 -	4029	
6 (GH)	2.0 MZR-CD	103	08/07 -		3875
6 (GH)	2.0 MZR-CD	103	08/07 -	4029	
6 (GH)	2.2 D	95	01/10 -		3875
6 (GH)	2.2 D	95	01/10 -	4029	
6 (GH)	2.2 D	132	01/10 -		3875
6 (GH)	2.2 D	132	01/10 -	4029	
6 (GH)	2.2 MZR-CD	92	01/09 – 12/12		3875
6 (GH)	2.2 MZR-CD	92	01/09 – 12/12	4029	
6 (GH)	2.2 MZR-CD	120	01/09 -		3875
6 (GH)	2.2 MZR-CD	120	01/09 -	4029	
6 (GH)	2.2 MZR-CD	136	01/09 -		3875
6 (GH)	2.2 MZR-CD	136	01/09 -	4029	
6 (GH)	2.5 MZR	125	08/07 -		3875
6 (GH)	2.5 MZR	125	08/07 -	4029	
6 ATENZA Saloon	2.5	141	05/14 -		4316
6 ATENZA Saloon	2.0	116	05/14 -		4316
6 ATENZA Saloon	2.0	116	05/14 -	4315	
6 ATENZA Saloon	2.5	141	05/14 -	4315	
6 Estate (GH)	1.8 MZR	88	02/08 -		3875
6 Estate (GH)	1.8 MZR	88	02/08 -	4029	
6 Estate (GH)	2.0 MZR	108	02/08 -		3875
6 Estate (GH)	2.0 MZR	108	02/08 -	4029	
6 Estate (GH)	2.0 MZR	114	01/10 -		3875
6 Estate (GH)	2.0 MZR	114	01/10 -	4029	
6 Estate (GH)	2.0 MZR-CD	103	02/08 -		3875
6 Estate (GH)	2.0 MZR-CD	103	02/08 -	4029	
6 Estate (GH)	2.2 D	95	01/10 -		3875
6 Estate (GH)	2.2 D	95	01/10 -	4029	
6 Estate (GH)	2.2 MZR-CD	92	01/09 -		3875
6 Estate (GH)	2.2 MZR-CD	92	01/09 -	4029	
6 Estate (GH)	2.2 MZR-CD	120	01/09 -		3875
6 Estate (GH)	2.2 MZR-CD	120	01/09 -	4029	
6 Estate (GH)	2.2 MZR-CD	132	01/10 -		3875
6 Estate (GH)	2.2 MZR-CD	132	01/10 -	4029	
6 Estate (GH)	2.2 MZR-CD	136	01/09 -		3875
6 Estate (GH)	2.2 MZR-CD	136	01/09 -	4029	
6 Estate (GH)	2.5 MZR	125	02/08 -		3875
6 Estate (GH)	2.5 MZR	125	02/08 -	4029	
6 Estate (GJ, GL)	2.0	107	01/13 -		4316

BEŞER

MAKE & MODEL		KW	YEAR		
MAZDA					
6 Estate (GJ, GL)	2.5	138	12/12 -	4315	
6 Estate (GJ, GL)	2.0	107	01/13 -	4315	
6 Estate (GJ, GL)	2.2 D 4WD	129	07/14 -	4315	
6 Estate (GJ, GL)	2.5	138	12/12 -		4316
6 Estate (GJ, GL)	2.5	141	12/12 -		4316
6 Estate (GJ, GL)	2.2 D AWD	129	02/15 -		4316
6 Estate (GJ, GL)	2.2 D AWD	110	02/15 -	4315	
6 Estate (GJ, GL)	2.5	141	12/12 -	4315	
6 Estate (GJ, GL)	2.0	114	07/14 -		4316
6 Estate (GJ, GL)	2.0	114	12/12 -		4316
6 Estate (GJ, GL)	2.0	121	01/13 -		4316
6 Estate (GJ, GL)	2.2 D	110	12/12 -	4315	
6 Estate (GJ, GL)	2.2 D	110	12/12 -		4316
6 Estate (GJ, GL)	2.2 D	129	12/12 -	4315	
6 Estate (GJ, GL)	2.2 D	129	12/12 -		4316
6 Estate (GJ, GL)	2.2 D 4WD	129	07/14 -		4316
6 Estate (GJ, GL)	2.2 D AWD	110	02/15 -		4316
6 Estate (GJ, GL)	2.2 D AWD	129	02/15 -	4315	
6 Estate (GJ, GL) 2.0	2.0	121	01/13 -	4315	
6 Estate (GJ, GL) 2.0	2.0	114	07/14 -	4315	
6 Estate (GJ, GL) 2.0	2.0	114	12/12 -	4315	
6 Hatchback (GG)	18	88	08/02 – 08/07		3875
6 Hatchback (GG)	18	88	08/02 -	4118	
6 Hatchback (GG)	20	104	08/02 – 08/07		3875
6 Hatchback (GG)	20	104	08/02 – 08/07	3889	
6 Hatchback (GG)	20	108	03/05 – 08/07		3875
6 Hatchback (GG)	20	108	03/05 – 08/07	3889	
6 Hatchback (GG)	23	122	08/02 – 08/07		3875
6 Hatchback (GG)	23	122	08/02 – 08/07	3889	
6 Hatchback (GG)	25	125	08/07 – 12/08		3875
6 Hatchback (GG)	25	125	08/07 – 12/08	4029	
6 Hatchback (GG)	2.0 DI	89	08/02 – 08/07		3875
6 Hatchback (GG)	2.0 DI	89	08/02 – 08/07	3889	
6 Hatchback (GG)	2.0 DI	100	08/02 – 08/07		3875
6 Hatchback (GG)	2.0 DI	100	08/02 – 08/07	3889	
6 Hatchback (GG)	2.0 DI	105	06/05 – 08/07		3875
6 Hatchback (GG)	2.0 DI	105	06/05 – 08/07	3889	
6 Hatchback (GH)	1.8 MZR	88	08/07 -		3875
6 Hatchback (GH)	1.8 MZR	88	08/07 -	4029	
6 Hatchback (GH)	2.0 MZR	108	08/07 -		3875
6 Hatchback (GH)	2.0 MZR	108	08/07 -	4029	
6 Hatchback (GH)	2.0 MZR	114	01/10 -		3875
6 Hatchback (GH)	2.0 MZR	114	01/10 -	4029	
6 Hatchback (GH)	2.0 MZR-CD	103	08/07 -		3875
6 Hatchback (GH)	2.0 MZR-CD	103	08/07 -	4029	
6 Hatchback (GH)	2.2 D	95	01/10 -		3875
6 Hatchback (GH)	2.2 D	95	01/10 -	4029	
6 Hatchback (GH)	2.2 MZR-CD	92	01/09 -		3875
6 Hatchback (GH)	2.2 MZR-CD	92	01/09 -	4029	
6 Hatchback (GH)	2.2 MZR-CD	120	01/09 -		3875
6 Hatchback (GH)	2.2 MZR-CD	120	01/09 -	4029	
6 Hatchback (GH)	2.2 MZR-CD	132	01/10 -		3875
6 Hatchback (GH)	2.2 MZR-CD	132	01/10 -	4029	
6 Hatchback (GH)	2.2 MZR-CD	136	01/09 -		3875
6 Hatchback (GH)	2.2 MZR-CD	136	01/09 -	4029	
6 Hatchback (GH)	2.5 MZR	125	08/07 -		3875
6 Hatchback (GH)	2.5 MZR	125	08/07 -	4029	
6 RUI YI	20	108	10/09 -	4029	
6 RUI YI	25	124	01/09 – 12/14	4029	
6 Saloon (GJ, GL)	2.0	114	12/12 -	4315	
6 Saloon (GJ, GL)	2.0	110	12/12 -		4316
6 Saloon (GJ, GL)	2.5	138	12/12 -		4316
6 Saloon (GJ, GL)	2.5	141	01/13 -	4315	
6 Saloon (GJ, GL)	2.5	141	01/13 -		4316
6 Saloon (GJ, GL)	2.0	110	12/12 -	4315	
6 Saloon (GJ, GL)	2.0	114	07/14 -	4315	
6 Saloon (GJ, GL)	2.2 D	129	12/12 -	4315	
6 Saloon (GJ, GL)	2.2 D 4WD	129	07/14 -		4316
6 Saloon (GJ, GL)	2.0	107	01/13 -		4316
6 Saloon (GJ, GL)	2.0	114	07/14 -		4316
6 Saloon (GJ, GL)	2.0	114	12/12 -		4316

MAKE & MODEL		KW	YEAR		
MAZDA					
6 Saloon (GJ, GL)	2.0	121	01/13 -		4316
6 Saloon (GJ, GL)	2.2 D	110	01/13 -		4316
6 Saloon (GJ, GL)	2.2 D	129	12/12 -		4316
6 Saloon (GJ, GL)	2.2 D	110	01/13 -	4315	
6 Saloon (GJ, GL)	2.5	138	12/12 -	4315	
6 Saloon (GJ, GL)	2.0	107	01/13 -	4315	
6 Saloon (GJ, GL)	2.0	121	01/13 -	4315	
6 Saloon (GJ, GL)	2.2 D	129	07/14 -	4315	
6 Saloon (GJ, GL)	2.2 D	129	07/14 -		4316
6 Saloon (GJ, GL) D	2.2 D 4W	129	07/14 -	4315	
6 Station Wagon (GY)	18	88	08/02 – 08/07		3875
6 Station Wagon (GY)	18	88	08/02 – 08/07	3889	
6 Station Wagon (GY)	20	104	08/02 – 08/07		3875
6 Station Wagon (GY)	20	104	08/02 – 08/07	3889	
6 Station Wagon (GY)	20	108	03/05 – 08/07		3875
6 Station Wagon (GY)	20	108	03/05 – 08/07	3889	
6 Station Wagon (GY)	23	122	08/02 – 08/07		3875
6 Station Wagon (GY)	23	122	08/02 – 08/07	3889	
6 Station Wagon (GY)	2.0 DI	89	08/02 – 08/07		3875
6 Station Wagon (GY)	2.0 DI	89	08/02 – 08/07	3889	
6 Station Wagon (GY)	2.0 DI	100	08/02 – 08/07		3875
6 Station Wagon (GY)	2.0 DI	100	08/02 – 08/07	3889	
6 Station Wagon (GY)	2.0 DI	105	06/05 – 08/07		3875
6 Station Wagon (GY)	2.0 DI	105	06/05 – 08/07	3889	
6 Station Wagon (GY)	2.3	122	08/02 – 08/07		4242
6 Station Wagon (GY)	2.3 AWD	119	11/02 – 08/07		3875
6 Station Wagon (GY)	2.3 AWD	119	11/02 – 08/07	3889	
626 II (GC)	2.0 i Turbo	87	01/86 – 10/87	3437	
626 III (GD)	1.6	60	06/87 – 05/92	3437	
626 III (GD)	1.8	65	11/87 – 05/92	3437	
626 III (GD)	2.0	66	09/87 – 10/90	3437	
626 III (GD)	2.0 12V	79	09/87 – 05/92	3437	
626 III (GD)	2.0 16V	103	11/87 – 05/92	3437	
626 III (GD)	2.0 16V	109	07/87 – 09/89	3437	
626 III (GD)	2.0 D	44	07/87 – 07/91	3437	
626 III (GD)	2.2 12V	85	11/87 – 07/91	3437	
626 III (GD)	2.2 12V 4WD	85	01/90 – 05/92	3437	
626 III Coupe (GD)	1.6	60	06/87 – 05/92	3437	
626 III Coupe (GD)	1.8	65	09/87 – 08/91	3437	
626 III Coupe (GD)	2.0	66	09/87 – 10/90	3437	
626 III Coupe (GD)	2.0 12V	79	09/87 – 12/88	3437	
626 III Coupe (GD)	2.0 16V	103	12/87 – 10/90	3437	
626 III Coupe (GD)	2.0 16V	109	06/87 09/89	3437	
626 III Coupe (GD)	2.2 12V	85	04/88 – 12/91	3437	
626 III Hatchback (GD)	1.6	60	06/87 – 05/92	3437	
626 III Hatchback (GD)	1.8	65	11/87 – 05/92	3437	
626 III Hatchback (GD)	1.8	69	11/87 – 05/92	3437	
626 III Hatchback (GD)	2.0	66	09/87 – 10/90	3437	
626 III Hatchback (GD)	2.0	74	10/87 – 07/89	3437	
626 III Hatchback (GD)	2.0 12V	79	11/87 – 05/92	3437	
626 III Hatchback (GD)	2.0 16V	103	11/87 – 10/90	3437	
626 III Hatchback (GD)	2.0 16V	109	06/87 – 08/89	3437	
626 III Hatchback (GD)	2.0 4x4	110	08/89 – 07/91	3437	
626 III Hatchback (GD)	2.0 D	44	07/87 – 07/91	3437	
626 III Hatchback (GD)	2.2 12V	85	06/88 – 04/92	3437	
626 III Hatchback (GD)	2.2 12V 4WD	85	11/87 – 07/90	3437	
626 III Hatchback (GD)	2.2 i Turbo	100	10/87 – 12/91	3437	
626 III Station Wagon (GV)	1.8	65	01/88 – 03/92	3437	
626 III Station Wagon (GV)	1.8	66	10/89 – 03/92	3437	
626 III Station Wagon (GV)	2.0	66	10/88 – 09/97	3437	
626 III Station Wagon (GV)	2.0 12V	81	09/87 – 01/90	3437	
626 III Station Wagon (GV)	2.0 16V	103	01/88 – 03/92	3437	
626 III Station Wagon (GV)	2.0 D	44	09/88 – 07/91	3437	
626 III Station Wagon (GV)	2.0 D	60	11/94 – 09/97	3437	
626 III Station Wagon (GV)	2.0 D Comprex	55	05/93 – 11/96	3437	
626 III Station Wagon (GV)	2.0 i 16V	110	11/94 – 09/97	3437	
626 III Station Wagon (GV)	2.2 12V	85	03/89 – 11/96	3437	
626 III Station Wagon (GV)	2.2 12V 4WD	85	05/91 – 11/92	3437	
626 III Station Wagon (GV)	2.2 12V 4WD	85	05/91 – 11/92		3875
626 IV (GE)	1.8 i	66	08/94 – 04/97	3832	
626 IV (GE)	1.8 i	66	08/94 – 04/97		3833

MAKE & MODEL		KW	YEAR		
MAZDA					
626 IV (GE)	1.8 i	77	01/92 – 04/97	3832	
626 IV (GE)	1.8 i	77	01/92 – 04/97		3833
626 IV (GE)	1.8 i	78	05/94 – 06/97	3832	
626 IV (GE)	1.8 i	78	05/94 – 06/97		3833
626 IV (GE)	2.0 D	56	05/94 – 06/97	3832	
626 IV (GE)	2.0 D	56	05/94 – 06/97		3833
626 IV (GE)	2.0 D GLX Comprex	55	10/92 – 04/97	3832	
626 IV (GE)	2.0 D GLX Comprex	55	10/92 – 04/97		3833
626 IV (GE)	2.0 i	85	01/92 – 04/97	3832	
626 IV (GE)	2.0 i	85	01/92 – 04/97		3833
626 IV (GE)	2.0 i 4WD	85	04/92 – 04/97	3832	
626 IV (GE)	2.0 i 4WD	85	04/92 – 04/97		3833
626 IV Hatchback (GE)	18	66	08/94 – 04/97	3832	
626 IV Hatchback (GE)	18	66	08/94 – 04/97		3833
626 IV Hatchback (GE)	18	77	08/91 – 04/97	3832	
626 IV Hatchback (GE)	18	77	08/91 – 04/97		3833
626 IV Hatchback (GE)	2.0 D GLX Comprex	55	01/93 – 04/97	3832	
626 IV Hatchback (GE)	2.0 D GLX Comprex	55	01/93 – 04/97		3833
626 IV Hatchback (GE)	2.0 i	85	08/91 – 04/97	3832	
626 IV Hatchback (GE)	2.0 i	85	08/91 – 04/97		3833
626 IV Hatchback (GE)	2.0 i 4WD	85	04/92 – 04/97	3832	
626 IV Hatchback (GE)	2.0 i 4WD	85	04/92 – 04/97		3833
626 IV Hatchback (GE)	2.5 24V	120	08/94 – 04/97	3832	
626 IV Hatchback (GE)	2.5 24V	120	08/94 – 04/97		3833
626 IV Hatchback (GE)	2.5 24V	121	01/92 – 04/97	3832	
626 IV Hatchback (GE)	2.5 24V	121	01/92 – 04/97		3833
626 V (GF)	16	79	07/97 – 07/99	3832	
626 V (GF)	16	79	07/97 – 07/99		3875
626 V (GF)	18	66	05/97 – 12/99	3832	
626 V (GF)	18	66	05/97 – 12/99		3875
626 V (GF)	18	74	12/99 – 10/02	3832	
626 V (GF)	18	74	12/99 – 10/02		3875
626 V (GF)	20	85	05/97 – 10/02	3832	
626 V (GF)	20	85	05/97 – 10/02		3875
626 V (GF)	20	100	04/98 – 10/02	3832	
626 V (GF)	20	100	04/98 – 10/02		3875
626 V (GF)	2.0 DI TD	66	04/98 – 10/02	3832	
626 V (GF)	2.0 DI TD	66	04/98 – 10/02		3875
626 V (GF)	2.0 TD	81	10/00 – 10/02	3832	
626 V (GF)	2.0 TD	81	10/00 – 10/02		3875
626 V (GF)	2.0 Turbo DI	74	04/98 – 10/02	3832	
626 V (GF)	2.0 Turbo DI	74	04/98 – 10/02		3875
626 V Hatchback (GF)	18	66	05/97 – 12/99	3832	
626 V Hatchback (GF)	18	66	05/97 – 12/99		3875
626 V Hatchback (GF)	18	74	12/99 – 10/02	3832	
626 V Hatchback (GF)	18	74	12/99 – 10/02		3875
626 V Hatchback (GF)	20	85	05/97 – 10/02	3832	
626 V Hatchback (GF)	20	85	05/97 – 10/02		3875
626 V Hatchback (GF)	2.0 DITD	66	04/98 – 10/02	3832	
626 V Hatchback (GF)	2.0 DITD	66	04/98 – 10/02		3875
626 V Hatchback (GF)	2.0 H.P.	100	02/98 – 10/02	3832	
626 V Hatchback (GF)	2.0 H.P.	100	02/98 – 10/02		3875
626 V Hatchback (GF)	2.0 TD	81	10/00 – 10/02	3832	
626 V Hatchback (GF)	2.0 TD	81	10/00 – 10/02		3875
626 V Hatchback (GF)	2.0 Turbo DI	74	04/98 – 10/02	3832	
626 V Hatchback (GF)	2.0 Turbo DI	74	04/98 – 10/02		3875
626 V Station Wagon (GW)	18	66	02/98 – 01/00	3832	
626 V Station Wagon (GW)	18	66	02/98 – 01/00		3875
626 V Station Wagon (GW)	18	74	01/00 – 10/02	3832	
626 V Station Wagon (GW)	18	74	01/00 – 10/02		3875
626 V Station Wagon (GW)	20	85	02/98 – 10/02	3832	
626 V Station Wagon (GW)	20	85	02/98 – 10/02		3875
626 V Station Wagon (GW)	2.0 DITD	66	09/99 – 10/02		3875
626 V Station Wagon (GW)	2.0 H.P.	100	02/98 – 10/02	3832	
626 V Station Wagon (GW)	2.0 H.P.	100	02/98 – 10/02		3875
626 V Station Wagon (GW)	2.0 TD	81	10/00 – 10/02		3875
626 V Station Wagon (GW)	2.0 Turbo DI	74	04/98 – 10/02	3832	
626 V Station Wagon (GW)	2.0 Turbo DI	74	04/98 – 10/02		3875
818 / 808 / MIZER	1.3 (TC)	44	01/74 – 10/78	3709	
818 / 808 / MIZER	1.6 (NA)	55	01/77 – 10/78	3709	
929 IV / LUCE (HC)	2.0 (FEFA)	85	06.87-12.88	3666	

BESER

MAKE & MODEL		KW	YEAR		
MAZDA					
929 IV / LUCE (HC)	2.0 (FEFA)	85	06.87-12.88	3672	
929 IV / LUCE (HC)	2.0 (FE (8V))	85	06.87-12.88	3666	
929 IV / LUCE (HC)	2.0 (FE (8V))	85	06.87-12.88	3672	
929 IV / LUCE (HC)	2.2 12V (F2)	85	01.88-04.89	3666	
929 IV / LUCE (HC)	2.2 12V (F2)	85	01.88-04.89	3672	
929 IV / LUCE (HC)	2.2 12V (F21)	85	01.88-04.89	3666	
929 IV / LUCE (HC)	2.2 12V (F21)	85	01.88-04.89	3672	
929 IV / LUCE (HC)	2.2 12V (F2-C)	94	04.89-06.91	3666	
929 IV / LUCE (HC)	2.2 12V (F2-C)	94	04.89-06.91	3672	
929 IV / LUCE (HC)	2.2 12V (F2E)	85	01.88-04.89	3666	
929 IV / LUCE (HC)	2.2 12V (F2E)	85	01.88-04.89	3672	
929 IV / LUCE (HC)	2.2 i (F2-EGI)	100	05.87-12.88	3666	
929 IV / LUCE (HC)	2.2 i (F2-EGI)	100	05.87-12.88	3672	
929 IV / LUCE (HC)	3.0 (JE)	140	06.87-06.91	3666	
929 IV / LUCE (HC)	3.0 (JE)	140	06.87-06.91	3672	
929 IV / LUCE (HC)	3.0 (JE3)	125	01.88-12.89	3666	
929 IV / LUCE (HC)	3.0 (JE3)	125	01.88-12.89	3672	
929 IV / LUCE (HC)	3.0 i (JE3)	123	01.90-06.91	3666	
929 IV / LUCE (HC)	3.0 i (JE3)	123	01.90-06.91	3672	
BONGO TRUCK Platform/Chassis (SKF_)	BONGO TRUCK Platform/Chassis (SKF_)	75	08/10 -	3892	
BONGO TRUCK Platform/Chassis (SKF_)	BONGO TRUCK Platform/Chassis (SKF_)	75	08/10 -	3892	
BONGO VAN Bus (SK_)	BONGO VAN Bus (SK_)	75	09/99 -	3892	
BONGO VAN Bus (SK_)	BONGO VAN Bus (SK_)	75	09/99 -	3892	
B-SERIE (UF)	2.5 D 4WD	57	09/98 – 06/99	3781	
B-SERIE (UF)	2.5 D 4WD	63	02/96 – 06/99	3781	
B-SERIE (UF)	2.5 D 4WD	64	04/96 – 02/99	3781	
B-SERIE (UF)	2.6 12V 4WD	90	01/90 – 06/99	3781	
B-SERIE (UF)	2.6 i 4WD	92	01/90 – 02/99	3781	
B-SERIE (UN)	22	68	11/99 – 08/02	3767	
B-SERIE (UN)	2.2 4WD	60	02/99 – 11/06	3767	
B-SERIE (UN)	2.2 8V 4WD	68	06/99 – 11/06	3767	
B-SERIE (UN)	2.5 D	57	06/99 – 11/06	3767	
B-SERIE (UN)	2.5 D	61	11/99 – 12/01	3767	
B-SERIE (UN)	2.5 D	62	12/02 – 11/06	3767	
B-SERIE (UN)	2.5 D 4WD	57	06/99 – 11/06	3767	
B-SERIE (UN)	2.5 D 4WD	61	11/99 – 12/01	3767	
B-SERIE (UN)	2.5 D 4WD	62	12/02 – 11/06	3767	
B-SERIE (UN)	2.5 D 4WD	65	11/99 – 07/02	3767	
B-SERIE (UN)	2.5 D 4WD	86	02/99 – 03/05	3767	
B-SERIE (UN)	2.5 TD	86	02/99 – 03/05	3767	
B-SERIE (UN)	2.5 TD 4WD	80	06/99 – 07/06	3767	
B-SERIE (UN)	2.6 12V 4WD	90	06/99 – 11/06	3767	
B-SERIE (UN)	2.6 i	92	02/99 – 11/06	3767	
B-SERIE (UN)	2.6 i 4WD	92	02/99 – 11/06	3767	
B-SERIE III / B-SERIE BRAVO	1.6 (H629)	58	10/81 – 12/84	3436	
B-SERIE III / B-SERIE BRAVO	1.8 (H816)	62	10/81 – 08/85	3436	
B-SERIE III / B-SERIE BRAVO	1.8 (H817)	62	10/81 – 08/85	3436	
B-SERIE III / B-SERIE BRAVO	2.0 (HEA1)	57	06/82 – 12/84	3436	
B-SERIE III / B-SERIE BRAVO	2.0 (UA)	57	01/83 – 12/84	3436	
BT-50 Pickup (CD, UN)	2.5 MRZ-CD 4x4	105	12/06 – 12/15	3988	
BT-50 Pickup (CD, UN)	2.5 TDi 4x4	81	08/06 – 12/15	3988	
BT-50 Pickup (CD, UN)	3.0 CDVi	115	12/06 – 12/15	3767	
BT-50 Pickup (CD, UN)	3.0 CDVi 4x4	115	12/06 – 12/15	3988	
BT-50 Platform/Chassis (CD, UN)	2.5 CDVi	105	12/06 -	3767	
BT-50 Platform/Chassis (CD, UN)	3.0 CDVi 4x4	115	12/06 -	3988	
CX-3 (DK)	2.0	88	05/15 -	4317	
CX-3 (DK)	2.0	109	07/15 -	4317	
CX-3 (DK)	1.5 D	77	05/15 -	4317	
CX-3 (DK)	2.0 AWD	109	07/15 -	4317	
CX-3 (DK)	2.0 AWD	110	05/15 -	4317	
CX-3 (DK)	1.5 D AWD	77	05/15 -	4317	
DEMIO (DW)	1.3 16V	46	08/98 – 07/03	3522	
DEMIO (DW)	1.3 i 16V	53	08/98 – 04/00	3522	
DEMIO (DW)	1.5 16V	55	04/00 – 07/03	3522	
E-SERIE II	1.6 E1600	51	08/80 – 06/84	3376	
E-SERIE II	1.6 E1600	51	08/80 – 06/84	3436	
E-SERIE III-IV / BONGO (SR2)	2.2 E2200 D	46	05/85 – 02/88	3376	
E-SERIE III-IV / BONGO (SR2)	2.2 E2200 D	46	05/85 – 02/88	3376	
E-SERIE Box (SG)	E2000	71	04/04 – 07/06	3874	
E-SERIE Box (SR2)	2200 D 4WD	47	03/91 – 05/03	3463	
E-SERIE Box (SR2)	2200 D 4WD	47	03/91 – 05/03	3499	

BESER

MAKE & MODEL		KW	YEAR		
MAZDA					
E-SERIE Box (SR2)	2200 D 4WD	47	03/91 – 05/03	3874	
E-SERIE Box (SR2)	E2000	60	03/91 – 05/94	3463	
E-SERIE Box (SR2)	E2000	60	03/91 – 05/94	3499	
E-SERIE Box (SR2)	E2000	63	05/85 – 04/89	3463	
E-SERIE Box (SR2)	E2000	63	05/85 – 04/89	3499	
E-SERIE Box (SR2)	E2000	65	01/84 – 12/90	3463	
E-SERIE Box (SR2)	E2000	65	01/84 – 12/90	3499	
E-SERIE Box (SR2)	E2000	70	06/94 – 05/03	3463	
E-SERIE Box (SR2)	E2000	70	06/94 – 05/03	3499	
E-SERIE Box (SR2)	E2000	70	06/94 – 05/03	3874	
E-SERIE Box (SR2)	E2000 4WD	65	01/88 – 07/91	3463	
E-SERIE Box (SR2)	E2000 4WD	65	01/88 – 07/91	3499	
E-SERIE Box (SR2)	E2000 4WD	71	04/97 – 08/99	3463	
E-SERIE Box (SR2)	E2000 4WD	71	04/97 – 08/99	3499	
E-SERIE Box (SR2)	E2200 D	46	05/85 – 02/88	3463	
E-SERIE Box (SR2)	E2200 D	46	05/85 – 02/88	3499	
E-SERIE Box (SR2)	E2200 D	47	03/91 – 05/03	3463	
E-SERIE Box (SR2)	E2200 D	47	03/91 – 05/03	3499	
E-SERIE Box (SR2)	E2200 D	52	02/97 – 08/02	3463	
E-SERIE Box (SR2)	E2200 D	52	02/97 – 08/02	3499	
E-SERIE Box (SR2)	E2200 D	52	02/97 – 08/02	3874	
E-SERIE Box (SR2)	E2200 D 4WD	52	02/97 – 05/03	3463	
E-SERIE Box (SR2)	E2200 D 4WD	52	02/97 – 05/03	3499	
E-SERIE Box (SR2)	E2200 D 4WD	52	02/97 – 05/03	3874	
E-SERIE Bus	E2200 D	47	03/91 – 05/03	3463	
E-SERIE Bus	E2200 D	47	03/91 – 05/03	3499	
E-SERIE Bus	E-SERIE Bus	47	03/91 – 05/03	3892	
E-SERIE Bus (SR1)	E2000	63	11/84 – 05/94	3463	
E-SERIE Bus (SR1)	E2000	63	11/84 – 05/94	3499	
E-SERIE Bus (SR1)	E2000 4WD	60	10/88 – 09/89	3463	
E-SERIE Bus (SR1)	E2000 4WD	60	10/88 – 09/89	3499	
E-SERIE Bus (SR1)	E2200 D	46	01/84 – 02/88	3463	
E-SERIE Bus (SR1)	E2200 D	46	01/84 – 02/88	3499	
E-SERIE MPV (SG)	2.5 TD (SGL35, SGLW)	92	09/99 – 10/01	3874	
E-SERIE MPV (SG)	2.5 TD 4x4 (SGL5, SGLR)	92	09/99 – 10/01	3874	
E-SERIE MPV (SG)	E-SERIE MPV (SG)	74	08/99 – 10/01	3892	
E-SERIE Platform/Chassis (SD1)	E2000	60	10/89 – 05/95	3463	
E-SERIE Platform/Chassis (SD1)	E2000	60	10/89 – 05/95	3499	
E-SERIE Platform/Chassis (SD1)	E2000	63	11/88 – 09/89	3463	
E-SERIE Platform/Chassis (SD1)	E2000	63	11/88 – 09/89	3499	
E-SERIE Platform/Chassis (SD1)	E2000	65	01/83 – 07/91	3463	
E-SERIE Platform/Chassis (SD1)	E2000	65	01/83 – 07/91	3499	
E-SERIE Platform/Chassis (SD1)	E2000	71	01/91 – 08/98	3463	
E-SERIE Platform/Chassis (SD1)	E2000	71	01/91 – 08/98	3499	
E-SERIE Platform/Chassis (SD1)	E2200 D	47	11/88 – 03/97	3463	
E-SERIE Platform/Chassis (SD1)	E2200 D	47	11/88 – 03/97	3499	
E-SERIE Platform/Chassis (SD1)	E2200 D	52	04/97 – 07/99	3463	
E-SERIE Platform/Chassis (SD1)	E2200 D	52	04/97 – 07/99	3499	
E-SERIE Platform/Chassis (SD1, SL)	E2000	71	09/99 – 09/04	3874	
E-SERIE Platform/Chassis (SD1, SL)	E2200 D	52	09/99 – 07/04	3874	
FESTIVA	11	40	04/89 – 10/90	3723	
FESTIVA	13	48	04/89 – 10/90	3723	
FIGHTER Pickup	2.5 TDiC 4WD	80	08/02 – 07/06	3767	
MPV I (LV)	2.5 TD	85	05/96 – 09/99	3874	
MPV I (LV)	3.0 i V6	109	11/89 – 09/99	3874	
MPV I (LV)	3.0 i V6 (LV10)	113	03/95 – 09/99	3874	
MPV II (LW)	20	88	08/00 – 07/02	3874	
MPV II (LW)	20	90	09/99 – 08/00	3874	
MPV II (LW)	23	104	07/02 – 02/06	3874	
MPV II (LW)	2.0 DI	100	07/02 – 02/06	3874	
MPV II (LW)	2.5 V6	125	09/99 – 03/02	3874	
MPV II (LW)	3.0 i V6	147	03/02 – 02/06	3874	
MX-3 (EC)	1.6 i	65	07/91 – 10/97	3640	
MX-3 (EC)	1.6 i	79	01/94 – 10/97	3640	
MX-3 (EC)	1.8 i V6	95	01/94 – 10/97	3640	
MX-3 (EC)	1.8 i V6	98	01/92 – 01/94	3640	
MX-3 (EC)	1.8 i V6	99	01/96 – 10/97	3640	
MX-6 (GE)	18	74	12/95 – 02/97	3832	
MX-6 (GE)	18	74	12/95 – 02/97		3833
MX-6 (GE)	20	85	02/92 – 02/97	3832	
MX-6 (GE)	20	85	02/92 – 02/97		3833

BESER®

MAKE & MODEL		KW	YEAR		
MAZDA					
MX-6 (GE)	22	162	12/95 – 02/97	3832	
MX-6 (GE)	22	162	12/95 – 02/97		3833
MX-6 (GE)	2.5 24V	121	02/92 – 02/97	3832	
MX-6 (GE)	2.5 24V	121	02/92 – 02/97		3833
MX-6 (GE)	2.5 24V	123	02/93 – 11/95	3832	
MX-6 (GE)	2.5 24V	123	02/93 – 11/95		3833
MX-6 (GE)	2.5 i 24V	120	08/94 – 02/97	3832	
MX-6 (GE)	2.5 i 24V	120	08/94 – 02/97		3833
PREMACY (CP)	19	74	07/99 – 03/05	3832	
PREMACY (CP)	19	74	07/99 – 03/05		3875
PREMACY (CP)	19	84	07/99 – 03/05	3832	
PREMACY (CP)	19	84	07/99 – 03/05		3875
PREMACY (CP)	20	96	11/01 – 03/05	3832	
PREMACY (CP)	20	96	11/01 – 03/05		3875
PREMACY (CP)	20	107	02/05 – 03/05	3832	
PREMACY (CP)	20	107	02/05 – 03/05		3853/1
PREMACY (CP)	20	107	02/05 – 03/05		3875
PREMACY (CP)	20	107	02/05 – 03/05	3885	
PREMACY (CP)	2.0 TD	66	10/99 – 07/00	3832	
PREMACY (CP)	2.0 TD	66	10/99 – 07/00		3875
PREMACY (CP)	2.0 TD	74	07/00 – 03/05	3832	
PREMACY (CP)	2.0 TD	74	07/00 – 03/05		3875
PREMACY (CP)	2.3 SVT	122	02/05 – 03/05	3832	
PREMACY (CP)	2.3 SVT	122	02/05 – 03/05		3853/1
PREMACY (CP)	2.3 SVT	122	02/05 – 03/05		3875
PREMACY (CP)	2.3 SVT	122	02/05 – 03/05	3885	
PREMACY MPV	18	90	01/01 – 02/07	3832	
PREMACY MPV	18	90	01/01 – 02/07		3875
RX 7 I (SA)	Wankel	83	03/84 – 03/86		3875
RX 7 I (SA)	Wankel	85	01/81 – 03/84		3875
RX 7 II (FC)	Turbo	133	06/87 – 11/89		3875
RX 7 II (FC)	Turbo	147	03/89 – 12/91		3875
RX 7 II (FC)	Wankel	110	11/85 – 04/89		3875
RX 7 II Convertible	Turbo	147	03/89 – 12/91		3875
RX 7 III (FD)	Wankel Twin Turbo	176	07/92 – 08/02		3875
TRIBUTE (EP)	20	91	03/00 – 05/08	4119	
TRIBUTE (EP)	20	91	03/00 – 05/08		4215
TRIBUTE (EP)	2.0 (YF)	91	03/00 – 05/08	4220	
TRIBUTE (EP)	2.0 (YF)	91	03/00 – 05/08	4220	
TRIBUTE (EP)	2.0 4WD	91	03/00 – 05/08	4119	
TRIBUTE (EP)	2.0 4WD	91	03/00 – 05/08		4215
TRIBUTE (EP)	2.3 (L3-VE)	110	04/04 – 05/08	4220	
TRIBUTE (EP)	2.3 A las 4 ruedas (L3)	109	07/06 – 05/08	4220	
TRIBUTE (EP)	2.3 All-wheel Drive	109	07/06 – 05/08	4119	
TRIBUTE (EP)	2.3 All-wheel Drive	109	07/06 – 05/08		4215
TRIBUTE (EP)	2.3 AWD	110	04/ 04 – 05/08	4119	
TRIBUTE (EP)	2.3 AWD	110	04/04 – 05/08		4215
TRIBUTE (EP)	2.3 GX	110	12/03 – 10/04	4119	
TRIBUTE (EP)	2.3 GX	110	12/03 – 10/04		4215
TRIBUTE (EP)	3.0 V6 (AJ)	149	04/04 – 05/08	4220	
TRIBUTE (EP)	3.0 V6 24V (AJ)	145	03/00 – 05/08	4220	
TRIBUTE (EP)	3.0 V6 24V 4WD	145	03/00 – 05/08	4119	
TRIBUTE (EP)	3.0 V6 24V 4WD	145	03/00 – 05/08		4215
TRIBUTE (EP)	3.0 V6 AWD	149	04/04 – 05/08	4119	
TRIBUTE (EP)	3.0 V6 AWD	149	04/04 – 05/08		4215
VERISA (ND)	15	83	07/04 – 03/15	3877	
XEDOS 6 (CA)	18	85	04/94 – 10/99	3832	
XEDOS 6 (CA)	18	85	04/94 – 10/99		3833
XEDOS 6 (CA)	1.6 16V	79	06/94 – 10/99	3832	
XEDOS 6 (CA)	1.6 16V	79	06/94 – 10/99		3833
XEDOS 6 (CA)	1.6 16V	83	08/92 – 05/94	3832	
XEDOS 6 (CA)	1.6 16V	83	08/92 – 05/94		3833
XEDOS 6 (CA)	2.0 V6	103	06/94 – 10/99	3832	
XEDOS 6 (CA)	2.0 V6	103	06/94 – 10/99		3833
XEDOS 6 (CA)	2.0 V6	106	01/92 – 05/94	3832	
XEDOS 6 (CA)	2.0 V6	106	01/92 – 05/94		3833
MEGA					
CLUB II	1.4 i	55	06/99 -	3380	
CLUB II	1.4 i	55	06/99 -	3381	

MAKE & MODEL		KW	YEAR		
MERCEDES-BENZ					
C-SERISI T-Model (S205)	C 180 BlueTEC / d (205.236)	85	09.14 -	4334	
/8 (W114)	250	96	07/68 – 08/72	3315	
/8 (W114)	250	96	07/68 – 08/72	3515	
/8 (W114)	230.6 (114.015)	88	01/68 – 11/76	3315	
/8 (W114)	230.6 (114.015)	88	01/68 – 11/76	3515	
/8 (W114)	250 (114.010)	85	01/68 – 08/72	3315	
/8 (W114)	250 (114.010)	85	01/68 – 08/72	3515	
/8 (W114)	250 2.8 (114.011)	96	06/72 – 11/76	3315	
/8 (W114)	250 2.8 (114.011)	96	06/72 – 11/76	3515	
/8 (W114)	280 (114.060)	118	06/72 – 11/76	3315	
/8 (W114)	280 (114.060)	118	06/72 – 11/76	3515	
/8 (W114)	280 E (114.062)	136	06/72 – 11/76	3315	
/8 (W114)	280 E (114.062)	136	06/72 – 11/76	3515	
/8 (W115)	200	70	01/68 – 01/77	3320	
/8 (W115)	200	70	01/68 – 01/77	3350	
/8 (W115)	200 (115.015)	63	01/68 – 01/77	3320	
/8 (W115)	200 (115.015)	63	01/68 – 01/77	3350	
/8 (W115)	200 D (115.115)	40	01/68 – 01/77	3320	
/8 (W115)	200 D (115.115)	40	01/68 – 01/77	3350	
/8 (W115)	220 (115.010)	66	01/68 – 07/73	3320	
/8 (W115)	220 (115.010)	66	01/68 – 07/73	3350	
/8 (W115)	220 (115.010)	77	01/68 – 07/73	3320	
/8 (W115)	220 (115.010)	77	01/68 – 07/73	3350	
/8 (W115)	220 D (115.110)	44	01/68 – 01/77	3320	
/8 (W115)	220 D (115.110)	44	01/68 – 01/77	3350	
/8 (W115)	230.4 (115.017)	81	08/73 – 12/76	3320	
/8 (W115)	230.4 (115.017)	81	08/73 – 12/76	3350	
/8 (W115)	240 D (115.117)	48	08/73 – 01/77	3320	
/8 (W115)	240 D (115.117)	48	08/73 – 01/77	3350	
/8 (W115)	240 D 3.0 (115.114)	59	08/74 – 11/76	3315	
/8 (W115)	240 D 3.0 (115.114)	59	08/74 – 11/76	3515	
/8 Coupe (W114)	250 C (114.021)	96	04/69 – 06/72	3315	
/8 Coupe (W114)	250 C (114.021)	96	04/69 – 06/72	3515	
/8 Coupe (W114)	250 C 2.8 (114.023)	96	06/72 – 11/76	3315	
/8 Coupe (W114)	250 C 2.8 (114.023)	96	06/72 – 11/76	3515	
/8 Coupe (W114)	250 CE (114.022)	110	04/69 – 04/72	3315	
/8 Coupe (W114)	250 CE (114.022)	110	04/69 – 04/72	3515	
/8 Coupe (W114)	280 C (114.073)	118	06/72 – 02/77	3315	
/8 Coupe (W114)	280 C (114.073)	118	06/72 – 02/77	3515	
/8 Coupe (W114)	280 CE (114.072)	136	06/72 – 01/77	3315	
/8 Coupe (W114)	280 CE (114.072)	136	06/72 – 01/77	3515	
100 Box (631)	2.0 D	44	04/88 – 08/93	3689	
100 Box (631)	2.0 D	45	09/93 – 04/96	3689	
100 Box (631)	D (631.332, 631.342)	53	02/88 – 05/92	3689	
100 Box (631)	D (631.332, 631.342)	55	12/90 – 02/96	3689	
100 Bus (631)	2.0 D	44	04/88 – 08/93	3689	
100 Bus (631)	2.0 D	45	09/93 – 04/96	3689	
100 Bus (631)	D	41	12/90 – 12/94	3689	
100 Bus (631)	D (631.333, 631.343, 631.334,631.344)	53	02/88 – 05/92	3689	
100 Bus (631)	D (631.333, 631.343, 631.334,631.344)	55	12/90 – 02/96	3689	
100 Platform/Chassis (631)	D (631.340)	53	02/88 – 05/92	3689	
100 Platform/Chassis (631)	D (631.340)	55	12/90 – 02/96	3689	
190 (W201)	23	97	09/87 – 09/88		3611
190 (W201)	26	118	10/82 – 09/88		3611
190 (W201)	2.0 (201.022)	66	10/82 – 10/84		3611
190 (W201)	2.0 (201.023)	75	01/86 – 05/90		3611
190 (W201)	2.0 (201.023)	75	01/86 – 05/90		3630
190 (W201)	2.0 (201.023)	77	09/84 – 05/90		3611
190 (W201)	2.0 (201.023)	77	09/84 – 05/90		3630
190 (W201)	2.3 E	100	10/82 – 09/88		3611
190 (W201)	D 2.0 (201.122)	53	08/83 – 08/89		3611
190 (W201)	D 2.0 (201.122)	55	08/89 – 08/93		3611
190 (W201)	D 2.0 (201.122)	55	08/89 – 08/93		3630
190 (W201)	D 2.5 (201.126)	66	04/85 – 08/93		3611
190 (W201)	D 2.5 (201.126)	66	04/85 – 08/93		3630
190 (W201)	D 2.5 (201.126)	69	08/89 – 08/93		3611
190 (W201)	D 2.5 (201.126)	69	08/89 – 08/93		3630
190 (W201)	E 1.8 (201.018)	80	04/90 – 08/93		3611
190 (W201)	E 1.8 (201.018)	80	04/90 – 08/93		3630
190 (W201)	E 2.0	87	01/85 – 08/93		3611
190 (W201)	E 2.0	87	01/85 – 08/93		3630

MAKE & MODEL		KW	YEAR		
MERCEDES-BENZ					
190 (W201)	E 2.0	93	10/82 – 06/93		3611
190 (W201)	E 2.0	93	10/82 – 06/93		3630
190 (W201)	E 2.0 (201.024)	83	02/85 – 12/86		3611
190 (W201)	E 2.0 (201.024)	85	02/85 – 12/86		3611
190 (W201)	E 2.0 (201.024)	90	10/82 – 06/93		3611
190 (W201)	E 2.0 (201.024)	90	10/82 – 06/93		3630
190 (W201)	E 2.3	97	09/86 – 08/91		3611
190 (W201)	E 2.3	97	09/86 – 08/91		3630
190 (W201)	E 2.3 (201.028)	100	10/86 – 08/93		3611
190 (W201)	E 2.3 (201.028)	100	10/86 – 08/93		3630
190 (W201)	E 2.3-16	125	09/85 – 12/87	3408	
190 (W201)	E 2.3-16	125	09/85 – 12/87		3550
190 (W201)	E 2.3-16	130	09/85 – 08/88	3408	
190 (W201)	E 2.3-16	130	09/85 – 08/88		3550
190 (W201)	E 2.3-16 (201.034)	136	04/84 – 01/87	3408	
190 (W201)	E 2.3-16 (201.034)	136	04/84 – 01/87		3550
190 (W201)	E 2.5-16	143	03/89 – 08/93		3550
190 (W201)	E 2.5-16	150	09/88 – 08/93	3408	
190 (W201)	E 2.5-16	150	09/88 – 08/93		3550
190 (W201)	E 2.6	122	09/86 – 12/89		3611
190 (W201)	E 2.6 (201.029)	118	09/86 – 08/93		3611
190 (W201)	E 2.6 (201.029)	118	09/86 – 08/93		3630
190 (W201)	E Evolution II 2.5	173	05/90 – 08/93	3629	
190 (W201)	Turbo-D 2.5 (201.128)	90	02/88 – 08/93		3611
190 (W201)	Turbo-D 2.5 (201.128)	90	02/88 – 08/93		3630
190 (W201)	Turbo-D 2.5 (201.128)	93	02/88 – 08/93		3611
190 (W201)	Turbo-D 2.5 (201.128)	93	02/88 – 08/93		3630
A-CLASS (W168)	A 140 (168.031, 168.131)	60	01/01 – 08/04	4125	
A-CLASS (W168)	A 140 (168.031, 168.131)	60	07/97 – 08/04	4125	
A-CLASS (W168)	A 160 (168.033, 168.133)	75	07/97 – 08/04	4125	
A-CLASS (W168)	A 160 CDI (168.006)	55	02/01 – 08/04	4125	
A-CLASS (W168)	A 160 CDI (168.007)	44	07/98 – 02/01	4125	
A-CLASS (W168)	A 170 CDI (168.008)	66	07/98 – 02/01	4125	
A-CLASS (W168)	A 170 CDI (168.009, 168.109)	70	02/01 – 08/04	4125	
A-CLASS (W168)	A 190 (168.032, 168.132)	92	03/99 – 08/04	4125	
A-CLASS (W168)	A 210 (168.035, 168.135)	103	03/02 – 08/04	4125	
A-CLASS (W176)	A 180 CDI / d (176.012)	80	06/12 -	4326	
A-CLASS (W176)	A 250 (176.050)	160	07/15 -	4326	
A-CLASS (W176)	A 250 4-matic (176.046)	155	06/12 - 06/15	4326	
A-CLASS (W176)	A 160 (176.041)	75	07/15 -	4326	
A-CLASS (W176)	A 160 CDI / d (176.011	66	06/13 -	4326	
A-CLASS (W176)	A 180 CDI (176.000)	80	06/12 -	4326	
A-CLASS (W176)	A 200 (176.043)	115	06/12 -	4326	
A-CLASS (W176)	A 200 CDI (176.001)	100	06/12 -	4326	
A-CLASS (W176)	A 200 CDI / d (176.008)	100	02/14 -	4326	
A-CLASS (W176)	A 200 CDI / d 4-matic (176.002)	100	02/14 -	4326	
A-CLASS (W176)	A 220 4-matic (176.047)	135	05/14 -	4326	
A-CLASS (W176)	A 220 CDI (176.003)	120	01/14 -	4326	
A-CLASS (W176)	A 220 CDI (176.003)	125	09/12 -	4326	
A-CLASS (W176)	A 220 CDI 4-matic (176.005)	125	09/12 -	4326	
A-CLASS (W176)	A 220 d (176.003)	130	07/15 -	4326	
A-CLASS (W176)	A 220 d 4-matic (176.005)	130	07/15 -	4326	
A-CLASS (W176)	A 250 (176.044)	155	06/12 - 06/15	4326	
A-CLASS (W176)	A 250 4-matic (176.051)	160	07/15 -	4326	
A-CLASS (W176)	A 180 (176.042)	90	06/12 -	4326	
B-CLASS (W246, W242)	Electric Drive / B 250 e (242.890)	132	11/14 - 10/17	4326	
B-CLASS (W246, W242)	B 160 (246.241)	75	07/15 -	4326	
B-CLASS (W246, W242)	B 160 CDI / d (246.211)	66	05/13 -	4326	
B-CLASS (W246, W242)	B 180 (246.242)	90	11/11 -	4326	
B-CLASS (W246, W242)	B 180 CDI (246.200)	80	11/11 -	4326	
B-CLASS (W246, W242)	B 180 CDI / d (246.212)	80	02/13 -	4326	
B-CLASS (W246, W242)	B 200 (246.243)	115	11/11 -	4326	
B-CLASS (W246, W242)	B 200 CDI (246.201)	100	11/11 -	4326	
B-CLASS (W246, W242)	B 200 CDI / d (246.208)	100	08/14 -	4326	
B-CLASS (W246, W242)	B 200 CDI / d 4-matic (246.202)	100	08/14 -	4326	
B-CLASS (W246, W242)	B 200 Natural Gas Drive / B 200 c (242.848)	115	11/12 -	4326	
B-CLASS (W246, W242)	B 220 4-matic (246.247)	135	05/13 -	4326	
B-CLASS (W246, W242)	B 220 CDI / d (246.203)	120	06/13 -	4326	
B-CLASS (W246, W242)	B 220 CDI / d (246.203)	125	11/11 -	4326	
B-CLASS (W246, W242)	B 220 CDI / d (246.203)	130	09/14 -	4326	
B-CLASS (W246, W242)	B 220 CDI / d 4-matic (246.205)	130	09/14 -	4326	

MAKE & MODEL		KW	YEAR		
MERCEDES-BENZ					
B-CLASS (W246, W242)	B 250 (246.244)	155	05/12 -	4326	
B-CLASS (W246, W242)	B 250 4-matic (246.246)	155	08/14 -	4326	
B-CLASS (W246, W242)	Electric Drive / B 250 e (242.890)	65	11/14 - 10/17	4326	
C 32 AMG Kompressor	(203.065)	260	02/01 – 02/07		3581
CABRIOLET (A124)	300 CE-24 (124.061)	162	04/92 – 06/93	3629	
CABRIOLET (A124)	300 CE-24 (124.061)	170	04/92 – 06/93	3629	
C-CLASS (W202)	C 180 (202.018)	89	11/94 – 05/00		3550
C-CLASS (W202)	C 180 (202.018)	89	11/94 – 05/00	3658	
C-CLASS (W202)	C 180 (202.018)	89	11/94 – 05/00		3663
C-CLASS (W202)	C 180 (202.018)	90	03/93 – 05/00		3550
C-CLASS (W202)	C 180 (202.018)	90	03/93 – 05/00	3658	
C-CLASS (W202)	C 180 (202.018)	90	03/93 – 05/00		3663
C-CLASS (W202)	C 200 (202.020)	100	01/94 – 05/00		3550
C-CLASS (W202)	C 200 (202.020)	100	01/94 – 05/00	3658	
C-CLASS (W202)	C 200 (202.020)	100	01/94 – 05/00		3663
C-CLASS (W202)	C 200 CDI (202.134)	75	03/98 – 05/00	3658	
C-CLASS (W202)	C 200 CDI (202.134)	75	03/98 – 05/00		3663
C-CLASS (W202)	C 200 D (202.120)	55	03/93 – 05/00		3550
C-CLASS (W202)	C 200 D (202.120)	55	03/93 – 05/00	3658	
C-CLASS (W202)	C 200 D (202.120)	55	03/93 – 05/00		3663
C-CLASS (W202)	C 200 D (202.122)	65	10/96 – 05/00		3550
C-CLASS (W202)	C 200 D (202.122)	65	10/96 – 05/00	3658	
C-CLASS (W202)	C 200 D (202.122)	65	10/96 – 05/00		3663
C-CLASS (W202)	C 200 Kompressor (202.025)	132	10/95 – 05/00		3676
C-CLASS (W202)	C 200 Kompressor (202.025)	132	10/95 – 05/00	3677	
C-CLASS (W202)	C 200 Kompressor (202.025)	141	11/96 – 05/00		3676
C-CLASS (W202)	C 200 Kompressor (202.025)	141	11/96 – 05/00	3677	
C-CLASS (W202)	C 220 (202.022)	110	03/93 – 05/00		3550
C-CLASS (W202)	C 220 (202.022)	110	03/93 – 05/00	3658	
C-CLASS (W202)	C 220 (202.022)	110	03/93 – 05/00		3663
C-CLASS (W202)	C 220 CDI (202.133)	92	09/97 – 05/00	3658	
C-CLASS (W202)	C 220 CDI (202.133)	92	09/97 – 05/00		3663
C-CLASS (W202)	C 220 D (202.021)	55	07/96 – 05/00		3550
C-CLASS (W202)	C 220 D (202.021)	55	07/96 – 05/00	3658	
C-CLASS (W202)	C 220 D (202.021)	55	07/96 – 05/00		3663
C-CLASS (W202)	C 220 D (202.121)	70	08/93 – 05/00		3550
C-CLASS (W202)	C 220 D (202.121)	70	08/93 – 05/00	3658	
C-CLASS (W202)	C 220 D (202.121)	70	08/93 – 05/00		3663
C-CLASS (W202)	C 230 (202.023)	110	06/96 – 06/97		3550
C-CLASS (W202)	C 230 (202.023)	110	06/96 – 06/97	3658	
C-CLASS (W202)	C 230 (202.023)	110	06/96 – 06/97		3663
C-CLASS (W202)	C 230 Kompressor (202.024)	142	10/95 – 05/00		3676
C-CLASS (W202)	C 230 Kompressor (202.024)	142	10/95 – 05/00	3677	
C-CLASS (W202)	C 240 (202.026)	125	06/97 – 05/00		3676
C-CLASS (W202)	C 240 (202.026)	125	06/97 – 05/00	3677	
C-CLASS (W202)	C 250 D (202.125)	83	05/93 – 05/00		3550
C-CLASS (W202)	C 250 D (202.125)	83	05/93 – 05/00	3658	
C-CLASS (W202)	C 250 D (202.125)	83	05/93 – 05/00		3663
C-CLASS (W202)	C 250 Turbo-D (202.128)	110	10/95 – 05/00		3676
C-CLASS (W202)	C 250 Turbo-D (202.128)	110	10/95 – 05/00	3677	
C-CLASS (W202)	C 280 (202.028)	142	05/93 – 05/00		3550
C-CLASS (W202)	C 280 (202.028)	142	05/93 – 05/00		3630
C-CLASS (W202)	C 280 (202.028)	142	05/93 – 05/00	3658	
C-CLASS (W202)	C 280 (202.028)	142	05/93 – 05/00	3677	
C-CLASS (W202)	C 280 (202.029)	145	06/97 – 05/00		3676
C-CLASS (W202)	C 280 (202.029)	145	06/97 – 05/00	3677	
C-CLASS (W202)	C 36 AMG (202.028)	206	05/94 – 05/00		3581
C-CLASS (W202)	C 36 AMG (202.028)	206	05/94 – 05/00	3629	
C-CLASS (W202)	C 43 AMG (202.033)	225	08/97 – 05/00		3581
C-CLASS (W203)	C 180 (203.035)	95	10/00 – 05/02	3836	
C-CLASS (W203)	C 180 Kompressor (203.046)	105	05/02 – 02/07	3821	
C-CLASS (W203)	C 180 Kompressor (203.046)	105	05/02 – 02/07	3836	
C-CLASS (W203)	C 180 Kompressor (203.046)	105	05/02 – 02/07	4102	
C-CLASS (W203)	C 200 CDI (203.004)	75	02/01 – 02/07	3821	
C-CLASS (W203)	C 200 CDI (203.004)	75	02/01 – 02/07	3836	
C-CLASS (W203)	C 200 CDI (203.004)	75	02/01 – 02/07	4102	
C-CLASS (W203)	C 200 CDI (203.004)	85	09/00 – 02/07	3821	
C-CLASS (W203)	C 200 CDI (203.004)	85	09/00 – 02/07	3836	
C-CLASS (W203)	C 200 CDI (203.004)	85	09/00 – 02/07	4102	
C-CLASS (W203)	C 200 CDI (203.007)	90	04/03 – 02/07	3821	
C-CLASS (W203)	C 200 CDI (203.007)	90	04/03 – 02/07	4102	

MAKE & MODEL   		KW	YEAR		
MERCEDES-BENZ					
C-CLASS (W203)	C 200 CDI (203.007)	90	04/03 – 02/07	3836	
C-CLASS (W203)	C 200 CGI Kompressor (203.043)	125	07/03 – 02/07	3821	
C-CLASS (W203)	C 200 CGI Kompressor (203.043)	125	07/03 – 02/07	4102	
C-CLASS (W203)	C 200 CGI Kompressor (203.043)	125	07/03 – 02/07	3836	
C-CLASS (W203)	C 200 Kompressor (203.042)	120	05/02 – 02/07	3821	
C-CLASS (W203)	C 200 Kompressor (203.042)	120	05/02 – 02/07	3836	
C-CLASS (W203)	C 200 Kompressor (203.042)	120	05/02 – 02/07	4102	
C-CLASS (W203)	C 200 Kompressor (203.045)	120	05/00 – 06/02	3836	
C-CLASS (W203)	C 220 CDI (203.006)	100	05/00 – 02/07	3821	
C-CLASS (W203)	C 220 CDI (203.006)	100	05/00 – 02/07	3836	
C-CLASS (W203)	C 220 CDI (203.006)	100	05/00 – 02/07	4102	
C-CLASS (W203)	C 220 CDI (203.006)	105	05/00 – 02/07	3821	
C-CLASS (W203)	C 220 CDI (203.006)	105	05/00 – 02/07	3836	
C-CLASS (W203)	C 220 CDI (203.006)	105	05/00 – 02/07	4102	
C-CLASS (W203)	C 220 CDI (203.008)	110	02/03 – 02/07	3821	
C-CLASS (W203)	C 220 CDI (203.008)	110	02/03 – 02/07	3836	
C-CLASS (W203)	C 220 CDI (203.008)	110	02/03 – 02/07	4102	
C-CLASS (W203)	C 230 (203.052)	150	01/05 – 02/07	3821	
C-CLASS (W203)	C 230 (203.052)	150	01/05 – 02/07	3836	
C-CLASS (W203)	C 230 Kompressor (203.040)	141	02/04 – 02/07	3821	
C-CLASS (W203)	C 230 Kompressor (203.040)	141	02/04 – 02/07	3836	
C-CLASS (W203)	C 230 Kompressor (203.040)	141	02/04 – 02/07	4102	
C-CLASS (W203)	C 240 (203.061)	125	05/00 – 02/07	3821	
C-CLASS (W203)	C 240 (203.061)	125	05/00 – 02/07	3836	
C-CLASS (W203)	C 240 (203.061)	125	05/00 – 02/07	4102	
C-CLASS (W203)	C 240 4-matic (203.081)	125	07/02 – 02/07	3821	
C-CLASS (W203)	C 270 CDI (203.016)	125	12/00 – 02/07	3821	
C-CLASS (W203)	C 270 CDI (203.016)	125	12/00 – 02/07	4102	
C-CLASS (W203)	C 280 (203.054)	170	01/05 – 02/07	3821	
C-CLASS (W203)	C 280 4-matic (203.092)	170	01/05 – 02/07	3821	
C-CLASS (W203)	C 30 CDI AMG (203.018)	170	01/03 – 02/07	4102	
C-CLASS (W203)	C 32 AMG Kompressor (203.065)	260	02/01 – 02/07	4102	
C-CLASS (W203)	C 320 (203.064)	160	05/00 – 02/07	3821	
C-CLASS (W203)	C 320 (203.064)	160	05/00 – 02/07	4102	
C-CLASS (W203)	C 320 4-matic (203.084)	160	07/02 – 02/07	3821	
C-CLASS (W203)	C 320 CDI (203.020)	165	01/05 – 02/07	3821	
C-CLASS (W203)	C 320 CDI (203.020)	165	01/05 – 02/07	4102	
C-CLASS (W203)	C 350 (203.056)	200	01/05 – 02/07	3821	
C-CLASS (W203)	C 350 (203.056)	200	01/05 – 02/07	4102	
C-CLASS (W203)	C 350 4-matic (203.087)	200	01/05 – 02/07	3821	
C-CLASS (W203)	C 350 4-matic (203.087)	200	01/05 – 02/07	4102	
C-CLASS (W203)	C 55 AMG (203.076)	270	02/04 – 02/07		3581
C-CLASS (W203)	C 55 AMG (203.076)	270	02/04 – 02/07	4102	
C-CLASS (W203)	C 30 CDI AMG (203.018)	170	01/03 – 02/07		3581
C-CLASS (W204)	C 180 CDI (204.000)	88	01/11 – 01/14		4247
C-CLASS (W204)	C 180 CDI (204.000)	88	01/11 – 01/14	4248	
C-CLASS (W204)	C 180 CGI (204.031)	115	01/08 – 01/14		4247
C-CLASS (W204)	C 180 CGI (204.031)	115	01/08 – 01/14	4248	
C-CLASS (W204)	C 180 CGI (204.049)	115	01/07 – 01/14		4247
C-CLASS (W204)	C 180 CGI (204.049)	115	01/07 – 01/14	4248	
C-CLASS (W204)	C 180 K (204.045)	115	07/10 -		4247
C-CLASS (W204)	C 180 K (204.045)	115	07/10 -	4248	
C-CLASS (W204)	C 180 Kompressor (204.044204.045)	115	01/08 – 01/14		4247
C-CLASS (W204)	C 180 Kompressor (204.046)	115	01/07 – 01/14		4247
C-CLASS (W204)	C 200 (204.048)	137	05/11 – 01/14		4247
C-CLASS (W204)	C 200 (204.048)	137	05/11 – 01/14	4248	
C-CLASS (W204)	C 200 CDI (204.001)	100	01/11 – 01/14		4247
C-CLASS (W204)	C 200 CDI (204.001)	100	01/11 – 01/14	4248	
C-CLASS (W204)	C 200 CDI (204.007)	100	01/07 – 12/10		4247
C-CLASS (W204)	C 200 CGI (204.048)	135	01/07 – 01/14		4247
C-CLASS (W204)	C 200 CGI (204.048)	135	01/07 – 01/14	4248	
C-CLASS (W204)	C 200 K (204.041)	135	03/08 – 12/09		4247
C-CLASS (W204)	C 200 K (204.041)	135	03/08 – 12/09	4248	
C-CLASS (W204)	C 200 Kompressor (204.041)	135	01/07 – 01/14		4247
C-CLASS (W204)	C 200 Kompressor (204.041)	135	01/07 – 01/14	4248	
C-CLASS (W204)	C 220 CDI (204.002)	120	10/08 – 01/14		4247
C-CLASS (W204)	C 220 CDI (204.002)	120	10/08 – 01/14	4248	
C-CLASS (W204)	C 220 CDI (204.002)	125	12/08 – 01/14		4247
C-CLASS (W204)	C 220 CDI (204.002)	125	12/08 – 01/14	4248	
C-CLASS (W204)	C 220 CDI (204.008)	120	01/07 – 11/08		4247
C-CLASS (W204)	C 220 CDI (204.008)	120	01/07 – 11/08	4248	

BESER®

MAKE & MODEL   		KW	YEAR		
MERCEDES-BENZ					
C-CLASS (W204)	C 220 CDI (204.008)	125	01/07 – 11/08		4247
C-CLASS (W204)	C 220 CDI (204.008)	125	01/07 – 11/08	4248	
C-CLASS (W204)	C 220 CDI 4-matic (204.084)	125	02/13 – 01/14		4247
C-CLASS (W204)	C 220 CDI 4-matic (204.084)	125	02/13 – 01/14	4248	
C-CLASS (W204)	C 230	150	05/08 – 10/09		4247
C-CLASS (W204)	C 230	150	05/08 – 10/09	4248	
C-CLASS (W204)	C 230 (204.052)	150	01/07 – 01/14		4247
C-CLASS (W204)	C 230 (204.052)	150	01/07 – 01/14	4248	
C-CLASS (W204)	C 230 4-matic (204.085)	150	07/07 – 01/14		4247
C-CLASS (W204)	C 230 4-matic (204.085)	150	07/07 – 01/14	4248	
C-CLASS (W204)	C 250 CDI (204.003)	150	08/08 – 01/14		4247
C-CLASS (W204)	C 250 CDI (204.003)	150	08/08 – 01/14	4248	
C-CLASS (W204)	C 250 CDI 4-matic (204.082)	150	01/11 – 01/14		4247
C-CLASS (W204)	C 250 CDI 4-matic (204.082)	150	01/11 – 01/14	4248	
C-CLASS (W204)	C 250 CDI 4-matic (204.082)	150	01/11 – 01/14	4249	
C-CLASS (W204)	C 250 CGI (204.047)	150	07/09 – 01/14		4247
C-CLASS (W204)	C 250 CGI (204.047)	150	07/09 – 01/14	4248	
C-CLASS (W204)	C 260 Turbo	150	10/09 – 12/14		4247
C-CLASS (W204)	C 260 Turbo	150	10/09 – 12/14	4248	
C-CLASS (W204)	C 280	170	03/08 – 01/09		4247
C-CLASS (W204)	C 280	170	03/08 – 01/09	4248	
C-CLASS (W204)	C 280	170	03/08 – 01/09	4249	
C-CLASS (W204)	C 280 (204.054)	170	01/07 – 01/14		4247
C-CLASS (W204)	C 280 (204.054)	170	01/07 – 01/14	4248	
C-CLASS (W204)	C 280 (204.054)	170	01/07 – 01/14	4249	
C-CLASS (W204)	C 280 4-matic (204.081)	170	07/07 – 01/14		4247
C-CLASS (W204)	C 280 4-matic (204.081)	170	07/07 – 01/14	4248	
C-CLASS (W204)	C 280 4-matic (204.081)	170	07/07 – 01/14	4249	
C-CLASS (W204)	C 300	180	07/11 -		4247
C-CLASS (W204)	C 300	180	07/11 -	4248	
C-CLASS (W204)	C 300 (204.054)	170	07/09 – 01/14		4247
C-CLASS (W204)	C 300 (204.054)	170	07/09 – 01/14	4248	
C-CLASS (W204)	C 300 (204.054)	170	07/09 – 01/14	4249	
C-CLASS (W204)	C 300 (204.055)	185	02/11 – 01/14		4247
C-CLASS (W204)	C 300 (204.055)	185	02/11 – 01/14	4249	
C-CLASS (W204)	C 300 4-matic (204.080)	185	02/11 – 01/14		4247
C-CLASS (W204)	C 300 4-matic (204.080)	185	02/11 – 01/14	4249	
C-CLASS (W204)	C 300 4-matic (204.081)	170	07/07 – 01/14		4247
C-CLASS (W204)	C 300 4-matic (204.081)	170	07/07 – 01/14	4248	
C-CLASS (W204)	C 300 4-matic (204.081)	170	07/07 – 01/14	4249	
C-CLASS (W204)	C 300 CDI 4-matic (204.092)	170	01/11 – 01/14		4247
C-CLASS (W204)	C 300 CDI 4-matic (204.092)	170	01/11 – 01/14	4249	
C-CLASS (W204)	C 320 CDI (204.022)	165	01/07 – 01/14		4247
C-CLASS (W204)	C 320 CDI (204.022)	165	01/07 – 01/14	4249	
C-CLASS (W204)	C 320 CDI 4-matic (204.089)	165	07/07 – 01/14		4247
C-CLASS (W204)	C 320 CDI 4-matic (204.089)	165	07/07 – 01/14	4249	
C-CLASS (W204)	C 350 (204.056)	200	01/07 – 01/14		4247
C-CLASS (W204)	C 350 (204.056)	200	01/07 – 01/14	4249	
C-CLASS (W204)	C 350 (204.057)	225	01/11 – 01/14		4247
C-CLASS (W204)	C 350 (204.057)	225	01/11 – 01/14	4249	
C-CLASS (W204)	C 350 4-matic (204.087)	200	07/07 – 01/14		4247
C-CLASS (W204)	C 350 4-matic (204.087)	200	07/07 – 01/14	4249	
C-CLASS (W204)	C 350 4-matic (204.088)	225	01/11 – 01/14		4247
C-CLASS (W204)	C 350 4-matic (204.088)	225	01/11 – 01/14	4249	
C-CLASS (W204)	C 350 CDI (204.022)	165	07/09 – 01/14		4247
C-CLASS (W204)	C 350 CDI (204.022)	165	07/09 – 01/14	4249	
C-CLASS (W204)	C 350 CDI (204.023)	195	06/11 – 01/14		4247
C-CLASS (W204)	C 350 CDI (204.023)	195	06/11 – 01/14	4249	
C-CLASS (W204)	C 350 CDI (204.025)	170	10/09 – 01/14		4247
C-CLASS (W204)	C 350 CDI (204.025)	170	10/09 – 01/14	4249	
C-CLASS (W204)	C 350 CDI 4-matic (204.089)	165	07/09 – 01/14		4247
C-CLASS (W204)	C 350 CDI 4-matic (204.089)	165	07/09 – 01/14	4249	
C-CLASS (W204)	C 350 CDI 4-matic (204.092)	170	10/09 – 01/14		4247
C-CLASS (W204)	C 350 CDI 4-matic (204.092)	170	10/09 – 01/14	4249	
C-CLASS (W204)	C 350 CGI (204.065)	215	09/08 – 01/14		4247
C-CLASS (W204)	C 350 CGI (204.065)	215	09/08 – 01/14	4249	
C-CLASS (W205)	C 160 (205.044)	95	04/15 -	4334	
C-CLASS (W205)	C 160 (205.044)	95	04/15 -		4349
C-CLASS (W205)	C 180 (205.040, 205.140)	115	03/14 -	4334	
C-CLASS (W205)	C 180 (205.040, 205.140)	115	03/14 -		4349
C-CLASS (W205)	C 180 BlueTEC / d (205.036)	85	05/14 -	4334	

MAKE & MODEL   		KW	YEAR		
MERCEDES-BENZ					
C-CLASS (W205)	C 180 BlueTEC / d (205.036)	85	05/14 -		4349
C-CLASS (W205)	C 180 d (205.000)	90	05/18 -	4334	
C-CLASS (W205)	C 180 d (205.000)	90	05/18 -		4349
C-CLASS (W205)	C 180 Flex (205.040)	115	03/14 -	4334	
C-CLASS (W205)	C 180 Flex (205.040)	115	03/14 -		4349
C-CLASS (W205)	C 180 L (205.140)	115	10/14 -		4349
C-CLASS (W205)	C 200 4-matic (205.043)	135	04/15 -		4349
C-CLASS (W205)	C 200 BlueTEC / d (205.037)	100	05/14 -	4334	
C-CLASS (W205)	C 200 BlueTEC / d (205.037)	100	05/14 -		4349
C-CLASS (W205)	C 200 d (205.001)	118	05/18 -		4349
C-CLASS (W205)	C 200 d (205.007)	100	10/15 -		4349
C-CLASS (W205)	C 200 d (205.011)	110	05/18 -	4334	
C-CLASS (W205)	C 200 d (205.011)	110	05/18 -		4349
C-CLASS (W205)	C 200 L (205.142)	135	08/14 -		4349
C-CLASS (W205)	C 200 L 4-matic (205.143)	135	04/15 -		4349
C-CLASS (W205)	C 220 BlueTEC / d (205.003)	120	03/14 -	4334	
C-CLASS (W205)	C 260 L (205.145)	155	08/14 12/15		4349
C-CLASS (W205)	C 300 L (205.148)	180	06/15 -		4349
C-CLASS (W205)	C 350 eL (205.147)	205	01/15 -		4349
C-CLASS (W205)	C 200 (205.042)	135	12/13 -		4349
C-CLASS Convertible (A205)	C 180 (205.440)	115	06/16 -	4334	
C-CLASS Convertible (A205)	C 220 d 4-matic (205.405)	125	06/16 -		4349
C-CLASS Convertible (A205)	C 250 (205.445)	155	06/16 -		4349
C-CLASS Convertible (A205)	C 250 d (205.408)	150	06/16 -		4349
C-CLASS Convertible (A205)	C 300 (205.448)	180	06/16 -		4349
C-CLASS Convertible (A205)	C 300 (205.483)	190	05/18 -		4349
C-CLASS Convertible (A205)	C 300 4-matic	180	09/17 -		4349
C-CLASS Convertible (A205)	C 400 4-matic (205.466)	245	06/16 -		4349
C-CLASS Coupe (C204)	C 180 (204.331)	115	01/13 -		4247
C-CLASS Coupe (C204)	C 180 (204.331)	115	01/13 -	4248	
C-CLASS Coupe (C204)	C 180 (204.349)	115	06/11 -		4247
C-CLASS Coupe (C204)	C 180 (204.349)	115	06/11 -	4248	
C-CLASS Coupe (C204)	C 180 (204.349)	115	06/11 -	4249	
C-CLASS Coupe (C204)	C 200 CGI (204.348)	135	06/11 -		4247
C-CLASS Coupe (C204)	C 200 CGI (204.348)	135	06/11 -	4248	
C-CLASS Coupe (C204)	C 200 CGI (204.348)	135	06/11 -	4249	
C-CLASS Coupe (C204)	C 220 CDI (204.302)	120	06/11 -		4247
C-CLASS Coupe (C204)	C 220 CDI (204.302)	120	06/11 -	4248	
C-CLASS Coupe (C204)	C 220 CDI (204.302)	125	06/11 -		4247
C-CLASS Coupe (C204)	C 220 CDI (204.302)	125	06/11 -	4248	
C-CLASS Coupe (C204)	C 250 (204.347)	150	06/11 -		4247
C-CLASS Coupe (C204)	C 250 (204.347)	150	06/11 -	4248	
C-CLASS Coupe (C204)	C 250 CDI (204.303)	150	06/11 -		4247
C-CLASS Coupe (C204)	C 250 CDI (204.303)	150	06/11 -	4248	
C-CLASS Coupe (C204)	C 350 (204.357)	225	06/11 -		4247
C-CLASS Coupe (C204)	C 350 (204.357)	225	06/11 -	4249	
C-CLASS Coupe (C204)	C 350 4-matic	225	09/13 -		4247
C-CLASS Coupe (C204)	C 350 4-matic	225	09/13 -	4249	
C-CLASS Coupe (C205)	C 180 (205.340)	115	10/15 -	4334	
C-CLASS Coupe (C205)	C 180 (205.340)	115	10/15 -		4349
C-CLASS Coupe (C205)	C 200 (205.342)	135	10/15 -		4349
C-CLASS Coupe (C205)	C 200 4-matic (205.343)	135	04/16 -		4349
C-CLASS Coupe (C205)	C 200 EQ Boost (205.377)	135	05/18 -		4349
C-CLASS Coupe (C205)	C 200 EQ Boost 4-matic (205.378)	135	05/18 -		4349
C-CLASS Coupe (C205)	C 220 d (205.304)	125	10/15 -		4349
C-CLASS Coupe (C205)	C 220 d (205.304)	120	10/15 -		4349
C-CLASS Coupe (C205)	C 220 d (205.314)	143	04/18 -		4349
C-CLASS Coupe (C205)	C 220 d 4-matic (205.305)	125	04/16 -		4349
C-CLASS Coupe (C205)	C 250 (205.345)	155	10/15 -		4349
C-CLASS Coupe (C205)	C 250 d (205.308)	150	10/15 -		4349
C-CLASS Coupe (C205)	C 250 d 4-matic (205.309)	150	04/16 -		4349
C-CLASS Coupe (C205)	C 300 (205.348)	180	10/15 -		4349
C-CLASS Coupe (C205)	C 300 (205.383)	190	05/18 -		4349
C-CLASS Coupe (C205)	C 300 4-matic (205.349)	180	09/16 -		4349
C-CLASS Coupe (C205)	C 400 4-matic (205.366)	245	04/16 -		4349
C-CLASS Coupe (CL203)	C 160 Kompressor (203.730)	90	05/02 – 05/08	3836	
C-CLASS Coupe (CL203)	C 180 (203.735)	95	03/01 – 05/02	3836	
C-CLASS Coupe (CL203)	C 180 Kompressor (203.746)	105	05/02 – 05/08	3836	
C-CLASS Coupe (CL203)	C 200 CDI (203.707)	90	03/03 – 05/08	3836	
C-CLASS Coupe (CL203)	C 200 CGI Kompressor (203.743)	125	03/03 – 05/08	3836	
C-CLASS Coupe (CL203)	C 200 Kompressor (203.742)	120	05/02 – 05/08	3836	

MAKE & MODEL		KW	YEAR		
MERCEDES-BENZ					
C-CLASS Coupe (CL203)	C 200 Kompressor (203.745)	120	03/01 – 05/02	3836	
C-CLASS Coupe (CL203)	C 220	120	05/02 – 05/08	3836	
C-CLASS Coupe (CL203)	C 220 CDI	100	03/01 – 01/04	3836	
C-CLASS Coupe (CL203)	C 220 CDI (203.706)	105	03/01 – 01/04	3836	
C-CLASS Coupe (CL203)	C 220 CDI (203.708)	110	02/04 – 05/08	3836	
C-CLASS Coupe (CL203)	C 230 (203.752)	150	01/05 – 05/08	3821	
C-CLASS Coupe (CL203)	C 230 Kompressor (203.740)	141	05/02 – 05/08	3821	
C-CLASS Coupe (CL203)	C 230 Kompressor (203.740)	141	05/02 – 05/08	3836	
C-CLASS Coupe (CL203)	C 230 Kompressor (203.747)	145	03/01 – 05/02	3821	
C-CLASS Coupe (CL203)	C 230 Kompressor (203.747)	145	03/01 – 05/02	3836	
C-CLASS Coupe (CL203)	C 30 CDI AMG (203.718)	170	09/02 – 05/08		3581
C-CLASS Coupe (CL203)	C 30 CDI AMG (203.718)	170	09/02 – 05/08	4102	
C-CLASS Coupe (CL203)	C 32 AMG Kompressor (203.765)	260	05/02 – 05/08		3581
C-CLASS Coupe (CL203)	C 32 AMG Kompressor (203.765)	260	05/02 – 05/08	4102	
C-CLASS Coupe (CL203)	C 320 (203.764)	160	09/02 – 05/08	3821	
C-CLASS Coupe (CL203)	C 350 (203.756)	200	01/05 – 05/08	3821	
C-CLASS Estate (S202)	C 180 T (202.078)	90	06/96 – 09/00	3658	
C-CLASS Estate (S202)	C 180 T (202.078)	90	06/96 – 09/00		3676
C-CLASS Estate (S202)	C 180 T (202.081)	95	09/00 – 03/01	3658	
C-CLASS Estate (S202)	C 180 T (202.081)	95	09/00 - 03/01		3676
C-CLASS Estate (S202)	C 200 T (202.080)	100	06/96 – 03/01	3658	
C-CLASS Estate (S202)	C 200 T (202.080)	100	06/96 – 03/01		3676
C-CLASS Estate (S202)	C 200 T CDI (202.194)	75	03/98 – 03/01	3658	
C-CLASS Estate (S202)	C 200 T CDI (202.194)	75	03/98 – 03/01		3676
C-CLASS Estate (S202)	C 200 T D (202.180)	65	10/96 – 03/01	3658	
C-CLASS Estate (S202)	C 200 T D (202.180)	65	10/96 – 03/01		3676
C-CLASS Estate (S202)	C 200 T Kompressor (202.082)	141	11/96 – 03/01		3676
C-CLASS Estate (S202)	C 200 T Kompressor (202.082)	141	11/96 – 03/01	3677	
C-CLASS Estate (S202)	C 200 T Kompressor (202.087)	120	09/00 – 03/01		3676
C-CLASS Estate (S202)	C 200 T Kompressor (202.087)	120	09/00 – 03/01	3677	
C-CLASS Estate (S202)	C 220 T CDI (202.193)	92	09/97 – 03/01	3658	
C-CLASS Estate (S202)	C 220 T CDI (202.193)	92	09/97 – 03/01		3676
C-CLASS Estate (S202)	C 220 T D (202.182)	55	06/96 – 03/01	3658	
C-CLASS Estate (S202)	C 220 T D (202.182)	55	06/96 – 03/01		3676
C-CLASS Estate (S202)	C 220 T D (202.182)	70	06/96 – 09/98	3658	
C-CLASS Estate (S202)	C 220 T D (202.182)	70	06/96 – 09/98		3676
C-CLASS Estate (S202)	C 230 T (202.083)	110	06/96 – 09/98	3658	
C-CLASS Estate (S202)	C 230 T (202.083)	110	06/96 – 06/98		3676
C-CLASS Estate (S202)	C 230 T Kompressor (202.085)	142	06/97 – 09/00		3676
C-CLASS Estate (S202)	C 230 T Kompressor (202.085)	142	06/97 – 09/00	3677	
C-CLASS Estate (S202)	C 240 T (202.086)	125	06/97 – 09/00		3676
C-CLASS Estate (S202)	C 240 T (202.086)	125	06/97 – 09/00	3677	
C-CLASS Estate (S202)	C 240 T (202.088)	125	09/00 – 03/01		3676
C-CLASS Estate (S202)	C 240 T (202.088)	125	09/00 – 03/01	3677	
C-CLASS Estate (S202)	C 250 T Turbo-D (202.188)	110	06/96 – 03/01		3676
C-CLASS Estate (S202)	C 250 T Turbo-D (202.188)	110	06/96 – 03/01	3677	
C-CLASS Estate (S202)	C 280 T (202.089)	145	06/97 – 03/01		3676
C-CLASS Estate (S202)	C 280 T (202.089)	145	06/97 – 03/01	3677	
C-CLASS Estate (S202)	C 43 AMG (202.093)	225	08/97 – 03/01		3581
C-CLASS T-Model (S203)	C 180 (203.235)	95	03/01 – 05/02	3821	
C-CLASS T-Model (S203)	C 180 (203.235)	95	03/01 – 05/02	3836	
C-CLASS T-Model (S203)	C 180 Kompressor (203.246)	105	05/02 – 08/07	3821	
C-CLASS T-Model (S203)	C 180 Kompressor (203.246)	105	05/02 – 08/07	3836	
C-CLASS T-Model (S203)	C 180 Kompressor (203.246)	105	05/02 – 08/07	4102	
C-CLASS T-Model (S203)	C 200 CDI (203.204)	85	03/01 – 08/07	3821	
C-CLASS T-Model (S203)	C 200 CDI (203.204)	85	03/01 – 08/07	3836	
C-CLASS T-Model (S203)	C 200 CDI (203.204)	85	03/01 – 08/07	4102	
C-CLASS T-Model (S203)	C 200 CDI (203.204, 203.207)	75	03/01 – 08/07	3821	
C-CLASS T-Model (S203)	C 200 CDI (203.204, 203.207)	75	03/01 – 08/07	3836	
C-CLASS T-Model (S203)	C 200 CDI (203.204, 203.207)	75	03/01 – 08/07	4102	
C-CLASS T-Model (S203)	C 200 CDI (203.207)	90	04/03 – 08/07	3821	
C-CLASS T-Model (S203)	C 200 CDI (203.207)	90	04/03 – 08/07	3836	
C-CLASS T-Model (S203)	C 200 CDI (203.207)	90	04/03 – 08/07	4102	
C-CLASS T-Model (S203)	C 200 CGI Kompressor (203.243)	125	07/03 – 08/07	3821	
C-CLASS T-Model (S203)	C 200 CGI Kompressor (203.243)	125	07/03 – 08/07	3836	
C-CLASS T-Model (S203)	C 200 CGI Kompressor (203.243)	125	07/03 – 08/07	4102	
C-CLASS T-Model (S203)	C 200 Kompressor (203.242)	120	05/02 – 08/07	3821	
C-CLASS T-Model (S203)	C 200 Kompressor (203.242)	120	05/02 – 08/07	3836	
C-CLASS T-Model (S203)	C 200 Kompressor (203.242)	120	05/02 – 08/07	4102	
C-CLASS T-Model (S203)	C 200 Kompressor (203.245)	120	03/01 – 05/02	3821	
C-CLASS T-Model (S203)	C 200 Kompressor (203.245)	120	03/01 – 05/02	3836	

MAKE & MODEL		KW	YEAR		
MERCEDES-BENZ					
C-CLASS T-Model (S203)	C 200 Kompressor (203.245)	120	03/01 – 05/02	4102	
C-CLASS T-Model (S203)	C 220 CDI (203.206)	105	03/01 – 08/07	3821	
C-CLASS T-Model (S203)	C 220 CDI (203.206)	105	03/01 – 08/07	3836	
C-CLASS T-Model (S203)	C 220 CDI (203.206)	105	03/01 – 08/07	4102	
C-CLASS T-Model (S203)	C 220 CDI (203.208)	100	08/06 – 08/07	3821	
C-CLASS T-Model (S203)	C 220 CDI (203.208)	100	08/06 – 08/07	3836	
C-CLASS T-Model (S203)	C 220 CDI (203.208)	100	08/06 – 08/07	4102	
C-CLASS T-Model (S203)	C 220 CDI (203.208)	110	02/04 – 08/07	3821	
C-CLASS T-Model (S203)	C 220 CDI (203.208)	110	02/04 – 08/07	3836	
C-CLASS T-Model (S203)	C 220 CDI (203.208)	110	02/04 – 08/07	4102	
C-CLASS T-Model (S203)	C 230 (203.252)	150	01/05 – 08/07	3821	
C-CLASS T-Model (S203)	C 230 (203.252)	150	01/05 – 08/07	3836	
C-CLASS T-Model (S203)	C 230 Kompressor (203.240)	141	02/04 – 08/07	3821	
C-CLASS T-Model (S203)	C 230 Kompressor (203.240)	141	02/04 – 08/07	3836	
C-CLASS T-Model (S203)	C 230 Kompressor (203.240)	141	02/04 – 08/07	4102	
C-CLASS T-Model (S203)	C 240 (203.261)	125	03/01 – 08/07	3821	
C-CLASS T-Model (S203)	C 240 (203.261)	125	03/01 – 08/07	3836	
C-CLASS T-Model (S203)	C 240 (203.261)	125	03/01 – 08/07	4102	
C-CLASS T-Model (S203)	C 240 4-matic (203.281)	125	07/02 – 08/07	3821	
C-CLASS T-Model (S203)	C 270 CDI (203.216)	125	03/01 – 08/07	3821	
C-CLASS T-Model (S203)	C 270 CDI (203.216)	125	03/01 – 08/07	4102	
C-CLASS T-Model (S203)	C 280 (203.254)	170	01/05 – 08/07	3821	
C-CLASS T-Model (S203)	C 280 4-matic (203.292)	170	01/05 – 08/07	3821	
C-CLASS T-Model (S203)	C 30 CDI AMG (203.218)	170	01/03 – 08/07		3581
C-CLASS T-Model (S203)	C 30 CDI AMG (203.218)	170	01/03 – 08/07	4102	
C-CLASS T-Model (S203)	C 32 AMG Kompressor (203.265)	260	03/01 – 08/07		3581
C-CLASS T-Model (S203)	C 32 AMG Kompressor (203.265)	260	03/01 – 08/07	4102	
C-CLASS T-Model (S203)	C 320 (203.264)	160	03/01 – 08/07	3821	
C-CLASS T-Model (S203)	C 320 (203.264)	160	03/01 – 08/07	4102	
C-CLASS T-Model (S203)	C 320 4-matic (203.284)	160	07/02 – 08/07	3821	
C-CLASS T-Model (S203)	C 320 CDI (203.220)	165	06/05 – 08/07	3821	
C-CLASS T-Model (S203)	C 320 CDI (203.220)	165	06/05 – 08/07	4102	
C-CLASS T-Model (S203)	C 350 (203.256)	200	01/05 – 08/07	3821	
C-CLASS T-Model (S203)	C 350 (203.256)	200	01/05 – 08/07	4102	
C-CLASS T-Model (S203)	C 350 4-matic (203.287)	200	01/05 – 08/07		3581
C-CLASS T-Model (S203)	C 350 4-matic (203.287)	200	01/05 – 08/07	3821	
C-CLASS T-Model (S203)	C 350 4-matic (203.287)	200	01/05 – 08/07	4102	
C-CLASS T-Model (S203)	C 55 AMG (203.276)	270	02/04 – 08/07		3581
C-CLASS T-Model (S203)	C 55 AMG (203.276)	270	02/04 – 08/07	4102	
C-CLASS T-Model (S204)	C 180 (204.231)	115	02/12 – 08/14		4247
C-CLASS T-Model (S204)	C 180 (204.231)	115	02/12 – 08/14	4248	
C-CLASS T-Model (S204)	C 180 CDI (204.200)	88	01/11 – 08/14		4247
C-CLASS T-Model (S204)	C 180 CGI (204.249)	115	11/09 – 08/14		4247
C-CLASS T-Model (S204)	C 180 CGI (204.249)	115	11/09 – 08/14	4248	
C-CLASS T-Model (S204)	C 180 Kompressor (204.245)	115	01/08 – 08/14		4247
C-CLASS T-Model (S204)	C 180 Kompressor (204.246)	115	08/07 – 08/14		4247
C-CLASS T-Model (S204)	C 200 CDI (204.201)	100	08/10 – 08/14		4247
C-CLASS T-Model (S204)	C 200 CDI (204.207)	100	08/07 – 12/11		4247
C-CLASS T-Model (S204)	C 200 CGI (204.248)	135	08/07 – 08/14		4247
C-CLASS T-Model (S204)	C 200 CGI (204.248)	135	08/07 – 08/14	4248	
C-CLASS T-Model (S204)	C 200 Kompressor (204.241)	135	08/07 – 08/14		4247
C-CLASS T-Model (S204)	C 200 Kompressor (204.241)	135	08/07 – 08/14	4248	
C-CLASS T-Model (S204)	C 220 CDI (204.202)	120	12/08 – 08/14		4247
C-CLASS T-Model (S204)	C 220 CDI (204.202)	120	12/08 – 08/14	4248	
C-CLASS T-Model (S204)	C 220 CDI (204.202)	125	12/08 – 08/14		4247
C-CLASS T-Model (S204)	C 220 CDI (204.202)	125	12/08 – 08/14	4248	
C-CLASS T-Model (S204)	C 220 CDI (204.208)	120	08/07 – 11/08		4247
C-CLASS T-Model (S204)	C 220 CDI (204.208)	120	08/07 – 11/08	4248	
C-CLASS T-Model (S204)	C 220 CDI (204.208)	125	08/07 – 11/08		4247
C-CLASS T-Model (S204)	C 220 CDI (204.208)	125	08/07 – 11/08	4248	
C-CLASS T-Model (S204)	C 220 CDI 4-matic (204.284)	125	02/13 – 08/14		4247
C-CLASS T-Model (S204)	C 220 CDI 4-matic (204.284)	125	02/13 – 08/14	4248	
C-CLASS T-Model (S204)	C 230 (204.252)	150	08/07 – 08/14		4247
C-CLASS T-Model (S204)	C 230 (204.252)	150	08/07 – 08/14	4248	
C-CLASS T-Model (S204)	C 250 CDI (204.203)	150	01/09 – 08/14		4247
C-CLASS T-Model (S204)	C 250 CDI (204.203)	150	01/09 – 08/14	4248	
C-CLASS T-Model (S204)	C 250 CDI 4-matic (204.282)	150	04/10 – 08/14		4247
C-CLASS T-Model (S204)	C 250 CDI 4-matic (204.282)	150	04/10 – 08/14	4248	
C-CLASS T-Model (S204)	C 250 CDI 4-matic (204.282)	150	04/10 – 08/14	4249	
C-CLASS T-Model (S204)	C 250 CGI (204.247)	150	07/09 – 08/14		4247
C-CLASS T-Model (S204)	C 250 CGI (204.247)	150	07/09 – 08/14	4248	

MAKE & MODEL		KW	YEAR		
MERCEDES-BENZ					
C-CLASS T-Model (S204)	C 280 (204.254)	170	08/07 – 08/14		4247
C-CLASS T-Model (S204)	C 280 (204.254)	170	08/07 – 08/14	4248	
C-CLASS T-Model (S204)	C 280 (204.254)	170	08/07 – 08/14	4249	
C-CLASS T-Model (S204)	C 300 (204.254)	170	08/07 – 08/14		4247
C-CLASS T-Model (S204)	C 300 (204.254)	170	08/07 – 08/14	4248	
C-CLASS T-Model (S204)	C 300 (204.254)	170	08/07 – 08/14	4249	
C-CLASS T-Model (S204)	C 320 CDI (204.222)	165	08/07 – 08/14		4247
C-CLASS T-Model (S204)	C 320 CDI (204.222)	165	08/07 – 08/14	4249	
C-CLASS T-Model (S204)	C 320 CDI 4-matic (204.289)	165	08/07 – 08/14		4247
C-CLASS T-Model (S204)	C 320 CDI 4-matic (204.289)	165	08/07 – 08/14	4249	
C-CLASS T-Model (S204)	C 350 (204.256)	200	08/07 – 08/14		4247
C-CLASS T-Model (S204)	C 350 (204.256)	200	08/07 – 08/14	4249	
C-CLASS T-Model (S204)	C 350 CDI	165	08/07 – 08/14		4247
C-CLASS T-Model (S204)	C 350 CDI	165	08/07 – 08/14	4249	
C-CLASS T-Model (S204)	C 350 CDI (204.223)	195	06/11 – 08/14		4247
C-CLASS T-Model (S204)	C 350 CDI (204.223)	195	06/11 – 08/14	4249	
C-CLASS T-Model (S204)	C 350 CDI (204.225)	170	10/09 – 08/14		4247
C-CLASS T-Model (S204)	C 350 CDI (204.225)	170	10/09 – 08/14	4249	
C-CLASS T-Model (S204)	C 350 CDI 4-matic (204.292)	170	10/09 – 08/14		4247
C-CLASS T-Model (S204)	C 350 CDI 4-matic (204.292)	170	10/09 – 08/14	4249	
C-CLASS T-Model (S204)	C 350 CGI (204.257)	225	06/11 – 08/14		4247
C-CLASS T-Model (S204)	C 350 CGI (204.257)	225	06/11 – 08/14	4249	
C-CLASS T-Model (S205)	C 160 (205.244)	95	04/15 -	4334	
C-CLASS T-Model (S205)	C 160 (205.244)	95	04/15 -		4349
C-CLASS T-Model (S205)	C 180 (205.240)	115	09/14 -	4334	
C-CLASS T-Model (S205)	C 180 (205.240)	115	09/14 -		4349
C-CLASS T-Model (S205)	C 180 BlueTEC / d (205.236)	85	09/14 -	4334	
C-CLASS T-Model (S205)	C 180 BlueTEC / d (205.236)	85	09/14 -		4349
C-CLASS T-Model (S205)	C 180 d (205.200)	90	05/18 -	4334	
C-CLASS T-Model (S205)	C 180 d (205.200)	90	05/18 -		4349
C-CLASS T-Model (S205)	C 200 (205.242)	135	09/14 -		4349
C-CLASS T-Model (S205)	C 200 4-matic (205.243)	135	04/15 -		4349
C-CLASS T-Model (S205)	C 200 BlueTEC / d (205.237)	100	09/14 -		4349
C-CLASS T-Model (S205)	C 200 d (205.201)	118	05/18 -	4334	
C-CLASS T-Model (S205)	C 200 d (205.201)	118	05/18 -		4349
C-CLASS T-Model (S205)	C 200 d (205.207)	100	10/15 -		4349
C-CLASS T-Model (S205)	C 200 d (205.211)	110	05/18 -	4334	
C-CLASS T-Model (S205)	C 200 d (205.211)	110	05/18 -		4349
C-CLASS T-Model (S205)	C 200 EQ Boost (205.277)	135	04/18 -		4349
C-CLASS T-Model (S205)	C 200 EQ Boost 4-matic (205.278)	135	04/18 -		4349
C-CLASS T-Model (S205)	C 220 BlueTEC / d (205.204)	120	09/14 -		4349
C-CLASS T-Model (S205)	C 220 BlueTEC / d (205.204)	125	09/14 -		4349
C-CLASS T-Model (S205)	C 220 d (205.214)	143	04/18 -		4349
C-CLASS T-Model (S205)	C 220 d 4-matic (205.205)	125	04/15 -		4349
C-CLASS T-Model (S205)	C 220 d 4-matic (205.215)	143	05/18 -		4349
C-CLASS T-Model (S205)	C 250 (205.245)	155	09/14 -		4349
C-CLASS T-Model (S205)	C 250 BlueTEC / d (205.208)	150	09/14 -		4349
C-CLASS T-Model (S205)	C 250 BlueTEC / d 4-matic (205.209)	150	10/14 -		4349
C-CLASS T-Model (S205)	C 300 (205.248)	180	09/15 -		4349
C-CLASS T-Model (S205)	C 300 (205.283)	190	05/18 -		4349
C-CLASS T-Model (S205)	C 300 BlueTEC Hybrid / h (205.212)	150	10/14 -		4349
C-CLASS T-Model (S205)	C 350 e (205.247)	155	02/15 -		4349
C-CLASS T-Model (S205)	C 350 e (205.247)	205	02/15 -		4349
C-CLASS T-Model (S205)	C 400 4-matic (205.266)	245	10/14 -		4349
C-CLASS T-Model (S205)	C 450 AMG 4-matic (205.264)	270	04/15 04/16		4349
C-CLASS T-Model (S205)	C 200 BlueTEC / d (205.237)	100	09/14 -	4334	
CITAN Box (415)	108 CDI (415.601, 415.603)	55	11/12 -	3966	
CITAN Box (415)	108 CDI (415.601, 415.603)	55	11/12 -	3983	
CITAN Box (415)	109 CDI (415.601, 415.603,415.605)	66	11/12 -	3966	
CITAN Box (415)	109 CDI (415.601, 415.603,415.605)	66	11/12 -	3983	
CITAN Box (415)	111 CDI (415.603, 415.605)	81	06/13 -	3966	
CITAN Box (415)	111 CDI (415.603, 415.605)	81	06/13 -	3983	
CITAN Box (415)	112 (415.603)	84	06/13 -	3966	
CITAN Box (415)	112 (415.603)	84	06/13 -	3983	
CITAN Combi (415)	108 CDI (415.703)	55	11/12 -	3966	
CITAN Combi (415)	108 CDI (415.703)	55	11/12 -	3983	
CITAN Combi (415)	109 CDI (415.703)	66	11/12 -	3966	
CITAN Combi (415)	109 CDI (415.703)	66	11/12 -	3983	
CITAN Combi (415)	111 CDI (415.703)	81	06/13 -	3966	
CITAN Combi (415)	111 CDI (415.703)	81	06/13 -	3983	
CITAN Combi (415)	112 (415.703)	84	06/13 -	3966	

MAKE & MODEL		KW	YEAR		
MERCEDES-BENZ					
CITAN Combi (415)	112 (415.703)	84	06/13 -	3983	
CITAN Mixto (415)	109 CDI	66	11/12 -	3966	
CITAN Mixto (415)	109 CDI	66	11/12 -	3983	
CITAN Mixto (415)	111 CDI (415.601, 415.603,415.605)	81	06/13 -	3966	
CITAN Mixto (415)	111 CDI (415.601, 415.603,415.605)	81	06/13 -	3983	
CLA Coupe (C117)	AMG CLA 45 4-matic (117.352)	280	07/15 -	4326	
CLA Coupe (C117)	CLA 180 (117.342)	90	01/13 -	4326	
CLA Coupe (C117)	CLA 200 (117.343)	115	01/13 -	4326	
CLA Coupe (C117)	CLA 200 CDI (117.301)	100	06/13 -	4326	
CLA Coupe (C117)	CLA 200 CDI / d (117.308)	100	07/14 -	4326	
CLA Coupe (C117)	CLA 200 CDI / d 4-matic (117.302)	100	07/14 -	4326	
CLA Coupe (C117)	CLA 220 4-matic (117.347)	135	04/16 -	4326	
CLA Coupe (C117)	CLA 220 CDI (117.303)	125	01/13 -	4326	
CLA Coupe (C117)	CLA 220 CDI / d (117.303)	120	01/13 -	4326	
CLA Coupe (C117)	CLA 220 CDI / d (117.303)	130	09/14 -	4326	
CLA Coupe (C117)	CLA 220 CDI / d 4-matic (117.305)	120	08/14 -	4326	
CLA Coupe (C117)	CLA 220 CDI / d 4-matic (117.305)	130	09/14 -	4326	
CLA Coupe (C117)	CLA 220 CDI 4-matic (117.305)	125	07/14 -	4326	
CLA Coupe (C117)	CLA 250 (117.344)	155	01/13 -	4326	
CLA Coupe (C117)	CLA 250 4-matic (117.346)	155	07/13 -	4326	
CLA Coupe (C117)	CLA 45 AMG 4-matic (117.352)	265	07/13 -	4326	
CLA Coupe (C117)	CLA 180 CDI / d (117.312)	80	10/13-	4326	
CLA Coupe (C117)	CLA 250 (117.350)	160	07/15 -	4326	
CLA Coupe (C117)	CLA 250 4-matic (117.351)	160	07/15 -	4326	
CLA Shooting Brake (X117)	CLA 180 (117.942)	90	01/15 -	4326	
CLA Shooting Brake (X117)	CLA 220 CDI / d 4-matic (117.905)	120	09/15 -	4326	
CLA Shooting Brake (X117)	CLA 180 d (117.912)	80	07/15 -	4326	
CLA Shooting Brake (X117)	CLA 200 CDI / d (117.908)	100	01/15 -	4326	
CLA Shooting Brake (X117)	CLA 200 CDI / d 4-matic (117.902)	100	01/15 -	4326	
CLA Shooting Brake (X117)	CLA 220 4-matic (117.947)	135	04/16 -	4326	
CLA Shooting Brake (X117)	CLA 220 CDI / d (117.903)	120	01/15 -	4326	
CLA Shooting Brake (X117)	CLA 220 CDI / d (117.903)	130	01/15 -	4326	
CLA Shooting Brake (X117)	CLA 220 CDI / d 4-matic (117.905)	130	01/15 -	4326	
CLA Shooting Brake (X117)	CLA 250 (117.944)	155	01/15 -	4326	
CLA Shooting Brake (X117)	CLA 250 4-matic (117.946)	155	01/15 -	4326	
CLA Shooting Brake (X117)	CLA 250 4-matic (117.951)	160	07/15 -	4326	
CLA Shooting Brake (X117)	CLA 200 (117.943)	115	01/15 -	4326	
CLC-CLASS (CL203)	CLC 160 (203.731)	95	02/09 – 06/11	3836	
CLC-CLASS (CL203)	CLC 180 Kompressor (203.746)	105	05/08 – 06/11	3836	
CLC-CLASS (CL203)	CLC 200 CDI (203.707)	90	05/08 – 06/11	3836	
CLC-CLASS (CL203)	CLC 200 Kompressor (203.741)	135	05/08 – 06/11	3836	
CLC-CLASS (CL203)	CLC 220 CDI (203.708)	110	05/08 – 06/11	3836	
CLC-CLASS (CL203)	CLC 230 (203.752)	150	05/08 – 06/11	3821	
CLC-CLASS (CL203)	CLC 350 (203.756)	200	05/08 – 06/11	3821	
CLK (C208)	54	260	10/98 – 07/02		3581
CLK (C208)	200 (208.335)	100	06/97 – 06/02		3676
CLK (C208)	200 (208.335)	100	06/97 – 06/02	3677	
CLK (C208)	200 Kompressor (208.344)	120	06/00 – 06/02		3676
CLK (C208)	200 Kompressor (208.344)	120	06/00 – 06/02	3677	
CLK (C208)	200 Kompressor (208.345)	141	06/97 – 06/00		3676
CLK (C208)	200 Kompressor (208.345)	141	06/97 – 06/00	3677	
CLK (C208)	230 Kompressor (208.347)	142	06/97 – 06/00		3676
CLK (C208)	230 Kompressor (208.347)	142	06/97 – 06/00	3677	
CLK (C208)	230 Kompressor (208.348)	145	06/00 – 06/02		3676
CLK (C208)	230 Kompressor (208.348)	145	06/00 – 06/02	3677	
CLK (C208)	320 (208.365)	160	06/97 – 06/02		3581
CLK (C208)	320 (208.365)	160	06/97 – 06/02	3821	
CLK (C208)	320 (208.365)	160	06/97 – 06/02	3863	
CLK (C208)	430 (208.370)	205	07/98 – 06/02		3581
CLK (C208)	430 (208.370)	205	07/98 – 06/02	3629	
CLK (C208)	430 (208.370)	205	07/98 – 06/02	3863	
CLK (C208)	55 AMG (208.374)	255	08/99 – 06/02		3581
CLK (C209)	200 CGI (209.343)	125	07/03 – 05/09	3821	
CLK (C209)	200 CGI (209.343)	125	07/03 – 05/09	3836	
CLK (C209)	200 Kompressor (209.341)	135	10/06 – 05/09	3821	
CLK (C209)	200 Kompressor (209.342)	120	09/02 – 05/09	3821	
CLK (C209)	200 Kompressor (209.342)	120	09/02 – 05/09	3836	
CLK (C209)	220 CDI (209.308)	100	01/05 – 05/09	3821	
CLK (C209)	220 CDI (209.308)	100	01/05 – 05/09	3836	
CLK (C209)	220 CDI (209.308)	110	01/05 – 05/09	3821	
CLK (C209)	220 CDI (209.308)	110	01/05 – 05/09	3836	

MAKE & MODEL		KW	YEAR		
MERCEDES-BENZ					
CLK (C209)	240 (209.361)	120	06/02 – 05/09	3821	
CLK (C209)	240 (209.361)	125	06/02 – 05/09	3821	
CLK (C209)	270 CDI (209.316)	120	02/03 – 06/05	3821	
CLK (C209)	270 CDI (209.316)	125	10/02 – 05/09	3821	
CLK (C209)	280 (209.354)	170	01/05 – 05/09	3821	
CLK (C209)	320 (209.365)	160	06/02 – 05/09	3821	
CLK (C209)	320 CDI (209.320)	165	01/05 – 05/09	3821	
CLK (C209)	320 CDI (209.320)	165	01/05 – 05/09	4102	
CLK (C209)	350 (209.356)	200	01/05 – 05/09	3821	
CLK (C209)	350 (209.356)	200	01/05 – 05/09	4102	
CLK (C209)	500 (209.372)	285	06/06 – 05/09		3581
CLK (C209)	500 (209.372)	285	06/06 – 05/09	4102	
CLK (C209)	500 (209.375)	225	06/02 – 05/09		3581
CLK (C209)	500 (209.375)	225	06/02 – 05/09	4102	
CLK (C209)	55 AMG (209.376)	270	09/02 – 05/09		3581
CLK (C209)	55 AMG (209.376)	270	09/02 – 05/09	4102	
CLK Convertible (A208)	200 (208.435)	100	03/98 – 03/02		3676
CLK Convertible (A208)	200 (208.435)	100	03/98 – 03/02	3677	
CLK Convertible (A208)	200 Kompressor (208.444)	120	06/00 – 03/02		3581
CLK Convertible (A208)	200 Kompressor (208.444)	120	06/00 – 03/02	3863	
CLK Convertible (A208)	200 Kompressor (208.445)	141	03/98 – 06/00		3581
CLK Convertible (A208)	200 Kompressor (208.445)	141	03/98 – 06/00	3863	
CLK Convertible (A208)	230 Kompressor (208.447)	142	03/98 – 06/00		3581
CLK Convertible (A208)	230 Kompressor (208.447)	142	03/98 – 06/00	3863	
CLK Convertible (A208)	230 Kompressor (208.448)	145	06/00 – 03/02		3581
CLK Convertible (A208)	230 Kompressor (208.448)	145	06/00 – 03/02	3863	
CLK Convertible (A208)	320 (208.465)	160	03/98 – 03/02		3581
CLK Convertible (A208)	320 (208.465)	160	03/98 – 03/02	3821	
CLK Convertible (A208)	320 (208.465)	160	03/98 – 03/02	3863	
CLK Convertible (A208)	430 (208.470)	205	09/98 – 03/02		3581
CLK Convertible (A208)	430 (208.470)	205	09/98 – 03/02	3629	
CLK Convertible (A208)	430 (208.470)	205	09/98 – 03/02	3863	
CLK Convertible (A208)	55 AMG (208.474)	255	01/00 – 03/02		3581
CLK Convertible (A209)	CLK 200 CGI (209.443)	125	07/03 – 03/10	3821	
CLK Convertible (A209)	CLK 200 CGI (209.443)	125	07/03 – 03/10	3836	
CLK Convertible (A209)	CLK 200 Kompressor(209.441)	135	10/06 – 03/10	3821	
CLK Convertible (A209)	CLK 200 Kompressor(209.442)	120	02/03 – 03/10	3821	
CLK Convertible (A209)	CLK 240 (209.461)	125	02/03 – 03/10	3821	
CLK Convertible (A209)	CLK 280 (209.454)	170	01/05 – 03/10	3821	
CLK Convertible (A209)	CLK 320 (209.465)	160	02/03 – 03/10	3821	
CLK Convertible (A209)	CLK 320 CDI (209.420)	165	03/05 – 03/10	3821	
CLK Convertible (A209)	CLK 320 CDI (209.420)	165	03/05 – 03/10	4102	
CLK Convertible (A209)	CLK 350 (209.456)	200	01/05 – 03/10	3821	
CLK Convertible (A209)	CLK 350 (209.456)	200	01/05 – 03/10	4102	
CLK Convertible (A209)	CLK 500 (209.472)	285	06/06 – 03/10		3581
CLK Convertible (A209)	CLK 500 (209.472)	285	06/06 – 03/10	4102	
CLK Convertible (A209)	CLK 500 (209.475)	225	02/03 – 03/10		3581
CLK Convertible (A209)	CLK 500 (209.475)	225	02/03 – 03/10	4102	
CLK Convertible (A209)	CLK 55 AMG (209.476)	270	02/03 – 03/10		3581
CLK Convertible (A209)	CLK 55 AMG (209.476)	270	02/03 – 03/10	4102	
CLS (C218)	CLS 220 BlueTEC (218.301)	130	05/14 -		4127
CLS (C218)	CLS 220 BlueTEC (218.301)	130	05/14 -	4249	
CLS (C218)	CLS 220 BlueTEC / d (218.301)	120	05/14 -		4127
CLS (C218)	CLS 220 BlueTEC / d (218.301)	120	05/14 -	4249	
CLS (C218)	CLS 220 BlueTEC / d (218.301)	125	05/14 -		4127
CLS (C218)	CLS 220 BlueTEC / d (218.301)	125	05/14 -	4249	
CLS (C218)	CLS 250 BlueTEC / d 4-matic (218.397)	150	05/14 -	4249	
CLS (C218)	CLS 250 BlueTEC / d 4-matic (218.397)	150	05/14 -		4127
CLS (C218)	CLS 250 CDI / BlueTEC / d (218.303, 218.304)	150	04/11 -	4249	
CLS (C218)	CLS 250 CDI / BlueTEC / d (218.303, 218.304)	150	04/11 -		4127
CLS (C218)	CLS 260 (218.336)	155	01/15 -		4127
CLS (C218)	CLS 260 (218.336)	155	01/15 -	4249	
CLS (C218)	CLS 300 CGI (218.355)	185	10/11 -		4127
CLS (C218)	CLS 300 CGI (218.355)	185	10/11 -	4249	
CLS (C218)	CLS 320 (218.362)	200	01/15 -		4127
CLS (C218)	CLS 350 (218.359)	225	01/11 -		4127
CLS (C218)	CLS 350 (218.359)	225	01/11 -	4249	
CLS (C218)	CLS 350 BlueTEC (218.326)	185	11/12 -		4127
CLS (C218)	CLS 350 BlueTEC (218.326)	185	11/12 -	4249	
CLS (C218)	CLS 350 BlueTEC / d (218.326)	190	06/14 -		4127
CLS (C218)	CLS 350 BlueTEC / d (218.326)	190	06/14 -	4249	

MAKE & MODEL		KW	YEAR		
MERCEDES-BENZ					
CLS (C218)	CLS 350 BlueTEC 4-matic (218.394)	185	11/12 -		4127
CLS (C218)	CLS 350 BlueTEC 4-matic (218.394)	185	11/12 -	4249	
CLS (C218)	CLS 350 CDI (218.323)	195	01/11 -		4127
CLS (C218)	CLS 350 CDI (218.323)	195	01/11 -	4249	
CLS (C218)	CLS 350 CDI 4-matic (218.393)	195	09/11 -		4127
CLS (C218)	CLS 350 CDI 4-matic (218.393)	195	09/11 -	4249	
CLS (C218)	CLS 350 d 4-matic (218.394)	190	04/15 -		4127
CLS (C218)	CLS 350 d 4-matic (218.394)	190	04/15 -	4249	
CLS (C218)	CLS 400 (218.361)	245	07/14 -		4127
CLS (C218)	CLS 400 (218.361)	245	07/14 -	4249	
CLS (C218)	CLS 400 (218.365)	245	05/14 -		4127
CLS (C218)	CLS 400 (218.365)	245	05/14 -	4249	
CLS (C218)	CLS 400 4-matic (218.367)	245	05/14 -		4127
CLS (C218)	CLS 400 4-matic (218.367)	245	05/14 -	4249	
CLS (C218)	CLS 400 4-matic (218.368)	245	07/14 -		4127
CLS (C218)	CLS 400 4-matic (218.368)	245	07/14 -	4249	
CLS (C218)	CLS 500 (218.373)	300	02/11 -		4127
CLS (C218)	CLS 500 4-matic (218.391)	300	09/11 -		4127
CLS (C219)	CLS 280 (219.354)	170	07/08 – 12/10	4102	
CLS (C219)	CLS 280 (219.354)	170	07/08 – 12/10		4127
CLS (C219)	CLS 300 (219.354)	170	04/09 – 12/10	4102	
CLS (C219)	CLS 300 (219.354)	170	04/09 – 12/10		4127
CLS (C219)	CLS 320 CDI	155	01/05 – 12/10	4102	
CLS (C219)	CLS 320 CDI	155	01/05 – 12/10		4127
CLS (C219)	CLS 320 CDI (219.322)	165	01/05 – 12/10	4102	
CLS (C219)	CLS 320 CDI (219.322)	165	01/05 – 12/10		4127
CLS (C219)	CLS 350 (219.356)	200	10/04 – 12/10	4102	
CLS (C219)	CLS 350 (219.356)	200	10/04 – 12/10		4127
CLS (C219)	CLS 350 (219.357)	215	04/06 – 12/10	4102	
CLS (C219)	CLS 350 (219.357)	215	04/06 – 12/10		4127
CLS (C219)	CLS 350 CDI	200	04/09 – 12/10	4102	
CLS (C219)	CLS 350 CDI	200	04/09 – 12/10		4127
CLS (C219)	CLS 350 CDI (219.322)	165	04/09 – 12/10	4102	
CLS (C219)	CLS 350 CDI (219.322)	165	04/09 – 12/10		4127
CLS (C219)	CLS 350 CGI (219.357)	215	04/09 – 12/10	4102	
CLS (C219)	CLS 350 CGI (219.357)	215	04/09 – 12/10		4127
CLS (C219)	CLS 500 (219.372)	285	04/06 – 12/10	4102	
CLS (C219)	CLS 500 (219.372)	285	04/06 – 12/10		4127
CLS (C219)	CLS 500 (219.372)	285	04/06 – 12/10	4240	
CLS (C219)	CLS 500 (219.375)	225	10/04 – 12/10	4102	
CLS (C219)	CLS 500 (219.375)	225	10/04 – 12/10		4127
CLS Shooting Brake (X218)	CLS 250 BlueTEC / d 4-matic (218.997)	150	05/14 -	4249	
CLS Shooting Brake (X218)	CLS 350 BlueTEC / d (218.926)	190	05/14 -	4249	
CLS Shooting Brake (X218)	CLS 220 BlueTEC (218.901)	130	05/14 -		4127
CLS Shooting Brake (X218)	CLS 220 BlueTEC (218.901)	130	05/14 -	4249	
CLS Shooting Brake (X218)	CLS 220 BlueTEC / d (218.901)	120	05/14 -		4127
CLS Shooting Brake (X218)	CLS 220 BlueTEC / d (218.901)	120	05/14 -	4249	
CLS Shooting Brake (X218)	CLS 220 BlueTEC / d (218.901)	125	05/14 -		4127
CLS Shooting Brake (X218)	CLS 220 BlueTEC / d (218.901)	125	05/14 -	4249	
CLS Shooting Brake (X218)	CLS 250 BlueTEC / d 4-matic (218.997)	150	05/14 -		4127
CLS Shooting Brake (X218)	CLS 250 CDI / BlueTEC / d (218.903, 218.904)	150	10/12 -		4127
CLS Shooting Brake (X218)	CLS 250 CDI / BlueTEC / d (218.903, 218.904)	150	10/12 -	4249	
CLS Shooting Brake (X218)	CLS 350 (218.959)	225	10/12 -		4127
CLS Shooting Brake (X218)	CLS 350 (218.959)	225	10/12 -	4249	
CLS Shooting Brake (X218)	CLS 350 BlueTEC / d (218.926)	190	05/14 -		4127
CLS Shooting Brake (X218)	CLS 350 BlueTEC 4-matic (218.994)	185	05/14 -		4127
CLS Shooting Brake (X218)	CLS 350 BlueTEC 4-matic (218.994)	185	05/14 -	4249	
CLS Shooting Brake (X218)	CLS 350 CDI (218.923)	195	10/12 -		4127
CLS Shooting Brake (X218)	CLS 350 CDI (218.923)	195	10/12 -	4249	
CLS Shooting Brake (X218)	CLS 350 CDI 4-matic (218.993)	195	10/12 -		4127
CLS Shooting Brake (X218)	CLS 350 CDI 4-matic (218.993)	195	10/12 -	4249	
CLS Shooting Brake (X218)	CLS 350 d 4-matic (218.994)	190	04/15 -		4127
CLS Shooting Brake (X218)	CLS 350 d 4-matic (218.994)	190	04/15 -	4249	
CLS Shooting Brake (X218)	CLS 400 (218.961)	245	07/14 -		4127
CLS Shooting Brake (X218)	CLS 400 (218.961)	245	07/14 -	4249	
CLS Shooting Brake (X218)	CLS 400 (218.965)	245	05/14 -		4127
CLS Shooting Brake (X218)	CLS 400 (218.965)	245	05/14 -	4249	
CLS Shooting Brake (X218)	CLS 400 4-matic (218.967)	245	05/14 -		4127
CLS Shooting Brake (X218)	CLS 400 4-matic (218.967)	245	05/14 -	4249	
CLS Shooting Brake (X218)	CLS 400 4-matic (218.968)	245	07/14 -		4127
CLS Shooting Brake (X218)	CLS 400 4-matic (218.968)	245	07/14 -	4249	

MAKE & MODEL		KW	YEAR		
MERCEDES-BENZ					
CLS Shooting Brake (X218)	CLS 500 (218.973)	300	10/12 -		4127
CLS Shooting Brake (X218)	CLS 500 4-matic (218.991)	300	10/12 -		4127
COUPE (C123)	230 C (123.043)	80	05/77 – 04/80	3315	
COUPE (C123)	230 C (123.043)	80	05/77 – 04/80	3339	
COUPE (C123)	230 C (123.043)	80	05/77 – 04/80	3514	
COUPE (C123)	230 C (123.043)	80	05/77 – 04/80	3515	
COUPE (C123)	230 CE (123.243)	100	04/80 – 12/85	3339	
COUPE (C123)	230 CE (123.243)	100	04/80 – 12/85	3514	
COUPE (C123)	280 C (123.050)	115	03/77 – 03/80	3315	
COUPE (C123)	280 C (123.050)	115	03/77 – 03/80	3339	
COUPE (C123)	280 C (123.050)	115	03/77 – 03/80	3514	
COUPE (C123)	280 C (123.050)	115	03/77 – 03/80	3515	
COUPE (C123)	280 CE	130	09/77 – 08/79	3315	
COUPE (C123)	280 CE	130	09/77 – 08/79	3515	
COUPE (C123)	280 CE	136	03/77 – 11/85	3315	
COUPE (C123)	280 CE	136	03/77 – 11/85	3339	
COUPE (C123)	280 CE	136	03/77 – 11/85	3514	
COUPE (C123)	280 CE	136	03/77 – 11/85	3515	
COUPE (C123)	300 C Turbo-D (123.153)	92	09/81 – 07/85	3339	
COUPE (C123)	300 C Turbo-D (123.153)	92	09/81 – 07/85	3514	
COUPE (C124)	220 CE (124.042)	110	10/92 – 05/93	3408	
COUPE (C124)	220 CE (124.042)	110	10/92 – 05/93		3550
COUPE (C124)	220 CE (124.042)	110	10/92 – 05/93		3630
COUPE (C124)	230 CE (124.043)	97	03/87 – 12/92	3408	
COUPE (C124)	230 CE (124.043)	97	03/87 – 12/92		3550
COUPE (C124)	230 CE (124.043)	97	03/87 12/92		3630
COUPE (C124)	230 CE (124.043)	100	03/87 – 12/92	3408	
COUPE (C124)	230 CE (124.043)	100	03/87 – 12/92		3550
COUPE (C124)	230 CE (124.043)	100	03/87 12/92		3630
COUPE (C124)	230 CE (124.043) CAT	97	06/89 – 12/92	3408	
COUPE (C124)	230 CE (124.043) CAT	97	06/89 – 12/92		3550
COUPE (C124)	230 CE (124.043) CAT	97	06/89 – 12/92		3630
COUPE (C124)	300 CE	138	03/87 – 12/89	3408	
COUPE (C124)	300 CE	138	03/87 – 12/89		3550
COUPE (C124)	300 CE (124.050)	132	03/87 – 05/93	3408	
COUPE (C124)	300 CE (124.050)	132	03/87 – 05/93		3550
COUPE (C124)	300 CE (124.050)	132	03/87 – 05/93		3630
COUPE (C124)	300 CE-24 (124.051)	162	09/89 – 12/92	3629	
COUPE (C124)	300 CE-24 (124.051)	170	09/89 – 12/92	3629	
COUPE (C124)	320 CE (124.052)	162	10/92 – 05/93	3628	
COUPE (C124)	320 CE (124.052)	162	10/92 – 05/93	3629	
COUPE (W111)	220 SEB (111.021)	88	01/61 – 12/65	3455	
COUPE (W111)	220 SEB (111.021)	88	01/61 – 12/65	3471	
COUPE (W111)	250 SE (111.021)	110	01/65 – 12/67	3318	
COUPE (W111)	250 SE (111.021)	110	01/65 – 12/67	3320	
COUPE (W111)	250 SE (111.021)	110	01/65 – 12/67	3338	
COUPE (W111)	250 SE (111.021)	110	01/65 – 12/67	3350	
COUPE (W111)	250 SE (111.021)	110	01/65 – 12/67	3353	
COUPE (W111)	250 SE (111.021)	110	01/65 – 12/67	3362	
COUPE (W111)	280 SE (111.024)	118	01/67 – 12/71	3318	
COUPE (W111)	280 SE (111.024)	118	01/67 – 12/71	3320	
COUPE (W111)	280 SE (111.024)	118	01/67 – 12/71	3338	
COUPE (W111)	280 SE (111.024)	118	01/67 – 12/71	3350	
COUPE (W111)	280 SE (111.024)	118	01/67 – 12/71	3353	
COUPE (W111)	280 SE (111.024)	118	01/67 – 12/71	3362	
COUPE (W111)	280 SE 3.5 (111.026)	147	01/69 – 12/71	3318	
COUPE (W111)	280 SE 3.5 (111.026)	147	01/69 – 12/71	3320	
COUPE (W111)	280 SE 3.5 (111.026)	147	01/69 – 12/71	3338	
COUPE (W111)	280 SE 3.5 (111.026)	147	01/69 – 12/71	3350	
COUPE (W111)	280 SE 3.5 (111.026)	147	01/69 – 12/71	3353	
COUPE (W111)	280 SE 3.5 (111.026)	147	01/69 – 12/71	3362	
C-SERISI (W205)	C 180 BlueTEC / d (205.036)	85	05.14 -	4334	
C-SERISI (W205)	C 160 (205.044)	95	04.15 -	4334	
C-SERISI (W205)	C 180 (205.040)	115	03.14 -	4334	
C-SERISI (W205)	C 200 (205.042)	135	12.13 -	4334	
C-SERISI (W205)	C 200 4-matic (205.043)	135	04.15 -	4334	
C-SERISI (W205)	C 200 BlueTEC / d (205.037)	100	05.14 -	4334	
C-SERISI (W205)	C 200 d (205.007)	100	10.15 -	4334	
C-SERISI (W205)	C 220 BlueTEC / d (205.002, 205.004)	125	12.13 -	4334	
C-SERISI (W205)	C 220 BlueTEC / d (205.003)	120	03.14 -	4334	
C-SERISI (W205)	C 220 d 4-matic (205.005)	125	04.15 -	4334	

MAKE & MODEL		KW	YEAR		
MERCEDES-BENZ					
C-SERISI (W205)	C 250 (205.045)	155	03.14 -	4334	
C-SERISI (W205)	C 250 BlueTEC / d (205.008, 205.006)	150	02.14 -	4334	
C-SERISI (W205)	C 250 BlueTEC / d 4-matic (205.009)	150	02.14 -	4334	
C-SERISI (W205)	C 300 BlueTEC Hybrid / h (205.012)	150	05.14 -	4334	
C-SERISI Cabrio (A205)	C 180 (205.440)	115	06.16 -	4334	
C-SERISI Cabrio (A205)	C 200 (205.442)	135	06.16 -	4334	
C-SERISI Cabrio (A205)	C 200 4-matic (205.443)	135	06.16 -	4334	
C-SERISI Cabrio (A205)	C 220 d (205.404)	125	06.16 -	4334	
C-SERISI Cabrio (A205)	C 220 d 4-matic (205.405)	125	06.16 -	4334	
C-SERISI Coupe (C205)	C 180 (205.340)	115	10.15 -	4334	
C-SERISI Coupe (C205)	C 200 4-matic (205.343)	135	04.16 -	4334	
C-SERISI Coupe (C205)	C 220 d (205.304)	120	10.15 -	4334	
C-SERISI Coupe (C205)	C 220 d (205.304)	125	10.15 -	4334	
C-SERISI Coupe (C205)	C 220 d 4-matic (205.305)	125	04.16 -	4334	
C-SERISI T-Model (S205)	C 160 (205.244)	95	04.15 -	4334	
C-SERISI T-Model (S205)	C 180 (205.240)	115	09.14 -	4334	
C-SERISI T-Model (S205)	C 200 (205.242)	135	09.14 -	4334	
C-SERISI T-Model (S205)	C 200 4-matic (205.243)	135	04.15 -	4334	
C-SERISI T-Model (S205)	C 200 BlueTEC / d (205.237)	100	09.14 -	4334	
C-SERISI T-Model (S205)	C 200 d (205.207)	100	10.15 -	4334	
C-SERISI T-Model (S205)	C 220 BlueTEC / d (205.204)	120	09.14 -	4334	
C-SERISI T-Model (S205)	C 220 BlueTEC / d (205.204)	125	09.14 -	4334	
C-SERISI T-Model (S205)	C 220 d 4-matic (205.205)	125	04.15 -	4334	
C-SERISI T-Model (S205)	C 250 (205.245)	155	09.14 -	4334	
C-SERISI T-Model (S205)	C 250 BlueTEC / d (205.208)	150	09.14 -	4334	
E-CLASS (W124)	E 200 (124.019)	100	06/93 – 06/95	3408	
E-CLASS (W124)	E 200 (124.019)	100	06/93 – 06/95		3550
E-CLASS (W124)	E 200 (124.019)	100	06/93 – 06/95		3630
E-CLASS (W124)	E 200 D (124.120)	55	06/93 – 06/95	3408	
E-CLASS (W124)	E 200 D (124.120)	55	06/93 – 06/95		3550
E-CLASS (W124)	E 200 D (124.120)	55	06/93 – 06/95		3630
E-CLASS (W124)	E 220 (124.022)	110	06/93 – 06/95	3408	
E-CLASS (W124)	E 220 (124.022)	110	06/93 – 06/95		3550
E-CLASS (W124)	E 220 (124.022)	110	06/93 – 06/95		3630
E-CLASS (W124)	E 250 D (124.126, 124.129)	83	07/93 – 06/95	3408	
E-CLASS (W124)	E 250 D (124.126, 124.129)	83	07/93 – 06/95		3550
E-CLASS (W124)	E 250 Turbo-D (124.128)	93	06/93 – 06/95	3408	
E-CLASS (W124)	E 250 Turbo-D (124.128)	93	06/93 – 06/95		3550
E-CLASS (W124)	E 280 (124.028)	145	06/93 – 06/95	3408	
E-CLASS (W124)	E 280 (124.028)	145	06/93 – 06/95		3550
E-CLASS (W124)	E 280 (124.028)	145	06/93 – 06/95	3628	
E-CLASS (W124)	E 280 (124.028)	145	06/93 – 06/95	3629	
E-CLASS (W124)	E 280 (124.028)	145	06/93 – 06/95		3630
E-CLASS (W124)	E 280 (124.029)	142	06/93 – 06/95	3408	
E-CLASS (W124)	E 280 (124.029)	142	06/93 – 06/95		3550
E-CLASS (W124)	E 280 (124.029)	142	06/93 – 06/95	3628	
E-CLASS (W124)	E 280 (124.029)	142	06/93 – 06/95	3629	
E-CLASS (W124)	E 280 (124.029)	142	06/93 – 06/95		3630
E-CLASS (W124)	E 300 4-matic (124.230)	132	06/93 – 06/95	3408	
E-CLASS (W124)	E 300 4-matic (124.230)	132	06/93 – 06/95		3550
E-CLASS (W124)	E 300 4-matic (124.230)	132	06/93 – 06/95		3630
E-CLASS (W124)	E 300 D (124.131)	100	07/93 – 06/95	3408	
E-CLASS (W124)	E 300 D (124.131)	100	07/93 – 06/95		3550
E-CLASS (W124)	E 300 Turbo-D (124.133)	108	06/93 – 06/95	3408	
E-CLASS (W124)	E 300 Turbo-D (124.133)	108	06/93 – 06/95		3550
E-CLASS (W124)	E 300 Turbo-D 4-matic (124.333)	108	06/93 – 06/95	3408	
E-CLASS (W124)	E 300 Turbo-D 4-matic (124.333)	108	06/93 – 06/95		3550
E-CLASS (W124)	E 300 Turbo-D 4-matic (124.333)	108	06/93 – 06/95		3630
E-CLASS (W124)	E 320 (124.032)	162	06/93 – 06/95	3628	
E-CLASS (W124)	E 320 (124.032)	162	06/93 – 06/95	3629	
E-CLASS (W124)	E 36 AMG	200	07/94 – 01/95	3628	
E-CLASS (W124)	E 36 AMG	200	07/94 – 01/95	3629	
E-CLASS (W124)	E 420 (124.034)	205	06/93 – 06/95	3628	
E-CLASS (W124)	E 420 (124.034)	205	06/93 – 06/95	3629	
E-CLASS (W124)	E 500 (124.036)	235	06/93 – 06/95		3581
E-CLASS (W124)	E 500 (124.036)	235	06/93 – 06/95	3629	
E-CLASS (W124)	E 60 AMG (124.036)	280	05/94 – 06/95		3581
E-CLASS (W124)	E 60 AMG (124.036)	280	05/94 – 06/95	3628	
E-CLASS (W210)	E 200 (210.035)	100	06/95 – 08/00		3676
E-CLASS (W210)	E 200 (210.035)	100	06/95 – 08/00	3677	
E-CLASS (W210)	E 200 CDI (210.007)	75	06/98 – 03/02		3676

MAKE & MODEL		KW	YEAR		
MERCEDES-BENZ					
E-CLASS (W210)	E 200 CDI (210.007)	75	06/98 – 03/02	3677	
E-CLASS (W210)	E 200 CDI (210.007)	85	07/99 – 03/02		3676
E-CLASS (W210)	E 200 CDI (210.007)	85	07/99 – 03/02	3677	
E-CLASS (W210)	E 200 D (210.003)	65	01/96 – 03/02		3676
E-CLASS (W210)	E 200 D (210.003)	65	01/96 – 03/02	3677	
E-CLASS (W210)	E 200 Kompressor (210.045)	137	06/97 – 03/02		3581
E-CLASS (W210)	E 200 Kompressor (210.045)	137	06/97 – 03/02	3821	
E-CLASS (W210)	E 200 Kompressor (210.045)	137	06/97 – 03/02	3863	
E-CLASS (W210)	E 200 Kompressor (210.048)	120	08/00 – 03/02		3676
E-CLASS (W210)	E 200 Kompressor (210.048)	120	08/00 – 03/02	3677	
E-CLASS (W210)	E 220 CDI	100	07/99 – 03/02		3676
E-CLASS (W210)	E 220 CDI	100	07/99 – 03/02	3677	
E-CLASS (W210)	E 220 CDI (210.006)	92	06/98 – 07/99		3676
E-CLASS (W210)	E 220 CDI (210.006)	92	06/98 – 07/99	3677	
E-CLASS (W210)	E 220 CDI (210.006)	105	07/99 – 03/02		3676
E-CLASS (W210)	E 220 CDI (210.006)	105	07/99 – 03/02	3677	
E-CLASS (W210)	E 220 D	55	05/96 – 03/02		3676
E-CLASS (W210)	E 220 D	55	05/96 – 03/02	3677	
E-CLASS (W210)	E 220 D (210.004)	70	06/95 – 07/99		3676
E-CLASS (W210)	E 220 D (210.004)	70	06/95 – 07/99	3677	
E-CLASS (W210)	E 230 (210.037)	110	06/95 – 06/97		3676
E-CLASS (W210)	E 230 (210.037)	110	06/95 – 06/97	3677	
E-CLASS (W210)	E 240 (210.061)	125	06/97 – 08/00		3676
E-CLASS (W210)	E 240 (210.061)	125	06/97 – 08/00	3677	
E-CLASS (W210)	E 240 (210.061)	125	06/97 – 08/00	3821	
E-CLASS (W210)	E 240 (210.061)	125	06/97 – 08/00	3863	
E-CLASS (W210)	E 240 (210.062)	125	08/00 – 03/02		3676
E-CLASS (W210)	E 240 (210.062)	125	08/00 – 03/02	3677	
E-CLASS (W210)	E 240 (210.062)	125	08/00 – 03/02	3821	
E-CLASS (W210)	E 240 (210.062)	125	08/00 – 03/02	3863	
E-CLASS (W210)	E 250 D (210.010)	83	06/95 – 07/99		3676
E-CLASS (W210)	E 250 D (210.010)	83	06/95 – 07/99	3677	
E-CLASS (W210)	E 250 Turbo-D (210.015)	110	06/97 – 07/99		3676
E-CLASS (W210)	E 250 Turbo-D (210.015)	110	06/97 – 07/99	3677	
E-CLASS (W210)	E 270 CDI	120	07/99 – 03/02	3821	
E-CLASS (W210)	E 270 CDI	120	07/99 – 03/02	3863	
E-CLASS (W210)	E 270 CDI (210.016)	125	07/99 – 03/02	3821	
E-CLASS (W210)	E 270 CDI (210.016)	125	07/99 – 03/02	3863	
E-CLASS (W210)	E 280 (210.053)	142	01/96 – 06/97		3581
E-CLASS (W210)	E 280 (210.053)	142	01/96 – 06/97	3821	
E-CLASS (W210)	E 280 (210.053)	142	01/96 – 06/97	3863	
E-CLASS (W210)	E 280 (210.063)	150	12/96 – 03/02		3581
E-CLASS (W210)	E 280 (210.063)	150	12/96 – 03/02	3821	
E-CLASS (W210)	E 280 (210.063)	150	12/96 – 03/02	3863	
E-CLASS (W210)	E 280 4-matic (210.081)	150	12/96 – 03/02		3581
E-CLASS (W210)	E 280 4-matic (210.081)	150	12/96 – 03/02	3821	
E-CLASS (W210)	E 280 4-matic (210.081)	150	12/96 – 03/02	3863	
E-CLASS (W210)	E 290 Turbo-D (210.017)	95	03/96 – 07/99		3676
E-CLASS (W210)	E 290 Turbo-D (210.017)	95	03/96 – 07/99	3677	
E-CLASS (W210)	E 300 D (210.020)	100	06/95 – 06/97		3676
E-CLASS (W210)	E 300 D (210.020)	100	06/95 – 06/97	3677	
E-CLASS (W210)	E 300 Turbo-D (210.025)	130	12/96 – 07/99		3581
E-CLASS (W210)	E 300 Turbo-D (210.025)	130	12/96 – 07/99	3821	
E-CLASS (W210)	E 300 Turbo-D (210.025)	130	12/96 – 07/99	3863	
E-CLASS (W210)	E 320 (210.055)	162	06/95 – 06/97		3581
E-CLASS (W210)	E 320 (210.055)	162	06/95 – 06/97	3821	
E-CLASS (W210)	E 320 (210.055)	162	06/95 – 06/97	3863	
E-CLASS (W210)	E 320 (210.065)	165	06/97 – 03/02		3581
E-CLASS (W210)	E 320 (210.065)	165	06/97 – 03/02	3821	
E-CLASS (W210)	E 320 (210.065)	165	06/97 – 03/02	3863	
E-CLASS (W210)	E 320 4-matic (210.082)	165	06/97 – 03/02		3581
E-CLASS (W210)	E 320 4-matic (210.082)	165	06/97 – 03/02	3821	
E-CLASS (W210)	E 320 4-matic (210.082)	165	06/97 – 03/02	3863	
E-CLASS (W210)	E 320 CDI (210.026)	145	07/99 – 03/02		3581
E-CLASS (W210)	E 320 CDI (210.026)	145	07/99 – 03/02	3821	
E-CLASS (W210)	E 320 CDI (210.026)	145	07/99 – 03/02	3863	
E-CLASS (W210)	E 420 (210.072)	205	01/96 – 06/97		3581
E-CLASS (W210)	E 420 (210.072)	205	01/96 – 06/97	3629	
E-CLASS (W210)	E 420 (210.072)	205	01/96 – 06/97	3821	
E-CLASS (W210)	E 420 (210.072)	205	01/96 – 06/97	3863	
E-CLASS (W210)	E 430 (210.070)	205	06/97 – 03/02		3581

MAKE & MODEL		KW	YEAR		
MERCEDES-BENZ					
E-CLASS (W210)	E 430 (210.070)	205	06/97 – 03/02	3629	
E-CLASS (W210)	E 430 (210.070)	205	06/97 – 03/02	3821	
E-CLASS (W210)	E 430 (210.070)	205	06/97 – 03/02	3863	
E-CLASS (W210)	E 430 4-matic (210.083)	205	05/99 – 03/02		3581
E-CLASS (W210)	E 430 4-matic (210.083)	205	05/99 – 03/02	3821	
E-CLASS (W210)	E 50 AMG (210.072)	255	02/96 – 08/97		3581
E-CLASS (W210)	E 50 AMG (210.072)	255	02/96 – 08/97	3629	
E-CLASS (W210)	E 55 AMG (210.074)	260	08/97 – 03/02		3581
E-CLASS (W210)	E 55 AMG 4-matic (210.074)	260	03/01 – 03/02		3581
E-CLASS (W211)	1.8 E 200	120	11/05 – 12/06	4097	
E-CLASS (W211)	1.8 E 200	120	11/05 – 12/06	4102	
E-CLASS (W211)	1.8 E 200	120	11/05 – 12/06		4127
E-CLASS (W211)	1.8 E 200 (211.041)	135	09/06 -	4097	
E-CLASS (W211)	1.8 E 200 (211.041)	135	09/06 -	4102	
E-CLASS (W211)	1.8 E 200 (211.041)	135	09/06 -		4127
E-CLASS (W211)	2.5 E 230	150	11/05 -	4097	
E-CLASS (W211)	2.5 E 230	150	11/05 -	4102	
E-CLASS (W211)	2.5 E 230	150	11/05 -		4127
E-CLASS (W211)	3.0 E 280	170	11/05 -	4097	
E-CLASS (W211)	3.0 E 280	170	11/05 -	4102	
E-CLASS (W211)	3.0 E 280	170	11/05 -		4127
E-CLASS (W211)	3.5 E 350	200	11/05 -	4097	
E-CLASS (W211)	3.5 E 350	200	11/05 -	4102	
E-CLASS (W211)	3.5 E 350	200	11/05 -		4127
E-CLASS (W211)	E 200 CDI (211.004)	75	07/02 – 12/08	4097	
E-CLASS (W211)	E 200 CDI (211.004)	75	07/02 – 12/08		4127
E-CLASS (W211)	E 200 CDI (211.004)	90	07/02 – 12/08	4097	
E-CLASS (W211)	E 200 CDI (211.004)	90	07/02 – 12/08		4127
E-CLASS (W211)	E 200 CDI (211.007)	100	04/06 – 12/08	4097	
E-CLASS (W211)	E 200 CDI (211.007)	100	04/06 – 12/08		4127
E-CLASS (W211)	E 200 Kompressor (211.041)	135	04/06 – 12/08	4097	
E-CLASS (W211)	E 200 Kompressor (211.041)	135	04/06 – 12/08	4102	
E-CLASS (W211)	E 200 Kompressor (211.041)	135	04/06 – 12/08		4127
E-CLASS (W211)	E 200 Kompressor (211.042)	120	11/02 – 12/08	4097	
E-CLASS (W211)	E 200 Kompressor (211.042)	120	11/02 – 12/08	4102	
E-CLASS (W211)	E 200 Kompressor (211.042)	120	11/02 – 12/08		4127
E-CLASS (W211)	E 200 NGT (211.041)	120	03/04 – 12/08	4097	
E-CLASS (W211)	E 200 NGT (211.041)	120	03/04 – 12/08		4127
E-CLASS (W211)	E 220 CDI	120	03/03 – 12/08	4097	
E-CLASS (W211)	E 220 CDI	120	03/03 – 12/08		4127
E-CLASS (W211)	E 220 CDI (211.006)	100	03/02 – 12/08	4097	
E-CLASS (W211)	E 220 CDI (211.006)	100	03/02 – 12/08		4127
E-CLASS (W211)	E 220 CDI (211.006)	110	03/02 – 12/08	4097	
E-CLASS (W211)	E 220 CDI (211.006)	110	03/02 – 12/08		4127
E-CLASS (W211)	E 220 CDI (211.008)	125	04/06 – 12/08	4097	
E-CLASS (W211)	E 220 CDI (211.008)	125	04/06 – 12/08		4127
E-CLASS (W211)	E 230 (211.052)	150	09/07 – 12/08	4097	
E-CLASS (W211)	E 230 (211.052)	150	09/07 – 12/08	4102	
E-CLASS (W211)	E 230 (211.052)	150	09/07 – 12/08		4127
E-CLASS (W211)	E 240 (211.061)	130	03/02 – 12/08	4097	
E-CLASS (W211)	E 240 (211.061)	130	03/02 – 12/08		4127
E-CLASS (W211)	E 240 4-matic (211.080)	130	03/03 – 12/08		4127
E-CLASS (W211)	E 240 4-matic (211.080)	130	03/03 – 12/08	4210	
E-CLASS (W211)	E 270 CDI (211.016)	120	03/02 – 12/08	4097	
E-CLASS (W211)	E 270 CDI (211.016)	120	03/02 – 12/08		4127
E-CLASS (W211)	E 270 CDI (211.016)	130	03/02 – 12/08	4097	
E-CLASS (W211)	E 270 CDI (211.016)	130	03/02 – 12/08		4127
E-CLASS (W211)	E 280 (211.054)	170	03/05 – 12/08	4097	
E-CLASS (W211)	E 280 (211.054)	170	03/05 – 12/08	4102	
E-CLASS (W211)	E 280 (211.054)	170	03/05 – 12/08		4127
E-CLASS (W211)	E 280 4-matic (211.092)	170	01/06 – 12/08		4127
E-CLASS (W211)	E 280 4-matic (211.092)	170	01/06 – 12/08	4210	
E-CLASS (W211)	E 280 CDI (211.020)	140	03/05 – 12/08	4097	
E-CLASS (W211)	E 280 CDI (211.020)	140	03/05 – 12/08	4102	
E-CLASS (W211)	E 280 CDI (211.020)	140	03/05 – 12/08		4127
E-CLASS (W211)	E 280 CDI (211.023)	130	05/04 – 12/08	4097	
E-CLASS (W211)	E 280 CDI (211.023)	130	05/04 – 12/08	4102	
E-CLASS (W211)	E 280 CDI (211.023)	130	05/04 – 12/08		4127
E-CLASS (W211)	E 280 CDI 4-matic	140	03/05 – 12/08		4127
E-CLASS (W211)	E 280 CDI 4-matic	140	03/05 – 12/08	4210	
E-CLASS (W211)	E 300 BlueTEC	155	09/07 – 12/08	4097	

MAKE & MODEL		KW	YEAR		
MERCEDES-BENZ					
E-CLASS (W211)	E 300 BlueTEC	155	09/07 – 12/08	4102	
E-CLASS (W211)	E 300 BlueTEC	155	09/07 – 12/08		4127
E-CLASS (W211)	E 320 (211.065)	165	03/02 – 12/08	4097	
E-CLASS (W211)	E 320 (211.065)	165	03/02 – 12/08	4102	
E-CLASS (W211)	E 320 (211.065)	165	03/02 – 12/08		4127
E-CLASS (W211)	E 320 4-matic (211.082)	165	03/03 – 12/08		4127
E-CLASS (W211)	E 320 4-matic (211.082)	165	03/03 – 12/08	4210	
E-CLASS (W211)	E 320 CDI (211.022)	165	03/05 – 12/08	4097	
E-CLASS (W211)	E 320 CDI (211.022)	165	03/05 – 12/08	4102	
E-CLASS (W211)	E 320 CDI (211.022)	165	03/05 – 12/08		4127
E-CLASS (W211)	E 320 CDI (211.026)	150	11/02 – 12/08	4097	
E-CLASS (W211)	E 320 CDI (211.026)	150	11/02 – 12/08	4102	
E-CLASS (W211)	E 320 CDI (211.026)	150	11/02 – 12/08		4127
E-CLASS (W211)	E 320 CDI 4-matic	165	03/05 – 12/08		4127
E-CLASS (W211)	E 320 CDI 4-matic	165	03/05 – 12/08	4210	
E-CLASS (W211)	E 350 (211.056)	200	03/05 – 12/08	4097	
E-CLASS (W211)	E 350 (211.056)	200	03/05 – 12/08	4102	
E-CLASS (W211)	E 350 (211.056)	200	03/05 – 12/08		4127
E-CLASS (W211)	E 350 4-matic	205	08/04 – 08/06		4127
E-CLASS (W211)	E 350 4-matic	205	08/04 – 08/06	4210	
E-CLASS (W211)	E 350 4-matic (211.087)	200	03/05 – 12/08		4127
E-CLASS (W211)	E 350 4-matic (211.087)	200	03/05 – 12/08	4210	
E-CLASS (W211)	E 350 CGI (211.057)	215	09/07 – 12/08	4097	
E-CLASS (W211)	E 350 CGI (211.057)	215	09/07 – 12/08	4102	
E-CLASS (W211)	E 350 CGI (211.057)	215	09/07 – 12/08		4127
E-CLASS (W211)	E 400 CDI (211.028)	191	02/03 – 12/08	4102	
E-CLASS (W211)	E 400 CDI (211.028)	191	02/03 – 12/08		4127
E-CLASS (W211)	E 420 CDI (211.029)	231	01/06 – 12/08		4127
E-CLASS (W211)	E 420 CDI (211.029)	231	01/06 – 12/08	4240	
E-CLASS (W211)	E 500 (211.070)	225	03/02 – 12/08	4102	
E-CLASS (W211)	E 500 (211.070)	225	03/02 – 12/08		4127
E-CLASS (W211)	E 500 (211.072)	285	04/06 – 12/08	4102	
E-CLASS (W211)	E 500 (211.072)	285	04/06 – 12/08		4127
E-CLASS (W211)	E 500 (211.072)	285	04/06 – 12/08	4240	
E-CLASS (W211)	E 500 4-matic (211.083)	225	10/03 – 12/08		4127
E-CLASS (W211)	E 500 4-matic (211.083)	225	10/03 – 12/08	4210	
E-CLASS (W211)	E 500 4-matic (211.090)	285	04/06 – 12/08		4127
E-CLASS (W211)	E 500 4-matic (211.090)	285	04/06 – 12/08	4210	
E-CLASS (W212)	E 220 CDI	120	01/09 -		4127
E-CLASS (W212)	E 200 (212.034)	135	01/13 -		4127
E-CLASS (W212)	E 200 (212.034)	135	01/13 -	4249	
E-CLASS (W212)	E 200 CDI / BlueTEC (212.005,212.006)	100	01/09 -		4127
E-CLASS (W212)	E 200 CDI / BlueTEC (212.005,212.006)	100	01/09 -	4248	
E-CLASS (W212)	E 200 CDI / BlueTEC (212.005,212.006)	100	01/09 -	4249	
E-CLASS (W212)	E 200 CGI (212.048, 212.148)	135	08/09 -		4127
E-CLASS (W212)	E 200 CGI (212.048, 212.148)	135	08/09 -	4249	
E-CLASS (W212)	E 200 NGT (212.035)	115	07/13 -		4127
E-CLASS (W212)	E 200 NGT (212.035)	115	07/13 -	4249	
E-CLASS (W212)	E 200 NGT (212.041)	120	03/11 -		4247
E-CLASS (W212)	E 200 NGT (212.041)	120	03/11 -	4248	
E-CLASS (W212)	E 220 BlueTEC (212.001)	130	05/14 -		4127
E-CLASS (W212)	E 220 BlueTEC (212.001)	130	05/14 -	4248	
E-CLASS (W212)	E 220 BlueTEC (212.001)	130	05/14 -	4249	
E-CLASS (W212)	E 220 BlueTEC 4-matic (212.011)	125	01/15 -		4127
E-CLASS (W212)	E 220 BlueTEC 4-matic (212.011)	125	01/15 -	4249	
E-CLASS (W212)	E 220 CDI	120	01/09 -	4249	
E-CLASS (W212)	E 220 CDI / BlueTEC (212.001, 212.002)	125	01/09 -		4127
E-CLASS (W212)	E 220 CDI / BlueTEC (212.001, 212.002)	125	01/09 -	4249	
E-CLASS (W212)	E 250 (212.036)	155	01/13 -	4249	
E-CLASS (W212)	E 250 (212.036)	155	01/13 -		4127
E-CLASS (W212)	E 250 CDI / BlueTEC (212.003, 212.004)	150	01/09 -		4127
E-CLASS (W212)	E 250 CDI / BlueTEC (212.003, 212.004)	150	01/09 -	4249	
E-CLASS (W212)	E 250 CDI / BlueTEC 4-matic (212.082, 212.097)	150	01/09 -		4127
E-CLASS (W212)	E 250 CDI / BlueTEC 4-matic (212.082, 212.097)	150	01/09 -	4249	
E-CLASS (W212)	E 250 CGI (212.047, 212.147)	150	01/09 -		4127
E-CLASS (W212)	E 250 CGI (212.047, 212.147)	150	01/09 -	4249	
E-CLASS (W212)	E 260 L CGI (212.147)	150	06/10 -		4127
E-CLASS (W212)	E 260 L CGI (212.147)	150	06/10 -	4249	
E-CLASS (W212)	E 300 (212.054)	170	01/09 -		4127
E-CLASS (W212)	E 300 (212.054)	170	01/09 -	4249	
E-CLASS (W212)	E 300 (212.055)	185	07/11 -		4127

MAKE & MODEL   		KW	YEAR		
MERCEDES-BENZ					
E-CLASS (W212)	E 300 (212.055)	185	07/11 -	4249	
E-CLASS (W212)	E 300 4-matic (212.080)	185	07/11 -		4127
E-CLASS (W212)	E 300 4-matic (212.080)	185	07/11 -	4249	
E-CLASS (W212)	E 300 CDI (212.020)	150	12/09 – 12/10		4127
E-CLASS (W212)	E 300 CDI (212.020)	150	12/09 – 12/10	4249	
E-CLASS (W212)	E 300 CDI / BlueTEC (212.020, 212.021, 212.027)	170	03/11 -		4127
E-CLASS (W212)	E 300 CDI / BlueTEC (212.020,212.021,	170	03/11 -	4249	
E-CLASS (W212)	E 300 Hybrid / BlueTEC Hybrid (212.098)	150	12/11 -		4127
E-CLASS (W212)	E 300 Hybrid / BlueTEC Hybrid (212.098)	150	12/11 -	4249	
E-CLASS (W212)	E 300 L (212.054)	180	12/10 -		4127
E-CLASS (W212)	E 300 L (212.054)	180	12/10 -	4249	
E-CLASS (W212)	E 350 (212.056)	200	01/09 -		4127
E-CLASS (W212)	E 350 (212.056)	200	01/09 -	4249	
E-CLASS (W212)	E 350 (212.059)	225	09/11 -		4127
E-CLASS (W212)	E 350 (212.059)	225	09/11 -	4249	
E-CLASS (W212)	E 350 4-matic (212.087)	200	01/09 – 08/11		4127
E-CLASS (W212)	E 350 4-matic (212.087)	200	01/09 – 08/11	4249	
E-CLASS (W212)	E 350 4-matic (212.088)	225	09/11 -		4127
E-CLASS (W212)	E 350 4-matic (212.088)	225	09/11 -	4249	
E-CLASS (W212)	E 350 BlueTEC	185	11/12 -		4127
E-CLASS (W212)	E 350 BlueTEC	185	11/12 -	4249	
E-CLASS (W212)	E 350 BlueTEC (212.024)	155	01/09 -		4127
E-CLASS (W212)	E 350 BlueTEC (212.024)	155	01/09 -	4249	
E-CLASS (W212)	E 350 BlueTEC (212.026)	190	05/14 -		4127
E-CLASS (W212)	E 350 BlueTEC (212.026)	190	05/14 -	4249	
E-CLASS (W212)	E 350 BlueTEC 4-matic (212.094)	185	11/12 -		4127
E-CLASS (W212)	E 350 BlueTEC 4-matic (212.094)	185	11/12 -	4249	
E-CLASS (W212)	E 350 BlueTEC 4-matic (212.094)	190	05/14 -		4127
E-CLASS (W212)	E 350 BlueTEC 4-matic (212.094)	190	05/14 -	4249	
E-CLASS (W212)	E 350 CDI (212.023)	195	03/11 -		4127
E-CLASS (W212)	E 350 CDI (212.023)	195	03/11 -	4249	
E-CLASS (W212)	E 350 CDI (212.025)	170	01/09 -		4127
E-CLASS (W212)	E 350 CDI (212.025)	170	01/09 -	4249	
E-CLASS (W212)	E 350 CDI 4-matic (212.089)	170	09/09 -		4127
E-CLASS (W212)	E 350 CDI 4-matic (212.089)	170	09/09 -	4249	
E-CLASS (W212)	E 350 CDI 4-matic (212.093)	195	03/11 -		4127
E-CLASS (W212)	E 350 CDI 4-matic (212.093)	195	03/11 -	4249	
E-CLASS (W212)	E 350 CGI (212.057)	215	01/09 – 08/11		4127
E-CLASS (W212)	E 350 CGI (212.057)	215	01/09 – 08/11	4249	
E-CLASS (W212)	E 400 (212.061)	245	07/14 -		4127
E-CLASS (W212)	E 400 (212.065)	245	01/13 -		4127
E-CLASS (W212)	E 400 4-matic (212.067)	245	01/13 -		4127
E-CLASS (W212)	E 400 4-matic (212.099)	245	07/14 -		4127
E-CLASS (W212)	E 400 4-matic (212.099)	245	07/14 -	4249	
E-CLASS (W212)	E 400 Hybrid (212.095)	245	05/15 -		4127
E-CLASS (W212)	E 400 Hybrid (212.095)	245	05/15 -	4249	
E-CLASS (W212)	E 500 (212.072)	285	01/09 -		4127
E-CLASS (W212)	E 500 (212.073)	300	09/11 -		4127
E-CLASS (W212)	E 500 4-matic (212.090)	285	01/09 -		4127
E-CLASS (W212)	E 500 4-matic (212.091)	300	09/11 -		4127
E-CLASS Convertible (A124)	E 200 (124.060)	100	06/93 – 03/98	3408	
E-CLASS Convertible (A124)	E 220 (124.062)	110	06/93 – 03/98	3408	
E-CLASS Convertible (A124)	E 320 (124.066)	162	06/93 – 03/98	3628	
E-CLASS Convertible (A124)	E 320 (124.066)	162	06/93 – 03/98	3629	
E-CLASS Convertible (A124)	E 36 AMG (124.066)	200	05/94 – 03/98		3581
E-CLASS Convertible (A124)	E 36 AMG (124.066)	200	05/94 – 03/98	3628	
E-CLASS Convertible (A124)	E 36 AMG (124.066)	200	05/94 – 03/98	3821	
E-CLASS Convertible (A207)	E 250 (207.436)	155	06/13 -		4247
E-CLASS Convertible (A207)	E 200 (207.434)	135	03/13 -		4247
E-CLASS Convertible (A207)	E 200 (207.434)	135	03/13 -	4248	
E-CLASS Convertible (A207)	E 200 (207.434)	135	03/13 -	4249	
E-CLASS Convertible (A207)	E 200 CGI (207.448)	135	01/10 -		4247
E-CLASS Convertible (A207)	E 200 CGI (207.448)	135	01/10 -	4248	
E-CLASS Convertible (A207)	E 200 CGI (207.448)	135	01/10 -	4249	
E-CLASS Convertible (A207)	E 220 BlueTEC (207.401)	130	05/14 -		4247
E-CLASS Convertible (A207)	E 220 BlueTEC (207.401)	130	05/14 -	4248	
E-CLASS Convertible (A207)	E 220 BlueTEC (207.401)	130	05/14 -	4249	
E-CLASS Convertible (A207)	E 220 CDI (207.402)	120	02/10 -		4247
E-CLASS Convertible (A207)	E 220 CDI (207.402)	120	02/10 -	4248	
E-CLASS Convertible (A207)	E 220 CDI (207.402)	120	02/10 -	4249	
E-CLASS Convertible (A207)	E 220 CDI / BlueTEC / d (207.402, 207.401)	125	01/10 -		4247

MAKE & MODEL   		KW	YEAR		
MERCEDES-BENZ					
E-CLASS Convertible (A207)	E 220 CDI / BlueTEC / d (207.402, 207.401)	125	01/10 -	4248	
E-CLASS Convertible (A207)	E 220 CDI / BlueTEC / d (207.402, 207.401)	125	01/10 -	4249	
E-CLASS Convertible (A207)	E 250 (207.436)	155	06/13 -	4249	
E-CLASS Convertible (A207)	E 250 CDI / BlueTEC / d (207.403, 207.404)	150	01/10 -		4247
E-CLASS Convertible (A207)	E 250 CDI / BlueTEC / d (207.403, 207.404)	150	01/10 -	4249	
E-CLASS Convertible (A207)	E 250 CGI (207.447)	150	01/10 -		4247
E-CLASS Convertible (A207)	E 250 CGI (207.447)	150	01/10 -	4248	
E-CLASS Convertible (A207)	E 250 CGI (207.447)	150	01/10 -	4249	
E-CLASS Convertible (A207)	E 300 (207.455)	185	04/11 -		4247
E-CLASS Convertible (A207)	E 300 (207.455)	185	04/11 -	4249	
E-CLASS Convertible (A207)	E 320 (207.462)	200	07/14 -		4247
E-CLASS Convertible (A207)	E 320 (207.462)	200	07/14 -	4249	
E-CLASS Convertible (A207)	E 350 (207.459)	225	04/11 -		4247
E-CLASS Convertible (A207)	E 350 (207.459)	225	04/11 -	4249	
E-CLASS Convertible (A207)	E 350 BlueTEC (207.426)	185	06/13 -		4247
E-CLASS Convertible (A207)	E 350 BlueTEC (207.426)	185	06/13 -	4249	
E-CLASS Convertible (A207)	E 350 BlueTEC/ d (207.426)	190	05/14 -		4247
E-CLASS Convertible (A207)	E 350 BlueTEC/ d (207.426)	190	05/14 -	4249	
E-CLASS Convertible (A207)	E 350 CDI	195	04/11 -		4247
E-CLASS Convertible (A207)	E 350 CDI	195	04/11 -	4249	
E-CLASS Convertible (A207)	E 350 CDI (207.422)	170	01/10 -		4247
E-CLASS Convertible (A207)	E 350 CDI (207.422)	170	01/10 -	4249	
E-CLASS Convertible (A207)	E 350 CGI (207.457)	215	01/10 -		4247
E-CLASS Convertible (A207)	E 350 CGI (207.457)	215	01/10 -	4249	
E-CLASS Convertible (A207)	E 400 (207.461)	245	07/14 -		4247
E-CLASS Convertible (A207)	E 400 (207.461)	245	07/14 -	4249	
E-CLASS Convertible (A207)	E 400 (207.465)	245	06/13 -		4247
E-CLASS Convertible (A207)	E 400 (207.465)	245	06/13 -	4249	
E-CLASS Convertible (A207)	E 500 (207.472)	285	01/10 -		4247
E-CLASS Convertible (A207)	E 500 (207.472)	285	01/10 -	4249	
E-CLASS Convertible (A207)	E 500 (207.473)	300	09/11 -		4247
E-CLASS Convertible (A207)	E 500 (207.473)	300	09/11 -	4249	
E-CLASS Convertible (A207)	E 550	299	09/11 -		4247
E-CLASS Coupe (C124)	E 200 (124.040)	100	06/93 – 06/97	3408	
E-CLASS Coupe (C124)	E 200 (124.040)	100	06/93 – 06/97		3550
E-CLASS Coupe (C124)	E 200 (124.040)	100	06/93 – 06/97		3630
E-CLASS Coupe (C124)	E 200 (124.040)	100	06/93 – 06/97		3663
E-CLASS Coupe (C124)	E 220 (124.042)	110	06/93 – 06/97	3408	
E-CLASS Coupe (C124)	E 220 (124.042)	110	06/93 – 06/97		3550
E-CLASS Coupe (C124)	E 220 (124.042)	110	06/93 – 06/97		3630
E-CLASS Coupe (C124)	E 220 (124.042)	110	06/93 – 06/97		3663
E-CLASS Coupe (C124)	E 320 (124.052)	162	06/93 – 06/97	3628	
E-CLASS Coupe (C124)	E 320 (124.052)	162	06/93 – 06/97	3629	
E-CLASS Coupe (C124)	E 320 (124.052)	162	06/93 – 06/97		3676
E-CLASS Coupe (C124)	E 36 AMG (124.052)	195	06/93 – 04/95		3581
E-CLASS Coupe (C124)	E 36 AMG (124.052)	195	06/93 – 04/95	3628	
E-CLASS Coupe (C124)	E 36 AMG (124.052)	200	05/94 – 06/97		3581
E-CLASS Coupe (C124)	E 36 AMG (124.052)	200	05/94 – 06/97	3628	
E-CLASS Coupe (C124)	E 36 AMG (124.052)	200	05/94 – 06/97	3821	
E-CLASS Coupe (C207)	E 200 (207.334)	135	06/13 -		4247
E-CLASS Coupe (C207)	E 200 (207.334)	135	06/13 -	4248	
E-CLASS Coupe (C207)	E 200 (207.334)	135	06/13 -	4249	
E-CLASS Coupe (C207)	E 200 CGI (207.348)	135	01/10 -		4247
E-CLASS Coupe (C207)	E 200 CGI (207.348)	135	01/10 -	4248	
E-CLASS Coupe (C207)	E 200 CGI (207.348)	135	01/10 -	4249	
E-CLASS Coupe (C207)	E 220 BlueTEC (207.301)	130	05/14 -		4247
E-CLASS Coupe (C207)	E 220 BlueTEC (207.301)	130	05/14 -	4248	
E-CLASS Coupe (C207)	E 220 BlueTEC (207.301)	130	05/14 -	4249	
E-CLASS Coupe (C207)	E 220 CDI	120	07/14 -		4247
E-CLASS Coupe (C207)	E 220 CDI	120	07/14 -	4248	
E-CLASS Coupe (C207)	E 220 CDI	120	07/14 -	4249	
E-CLASS Coupe (C207)	E 220 CDI / d (207.302)	125	01/10 -		4247
E-CLASS Coupe (C207)	E 220 CDI / d (207.302)	125	01/10 -	4248	
E-CLASS Coupe (C207)	E 220 CDI / d (207.302)	125	01/10 -	4249	
E-CLASS Coupe (C207)	E 250 (207.336)	155	06/13 -		4247
E-CLASS Coupe (C207)	E 250 (207.336)	155	06/13 -	4249	
E-CLASS Coupe (C207)	E 250 CDI / d (207.303)	150	01/09 -		4247
E-CLASS Coupe (C207)	E 250 CDI / d (207.303)	150	01/09 -	4249	
E-CLASS Coupe (C207)	E 250 CGI (207.347)	150	01/09 -		4247
E-CLASS Coupe (C207)	E 250 CGI (207.347)	150	01/09 -	4248	
E-CLASS Coupe (C207)	E 250 CGI (207.347)	150	01/09 -	4249	

MAKE & MODEL		KW	YEAR		
MERCEDES-BENZ					
E-CLASS Coupe (C207)	E 300 (207.355)	185	04/11 -		4247
E-CLASS Coupe (C207)	E 300 (207.355)	185	04/11 -	4249	
E-CLASS Coupe (C207)	E 320 (207.362)	200	07/14 -		4247
E-CLASS Coupe (C207)	E 320 (207.362)	200	07/14 -	4249	
E-CLASS Coupe (C207)	E 350 (207.356)	200	05/11 -		4247
E-CLASS Coupe (C207)	E 350 (207.356)	200	05/11 -	4249	
E-CLASS Coupe (C207)	E 350 (207.356)	225	04/11 -		4247
E-CLASS Coupe (C207)	E 350 (207.356)	225	04/11 -	4249	
E-CLASS Coupe (C207)	E 350 4-matic (207.388)	225	02/13 -		4247
E-CLASS Coupe (C207)	E 350 4-matic (207.388)	225	02/13 -	4249	
E-CLASS Coupe (C207)	E 350 BlueTEC	185	03/13 -		4247
E-CLASS Coupe (C207)	E 350 BlueTEC	185	03/13 -	4249	
E-CLASS Coupe (C207)	E 350 BlueTEC / d (207.326)	190	05/14 -		4247
E-CLASS Coupe (C207)	E 350 BlueTEC / d (207.326)	190	05/14 -	4249	
E-CLASS Coupe (C207)	E 350 CDI	195	04/11 -		4247
E-CLASS Coupe (C207)	E 350 CDI	195	04/11 -	4249	
E-CLASS Coupe (C207)	E 350 CDI (207.322)	170	01/09 -		4247
E-CLASS Coupe (C207)	E 350 CDI (207.322)	170	01/09 -	4249	
E-CLASS Coupe (C207)	E 350 CGI (207.357)	215	01/09 -		4247
E-CLASS Coupe (C207)	E 350 CGI (207.357)	215	01/09 -	4249	
E-CLASS Coupe (C207)	E 400	245	06/13 -		4247
E-CLASS Coupe (C207)	E 400	245	06/13 -	4249	
E-CLASS Coupe (C207)	E 400 (207.361)	245	07/14 -		4247
E-CLASS Coupe (C207)	E 400 (207.361)	245	07/14 -	4249	
E-CLASS Coupe (C207)	E 500 (207.372)	285	01/09 -		4247
E-CLASS Coupe (C207)	E 500 (207.372)	285	01/09 -	4249	
E-CLASS Coupe (C207)	E 500 (207.373)	300	09/11 -		4247
E-CLASS Coupe (C207)	E 500 (207.373)	300	09/11 -	4249	
E-CLASS Estate (S124)	E 200 T (124.079)	100	06/93 – 06/96	3408	
E-CLASS Estate (S124)	E 200 T (124.079)	100	06/93 – 06/96		3676
E-CLASS Estate (S124)	E 220 T (124.082)	110	06/93 – 06/96	3408	
E-CLASS Estate (S124)	E 220 T (124.082)	110	06/93 – 06/96		3676
E-CLASS Estate (S124)	E 250 TD (124.186)	83	06/93 – 06/96	3408	
E-CLASS Estate (S124)	E 250 TD (124.186)	83	06/93 – 06/96		3676
E-CLASS Estate (S124)	E 250 Turbo D	93	06/93 – 06/96	3408	
E-CLASS Estate (S124)	E 280 T (124.088)	142	06/93 – 06/96	3408	
E-CLASS Estate (S124)	E 280 T (124.088)	142	06/93 – 06/96	3629	
E-CLASS Estate (S124)	E 280 T (124.088)	142	06/93 – 06/96		3676
E-CLASS Estate (S124)	E 280 T (124.088)	145	06/93 – 06/96	3408	
E-CLASS Estate (S124)	E 280 T (124.088)	145	06/93 – 06/96	3629	
E-CLASS Estate (S124)	E 280 T (124.088)	145	06/93 – 06/96		3676
E-CLASS Estate (S124)	E 300 T 4-matic (124.290)	132	06/93 – 06/96	3408	
E-CLASS Estate (S124)	E 300 T 4-matic (124.290)	132	06/93 – 06/96		3676
E-CLASS Estate (S124)	E 300 T Turbo-D (124.193)	108	06/93 – 06/96	3408	
E-CLASS Estate (S124)	E 300 T Turbo-D (124.193)	108	06/93 – 06/96		3676
E-CLASS Estate (S124)	E 300 T Turbo-D 4-matic (124.393)	108	06/93 – 06/96	3408	
E-CLASS Estate (S124)	E 300 T Turbo-D 4-matic (124.393)	108	06/93 – 06/96		3676
E-CLASS Estate (S124)	E 300 TD (124.191)	100	06/93 – 06/96	3408	
E-CLASS Estate (S124)	E 300 TD (124.191)	100	06/93 – 06/96		3676
E-CLASS Estate (S124)	E 300 TE-24 AMG (124.091)	162	06/93 – 06/96	3628	
E-CLASS Estate (S124)	E 300 TE-24 AMG (124.091)	162	06/93 – 06/96	3629	
E-CLASS Estate (S124)	E 300 TE-24 AMG (124.091)	162	06/93 – 06/96		3676
E-CLASS Estate (S124)	E 320 T (124.092)	162	06/93 – 06/96	3628	
E-CLASS Estate (S124)	E 320 T (124.092)	162	06/93 – 06/96	3629	
E-CLASS Estate (S124)	E 320 T (124.092)	162	06/93 – 06/96		3676
E-CLASS Estate (S124)	E 36 T AMG (124.092)	200	05/94 – 06/96		3581
E-CLASS Estate (S124)	E 36 T AMG (124.092)	200	05/94 – 06/96	3628	
E-CLASS Estate (S210)	E 200 T (210.235)	100	06/96 – 08/00		3581
E-CLASS Estate (S210)	E 200 T (210.235)	100	06/96 – 08/00	3677	
E-CLASS Estate (S210)	E 200 T Kompressor (210.245)	137	06/97 – 03/03		3581
E-CLASS Estate (S210)	E 200 T Kompressor (210.245)	137	06/97 – 03/03	3863	
E-CLASS Estate (S210)	E 200 T Kompressor (210.248)	120	08/00 – 03/03		3581
E-CLASS Estate (S210)	E 200 T Kompressor (210.248)	120	08/00 – 03/03	3677	
E-CLASS Estate (S210)	E 220 T CDI (210.206)	92	06/98 – 07/99		3581
E-CLASS Estate (S210)	E 220 T CDI (210.206)	92	06/98 – 07/99	3677	
E-CLASS Estate (S210)	E 220 T CDI (210.206)	92	06/98 – 07/99	3863	
E-CLASS Estate (S210)	E 220 T CDI (210.206)	100	05/99 – 03/03		3581
E-CLASS Estate (S210)	E 220 T CDI (210.206)	100	05/99 – 03/03	3677	
E-CLASS Estate (S210)	E 220 T CDI (210.206)	100	05/99 – 03/03	3863	
E-CLASS Estate (S210)	E 220 T CDI (210.206)	105	07/99 – 03/03		3581
E-CLASS Estate (S210)	E 220 T CDI (210.206)	105	07/99 – 03/03	3677	

BEŞER

MAKE & MODEL		KW	YEAR		
MERCEDES-BENZ					
E-CLASS Estate (S210)	E 220 T CDI (210.206)	105	07/99 – 03/03	3863	
E-CLASS Estate (S210)	E 230 T (210.237)	110	06/96 – 06/97		3581
E-CLASS Estate (S210)	E 230 T (210.237)	110	06/96 – 06/97	3677	
E-CLASS Estate (S210)	E 240 T (210.261)	125	06/97 – 03/03		3581
E-CLASS Estate (S210)	E 240 T (210.261)	125	06/97 – 03/03	3677	
E-CLASS Estate (S210)	E 240 T (210.261)	125	06/97 – 03/03	3863	
E-CLASS Estate (S210)	E 240 T (210.262)	125	08/00 – 03/03		3581
E-CLASS Estate (S210)	E 240 T (210.262)	125	08/00 – 03/03	3677	
E-CLASS Estate (S210)	E 240 T (210.262)	125	08/00 – 03/03	3863	
E-CLASS Estate (S210)	E 250 T D (210.210)	83	06/96 – 07/99		3581
E-CLASS Estate (S210)	E 250 T D (210.210)	83	06/96 – 07/99	3677	
E-CLASS Estate (S210)	E 250 T D (210.210)	83	06/96 – 07/99	3863	
E-CLASS Estate (S210)	E 250 T Turbo-D (210.215)	110	06/97 – 07/99		3581
E-CLASS Estate (S210)	E 250 T Turbo-D (210.215)	110	06/97 – 07/99	3677	
E-CLASS Estate (S210)	E 270 T CDI	120	02/00 – 03/03		3581
E-CLASS Estate (S210)	E 270 T CDI	120	02/00 – 03/03	3821	
E-CLASS Estate (S210)	E 270 T CDI	120	02/00 – 03/03	3863	
E-CLASS Estate (S210)	E 270 T CDI (210.216)	125	07/99 – 03/03		3581
E-CLASS Estate (S210)	E 270 T CDI (210.216)	125	07/99 – 03/03	3821	
E-CLASS Estate (S210)	E 270 T CDI (210.216)	125	07/99 – 03/03	3863	
E-CLASS Estate (S210)	E 280 T (210.263)	150	12/96 – 03/03		3581
E-CLASS Estate (S210)	E 280 T (210.263)	150	12/96 – 03/03	3863	
E-CLASS Estate (S210)	E 280 T 4-matic (210.281)	150	12/96 – 03/03		3581
E-CLASS Estate (S210)	E 280 T 4-matic (210.281)	150	12/96 – 03/03	3863	
E-CLASS Estate (S210)	E 290 T Turbo-D (210.217)	95	06/96 – 07/99		3581
E-CLASS Estate (S210)	E 290 T Turbo-D (210.217)	95	06/96 – 07/99	3677	
E-CLASS Estate (S210)	E 290 T Turbo-D (210.217)	95	06/96 – 07/99	3863	
E-CLASS Estate (S210)	E 300 T Turbo-D (210.225)	130	12/96 – 07/99		3581
E-CLASS Estate (S210)	E 300 T Turbo-D (210.225)	130	12/96 – 07/99	3821	
E-CLASS Estate (S210)	E 300 T Turbo-D (210.225)	130	12/96 – 07/99	3863	
E-CLASS Estate (S210)	E 320 T (210.265)	165	12/96 – 03/03		3581
E-CLASS Estate (S210)	E 320 T (210.265)	165	12/96 – 03/03	3863	
E-CLASS Estate (S210)	E 320 T 4-matic (210.282)	165	12/96 – 03/03		3581
E-CLASS Estate (S210)	E 320 T 4-matic (210.282)	165	12/96 – 03/03	3863	
E-CLASS Estate (S210)	E 320 T CDI (210.226)	145	07/99 – 03/03		3581
E-CLASS Estate (S210)	E 320 T CDI (210.226)	145	07/99 – 03/03	3821	
E-CLASS Estate (S210)	E 320 T CDI (210.226)	145	07/99 – 03/03	3863	
E-CLASS Estate (S210)	E 420 T (210.272)	205	06/96 – 06/97		3581
E-CLASS Estate (S210)	E 420 T (210.272)	205	06/96 – 06/97	3629	
E-CLASS Estate (S210)	E 420 T (210.272)	205	06/96 – 06/97	3863	
E-CLASS Estate (S210)	E 430 T (210.270)	205	06/97 – 03/03		3581
E-CLASS Estate (S210)	E 430 T (210.270)	205	06/97 – 03/03	3629	
E-CLASS Estate (S210)	E 430 T (210.270)	205	06/97 – 03/03	3863	
E-CLASS Estate (S210)	E 430 T 4-matic (210.283)	205	05/99 – 03/03		3581
E-CLASS Estate (S210)	E 55 T AMG (210.274)	260	08/97 – 03/03		3581
E-CLASS Estate (S210)	E 55 T AMG 4-matic (210.283)	260	03/01 – 03/03		3581
E-CLASS T-Model (S211)	350 CGI (211.257)	215	05/06 – 07/09	4097	
E-CLASS T-Model (S211)	350 CGI (211.257)	215	05/06 – 07/09	4102	
E-CLASS T-Model (S211)	350 CGI (211.257)	215	05/06 – 07/09		4127
E-CLASS T-Model (S211)	E 200 CDI (211.207)	100	04/06 – 07/09	4097	
E-CLASS T-Model (S211)	E 200 CDI (211.207)	100	04/06 – 07/09	4102	
E-CLASS T-Model (S211)	E 200 CDI (211.207)	100	04/06 – 07/09		4127
E-CLASS T-Model (S211)	E 200 Kompressor (211.241)	135	04/06 – 07/09	4097	
E-CLASS T-Model (S211)	E 200 Kompressor (211.241)	135	04/06 – 07/09	4102	
E-CLASS T-Model (S211)	E 200 Kompressor (211.241)	135	04/06 – 07/09		4127
E-CLASS T-Model (S211)	E 200 T Kompressor (211.242)	120	03/03 – 07/09	4097	
E-CLASS T-Model (S211)	E 200 T Kompressor (211.242)	120	03/03 – 07/09	4102	
E-CLASS T-Model (S211)	E 200 T Kompressor (211.242)	120	03/03 – 07/09		4127
E-CLASS T-Model (S211)	E 220 CDI (211.206)	100	03/03 – 07/09	4097	
E-CLASS T-Model (S211)	E 220 CDI (211.206)	100	03/03 – 07/09	4102	
E-CLASS T-Model (S211)	E 220 CDI (211.206)	100	03/03 – 07/09		4127
E-CLASS T-Model (S211)	E 220 T CDI	120	03/03 – 07/09	4097	
E-CLASS T-Model (S211)	E 220 T CDI	120	03/03 – 07/09		4127
E-CLASS T-Model (S211)	E 220 T CDI (211.206)	110	03/03 – 07/09	4097	
E-CLASS T-Model (S211)	E 220 T CDI (211.206)	110	03/03 – 07/09		4127
E-CLASS T-Model (S211)	E 220 T CDI (211.208)	125	04/06 – 07/09	4097	
E-CLASS T-Model (S211)	E 220 T CDI (211.208)	125	04/06 – 07/09		4127
E-CLASS T-Model (S211)	E 230 T (211.252)	150	05/07 – 07/09	4097	
E-CLASS T-Model (S211)	E 230 T (211.252)	150	05/07 – 07/09	4102	
E-CLASS T-Model (S211)	E 230 T (211.252)	150	05/07 – 07/09		4127
E-CLASS T-Model (S211)	E 240 T (211.261)	130	03/03 – 07/09	4097	

MAKE & MODEL		KW	YEAR		
MERCEDES-BENZ					
E-CLASS T-Model (S211)	E 240 T (211.261)	130	03/03 – 07/09		4127
E-CLASS T-Model (S211)	E 240 T 4-matic (211.280)	130	07/03 – 07/09		4127
E-CLASS T-Model (S211)	E 240 T 4-matic (211.280)	130	07/03 – 07/09	4210	
E-CLASS T-Model (S211)	E 270 T CDI (211.216)	120	03/03 – 07/09	4097	
E-CLASS T-Model (S211)	E 270 T CDI (211.216)	120	03/03 – 07/09		4127
E-CLASS T-Model (S211)	E 270 T CDI (211.216)	130	03/03 – 07/09	4097	
E-CLASS T-Model (S211)	E 270 T CDI (211.216)	130	03/03 – 07/09		4127
E-CLASS T-Model (S211)	E 280 T (211.254)	170	03/05 – 07/09	4102	
E-CLASS T-Model (S211)	E 280 T (211.254)	170	03/05 – 07/09		4127
E-CLASS T-Model (S211)	E 280 T 4-matic (211.292)	170	03/05 – 07/09		4127
E-CLASS T-Model (S211)	E 280 T 4-matic (211.292)	170	03/05 – 07/09	4210	
E-CLASS T-Model (S211)	E 280 T CDI (211.220)	140	03/05 – 07/09	4097	
E-CLASS T-Model (S211)	E 280 T CDI (211.220)	140	03/05 – 07/09	4102	
E-CLASS T-Model (S211)	E 280 T CDI (211.220)	140	03/05 – 07/09		4127
E-CLASS T-Model (S211)	E 280 T CDI (211.223)	130	05/04 – 07/09	4097	
E-CLASS T-Model (S211)	E 280 T CDI (211.223)	130	05/04 – 07/09	4102	
E-CLASS T-Model (S211)	E 280 T CDI (211.223)	130	05/04 – 07/09		4127
E-CLASS T-Model (S211)	E 280 T CDI 4-matic (211.284)	140	03/05 – 07/09		4127
E-CLASS T-Model (S211)	E 280 T CDI 4-matic (211.284)	140	03/05 – 07/09	4210	
E-CLASS T-Model (S211)	E 320 T (211.265)	165	03/03 – 07/09	4097	
E-CLASS T-Model (S211)	E 320 T (211.265)	165	03/03 – 07/09	4102	
E-CLASS T-Model (S211)	E 320 T (211.265)	165	03/03 – 07/09		4127
E-CLASS T-Model (S211)	E 320 T 4-matic (211.282)	165	07/03 – 07/09		4127
E-CLASS T-Model (S211)	E 320 T 4-matic (211.282)	165	07/03 – 07/09	4210	
E-CLASS T-Model (S211)	E 320 T CDI (211.222)	165	03/05 – 07/09	4097	
E-CLASS T-Model (S211)	E 320 T CDI (211.222)	165	03/05 – 07/09	4102	
E-CLASS T-Model (S211)	E 320 T CDI (211.222)	165	03/05 – 07/09		4127
E-CLASS T-Model (S211)	E 320 T CDI (211.226)	150	03/03 – 07/09	4097	
E-CLASS T-Model (S211)	E 320 T CDI (211.226)	150	03/03 – 07/09	4102	
E-CLASS T-Model (S211)	E 320 T CDI (211.226)	150	03/03 – 07/09		4127
E-CLASS T-Model (S211)	E 320 T CDI 4-matic (211.289)	165	03/05 – 07/09		4127
E-CLASS T-Model (S211)	E 320 T CDI 4-matic (211.289)	165	03/05 – 07/09	4210	
E-CLASS T-Model (S211)	E 350 T (211.256)	200	03/05 – 07/09	4097	
E-CLASS T-Model (S211)	E 350 T (211.256)	200	03/05 – 07/09	4102	
E-CLASS T-Model (S211)	E 350 T (211.256)	200	03/05 – 07/09		4127
E-CLASS T-Model (S211)	E 350 T 4-matic (211.287)	200	03/05 – 07/09		4127
E-CLASS T-Model (S211)	E 350 T 4-matic (211.287)	200	03/05 – 07/09	4210	
E-CLASS T-Model (S211)	E 500 T (211.270)	225	10/03 – 07/09	4102	
E-CLASS T-Model (S211)	E 500 T (211.270)	225	10/03 – 07/09		4127
E-CLASS T-Model (S211)	E 500 T (211.272)	285	04/06 – 07/09	4102	
E-CLASS T-Model (S211)	E 500 T (211.272)	285	04/06 – 07/09		4127
E-CLASS T-Model (S211)	E 500 T (211.272)	285	04/06 – 07/09	4240	
E-CLASS T-Model (S211)	E 500 T 4-matic (211.283)	225	10/03 – 07/09		4127
E-CLASS T-Model (S211)	E 500 T 4-matic (211.283)	225	10/03 – 07/09	4210	
E-CLASS T-Model (S211)	E 500 T 4-matic (211.290)	285	04/06 – 07/09		4127
E-CLASS T-Model (S211)	E 500 T 4-matic (211.290)	285	04/06 – 07/09	4210	
E-CLASS T-Model (S212)	E 220 CDI (212.202)	120	08/09 -		4127
E-CLASS T-Model (S212)	E 220 CDI (212.202)	120	08/09 -	4249	
E-CLASS T-Model (S212)	E 220 CDI / BlueTEC (212.202, 212.201)	125	11/09 -		4127
E-CLASS T-Model (S212)	E 250 (212.236)	155	11/12 -		4127
E-CLASS T-Model (S212)	E 250 CDI / BlueTEC 4-matic (212.282, 212.297)	150	07/10 -		4127
E-CLASS T-Model (S212)	E 300 Hybrid / BlueTEC Hybrid (212.298)	150	12/11 -		4127
E-CLASS T-Model (S212)	E 350 4-matic (212.288, 212.287)	225	09/11 -	4249	
E-CLASS T-Model (S212)	E 200 (212.234)	135	11/12 -		4127
E-CLASS T-Model (S212)	E 200 (212.234)	135	11/12 -	4249	
E-CLASS T-Model (S212)	E 200 CDI / BlueTEC (212.205,212.206)	100	11/09 -		4127
E-CLASS T-Model (S212)	E 200 CDI / BlueTEC (212.205,212.206)	100	11/09 -	4248	
E-CLASS T-Model (S212)	E 200 CDI / BlueTEC (212.205,212.206)	100	11/09 -	4249	
E-CLASS T-Model (S212)	E 200 CGI (212.248)	135	11/09 -		4127
E-CLASS T-Model (S212)	E 200 CGI (212.248)	135	11/09 -	4249	
E-CLASS T-Model (S212)	E 220 BlueTEC	130	05/15 -		4127
E-CLASS T-Model (S212)	E 220 BlueTEC	130	05/15 -	4249	
E-CLASS T-Model (S212)	E 220 BlueTEC 4-matic (212.211)	125	12/14 -		4127
E-CLASS T-Model (S212)	E 220 BlueTEC 4-matic (212.211)	125	12/14 -	4249	
E-CLASS T-Model (S212)	E 220 CDI / BlueTEC (212.202, 212.201)	125	11/09 -	4249	
E-CLASS T-Model (S212)	E 250 (212.236)	155	11/12 -	4249	
E-CLASS T-Model (S212)	E 250 CDI / BlueTEC (212.203, 212.204)	150	11/09 -		4127
E-CLASS T-Model (S212)	E 250 CDI / BlueTEC (212.203, 212.204)	150	11/09 -	4249	
E-CLASS T-Model (S212)	E 250 CDI / BlueTEC 4-matic (212.282, 212.297)	150	07/10 -	4249	
E-CLASS T-Model (S212)	E 250 CGI (212.247)	150	11/09 -		4127
E-CLASS T-Model (S212)	E 250 CGI (212.247)	150	11/09 -	4249	

MAKE & MODEL   		KW	YEAR		
MERCEDES-BENZ					
E-CLASS T-Model (S212)	E 300 (212.254)	170	11/09 -		4127
E-CLASS T-Model (S212)	E 300 (212.254)	170	11/09 -	4249	
E-CLASS T-Model (S212)	E 300 (212.255)	185	07/11 -		4127
E-CLASS T-Model (S212)	E 300 (212.255)	185	07/11 -	4249	
E-CLASS T-Model (S212)	E 300 4-matic (212.280)	185	07/11 -		4127
E-CLASS T-Model (S212)	E 300 4-matic (212.280)	185	07/11 -	4249	
E-CLASS T-Model (S212)	E 300 CDI (212.220)	150	12/09 – 12/10		4127
E-CLASS T-Model (S212)	E 300 CDI (212.220)	150	12/09 – 12/10	4249	
E-CLASS T-Model (S212)	E 300 CDI / BlueTEC (212.227,212.221)	170	11/09 -		4127
E-CLASS T-Model (S212)	E 300 CDI / BlueTEC (212.227,212.221)	170	11/09 -	4249	
E-CLASS T-Model (S212)	E 300 Hybrid / BlueTEC Hybrid (212.098)	150	12/11 -	4249	
E-CLASS T-Model (S212)	E 350 (212.256)	200	08/09 -		4127
E-CLASS T-Model (S212)	E 350 (212.256)	200	08/09 -	4249	
E-CLASS T-Model (S212)	E 350 (212.259)	225	09/11 -		4127
E-CLASS T-Model (S212)	E 350 (212.259)	225	09/11 -	4249	
E-CLASS T-Model (S212)	E 350 4-matic (212.287)	200	11/09 -		4127
E-CLASS T-Model (S212)	E 350 4-matic (212.287)	200	11/09 -	4249	
E-CLASS T-Model (S212)	E 350 4-matic (212.288,212.287)	225	09/11 -		4127
E-CLASS T-Model (S212)	E 350 BlueTEC	185	11/12 -		4127
E-CLASS T-Model (S212)	E 350 BlueTEC	185	11/12 -	4249	
E-CLASS T-Model (S212)	E 350 BlueTEC (212.224)	155	11/09 -		4127
E-CLASS T-Model (S212)	E 350 BlueTEC (212.224)	155	11/09 -	4249	
E-CLASS T-Model (S212)	E 350 BlueTEC (212.226)	190	07/14 -		4127
E-CLASS T-Model (S212)	E 350 BlueTEC (212.226)	190	07/14 -	4249	
E-CLASS T-Model (S212)	E 350 BlueTEC 4-matic	185	11/12 -		4127
E-CLASS T-Model (S212)	E 350 BlueTEC 4-matic	185	11/12 -	4249	
E-CLASS T-Model (S212)	E 350 BlueTEC 4-matic (212.294)	190	07/14 -		4127
E-CLASS T-Model (S212)	E 350 BlueTEC 4-matic (212.294)	190	07/14 -	4249	
E-CLASS T-Model (S212)	E 350 CDI (212.223)	195	07/11 -		4127
E-CLASS T-Model (S212)	E 350 CDI (212.223)	195	07/11 -	4249	
E-CLASS T-Model (S212)	E 350 CDI (212.225)	170	11/09 -		4127
E-CLASS T-Model (S212)	E 350 CDI (212.225)	170	11/09 -	4249	
E-CLASS T-Model (S212)	E 350 CDI 4-matic (212.289)	170	11/09 -		4127
E-CLASS T-Model (S212)	E 350 CDI 4-matic (212.289)	170	11/09 -	4249	
E-CLASS T-Model (S212)	E 350 CDI 4-matic (212.293)	195	07/11 -		4127
E-CLASS T-Model (S212)	E 350 CDI 4-matic (212.293)	195	07/11 -	4249	
E-CLASS T-Model (S212)	E 350 CGI (212.257)	215	11/09 -		4127
E-CLASS T-Model (S212)	E 350 CGI (212.257)	215	11/09 -	4249	
E-CLASS T-Model (S212)	E 400	245	01/13 -		4127
E-CLASS T-Model (S212)	E 400 (212.261)	245	07/14 -		4127
E-CLASS T-Model (S212)	E 400 4-matic	245	01/13 -		4127
E-CLASS T-Model (S212)	E 400 4-matic (212.299)	245	07/14 -		4127
E-CLASS T-Model (S212)	E 500 (212.272)	285	11/09 -		4127
E-CLASS T-Model (S212)	E 500 (212.273)	300	09/11 -		4127
E-CLASS T-Model (S212)	E 500 4-matic (212.291)	300	09/11 -		4127
E-SERISI (W213)	E 200 (213.042)	135	01.16 -	4334	
E-SERISI (W213)	E 220 d (213.004)	120	01.16 -	4334	
E-SERISI (W213)	E 220 d (213.004)	143	01.16 -	4334	
G-CLASS (W460)	230 G (460,2)	66	03/79 – 07/93	3513	
G-CLASS (W460)	230 G (460,2)	75	02/80 – 07/87	3513	
G-CLASS (W460)	230 GE (460,2)	90	05/87 – 08/92	3513	
G-CLASS (W460)	230 GE (460,2)	92	04/82 – 08/92	3513	
G-CLASS (W460)	240 GD (460,3)	53	03/79 – 08/87	3513	
G-CLASS (W460)	250 GD (460,3)	62	10/87 – 12/92	3513	
G-CLASS (W460)	250 GD (460,3)	68	12/88 – 08/92	3513	
G-CLASS (W460)	280 GE (460,2)	110	08/84 – 08/89	3513	
G-CLASS (W460)	280 GE (460,2)	115	11/79 – 08/89	3513	
G-CLASS (W460)	300 GD (460,3)	65	12/79 – 12/91	3513	
G-CLASS (W460)	300 GD (460.3)	83	03/79 – 07/93	3513	
G-CLASS (W461)	230 GE (461)	92	06/93 -	3513	
G-CLASS (W461)	230 GE (461.238, 461.239)	90	02/93 -	3513	
G-CLASS (W461)	250 GD (461)	68	02/90 -	3513	
G-CLASS (W461)	290 GD/G 290 D (461.337,461.338)	70	04/92 -	3513	
G-CLASS (W461)	G 270 CDI	115	01/03 -	3513	
G-CLASS (W461)	G 270 CDI	115	01/03 -		3804
G-CLASS (W461)	G 280 CDI	135	04/09 -	3513	
G-CLASS (W461)	G 280 CDI	135	04/09 -		3804
G-CLASS (W461)	G 290 TD (461.335, 461.336)	88	07/97 -	3513	
G-CLASS (W461)	G 290 TD (461.335, 461.336)	88	07/97 -		3804
G-CLASS (W461)	G 300 CDI	135	04/10 -	3513	
G-CLASS (W461)	G 300 CDI	135	04/10 -		3804

MAKE & MODEL		KW	YEAR		
MERCEDES-BENZ					
G-Class (W463)	2.7 G 270 CDI (OM 612.965)	115	10.01 -	3670	
G-CLASS (W463)	200 GE (463.220)	85	01/90 – 07/93	3513	
G-CLASS (W463)	230 GE (463.224, 463.225)	93	06/90 – 06/93	3513	
G-CLASS (W463)	230 GE (463.224, 463.225)	93	06/90 – 06/93		3804
G-CLASS (W463)	250 GD (463.324, 463.325)	69	06/90 -	3513	
G-CLASS (W463)	250 GD (463.324, 463.325)	69	06/90 – 10/92		3804
G-Class (W463)	250 GD (463.324, 463.325) (OM 602.931)	69	06.90 – 10.92	3670	
G-Class (W463)	3.0 300 GD (OM 603.931)	83	12.90 – 09.97	3670	
G-Class (W463)	3.0 G 320 CDI (OM 642.970)	165	09.06 -	3670	
G-Class (W463)	3.0 G 320 CDI (OM 642.970)	165	09.06 -	3670	
G-Class (W463)	3.0 G 350 CDI (OM 642.886)	155	07.11 -	3670	
G-Class (W463)	3.0 G 350 CDI (OM 642.886)	155	07.11 -	3670	
G-Class (W463)	3.2 320 GE (M 104.996)	155	09.94 – 11.97	3670	
G-Class (W463)	3.2 G 320 (M 104.996)	155	09.94 – 12.97	3670	
G-Class (W463)	3.2 G 320 (M 112.945)	158	07.97 -	3670	
G-Class (W463)	3.2 G 320 (M 112.945)	158	11.97 -	3670	
G-CLASS (W463)	300 GD (463.327, 463.328)	83	09/89 -	3513	
G-CLASS (W463)	300 GD (463.327, 463.328)	83	09/89 – 06/93		3804
G-Class (W463)	300 GD (463.327, 463.328) (OM 603.931)	83	09.89 – 06.93	3670	
G-CLASS (W463)	300 GE (463.227, 463.228)	125	06/90 -	3513	
G-CLASS (W463)	300 GE (463.227, 463.228)	125	09/89 – 08/93		3804
G-CLASS (W463)	300 GE (463.227, 463.228)	128	06/90 -	3513	
G-CLASS (W463)	300 GE (463.227, 463.228)	128	06/90 – 08/97		3804
G-Class (W463)	300 GE (463.227, 463.228) (M 103.987)	128	06.90 – 08.97	3670	
G-CLASS (W463)	350 Turbo GD (463.320,463.321)	100	09/91 -	3513	
G-CLASS (W463)	350 Turbo GD (463.320,463.321)	100	09/91 – 08/96		3804
G-Class (W463)	4.0 G 400 CDI (OM 628.962)	184	12.00 -	3670	
G-Class (W463)	4.0 G 400 CDI (OM 628.962)	184	12.00 -	3670	
G-Class (W463)	4.9 G 500 E (M 117.965)	177	09.93 -	3670	
G-Class (W463)	5.0 G 500 (M 113.962)	218	04.98 -	3670	
G-Class (W463)	5.0 G 500 (M 113.962)	218	04.98 -	3670	
G-Class (W463)	5.4 G 55 AMG (M 113.993)	350	06.04 -	3670	
G-Class (W463)	5.4 G 55 AMG (M 113.993)	368	08.06 -	3670	
G-Class (W463)	5.5 G 500 (M 273.963)	285	12.09 -	3670	
G-Class (W463)	5.5 G 55 AMG (M 113.982)	260	04.99 -	3670	
G-CLASS (W463)	AMG G 63 (463.272)	420	06/15 -	3513	
G-CLASS (W463)	AMG G 65 (463.274)	463	06/15 -	3513	
G-CLASS (W463)	G 270 CDI (463.322, 463.323)	115	10/01 -	3513	
G-CLASS (W463)	G 270 CDI (463.322, 463.323)	115	10/01 -		3804
G-Class (W463)	G 300 TD (463.308) (OM 606.964)	130	09.96 – 07.00	3670	
G-CLASS (W463)	G 300 TD (463.330, 463.331)	130	08/96 -	3513	
G-CLASS (W463)	G 300 TD (463.330, 463.331)	130	08/96 – 07/00		3804
G-Class (W463)	G 300 TD (463.330, 463.331) (OM 606.964)	130	08.96 – 07.00	3670	
G-CLASS (W463)	G 320 (463.230, 463.231)	155	09/94 – 12/97	3513	
G-CLASS (W463)	G 320 (463.230, 463.231)	155	09/94 – 12/97		3804
G-CLASS (W463)	G 320 (463.232, 463.233,463.244, 463.245)	158	07/97 -	3513	
G-CLASS (W463)	G 320 (463.232, 463.233,463.244, 463.245)	158	07/97 -		3804
G-CLASS (W463)	G 320 CDI (463.340, 463.341,463.343)	165	09/06 -	3513	
G-CLASS (W463)	G 320 CDI (463.340, 463.341,463.343)	165	09/96 -		3804
G-CLASS (W463)	G 350 CDI	155	07/11 -	3513	
G-CLASS (W463)	G 350 CDI	155	07/11 -		3804
G-CLASS (W463)	G 350 d (463.348)	180	06/15 -	3513	
G-CLASS (W463)	G 350 d (463.348)	180	06/15 -		3804
G-CLASS (W463)	G 36 AMG (463.230)	200	01/95 -	3513	
G-CLASS (W463)	G 36 AMG (463.230)	200	01/95 – 07/98		3804
G-Class (W463)	G 36 AMG (463.230) (M 104.996 (AMG 3,6))	200	01.95 – 07.98	3670	
G-CLASS (W463)	G 400 CDI (463.332, 463.333)	184	12/00 -	3513	
G-CLASS (W463)	G 400 CDI (463.332, 463.333)	184	12/00 -		3804
G-CLASS (W463)	G 500	285	05/08 -	3513	
G-CLASS (W463)	G 500	285	05/08 -		3804
G-CLASS (W463)	G 500 (463.234)	310	06/15 -	3513	
G-CLASS (W463)	G 500 (463.234)	310	06/15 -		3804
G-CLASS (W463)	G 500 (463.247, 463.248,463.249, 463.240,	218	04/98 -		3804
G-CLASS (W463)	G 500 E (463.228)	177	09/93 -	3513	
G-CLASS (W463)	G 500 E (463.228)	177	09/93 -		3804
G-CLASS (W463)	G 55 AMG (463.243, 463.246)	260	04/99 -	3513	
G-CLASS (W463)	G 55 AMG (463.243, 463.246)	260	04/99 -		3804
G-CLASS (W463)	G 55 AMG (463.270, 463.271)	350	06/04 -	3513	
G-CLASS (W463)	G 55 AMG (463.270, 463.271)	350	06/04 -		3804
G-CLASS (W463)	G 55 AMG (463.270, 463.271)	350	06/04 -	4210	
G-CLASS (W463)	G 55 AMG (463.270, 463.271)	368	08/06 -	3513	

MAKE & MODEL		KW	YEAR		
MERCEDES-BENZ					
G-CLASS (W463)	G 55 AMG (463.270, 463.271)	368	08/06 -		3804
G-CLASS (W463)	G 55 AMG (463.270, 463.271)	368	08/06 -	4210	
G-CLASS (W463)	G 55 AMG (463.270, 463.271)	373	08/08 -	3513	
G-CLASS (W463)	G 55 AMG (463.270, 463.271)	373	08/08 -		3804
G-CLASS (W463)	G 55 AMG (463.270, 463.271)	373	08/08 -	4210	
G-CLASS (W463)	G 63 AMG (463.273)	400	05/12 -	3513	
G-CLASS (W463)	G 63 AMG (463.273)	400	05/12 -		3804
G-CLASS (W463)	G 63 AMG (463.273)	400	05/12 -	4210	
G-CLASS (W463)	G 63 AMG 6x6	400	12/14 -	3513	
G-CLASS (W463)	G 65 AMG	450	05/12 -	3513	
G-CLASS (W463)	G 500 (463.247, 463.248,463.249, 463.240, 463.241)	200	12/00 -	3513	
G-Class (W463) Closed SUV (Luxury Crossover SUV-J Segment)	300 GE (463.227, 463.228) (M 103.987)	125	09.89 – 08.93	3670	
G-Class (W463) Open SUV (Luxury Crossover SUV-J Segment)	3.0 300 GE (M 103.987)	125	09.89 – 09.97	3670	
G-CLASS Cabrio (W463)	200 GE (463.200)	80	01/90 – 07/93	3513	
G-CLASS Cabrio (W463)	200 GE (463.200)	80	01/90 – 07/93		3804
G-CLASS Cabrio (W463)	200 GE (463.200)	85	01/90 – 07/93	3513	
G-CLASS Cabrio (W463)	230 GE (463.204)	93	06/90 – 02/93	3513	
G-CLASS Cabrio (W463)	230 GE (463.204)	93	06/90 – 02/93		3804
G-CLASS Cabrio (W463)	300 GD (463.307)	83	12/90 – 09/97	3513	
G-CLASS Cabrio (W463)	300 GD (463.307)	83	12/90 – 09/97		3804
G-CLASS Cabrio (W463)	300 GE (463.207)	125	09/89 – 09/97	3513	
G-CLASS Cabrio (W463)	300 GE (463.207)	125	09/89 – 09/97		3804
G-CLASS Cabrio (W463)	320 GE (463.208)	155	09/94 – 11/97	3513	
G-CLASS Cabrio (W463)	320 GE (463.208)	155	09/94 – 11/97		3804
G-CLASS Cabrio (W463)	350 G Turbo-D (463.300)	100	09/91 – 09/97	3513	
G-CLASS Cabrio (W463)	350 G Turbo-D (463.300)	100	09/91 – 09/97		3804
G-CLASS Cabrio (W463)	G 300 TD (463.308)	130	09/96 -	3513	
G-CLASS Cabrio (W463)	G 300 TD (463.308)	130	09/96 – 07/00		3804
G-CLASS Cabrio (W463)	G 320 (463.209)	158	11/97 -	3513	
G-CLASS Cabrio (W463)	G 320 (463.209)	158	11/97 -		3804
G-CLASS Cabrio (W463)	G 320 CDI (463.303)	165	09/06 -	3513	
G-CLASS Cabrio (W463)	G 320 CDI (463.303)	165	09/06 -		3804
G-CLASS Cabrio (W463)	G 350 CDI	155	07/11 -	3513	
G-CLASS Cabrio (W463)	G 350 CDI	155	07/11 -		3804
G-CLASS Cabrio (W463)	G 400 CDI (463.309)	184	12/00 -	3513	
G-CLASS Cabrio (W463)	G 400 CDI (463.309)	184	12/00 -		3804
G-CLASS Cabrio (W463)	G 500	285	12/09 -	3513	
G-CLASS Cabrio (W463)	G 500	285	12/09 -		3804
G-CLASS Cabrio (W463)	G 500 (463)	218	04/98 -	3513	
G-CLASS Cabrio (W463)	G 500 (463)	218	04/98 -		3804
GLA (X156)	260 4-matic (156.946)	155	04/15 -	4326	
GLA-CLASS (X156)	GLA 180 (156.942)	90	02/15 -	4326	
GLA-CLASS (X156)	GLA 180 CDI / d (156.912)	80	07/14 -	4326	
GLA-CLASS (X156)	GLA 200 CDI / d (156.908)	100	12/13-	4326	
GLA-CLASS (X156)	GLA 200 CDI 4-matic (156.902)	100	12/13 -	4326	
GLA-CLASS (X156)	GLA 220 4-matic (156.947)	135	01/17 -	4326	
GLA-CLASS (X156)	GLA 220 CDI (156.903)	125	12/13 -	4326	
GLA-CLASS (X156)	GLA 220 CDI / d (156.903)	120	12/13 -	4326	
GLA-CLASS (X156)	GLA 220 CDI / d 4-matic (156.905)	120	12/13 -	4326	
GLA-CLASS (X156)	GLA 220 CDI 4-matic (156.905)	125	12/13 -	4326	
GLA-CLASS (X156)	GLA 220 d (156.903)	130	07/15 -	4326	
GLA-CLASS (X156)	GLA 220 d 4-matic (156.905)	130	07/15 -	4326	
GLA-CLASS (X156)	GLA 250 (156.944)	155	12/13 -	4326	
GLA-CLASS (X156)	GLA 250 4-matic (156.946)	155	12/13 -	4326	
GLA-CLASS (X156)	GLA 200 (156.943)	115	12/13-	4326	
GL-CLASS (X164)	GL 320 CDI / 350 BlueTEC 4-matic (164.824,	155	12/09 -	4210	
GL-CLASS (X164)	GL 320 CDI 4-matic (164.822)	165	09/06 – 05/09	4210	
GL-CLASS (X164)	GL 350 CDI 4-matic (164.822)	165	05/09 -	4210	
GL-CLASS (X164)	GL 350 CDI 4-matic (164.823)	195	10/10 -	4210	
HENSCHEL 2-t	206 D 2.2	44	02/73 – 12/77	3513	
HENSCHEL 2-t	207 1.8	51	02/73 – 12/77	3513	
KOMBI Estate (S123)	200 T	80	11/80 – 11/85	3339	
KOMBI Estate (S123)	200 T	80	11/80 – 11/85	3514	
KOMBI Estate (S123)	200 T (123.280)	74	11/80 – 11/85	3339	
KOMBI Estate (S123)	200 T (123.280)	74	11/80 – 11/85	3514	
KOMBI Estate (S123)	230 T (123.083)	80	09/77 – 03/80	3315	
KOMBI Estate (S123)	230 T (123.083)	80	09/77 – 03/80	3339	
KOMBI Estate (S123)	230 T (123.083)	80	09/77 – 03/80	3514	
KOMBI Estate (S123)	230 T (123.083)	80	09/77 – 03/80	3515	
KOMBI Estate (S123)	230 TE (123.283)	100	04/80 – 11/85	3339	
KOMBI Estate (S123)	230 TE (123.283)	100	04/80 – 11/85	3514	

BESER®

MAKE & MODEL		KW	YEAR		
MERCEDES-BENZ					
KOMBI Estate (S123)	240 T D	48	09/77 – 02/79	3315	
KOMBI Estate (S123)	240 T D	48	09/77 – 02/79	3515	
KOMBI Estate (S123)	240 T D (123.183)	53	03/79 – 12/85	3315	
KOMBI Estate (S123)	240 T D (123.183)	53	03/79 – 12/85	3339	
KOMBI Estate (S123)	240 T D (123.183)	53	03/79 – 12/85	3514	
KOMBI Estate (S123)	240 T D (123.183)	53	03/79 – 12/85	3515	
KOMBI Estate (S123)	250 T (123.086)	95	05/78 – 10/79	3315	
KOMBI Estate (S123)	250 T (123.086)	95	05/78 – 10/79	3339	
KOMBI Estate (S123)	250 T (123.086)	95	05/78 – 10/79	3514	
KOMBI Estate (S123)	250 T (123.086)	95	05/78 – 10/79	3515	
KOMBI Estate (S123)	250 T (123.086)	103	05/78 – 08/82	3315	
KOMBI Estate (S123)	250 T (123.086)	103	05/78 – 08/82	3339	
KOMBI Estate (S123)	250 T (123.086)	103	05/78 – 08/82	3514	
KOMBI Estate (S123)	250 T (123.086)	103	05/78 – 08/82	3515	
KOMBI Estate (S123)	280 TE (123.093)	136	09/77 – 11/85	3315	
KOMBI Estate (S123)	280 TE (123.093)	136	09/77 – 11/85	3339	
KOMBI Estate (S123)	280 TE (123.093)	136	09/77 – 11/85	3514	
KOMBI Estate (S123)	280 TE (123.093)	136	09/77 – 11/85	3515	
KOMBI Estate (S123)	300 T D (123.190)	59	09/77 – 10/85	3315	
KOMBI Estate (S123)	300 T D (123.190)	59	09/77 – 10/85	3339	
KOMBI Estate (S123)	300 T D (123.190)	59	09/77 – 10/85	3514	
KOMBI Estate (S123)	300 T D (123.190)	59	09/77 – 10/85	3515	
KOMBI Estate (S123)	300 T D (123.190)	65	03/79 – 11/85	3315	
KOMBI Estate (S123)	300 T D (123.190)	65	03/79 – 11/85	3339	
KOMBI Estate (S123)	300 T D (123.190)	65	03/79 – 11/85	3514	
KOMBI Estate (S123)	300 T D (123.190)	65	03/79 – 11/85	3515	
KOMBI Estate (S123)	300 T Turbo-D (123.193)	92	10/80 – 11/85	3339	
KOMBI Estate (S123)	300 T Turbo-D (123.193)	92	10/80 – 11/85	3514	
KOMBI Estate (S124)	200 E	77	11/92 – 05/93	3408	
KOMBI Estate (S124)	200 T (124.080)	77	01/86 – 05/90	3408	
KOMBI Estate (S124)	200 T (124.080)	80	09/85 – 08/89	3408	
KOMBI Estate (S124)	200 T D (124.180)	53	09/85 – 08/91	3408	
KOMBI Estate (S124)	200 T D (124.180)	55	09/88 – 08/91	3408	
KOMBI Estate (S124)	200 TE	90	09/88 – 12/89	3408	
KOMBI Estate (S124)	200 TE (124.079)	100	05/86 – 06/93	3408	
KOMBI Estate (S124)	200 TE (124.081)	87	09/88 – 08/92	3408	
KOMBI Estate (S124)	220 TE (124.082)	110	10/92 – 05/93	3408	
KOMBI Estate (S124)	230 TE (124.083)	97	09/85 – 08/92	3408	
KOMBI Estate (S124)	230 TE (124.083)	100	09/85 – 08/92	3408	
KOMBI Estate (S124)	230 TE (124.083) CAT	97	06/89 – 08/92	3408	
KOMBI Estate (S124)	250 T D (124.185)	66	09/85 – 06/93	3408	
KOMBI Estate (S124)	250 T D (124.185)	69	01/89 – 06/93	3408	
KOMBI Estate (S124)	250 TD Turbo (124.188)	93	03/88 – 07/93	3408	
KOMBI Estate (S124)	260 TE FGST.	118	09/89 – 08/92	3408	
KOMBI Estate (S124)	260 TE FGST.	122	09/85 – 12/89	3408	
KOMBI Estate (S124)	280 TE (124.088)	145	10/92 – 06/93	3408	
KOMBI Estate (S124)	280 TE (124.088)	145	10/92 – 06/93	3629	
KOMBI Estate (S124)	300 T D (124.190)	80	09/86 – 06/93	3408	
KOMBI Estate (S124)	300 T D (124.190)	81	01/89 – 06/93	3408	
KOMBI Estate (S124)	300 T D (124.190)	83	01/89 – 06/93	3408	
KOMBI Estate (S124)	300 T Turbo-D	105	09/86 – 01/89	3408	
KOMBI Estate (S124)	300 T Turbo-D (124.193)	108	01/89 – 06/93	3408	
KOMBI Estate (S124)	300 T Turbo-D 4-matic (124.393)	105	09/86 – 01/89	3408	
KOMBI Estate (S124)	300 T Turbo-D 4-matic (124.393)	108	01/89 – 06/93	3408	
KOMBI Estate (S124)	300 TD T	100	06/92 – 05/93	3408	
KOMBI Estate (S124)	300 TD T	100	06/92 – 05/93	3408	
KOMBI Estate (S124)	300 TE (124.090)	132	01/86 – 08/92	3408	
KOMBI Estate (S124)	300 TE (124.090)	138	01/86 – 12/89	3408	
KOMBI Estate (S124)	300 TE 4-matic (124.290)	132	09/86 – 06/93	3408	
KOMBI Estate (S124)	300 TE 4-matic (124.290)	138	09/86 – 12/89	3408	
KOMBI Estate (S124)	300 TE-24 (124.091)	162	09/89 – 08/92	3629	
KOMBI Estate (S124)	300 TE-24 (124.091)	170	09/89 – 08/92	3628	
KOMBI Estate (S124)	300 TE-24 (124.091)	170	09/89 – 08/92	3629	
KOMBI Estate (S124)	320 TE (124.092)	162	10/92 – 06/93	3628	
KOMBI Estate (S124)	320 TE (124.092)	162	10/92 – 06/93	3629	
M-CLASS (W163)	ML 230 (163.136)	110	02/98 – 06/05		4069
M-CLASS (W163)	ML 230 (163.136)	110	02/98 – 06/05		4103
M-CLASS (W163)	ML 230 (163.136)	110	02/98 – 06/05	4126	
M-CLASS (W163)	ML 270 CDI (163.113)	120	12/99 – 06/05		4103
M-CLASS (W163)	ML 270 CDI (163.113)	120	12/99 – 06/05	4126	
M-CLASS (W163)	ML 320 (163.154)	160	02/98 – 08/02		4069

BEŞER®

MAKE & MODEL		KW	YEAR		
MERCEDES-BENZ					
M-CLASS (W163)	ML 320 (163.154)	160	02/98 – 08/02		4103
M-CLASS (W163)	ML 320 (163.154)	160	02/98 – 08/02	4126	
M-CLASS (W163)	ML 350 (163.157)	180	08/02 – 06/05		4103
M-CLASS (W163)	ML 350 4-matic	173	02/03 – 06/05		4103
M-CLASS (W163)	ML 350 4-matic	173	03/02 – 06/05	4126	
M-CLASS (W163)	ML 400 CDI (163.128)	184	09/01 – 06/05		4103
M-CLASS (W163)	ML 430 (163.172)	200	02/98 – 06/05		4103
M-CLASS (W163)	ML 430 (163.172)	200	02/98 – 06/05	4126	
M-CLASS (W163)	ML 500 (163.175)	215	09/01 – 06/05		4103
M-CLASS (W163)	ML 55 AMG (163.174)	255	02/00 – 06/05		4103
M-CLASS (W164)	ML 280 CDI 4-matic (164.120)	140	07/05 – 07/09	4210	
M-CLASS (W164)	ML 300 CDI 4-matic (164.120)	140	07/09 – 12/11	4210	
M-CLASS (W164)	ML 300 CDI 4-matic (164.121)	150	02/10 – 12/11	4210	
M-CLASS (W164)	ML 320 CDI 4-matic (164.122)	165	07/05 – 07/09	4210	
M-CLASS (W164)	ML 350 4-matic (164.186)	200	07/05 – 12/11	4210	
M-CLASS (W164)	ML 350 CDI 4-matic	155	09/09 – 12/11	4210	
M-CLASS (W164)	ML 350 CDI 4-matic (164.122)	165	07/09 – 12/11	4210	
M-CLASS (W164)	ML 350 CDI 4-matic (164.125)	170	02/10 – 12/11	4210	
M-CLASS (W164)	ML 420 CDI 4-matic (164.128)	225	02/06 – 09/09	4210	
M-CLASS (W164)	ML 450 CDI 4-matic (164.128)	225	09/09 – 12/11	4210	
M-CLASS (W164)	ML 500 4-matic (164.172)	285	12/07 – 12/11	4210	
M-CLASS (W164)	ML 500 4-matic (164.175)	225	07/05 – 12/11	4210	
O 100	City	70	01/94 -	3689	
PAGODE (W113)	230 SL (113.042)	110	01/63 – 01/67	3455	
PAGODE (W113)	230 SL (113.042)	110	01/63 – 01/67	3471	
PAGODE (W113)	250 SL (113.043)	110	01/66 – 01/68	3318	
PAGODE (W113)	250 SL (113.043)	110	01/66 – 01/68	3320	
PAGODE (W113)	250 SL (113.043)	110	01/66 – 01/68	3338	
PAGODE (W113)	250 SL (113.043)	110	01/66 – 01/68	3350	
PAGODE (W113)	250 SL (113.043)	110	01/66 – 01/68	3353	
PAGODE (W113)	250 SL (113.043)	110	01/66 – 01/68	3362	
PAGODE (W113)	280 SL (113.044)	125	01/68 – 03/71	3318	
PAGODE (W113)	280 SL (113.044)	125	01/68 – 03/71	3320	
PAGODE (W113)	280 SL (113.044)	125	01/68 – 03/71	3338	
PAGODE (W113)	280 SL (113.044)	125	01/68 – 03/71	3350	
PAGODE (W113)	280 SL (113.044)	125	01/68 – 03/71	3353	
PAGODE (W113)	280 SL (113.044)	125	01/68 – 03/71	3362	
R-CLASS (W251, V251)	R 350 CGI 4-matic (251.057, 251.157)	225	01/06 -	4210	
R-CLASS (W251, V251)	R 280 (251.054, 251.154)	170	01/07 -	4210	
R-CLASS (W251, V251)	R 280 4-matic (251.062)	170	05/07 -	4210	
R-CLASS (W251, V251)	R 280 CDI (251.121, 251.026,251.126)	140	05/06 -	4210	
R-CLASS (W251, V251)	R 280 CDI 4-matic (251.020)	140	05/06 -	4210	
R-CLASS (W251, V251)	R 300 (251.054, 251.154)	170	07/09 -	4210	
R-CLASS (W251, V251)	R 320 CDI 4-matic (251.125)	155	01/06 -	4210	
R-CLASS (W251, V251)	R 350 (251.056, 251.156)	200	01/07 -	4210	
R-CLASS (W251, V251)	R 350 4-matic (251.065,251.165)	200	01/06 -	4210	
R-CLASS (W251, V251)	R 350 CDI 4-matic (251.022, 251.122)	165	07/09 -	4210	
R-CLASS (W251, V251)	R 350 CDI 4-matic (251.023, 251.123)	195	08/10 -	4210	
R-CLASS (W251, V251)	R 350 CDI 4-matic (251.124, 251.125)	155	01/06 -	4210	
R-CLASS (W251, V251)	R 500 4-matic (251.072, 251.172)	285	01/07 -	4210	
R-CLASS (W251, V251)	R 500 4-matic (251.075, 251.175)	225	01/06 -	4210	
R-CLASS (W251, V251)	R 300 CDI (251.021, 251.121,251.026, 251.126)	140	07/09 -	4210	
R-CLASS (W251, V251)	R 300 CDI 4-matic (251.020)	140	07/09 -	4210	
R-CLASS (W251, V251)	R 320 CDI 4-matic (251.022, 251.122)	165	01/06 -	4210	
Saloon (W123)	200	62	02/76 – 08/80	3315	
Saloon (W123)	200	62	02/76 – 08/80	3339	
Saloon (W123)	200	62	02/76 – 08/80	3514	
Saloon (W123)	200	62	02/76 – 08/80	3515	
Saloon (W123)	200	74	06/80 – 11/85	3339	
Saloon (W123)	200	74	06/80 – 11/85	3514	
Saloon (W123)	200 (123.020)	69	02/76 – 08/80	3315	
Saloon (W123)	200 (123.020)	69	02/76 – 08/80	3339	
Saloon (W123)	200 (123.020)	69	02/76 – 08/80	3514	
Saloon (W123)	200 (123.020)	69	02/76 – 08/80	3515	
Saloon (W123)	200 (123.220)	80	06/80 – 11/85	3339	
Saloon (W123)	200 (123.220)	80	06/80 – 11/85	3514	
Saloon (W123)	200 D	44	03/79 – 11/85	3315	
Saloon (W123)	200 D	44	03/79 – 11/85	3339	
Saloon (W123)	200 D	44	03/79 – 11/85	3514	
Saloon (W123)	200 D	44	03/79 – 11/85	3515	
Saloon (W123)	200 D (123.120)	40	07/76 – 02/79	3315	

MAKE & MODEL		KW	YEAR		
MERCEDES-BENZ					
Saloon (W123)	200 D (123.120)	40	07/76 – 02/79	3515	
Saloon (W123)	220 D	49	01/77 – 03/79	3315	
Saloon (W123)	220 D	49	01/77 – 03/79	3515	
Saloon (W123)	220 D (123.126)	44	01/76 – 02/79	3315	
Saloon (W123)	220 D (123.126)	44	01/76 – 02/79	3515	
Saloon (W123)	230 (123.023)	80	02/76 – 03/81	3315	
Saloon (W123)	230 (123.023)	80	02/76 – 03/81	3339	
Saloon (W123)	230 (123.023)	80	02/76 – 03/81	3514	
Saloon (W123)	230 (123.023)	80	02/76 – 03/81	3515	
Saloon (W123)	230 E (123.223)	100	04/80 – 12/85	3339	
Saloon (W123)	230 E (123.223)	100	04/80 – 12/85	3514	
Saloon (W123)	240 D (123.123)	48	02/76 – 02/79	3315	
Saloon (W123)	240 D (123.123)	48	02/76 – 02/79	3515	
Saloon (W123)	240 D (123.123)	53	03/79 – 11/85	3315	
Saloon (W123)	240 D (123.123)	53	03/79 – 11/85	3339	
Saloon (W123)	240 D (123.123)	53	03/79 – 11/85	3514	
Saloon (W123)	240 D (123.123)	53	03/79 – 11/85	3515	
Saloon (W123)	250 (123.026)	95	02/76 – 10/79	3315	
Saloon (W123)	250 (123.026)	95	02/76 – 10/79	3339	
Saloon (W123)	250 (123.026)	95	02/76 – 10/79	3514	
Saloon (W123)	250 (123.026)	95	02/76 – 10/79	3515	
Saloon (W123)	250 (123.026)	103	10/79 – 07/85	3339	
Saloon (W123)	250 (123.026)	103	10/79 – 07/85	3514	
Saloon (W123)	280 (123.030)	115	02/76 – 08/81	3315	
Saloon (W123)	280 (123.030)	115	02/76 – 08/81	3339	
Saloon (W123)	280 (123.030)	115	02/76 – 08/81	3514	
Saloon (W123)	280 (123.030)	115	02/76 – 08/81	3515	
Saloon (W123)	280 E	130	08/76 – 08/81	3315	
Saloon (W123)	280 E	130	08/76 – 08/81	3339	
Saloon (W123)	280 E	130	08/76 – 08/81	3514	
Saloon (W123)	280 E	130	08/76 – 08/81	3515	
Saloon (W123)	280 E (123.033)	136	02/76 – 11/85	3315	
Saloon (W123)	280 E (123.033)	136	02/76 – 11/85	3339	
Saloon (W123)	280 E (123.033)	136	02/76 – 11/85	3514	
Saloon (W123)	280 E (123.033)	136	02/76 – 11/85	3515	
Saloon (W123)	300 D (123.130)	59	02/76 – 07/80	3315	
Saloon (W123)	300 D (123.130)	59	02/76 – 07/80	3339	
Saloon (W123)	300 D (123.130)	59	02/76 – 07/80	3514	
Saloon (W123)	300 D (123.130)	59	02/76 – 07/80	3515	
Saloon (W123)	300 D (123.130)	65	03/79 – 11/85	3315	
Saloon (W123)	300 D (123.130)	65	03/79 – 11/85	3339	
Saloon (W123)	300 D (123.130)	65	03/79 – 11/85	3514	
Saloon (W123)	300 D (123.130)	65	03/79 – 11/85	3515	
Saloon (W123)	300 Turbo-D (123.133)	92	08/81 – 07/85	3339	
Saloon (W123)	300 Turbo-D (123.133)	92	08/81 – 07/85	3514	
Saloon (W124)	200	77	01/86 – 05/90	3408	
Saloon (W124)	200	77	01/86 – 05/90		3550
Saloon (W124)	200	77	01/86 – 05/90		3630
Saloon (W124)	200 (124.020)	75	01/86 – 05/90	3408	
Saloon (W124)	200 (124.020)	75	01/86 – 05/90		3550
Saloon (W124)	200 (124.020)	75	01/86 – 05/90		3630
Saloon (W124)	200 (124.020)	80	12/85 – 05/90	3408	
Saloon (W124)	200 (124.020)	80	12/85 – 05/90		3550
Saloon (W124)	200 (124.020)	80	12/85 – 05/90		3630
Saloon (W124)	200 D (124.120)	53	12/84 – 08/89	3408	
Saloon (W124)	200 D (124.120)	53	12/84 – 08/89		3550
Saloon (W124)	200 D (124.120)	55	08/89 – 06/93	3408	
Saloon (W124)	200 D (124.120)	55	08/89 – 06/93		3550
Saloon (W124)	200 D (124.120)	55	08/89 – 06/93		3630
Saloon (W124)	200 E	77	11/92 – 05/93	3408	
Saloon (W124)	200 E	77	11/92 – 05/93		3550
Saloon (W124)	200 E	77	11/92 – 05/93		3630
Saloon (W124)	200 E (124.019)	100	10/92 – 06/93	3408	
Saloon (W124)	200 E (124.019)	100	10/92 – 06/93		3550
Saloon (W124)	200 E (124.019)	100	10/92 – 06/93		3630
Saloon (W124)	200 E (124.021)	87	09/88 – 08/92	3408	
Saloon (W124)	200 E (124.021)	87	09/88 – 08/92		3550
Saloon (W124)	200 E (124.021)	87	09/88 – 08/92		3630
Saloon (W124)	200 E (124.021)	90	09/88 – 12/89	3408	
Saloon (W124)	200 E (124.021)	90	09/88 – 12/89		3550
Saloon (W124)	220 E (124.022)	110	10/92 – 06/93	3408	

MAKE & MODEL		KW	YEAR		
MERCEDES-BENZ					
Saloon (W124)	220 E (124.022)	110	10/92 – 06/93		3550
Saloon (W124)	220 E (124.022)	110	10/92 – 06/93		3630
Saloon (W124)	230 E (124.023)	97	12/84 – 03/92	3408	
Saloon (W124)	230 E (124.023)	97	12/84 – 03/92		3550
Saloon (W124)	230 E (124.023)	97	12/84 – 03/92		3630
Saloon (W124)	230 E (124.023)	100	01/85 – 06/93	3408	
Saloon (W124)	230 E (124.023)	100	01/85 – 06/93		3550
Saloon (W124)	230 E (124.023)	100	01/85 – 06/93		3630
Saloon (W124)	230 E (124.023) CAT	97	06/89 – 06/93	3408	
Saloon (W124)	230 E (124.023) CAT	97	06/89 – 06/93		3550
Saloon (W124)	230 E (124.023) CAT	97	06/89 – 06/93		3630
Saloon (W124)	250 D (124.125)	66	04/85 – 06/93	3408	
Saloon (W124)	250 D (124.125)	66	04/85 – 06/93		3550
Saloon (W124)	250 D (124.125)	69	01/89 – 06/93	3408	
Saloon (W124)	250 D (124.125)	69	01/89 – 06/93		3550
Saloon (W124)	250 Turbo-D (124.128)	93	09/88 – 06/93	3408	
Saloon (W124)	250 Turbo-D (124.128)	93	09/88 – 06/93		3550
Saloon (W124)	260 E (124.026)	118	09/85 – 08/92	3408	
Saloon (W124)	260 E (124.026)	118	09/85 – 08/92		3550
Saloon (W124)	260 E (124.026)	118	09/85 – 08/92		3630
Saloon (W124)	260 E (124.026)	122	09/85 – 12/89	3408	
Saloon (W124)	260 E (124.026)	122	09/85 – 12/89		3550
Saloon (W124)	260 E 4-matic (124.226)	118	09/86 – 08/92	3408	
Saloon (W124)	260 E 4-matic (124.226)	118	09/86 – 08/92		3550
Saloon (W124)	260 E 4-matic (124.226)	118	09/86 – 08/92		3630
Saloon (W124)	260 E 4-matic (124.226)	122	12/86 – 12/89	3408	
Saloon (W124)	260 E 4-matic (124.226)	122	12/86 – 12/89		3550
Saloon (W124)	280 E (124.028)	145	10/92 – 06/93	3408	
Saloon (W124)	280 E (124.028)	145	10/92 – 06/93		3550
Saloon (W124)	280 E (124.028)	145	10/92 – 06/93	3628	
Saloon (W124)	280 E (124.028)	145	10/92 – 06/93	3629	
Saloon (W124)	280 E (124.028)	145	10/92 – 06/93		3630
Saloon (W124)	300 AMG (124.031)	265	09/88 – 06/93	3628	
Saloon (W124)	300 D (124.130)	80	12/84 – 08/89	3408	
Saloon (W124)	300 D (124.130)	80	12/84 – 08/89		3550
Saloon (W124)	300 D (124.130)	81	06/90 – 06/93	3408	
Saloon (W124)	300 D (124.130)	81	06/90 – 06/93		3550
Saloon (W124)	300 D (124.130)	83	08/89 – 06/93	3408	
Saloon (W124)	300 D (124.130)	83	08/89 – 06/93		3550
Saloon (W124)	300 D 4-matic (124.330)	80	09/86 – 08/92	3408	
Saloon (W124)	300 D 4-matic (124.330)	80	09/86 – 08/92		3550
Saloon (W124)	300 D 4-matic (124.330)	80	09/86 – 08/92		3630
Saloon (W124)	300 D 4-matic (124.330)	83	08/89 – 06/93	3408	
Saloon (W124)	300 D 4-matic (124.330)	83	08/89 – 06/93		3550
Saloon (W124)	300 D 4-matic (124.330)	83	08/89 – 06/93		3630
Saloon (W124)	300 E	138	01/85 – 12/85	3408	
Saloon (W124)	300 E	138	06/85 – 08/92	3408	
Saloon (W124)	300 E	138	01/85 – 12/85		3550
Saloon (W124)	300 E	138	06/85 – 08/92		3550
Saloon (W124)	300 E	138	06/85 – 08/92		3630
Saloon (W124)	300 E (124.030)	132	08/85 – 08/92	3408	
Saloon (W124)	300 E (124.030)	132	08/85 – 08/92		3550
Saloon (W124)	300 E (124.030)	132	08/85 – 08/92		3630
Saloon (W124)	300 E 4-matic	138	09/86 – 02/92	3408	
Saloon (W124)	300 E 4-matic	138	09/86 – 02/92		3550
Saloon (W124)	300 E 4-matic	138	09/86 – 02/92		3630
Saloon (W124)	300 E 4-matic (124.230)	132	09/86 – 06/93	3408	
Saloon (W124)	300 E 4-matic (124.230)	132	09/86 – 06/93		3550
Saloon (W124)	300 E 4-matic (124.230)	132	09/86 – 06/93		3630
Saloon (W124)	300 E-24 (124.031)	162	09/88 – 08/92	3629	
Saloon (W124)	300 E-24 (124.031)	170	09/88 – 08/92	3629	
Saloon (W124)	300 TD SD	110	06/91 – 05/93	3408	
Saloon (W124)	300 TD SD	110	06/91 – 05/93		3550
Saloon (W124)	300 Turbo-D (124.133)	105	09/86 – 09/88	3408	
Saloon (W124)	300 Turbo-D (124.133)	105	09/86 - 09/88		3550
Saloon (W124)	300 Turbo-D (124.133)	108	09/88 – 06/93	3408	
Saloon (W124)	300 Turbo-D (124.133)	108	09/88 – 06/93		3550
Saloon (W124)	300 Turbo-D 4-matic (124.333)	105	09/86 – 09/88	3408	
Saloon (W124)	300 Turbo-D 4-matic (124.333)	105	09/86 – 09/88		3550
Saloon (W124)	300 Turbo-D 4-matic (124.333)	108	01/88 – 06/93	3408	
Saloon (W124)	300 Turbo-D 4-matic (124.333)	108	01/88 – 06/93		3550

BESER®

MAKE & MODEL		KW	YEAR		
MERCEDES-BENZ					
Saloon (W124)	300 Turbo-D 4-matic (124.333)	108	01/88 – 06/93		3630
Saloon (W124)	320 E (124.032)	162	10/92 – 06/93	3628	
Saloon (W124)	320 E (124.032)	162	10/92 – 06/93	3629	
Saloon (W124)	400 E 4.2 (124.034)	205	10/92 – 06/93	3628	
Saloon (W124)	400 E 4.2 (124.034)	205	10/92 – 06/93	3629	
Saloon (W124)	500 E (124.036)	240	01/91 – 06/93	3629	
Saloon (W124)	500 E AMG 6.0 (124.036)	275	01/92 – 06/93	3628	
S-Class III (W140)	2.8 S 280 (M 104.944)	142	02/93 – 10/98	3626	
S-Class III (W140)	3.4 S 350 Turbo-D (OM 603.971)	110	01/93 – 10/98	3626	
S-Class III (W140)	300 SE, SEL/S320 (140.032, 140.033)	170	03/91 – 10/98	3626	
S-Class III (W140)	300 SE, SEL/S320 (140.032, 140.033)	170	03/91 – 10/98	3626	
S-CLASS (W116)	280 S (116.020)	115	08/72 – 07/80	3315	
S-CLASS (W116)	280 S (116.020)	115	08/72 – 07/80	3515	
S-CLASS (W116)	280 S (116.020)	118	08/72 – 07/80	3315	
S-CLASS (W116)	280 S (116.020)	118	08/72 – 07/80	3515	
S-CLASS (W116)	280 SE,SEL (116.024)	130	08/72 – 07/80	3315	
S-CLASS (W116)	280 SE,SEL (116.024)	130	08/72 – 07/80	3515	
S-CLASS (W116)	280 SE,SEL (116.024)	136	08/72 – 07/80	3315	
S-CLASS (W116)	280 SE,SEL (116.024)	136	08/72 – 07/80	3515	
S-CLASS (W116)	350 SE,SEL (116.028,116.029)	143	03/76 – 03/80	3515	
S-CLASS (W116)	350 SE,SEL (116.028,116.029)	147	08/72 – 02/76	3515	
S-CLASS (W116)	350 SE,SEL (116.028,116.029)	151	03/76 – 03/80	3515	
S-CLASS (W116)	450 SE	143	08/72 – 12/76	3315	
S-CLASS (W116)	450 SE	143	08/72 – 12/76	3515	
S-CLASS (W116)	450 SE,SEL (116.032)	165	01/73 – 04/80	3315	
S-CLASS (W116)	450 SE,SEL (116.032)	165	01/73 – 04/80	3515	
S-CLASS (W116)	450 SE,SEL (116.033)	160	12/75 – 04/80	3315	
S-CLASS (W116)	450 SE,SEL (116.033)	160	12/75 – 04/80	3515	
S-CLASS (W116)	450 SEL 6.9 (116.036)	210	07/75 – 03/80	3315	
S-CLASS (W116)	450 SEL 6.9 (116.036)	210	07/75 – 03/80	3515	
S-CLASS (W126)	260 SE (126.020)	118	09/85 – 06/91	3339	
S-CLASS (W126)	260 SE (126.020)	118	09/85 – 06/91	3514	
S-CLASS (W126)	260 SE (126.020)	122	09/85 – 06/91	3339	
S-CLASS (W126)	260 SE (126.020)	122	09/85 – 06/91	3514	
S-CLASS (W126)	280 S (126.021)	115	12/79 – 07/85	3339	
S-CLASS (W126)	280 S (126.021)	115	12/79 – 07/85	3514	
S-CLASS (W126)	280 SE, SEL (126.022,126.023)	136	10/79 – 07/85	3339	
S-CLASS (W126)	280 SE, SEL (126.022,126.023)	136	10/79 07/85	3514	
S-CLASS (W126)	3.8	160	08/80 – 08/84	3514	
S-CLASS (W126)	300 SE, SEL (126.024,126.025)	132	01/86 – 06/91	3339	
S-CLASS (W126)	300 SE, SEL (126.024,126.025)	138	09/85 – 12/89	3339	
S-CLASS (W126)	300 SE, SEL (126.024,126.025)	132	01/86 – 06/91	3514	
S-CLASS (W126)	300 SE, SEL (126.024,126.025)	138	09/85 – 12/89	3514	
S-CLASS (W126)	380 SE, SEL (126.032)	150	10/81 – 08/85	3339	
S-CLASS (W126)	380 SE, SEL (126.032)	150	10/81 – 08/85	3514	
S-CLASS (W126)	380 SE, SEL (126.032)	160	09/80 – 10/81	3339	
S-CLASS (W126)	380 SE, SEL (126.032)	160	09/80 – 10/81	3514	
S-CLASS (W126)	420 SE, SEL	165	10/85 – 06/91	3339	
S-CLASS (W126)	420 SE, SEL	165	10/85 – 06/91	3514	
S-CLASS (W126)	420 SE, SEL	170	10/85 – 12/87	3339	
S-CLASS (W126)	420 SE, SEL	170	10/85 – 12/87	3514	
S-CLASS (W126)	420 SE, SEL (126.034)	160	10/85 – 12/87	3339	
S-CLASS (W126)	420 SE, SEL (126.034)	160	10/85 – 12/87	3514	
S-CLASS (W126)	420 SE, SEL (126.034,126.035)	150	10/85 – 06/91	3339	
S-CLASS (W126)	420 SE, SEL (126.034,126.035)	150	10/85 – 06/91	3514	
S-CLASS (W126)	500 SE, SEL	185	09/87 – 06/91	3339	
S-CLASS (W126)	500 SE, SEL	185	09/87 – 06/91	3514	
S-CLASS (W126)	500 SE, SEL	195	09/87 – 06/91	3339	
S-CLASS (W126)	500 SE, SEL	195	09/87 – 06/91	3514	
S-CLASS (W126)	500 SE, SEL (126.036)	164	09/85 – 06/91	3339	
S-CLASS (W126)	500 SE, SEL (126.036)	164	09/85 – 06/91	3514	
S-CLASS (W126)	500 SE, SEL (126.036)	170	12/79 – 08/85	3339	
S-CLASS (W126)	500 SE, SEL (126.036)	170	12/79 – 08/85	3514	
S-CLASS (W126)	500 SE, SEL (126.036)	177	12/79 – 08/85	3339	
S-CLASS (W126)	500 SE, SEL (126.036)	177	12/79 – 08/85	3514	
S-CLASS (W126)	500 SE, SEL (126.036)	180	09/85 – 06/91	3339	
S-CLASS (W126)	500 SE, SEL (126.036)	180	09/85 – 06/91	3514	
S-CLASS (W126)	500 SE, SEL CAT	185	06/89 – 06/91	3339	
S-CLASS (W126)	500 SE, SEL CAT	185	06/89 – 06/91	3514	
S-CLASS (W126)	560 SE, SEL	205	08/87 – 06/91	3339	
S-CLASS (W126)	560 SE, SEL	205	08/87 – 06/91	3514	

MAKE & MODEL		KW	YEAR		
MERCEDES-BENZ					
S-CLASS (W126)	560 SE, SEL	220	10/85 – 06/91	3339	
S-CLASS (W126)	560 SE, SEL	220	10/85 – 06/91	3514	
S-CLASS (W126)	560 SE, SEL (126.038)	200	10/85 – 12/87	3339	
S-CLASS (W126)	560 SE, SEL (126.038)	200	10/85 – 12/87	3514	
S-CLASS (W126)	560 SE, SEL (126.038,126.039)	178	10/85 – 06/91	3339	
S-CLASS (W126)	560 SE, SEL (126.038,126.039)	178	10/85 – 06/91	3514	
S-CLASS (W140)	300 SE 2.8 (140.028)	145	01/93 – 10/98		3581
S-CLASS (W140)	300 SE 2.8 (140.028)	145	01/93 – 10/98	3627	
S-CLASS (W140)	300 SE, SEL/S320 (140.032,140.033)	170	03/91 – 10/98		3581
S-CLASS (W140)	300 SE, SEL/S320 (140.032,140.033)	170	03/91 – 10/98	3627	
S-CLASS (W140)	400 SE, SEL/S420 (140.042,140.043)	210	02/91 – 10/98	3627	
S-CLASS (W140)	400 SE, SEL/S420 (140.042,140.043)	210	02/91 – 10/98		3581
S-CLASS (W140)	500 SE, SEL (140.050,140.051)	240	02/91 – 10/98	3627	
S-CLASS (W140)	500 SE, SEL (140.050,140.051)	240	02/91 – 10/98		3581
S-CLASS (W140)	600 SE, SEL (140.056,140.057)	300	04/91 – 12/92		3581
S-CLASS (W140)	600 SE, SEL (140.056,140.057)	300	02/91 – 10/98	3627	
S-CLASS (W140)	S 280 (140.028)	142	02/93 – 10/98		3581
S-CLASS (W140)	S 280 (140.028)	142	02/93 – 10/98	3627	
S-CLASS (W140)	S 300 Turbo-D (140.135)	130	05/96 – 10/98		3581
S-CLASS (W140)	S 300 Turbo-D (140.135)	130	05/96 – 10/98	3627	
S-CLASS (W140)	S 350 Turbo-D (140.134)	110	01/93 – 10/98		3581
S-CLASS (W140)	S 350 Turbo-D (140.134)	110	01/93 – 10/98	3627	
S-CLASS (W140)	S 420 (140.042)	205	01/93 – 10/98		3581
S-CLASS (W140)	S 420 (140.042)	205	01/93 – 10/98	3627	
S-CLASS (W140)	S 500 (140.050, 140.051)	235	01/93 – 10/98		3581
S-CLASS (W140)	S 500 (140.050, 140.051)	235	01/93 – 10/98	3627	
S-CLASS (W140)	S 600 (140.056, 140.057)	290	01/93 – 10/98		3581
S-CLASS (W140)	S 600 (140.056, 140.057)	290	01/93 – 10/98	3627	
S-CLASS (W220)	S 280 (220.063, 220.163)	150	10/98 – 08/05		4101
S-CLASS (W220)	S 280 (220.063, 220.163)	150	10/98 – 08/05		4127
S-CLASS (W220)	S 280 (220.063, 220.163)	150	10/98 – 08/05		4209
S-CLASS (W220)	S 320 (220.065, 220.165)	165	10/98 – 08/05		4101
S-CLASS (W220)	S 320 (220.065, 220.165)	165	10/98 – 08/05		4127
S-CLASS (W220)	S 320 (220.065, 220.165)	165	10/98 – 08/05		4209
S-CLASS (W220)	S 320 CDI (220.025, 220.125)	150	09/02 – 08/05		4127
S-CLASS (W220)	S 320 CDI (220.026, 220.126)	145	08/99 – 09/02		4101
S-CLASS (W220)	S 320 CDI (220.026, 220.126)	145	08/99 – 09/02		4209
S-CLASS (W220)	S 350 (220.067, 220.167)	180	09/02 – 08/05		4127
S-CLASS (W220)	S 350 4-matic (220.087,220.187)	180	06/03 – 08/05	3863	
S-CLASS (W220)	S 350 4-matic (220.087,220.187)	180	06/03 – 08/05		4127
S-CLASS (W220)	S 400 CDI (220.028, 220.128)	184	06/00 – 08/05		4101
S-CLASS (W220)	S 400 CDI (220.028, 220.128)	184	06/00 – 08/05		4127
S-CLASS (W220)	S 400 CDI (220.028, 220.128)	184	06/00 – 08/05		4209
S-CLASS (W220)	S 400 CDI (220.028, 220.128)	191	06/03 – 08/05		4127
S-CLASS (W220)	S 430 (220.070, 220.170)	205	10/98 – 08/05		4101
S-CLASS (W220)	S 430 (220.070, 220.170)	205	10/98 – 08/05		4127
S-CLASS (W220)	S 430 (220.070, 220.170)	205	10/98 – 08/05		4209
S-CLASS (W220)	S 430 4-matic (220.083,220.183)	205	09/02 – 08/05		4127
S-CLASS (W220)	S 500 (220.075, 220.175,220.875)	225	10/98 – 08/05		3581
S-CLASS (W220)	S 500 (220.075, 220.175,220.875)	225	10/98 – 08/05		4101
S-CLASS (W220)	S 500 (220.075, 220.175,220.875)	225	10/98 – 08/05		4209
S-CLASS (W220)	S 500 (220.075, 220.175,220.875)	225	10/98 – 08/5		4127
S-CLASS (W220)	S 500 4-matic (220.084,220.184)	225	09/02 – 08/05		4127
S-CLASS (W220)	S 600 (220.878, 220.178)	270	01/00 – 08/05		3581
S-CLASS (W221)	S 350 (221.056, 221.156)	200	10/05 – 12/13		4127
S-CLASS (W221)	S 500 (221.071, 221.171)	285	10/05 – 12/13		4127
S-CLASS (W221)	S 250 CDI (221.003, 221.103)	150	01/11 – 12/13		4127
S-CLASS (W221)	S 250 CDI (221.003, 221.103)	150	01/11 – 12/13	4240	
S-CLASS (W221)	S 280 (221.054)	170	08/06 – 12/13		4127
S-CLASS (W221)	S 280 (221.054)	170	08/06 – 12/13	4240	
S-CLASS (W221)	S 300 (221.054)	170	08/06 – 12/13		4127
S-CLASS (W221)	S 300 (221.054)	170	08/06 – 12/13	4240	
S-CLASS (W221)	S 320 CDI	155	10/05 – 12/13		4127
S-CLASS (W221)	S 320 CDI	155	10/05 – 12/13	4240	
S-CLASS (W221)	S 320 CDI (221.022, 221.122)	173	12/05 – 06/09		4127
S-CLASS (W221)	S 320 CDI (221.022, 221.122)	173	12/05 – 06/09	4240	
S-CLASS (W221)	S 320 CDI 4-matic (221.080,221.180)	155	10/05 – 12/13		4127
S-CLASS (W221)	S 320 CDI 4-matic (221.080,221.180)	155	10/05 – 12/13	4240	
S-CLASS (W221)	S 320 CDI 4-matic (221.080,221.180)	173	10/06 – 12/13	4240	
S-CLASS (W221)	S 320 CDI 4-matic (221.080,221.180)	173	10/06 – 12/13		4127
S-CLASS (W221)	S 350 (221.056, 221.156)	200	10/05 – 12/13	4240	

MAKE & MODEL		KW	YEAR		
MERCEDES-BENZ					
S-CLASS (W221)	S 350 4-matic (221.087,221.187)	200	02/08 – 12/13	4240	
S-CLASS (W221)	S 350 4-matic (221.087,221.187)	200	02/08 – 12/13		4127
S-CLASS (W221)	S 350 BlueTec (221.026,221.126)	190	04/11 – 12/13	4240	
S-CLASS (W221)	S 350 BlueTec (221.026,221.126)	190	04/11 – 12/13		4127
S-CLASS (W221)	S 350 BlueTEC 4-matic (221.083, 221.183)	190	04/11 – 12/13	4240	
S-CLASS (W221)	S 350 BlueTEC 4-matic (221.083, 221.183)	190	04/11 – 12/13		4127
S-CLASS (W221)	S 350 CDI	173	06/09 – 12/13		4127
S-CLASS (W221)	S 350 CDI	173	06/09 – 12/13	4240	
S-CLASS (W221)	S 350 CGI (221.057, 221.157)	225	04/11 – 12/13		4127
S-CLASS (W221)	S 350 CGI (221.057, 221.157)	225	04/11 – 12/13	4240	
S-CLASS (W221)	S 350 CGI 4-matic (221.082,221.182)	225	04/11 – 12/13		4127
S-CLASS (W221)	S 350 CGI 4-matic (221.082,221.182)	225	04/11 – 12/13	4240	
S-CLASS (W221)	S 400 Hybrid (221.095,221.195)	205	01/09 – 12/13	4240	
S-CLASS (W221)	S 400 Hybrid (221.095,221.195)	205	01/09 – 12/13		4127
S-CLASS (W221)	S 420 CDI / S 450 CDI (221.028, 221.128)	235	10/06 – 12/13	4240	
S-CLASS (W221)	S 420 CDI / S 450 CDI (221.028, 221.128)	235	10/06 – 12/13		4127
S-CLASS (W221)	S 450 (221.070, 221.170)	250	12/05 – 12/13		4127
S-CLASS (W221)	S 450 (221.070, 221.170)	250	12/05 – 12/13	4240	
S-CLASS (W221)	S 450 4-matic (221.084,221.184)	250	12/05 – 12/13	4240	
S-CLASS (W221)	S 450 4-matic (221.084,221.184)	250	12/05 – 12/13		4127
S-CLASS (W221)	S 500 (221.071, 221.171)	285	10/05 – 12/13	4240	
S-CLASS (W221)	S 500 4-matic (221.086,221.186)	285	10/05 – 12/13	4240	
S-CLASS (W221)	S 500 4-matic (221.086,221.186)	285	10/05 – 12/13		4127
S-CLASS (W221)	S 500 CGI (221.073, 221.173)	320	04/11 – 12/13		4127
S-CLASS (W221)	S 500 CGI (221.073, 221.173)	320	04/11 – 12/13	4240	
S-CLASS (W221)	S 500 CGI 4-matic (221.094,221.194)	320	03/11 – 12/13		4127
S-CLASS (W221)	S 500 CGI 4-matic (221.094,221.194)	320	03/11 – 12/13	4240	
S-CLASS (W221)	S 600 (221.176)	380	12/05 – 12/13		4127
S-CLASS (W221)	S 600 (221.176)	380	12/05 – 12/13	4240	
S-CLASS (W222, V222, X222)	S 400 d 4-matic (222.035,222.135)	250	05/17 -		4335
S-CLASS (W222, V222, X222)	S 500 Maybach 4-matic (222.985)	335	04/15 -		4335
S-CLASS (W222, V222, X222)	S 560 4-matic (222.086,222.186)	345	05/17 -		4335
S-CLASS (W222, V222, X222)	S 300 BlueTEC Hybrid / h (222.004, 222.104)	150	02/14 -		4335
S-CLASS (W222, V222, X222)	S 300 BlueTEC Hybrid / h (222.104)	170	02/14 -		4335
S-CLASS (W222, V222, X222)	S 350 BlueTEC / d (222.132,222.032, 222.123)	190	05/13 -		4335
S-CLASS (W222, V222, X222)	S 350 BlueTEC / d 4-matic (222.033, 222.133)	190	02/14 -		4335
S-CLASS (W222, V222, X222)	S 350 BlueTEC 4-matic (222.133)	185	02/14 -		4335
S-CLASS (W222, V222, X222)	S 350 d (222.020, 222.120)	210	07/17 -		4335
S-CLASS (W222, V222, X222)	S 350 d 4-matic (222.021,222.121)	210	05/17 -		4335
S-CLASS (W222, V222, X222)	S 400 (222.165)	245	03/14 -		4335
S-CLASS (W222, V222, X222)	S 400 4-matic (222.067) 245	245	11/14 -		4335
S-CLASS (W222, V222, X222)	S 400 d (222.034, 222.134)	250	07/17 -		4335
S-CLASS (W222, V222, X222)	S 400 Hybrid / h (222.057,222.157) 225	225	05/13 -		4335
S-CLASS (W222, V222, X222)	S 400 Maybach 4-matic (222.967)	245	01/15 -		4335
S-CLASS (W222, V222, X222)	S 450 (222.066, 222.166)	270	02/17 -		4335
S-CLASS (W222, V222, X222)	S 450 4-matic (222.064,222.164)	270	02/17 -		4335
S-CLASS (W222, V222, X222)	S 450 EQ Boost (222.158,222.058)	270	07/17 -		4335
S-CLASS (W222, V222, X222)	S 450 EQ Boost 4-matic(222.059, 222.159)	270	07/17 -		4335
S-CLASS (W222, V222, X222)	S 500 (222.082, 222.182)	335	05/13 -		4335
S-CLASS (W222, V222, X222)	S 500 4-matic (222.085,222.185)	335	05/13 -		4335
S-CLASS (W222, V222, X222)	S 500 4-matic (222.184)	310	02/14 -		4335
S-CLASS (W222, V222, X222)	S 500 EQ Boost (222.060,222.160)	320	07/17 -		4335
S-CLASS (W222, V222, X222)	S 500 Hybrid / e (222.163)	245	07/14 -		4335
S-CLASS (W222, V222, X222)	S 500 Maybach (222.982)	335	12/14 -		4335
S-CLASS (W222, V222, X222)	S 500 Maybach 4-matic (222.984)	310	09/15 -		4335
S-CLASS (W222, V222, X222)	S 560 (222.083, 222.183)	345	07/17 -		4335
S-CLASS (W222, V222, X222)	S 560 Maybach (222.983)	345	07/17 -		4335
S-CLASS (W222, V222, X222)	S 560 Maybach 4-matic (222.986)	345	07/17 -		4335
S-CLASS (W222, V222, X222)	S 320 (222.162)	200	05/14 -		4335
S-CLASS Convertible (A217)	S 500 (217.482)	335	12/15 -		4335
S-CLASS Convertible (A217)	S 560 (217.483)	345	10/17 -		4335
S-CLASS Coupe (C126)	420 SEC (126.046)	150	10/85 – 06/91	3339	
S-CLASS Coupe (C126)	420 SEC (126.046)	150	10/85 – 06/91	3514	
S-CLASS Coupe (C126)	420 SEC (126.046)	160	10/85 – 12/87	3339	
S-CLASS Coupe (C126)	420 SEC (126.046)	160	10/85 – 12/87	3514	
S-CLASS Coupe (C126)	420 SEC (126.046)	165	10/85 – 06/91	3339	
S-CLASS Coupe (C126)	420 SEC (126.046)	165	10/85 – 06/91	3514	
S-CLASS Coupe (C126)	500 SEC (126.044)	164	10/85 – 06/91	3339	
S-CLASS Coupe (C126)	500 SEC (126.044)	164	10/85 – 06/91	3514	
S-CLASS Coupe (C126)	500 SEC (126.044)	180	09/85 – 06/91	3339	
S-CLASS Coupe (C126)	500 SEC (126.044)	180	09/85 – 06/91	3514	

MAKE & MODEL		KW	YEAR		
MERCEDES-BENZ					
S-CLASS Coupe (C126)	500 SEC (126.044)	185	08/87 – 06/91	3339	
S-CLASS Coupe (C126)	500 SEC (126.044)	185	08/87 – 06/91	3514	
S-CLASS Coupe (C126)	500 SEC (126.044)	195	09/85 – 06/91	3339	
S-CLASS Coupe (C126)	500 SEC (126.044)	195	09/85 – 06/91	3514	
S-CLASS Coupe (C126)	500 SEC CAT	185	06/89 – 06/91	3339	
S-CLASS Coupe (C126)	500 SEC CAT	185	06/89 – 06/91	3514	
S-CLASS Coupe (C126)	560 SEC (126.045)	178	10/85 – 06/91	3339	
S-CLASS Coupe (C126)	560 SEC (126.045)	178	10/85 – 06/91	3514	
S-CLASS Coupe (C126)	560 SEC (126.045)	200	10/85 – 12/87	3339	
S-CLASS Coupe (C126)	560 SEC (126.045)	200	10/85 – 12/87	3514	
S-CLASS Coupe (C126)	560 SEC (126.045)	205	10/85 – 06/91	3339	
S-CLASS Coupe (C126)	560 SEC (126.045)	205	10/85 – 06/91	3514	
S-CLASS Coupe (C126)	560 SEC (126.045)	220	10/85 – 12/89	3339	
S-CLASS Coupe (C126)	560 SEC (126.045)	220	10/85 – 12/89	3514	
S-CLASS Coupe (C140)	SEC/CL 420 (140.063)	205	10/94 – 02/99		3581
S-CLASS Coupe (C140)	SEC/CL 420 (140.063)	205	10/94 – 02/99	3627	
S-CLASS Coupe (C140)	SEC/CL 500 (140.070)	235	10/92 – 02/99		3581
S-CLASS Coupe (C140)	SEC/CL 500 (140.070)	235	10/92 – 02/99	3627	
S-CLASS Coupe (C140)	SEC/CL 600 (140.076)	290	09/92 – 02/99		3581
S-CLASS Coupe (C140)	SEC/CL 600 (140.076)	290	09/92 – 02/99	3627	
S-CLASS Coupe (C215)	CL 500 (215.375)	225	03/99 – 03/06		4101
S-CLASS Coupe (C215)	CL 500 (215.375)	225	03/99 – 03/06		4127
S-CLASS Coupe (C215)	CL 500 (215.375)	225	03/99 – 03/06		4209
S-CLASS Coupe (C215)	CL 55 AMG (215.373)	265	10/99 – 03/06		4101
S-CLASS Coupe (C215)	CL 55 AMG (215.373)	265	10/99 – 03/06	4102	
S-CLASS Coupe (C215)	CL 55 AMG (215.373)	265	10/99 – 03/06		4209
S-CLASS Coupe (C215)	CL 55 AMG Kompressor (215.374)	368	06/02 – 03/06		4101
S-CLASS Coupe (C215)	CL 55 AMG Kompressor (215.374)	368	06/02 – 03/06		4209
S-CLASS Coupe (C215)	CL 600 (215.376)	368	09/02 – 03/06		4101
S-CLASS Coupe (C215)	CL 600 (215.376)	368	09/02 – 03/06		4209
S-CLASS Coupe (C215)	CL 600 (215.378)	270	03/99 – 03/06		4101
S-CLASS Coupe (C215)	CL 600 (215.378)	270	03/99 – 03/06		4209
S-CLASS Coupe (C215)	CL 63 AMG	326	09/01 – 03/06		4101
S-CLASS Coupe (C215)	CL 63 AMG	326	09/01 – 03/06	4102	
S-CLASS Coupe (C215)	CL 63 AMG	326	09/01 – 03/06		4209
S-CLASS Coupe (C216)	CL 500 (216.371)	285	06/06 – 12/13		4127
S-CLASS Coupe (C216)	CL 500 (216.371)	285	06/06 – 12/13	4240	
S-CLASS Coupe (C216)	CL 500 (216.373)	320	02/11 – 12/13		4127
S-CLASS Coupe (C216)	CL 500 (216.373)	320	02/11 – 12/13	4240	
S-CLASS Coupe (C216)	CL 500 4-matic (216.386)	285	02/08 – 12/13		4127
S-CLASS Coupe (C216)	CL 500 4-matic (216.386)	285	02/08 – 12/13	4240	
S-CLASS Coupe (C216)	CL 500 4-matic (216.394)	320	02/11 – 12/13		4127
S-CLASS Coupe (C216)	CL 500 4-matic (216.394)	320	02/11 – 12/13	4240	
S-CLASS Coupe (C216)	CL 600 (216.376)	380	05/06 – 12/13	4240	
S-CLASS Coupe (C217)	S 400 4-matic (217.364)	270	10/15 -		4335
S-CLASS Coupe (C217)	S 450 4-matic (217.364)	270	10/17 -		4335
S-CLASS Coupe (C217)	S 500 (217.382)	335	11/14 -		4335
S-CLASS Coupe (C217)	S 500 4-matic (217.384)	310	11/14 -		4335
S-CLASS Coupe (C217)	S 500 4-matic (217.385)	335	04/14 -		4335
S-CLASS Coupe (C217)	S 560 (217.383)	345	10/17 -		4335
S-CLASS Coupe (C217)	S 560 4-matic (217.386)	345	10/17 -		4335
SL (R107)	280 SL (107.042)	130	06/76 – 09/81	3315	
SL (R107)	280 SL (107.042)	130	06/76 – 09/81	3339	
SL (R107)	280 SL (107.042)	130	06/76 – 09/81	3514	
SL (R107)	280 SL (107.042)	130	06/76 – 09/81	3515	
SL (R107)	280 SL (107.042)	136	08/74 – 07/85	3315	
SL (R107)	280 SL (107.042)	136	08/74 – 07/85	3339	
SL (R107)	280 SL (107.042)	136	08/74 – 07/85	3514	
SL (R107)	280 SL (107.042)	136	08/74 – 07/85	3515	
SL (R107)	300 SL (107.041)	132	09/85 – 08/89	3339	
SL (R107)	300 SL (107.041)	132	09/85 – 08/89	3514	
SL (R107)	300 SL (107.041)	138	09/85 – 08/89	3339	
SL (R107)	300 SL (107.041)	138	09/85 – 08/89	3514	
SL (R107)	350 SL (107.043)	143	05/71 – 02/80	3315	
SL (R107)	350 SL (107.043)	143	05/71 – 02/80	3339	
SL (R107)	350 SL (107.043)	143	05/71 – 02/80	3514	
SL (R107)	350 SL (107.043)	143	05/71 – 02/80	3515	
SL (R107)	380 SL (107.045)	150	09/80 – 08/85	3339	
SL (R107)	380 SL (107.045)	150	09/80 – 08/85	3514	
SL (R107)	380 SL (107.045)	160	09/80 – 08/81	3339	
SL (R107)	380 SL (107.045)	160	09/80 – 08/81	3514	

MAKE & MODEL		KW	YEAR		
MERCEDES-BENZ					
SL (R107)	420 SL (107.047)	150	01/86 – 08/89	3339	
SL (R107)	420 SL (107.047)	150	01/86 – 08/89	3514	
SL (R107)	420 SL (107.047)	160	01/86 – 08/89	3339	
SL (R107)	420 SL (107.047)	160	01/86 – 08/89	3514	
SL (R107)	450 SL (107.044)	160	09/75 – 10/80	3315	
SL (R107)	450 SL (107.044)	160	09/75 – 10/80	3339	
SL (R107)	450 SL (107.044)	160	09/75 – 10/80	3514	
SL (R107)	450 SL (107.044)	160	09/75 – 10/80	3515	
SL (R107)	450 SL (107.044)	165	10/72 – 10/80	3315	
SL (R107)	450 SL (107.044)	165	10/72 – 10/80	3339	
SL (R107)	450 SL (107.044)	165	10/72 – 10/80	3514	
SL (R107)	450 SL (107.044)	165	10/72 – 10/80	3515	
SL (R107)	500 SL (107.046)	164	01/86 – 08/89	3339	
SL (R107)	500 SL (107.046)	164	01/86 – 08/89	3514	
SL (R107)	500 SL (107.046)	170	05/80 – 12/85	3339	
SL (R107)	500 SL (107.046)	170	05/80 – 12/85	3514	
SL (R107)	500 SL (107.046)	177	05/80 – 12/81	3339	
SL (R107)	500 SL (107.046)	177	05/80 – 12/81	3514	
SL (R107)	500 SL (107.046)	180	01/86 – 08/89	3339	
SL (R107)	500 SL (107.046)	180	01/86 – 08/89	3514	
SL (R129)	280 (129.058)	142	08/93 – 10/01		3581
SL (R129)	280 (129.058)	142	08/93 – 10/01	3629	
SL (R129)	280 (129.059)	150	05/98 – 10/01		3581
SL (R129)	280 (129.059)	150	05/98 – 10/01	3629	
SL (R129)	300 SL (129.060)	140	03/89 – 08/93	3629	
SL (R129)	300 SL-24 (129.061)	170	03/89 – 07/93	3629	
SL (R129)	320 (129.063)	170	09/93 – 10/01		3581
SL (R129)	320 (129.063)	170	09/93 – 10/01	3629	
SL (R129)	320 (129.064)	165	05/98 – 10/01		3581
SL (R129)	320 (129.064)	165	05/98 – 10/01	3629	
SL (R129)	500 (129.067)	235	09/92 – 10/01		3581
SL (R129)	500 (129.067)	235	09/92 – 10/01	3629	
SL (R129)	500 (129.068)	225	05/98 – 10/01		3581
SL (R129)	500 (129.068)	225	05/98 – 10/01	3629	
SL (R129)	500 SL (129.066)	240	09/89 – 08/92	3629	
SL (R129)	55 AMG	260	03/00 – 10/01		3581
SL (R129)	55 AMG	260	03/00 – 10/01	3629	
SL (R129)	60 AMG (129.067)	280	05/97 – 10/01		3581
SL (R129)	60 AMG (129.067)	280	05/97 – 10/01	3629	
SL (R129)	600 (129.076)	290	07/92 – 10/01		3581
SL (R129)	600 (129.076)	290	07/92 – 10/01	3629	
SL (R129)	600 SL	300	02/92 – 08/94		3581
SL (R129)	600 SL	300	02/92 – 08/94	3629	
SL (R129)	SL 73 AMG (129.076)	385	01/99 – 12/01		3581
SL (R230)	280	170	03/08 – 01/12	4102	
SL (R230)	280	170	03/08 – 01/12		4127
SL (R230)	280	170	03/08 – 01/12	4240	
SL (R230)	300	170	04/09 – 01/12	4102	
SL (R230)	300	170	04/09 – 01/12		4127
SL (R230)	300	170	04/09 – 01/12	4240	
SL (R230)	350	200	03/06 – 01/12	4102	
SL (R230)	350	200	03/06 – 01/12		4127
SL (R230)	350	200	03/06 – 01/12	4240	
SL (R230)	350	232	04/08 – 01/12	4102	
SL (R230)	350	232	04/08 – 01/12		4127
SL (R230)	350	232	04/08 – 01/12	4240	
SL (R230)	500	285	03/06 – 01/12	4102	
SL (R230)	500	285	03/06 – 01/12		4127
SL (R230)	500	285	03/06 – 01/12	4240	
SL (R230)	350 (230.467)	180	03/03 – 01/12		4127
SL (R230)	500 (230.475)	225	10/01 – 01/12		4127
SL (R231)	550	320	01/12 -	4313	
SL (R231)	350 (231.457)	225	02/12 -	4313	
SL (R231)	400 (231.466)	270	01/16 -	4313	
SL (R231)	500 (231.473)	320	01/12 -	4313	
SL (R231)	400 (231.465)	245	04/14 -	4313	
SL (R231)	500 (231.473)	335	04/15 -	4313	
SL Coupe (C107)	280 SLC (107.022)	130	06/76 – 09/81	3315	
SL Coupe (C107)	280 SLC (107.022)	130	06/76 – 09/81	3339	
SL Coupe (C107)	280 SLC (107.022)	130	06/76 – 09/81	3514	
SL Coupe (C107)	280 SLC (107.022)	130	06/76 – 09/81	3515	

MAKE & MODEL		KW	YEAR		
MERCEDES-BENZ					
SL Coupe (C107)	280 SLC (107.022)	136	08/74 – 09/81	3315	
SL Coupe (C107)	280 SLC (107.022)	136	08/74 – 09/81	3339	
SL Coupe (C107)	280 SLC (107.022)	136	08/74 – 09/81	3514	
SL Coupe (C107)	280 SLC (107.022)	136	08/74 – 09/81	3515	
SL Coupe (C107)	350 SLC (107.023)	143	03/76 – 02/80	3315	
SL Coupe (C107)	350 SLC (107.023)	143	03/76 – 02/80	3339	
SL Coupe (C107)	350 SLC (107.023)	143	03/76 – 02/80	3514	
SL Coupe (C107)	350 SLC (107.023)	143	03/76 – 02/80	3515	
SL Coupe (C107)	350 SLC (107.023)	147	01/72 – 02/76	3315	
SL Coupe (C107)	350 SLC (107.023)	147	01/72 – 02/76	3515	
SL Coupe (C107)	380 SLC (107.025)	160	07/80 – 08/81	3339	
SL Coupe (C107)	380 SLC (107.025)	160	07/80 – 08/81	3514	
SL Coupe (C107)	450 SLC (107.024)	160	09/75 – 08/79	3315	
SL Coupe (C107)	450 SLC (107.024)	160	09/75 – 08/79	3515	
SL Coupe (C107)	450 SLC (107.024)	165	01/73 – 11/75	3315	
SL Coupe (C107)	450 SLC (107.024)	165	01/73 – 11/75	3515	
SL Coupe (C107)	450 SLC 5.0 (107.026)	177	06/78 – 02/80	3315	
SL Coupe (C107)	450 SLC 5.0 (107.026)	177	06/78 – 02/80	3339	
SL Coupe (C107)	450 SLC 5.0 (107.026)	177	06/78 – 02/80	3514	
SL Coupe (C107)	450 SLC 5.0 (107.026)	177	06/78 – 02/80	3515	
SLC (R172)	180 (172.431)	115	01/16 -	4249	
SLC (R172)	200 (172.434)	135	01/16 -	4249	
SLC (R172)	250 d (172.404)	150	01/16 -	4249	
SLC (R172)	300 (172.438)	180	01/16 -	4249	
SLK (R170)	200 (170.435)	100	09/96 – 03/00		3676
SLK (R170)	200 (170.435)	100	09/96 – 03/00	3677	
SLK (R170)	200 Kompressor (170.444)	120	03/00 – 04/04		3676
SLK (R170)	200 Kompressor (170.444)	120	03/00 – 04/04	3677	
SLK (R170)	200 Kompressor (170.445)	141	10/96 – 03/00		3676
SLK (R170)	200 Kompressor (170.445)	141	10/96 – 03/00	3677	
SLK (R170)	230 Kompressor (170.447)	142	09/96 – 03/00		3676
SLK (R170)	230 Kompressor (170.447)	142	09/96 – 03/00	3677	
SLK (R170)	230 Kompressor (170.449)	145	03/00 – 04/04		3676
SLK (R170)	230 Kompressor (170.449)	145	03/00 – 04/04	3677	
SLK (R170)	32 AMG Kompressor (170.466)	260	03/01 – 04/04		3581
SLK (R170)	320 (170.465)	160	03/00 – 04/04		3676
SLK (R170)	320 (170.465)	160	03/00 – 04/04	3863	
SLK (R171)	200 Kompressor (171.442)	120	03/04 – 02/11	3821	
SLK (R171)	200 Kompressor (171.442)	120	03/04 – 02/11	3836	
SLK (R171)	200 Kompressor (171.445)	135	01/08 – 02/11	3821	
SLK (R171)	200 Kompressor (171.445)	135	01/08 – 02/11	3836	
SLK (R171)	280 (171.454)	170	01/05 – 02/11	3821	
SLK (R171)	300 (171.454)	170	04/09 – 02/11	3821	
SLK (R171)	350 (171.456)	200	06/04 – 02/11	3821	
SLK (R171)	350 (171.456)	200	06/04 – 02/11	4102	
SLK (R171)	350 (171.458)	224	01/08 – 02/11	3821	
SLK (R171)	55 AMG (171.473)	265	06/04 – 02/11	4102	
SLK (R171)	55 AMG (171.473)	265	06/04 – 02/11		4127
SLK (R171)	55 AMG (171.473)	294	06/06 – 02/11	4102	
SLK (R171)	55 AMG (171.473)	294	06/06 – 02/11		4127
SLK (R172)	200 (172.434)	135	04/15 -	4249	
SLK (R172)	200 (172.448)	135	02/11 -	4249	
SLK (R172)	250 (172.447)	150	02/11 -	4249	
SLK (R172)	250 CDI / d (172.403)	150	01/12 -	4249	
SLK (R172)	300 (172.438)	180	07/15 -	4249	
SLK (R172)	350 (172.457)	225	02/11 -	4249	
SPRINTER 2-t Box (901, 902)	214	105	02/95 – 05/06		3804
SPRINTER 2-t Box (901, 902)	208 CDI	60	04/00 – 05/06		3804
SPRINTER 2-t Box (901, 902)	208 D	58	02/95 – 04/00		3804
SPRINTER 2-t Box (901, 902)	208 D	60	10/96 – 04/00		3804
SPRINTER 2-t Box (901, 902)	210 D	75	01/97 – 04/00		3804
SPRINTER 2-t Box (901, 902)	211 CDI	80	04/00 – 05/06		3804
SPRINTER 2-t Box (901, 902)	212 D	90	02/95 – 04/00		3804
SPRINTER 2-t Box (901, 902)	213 CDI	95	04/00 – 05/06		3804
SPRINTER 2-t Box (901, 902)	214 NGT	92	04/00 – 05/06		3804
SPRINTER 2-t Box (901, 902)	216 CDI	115	04/00 – 05/06		3804
SPRINTER 2-t Bus (901, 902)	214	105	02/95 – 05/06		3804
SPRINTER 2-t Bus (901, 902)	208 CDI	60	04/00 – 05/06		3804
SPRINTER 2-t Bus (901, 902)	208 D	58	02/95 – 04/00		3804
SPRINTER 2-t Bus (901, 902)	210 D	75	03/97 – 04/00		3804
SPRINTER 2-t Bus (901, 902)	211 CDI	80	04/00 – 05/06		3804

MAKE & MODEL		KW	YEAR		
MERCEDES-BENZ					
SPRINTER 2-t Bus (901, 902)	212 D	90	02/95 – 04/00		3804
SPRINTER 2-t Bus (901, 902)	213 CDI	95	04/00 – 05/06		3804
SPRINTER 2-t Bus (901, 902)	214 NGT	92	04/00 – 05/06		3804
SPRINTER 2-t Bus (901, 902)	216 CDI	115	04/00 – 05/06		3804
SPRINTER 2-t Platform/Chassis (901, 902)	214	105	02/95 – 05/06		3804
SPRINTER 2-t Platform/Chassis (901, 902)	208 CDI	60	04/00 – 05/06		3804
SPRINTER 2-t Platform/Chassis (901, 902)	208 D	58	01/95 – 04/00		3804
SPRINTER 2-t Platform/Chassis (901, 902)	208 D	60	09/96 – 04/00		3804
SPRINTER 2-t Platform/Chassis (901, 902)	210 D	75	01/97 – 04/00		3804
SPRINTER 2-t Platform/Chassis (901, 902)	211 CDI	80	04/00 – 05/06		3804
SPRINTER 2-t Platform/Chassis (901, 902)	212 D	90	02/95 – 04/00		3804
SPRINTER 2-t Platform/Chassis (901, 902)	213 CDI	95	04/00 – 05/06		3804
SPRINTER 2-t Platform/Chassis (901, 902)	214 NGT	92	04/00 – 05/06		3804
SPRINTER 2-t Platform/Chassis (901, 902)	216 CDI	115	04/00 – 05/06		3804
SPRINTER 2-Ton.	2.1 208 CDI (OM 611.987)	60	04/00 – 05/06	3567	
SPRINTER 2-Ton.	2.1 208 CDI (OM 611.987)	60	04/00 – 05/06	3567	
SPRINTER 2-Ton.	2.1 208 CDI (OM 611.987)	60	04/00 – 05/06	3567	
SPRINTER 2-Ton.	2.1 211 CDI (OM 611.981)	80	04/00 – 05/06	3567	
SPRINTER 2-Ton.	2.1 211 CDI (OM 611.981)	80	04/00 – 05/06	3567	
SPRINTER 2-Ton.	2.1 211 CDI (OM 611.981)	80	04/00 – 05/06	3567	
SPRINTER 2-Ton.	2.1 213 CDI (OM 611.981)	95	04/00 – 05/06	3567	
SPRINTER 2-Ton.	2.1 213 CDI (OM 611.981)	95	04/00 – 05/06	3567	
SPRINTER 2-Ton.	2.1 213 CDI (OM 611.981)	95	04/00 – 05/06	3567	
SPRINTER 2-Ton.	2.3 208 D (OM 601.943)	58	02/95 – 04/00	3567	
SPRINTER 2-Ton.	2.3 208 D (OM 601.943)	58	01/95 – 04/00	3567	
SPRINTER 2-Ton.	2.3 208 D (OM 601.943)	58	02/95 – 04/00	3567	
SPRINTER 2-Ton.	2.3 208 D (OM 601.943)	60	09/96 – 04/00	3567	
SPRINTER 2-Ton.	2.3 208 D (OM 601.943)	60	10/96 – 04/00	3567	
SPRINTER 2-Ton.	2.3 214 NGT (M 111.984)	92	04/00 – 05/06	3567	
SPRINTER 2-Ton.	2.3 214 NGT (M 111.984)	92	04/00 – 05/06	3567	
SPRINTER 2-Ton.	2.7 216 CDI (OM 612.981)	115	04/00 – 05/06	3567	
SPRINTER 2-Ton.	2.7 216 CDI (OM 612.981)	115	04/00 – 05/06	3567	
SPRINTER 2-Ton.	2.7 216 CDI (OM 612.981)	115	04/00 – 05/06	3567	
SPRINTER 2-Ton.	2.9 210 D (OM 602.980)	75	03/97 – 04/00	3567	
SPRINTER 2-Ton.	2.9 210 D (OM 602.980)	75	01/97 – 04/00	3567	
SPRINTER 2-Ton.	2.9 210 D (OM 602.980)	75	01/97 – 04/00	3567	
SPRINTER 2-Ton.	2.9 212 D (OM 602.980)	90	02/95 – 04/00	3567	
SPRINTER 2-Ton.	2.9 212 D (OM 602.980)	90	02/95 – 04/00	3567	
SPRINTER 2-Ton.	2.9 212 D (OM 602.980)	90	02/95 – 04/00	3567	
SPRINTER 2-Ton.	214 (M 111.979)	105	02/95 – 05/06	3567	
SPRINTER 2-Ton.	214 (M 111.984)	105	02/95 – 05/06	3567	
SPRINTER 2-Ton.	214 (M 111.979)	105	02/95 – 05/06	3567	
SPRINTER 2-Ton.	214 (M 111.979)	105	02/95 – 05/06	3567	
SPRINTER 2-Ton.	214 NGT (M 111.984)	92	04/00 – 05/06	3567	
SPRINTER 2-Ton. Bus	2.1 208 CDI (OM 611.987)	60	04/00 – 05/06		3678
SPRINTER 2-Ton. Bus	2.1 211 CDI (OM 611.981)	80	04/00 – 05/06		3678
SPRINTER 2-Ton. Bus	2.1 213 CDI (OM 611.981)	95	04/00 – 05/06		3678
SPRINTER 2-Ton. Bus	2.3 208 D (OM 601.943)	58	02/95 – 04/00		3678
SPRINTER 2-Ton. Bus	2.3 214 NGT (M 111.984)	92	04/00 – 05/06		3678
SPRINTER 2-Ton. Bus	2.7 216 CDI (OM 612.981)	115	04/00 – 05/06		3678
SPRINTER 2-Ton. Bus	2.9 210 D (OM 602.980)	75	03/97 – 04/00		3678
SPRINTER 2-Ton. Bus	2.9 212 D (OM 602.980)	90	02/95 – 04/00		3678
SPRINTER 2-Ton. Bus	214 (M 111.979)	105	02/95 – 05/06		3678
SPRINTER 2-Ton.Caja/Chasis	2.1 208 CDI (OM 611.987)	60	04/00 – 05/06		3678
SPRINTER 2-Ton.Caja/Chasis	2.1 211 CDI (OM 611.981)	80	04/00 – 05/06		3678
SPRINTER 2-Ton.Caja/Chasis	2.1 213 CDI (OM 611.981)	95	04/00 – 05/06		3678
SPRINTER 2-Ton.Caja/Chasis	2.3 208 D (OM 601.943)	58	01/95 – 04/00		3678
SPRINTER 2-Ton.Caja/Chasis	2.3 208 D (OM 601.943)	60	09/96 – 04/00		3678
SPRINTER 2-Ton.Caja/Chasis	2.7 216 CDI (OM 612.981)	115	04/00 – 05/06		3678
SPRINTER 2-Ton.Caja/Chasis	2.9 210 D (OM 602.980)	75	01/97 – 04/00		3678
SPRINTER 2-Ton.Caja/Chasis	2.9 212 D (OM 602.980)	90	02/95 – 04/00		3678
SPRINTER 2-Ton.Caja/Chasis	214 (M 111.979)	105	02/95 – 05/06		3678
SPRINTER 2-Ton.Caja/Chasis	214 NGT (M 111.984)	92	04/00 – 05/06		3678
SPRINTER 2-Ton.Furgón	2.1 208 CDI (OM 611.987)	60	04/00 – 05/06		3678
SPRINTER 2-Ton.Furgón	2.1 211 CDI (OM 611.981)	80	04/00 – 05/06		3678
SPRINTER 2-Ton.Furgón	2.1 213 CDI (OM 611.981)	95	04/00 – 05/06		3678
SPRINTER 2-Ton.Furgón	2.3 208 D (OM 601.943)	58	02/95 – 04/00		3678
SPRINTER 2-Ton.Furgón	2.3 208 D (OM 601.943)	60	10/96 – 04/00		3678
SPRINTER 2-Ton.Furgón	2.3 214 NGT (M 111.984)	92	04/00 – 05/06		3678
SPRINTER 2-Ton.Furgón	2.7 216 CDI (OM 612.981)	115	04/00 – 05/06		3678
SPRINTER 2-Ton.Furgón	2.9 210 D (OM 602.980)	75	01/97 – 04/00		3678

MAKE & MODEL		KW	YEAR		
MERCEDES-BENZ					
SPRINTER 2-Ton.Furgón	2.9 212 D (OM 602.980)	90	02/95 – 04/00		3678
SPRINTER 2-Ton.Furgón	214 (M 111.979)	105	02/95 – 05/06		3678
SPRINTER 2-Ton.Furgón	214 (M 111.984)	105	02/95 – 05/06		3678
SPRINTER 3,5-t Box (906)	309 CDI (906.631, 906.633,906.635, 906.637)	65	06/06 – 12/09		3926
SPRINTER 3,5-t Box (906)	311 CDI (906.731, 906.733,906.735)	80	06/06 – 12/09		3926
SPRINTER 3,5-t Box (906)	311 CDI (906.731, 906.733,906.735)	84	05/16 -		3926
SPRINTER 3,5-t Box (906)	311 CDI (906.731, 906.733,906.735)	84	05/16 -	3962	
SPRINTER 3,5-t Box (906)	313 CDI (906.631, 906.633,906.635, 906.637)	95	05/09 -	3925	
SPRINTER 3,5-t Box (906)	313 CDI (906.631, 906.633,906.635, 906.637)	95	05/09 -		3926
SPRINTER 3,5-t Box (906)	313 CDI (906.631, 906.633,906.635, 906.637)	95	06/06 -		3926
SPRINTER 3,5-t Box (906)	314 CDI (906.731, 906.733,906.735)	105	05/16 -	3962	
SPRINTER 3,5-t Box (906)	314 CDI 4x4 (906.731,906.733, 906.735)	105	05/16 -		3926
SPRINTER 3,5-t Box (906)	315 CDI (906.731, 906.733,906.735)	110	06/06 – 12/09		3926
SPRINTER 3,5-t Box (906)	316 (906.635, 906.633)	115	09/08 -		3926
SPRINTER 3,5-t Box (906)	316 (906.733, 906.735)	115	09/08 -		3926
SPRINTER 3,5-t Box (906)	316 CDI (906.631, 906.633,906.635, 906.637)	120	03/09 -		3926
SPRINTER 3,5-t Box (906)	316 CDI (906.731, 906.733,906.735)	120	08/11 -		3926
SPRINTER 3,5-t Box (906)	316 CDI 4x4 (906.631,906.633, 906.635, 906.637)	120	03/09 -		3926
SPRINTER 3,5-t Box (906)	319 CDI / BlueTEC 4x4 (906.731, 906.733, 906.735)	140	03/09 -		3926
SPRINTER 3,5-t Box (906)	309 CDI (906.631, 906.633,906.635, 906.637)	65	06/06 – 12/09	3925	
SPRINTER 3,5-t Box (906)	310 CDI (906.631, 906.633,906.635, 906.637)	70	03/09 -		3926
SPRINTER 3,5-t Box (906)	310 CDI (906.631,906.633,906.635,906.637)	70	03/09 -	3925	
SPRINTER 3,5-t Box (906)	310 CDI (906.731, 906.733,906.735)	70	03/09 – 12/13		3926
SPRINTER 3,5-t Box (906)	311 CDI (906.631, 906.633,906.635, 906.637)	80	06/06 – 12/09		3926
SPRINTER 3,5-t Box (906)	311 CDI (906.631, 906.633,906.635, 906.637)	84	05/16 -	3925	
SPRINTER 3,5-t Box (906)	311 CDI (906.631, 906.633,906.635, 906.637)	84	05/16 -		3926
SPRINTER 3,5-t Box (906)	311 CDI (906.631, 906.633,906.635, 906.637)	84	05/16 -	3962	
SPRINTER 3,5-t Box (906)	311 CDI (906.631, 906.633906.635, 906.637)	80	06/06 – 12/09	3925	
SPRINTER 3,5-t Box (906)	311 CDI 4x4 (906.631,906.633, 906.635, 906.637)	80	02/08 – 12/09	3925	
SPRINTER 3,5-t Box (906)	311 CDI 4x4 (906.631,906.633, 906.635, 906.637)	80	02/08 – 12/09		3926
SPRINTER 3,5-t Box (906)	311 CDI 4x4 (906.731,906.733, 906.735)	80	02/08 – 12/09		3926
SPRINTER 3,5-t Box (906)	313 CDI (906.631, 906.633,906.635, 906.637)	95	06/06 -	3925	
SPRINTER 3,5-t Box (906)	313 CDI (906.731, 906.733,906.735)	95	08/11 – 05/16		3926
SPRINTER 3,5-t Box (906)	313 CDI 4x4 (906.631,906.633, 906.635, 906.637)	95	05/09 -	3925	
SPRINTER 3,5-t Box (906)	313 CDI 4x4 (906.631,906.633, 906.635, 906.637)	95	05/09 -		3926
SPRINTER 3,5-t Box (906)	313 CDI 4x4 (906.731,906.733, 906.735)	95	08/11 – 05/16		3926
SPRINTER 3,5-t Box (906)	314 CDI (906.631, 906.633,906.635, 906.637)	105	05/16 -	3925	
SPRINTER 3,5-t Box (906)	314 CDI (906.631, 906.633,906.635, 906.637)	105	05/16 -		3926
SPRINTER 3,5-t Box (906)	314 CDI (906.631, 906.633,906.635, 906.637)	105	05/16 -	3962	
SPRINTER 3,5-t Box (906)	314 CDI (906.731, 906.733,906.735)	105	05/16 -		3926
SPRINTER 3,5-t Box (906)	314 CDI 4x4 (906.631,906.633, 906.635, 906.637)	105	05/16 -	3925	
SPRINTER 3,5-t Box (906)	314 CDI 4x4 (906.631,906.633, 906.635, 906.637)	105	05/16 -		3926
SPRINTER 3,5-t Box (906)	314 CDI 4x4 (906.631,906.633, 906.635, 906.637)	105	05/16 -	3962	
SPRINTER 3,5-t Box (906)	314 CDI 4x4 (906.731,906.733, 906.735)	105	05/16 -	3962	
SPRINTER 3,5-t Box (906)	315 CDI (906.631, 906.633,906.635, 906.637)	110	06/06 – 12/09	3925	
SPRINTER 3,5-t Box (906)	315 CDI (906.631, 906.633,906.635, 906.637)	110	06/06 – 12/09		3926
SPRINTER 3,5-t Box (906)	315 CDI 4x4 (906.631,906.633, 906.635, 906.637)	110	02/08 – 12/09	3925	
SPRINTER 3,5-t Box (906)	315 CDI 4x4 (906.631,906.633, 906.635, 906.637)	110	02/08 – 12/09		3926
SPRINTER 3,5-t Box (906)	315 CDI 4x4 (906.731,906.733, 906.735)	110	02/08 – 12/09		3926
SPRINTER 3,5-t Box (906)	316 (906.635, 906.633)	115	09/08 -	3925	
SPRINTER 3,5-t Box (906)	316 CDI (906.631, 906.633,906.635, 906.637)	120	03/09 -	3925	
SPRINTER 3,5-t Box (906)	316 CDI 4x4 (906.631,906.633, 906.635, 906.637)	120	03/09 -	3925	
SPRINTER 3,5-t Box (906)	316 CDI 4x4 (906.731,906.733, 906.735)	120	08/11 -		3926
SPRINTER 3,5-t Box (906)	316 LGT	115	09/08 -		3926
SPRINTER 3,5-t Box (906)	316 LGT (906.633, 906.635)	115	09/08 -	3925	
SPRINTER 3,5-t Box (906)	316 LGT (906.633, 906.635)	115	09/08 -		3926
SPRINTER 3,5-t Box (906)	316 NGT (906.633, 906.635)	115	09/08 -	3925	
SPRINTER 3,5-t Box (906)	316 NGT (906.633, 906.635)	115	09/08 -		3926
SPRINTER 3,5-t Box (906)	316 NGT (906.733, 906.735)	115	09/08 -		3926
SPRINTER 3,5-t Box (906)	318 CDI (906.631, 906.633,906.635, 906.637)	135	06/06 – 12/09	3925	
SPRINTER 3,5-t Box (906)	318 CDI (906.631, 906.633,906.635, 906.637)	135	06/06 -12/09		3926
SPRINTER 3,5-t Box (906)	318 CDI (906.731, 906.733,906.735)	135	02/08 – 12/09		3926
SPRINTER 3,5-t Box (906)	318 CDI 4x4 (906.631,906.633, 906.635, 906.637)	135	02/08 – 12/09		3926
SPRINTER 3,5-t Box (906)	318 CDI 4x4 (906.73 1,	135	02/08 – 12/09		3926
SPRINTER 3,5-t Box (906)	319 CDI / BlueTEC (906.631,906.633, 906.635, 906.637)	140	03/09 -		3926
SPRINTER 3,5-t Box (906)	319 CDI / BlueTEC (906.731,906.733, 906.735)	140	03/09 -		3926
SPRINTER 3,5-t Box (906)	319 CDI / BlueTEC 4x4 (906.631, 906.633, 906.635,906.637)	140	03/09 -		3926
SPRINTER 3,5-t Box (906)	324 (906.633, 906.635,906.637)	190	06/06 – 12/13		3926
SPRINTER 3,5-t Box (906)	324 (906.733, 906.735)	190	06/06 – 12/13		3926
SPRINTER 3,5-t Box (906)	316 (906.733, 906.735)	115	09/08 -	3925	
SPRINTER 3,5-t Box (906)	316 CDI 4x4 (906.731,906.733, 906.735)	120	08/11 -	3925	

MAKE & MODEL		KW	YEAR		
MERCEDES-BENZ					
SPRINTER 3,5-t Box (906)	310 CDI (906.731, 906.733,906.735)	70	03/09 – 12/13	3925	
SPRINTER 3,5-t Box (906)	311 CDI (906.731, 906.733,906.735)	80	06/06 – 12/09	3925	
SPRINTER 3,5-t Box (906)	311 CDI (906.731, 906.733,906.735)	84	05/16 -	3925	
SPRINTER 3,5-t Box (906)	311 CDI 4x4 (906.731,906.733, 906.735)	80	02/08 – 12/09	3925	
SPRINTER 3,5-t Box (906)	313 CDI (906.731, 906.733,906.735)	95	08/11 – 05/16	3925	
SPRINTER 3,5-t Box (906)	313 CDI 4x4 (906.731,906.733, 906.735)	95	08/11 – 05/16	3925	
SPRINTER 3,5-t Box (906)	314 CDI (906.731, 906.733,906.735)	105	05/16 -	3925	
SPRINTER 3,5-t Box (906)	314 CDI 4x4 (906.731,906.733, 906.735)	105	05/16 -	3925	
SPRINTER 3,5-t Box (906)	315 CDI (906.731, 906.733,906.735)	110	06/06 – 12/09	3925	
SPRINTER 3,5-t Box (906)	315 CDI 4x4 (906.731,906.733, 906.735)	110	02/08 – 12/09	3925	
SPRINTER 3,5-t Box (906)	316 CDI (906.731, 906.733,906.735)	120	08/11 -	3925	
SPRINTER 3,5-t Box (906)	316 LGT	115	09/08 -	3925	
SPRINTER 3,5-t Box (906)	319 CDI / BlueTEC (906.631,906.633, 906.635, 906.637)	140	03/09 -	3925	
SPRINTER 3,5-t Box (906)	319 CDI / BlueTEC 4x4 (906.631, 906.633, 906.635,906.637)	140	03/09 -	3925	
SPRINTER 3,5-t Box (906)	324 (906.633, 906.635,906.637)	190	06/06 – 12/13	3925	
SPRINTER 3,5-t Box (906)	318 CDI 4x4 (906.631,906.633, 906.635, 906.637)	135	02/08 – 12/09	3925	
SPRINTER 3,5-t Bus (906)	318 CDI 4x4 (906.731,906.733, 906.735)	135	02/08 – 12/09	3925	
SPRINTER 3,5-t Bus (906)	319 CDI / BlueTEC 4x4 (906.731, 906.733, 906.735)	140	03/09 -	3925	
SPRINTER 3,5-t Bus (906)	324 (906.733, 906.735)	190	06/06 – 12/13	3925	
SPRINTER 3,5-t Bus (906)	316 NGT (906.733, 906.735)	115	09/08 -	3925	
SPRINTER 3,5-t Bus (906)	318 CDI (906.731, 906.733,906.735)	135	02/08 – 12/09	3925	
SPRINTER 3,5-t Bus (906)	319 CDI / BlueTEC (906.731,906.733, 906.735)	140	03/09 -	3925	
SPRINTER 3,5-t Platform/Chassis (906)	309 CDI (906.131, 906.133,906.135, 906.231, 906.233...)	65	06/06 – 12/09		3926
SPRINTER 3,5-t Platform/Chassis (906)	310 CDI (906.131, 906.133,906.135, 906.231, 906.233...)	70	03/09 – 05/16		3926
SPRINTER 3,5-t Platform/Chassis (906)	313 CDI (906.131, 906.133,906.135, 906.231, 906.233...)	95	06/06 – 05/16		3926
SPRINTER 3,5-t Platform/Chassis (906)	314 CDI (906.131, 906.133,906.135, 906.231, 906.233...)	105	05/16 -		3926
SPRINTER 3,5-t Platform/Chassis (906)	314 CDI 4x4 (906.131,906.133, 906.135, 906.231...)	105	05/16 -		3926
SPRINTER 3,5-t Platform/Chassis (906)	316 (906.133, 906.135,906.233, 906.235)	115	09/08 -		3926
SPRINTER 3,5-t Platform/Chassis (906)	316 CDI 4x4 (906.131,906.133, 906.135, 906.231...)	120	03/09 -		3926
SPRINTER 3,5-t Platform/Chassis (906)	316 LGT (906.133, 906.135,906.233, 906.235)	115	09/08 -		3926
SPRINTER 3,5-t Platform/Chassis (906)	316 NGT (906.133, 906.135,906.233, 906.235)	115	09/08 -		3926
SPRINTER 3,5-t Platform/Chassis (906)	318 CDI (906.131, 906.133,906.135, 906.231, 906.233...)	135	06/06 – 12/09		3926
SPRINTER 3,5-t Platform/Chassis (906)	311 CDI (906.131, 906.133,906.135, 906.231, 906.233...)	80	06/06 – 12/09		3926
SPRINTER 3,5-t Platform/Chassis (906)	311 CDI (906.131, 906.133,906.135, 906.231, 906.233...)	84	05/16 -		3926
SPRINTER 3,5-t Platform/Chassis (906)	311 CDI 4x4 (906.131,906.133, 906.135, 906.231...)	80	02/08 – 12/09		3926
SPRINTER 3,5-t Platform/Chassis (906)	313 CDI (906.131, 906.133,906.135, 906.231, 906.233...)	95	06/06 – 05/16		3926
SPRINTER 3,5-t Platform/Chassis (906)	313 CDI 4x4 (906.131,906.133, 906.135, 906.231...)	95	06/06 – 05/16		3926
SPRINTER 3,5-t Platform/Chassis (906)	315 CDI (906.131, 906.133,906.135, 906.231, 906.233...)	110	06/06 – 12/09		3926
SPRINTER 3,5-t Platform/Chassis (906)	315 CDI 4x4 (906.131,906.133, 906.135, 906.231...)	110	02/08 – 12/09		3926
SPRINTER 3,5-t Platform/Chassis (906)	316 CDI (906.131, 906.133,906.135, 906.231, 906.233...)	120	03/09 -		3926
SPRINTER 3,5-t Platform/Chassis (906)	316 NGT (906.133, 906.135,906.233, 906.235)	115	09/08 -		3926
SPRINTER 3,5-t Platform/Chassis (906)	318 CDI 4x4 (906.131,906.133, 906.135, 906.231...)	135	02/08 – 12/09		3926
SPRINTER 3,5-t Platform/Chassis (906)	319 CDI / BlueTEC (906.131,906.133, 906.135, 906.231...)	140	03/09 -		3926
SPRINTER 3,5-t Platform/Chassis (906)	319 CDI / BlueTEC 4x4 (906.131, 906.133, 906.135...)	140	05/11 -		3926
SPRINTER 3,5-t Platform/Chassis (906)	324 (906.133, 906.135,906.233, 906.235)	190	06/06 – 12/13		3926
SPRINTER 3,5-t Platform/Chassis (906)	309 CDI (906.131, 906.133,906.135, 906.231, 906.233...)	65	06/06 – 12/09	3925	
SPRINTER 3,5-t Platform/Chassis (906)	313 CDI (906.131, 906.133,906.135, 906.231, 906.233...)	95	06/06 – 05/16	3925	
SPRINTER 3,5-t Platform/Chassis (906)	314 CDI 4x4 (906.131,906.133, 906.135, 906.231...)	105	05/16 -	3925	
SPRINTER 3,5-t Platform/Chassis (906)	315 CDI 4x4 (906.131,906.133, 906.135, 906.231...)	110	02/08 – 12/09	3925	
SPRINTER 3,5-t Platform/Chassis (906)	316 LGT (906.133, 906.135,906.233, 906.235)	115	09/08 -	3925	
SPRINTER 3,5-t Platform/Chassis (906)	316 NGT (906.133, 906.135,906.233, 906.235)	115	09/08 -	3925	
SPRINTER 3,5-t Platform/Chassis (906)	324 (906.133, 906.135,906.233, 906.235)	190	06/06 – 12/13	3925	
SPRINTER 3,5-t Platform/Chassis (906)	310 CDI (906.131, 906.133,906.135, 906.231, 906.233...)	70	03/09 – 05/16	3925	
SPRINTER 3,5-t Platform/Chassis (906)	311 CDI (906.131, 906.133,906.135, 906.231, 906.233...)	80	06/06 – 12/109	3925	
SPRINTER 3,5-t Platform/Chassis (906)	311 CDI (906.131, 906.133,906.135, 906.231, 906.233...)	84	05/16 -	3925	
SPRINTER 3,5-t Platform/Chassis (906)	311 CDI (906.131, 906.133,906.135, 906.231, 906.233...)	84	05/16 -	3962	
SPRINTER 3,5-t Platform/Chassis (906)	311 CDI 4x4 (906.131,906.133, 906.135, 906.231...)	80	02/08 – 12/09	3925	
SPRINTER 3,5-t Platform/Chassis (906)	313 CDI (906.131, 906.133,906.135, 906.231, 906.233...)	95	06/06 – 05/16	3925	
SPRINTER 3,5-t Platform/Chassis (906)	313 CDI 4x4 (906.131,906.133, 906.135, 906.231...)	95	06/06 – 05/16	3925	
SPRINTER 3,5-t Platform/Chassis (906)	314 CDI (906.131, 906.133,906.135, 906.231, 906.233...)	105	05/16 -	3925	
SPRINTER 3,5-t Platform/Chassis (906)	314 CDI (906.131, 906.133,906.135, 906.231, 906.233...)	105	05/16 -	3962	
SPRINTER 3,5-t Platform/Chassis (906)	314 CDI 4x4 (906.131,906.133, 906.135, 906.231...)	105	05/16 -	3962	
SPRINTER 3,5-t Platform/Chassis (906)	315 CDI (906.131, 906.133,906.135, 906.231, 906.233...)	110	06/06 – 12/09	3925	
SPRINTER 3,5-t Platform/Chassis (906)	316 (906.133, 906.135,906.233, 906.235)	115	09/08 -	3925	
SPRINTER 3,5-t Platform/Chassis (906)	316 CDI (906.131, 906.133,906.135, 906.231, 906.233...)	120	03/09 -	3925	
SPRINTER 3,5-t Platform/Chassis (906)	316 CDI 4x4 (906.131,906.133, 906.135, 906.231...)	120	03/09 -	3925	
SPRINTER 3,5-t Platform/Chassis (906)	316 NGT (906.133, 906.135,906.233, 906.235)	115	09/08 -	3925	
SPRINTER 3,5-t Platform/Chassis (906)	318 CDI (906.131, 906.133,906.135, 906.231, 906.233...)	135	06/06 – 12/09	3925	
SPRINTER 3,5-t Platform/Chassis (906)	318 CDI 4x4 (906.131,906.133, 906.135, 906.231...)	135	02/08 – 12/09	3925	
SPRINTER 3,5-t Platform/Chassis (906)	319 CDI / BlueTEC (906.131,906.133, 906.135, 906.231...)	140	03/09 -	3925	
SPRINTER 3,5-t Platform/Chassis (906)	319 CDI / BlueTEC 4x4 (906.131, 906.133, 906.135...)	140	05/11 -	3925	

MAKE & MODEL   		KW	YEAR		
MERCEDES-BENZ					
SPRINTER 3-t Box (903)	314	105	02/95 – 05/06		3804
SPRINTER 3-t Box (903)	308 CDI	60	04/00 – 05/06		3804
SPRINTER 3-t Box (903)	308 D 2.3	58	02/95 – 04/00		3804
SPRINTER 3-t Box (903)	308 D 2.3	60	02/95 – 04/00		3804
SPRINTER 3-t Box (903)	310 D 2.9	75	02/95 – 04/00		3804
SPRINTER 3-t Box (903)	311 CDI	80	04/00 – 05/06		3804
SPRINTER 3-t Box (903)	311 CDI 4x4	80	08/02 – 05/06		3804
SPRINTER 3-t Box (903)	312 D 2.9	90	02/95 – 04/00		3804
SPRINTER 3-t Box (903)	312 D 2.9 4x4	90	05/97 – 08/02		3804
SPRINTER 3-t Box (903)	313 CDI	95	04/00 – 05/06		3804
SPRINTER 3-t Box (903)	313 CDI 4x4	95	08/02 – 05/06		3804
SPRINTER 3-t Box (903)	314 4x4	105	08/02 – 05/06		3804
SPRINTER 3-t Box (903)	314 NGT (903.661)	92	04/00 – 05/06		3804
SPRINTER 3-t Box (903)	316 CDI	115	04/00 – 05/06		3804
SPRINTER 3-t Box (903)	316 CDI 4x4	115	08/02 – 05/06		3804
SPRINTER 3-t Box (906)	209 CDI (906.611, 906.613)	65	06/06 – 12/09	3925	
SPRINTER 3-t Box (906)	209 CDI (906.611, 906.613)	65	06/06 – 12/09		3926
SPRINTER 3-t Box (906)	210 CDI (906.611, 906.613)	70	03/09 -	3925	
SPRINTER 3-t Box (906)	210 CDI (906.611, 906.613)	70	03/09 -		3926
SPRINTER 3-t Box (906)	211 CDI (906.611, 906.613)	80	06/06 – 12/09	3925	
SPRINTER 3-t Box (906)	211 CDI (906.611, 906.613)	80	06/06 – 12/09		3926
SPRINTER 3-t Box (906)	211 CDI (906.611, 906.613)	84	04/16 -	3925	
SPRINTER 3-t Box (906)	211 CDI (906.611, 906.613)	84	04/16 -		3926
SPRINTER 3-t Box (906)	213 CDI (906.611, 906.613)	95	06/06 -	3925	
SPRINTER 3-t Box (906)	213 CDI (906.611, 906.613)	95	06/06 – 12/09	3925	
SPRINTER 3-t Box (906)	213 CDI (906.611, 906.613)	95	06/06 -		3926
SPRINTER 3-t Box (906)	213 CDI (906.611, 906.613)	95	06/06 – 12/09		3926
SPRINTER 3-t Box (906)	214 CDI (906.611, 906.613)	105	04/16 -	3925	
SPRINTER 3-t Box (906)	214 CDI (906.611, 906.613)	105	04/06 -		3926
SPRINTER 3-t Box (906)	215 CDI (906.611, 906.613)	110	06/06 – 12/09	3925	
SPRINTER 3-t Box (906)	215 CDI (906.611, 906.613)	110	06/06 – 12/09		3926
SPRINTER 3-t Box (906)	216 (906.613)	115	09/08 -	3925	
SPRINTER 3-t Box (906)	216 (906.613)	115	09/08 -		3926
SPRINTER 3-t Box (906)	216 CDI (906.611, 906.613)	120	03/09 -	3925	
SPRINTER 3-t Box (906)	216 CDI (906.611, 906.613)	120	03/09 -		3926
SPRINTER 3-t Box (906)	218 CDI (906.611, 906.613)	135	06/06 – 12/09	3925	
SPRINTER 3-t Box (906)	218 CDI (906.611, 906.613)	135	06/06 – 12/09		3926
SPRINTER 3-t Box (906)	219 CDI / BlueTEC (906.611,906.613)	140	03/09 -	3925	
SPRINTER 3-t Box (906)	219 CDI / BlueTEC (906.611,906.613)	140	03/09 -		3926
SPRINTER 3-t Box (906)	224 (906.613)	190	06/06 -	3925	
SPRINTER 3-t Box (906)	224 (906.613)	190	06/06 -		3926
SPRINTER 3-t Bus (903)	314	105	02/95 – 05/06		3804
SPRINTER 3-t Bus (903)	308 CDI	60	04/00 – 05/06		3804
SPRINTER 3-t Bus (903)	308 D	58	02/95 – 04/00		3804
SPRINTER 3-t Bus (903)	308 D (903.371, 903.372,903.373)	60	03/97 – 04/00		3804
SPRINTER 3-t Bus (903)	308 E	40	04/00 – 05/06		3804
SPRINTER 3-t Bus (903)	310 D (903.371, 903.372,903.373)	75	01/97 – 12/99		3804
SPRINTER 3-t Bus (903)	310 D 4x4	75	05/97 – 08/02		3804
SPRINTER 3-t Bus (903)	311 CDI	80	04/00 – 05/06		3804
SPRINTER 3-t Bus (903)	311 CDI 4x4	80	08/02 – 05/06		3804
SPRINTER 3-t Bus (903)	312 D 2.9	90	02/95 – 04/00		3804
SPRINTER 3-t Bus (903)	312 D 2.9 4x4	90	05/97 – 08/02		3804
SPRINTER 3-t Bus (903)	313 CDI	95	04/00 – 05/06		3804
SPRINTER 3-t Bus (903)	313 CDI 4x4	95	08/02 – 05/06		3804
SPRINTER 3-t Bus (903)	314 4x4	105	08/02 – 05/06		3804
SPRINTER 3-t Bus (903)	314 NGT	92	04/00 – 05/06		3804
SPRINTER 3-t Bus (903)	316 CDI	115	04/00 – 05/06		3804
SPRINTER 3-t Bus (903)	316 CDI 4x4	115	08/02 – 05/06		3804
SPRINTER 3-t Bus (906)	224 (906.713)	190	06/06 – 12/13		3926
SPRINTER 3-t Bus (906)	210 CDI (906.711, 906.713)	70	03/09 – 12/13	3925	
SPRINTER 3-t Bus (906)	210 CDI (906.711, 906.713)	70	03/09 – 12/13		3926
SPRINTER 3-t Bus (906)	211 CDI (906.711, 906.713)	80	06/06 – 12/09	3925	
SPRINTER 3-t Bus (906)	211 CDI (906.711, 906.713)	80	06/06 – 12/09		3926
SPRINTER 3-t Bus (906)	211 CDI (906.711, 906.713)	84	04/16 -	3925	
SPRINTER 3-t Bus (906)	211 CDI (906.711, 906.713)	84	04/16 -		3926
SPRINTER 3-t Bus (906)	213 CDI (906.711, 906.713)	95	06/06 – 05/16	3925	
SPRINTER 3-t Bus (906)	213 CDI (906.711, 906.713)	95	06/06 – 05/16		3926
SPRINTER 3-t Bus (906)	214 CDI (906.711, 906.713)	105	04/16 -	3925	
SPRINTER 3-t Bus (906)	214 CDI (906.711, 906.713)	105	04/16 -		3926
SPRINTER 3-t Bus (906)	215 CDI (906.711, 906.713)	110	06/06 – 12/09	3925	
SPRINTER 3-t Bus (906)	215 CDI (906.711, 906.713)	110	06/06 – 12/09		3926

MAKE & MODEL		KW	YEAR		
MERCEDES-BENZ					
SPRINTER 3-t Bus (906)	216 (906.713)	115	09/08 -	3925	
SPRINTER 3-t Bus (906)	216 (906.713)	115	09/08 -		3926
SPRINTER 3-t Bus (906)	216 CDI (906.711, 906.713)	120	06/06 -	3925	
SPRINTER 3-t Bus (906)	216 CDI (906.711, 906.713)	120	06/06 -		3926
SPRINTER 3-t Bus (906)	224 (906.713)	190	06/06 12/13	3925	
SPRINTER 3-t Platform/Chassis (903)	314	105	02/95 – 05/06		3804
SPRINTER 3-t Platform/Chassis (903)	308 CDI	60	04/00 – 05/06		3804
SPRINTER 3-t Platform/Chassis (903)	308 D 2.3	58	02/95 – 04/00		3804
SPRINTER 3-t Platform/Chassis (903)	308 D 2.3	60	11/96 – 04/00		3804
SPRINTER 3-t Platform/Chassis (903)	310 D 2.9	75	01/97 – 04/00		3804
SPRINTER 3-t Platform/Chassis (903)	311 CDI	80	04/00 – 05/06		3804
SPRINTER 3-t Platform/Chassis (903)	311 CDI 4x4	80	08/02 – 05/06		3804
SPRINTER 3-t Platform/Chassis (903)	312 D 2.9	90	02/95 – 04/00		3804
SPRINTER 3-t Platform/Chassis (903)	312 D 2.9 (903.411, 903.412, 903.413,	85	12/98 – 09/01		3804
SPRINTER 3-t Platform/Chassis (903)	313 CDI	95	04/00 – 05/06		3804
SPRINTER 3-t Platform/Chassis (903)	313 CDI 4x4	95	08/02 – 05/06		3804
SPRINTER 3-t Platform/Chassis (903)	314 4x4	105	08/02 – 05/06		3804
SPRINTER 3-t Platform/Chassis (903)	314 NGT (903.611, 903.612)	92	04/00 – 05/06		3804
SPRINTER 3-t Platform/Chassis (903)	316 CDI	115	04/00 – 05/06		3804
SPRINTER 3-t Platform/Chassis (903)	316 CDI 4x4	115	08/02 – 05/06		3804
SPRINTER 3-t Platform/Chassis (906)	224 (906.113, 906.213)	190	06/06 – 12/13	3925	
SPRINTER 3-t Platform/Chassis (906)	211 CDI (906.111, 906.113,906.211, 906.213)	84	04/16 -	3925	
SPRINTER 3-t Platform/Chassis (906)	213 CDI (906.111, 906.113,906.211, 906.213)	95	03/09 – 05/16	3925	
SPRINTER 3-t Platform/Chassis (906)	209 CDI (906.111, 906.113,906.211, 906.213)	65	06/06 – 12/09	3925	
SPRINTER 3-t Platform/Chassis (906)	210 CDI (906.111, 906.113,906.211, 906.213)	70	03/09 – 05/16	3925	
SPRINTER 3-t Platform/Chassis (906)	211 CDI (906.111, 906.113,906.211, 906.213)	80	06/06 – 12/09	3925	
SPRINTER 3-t Platform/Chassis (906)	213 CDI (906.111, 906.113,906.211, 906.213)	95	06/06 – 12/09	3925	
SPRINTER 3-t Platform/Chassis (906)	214 CDI (906.111, 906.113,906.211, 906.213)	105	04/16 -	3925	
SPRINTER 3-t Platform/Chassis (906)	215 CDI (906.111, 906.113,906.211, 906.213)	110	06/06 – 12/09	3925	
SPRINTER 3-t Platform/Chassis (906)	216 (906.113, 906.213)	115	09/08 – 05/16	3925	
SPRINTER 3-t Platform/Chassis (906)	216 CDI (906.111, 906.113,906.211, 906.213)	120	03/09 -	3925	
SPRINTER 3-t Platform/Chassis (906)	218 CDI (906.111, 906.113,906.211, 906.213)	135	06/06 – 12/09	3925	
SPRINTER 3-t Platform/Chassis (906)	219 CDI / BlueTEC (906.111,906.113, 906.211, 906.213)	140	03/09 – 05/16	3925	
SPRINTER 3-t Platform/Chassis (906)	211 CDI (906.111, 906.113,906.211, 906.213)	80	06/06 – 12/09		3926
SPRINTER 3-t Platform/Chassis (906)	209 CDI (906.111, 906.113,906.211, 906.213)	65	06/06- 12/09		3926
SPRINTER 3-t Platform/Chassis (906)	213 CDI (906.111, 906.113,906.211, 906.213)	95	03/09 – 05/16		3926
SPRINTER 3-t Platform/Chassis (906)	215 CDI (906.111, 906.113,906.211, 906.213)	110	06/06 – 12/09		3926
SPRINTER 3-t Platform/Chassis (906)	216 (906.113, 906.213)	115	09/08 – 05/16		3926
SPRINTER 3-t Platform/Chassis (906)	218 CDI (906.111, 906.113,906.211, 906.213)	135	06/06 – 12/09		3926
SPRINTER 3-t Platform/Chassis (906)	210 CDI (906.111, 906.113,906.211, 906.213)	70	03/09 – 05/16		3926
SPRINTER 3-t Platform/Chassis (906)	211 CDI (906.111, 906.113,906.211, 906.213)	84	04/16 -		3926
SPRINTER 3-t Platform/Chassis (906)	213 CDI (906.111, 906.113,906.211, 906.213)	95	06/06 – 12/09		3926
SPRINTER 3-t Platform/Chassis (906)	214 CDI (906.111, 906.113,906.211, 906.213)	105	04/16 -		3926
SPRINTER 3-t Platform/Chassis (906)	216 CDI (906.111, 906.113,906.211, 906.213)	120	03/09 -		3926
SPRINTER 3-t Platform/Chassis (906)	219 CDI / BlueTEC (906.111,906.113, 906.211, 906.213)	140	03/09 – 05/16		3926
SPRINTER 3-t Platform/Chassis (906)	224 (906.113, 906.213)	190	06/06 – 12/13		3926
SPRINTER 3-Ton.	0.0 308 E	40	04/00 – 05/06	3567	
SPRINTER 3-Ton.	2.1 308 CDI (OM 611.987)	60	04/00 – 05/06	3567	
SPRINTER 3-Ton.	2.1 308 CDI (OM 611.987)	60	04/00 – 05/06	3567	
SPRINTER 3-Ton.	2.1 308 CDI (OM 611.987)	60	04/00 – 05/06	3567	
SPRINTER 3-Ton.	2.1 311 CDI (OM 611.981)	80	04/00 – 05/06	3567	
SPRINTER 3-Ton.	2.1 311 CDI (OM 611.981)	80	08/02 – 05/06	3567	
SPRINTER 3-Ton.	2.1 311 CDI (OM 611.981)	80	04/00 – 05/06	3567	
SPRINTER 3-Ton.	2.1 311 CDI (OM 611.981)	80	08/02 – 05/06	3567	
SPRINTER 3-Ton.	2.1 311 CDI (OM 611.981)	80	04/00 – 05/06	3567	
SPRINTER 3-Ton.	2.1 311 CDI (OM 611.981)	80	08/02 – 05/06	3567	
SPRINTER 3-Ton.	2.1 313 CDI (OM 611.981)	95	04/00 – 05/06	3567	
SPRINTER 3-Ton.	2.1 313 CDI (OM 611.981)	95	08/02 – 05/06	3567	
SPRINTER 3-Ton.	2.1 313 CDI (OM 611.981)	95	04/00 – 05/06	3567	
SPRINTER 3-Ton.	2.1 313 CDI (OM 611.981)	95	08/02 – 05/06	3567	
SPRINTER 3-Ton.	2.1 313 CDI (OM 611.981)	95	04/00 – 05/06	3567	
SPRINTER 3-Ton.	2.1 313 CDI (OM 611.981)	95	08/02 – 05/06	3567	
SPRINTER 3-Ton.	2.3 308 D (OM 601.943)	58	02/95 – 04/00	3567	
SPRINTER 3-Ton.	2.3 308 D (OM 601.943)	58	02/95 – 04/00	3567	
SPRINTER 3-Ton.	2.3 308 D (OM 601.943)	58	02/95 – 04/00	3567	
SPRINTER 3-Ton.	2.3 308 D (OM 601.943)	60	11/96 – 04/00	3567	
SPRINTER 3-Ton.	2.3 308 D (OM 601.943)	60	02/95 – 04/00	3567	
SPRINTER 3-Ton.	2.3 314 (M 111.984)	105	02/95 – 05/06	3567	
SPRINTER 3-Ton.	2.3 314 (M 111.984)	105	08/02 – 05/06	3567	
SPRINTER 3-Ton.	2.3 314 (M 111.984)	105	02/95 – 05/06	3567	
SPRINTER 3-Ton.	2.3 314 (M 111.984)	105	08/02 – 05/06	3567	

BESER

MAKE & MODEL		KW	YEAR		
MERCEDES-BENZ					
SPRINTER 3-Ton.	2.3 314 (M 111.984)	105	08/02 – 05/06	3567	
SPRINTER 3-Ton.	2.3 314 NGT (M 111.984)	92	04/00 – 05/06	3567	
SPRINTER 3-Ton.	2.3 D	58	06/97 – 12/99	3567	
SPRINTER 3-Ton.	2.3 D	58	06/97 – 12/99	3567	
SPRINTER 3-Ton.	2.7 316 CDI (OM 612.981)	115	04/00 – 05/06	3567	
SPRINTER 3-Ton.	2.7 316 CDI (OM 612.981)	115	08/02 – 05/06	3567	
SPRINTER 3-Ton.	2.7 316 CDI (OM 612.981)	115	04/00 – 05/06	3567	
SPRINTER 3-Ton.	2.7 316 CDI (OM 612.981)	115	08/02 – 05/06	3567	
SPRINTER 3-Ton.	2.7 316 CDI (OM 612.981)	115	04/00 – 05/06	3567	
SPRINTER 3-Ton.	2.7 316 CDI (OM 612.981)	115	08/02 – 05/06	3567	
SPRINTER 3-Ton.	2.9 310 D (OM 602.980)	75	05/97 – 08/02	3567	
SPRINTER 3-Ton.	2.9 310 D (OM 602.980)	75	01/97 – 04/00	3567	
SPRINTER 3-Ton.	2.9 310 D (OM 602.980)	75	02/95 – 04/00	3567	
SPRINTER 3-Ton.	2.9 312 D (OM 602.980)	90	02/95 – 04/00	3567	
SPRINTER 3-Ton.	2.9 312 D (OM 602.980)	90	02/95 – 04/00	3567	
SPRINTER 3-Ton.	2.9 312 D (OM 602.980)	90	02/95 – 04/00	3567	
SPRINTER 3-Ton.	2.9 312 D 2.9 (OM 602.980)	90	05/97 – 08/02	3567	
SPRINTER 3-Ton.	2.9 312 D 2.9 (OM 602.980)	90	05/97 – 08/02	3567	
SPRINTER 3-Ton.	2.9 TDi (OM 602.980)	75	01/97 – 12/99	3567	
SPRINTER 3-Ton.	314 (M 111.979)	105	02/95 – 05/06	3567	
SPRINTER 3-Ton.	314 (M 111.984)	105	02/95 – 05/06	3567	
SPRINTER 3-Ton.	314 NGT (903.611, 903.612)	92	04/00 – 05/06	3567	
SPRINTER 3-Ton.	314 NGT (903.661) (M 111.984)	92	04/00 – 05/06	3567	
SPRINTER 3-Ton. (903)	0.0 308 E	40	04.00 – 05.06	3670	
SPRINTER 3-Ton. (903)	2.1 308 CDI (OM 611.987)	60	04.00 – 05.06	3670	
SPRINTER 3-Ton. (903)	2.1 308 CDI (OM 611.987)	60	04.00 – 05.06	3670	
SPRINTER 3-Ton. (903)	2.1 308 CDI (OM 611.987)	60	04.00 – 05.06	3670	
SPRINTER 3-Ton. (903)	2.1 311 CDI (OM 611.981)	80	04.00 – 05.06	3670	
SPRINTER 3-Ton. (903)	2.1 311 CDI (OM 611.981)	80	08.02 – 05.06	3670	
SPRINTER 3-Ton. (903)	2.1 311 CDI (OM 611.981)	80	08.02 – 05.06	3670	
SPRINTER 3-Ton. (903)	2.1 311 CDI (OM 611.981)	80	04.00 – 05.06	3670	
SPRINTER 3-Ton. (903)	2.1 311 CDI (OM 611.981)	80	08.02 – 05.06	3670	
SPRINTER 3-Ton. (903)	2.1 311 CDI (OM 611.981)	80	04.00 – 05.06	3670	
SPRINTER 3-Ton. (903)	2.1 313 CDI (OM 611.981)	95	04.00 – 05.06	3670	
SPRINTER 3-Ton. (903)	2.1 313 CDI (OM 611.981)	95	08.02 – 05.06	3670	
SPRINTER 3-Ton. (903)	2.1 313 CDI (OM 611.981)	95	04.00 – 05.06	3670	
SPRINTER 3-Ton. (903)	2.1 313 CDI (OM 611.981)	95	08.02 – 05.06	3670	
SPRINTER 3-Ton. (903)	2.1 313 CDI (OM 611.981)	95	04.00 – 05.06	3670	
SPRINTER 3-Ton. (903)	2.1 313 CDI (OM 611.981)	95	08.02 – 05.06	3670	
SPRINTER 3-Ton. (903)	2.3 308 D (OM 601.943)	58	02.95 – 04.00	3670	
SPRINTER 3-Ton. (903)	2.3 308 D (OM 601.943)	58	02.95 – 04.00	3670	
SPRINTER 3-Ton. (903)	2.3 308 D (OM 601.943)	58	02.95 – 04.00	3670	
SPRINTER 3-Ton. (903)	2.3 308 D (OM 601.943)	60	11.96 – 04.00	3670	
SPRINTER 3-Ton. (903)	2.3 308 D (OM 601.943)	60	02.95 – 04.00	3670	
SPRINTER 3-Ton. (903)	2.3 314 (M 111.984)	105	02.95 – 05.06	3670	
SPRINTER 3-Ton. (903)	2.3 314 (M 111.984)	105	08.02 – 05.06	3670	
SPRINTER 3-Ton. (903)	2.3 314 (M 111.984)	105	02.95 – 05.06	3670	
SPRINTER 3-Ton. (903)	2.3 314 (M 111.984)	105	08.02 – 05.06	3670	
SPRINTER 3-Ton. (903)	2.3 314 (M 111.984)	105	08.02 – 05.06	3670	
SPRINTER 3-Ton. (903)	2.3 314 NGT (M 111.984) Bus (Minibus-M2-	92	04.00 – 05.06	3670	
SPRINTER 3-Ton. (903)	2.3 D	58	06.97 – 12.99	3670	
SPRINTER 3-Ton. (903)	2.3 D	58	06.97 – 12.99	3670	
SPRINTER 3-Ton. (903)	2.7 316 CDI (OM 612.981)	115	04.00 – 05.06	3670	
SPRINTER 3-Ton. (903)	2.7 316 CDI (OM 612.981)	115	08.02 – 05.06	3670	
SPRINTER 3-Ton. (903)	2.7 316 CDI (OM 612.981)	115	04.00 – 05.06	3670	
SPRINTER 3-Ton. (903)	2.7 316 CDI (OM 612.981)	115	08.02 – 05.06	3670	
SPRINTER 3-Ton. (903)	2.7 316 CDI (OM 612.981)	115	04.00 – 05.06	3670	
SPRINTER 3-Ton. (903)	2.7 316 CDI (OM 612.981)	115	08.02 – 05.06	3670	
SPRINTER 3-Ton. (903)	2.9 310 D (OM 602.980)	75	05.97 – 08.02	3670	
SPRINTER 3-Ton. (903)	2.9 310 D (OM 602.980)	75	01.97 – 04.00	3670	
SPRINTER 3-Ton. (903)	2.9 310 D (OM 602.980)	75	02.95 – 04.00	3670	
SPRINTER 3-Ton. (903)	2.9 312 D (OM 602.980)	90	02.95 – 04.00	3670	
SPRINTER 3-Ton. (903)	2.9 312 D (OM 602.980)	90	02.95 – 04.00	3670	
SPRINTER 3-Ton. (903)	2.9 312 D 2.9 (OM 602.980)	90	05.97 – 08.02	3670	
SPRINTER 3-Ton. (903)	2.9 TDi (OM 602.980)	75	01.97 – 12.99	3670	
SPRINTER 3-Ton. (903)	314 (M 111.979)	105	02.95 – 05.06	3670	
SPRINTER 3-Ton. (903)	314 (M 111.984)	105	02.95 – 05.06	3670	
SPRINTER 3-Ton. (903) Caja/Chasis (LCVs-N1 Segment)	314 NGT (903.611, 903.612) (M 111.984)	92	04.00 – 05.06	3670	
SPRINTER 3-Ton. (903) Furgón (LCVs-N1 Segment)	314 NGT (903.661) (M 111.984)	92	04.00 – 05.06	3670	
SPRINTER 4,6-t Box (906)	411 CDI (906.653, 906.655,906.657)	80	06/09 – 12/09	3962	
SPRINTER 4,6-t Box (906)	413 CDI (906.653, 906.655,906.657)	95	06/06 – 05/16	3962	

MAKE & MODEL		KW	YEAR		
MERCEDES-BENZ					
SPRINTER 4,6-t Box (906)	413 CDI (906.653, 906.655,906.657)	95	06/06 – 05/16	3962	
SPRINTER 4,6-t Box (906)	414 CDI	105	05/16 -		3963
SPRINTER 4,6-t Box (906)	416 CDI (906.653, 906.655,906.657)	120	03/09 -	3962	
SPRINTER 4,6-t Box (906)	419 CDI (906.653, 906.655,906.657)	140	03/09 -		3963
SPRINTER 4,6-t Box (906)	411 CDI (906.653, 906.655,906.657)	80	06/09 – 12/09		3963
SPRINTER 4,6-t Box (906)	413 CDI (906.653, 906.655,906.657)	95	06/06 – 05/16		3963
SPRINTER 4,6-t Box (906)	413 CDI (906.653, 906.655,906.657)	95	06/06 – 05/16		3963
SPRINTER 4,6-t Box (906)	414 CDI	105	05/16 -	3962	
SPRINTER 4,6-t Box (906)	415 CDI (906.653, 906.655,906.657)	110	06/09 – 12/09	3962	
SPRINTER 4,6-t Box (906)	415 CDI (906.653, 906.655,906.657)	110	06/09 – 12/09		3963
SPRINTER 4,6-t Box (906)	416 CDI (906.653, 906.655,906.657)	120	03/09 -		3963
SPRINTER 4,6-t Box (906)	418 CDI (906.653, 906.655,906.657)	135	06/09 – 05/6	3962	
SPRINTER 4,6-t Box (906)	418 CDI (906.653, 906.655,906.657)	135	06/09 – 05/16		3963
SPRINTER 4,6-t Box (906)	419 CDI (906.653, 906.655,906.657)	140	03/09 -	3962	
SPRINTER 4,6-t Box (906)	424 (906.655, 906.657,906.653)	190	06/06 – 12/13	3962	
SPRINTER 4,6-t Box (906)	424 (906.655, 906.657,906.653)	190	06/06 – 12/13		3963
SPRINTER 4,6-t Box (906)	414 CDI	105	05/16 -		3926
SPRINTER 4,6-t Box (906)	415 CDI (906.653, 906.655,906.657)	110	06/09 – 12/09		3926
SPRINTER 4,6-t Box (906)	416 CDI (906.653, 906.655,906.657)	120	03/09 -		3926
SPRINTER 4,6-t Box (906)	418 CDI (906.653, 906.655,906.657)	135	06/09 – 05/16		3926
SPRINTER 4,6-t Box (906)	419 CDI (906.653, 906.655,906.657)	140	03/09 -		3926
SPRINTER 4,6-t Box (906)	424 (906.655, 906.657,906.653)	190	06/06 – 12/13		3926
SPRINTER 4,6-t Box (906)	411 CDI (906.653, 906.655,906.657)	80	06/09 – 12/09		3926
SPRINTER 4,6-t Box (906)	413 CDI (906.653, 906.655,906.657)	95	06/06 – 05/16		3926
SPRINTER 4,6-t Platform/Chassis (906)	414 CDI	105	05/16 -	3925	
SPRINTER 4,6-t Platform/Chassis (906)	411 CDI (906.153, 906.155,906.253, 906.255)	80	06/09 – 12/09		3926
SPRINTER 4,6-t Platform/Chassis (906)	413 CDI (906.153, 906.155,906.253, 906.255)	95	06/06 – 05/16		3926
SPRINTER 4,6-t Platform/Chassis (906)	416 CDI (906.153, 906.155,906.253, 906.255)	120	03/09 -		3926
SPRINTER 4,6-t Platform/Chassis (906)	414 CDI	105	05/16 -		3926
SPRINTER 4,6-t Platform/Chassis (906)	415 CDI (906.153, 906.155,906.253, 906.255)	110	06/06 – 12/09		3926
SPRINTER 4,6-t Platform/Chassis (906)	418 CDI (906.153, 906.155,906.253, 906.255)	135	06/06 – 12/09		3926
SPRINTER 4,6-t Platform/Chassis (906)	419 CDI (906.153, 906.155,906.253, 906.255)	140	03/09 -		3926
SPRINTER 4,6-t Platform/Chassis (906)	424 (906.153, 906.155,906.253, 906.255)	190	06/06 – 12/13		3926
SPRINTER 4,6-t Platform/Chassis (906)	419 CDI (906.153, 906.155,906.253, 906.255)	140	03/09 -		3963
SPRINTER 4,6-t Platform/Chassis (906)	418 CDI (906.153, 906.155,906.253, 906.255)	135	06/06 – 12/09		3963
SPRINTER 4,6-t Platform/Chassis (906)	424 (906.153, 906.155,906.253, 906.255)	190	06/06 – 12/13		3963
SPRINTER 4,6-t Platform/Chassis (906)	411 CDI (906.153, 906.155,906.253, 906.255)	80	06/09 – 12/09	3962	
SPRINTER 4,6-t Platform/Chassis (906)	413 CDI (906.153, 906.155,906.253, 906.255)	95	06/06 – 05/16	3962	
SPRINTER 4,6-t Platform/Chassis (906)	416 CDI (906.153, 906.155,906.253, 906.255)	120	03/09 -	3962	
SPRINTER 4,6-t Platform/Chassis (906)	418 CDI (906.153, 906.155,906.253, 906.255)	135	06/06 – 12/09	3962	
SPRINTER 4,6-t Platform/Chassis (906)	419 CDI (906.153, 906.155,906.253, 906.255)	140	03/09 -	3962	
SPRINTER 4,6-t Platform/Chassis (906)	414 CDI	105	05/16 -	3962	
SPRINTER 4,6-t Platform/Chassis (906)	415 CDI (906.153, 906.155,906.253, 906.255)	110	06/06 – 12/09	3962	
SPRINTER 4,6-t Platform/Chassis (906)	424 (906.153, 906.155,906.253, 906.255)	190	06/06 – 12/13	3962	
SPRINTER 4,6-t Platform/Chassis (906)	415 CDI (906.153, 906.155,906.253, 906.255)	110	06/06 – 12/09		3963
SPRINTER 4,6-t Platform/Chassis (906)	411 CDI (906.153, 906.155,906.253, 906.255)	80	06/09 – 12/09		3963
SPRINTER 4,6-t Platform/Chassis (906)	413 CDI (906.153, 906.155,906.253, 906.255)	95	06/06 – 05/16		3963
SPRINTER 4,6-t Platform/Chassis (906)	416 CDI (906.153, 906.155,906.253, 906.255)	120	03/09 -		3963
SPRINTER 4-t Platform şasi (904)	412 D	85	02/96 – 05/06	3614	3614
SPRINTER 4-t Platform şasi (904)	412 D	90	02/96 – 05/06	3614	3614
SPRINTER 4-t Platform şasi (904)	413 CDI	95	04/00 – 05/06	3614	3614
SPRINTER 4-t Platform şasi (904)	413 CDI 4x4	95	04/00 – 05/06	3614	3614
SPRINTER 4-t Platform şasi (904)	408 D	58	02/96 – 05/06	3614	3614
SPRINTER 4-t Platform şasi (904)	410 D	75	02/96 – 05/06	3614	3614
SPRINTER 4-t Platform şasi (904)	410 D 4x4	75	05/97 – 05/06	3614	3614
SPRINTER 4-t Platform şasi (904)	412 D 4x4	85	05/97 – 05/06	3614	3614
SPRINTER 4-t Platform şasi (904)	412 D 4x4	90	05/97 – 05/06	3614	3614
SPRINTER 4-t Platform şasi (904)	416 CDI	115	04/00 – 05/06	3614	3614
SPRINTER 4-t Platform şasi (904)	416 CDI 4x4	115	04/00 – 05/06	3614	3614
SPRINTER 5-t Box (906)	509 CDI (906.653, 906.655,906.657)	65	06/06 – 12/09		3926
SPRINTER 5-t Box (906)	510 CDI (906.653, 906.655,906.657)	70	03/09 – 05/16		3963
SPRINTER 5-t Box (906)	511 CDI (906.653, 906.655,906.657)	80	06/06 – 12/09		3963
SPRINTER 5-t Box (906)	511 CDI 4x4 (906.653,906.655, 906.657)	80	06/06 – 12/09		3926
SPRINTER 5-t Box (906)	511 CDI 4x4 (906.653,906.655, 906.657)	80	06/06 – 12/09		3963
SPRINTER 5-t Box (906)	514 CDI (906.653, 906.655,906.657)	105	05/16 -		3963
SPRINTER 5-t Box (906)	514 CDI 4x4 (906.653,906.655, 906.657)	105	05/16 -	3962	
SPRINTER 5-t Box (906)	514 CDI 4x4 (906.653,906.655, 906.657)	105	05/16 -		3963
SPRINTER 5-t Box (906)	516 CDI 4x4 (906.653,906.655, 906.657)	120	06/06 -	3962	
SPRINTER 5-t Box (906)	518 CDI (906.653, 906.655,906.657)	135	06/06 – 12/09		3926
SPRINTER 5-t Box (906)	519 CDI / BlueTEC (906.653,906.655, 906.657)	140	03/09 -		3926
SPRINTER 5-t Box (906)	524 (906.653, 906.655,906.657)	140	03/09 -		3963

MAKE & MODEL		KW	YEAR		
MERCEDES-BENZ					
SPRINTER 5-t Box (906)	509 CDI (906.653, 906.655,906.657)	65	06/06 – 12/09		3963
SPRINTER 5-t Box (906)	510 CDI (906.653, 906.655,906.657)	70	03/09 – 05/16		3926
SPRINTER 5-t Box (906)	511 CDI (906.653, 906.655,906.657)	80	06/06 – 12/09		3926
SPRINTER 5-t Box (906)	511 CDI (906.653, 906.655,906.657)	80	06/06 – 12/09	3962	
SPRINTER 5-t Box (906)	511 CDI (906.653, 906.655,906.657)	84	05/16 -	3962	
SPRINTER 5-t Box (906)	511 CDI (906.653, 906.655,906.657)	84	05/16 -		3963
SPRINTER 5-t Box (906)	511 CDI 4x4 (906.653,906.655, 906.657)	80	06/06 – 12/09	3962	
SPRINTER 5-t Box (906)	513 CDI (906.653, 906.655,906.657)	95	06/06 -		3926
SPRINTER 5-t Box (906)	513 CDI (906.653, 906.655,906.657)	95	06/06 -		3926
SPRINTER 5-t Box (906)	513 CDI (906.653, 906.655,906.657)	95	06/06 -	3962	
SPRINTER 5-t Box (906)	513 CDI (906.653, 906.655,906.657)	95	06/06 -	3962	
SPRINTER 5-t Box (906)	513 CDI (906.653, 906.655,906.657)	95	06/06 -		3963
SPRINTER 5-t Box (906)	513 CDI (906.653, 906.655,906.657)	95	06/06 -		3963
SPRINTER 5-t Box (906)	513 CDI 4x4 (906.653,906.655, 906.657)	95	06/06 -		3926
SPRINTER 5-t Box (906)	513 CDI 4x4 (906.653,906.655, 906.657)	95	06/06 -	3962	
SPRINTER 5-t Box (906)	513 CDI 4x4 (906.653,906.655, 906.657)	95	06/06 -		3963
SPRINTER 5-t Box (906)	514 CDI (906.653, 906.655,906.657)	95	06/06 -	3962	
SPRINTER 5-t Box (906)	515 CDI (906.653, 906.655,906.657)	105	05/16 -	3962	
SPRINTER 5-t Box (906)	515 CDI (906.653, 906.655,906.657)	105	05/16 -		3963
SPRINTER 5-t Box (906)	515 CDI (906.653, 906.655,906.657)	110	06/06 – 12/09		3926
SPRINTER 5-t Box (906)	515 CDI 4x4 (906.653,906.655, 906.657)	110	06/06 – 12/09		3926
SPRINTER 5-t Box (906)	515 CDI 4x4 (906.653,906.655, 906.657)	110	06/06 – 12/09	3962	
SPRINTER 5-t Box (906)	515 CDI 4x4 (906.653,906.655, 906.657)	110	06/06 – 12/09		3963
SPRINTER 5-t Box (906)	516 CDI (906.653, 906.655,906.657)	110	06/06 – 12/09	3962	
SPRINTER 5-t Box (906)	516 CDI (906.653, 906.655,906.657)	110	06/06 – 12/09		3963
SPRINTER 5-t Box (906)	516 CDI (906.653, 906.655,906.657)	120	03/09 -		3926
SPRINTER 5-t Box (906)	516 CDI 4x4 (906.653,906.655, 906.657)	120	06/06 -		3926
SPRINTER 5-t Box (906)	516 CDI 4x4 (906.653,906.655, 906.657)	120	06/06 -		3963
SPRINTER 5-t Box (906)	518 CDI (906.653, 906.655,906.657)	120	06/06 -	3962	
SPRINTER 5-t Box (906)	518 CDI (906.653, 906.655,906.657)	120	06/06 -		3963
SPRINTER 5-t Box (906)	518 CDI 4x4 (906.653,906.655, 906.657)	135	06/06 – 12/09		3926
SPRINTER 5-t Box (906)	518 CDI 4x4 (906.653,906.655, 906.657)	135	06/06 – 12/09	3962	
SPRINTER 5-t Box (906)	518 CDI 4x4 (906.653,906.655, 906.657)	135	06/06 – 12-09		3963
SPRINTER 5-t Box (906)	519 CDI / BlueTEC (906.653,906.655, 906.657)	135	06/06 – 12/09	3962	
SPRINTER 5-t Box (906)	519 CDI / BlueTEC (906.653,906.655, 906.657)	135	06/06 – 12/09		3963
SPRINTER 5-t Box (906)	519 CDI / BlueTEC 4x4 (906.653, 906.655, 906.657)	140	03/09 -		3926
SPRINTER 5-t Box (906)	519 CDI / BlueTEC 4x4 (906.653, 906.655, 906.657)	140	03/09 -	3962	
SPRINTER 5-t Box (906)	519 CDI / BlueTEC 4x4 (906.653, 906.655, 906.657)	140	03/09 -		3963
SPRINTER 5-t Box (906)	524 (906.653, 906.655,906.657)	140	03/09 -	3962	
SPRINTER 5-t Box (906)	524 (906.653, 906.655,906.657)	190	06/06 – 12/13		3926
SPRINTER 5-t Box (906)	509 CDI (906.653, 906.655,906.657)	65	06/06 – 12/09	3962	
SPRINTER 5-t Box (906)	510 CDI (906.653, 906.655,906.657)	70	03/09 – 05/16	3962	
SPRINTER 5-t Platform/Chassis (905)	616 CDI (905.612, 905.613,905.622, 905.623)	115	04/01 05/06	3679	
SPRINTER 5-t Platform/Chassis (906)	516 NGT (906.153, 906.155,906.253, 906.255)	115	09/08 -	3962	
SPRINTER 5-t Platform/Chassis (906)	518 CDI (906.153, 906.155,906.253, 906.255)	135	06/06 – 12/09	3962	
SPRINTER 5-t Platform/Chassis (906)	518 CDI 4x4 (906.153,906.155, 906.253, 906.255)	135	06/06 – 12/09	3962	
SPRINTER 5-t Platform/Chassis (906)	519 CDI / BlueTEC (906.153,906.155, 906.253, 906.255)	140	03/09 -	3962	
SPRINTER 5-t Platform/Chassis (906)	519 CDI / BlueTEC 4x4 (906.153, 906.155, 906.253,906.255)	140	03/09 -	3962	
SPRINTER 5-t Platform/Chassis (906)	524 (906.153, 906.155,906.253, 906.255)	190	06/06 – 12/13	3962	
SPRINTER 5-t Platform/Chassis (906)	511 CDI (906.153, 906.155,906.253, 906.255)	80	06/06 – 12/09		3926
SPRINTER 5-t Platform/Chassis (906)	511 CDI 4x4 (906.155,906.253, 906.255)	80	06/06 – 12/09		3926
SPRINTER 5-t Platform/Chassis (906)	513 CDI 4x4 (906.155,906.253, 906.255)	95	05/11 – 05/16		3926
SPRINTER 5-t Platform/Chassis (906)	514 CDI 4x4 (906.153,906.155, 906.253, 906.255)	105	05/16 -		3926
SPRINTER 5-t Platform/Chassis (906)	515 CDI 4x4 (906.153,906.155, 906.253, 906.255)	110	06/06 – 12/09		3926
SPRINTER 5-t Platform/Chassis (906)	516 (906.153, 906.155,906.253, 906.255)	115	09/08 -	3962	
SPRINTER 5-t Platform/Chassis (906)	516 (906.153, 906.155,906.253, 906.255)	120	03/09 -	3962	
SPRINTER 5-t Platform/Chassis (906)	516 CDI (906.153, 906.155,906.253, 906.255)	120	03/09 -		3926
SPRINTER 5-t Platform/Chassis (906)	516 CDI 4x4 (906.153,906.155, 906.255)	120	05/11 -		3926
SPRINTER 5-t Platform/Chassis (906)	519 CDI / BlueTEC (906.153,906.155, 906.253, 906.255)	140	03/09 -		3926
SPRINTER 5-t Platform/Chassis (906)	524 (906.153, 906.155,906.253, 906.255)	190	06/06 – 12/13		3926
SPRINTER 5-t Platform/Chassis (906)	509 CDI (906.153, 906.155,906.253, 906.255)	65	06/06- 12/09		3926
SPRINTER 5-t Platform/Chassis (906)	510 CDI (906.153, 906.155,906.253, 906.255)	70	03/09 -		3926
SPRINTER 5-t Platform/Chassis (906)	513 CDI (906.155, 906.253,906.255)	95	06/06 – 05/16		3926
SPRINTER 5-t Platform/Chassis (906)	513 CDI (906.155, 906.253,906.255)	95	06/06 – 05/16		3926
SPRINTER 5-t Platform/Chassis (906)	513 CDI 4x4 (906.155,906.253, 906.255)	95	05/11 – 05/16	3962	
SPRINTER 5-t Platform/Chassis (906)	514 CDI (906.153, 906.155,906.253, 906.255)	105	05/16 -		3926
SPRINTER 5-t Platform/Chassis (906)	514 CDI 4x4 (906.153,906.155, 906.253, 906.255)	105	05/16 -	3962	
SPRINTER 5-t Platform/Chassis (906)	515 CDI (906.153, 906.155,906.253, 906.255)	110	06/06 – 12/09		3926
SPRINTER 5-t Platform/Chassis (906)	515 CDI (906.153, 906.155,906.253, 906.255)	110	06/06 – 12/09	3962	
SPRINTER 5-t Platform/Chassis (906)	515 CDI 4x4 (906.153,906.155, 906.253, 906.255)	110	06/06 – 12/09	3962	
SPRINTER 5-t Platform/Chassis (906)	516 (906.153, 906.155,906.253, 906.255)	115	09/08 -		3926

BESER

MAKE & MODEL		KW	YEAR		
MERCEDES-BENZ					
SPRINTER 5-t Platform/Chassis (906)	516 CDI 4x4 (906.153,906.155, 906.255)	120	05/11 -	3962	
SPRINTER 5-t Platform/Chassis (906)	516 NGT (906.153, 906.155,906.253, 906.255)	115	09/08 -		3926
SPRINTER 5-t Platform/Chassis (906)	518 CDI (906.153, 906.155,906.253, 906.255)	135	06/6 – 12/09		3926
SPRINTER 5-t Platform/Chassis (906)	518 CDI 4x4 (906.153,906.155, 906.253, 906.255)	135	06/06 – 12/09		3926
SPRINTER 5-t Platform/Chassis (906)	519 CDI / BlueTEC 4x4 (906.153, 906.155, 906.253,906.255)	140	03/09 -		3926
SPRINTER 5-t Platform/Chassis (906)	511 CDI 4x4 (906.155,906.253, 906.255)	80	06/06 – 12/09		3963
SPRINTER 5-t Platform/Chassis (906)	513 CDI (906.155, 906.253,906.255)	95	06/06 – 05/16		3963
SPRINTER 5-t Platform/Chassis (906)	513 CDI (906.155, 906.253,906.255)	95	06/06 – 05/16		3963
SPRINTER 5-t Platform/Chassis (906)	515 CDI (906.153, 906.155,906.253, 906.255)	110	06/06 -12/09		3963
SPRINTER 5-t Platform/Chassis (906)	516 CDI 4x4 (906.153,906.155, 906.255)	120	05/11 -		3963
SPRINTER 5-t Platform/Chassis (906)	516 NGT (906.153, 906.155,906.253, 906.255)	115	09/08 -		3963
SPRINTER 5-t Platform/Chassis (906)	518 CDI 4x4 (906.153,906.155, 906.253, 906.255)	135	06/06 – 12/09		3963
SPRINTER 5-t Platform/Chassis (906)	519 CDI / BlueTEC (906.153,906.155, 906.253, 906.255)	140	03/09 -		3963
SPRINTER 5-t Platform/Chassis (906)	509 CDI (906.153, 906.155,906.253, 906.255)	65	06/06 – 12/09		3963
SPRINTER 5-t Platform/Chassis (906)	510 CDI (906.153, 906.155,906.253, 906.255)	70	03/09 -		3963
SPRINTER 5-t Platform/Chassis (906)	511 CDI (906.153, 906.155,906.253, 906.255)	80	06/06 – 12/09		3963
SPRINTER 5-t Platform/Chassis (906)	513 CDI 4x4 (906.155,906.253, 906.255)	95	05/11 – 05/16		3963
SPRINTER 5-t Platform/Chassis (906)	516 (906.153, 906.155,906.253, 906.255)	115	09/08 -		3963
SPRINTER 5-t Platform/Chassis (906)	516 CDI (906.153, 906.155,906.253, 906.255)	120	03/09 -		3963
SPRINTER 5-t Platform/Chassis (906)	518 CDI (906.153, 906.155,906.253, 906.255)	135	06/06 – 12/09		3963
SPRINTER 5-t Platform/Chassis (906)	519 CDI / BlueTEC 4x4 (906.153, 906.155, 906.253,906.255)	140	03/09 -		3963
SPRINTER 5-t Platform/Chassis (906)	524 (906.153, 906.155,906.253, 906.255)	190	06/06 – 12/13		3963
SPRINTER 5-t Platform/Chassis (906)	509 CDI (906.153, 906.155,906.253, 906.255)	65	06/06 – 12/09	3962	
SPRINTER 5-t Platform/Chassis (906)	510 CDI (906.153, 906.155,906.253, 906.255)	70	03/09 -	3962	
SPRINTER 5-t Platform/Chassis (906)	511 CDI (906.153, 906.155,906.253, 906.255)	80	06/06 – 12/09	3962	
SPRINTER 5-t Platform/Chassis (906)	511 CDI (906.153, 906.155,906.253, 906.255)	84	05/16 -	3962	
SPRINTER 5-t Platform/Chassis (906)	511 CDI 4x4 (906.155,906.253, 906.255)	80	06/06 – 12/09	3962	
SPRINTER 5-t Platform/Chassis (906)	513 CDI (906.155, 906.253,906.255)	95	06/06 – 05/16	3962	
SPRINTER 5-t Platform/Chassis (906)	513 CDI (906.155, 906.253,906.255)	95	06/06 – 05/16	3962	
SPRINTER CLASSIC 3,5-t Box (909)	311 CDI (909.632, 909.633)	80	09/13 -		3804
SPRINTER CLASSIC 4,6-t Bus (909)	411 CDI (909.843)	80	09/13 -		3804
SPRINTER Dumptruck (905)	616 CDI (905.612, 905.622,905.623)	115	04/01 -	3679	
T1 Box (601)	207 D 2.4	53	06/82 – 01/90	3513	
T1 Box (601)	208 D 2.3	58	11/88 – 02/96	3513	
T1 Box (601)	208 D 2.3	60	10/88 – 02/96	3513	
T1 Box (601)	209 D 2.9	65	12/82 – 01/90	3513	
T1 Box (601)	210 2.3	63	05/77 – 12/82	3513	
T1 Box (601)	210 2.3	70	07/82 – 02/96	3513	
T1 Box (601)	210 2.3	77	05/89 – 02/96	3513	
T1 Box (601)	210 D 2.8	70	10/88 – 02/96	3513	
T1 Box (601)	210 D 2.8	72	10/88 – 02/96	3513	
T1 Box (602)	307 D 2.4	53	10/82 – 01/90	3513	
T1 Box (602)	308 D 2.3	58	11/88 – 02/96	3513	
T1 Box (602)	308 D 2.3	60	06/89 – 02/96	3513	
T1 Box (602)	309 D 3.0	65	10/82 – 01/90	3513	
T1 Box (602)	310 2.3	70	06/89 – 02/96	3513	
T1 Box (602)	310 2.3	77	01/89 – 12/95	3513	
T1 Box (602)	310 D 2.9	70	06/89 – 02/96	3513	
T1 Box (602)	310 D 2.9	72	06/89 – 02/96	3513	
T1 Bus (601)	207 D 2.4 (601.371, 601.372,601.376, 601.377)	48	05/77 – 12/82	3513	
T1 Bus (601)	208 2.3	63	05/77 – 12/82	3513	
T1 Bus (601)	208 D 2.3	60	10/88 – 02/96	3513	
T1 Bus (601)	208 D 2.3 (601.371, 601.372,601.376, 601.377)	58	10/88 – 02/96	3513	
T1 Bus (601)	209 D 2.9	65	12/82 – 01/90	3513	
T1 Bus (601)	210 2.3	70	07/82 – 01/90	3513	
T1 Bus (601)	210 2.3	77	05/89 – 02/96	3513	
T1 Bus (601)	210 D 2.8	70	11/88 – 02/96	3513	
T1 Bus (601)	210 D 2.8	72	11/88 – 02/96	3513	
T1 Bus (601)	207 D 2.4 (601.371, 601.376,601.377)	53	07/82 – 01/90	3513	
T1 Bus (602)	308 D 2.3	58	05/90 – 02/96	3513	
T1 Bus (602)	308 D 2.3	60	06/89 – 02/96	3513	
T1 Bus (602)	310 D 2.9	70	06/89 – 02/96	3513	
T1 Bus (602)	310 D 2.9	72	06/90 – 02/96	3513	
T1 Platform/Chassis (601)	207 D 2.4	48	04/77 – 12/82	3513	
T1 Platform/Chassis (601)	207 D 2.4	53	12/77 – 10/89	3513	
T1 Platform/Chassis (601)	208 D 2.3	58	11/88 – 02/96	3513	
T1 Platform/Chassis (601)	208 D 2.3	60	06/89 – 02/96	3513	
T1 Platform/Chassis (601)	209 D 2.9	65	12/82 – 01/90	3513	
T1 Platform/Chassis (601)	210 2.3	63	04/77 – 10/89	3513	
T1 Platform/Chassis (601)	210 2.3	70	04/77 – 10/89	3513	
T1 Platform/Chassis (601)	210 D 2.8	72	11/88 – 02/96	3513	

MAKE & MODEL		KW	YEAR		
MERCEDES-BENZ					
T1 Platform/Chassis (601)	210 D 2.9	70	11/88 – 02/96	3513	
T1 Platform/Chassis (602)	307 D 2.4	48	01/77 – 12/90	3513	
T1 Platform/Chassis (602)	307 D 2.4	48	04/77 – 01/83	3513	
T1 Platform/Chassis (602)	307 D 2.4	53	06/82 – 01/90	3513	
T1 Platform/Chassis (602)	308 D 2.3	58	06/89 – 02/96	3513	
T1 Platform/Chassis (602)	308 D 2.3	60	06/89 – 02/96	3513	
T1 Platform/Chassis (602)	309 D 3.0	65	10/82 – 01/90	3513	
T1 Platform/Chassis (602)	310 2.3	70	01/82 – 12/94	3513	
T1 Platform/Chassis (602)	310 D 2.9	70	06/89 – 02/96	3513	
T1 Platform/Chassis (602)	310 D 2.9	72	06/89 – 02/96	3513	
T1/TN Box Body / Estate	407 D (611.367, 611.368)	53	07/81 – 01/89	3513	
T1/TN Box Body / Estate	408 D (611.367, 611.368)	58	11/88 – 06/95	3513	
T1/TN Box Body / Estate	408 D (611.367, 611.368)	60	11/88 – 06/95	3513	
T1/TN Box Body / Estate	409 D (611.467, 611.468)	65	04/82 – 01/89	3513	
T1/TN Box Body / Estate	410 (611.067, 611.068)	70	08/82 – 06/95	3513	
T1/TN Box Body / Estate	410 (611.067, 611.068)	77	08/82 – 06/95	3513	
T1/TN Box Body / Estate	410 D (611.467, 611.468)	70	11/88 – 06/95	3513	
T1/TN Box Body / Estate	410 D (611.467, 611.468)	72	11/88 – 06/95	3513	
T1/TN Platform/Chassis	407 D (611.317, 611.318)	53	07/81 – 01/89	3513	
T1/TN Platform/Chassis	408 D (611.317, 611.318)	58	11/88 – 06/95	3513	
T1/TN Platform/Chassis	408 D (611.317, 611.318)	60	11/88 – 06/95	3513	
T1/TN Platform/Chassis	409 D (611.417, 611.418)	65	04/82 – 01/89	3513	
T1/TN Platform/Chassis	410 (611.017, 611.018)	70	08/82 – 06/95	3513	
T1/TN Platform/Chassis	410 (611.017, 611.018)	77	08/82 – 06/95	3513	
T1/TN Platform/Chassis	410 D (611.417, 611.418)	70	11/88 – 06/95	3513	
T1/TN Platform/Chassis	410 D (611.417, 611.418)	72	11/88 – 06/95	3513	
T2/L	L 911	124	01/72 – 07/83	3513	
T2/L	LA 911	81	01/72 -	3513	
T2/L	LA 911	96	01/72 -	3513	
T2/L	LA 911	124	01/72 -	3513	
T2/L Box Body / Estate	L 405 D	44	01/72 – 12/80	3513	
T2/L Box Body / Estate	L 406 DG (309.111, 309.112,309.113, 309.114,	44	01/68 – 12/74	3513	
T2/L Box Body / Estate	L 407 D (309.111, 309.112,309.113, 309.114,	53	01/75 – 12/88	3513	
T2/L Box Body / Estate	L 410 (309.011, 309.012,309.013, 309.014, 309.015...)	70	08/82 – 12/88	3513	
T2/L Box Body / Estate	L 407 D (309.111, 309.112, 309.113, 309.114,	48	01/75 – 12/88	3513	
T2/L Box Body / Estate	L 408 G (309.012, 309.013, 309.014, 309.015,	55	08/72 – 12/74	3513	
T2/L Box Body / Estate	L 508 DG (309.411, 309.412, 309.413, 309.414, 309.415...)	60	01/70 – 12/88	3513	
T2/L Box Body / Estate	L613 D (310.510, 313.424, 313.427, 313.429)	96	04/77 – 12/88	3513	
T2/L Box Body / Estate	L 408 G (309.012, 309.013, 309.014, 309.015, 309.016...)	63	08/72 – 12/74	3513	
T2/L Box Body / Estate	L 608 D (310.311, 310.312, 310.313, 310.314, 310.315...)	63	01/70 – 12/88	3513	
T2/L Box Body / Estate	L 508 DG (309.411, 309.412, 309.413, 309.414, 309.415...)	63	01/70 – 12/88	3513	
T2/L Box Body / Estate	L 409 (309.011, 309.012,309.013, 309.014, 309.015...)	66	01/75 – 08/82	3513	
T2/L Platform/Chassis	L 409 (309.000, 309.001,309.002, 309.003)	66	01/75 – 08/82	3513	
T2/L Platform/Chassis	L 508 DG (309.400, 309.401,309.402, 309.403, 309.404...)	63	01/70 – 12/88	3513	
T2/L Platform/Chassis	L 407 D (309.100, 309.101,309.102, 309.103)	53	01/75 – 12/88	3513	
T2/L Platform/Chassis	L 410 (309.000, 309.002)	70	08/82 – 12/88	3513	
T2/L Platform/Chassis	L 405 D	44	01/72 – 12/80	3513	
T2/L Platform/Chassis	L 406 DG (309.100, 309.101,309.102, 309.103)	44	01/68 – 12/74	3513	
T2/L Platform/Chassis	L 408 G (309.000, 309.001,309.002, 309.003, 309.011)	63	08/72 – 12/74	3513	
T2/L Platform/Chassis	L 613 D (313.402, 313.404)	96	04/77 – 12/88	3513	
T2/L Platform/Chassis	L 508 DG (309.400, 309.401,309.402, 309.403, 309.404...)	60	01/70 – 12/88	3513	
T2/L Platform/Chassis	L 407 D (309.100, 309.101,309.102, 309.103)	48	01/75 – 12/88	3513	
T2/L Platform/Chassis	L 608 D (310.300, 310.301,310.302, 310.303, 310.304...)	63	01/70 – 12/88	3513	
T2/L Platform/Chassis	L 408 G (309.000, 309.001,309.002, 309.003, 309.011)	55	08/72 – 12/74	3513	
T2/L Platform/Chassis	L 911 (328.001, 328.002,328.003, 328.005, 328.020...)	81	01/72 – 07/83	3513	
T2/LN1 Box Body / Estate	507 D (667.361, 667.362)	53	04/86 – 04/89	3513	
T2/LN1 Box Body / Estate	508 D (667.361, 667.362)	58	03/89 – 12/94	3513	
T2/LN1 Box Body / Estate	510 (667.061, 667.062)	70	04/86 – 12/94	3513	
T2/LN1 Box Body / Estate	510 (667.061, 667.062)	77	04/86 – 12/94	3513	
T2/LN1 Box Body / Estate	811 D (670.362, 670.363)	77	04/86 – 12/94	3679	
T2/LN1 Box Body / Estate	811 D (670.362, 670.363)	85	04/86 – 12/94	3679	
T2/LN1 Box Body / Estate	814 D (670.364, 670.365,670.366)	100	11/87 – 12/94	3679	
T2/LN1 Box Body / Estate	814 D (670.364, 670.365,670.366)	103	11/87 – 12/94	3679	
T2/LN1 Box Body / Estate	814 DA 4x4 (670.464, 670.465)	100	11/87 – 12/94	3679	
T2/LN1 Box Body / Estate	814 DA 4x4 (670.464, 670.465)	103	11/87 – 12/94	3679	
T2/LN1 Box Body / Estate	609 D (668.061, 668.062,668.063)	63	04/86 – 12/94	3679	
T2/LN1 Box Body / Estate	609 D (668.061, 668.062,668.063)	66	04/86 – 12/94	3679	
T2/LN1 Box Body / Estate	609 D (668.061, 668.062,668.063)	77	06/94 – 12/94	3679	
T2/LN1 Box Body / Estate	711 D (669.361, 669.362,669.363)	77	04/86 – 12/94	3679	
T2/LN1 Box Body / Estate	711 D (669.361, 669.362,669.363)	85	04/86 – 12/94	3679	
T2/LN1 Box Body / Estate	611 D (668.061, 668.062,668.063)	77	06/94 – 12/94	3679	

MAKE & MODEL		KW	YEAR		
MERCEDES-BENZ					
T2/LN1 Box Body / Estate	709 D (669.061, 669.062,669.063)	63	04/86 – 12/94	3679	
T2/LN1 Box Body / Estate	709 D (669.061, 669.062,669.063)	66	04/86 – 12/94	3679	
T2/LN1 Box Body / Estate	709 D (669.061, 669.062,669.063)	66	04/86 – 12/94	3679	
T2/LN1 Box Body / Estate	714 D (669.361, 669.362,669.363)	103	06/94 – 12/94	3679	
T2/LN1 Box Body / Estate	809 D (670.061, 670.062,670.063)	63	04/86 – 12/94	3679	
T2/LN1 Box Body / Estate	809 D (670.061, 670.062,670.063)	66	04/86 – 12/94	3679	
T2/LN1 Bus	O 609 D (672.072, 672.073)	66	07/87 – 12/92	3679	
T2/LN1 Bus	O 611 D (672.372, 672.373)	85	07/87 – 12/92	3679	
T2/LN1 Bus	O 614 D (672.375, 672.376)	100	07/87 – 12/92	3679	
T2/LN1 Cab with engine	809 DT (670.199)	63	04/86 – 12/94	3679	
T2/LN1 Cab with engine	809 DT (670.199)	66	04/86 – 12/94	3679	
T2/LN1 Dumptruck	609 DK (668.041, 668.042)	63	04/86 – 12/94	3679	
T2/LN1 Dumptruck	609 DK (668.041, 668.042)	66	04/86 – 12/94	3679	
T2/LN1 Dumptruck	611 DK (668.041, 668.042)	77	06/94 – 12/94	3679	
T2/LN1 Dumptruck	709 DK (669.041, 669.042)	63	04/86 – 12/94	3679	
T2/LN1 Dumptruck	709 DK (669.041, 669.042)	66	04/86 – 12/94	3679	
T2/LN1 Dumptruck	809 DK (670.041, 670.042)	63	04/86 – 12/94	3679	
T2/LN1 Dumptruck	809 DK (670.041, 670.042)	66	04/86 – 12/94	3679	
T2/LN1 Dumptruck	811 DK (670.341, 670.342)	77	04/86 – 12/94	3679	
T2/LN1 Dumptruck	811 DK (670.341, 670.342)	85	04/86 – 12/94	3679	
T2/LN1 Dumptruck	507 DK (667.341, 667.342)	53	04/86 – 04/89	3513	
T2/LN1 Dumptruck	508 D (667.301, 667.302,	58	03/89 – 12/94	3513	
T2/LN1 Platform/Chassis	611 D (668.001, 668.002,668.003)	77	06/94 – 12/94	3679	
T2/LN1 Platform/Chassis	714 D (669.301, 669.302,669.303)	103	06/94 – 12/94	3679	
T2/LN1 Platform/Chassis	510 (667.001, 667.002)	70	04/86 – 12/94	3513	
T2/LN1 Platform/Chassis	510 (667.001, 667.002)	77	04/86 – 12/94	3513	
T2/LN1 Platform/Chassis	609 D (668.001, 668.002,668.003)	63	04/86 – 12/94	3679	
T2/LN1 Platform/Chassis	609 D (668.001, 668.002,668.003)	66	04/86 – 12/94	3679	
T2/LN1 Platform/Chassis	609 D (668.001, 668.002,668.003)	77	06/94 – 12/94	3679	
T2/LN1 Platform/Chassis	709 D (669.000, 669.001,669.002, 669.003, 669.041)	63	04/86 – 12/94	3679	
T2/LN1 Platform/Chassis	709 D (669.000, 669.001,669.002, 669.003, 669.041)	66	04/86 – 12/94	3679	
T2/LN1 Platform/Chassis	709 D (669.001, 669.002,669.003, 669.041, 669.000)	63	04/86 – 12/94	3679	
T2/LN1 Platform/Chassis	711 D (669.301, 669.302,669.303)	77	04/86 – 12/94	3679	
T2/LN1 Platform/Chassis	711 D (669.301, 669.302,669.303)	85	04/86 – 12/94	3679	
T2/LN1 Platform/Chassis	809 D (670.001, 670.002,670.003)	63	04/86 – 12/94	3679	
T2/LN1 Platform/Chassis	809 D (670.001, 670.002,670.003)	66	04/86 – 12/94	3679	
T2/LN1 Platform/Chassis	811 D (670.302, 670.303)	77	04/86 – 12/94	3679	
T2/LN1 Platform/Chassis	811 D (670.302, 670.303)	85	04/86 – 12/94	3679	
T2/LN1 Platform/Chassis	814 D (670.312, 670.313)	100	11/87 – 12/94	3679	
T2/LN1 Platform/Chassis	814 D (670.312, 670.313)	103	11/87 – 12/94	3679	
T2/LN1 Platform/Chassis	814 DA 4x4 (670.411, 670.412)	100	11/87 – 12/94	3679	
T2/LN1 Platform/Chassis	814 DA 4x4 (670.411, 670.412)	103	11/87 – 12/94	3679	
T2/LN1 Platform/Chassis	507 D (667.301, 667.302,667.341, 667.342)	53	04/86 – 04/89	3513	
UNIMOG	U 120	88	01/55 -	3390	
UNIMOG	U 150	88	01/55 -	3390	
UNIMOG	U 150/4255		01/55 -	3390	
UNIMOG	U 435	88	01/55 -	3390	
UNIMOG	U 100, U 110, U 1100L (OM 353.901)	74	01/77 – 05/88	3390	
UNIMOG	U 100, U 110, U 1100L (OM 353.940)	74	01/77 – 05/88	3390	
UNIMOG	U 100, U 110, U 1100L (OM 353.980)	74	01/77 – 05/88	3390	
UNIMOG	U 120/145		01/55 -	3390	
UNIMOG	U 1200T (OM 353.973)	92	01/83 – 05/88	3390	
UNIMOG	U 1200T (OM 353.995)	92	01/83 – 05/88	3390	
UNIMOG	U 1250 (OM 353.973)	92	12/84 – 05/88	3390	
UNIMOG	U 1250 (OM 353.995)	92	12/84 – 05/88	3390	
UNIMOG	U 1300 (OM 353.973)	92	01/77 – 12/84	3390	
UNIMOG	U 1300 (OM 353.995)	92	01/77 – 12/84	3390	
UNIMOG	U 600 (OM 616.942)	38	05/88 -	3390	
UNIMOG	U 600 (OM 616.943)	38	05/88 -	3390	
UNIMOG	U 110		01/55 -	3521	3521
UNIMOG	U 140		01/55 -	3521	3521
UNIMOG	U 650		01/55 -	3521	3521
UNIMOG	U 100L (OM 602.948)	71	11/92 -	3521	3521
UNIMOG	U 100L (OM 602.981)	85	07/96 -	3521	3521
UNIMOG	U 100L (OM 602.989)	85	07/96 -	3521	3521
UNIMOG	U 110,U 110L (OM 364.955)	75	02/92 -	3521	3521
UNIMOG	U 110,U 110L (OM 364.958)	75	02/92 -	3521	3521
UNIMOG	U 1100		01/55 -	3521	3521
UNIMOG	U 1250,U 1250L (OM 356.950)	92	01/88 -	3521	3521
UNIMOG	U 1250,U 1250L (OM 356.954)	92	01/88 -	3521	3521
UNIMOG	U 1250,U 1250L (OM 366.949)	92	01/88 -	3521	3521

MAKE & MODEL   		KW	YEAR		
MERCEDES-BENZ					
UNIMOG	U 1250L (OM 366.955)	100	05/88 -	3521	3521
UNIMOG	U 130,U 140 (OM 364.982)	98	07/92 -	3521	3521
UNIMOG	U 130,U 140 (OM 364.985)	98	07/92 -	3521	3521
UNIMOG	U 140L (OM 364.985)	100	07/92 -	3521	3521
UNIMOG	U 140T (OM 364.982)	98	07/92 -	3521	3521
UNIMOG	U 1550L (OM 356.956)	115	05/88 -	3521	3521
UNIMOG	U 1550L (OM 356.980)	177	05/88 -	3521	3521
UNIMOG	U 1550L (OM 356.997)	150	05/88 -	3521	3521
UNIMOG	U 1550L (OM 357.924)	150	05/88 -	3521	3521
UNIMOG	U 1550L (OM 357.945)	177	05/88 -	3521	3521
UNIMOG	U 1550L (OM 366.955)	100	05/88 -	3521	3521
UNIMOG	U 1550L (OM 366.956)	100	05/88 -	3521	3521
UNIMOG	U 1550L (OM 366.984)	150	05/88 -	3521	3521
UNIMOG	U 1600		01/55 -	3521	3521
UNIMOG	U 1600 (OM 356.956)	115	01/88 -	3521	3521
UNIMOG	U 1600 (OM 356.997)	150	09/89 -	3521	3521
UNIMOG	U 1600 (OM 357.924)	150	09/89 -	3521	3521
UNIMOG	U 1600 (OM 366.949)	115	01/88 -	3521	3521
UNIMOG	U 1600 (OM 366.984)	150	09/89 -	3521	3521
UNIMOG	U 1650,U 1650L (OM 356.956)	115	01/88 -	3521	3521
UNIMOG	U 1650,U 1650L (OM 356.997)	150	09/89 -	3521	3521
UNIMOG	U 1650,U 1650L (OM 357.924)	150	09/89 -	3521	3521
UNIMOG	U 1650,U 1650L (OM 366.948)	115	01/88 -	3521	3521
UNIMOG	U 1650,U 1650L (OM 366.949)	115	01/88 -	3521	3521
UNIMOG	U 1650,U 1650L (OM 366.984)	150	09/89 -	3521	3521
UNIMOG	U 1700T (OM 356.957)	122	09/88 -	3521	3521
UNIMOG	U 1700T (OM 366.963)	122	09/88 -	3521	3521
UNIMOG	U 1750,U 1750L (OM 356.957)	122	09/88 -	3521	3521
UNIMOG	U 1750,U 1750L (OM 356.957)	122	09/88 -	3521	3521
UNIMOG	U 1750,U 1750L (OM 356.981)	122	09/88 -	3521	3521
UNIMOG	U 1750,U 1750L (OM 356.981)	122	09/88 -	3521	3521
UNIMOG	U 1750,U 1750L (OM 366.963)	122	09/88 -	3521	3521
UNIMOG	U 1750,U 1750L (OM 366.963)	122	09/88 -	3521	3521
UNIMOG	U 1800 (OM 356.998)	132	04/92 -	3521	3521
UNIMOG	U 1800T (OM 356.998)	132	04/92 -	3521	3521
UNIMOG	U 1850,U 1850L (OM 356.998)	132	04/92 -	3521	3521
UNIMOG	U 2100 (OM 356.997)	155	09/89 -	3521	3521
UNIMOG	U 2100 (OM 366.984)	155	09/89 -	3521	3521
UNIMOG	U 2100T (OM 356.997)	155	09/89 -	3521	3521
UNIMOG	U 2100T (OM 366.984)	155	09/89 -	3521	3521
UNIMOG	U 2150 (OM 356.997)	155	09/89 -	3521	3521
UNIMOG	U 2150 (OM 366.984)	155	09/89 -	3521	3521
UNIMOG	U 2150,U 2150L (OM 356.980)	177	09/89 -	3521	3521
UNIMOG	U 2150,U 2150L (OM 356.997)	155	09/89 -	3521	3521
UNIMOG	U 2150,U 2150L (OM 357.924)	155	09/89 -	3521	3521
UNIMOG	U 2150,U 2150L (OM 357.945)	177	09/89 -	3521	3521
UNIMOG	U 2150,U 2150L (OM 366.984)	155	09/89 -	3521	3521
UNIMOG	U 2400 (OM 356.980)	177	05/91 -	3521	3521
UNIMOG	U 2400 (OM 357.945)	177	05/91 -	3521	3521
UNIMOG	U 2400TG (OM 356.980)	177	07/93 -	3521	3521
UNIMOG	U 2400TG (OM 357.945)	177	07/93 -	3521	3521
UNIMOG	U 2450,U 2450L (OM 356.980)	177	05/91 -	3521	3521
UNIMOG	U 2450,U 2450L (OM 357.945)	177	05/91 -	3521	3521
UNIMOG	U 2450L (OM 356.980)	177	07/93 -	3521	3521
UNIMOG	U 2450L (OM 357.945)	177	07/93 -	3521	3521
UNIMOG	U 600		01/55 -	3521	3521
UNIMOG	U 90		01/55 -	3521	3521
UNIMOG	U 90 (OM 602.941)	65	11/92 -	3521	3521
UNIMOG	U 90 (OM 602.981)	85	07/96 -	3521	3521
UNIMOG	U 90 (OM 602.989)	85	07/96 -	3521	3521
UNIMOG	UX 100H,UX 100M (OM 602.981)	80	09/96 -	3521	3521
UNIMOG	UX 100H,UX 100M (OM 602.989)	80	09/96 -	3521	3521
VARIO Box Body / Estate	615 D, 616 D (668.351, 668.352, 668.353)	112	09/98 -	3679	
VARIO Box Body / Estate	615 D, 616 D (668.351, 668.352, 668.353)	115	09/98 -	3679	
VARIO Box Body / Estate	815 DA, 816 DA 4x4 (669.599, 670.451, 670.452, 670.453)	112	09/96 -	3679	
VARIO Box Body / Estate	815 DA, 816 DA 4x4 (669.599, 670.451, 670.452, 670.453)	115	09/96 -	3679	
VARIO Box Body / Estate	612 D (668.351, 668.352,668.353)	90	09/96 -	3679	
VARIO Box Body / Estate	613 D, 614 D (668.351, 668.352, 668.353)	95	09/96 -	3679	
VARIO Box Body / Estate	613 D, 614 D (668.351, 668.352, 668.353)	100	09/96 -	3679	
VARIO Box Body / Estate	618D	130	09/06 -	3679	
VARIO Box Body / Estate	812 D (670.351, 670.352,670.353)	90	09/96 -	3679	

MAKE & MODEL   		KW	YEAR		
MERCEDES-BENZ					
VARIO Box Body / Estate	813 D, 814 D (670.351, 670.352, 670.353)	95	09/96 -	3679	
VARIO Box Body / Estate	813 D, 814 D (670.351, 670.352, 670.353)	100	09/96 -	3679	
VARIO Box Body / Estate	813 DA, 814 DA 4x4 (669.599, 670.451, 670.452, 670.453)	95	09/96 -	3679	
VARIO Box Body / Estate	813 DA, 814 DA 4x4 (669.599, 670.451, 670.452, 670.453)	100	09/96 -	3679	
VARIO Box Body / Estate	815 D, 816 D (670.351, 670.352, 670.353)	112	09/96 -	3679	
VARIO Box Body / Estate	815 D, 816 D (670.351, 670.352, 670.353)	115	09/96 -	3679	
VARIO Box Body / Estate	818 D (670.351, 670.352,670.353)	130	09/96 -	3679	
VARIO Bus	O 810 (670.373, 670.374)	75	09/96 -	3679	
VARIO Bus	O 812 (670.373, 670.674)	90	09/96 -	3679	
VARIO Bus	O 813 (670.373, 670.374)	95	01/06 -	3679	
VARIO Bus	O 814 (670.373, 670.374)	100	09/96 -	3679	
VARIO Bus	O 815 (670.373, 670.374)	112	09/96 -	3679	
VARIO Bus	O 816 D (670.373, 670.374)	115	01/06 -	3679	
VARIO Bus	O 818 D (670.373, 670.374)	130	09/06 -	3679	
VARIO Cab with engine	810 DT (670.398)	75	09/96 -	3679	
VARIO Cab with engine	812 DT	90	09/96 -	3679	
VARIO Cab with engine	814 DT (670.398)	100	09/96 -	3679	
VARIO Cab with engine	816 DT (670.398)	112	09/96 -	3679	
VARIO Dumptruck	813 DA, 814 DA 4x4 (670.431,670.432)	95	09/96 -	3679	
VARIO Dumptruck	815 D, 816 D (670.331,670.332)	112	09/96 -	3679	
VARIO Dumptruck	815 D, 816 D (670.331,670.332)	115	09/96 -	3679	
VARIO Dumptruck	612 D (668.331, 668.332)	90	09/96 -	3679	
VARIO Dumptruck	613 D, 614 D (668.331,668.332)	95	09/96 -	3679	
VARIO Dumptruck	613 D, 614 D (668.331,668.332)	100	09/96 -	3679	
VARIO Dumptruck	615 D, 616 D (668.331,668.332)	112	09/98 -	3679	
VARIO Dumptruck	615 D, 616 D (668.331,668.332)	115	09/98 -	3679	
VARIO Dumptruck	618 D	130	09/06 -	3679	
VARIO Dumptruck	812 D (670.331, 670.332)	90	09/96 -	3679	
VARIO Dumptruck	813 D, 814 D (670.331,670.332)	95	09/96 -	3679	
VARIO Dumptruck	813 D, 814 D (670.331,670.332)	100	09/96 -	3679	
VARIO Dumptruck	813 DA, 814 DA 4x4 (670.431,670.432)	100	09/96 -	3679	
VARIO Dumptruck	815 DA, 816 DA 4x4 (670.431,670.432)	112	09/96 -	3679	
VARIO Dumptruck	815 DA, 816 DA 4x4 (670.431,670.432)	115	09/96 -	3679	
VARIO Dumptruck	818 D (670.321, 670.322)	130	09/06 -	3679	
VARIO Dumptruck	818 DA 4x4	130	09/06 -	3679	
VARIO Kombi Van	512 D (667.351,667.352,667.353)	90	09/96 – 12/10	3614	3614
VARIO Platform şasi	512 D (667.321,667.322,667.323)	90	09/96 – 12/10	3614	3614
VARIO Platform/Chassis	812 D (670.321, 670.322,670.323, 670.324)	90	09/96 -	3679	
VARIO Platform/Chassis	612 D (668.321, 668.322,668.323)	90	09/96 -	3679	
VARIO Platform/Chassis	613 D, 614 D (668.321,668.322, 668.323)	95	09/96 -	3679	
VARIO Platform/Chassis	613 D, 614 D (668.321,668.322, 668.323)	100	09/96 -	3679	
VARIO Platform/Chassis	615 D, 616 D (668.321,668.322, 668.323)	112	09/98 -	3679	
VARIO Platform/Chassis	615 D, 616 D (668.321,668.322, 668.323)	115	09/98 -	3679	
VARIO Platform/Chassis	618 D (668.321, 668.322,668.323)	130	09/96 -	3679	
VARIO Platform/Chassis	813 D, 814 D (670.321,670.322, 670.323, 670.324)	95	09/96 -	3679	
VARIO Platform/Chassis	813 D, 814 D (670.321,670.322, 670.323, 670.324)	100	09/96 -	3679	
VARIO Platform/Chassis	813 DA, 814 DA 4x4 (670.421,670.422, 670.423)	95	09/96 -	3679	
VARIO Platform/Chassis	813 DA, 814 DA 4x4 (670.421,670.422, 670.423)	100	09/96 -	3679	
VARIO Platform/Chassis	815 D, 816 D (670.321,670.322, 670.323, 670.324)	112	09/96 -	3679	
VARIO Platform/Chassis	815 D, 816 D (670.321,670.322, 670.323, 670.324)	115	09/96 -	3679	
VARIO Platform/Chassis	815 DA, 816 DA 4x4 (670.421,670.422, 670.423)	112	09/96 -	3679	
VARIO Platform/Chassis	815 DA, 816 DA 4x4 (670.421,670.422, 670.423)	115	09/96 -	3679	
VARIO Platform/Chassis	818 D (670.321, 670.322,670.323, 670.324)	130	09/06 -	3679	
VARIO Platform/Chassis	818 DA 4x4	130	09/96 -	3679	
V-Class (638/2)	2.0 V 200 (M 111.950)	95	02/97 – 07/03	3567	
V-Class (638/2)	2.0 V 200 (M 111.948)	95	02/97 – 07/03	3567	
V-Class (638/2)	2.2 V 200 CDI (OM 611.980)	75	03/99 – 07/03	3567	
V-Class (638/2)	2.2 V 220 CDI (OM 611.980)	90	03/99 – 07/03	3567	
V-Class (638/2)	2.3 V 230 (M 111.978)	105	10/96 – 07/03	3567	
V-Class (638/2)	2.3 V 230 TD (OM 601.970)	72	09/96 – 07/03	3567	
V-Class (638/2)	2.8 V 280 (M 104.900)	128	08/97 – 07/03	3567	
V-CLASS (638/2)	V 200 (638.214, 638.294)	95	02/97 – 07/03		3680
V-CLASS (638/2)	V 200 (638.214, 638.294)	95	02/97 – 07/03	3681	
V-CLASS (638/2)	V 200 (638.214, 638.294)	95	02/97 – 07/03		3861
V-CLASS (638/2)	V 200 CDI (638.294)	75	03/99 – 07/03		3680
V-CLASS (638/2)	V 200 CDI (638.294)	75	03/99 – 07/03	3681	
V-CLASS (638/2)	V 200 CDI (638.294)	75	03/99 – 07/03		3861
V-CLASS (638/2)	V 220 CDI (638.294)	90	03/99 – 07/03		3680
V-CLASS (638/2)	V 220 CDI (638.294)	90	03/99 – 07/03	3681	
V-CLASS (638/2)	V 220 CDI (638.294)	90	03/99 – 07/03		3861
V-CLASS (638/2)	V 230 (638.234, 638.294)	105	10/96 – 07/03		3680

MAKE & MODEL   		KW	YEAR		
MERCEDES-BENZ					
V-CLASS (638/2)	V 230 (638.234, 638.294)	105	10/96 – 07/03	3681	
V-CLASS (638/2)	V 230 (638.234, 638.294)	105	10/96 – 07/03		3861
V-CLASS (638/2)	V 230 TD (638.274)	72	09/96 – 07/03		3680
V-CLASS (638/2)	V 230 TD (638.274)	72	09/96 – 07/03	3681	
V-CLASS (638/2)	V 230 TD (638.274)	72	09/96 – 07/03		3861
V-CLASS (638/2)	V 280 (638.244, 638.294)	128	08/97 – 07/03		3680
V-CLASS (638/2)	V 280 (638.244, 638.294)	128	08/97 – 07/03	3681	
V-CLASS (638/2)	V 280 (638.244, 638.294)	128	08/97 – 07/03		3861
V-CLASS (W447)	V 200 CDI / d (447.811,447.813, 447.815)	100	03/14 -		3680
V-CLASS (W447)	V 200 CDI / d (447.811,447.813, 447.815)	100	03/14 -	3681	
V-CLASS (W447)	V 200 CDI / d (447.811,447.813, 447.815)	100	03/14 -		3861
V-CLASS (W447)	V 220 CDI / d (447.811,447.813, 447.815)	120	03/14 -		3680
V-CLASS (W447)	V 220 CDI / d (447.811,447.813, 447.815)	120	03/14 -	3681	
V-CLASS (W447)	V 220 CDI / d (447.811,447.813, 447.815)	120	03/14 -		3861
VIANO (W639)	3,0	140	09/03 -	3923	
VIANO (W639)	3,0	140	09/03 -		3924
VIANO (W639)	3,0	140	09/03 -	3925	
VIANO (W639)	32	160	09/03 -	3923	
VIANO (W639)	32	160	09/03 -		3924
VIANO (W639)	32	160	09/03 -	3925	
VIANO (W639)	35	190	09/07 -	3923	
VIANO (W639)	35	190	09/07 -		3924
VIANO (W639)	35	190	09/07 -	3925	
VIANO (W639)	37	170	06/04 -	3923	
VIANO (W639)	37	170	06/04 -		3924
VIANO (W639)	37	170	06/04 -	3925	
VIANO (W639)	CDI 2.0	80	09/03 -	3923	
VIANO (W639)	CDI 2.0	80	09/03 -		3924
VIANO (W639)	CDI 2.0	80	09/03 -	3925	
VIANO (W639)	CDI 2.0	85	08/05 -	3923	
VIANO (W639)	CDI 2.0	85	08/05 -		3924
VIANO (W639)	CDI 2.0	85	08/05 -	3925	
VIANO (W639)	CDI 2.0	100	07/10 -		3924
VIANO (W639)	CDI 2.0	100	07/10 -	3925	
VIANO (W639)	CDI 2.0 4-matic	80	07/05 -	3923	
VIANO (W639)	CDI 2.0 4-matic	80	07/05 -		3924
VIANO (W639)	CDI 2.0 4-matic	80	07/05 -	3925	
VIANO (W639)	CDI 2.0 4-matic	100	07/10 -		3924
VIANO (W639)	CDI 2.0 4-matic	100	07/10 -	3925	
VIANO (W639)	CDI 2.2	110	09/03 -	3923	
VIANO (W639)	CDI 2.2	110	09/03 -		3924
VIANO (W639)	CDI 2.2	110	09/03 -	3925	
VIANO (W639)	CDI 2.2	120	07/10 -		3924
VIANO (W639)	CDI 2.2	120	07/10 -	3925	
VIANO (W639)	CDI 2.2 4-matic	110	07/05 -	3923	
VIANO (W639)	CDI 2.2 4-matic	110	07/05 -		3924
VIANO (W639)	CDI 2.2 4-matic	110	07/05 -	3925	
VIANO (W639)	CDI 2.2 4-matic	120	07/10 -		3924
VIANO (W639)	CDI 2.2 4-matic	120	07/10 -	3925	
VIANO (W639)	CDI 3.0	150	03/06 -	3923	
VIANO (W639)	CDI 3.0	150	03/06 -		3924
VIANO (W639)	CDI 3.0	150	03/06 -	3925	
VIANO (W639)	CDI 3.0	165	07/10 -		3924
VIANO (W639)	CDI 3.0	165	07/10 -	3925	
VIANO MPV	25	140	01/10 – 12/12	3923	
VIANO MPV	25	140	01/10 – 12/12		3924
VIANO MPV	25	140	01/10 – 12/12	3925	
VITO (638)	108 D 2.3 (638.064) (OM 601.942)	58	03/97 – 07/03	3567	
VITO (638)	2.0 113 (M 111.948)	95	02/96 – 07/03	3567	
VITO (638)	2.0 113 (M 111.948)	95	03/97 – 07/03	3567	
VITO (638)	2.0 113 (M 111.950)	95	02/96 – 07/03	3567	
VITO (638)	2.0 113 (M 111.950)	95	03/97 – 07/03	3567	
VITO (638)	2.3 108 D (OM 601.942)	58	02/96 – 07/03	3567	
VITO (638)	2.3 110 D (OM 601.970)	72	03/97 – 07/03	3567	
VITO (638)	2.3 110 TD (OM 601.970)	72	02/96 – 07/03	3567	
VITO (638)	2.3 114 (M 111.978)	105	12/96 – 07/03	3567	
VITO (638)	2.3 114 (M 111.978)	105	03/97 – 07/03	3567	
VITO / MIXTO Box (W639)	119	140	09/03 -	3923	
VITO / MIXTO Box (W639)	119	140	09/03 -		3924
VITO / MIXTO Box (W639)	119	140	09/03 -	3925	
VITO / MIXTO Box (W639)	122	160	09/03 -	3923	

MAKE & MODEL		KW	YEAR		
MERCEDES-BENZ					
VITO / MIXTO Box (W639)	122	160	09/03 -		3924
VITO / MIXTO Box (W639)	122	160	09/03 -	3925	
VITO / MIXTO Box (W639)	126	190	09/07 -	3923	
VITO / MIXTO Box (W639)	126	190	09/07 -		3924
VITO / MIXTO Box (W639)	126	190	09/07 -	3925	
VITO / MIXTO Box (W639)	109 CDI	65	09/03 -	3923	
VITO / MIXTO Box (W639)	109 CDI	65	09/03 -		3924
VITO / MIXTO Box (W639)	109 CDI	65	09/03 -	3925	
VITO / MIXTO Box (W639)	109 CDI	70	08/06 -	3923	
VITO / MIXTO Box (W639)	109 CDI	70	08/06 -		3924
VITO / MIXTO Box (W639)	109 CDI	70	08/06 -	3925	
VITO / MIXTO Box (W639)	110 CDI	70	09/10 -		3924
VITO / MIXTO Box (W639)	110 CDI	70	09/10 -	3925	
VITO / MIXTO Box (W639)	111 CDI	80	09/03 -	3923	
VITO / MIXTO Box (W639)	111 CDI	80	09/03 -		3924
VITO / MIXTO Box (W639)	111 CDI	80	09/03 -	3925	
VITO / MIXTO Box (W639)	111 CDI	85	09/07 -	3923	
VITO / MIXTO Box (W639)	111 CDI	85	09/07 -		3924
VITO / MIXTO Box (W639)	111 CDI	85	09/07 -	3925	
VITO / MIXTO Box (W639)	111 CDI 4x4	80	09/07 -	3923	
VITO / MIXTO Box (W639)	111 CDI 4x4	80	09/07 -		3924
VITO / MIXTO Box (W639)	111 CDI 4x4	80	09/07 -	3925	
VITO / MIXTO Box (W639)	113 CDI	100	09/10 -		3924
VITO / MIXTO Box (W639)	113 CDI	100	09/10 -	3925	
VITO / MIXTO Box (W639)	113 CDI 4x4	100	09/10 -	3923	
VITO / MIXTO Box (W639)	113 CDI 4x4	100	09/10 -		3924
VITO / MIXTO Box (W639)	113 CDI 4x4	100	09/10 -	3925	
VITO / MIXTO Box (W639)	115 CDI	110	09/03 -	3923	
VITO / MIXTO Box (W639)	115 CDI	110	09/03 -		3924
VITO / MIXTO Box (W639)	115 CDI	110	09/03 -	3925	
VITO / MIXTO Box (W639)	115 CDI 4x4	110	07/06 -	3923	
VITO / MIXTO Box (W639)	115 CDI 4x4	110	07/06 -		3924
VITO / MIXTO Box (W639)	115 CDI 4x4	110	07/06 -	3925	
VITO / MIXTO Box (W639)	116 CDI	120	09/10 -		3924
VITO / MIXTO Box (W639)	116 CDI	120	09/10 -	3925	
VITO / MIXTO Box (W639)	116 CDI 4x4	120	09/10 -	3923	
VITO / MIXTO Box (W639)	116 CDI 4x4	120	09/10 -		3924
VITO / MIXTO Box (W639)	116 CDI 4x4	120	09/10 -	3925	
VITO / MIXTO Box (W639)	120 CDI	150	07/06 -	3923	
VITO / MIXTO Box (W639)	120 CDI	150	07/06 -		3924
VITO / MIXTO Box (W639)	120 CDI	150	07/06 -	3925	
VITO / MIXTO Box (W639)	122 CDI	165	09/10 -		3924
VITO / MIXTO Box (W639)	122 CDI	165	09/10 -	3925	
VITO / MIXTO Box (W639)	123 (639.603)	170	06/04 – 07/08	3923	
VITO / MIXTO Box (W639)	123 (639.603)	170	06/04 – 07/08		3924
VITO / MIXTO Box (W639)	123 (639.603)	170	06/04 – 07/08	3925	
VITO / MIXTO Box (W639)	E-CELL	60	03/12 -		3924
VITO / MIXTO Box (W639)	E-CELL	60	03/12 -	3925	
VITO Box (638)	108 CDI 2.2 (638.094)	60	03/99 – 07/03		3680
VITO Box (638)	108 CDI 2.2 (638.094)	60	03/99 – 07/03	3681	
VITO Box (638)	108 CDI 2.2 (638.094)	60	03/99 – 07/03		3861
VITO Box (638)	108 D 2.3 (638.064)	58	03/97 – 07/03		3680
VITO Box (638)	108 D 2.3 (638.064)	58	03/97 – 07/03	3681	
VITO Box (638)	108 D 2.3 (638.064)	58	03/97 – 07/03		3861
VITO Box (638)	110 CDI 2.2 (638.094)	75	03/99 – 07/03		3680
VITO Box (638)	110 CDI 2.2 (638.094)	75	03/99 – 07/03	3681	
VITO Box (638)	110 CDI 2.2 (638.094)	75	03/99 – 07/03		3861
VITO Box (638)	110 D 2.3 (638.074)	72	03/97 – 07/03		3680
VITO Box (638)	110 D 2.3 (638.074)	72	03/97 – 07/03	3681	
VITO Box (638)	110 D 2.3 (638.074)	72	03/97 – 07/03		3861
VITO Box (638)	112 CDI 2.2 (638.094)	90	03/99 – 07/03		3680
VITO Box (638)	112 CDI 2.2 (638.094)	90	03/99 – 07/03	3681	
VITO Box (638)	112 CDI 2.2 (638.094)	90	03/99 – 07/03		3861
VITO Box (638)	113 2.0 (638.014, 638.094)	95	03/97 – 07/03		3680
VITO Box (638)	113 2.0 (638.014, 638.094)	95	03/97 – 07/03	3681	
VITO Box (638)	113 2.0 (638.014, 638.094)	95	03/97 – 07/03		3861
VITO Box (638)	114 2.3 (638.034, 638.094)	105	03/97 – 07/03		3680
VITO Box (638)	114 2.3 (638.034, 638.094)	105	03/97 – 07/03	3681	
VITO Box (638)	114 2.3 (638.034, 638.094)	105	03/97 – 07/03		3861
VITO Box (W447)	109 CDI (447.601, 447.603,447.605)	65	10/14 -	3925	
VITO Box (W447)	111 CDI (447.601, 447.603,447.605)	84	10/14 -	3925	

MAKE & MODEL		KW	YEAR		
MERCEDES-BENZ					
VITO Bus	115 CDI - 2.2	110	01/10 – 03/16	3923	
VITO Bus	115 CDI - 2.2	110	01/10 – 03/16		3924
VITO Bus	115 CDI - 2.2	110	01/10 – 03/16	3925	
VITO Bus	119 - 2.5	140	01/10 – 03/16	3923	
VITO Bus	119 - 2.5	140	01/10 – 03/16		3924
VITO Bus	119 - 2.5	140	01/10 – 03/16	3925	
VITO Bus (638)	108 CDI 2.2 (638.194)	60	03/99 – 07/03		3680
VITO Bus (638)	108 CDI 2.2 (638.194)	60	03/99 – 07/03	3681	
VITO Bus (638)	108 CDI 2.2 (638.194)	60	03/99 – 07/03		3861
VITO Bus (638)	108 D 2.3 (638.164)	58	02/96 – 07/03		3680
VITO Bus (638)	108 D 2.3 (638.164)	58	02/96 – 07/03	3681	
VITO Bus (638)	108 D 2.3 (638.164)	58	02/96 – 07/03		3861
VITO Bus (638)	110 CDI 2.2 (638.194)	75	03/99 – 07/03		3680
VITO Bus (638)	110 CDI 2.2 (638.194)	75	03/99 – 07/03	3681	
VITO Bus (638)	110 CDI 2.2 (638.194)	75	03/99 – 07/03		3861
VITO Bus (638)	110 TD 2.3 (638.174)	72	02/96 – 07/03		3680
VITO Bus (638)	110 TD 2.3 (638.174)	72	02/96 – 07/03	3681	
VITO Bus (638)	110 TD 2.3 (638.174)	72	02/96 – 07/03		3861
VITO Bus (638)	112 CDI 2.2 (638.194)	90	03/99 – 07/03		3680
VITO Bus (638)	112 CDI 2.2 (638.194)	90	03/99 – 07/03	3681	
VITO Bus (638)	112 CDI 2.2 (638.194)	90	03/99 – 07/03		3861
VITO Bus (638)	113 2.0 (638.114, 638.194)	95	02/96 – 07/03		3680
VITO Bus (638)	113 2.0 (638.114, 638.194)	95	02/96 – 07/03	3681	
VITO Bus (638)	113 2.0 (638.114, 638.194)	95	02/96 – 07/03		3861
VITO Bus (638)	114 2.3 (638.134, 638.194)	105	12/96 – 07/03		3680
VITO Bus (638)	114 2.3 (638.134, 638.194)	105	12/96 – 07/03	3681	
VITO Bus (638)	114 2.3 (638.134, 638.194)	105	12/96 – 07/03		3861
VITO Bus (W639)	119	140	09/03 -	3923	
VITO Bus (W639)	119	140	09/03 -		3924
VITO Bus (W639)	119	140	09/03 -	3925	
VITO Bus (W639)	122	160	09/03 -	3923	
VITO Bus (W639)	122	160	09/03 -		3924
VITO Bus (W639)	122	160	09/03 -	3925	
VITO Bus (W639)	123	170	06/04 -	3923	
VITO Bus (W639)	123	170	06/04 -		3924
VITO Bus (W639)	123	170	06/04 -	3925	
VITO Bus (W639)	126	190	09/07 -	3923	
VITO Bus (W639)	126	190	09/07 -		3924
VITO Bus (W639)	126	190	09/07 -	3925	
VITO Bus (W639)	109 CDI	65	09/03 -	3923	
VITO Bus (W639)	109 CDI	65	09/03 -		3924
VITO Bus (W639)	109 CDI	65	09/03 -	3925	
VITO Bus (W639)	109 CDI	70	09/06 -	3923	
VITO Bus (W639)	109 CDI	70	09/06 -		3924
VITO Bus (W639)	109 CDI	70	09/06 -	3925	
VITO Bus (W639)	109 CDI 4x4	70	09/07 -	3923	
VITO Bus (W639)	109 CDI 4x4	70	09/07 -		3924
VITO Bus (W639)	109 CDI 4x4	70	09/07 -	3925	
VITO Bus (W639)	110 CDI	70	09/10 -		3924
VITO Bus (W639)	110 CDI	70	09/10 -	3925	
VITO Bus (W639)	111 CDI	80	09/03 -	3923	
VITO Bus (W639)	111 CDI	80	09/03 -		3924
VITO Bus (W639)	111 CDI	80	09/03 -	3925	
VITO Bus (W639)	111 CDI (639.701)	85	09/07 -	3923	
VITO Bus (W639)	111 CDI (639.701)	85	09/07 -		3924
VITO Bus (W639)	111 CDI (639.701)	85	09/07 -	3925	
VITO Bus (W639)	111 CDI 4x4	80	09/07 -	3923	
VITO Bus (W639)	111 CDI 4x4	80	09/07 -		3924
VITO Bus (W639)	111 CDI 4x4	80	09/07 -	3925	
VITO Bus (W639)	113 CDI	100	09/10 -		3924
VITO Bus (W639)	113 CDI	100	09/10 -	3925	
VITO Bus (W639)	113 CDI 4x4	100	09/10 -		3924
VITO Bus (W639)	113 CDI 4x4	100	09/10 -	3925	
VITO Bus (W639)	115 CDI	110	09/03 -	3923	
VITO Bus (W639)	115 CDI	110	09/03 -		3924
VITO Bus (W639)	115 CDI	110	09/03 -	3925	
VITO Bus (W639)	115 CDI 4x4	110	09/07 -	3923	
VITO Bus (W639)	115 CDI 4x4	110	09/07 -		3924
VITO Bus (W639)	115 CDI 4x4	110	09/07 -	3925	
VITO Bus (W639)	116 CDI	120	09/10 -		3924
VITO Bus (W639)	116 CDI	120	09/10 -	3925	

MAKE & MODEL   		KW	YEAR		
MERCEDES-BENZ					
VITO Bus (W639)	116 CDI 4x4	120	09/10 -		3924
VITO Bus (W639)	116 CDI 4x4	120	09/10 -	3925	
VITO Bus (W639)	120 CDI	150	07/06 -	3923	
VITO Bus (W639)	120 CDI	150	07/06 -		3924
VITO Bus (W639)	120 CDI	150	07/06 -	3925	
VITO Bus (W639)	122 CDI	165	09/10 -		3924
VITO Bus (W639)	122 CDI	165	09/10 -	3925	
VITO Bus (W639)	E-CELL	60	03/12 -	3923	
VITO Bus (W639)	E-CELL	60	03/12 -		3924
VITO Bus (W639)	E-CELL	60	03/12 -	3925	
VITO Mixto (W447)	109 CDI (447.701, 447.703,447.705)	65	10/14 -	3925	
VITO Mixto (W447)	109 CDI / 109 BlueTEC (447.701, 447.703, 447.705)	65	10/14 -	3925	
VITO Mixto (W447)	111 CDI (447.701, 447.703,447.705)	84	10/14 -	3925	
VITO Mixto (W447)	111 CDI / 111 BlueTEC (447.701, 447.703, 447.705)	84	10/14 -	3925	
	E 2.5-16	143	03/89 – 08/93	3408	
MERCURY					
GRAND MARQUIS			03-11	4195	
GRAND MARQUIS GS SEDAN 4-Door	4.6L 281Cu. In. V8 FLEX SOHC Naturally		06-08		4192
GRAND MARQUIS GS SEDAN 4-Door	4.6L 281Cu. In. V8 GAS SOHC Naturally		03-07		4192
GRAND MARQUIS GSL SEDAN 4-Door	4.6L 281Cu. In. V8 GAS SOHC Naturally		05-		4192
GRAND MARQUIS LIMITED EDITION SEDAN 4-Door	4.6L 281Cu. In. V8 GAS SOHC Naturally		05-		4192
GRAND MARQUIS LS SEDAN 4-Door	4.6L 281Cu. In. V8 FLEX SOHC Naturally		06-11		4192
GRAND MARQUIS LS SEDAN 4-Door	4.6L 281Cu. In. V8 GAS SOHC Naturally		03-07		4192
GRAND MARQUIS LSE SEDAN 4-Door	4.6L 281Cu. In. V8 GAS SOHC Naturally		03-		4192
GRAND MARQUIS ULTIMATE EDITION SEDAN 4-Door	4.6L 281Cu. In. V8 GAS SOHC Naturally		05-		4192
MARAUDER			03-04	4195	
MARINER	2.3 16V		05/04 -	4220	
MARINER	2.3 16V 4WD		05/04 -	4220	
MARINER	2.3 16V 4WD		05/04 -	4220	
MARINER	3.0 24V		05/04 -	4220	
MARINER	3.0 24V 4WD		05/04 -	4220	
MARINER	3.0 24V 4WD		05/04 -	4220	
MARINER	3.0 A las 4 ruedas	151	05/04 – 12/07	4220	
MOUNTAINEER			07-		4196
MG					
EXPRESS Box	14	76	03/03 – 05/05	3683	
EXPRESS Box	14	76	03/03 – 05/05	3872	
EXPRESS Box	14	76	03/03 – 05/05		4212
EXPRESS Box	18	86	03/03 – 05/05	3683	
EXPRESS Box	18	86	03/03 – 05/05	3872	
EXPRESS Box	18	86	03/03 – 05/05		4212
EXPRESS Box	160	118	03/03 – 05/05	4115	
EXPRESS Box	160	118	03/03 – 05/05		4148
EXPRESS Box	2.0 TD	74	03/03 – 05/05	3683	
EXPRESS Box	2.0 TD	74	03/03 – 05/05	3872	
EXPRESS Box	2.0 TD	74	03/03 – 05/05		4212
EXPRESS Box	2.0 TD	83	03/03 – 05/05	3683	
EXPRESS Box	2.0 TD	83	03/03 – 05/05	3872	
EXPRESS Box	2.0 TD	83	03/03 – 05/05		4212
MAESTRO	1600	76	03/83 – 09/84	3624	
MAESTRO	2.0 EFi	86	10/84 – 09/90	3624	
MG X-POWER	4.6 SV	230	01/03-04/08	4347	
MG X-POWER	5.0 SV-R	294	01/05-04/08	4347	
MG ZR	105	76	06/01 – 04/05	3683	
MG ZR	105	76	06/01 – 4/05	3872	
MG ZR	105	76	06/01 – 04/05		4212
MG ZR	120	86	06/01 – 04/05	3683	
MG ZR	120	86	06/01 – 04/05	3872	
MG ZR	120	86	06/01 – 04/05		4212
MG ZR	160	118	06/01 – 04/05	4115	
MG ZR	160	118	06/01 – 04/05		4148
MG ZR	2.0 TD	74	06/01 – 04/05	3683	
MG ZR	2.0 TD	74	06/01 – 04/05	3872	
MG ZR	2.0 TD	74	06/01 – 04/05		4212
MG ZR	2.0 TD	83	12/02 – 04/05	3683	
MG ZR	2.0 TD	83	12/02 – 04/05	3872	
MG ZR	2.0 TD	83	12/02 – 04/05		4212
MG ZS	16	79	07/03 – 04/05	3683	
MG ZS	16	79	07/03 – 04/05	3872	
MG ZS	16	79	07/03 – 04/05		4212

MAKE & MODEL		KW	YEAR		
MG					
MG ZS	120	86	07/01 – 04/05	3683	
MG ZS	120	86	07/01 – 04/05	3872	
MG ZS	120	86	07/01 – 04/05		4212
MG ZS	180	130	07/01 – 04/05	4115	
MG ZS	180	130	07/01 – 04/05		4148
MG ZS	180	130	07/01 – 04/05		4212
MG ZS	2.0 TD	74	01/04 – 04/05	3683	
MG ZS	2.0 TD	74	01/04 – 04/05	3872	
MG ZS	2.0 TD	74	01/04 – 04/05		4212
MG ZS	2.0 TD	83	01/04 – 04/05	3683	
MG ZS	2.0 TD	83	01/04 – 04/05	3872	
MG ZS	2.0 TD	83	01/04 – 04/05		4212
MG ZS Hatchback	16	82	11/01 – 10/05	3683	
MG ZS Hatchback	16	82	11/01 – 10/05	3872	
MG ZS Hatchback	16	82	11/01 – 10/05		4212
MG ZS Hatchback	120	86	07/01 – 10/05	3683	
MG ZS Hatchback	120	86	07/01 – 10/05	3872	
MG ZS Hatchback	120	86	07/01 – 10/05		4212
MG ZS Hatchback	180	130	07/01 – 10/05	4115	
MG ZS Hatchback	180	130	07/01 – 10/05		4148
MG ZS Hatchback	180	130	07/01 – 10/05		4212
MG ZS Hatchback	2.0 TD	74	01/04 – 10/05	3683	
MG ZS Hatchback	2.0 TD	74	01/04 – 10/05	3872	
MG ZS Hatchback	2.0 TD	74	01/04 – 10/05		4212
MG ZS Hatchback	2.0 TD	83	01/04 – 10/05	3683	
MG ZS Hatchback	2.0 TD	83	01/04 – 10/05	3872	
MG ZS Hatchback	2.0 TD	83	01/04 – 10/05		4212
MG ZT	160	118	06/01 – 07/05	3943	
MG ZT	180	130	01/03 – 07/05	3943	
MG ZT	190	140	06/01 – 07/05	3943	
MG ZT	1.8 16V	88	01/03 – 07/05	3943	
MG ZT	1.8 T 16V	118	01/03 – 07/05	3943	
MG ZT	2.0 CDTi	85	06/02 – 09/03	3943	
MG ZT	2.0 CDTi	96	11/02 – 07/05	3943	
MG ZT	260	191	10/03-07/05	4347	
MG ZT- T	160	118	10/01 – 07/05	3943	
MG ZT- T	180	130	01/03 – 07/05	3943	
MG ZT- T	190	140	10/01 – 07/05	3943	
MG ZT- T	1.8 16V	88	01/03 – 07/05	3943	
MG ZT- T	1.8 T 16V	118	01/03 – 07/05	3943	
MG ZT- T	2.0 CDTi	85	06/02 – 07/05	3943	
MG ZT- T	2.0 CDTi	96	11/02 – 07/05	3943	
MG ZT- T	260	191	10/03-07/05	4347	
MGB Convertible	18	68	01/66 – 12/80	3319	
MGB GT	18	68	01/66 – 11/80	3319	
MGR V8	39	140	09/92 – 12/95	3683	
MGR V8	39	140	09/92 – 12/95	3872	
MONTEGO	2.0 EFi	86	04/84 – 09/90	3624	
MONTEGO	2.0 Turbo	110	10/84 – 09/90	3624	
MITSUBISHI					
Canter (FE5, FE6)	6.Generation 916, 918	129	01.12 -	4170	
ASX (GA_W_)	18	102	02/10 -		3893
ASX (GA_W_)	1.6 DI-D	84	07/15 -		3893
ASX (GA_W_)	1.6 DI-D 4WD	84	07/15 -		3893
ASX (GA_W_)	1.6 MIVEC	85	05/10 -		3893
ASX (GA_W_)	1.6 MIVEC	86	06/10 -		3893
ASX (GA_W_)	1.8 4WD	102	02/10 -		3893
ASX (GA_W_)	1.8 DI-D	85	06/10 -		3893
ASX (GA_W_)	1.8 DI-D	110	06/10 -		3893
ASX (GA_W_)	1.8 DI-D 4WD	85	06/10 -		3893
ASX (GA_W_)	1.8 DI-D 4WD	110	06/10 -		3893
ASX (GA_W_)	2.0 i	110	06/10 -		3893
ASX (GA_W_)	2.0 i	118	06/10 -		3893
ASX (GA_W_)	2.0 i 4WD	110	06/10 -		3893
ASX (GA_W_)	2.0 i 4WD	118	06/10 -		3893
ASX (GA_W_)	1.8	102	02/10 -		4316
ASX (GA_W_)	1.6 MIVEC	86	06/10 -		4316
ASX (GA_W_)	1.8 4WD	102	02/10 -		4316
ASX (GA_W_)	1.8 DI-D	85	06/10 -		4316
ASX (GA_W_)	1.8 DI-D 4WD	85	06/10 -		4316
ASX (GA_W_)	1.8 DI-D 4WD	110	06/10 -		4316

MAKE & MODEL   		KW	YEAR		
MITSUBISHI					
ASX (GA_W_)	2.0 i	110	06/10 -		4316
ASX (GA_W_)	2.0 i 4WD	110	06/10 -		4316
ASX (GA_W_)	2.2 Di-D 4WD	110	04/13 -		4316
ASX (GA_W_)	1.6 MIVEC	85	05/10 -		4316
ASX (GA_W_)	1.8 DI-D	110	06/10 -		4316
ASX Van (GA_W_)	1.8 DI-D 4WD	110	06/10 -		3893
ASX Van (GA_W_)	1.8 DI-D 4WD	110	06/10 -		4316
CANTER	2.8 FB511		93-99	4055	
CANTER	2.8 FB51A		99-02	4055	
CANTER	3.3 FE311		85-91	4055	
CANTER	3.3 FE311		91-93	4055	
CANTER	3.6 FE305,FE335,FE		89-93	4055	
CANTER	3.6 FE315		94-99	4055	
CANTER	3.6 FE335		85-91	4055	
CANTER	3.6 FE516		93-99	4055	
CANTER	3.6 FE516,FE536,FE		93-99	4055	
CANTER	3.9 FE439		89-93	4055	
CANTER	3.9 FE439		89-93	4055	
CANTER	3.9 FE639		93-99	4055	
CANTER	3.9 FE639		93-99	4055	
CANTER	3.9 FE669		96-99	4055	
CANTER	3000			4244	
CANTER	3000			4244/1	
CANTER	3000 (FBA20)		12-	4244	
CANTER	3000 (FBA20)		12-	4244/1	
CANTER	3000 (FDA20)		11-	4244	
CANTER	3000 (FDA20)		11-	4244/1	
CANTER	3000 (FEA20)		10-	4244	
CANTER	3000 (FEA20)		10-	4244/1	
CANTER	4.2 FE317		88-93	4055	
CANTER	4.2 FE317,FE337,FE		88-93	4055	
CANTER	4.2 FE337		93-99	4055	
CANTER	4.2 FE437		87-93	4055	
CANTER	4.2 FE437,FE337		87-93	4055	
CANTER	4.2 FE507		93-99	4055	
CANTER	4.2 FE50C		99-02	4055	
CANTER	4.2 FE50C,FE51C,FE		99-02	4055	
CANTER	4.2 FE517,FE537		93-99	4055	
CANTER	4.2 FE517,FE537,FE		93-99	4055	
CANTER	4.2 FE527		95-99	4055	
CANTER	4.2 FE53C,FE63C		99-02	4055	
CANTER	4.2 FE567,FE637		95-99	4055	
CANTER	4.2 FE637		96-99	4055	
CANTER	4.2 FE637,FE567		93-99	4055	
CANTER	4.2 FE63C		99-02	4055	
CANTER	4.2 FE667		96-99	4055	
CANTER	4.2 FG507		96-99	4055	
CANTER	4.6 FE508,FE518		93-99	4055	
CANTER	4.6 FE528		95-99	4055	
CANTER	4.6 FE538,FE638		93-99	4055	
CANTER	4.6 FE538,FE638		93-99	4055	
CANTER	4.6 FE568		96-99	4055	
CANTER	4.6 FE568		96-99	4055	
CANTER	4.6 FE668		96-99	4055	
CANTER	4.6 FG508		96-99	4055	
CANTER	4.6 FG508		97-99	4055	
CANTER	4.9 FE63D		99-02	4055	
CANTER	5.2 FE50E(51E,52E,		99-02	4055	
CANTER	5.2 FE512,FE532		97-99	4055	
CANTER	5.2 FE51E		00-02	4055	
CANTER	5.2 FE53E		99-02	4055	
CANTER	5.2 FE562(632,662)		97-99	4055	
CANTER	5.2 FE59E		99-02	4055	
CANTER	5.2 FE63D(63E,69E)		99-02	4055	
CANTER	5.2 FG50E		99-02	4055	
CANTER	5.2 FG50E,FG52E		99-02	4055	
CANTER	5.2 FG52E		99-02	4055	
CANTER	3000				4245
CANTER	3000				4245/1
CANTER	3000 (FBA20)		12-		4245
CANTER	3000 (FBA20)		12-		4245/1

BESER

MAKE & MODEL		KW	YEAR		
MITSUBISHI					
CANTER	3000 (FDA20)		11-		4245
CANTER	3000 (FDA20)		11-		4245/1
CANTER	3000 (FEA20)		10-		4245
CANTER	3000 (FEA20)		10-		4245/1
CANTER	3000 (FEB20)		10-	4244	
CANTER	3000 (FEB20)		10-	4244/1	
CANTER	3000 (FEB20)		10-		4245
CANTER	3000 (FEB20)		10-		4245/1
Canter (FB7, FB8, FE7, FE8)	7.Generation 6C18	129	08.05 -	4170	
Canter (FB7, FB8, FE7, FE8)	7.Generation 6C18	129	08.05 -	4170	
Canter (FE5, FE6)	6.Generation 413	96	01.12 -	4170	
Canter (FE5, FE6)	6.Generation 515, 516	110	01.12 -	4170	
Canter (FE5, FE6)	6.Generation 615, 616	110	01.12 -	4170	
Canter (FE5, FE6)	6.Generation 616	110	08.12 -	4170	
Canter (FE5, FE6)	6.Generation 6C18 4X4	110	01.12 -	4170	
Canter (FE5, FE6)	6.Generation 713 ECO HYBRID	96	01.12 -	4170	
Canter (FE5, FE6)	6.Generation 715	110	01.12 -	4170	
Canter (FE5, FE6)	6.Generation 7C15 EcoHybrid	110	09.12 -	4170	
Canter (FE5, FE6)	6.Generation 7C15 EcoHybrid	110	09.12 -	4170	
Canter (FE5, FE6)	6.Generation 815, 816	110	01.12 -	4170	
Canter (FE5, FE6)	6.Generation Canter 35	85	07.98 -	4170	
Canter (FE5, FE6)	6.Generation Canter 35	92	09.01 -	4170	
Canter (FE5, FE6)	6.Generation Canter 55	92	09.01 -	4170	
Canter (FE5, FE6)	6.Generation Canter 60	86	07.86 -	4170	
Canter (FE5, FE6)	6.Generation Canter 60	86	07.86 -	4170	
Canter (FE5, FE6)	6.Generation Canter 60	100	08.96 -	4170	
Canter (FE5, FE6)	6.Generation Canter 60	100	08.96 -	4170	
Canter (FE5, FE6)	6.Generation Canter 60	105	09.01 -	4170	
Canter (FE5, FE6)	6.Generation Canter 75	100	10.97 -	4170	
Canter (FE5, FE6)	6.Generation Canter 75	105	09.01 -	4170	
Canter (FE5, FE6)	6.Generation Canter 75	115	01.94 - 12.97	4170	
Canter (FE5, FE6)	6.Generation FE112E4	80	-	4170	
Canter (FE5, FE6)	6.Generation FE122F4	89	-	4170	
Canter (FE5, FE6)	6.Generation FE126F4	89	-	4170	
Canter (FE5, FE6)	6.Generation FE130C1	97	-	4170	
Canter (FE5, FE6)	6.Generation FE150C1	109	-	4170	
Canter (FE5, FE6)	6.Generation FE150E2	109	-	4170	
Canter (FE5, FE6)	6.Generation FE150G1	109	-	4170	
Canter (FE5, FE6)	6.Generation FE150G2, FE150J1	109	-	4170	
Canter (FE5, FE6)	6.Generation FE160C1, FE160E1	110	-	4170	
Canter (FE5, FE6)	6.Generation FE160C2, FE160E2	110	-	4170	
Canter (FE5, FE6)	6.Generation FE160E3	110	-	4170	
Canter (FE5, FE6)	6.Generation FE160E4	110	-	4170	
Canter (FE5, FE6)	6.Generation FE6-109	81	-	4170	
Canter (FE5, FE6)	6.Generation FE7-136	100	-	4170	
Canter (FE5, FE6)	6.Generation FEI60W4	110	-	4170	
Canter (FE5, FE6)	6.Generation FG145C1	103	-	4170	
Canter (FE5, FE6)	6.Generation FG160C1, FG160E1, FG160W1	110	-	4170	
Canter (FE5, FE6)	6.Generation FG6-109	81	-	4170	
Canter (FE5, FE6)	6.Generation FG6-109	81	-	4170	
Canter (FE5, FE6) 6.Generation	6C18 4X4	110	01/12 -	4054	
Canter (FE5, FE6) 6.Generation	Canter 55	92	09/01 -	4216	
Canter (FE5, FE6) 6.Generation	Canter 60	100	08/96 -	4216	
Canter (FE5, FE6) 6.Generation	Canter 60	100	08/96 -	4216	
Canter (FE5, FE6) 6.Generation	Canter 60	105	09/01 -	4216	
Canter (FE5, FE6) 6.Generation	Canter 75	100	10/97 -	4216	
Canter (FE5, FE6) 6.Generation	Canter 75	105	09/01 -	4216	
CARISMA (DA_)	1.6 (DA1A)	66	07/95 – 06/06	3675	
CARISMA (DA_)	1.6 (DA1A)	66	07/95 – 06/06		4062
CARISMA (DA_)	1.6 (DA1A)	70	12/98 – 06/06	3675	
CARISMA (DA_)	1.6 (DA1A)	70	12/98 – 06/06		4062
CARISMA (DA_)	1.6 (DA1A)	73	05/97 – 06/06	3675	
CARISMA (DA_)	1.6 (DA1A)	73	05/97 – 06/06		4062
CARISMA (DA_)	1.6 (DA1A)	76	09/00 – 06/06		4062
CARISMA (DA_)	1.8 (DA2A)	85	07/95 – 07/97		4062
CARISMA (DA_)	1.8 16V GDI (DA2A)	92	09/97 – 06/06		4062
CARISMA (DA_)	1.8 GDI (DA2A)	90	10/00 – 06/06		4062
CARISMA (DA_)	1.8 MSX - 16V (DA2A)	103	07/95 – 07/97		4062
CARISMA (DA_)	1.9 DI-D	85	09/00 – 06/06		4062
CARISMA (DA_)	1.9 DI-D (DA5A)	75	09/00 – 06/06		4062
CARISMA (DA_)	1.9 TD (DA4A)	66	10/96 – 09/00	3675	

BESER

MAKE & MODEL		KW	YEAR		
MITSUBISHI					
CARISMA (DA_)	1.9 TD (DA4A)	66	10/96 – 09/00		4062
CARISMA Saloon (DA_)	1.3 12V (DA6A)	55	09/00 – 10/04		4062
CARISMA Saloon (DA_)	1.6 (DA1A)	66	09/96 – 06/06	3675	
CARISMA Saloon (DA_)	1.6 (DA1A)	66	09/96 – 06/06		4062
CARISMA Saloon (DA_)	1.6 (DA1A)	70	12/98 – 06/06	3675	
CARISMA Saloon (DA_)	1.6 (DA1A)	70	12/98 – 06/06		4062
CARISMA Saloon (DA_)	1.6 (DA1A)	73	05/97 – 06/06	3675	
CARISMA Saloon (DA_)	1.6 (DA1A)	73	05/97 – 06/06		4062
CARISMA Saloon (DA_)	1.6 (DA1A)	76	09/00 – 06/06		4062
CARISMA Saloon (DA_)	1.8 (DA2A)	85	09/96 – 09/97		4062
CARISMA Saloon (DA_)	1.8 16V GDI (DA2A)	92	09/97 – 06/06		4062
CARISMA Saloon (DA_)	1.8 GDI (DA2A)	90	10/00 – 06/06		4062
CARISMA Saloon (DA_)	1.9 DI-D	85	09/00 – 06/06		4062
CARISMA Saloon (DA_)	1.9 DI-D (DA5A)	75	09/00 – 06/06		4062
CARISMA Saloon (DA_)	1.9 TD (DA4A)	66	10/96 – 09/00	3675	
CARISMA Saloon (DA_)	1.9 TD (DA4A)	66	10/96 – 09/00		4062
CELESTE (A7_)	1.4	44	10/75 -	3709	
CELESTE (A7_)	1.6 ST (4G32)	54	01/77 – 06/81	3709	
CELESTE (A7_)	2.0 GSR (4G52)	66	10/75 – 06/81	3709	
CELESTE (A7_)	2.0 GSR (4G52)	71	01/77 – 06/81	3709	
CELESTE (A7_)	2.0 GSR (4G52)	77	01/79 – 06/81	3709	
COLT CZC Convertible (RG)	15	80	05/06 – 07/09		4062
COLT CZC Convertible (RG)	1.5 Turbo	110	05/06 – 07/09	4059	
COLT CZC Convertible (RG)	1.5 Turbo	110	05/06 – 07/09		4062
COLT II (A15_A)	1.2 GL (4G11)	40	12/78 – 01/84	3709	
COLT II (A15_A)	1.4 GLX,GT (4G12)	51	05/79 – 01/84	3709	
COLT II (A15_A)	1.4 GLX,GT (4G12)	51	01/81 – 10/82	3709	
COLT II (A15_A)	1.4 Turbo (4G12 T)	77	09/81 – 01/84	3709	
COLT II (C1)	1.6 Turbo		84-88	3401	
COLT II (C1)	1.8 D		84-88	3401	
COLT II (C1_A)	1.2 EL,GL (C15A)	40	02/84 – 09/86	3400	
COLT II (C1_A)	1.2 EL,GL (C15A)	44	09/86 – 04/88	3400	
COLT II (C1_A)	1.3 EL,GL (C11A)	49	06/86 – 04/88	3400	
COLT II (C1_A)	1.5 GLX (C12A)	51	09/85 – 04/88	3400	
COLT II (C1_A)	1.5 GLX (C12A)	55	09/84 – 04/88	3400	
COLT III (C5)	1.3i		88-90	3401	
COLT III (C5)	1.5i		88-90	3401	
COLT III (C5)	1.6i 16V		88-90	3401	
COLT III (C5)	1.8 D		88-90	3401	
COLT III (C5_A)	1.3 (C51A)	51	04/88 – 05/92	3400	
COLT III (C5_A)	1.3 (C51A)	51	04/88 – 05/92	3604	
COLT III (C5_A)	1.3 12V (C51A)	55	04/88 – 05/92	3400	
COLT III (C5_A)	1.3 12V (C51A)	55	04/88 – 05/92	3604	
COLT III (C5_A)	1.3 GL (C61A)	44	04/88 – 12/90	3400	
COLT III (C5_A)	1.3 GL (C61A)	44	04/88 – 12/90	3604	
COLT III (C5_A)	1.5 (C52A) CAT	66	07/90 – 05/92	3604	
COLT III (C5_A)	1.5 GLXi (C52A)	62	04/88 – 05/92	3400	
COLT III (C5_A)	1.5 GLXi (C52A)	62	04/88 – 05/92	3604	
COLT III (C5_A)	1.8 Diesel GLX (C54A)	44	04/88 – 05/92	3400	
COLT III (C5_A)	1.8 Diesel GLX (C54A)	44	04/88 – 05/92	3604	
COLT III (C5_A)	1.8 GTi 16V (C58A) CAT	100	06/90 – 05/92	3622	
COLT IV (CA_A)	1.3 GLi 12V (CA1A)	55	04/92 – 04/96	3604	
COLT IV (CA_A)	1.6 (CA4A)	66	02/94 – 04/96	3604	
COLT IV (CA_A)	1.6 4WD (CC4A)	84	08/93 – 08/95	3604	
COLT IV (CA_A)	1.6 GLXi 16V (CA4A)	83	04/92 – 04/96	3604	
COLT IV (CA_A)	1.8 GTi 16V (CA5A)	103	04/92 – 04/96	3622	
COLT LANCER II (A7_K)	1.2 (4G36)	40	01/78 – 09/79	3709	
COLT LANCER II (A7_K)	1.4 (4G33)	50	01/78 – 09/79	3709	
COLT LANCER II (A7_K)	1.6 (4G32 GS)	60	01/78 – 09/79	3709	
COLT LANCER II (A7_K)	1.6 GL, GLX	62	01/78 -	3709	
COLT V (CJ_, CP_)	1600	76	09/00 – 09/03	3604	
COLT V (CJ_, CP_)	1.5 16V (CJ2A)	69	10/99 – 09/03	3604	
COLT V (CJ_, CP_)	1300 (CJ1A)	60	06/00 – 09/03	3604	
COLT V (CJ_, CP_)	1300 GL,GLX (CJ1A)	55	05/96 – 06/00	3604	
COLT V (CJ_, CP_)	1600 GLX (CJ4A)	66	05/96 – 09/00	3604	
COLT VI (Z3_A, Z2_A)	11	55	10/04 – 06/12		3916
COLT VI (Z3_A, Z2_A)	11	55	10/04 – 06/12		4062
COLT VI (Z3_A, Z2_A)	13	68	10/04 – 06/12		4062
COLT VI (Z3_A, Z2_A)	13	70	06/04 – 06/12		3916
COLT VI (Z3_A, Z2_A)	13	70	06/04 – 06/12		4062
COLT VI (Z3_A, Z2_A)	15	80	06/04 – 06/12		3916

BESER

MAKE & MODEL		KW	YEAR		
MITSUBISHI					
COLT VI (Z3_A, Z2_A)	15	80	06/04 – 06/12		4062
COLT VI (Z3_A, Z2_A)	1.1 LPG	55	10/04 – 06/12		4062
COLT VI (Z3_A, Z2_A)	1.3 LPG	70	06/04 – 06/12		4062
COLT VI (Z3_A, Z2_A)	1.5 (Z23)	77	07/06 – 06/12		4062
COLT VI (Z3_A, Z2_A)	1.5 (Z27)	72	09/04 – 02/06		4062
COLT VI (Z3_A, Z2_A)	1.5 CZT	110	03/05 – 06/12	4059	
COLT VI (Z3_A, Z2_A)	1.5 CZT	110	03/05 – 06/12		4062
COLT VI (Z3_A, Z2_A)	1.5 DI-D	50	08/04 – 06/12		3916
COLT VI (Z3_A, Z2_A)	1.5 DI-D	50	08/04 – 06/12		4062
COLT VI (Z3_A, Z2_A)	1.5 DI-D	70	08/04 – 06/12		3916
COLT VI (Z3_A, Z2_A)	1.5 DI-D	70	08/04 – 06/12		4062
COLT VI (Z3_A, Z2_A)	1.5 Ralliart R	120	02/10 – 06/12	4059	
COLT VI (Z3_A, Z2_A)	1.5 Ralliart R	120	02/10 – 06/12		4062
COLT VI (Z3_A, Z2_A)	1.5 Turbo (Z23)	113	09/06 – 06/12	4059	
COLT VI (Z3_A, Z2_A)	1.5 Turbo (Z23)	113	09/06 – 06/12		4062
CORDIA (A21)	1.6 Turbo		82-84	3401	
CORDIA (A21)	1.8 Turbo		84-89	3401	
ECLIPSE (D2)	1.8i		88-89	3401	
ECLIPSE (D2)	2.0i 16V		88-89	3401	
ECLIPSE (D2)	2.0i 16V Turbo		88-89	3401	
ECLIPSE I (D2_A)	2.0 i 16V (D22A, D27A)	110	04/91 – 11/95	3622	
ECLIPSE I (D2_A)	2.0 i 16V 4WD (D22A, D27A)	110	04/91 – 11/95	3685	
ECLIPSE II (D3_A)	2.0 Turbo 4WD	157	12/95 – 04/99	3622	
ECLIPSE II (D3_A)	2.0 Turbo 4WD	157	12/95 – 04/99		4108
ECLIPSE II (D3_A)	2000 GS 16V (D32A)	107	12/95 – 04/99	3622	
ECLIPSE II (D3_A)	2000 GS 16V (D32A)	107	12/95 – 04/99		4108
ECLIPSE II (D3_A)	2000 GT 16V	157	12/95 – 04/99	3622	
ECLIPSE II (D3_A)	2000 GT 16V	157	12/95 – 04/99		4108
ECLIPSE II (D3_A)	2400 GS 16V	105	09/98 – 04/99	3622	
ECLIPSE II (D3_A)	2400 GS 16V	105	09/98 – 04/99		4108
FTO Coupe (DE_A)	1.8 (DE2A)	92	09/94 – 07/01	3622	
FTO Coupe (DE_A)	2.0 (DE3A)	127	09/94 – 07/01	3622	
FTO Coupe (DE_A)	2.0 (DE3A)	132	08/97 – 07/01	3622	
FTO Coupe (DE_A)	2.0 (DE3A)	147	09/94 – 07/01	3685	
Fuso	FP18-350TT	257	07.11 -	4170	
Fuso	FP41OG1 AIR	295	09.12 -	4170	
Fuso	FP54SGR AIR	295	11.11 -	4170	
Fuso	FS470S1, FS470S2	335	07.11 -	4170	
Fuso	FS52SS	295	11.11 -	4170	
Fuso	FS52SS	335	11.11 -	4170	
Fuso	FV26-350	257	07.11 -	4170	
Fuso	FV26-420	309	07.11 -	4170	
Fuso	FV470J1	335	07.11 -	4170	
Fuso	FV470K1	335	07.11 -	4170	
Fuso	FV51SK	265	11.11 -	4170	
Fuso	FV51SK	295	11.11 -	4170	
Fuso	FV51SK	335	11.11 -	4170	
Fuso	FV54JR AIR	335	11.11 -	4170	
Fuso	FV54ST AIR	295	11.11 -	4170	
GALANT III (A12_V)	1.6 (4G32)	55	01/77 – 08/80	3709	
GALANT III (A12_V)	1.6 GL (4G32)	55	01/79 – 08/80	3709	
GALANT III (A12_V)	2.0 (4G52)	72	01/79 – 08/80	3709	
GALANT III (A12_V)	2.0 GLX (4G52)	63	01/77 – 08/80	3709	
GALANT III (A12_V)	2.0 GLX (4G52)	72	01/79 – 08/80	3709	
GALANT IV (A16_V)	1.6 GLX	55	09/80 – 05/84	3407	
GALANT III (E1)	1.6		84-87	3401	
GALANT III (E1)	1.8 TD		84-87	3401	
GALANT III (E1)	2.0 /4wd		84-87	3401	
GALANT III (E1)	2.0 Turbo		84-87	3401	
GALANT III (E1)	2.3		84-87	3401	
GALANT IV (E3)	1.6		87-90	3401	
GALANT IV (E3)	1.8		87-90	3401	
GALANT IV (E3)	1.8 TD		87-90	3401	
GALANT IV (E3)	2.0 /4wd (E33A-E38A)		87-90	3401	
GALANT IV (E3)	2.0 /4wd (E39A)		87-90	3401	
GALANT IV (E3)	2.0 GTI 16V /4wd		87-89	3401	
GALANT IV (E3_A)	2.0 GTI 16V (E39A, E38A, E33A)	107	11/88 – 10/92	3622	
GALANT IV (E3_A)	2.0 GTI 16V 4x4 (E38A, E39A, E33A)	106	07/89 – 12/92	3622	
GALANT IV (E3_A)	1.8 (E32A)	66	11/88 – 10/92	3622	
GALANT IV (E3_A)	1.8 Turbo-D (E34A)	55	11/88 – 10/92	3622	
GALANT IV (E3_A)	2.0 (E39A, E38A, E33A)	77	05/89 – 12/92	3622	

MAKE & MODEL		KW	YEAR		
MITSUBISHI					
GALANT IV (E3_A)	2.0 (E39A, E38A, E33A)	80	04/89 – 10/92	3622	
GALANT IV (E3_A)	2.0 4WD (E33A, E38A, E39A)	80	04/89 – 10/92	3622	
GALANT IV (E3_A)	2.0 GTI 16V (E39A, E38A, E33A)	106	11/88 – 10/92	3622	
GALANT IV Saloon (E3_A)	2.0 GTI 16V 4WD (E38A, E39A, E33A) CAT	110	09/91 – 10/92	3622	
GALANT IV Saloon (E3_A)	2.0 GTi 16V (E39A, E38A, E33A)	107	11/88 – 10/92	3622	
GALANT IV Saloon (E3_A)	1.8 (E32A)	63	11/87 – 08/90	3622	
GALANT IV Saloon (E3_A)	1.8 (E32A)	66	11/87 10/92	3622	
GALANT IV Saloon (E3_A)	1.8 Turbo-D (E34A)	55	12/87 10/92	3622	
GALANT IV Saloon (E3_A)	2.0 (E39A, E38A, E33A)	77	05/89 12/92	3622	
GALANT IV Saloon (E3_A)	2.0 (E39A, E38A, E33A)	80	11/87 10/92	3622	
GALANT IV Saloon (E3_A)	2.0 4WD (E39A, E38A, E33A)	80	12/88 10/92	3622	
GALANT IV Saloon (E3_A)	2.0 GTi 16V (E39A, E38A, E33A)	106	11/87 10/92	3622	
GALANT IV Saloon (E3_A)	2.0 GTi 16V 4WD (E39A, E38A, E33A)	106	06/88 – 10/92	3622	
GALANT V (E5_A, E7_A, E8_A)	1.8 (E52A)	85	02/94 – 08/96	3622	
GALANT V (E5_A, E7_A, E8_A)	1.8 (E52A)	85	02/94 – 08/96		4108
GALANT V (E5_A, E7_A, E8_A)	1.8 GLSI (E52A)	93	11/92 – 08/96	3622	
GALANT V (E5_A, E7_A, E8_A)	1.8 GLSI (E52A)	93	11/92 – 08/96		4108
GALANT V (E5_A, E7_A, E8_A)	2.0 (E55A)	90	04/93 – 03/95	3622	
GALANT V (E5_A, E7_A, E8_A)	2.0 GLSI (E55A)	101	11/92 – 08/96	3622	
GALANT V (E5_A, E7_A, E8_A)	2.0 GLSI (E55A)	101	11/92 – 08/96		4108
GALANT V (E5_A, E7_A, E8_A)	2.0 GLSI 4WD (E75A)	101	11/92 – 08/96	3622	
GALANT V (E5_A, E7_A, E8_A)	2.0 GLSI 4WD (E75A)	101	11/92 – 08/96		4108
GALANT V (E5_A, E7_A, E8_A)	2.0 GLSTD (E57A)	66	11/92 – 08/96	3622	
GALANT V (E5_A, E7_A, E8_A)	2.0 GLSTD (E57A)	66	11/92 – 08/96		4108
GALANT V (E5_A, E7_A, E8_A)	2.0 V6-24 (E64A, E54A)	110	11/92 – 08/96	3622	
GALANT V (E5_A, E7_A, E8_A)	2.0 V6-24 (E64A, E54A)	110	11/92 – 08/96		4108
GALANT V (E5_A, E7_A, E8_A)	2.5 V6-24 4WD (E88A)	125	11/92 – 08/96	3685	
GALANT V (E5_A, E7_A, E8_A)	2.5 V6-24 4WD (E88A)	125	11/92 – 08/96		4108
GALANT V Saloon (E5_A, E7_A, E8_A)	1.8 (E52A)	85	02/94 – 08/96	3622	
GALANT V Saloon (E5_A, E7_A, E8_A)	1.8 (E52A)	85	02/94 – 08/96		4108
GALANT V Saloon (E5_A, E7_A, E8_A)	1.8 GLSI (E52A)	93	11/92 – 08/96	3622	
GALANT V Saloon (E5_A, E7_A, E8_A)	1.8 GLSI (E52A)	93	11/92 – 08/96		4108
GALANT V Saloon (E5_A, E7_A, E8_A)	2.0 GLSI (E55A)	101	11/92 – 08/96	3622	
GALANT V Saloon (E5_A, E7_A, E8_A)	2.0 GLSI (E55A)	101	11/92 – 08/96		4108
GALANT V Saloon (E5_A, E7_A, E8_A)	2.0 GLSI 4WD (E75A)	101	11/92 – 08/96	3622	
GALANT V Saloon (E5_A, E7_A, E8_A)	2.0 GLSI 4WD (E75A)	101	11/92 – 08/96		4108
GALANT V Saloon (E5_A, E7_A, E8_A)	2.0 GLSTD (E57A)	66	11/92 – 08/96	3622	
GALANT V Saloon (E5_A, E7_A, E8_A)	2.0 GLSTD (E57A)	66	11/92 – 08/96		4108
GALANT V Saloon (E5_A, E7_A, E8_A)	2.0 V6-24 (E64A, E54A)	110	11/92 – 08/96	3622	
GALANT V Saloon (E5_A, E7_A, E8_A)	2.0 V6-24 (E64A, E54A)	110	11/92 – 08/96		4108
GALANT V Saloon (E5_A, E7_A, E8_A)	2.5 V6-24 4WD (E88A)	125	11/92 – 08/96	3685	
GALANT V Saloon (E5_A, E7_A, E8_A)	2.5 V6-24 4WD (E88A)	125	11/92 – 08/96		4108
GALANT VI (EA_)	1.8 GDi	103	11/97 – 10/01	3622	
GALANT VI (EA_)	1.8 GDi	103	11/97 – 10/01		4108
GALANT VI (EA_)	2.0 (EA2A)	98	09/00 – 10/04		4108
GALANT VI (EA_)	2.0 (EA2A)	100	09/96 – 09/00	3622	
GALANT VI (EA_)	2.0 (EA2A)	100	09/96 – 09/00	3685	
GALANT VI (EA_)	2.0 (EA2A)	100	09/96 – 09/00		4108
GALANT VI (EA_)	2.0 GDI	107	10/99 – 10/04		4108
GALANT VI (EA_)	2.0 TDI (EA6A)	66	09/96 – 10/04	3622	
GALANT VI (EA_)	2.0 TDI (EA6A)	66	09/96 – 10/04	3685	
GALANT VI (EA_)	2.0 TDI (EA6A)	66	09/96 – 10/04		4108
GALANT VI (EA_)	2.4 GDI (EA3A)	106	09/00 – 10/04	3622	
GALANT VI (EA_)	2.4 GDI (EA3A)	106	09/00 – 10/04		4108
GALANT VI (EA_)	2.4 GDI (EA3A)	110	02/99 – 09/00	3622	
GALANT VI (EA_)	2.4 GDI (EA3A)	110	02/99 – 09/00		4108
GALANT VI (EA_)	2.5 Type S	151	10/99 – 10/04	3622	
GALANT VI (EA_)	2.5 Type S	151	10/99 – 10/04	3685	
GALANT VI (EA_)	2.5 V6 24V	206	09/96 – 10/02	3685	
GALANT VI (EA_)	2.5 V6 24V (EA5A)	118	09/00 – 10/04	3622	
GALANT VI (EA_)	2.5 V6 24V (EA5A)	118	09/00 – 10/04		4108
GALANT VI (EA_)	2.5 V6 24V (EA5A)	120	09/96 – 09/00	3622	
GALANT VI (EA_)	2.5 V6 24V (EA5A)	120	09/96 – 09/00	3685	
GALANT VI (EA_)	2.5 V6 24V (EA5A)	120	09/96 – 09/00		4108
GALANT VI Estate (EA_)	2.0 (EA2W)	98	09/00 – 10/03		4108
GALANT VI Estate (EA_)	2.0 (EA2W)	100	09/96 – 09/00	3622	
GALANT VI Estate (EA_)	2.0 (EA2W)	100	09/96 – 09/00	3685	
GALANT VI Estate (EA_)	2.0 (EA2W)	100	09/96 – 09/00		4108
GALANT VI Estate (EA_)	2.0 TDI (EA6W)	66	09/96 – 10/03	3622	
GALANT VI Estate (EA_)	2.0 TDI (EA6W)	66	09/96 – 10/03	3685	
GALANT VI Estate (EA_)	2.0 TDI (EA6W)	66	09/96 – 10/03		4108

MAKE & MODEL		KW	YEAR		
MITSUBISHI					
GALANT VI Estate (EA_)	2.4 GDI (EA3W)	106	09/00 – 10/03		4108
GALANT VI Estate (EA_)	2.4 GDI (EA3W)	110	02/99 – 10/03	3685	
GALANT VI Estate (EA_)	2.4 GDI (EA3W)	110	02/99 – 10/03		4108
GALANT VI Estate (EA_)	2.5 V6 24V	206	09/96 – 10/02	3685	
GALANT VI Estate (EA_)	2.5 V6 24V (EA5W)	118	09/00 – 10/03		4108
GALANT VI Estate (EA_)	2.5 V6 24V (EA5W)	120	09/96 – 09/00	3685	
GALANT VI Estate (EA_)	2.5 V6 24V (EA5W)	120	09/96 – 09/00		4108
GRANDIS (NA_W)	24	121	04/04 -		3893
GRANDIS (NA_W)	24	130	04/04 -		3893
GRANDIS (NA_W)	2.0 DI-D	100	09/05 -		3893
GRANDIS (NA_W)	2.0 DI-D	103	02/07 -		3893
GRANDIS (NA_W)	GRANDIS (NA_W)	100	09/05 -	3892	
GRANDIS (NA_W)	GRANDIS (NA_W)	103	02/07 -	3892	
GRANDIS (NA_W)	GRANDIS (NA_W)	121	04/04 -	3892	
GRANDIS (NA_W)	GRANDIS (NA_W)	130	04/04 -	3892	
L 200 (K3_T, K2_T, K1_T, K0_T)	1.6 (K11T)	60	04/87 – 10/96	3448	
L 200 (K3_T, K2_T, K1_T, K0_T)	2.0 (K12T, K32T)	75	11/86 – 08/96	3448	
L 200 (K3_T, K2_T, K1_T, K0_T)	2.0 (K32T, K12T)	69	01/87 – 12/90	3448	
L 200 (K3_T, K2_T, K1_T, K0_T)	2.0 4WD (K32T, K22T)	75	11/86 – 08/96	3448	
L 200 (K3_T, K2_T, K1_T, K0_T)	2.5 D (K14T)	51	11/86 – 10/96	3448	
L 200 (K3_T, K2_T, K1_T, K0_T)	2.5 D (K14T)	51	11/86 – 10/96	3685	
L 200 (K3_T, K2_T, K1_T, K0_T)	2.5 D 4WD (K24T)	51	12/87 – 05/93	3448	
L 200 (K3_T, K2_T, K1_T, K0_T)	2.5 D 4WD (K24T)	51	12/87 – 05/93	3685	
L 200 (K3_T, K2_T, K1_T, K0_T)	2.5 TD 4WD (K34T)	64	11/92 – 08/96	3448	
L 200 (K3_T, K2_T, K1_T, K0_T)	2.5 TD 4WD (K34T)	64	11/92 – 08/96	3685	
L 200 (K3_T, K2_T, K1_T, K0_T)	2.6 4WD (K33T)	76	11/89 – 05/95	3448	
L 200 (K3_T, K2_T, K1_T, K0_T)	2.6 4WD (K33T)	76	11/89 – 05/95	3685	
L 200 (K7_T, K6_T)	2.0 (K62T)	90	06/96 – 12/07	3809	
L 200 (K7_T, K6_T)	2.0 (K62T)	90	06/96 – 12/07	3900	
L 200 (K7_T, K6_T)	2.4 4WD (K75T)	97	06/96 – 12/07	3809	
L 200 (K7_T, K6_T)	2.4 4WD (K75T)	97	06/96 – 12/07	3900	
L 200 (K7_T, K6_T)	2.5 D (K64T)	55	06/96 – 12/07	3809	
L 200 (K7_T, K6_T)	2.5 D (K64T)	55	06/96 – 12/07	3900	
L 200 (K7_T, K6_T)	2.5 TD (K64T)	66	08/01 – 11/05	3809	
L 200 (K7_T, K6_T)	2.5 TD (K64T)	66	08/01 – 11/05	3900	
L 200 (K7_T, K6_T)	2.5 TD 4WD (K74T)	73	06/96 – 12/07	3809	
L 200 (K7_T, K6_T)	2.5 TD 4WD (K74T)	73	06/96 – 12/07	3900	
L 200 (K7_T, K6_T)	2.5 TD 4WD (K74T)	85	09/01 – 12/07	3809	
L 200 (K7_T, K6_T)	2.5 TD 4WD (K74T)	85	09/01 – 12/07	3900	
L 200 (K7_T, K6_T)	2.5 TD 4WD (K74T)	98	08/01 – 12/07	3809	
L 200 (K7_T, K6_T)	2.5 TD 4WD (K74T)	98	08/01 – 12/07	3900	
L 200 (K7_T, K6_T)	2.8 TD 4WD	92	04/03 – 06/06	3809	
L 200 (K7_T, K6_T)	3.0 4WD	133	10/96 – 10/06	3809	
L 200 / L200 EXPRESS / FORTE / COLT-RODEO (MA, MB, MC,	1.6	51	01/78 -	3376	
L 200 / L200 EXPRESS / FORTE / COLT-RODEO (MA, MB, MC,	1.6	60	09/84 – 10/86	3376	
L 200 / L200 EXPRESS / FORTE / COLT-RODEO (MA, MB, MC,	1.6	60	03/80 – 08/84	3376	
L 200 / L200 EXPRESS / FORTE / COLT-RODEO (MA, MB, MC,	2.0	63	01/81 – 10/86	3376	
L 200 / L200 EXPRESS / FORTE / COLT-RODEO (MA, MB, MC,	2.0	66	10/81 – 09/82	3376	
L 200 / L200 EXPRESS / FORTE / COLT-RODEO (MA, MB, MC,	2.0	66	10/82 – 10/86	3376	
L 200 / L200 EXPRESS / FORTE / COLT-RODEO (MA, MB, MC,	2.0	66	07/81 – 09/82	3376	
L 200 / L200 EXPRESS / FORTE / COLT-RODEO (MA, MB, MC,	2.0	66	10/82 – 10/86	3376	
L 200 / L200 EXPRESS / FORTE / COLT-RODEO (MA, MB, MC,	2.3	50	10/82 – 10/86	3376	
L 200 / L200 EXPRESS / FORTE / COLT-RODEO (MA, MB, MC,	2.3	50	10/82 – 08/84	3376	
L 200 / L200 EXPRESS / FORTE / COLT-RODEO (MA, MB, MC,	2.3 D (4D55)	62	01/83 – 10/86	3376	
L 200 / TRITON (KA_T, KB_T)	2.4 CNG	94	04/10 -	3975	
L 200 / TRITON (KA_T, KB_T)	2.4 i	94	11/05 -	3975	
L 200 / TRITON (KA_T, KB_T)	2.5 DI-D	103	04/10 -	3975	
L 200 / TRITON (KA_T, KB_T)	2.5 DI-D	123	08/07 -	3975	
L 200 / TRITON (KA_T, KB_T)	2.5 DI-D (KA4T)	94	04/10 -	3975	
L 200 / TRITON (KA_T, KB_T)	2.5 DI-D 4WD (KA4TXCN)	103	04/10 -	3975	
L 200 / TRITON (KA_T, KB_T)	2.5 DI-D 4WD (KB4T)	100	11/05 -	3975	
L 200 / TRITON (KA_T, KB_T)	2.5 DI-D 4WD (KB4T)	123	10/07 -	3975	
L 200 / TRITON (KA_T, KB_T)	2.5 DI-D 4WD (KB4T)	131	04/10 -	3975	
L 200 / TRITON (KA_T, KB_T)	2.5 DiD (KA4T)	100	11/05 -	3975	
L 200 / TRITON (KA_T, KB_T)	3.2 DI-D 4WD	118	07/06 -	3975	
L 200 / TRITON (KA_T, KB_T)	3.2 DI-D 4WD	121	05/07 -	3975	
L 200 / TRITON (KA_T, KB_T)	3.5 4WD	147	05/07 -	3975	
L 200 / TRITON (KJ_, KK_, KL_)	2.4 (KK4T)	94	11/14 -	3975	
L 200 / TRITON (KJ_, KK_, KL_)	2.4 DI-D	133	01/15 -	3975	
L 200 / TRITON (KJ_, KK_, KL_)	2.4 DI-D 4WD	133	11/14 -	3975	
L 200 / TRITON (KJ_, KK_, KL_)	2.4 DI-D 4WD (KJ0T)	113	09/15 -	3975	

BESER

MAKE & MODEL		KW	YEAR		
MITSUBISHI					
L 200 / TRITON (KJ_, KK_, KL_)	2.5 DI-D	94	11/14 -	3975	
L 200 / TRITON (KJ_, KK_, KL_)	2.5 DI-D	100	01/15 -	3975	
L 200 / TRITON (KJ_, KK_, KL_)	2.5 DI-D 4WD	131	11/14 -	3975	
L 200 Platform/Chassis (MQ)	2.4 D	133	01/15 -	3975	
L 200 Platform/Chassis (MQ)	2.4 D 4WD	133	01/15 -	3975	
L 300 I Platform/Chassis (L03_P)	1.6 (L032P, L062P)	51	04/83 – 04/94	3448	
L 300 I Platform/Chassis (L03_P)	2.5 D (L039P)	51	11/86 – 04/94	3448	
L 300 II Box (P0_V, P1_V, P_2V)	1.6 (P12V, P02V)	51	11/86 – 05/94	3448	
L 300 II Box (P0_V, P1_V, P_2V)	2.0 (P03V, P13V)	64	11/86 – 05/96	3448	
L 300 II Box (P0_V, P1_V, P_2V)	2.0 (P23V, P03V, P13V)	78	06/94 – 05/96	3448	
L 300 II Box (P0_V, P1_V, P_2V)	2.0 (P23W, P23V)	83	11/03 – 02/06	3448	
L 300 II Box (P0_V, P1_V, P_2V)	2.0 4WD (P23W, P23V)	63	08/88 – 05/94	3448	
L 300 II Box (P0_V, P1_V, P_2V)	2.4 (P24V, P24W)	82	11/86 – 08/97	3448	
L 300 II Box (P0_V, P1_V, P_2V)	2.4 4WD (P24V, P24W)	82	11/86 – 08/97	3448	
L 300 II Box (P0_V, P1_V, P_2V)	2.4 i	84	03/06 – 09/13	3448	
L 300 II Box (P0_V, P1_V, P_2V)	2.5 D	55	09/91 – 09/03	3448	
L 300 II Box (P0_V, P1_V, P_2V)	2.5 D (P05V, P05W, P15V)	51	11/86 – 02/06	3448	
L 300 II Box (P0_V, P1_V, P_2V)	2.5 TD 4WD	64	11/91 – 05/03	3448	
L 300 II Bus (P0_W, P1_W, P2_W)	30	136	06/94 – 05/03	3448	
L 300 II Bus (P0_W, P1_W, P2_W)	1.6 (P02V, P12V)	51	11/86 – 05/04	3448	
L 300 II Bus (P0_W, P1_W, P2_W)	2.0 (P13T, P03W, P03V, P13V)	66	11/86 – 05/04	3448	
L 300 II Bus (P0_W, P1_W, P2_W)	2.0 (P13V, P13W, P03W, P13T)	64	11/86 – 05/04	3448	
L 300 II Bus (P0_W, P1_W, P2_W)	2.0 i (P13V, P00W, P03V, P03W, P13T)	83	06/94 – 10/98	3448	
L 300 II Bus (P0_W, P1_W, P2_W)	2.4 (P04W, P14V, P04V)	82	11/90 – 05/04	3448	
L 300 II Bus (P0_W, P1_W, P2_W)	2.4 4WD (P24W, P24V)	80	11/86 – 12/90	3448	
L 300 II Bus (P0_W, P1_W, P2_W)	2.4 4WD (P24W, P24V)	82	11/90 – 05/04	3448	
L 300 II Bus (P0_W, P1_W, P2_W)	2.5 D (P05W, P05V, P15T)	55	09/91 – 09/03	3448	
L 300 II Bus (P0_W, P1_W, P2_W)	2.5 D (P25V, P05W, P05V, P15V, P15T)	51	11/86 – 05/04	3448	
L 300 II Bus (P0_W, P1_W, P2_W)	2.5 TD 4WD (P25W, P25V)	64	11/88 – 05/04	3448	
L 300 II Bus (P0_W, P1_W, P2_W)	3.0 4WD	136	10/00 – 05/03	3448	
L 300 II Bus (P0_W, P1_W, P2_W)	2.0 4WD (P13V, P23V, P23W, P03V, P13T)	65	12/86 – 05/04	3448	
L 300 II Bus (P0_W, P1_W, P2_W)	2.0 4WD (P13V, P23W, P03V, P13T)	66	11/86 – 05/04	3448	
L 300 II Bus (P0_W, P1_W, P2_W)	2.0 GLS (P13V, P03W, P03V, P13T)	78	06/94 – 05/96	3448	
L 300 II Platform/Chassis (P1_T)	2.0 (P13T)	85	07/94 – 04/00	3448	
L 300 II Platform/Chassis (P1_T)	2.5 TD (P15T)	64	11/94 – 04/00	3448	
L 300 III Platform/Chassis (P1_T)	2.0 (P13T)	85	07/94 – 04/00	3809	
L 300 III Platform/Chassis (P1_T)	2.5 TD (P15T)	64	11/94 – 04/00	3809	
L 400 / SPACE GEAR Bus (PD_W, PC_W, PA_V, PB_V,PA_W)	2.0 (PA3W)	83	09/95 – 10/02	3685	
L 400 / SPACE GEAR Bus (PD_W, PC_W, PA_V, PB_V,PA_W)	2.5 TD (PA5V/W, PB5V)	73	05/95 – 05/00		3688
L 400 / SPACE GEAR Bus (PD_W, PC_W, PA_V, PB_V,PA_W)	2.5 TD 4WD (PD5V/W)	73	05/95 – 05/00	3685	
L 400 / SPACE GEAR Bus (PD_W, PC_W, PA_V, PB_V,PA_W)	2.0 16V	85	05/95 – 05/00	3685	
L 400 / SPACE GEAR Bus (PD_W, PC_W, PA_V, PB_V,PA_W)	2.0 16V (PA3V/W, PB3V,PA3W)	85	05/95 – 05/00		3688
L 400 / SPACE GEAR Bus (PD_W, PC_W, PA_V, PB_V,PA_W)	2.4	97	05/95 – 10/02	3685	
L 400 / SPACE GEAR Bus (PD_W, PC_W, PA_V, PB_V,PA_W)	2.4 i 4WD (PD4V/W)	97	05/95 – 05/00	3685	
L 400 / SPACE GEAR Bus (PD_W, PC_W, PA_V, PB_V,PA_W)	2.4 i 4WD (PD4V/W)	97	05/95 – 05/00		3688
L 400 / SPACE GEAR Bus (PD_W, PC_W, PA_V, PB_V,PA_W)	2.5 TD (PA5V/W, PB5V)	73	05/95 – 05/00	3685	
L 400 / SPACE GEAR Bus (PD_W, PC_W, PA_V, PB_V,PA_W)	2.5 TD 4WD (PD5V/W)	73	05/95 – 05/00		3688
L 400 / SPACE GEAR Bus (PD_W, PC_W, PA_V, PB_V,PA_W)	2500 TD	64	05/95 – 06/05	3685	
L 400 / SPACE GEAR Bus (PD_W, PC_W, PA_V, PB_V,PA_W)	2500 TD	64	05/95 – 06/05		3688
L 400 Box (PD_W, PC_W, PB_V, PA_W, PA_V)	16	51	06/96 – 10/02	3685	
L 400 Box (PD_W, PC_W, PB_V, PA_W, PA_V)	16	51	06/96 – 10/02	3809	
L 400 Box (PD_W, PC_W, PB_V, PA_W, PA_V)	20	85	06/96 – 03/01	3685	
L 400 Box (PD_W, PC_W, PB_V, PA_W, PA_V)	20	85	06/96 – 03/01	3809	
L 400 Box (PD_W, PC_W, PB_V, PA_W, PA_V)	24	97	06/96 – 10/02	3685	
L 400 Box (PD_W, PC_W, PB_V, PA_W, PA_V)	24	97	06/96 – 10/02	3809	
L 400 Box (PD_W, PC_W, PB_V, PA_W, PA_V)	2.0 (PA3W)	83	12/94 – 10/02	3685	
L 400 Box (PD_W, PC_W, PB_V, PA_W, PA_V)	2.0 (PA3W)	83	12/94 – 10/02	3809	
L 400 Box (PD_W, PC_W, PB_V, PA_W, PA_V)	2500 TD (PD5W, PD5V PA5W, PA5V)	64	09/96 – 06/05	3685	
L 400 Box (PD_W, PC_W, PB_V, PA_W, PA_V)	2500 TD (PD5W, PD5V, PA5W, PA5V)	64	09/96 – 06/05	3809	
L 400 Box (PD_W, PC_W, PB_V, PA_W, PA_V)	2500 TD (PD5W, PD5V,PA5W, PA5V)	64	09/96 – 06/05		3688
L 400 Box (PD_W, PC_W, PB_V, PA_W, PA_V)	2500 TD 4WD (PD5W, PD5V,PA5W, PA5V)	64	09/96 – 06/05	3809	
L 400 Box (PD_W, PC_W, PB_V, PA_W, PA_V)	2500 TD 4WD (PD5W, PD5V,PA5W, PA5V)	64	09/96 – 06/05	3685	
L 400 Bus (PD_W, PC_W, PA_V, PB_V, PA_W)	24	97	05/95 – 10/02	3809	
L 400 Bus (PD_W, PC_W, PA_V, PB_V, PA_W)	2.4 i 4WD (PD4V/W)	97	05/95 – 05/00	3809	
L 400 Bus (PD_W, PC_W, PA_V, PB_V, PA_W)	2.5 TD (PA5V/W, PB5V)	73	05/95 – 05/00	3809	
L 400 Bus (PD_W, PC_W, PA_V, PB_V, PA_W)	2.5 TD 4WD (PD5V/W)	73	05/95 – 05/00	3809	
L 400 Bus (PD_W, PC_W, PA_V, PB_V, PA_W)	2500 TD	64	05/95 – 06/05	3809	
L 400 Bus (PD_W, PC_W, PA_V, PB_V, PA_W)	2.0 (PA3W)	83	09/95 – 10/02	3809	
L 400 Bus (PD_W, PC_W, PA_V, PB_V, PA_W)	2.0 16V (PA3V/W, PB3V,PA3W)	85	05/95 – 05/00	3809	
LANCER II	1.2 (4G11)	40	01/80 – 12/81	3407	
LANCER II	1.4 GLX (4G12)	50	09/79 – 02/83	3407	

MAKE & MODEL		KW	YEAR		
MITSUBISHI					
LANCER II	1.6 (4G32 GS)	60	09/79 – 02/83	3407	
LANCER II	1.6 (4G32 GS)	62	01/81 – 02/83	3407	
LANCER II (A17_)	1.4 GLX (4G12)	50	09/79 – 02/83	3709	
LANCER II (A17_)	1.6 (4G32 GS)	60	09/79 – 02/83	3709	
LANCER Estate (CS_W)	16	72	09/03 – 10/08		4106
LANCER Estate (CS_W)	20	92	08/05 – 10/08	3765	
LANCER Estate (CS_W)	20	92	08/05 – 10/08		4106
LANCER Estate (CS_W)	20	99	09/03 – 12/07		4106
LANCER F II / COLT (A17_)	1.2 GLX	40	03/83 -	3709	
LANCER F II / COLT (A17_)	1.2 GLX (4G11)	40	03/83 – 01/84	3709	
LANCER F II / COLT (A17_)	1.4 GLX	51	03/83 -	3709	
LANCER F II / COLT (A17_)	1.4 GLX (4G12)	51	03/83 – 01/84	3709	
LANCER F II / COLT (A17_)	1.4 Turbo	77	03/83 -	3709	
LANCER F II / COLT (A17_)	1.4 Turbo (4G12 T)	77	03/83 – 01/84	3709	
LANCER III (C1_A, C6_A)	1.2 (C65A)	44	08/86 – 04/88	3400	
LANCER III (C1_A, C6_A)	1.2 GL (C15AS)	40	01/84 – 10/86	3400	
LANCER III (C1_A, C6_A)	1.5 GLX (C12AS)	51	06/85 – 04/88	3400	
LANCER III (C1_A, C6_A)	1.5 GLX (C12AS)	55	11/83 – 04/88	3400	
LANCER III Station Wagon (C1_V, C3_V)	1.5 (C12V)	51	09/85 – 08/89	3400	
LANCER III Station Wagon (C1_V, C3_V)	1.5 (C12V)	55	09/85 – 12/87	3400	
LANCER III Station Wagon (C1_V, C3_V)	1.5 (C12V)	61	09/88 – 12/90	3400	
LANCER III Station Wagon (C1_V, C3_V)	1.5 (C12V)	61	09/88 – 12/90	3604	
LANCER III Station Wagon (C1_V, C3_V)	1.5 12V (C12V)	66	09/90 – 12/91	3604	
LANCER III Station Wagon (C1_V, C3_V)	1.8 4WD (C37V)	63	03/89 – 12/90	3604	
LANCER III Station Wagon (C1_V, C3_V)	1.8 4WD (C37V)	69	08/90 – 06/92	3604	
LANCER III Station Wagon (C1_V, C3_V)	1.8 D (C14V)	44	08/86 – 06/92	3604	
LANCER III WAGON (C1_V-C3_V)	1.5		85-90	3401	
LANCER III WAGON (C1_V-C3_V)	1.8 /4wd		85-90	3401	
LANCER III WAGON (C1_V-C3_V)	1.8 D		85-90	3401	
LANCER IV (C5-C6-C7)	1.2		88-90	3401	
LANCER IV (C5-C6-C7)	1.3 12V		88-90	3401	
LANCER IV (C5-C6-C7)	1.5 12V		88-90	3401	
LANCER IV (C5-C6-C7)	1.8 D		88-90	3401	
LANCER IV (C5-C6-C7)	1.8i /4wd		88-90	3401	
LANCER IV (C6_A, C7_A)	1.3 12V (C61A)	55	06/92 – 05/94	3604	
LANCER IV (C6_A, C7_A)	1.5 (C62A)	62	06/88 – 05/92	3400	
LANCER IV (C6_A, C7_A)	1.5 (C62A)	62	06/88 – 05/92	3604	
LANCER IV (C6_A, C7_A)	1.5 12V (C62A)	66	05/89 – 05/92	3400	
LANCER IV (C6_A, C7_A)	1.5 12V (C62A)	66	05/89 – 05/92	3604	
LANCER IV (C6_A, C7_A)	1.6 16V (C76A, C66A)	83	06/92 – 05/94	3604	
LANCER IV (C6_A, C7_A)	1.6 i (C63A)	90	09/90 – 09/92	3604	
LANCER IV (C6_A, C7_A)	1.8 4WD (C77A)	71	09/89 – 06/92	3400	
LANCER IV (C6_A, C7_A)	1.8 4WD (C77A)	71	09/89 – 06/92	3604	
LANCER IV (C6_A, C7_A)	1.8 D (C64A)	44	04/88 – 05/92	3400	
LANCER IV (C6_A, C7_A)	1.8 D (C64A)	44	04/88 – 05/92	3604	
LANCER IV (C6_A, C7_A)	1.8 GTi 16V (C68A)	100	11/89 – 05/92	3622	
LANCER IV (C6_A, C7_A)	1.8 GTi 16V (C69A)	103	06/92 – 12/93	3622	
LANCER IV (C6_A, C7_A)	1.5	61	09.88 - 08.89	4033	
LANCER IV (C6_A, C7_A)	1.5 (C62A)	56	09.88 - 08.90	4033	
LANCER IV Saloon (C6_A)	1.3 (C61A)	44	04/88 – 05/92	3400	
LANCER IV Saloon (C6_A)	1.3 (C61A)	44	04/88 – 05/92	3604	
LANCER IV Saloon (C6_A)	1.3 (C61A)	51	08/88 – 05/92	3400	
LANCER IV Saloon (C6_A)	1.3 (C61A)	51	08/88 – 05/92	3604	
LANCER IV Saloon (C6_A)	1.3 12V (C61A)	55	07/90 – 06/92	3604	
LANCER IV Saloon (C6_A)	1.5 (C62A)	62	04/88 – 05/92	3400	
LANCER IV Saloon (C6_A)	1.5 (C62A)	62	04/88 – 05/92	3604	
LANCER IV Saloon (C6_A)	1.5 12V (C62A)	66	05/89 – 05/92	3400	
LANCER IV Saloon (C6_A)	1.5 12V (C62A)	66	05/89 – 05/92	3604	
LANCER IV Saloon (C6_A)	1.8 GLX Diesel (C64A)	44	04/88 – 05/92	3400	
LANCER IV Saloon (C6_A)	1.8 GLX Diesel (C64A)	44	04/88 – 05/92	3604	
LANCER Saloon (CS_A, CT0)	13	60	09/03 -		4106
LANCER Saloon (CS_A, CT0)	20	85	09/03 -		4106
LANCER Saloon (CS_A, CT0)	20	92	08/05 -	3765	
LANCER Saloon (CS_A, CT0)	20	92	08/05 -		4106
LANCER Saloon (CS_A, CT0)	1.6 (CS3A)	72	09/03 -		4106
LANCER Saloon (CS_A, CT0)	2.0 (CS9A)	99	12/03 -		4106
LANCER Saloon (CS_A, CT0)	2.0 16V EVO IX (CT9A)	206	01/06 -		4106
LANCER Saloon (CS_A, CT0)	2.0 16V EVO VIII (CT9A)	195	03/04 -		4106
LANCER Saloon (CS_A, CT0)	2.0 4WD	213	08/05 -		4106
LANCER Saloon (CS_A, CT0)	2.0 GDi	92	09/03 -	3765	
LANCER Saloon (CS_A, CT0)	2.0 GDi	92	09/03 -		4106

MAKE & MODEL		KW	YEAR		
MITSUBISHI					
LANCER Saloon (CS_A, CT0)	2.4 iVRX	115	08/05 -	3765	
LANCER Saloon (CS_A, CT0)	2.4 iVRX	115	08/05 -		4106
LANCER Saloon (CY/Z_A)	15	80	06/08 -		4106
LANCER Saloon (CY/Z_A)	18	103	05/10 -		4106
LANCER Saloon (CY/Z_A)	18	105	02/08 -		4106
LANCER Saloon (CY/Z_A)	20	108	01/09 -		4106
LANCER Saloon (CY/Z_A)	20	115	04/08 -		4106
LANCER Saloon (CY/Z_A)	1.5 Bifuel	80	02/10 -		4106
LANCER Saloon (CY/Z_A)	1.6 MIVEC	86	05/10 -		4106
LANCER Saloon (CY/Z_A)	1.8 Bifuel	105	02/10 -		4106
LANCER Saloon (CY/Z_A)	1.8 DI-D	85	05/10 -		4106
LANCER Saloon (CY/Z_A)	1.8 DI-D (CY9A)	110	06/10 -		4106
LANCER Saloon (CY/Z_A)	1.8 Flex	103	03/09 -		4106
LANCER Saloon (CY/Z_A)	2.0 (CY4A)	110	01/13 -		4106
LANCER Saloon (CY/Z_A)	2.0 DI-D	103	01/08 -		4106
LANCER Saloon (CY/Z_A)	2.0 i	113	01/09 -		4106
LANCER Saloon (CY/Z_A)	2.0 i	118	10/09 -		4106
LANCER Saloon (CY/Z_A)	2.0 i Ralliart 4WD (CY4A)	177	10/08 -	3685	
LANCER Saloon (CY/Z_A)	2.0 i Ralliart 4WD (CY4A)	177	10/08 -		3893
LANCER Saloon (CY/Z_A)	2.0 i Ralliart 4WD (CY4A)	177	10/08 -		4106
LANCER SPORTBACK (CX_A)	15	80	06/08 -		4106
LANCER SPORTBACK (CX_A)	1.5 Bifuel	80	03/10 -		4106
LANCER SPORTBACK (CX_A)	1.6 MIVEC	86	05/10 -		4106
LANCER SPORTBACK (CX_A)	1.8 (CX3A)	105	06/08 -		4106
LANCER SPORTBACK (CX_A)	1.8 Bifuel	105	02/10 -		4106
LANCER SPORTBACK (CX_A)	1.8 DI-D	85	05/10 -		4106
LANCER SPORTBACK (CX_A)	1.8 DI-D (CX9A)	110	06/10 -		4106
LANCER SPORTBACK (CX_A)	1.8 MIVEC	103	03/09 -		4106
LANCER SPORTBACK (CX_A)	2.0 DI-D	103	06/08 -		4106
LANCER SPORTBACK (CX_A)	2.0 Ralliart 4WD (CX4A)	177	10/08 -	3685	
LANCER SPORTBACK (CX_A)	2.0 Ralliart 4WD (CX4A)	177	10/08 -		3893
LANCER V (CB/D_A)	13	55	06/92 – 02/95	3604	
LANCER V (CB/D_A)	15	65	09/92 – 07/96	3604	
LANCER V (CB/D_A)	15	65	09/92 – 07/96	3622	
LANCER V (CB/D_A)	1.3 (CB1A)	55	06/92 – 12/96	3604	
LANCER V (CB/D_A)	1.6 (CB4A)	66	02/94 – 12/96	3604	
LANCER V (CB/D_A)	1.6 16V (CB4A)	83	06/92 – 12/96	3604	
LANCER V (CB/D_A)	1.6 16V 4WD (CD4A)	83	06/92 – 12/96	3604	
LANCER V (CB/D_A)	1.8 16V (CB5A)	103	06/92 – 12/93	3622	
LANCER V (CB/D_A)	2.0 Diesel (CB8A)	50	06/92 – 12/96	3604	
LANCER V (CB/D_A)	2.0 EVO II (CE9A)	192	01/94 – 07/95	3685	
LANCER V (CB/D_A)	2.0 EVO III (CE9A)	198	08/95 – 07/96	3685	
LANCER V Station Wagon (CB_W, CD_W)	1.6 16V (CB4W)	83	12/92 – 10/03	3604	
LANCER V Station Wagon (CB_W, CD_W)	1.6 16V 4WD (CD4W)	83	12/92 – 10/03	3622	
LANCER V Station Wagon (CB_W, CD_W)	1.8 i	88	03/95 – 10/03	3604	
LANCER V Station Wagon (CB_W, CD_W)	1.8 i	88	03/95 – 10/03	3622	
LANCER V Station Wagon (CB_W, CD_W)	2.0 D (CB8W)	50	12/92 – 10/03	3604	
LANCER VI (CJ-CP_)	1.3 12V (CK1A)	55	12/95 – 08/03	3604	
LANCER VI (CJ-CP_)	1.5 16V (CK2A)	69	10/99 – 08/03	3604	
LANCER VI (CJ-CP_)	1.6 16V (CK4A)	66	12/95 – 08/03	3604	
LANCER VI (CJ-CP_)	1.8 16V	151	09/95 – 08/03	3685	
LANCER VI (CJ-CP_)	1.8 16V	151	09/95 – 08/03	3765	
MAGNA Estate	35	143	06/03 – 07/05	3685	
MAGNA Estate (TE)	3.0 i	140	04/96 – 06/97	3685	
MAGNA Estate (TE)	3.0 i	140	04/96 – 06/97		4108
MAGNA Estate (TH)	35	147	03/99 – 08/00	3685	
MAGNA Estate (TH)	35	147	03/99 – 08/00		4108
MAGNA Estate (TJ)	3.5 i	155	08/00 – 05/03	3685	
MAGNA Estate (TJ)	3.5 i	155	08/00 – 05/03		4108
MAGNA Estate (TJ)	3.5 i 4WD	155	08/00 – 05/03	3685	
MAGNA Estate (TJ)	3.5 i 4WD	155	08/00 – 05/03		3688
MAGNA Estate (TJ)	3.5 i 4WD	155	08/00 – 05/03		4108
MAGNA Estate (TJ)	3.5 i Sport	163	08/00 – 05/03	3685	
MAGNA Estate (TJ)	3.5 i Sport	163	08/00 – 05/03		4108
MAGNA Estate (TW)	35	143	06/03 – 07/05		4108
MAGNA Saloon (TE)	3.0 i	140	04/96 – 06/97	3685	
MAGNA Saloon (TE)	3.0 i	140	04/96 – 06/97		4108
MAGNA Saloon (TH)	3.5 i	147	03/99 – 08/00	3685	
MAGNA Saloon (TH)	3.5 i	147	03/99 – 08/00		4108
MAGNA Saloon (TJ)	30	150	08/00 – 05/03	3685	
MAGNA Saloon (TJ)	30	150	08/00 – 05/03		4108

MAKE & MODEL		KW	YEAR		
MITSUBISHI					
MAGNA Saloon (TJ)	3.5 i	155	08/00 – 05/03	3685	
MAGNA Saloon (TJ)	3.5 i	155	08/00 – 05/03		4108
MAGNA Saloon (TJ)	3.5 i 4WD	154	08/00 – 05/03	3685	
MAGNA Saloon (TJ)	3.5 i 4WD	154	08/00 – 05/03		4108
MAGNA Saloon (TJ)	3.5 i Series II Ralliart	180	08/02 – 05/03	3685	
MAGNA Saloon (TJ)	3.5 i Series II Ralliart	180	08/02 – 05/03		4108
MAGNA Saloon (TJ)	3.5 Series II Sports VR-X	163	08/02 – 05/03	3685	
MAGNA Saloon (TJ)	3.5 Series II Sports VR-X	163	08/02 – 05/03		4108
MAGNA Saloon (TW)	3.5 i 4WD	159	06/03 – 07/05	3685	
MAGNA Saloon (TW)	3.5 i 4WD	159	06/03 – 07/05		4108
MIRAGE Coupe	13	58	12/91 – 08/95	3604	
MIRAGE Hatchback (CJ_A)	13	55	09/95 – 07/03	3604	
MIRAGE Hatchback (CJ_A)	16	84	09/99 – 07/03	3604	
MIRAGE Hatchback (CJ_A)	16	128	09/95 – 08/99	3604	
MIRAGE Hatchback (CJ_A)	18	103	08/01 – 07/03	3622	
MIRAGE Hatchback (CJ_A)	1.5 (CJ2A)	81	09/95 – 08/99	3604	
MIRAGE Hatchback (CJ_A, CL_A)	13	58	12/91 – 08/95	3604	
MIRAGE Hatchback (CJ_A, CL_A)	16	88	12/91 – 08/95	3604	
MIRAGE Hatchback (CJ_A, CL_A)	1.6 4WD	84	03/92 – 07/93	3604	
MIRAGE Hatchback (CJ_A, CL_A)	1.6 4WD	88	12/91 – 08/95	3604	
MIRAGE Hatchback (CJ_A, CL_A)	1.6 ZR (CJ4A)	128	09/95 – 08/99	3604	
MIRAGE Hatchback (CJ_A, CL_A)	1.8 Gti	103	12/91 – 07/03	3622	
MIRAGE Saloon (CK_A)	1.5 (CK2A)	81	09/95 – 08/99	3604	
MIRAGE V Coupe (CJ - CM)	1.5 (CJ2A)	81	09/95 – 08/99	3604	
MIRAGE V Coupe (CJ - CM)	1.6 ZR	128	09/95 – 08/99	3604	
OUTLANDER	24	99	07/06 -	3685	
OUTLANDER	24	99	07/06 -		4106
OUTLANDER	24	121	07/06 -	3685	
OUTLANDER	24	121	07/06 -		4106
OUTLANDER	2.4 All-wheel Drive	121	07/06 -	3685	
OUTLANDER	2.4 All-wheel Drive	121	07/06 -		4106
OUTLANDER I (CU_W)	2.0 (CU2W)	100	05/03 – 10/06	3685	
OUTLANDER I (CU_W)	2.0 (CU2W)	100	05/03 – 10/06		4106
OUTLANDER I (CU_W)	2.0 4WD	177	01/02 – 10/06	3685	
OUTLANDER I (CU_W)	2.0 4WD (CU2W)	93	05/03 – 10/06	3685	
OUTLANDER I (CU_W)	2.0 4WD (CU2W)	93	05/03 – 10/06		4106
OUTLANDER I (CU_W)	2.0 4WD (CU2W)	100	05/03 – 10/06	3685	
OUTLANDER I (CU_W)	2.0 4WD (CU2W)	100	05/03 – 10/06		4106
OUTLANDER I (CU_W)	2.0 Turbo 4WD (CU2W)	148	04/04 – 10/06	3685	
OUTLANDER I (CU_W)	2.0 Turbo 4WD (CU2W)	148	04/04 – 10/06		4106
OUTLANDER I (CU_W)	2.0 Turbo-R 4WD	177	01/02 – 10/06		4106
OUTLANDER I (CU_W)	2.4 4WD	102	05/03 – 10/06	3685	
OUTLANDER I (CU_W)	2.4 4WD	102	05/03 – 10/06		4106
OUTLANDER I (CU_W)	2.4 4WD (CU5W)	118	11/03 – 10/06	3685	
OUTLANDER I (CU_W)	2.4 4WD (CU5W)	118	11/03 – 10/06		4106
OUTLANDER I (CU_W)	2.4 4WD (CU5W)	119	05/03 – 10/06	3685	
OUTLANDER I (CU_W)	2.4 4WD (CU5W)	119	05/03 – 10/06		4106
OUTLANDER I (CU_W)	2.4 HDD Mivec (CU5W)	118	03/01 – 12/06	3685	
OUTLANDER I (CU_W)	2.4 HDD Mivec (CU5W)	118	03/01 – 12/06		4106
OUTLANDER II (CW_W)	20	108	11/06 – 11/12	3685	
OUTLANDER II (CW_W)	20	108	11/06 – 11/12		3893
OUTLANDER II (CW_W)	20	118	06/09 – 11/12	3685	
OUTLANDER II (CW_W)	20	118	06/09 – 11/12		3893
OUTLANDER II (CW_W)	24	125	11/06 – 11/12	3685	
OUTLANDER II (CW_W)	24	125	11/06 – 11/12		3893
OUTLANDER II (CW_W)	2.0 4WD	108	11/06 – 11/12	3685	
OUTLANDER II (CW_W)	2.0 4WD	108	11/06 – 11/12		3893
OUTLANDER II (CW_W)	2.0 DI-D	103	02/07 – 11/12	3685	
OUTLANDER II (CW_W)	2.0 DI-D	103	02/07 – 11/12		3893
OUTLANDER II (CW_W)	2.2 DI-D	130	11/06 – 11/12	3685	
OUTLANDER II (CW_W)	2.2 DI-D	130	11/06 – 11/12		3893
OUTLANDER II (CW_W)	2.2 DI-D 4WD	103	09/10 – 11/12	3685	
OUTLANDER II (CW_W)	2.2 DI-D 4WD	103	09/10 – 11/12		3893
OUTLANDER II (CW_W)	2.2 DI-D 4WD	115	08/07 – 11/12	3685	
OUTLANDER II (CW_W)	2.2 DI-D 4WD	115	08/07 – 11/12		3893
OUTLANDER II (CW_W)	2.2 DI-D 4WD	130	11/06 – 11/12	3685	
OUTLANDER II (CW_W)	2.2 DI-D 4WD	130	11/06 – 11/12		3893
OUTLANDER II (CW_W)	2.4 4WD	125	09/07 – 11/12	3685	
OUTLANDER II (CW_W)	2.4 4WD	125	09/07 – 11/12		3893
OUTLANDER II (CW_W)	2.4 Flex 4WD	125	09/07 – 11/12	3685	
OUTLANDER II (CW_W)	2.4 Flex 4WD	125	09/07 – 11/12		3893

MAKE & MODEL		KW	YEAR		
MITSUBISHI					
OUTLANDER II (CW_W)	3.0 4WD	162	11/06 – 11/12	3685	
OUTLANDER II (CW_W)	3.0 4WD	162	11/06 – 11/12		3893
OUTLANDER II (CW_W)	3.0 4WD	169	09/10 – 12/12	3685	
OUTLANDER II (CW_W)	3.0 4WD	169	09/10 – 12/12		3893
OUTLANDER II (CW_W)	3.0 4WD	177	10/09 – 11/12	3685	
OUTLANDER II (CW_W)	3.0 4WD	177	10/09 – 11/12		3893
OUTLANDER II (CW_W)	3.0 AWD	164	11/06 – 12/10	3685	
OUTLANDER II (CW_W)	3.0 AWD	164	11/06 – 12/10		3893
OUTLANDER II (CW_W)	3.0 FWD	162	11/06 – 11/12	3685	
OUTLANDER II (CW_W)	3.0 FWD	162	11/06 – 11/12		3893
OUTLANDER II Van (CW_W)	2.0 DI-D	103	12/06 – 11/12	3685	
OUTLANDER II Van (CW_W)	2.2 DI-D 4WD	130	09/10 – 11/12	3685	
OUTLANDER III (GG_W, GF_W, ZJ)	2.0 Hybrid 4WD (GG2W)	139	12/12 -		4316
OUTLANDER III (GG_W, GF_W, ZJ)	2.0 (GF7W)	107	10/12 -	3685	
OUTLANDER III (GG_W, GF_W, ZJ)	2.0 (GF7W)	110	08/12 -	3685	
OUTLANDER III (GG_W, GF_W, ZJ)	2.0 4WD (GF2W)	107	10/12 -	3685	
OUTLANDER III (GG_W, GF_W, ZJ)	2.0 4WD (GF2W)	110	08/12 -	3685	
OUTLANDER III (GG_W, GF_W, ZJ)	2.0 Hybrid 4WD (GG2W)	87	01/14 -	3685	
OUTLANDER III (GG_W, GF_W, ZJ)	2.0 Hybrid 4WD (GG2W)	89	12/12 -	3685	
OUTLANDER III (GG_W, GF_W, ZJ)	2.2 Di-D	110	08/12 -	3685	
OUTLANDER III (GG_W, GF_W, ZJ)	2.2 Di-D 4WD	110	08/12 -	3685	
OUTLANDER III (GG_W, GF_W, ZJ)	2.0 (GF2W)	107	10/12 -		4316
OUTLANDER III (GG_W, GF_W, ZJ)	2.0 (GF7W)	110	08/12 -		4316
OUTLANDER III (GG_W, GF_W, ZJ)	2.0 4WD (GF2W)	107	10/12 -		4316
OUTLANDER III (GG_W, GF_W, ZJ)	2.0 4WD (GF7W)	110	08/12 -		4316
OUTLANDER III (GG_W, GF_W, ZJ)	2.0 Hybrid 4WD (GG2W)	89	12/12 -		4316
OUTLANDER III (GG_W, GF_W, ZJ)	2.0 Hybrid 4WD (GG2W)	87	01/14 -		4316
OUTLANDER III (GG_W, GF_W, ZJ)	2.2 Di-D (GF6W)	110	08/12 -		4316
OUTLANDER III (GG_W, GF_W, ZJ)	2.2 Di-D 4WD (GF6W)	110	08/12 -		4316
OUTLANDER III (GG_W, GF_W, ZJ)	2.4 4WD (GF3W)	124	10/12 -		4316
OUTLANDER III Van (GF_W, GG_W)	2.2 Di-D 4WD	110	04/13 -	3685	
PAJERO CLASSIC (V2_W)	30	131	09/06 -		3893
PAJERO CLASSIC (V2_W)	2.5 TD	85	07/02 -	3685	
PAJERO CLASSIC (V2_W)	2.5 TD	85	07/02 -		3688
PAJERO CLASSIC (V2_W)	2.8 TD	80	06/02 -	3685	
PAJERO CLASSIC (V2_W)	2.8 TD	87	06/02 -	3685	
PAJERO CLASSIC (V2_W)	3.2 DiD	125	09/06 -	3685	
PAJERO CLASSIC (V2_W)	3.8 All-wheel Drive	184	09/06 -	3693	
PAJERO CLASSIC (V2_W)	3.8 All-wheel Drive	184	09/06 -		3893
PAJERO CLASSIC (V2_W)	PAJERO CLASSIC (V2_W)	131	09/06 -	3892	
PAJERO CLASSIC (V2_W)	PAJERO CLASSIC (V2_W)	184	09/06 -	3892	
PAJERO CLASSIC (V2_W)	3.2 DiD	125	09/06 -		3688
PAJERO CLASSIC (V2_W)	2.8 TD	80	06/02 -		3688
PAJERO CLASSIC (V2_W)	2.8 TD	87	06/02 -		3688
PAJERO I (L04_G, L14_G)	2.0 4WD	81	01/83 – 02/91	3448	
PAJERO I (L04_G, L14_G)	2.0 Turbo 4WD	107	10/84 – 02/91	3448	
PAJERO I (L04_G, L14_G)	2.3 D (L049GW, L044GV)	62	10/84 – 09/86	3448	
PAJERO I (L04_G, L14_G)	2.5 TD (L044G, L049G)	64	01/90 – 12/91	3448	
PAJERO I (L04_G, L14_G)	2.5 TD (L044G, L049G)	70	11/89 – 11/90	3448	
PAJERO I (L04_G, L14_G)	2.5 TD 4WD	62	10/86 – 05/91	3448	
PAJERO I (L04_G, L14_G)	2.6 4WD (L042G)	79	10/86 – 05/91	3448	
PAJERO I (L04_G, L14_G)	3.0 i 4WD	105	05/88 – 05/91	3448	
PAJERO I (L04_G, L14_G)	3.0 V6 (L141G, L146G)	104	11/88 – 11/90	3448	
PAJERO I Canvas Top (L04_G)	2.5 TD (L044G, L049G)	62	05/86 – 10/89	3448	
PAJERO I Canvas Top (L04_G)	2.5 TD (L044G, L049G)	70	11/89 – 11/90	3448	
PAJERO I Canvas Top (L04_G)	2.6 (L042G, L047G)	76	01/83 – 11/90	3448	
PAJERO II (V3_W, V2_W, V4_W)	2.4 (V21W, V21C)	82	04/91 – 10/99		3688
PAJERO II (V3_W, V2_W, V4_W)	2.4 (V21W, V21C)	82	04/91 – 10/99	3685	
PAJERO II (V3_W, V2_W, V4_W)	2.4 (V21W, V21C)	82	04/91 – 10/99		3893
PAJERO II (V3_W, V2_W, V4_W)	2.4 (V21W, V21C)	82	04/91 – 10/99		4084
PAJERO II (V3_W, V2_W, V4_W)	2.5 TD 4WD (V24C, V24W)	73	12/90 – 10/99	3685	
PAJERO II (V3_W, V2_W, V4_W)	2.5 TD 4WD (V24C, V24W)	73	12/90 – 10/99		3688
PAJERO II (V3_W, V2_W, V4_W)	2.5 TD 4WD (V24C, V24W)	73	12/90 – 10/99		3893
PAJERO II (V3_W, V2_W, V4_W)	2.5 TD 4WD (V24C, V24W)	73	12/90 – 10/99		4084
PAJERO II (V3_W, V2_W, V4_W)	2.5 TDiC (V44W, V24W)	73	03/91 – 08/99	3685	
PAJERO II (V3_W, V2_W, V4_W)	2.5 TDiC (V44W, V24W)	73	03/91 – 08/99		3688
PAJERO II (V3_W, V2_W, V4_W)	2.8 D 4WD (V46W, V26W)	71	11/93 – 07/97		3688
PAJERO II (V3_W, V2_W, V4_W)	2.8 TD (V46W, V26W)	92	06/94 – 10/99	3685	
PAJERO II (V3_W, V2_W, V4_W)	2.8 TD (V46W, V26W)	92	06/94 – 10/99		3688
PAJERO II (V3_W, V2_W, V4_W)	2.8 TD (V46W, V26W)	92	06/94 – 10/99		3893
PAJERO II (V3_W, V2_W, V4_W)	2.8 TD (V46W, V26W)	92	06/94 – 10/99		4084

BEŞER

MAKE & MODEL			KW	YEAR		
MITSUBISHI						
PAJERO II (V3_W, V2_W, V4_W)	3.0 V6 24V (V43W, V23W)		130	06/97 – 10/99	3685	
PAJERO II (V3_W, V2_W, V4_W)	3.0 V6 24V (V43W, V23W)		130	06/97 – 10/99		3688
PAJERO II (V3_W, V2_W, V4_W)	3.0 V6 24V (V43W, V23W)		130	06/97 – 10/99		3893
PAJERO II (V3_W, V2_W, V4_W)	3.0 V6 24V (V43W, V23W)		130	06/97 – 10/99		4084
PAJERO II (V3_W, V2_W, V4_W)	3.0 V6 24V (V43W, V23W)		133	06/94 – 05/97	3685	
PAJERO II (V3_W, V2_W, V4_W)	3.0 V6 24V (V43W, V23W)		133	06/94 – 05/97		3688
PAJERO II (V3_W, V2_W, V4_W)	3.0 V6 4WD (V23W, V43W, V23C)		110	12/90 – 12/95		3688
PAJERO II (V3_W, V2_W, V4_W)	3.0 V6 4WD (V23W, V43W,V23C)		110	12/90 – 12/95	3685	
PAJERO II (V3_W, V2_W, V4_W)	3.5 V6 24V (V25W, V45W)		153	06/94 – 10/99	3685	
PAJERO II (V3_W, V2_W, V4_W)	3.5 V6 24V (V25W, V45W)		153	06/94 – 10/99		3688
PAJERO II (V3_W, V2_W, V4_W)	3.5 V6 24V (V45W, V25W)		143	07/97 – 10/99	3685	
PAJERO II (V3_W, V2_W, V4_W)	3.5 V6 24V (V45W, V25W)		143	07/97 – 10/99		3688
PAJERO II Canvas Top (V2_W, V4_W)	1.8 GDI		96	06/98 – 04/00	3685	
PAJERO II Canvas Top (V2_W, V4_W)	1.8 GDI		96	06/98 – 04/00		3688
PAJERO II Canvas Top (V2_W, V4_W)	1.8 GDI		96	06/98 – 04/00		3893
PAJERO II Canvas Top (V2_W, V4_W)	1.8 GDI		96	06/98 – 04/00		4084
PAJERO II Canvas Top (V2_W, V4_W)	2.4 (V41W, V21W, V21C)		82	04/91 – 04/00	3685	
PAJERO II Canvas Top (V2_W, V4_W)	2.4 (V41W, V21W, V21C)		82	04/91 – 04/00		3688
PAJERO II Canvas Top (V2_W, V4_W)	2.4 (V41W, V21W, V21C)		82	04/91 – 04/00		3893
PAJERO II Canvas Top (V2_W, V4_W)	2.4 (V41W, V21W, V21C)		82	04/91 – 04/00		4084
PAJERO II Canvas Top (V2_W, V4_W)	2.5 TD 4WD (V24C, V24W)		73	12/90 – 04/00	3685	
PAJERO II Canvas Top (V2_W, V4_W)	2.5 TD 4WD (V24C, V24W)		73	12/90 – 04/00		3688
PAJERO II Canvas Top (V2_W, V4_W)	2.5 TD 4WD (V24C, V24W)		73	12/90 – 04/00		3893
PAJERO II Canvas Top (V2_W, V4_W)	2.5 TD 4WD (V24C, V24W)		73	12/90 – 04/00		4084
PAJERO II Canvas Top (V2_W, V4_W)	3.0 V6 (V23W, v43W, V23C)		110	12/90 – 12/95	3685	
PAJERO II Canvas Top (V2_W, V4_W)	3.0 V6 (V23W, v43W, V23C)		110	12/90 – 12/95		3688
PAJERO II Canvas Top (V2_W, V4_W)	3.0 V6 24V (V23W, V23C)		133	06/94 – 04/00	3685	
PAJERO II Canvas Top (V2_W, V4_W)	3.0 V6 24V (V23W, V23C)		133	06/94 – 04/00		3688
PAJERO II Canvas Top (V2_W, V4_W)	3.0 V6 24V (V23W, V23C)		133	06/94 – 04/00		3893
PAJERO II Canvas Top (V2_W, V4_W)	3.0 V6 24V (V23W, V23C)		133	06/94 – 04/00		4084
PAJERO III (V7_W, V6_W)	35		149	04/00 – 01/07		3893
PAJERO III (V7_W, V6_W)	2.5 TDi		73	04/00 – 12/06		3893
PAJERO III (V7_W, V6_W)	2.5 TDi		85	09/01 – 12/06		3893
PAJERO III (V7_W, V6_W)	3.2 Di-D		118	04/00 – 12/06		3893
PAJERO III (V7_W, V6_W)	3.2 Di-D		121	04/00 – 10/01		3893
PAJERO III (V7_W, V6_W)	PAJERO III (V7_W, V6_W)		73	04/00 – 12/06	3892	
PAJERO III (V7_W, V6_W)	PAJERO III (V7_W, V6_W)		85	09/01 – 12/06	3892	
PAJERO III (V7_W, V6_W)	PAJERO III (V7_W, V6_W)		118	04/00 – 12/06	3892	
PAJERO III (V7_W, V6_W)	PAJERO III (V7_W, V6_W)		121	04/00 – 10/01	3892	
PAJERO III (V7_W, V6_W)	PAJERO III (V7_W, V6_W)		149	04/00 – 01/07	3892	
PAJERO III Open Off-Road Vehicle (V6_W, V7_W)	24		82	10/01 – 08/06		3893
PAJERO III Open Off-Road Vehicle (V6_W, V7_W)	2.5 TDi (V64W, V74W)		73	04/00 – 12/06		3893
PAJERO III Open Off-Road Vehicle (V6_W, V7_W)	2.5 TDi (V64W, V74W)		85	09/01 – 12/06		3893
PAJERO III Open Off-Road Vehicle (V6_W, V7_W)	3.0 (V73W)		125	10/01 – 12/06		3893
PAJERO III Open Off-Road Vehicle (V6_W, V7_W)	3.2 DI-D (V68W, V78W)		118	10/01 – 12/06		3893
PAJERO III Open Off-Road Vehicle (V6_W, V7_W)	3.2 DI-D (V68W, V78W)		121	04/00 – 12/06		3893
PAJERO III Open Off-Road Vehicle (V6_W, V7_W)	3.5 i		160	09/03 – 10/06		3893
PAJERO III Open Off-Road Vehicle (V6_W, V7_W)	3.5 V6 GDI (V65W, V75W)		149	04/00 – 12/06		3893
PAJERO III Open Off-Road Vehicle (V6_W, V7_W)	PAJERO III Open Off-Road Vehicle (V6_W,		73	04/00 – 12/06	3892	
PAJERO III Open Off-Road Vehicle (V6_W, V7_W)	PAJERO III Open Off-Road Vehicle (V6_W,		82	10/01 – 08/06	3892	
PAJERO III Open Off-Road Vehicle (V6_W, V7_W)	PAJERO III Open Off-Road Vehicle (V6_W,		85	09/01 – 12/06	3892	
PAJERO III Open Off-Road Vehicle (V6_W, V7_W)	PAJERO III Open Off-Road Vehicle (V6_W,		118	10/01 – 12/06	3892	
PAJERO III Open Off-Road Vehicle (V6_W, V7_W)	PAJERO III Open Off-Road Vehicle (V6_W,		121	04/00 – 12/06	3892	
PAJERO III Open Off-Road Vehicle (V6_W, V7_W)	PAJERO III Open Off-Road Vehicle (V6_W,		125	10/01 – 12/06	3892	
PAJERO III Open Off-Road Vehicle (V6_W, V7_W)	PAJERO III Open Off-Road Vehicle (V6_W,		149	04/00 – 12/06	3892	
PAJERO III Open Off-Road Vehicle (V6_W, V7_W)	PAJERO III Open Off-Road Vehicle (V6_W,		160	09/03 – 10/06	3892	
PAJERO IV (V8_W, V9_W)	3.0 4WD		131	02/07 -	3693	
PAJERO IV (V8_W, V9_W)	3.2 DI-D		121	01/10 -	3693	
PAJERO IV (V8_W, V9_W)	3.2 DI-D		121	01/10 -		3893
PAJERO IV (V8_W, V9_W)	3.2 DI-D (V88W, V98W)		118	02/07 -	3693	
PAJERO IV (V8_W, V9_W)	3.2 DI-D (V88W, V98W)		118	02/07 -		3893
PAJERO IV (V8_W, V9_W)	3.2 DI-D (V88W, V98W)		125	02/07 -	3693	
PAJERO IV (V8_W, V9_W)	3.2 DI-D (V88W, V98W)		125	02/07 -		3893
PAJERO IV (V8_W, V9_W)	3.2 DI-D 4WD (V98W)		140	02/07 -	3693	
PAJERO IV (V8_W, V9_W)	3.2 DI-D 4WD (V98W)		140	02/07 -		3893
PAJERO IV (V8_W, V9_W)	3.2 DI-D 4WD (V98W, V88W)		147	01/09 -	3693	
PAJERO IV (V8_W, V9_W)	3.2 DI-D 4WD (V98W, V88W)		147	01/09 -		3893
PAJERO IV (V8_W, V9_W)	3.8 V6		180	02/10 -	3693	
PAJERO IV (V8_W, V9_W)	3.8 V6		180	02/10 -		3893
PAJERO IV (V8_W, V9_W)	3.8 V6		182	02/10 -	3693	
PAJERO IV (V8_W, V9_W)	3.8 V6		182	02/10 -		3893

MAKE & MODEL		KW	YEAR		
MITSUBISHI					
PAJERO IV (V8_W, V9_W)	3.8 V6 (V87W, V97W)	184	02/07 -	3693	
PAJERO IV (V8_W, V9_W)	3.8 V6 (V87W, V97W)	184	02/07 -		3893
PAJERO IV (V8_W, V9_W)	PAJERO IV (V8_W, V9_W)	118	02/07 -	3892	
PAJERO IV (V8_W, V9_W)	PAJERO IV (V8_W, V9_W)	121	01/10 -	3892	
PAJERO IV (V8_W, V9_W)	PAJERO IV (V8_W, V9_W)	125	02/07 -	3892	
PAJERO IV (V8_W, V9_W)	PAJERO IV (V8_W, V9_W)	131	02/07 -	3892	
PAJERO IV (V8_W, V9_W)	PAJERO IV (V8_W, V9_W)	140	02/07 -	3892	
PAJERO IV (V8_W, V9_W)	PAJERO IV (V8_W, V9_W)	147	01/09 -	3892	
PAJERO IV (V8_W, V9_W)	PAJERO IV (V8_W, V9_W)	180	02/10 -	3892	
PAJERO IV (V8_W, V9_W)	PAJERO IV (V8_W, V9_W)	182	02/10 -	3892	
PAJERO IV (V8_W, V9_W)	PAJERO IV (V8_W, V9_W)	184	02/07 -	3892	
PAJERO IV Van (V90, V80, V8_V)	3.2 DI-D	118	11/06 -	3693	
PAJERO IV Van (V90, V80, V8_V)	3.2 DI-D	118	11/06 -		3893
PAJERO IV Van (V90, V80, V8_V)	3.2 TD 4WD	147	01/10 -	3693	
PAJERO IV Van (V90, V80, V8_V)	3.2 TD 4WD	147	01/10 -		3893
PAJERO IV Van (V90, V80, V8_V)	PAJERO IV Van (V90, V80, V8_V)	118	11/06 -	3892	
PAJERO IV Van (V90, V80, V8_V)	PAJERO IV Van (V90, V80, V8_V)	147	01/10 -	3892	
PAJERO MINI (H5_A)	0.7	37	10/94 – 08/98	4271	
PAJERO MINI (H5_A)	0.7	38	10/94 – 08/12	4271	
PAJERO MINI (H5_A)	0.7 4WD	37	10/94 – 08/98	4271	
PAJERO MINI (H5_A)	0.7 4WD	47	10/94 – 08/12	4271	
PAJERO PININ (H6_W, H7_W)	1.8 (H76W, H66W)	84	11/01 – 06/07		4108
PAJERO PININ (H6_W, H7_W)	1.8 (H76W, H66W)	84	11/01 – 06/07	4271	
PAJERO PININ (H6_W, H7_W)	1.8 GDI (H66W)	88	10/99 – 10/01		4108
PAJERO PININ (H6_W, H7_W)	1.8 GDI (H66W)	88	10/99 – 10/01	4271	
PAJERO PININ (H6_W, H7_W)	2.0 GDI (H67W, H77W)	95	10/00 – 06/07		4108
PAJERO PININ (H6_W, H7_W)	2.0 GDI (H67W, H77W)	95	10/00 – 06/07	4271	
PAJERO SPORT	24	94	01/03 – 02/06	3809	
PAJERO SPORT	3.0 All-wheel Drive	123	01/03 – 02/06	3892	
PAJERO SPORT	3.0 All-wheel Drive	123	01/03 – 02/06		3893
PAJERO SPORT I (K90)	2.5 TD (K94W)	73	11/98 -	3685	
PAJERO SPORT I (K90)	2.5 TD (K94W)	73	11/98 -		4084
PAJERO SPORT I (K90)	2.5 TD (K94W)	85	07/02 -	3685	
PAJERO SPORT I (K90)	2.5 TD (K94W)	85	07/02 -		4084
PAJERO SPORT I (K90)	2.5 TD (K94W)	98	08/03 -	3685	
PAJERO SPORT I (K90)	2.5 TD (K94W)	98	08/03 -		4084
PAJERO SPORT I (K90)	2.5 TD 4WD (K94W)	83	11/97 – 10/98	3685	
PAJERO SPORT I (K90)	2.5 TD 4WD (K94W)	83	11/97 – 10/98		4084
PAJERO SPORT I (K90)	3.0 V6 (K96W)	123	03/03 -	3685	
PAJERO SPORT I (K90)	3.0 V6 (K96W)	123	03/03 -		4084
PAJERO SPORT I (K90)	3.0 V6 (K96W)	125	06/00 -	3685	
PAJERO SPORT I (K90)	3.0 V6 (K96W)	125	06/00 -		4084
PAJERO SPORT I (K90)	3.0 V6 (K96W)	130	11/98 -	3685	
PAJERO SPORT I (K90)	3.0 V6 (K96W)	130	11/98 -		4084
PAJERO SPORT I (K90)	3.2 TDi	121	11/98 -	3685	
PAJERO SPORT I (K90)	3.2 TDi	121	11/98 -		4084
PAJERO SPORT II (KH_, KG_)	35	137	01/10 -	3975	
PAJERO SPORT II (KH_, KG_)	2.5 DI-D	131	07/08 -	3975	
PAJERO SPORT II (KH_, KG_)	2.5 DI-D	131	07/08 -		4084
PAJERO SPORT II (KH_, KG_)	2.5 DI-D 4WD (KH4W)	131	07/08 -	3975	
PAJERO SPORT II (KH_, KG_)	2.5 TD	98	09/08 -	3975	
PAJERO SPORT II (KH_, KG_)	2.5 TD	98	09/08 -		4084
PAJERO SPORT II (KH_, KG_)	3.0 4WD	162	09/08 -	3975	
PAJERO SPORT II (KH_, KG_)	3.0 4WD	162	09/08 -		4084
PAJERO SPORT II (KH_, KG_)	3.2 DI-D 4WD	118	07/08 -	3975	
PAJERO SPORT II (KH_, KG_)	3.5 V6 24V	153	09/08 -	3975	
PAJERO SPORT III (KS_)	2.4 DI-D	133	08/15 -		4084
PAJERO SPORT III (KS_)	2.4 DI-D 4x4	133	08/15 -		4084
PAJERO SPORT III (KS_)	2.5 DI-D	100	08/15 -		4084
PAJERO SPORT III (KS_)	2.5 DI-D 4x4	100	08/15 -		4084
PAJERO SPORT VAN I (K90)	2.5 TD	85	12/99 – 01/08	3685	
PAJERO SPORT VAN I (K90)	2.5 TD	85	12/99 – 01/08		4084
PAJERO SPORT VAN I (K90)	3.0 V6	125	12/99 – 01/08	3685	
PAJERO SPORT VAN I (K90)	3.0 V6	125	12/99 – 01/08		4084
PROUDIA/DIGNITY (S4_A, S3_A)	PROUDIA/DIGNITY (S4_A, S3_A)	177	10/99 – 05/01	3892	
PROUDIA/DIGNITY (S4_A, S3_A)	PROUDIA/DIGNITY (S4_A, S3_A)	206	10/99 – 05/01	3892	
ROSA	3.6 BE435F		89-93	4055	
ROSA	3.6 BE436E		95-97	4055	
ROSA	3.6 BE436E,BE436F		93-95	4055	
ROSA	3.6 BE636		97-99	4055	
ROSA	3.9 BE439,BE449		89-95	4055	

MAKE & MODEL		KW	YEAR		
MITSUBISHI					
ROSA	3.9 BE459		89-95	4055	
ROSA	4.2 BE437		89-95	4055	
ROSA	4.2 BE63C		99-	4055	
ROSA	4.6 BE438E		95-97	4055	
ROSA	5.2 BE632		97-99	4055	
ROSA	5.2 BE63C,BE63E		99-	4055	
ROSA			93-95	4055	
SANTAMO	2.0 16V	102	05/99 – 12/04	3622	
SANTAMO	2.0 16V	102	05/99 – 12/04	3632	
SANTAMO	2.0 16V	102	05/99 – 12/04		4108
SANTAMO	2.0 16V 4WD	102	05/99 – 12/04	3622	
SANTAMO	2.0 16V 4WD	102	05/99 – 12/04	3632	
SANTAMO	2.0 16V 4WD	102	05/99 – 12/04		4108
SAPPORO (A16_A)	1.6 GLX (4G32)	55	08/80 – 09/84	3407	
SAPPORO (A12_)	1.6 SL,GL (4G32)	55	04/78 – 07/80	3709	
SAPPORO (A12_)	2.0 (4G52)	66	04/78 – 07/80	3376	
SAPPORO (A12_)	2.0 (4G52)	72	04/78 – 07/80	3376	
SAPPORO (A12_)	2.0 (4G52)	79	01/79 – 07/80	3376	
SAPPORO III (E16A)	2.4 (E16A)	91	06/87 – 08/90		4108
SIGMA III (GJ, GK, GN)	2.0 GL	68	03/82 -	3376	
SIGMA III (GJ, GK, GN)	2.0 SE	68	03/82 -	3376	
SIGMA III SCORPION (GJ, GK, GL)	GH, GJ, GK, GL		11/80 -	3376	
SIGMA (F2_A, F1_A)	3.0 V6	130	12/90 – 07/96	3685	
SIGMA (F2_A, F1_A)	3.0 V6	130	12/90 – 07/96		4108
SIGMA (F2_A, F1_A)	3.0 V6	151	12/90 – 07/96	3685	
SIGMA (F2_A, F1_A)	3.0 V6	151	12/90 – 07/96		4108
SIGMA (GE)	2.0 GL	54	09/78 -	3407	
SIGMA (GE)	2.0 GL	54	10/77 -	3407	
SIGMA (GE)	2.0 GLX	74	09/78 -	3376	
SIGMA (GE)	All models	54	10/77 -	3709	
SIGMA Station Wagon (F0_W)	30	125	06/92 – 10/96	3685	
SIGMA Station Wagon (F0_W)	30	125	06/92 – 10/96		4108
SPACE RUNNER (N1_W, N2_W)	1.8 (N11W)	85	06/96 – 08/99	3622	
SPACE RUNNER (N1_W, N2_W)	1.8 (N11W)	85	06/96 – 08/99		4108
SPACE RUNNER (N1_W, N2_W)	1.8 (N11W)	90	10/91 – 08/99	3622	
SPACE RUNNER (N1_W, N2_W)	1.8 (N11W)	90	10/91 – 08/99		4108
SPACE RUNNER (N1_W, N2_W)	1.8 4WD (N21W)	85	06/96 – 08/99	3622	
SPACE RUNNER (N1_W, N2_W)	1.8 4WD (N21W)	85	06/96 – 08/99		4108
SPACE RUNNER (N1_W, N2_W)	1.8 4WD (N21W)	90	10/91 – 08/99	3622	
SPACE RUNNER (N1_W, N2_W)	1.8 4WD (N21W)	90	10/91 – 08/99		4108
SPACE RUNNER (N1_W, N2_W)	2.0 16V	98	06/97 – 08/99	3622	
SPACE RUNNER (N1_W, N2_W)	2.0 16V	98	06/97 – 08/99		4108
SPACE RUNNER (N1_W, N2_W)	2.0 TD (N18W)	60	10/92 – 08/99	3622	
SPACE RUNNER (N1_W, N2_W)	2.0 TD (N18W)	60	10/92 – 08/99		4108
SPACE RUNNER (N6_W)	20	98	05/00 – 08/02		4108
SPACE RUNNER (N6_W)	2.0 (N63W)	100	08/99 – 08/02	3685	
SPACE RUNNER (N6_W)	2.0 (N63W)	100	08/99 – 08/02		4108
SPACE RUNNER (N6_W)	2.4 GDI	108	08/99 – 08/02		4108
SPACE RUNNER (N6_W)	2.4 GDI	110	08/99 – 08/02	3685	
SPACE RUNNER (N6_W)	2.4 GDI	110	08/99 – 01/03		4108
SPACE RUNNER (N6_W)	2.4 GDI	110	08.99 - 01.03	4107	
SPACE STAR MPV (DG_A)	16	72	04/01 – 12/04		4062
SPACE STAR MPV (DG_A)	1.3 16V (DG1A)	60	09/00 – 12/04		4062
SPACE STAR MPV (DG_A)	1.3 16V (DG1A)	61	12/98 – 12/04		4062
SPACE STAR MPV (DG_A)	1.3 16V (DG1A)	63	06/98 – 12/04		4062
SPACE STAR MPV (DG_A)	1.6 16V (DG3A)	72	01/01 – 12/04		4062
SPACE STAR MPV (DG_A)	1.8 GDI (DG5A)	87	06/98 – 12/04		4062
SPACE STAR MPV (DG_A)	1.8 GDI (DG5A)	90	06/98 – 12/04		4062
SPACE STAR MPV (DG_A)	1.8 MPI	82	10/02 – 12/04		4062
SPACE STAR MPV (DG_A)	1.9 DI-D	85	10/02 – 12/04		4062
SPACE STAR MPV (DG_A)	1.9 DI-D (DG4A)	75	02/01 – 12/04		4062
SPACE WAGON (D0)	1.8		83-91	3401	
SPACE WAGON (D0)	1.8 D-TD		83-91	3401	
SPACE WAGON (D0)	2.0 /4wd		83-91	3401	
SPACE WAGON (N3_W, N4_W)	24	88	10/91 – 10/97	3622	
SPACE WAGON (N3_W, N4_W)	24	88	10/91 – 10/97		4108
SPACE WAGON (N3_W, N4_W)	1.8 (N31W)	90	10/91 – 10/98	3622	
SPACE WAGON (N3_W, N4_W)	1.8 (N31W)	90	10/91 – 10/98		4108
SPACE WAGON (N3_W, N4_W)	1.8 4WD (N41W)	90	10/91 – 10/98	3622	
SPACE WAGON (N3_W, N4_W)	1.8 4WD (N41W)	90	10/91 – 10/98		4108
SPACE WAGON (N3_W, N4_W)	1.8 TD (N35W)	55	10/91 – 10/98	3622	

MAKE & MODEL		KW	YEAR		
MITSUBISHI					
SPACE WAGON (N3_W, N4_W)	1.8 TD (N35W)	55	10/91 – 10/98		4108
SPACE WAGON (N3_W, N4_W)	2.0 (N33W)	98	10/92 – 10/98	3622	
SPACE WAGON (N3_W, N4_W)	2.0 (N33W)	98	10/92 – 10/98		4108
SPACE WAGON (N3_W, N4_W)	2.0 4WD (N43W)	98	10/92 – 10/98	3622	
SPACE WAGON (N3_W, N4_W)	2.0 4WD (N43W)	98	10/92 – 10/98		4108
SPACE WAGON (N3_W, N4_W)	2.0 TD (N38W)	60	10/92 – 10/98	3622	
SPACE WAGON (N3_W, N4_W)	2.0 TD (N38W)	60	10/92 – 10/98		4108
SPACE WAGON (N3_W, N4_W)	2.4 i (N34W)	102	10/92 – 10/98	3622	
SPACE WAGON (N3_W, N4_W)	2.4 i (N34W)	102	10/92 – 10/98		4108
SPACE WAGON (N9_, N8_)	2.4 GDi GLX	110	11.97 - 07.00	4107	
SPACE WAGON (N9_W, N8_W)	20	98	10/98 – 12/04	3685	
SPACE WAGON (N9_W, N8_W)	24	96	11/98 – 04/04	3622	
SPACE WAGON (N9_W, N8_W)	24	96	11/98 – 04/04		3688
SPACE WAGON (N9_W, N8_W)	2.4 GDI	108	09/00 – 12/04	3685	
SPACE WAGON (N9_W, N8_W)	2.4 GDI	110	10/98 – 12/04	3685	
SPACE WAGON (N9_W, N8_W)	2.4 GDI 4WD	108	09/00 – 12/04	3685	
SPACE WAGON (N9_W, N8_W)	2.4 GDI 4WD	110	10/98 – 12/04	3685	
TREDIA (A21)	1.6 Turbo		82-84	3401	
TREDIA (A21)	1.8 4wd		84-86	3401	
TREDIA (A21)	1.8 Turbo /4wd		84-86	3401	
VERADA Estate (KS)	30	120	03/94 – 03/97		4108
VERADA Saloon (KJ)	3.5 i	150	08/00 – 05/03		4108
VERADA Saloon (KL)	35	155	06/03 – 10/04	3685	
VERADA Saloon (KL)	35	163	06/03 – 10/04	3685	
VERADA Saloon (KL)	3.5 24V	169	06/03 – 10/04	3685	
VERADA Saloon (KL)	3.5 i Series II 4WD	154	06/03 – 10/04	3685	
VERADA Saloon (KL)	3.5 i Series II 4WD	154	06/03 – 10/04		3688
VERADA Saloon (KL)	3.5 i Series II 4WD	154	06/03 – 10/04		4108
VERADA Saloon (KR)	30	151	10/92 – 02/94		4108
VERADA Saloon (KR)	3.0 i	125	07/91 – 02/94		4108
VERADA Saloon (KS)	30	120	03/94 – 03/97		4108
VERADA Saloon (KW)	35	155	10/04 – 07/05	3685	
VERADA Saloon (KW)	35	155	10/04 – 07/05		3688
VERADA Saloon (KW)	35	155	10/04 – 07/05		4108
VERADA Saloon (KW)	3.5 24V	157	10/04 – 05/05	3685	
VERADA Saloon (KW)	3.5 24V	157	10/04 – 05/05		3688
VERADA Saloon (KW)	3.5 24V	169	10/04 – 07/05	3685	
VERADA Saloon (KW)	3.5 24V	169	10/04 – 07/05		3688
VERADA Saloon (KW)	3.5 4WD	154	10/04 – 07/05	3685	
VERADA Saloon (KW)	3.5 4WD	154	10/04 – 07/05		3688
VERADA Saloon (KW)	3.5 4WD	154	10/04 – 07/05		4108
MULTICAR					
M25	1.9	40	01/91 – 12/92	3440	
M25	1.9	40	01/91 – 12/92	3440	
NAZA					
RIA	25	100	10/01 – 09/06	3802	
RIA	25	129	11/01 – 09/06	3802	
SURIA	11	48	11/06 -	3968	
NISSAN					
(DONGFENG) TEANA (L33Z)	2.0	104	01.13 - 07.16	4319	
(DONGFENG) TEANA (L33Z)	2.0	110	07.16 -	4319	
(DONGFENG) TEANA (L33Z)	2.5	137	03.13 -	4319	
100 NX (B13)	16	66	03/90 – 10/94	3598	
100 NX (B13)	16	66	03/90 – 10/94	3766	
100 NX (B13)	1.6	66	03/90 - 10/94	4328	
100 NX (B13)	1.6 SR	75	09/93 – 10/94	3598	
100 NX (B13)	1.6 SR	75	09/93 – 10/94	3766	
100 NX (B13) 1.6 SR	1.6	75	09/93 - 10/94	4328	
180 SX Coupe (S13)	2.0 Turbo	147	04/91 – 03/94	3699	
180 SX Coupe (S13)	2.0 Turbo	147	04/91 – 03/94	3779	
200 B	All models		01/77 -	3375	
200 SX (S13)	18	99	09/88 – 03/94	3699	
200 SX (S13)	18	99	09/88 – 03/94	3700	
200 SX (S13)	18	99	09/88 – 03/94	3779	
200 SX (S13)	1.8 Turbo	122	01/92 – 09/94	3699	
200 SX (S13)	1.8 Turbo	122	01/92 – 09/94	3779	
200 SX (S13)	1.8 Turbo	124	07/88 – 11/93	3699	
200 SX (S13)	1.8 Turbo	124	07/88 – 11/93	3700	
200 SX (S13)	1.8 Turbo	124	07/88 – 11/93	3779	
200 SX (S13)	2.0 i 16V	103	07/88 – 11/93	3699	

MAKE & MODEL		KW	YEAR		
NISSAN					
200 SX (S13)	2.0 i 16V	103	07/88 – 11/93	3700	
200 SX (S13)	2.0 i 16V	103	07/88 – 11/93	3779	
240 K	GL		01/72 -	3375	
240 Z / DATSUN 240 Z	HS30		10/70 -	3375	
260 C	All models		01.80-	3369	
260 C	All models		01.80-	3369	
260 Z / DATSUN 260 Z	1.6 260 Z	49	05/74 -	3375	
280 C	2.8 CDX	147	01.74-	3369	
280 C	2.8 CDX	147	01.74-	3369	
280 C	2.8 CDX		01/74 -	3375	
280 ZX	2.8 i		09.78-	3369	
280 ZX	2.8 i Turbo		09.78-	3369	
280 ZX,ZXT	2.8 (L28E)	103	10.78-06.83	3369	
280 ZX,ZXT	2.8 (L28E)	108	02.80-09.82	3369	
ALMERA Classic (B10)	1.6 16V	79	03/06 -	3797	
ALMERA I (N15)	14	64	09/95 – 07/00	3577	
ALMERA I (N15)	14	64	09/95 – 07/00	4010	
ALMERA I (N15)	15	77	07/95 – 05/00	3577	
ALMERA I (N15)	15	77	07/95 – 05/00	4010	
ALMERA I (N15)	16	73	09/95 – 07/00	3577	
ALMERA I (N15)	16	73	09/95 – 07/00	4010	
ALMERA I (N15)	16	75	07/95 – 03/00	3577	
ALMERA I (N15)	16	75	07/95 – 03/00	4010	
ALMERA I (N15)	18	84	07/95 – 05/00	3577	
ALMERA I (N15)	18	84	07/95 – 05/00	4010	
ALMERA I (N15)	1.4 GX,LX	55	09/95 – 07/00	3577	
ALMERA I (N15)	1.4 GX,LX	55	09/95 – 07/00	4010	
ALMERA I (N15)	1.6 SLX	66	09/95 – 07/00	3577	
ALMERA I (N15)	1.6 SLX	66	09/95 – 07/00	4010	
ALMERA I (N15)	2.0 D	55	11/95 – 07/00	3577	
ALMERA I (N15)	2.0 D	55	11/95 – 07/00	4010	
ALMERA I (N15)	1.4 GX,LX	55	09/95-07/00	3647	
ALMERA I (N15)	1.5	77	07/95-05/00	3647	
ALMERA I (N15)	1.6	73	09/95-07/00	3647	
ALMERA I (N15)	1.6 SLX	66	09/95-07/00	3647	
ALMERA I (N15)	1.8	84	07/95-05/00	3647	
ALMERA I (N15)	2.0 D	55	11/95-07/00	3647	
ALMERA I (N15)	1.4	64	09/95-07/00	3647	
ALMERA I (N15)	1.6	75	07/95-03/00	3647	
ALMERA I Hatchback (N15)	14	64	09/95 – 03/00	3577	
ALMERA I Hatchback (N15)	14	64	09/95 – 03/00	4010	
ALMERA I Hatchback (N15)	15	77	07/95 – 03/00	3577	
ALMERA I Hatchback (N15)	15	77	07/95 – 03/00	4010	
ALMERA I Hatchback (N15)	16	73	09/95 – 03/00	3577	
ALMERA I Hatchback (N15)	16	73	09/95 – 03/00	4010	
ALMERA I Hatchback (N15)	16	75	07/95 – 03/00	3577	
ALMERA I Hatchback (N15)	16	75	07/95 – 03/00	4010	
ALMERA I Hatchback (N15)	1.4 S,GX,LX	55	09/95 – 03/00	3577	
ALMERA I Hatchback (N15)	1.4 S,GX,LX	55	09/95 – 03/00	4010	
ALMERA I Hatchback (N15)	1.6 SR,SLX	66	09/95 – 03/00	3577	
ALMERA I Hatchback (N15)	1.6 SR,SLX	66	09/95 – 03/00	4010	
ALMERA I Hatchback (N15)	2.0 D	55	11/95 – 03/00	3577	
ALMERA I Hatchback (N15)	2.0 D	55	11/95 – 03/00	4010	
ALMERA I Hatchback (N15)	1.4	64	09/95-03/00	3647	
ALMERA I Hatchback (N15)	1.4 S,GX,LX	55	09/95-03/00	3647	
ALMERA I Hatchback (N15)	1.5	77	07/95-03/00	3647	
ALMERA I Hatchback (N15)	1.6	73	09/95-03/00	3647	
ALMERA I Hatchback (N15)	1.6	75	07/95-03/00	3647	
ALMERA I Hatchback (N15)	1.6 SR,SLX	66	09/95-03/00	3647	
ALMERA I Hatchback (N15)	2.0 D	55	11/95-03/00	3647	
ALMERA II (N16)	15	66	07/00 -	3562	
ALMERA II (N16)	15	66	07/00 -	3652	
ALMERA II (N16)	15	66	07/00 -		3660
ALMERA II (N16)	15	72	10/02 -	3562	
ALMERA II (N16)	15	72	10/02 -	3652	
ALMERA II (N16)	15	72	10/02 -		3660
ALMERA II (N16)	15	77	03/01 -	3562	
ALMERA II (N16)	15	77	03/01 -	3652	
ALMERA II (N16)	15	77	03/01 -		3660
ALMERA II (N16)	18	84	07/00 -		3660
ALMERA II (N16)	18	85	10/02 -		3660

MAKE & MODEL   		KW	YEAR		
NISSAN					
ALMERA II (N16)	18	94	01/02 -		3660
ALMERA II (N16)	1.5 dCi	60	01/03 -	3562	
ALMERA II (N16)	1.5 dCi	60	01/03 -	3652	
ALMERA II (N16)	1.5 dCi	60	01/03 -		3660
ALMERA II (N16)	2.2 dCi	82	09/03 -		3660
ALMERA II (N16)	2.2 dCi	100	09/03 -		3660
ALMERA II (N16)	2.2 Di	81	07/00 -		3660
ALMERA II Hatchback (N16)	15	66	03/00 -	3562	
ALMERA II Hatchback (N16)	15	66	03/00 -	3652	
ALMERA II Hatchback (N16)	15	66	03/00 -		3660
ALMERA II Hatchback (N16)	15	72	10/02 -	3562	
ALMERA II Hatchback (N16)	15	72	10/02 -	3652	
ALMERA II Hatchback (N16)	15	72	10/02 -		3660
ALMERA II Hatchback (N16)	18	84	01/00 -		3660
ALMERA II Hatchback (N16)	18	85	10/02 -		3660
ALMERA II Hatchback (N16)	18	94	08/02 -		3660
ALMERA II Hatchback (N16)	1.5 dCi	60	01/03 -	3562	
ALMERA II Hatchback (N16)	1.5 dCi	60	01/03 -	3652	
ALMERA II Hatchback (N16)	1.5 dCi	60	01/03 -		3660
ALMERA II Hatchback (N16)	1.5 XL	77	03/01 -	3562	
ALMERA II Hatchback (N16)	1.5 XL	77	03/01 -	3652	
ALMERA II Hatchback (N16)	1.5 XL	77	03/01 -		3660
ALMERA II Hatchback (N16)	2.2 dCi	82	09/03 -		3660
ALMERA II Hatchback (N16)	2.2 dCi	100	09/03 -		3660
ALMERA II Hatchback (N16)	2.2 Di	81	03/00 -		3660
ALMERA TINO (V10)	18	84	08/00 -		3660
ALMERA TINO (V10)	18	84	08/00 -	4115	
ALMERA TINO (V10)	18	85	12/02 -		3660
ALMERA TINO (V10)	18	85	12/02 -	4115	
ALMERA TINO (V10)	20	100	08/00 -		3660
ALMERA TINO (V10)	20	100	08/00 -	4115	
ALMERA TINO (V10)	2.2 dCi	82	09/03 -		3660
ALMERA TINO (V10)	2.2 dCi	82	09/03 -	4115	
ALMERA TINO (V10)	2.2 dCi	100	09/03 -		3660
ALMERA TINO (V10)	2.2 dCi	100	09/03 -	4115	
ALMERA TINO (V10)	2.2 Di	84	08/00 -		3660
ALMERA TINO (V10)	2.2 Di	84	08/00	4115	
ALTIMA (L30)	24	112	06/97 – 08/01	3699	
ALTIMA (L30)	24	112	06/97 – 08/01	3779	
ALTIMA (L31)	25	121	08/01 – 09/06	3699	
ALTIMA (L31)	25	121	08/01 – 09/06	3779	
ALTIMA (L31)	25	121	08/01 – 09/06		3933
ALTIMA (L31)	35	180	08/01 – 09/06	3699	
ALTIMA (L31)	35	180	08/01 – 09/06	3779	
ALTIMA (L31)	35	180	08/01 – 09/06		3933
ALTIMA (L32)	25	128	10/06 -	3699	
ALTIMA (L32)	25	128	10/06 – 07/13	3779	
ALTIMA (L32)	25	128	10/06 – 07/13		3933
ALTIMA (L32)	35	201	10/06 -	3699	
ALTIMA (L32)	35	201	10/06 – 07/13	3779	
ALTIMA (L32)	35	201	10/06 – 07/13		3933
ALTIMA (L32)	2.5 Hybrid (L32HV)	118	10/06 -	3699	
ALTIMA (L32)	2.5 Hybrid (L32HV)	118	10/06 – 07/11	3779	
ALTIMA (L32)	2.5 Hybrid (L32HV)	118	10/06 – 07/11		3933
ALTIMA (L33)	25	127	11/13 -		3933
ALTIMA (L33)	25	132	01/13 -		3933
ALTIMA (L33)	25	134	05/12 -		3933
ALTIMA (L33)	35	201	08/12 -		3933
ALTIMA (L33)	2.5	127	11.13 -	4319	
ALTIMA (L33)	2.5	132	01.13 -	4319	
ALTIMA (L33)	2.5	134	05.12 -	4319	
ALTIMA (L33)	2.5	136	08.12 -	4319	
ALTIMA (L33)	3.5	183	11.13 -	4319	
ALTIMA (L33)	3.5	199	11.12 -	4319	
ALTIMA (L33)	3.5	201	08.12 -	4319	
ALTIMA Coupe (CL32)	2.5 Hybrid (CL32HV)	118	10/06 -	3699	
ALTIMA Coupe (CL32)	2.5 Hybrid (CL32HV)	118	04/07 – 06/13	3779	
ALTIMA Coupe (CL32)	2.5 Hybrid (CL32HV)	118	04/07 – 06/13		3933
ATLEON	12.045	87	09/03 -	3942/A	
ATLEON	12.056	87	09/03 -	3942/A	
ATLEON	14.070	100	09/03 -	3942/A	

MAKE & MODEL		KW	YEAR	
NISSAN				
ATLEON	14.075	100	09/00 -	3942/A
ATLEON	14.080	100	09/03 -	3942/A
ATLEON	165.130	117	09/03 -	3942/A
ATLEON	210.130	151	09/03 -	3942/A
ATLEON	110.35, 120.35	78	09/00 -	3942/A
ATLEON	110.56, 120.56	78	09/00 -	3942/A
ATLEON	120.16, 165.120	117	09/03 -	3942/A
ATLEON	120.21, 210.120	151	09/03 -	3942/A
ATLEON	150,.21, 210.150	151	09/03 -	3942/A
ATLEON	75.16, 165.75	117	09/00 -	3942/A
ATLEON	95.16, 165.95	117	09/03 -	3942/A
BASSARA	24	110	11/99 – 08/02	3932
BASSARA	25	121	06/02 – 08/03	3932
BASSARA	30	162	11/99 – 08/03	3932
BASSARA	2.5 DCi	110	11/99 – 08/03	3932
BLUEBIRD VIII	1.8 (L18S)	65	01.80-12.83	3370
BLUEBIRD VIII	1.8 Turbo	99	01.80-10.83	3370
BLUEBIRD VIII	1.9 i (Z20E)	80	01.82-05.84	3370
BLUEBIRD VIII	16 (L16)	60	01.80-11.83	3370
BLUEBIRD VIII	18 (L18S)	65	01.80-05.84	3370
BLUEBIRD VIII	18 (L18T)	66	01.80-05.84	3370
BLUEBIRD VIII	2.0 D (LD20)	44	01.80-05.84	3370
BLUEBIRD VIII	2.0 D (LD20)	44	01.80-12.83	3370
BLUEBIRD VIII	2.0 i (Z20E)	80	01.82-12.83	3370
BLUEBIRD VIII	2.0 i GLE, GL	80	01.80-	3370
BLUEBIRD VIII	2.0 TD (LD20T)	57	01.83-09.83	3370
BLUEBIRD (G10)	20	107	04/00 – 12/06	3700
BLUEBIRD (T72 , T12)	16	61	03/86 – 06/90	3397
BLUEBIRD (T72 , T12)	16	61	03/86 – 06/90	3758
BLUEBIRD (T72 , T12)	1.8 i 16V (RLT72)	95	02/89 – 12/90	3397
BLUEBIRD (T72 , T12)	1.8 i 16V (RLT72)	95	02/89 – 12/90	3758
BLUEBIRD (T72 , T12)	2.0 (T12)	75	12/85 – 12/87	3397
BLUEBIRD (T72 , T12)	2.0 (T12)	75	12/85 – 12/87	3758
BLUEBIRD (T72 , T12)	2.0 D (SLT72, T12)	49	03/86 – 12/90	3397
BLUEBIRD (T72 , T12)	2.0 D (SLT72, T12)	49	03/86 – 12/90	3758
BLUEBIRD (T72 , T12)	2.0 i	85	09/88 – 09/90	3397
BLUEBIRD (T72 , T12)	2.0 i	85	09/88 – 09/90	3758
BLUEBIRD (T72 , T12)	2.0 i (HLT72, T12)	77	12/85 – 12/90	3397
BLUEBIRD (T72 , T12)	2.0 i (HLT72, T12)	77	12/85 – 12/90	3758
BLUEBIRD (T72 , T12, U12)	1.8 i 16V (RLT72)	95	02/89 – 12/90	4087
BLUEBIRD (U11)	18	66	11/83 – 06/88	3397
BLUEBIRD (U11)	18	66	11/83 – 06/88	3758
BLUEBIRD (U11)	2.0 D	43	04/84 – 01/88	3397
BLUEBIRD (U11)	2.0 D	43	04/84 – 01/88	3758
BLUEBIRD (U11)	2.0 i	77	04/84 – 01/88	3397
BLUEBIRD (U11)	2.0 i	77	04/84 – 01/88	3758
BLUEBIRD Hatchback (T72, T12)	16	61	03/86 – 06/90	3397
BLUEBIRD Hatchback (T72, T12)	16	61	03/86 – 06/90	3758
BLUEBIRD Hatchback (T72, T12)	16	66	03/86 – 06/91	3397
BLUEBIRD Hatchback (T72, T12)	16	66	03/86 – 06/91	3758
BLUEBIRD Hatchback (T72, T12)	1.8 i 16V (FRLT72)	95	02/89 – 12/90	3397
BLUEBIRD Hatchback (T72, T12)	1.8 i 16V (FRLT72)	95	02/89 – 12/90	3758
BLUEBIRD Hatchback (T72, T12)	1.8 i 16V (FRLT72)	95	02/89 – 12/90	4087
BLUEBIRD Hatchback (T72, T12)	2.0 (T12)	75	12/85 – 12/87	3397
BLUEBIRD Hatchback (T72, T12)	2.0 (T12)	75	12/85 – 12/87	3758
BLUEBIRD Hatchback (T72, T12)	2.0 D (FSLT72, T12)	49	03/86 – 12/90	3397
BLUEBIRD Hatchback (T72, T12)	2.0 D (FSLT72, T12)	49	03/86 – 12/90	3758
BLUEBIRD Hatchback (T72, T12)	2.0 i	85	09/88 – 09/90	3397
BLUEBIRD Hatchback (T72, T12)	2.0 i	85	09/88 – 09/90	3758
BLUEBIRD Hatchback (T72, T12)	2.0 i (FHLT72, T12)	77	12/85 – 12/90	3397
BLUEBIRD Hatchback (T72, T12)	2.0 i (FHLT72, T12)	77	12/85 – 12/90	3758
BLUEBIRD Station Wagon (WU11)	20	75	04/86 – 09/90	3397
BLUEBIRD Station Wagon (WU11)	20	75	04/86 – 09/90	3758
BLUEBIRD Station Wagon (WU11)	2.0 D	43	04/84 – 01/88	3397
BLUEBIRD Station Wagon (WU11)	2.0 D	43	04/84 – 01/88	3758
BLUEBIRD Station Wagon (WU11)	2.0 D	49	03/86 – 12/90	3397
BLUEBIRD Station Wagon (WU11)	2.0 D	49	03/86 – 12/90	3758
BLUEBIRD Station Wagon (WU11)	2.0 i	77	04/84 – 12/90	3397
BLUEBIRD Station Wagon (WU11)	2.0 i	77	04/84 – 12/90	3758
BLUEBIRD Station Wagon (WU11)	2.0 i	85	09/88 – 09/90	3397
BLUEBIRD Station Wagon (WU11)	2.0 i	85	09/88 – 09/90	3758

MAKE & MODEL		KW	YEAR		
NISSAN					
BLUEBIRD SYLPHY (G11)	16	80	01/07 – 04/09		3933
BLUEBIRD SYLPHY (G11)	16	86	04/09 -		3933
BLUEBIRD SYLPHY (G11)	20	100	08/06 – 04/09	3699	
BLUEBIRD SYLPHY (G11)	20	100	08/06 – 04/09	3779	
BLUEBIRD SYLPHY (G11)	20	100	08/06 – 04/09		3933
BLUEBIRD SYLPHY (G11)	20	105	04/09 -	3699	
BLUEBIRD SYLPHY (G11)	20	105	04/09 – 12/12	3779	
BLUEBIRD SYLPHY (G11)	20	105	04/09 – 12/12		3933
CABSTAR	2.811	81	10/06 -	3965/1	
CABSTAR	2.812	90	10/06 -	3965/1	
CABSTAR	3.211	81	01/07 – 07/11	3965/1	
CABSTAR	3.511	81	09/06 – 03/09	3965/1	
CABSTAR	3.512	90	10/06 -	3965/1	
CABSTAR	3.513	96	09/06 – 12/12	3965/1	
CABSTAR	3.514	100	10/06 -	3965/1	
CABSTAR	3.515	101	10/06 -	3965/1	
CABSTAR	4.513	96	10/06 -	3965/1	
CABSTAR	4.515	110	10/06 -	3965/1	
CABSTAR (F23, H41, H42)	2.5 dCi	96	10/06 – 09/11	3965/1	
CABSTAR (F23, H41, H42)	35 DI 3.0	92	01/04 – 12/06	3965/1	
CARAVAN (E25)	2.0 (KA20DE)	88	10/00 – 09/02	4002	
CARAVAN (E25)	2.4 (KA24DE)	103	05/01 – 01/12	4002	
CARAVAN (E25)	3.0 Di (ZD30DD)	77	10/00 – 01/12	4002	
CARAVAN (E25)	3.0 Di (ZD30DDTI)	89	05/02 – 01/12	4002	
CEDRIC V / DATSUN 280C	2.8 CDX		03.78-	3369	
CEDRIC V / DATSUN 280C	2.8 CDX		03.78-	3369	
CEDRIC V / DATSUN 280C	2.8 CDX		03.78-	3369	
CEDRIC V / DATSUN 280C	2.8 CDX		03.78-	3369	
CEFIRO II Saloon (A32)	20	103	10/94 – 12/99	3699	
CEFIRO II Saloon (A32)	20	103	10/94 – 12/99	3779	
CEFIRO II Saloon (A32)	30	142	10/94 – 12/99	3697	
CHERRY III (N12)	10	37	05/82 – 05/86	3394	
CHERRY III (N12)	13	44	05/82 – 10/86	3394	
CHERRY III (N12)	15	55	11/83 – 10/86	3394	
CHERRY III (N12)	16	51	05/84 – 07/86	3394	
CHERRY III (N12)	1.5 ET Turbo	77	01/83 – 12/85	3394	
CIVILAN	4.5		04/07 -	4116	
CIVILAN	4.9		04/07 -	4116	
CUBE (Z10)	13	55	03/98 – 08/00	3797	
CUBE (Z10)	13	63	09/00 – 12/02	3797	
CUBE (Z10)	13	74	09/00 – 12/02	3797	
CUBE (Z10)	1.3 All-wheel Drive	63	09/00 – 12/02	3797	
CUBE (Z10)	1.3 All-wheel Drive	74	09/00 – 12/02	3797	
CUBE (Z11)	14	72	01/03 – 09/05	4015	
CUBE (Z11)	15	80	01/03 – 09/05	4015	
CUBE (Z11)	1.4 4x4	72	01/03 – 09/05	4015	
CUBE (Z11)	1.5 4x4	80	01/03 – 09/05	4015	
CUBE (Z12)	1.5 dCi	78	03/10 -		3933
CUBE (Z12)	1.5 dCi	81	03/10 -		3933
CUBE (Z12)	1.6 16V	81	03/10 -		3933
DATSUN 180 B (PL810)	1.8 (L18S)	65	05.77-01.81	3370	
DATSUN 180 B (PL810)	1.8 (KPL810) (L18)	66	05.77-01.81	3370	
DATSUN 180 B (PL810)	1.8 (KPL810) (L18S)	66	05.77-01.81	3370	
DATSUN 180 B (PL810)	1.8 (KPL810) (L18T)	66	05.77-01.81	3370	
ELGRAND II (E51)	3.0 D (ZD30)	113	04/03 – 12/10	4002	
ELGRAND II (E51)	3.5 (VQ35DE)	177	05/02 – 12/10	4002	
ELGRAND (E50)	3.2 D 4x4 (AVWE50)	110	10/95 – 08/01	3932	
ELGRAND (E51)	25	137	12/04 – 12/10	3932	
ELGRAND (E51)	25	137	12/04 – 12/10		3933
ELGRAND (E51)	35	177	05/02 – 12/10	3932	
ELGRAND (E51)	35	177	05/02 – 12/10		3933
ELGRAND (E51)	2.5 AWD	137	12/04 – 12/10	3932	
ELGRAND (E51)	2.5 AWD	137	12/04 – 12/10		3933
ELGRAND (E51)	3.0 D	113	04/03 – 12/10	3932	
ELGRAND (E51)	3.0 D	113	04/03 – 12/10		3933
ELGRAND (E51)	3.5 AWD	177	05/02 – 12/10	3932	
ELGRAND (E51)	3.5 AWD	177	05/02 – 12/10		3933
GENISS / LIVINA GENISS MPV	18	93	11/06 – 01/10		3933
GENISS / LIVINA GENISS MPV	18	93	11/06 – 01/10	4017	
HOMY III-IV	2.0 (Z20S)	66	08.82-04.92	3370	
INFINITI (Dongfeng) Q50L	2.0 T	155	11/14 -	4308	

MAKE & MODEL		KW	YEAR		
NISSAN					
INFINITI Q50	3.7	258	04/14 -	4308	
INFINITI Q50	50	241	06/13 -	4308	
INFINITI Q50	2.0 T	153	04/14 -	4308	
INFINITI Q50	2.0 T	155	04/14 -	4308	
INFINITI Q50	50 D	125	04/13 -	4308	
INFINITI Q50	50 Hybrid	225	04/13 -	4308	
INFINITI Q50	50 Hybrid	268	04/13 -	4308	
INFINITI Q50	50 Hybrid AWD	225	04/13 -	4308	
INFINITI Q50	50 Hybrid AWD	268	04/13 -	4308	
INFINITI Q60 Coupe	2.0 T	155	09/16 -	4308	
INTERSTAR Box (X70)	dCI 90	66	07/02 -		3855
INTERSTAR Box (X70)	dCI 90	66	07/02 -	3856	
INTERSTAR Box (X70)	dCi 100	73	11/03 -		3855
INTERSTAR Box (X70)	dCi 100	73	11/03 -	3856	
INTERSTAR Box (X70)	dCi 100	74	04/06 -		3855
INTERSTAR Box (X70)	dCi 100	74	04/06 -	3856	
INTERSTAR Box (X70)	dCi 120	84	07/02 -		3855
INTERSTAR Box (X70)	dCi 120	84	07/02 -	3856	
INTERSTAR Box (X70)	dCi 120	88	09/06 -		3855
INTERSTAR Box (X70)	dCi 120	88	09/06 -	3856	
INTERSTAR Box (X70)	dCi 140	100	11/03 -		3855
INTERSTAR Box (X70)	dCi 140	100	11/03 -	3856	
INTERSTAR Box (X70)	dCi 150	107	09/06 -		3855
INTERSTAR Box (X70)	dCi 150	107	09/06 -	3856	
INTERSTAR Box (X70)	dCi 80	60	07/02 -		3855
INTERSTAR Box (X70)	dCi 80	60	07/02 -	3856	
INTERSTAR Bus (X70)	dCI 90	66	07/02 -		3855
INTERSTAR Bus (X70)	dCI 90	66	07/02 -	3856	
INTERSTAR Bus (X70)	dCi 100	73	11/03 -		3855
INTERSTAR Bus (X70)	dCi 100	73	11/03 -	3856	
INTERSTAR Bus (X70)	dCi 100	74	04/06 -		3855
INTERSTAR Bus (X70)	dCi 100	74	04/06 -	3856	
INTERSTAR Bus (X70)	dCi 120	84	07/02 – 08/06		3855
INTERSTAR Bus (X70)	dCi 120	84	07/02 – 08/06	3856	
INTERSTAR Bus (X70)	dCi 120	88	09/06 -		3855
INTERSTAR Bus (X70)	dCi 120	88	09/06 -	3856	
INTERSTAR Bus (X70)	dCi 140	100	11/03 -		3855
INTERSTAR Bus (X70)	dCi 140	100	11/03 -	3856	
INTERSTAR Bus (X70)	dCi 150	107	09/06 -		3855
INTERSTAR Bus (X70)	dCi 150	107	09/06 -	3856	
INTERSTAR Bus (X70)	dCi 80	60	07/02 -		3855
INTERSTAR Bus (X70)	dCi 80	60	07/02 -	3856	
INTERSTAR Platform/Chassis	dCi 100	73	02/04 -		3855
INTERSTAR Platform/Chassis	dCi 100	73	02/04 -	3856	
INTERSTAR Platform/Chassis	dCi 120	84	08/03 -		3855
INTERSTAR Platform/Chassis	dCi 120	84	08/03 -	3856	
INTERSTAR Platform/Chassis	dCi 120	88	08/06 -		3855
INTERSTAR Platform/Chassis	dCi 120	88	08/06 -	3856	
INTERSTAR Platform/Chassis	dCi 140	100	11/03 -		3855
INTERSTAR Platform/Chassis	dCi 140	100	11/03 -	3856	
INTERSTAR Platform/Chassis	dCi 150	107	08/06 -		3855
INTERSTAR Platform/Chassis	dCi 150	107	08/06 -	3856	
JUKE (F15)	16	69	01/13 -	4109	
JUKE (F15)	16	69	01/13 -	3699	
JUKE (F15)	16	86	06/10 -	4109	
JUKE (F15)	16	86	06/10 -	3699	
JUKE (F15)	1.2 DIG-T	85	05/14 -	4109	
JUKE (F15)	1.2 DIG-T	85	05/14 -	3699	
JUKE (F15)	1.5 dCi	81	06/10 -	4109	
JUKE (F15)	1.5 dCi	81	06/10 -	3699	
JUKE (F15)	1.6 DIG-T	140	06/10 -	4109	
JUKE (F15)	1.6 DIG-T	140	06/10 -	3699	
JUKE (F15)	1.6 DIG-T 4x4	140	06/10 -	4109	
JUKE (F15)	1.6 DIG-T 4x4	140	06/10 -	3699	
JUKE (F15)	1.6 DIG-T NISMO	147	03/13 – 07/14	4109	
JUKE (F15)	1.6 DIG-T NISMO	147	03/13 – 07/14	3699	
JUKE (F15)	1.6 DIG-T NISMO 4x4	147	02/13 – 07/14	4109	
JUKE (F15)	1.6 DIG-T NISMO 4x4	147	02/13 – 07/14	3699	
JUKE (F15)	1.6 DIG-T NISMO RS	160	08/14 -	4109	
JUKE (F15)	1.6 DIG-T NISMO RS	160	08/14 -	3699	
JUKE (F15)	1.6 DIG-T NISMO RS 4x4	157	08/14 -	4109	

BESER®

MAKE & MODEL		KW	YEAR		
NISSAN					
JUKE (F15)	1.6 DIG-T NISMO RS 4x4	157	08/14 -	3699	
L Series	L 80.9	70	01/95 -	3773	3773
L Series	L 80.9	70	01/95 -	3773	3773
LAUREL III	2.0 (L20A)	71	03.77-05.83	3370	
LAUREL III	2.4 (L24)	83	12.77-05.83	3370	
LAUREL III (HLC230)	2.0 (L20A)	71	03/77 – 05/83	3375	
LAUREL III (HLC230)	2.4 (L24)	83	12/77 – 05/83	3375	
LAUREL IV	2.0 (L20A)	71	01.81-01.84	3370	
LAUREL IV	2.0 D (LD20)	44	04.81-10.84	3370	
LAUREL IV	2.4 (L24)	83	01.81-01.84	3370	
LAUREL IV	2.4 (L24)	88	09.83-12.85	3370	
LAUREL IV	2.8 D (LD28)	62	01.81-10.85	3370	
LAUREL (JC32)	24	94	01/85 – 12/87	3397	
LAUREL (JC32)	24	94	01/85 – 12/87	3758	
LAUREL (JC32)	2.8 D	62	01/85 – 12/87	3397	
LAUREL (JC32)	2.8 D	62	01/85 – 12/87	3758	
LAUREL (JC32)	2.8 D	66	01/85 – 12/89	3397	
LAUREL (JC32)	2.8 D	66	01/85 – 12/89	3758	
LAUREL II (C130)	18	63	01/73 -	3375	
LEAF (ZE0	Electric		11.10 -	4319	
LEAF (ZE0)	Electric	80	11/10 -	3952	
LIVINA / GRAND LIVINA (L10, L11)	16	80	02/07 -	4015	
LIVINA C-GEAR	16	77	03/10 -		3933
LIVINA Hatchback	16	77	03/10 -		3933
LIVINA Hatchback	16	80	04/07 – 03/10		3933
M Series	M 110.14	103	01/53 – 12/00	3773	3773
M Series	M 110.14	103	01/53 – 12/00	3773	3773
MAXIMA (U.S.A. G910)	2.4		09.80-	3370	
MAXIMA (U.S.A. G910)	2.4		09.80-	3370	
MAXIMA (U.S.A. G910)	2.4		09.80-	3370	
MAXIMA (U.S.A. G910)	2.4		09.80-	3370	
MAXIMA (U.S.A. G910)	2.4		09.80-	3370	
MAXIMA (U.S.A. G910)	2.4		09.80-	3370	
MAXIMA (U.S.A. G910)	2.4 D		09.80-	3370	
MAXIMA (U.S.A. G910)	2.4 D		09.80-	3370	
MAXIMA (U.S.A. G910)	2.4 D		09.80-	3370	
MAXIMA (U.S.A. G910)	2.4 D		09.80-	3370	
MAXIMA (U.S.A. G910)	2.4 D		09.80-	3370	
MAXIMA (U.S.A. G910)	2.4 D		09.80-	3370	
MAXIMA / MAXIMA QX IV (A32)	20	103	02/95 – 08/00	3697	
MAXIMA / MAXIMA QX IV (A32)	20	103	02/95 – 08/00	3699	
MAXIMA / MAXIMA QX IV (A32)	20	103	02/95 – 08/00	3779	
MAXIMA / MAXIMA QX IV (A32)	30	142	01/95 – 08/00	3697	
MAXIMA / MAXIMA QX IV (A32)	2.5 V6 24V	140	02/95 – 08/00	3697	
MAXIMA / MAXIMA QX IV Station Wagon (A32)	2.0 QX	103	10/97 – 12/00	3697	
MAXIMA / MAXIMA QX IV Station Wagon (A32)	2.5 V6 24V	140	10/97 – 12/00	3697	
MAXIMA / MAXIMA QX IV Station Wagon (A32)	3.0 QX	142	10/97 – 12/00	3697	
MAXIMA III (J30)	3.0 i	125	10/88 – 06/94	3697	
MAXIMA III (J30)	3.0 i	125	10/88 – 06/94	3699	
MAXIMA III (J30)	3.0 i	125	10/88 – 06/94	3779	
MAXIMA III (J30)	3.0 i	125	10/88 – 06/94	4087	
MICRA C+C III (K12)	1.4 16V	65	08/05 -	3983	
MICRA C+C III (K12)	1.6 160 SR	81	08/05 -	3983	
MICRA II (K11)	10	40	01/92 – 04/93	4128	
MICRA II (K11)	1.0 i 16V	40	08/92 – 09/00	4128	
MICRA II (K11)	1.0 i 16V	44	09/00 – 02/03	4128	
MICRA II (K11)	1.3 i 16V	55	08/92 – 09/00	4128	
MICRA II (K11)	1.4 i 16V	60	09/00 – 02/03	4128	
MICRA II (K11)	1.5 D	42	02/98 – 02/03	4128	
MICRA III (K12)	1.0 16V	48	01/03 – 06/10	3983	
MICRA III (K12)	1.0 16V	48	01/03 – 06/10	4015	
MICRA III (K12)	1.2 16V	48	01/03 – 06/10	3983	
MICRA III (K12)	1.2 16V	48	01/03 – 06/10	4015	
MICRA III (K12)	1.2 16V	59	01/03 – 06/10	3983	
MICRA III (K12)	1.2 16V	59	01/03 – 06/10	4015	
MICRA III (K12)	1.4 16V	65	01/03 – 06/10	3983	
MICRA III (K12)	1.4 16V	65	01/03 – 06/10	4015	
MICRA III (K12)	1.5 dCi	48	01/03 – 06/10	3983	
MICRA III (K12)	1.5 dCi	48	01/03 – 06/10	4015	
MICRA III (K12)	1.5 dCi	50	06/05 – 06/10	3983	
MICRA III (K12)	1.5 dCi	50	06/05 – 06/10	4015	

MAKE & MODEL		KW	YEAR		
NISSAN					
MICRA III (K12)	1.5 dCi	60	09/03 – 06/10	3983	
MICRA III (K12)	1.5 dCi	60	09/03 – 06/10	4015	
MICRA III (K12)	1.5 dCi	63	06/05 – 06/10	3983	
MICRA III (K12)	1.5 dCi	63	06/05 – 06/10	4015	
MICRA III (K12)	160 SR	81	05/05 – 06/10	3983	
MICRA III (K12)	160 SR	81	05/05 – 06/10	4015	
MICRA IV (K13)	12	56	05/10 -	3983/2	
MICRA IV (K13)	12	59	05/10 -	3983/2	
MICRA IV (K13)	15	75	11/10 -	3983/2	
MICRA IV (K13)	1.2 DIG-S	72	04/11 -	3983/2	
MURANO I (Z50)	3.5 4x4	172	08/03 – 09/08		3933
MURANO I (Z50)	3.5 4x4	172	08/03 – 09/08	4074	
MURANO I (Z50)	3.5 4x4	172	08/03 – 09/08	4143	
MURANO II (Z51)	35	191	01/11 – 09/14	4143	
MURANO II (Z51)	35	195	11/07 – 09/14	4143	
MURANO II (Z51)	2.5 dCi 4x4	140	01/10 – 09/14	4143	
MURANO II (Z51)	3.5 4x4	183	12/10 – 09/14	4143	
MURANO II (Z51)	3.5 4x4	188	10/08 – 09/14	4143	
MURANO II (Z51)	3.5 4x4	191	12/09 – 09/14	4143	
MURANO II (Z51)	3.5 4x4	195	11/07 – 09/14	4143	
NAVARA Platform şasi (D23)	2.3 dCi 4x4	120	01.15 -	4307	
NAVARA Platform/Chassis (D22)	2.5 Di 4WD	98	02/02 -	3397	
NAVARA Platform/Chassis (D23)	2.3 dCi 4x4	120	01/15 -	4307	
NOTE (E11)	14	65	03/06 -		3529/2
NOTE (E11)	16	81	03/06 -		3529/2
NOTE (E11)	1.5 dCi	50	03/06 -		3529/2
NOTE (E11)	1.5 dCi	63	03/06 -		3529/2
NOTE (E11)	1.5 dCi	66	09/10 -		3529/2
NOTE (E11)	1.5 dCi	76	07/08 -		3529/2
NOTE (E11, NE11)	14	65	03/06 – 06/12	3983	
NOTE (E11, NE11)	14	65	03/06 – 06/12	4015	
NOTE (E11, NE11)	16	81	03/06 – 06/12	3983	
NOTE (E11, NE11)	16	81	03/06 – 06/12	4015	
NOTE (E11, NE11)	1.5 dCi	50	03/06 – 06/12	3983	
NOTE (E11, NE11)	1.5 dCi	50	03/06 – 06/12	4015	
NOTE (E11, NE11)	1.5 dCi	63	03/06 – 06/12	3983	
NOTE (E11, NE11)	1.5 dCi	63	03/06 – 06/12	4015	
NOTE (E11, NE11)	1.5 dCi	66	09/10 – 06/12	3983	
NOTE (E11, NE11)	1.5 dCi	66	09/10 – 06/12	4015	
NOTE (E11, NE11)	1.5 dCi	76	07/08 – 06/12	3983	
NOTE (E11, NE11)	1.5 dCi	76	07/08 – 06/12	4015	
NOTE (E12)	12	59	06/13 -	3983/2	
NOTE (E12)	1.2 DIG-S	72	06/13 -	3983/2	
NOTE (E12)	1.2 LPG	56	03/15 -	3983/2	
NOTE (E12)	1.5 dCi	66	06/13 -	3983/2	
NP300 NAVARA (D40)	2.5 D	98	09/08 -	3952	
NP300 NAVARA (D40)	2.5 dCi	106	07/05 -	3952	
NP300 NAVARA (D40)	2.5 dCi	106	07/05 -		4025
NP300 NAVARA (D40)	2.5 dCi	106	07/05 -	4143	
NP300 NAVARA (D40)	2.5 dCi	120	10/06 -	3952	
NP300 NAVARA (D40)	2.5 dCi	128	12/05 -	3952	
NP300 NAVARA (D40)	2.5 dCi	128	12/05 -		4025
NP300 NAVARA (D40)	2.5 dCi	128	12/05 -	4143	
NP300 NAVARA (D40)	2.5 dCi 4WD	106	10/08 -	3952	
NP300 NAVARA (D40)	2.5 dCi 4WD	106	10/08 -	4143	
NP300 NAVARA (D40)	2.5 dCi 4WD	126	10/06 -	3952	
NP300 NAVARA (D40)	2.5 dCi 4WD	126	10/06 -		4025
NP300 NAVARA (D40)	2.5 dCi 4WD	126	10/06 -	4143	
NP300 NAVARA (D40)	2.5 dCi 4WD	128	07/05 -	3952	
NP300 NAVARA (D40)	2.5 dCi 4WD	128	07/05 -		4025
NP300 NAVARA (D40)	2.5 dCi 4WD	128	07/05 -	4143	
NP300 NAVARA (D40)	2.5 dCi 4WD	140	12/09 -		4025
NP300 NAVARA (D40)	2.5 dCi 4WD	140	12/09 -	4143	
NP300 NAVARA (D40)	3.0 dCi 4WD	170	02/10 -		4025
NP300 NAVARA (D40)	3.0 dCi 4WD	170	02/10 -	4143	
NP300 NAVARA Pickup (D23)	2.5 dCi	120	07/14 -	3952	
NP300 NAVARA Pickup (D23)	2.5 dCi	140	07/14 -	3952	
NP300 NAVARA Pickup (D23)	2.5 dCi 4x4	120	07/14 -	3952	
NP300 NAVARA Pickup (D23)	2.5 dCi 4x4	120	07/14 -	4143	
NP300 NAVARA Pickup (D23)	2.5 dCi 4x4	140	07/14 -	3952	
NP300 NAVARA Pickup (D23)	2.5 dCi 4x4	140	07/14 -	4143	

MAKE & MODEL   		KW	YEAR		
NISSAN					
NP300 NAVARA Pickup (D23)	3.0 dCi 4x4	170	10/14 -	3952	
NP300 NAVARA Pickup (D23)	3.0 dCi 4x4	170	10/14 -	4143	
NP300 NAVARA Pick-up (D23)	2.3 dCi (D231)	120	01.15 -	4307	
NP300 NAVARA Pick-up (D23)	2.3 dCi 4x4 (D231)	120	01.15 -	4307	
NP300 NAVARA Pick-up (D23)	2.3 dCi 4x4 (D231)	140	10.15 -	4307	
NP300 NAVARA Platform/Chassis (D40)	2.5 dCi	106	08/08 – 12/15	3952	
NP300 NAVARA Platform/Chassis (D40)	2.5 dCi	140	03/10 -	4143	
NP300 NAVARA Platform/Chassis (D40)	2.5 dCi 4WD	106	08/08 -	3952	
NP300 NAVARA Platform/Chassis (D40)	2.5 dCi 4WD	106	08/08 -	4143	
NP300 NAVARA Platform/Chassis (D40)	2.5 dCi 4WD	126	08/08 -	4143	
NP300 NAVARA Platform/Chassis (D40)	3.0 dCi	170	03/10 -	4143	
NP300 PICKUP (D22)	2.5 dCi	98	04/08 -	4017	
NP300 PICKUP (D22)	2.5 dCi 4x4	98	04/08 -	4017	
NT400 CABSTAR (F24F)	3.514	100	01/14 -	3965/1	
NT400 CABSTAR (F24F)	28.12, 32.12, 35.12 (F91AN)	90	01/14 -	3965/1	
NT400 CABSTAR (F24F)	35.15, 45.15	107	01/14 -	3965/1	
NV400 Box	2.3 dCi 145 [RWD]	107	11/11 – 02/14	4056	
NV400 Box	2.3 dCi 145 [RWD]	107	11/11 – 02/14		4057
NV400 Box	2.3 dCi 145 [RWD]	107	11/11 – 02/14		4132
NV400 Box	2.3 dCi 145 [RWD]	107	11/11 – 02/14		4172
NV400 Box	2.3 dCi 150	110	02/14 – 09/16	4056	
NV400 Box	2.3 dCi 150	110	02/14 – 09/16		4057
NV400 Box	2.3 dCi 165	120	06/14 – 09/16	4056	
NV400 Box	2.3 dCi 165	120	06/14 – 09/16		4057
NV400 Box	dCi 100	74	11/11 – 05/14	4056	
NV400 Box	dCi 100	74	11/11 – 05/14		4057
NV400 Box	dCi 110	81	06/14 -	4056	
NV400 Box	dCi 110	81	06/14 -		4057
NV400 Box	dCi 125	92	11/11 – 09/16	4056	
NV400 Box	dCi 125	92	11/11 – 09/16		4057
NV400 Box	dCi 125 [RWD]	92	11/11 – 09/16	4056	
NV400 Box	dCi 125 [RWD]	92	11/11 – 09/16		4057
NV400 Box	dCi 125 [RWD]	92	11/11 – 09/16		4132
NV400 Box	dCi 125 [RWD]	92	11/11 – 09/16		4172
NV400 Box	dCi 130	96	09/16 -	4056	
NV400 Box	dCi 130 [RWD]	96	09/16 -	4056	
NV400 Box	dCi 140	100	06/14 – 09/16	4056	
NV400 Box	dCi 140	100	06/14 – 09/16		4057
NV400 Box	dCi 140 [RWD]	100	06/14 – 09/16	4056	
NV400 Box	dCi 140 [RWD]	100	06/14 – 09/16		4057
NV400 Box	dCi 140 [RWD]	100	06/14 – 09/16		4132
NV400 Box	dCi 140 [RWD]	100	06/14 – 09/16		4172
NV400 Box	dCi 145	107	11/11 – 02/14	4056	
NV400 Box	dCi 145	107	11/11 – 02/14		4057
NV400 Box	dCi 150 [RWD]	110	02/14 – 09/16	4056	
NV400 Box	dCi 150 [RWD]	110	02/14 – 09/16		4057
NV400 Box	dCi 150 [RWD]	110	02/14 – 09/16		4132
NV400 Box	dCi 150 [RWD]	110	02/14 – 09/16		4172
NV400 Box	dCi 165 [RWD]	120	06/14 – 09/16	4056	
NV400 Box	dCi 165 [RWD]	120	06/14 – 09/16		4057
NV400 Box	dCi 165 [RWD]	120	06/14 – 09/16		4132
NV400 Box	dCi 165 [RWD]	120	06/14 – 09/16		4172
NV400 Box	dCi 170	125	09/16 -	4056	
NV400 Bus	dCi 100	74	11/11 – 06/14	4056	
NV400 Bus	dCi 100	74	11/11 – 06/14		4057
NV400 Bus	dCi 110	81	06/14 – 09/16	4056	
NV400 Bus	dCi 110	81	06/14 – 09/16		4057
NV400 Bus	dCi 125	92	11/11 – 09/16	4056	
NV400 Bus	dCi 125	92	11/11 – 09/16		4057
NV400 Bus	dCi 140	100	06/14 – 09/16	4056	
NV400 Bus	dCi 140	100	06/14 – 09/16		4057
NV400 Bus	dCi 145	107	11/11 – 02/14	4056	
NV400 Bus	dCi 145	107	11/11 – 02/14		4057
NV400 Bus	dCi 150	110	02/14 – 09/16	4056	
NV400 Bus	dCi 150	110	02/14 – 09/16		4057
NV400 Bus	dCi 160	120	06/14 – 09/16	4056	
NV400 Bus	dCi 160	120	06/14 – 09/16		4057
NV400 Bus	dCi 170	125	07/15 -	4056	
NV400 Bus	dCi 170	125	07/15 -		4057
NV400 Bus	dCi 170	125	07/15 -		4132
NV400 Bus	dCi 170	125	07/15 -		4172

MAKE & MODEL		KW	YEAR		
NISSAN					
NV400 Platform/Chassis	dCi 100	74	11/11 – 06/14	4056	
NV400 Platform/Chassis	dCi 100	74	11/11 – 06/14		4057
NV400 Platform/Chassis	dCi 110	81	06/14 – 06/16	4056	
NV400 Platform/Chassis	dCi 110	81	06/14 – 06/16		4057
NV400 Platform/Chassis	dCi 125	92	11/11 – 06/16	4056	
NV400 Platform/Chassis	dCi 125	92	11/11 – 06/16		4057
NV400 Platform/Chassis	dCi 125 [RWD]	92	11/11 – 06/16	4056	
NV400 Platform/Chassis	dCi 125 [RWD]	92	11/11 – 06/16		4057
NV400 Platform/Chassis	dCi 125 [RWD]	92	11/11 – 06/16		4132
NV400 Platform/Chassis	dCi 125 [RWD]	92	11/11 – 06/16		4172
NV400 Platform/Chassis	dCi 130	96	06/16 -	4056	
NV400 Platform/Chassis	dCi 130 [RWD]	96	06/16 -	4056	
NV400 Platform/Chassis	dCi 140	100	06/14 – 06/16	4056	
NV400 Platform/Chassis	dCi 140	100	06/14 – 06/16		4057
NV400 Platform/Chassis	dCi 140 [RWD]	100	06/14 – 06/16	4056	
NV400 Platform/Chassis	dCi 140 [RWD]	100	06/14 – 06/16		4057
NV400 Platform/Chassis	dCi 140 [RWD]	100	06/14 – 06/16		4132
NV400 Platform/Chassis	dCi 140 [RWD]	100	06/14 – 06/16		4172
NV400 Platform/Chassis	dCi 145	107	11/11 – 06/16	4056	
NV400 Platform/Chassis	dCi 145	107	11/11 – 06/16		4057
NV400 Platform/Chassis	dCi 145 [RWD]	107	11/11 – 06/16	4056	
NV400 Platform/Chassis	dCi 145 [RWD]	107	11/11 – 06/16		4057
NV400 Platform/Chassis	dCi 145 [RWD]	107	11/11 – 06/16		4132
NV400 Platform/Chassis	dCi 145 [RWD]	107	11/11 – 06/16		4172
NV400 Platform/Chassis	dCi 150	110	08/14 – 06/16	4056	
NV400 Platform/Chassis	dCi 150	110	08/14 – 06/16		4057
NV400 Platform/Chassis	dCi 150 [RWD]	110	08/14 – 06/16	4056	
NV400 Platform/Chassis	dCi 150 [RWD]	110	08/14 – 06/16		4057
NV400 Platform/Chassis	dCi 150 [RWD]	110	08/14 – 06/16		4132
NV400 Platform/Chassis	dCi 150 [RWD]	110	08/14 – 06/16		4172
NV400 Platform/Chassis	dCi 165	120	06/14 – 06/16	4056	
NV400 Platform/Chassis	dCi 165	120	06/14 – 06/16		4057
NV400 Platform/Chassis	dCi 165 [RWD]	120	06/14 -	4056	
NV400 Platform/Chassis	dCi 165 [RWD]	120	06/14 -		4057
NV400 Platform/Chassis	dCi 165 [RWD]	120	06/14 -		4132
NV400 Platform/Chassis	dCi 165 [RWD]	120	06/14 -		4172
NV400 Platform/Chassis	dCi 170	125	06/16 -	4056	
OTING Closed Off-Road Vehicle	24	96	10/07 -	4017	
OTING Closed Off-Road Vehicle	2.5 D	80	09/08 -	4017	
OTING Closed Off-Road Vehicle	2.5 D All-wheel Drive	80	09/08 -	4017	
OTING Closed Off-Road Vehicle	2.9 D	78	10/07 -	4017	
OTING Closed Off-Road Vehicle	2.9 D All-wheel Drive	78	10/07 -	4017	
OTING Closed Off-Road Vehicle	3.2 D	81	10/07 -	4017	
OTING Closed Off-Road Vehicle	3.2 D All-wheel Drive	81	10/07 -	4017	
PALADIN	24	110	02/03 -	4017	
PALADIN	2.4 All-wheel Drive	110	02/03 -	4017	
PALADIN	3.3 All-wheel Drive	125	02/03 -	4017	
PATHFINDER I (WD21)	2.4 4WD	74	07/86 – 10/95	3692	
PATHFINDER I (WD21)	2.4 4WD	74	07/86 – 10/95	3760	
PATHFINDER I (WD21)	3.0 4WD	95	07/86 – 08/95	3692	
PATHFINDER I (WD21)	3.0 4WD	95	07/86 – 08/95	3760	
PATHFINDER II (R50)	24	87	09/99 – 02/02	3932	
PATHFINDER II (R50)	2.7 TD 4WD	96	09/97 – 12/04	3932	
PATHFINDER II (R50)	3.2 TD 4WD	110	09/97 – 12/04	3932	
PATHFINDER II (R50)	3.3 V6 4WD	110	03/98 – 10/00	3932	
PATHFINDER II (R50)	3.3 V6 4WD	125	09/97 – 12/04	3932	
PATHFINDER II (R50)	3.5 V6 4WD	162	11/00 – 12/04	3932	
PATHFINDER III (R51)	2.5 dCi	128	01/05 -		4025
PATHFINDER III (R51)	2.5 dCi	128	01/05 -	4143	
PATHFINDER III (R51)	2.5 dCi 4WD	120	01/05 -		4025
PATHFINDER III (R51)	2.5 dCi 4WD	120	01/05 -	4143	
PATHFINDER III (R51)	2.5 dCi 4WD	126	10/06 -		4025
PATHFINDER III (R51)	2.5 dCi 4WD	126	10/06 -	4143	
PATHFINDER III (R51)	2.5 dCi 4WD	128	03/05 -		4025
PATHFINDER III (R51)	2.5 dCi 4WD	128	03/05 -	4143	
PATHFINDER III (R51)	2.5 dCi 4WD	140	08/10 -		4025
PATHFINDER III (R51)	2.5 dCi 4WD	140	08/10 -	4143	
PATHFINDER III (R51)	3.0 dCi	170	08/10 -		4025
PATHFINDER III (R51)	3.0 dCi	170	08/10 -	4143	
PATHFINDER III (R51)	4.0 4WD	198	09/05 -		4025
PATHFINDER III (R51)	4.0 4WD	198	09/05 -	4143	

BESER

MAKE & MODEL		KW	YEAR		
NISSAN					
PATHFINDER IV (R52)	3.0 dCi 4WD	170	09/12 -		4025
PATHFINDER IV (R52)	3.0 dCi 4WD	170	09/12 -	4143	
PATROL GR IV (Y60, GR)	2.8 TD	82	10/95 – 02/98	3415	
PATROL GR IV (Y60, GR)	2.8 TD (Y60A)	85	09/88 – 06/97	3415	
PATROL GR IV (Y60, GR)	4.2 CAT	121	11/88 – 02/98	3415	
PATROL GR IV (Y60, GR)	4.2 CAT	121	11/88 – 02/98	3667	
PATROL GR IV (Y60, GR)	4.2 D (Y60GR)	85	11/88 – 06/97	3415	
PATROL GR IV (Y60, GR)	4.2 Efi 4WD	129	02/88 – 12/95	3415	
PATROL GR IV (Y60, GR)	4.2 Efi 4WD	129	02/88 – 12/95	3667	
PATROL GR V Platform/Chassis (Y61)	3.0 D 4x4	118	09/07 -	3859	
PATROL GR V Platform/Chassis (Y61)	3.0 D 4x4	118	09/07 -	4010	
PATROL GR V Wagon (Y61)	42	125	03/00 – 08/02	3859	
PATROL GR V Wagon (Y61)	42	125	03/00 – 08/02	4010	
PATROL GR V Wagon (Y61)	45	145	12/97 – 09/01	3859	
PATROL GR V Wagon (Y61)	45	145	12/97 – 09/01	4010	
PATROL GR V Wagon (Y61)	48	180	03/00 -	3859	
PATROL GR V Wagon (Y61)	48	180	03/00 -	4010	
PATROL GR V Wagon (Y61)	48	185	10/01 – 12/07	3859	
PATROL GR V Wagon (Y61)	48	185	10/01 – 12/07	4010	
PATROL GR V Wagon (Y61)	2.7 TD	73	05/98 – 06/01	3859	
PATROL GR V Wagon (Y61)	2.7 TD	73	05/98 – 06/01	4010	
PATROL GR V Wagon (Y61)	2.8 TD	95	06/97 – 05/00	3859	
PATROL GR V Wagon (Y61)	2.8 TD	95	06/97 – 05/00	4010	
PATROL GR V Wagon (Y61)	2.8 TDiC	96	10/97 – 02/00	3859	
PATROL GR V Wagon (Y61)	2.8 TDiC	96	10/97 – 02/00	4010	
PATROL GR V Wagon (Y61)	3.0 DTi	116	05/00 -	3859	
PATROL GR V Wagon (Y61)	3.0 DTi	116	05/00 -	4010	
PATROL GR V Wagon (Y61)	3.0 DTi	118	05/00 -	3859	
PATROL GR V Wagon (Y61)	3.0 DTi	118	05/00 -	4010	
PATROL GR V Wagon (Y61)	3.2 D	70	05/98 – 06/01	3859	
PATROL GR V Wagon (Y61)	3.2 D	70	05/98 – 06/01	4010	
PATROL GR V Wagon (Y61)	4.2 D	114	05/99 – 09/04	3859	
PATROL GR V Wagon (Y61)	4.2 D	114	05/99 – 09/04	4010	
PATROL GR V Wagon (Y61)	4.2 TD	107	06/97 -	3859	
PATROL GR V Wagon (Y61)	4.2 TD	107	06/97 -	4010	
PATROL GR V Wagon (Y61)	4.5 i	147	06/97 -	3859	
PATROL GR V Wagon (Y61)	4.5 i	147	06/97 -	4010	
PATROL III/1 Hardtop (K160)	2.8 (K160)	88	07/80 – 08/88	3415	
PATROL III/1 Hardtop (K160)	2.8 (K160)	89	07/80 – 08/88	3415	
PATROL III/1 Hardtop (K160)	3.2 D (K160)	70	11/79 – 08/88	3415	
PATROL III/1 Hardtop (K160)	3.2 TD (K160)	81	07/83 – 08/88	3415	
PATROL III/1 Station Wagon (W160)	40	108	06/80 – 01/88	3415	
PATROL III/1 Station Wagon (W160)	2.8 (W160)	88	07/80 – 08/88	3415	
PATROL III/1 Station Wagon (W160)	3.2 D (W160)	70	11/79 – 08/88	3415	
PATROL III/1 Station Wagon (W160)	3.2 TD (W160)	81	07/83 – 08/88	3415	
PATROL III/2 Hardtop (K260)	28	88	05/86 – 06/90	3415	
PATROL III/2 Hardtop (K260)	2.8 TD	85	05/86 – 06/90	3415	
PATROL III/2 Hardtop (K260)	3.2 D	81	08/88 – 06/90	3415	
PATROL III/2 Station Wagon (W260)	2.8 D 4x4	68	01/90 – 01/91	3415	
PATROL III/2 Station Wagon (W260)	2.8 TD	85	06/89 – 11/95	3415	
PATROL III/2 Station Wagon (W260)	2.8 TD 4x4	86	03/92 – 06/93	3415	
PATROL III/2 Station Wagon (W260)	3.2 D	81	08/88 – 06/90	3415	
PATROL VI (Y62)	5.6	293	12/10 -	4324	
PATROL VI (Y62)	5.6	298	04/10 -	4324	
PICK UP (D22)	30	120	01/97 – 09/01	4017	
PICK UP (D22)	2.4 i	88	02/98 – 04/05	4017	
PICK UP (D22)	2.4 i 4WD	88	02/98 – 04/05	4017	
PICK UP (D22)	2.4 i 4WD	98	03/02 – 04/05	4017	
PICK UP (D22)	2.5 D	61	02/98 – 04/05	4017	
PICK UP (D22)	2.5 D 4WD	61	02/98 – 04/05	4017	
PICK UP (D22)	2.5 D 4WD	96	01/08 – 04/05	4017	
PICK UP (D22)	2.5 Di	98	03/02 – 04/05	4017	
PICK UP (D22)	2.5 Di 4WD	98	03/02 – 04/05	4017	
PICK UP (D22)	2.5 TD 4WD	76	05/98 – 04/05	4017	
PICK UP (D22)	2.8 D	101	11/01 – 04/05	4017	
PICK UP (D22)	3.0 4WD	120	02/98 – 10/01	4017	
PICK UP (D22)	3.0 TD	110	11/01 – 04/05	4017	
PICK UP (D22)	3.0 TD 4WD	110	11/01 – 04/05	4017	
PICK UP (D22)	3.2 D 4WD	76	12/98 – 04/05	4017	
PICK UP (D22)	3.3 4WD	125	01/03 – 04/05	4017	
PICK UP / 720	4WD		01/80 -	3375	

MAKE & MODEL		KW	YEAR		
NISSAN					
PICK UP I (720)	18	59	01/83 – 03/86	3397	
PICK UP I (720)	18	59	01/83 – 03/86	3758	
PICK UP I (720)	2.2 4WD	71	04/83 – 03/86	3397	
PICK UP I (720)	2.2 4WD	71	04/83 – 03/86	3758	
PICK UP I (720)	2.2 D	47	01/82 – 01/84	3397	
PICK UP I (720)	2.2 D	47	01/82 – 01/84	3758	
PICK UP I (720)	2.3 D	51	04/83 – 03/86	3397	
PICK UP I (720)	2.3 D	51	04/83 – 03/86	3758	
PICK UP I (720)	2.5 D 4WD	53	04/83 – 03/86	3397	
PICK UP I (720)	2.5 D 4WD	53	04/83 – 03/86	3758	
PICK UP II (D21)	20	64	09/85 – 07/88	3397	
PICK UP II (D21)	20	64	09/85 – 07/88	3758	
PICK UP II (D21)	20	66	09/88 – 08/91	3397	
PICK UP II (D21)	20	66	09/88 – 08/91	3758	
PICK UP II (D21)	30	112	09/85 – 12/96	3397	
PICK UP II (D21)	2.3 D	51	09/85 – 08/88	3397	
PICK UP II (D21)	2.3 D	51	09/85 – 08/88	3758	
PICK UP II (D21)	2.4 i 12V	91	04/92 – 02/98	3397	
PICK UP II (D21)	2.4 i 12V	91	04/92 – 02/98	3758	
PICK UP II (D21)	2.4 i 12V 4WD	93	04/92 – 02/98	3692	
PICK UP II (D21)	2.4 i 12V 4WD	93	04/92 – 02/98	3760	
PICK UP II (D21)	2.4 i 4WD	74	03/86 – 04/92	3397	
PICK UP II (D21)	2.4 i 4WD	74	03/86 – 04/92	3758	
PICK UP II (D21)	2.5 D	55	09/87 – 02/98	3397	
PICK UP II (D21)	2.5 D	55	09/87 – 02/98	3758	
PICK UP II (D21)	2.5 D	59	09/94 – 08/96	3397	
PICK UP II (D21)	2.5 D	59	09/94 – 08/96	3758	
PICK UP II (D21)	2.5 D	61	08/92 – 02/98	3397	
PICK UP II (D21)	2.5 D	61	08/92 – 02/98	3758	
PICK UP II (D21)	2.5 D 4WD	53	09/85 – 08/88	3397	
PICK UP II (D21)	2.5 D 4WD	53	09/85 – 08/88	3758	
PICK UP II (D21)	2.5 D 4WD	55	03/86 – 08/91	3397	
PICK UP II (D21)	2.5 D 4WD	55	03/86 – 08/91	3758	
PICK UP II (D21)	2.5 D 4WD	59	08/87 – 02/98	3397	
PICK UP II (D21)	2.5 D 4WD	59	08/87 – 02/98	3758	
PICK UP II (D21)	2.5 D 4WD	61	03/96 – 02/98	3397	
PICK UP II (D21)	2.5 D 4WD	61	03/96 – 02/98	3758	
PICK UP II (D21)	2.7 D 4WD	58	09/87 – 08/91	3397	
PICK UP II (D21)	2.7 D 4WD	58	09/87 – 08/91	3758	
PICK UP II (D21)	2.7 D 4WD	73	08/87 – 02/98	3397	
PICK UP II (D21)	2.7 D 4WD	73	08/87 – 02/98	3758	
PICK UP II (D21)	2.7 TD 4WD	73	09/87 – 12/96	3397	
PICK UP II (D21)	2.7 TD 4WD	73	09/87 – 12/96	3758	
PICK UP III (D22)	20	92	01/97 – 08/01	3692	
PICK UP III (D22)	20	92	01/97 – 08/01	3760	
PICK UP III (D22)	24	79	01/97 – 12/02	3692	
PICK UP III (D22)	24	79	01/97 – 12/02	3760	
PICK UP III (D22)	24	98	11/01 – 04/05	3692	
PICK UP III (D22)	24	98	11/01 – 04/05	3760	
PICK UP III (D22)	24	110	01/03 -	3692	
PICK UP III (D22)	24	110	01/03 -	3760	
PICK UP III (D22)	2.4 4WD	79	01/97 – 12/02	3692	
PICK UP III (D22)	2.4 4WD	79	01/97 – 12/02	3760	
PICK UP III (D22)	2.4 i	88	02/98 -	3692	
PICK UP III (D22)	2.4 i	88	02/98 -	3760	
PICK UP III (D22)	2.4 i 4WD	88	02/98 -	3397	
PICK UP III (D22)	2.4 i 4WD	88	02/98 -	3692	
PICK UP III (D22)	2.4 i 4WD	88	02/98 -	3760	
PICK UP III (D22)	2.4 i 4WD	98	03/02 -	3692	
PICK UP III (D22)	2.4 i 4WD	98	03/02 -	3760	
PICK UP III (D22)	2.5 D	61	02/98 -	3692	
PICK UP III (D22)	2.5 D	61	02/98 -	3760	
PICK UP III (D22)	2.5 D 4WD	61	02/98 -	3692	
PICK UP III (D22)	2.5 D 4WD	61	02/98 -	3760	
PICK UP III (D22)	2.5 Di	98	03/02 -	3692	
PICK UP III (D22)	2.5 Di	98	03/02 -	3760	
PICK UP III (D22)	2.5 TD 4WD	76	05/98 -	3692	
PICK UP III (D22)	2.5 TD 4WD	76	05/98 -	3760	
PICK UP III (D22)	2.5 Tdi	76	05/98 – 10/01	3692	
PICK UP III (D22)	2.5 Tdi	76	05/98 – 10/01	3760	
PICK UP III (D22)	2.7 D	66	02/98 -	3397	

MAKE & MODEL		KW	YEAR		
NISSAN					
PICK UP III (D22)	2.7 D	66	02/98 -	3692	
PICK UP III (D22)	2.7 D	66	02/98 -	3760	
PICK UP III (D22)	2.7 TD	73	01/97 – 10/01	3692	
PICK UP III (D22)	2.7 TD	73	01/97 – 10/01	3760	
PICK UP III (D22)	2.7 TD 4WD	73	01/97 – 10/01	3692	
PICK UP III (D22)	2.7 TD 4WD	73	01/97 – 10/01	3760	
PICK UP III (D22)	3.2 D 4WD	76	12/98 -	3692	
PICK UP III (D22)	3.2 D 4WD	76	12/98 -	3760	
PICK UP III (D22)	3.2 TD	76	01/97 – 10/01	3692	
PICK UP III (D22)	3.2 TD	76	01/97 – 10/01	3760	
PICKUP / NP300 PICKUP III (D22)	2.5 dCi	98	04/08 -	3692	
PICKUP / NP300 PICKUP III (D22)	2.5 dCi	98	04/08 -	3760	
PICKUP / NP300 PICKUP III (D22)	2.5 dCi 4x4	98	04/08 -	3692	
PICKUP / NP300 PICKUP III (D22)	2.5 dCi 4x4	98	04/08 -	3760	
PRAIRIE (M10, NM10)	1.5 S (M10)	55	01/84 – 12/87	3397	
PRAIRIE (M10, NM10)	1.5 S (M10)	55	01/84 – 12/87	3758	
PRAIRIE (M10, NM10)	1.8 SGL (M10)	66	05/85 – 10/87	3397	
PRAIRIE (M10, NM10)	1.8 SGL (M10)	66	05/85 – 10/87	3758	
PRAIRIE (M10, NM10)	2.0 4x4 (NM10)	68	06/86 – 09/88	3397	
PRAIRIE (M10, NM10)	2.0 4x4 (NM10)	68	06/86 – 09/88	3758	
PRAIRIE PRO (M11)	2.0 i	72	10/88 – 04/92	3700	
PRAIRIE PRO (M11)	2.0 i 4x4	72	10/88 – 12/92	3700	
PRAIRIE PRO (M11)	2.4 i	98	04/92 – 07/94	3700	
PRAIRIE PRO (M11)	2.4 i 4x4	98	04/92 – 07/94	3700	
PRESEA	1.8	92	08/97-08/00	3647	
PRIMASTAR Box (X83)	20	88	02/03 -		3795/1
PRIMASTAR Box (X83)	20	88	02/03 -	3848	
PRIMASTAR Box (X83)	dCi 100	74	09/02 -		3795/1
PRIMASTAR Box (X83)	dCi 100	74	09/02 -	3848	
PRIMASTAR Box (X83)	dCi 115	84	09/08 -		3795/1
PRIMASTAR Box (X83)	dCi 115	84	09/08 -	3848	
PRIMASTAR Box (X83)	dCi 120	84	09/06 -		3795/1
PRIMASTAR Box (X83)	dCi 120	84	09/06 -	3848	
PRIMASTAR Box (X83)	dCi 140	99	07/03 -		3795/1
PRIMASTAR Box (X83)	dCi 140	99	07/03 -	3848	
PRIMASTAR Box (X83)	dCi 150	107	09/06 -		3795/1
PRIMASTAR Box (X83)	dCi 150	107	09/06 -	3848	
PRIMASTAR Box (X83)	dCi 80	60	09/02 -		3795/1
PRIMASTAR Box (X83)	dCi 80	60	09/02 -	3848	
PRIMASTAR Box (X83)	dCi 90	66	09/06 -		3795/1
PRIMASTAR Box (X83)	dCi 90	66	09/06 -	3848	
PRIMASTAR Bus (X83)	20	88	03/01 -		3795/1
PRIMASTAR Bus (X83)	20	88	03/01 -	3848	
PRIMASTAR Bus (X83)	dCi 100	74	03/01 -		3795/1
PRIMASTAR Bus (X83)	dCi 100	74	03/01 -	3848	
PRIMASTAR Bus (X83)	dCi 115	84	09/08 -		3795/1
PRIMASTAR Bus (X83)	dCi 115	84	09/08 -	3848	
PRIMASTAR Bus (X83)	dCi 120	84	09/06 -		3795/1
PRIMASTAR Bus (X83)	dCi 120	84	09/06 -	3848	
PRIMASTAR Bus (X83)	dCi 140	99	07/03 -		3795/1
PRIMASTAR Bus (X83)	dCi 140	99	07/03 -	3848	
PRIMASTAR Bus (X83)	dCi 150	107	09/06 -		3795/1
PRIMASTAR Bus (X83)	dCi 150	107	09/06 -	3848	
PRIMASTAR Bus (X83)	dCi 80	60	03/01 -		3795/1
PRIMASTAR Bus (X83)	dCi 80	60	03/01 -	3848	
PRIMASTAR Bus (X83)	dCi 90	66	09/06 -		3795/1
PRIMASTAR Bus (X83)	dCi 90	66	09/06 -	3848	
PRIMASTAR Platform/Chassis	1.9 dCi	74	07/02 – 08/06		3795/1
PRIMASTAR Platform/Chassis	1.9 dCi	74	07/02 – 08/06	3848	
PRIMERA (P10)	16	66	06/90 – 01/96	3562	
PRIMERA (P10)	16	66	06/90 – 01/96	3652	
PRIMERA (P10)	16	66	06/90 – 01/96		3660
PRIMERA (P10)	16	66	06/90 – 01/96		4104
PRIMERA (P10)	16	71	06/90 – 01/96	3562	
PRIMERA (P10)	16	71	06/90 – 01/96	3652	
PRIMERA (P10)	16	71	06/90 – 01/96		3660
PRIMERA (P10)	16	71	06/90 – 01/96		4104
PRIMERA (P10)	16	75	06/93 – 01/96	3562	
PRIMERA (P10)	16	75	06/93 – 01/96	3652	
PRIMERA (P10)	16	75	06/93 – 01/96		3660
PRIMERA (P10)	16	75	06/96 – 01/96		4104

MAKE & MODEL		KW	YEAR		
NISSAN					
PRIMERA (P10)	20	105	06/90 – 04/93	3562	
PRIMERA (P10)	20	105	06/90 – 04/93	3652	
PRIMERA (P10)	20	105	06/90 – 04/93		3660
PRIMERA (P10)	2.0 16V	85	06/90 – 01/96	3562	
PRIMERA (P10)	2.0 16V	85	06/90 – 01/96	3652	
PRIMERA (P10)	2.0 16V	85	06/90 – 01/96		3660
PRIMERA (P10)	2.0 16V 4x4	85	04/91 – 06/96	3562	
PRIMERA (P10)	2.0 16V 4x4	85	04/91 – 06/96	3652	
PRIMERA (P10)	2.0 16V 4x4	85	04/91 – 06/96		3660
PRIMERA (P10)	2.0 4x4	110	03/91 – 04/93	3562	
PRIMERA (P10)	2.0 4x4	110	03/91 – 04/93	3652	
PRIMERA (P10)	2.0 4x4	110	03/91 – 04/93		3660
PRIMERA (P10)	2.0 D	55	01/91 – 01/96	3562	
PRIMERA (P10)	2.0 D	55	01/91 – 01/96	3652	
PRIMERA (P10)	2.0 D	55	01/91 – 01/96		3660
PRIMERA (P10)	2.0 D	55	01/91 – 01/96		4104
PRIMERA (P10)	2.0 GT	110	06/90 – 01/96	3562	
PRIMERA (P10)	2.0 GT	110	06/90 – 01/96	3652	
PRIMERA (P10)	2.0 GT	110	06/90 – 01/96		3660
PRIMERA (P10)	2.0 GT 4x4	105	03/91 – 04/93	3562	
PRIMERA (P10)	2.0 GT 4x4	105	03/91 – 04/93	3652	
PRIMERA (P10)	2.0 GT 4x4	105	03/91 – 04/93		3660
PRIMERA (P10)	2.0 i	92	01/95 – 06/96	3562	
PRIMERA (P10)	2.0 i	92	01/95 – 06/96	3652	
PRIMERA (P10)	2.0 i	92	01/95 – 06/96		3660
PRIMERA (P11)	1.6 16V	66	09/96 – 12/01	3562	
PRIMERA (P11)	1.6 16V	66	09/96 – 12/01	3652	
PRIMERA (P11)	1.6 16V	66	09/96 – 12/01		3660
PRIMERA (P11)	1.6 16V	73	09/96 – 10/00	3562	
PRIMERA (P11)	1.6 16V	73	09/96 – 10/00	3652	
PRIMERA (P11)	1.6 16V	73	09/96 – 10/00		3660
PRIMERA (P11)	1.6 16V	78	06/96 – 12/01	3562	
PRIMERA (P11)	1.6 16V	78	06/96 – 12/01	3652	
PRIMERA (P11)	1.6 16V	78	06/96 – 12/01		3660
PRIMERA (P11)	1.8 16V	84	08/99 – 12/01		3660
PRIMERA (P11)	2.0 16V	85	09/96 – 12/01	3562	
PRIMERA (P11)	2.0 16V	85	09/96 – 12/01	3652	
PRIMERA (P11)	2.0 16V	85	09/96 – 12/01		3660
PRIMERA (P11)	2.0 16V	96	09/96 – 12/01	3562	
PRIMERA (P11)	2.0 16V	96	09/96 – 12/01	3652	
PRIMERA (P11)	2.0 16V	96	09/96 – 12/01		3660
PRIMERA (P11)	2.0 16V	103	08/99 – 12/01		3660
PRIMERA (P11)	2.0 16V	110	09/96 – 12/01		3660
PRIMERA (P11)	2.0 TD	66	09/96 – 12/01	3562	
PRIMERA (P11)	2.0 TD	66	09/96 – 12/01	3652	
PRIMERA (P11)	2.0 TD	66	09/96 – 12/01		3660
PRIMERA (P12)	16	78	03/02 -		3853
PRIMERA (P12)	16	78	03/02 -	4115	
PRIMERA (P12)	16	80	01/02 -		3853
PRIMERA (P12)	16	80	01/02 -	4115	
PRIMERA (P12)	18	85	03/02 -		3853
PRIMERA (P12)	18	85	03/02 -	4115	
PRIMERA (P12)	20	103	03/02 -		3853
PRIMERA (P12)	20	103	03/02 -	4115	
PRIMERA (P12)	25	125	01/02 -		3853
PRIMERA (P12)	25	125	01/02 -	4115	
PRIMERA (P12)	1.9 dCi	85	08/02 -		3853
PRIMERA (P12)	1.9 dCi	85	08/02 -	4115	
PRIMERA (P12)	1.9 dCi	88	04/03 -		3853
PRIMERA (P12)	1.9 dCi	88	04/03 -	4115	
PRIMERA (P12)	2.2 dCi	102	04/03 -		3853
PRIMERA (P12)	2.2 dCi	102	04/03 -	4115	
PRIMERA (P12)	2.2 Di	93	03/02 -		3853
PRIMERA (P12)	2.2 Di	93	03/02 -	4115	
PRIMERA Estate (WP12)	18	85	03/02 -		3853
PRIMERA Estate (WP12)	18	85	03/02 -	4115	
PRIMERA Estate (WP12)	20	103	03/02 -		3853
PRIMERA Estate (WP12)	20	103	03/02 -	4115	
PRIMERA Estate (WP12)	25	125	01/02 -		3853
PRIMERA Estate (WP12)	25	125	01/02 -	4115	
PRIMERA Estate (WP12)	1.6 Visia	80	01/02 -		3853

MAKE & MODEL		KW	YEAR		
NISSAN					
PRIMERA Estate (WP12)	1.6 Visia	80	01/02 -	4115	
PRIMERA Estate (WP12)	1.9 dCi	85	08/02 -		3853
PRIMERA Estate (WP12)	1.9 dCi	85	08/02 -	4115	
PRIMERA Estate (WP12)	1.9 dCi	88	04/03 -		3853
PRIMERA Estate (WP12)	1.9 dCi	88	04/03 -	4115	
PRIMERA Estate (WP12)	2.2 dCi	102	04/03 -		3853
PRIMERA Estate (WP12)	2.2 dCi	102	04/03 -	4115	
PRIMERA Estate (WP12)	2.2 Di	93	03/02 -		3853
PRIMERA Estate (WP12)	2.2 Di	93	03/02 -	4115	
PRIMERA Hatchback (P10)	16	66	06/90 – 01/96	3562	
PRIMERA Hatchback (P10)	16	66	06/90 – 01/96	3652	
PRIMERA Hatchback (P10)	16	66	06/90 – 01/96		3660
PRIMERA Hatchback (P10)	16	66	06/90 – 01/96		4104
PRIMERA Hatchback (P10)	16	71	06/90 – 06/93		3660
PRIMERA Hatchback (P10)	16	71	06/90 – 06/93		4104
PRIMERA Hatchback (P10)	16	75	06/93 – 01/96	3562	
PRIMERA Hatchback (P10)	16	75	06/93 – 01/96	3652	
PRIMERA Hatchback (P10)	16	75	06/93 – 01/96		3660
PRIMERA Hatchback (P10)	16	75	06/93 – 01/96		4104
PRIMERA Hatchback (P10)	20	105	06/90 – 04/93	3562	
PRIMERA Hatchback (P10)	20	105	06/90 – 04/93	3652	
PRIMERA Hatchback (P10)	20	105	06/90 – 04/93		3660
PRIMERA Hatchback (P10)	20	110	06/90 – 01/96	3562	
PRIMERA Hatchback (P10)	20	110	06/90 – 01/96	3652	
PRIMERA Hatchback (P10)	20	110	06/90 – 01/96		3660
PRIMERA Hatchback (P10)	20	112	09/90 – 01/96	3562	
PRIMERA Hatchback (P10)	20	112	09/90 – 01/96	3652	
PRIMERA Hatchback (P10)	20	112	09/90 – 01/96		3660
PRIMERA Hatchback (P10)	2.0 16V	85	06/90 – 01/96	3562	
PRIMERA Hatchback (P10)	2.0 16V	85	06/90 – 01/96	3652	
PRIMERA Hatchback (P10)	2.0 16V	85	06/90 – 01/96		3660
PRIMERA Hatchback (P10)	2.0 16V 4x4	85	04/91 – 06/96	3562	
PRIMERA Hatchback (P10)	2.0 16V 4x4	85	04/91 – 06/96	3652	
PRIMERA Hatchback (P10)	2.0 16V 4x4	85	04/91 – 06/96		3660
PRIMERA Hatchback (P10)	2.0 D	55	01/91 – 01/96	3562	
PRIMERA Hatchback (P10)	2.0 D	55	01/91 – 01/96	3652	
PRIMERA Hatchback (P10)	2.0 D	55	01/91 – 01/96		3660
PRIMERA Hatchback (P10)	2.0 D	55	01/91 – 01/96		4104
PRIMERA Hatchback (P10)	2.0 GT 4x4	105	03/91 – 04/93	3562	
PRIMERA Hatchback (P10)	2.0 GT 4x4	105	03/91 – 04/93	3652	
PRIMERA Hatchback (P10)	2.0 GT 4x4	105	03/91 – 04/93		3660
PRIMERA Hatchback (P10)	2.0 i	92	01/95 – 06/96	3562	
PRIMERA Hatchback (P10)	2.0 i	92	01/95 – 06/96	3652	
PRIMERA Hatchback (P10)	2.0 i	92	01/95 – 06/96		3660
PRIMERA Hatchback (P11)	1.6 16V	66	09/96 – 07/02	3562	
PRIMERA Hatchback (P11)	1.6 16V	66	09/96 – 07/02	3652	
PRIMERA Hatchback (P11)	1.6 16V	66	09/96 – 07/02		3660
PRIMERA Hatchback (P11)	1.6 16V	73	09/96 – 07/02	3562	
PRIMERA Hatchback (P11)	1.6 16V	73	09/96 – 07/02	3652	
PRIMERA Hatchback (P11)	1.6 16V	73	09/96 – 07/02		3660
PRIMERA Hatchback (P11)	1.6 16V	78	09/00 – 07/02		3660
PRIMERA Hatchback (P11)	1.8 16V	84	08/99 – 07/02		3660
PRIMERA Hatchback (P11)	2.0 16V	85	09/96 – 07/02	3562	
PRIMERA Hatchback (P11)	2.0 16V	85	09/96 – 07/02	3652	
PRIMERA Hatchback (P11)	2.0 16V	85	09/96 – 07/02		3660
PRIMERA Hatchback (P11)	2.0 16V	96	09/96 – 07/02	3562	
PRIMERA Hatchback (P11)	2.0 16V	96	09/96 – 07/02	3652	
PRIMERA Hatchback (P11)	2.0 16V	96	09/96 – 07/02		3660
PRIMERA Hatchback (P11)	2.0 16V	103	08/99 – 07/02		3660
PRIMERA Hatchback (P11)	2.0 16V	110	09/96 – 07/02		3660
PRIMERA Hatchback (P11)	2.0 TD	66	09/96 – 07/02	3562	
PRIMERA Hatchback (P11)	2.0 TD	66	09/96 – 07/02	3652	
PRIMERA Hatchback (P11)	2.0 TD	66	09/96 – 07/02		3660
PRIMERA Hatchback (P12)	16	78	07/02 -		3853
PRIMERA Hatchback (P12)	16	78	07/02 -	4115	
PRIMERA Hatchback (P12)	16	80	07/02 -		3853
PRIMERA Hatchback (P12)	16	80	07/02 -	4115	
PRIMERA Hatchback (P12)	18	85	07/02 -		3853
PRIMERA Hatchback (P12)	18	85	07/02 -	4115	
PRIMERA Hatchback (P12)	20	103	07/02 -		3853
PRIMERA Hatchback (P12)	20	103	07/02 -	4115	

MAKE & MODEL			KW	YEAR		
NISSAN						
PRIMERA Hatchback (P12)	25		125	01/02 -		3853
PRIMERA Hatchback (P12)	25		125	01/02 -	4115	
PRIMERA Hatchback (P12)	1.9 dCi		85	08/02 -		3853
PRIMERA Hatchback (P12)	1.9 dCi		85	08/02 -	4115	
PRIMERA Hatchback (P12)	1.9 dCi		88	04/03 -		3853
PRIMERA Hatchback (P12)	1.9 dCi		88	04/03 -	4115	
PRIMERA Hatchback (P12)	2.2 dCi		102	04/03 -		3853
PRIMERA Hatchback (P12)	2.2 dCi		102	04/03 -	4115	
PRIMERA Hatchback (P12)	2.2 Di		93	07/02 -		3853
PRIMERA Hatchback (P12)	2.2 Di		93	07/02 -	4115	
PRIMERA Traveller (W10)	1.6 i		66	07/90 – 03/98	3700	
PRIMERA Traveller (W10)	1.6 i		75	02/91 – 03/98	3700	
PRIMERA Traveller (W10)	2.0 D		55	07/90 – 12/95	3700	
PRIMERA Traveller (W10)	2.0 i		85	07/90 – 03/98	3700	
PRIMERA Traveller (WP11)	1.6 16V		66	04/98 – 12/01		3660
PRIMERA Traveller (WP11)	1.6 16V		73	04/98 – 12/01		3660
PRIMERA Traveller (WP11)	1.6 16V		80	04/98 – 12/01	3562	
PRIMERA Traveller (WP11)	1.6 16V		80	04/98 – 12/01	3652	
PRIMERA Traveller (WP11)	1.6 16V		80	04/98 – 12/01		3660
PRIMERA Traveller (WP11)	1.8 16V		84	08/99 – 12/01		3660
PRIMERA Traveller (WP11)	2.0 16V		85	06/96 – 12/01		3660
PRIMERA Traveller (WP11)	2.0 16V		96	04/98 – 12/01		3660
PRIMERA Traveller (WP11)	2.0 16V		103	08/99 – 12/01		3660
PRIMERA Traveller (WP11)	2.0 TD		66	04/98 – 12/01		3660
PULSAR Hatchback (C13)	1.2 DIG-T		85	10/14 -	4109	
PULSAR Hatchback (C13)	1.2 DIG-T		85	10/14 -	4232	
PULSAR Hatchback (C13)	1.5 dCi		81	10/14 -	4109	
PULSAR Hatchback (C13)	1.5 dCi		81	10/14 -	4232	
PULSAR Hatchback (C13)	1.6 DIG-T		140	02/15 -	4109	
PULSAR Hatchback (C13)	1.6 DIG-T		140	02/15 -	4232	
QASHQAI	16		81	11/08 – 12/10		3933
QASHQAI	16		81	11/08 – 12/10	4038	
QASHQAI	16		89	01/11 -		3933
QASHQAI	16		89	01/11 -	4038	
QASHQAI	20		102	03/08 – 12/10		3933
QASHQAI	20		102	03/08 – 12/10	4038	
QASHQAI	20		106	01/11 -		3933
QASHQAI	20		106	01/11 -	4038	
QASHQAI	2.0 4x4		102	03/08 – 12/10		3933
QASHQAI	2.0 4x4		102	03/08 – 12/10	4038	
QASHQAI / QASHQAI +2 I (J10, JJ10)	16		84	02/07 – 12/13		3933
QASHQAI / QASHQAI +2 I (J10, JJ10)	16		84	02/07 – 12/13	4038	
QASHQAI / QASHQAI +2 I (J10, JJ10)	16		86	11/10 – 12/13		3933
QASHQAI / QASHQAI +2 I (J10, JJ10)	16		86	11/10 – 12/13	4038	
QASHQAI / QASHQAI +2 I (J10, JJ10)	20		102	02/07 – 12/13		3933
QASHQAI / QASHQAI +2 I (J10, JJ10)	20		102	02/07 – 12/13	4038	
QASHQAI / QASHQAI +2 I (J10, JJ10)	20		104	02/07 – 12/13		3933
QASHQAI / QASHQAI +2 I (J10, JJ10)	20		104	02/07 – 12/13	4038	
QASHQAI / QASHQAI +2 I (J10, JJ10)	1.5 dCi		76	07/08 – 12/13		3933
QASHQAI / QASHQAI +2 I (J10, JJ10)	1.5 dCi		76	07/08 – 12/13	4038	
QASHQAI / QASHQAI +2 I (J10, JJ10)	1.5 dCi		78	02/07 – 12/13		3933
QASHQAI / QASHQAI +2 I (J10, JJ10)	1.5 dCi		78	02/07 – 12/13	4038	
QASHQAI / QASHQAI +2 I (J10, JJ10)	1.5 dCi		81	01/10 – 12/13		3933
QASHQAI / QASHQAI +2 I (J10, JJ10)	1.5 dCi		81	01/10 – 12/13	4038	
QASHQAI / QASHQAI +2 I (J10, JJ10)	1.6 dCi		96	10/11 – 12/13		3933
QASHQAI / QASHQAI +2 I (J10, JJ10)	1.6 dCi		96	10/11 – 12/13	4038	
QASHQAI / QASHQAI +2 I (J10, JJ10)	1.6 dCi All-wheel Drive		96	10/11 – 12/13		3933
QASHQAI / QASHQAI +2 I (J10, JJ10)	1.6 dCi All-wheel Drive		96	10/11 – 12/13	4038	
QASHQAI / QASHQAI +2 I (J10, JJ10)	1.6 dCi All-wheel Drive		96	10/11 – 12/13	4143	
QASHQAI / QASHQAI +2 I (J10, JJ10)	2.0 All-wheel Drive		102	02/07 – 12/13		3933
QASHQAI / QASHQAI +2 I (J10, JJ10)	2.0 All-wheel Drive		102	02/07 – 12/13	4038	
QASHQAI / QASHQAI +2 I (J10, JJ10)	2.0 All-wheel Drive		104	02/07 – 12/13		3933
QASHQAI / QASHQAI +2 I (J10, JJ10)	2.0 All-wheel Drive		104	02/07 – 12/13	4038	
QASHQAI / QASHQAI +2 I (J10, JJ10)	2.0 All-wheel Drive		104	02/07 – 12/13	4143	
QASHQAI / QASHQAI +2 I (J10, JJ10)	2.0 dCi		110	02/07 – 12/13		3933
QASHQAI / QASHQAI +2 I (J10, JJ10)	2.0 dCi		110	02/07 – 12/13	4038	
QASHQAI / QASHQAI +2 I (J10, JJ10)	2.0 dCi		110	02/07 – 12/13	4143	
QASHQAI / QASHQAI +2 I (J10, JJ10)	2.0 dCi All-wheel Drive		110	02/07 – 12/13		3933
QASHQAI / QASHQAI +2 I (J10, JJ10)	2.0 dCi All-wheel Drive		110	02/07 – 12/13	4038	
QASHQAI / QASHQAI +2 I (J10, JJ10)	2.0 dCi All-wheel Drive		110	02/07 – 12/13	4143	
QASHQAI II (J11, J11_)	1.2 DIG-T		85	11/13 -	4282	

BESER

MAKE & MODEL		KW	YEAR		
NISSAN					
QASHQAI II (J11, J11_)	1.2 DIG-T	85	11/13 -		4283
QASHQAI II (J11, J11_)	1.5 dCi	81	11/13 -	4282	
QASHQAI II (J11, J11_)	1.5 dCi	81	11/13 -		4283
QASHQAI II (J11, J11_)	1.6 dCi	96	11/13 -	4282	
QASHQAI II (J11, J11_)	1.6 dCi	96	11/13 -		4283
QASHQAI II (J11, J11_)	1.6 dCi ALL MODE 4x4-i	96	11/13 -	4282	
QASHQAI II (J11, J11_)	1.6 dCi ALL MODE 4x4-i	96	11/13 -		4283
QASHQAI II (J11, J11_)	1.6 DIG-T	120	10/14 -	4282	
QASHQAI II (J11, J11_)	1.6 DIG-T	120	10/14 -		4283
QASHQAI II (J11, J11_)	2.0 (J11E)	106	06/14 -	4282	
QASHQAI II (J11, J11_)	2.0 (J11E)	106	06/14 -		4283
QASHQAI II (J11, J11_)	2.0 ALL MODE 4x4-i (J11R)	106	10/15 -	4282	
QASHQAI II (J11, J11_)	2.0 ALL MODE 4x4-i (J11R)	106	10/15 -		4283
QUEST (V42)	35	176	05/03 -	3932	
SENTRA V (B15)	18	88	01/00 – 08/06	3700	
SENTRA V (B15)	18	93	01/00 – 08/06	3700	
SENTRA V (B15)	20	107	01/00 – 12/06	3699	
SENTRA V (B15)	20	107	01/00 – 12/06	3779	
SENTRA VII (B17)	16	86	08/14 -	4109	
SENTRA VII (B17)	16	86	08/14 -	4232	
SERENA (C23)	16	71	02/93 – 09/01	3888	
SERENA (C23)	16	75	10/94 – 08/00	3888	
SERENA (C23)	20	93	11/92 – 09/01	3888	
SERENA (C23)	24	93	07/94 – 08/00	3888	
SERENA (C23)	2.0 D	49	11/92 – 09/01	3888	
SERENA (C23)	2.3 D	55	01/95 – 09/01	3888	
SERENA (C23M)	16	75	10/94 – 08/00	3758	
SERENA (C23M)	24	93	07/94 – 08/00	3758	
SERENA (C23M)	1.6 16V	71	02/93 – 09/01	3758	
SERENA (C23M)	2.0 16V	93	11/92 – 09/01	3758	
SERENA (C23M)	2.0 D	49	11/92 – 09/01	3758	
SERENA (C23M)	2.3 D	55	01/95 – 09/01	3758	
SERENA (C24)	2.0 SGX	107	09/00 – 09/05	3932	
SERENA (C24)	2.0 SGX 4x4	107	09/00 – 09/05	3932	
SERENA (C24)	2.5 DCi SGX	110	06/99 – 09/05	3932	
SERENA (C24)	2.5 DCi SGX 4x4	110	06/99 – 09/05	3932	
SERENA (C25)	20	108	04/05 – 11/10		3933
SERENA (C25)	25	118	02/06 – 11/10		3933
SERENA (C25)	2.0 4x4	108	04/05 – 11/10		3933
SERENA (C25)	2.5 4x4	118	02/06 – 11/10		3933
SERENA (C26)	2.0	108	11/10 – 07/16	3952	
SERENA (C26)	2.0 4x4	106	11/10 – 07/16	3952	
SERENA (C26)	2.0 4x4	108	11/10 – 07/16	3952	
SERENA (C26)	2.0 Hybrid	108	03/13 – 07/16	3952	
SKYLINE (R34)	2.5 4x4 (ENR34)	147	06/98 – 07/00	3697	
SKYLINE Coupe (R34)	25	147	06/98 – 07/00	3697	
SKYLINE Coupe (R34)	2.5 4x4	147	06/98 – 07/00	3697	
SKYLINE V	2.4		09.78-	3370	
SKYLINE V	2.4		09.78-	3370	
SKYLINE V	2.4		09.78-	3370	
SKYLINE V (C210)	16		09/78 -	3375	
STANZA III	1.8 (CA18S)	66	03.83-12.85	3370	
STANZA III	2.0		08.81-	3370	
STANZA III	2.0		08.81-	3370	
SUNNY			2014 – 2015	4229	
SUNNY I (B11)	13	44	03/82 – 09/87	3394	
SUNNY I (B11)	15	55	03/82 – 10/86	3394	
SUNNY I Coupe (B11)	13	44	04/82 – 09/86	3394	
SUNNY I Coupe (B11)	15	55	03/82 – 10/86	3394	
SUNNY I Traveller (B11)	13	44	08/82 – 08/90	3394	
SUNNY I Traveller (B11)	15	55	03/82 – 10/86	3394	
SUNNY II (N13)	13	44	07/86 – 10/91	3394	
SUNNY II (N13)	15	52	06/86 – 10/88	3394	
SUNNY II (N13)	16	62	06/86 – 10/88	3394	
SUNNY II (N13)	1.4 LX	55	10/88 – 08/91	3394	
SUNNY II (N13)	1.6 i	54	06/86 – 10/90	3394	
SUNNY II (N13)	1.6 i 12V	66	10/88 – 06/91	3394	
SUNNY II (N13)	1.7 D	40	06/86 – 05/89	3394	
SUNNY II Coupe (B12)	15	52	06/86 – 10/88	3394	
SUNNY II Coupe (B12)	16	62	06/86 – 10/88	3394	
SUNNY II Coupe (B12)	1.6 i	54	06/86 – 05/89	3394	

MAKE & MODEL   		KW	YEAR		
NISSAN					
SUNNY II Coupe (B12)	1.6 i 12V	66	10/88 – 06/91	3394	
SUNNY II Hatchback (N13)	10	37	07/86 – 09/90	3394	
SUNNY II Hatchback (N13)	13	44	06/86 – 10/88	3394	
SUNNY II Hatchback (N13)	14	60	10/88 – 09/90	3394	
SUNNY II Hatchback (N13)	15	52	06/86 – 10/88	3394	
SUNNY II Hatchback (N13)	16	62	06/86 – 10/88	3394	
SUNNY II Hatchback (N13)	1.4 LX	55	01/89 – 08/91	3394	
SUNNY II Hatchback (N13)	1.6 i	54	06/86 – 10/90	3394	
SUNNY II Hatchback (N13)	1.6 i 12V	66	06/86 – 10/90	3394	
SUNNY II Hatchback (N13)	1.7 D	40	06/86 – 01/91	3394	
SUNNY II Traveller (B12)	15	52	06/86 – 10/88	3394	
SUNNY II Traveller (B12)	16	62	06/86 – 10/88	3394	
SUNNY III (N14)	14	60	10/90 – 06/95	3598	
SUNNY III (N14)	14	60	10/90 – 06/95	3766	
SUNNY III (N14)	16	82	08/90 – 10/94	3598	
SUNNY III (N14)	16	82	08/90 – 10/94	3766	
SUNNY III (N14)	18	78	05/90 – 10/95	3598	
SUNNY III (N14)	18	78	05/90 – 10/95	3766	
SUNNY III (N14)	1.4 i	55	10/90 – 05/95	3598	
SUNNY III (N14)	1.4 i	55	10/90 – 05/95	3766	
SUNNY III (N14)	1.4 i 16V	64	10/90 – 06/95	3598	
SUNNY III (N14)	1.4 i 16V	64	10/90 – 06/95	3766	
SUNNY III (N14)	1.6 i	66	10/90 – 05/95	3598	
SUNNY III (N14)	1.6 i	66	10/90 – 05/95	3766	
SUNNY III (N14)	1.6 i 16V	75	10/92 – 05/95	3598	
SUNNY III (N14)	1.6 i 16V	75	10/92 – 05/95	3766	
SUNNY III (N14)	1.6 i 16V 4WD	66	10/90 – 05/95	3598	
SUNNY III (N14)	1.6 i 16V 4WD	66	10/90 – 05/95	3766	
SUNNY III (N14)	1.6 SR 4x4	66	01/92 – 06/95	3598	
SUNNY III (N14)	1.6 SR 4x4	66	01/92 – 06/95	3766	
SUNNY III (N14)	2.0 D	55	10/90 – 05/95	3598	
SUNNY III (N14)	2.0 D	55	10/90 – 05/95	3766	
SUNNY III (N14)	1.4	60	10/90 - 06/95	4328	
SUNNY III (N14)	1.6	82	08/90 - 10/94	4328	
SUNNY III (N14)	1.8	78	05/90 - 10/95	4328	
SUNNY III (N14)	1.4 i	55	10/90 - 05/95	4328	
SUNNY III (N14)	1.4 i 16V	64	10/90 - 06/95	4328	
SUNNY III (N14)	1.6 İ	66	10/90 - 05/95	4328	
SUNNY III (N14)	1.6 i 16V	75	10/92 - 05/95	4328	
SUNNY III (N14)	1.6 i 16V 4WD	66	10/90 - 05/95	4328	
SUNNY III (N14)	2.0 D	55	10/90 - 05/95	4328	
SUNNY III Hatchback (N14)	14	60	10/90 – 06/95	3598	
SUNNY III Hatchback (N14)	14	60	10/90 – 06/95	3766	
SUNNY III Hatchback (N14)	15	51	10/90 – 05/95	3598	
SUNNY III Hatchback (N14)	15	51	10/90 – 05/95	3766	
SUNNY III Hatchback (N14)	1.6 i	66	10/90 - 05/95	4328	
SUNNY III Hatchback (N14)	1.4 i	55	10/90 – 05/95	3598	
SUNNY III Hatchback (N14)	1.4 i	55	10/90 – 05/95	3766	
SUNNY III Hatchback (N14)	1.4 i 16V	64	10/90 – 05/95	3598	
SUNNY III Hatchback (N14)	1.4 i 16V	64	10/90 – 05/95	3766	
SUNNY III Hatchback (N14)	1.4 İ 16V	64	10/90 - 05/95	4328	
SUNNY III Hatchback (N14)	1.6 i	66	10/90 – 05/95	3598	
SUNNY III Hatchback (N14)	1.6 i	66	10/90 – 05/95	3766	
SUNNY III Hatchback (N14)	1.6 i 16V	75	10/92 – 05/95	3598	
SUNNY III Hatchback (N14)	1.6 i 16V	75	10/92 – 05/95	3766	
SUNNY III Hatchback (N14)	1.6 i 16V 4x4	75	10/92 – 05/95	3598	
SUNNY III Hatchback (N14)	1.6 i 16V 4x4	75	10/92 – 05/95	3766	
SUNNY III Hatchback (N14)	1.6 SR 4x4	66	01/92 – 06/95	3598	
SUNNY III Hatchback (N14)	1.6 SR 4x4	66	01/92 – 06/95	3766	
SUNNY III Hatchback (N14)	2.0 D	55	10/90 – 05/95	3598	
SUNNY III Hatchback (N14)	2.0 D	55	10/90 – 05/95	3766	
SUNNY III Hatchback (N14)	1.4	60	10/90 06/95	4328	
SUNNY III Hatchback (N14)	1.4 İ	55	10/90 - 05/95	4328	
SUNNY III Hatchback (N14)	1.5	51	10/90 - 05/95	4328	
SUNNY III Hatchback (N14)	2.0 D	55	10/90 - 05/95	4328	
SUNNY III Hatchback (N14)	1.6 i 16V 4x4	75	10/92 - 05/95	4328	
SUNNY III Hatchback (N14)	1.6 i 16V	75	10/92 - 05/95	4328	
SUNNY III Liftback (N14)	14	60	10/90 – 06/95	3598	
SUNNY III Liftback (N14)	14	60	10/90 – 06/95	3766	
SUNNY III Liftback (N14)	1.4 i	55	10/90 - 05/95	4328	
SUNNY III Liftback (N14)	1.4 i 16V	64	10/90 - 06/95	4328	

MAKE & MODEL		KW	YEAR		
NISSAN					
SUNNY III Liftback (N14)	1.4 i	55	10/90 – 05/95	3598	
SUNNY III Liftback (N14)	1.4 i	55	10/90 – 05/95	3766	
SUNNY III Liftback (N14)	1.4 i 16V	64	10/90 – 06/95	3598	
SUNNY III Liftback (N14)	1.4 i 16V	64	10/90 – 06/95	3766	
SUNNY III Liftback (N14)	1.6 i	66	10/90 – 05/95	3598	
SUNNY III Liftback (N14)	1.6 i	66	10/90 – 05/95	3766	
SUNNY III Liftback (N14)	1.6 i 16V	75	10/92 – 05/95	3598	
SUNNY III Liftback (N14)	1.6 i 16V	75	10/92 – 05/95	3766	
SUNNY III Liftback (N14)	1.6 SR 4x4	66	01/92 – 06/95	3598	
SUNNY III Liftback (N14)	1.6 SR 4x4	66	01/92 – 06/95	3766	
SUNNY III Liftback (N14)	2.0 D	55	10/90 – 05/95	3598	
SUNNY III Liftback (N14)	2.0 D	55	10/90 – 05/95	3766	
SUNNY III Liftback (N14)	2.0 D	55	10/90 - 05/95	4328	
SUNNY III Liftback (N14)	1.6 i	66	10/90 - 05/95	4328	
SUNNY III Liftback (N14)	1.6 i 16V	75	10/92 05/95	4328	
SUNNY IV Coupe	18	85	04/00 – 09/03	3797	
SUNNY IV Hatchback	15	77	04/00 – 08/03	3797	
SUNNY IV Hatchback	18	85	04/00 – 09/03	3797	
SUNNY IV Saloon	18	85	04/00 – 09/03	3797	
SUNNY IV Saloon	20	110	01/00 – 05/02	3797	
SYLPHY III Saloon (B17)	16	85	08/12 -	4109	
SYLPHY III Saloon (B17)	16	85	08/12 -	4232	
SYLPHY III Saloon (B17)	18	96	08/12 -	4109	
SYLPHY III Saloon (B17)	18	96	08/12 -	4232	
TEANA (J31)	20	100	04/06 – 06/08	3699	
TEANA (J31)	20	100	04/06 – 06/08	3779	
TEANA (J31)	20	100	04/06 – 06/08		3933
TEANA (J31)	23	127	04/06 – 06/08	3699	
TEANA (J31)	23	127	04/06 – 06/08	3779	
TEANA (J31)	23	127	04/06 – 06/08		3933
TEANA (J31)	35	180	04/06 – 06/08	3699	
TEANA (J31)	35	180	04/06 – 06/08	3779	
TEANA (J31)	35	180	04/06 – 06/08		3933
TEANA (J32)	20	104	11/10 -	3699	
TEANA (J32)	20	104	11/10 -	3779	
TEANA (J32)	20	104	11/10 -		3933
TEANA (J32)	25	136	11/10 -	3699	
TEANA (J32)	25	136	11/10 -	3779	
TEANA (J32)	25	136	11/10 -		3933
TEANA (J32)	35	185	06/08 – 11/10	3699	
TEANA (J32)	35	185	11/10 -	3699	
TEANA (J32)	35	185	06/08 – 11/10	3779	
TEANA (J32)	35	185	11/10 -	3779	
TEANA (J32)	35	185	06/08 – 11/10		3933
TEANA (J32)	35	185	11/10 -		3933
TEANA I (J31)	20	103	10/03 – 06/08		3933
TEANA I (J31)	23	127	10/03 – 06/08		3933
TEANA I (J31)	35	170	10/03 – 06/08		3933
TEANA II (J32)	20	100	02/13 – 09/13	4109	
TEANA II (J32)	20	100	02/13 – 09/13	4232	
TEANA II (J32)	23	127	07/08 – 09/13		3933
TEANA II (J32)	23	127	07/08 – 09/13	4109	
TEANA II (J32)	23	127	07/08 – 09/13	4232	
TEANA II (J32)	25	134	07/08 – 09/13		3933
TEANA II (J32)	25	134	07/08 – 09/13	4109	
TEANA II (J32)	25	134	07/08 – 09/13	4232	
TEANA II (J32)	35	183	07/08 – 09/13		3933
TEANA II (J32)	35	183	07/08 – 09/13	4109	
TEANA II (J32)	35	183	07/08 – 09/13	4232	
TEANA III (J33)	2.5 (L33L, L33R, L33T)	127	09/13 -	4109	
TEANA III (J33)	2.5 (L33L, L33R, L33T)	127	09/13 -	4232	
TEANA III (J33, L33)	2.0	100	09.13 -	4319	
TEANA III (J33, L33)	2.5	134	01.14 -	4319	
TEANA III (J33, L33)	3.5	201	01.14 -	4319	
TEANA III (J33, L33) Flexfuel (L33T)	2.0	100	01.14 -	4319	
TERRANO (D10)	16	76	03/14 -	3983	
TERRANO I (WD21)	2.4 i 4WD	76	10/87 – 02/93	3692	
TERRANO I (WD21)	2.4 i 4WD	76	10/87 – 02/93	3760	
TERRANO I (WD21)	2.7 TD 4WD	73	02/89 – 02/96	3692	
TERRANO I (WD21)	2.7 TD 4WD	73	02/89 – 02/96	3760	
TERRANO I (WD21)	3.0 i 4WD	109	01/90 – 12/95	3692	

MAKE & MODEL		KW	YEAR		
NISSAN					
TERRANO I (WD21)	3.0 i 4WD	109	01/90 – 12/95	3760	
TERRANO II (R20)	33	125	10/92 – 12/04	3888	
TERRANO II (R20)	2.4 4WD	85	05/96 – 01/02	3888	
TERRANO II (R20)	2.4 4WD	87	05/96 – 09/07	3888	
TERRANO II (R20)	2.4 i 12V 4WD	91	02/93 – 06/96	3888	
TERRANO II (R20)	2.7 TD 4WD	74	02/93 – 01/02	3888	
TERRANO II (R20)	2.7 TDi 4WD	92	05/96 – 09/07	3888	
TERRANO II (R20)	3.0 Di 4WD	113	05/02 – 09/07	3888	
TERRANO II (R20)	3.0 DiTD 4WD	125	10/97 – 12/04	3888	
TERRANO II (R20)	3.2 TDi 4WD	110	10/92 – 10/97	3888	
TERRANO II (R20)	3.3 4WD	125	10/92 – 10/97	3888	
TERRANO II (R20)	3.5 4WD	177	10/94 – 06/03	3888	
TERRANO II Van (R20)	2.7 TDi 4WD	92	06/98 – 09/07	3888	
TERRANO II Van (R20)	3.0 Di 4WD	113	04/03 – 09/07	3888	
TIIDA Hatchback (C11)	16	81	09/07 – 12/11		3933
TIIDA Hatchback (C11)	16	81	09/07 – 12/11	4015	
TIIDA Hatchback (C11)	18	93	05/04 – 02/07		3933
TIIDA Hatchback (C11)	18	93	09/07 – 12/11		3933
TIIDA Hatchback (C11)	18	93	05/04 – 02/07	4015	
TIIDA Hatchback (C11)	18	93	09/07 – 12/11	4015	
TIIDA Hatchback (C11)	1.5 dCi	78	09/07 – 12/11		3933
TIIDA Hatchback (C11)	1.5 dCi	78	09/07 – 12/11	4015	
TIIDA Hatchback (C12)	16	85	08/12 -	4109	
TIIDA Hatchback (C12)	16	85	08/12 -	4232	
TIIDA Hatchback (C12)	16	140	02/13 -	4109	
TIIDA Hatchback (C12)	16	140	02/13 -	4232	
TIIDA QIDA Hatchback (C11)	16	80	07/05 -		3933
TIIDA Saloon (C11)	16	81	09/07 – 12/12		3933
TIIDA Saloon (C11)	16	81	09/07 – 12/12	4015	
TIIDA Saloon (C11)	18	93	09/07 – 12/12		3933
TIIDA Saloon (C11)	18	93	09/07 – 12/12	4015	
TIIDA Saloon (C11)	1.5 dCi	76	01/07 – 12/12		3933
TIIDA Saloon (C11)	1.5 dCi	76	01/07 – 12/12	4015	
TIIDA Saloon (C11)	1.5 dCi	78	09/07 – 12/12		3933
TIIDA Saloon (C11)	1.5 dCi	78	09/07 – 12/12	4015	
TIIDA Saloon (C12)	16	85	08/11 -	4109	
TIIDA Saloon (C12)	16	85	08/11 -	4232	
TIIDA YIDA Saloon (C11)	16	80	04/05 -		3933
TRADE Box	2.0 D	44	11/86 – 03/93	3397	
TRADE Box	2.0 D	49	04/93 – 10/98	3397	
TRADE Platform/Chassis	2.0 D	44	11/86 – 03/93	3397	
TRADE Platform/Chassis	2.0 D	49	04/93 – 10/98	3397	
TRADE Platform/Chassis	2.8 D	59	12/86 – 06/94	3397	
URVAN (E25)	2.0 (KA20DE)	88	10/00 – 09/02	4002	
URVAN (E25)	2.4 (KA24DE)	103	05/01 – 01/12	4002	
URVAN (E25)	3.0 D (ZD30DD)	77	10/00 – 01/12	4002	
URVAN (E25)	3.0 D (ZD30DD)	89	05/02 – 01/12	4002	
URVAN Box (E24)	20	64	05/87 – 05/97	3692	
URVAN Box (E24)	20	64	05/87 – 05/97	3760	
URVAN Box (E24)	20	65	06/86 – 09/94	3692	
URVAN Box (E24)	20	65	06/86 – 09/94	3760	
URVAN Box (E24)	20	66	02/87 – 07/94	3692	
URVAN Box (E24)	20	66	02/87 – 07/94	3760	
URVAN Box (E24)	24	72	10/93 – 05/97	3692	
URVAN Box (E24)	24	72	10/93 – 05/97	3760	
URVAN Box (E24)	24	74	02/92 – 04/97	3692	
URVAN Box (E24)	24	74	02/92 – 04/97	3760	
URVAN Box (E24)	30	95	02/92 – 04/97	3692	
URVAN Box (E24)	30	95	02/92 – 04/97	3760	
URVAN Box (E24)	2.0 D	49	02/92 – 09/94	3692	
URVAN Box (E24)	2.0 D	49	02/92 – 09/94	3760	
URVAN Box (E24)	2.3 D	51	01/88 – 05/97	3692	
URVAN Box (E24)	2.3 D	51	01/88 – 05/97	3760	
URVAN Box (E24)	2.7 TD	58	10/94 – 04/97	3692	
URVAN Box (E24)	2.7 TD	58	10/94 – 04/97	3760	
URVAN Box (E24)	3.2 D	70	02/92 – 04/97	3692	
URVAN Box (E24)	3.2 D	70	02/92 – 04/97	3760	
URVAN Box (E24)	3.2 TD	81	02/92 – 04/97	3692	
URVAN Box (E24)	3.2 TD	81	02/92 – 04/97	3760	
URVAN Bus (E24)	20	65	06/86 – 09/94	3692	
URVAN Bus (E24)	20	65	06/86 – 09/94	3760	

MAKE & MODEL		KW	YEAR		
NISSAN					
URVAN Bus (E24)	20	66	01/92 – 09/93	3692	
URVAN Bus (E24)	20	66	01/92 – 09/93	3760	
URVAN Bus (E24)	30	95	02/92 – 04/97	3692	
URVAN Bus (E24)	30	95	02/92 – 04/97	3760	
URVAN Bus (E24)	2.4 i	74	05/89 – 09/93	3692	
URVAN Bus (E24)	2.4 i	74	05/89 – 09/93	3760	
URVAN Bus (E24)	2.5 D	59	05/89 – 10/96	3692	
URVAN Bus (E24)	2.5 D	59	05/89 – 10/96	3760	
URVAN Bus (E24)	2.7 D	62	03/87 – 09/93	3692	
URVAN Bus (E24)	2.7 D	62	03/87 – 09/93	3760	
URVAN Bus (E24)	2.7 TD	58	10/94 – 04/97	3692	
URVAN Bus (E24)	2.7 TD	58	10/94 – 04/97	3760	
URVAN Bus (E24)	3.2 TD	81	02/92 – 04/97	3692	
URVAN Bus (E24)	3.2 TD	81	02/92 – 04/97	3760	
VANETTE (C20)	12 (A12)	47	07.82-10.84	3370	
VANETTE (C20)	2.0	66	09.82-06.87	3370	
VANETTE (C20)	2.0 D (LD20)	43	11.82-06.87	3370	
VANETTE Box (C22)	15	51	10/86 – 12/95	3692	
VANETTE Box (C22)	15	51	10/86 – 12/95	3760	
VANETTE Box (C22)	2.0 D	49	07/91 – 01/95	3692	
VANETTE Box (C22)	2.0 D	49	07/91 – 01/95	3760	
VANETTE Bus (C22)	15	51	10/86 – 12/95	3692	
VANETTE Bus (C22)	15	51	10/86 – 12/95	3760	
VANETTE Bus (C22)	20	66	07/87 – 08/94	3692	
VANETTE Bus (C22)	20	66	07/87 – 08/94	3760	
VANETTE Bus (C22)	2.0 D (ULC22)	47	10/86 – 12/95	3692	
VANETTE Bus (C22)	2.0 D (ULC22)	47	10/86 – 12/95	3760	
VANETTE Bus (C22)	2.4 i (SLC22)	74	10/86 – 12/95	3692	
VANETTE Bus (C22)	2.4 i (SLC22)	74	10/86 – 12/95	3760	
VANETTE Bus (C22)	2.4 i (SLC22)	77	10/86 – 12/95	3692	
VANETTE Bus (C22)	2.4 i (SLC22)	77	10/86 – 12/95	3760	
VANETTE Bus (KC120)	15	51	01/83 – 12/87	3692	
VANETTE Bus (KC120)	15	51	01/83 – 12/87	3760	
VANETTE CARGO Box (HC 23)	1.6 i	71	01/95 -	3758	
VANETTE CARGO Box (HC 23)	1.6 i	71	09/94 – 05/01	3888	
VANETTE CARGO Box (HC 23)	2.3 D	55	01/95 -	3758	
VANETTE CARGO Box (HC 23)	2.3 D	55	09/94 – 05/02	3888	
VANETTE CARGO Bus (HC 23)	1.6 i	72	01/96 -	3758	
VANETTE CARGO Bus (HC 23)	1.6 i	72	01/96 – 05/01	3888	
VANETTE CARGO Bus (HC 23)	2.0 D	49	01/96 -	3758	
VANETTE CARGO Bus (HC 23)	2.0 D	49	01/96 – 05/01	3888	
VANETTE CARGO Bus (HC 23)	2.3 D	55	01/96 -	3758	
VANETTE CARGO Bus (HC 23)	2.3 D	55	09/94 – 05/01	3888	
XTERRA (WD22_)	2.8 TDI 4x4 (WD22B)	103	06/05 – 08/08	4143	
X-TRAIL (T30)	20	103	07/01 – 01/13	3932	
X-TRAIL (T30)	20	103	07/01 – 01/13		3933
X-TRAIL (T30)	20	110	09/01 – 01/13	3932	
X-TRAIL (T30)	20	110	09/01 – 01/13		3933
X-TRAIL (T30)	2.0 4x4	103	07/01 – 01/13	3932	
X-TRAIL (T30)	2.0 4x4	103	07/01 – 01/13		3933
X-TRAIL (T30)	2.0 4x4	110	09/01 – 01/13	3932	
X-TRAIL (T30)	2.0 4x4	110	09/01 – 01/13		3933
X-TRAIL (T30)	2.0 4x4	206	06/01 – 01/13	3932	
X-TRAIL (T30)	2.0 4x4	206	06/01 – 01/13		3933
X-TRAIL (T30)	2.2 DCi	84	10/04 – 01/13	3932	
X-TRAIL (T30)	2.2 DCi	84	10/04 – 01/13		3933
X-TRAIL (T30)	2.2 dCi	100	12/03 – 01/13	3932	
X-TRAIL (T30)	2.2 dCi	100	12/03 – 01/13		3933
X-TRAIL (T30)	2.2 dCi 4x4	100	12/03 – 01/13	3932	
X-TRAIL (T30)	2.2 dCi 4x4	100	12/03 – 01/13		3933
X-TRAIL (T30)	2.2 DCi FWD	84	06/01 – 09/03	3932	
X-TRAIL (T30)	2.2 DCi FWD	84	06/01 – 09/03		3933
X-TRAIL (T30)	2.2 Di 4x4	84	07/01 – 10/05	3932	
X-TRAIL (T30)	2.2 Di 4x4	84	07/01 – 10/05		3933
X-TRAIL (T30)	2.5 4x4	121	09/02 – 01/13		3933
X-TRAIL (T30)	2.5 4x4	132	11/02 – 01/13	3932	
X-TRAIL (T30)	2.5 4x4	132	11/02 – 01/13		3933
X-TRAIL (T31)	20	101	06/07 – 11/13		3933
X-TRAIL (T31)	20	101	06/07 – 11/13	4038	
X-TRAIL (T31)	20	103	06/08 – 11/13		3933
X-TRAIL (T31)	20	103	06/08 – 11/13	4038	

MAKE & MODEL		KW	YEAR		
NISSAN					
X-TRAIL (T31)	20	104	06/07 – 11/13		3933
X-TRAIL (T31)	20	104	06/07 – 11/13	4038	
X-TRAIL (T31)	20	106	11/08 -	3932	
X-TRAIL (T31)	20	106	11/08 -		3933
X-TRAIL (T31)	25	135	11/08 – 12/14	3932	
X-TRAIL (T31)	25	135	11/08 – 12/14		3933
X-TRAIL (T31)	2.0 dCi	110	06/07 – 11/13		3933
X-TRAIL (T31)	2.0 dCi	110	06/07 – 11/13	4038	
X-TRAIL (T31)	2.0 dCi	127	06/07 – 11/13		3933
X-TRAIL (T31)	2.0 dCi	127	06/07 – 11/13	4038	
X-TRAIL (T31)	2.0 dCi FWD	110	06/07 – 11/13		3933
X-TRAIL (T31)	2.0 dCi FWD	110	06/07 – 11/13	4038	
X-TRAIL (T31)	2.0 FWD	103	06/08 – 11/13		3933
X-TRAIL (T31)	2.0 FWD	103	06/08 – 11/13	4038	
X-TRAIL (T31)	2.0 FWD	104	03/07 – 11/13		3933
X-TRAIL (T31)	2.0 FWD	104	03/07 – 11/13	4038	
X-TRAIL (T31)	2.5 4x4	124	06/07 – 11/13		3933
X-TRAIL (T31)	2.5 4x4	124	06/07 – 11/13	4038	
X-TRAIL (T32_)	2.5 (T32)	126	12/13 -		3933
X-TRAIL (T32_)	2.5 ALL MODE 4x4-i (NT32)	126	12/13 -		3933
X-TRAIL (T32_)	1.6 dCi (T32)	96	04/14 -	4308	
X-TRAIL (T32_)	1.6 dCi ALL MODE 4x4-i (NT32)	96	04/14 -	4308	
X-TRAIL (T32_)	1.6 DIG-T (T32)	120	06/15 -	4308	
X-TRAIL (T32_)	2.0 dCi (T32)	130	10/16 -	4308	
X-TRAIL (T32_)	2.0 dCi ALL MODE 4x4-i (NT32)	130	10/16 -	4308	
X-TRAIL (T32_)	1.6 dCi (T32)	96	12/13 -		4283
X-TRAIL (T32_)	1.6 dCi ALL MODE 4x4-i (NT32)	96	12/13 -		4283
X-TRAIL (T32_)	1.6 DIG-T (T32)	120	06/15 -		4283
X-TRAIL (T32_)	2.0 (T32)	106	09/14 -		4283
X-TRAIL (T32_)	2.0 ALL MODE 4x4-i (NT32)	106	09/14 -		4283
OLCIT					
11	06	25	01/81 – 12/95	3513	
OPEL					
ADAM	10	66	07/14 -	3826/2	
ADAM	10	66	07/14 -		4286
ADAM	10	85	07/14 -	3826/2	
ADAM	10	85	07/14 -		4286
ADAM	12	51	10/12 -	3826/2	
ADAM	12	69	07/13 -	3826/2	
ADAM	14	64	10/12 -	3826/2	
ADAM	14	74	10/12 -	3826/2	
ADAM	1.4 LPG	64	07/13 -	3826/2	
ADAM	1.4 S	110	11/14 -	4042	
ADAM	1.4 S	110	11/14 -		4286
AGILA (B) (H08)	10	48	04/08 -	3983/1	
AGILA (B) (H08)	10	50	07/11 -	3983/1	
AGILA (B) (H08)	12	63	04/08 -	3983/1	
AGILA (B) (H08)	12	69	11/10 -	3983/1	
AGILA (B) (H08)	1.0 LPG	48	01/10 -	3983/1	
AGILA (B) (H08)	1.2 LPG	63	04/08 -	3983/1	
AGILA (B) (H08)	1.3 CDTI	55	04/08 -	3983/1	
AMPERA	EV 150	111	11/11 -	4008	
AMPERA	EV 150	111	11/11 -	4014	
ANTARA	24	103	09/08 -	3976	
ANTARA	24	104	05/06 -	3976	
ANTARA	24	123	12/10 -	3976	
ANTARA	30	190	11/10 -	3976	
ANTARA	2.0 CDTI	93	03/07 -	3976	
ANTARA	2.0 CDTI	93	09/08 -	3976	
ANTARA	2.0 CDTI	110	05/06 -	3976	
ANTARA	2.0 CDTI	125	01/16 -	3976	
ANTARA	2.0 CDTI 4x4	110	05/06 -	3976	
ANTARA	2.0 CDTI 4x4	125	01/16 -	3976	
ANTARA	2.2 CDTi	120	12/10 -	3976	
ANTARA	2.2 CDTi 4x4	120	12/10 -	3976	
ANTARA	2.2 CDTi 4x4	135	12/10 -	3976	
ANTARA	2.4 4x4	103	01/07 -	3976	
ANTARA	2.4 4x4	123	12/10 -	3976	
ANTARA	2.4 LPG	103	10/08 -	3976	
ANTARA	2.4 LPG 4x4	103	10/08 -	3976	

MAKE & MODEL		KW	YEAR		
OPEL					
ANTARA	3.2 V6	167	03/07 -	3976	
ARENA Box	1.9 D	44	01/97 – 12/01	3482	
ARENA Box	2.5 D	55	01/97 – 12/01	3482	
ARENA Box (TB, TF)	1.9 D	44	03/98 – 08/01	3482	
ARENA Box (TB, TF)	2.5 D	55	03/98 – 08/01	3482	
ARENA Bus	1.9 D	44	01/97 – 12/01	3482	
ARENA Bus	2.5 D	55	01/97 – 12/01	3482	
ARENA Combi (THB)	1.9 D	44	03/98 – 08/01	3482	
ARENA Combi (THB)	2.5 D	55	03/98 – 08/01	3482	
ASCONA B (81_, 86_, 87_, 88_)	12	40	08/76 – 02/79	3335	
ASCONA B (81_, 86_, 87_, 88_)	12	40	08/76 – 02/79	3365	
ASCONA B (81_, 86_, 87_, 88_)	12	40	08/76 – 02/79	3410	
ASCONA B (81_, 86_, 87_, 88_)	1.2 S	44	09/75 – 02/79	3335	
ASCONA B (81_, 86_, 87_, 88_)	1.2 S	44	09/75 – 02/79	3365	
ASCONA B (81_, 86_, 87_, 88_)	1.2 S	44	09/75 – 02/79	3410	
ASCONA B (81_, 86_, 87_, 88_)	1.3 N	44	03/79 – 08/81	3410	
ASCONA B (81_, 86_, 87_, 88_)	1.3 S	55	08/79 – 08/81	3410	
ASCONA B (81_, 86_, 87_, 88_)	1.6 N	44	09/75 – 08/81	3335	
ASCONA B (81_, 86_, 87_, 88_)	1.6 N	44	09/75 – 08/81	3365	
ASCONA B (81_, 86_, 87_, 88_)	1.6 S	55	09/75 – 08/81	3410	
ASCONA B (81_, 86_, 87_, 88_)	1.9 N	55	08/76 – 08/81	3335	
ASCONA B (81_, 86_, 87_, 88_)	1.9 N	55	08/76 – 08/81	3365	
ASCONA B (81_, 86_, 87_, 88_)	1.9 N	55	08/76 – 08/81	3410	
ASCONA B (81_, 86_, 87_, 88_)	1.9 S	66	09/75 – 08/81	3410	
ASCONA B (81_, 86_, 87_, 88_)	2.0 D	43	08/78 – 08/81	3410	
ASCONA B (81_, 86_, 87_, 88_)	2.0 E	81	08/79 – 08/81	3410	
ASCONA B (81_, 86_, 87_, 88_)	2.0 N	66	08/77 – 08/81	3335	
ASCONA B (81_, 86_, 87_, 88_)	2.0 N	66	08/77 – 08/81	3365	
ASCONA B (81_, 86_, 87_, 88_)	2.0 N	66	08/77 – 08/81	3410	
ASCONA B (81_, 86_, 87_, 88_)	2.0 S	74	08/77 – 08/81	3335	
ASCONA B (81_, 86_, 87_, 88_)	2.0 S	74	08/77 – 08/81	3365	
ASCONA B (81_, 86_, 87_, 88_)	2.0 S	74	08/77 – 08/81	3410	
ASCONA C (81_, 86_, 87_, 88_)	16	55	09/81 – 09/87	3410	
ASCONA C (81_, 86_, 87_, 88_)	16	60	09/86 – 08/88	3410	
ASCONA C (81_, 86_, 87_, 88_)	18	62	09/87 – 08/88	3410	
ASCONA C (81_, 86_, 87_, 88_)	1.3 N	44	09/81 – 08/86	3410	
ASCONA C (81_, 86_, 87_, 88_)	1.3 S	55	09/81 – 08/88	3410	
ASCONA C (81_, 86_, 87_, 88_)	1.6 D	40	03/82 – 08/88	3410	
ASCONA C (81_, 86_, 87_, 88_)	1.6 i	55	09/87 – 08/88	3410	
ASCONA C (81_, 86_, 87_, 88_)	1.6 i CAT	55	09/86 – 08/88	3410	
ASCONA C (81_, 86_, 87_, 88_)	1.6 S	66	09/81 – 08/86	3410	
ASCONA C (81_, 86_, 87_, 88_)	1.8 E	74	01/85 – 08/86	3410	
ASCONA C (81_, 86_, 87_, 88_)	1.8 i	85	09/82 – 08/86	3410	
ASCONA C (81_, 86_, 87_, 88_)	2.0 i	74	08/87 – 08/88	3410	
ASCONA C (81_, 86_, 87_, 88_)	2.0 i	85	09/86 – 08/88	3410	
ASCONA C (81_, 86_, 87_, 88_)	2.0 i CAT	85	09/86 – 08/88	3410	
ASCONA C (81_, 86_, 87_, 88_)	2.0 i GT	95	03/87 – 08/88	3410	
ASCONA C Hatchback (84_, 89_)	16	55	09/81 – 08/88	3410	
ASCONA C Hatchback (84_, 89_)	16	60	09/86 – 08/88	3410	
ASCONA C Hatchback (84_, 89_)	18	62	09/87 – 08/88	3410	
ASCONA C Hatchback (84_, 89_)	1.3 N	44	09/81 – 08/86	3410	
ASCONA C Hatchback (84_, 89_)	1.3 S	55	09/81 – 08/88	3410	
ASCONA C Hatchback (84_, 89_)	1.6 D	40	03/82 – 08/88	3410	
ASCONA C Hatchback (84_, 89_)	1.6 i	55	09/87 – 08/88	3410	
ASCONA C Hatchback (84_, 89_)	1.6 i CAT	55	09/86 – 08/88	3410	
ASCONA C Hatchback (84_, 89_)	1.6 S	66	09/81 – 08/86	3410	
ASCONA C Hatchback (84_, 89_)	1.8 E	74	01/85 – 08/86	3410	
ASCONA C Hatchback (84_, 89_)	1.8 i	85	09/82 – 08/86	3410	
ASCONA C Hatchback (84_, 89_)	2.0 i	85	09/86 – 08/88	3410	
ASCONA C Hatchback (84_, 89_)	2.0 i CAT	85	09/86 – 08/88	3410	
ASCONA C Hatchback (84_, 89_)	2.0 i GT	95	03/87 – 08/88	3410	
ASTRA F (56_, 57_)	14	55	09/91 – 09/93	3623	
ASTRA F (56_, 57_)	14	60	09/92 – 09/98	3470	
ASTRA F (56_, 57_)	14	60	09/92 – 09/98	3505	
ASTRA F (56_, 57_)	14	60	09/92 – 09/98	3615	
ASTRA F (56_, 57_)	14	60	09/92 – 09/98	3623	
ASTRA F (56_, 57_)	16	55	09/95 – 09/98	3623	
ASTRA F (56_, 57_)	1.4 i	44	09/91 – 09/98	3623	
ASTRA F (56_, 57_)	1.4 i 16V	66	02/96 – 09/98	3623	
ASTRA F (56_, 57_)	1.4 Si	60	03/92 – 09/98	3470	
ASTRA F (56_, 57_)	1.4 Si	60	03/92 – 09/98	3505	

MAKE & MODEL		KW	YEAR		
OPEL					
ASTRA F (56_, 57_)	1.4 Si	60	03/92 – 09/98	3615	
ASTRA F (56_, 57_)	1.4 Si	60	03/92 – 09/98	3623	
ASTRA F (56_, 57_)	1.6 i	52	05/93 – 07/96	3623	
ASTRA F (56_, 57_)	1.6 i	55	03/92 – 09/98	3623	
ASTRA F (56_, 57_)	1.6 i 16V	74	08/94 – 09/98	3470	
ASTRA F (56_, 57_)	1.6 i 16V	74	08/94 – 09/98	3505	
ASTRA F (56_, 57_)	1.6 i 16V	74	08/94 – 09/98	3615	
ASTRA F (56_, 57_)	1.6 Si	74	05/92 – 12/94	3623	
ASTRA F (56_, 57_)	1.7 D	42	03/92 – 09/92	3470	
ASTRA F (56_, 57_)	1.7 D	42	03/92 – 09/92	3505	
ASTRA F (56_, 57_)	1.7 D	42	03/92 – 09/92	3615	
ASTRA F (56_, 57_)	1.7 D	42	03/92 – 09/92	3623	
ASTRA F (56_, 57_)	1.7 D	44	07/92 – 09/98	3470	
ASTRA F (56_, 57_)	1.7 D	44	07/92 – 09/98	3505	
ASTRA F (56_, 57_)	1.7 D	44	07/92 – 09/98	3615	
ASTRA F (56_, 57_)	1.7 D	44	07/92 – 09/98	3623	
ASTRA F (56_, 57_)	1.7 TD	50	11/94 – 09/98	3470	
ASTRA F (56_, 57_)	1.7 TD	50	11/94 – 09/98	3505	
ASTRA F (56_, 57_)	1.7 TD	50	11/94 – 09/98	3615	
ASTRA F (56_, 57_)	1.7 TD	50	11/94 – 09/98	3623	
ASTRA F (56_, 57_)	1.7 TDS	60	03/92 – 09/98	3470	
ASTRA F (56_, 57_)	1.7 TDS	60	03/92 – 09/98	3505	
ASTRA F (56_, 57_)	1.7 TDS	60	03/92 – 09/98	3615	
ASTRA F (56_, 57_)	1.7 TDS	60	03/92 – 09/98	3623	
ASTRA F (56_, 57_)	1.8 i	66	03/92 – 09/98	3623	
ASTRA F (56_, 57_)	1.8 i 16V	82	09/95 - 09/96		3469
ASTRA F (56_, 57_)	1.8 i 16V	82	09/95 – 09/96	3470	
ASTRA F (56_, 57_)	1.8 i 16V	82	09/95 – 09/96	3505	
ASTRA F (56_, 57_)	1.8 i 16V	82	09/95 – 09/96	3615	
ASTRA F (56_, 57_)	1.8 i 16V	85	09/95 – 08/97		3469
ASTRA F (56_, 57_)	1.8 i 16V	85	11/94 – 09/98		3469
ASTRA F (56_, 57_)	1.8 i 16V	85	09/95 – 08/97	3470	
ASTRA F (56_, 57_)	1.8 i 16V	85	11/94 – 09/98	3470	
ASTRA F (56_, 57_)	1.8 i 16V	85	09/95 – 08/97	3505	
ASTRA F (56_, 57_)	1.8 i 16V	85	11/94 – 09/98	3505	
ASTRA F (56_, 57_)	1.8 i 16V	85	09/95 – 08/97	3615	
ASTRA F (56_, 57_)	1.8 i 16V	85	11/94 – 09/98	3615	
ASTRA F (56_, 57_)	1.8 i 16V	92	06/93 – 10/94		3469
ASTRA F (56_, 57_)	1.8 i 16V	92	06/93 – 10/94	3470	
ASTRA F (56_, 57_)	1.8 i 16V	92	06/93 – 10/94	3505	
ASTRA F (56_, 57_)	1.8 i 16V	92	06/93 – 10/94	3615	
ASTRA F (56_, 57_)	2.0 i	85	03/92 – 09/98		3469
ASTRA F (56_, 57_)	2.0 i	85	03/92 – 09/98	3470	
ASTRA F (56_, 57_)	2.0 i	85	03/92 – 09/98	3505	
ASTRA F (56_, 57_)	2.0 i	85	03/92 – 09/98	3615	
ASTRA F (56_, 57_)	2.0 i 16V	100	02/95 – 09/98		3469
ASTRA F (56_, 57_)	2.0 i 16V	100	02/95 – 09/98	3470	
ASTRA F (56_, 57_)	2.0 i 16V	100	02/95 – 09/98	3505	
ASTRA F (56_, 57_)	2.0 i 16V	100	02/95 – 09/98	3615	
ASTRA F CLASSIC Estate	1.4 Comfort	66	09/03 – 01/05		3469
ASTRA F CLASSIC Estate	1.4 Comfort	66	09/03 – 01/05	3623	
ASTRA F CLASSIC Estate	1.4 i	44	01/98 – 01/05	3623	
ASTRA F CLASSIC Estate	1.6 i	55	01/98 – 01/05	3623	
ASTRA F CLASSIC Estate	1.6 i 16V	74	01/98 – 01/05		3469
ASTRA F CLASSIC Estate	1.6 i 16V	74	01/98 – 01/05	3470	
ASTRA F CLASSIC Estate	1.6 i 16V	74	01/98 – 01/05	3505	
ASTRA F CLASSIC Estate	1.6 i 16V	74	01/98 – 01/05	3615	
ASTRA F CLASSIC Hatchback	1.4 i	44	01/98 – 08/02	3623	
ASTRA F CLASSIC Hatchback	1.6 i	55	01/98 – 08/02	3623	
ASTRA F CLASSIC Hatchback	1.6 i 16V	74	01/98 – 08/02	3470	
ASTRA F CLASSIC Hatchback	1.6 i 16V	74	01/98 – 08/02	3505	
ASTRA F CLASSIC Hatchback	1.6 i 16V	74	01/98 – 08/02	3615	
ASTRA F CLASSIC Saloon	1.4 i	44	01/98 – 08/02	3623	
ASTRA F CLASSIC Saloon	1.6 i	55	01/98 – 08/02	3623	
ASTRA F CLASSIC Saloon	1.6 i 16V	74	01/98 – 08/02	3470	
ASTRA F CLASSIC Saloon	1.6 i 16V	74	01/98 – 08/02	3505	
ASTRA F CLASSIC Saloon	1.6 i 16V	74	01/98 – 08/02	3615	
ASTRA F Convertible (53_B)	1.4 i 16V	66	01/96 – 03/01	3623	
ASTRA F Convertible (53_B)	1.4 Si	60	05/93 – 03/01	3623	
ASTRA F Convertible (53_B)	1.6 i	52	03/93 – 08/96	3623	
ASTRA F Convertible (53_B)	1.6 i	55	01/96 – 03/01	3623	

MAKE & MODEL		KW	YEAR		
OPEL					
ASTRA F Convertible (53_B)	1.8 i 16V	85	11/94 – 03/01		3469
ASTRA F Convertible (53_B)	1.8 i 16V	85	11/94 – 03/01	3470	
ASTRA F Convertible (53_B)	1.8 i 16V	85	11/94 – 03/01	3505	
ASTRA F Convertible (53_B)	1.8 i 16V	85	11/94 – 03/01	3615	
ASTRA F Convertible (53_B)	2.0 i	85	03/93 – 10/94		3469
ASTRA F Convertible (53_B)	2.0 i	85	03/93 – 10/94	3470	
ASTRA F Convertible (53_B)	2.0 i	85	03/93 – 10/94	3505	
ASTRA F Convertible (53_B)	2.0 i	85	03/93 – 10/94	3615	
ASTRA F Estate (51_, 52_)	14	55	09/91 – 09/93	3623	
ASTRA F Estate (51_, 52_)	14	60	09/92 – 01/98	3470	
ASTRA F Estate (51_, 52_)	14	60	09/92 – 01/98	3505	
ASTRA F Estate (51_, 52_)	14	60	09/92 – 01/98	3615	
ASTRA F Estate (51_, 52_)	14	60	09/92 – 01/98	3623	
ASTRA F Estate (51_, 52_)	16	55	09/95 – 01/98	3623	
ASTRA F Estate (51_, 52_)	1.4 i	44	09/91 – 01/98	3623	
ASTRA F Estate (51_, 52_)	1.4 i 16V	66	02/96 – 01/98	3623	
ASTRA F Estate (51_, 52_)	1.4 Si	60	03/92 – 01/98	3470	
ASTRA F Estate (51_, 52_)	1.4 Si	60	03/92 – 01/98	3505	
ASTRA F Estate (51_, 52_)	1.4 Si	60	03/92 – 01/98	3615	
ASTRA F Estate (51_, 52_)	1.4 Si	60	03/92 – 01/98	3623	
ASTRA F Estate (51_, 52_)	1.6 i	52	05/93 – 07/96	3623	
ASTRA F Estate (51_, 52_)	1.6 i	55	09/91 – 01/98	3623	
ASTRA F Estate (51_, 52_)	1.6 i 16V	74	08/94 – 01/98	3470	
ASTRA F Estate (51_, 52_)	1.6 i 16V	74	08/94 – 01/98	3505	
ASTRA F Estate (51_, 52_)	1.6 i 16V	74	08/94 – 01/98	3615	
ASTRA F Estate (51_, 52_)	1.6 Si	74	03/92 – 12/94	3623	
ASTRA F Estate (51_, 52_)	1.7 D	42	12/91 – 09/92	3470	
ASTRA F Estate (51_, 52_)	1.7 D	42	12/91 – 09/92	3505	
ASTRA F Estate (51_, 52_)	1.7 D	42	12/91 – 09/92	3615	
ASTRA F Estate (51_, 52_)	1.7 D	42	12/91 – 09/92	3623	
ASTRA F Estate (51_, 52_)	1.7 D	44	07/92 – 01/98	3470	
ASTRA F Estate (51_, 52_)	1.7 D	44	07/92 – 01/98	3505	
ASTRA F Estate (51_, 52_)	1.7 D	44	07/92 – 01/98	3615	
ASTRA F Estate (51_, 52_)	1.7 D	44	07/92 – 01/98	3623	
ASTRA F Estate (51_, 52_)	1.7 TD	50	11/94 – 01/98	3470	
ASTRA F Estate (51_, 52_)	1.7 TD	50	11/94 – 01/98	3505	
ASTRA F Estate (51_, 52_)	1.7 TD	50	11/94 – 01/98	3615	
ASTRA F Estate (51_, 52_)	1.7 TD	50	11/94 – 01/98	3623	
ASTRA F Estate (51_, 52_)	1.7 TDS	60	12/91 – 01/98	3470	
ASTRA F Estate (51_, 52_)	1.7 TDS	60	12/91 – 01/98	3505	
ASTRA F Estate (51_, 52_)	1.7 TDS	60	12/91 – 01/98	3615	
ASTRA F Estate (51_, 52_)	1.7 TDS	60	12/91 – 01/98	3623	
ASTRA F Estate (51_, 52_)	1.8 i	66	09/91 – 01/98	3623	
ASTRA F Estate (51_, 52_)	1.8 i 16V	85	07/94 – 01/98		3469
ASTRA F Estate (51_, 52_)	1.8 i 16V	85	07/94 – 01/98	3470	
ASTRA F Estate (51_, 52_)	1.8 i 16V	85	07/94 – 01/98	3505	
ASTRA F Estate (51_, 52_)	1.8 i 16V	85	07/94 – 01/98	3615	
ASTRA F Estate (51_, 52_)	1.8 i 16V	92	06/93 – 01/98		3469
ASTRA F Estate (51_, 52_)	1.8 i 16V	92	06/93 – 01/98	3470	
ASTRA F Estate (51_, 52_)	1.8 i 16V	92	06/93 – 01/98	3505	
ASTRA F Estate (51_, 52_)	1.8 i 16V	92	06/93 – 01/98	3615	
ASTRA F Estate (51_, 52_)	2.0 i	85	09/91 – 07/94		3469
ASTRA F Estate (51_, 52_)	2.0 i	85	09/91 – 07/94	3470	
ASTRA F Estate (51_, 52_)	2.0 i	85	09/91 – 07/94	3505	
ASTRA F Estate (51_, 52_)	2.0 i	85	09/91 – 07/94	3615	
ASTRA F Estate (51_, 52_)	2.0 i 16V	100	02/95 – 01/98		3469
ASTRA F Estate (51_, 52_)	2.0 i 16V	100	02/95 – 01/98	3470	
ASTRA F Estate (51_, 52_)	2.0 i 16V	100	02/95 – 01/98	3505	
ASTRA F Estate (51_, 52_)	2.0 i 16V	100	02/95 – 01/98	3615	
ASTRA F Estate (51_, 52_)	2.0 i 16V	110	03/93 – 01/98		3469
ASTRA F Estate (51_, 52_)	2.0 i 16V	110	03/93 – 01/98	3470	
ASTRA F Estate (51_, 52_)	2.0 i 16V	110	03/93 – 01/98	3505	
ASTRA F Estate (51_, 52_)	2.0 i 16V	110	03/93 – 01/98	3615	
ASTRA F Hatchback (53_, 54_, 58_, 59_)	14	55	09/91 – 09/93	3623	
ASTRA F Hatchback (53_, 54_, 58_, 59_)	14	60	09/92 – 01/98	3470	
ASTRA F Hatchback (53_, 54_, 58_, 59_)	14	60	09/92 – 01/98	3505	
ASTRA F Hatchback (53_, 54_, 58_, 59_)	14	60	09/92 – 01/98	3615	
ASTRA F Hatchback (53_, 54_, 58_, 59_)	14	60	09/92 – 01/98	3623	
ASTRA F Hatchback (53_, 54_, 58_, 59_)	16	55	09/95 – 01/98	3623	
ASTRA F Hatchback (53_, 54_, 58_, 59_)	1.4 i	44	03/92 – 01/98	3623	
ASTRA F Hatchback (53_, 54_, 58_, 59_)	1.4 i 16V	66	01/96 – 01/98	3623	

MAKE & MODEL   		KW	YEAR		
OPEL					
ASTRA F Hatchback (53_, 54_, 58_, 59_)	1.4 Si	60	03/92 – 01/98	3470	
ASTRA F Hatchback (53_, 54_, 58_, 59_)	1.4 Si	60	03/92 – 01/98	3505	
ASTRA F Hatchback (53_, 54_, 58_, 59_)	1.4 Si	60	03/92 – 01/98	3615	
ASTRA F Hatchback (53_, 54_, 58_, 59_)	1.4 Si	60	03/92 – 01/98	3623	
ASTRA F Hatchback (53_, 54_, 58_, 59_)	1.6 i	52	05/93 – 07/96	3623	
ASTRA F Hatchback (53_, 54_, 58_, 59_)	1.6 i	55	09/91 – 01/98	3623	
ASTRA F Hatchback (53_, 54_, 58_, 59_)	1.6 i 16V	74	08/94 – 01/98	3470	
ASTRA F Hatchback (53_, 54_, 58_, 59_)	1.6 i 16V	74	08/94 – 01/98	3505	
ASTRA F Hatchback (53_, 54_, 58_, 59_)	1.6 i 16V	74	08/94 – 01/98	3615	
ASTRA F Hatchback (53_, 54_, 58_, 59_)	1.6 Si	74	03/92 – 12/94	3623	
ASTRA F Hatchback (53_, 54_, 58_, 59_)	1.7 D	42	12/91 – 09/92	3470	
ASTRA F Hatchback (53_, 54_, 58_, 59_)	1.7 D	42	12/91 – 09/92	3505	
ASTRA F Hatchback (53_, 54_, 58_, 59_)	1.7 D	42	12/91 – 09/92	3615	
ASTRA F Hatchback (53_, 54_, 58_, 59_)	1.7 D	42	12/91 – 09/92	3623	
ASTRA F Hatchback (53_, 54_, 58_, 59_)	1.7 D	44	07/92 – 01/98	3470	
ASTRA F Hatchback (53_, 54_, 58_, 59_)	1.7 D	44	07/92 – 01/98	3505	
ASTRA F Hatchback (53_, 54_, 58_, 59_)	1.7 D	44	07/92 – 01/98	3615	
ASTRA F Hatchback (53_, 54_, 58_, 59_)	1.7 D	44	07/92 – 01/98	3623	
ASTRA F Hatchback (53_, 54_, 58_, 59_)	1.7 TD	50	11/94 – 01/98	3470	
ASTRA F Hatchback (53_, 54_, 58_, 59_)	1.7 TD	50	11/94 – 01/98	3505	
ASTRA F Hatchback (53_, 54_, 58_, 59_)	1.7 TD	50	11/94 – 01/98	3615	
ASTRA F Hatchback (53_, 54_, 58_, 59_)	1.7 TD	50	11/94 – 01/98	3623	
ASTRA F Hatchback (53_, 54_, 58_, 59_)	1.7 TDS	60	12/91 – 01/98	3470	
ASTRA F Hatchback (53_, 54_, 58_, 59_)	1.7 TDS	60	12/91 – 01/98	3505	
ASTRA F Hatchback (53_, 54_, 58_, 59_)	1.7 TDS	60	12/91 – 01/98	3615	
ASTRA F Hatchback (53_, 54_, 58_, 59_)	1.7 TDS	60	12/91 – 01/98	3623	
ASTRA F Hatchback (53_, 54_, 58_, 59_)	1.8 i	66	09/91 – 01/98	3623	
ASTRA F Hatchback (53_, 54_, 58_, 59_)	1.8 i 16V	85	09/94 – 01/98		3469
ASTRA F Hatchback (53_, 54_, 58_, 59_)	1.8 i 16V	85	09/94 – 01/98	3470	
ASTRA F Hatchback (53_, 54_, 58_, 59_)	1.8 i 16V	85	09/94 – 01/98	3505	
ASTRA F Hatchback (53_, 54_, 58_, 59_)	1.8 i 16V	85	09/94 – 01/98	3615	
ASTRA F Hatchback (53_, 54_, 58_, 59_)	1.8 i 16V	92	06/93 – 08/94		3469
ASTRA F Hatchback (53_, 54_, 58_, 59_)	1.8 i 16V	92	06/93 – 08/94	3470	
ASTRA F Hatchback (53_, 54_, 58_, 59_)	1.8 i 16V	92	06/93 – 08/94	3505	
ASTRA F Hatchback (53_, 54_, 58_, 59_)	1.8 i 16V	92	06/93 – 08/94	3615	
ASTRA F Hatchback (53_, 54_, 58_, 59_)	2.0 GSI 16V	110	09/91 – 01/98		3469
ASTRA F Hatchback (53_, 54_, 58_, 59_)	2.0 GSI 16V	110	09/91 – 01/98	3470	
ASTRA F Hatchback (53_, 54_, 58_, 59_)	2.0 GSI 16V	110	09/91 – 01/98	3505	
ASTRA F Hatchback (53_, 54_, 58_, 59_)	2.0 GSI 16V	110	09/91 – 01/98	3615	
ASTRA F Hatchback (53_, 54_, 58_, 59_)	2.0 i	85	09/91 – 01/98		3469
ASTRA F Hatchback (53_, 54_, 58_, 59_)	2.0 i	85	09/91 – 01/98	3470	
ASTRA F Hatchback (53_, 54_, 58_, 59_)	2.0 i	85	09/91 – 01/98	3505	
ASTRA F Hatchback (53_, 54_, 58_, 59_)	2.0 i	85	09/91 – 01/98	3615	
ASTRA F Hatchback (53_, 54_, 58_, 59_)	2.0 i 16V	100	02/95 – 01/98		3469
ASTRA F Hatchback (53_, 54_, 58_, 59_)	2.0 i 16V	100	02/95 – 01/98	3470	
ASTRA F Hatchback (53_, 54_, 58_, 59_)	2.0 i 16V	100	02/95 – 01/98	3505	
ASTRA F Hatchback (53_, 54_, 58_, 59_)	2.0 i 16V	100	02/95 – 01/98	3615	
ASTRA F Van (55_)	1.4 i	44	10/91 – 01/99	3623	
ASTRA F Van (55_)	1.6 i	52	02/93 – 07/96	3623	
ASTRA F Van (55_)	1.6 i	55	10/91 – 04/93	3623	
ASTRA F Van (55_)	1.6 i 16V	74	08/94 – 03/98	3470	
ASTRA F Van (55_)	1.6 i 16V	74	08/94 – 03/98	3505	
ASTRA F Van (55_)	1.6 i 16V	74	08/94 – 03/98	3615	
ASTRA F Van (55_)	1.6 i 16V	74	08/94 – 03/98	3623	
ASTRA F Van (55_)	1.7 D	42	12/91 – 09/92	3470	
ASTRA F Van (55_)	1.7 D	42	12/91 – 09/92	3505	
ASTRA F Van (55_)	1.7 D	42	12/91 – 09/92	3615	
ASTRA F Van (55_)	1.7 D	42	12/91 – 09/92	3623	
ASTRA F Van (55_)	1.7 D	44	07/92 – 01/99	3470	
ASTRA F Van (55_)	1.7 D	44	07/92 – 01/99	3505	
ASTRA F Van (55_)	1.7 D	44	07/92 – 01/99	3615	
ASTRA F Van (55_)	1.7 D	44	07/92 – 01/99	3623	
ASTRA F Van (55_)	1.7 TD	50	08/94 – 01/99	3470	
ASTRA F Van (55_)	1.7 TD	50	08/94 – 01/99	3505	
ASTRA F Van (55_)	1.7 TD	50	08/94 – 01/99	3615	
ASTRA F Van (55_)	1.7 TD	50	08/94 – 01/99	3623	
ASTRA F Van (55_)	1.7 TD	60	03/95 – 02/98	3470	
ASTRA F Van (55_)	1.7 TD	60	03/95 – 02/98	3505	
ASTRA F Van (55_)	1.7 TD	60	03/95 – 02/98	3615	
ASTRA F Van (55_)	1.7 TD	60	03/95 – 02/98	3623	
ASTRA G (F35_)	1.2 16V (X 12 XE)	48	02/98 – 09/00		3763

MAKE & MODEL		KW	YEAR		
OPEL					
ASTRA G (F35_)	1.4 16V (X 14 XE)	66	06/98 – 07/04		3763
ASTRA G (F35_)	1.4 16V (Z 14 XE)	66	06/98 – 07/04		3763
ASTRA G (F35_)	1.6 (X 16 SZR)	55	02/98 – 09/00		3763
ASTRA G (F35_)	1.6 16V (X 16 XEL)	74	02/98 – 07/04		3763
ASTRA G (F35_)	1.6 16V (Z 16 XE)	74	02/98 – 0 7/04		3763
ASTRA G (F35_)	1.7 DTI 16V (Y 17 DT)	55	02/00 – 07/04		3763
ASTRA G (F35_)	1.7 TD (X 17 DTL)	50	02/98 – 08/00		3763
ASTRA G (F35_)	1.8 16V (X 18 XE1)	85	02/98 – 09/00		3763
ASTRA G (F35_)	2.0 16V (X 20 XEV)	100	02/98 – 07/04		3763
ASTRA G (F35_)	2.0 DI (X 20 DTL)	60	02/98 – 07/04		3763
ASTRA G (F35_)	2.0 DI (Y 20 DTL)	60	02/98 – 07/04		3763
ASTRA G (F35_)	2.0 DTI 16V (X 20 DTH)	74	08/99 – 07/04		3763
ASTRA G (F35_)	2.0 DTI 16V (Y 20 DTH)	74	08/99 – 07/04		3763
ASTRA G (F48_, F08_)	1.2 16V (X 12 XE)	48	02/98 – 09/00		3763
ASTRA G (F48_, F08_)	1.4 16V (X 14 XE)	66	02/98 – 01/05		3763
ASTRA G (F48_, F08_)	1.4 16V (Z 14 XE)	66	02/98 – 01/05		3763
ASTRA G (F48_, F08_)	1.6 (X 16 SZR)	55	02/98 – 09/00		3763
ASTRA G (F48_, F08_)	1.6 16V (C 16 SEL)	74	02/98 – 01/05		3763
ASTRA G (F48_, F08_)	1.6 16V (X 16 XEL)	74	02/98 – 01/05		3763
ASTRA G (F48_, F08_)	1.6 16V (Z 16 XE)	74	02/98 – 01/05		3763
ASTRA G (F48_, F08_)	1.7 DTI 16V (Y 17 DT)	55	02/00 – 01/05		3763
ASTRA G (F48_, F08_)	1.7 TD (X 17 DTL)	50	02/98 – 08/00		3763
ASTRA G (F48_, F08_)	1.8 16V (X 18 XE1)	85	02/98 – 09/00		3763
ASTRA G (F48_, F08_)	2.0 16V (C 20 SEL)	100	02/98 – 01/05		3763
ASTRA G (F48_, F08_)	2.0 16V (X 20 XEV)	100	02/98 – 01/05		3763
ASTRA G (F48_, F08_)	2.0 DI (X 20 DTL)	60	02/98 – 01/05		3763
ASTRA G (F48_, F08_)	2.0 DI (Y 20 DTL)	60	02/98 – 01/05		3763
ASTRA G (F48_, F08_)	2.0 DTI 16V (X 20 DTH)	74	08/99 – 01/05		3763
ASTRA G (F48_, F08_)	2.0 DTI 16V (Y 20 DTH)	74	08/99 – 01/05		3763
ASTRA G (F69_)	1.2 16V (X 12 XE)	48	09/98 – 09/00		3763
ASTRA G (F69_)	1.4 16V (X 14 XE)	66	09/98 – 01/05		3763
ASTRA G (F69_)	1.4 16V (Z 14 XE)	66	09/98 – 01/05		3763
ASTRA G (F69_)	1.6 (X 16 SZR)	55	09/98 – 09/00		3763
ASTRA G (F69_)	1.6 16V (X 16 XEL)	74	09/98 – 01/05		3763
ASTRA G (F69_)	1.6 16V (Z 16 XE)	74	09/98 – 01/05		3763
ASTRA G (F69_)	1.7 DTI 16V (Y 17 DT)	55	02/00 – 01/05		3763
ASTRA G (F69_)	1.7 TD (X 17 DTL)	50	09/98 – 08/00		3763
ASTRA G (F69_)	1.8 16V (X 18 XE1)	85	09/98 – 09/00		3763
ASTRA G (F69_)	2.0 16V (X 20 XEV)	100	09/98 – 01/05		3763
ASTRA G (F69_)	2.0 DI (X 20 DTL)	60	09/98 – 01/05		3763
ASTRA G (F69_)	2.0 DI (Y 20 DTL)	60	09/98 – 01/05		3763
ASTRA G (F69_)	2.0 DTI 16V (X 20 DTH)	74	08/99 – 01/05		3763
ASTRA G (F69_)	2.0 DTI 16V (Y 20 DTH)	74	08/99 – 01/05		3763
ASTRA G Box (F70)	16	55	01/99 – 09/00	3762	
ASTRA G Box (F70)	16	55	01/99 – 09/00		4040
ASTRA G Box (F70)	16	62	09/00 – 04/05	3762	
ASTRA G Box (F70)	16	62	09/00 – 04/05		4040
ASTRA G Box (F70)	16	76	10/04 – 04/05	3762	
ASTRA G Box (F70)	16	76	10/04 – 04/05		4040
ASTRA G Box (F70)	1.7 DTI 16V	55	02/00 – 04/05	3762	
ASTRA G Box (F70)	1.7 DTI 16V	55	02/00 – 04/05		4040
ASTRA G Box (F70)	1.7 TD	50	01/99 – 04/05	3762	
ASTRA G Box (F70)	1.7 TD	50	01/99 – 04/05		4040
ASTRA G Box (F70)	2.0 DI	60	01/99 – 04/05	3762	
ASTRA G Box (F70)	2.0 DI	60	01/99 – 04/05		4040
ASTRA G Box (F70)	2.0 DI	60	01/99 – 04/05	4042	
ASTRA G Convertible (F67)	16	76	01/03 – 10/05	3762	
ASTRA G Convertible (F67)	16	76	01/03 – 10/05		4040
ASTRA G Convertible (F67)	1.6 16V	74	03/01 – 10/05	3762	
ASTRA G Convertible (F67)	1.6 16V	74	03/01 – 10/05		4040
ASTRA G Convertible (F67)	1.8 16V	92	03/01 – 10/05	3762	
ASTRA G Convertible (F67)	1.8 16V	92	03/01 – 10/05		4040
ASTRA G Convertible (F67)	1.8 16V	92	03/01 – 10/05	4042	
ASTRA G Convertible (F67)	2.0 16V Turbo	147	11/02 – 10/05		4040
ASTRA G Convertible (F67)	2.0 OPC	141	03/02 – 10/05		4040
ASTRA G Convertible (F67)	2.2 16V	108	03/01 – 10/05		4040
ASTRA G Convertible (F67)	2.2 16V	108	03/01 – 10/05	4042	
ASTRA G Convertible (F67)	2.2 DTI	92	09/02 – 10/05		4040
ASTRA G Convertible (F67)	2.2 DTI	92	09/02 – 10/05	4042	
ASTRA G Coupe (F07_)	1.6 16V	74	03/00 – 05/05	3762	
ASTRA G Coupe (F07_)	1.6 16V	74	03/00 – 05/05		4040

MAKE & MODEL		KW	YEAR		
OPEL					
ASTRA G Coupe (F07_)	1.6 16V	76	03/00 – 05/05	3762	
ASTRA G Coupe (F07_)	1.6 16V	76	03/00 – 05/05		4040
ASTRA G Coupe (F07_)	1.8 16V	85	03/00 – 10/00	3762	
ASTRA G Coupe (F07_)	1.8 16V	85	03/00 – 10/00		4040
ASTRA G Coupe (F07_)	1.8 16V	85	03/00 – 10/00	4042	
ASTRA G Coupe (F07_)	1.8 16V	92	09/00 – 05/05	3762	
ASTRA G Coupe (F07_)	1.8 16V	92	09/00 – 05/05		4040
ASTRA G Coupe (F07_)	1.8 16V	92	09/00 – 05/05	4042	
ASTRA G Coupe (F07_)	2.0 16V Turbo	140	09/00 – 08/01		4040
ASTRA G Coupe (F07_)	2.0 16V Turbo	141	08/01 – 05/05		4040
ASTRA G Coupe (F07_)	2.0 16V Turbo	147	11/02 – 05/05		4040
ASTRA G Coupe (F07_)	2.2 16V	108	09/00 – 05/05		4040
ASTRA G Coupe (F07_)	2.2 16V	108	09/00 – 05/05	4042	
ASTRA G Coupe (F07_)	2.2 DTI	92	09/02 – 05/05		4040
ASTRA G Coupe (F07_)	2.2 DTI	92	09/02 – 05/05	4042	
ASTRA G Estate (F35_)	14	66	10/04 – 12/09	3762	
ASTRA G Estate (F35_)	14	66	10/04 – 12/09		4040
ASTRA G Estate (F35_)	16	55	02/98 – 09/00	3762	
ASTRA G Estate (F35_)	16	55	02/98 – 09/00		4040
ASTRA G Estate (F35_)	16	62	09/00 – 07/04	3762	
ASTRA G Estate (F35_)	16	62	09/00 – 07/04		4040
ASTRA G Estate (F35_)	16	76	12/02 – 07/09	3762	
ASTRA G Estate (F35_)	16	76	12/02 – 07/09		4040
ASTRA G Estate (F35_)	1.2 16V	48	02/98 – 09/00	3762	
ASTRA G Estate (F35_)	1.2 16V	48	02/98 – 09/00		4040
ASTRA G Estate (F35_)	1.2 16V	55	09/00 – 07/04	3762	
ASTRA G Estate (F35_)	1.2 16V	55	09/00 – 07/04		4040
ASTRA G Estate (F35_)	1.4 16V	66	06/98 – 07/04	3762	
ASTRA G Estate (F35_)	1.4 16V	66	06/98 – 07/04		4040
ASTRA G Estate (F35_)	1.6 16V	74	02/98 – 07/04	3762	
ASTRA G Estate (F35_)	1.6 16V	74	02/98 – 07/04		4040
ASTRA G Estate (F35_)	1.6 CNG	71	03/03 – 07/04		4040
ASTRA G Estate (F35_)	1.6 CNG	71	03/03 – 07/04	4042	
ASTRA G Estate (F35_)	1.7 CDTI	59	04/03 – 07/09	3762	
ASTRA G Estate (F35_)	1.7 CDTI	59	04/03 – 07/09		4040
ASTRA G Estate (F35_)	1.7 DTI 16V	55	02/00 – 07/04	3762	
ASTRA G Estate (F35_)	1.7 DTI 16V	55	02/00 – 07/04		4040
ASTRA G Estate (F35_)	1.7 TD	50	02/98 – 08/00	3762	
ASTRA G Estate (F35_)	1.7 TD	50	02/98 – 08/00		4040
ASTRA G Estate (F35_)	1.8 16V	85	02/98 – 09/00	3762	
ASTRA G Estate (F35_)	1.8 16V	85	02/98 – 09/00		4040
ASTRA G Estate (F35_)	1.8 16V	85	02/98 – 09/00	4042	
ASTRA G Estate (F35_)	1.8 16V	92	09/00 – 07/04	3762	
ASTRA G Estate (F35_)	1.8 16V	92	09/00 – 07/04		4040
ASTRA G Estate (F35_)	1.8 16V	92	09/00 – 07/04	4042	
ASTRA G Estate (F35_)	2.0 16V	100	02/98 – 07/04		4040
ASTRA G Estate (F35_)	2.0 16V	100	02/98 – 07/04	4042	
ASTRA G Estate (F35_)	2.0 DI	60	02/98 – 07/04	3762	
ASTRA G Estate (F35_)	2.0 DI	60	02/98 – 07/04		4040
ASTRA G Estate (F35_)	2.0 DI	60	02/98 – 07/04	4042	
ASTRA G Estate (F35_)	2.0 DTI 16V	74	08/99 – 07/04	3762	
ASTRA G Estate (F35_)	2.0 DTI 16V	74	08/99 – 07/04		4040
ASTRA G Estate (F35_)	2.0 DTI 16V	74	08/99 – 07/04	4042	
ASTRA G Estate (F35_)	2.0 OPC	141	09/02 – 07/04		4040
ASTRA G Estate (F35_)	2.0 OPC	147	11/02 – 07/04		4040
ASTRA G Estate (F35_)	2.2 16V	108	03/01 – 07/04		4040
ASTRA G Estate (F35_)	2.2 16V	108	03/01 – 07/04	4042	
ASTRA G Estate (F35_)	2.2 DTI	86	09/02 – 07/04		4040
ASTRA G Estate (F35_)	2.2 DTI	86	09/02 – 07/04	4042	
ASTRA G Estate (F35_)	2.2 DTI	92	09/02 – 07/04		4040
ASTRA G Estate (F35_)	2.2 DTI	92	09/02 – 07/04	4042	
ASTRA G Hatchback (F48_, F08_)	14	66	09/07 – 12/09	3762	
ASTRA G Hatchback (F48_, F08_)	14	66	09/07 – 12/09		4040
ASTRA G Hatchback (F48_, F08_)	16	55	02/98 – 09/00	3762	
ASTRA G Hatchback (F48_, F08_)	16	55	02/98 – 09/00		4040
ASTRA G Hatchback (F48_, F08_)	16	62	09/00 – 01/05	3762	
ASTRA G Hatchback (F48_, F08_)	16	62	09/00 – 01/05		4040
ASTRA G Hatchback (F48_, F08_)	16	76	12/02 – 12/09	3762	
ASTRA G Hatchback (F48_, F08_)	16	76	12/02 – 12/09		4040
ASTRA G Hatchback (F48_, F08_)	18	81	02/03 – 01/04	3762	
ASTRA G Hatchback (F48_, F08_)	1.2 16V	48	02/98 – 09/00	3762	

MAKE & MODEL		KW	YEAR		
OPEL					
ASTRA G Hatchback (F48_, F08_)	1.2 16V	48	02/98 – 09/00		4040
ASTRA G Hatchback (F48_, F08_)	1.2 16V	55	09/00 – 01/05	3762	
ASTRA G Hatchback (F48_, F08_)	1.2 16V	55	09/00 – 01/05		4040
ASTRA G Hatchback (F48_, F08_)	1.4 16V	66	02/98 – 01/05	3762	
ASTRA G Hatchback (F48_, F08_)	1.4 16V	66	02/98 – 01/05		4040
ASTRA G Hatchback (F48_, F08_)	1.6 16V	74	02/98 – 01/05	3762	
ASTRA G Hatchback (F48_, F08_)	1.6 16V	74	02/98 – 01/05		4040
ASTRA G Hatchback (F48_, F08_)	1.6 LPG	74	06/02 – 01/05	3762	
ASTRA G Hatchback (F48_, F08_)	1.6 LPG	74	06/02 – 01/05		4040
ASTRA G Hatchback (F48_, F08_)	1.7 CDTI	59	04/03 – 12/09	3762	
ASTRA G Hatchback (F48_, F08_)	1.7 CDTI	59	04/03 – 12/09		4040
ASTRA G Hatchback (F48_, F08_)	1.7 DTI 16V	55	02/00 – 01/05	3762	
ASTRA G Hatchback (F48_, F08_)	1.7 DTI 16V	55	02/00 – 01/05		4040
ASTRA G Hatchback (F48_, F08_)	1.7 TD	50	02/98 – 08/00	3762	
ASTRA G Hatchback (F48_, F08_)	1.7 TD	50	02/98 – 08/00		4040
ASTRA G Hatchback (F48_, F08_)	1.8 16V	85	02/98 – 09/00	3762	
ASTRA G Hatchback (F48_, F08_)	1.8 16V	85	02/98 – 09/00		4040
ASTRA G Hatchback (F48_, F08_)	1.8 16V	85	02/98 – 09/00	4042	
ASTRA G Hatchback (F48_, F08_)	1.8 16V	92	09/00 – 01/05	3762	
ASTRA G Hatchback (F48_, F08_)	1.8 16V	92	09/00 – 01/05		4040
ASTRA G Hatchback (F48_, F08_)	1.8 16V	92	09/00 – 01/05	4042	
ASTRA G Hatchback (F48_, F08_)	2.0 16V	100	02/98 – 01/05		4040
ASTRA G Hatchback (F48_, F08_)	2.0 16V	100	02/98 – 01/05	4042	
ASTRA G Hatchback (F48_, F08_)	2.0 16V OPC	118	11/99 – 09/02		4040
ASTRA G Hatchback (F48_, F08_)	2.0 DI	60	02/98 – 01/05	3762	
ASTRA G Hatchback (F48_, F08_)	2.0 DI	60	02/98 – 01/05		4040
ASTRA G Hatchback (F48_, F08_)	2.0 DI	60	02/98 – 01/05	4042	
ASTRA G Hatchback (F48_, F08_)	2.0 DTI 16V	74	08/99 – 01/05	3762	
ASTRA G Hatchback (F48_, F08_)	2.0 DTI 16V	74	08/99 – 01/05		4040
ASTRA G Hatchback (F48_, F08_)	2.0 DTI 16V	74	08/99 – 01/05	4042	
ASTRA G Hatchback (F48_, F08_)	2.0 OPC	141	09/02 – 01/05		4040
ASTRA G Hatchback (F48_, F08_)	2.0 OPC	147	11/02 – 01/05		4040
ASTRA G Hatchback (F48_, F08_)	2.2 16V	108	06/00 – 01/05		4040
ASTRA G Hatchback (F48_, F08_)	2.2 16V	108	06/00 – 01/05	4042	
ASTRA G Hatchback (F48_, F08_)	2.2 DTI	86	09/02 – 01/05		4040
ASTRA G Hatchback (F48_, F08_)	2.2 DTI	86	09/02 – 01/05	4042	
ASTRA G Hatchback (F48_, F08_)	2.2 DTI	92	09/02 – 01/05		4040
ASTRA G Hatchback (F48_, F08_)	2.2 DTI	92	09/02 – 01/05	4042	
ASTRA G Saloon (F69_)	14	66	09/07 – 12/09	3762	
ASTRA G Saloon (F69_)	14	66	09/07 – 12/09		4040
ASTRA G Saloon (F69_)	16	55	09/98 – 09/00	3762	
ASTRA G Saloon (F69_)	16	55	09/98 – 09/00		4040
ASTRA G Saloon (F69_)	16	62	09/00 – 01/05	3762	
ASTRA G Saloon (F69_)	16	62	09/00 – 01/05		4040
ASTRA G Saloon (F69_)	16	76	12/02 – 12/09	3762	
ASTRA G Saloon (F69_)	16	76	12/02 – 12/09		4040
ASTRA G Saloon (F69_)	1.2 16V	48	09/98 – 09/00	3762	
ASTRA G Saloon (F69_)	1.2 16V	48	09/98 – 09/00		4040
ASTRA G Saloon (F69_)	1.2 16V	55	09/00 – 01/05	3762	
ASTRA G Saloon (F69_)	1.2 16V	55	09/00 – 01/05		4040
ASTRA G Saloon (F69_)	1.4 16V	66	09/98 – 01/05	3762	
ASTRA G Saloon (F69_)	1.4 16V	66	09/98 – 01/05		4040
ASTRA G Saloon (F69_)	1.6 16V	74	09/98 – 01/05	3762	
ASTRA G Saloon (F69_)	1.6 16V	74	09/98 – 01/05		4040
ASTRA G Saloon (F69_)	1.6 LPG	74	06/02 – 01/05	3762	
ASTRA G Saloon (F69_)	1.6 LPG	74	06/02 – 01/05		4040
ASTRA G Saloon (F69_)	1.7 CDTI	59	04/03 – 12/09	3762	
ASTRA G Saloon (F69_)	1.7 CDTI	59	04/03 – 12/09		4040
ASTRA G Saloon (F69_)	1.7 DTI 16V	55	02/00 – 01/05	3762	
ASTRA G Saloon (F69_)	1.7 DTI 16V	55	02/00 – 01/05		4040
ASTRA G Saloon (F69_)	1.7 TD	50	09/98 – 08/00	3762	
ASTRA G Saloon (F69_)	1.7 TD	50	09/98 – 08/00		4040
ASTRA G Saloon (F69_)	1.8 16V	85	09/98 – 09/00	3762	
ASTRA G Saloon (F69_)	1.8 16V	85	09/98 – 09/00		4040
ASTRA G Saloon (F69_)	1.8 16V	85	09/98 – 09/00	4042	
ASTRA G Saloon (F69_)	1.8 16V	92	06/00 – 01/05	3762	
ASTRA G Saloon (F69_)	1.8 16V	92	06/00 – 01/05		4040
ASTRA G Saloon (F69_)	1.8 16V	92	06/00 – 01/05	4042	
ASTRA G Saloon (F69_)	2.0 16V	100	09/98 – 01/05		4040
ASTRA G Saloon (F69_)	2.0 16V	100	09/98 – 01/05	4042	
ASTRA G Saloon (F69_)	2.0 DI	60	09/98 – 01/05	3762	

MAKE & MODEL		KW	YEAR		
OPEL					
ASTRA G Saloon (F69_)	2.0 DI	60	09/98 – 01/05		4040
ASTRA G Saloon (F69_)	2.0 DI	60	09/98 – 01/05	4042	
ASTRA G Saloon (F69_)	2.0 DTI 16V	74	08/99 – 01/05	3762	
ASTRA G Saloon (F69_)	2.0 DTI 16V	74	08/99 – 01/05		4040
ASTRA G Saloon (F69_)	2.0 DTI 16V	74	08/99 – 01/05	4042	
ASTRA G Saloon (F69_)	2.2 16V	108	03/01 – 01/05		4040
ASTRA G Saloon (F69_)	2.2 16V	108	03/01 – 01/05	4042	
ASTRA G Saloon (F69_)	2.2 DTI	86	09/02 – 01/05		4040
ASTRA G Saloon (F69_)	2.2 DTI	86	09/02 – 01/05	4042	
ASTRA G Saloon (F69_)	2.2 DTI	92	09/02 – 01/05		4040
ASTRA G Saloon (F69_)	2.2 DTI	92	09/02 – 01/05	4042	
ASTRA GTC J	14	74	10/11 -	4008	
ASTRA GTC J	14	74	10/11 -	4149	
ASTRA GTC J	14	74	10/11 -	4230	
ASTRA GTC J	14	88	10/11 -	4008	
ASTRA GTC J	14	88	10/11 -	4149	
ASTRA GTC J	14	88	10/11 -	4230	
ASTRA GTC J	14	103	10/11 -	4008	
ASTRA GTC J	14	103	10/11 -	4149	
ASTRA GTC J	14	103	10/11 -	4230	
ASTRA GTC J	16	132	10/11 -	4008	
ASTRA GTC J	16	132	10/11 -	4149	
ASTRA GTC J	16	132	10/11 -	4230	
ASTRA GTC J	18	103	10/11 -	4008	
ASTRA GTC J	18	103	10/11 -	4149	
ASTRA GTC J	18	103	10/11 -	4230	
ASTRA GTC J	1.4	74	10/11 -	4014	
ASTRA GTC J	1.4	88	10/11 -	4014	
ASTRA GTC J	1.4	103	10/11 -	4014	
ASTRA GTC J	1.6	132	10/11 -	4014	
ASTRA GTC J	1.6 CDTI	81	07/14 -	4008	
ASTRA GTC J	1.6 CDTI	81	07/14 -	4014	
ASTRA GTC J	1.6 CDTI	81	07/14 -	4149	
ASTRA GTC J	1.6 CDTI	81	07/14 -	4230	
ASTRA GTC J	1.6 CDTI	100	07/14 -	4008	
ASTRA GTC J	1.6 CDTI	100	07/14 -	4014	
ASTRA GTC J	1.6 CDTI	100	07/14 -	4149	
ASTRA GTC J	1.6 CDTI	100	07/14 -	4230	
ASTRA GTC J	1.6 SIDI	125	12/12 -	4008	
ASTRA GTC J	1.6 SIDI	125	12/12 -	4014	
ASTRA GTC J	1.6 SIDI	125	12/12 -	4149	
ASTRA GTC J	1.6 SIDI	125	12/12 -	4230	
ASTRA GTC J	1.6 SIDI	147	07/13 -	4008	
ASTRA GTC J	1.6 SIDI	147	07/13 -	4014	
ASTRA GTC J	1.6 SIDI	147	07/13 -	4149	
ASTRA GTC J	1.6 SIDI	147	07/13 -	4230	
ASTRA GTC J	1.7 CDTI	81	10/11 -	4008	
ASTRA GTC J	1.7 CDTI	81	10/11 -	4014	
ASTRA GTC J	1.7 CDTI	81	10/11 -	4149	
ASTRA GTC J	1.7 CDTI	81	10/11 -	4230	
ASTRA GTC J	1.7 CDTI	96	10/11 -	4008	
ASTRA GTC J	1.7 CDTI	96	10/11 -	4014	
ASTRA GTC J	1.7 CDTI	96	10/11 -	4149	
ASTRA GTC J	1.7 CDTI	96	10/11 -	4230	
ASTRA GTC J	1.8	103	10/11 -	4014	
ASTRA GTC J	2.0	206	04/12 -	4014	
ASTRA GTC J	2.0 BiTurbo CDTI	143	10/12 -	4008	
ASTRA GTC J	2.0 BiTurbo CDTI	143	10/12 -	4014	
ASTRA GTC J	2.0 BiTurbo CDTI	143	10/12 -	4149	
ASTRA GTC J	2.0 BiTurbo CDTI	143	10/12 -	4230	
ASTRA GTC J	2.0 CDTI	121	10/11 -	4008	
ASTRA GTC J	2.0 CDTI	121	10/11 -	4014	
ASTRA GTC J	2.0 CDTI	121	10/11 -	4149	
ASTRA GTC J	2.0 CDTI	121	10/11 -	4230	
ASTRA H (L48)	12	59	08/05 – 10/10		4040
ASTRA H (L48)	12	59	08/05 – 10/10	4042	
ASTRA H (L48)	14	55	04/04 – 10/04		4040
ASTRA H (L48)	14	55	04/04 – 10/04	4042	
ASTRA H (L48)	14	59	04/04 – 10/04		4040
ASTRA H (L48)	14	59	04/04 – 10/04	4042	
ASTRA H (L48)	14	66	03/04 – 10/10		4040

MAKE & MODEL   		KW	YEAR		
OPEL					
ASTRA H (L48)	14	66	03/04 – 10/10	4042	
ASTRA H (L48)	16	77	03/04 – 10/10		4040
ASTRA H (L48)	16	77	03/04 – 10/10	4042	
ASTRA H (L48)	16	85	12/06 – 05/14		4040
ASTRA H (L48)	16	85	12/06 – 05/14	4042	
ASTRA H (L48)	18	92	03/04 – 10/10		4040
ASTRA H (L48)	18	92	03/04 – 10/10	4042	
ASTRA H (L48)	18	103	01/06 – 10/10		4040
ASTRA H (L48)	18	103	01/06 – 10/10	4042	
ASTRA H (L48)	1.3 CDTI	66	08/05 – 10/10		4040
ASTRA H (L48)	1.3 CDTI	66	08/05 – 10/10	4042	
ASTRA H (L48)	1.4 LPG	66	08/09 – 10/10		4040
ASTRA H (L48)	1.4 LPG	66	08/09 – 10/10	4042	
ASTRA H (L48)	1.6 Turbo	132	02/07 – 10/10		4040
ASTRA H (L48)	1.6 Turbo	132	02/07 – 10/10	4042	
ASTRA H (L48)	1.7 CDTI	59	03/04 – 10/10		4040
ASTRA H (L48)	1.7 CDTI	59	03/04 – 10/10	4042	
ASTRA H (L48)	1.7 CDTI	74	03/04 – 10/10		4040
ASTRA H (L48)	1.7 CDTI	74	03/04 – 10/10	4042	
ASTRA H (L48)	1.7 CDTI	81	02/07 – 05/14		4040
ASTRA H (L48)	1.7 CDTI	81	02/07 – 05/14	4042	
ASTRA H (L48)	1.7 CDTI	92	02/07 – 05/14		4040
ASTRA H (L48)	1.7 CDTI	92	02/07 – 05/14	4042	
ASTRA H (L48)	1.9 CDTI	74	09/05 – 10/10		4040
ASTRA H (L48)	1.9 CDTI	74	09/05 – 10/10	4042	
ASTRA H (L48)	1.9 CDTI	88	06/04 – 10/10		4040
ASTRA H (L48)	1.9 CDTI	88	06/04 – 10/10	4042	
ASTRA H (L48)	1.9 CDTI	110	09/04 – 10/10		4040
ASTRA H (L48)	1.9 CDTI	110	09/04 – 10/10	4042	
ASTRA H (L48)	1.9 CDTI 16V	88	04/04 – 10/10		4040
ASTRA H (L48)	1.9 CDTI 16V	88	04/04 – 10/10	4042	
ASTRA H (L48)	2.0 Turbo	125	03/04 – 10/10		4040
ASTRA H (L48)	2.0 Turbo	125	03/04 – 10/10	4042	
ASTRA H (L48)	2.0 Turbo	147	09/04 – 10/10		4040
ASTRA H (L48)	2.0 Turbo	147	09/04 – 10/10	4042	
ASTRA H (L48)	2.0 Turbo	177	03/05 – 10/10		4040
ASTRA H Box (L70)	16	76	02/04 – 11/04		4040
ASTRA H Box (L70)	16	76	02/04 – 11/04	4042	
ASTRA H Box (L70)	1.3 CDTI	66	08/05 – 10/10		4040
ASTRA H Box (L70)	1.3 CDTI	66	08/05 – 10/10	4042	
ASTRA H Box (L70)	1.7 CDTI	74	03/04 – 10/10		4040
ASTRA H Box (L70)	1.7 CDTI	74	03/04 – 10/10	4042	
ASTRA H Box (L70)	1.7 CDTI	81	02/07 – 10/10		4040
ASTRA H Box (L70)	1.7 CDTI	81	02/07 – 10/10	4042	
ASTRA H Box (L70)	1.7 CDTI	92	02/07 – 10/10		4040
ASTRA H Box (L70)	1.7 CDTI	92	02/07 – 10/10	4042	
ASTRA H Box (L70)	1.9 CDTI	88	09/05 – 10/10		4040
ASTRA H Box (L70)	1.9 CDTI	88	09/05 – 10/10	4042	
ASTRA H Box (L70)	1.9 CDTI	110	09/04 – 10/10		4040
ASTRA H Box (L70)	1.9 CDTI	110	09/04 – 10/10	4042	
ASTRA H Box (L70)	1.9 CDTI 16V	88	08/04 – 10/10		4040
ASTRA H Box (L70)	1.9 CDTI 16V	88	08/04 – 10/10	4042	
ASTRA H Estate (L35)	14	55	08/04 – 10/10		4040
ASTRA H Estate (L35)	14	55	08/04 – 10/10	4042	
ASTRA H Estate (L35)	14	66	08/04 – 10/10		4040
ASTRA H Estate (L35)	14	66	08/04 – 10/10	4042	
ASTRA H Estate (L35)	16	77	08/04 – 10/10		4040
ASTRA H Estate (L35)	16	77	08/04 – 10/10	4042	
ASTRA H Estate (L35)	16	85	12/06 – 05/14		4040
ASTRA H Estate (L35)	16	85	12/06 – 05/14	4042	
ASTRA H Estate (L35)	18	92	08/04 – 10/10		4040
ASTRA H Estate (L35)	18	92	08/04 – 10/10	4042	
ASTRA H Estate (L35)	18	103	08/05 – 10/10		4040
ASTRA H Estate (L35)	18	103	08/05 – 10/10	4042	
ASTRA H Estate (L35)	1.3 CDTI	66	08/05 – 10/10		4040
ASTRA H Estate (L35)	1.3 CDTI	66	08/05 – 10/10	4042	
ASTRA H Estate (L35)	1.4 LPG	66	08/09 – 10/10		4040
ASTRA H Estate (L35)	1.4 LPG	66	08/09 – 10/10	4042	
ASTRA H Estate (L35)	1.6 LPG	85	08/09 – 10/10		4040
ASTRA H Estate (L35)	1.6 LPG	85	08/09 – 10/10	4042	
ASTRA H Estate (L35)	1.6 Turbo	132	02/07 – 10/10		4040

MAKE & MODEL		KW	YEAR		
OPEL					
ASTRA H Estate (L35)	1.6 Turbo	132	02/07 – 10/10	4042	
ASTRA H Estate (L35)	1.7 CDTI	59	08/04 – 10/10		4040
ASTRA H Estate (L35)	1.7 CDTI	59	08/04 – 10/10	4042	
ASTRA H Estate (L35)	1.7 CDTI	74	08/04 – 10/10		4040
ASTRA H Estate (L35)	1.7 CDTI	74	08/04 – 10/10	4042	
ASTRA H Estate (L35)	1.7 CDTI	81	02/07 – 05/14		4040
ASTRA H Estate (L35)	1.7 CDTI	81	02/07 – 05/14	4042	
ASTRA H Estate (L35)	1.7 CDTI	92	02/07 – 05/14		4040
ASTRA H Estate (L35)	1.7 CDTI	92	02/07 – 05/14	4042	
ASTRA H Estate (L35)	1.9 CDTI	74	09/05 – 10/10		4040
ASTRA H Estate (L35)	1.9 CDTI	74	09/05 – 10/10	4042	
ASTRA H Estate (L35)	1.9 CDTI	88	09/05 – 10/10		4040
ASTRA H Estate (L35)	1.9 CDTI	88	09/05 – 10/10	4042	
ASTRA H Estate (L35)	1.9 CDTI	110	09/04 – 10/10		4040
ASTRA H Estate (L35)	1.9 CDTI	110	09/04 – 10/10	4042	
ASTRA H Estate (L35)	1.9 CDTI 16V	88	08/04 – 10/10		4040
ASTRA H Estate (L35)	1.9 CDTI 16V	88	08/04 – 10/10	4042	
ASTRA H Estate (L35)	2.0 Turbo	125	08/04 – 10/10		4040
ASTRA H Estate (L35)	2.0 Turbo	125	08/04 – 10/10	4042	
ASTRA H Estate (L35)	2.0 Turbo	147	09/04 – 10/10		4040
ASTRA H Estate (L35)	2.0 Turbo	147	09/04 – 10/10	4042	
ASTRA H GTC (L08)	12	59	08/05 – 10/10		4040
ASTRA H GTC (L08)	12	59	08/05 – 10/10	4042	
ASTRA H GTC (L08)	14	55	03/05 – 10/10		4040
ASTRA H GTC (L08)	14	55	03/05 – 10/10	4042	
ASTRA H GTC (L08)	14	66	03/05 – 10/10		4040
ASTRA H GTC (L08)	14	66	03/05 – 10/10	4042	
ASTRA H GTC (L08)	16	77	03/05 – 10/10		4040
ASTRA H GTC (L08)	16	77	03/05 – 10/10	4042	
ASTRA H GTC (L08)	16	85	12/06 – 10/10		4040
ASTRA H GTC (L08)	16	85	12/06 – 10/10	4042	
ASTRA H GTC (L08)	18	92	03/05 – 10/10		4040
ASTRA H GTC (L08)	18	92	03/05 – 10/10	4042	
ASTRA H GTC (L08)	18	103	01/06 – 10/10		4040
ASTRA H GTC (L08)	18	103	01/06 – 10/10	4042	
ASTRA H GTC (L08)	1.3 CDTI	66	04/05 – 10/10		4040
ASTRA H GTC (L08)	1.3 CDTI	66	04/05 – 10/10	4042	
ASTRA H GTC (L08)	1.6 Turbo	132	02/07 – 10/10		4040
ASTRA H GTC (L08)	1.6 Turbo	132	02/07 – 10/10	4042	
ASTRA H GTC (L08)	1.7 CDTI	59	03/05 – 10/10		4040
ASTRA H GTC (L08)	1.7 CDTI	59	03/05 – 10/10	4042	
ASTRA H GTC (L08)	1.7 CDTI	81	02/07 – 10/10		4040
ASTRA H GTC (L08)	1.7 CDTI	81	02/07 – 10/10	4042	
ASTRA H GTC (L08)	1.7 CDTI	92	02/07 – 10/10		4040
ASTRA H GTC (L08)	1.7 CDTI	92	02/07 – 10/10	4042	
ASTRA H GTC (L08)	1.7 CDTi	74	03/05 – 10/10		4040
ASTRA H GTC (L08)	1.7 CDTi	74	03/05 – 10/10	4042	
ASTRA H GTC (L08)	1.9 CDTI	74	01/06 – 10/10		4040
ASTRA H GTC (L08)	1.9 CDTI	74	01/06 – 10/10	4042	
ASTRA H GTC (L08)	1.9 CDTI	88	09/05 – 10/10		4040
ASTRA H GTC (L08)	1.9 CDTI	88	09/05 – 10/10	4042	
ASTRA H GTC (L08)	1.9 CDTi	110	03/05 – 10/10		4040
ASTRA H GTC (L08)	1.9 CDTi	110	03/05 – 10/10	4042	
ASTRA H GTC (L08)	1.9 CDTi 16V	88	03/05 – 10/10		4040
ASTRA H GTC (L08)	1.9 CDTi 16V	88	03/05 – 10/10	4042	
ASTRA H GTC (L08)	2.0 Turbo	125	03/05 – 10/10		4040
ASTRA H GTC (L08)	2.0 Turbo	125	03/05 – 10/10	4042	
ASTRA H GTC (L08)	2.0 Turbo	147	03/05 – 10/10		4040
ASTRA H GTC (L08)	2.0 Turbo	147	03/05 – 10/10	4042	
ASTRA H GTC (L08)	2.0 Turbo	177	08/05 – 10/10		4040
ASTRA H Saloon (L69)	16	85	02/07 – 05/14		4040
ASTRA H Saloon (L69)	16	85	02/07 – 05/14	4042	
ASTRA H Saloon (L69)	18	103	02/07 – 10/10		4040
ASTRA H Saloon (L69)	18	103	02/07 – 10/10	4042	
ASTRA H Saloon (L69)	1.3 CDTi	66	02/07 – 10/10		4040
ASTRA H Saloon (L69)	1.3 CDTi	66	02/07 – 10/10	4042	
ASTRA H Saloon (L69)	1.7 CDTI	92	02/07 – 05/14		4040
ASTRA H Saloon (L69)	1.7 CDTI	92	02/07 – 05/14	4042	
ASTRA H Saloon (L69)	1.7 CDTi	74	02/07 – 10/10		4040
ASTRA H Saloon (L69)	1.7 CDTi	74	02/07 – 10/10	4042	
ASTRA H Saloon (L69)	1.7 CDTi	81	02/07 – 05/14		4040

MAKE & MODEL		KW	YEAR		
OPEL					
ASTRA H Saloon (L69)	1.7 CDTi	81	02/07 – 05/14	4042	
ASTRA H TwinTop (L67)	16	77	09/05 – 10/10		4040
ASTRA H TwinTop (L67)	16	77	09/05 – 10/10	4042	
ASTRA H TwinTop (L67)	16	85	12/06 – 10/10		4040
ASTRA H TwinTop (L67)	16	85	12/06 – 10/10	4042	
ASTRA H TwinTop (L67)	18	92	09/05 – 10/10		4040
ASTRA H TwinTop (L67)	18	92	09/05 – 10/10	4042	
ASTRA H TwinTop (L67)	18	103	09/05 – 10/10		4040
ASTRA H TwinTop (L67)	18	103	09/05 – 10/10	4042	
ASTRA H TwinTop (L67)	1.6 Turbo	132	02/07 – 10/10		4040
ASTRA H TwinTop (L67)	1.6 Turbo	132	02/07 – 10/10	4042	
ASTRA H TwinTop (L67)	1.9 CDTi	110	09/05 – 10/10		4040
ASTRA H TwinTop (L67)	1.9 CDTi	110	09/05 – 10/10	4042	
ASTRA H TwinTop (L67)	2.0 Turbo	125	09/05 – 10/10		4040
ASTRA H TwinTop (L67)	2.0 Turbo	125	09/05 – 10/10	4042	
ASTRA H TwinTop (L67)	2.0 Turbo	147	09/05 – 10/10		4040
ASTRA J	14	64	12/09 -	4008	
ASTRA J	14	64	12/09 -	4230	
ASTRA J	14	74	12/09 -	4008	
ASTRA J	14	74	12/09 -	4230	
ASTRA J	16	85	12/09 -	4008	
ASTRA J	16	85	12/09 -	4230	
ASTRA J	1.3 CDTI	70	12/09 -	4008	
ASTRA J	1.3 CDTI	70	12/09 -	4014	
ASTRA J	1.3 CDTI	70	12/09 -	4230	
ASTRA J	1.4	64	12/09 -	4014	
ASTRA J	1.4	74	12/09 -	4014	
ASTRA J	1.4 LPG	103	01/12 -	4008	
ASTRA J	1.4 LPG	103	01/12 -	4014	
ASTRA J	1.4 LPG	103	01/12 -	4230	
ASTRA J	1.4 Turbo	88	10/10 -	4008	
ASTRA J	1.4 Turbo	88	10/10 -	4014	
ASTRA J	1.4 Turbo	88	10/10 -	4230	
ASTRA J	1.4 Turbo	103	12/09 -	4008	
ASTRA J	1.4 Turbo	103	12/09 -	4014	
ASTRA J	1.4 Turbo	103	12/09 -	4230	
ASTRA J	1.6	85	12/09 -	4014	
ASTRA J	1.6 CDTi	81	02/14 -	4008	
ASTRA J	1.6 CDTi	81	02/14 -	4014	
ASTRA J	1.6 CDTi	81	02/14 -	4230	
ASTRA J	1.6 CDTi	100	01/14 -	4008	
ASTRA J	1.6 CDTi	100	01/14 -	4014	
ASTRA J	1.6 CDTi	100	01/14 -	4230	
ASTRA J	1.6 SIDI	125	12/12 -	4008	
ASTRA J	1.6 SIDI	125	12/12 -	4014	
ASTRA J	1.6 SIDI	125	12/12 -	4230	
ASTRA J	1.6 Turbo	132	12/09 -	4008	
ASTRA J	1.6 Turbo	132	12/09 -	4014	
ASTRA J	1.6 Turbo	132	12/09 -	4230	
ASTRA J	1.7 CDTI	74	10/10 -	4008	
ASTRA J	1.7 CDTI	74	10/10 -	4014	
ASTRA J	1.7 CDTI	74	10/10 -	4230	
ASTRA J	1.7 CDTI	81	12/09 -	4008	
ASTRA J	1.7 CDTI	81	12/09 -	4014	
ASTRA J	1.7 CDTI	81	12/09 -	4230	
ASTRA J	1.7 CDTI	92	12/09 -	4008	
ASTRA J	1.7 CDTI	92	12/09 -	4014	
ASTRA J	1.7 CDTI	92	12/09 -	4230	
ASTRA J	1.7 CDTI	96	12/09 -	4008	
ASTRA J	1.7 CDTI	96	12/09 -	4014	
ASTRA J	1.7 CDTI	96	12/09 -	4230	
ASTRA J	2.0 BiTurbo CDTI	143	12/12 -	4008	
ASTRA J	2.0 BiTurbo CDTI	143	12/12 -	4014	
ASTRA J	2.0 BiTurbo CDTI	143	12/12 -	4230	
ASTRA J	2.0 CDTI	118	12/09 -	4008	
ASTRA J	2.0 CDTI	118	12/09 -	4014	
ASTRA J	2.0 CDTI	121	06/11 -	4008	
ASTRA J	2.0 CDTI	121	06/11 -	4014	
ASTRA J	2.0 CDTI	121	06/11 -	4230	
ASTRA J Saloon	14	74	06/12 -	4008	
ASTRA J Saloon	14	74	06/12 -	4230	

MAKE & MODEL   		KW	YEAR		
OPEL					
ASTRA J Saloon	16	85	06/12 -	4008	
ASTRA J Saloon	16	85	06/12 -	4230	
ASTRA J Saloon	1.3 CDTI	70	06/12 -	4008	
ASTRA J Saloon	1.3 CDTI	70	06/12 -	4014	
ASTRA J Saloon	1.3 CDTI	70	06/12 -	4230	
ASTRA J Saloon	1.4	74	06/12 -	4014	
ASTRA J Saloon	1.4 LPG	103	07/14 -	4008	
ASTRA J Saloon	1.4 LPG	103	07/14 -	4014	
ASTRA J Saloon	1.4 LPG	103	07/14 -	4230	
ASTRA J Saloon	1.4 Turbo	88	06/12 -	4008	
ASTRA J Saloon	1.4 Turbo	88	06/12 -	4014	
ASTRA J Saloon	1.4 Turbo	88	06/12 -	4230	
ASTRA J Saloon	1.4 Turbo	103	06/12 -	4008	
ASTRA J Saloon	1.4 Turbo	103	06/12 -	4014	
ASTRA J Saloon	1.4 Turbo	103	06/12 -	4230	
ASTRA J Saloon	1.6	85	06/12 -	4014	
ASTRA J Saloon	1.6 CDTi	81	04/14 -	4008	
ASTRA J Saloon	1.6 CDTi	81	04/14 -	4014	
ASTRA J Saloon	1.6 CDTi	81	04/14 -	4230	
ASTRA J Saloon	1.6 CDTi	100	01/14 -	4008	
ASTRA J Saloon	1.6 CDTi	100	01/14 -	4014	
ASTRA J Saloon	1.6 CDTi	100	01/14 -	4230	
ASTRA J Saloon	1.6 SIDI	125	12/12 -	4008	
ASTRA J Saloon	1.6 SIDI	125	12/12 -	4014	
ASTRA J Saloon	1.6 SIDI	125	12/12 -	4230	
ASTRA J Saloon	1.6 Turbo	132	06/12 -	4008	
ASTRA J Saloon	1.6 Turbo	132	06/12 -	4014	
ASTRA J Saloon	1.6 Turbo	132	06/12 -	4230	
ASTRA J Saloon	1.7 CDTI	81	06/12 -	4008	
ASTRA J Saloon	1.7 CDTI	81	06/12 -	4014	
ASTRA J Saloon	1.7 CDTI	81	06/12 -	4230	
ASTRA J Saloon	1.7 CDTI	96	06/12 -	4008	
ASTRA J Saloon	1.7 CDTI	96	06/12 -	4014	
ASTRA J Saloon	1.7 CDTI	96	06/12 -	4230	
ASTRA J Sports Tourer	14	74	10/10 -	4008	
ASTRA J Sports Tourer	14	74	10/10 -	4230	
ASTRA J Sports Tourer	16	85	10/10 -	4008	
ASTRA J Sports Tourer	16	85	10/10 -	4230	
ASTRA J Sports Tourer	1.3 CDTI	70	10/10 -	4008	
ASTRA J Sports Tourer	1.3 CDTI	70	10/10 -	4014	
ASTRA J Sports Tourer	1.3 CDTI	70	10/10 -	4230	
ASTRA J Sports Tourer	1.4	74	10/10 -	4014	
ASTRA J Sports Tourer	1.4 LPG	103	01/12 -	4008	
ASTRA J Sports Tourer	1.4 LPG	103	01/12 -	4014	
ASTRA J Sports Tourer	1.4 LPG	103	01/12 -	4230	
ASTRA J Sports Tourer	1.4 Turbo	88	10/10 -	4008	
ASTRA J Sports Tourer	1.4 Turbo	88	10/10 -	4014	
ASTRA J Sports Tourer	1.4 Turbo	88	10/10 -	4230	
ASTRA J Sports Tourer	1.4 Turbo	103	10/10 -	4008	
ASTRA J Sports Tourer	1.4 Turbo	103	10/10 -	4014	
ASTRA J Sports Tourer	1.4 Turbo	103	10/10 -	4230	
ASTRA J Sports Tourer	1.6	85	10/10 -	4014	
ASTRA J Sports Tourer	1.6 CDTi	81	02/14 -	4008	
ASTRA J Sports Tourer	1.6 CDTi	81	02/14 -	4014	
ASTRA J Sports Tourer	1.6 CDTi	81	02/14 -	4230	
ASTRA J Sports Tourer	1.6 CDTi	100	01/14 -	4008	
ASTRA J Sports Tourer	1.6 CDTi	100	01/14 -	4014	
ASTRA J Sports Tourer	1.6 CDTi	100	01/14 -	4230	
ASTRA J Sports Tourer	1.6 LPG	84	10/12 -	4008	
ASTRA J Sports Tourer	1.6 LPG	84	10/12 -	4014	
ASTRA J Sports Tourer	1.6 LPG	84	10/12 -	4230	
ASTRA J Sports Tourer	1.6 SIDI	125	12/12 -	4008	
ASTRA J Sports Tourer	1.6 SIDI	125	12/12 -	4014	
ASTRA J Sports Tourer	1.6 SIDI	125	12/12 -	4230	
ASTRA J Sports Tourer	1.6 Turbo	132	10/10 -	4008	
ASTRA J Sports Tourer	1.6 Turbo	132	10/10 -	4014	
ASTRA J Sports Tourer	1.6 Turbo	132	10/10 -	4230	
ASTRA J Sports Tourer	1.7 CDTI	74	10/10 -	4008	
ASTRA J Sports Tourer	1.7 CDTI	74	10/10 -	4014	
ASTRA J Sports Tourer	1.7 CDTI	74	10/10 -	4230	
ASTRA J Sports Tourer	1.7 CDTI	81	10/10 -	4008	

MAKE & MODEL		KW	YEAR		
OPEL					
ASTRA J Sports Tourer	1.7 CDTI	81	10/10 -	4014	
ASTRA J Sports Tourer	1.7 CDTI	81	10/10 -	4230	
ASTRA J Sports Tourer	1.7 CDTI	92	10/10 -	4008	
ASTRA J Sports Tourer	1.7 CDTI	92	10/10 -	4014	
ASTRA J Sports Tourer	1.7 CDTI	92	10/10 -	4230	
ASTRA J Sports Tourer	1.7 CDTI	96	10/10 -	4008	
ASTRA J Sports Tourer	1.7 CDTI	96	10/10 -	4014	
ASTRA J Sports Tourer	1.7 CDTI	96	10/10 -	4230	
ASTRA J Sports Tourer	2.0 BiTurbo CDTI	143	12/12 -	4008	
ASTRA J Sports Tourer	2.0 BiTurbo CDTI	143	12/12 -	4014	
ASTRA J Sports Tourer	2.0 BiTurbo CDTI	143	12/12 -	4230	
ASTRA J Sports Tourer	2.0 CDTI	118	10/10 -	4008	
ASTRA J Sports Tourer	2.0 CDTI	118	10/10 -	4014	
ASTRA J Sports Tourer	2.0 CDTI	118	10/10 -	4230	
ASTRA J Sports Tourer	2.0 CDTI	121	08/11 -	4008	
ASTRA J Sports Tourer	2.0 CDTI	121	08/11 -	4014	
ASTRA J Sports Tourer	2.0 CDTI	121	08/11 -	4230	
CALIBRA A (85_)	2.0 i	85	06/90 – 07/97		3469
CALIBRA A (85_)	2.0 i	85	06/90 – 07/97	3470	
CALIBRA A (85_)	2.0 i	85	06/90 – 07/97	3505	
CALIBRA A (85_)	2.0 i	85	06/90 – 07/97	3615	
CALIBRA A (85_)	2.0 i 16V	100	02/94 – 07/97		3469
CALIBRA A (85_)	2.0 i 16V	100	02/94 – 07/97	3470	
CALIBRA A (85_)	2.0 i 16V	100	02/94 – 07/97	3505	
CALIBRA A (85_)	2.0 i 16V	100	02/94 – 07/97	3615	
CALIBRA A (85_)	2.0 i 16V	110	06/90 – 02/94		3469
CALIBRA A (85_)	2.0 i 16V	110	06/90 – 02/94	3470	
CALIBRA A (85_)	2.0 i 16V	110	06/90 – 02/94	3505	
CALIBRA A (85_)	2.0 i 16V	110	06/90 – 02/94	3615	
CALIBRA A (85_)	2.0 i 16V 4x4	100	02/94 – 07/97		3469
CALIBRA A (85_)	2.0 i 16V 4x4	100	02/94 – 07/97	3470	
CALIBRA A (85_)	2.0 i 16V 4x4	100	02/94 – 07/97	3505	
CALIBRA A (85_)	2.0 i 16V 4x4	100	02/94 – 07/97	3615	
CALIBRA A (85_)	2.0 i 16V 4x4	110	06/90 – 02/94		3469
CALIBRA A (85_)	2.0 i 16V 4x4	110	06/90 – 02/94	3470	
CALIBRA A (85_)	2.0 i 16V 4x4	110	06/90 – 02/94	3505	
CALIBRA A (85_)	2.0 i 16V 4x4	110	06/90 – 02/94	3615	
CALIBRA A (85_)	2.0 i 4x4	85	06/90 – 07/97		3469
CALIBRA A (85_)	2.0 i 4x4	85	06/90 – 07/97	3470	
CALIBRA A (85_)	2.0 i 4x4	85	06/90 – 07/97	3505	
CALIBRA A (85_)	2.0 i 4x4	85	06/90 – 07/97	3615	
CALIBRA A (85_)	2.0 i Turbo 4x4	150	03/92 – 07/97		3469
CALIBRA A (85_)	2.0 i Turbo 4x4	150	03/92 – 07/97	3665	
CALIBRA A (85_)	2.0 i Turbo 4x4	150	03/92 – 07/97	3736	
CALIBRA A (85_)	2.5 i V6	125	04/93 – 07/97		3469
CALIBRA A (85_)	2.5 i V6	125	04/93 – 07/97	3665	
CALIBRA A (85_)	2.5 i V6	125	04/93 – 07/97	3736	
CAMPO (TF_)	2.2 D	45	09/90 – 08/92	3657	
CAMPO (TF_)	2.2 D	45	09/90 – 08/92	3757	
CAMPO (TF_)	2.2 D	45	09/90 – 08/92	3857	
CAMPO (TF_)	2.2 D (TFR52)	39	08/91 – 09/96	3657	
CAMPO (TF_)	2.2 D (TFR52)	39	08/91 – 09/96	3757	
CAMPO (TF_)	2.2 D (TFR52)	39	08/91 – 09/96	3857	
CAMPO (TF_)	2.2 D (TFR52)	45	08/87 – 08/90	3657	
CAMPO (TF_)	2.2 D (TFR52)	45	08/87 – 08/90	3757	
CAMPO (TF_)	2.2 D (TFR52)	45	08/87 – 08/90	3857	
CAMPO (TF_)	2.2 D 4x4	45	09/90 – 08/92	3657	
CAMPO (TF_)	2.2 D 4x4	45	09/90 – 08/92	3757	
CAMPO (TF_)	2.2 D 4x4	45	09/90 – 08/92	3857	
CAMPO (TF_)	2.2 D 4x4 (TFS52)	39	08/91 – 09/96	3657	
CAMPO (TF_)	2.2 D 4x4 (TFS52)	39	08/91 – 09/96	3757	
CAMPO (TF_)	2.2 D 4x4 (TFS52)	39	08/91 – 09/96	3857	
CAMPO (TF_)	2.2 D 4x4 (TFS52)	45	08/87 – 08/90	3657	
CAMPO (TF_)	2.2 D 4x4 (TFS52)	45	08/87 – 08/90	3757	
CAMPO (TF_)	2.2 D 4x4 (TFS52)	45	08/87 – 08/90	3857	
CAMPO (TF_)	2.3 (TFR16)	69	08/91 – 08/94	3657	
CAMPO (TF_)	2.3 (TFR16)	69	08/91 – 08/94	3757	
CAMPO (TF_)	2.3 (TFR16)	69	08/91 – 08/94	3857	
CAMPO (TF_)	2.3 (TFR16)	72	08/94 – 09/96	3657	
CAMPO (TF_)	2.3 (TFR16)	72	08/94 – 09/96	3757	
CAMPO (TF_)	2.3 (TFR16)	72	08/94 – 09/96	3857	

MAKE & MODEL   		KW	YEAR		
OPEL					
CAMPO (TF_)	2.3 4x4 (TFS16)	69	08/91 – 08/94	3657	
CAMPO (TF_)	2.3 4x4 (TFS16)	69	08/91 – 08/94	3757	
CAMPO (TF_)	2.3 4x4 (TFS16)	69	08/91 – 08/94	3857	
CAMPO (TF_)	2.3 4x4 (TFS16)	72	08/94 – 09/96	3657	
CAMPO (TF_)	2.3 4x4 (TFS16)	72	08/94 – 09/96	3757	
CAMPO (TF_)	2.3 4x4 (TFS16)	72	08/94 – 09/96	3857	
CAMPO (TF_)	2.5 D (TFR54)	56	08/91 – 06/94	3657	
CAMPO (TF_)	2.5 D (TFR54)	56	08/91 – 06/94	3757	
CAMPO (TF_)	2.5 D (TFR54)	56	08/91 – 06/94	3857	
CAMPO (TF_)	2.5 D 4x4 (TFS54)	56	08/91 – 06/94	3657	
CAMPO (TF_)	2.5 D 4x4 (TFS54)	56	08/91 – 06/94	3757	
CAMPO (TF_)	2.5 D 4x4 (TFS54)	56	08/91 – 06/94	3857	
CAMPO (TF_)	2.5 DTI	74	12/01 -	3657	
CAMPO (TF_)	2.5 DTI	74	12/01 -	3757	
CAMPO (TF_)	2.5 DTI	74	07/01 – 12/01	3857	
CAMPO (TF_)	2.5 DTI 4x4	74	12/01 -	3657	
CAMPO (TF_)	2.5 DTI 4x4	74	12/01 -	3757	
CAMPO (TF_)	2.5 DTI 4x4	74	07/01 – 12/01	3857	
CAMPO (TF_)	2.5 TD (TFR54)	56	07/94 -	3657	
CAMPO (TF_)	2.5 TD (TFR54)	56	07/94 -	3757	
CAMPO (TF_)	2.5 TD (TFR54)	56	07/94 – 06/01	3857	
CAMPO (TF_)	2.5 TD 4x4 (TFS54)	56	07/94 -	3657	
CAMPO (TF_)	2.5 TD 4x4 (TFS54)	56	07/94 -	3757	
CAMPO (TF_)	2.5 TD 4x4 (TFS54)	56	07/94 – 06/01	3857	
CAMPO (TF_)	3.1 TD (TFR69)	80	12/92 -	3657	
CAMPO (TF_)	3.1 TD (TFR69)	80	12/92 -	3757	
CAMPO (TF_)	3.1 TD (TFR69)	80	12/92 – 06/01	3857	
CAMPO (TF_)	3.1 TD 4x4 (TFS69)	80	12/92 -	3657	
CAMPO (TF_)	3.1 TD 4x4 (TFS69)	80	12/92 -	3757	
CAMPO (TF_)	3.1 TD 4x4 (TFS69)	80	12/92 – 06/01	3857	
CASCADA (W13)	14	88	03/13 -	4149	
CASCADA (W13)	16	147	11/13 -	4149	
CASCADA (W13)	1.4	88	03/13 -	4014	
CASCADA (W13)	1.4 Turbo	103	03/13 -	4014	
CASCADA (W13)	1.4 Turbo	103	03/13 -	4149	
CASCADA (W13)	1.6	147	11/13 -	4014	
CASCADA (W13)	1.6 SIDI	125	03/13 -	4014	
CASCADA (W13)	1.6 SIDI	125	03/13 -	4149	
CASCADA (W13)	2.0 CDTI	121	03/13 -	4014	
CASCADA (W13)	2.0 CDTI	121	03/13 -	4149	
CASCADA (W13)	2.0 CDTI	125	07/15 -	4014	
CASCADA (W13)	2.0 CDTI	125	07/15 -	4149	
CASCADA (W13)	2.0 CDTI	143	03/13 -	4014	
CASCADA (W13)	2.0 CDTI	143	03/13 -	4149	
COMBO (71_)	12	33	07/94 – 10/01	3623	
COMBO (71_)	14	44	07/94 – 10/01	3623	
COMBO (71_)	14	60	07/94 – 10/01	3623	
COMBO (71_)	1.4 16V	66	08/99 – 10/01	3623	
COMBO (71_)	1.7 D	44	07/94 – 10/01	3623	
COMBO Box Body / Estate	16	64	10/01 -	3846	
COMBO Box Body / Estate	16	64	10/01 -		4040
COMBO Box Body / Estate	16	64	10/01 -	4042	
COMBO Box Body / Estate	1.3 CDTI 16V	51	08/05 -	3846	
COMBO Box Body / Estate	1.3 CDTI 16V	51	08/05 -		4040
COMBO Box Body / Estate	1.3 CDTI 16V	51	08/05 -	4042	
COMBO Box Body / Estate	1.3 CDTI 16V	55	10/05 -	3846	
COMBO Box Body / Estate	1.3 CDTI 16V	55	10/05 -		4040
COMBO Box Body / Estate	1.3 CDTI 16V	55	10/05 -	4042	
COMBO Box Body / Estate	1.4 16V	66	08/05 -	3846	
COMBO Box Body / Estate	1.4 16V	66	08/05 -		4040
COMBO Box Body / Estate	1.4 16V	66	08/05 -	4042	
COMBO Box Body / Estate	1.6 CNG 16V	69	06/06 -		4040
COMBO Box Body / Estate	1.6 CNG 16V	69	06/06 -	4042	
COMBO Box Body / Estate	1.6 CNG 16V	71	04/05 -		4040
COMBO Box Body / Estate	1.6 CNG 16V	71	04/05 -	4042	
COMBO Box Body / Estate	1.7 CDTI 16V	74	12/04 -		4040
COMBO Box Body / Estate	1.7 CDTI 16V	74	12/04 -	4042	
COMBO Box Body / Estate	1.7 DI 16V	48	10/01 -	3846	
COMBO Box Body / Estate	1.7 DI 16V	48	10/01 -		4040
COMBO Box Body / Estate	1.7 DI 16V	48	10/01 -	4042	
COMBO Box Body / Estate	1.7 DTI 16V	55	10/01 -	3846	

MAKE & MODEL		KW	YEAR		
OPEL					
COMBO Box Body / Estate	1.7 DTI 16V	55	10/01 -		4040
COMBO Box Body / Estate	1.7 DTI 16V	55	10/01 -	4042	
COMBO Box Body / Estate (X12)	14	70	02/12 -	4121	
COMBO Box Body / Estate (X12)	14	88	02/12 -	4121	
COMBO Box Body / Estate (X12)	1.3 CDTI	66	02/12 -	4121	
COMBO Box Body / Estate (X12)	1.4 CNG	88	02/12 -	4121	
COMBO Box Body / Estate (X12)	1.6 CDTI	66	02/12 -	4121	
COMBO Box Body / Estate (X12)	1.6 CDTI	74	02/12 -	4121	
COMBO Box Body / Estate (X12)	1.6 CDTI	77	02/12 -	4121	
COMBO Box Body / Estate (X12)	2.0 CDTI	99	02/12 -	4121	
COMBO Platform/Chassis (X12)	2.0 CDTI	99	02/12 -	4121	
COMBO Tour	14	66	10/04 -	3846	
COMBO Tour	14	66	10/04 -		4040
COMBO Tour	14	66	10/04 -	4042	
COMBO Tour	16	64	10/01 -	3846	
COMBO Tour	16	64	10/01 -		4040
COMBO Tour	16	64	10/01 -	4042	
COMBO Tour	1.3 CDTI 16V	51	10/04 -	3846	
COMBO Tour	1.3 CDTI 16V	51	10/04 -		4040
COMBO Tour	1.3 CDTI 16V	51	10/04 -	4042	
COMBO Tour	1.3 CDTI 16V	55	10/05 -	3846	
COMBO Tour	1.3 CDTI 16V	55	10/05 -		4040
COMBO Tour	1.3 CDTI 16V	55	10/05 -	4042	
COMBO Tour	1.6 CNG	69	06/06 -		4040
COMBO Tour	1.6 CNG	69	06/06 -	4042	
COMBO Tour	1.6 CNG	71	04/05 -		4040
COMBO Tour	1.6 CNG	71	04/05 -	4042	
COMBO Tour	1.7 CDTI 16V	74	12/04 -	3846	
COMBO Tour	1.7 CDTI 16V	74	12/04 -		4040
COMBO Tour	1.7 CDTI 16V	74	12/04 -	4042	
COMBO Tour	1.7 DI 16V	48	10/01 -	3846	
COMBO Tour	1.7 DI 16V	48	10/01 -		4040
COMBO Tour	1.7 DI 16V	48	10/01 -	4042	
COMBO Tour	1.7 DTI 16V	55	10/01 -	3846	
COMBO Tour	1.7 DTI 16V	55	10/01 -		4040
COMBO Tour	1.7 DTI 16V	55	10/01 -	4042	
COMBO Tour (X12)	14	70	02/12 -	4121	
COMBO Tour (X12)	14	88	02/12 -	4121	
COMBO Tour (X12)	1.3 CDTI	66	02/12 -	4121	
COMBO Tour (X12)	1.4 CNG	88	02/12 -	4121	
COMBO Tour (X12)	1.6 CDTI	66	02/12 -	4121	
COMBO Tour (X12)	1.6 CDTI	74	02/12 -	4121	
COMBO Tour (X12)	1.6 CDTI	77	02/12 -	4121	
COMBO Tour (X12)	2.0 CDTI	99	02/12 -	4121	
COMMODORE A	2.5	85	08/67 – 08/69	3334	
COMMODORE A	2.5	88	08/69 – 01/72	3334	
COMMODORE A	2.5 GS	96	08/67 – 01/72	3334	
COMMODORE A	2.5B GS/E	110	08/69 – 01/72	3334	
COMMODORE A	2.8 G/S	107	05/70 – 01/72	3334	
COMMODORE A Coupe	2.5	85	08/67 – 08/69	3334	
COMMODORE A Coupe	2.5	88	08/69 – 01/72	3334	
COMMODORE A Coupe	2.5 GS	96	08/67 – 01/72	3334	
COMMODORE A Coupe	2.5 GS/E	110	08/69 – 01/72	3334	
COMMODORE A Coupe	2.8 GS	107	05/70 – 01/72	3334	
COMMODORE B	2.5 GS	85	01/72 – 07/78	3334	
COMMODORE B	2.5 GS	96	01/72 – 08/75	3334	
COMMODORE B	2.8 GS	103	03/75 – 07/78	3334	
COMMODORE B	2.8 GS	104	01/72 – 07/78	3334	
COMMODORE B	2.8 GS/E	114	03/75 – 07/78	3334	
COMMODORE B	2.8 GS/E	118	07/72 – 02/75	3334	
COMMODORE B Coupe	2.5	85	01/72 – 07/78	3334	
COMMODORE B Coupe	2.5 GS	96	01/72 – 08/75	3334	
COMMODORE B Coupe	2.8 GS	103	03/75 – 07/78	3334	
COMMODORE B Coupe	2.8 GS	104	12/72 – 07/78	3334	
COMMODORE B Coupe	2.8 GS/E	114	03/75 – 07/78	3334	
COMMODORE B Coupe	2.8 GS/E	118	07/72 – 02/75	3334	
COMMODORE C (14 19)	2.5 E	96	05/81 – 12/82	3334	
COMMODORE C (14 19)	2.5 S	85	08/78 – 12/82	3334	
COMMODORE C Station Wagon (61)	2.5 E	96	12/80 – 12/82	3334	
COMMODORE C Station Wagon (61)	2.5 S	85	12/80 – 12/82	3334	
CORSA A Box	10	33	02/86 – 04/89	3410	

MAKE & MODEL		KW	YEAR		
OPEL					
CORSA A Box	12	33	02/86 – 04/89	3410	
CORSA A Box	12	40	02/86 – 04/89	3410	
CORSA A Box	12	44	02/86 – 07/90	3410	
CORSA A Box	13	44	02/86 – 04/89	3410	
CORSA A Box	13	51	02/86 – 04/89	3410	
CORSA A Box	1.5 D	37	06/87 – 04/89	3410	
CORSA A Hatchback (93_, 94_, 98_, 99_)	10	33	09/82 – 03/93	3410	
CORSA A Hatchback (93_, 94_, 98_, 99_)	10	33	09/82 – 03/93	3623	
CORSA A Hatchback (93_, 94_, 98_, 99_)	12	33	09/82 – 08/90	3410	
CORSA A Hatchback (93_, 94_, 98_, 99_)	12	44	09/82 – 08/90	3410	
CORSA A Hatchback (93_, 94_, 98_, 99_)	13	44	09/85 – 10/89	3410	
CORSA A Hatchback (93_, 94_, 98_, 99_)	1.2 i	33	09/89 – 03/93	3410	
CORSA A Hatchback (93_, 94_, 98_, 99_)	1.2 i	33	09/89 – 03/93	3623	
CORSA A Hatchback (93_, 94_, 98_, 99_)	1.2 N	38	01/90 – 03/93	3410	
CORSA A Hatchback (93_, 94_, 98_, 99_)	1.2 N	38	01/90 – 03/93	3623	
CORSA A Hatchback (93_, 94_, 98_, 99_)	1.2 S	40	09/82 – 02/90	3410	
CORSA A Hatchback (93_, 94_, 98_, 99_)	1.3 GL	55	09/82 – 03/93	3410	
CORSA A Hatchback (93_, 94_, 98_, 99_)	1.3 GL	55	09/82 – 03/93	3623	
CORSA A Hatchback (93_, 94_, 98_, 99_)	1.3 i	44	09/86 – 09/90	3410	
CORSA A Hatchback (93_, 94_, 98_, 99_)	1.3 S	51	09/82 – 10/89	3410	
CORSA A Hatchback (93_, 94_, 98_, 99_)	1.4 i	40	01/85 – 03/93	3410	
CORSA A Hatchback (93_, 94_, 98_, 99_)	1.4 i	40	01/85 – 03/93	3623	
CORSA A Hatchback (93_, 94_, 98_, 99_)	1.4 i	44	01/90 – 03/93	3410	
CORSA A Hatchback (93_, 94_, 98_, 99_)	1.4 i	44	01/90 – 03/93	3623	
CORSA A Hatchback (93_, 94_, 98_, 99_)	1.4 S	53	01/90 – 03/93	3410	
CORSA A Hatchback (93_, 94_, 98_, 99_)	1.4 S	53	01/90 – 03/93	3623	
CORSA A Hatchback (93_, 94_, 98_, 99_)	1.4 Si	60	09/91 – 03/93	3623	
CORSA A Hatchback (93_, 94_, 98_, 99_)	1.5 D	37	09/87 – 03/93	3410	
CORSA A Hatchback (93_, 94_, 98_, 99_)	1.5 D	37	09/87 – 03/93	3623	
CORSA A Hatchback (93_, 94_, 98_, 99_)	1.5 TD	49	03/88 – 03/93	3623	
CORSA A Hatchback (93_, 94_, 98_, 99_)	1.6 GSI	55	08/88 – 09/92	3410	
CORSA A Hatchback (93_, 94_, 98_, 99_)	1.6 GSI	55	08/88 – 09/92	3623	
CORSA A Hatchback (93_, 94_, 98_, 99_)	1.6 GSI	72	09/89 – 03/93	3623	
CORSA A Hatchback (93_, 94_, 98_, 99_)	1.6 GSI	74	05/88 – 03/92	3623	
CORSA A Hatchback (93_, 94_, 98_, 99_)	1.6 GSI CAT	74	02/92 – 03/93	3623	
CORSA A TR (91_, 92_, 96_, 97_)	10	33	09/82 – 09/92	3410	
CORSA A TR (91_, 92_, 96_, 97_)	10	33	09/82 – 09/92	3623	
CORSA A TR (91_, 92_, 96_, 97_)	13	44	09/85 – 10/87	3410	
CORSA A TR (91_, 92_, 96_, 97_)	1.2 i	33	09/89 – 03/93	3410	
CORSA A TR (91_, 92_, 96_, 97_)	1.2 i	33	09/89 – 03/93	3623	
CORSA A TR (91_, 92_, 96_, 97_)	1.2 N	33	01/85 – 10/87	3410	
CORSA A TR (91_, 92_, 96_, 97_)	1.2 S	40	09/82 – 03/93	3410	
CORSA A TR (91_, 92_, 96_, 97_)	1.2 S	40	09/82 – 03/93	3623	
CORSA A TR (91_, 92_, 96_, 97_)	1.2 S	43	09/82 – 10/87	3410	
CORSA A TR (91_, 92_, 96_, 97_)	1.3 GL	55	09/82 – 03/93	3410	
CORSA A TR (91_, 92_, 96_, 97_)	1.3 GL	55	09/82 – 03/93	3623	
CORSA A TR (91_, 92_, 96_, 97_)	1.3 S	51	09/82 – 10/87	3410	
CORSA A TR (91_, 92_, 96_, 97_)	1.4 i	44	10/89 – 03/93	3410	
CORSA A TR (91_, 92_, 96_, 97_)	1.4 i	44	10/89 – 03/93	3623	
CORSA A TR (91_, 92_, 96_, 97_)	1.4 S	53	09/89 – 03/93	3410	
CORSA A TR (91_, 92_, 96_, 97_)	1.4 S	53	09/89 – 03/93	3623	
CORSA A TR (91_, 92_, 96_, 97_)	1.5 D	37	10/87 – 11/92	3410	
CORSA A TR (91_, 92_, 96_, 97_)	1.5 D	37	10/87 – 11/92	3623	
CORSA A TR (91_, 92_, 96_, 97_)	1.5 TD	49	10/87 – 03/93	3410	
CORSA A TR (91_, 92_, 96_, 97_)	1.5 TD	49	10/87 – 03/93	3623	
CORSA B (73_, 78_, 79_)	14	54	04/93 – 08/94	3623	
CORSA B (73_, 78_, 79_)	1.0 i 12V	40	11/96 – 09/00	3623	
CORSA B (73_, 78_, 79_)	1.2 i	33	03/93 – 09/00	3623	
CORSA B (73_, 78_, 79_)	1.2 i	33	03/93 – 09/00	3623	
CORSA B (73_, 78_, 79_)	1.2 i 16V	48	03/98 – 09/00	3623	
CORSA B (73_, 78_, 79_)	1.4 i	40	03/93 – 09/00	3623	
CORSA B (73_, 78_, 79_)	1.4 i	44	03/93 – 09/00	3623	
CORSA B (73_, 78_, 79_)	1.4 i 16V	63	08/97 – 09/00	3623	
CORSA B (73_, 78_, 79_)	1.4 i 16V	66	09/94 – 09/00	3623	
CORSA B (73_, 78_, 79_)	1.4 i 16V	67	09/94 – 09/00	3623	
CORSA B (73_, 78_, 79_)	1.4 Si	60	03/93 – 09/00	3623	
CORSA B (73_, 78_, 79_)	1.5 D	37	03/93 – 09/00	3623	
CORSA B (73_, 78_, 79_)	1.5 TD	49	03/93 – 09/00	3623	
CORSA B (73_, 78_, 79_)	1.6 GSI 16V	80	03/93 – 09/00	3623	
CORSA B (73_, 78_, 79_)	1.6 i 16V	74	08/97 – 09/00	3623	
CORSA B (73_, 78_, 79_)	1.6 i 16V	78	09/94 – 09/00	3623	

MAKE & MODEL   		KW	YEAR		
OPEL					
CORSA B (73_, 78_, 79_)	1.7 D	44	02/96 – 09/00	3623	
CORSA B Box (73_)	1.4 i	44	08/99 – 09/00	3623	
CORSA B Box (73_)	1.7 D	44	08/99 – 09/00	3623	
CORSA B Estate (F35)	1.4 i 16V	66	01/99 -	3623	
CORSA B Estate (F35)	1.7 D	44	01/99 -	3623	
CORSA C (F08, F68)	10	43	09/00 – 06/03	3846	
CORSA C (F08, F68)	10	44	06/03 – 12/09	3846	
CORSA C (F08, F68)	12	55	09/00 – 12/09	3846	
CORSA C (F08, F68)	14	66	09/00 – 12/09	3846	
CORSA C (F08, F68)	18	92	09/00 – 12/09	3846	
CORSA C (F08, F68)	1.2 Twinport	59	07/04 – 12/09	3846	
CORSA C (F08, F68)	1.3 CDTI	51	06/03 – 12/09	3846	
CORSA C (F08, F68)	1.4 Twinport	66	06/03 – 12/09	3846	
CORSA C (F08, F68)	1.7 CDTI	74	06/03 – 12/09		4040
CORSA C (F08, F68)	1.7 CDTI	74	06/03 – 12/09	4042	
CORSA C (F08, F68)	1.7 DI	48	09/00 – 12/09	3846	
CORSA C (F08, F68)	1.7 DTI	55	09/00 – 12/09	3846	
CORSA C Box (F08, W5L)	12	59	07/05 -	3846	
CORSA C Box (F08, W5L)	14	66	08/03 -	3846	
CORSA C Box (F08, W5L)	1.2 16V	55	09/00 -	3846	
CORSA C Box (F08, W5L)	1.3 CDTI 16V	51	08/05 -	3846	
CORSA C Box (F08, W5L)	1.7 CDTi	74	08/03 -	3846	
CORSA C Box (F08, W5L)	1.7 DI 16V	48	09/00 -	3846	
CORSA C Box (F08, W5L)	1.7 DTI 16V	55	09/00 -	3846	
CORSA D	1.6 Turbo	110	02/07 -	4042	
CORSA D	1.6 Turbo	141	02/07 -	4042	
CORSA E	10	66	09/14 -	4042	
CORSA E	10	66	09/14 -	4285	
CORSA E	10	66	09/14 -		4286
CORSA E	10	85	09/14 -	4042	
CORSA E	10	85	09/14 -	4285	
CORSA E	10	85	09/14 -		4286
CORSA E	12	51	09/14 -	4042	
CORSA E	12	51	09/14 -	4285	
CORSA E	12	51	09/14 -		4286
CORSA E	14	55	09/14 -	4042	
CORSA E	14	55	09/14 -	4285	
CORSA E	14	55	09/14 -		4286
CORSA E	14	66	09/14 -	4042	
CORSA E	14	66	09/14 -	4285	
CORSA E	14	66	09/14 -		4286
CORSA E	1.3 CDTI	55	09/14 -	4042	
CORSA E	1.3 CDTI	55	09/14 -	4285	
CORSA E	1.3 CDTI	55	09/14 -		4286
CORSA E	1.3 CDTI	70	09/14 -	4042	
CORSA E	1.3 CDTI	70	09/14 -	4285	
CORSA E	1.3 CDTI	70	09/14 -		4286
CORSA E	1.4 LPG	64	11/15 -	4285	
CORSA E	1.4 LPG	64	11/15 -		4286
CORSA E	1.4 LPG	66	03/15 -	4285	
CORSA E	1.4 LPG	66	03/15 -		4286
CORSA E	1.4 Turbo	74	09/14 -	4042	
CORSA E	1.4 Turbo	74	09/14 -	4285	
CORSA E	1.4 Turbo	74	09/14 -		4286
CORSA E	1.4 Turbo	110	03/15 -	4285	
CORSA E	1.4 Turbo	110	03/15 -		4286
CORSA E	1.6 Turbo	152	03/15 -		4286
CORSA E (X15)	1.0 (B 10 XFL)	66	09/14 -	4284	
CORSA E (X15)	1.0 (B 10 XFT)	85	09/14 -	4284	
CORSA E (X15)	1.2 (B 12 XEL)	51	09/14 -	4284	
CORSA E (X15)	1.2 (B 12 XEL)	51	01/15 -	4284	
CORSA E (X15)	1.2 (B 12 XER)	51	09/14 -	4284	
CORSA E (X15)	1.2 (B 12 XER)	51	01/15 -	4284	
CORSA E (X15)	1.3 CDTI (B 13 DTC)	55	09/14 -	4284	
CORSA E (X15)	1.3 CDTI (B 13 DTC)	55	01/15 -	4284	
CORSA E (X15)	1.3 CDTI (B 13 DTE)	70	09/14 -	4284	
CORSA E (X15)	1.3 CDTI (B 13 DTE)	70	09/14 -	4284	
CORSA E (X15)	1.3 CDTI (B 13 DTR)	70	09/14 -	4284	
CORSA E (X15)	1.3 CDTI (B 13 DTR)	70	09/14 -	4284	
CORSA E (X15)	1.4 (B 14 XEJ)	55	09/14 -	4284	
CORSA E (X15)	1.4 (B 14 XEJ)	55	09/14 -	4284	

BESER®

MAKE & MODEL   		KW	YEAR		
OPEL					
CORSA E (X15)	1.4 (B 14 XEL)	66	09/14 -	4284	
CORSA E (X15)	1.4 (B 14 XEL)	66	09/14 -	4284	
CORSA E (X15)	1.4 LPG (B 14 XEL)	64	11/15 -	4284	
CORSA E (X15)	1.4 LPG (B 14 XEL)	66	03/15 -	4284	
CORSA E (X15)	1.4 Turbo (B 14 NEH)	110	03/15 -	4284	
CORSA E (X15)	1.4 Turbo (B 14 NEJ)	74	09/14 -	4284	
CORSA E (X15)	1.6 Turbo (B 16 LES)	152	03/15 -	4284	
CORSA E Van	12	51	01/15 -	4285	
CORSA E Van	12	51	01/15 -		4286
CORSA E Van	14	55	09/14 -	4042	
CORSA E Van	14	55	09/14 -	4285	
CORSA E Van	14	55	09/14 -		4286
CORSA E Van	14	66	09/14 -	4042	
CORSA E Van	14	66	09/14 -	4285	
CORSA E Van	14	66	09/14 -		4286
CORSA E Van	1.3 CDTI	55	01/15 -	4285	
CORSA E Van	1.3 CDTI	55	01/15 -		4286
CORSA E Van	1.3 CDTI	70	09/14 -	4042	
CORSA E Van	1.3 CDTI	70	09/14 -	4285	
CORSA E Van	1.3 CDTI	70	09/14 -		4286
D-20	ONLY SOUTH AMERICA		92-	3534	
D-20	ONLY SOUTH AMERICA		94-	3535	
FRONTERA A (5_MWL4)	2.2 i (54MWL4)	100	03/95 – 10/98	3657	
FRONTERA A (5_MWL4)	2.2 i (54MWL4)	100	03/95 – 10/98	3674	
FRONTERA A (5_MWL4)	2.2 i (54MWL4)	100	03/95 – 10/98	3743	
FRONTERA A (5_MWL4)	2.2 i (54MWL4)	100	03/95 – 10/98	3757	
FRONTERA A (5_MWL4)	2.2 i (54MWL4)	100	03/95 – 10/98	3857	
FRONTERA A (5_MWL4)	2.2 i (54MWL4)	100	03/95 – 10/98		3887
FRONTERA A (5_MWL4)	2.3 TD (5JMWL4)	74	03/92 – 10/98	3657	
FRONTERA A (5_MWL4)	2.3 TD (5JMWL4)	74	03/92 – 10/98	3674	
FRONTERA A (5_MWL4)	2.3 TD (5JMWL4)	74	03/92 – 10/98	3743	
FRONTERA A (5_MWL4)	2.3 TD (5JMWL4)	74	03/92 – 10/98	3757	
FRONTERA A (5_MWL4)	2.3 TD (5JMWL4)	74	03/92 – 10/98	3857	
FRONTERA A (5_MWL4)	2.3 TD (5JMWL4)	74	03/92 – 10/98		3887
FRONTERA A (5_MWL4)	2.4 i (53MWL4)	92	03/92 – 10/98	3657	
FRONTERA A (5_MWL4)	2.4 i (53MWL4)	92	03/92 – 10/98	3674	
FRONTERA A (5_MWL4)	2.4 i (53MWL4)	92	03/92 – 10/98	3743	
FRONTERA A (5_MWL4)	2.4 i (53MWL4)	92	03/92 – 10/98	3757	
FRONTERA A (5_MWL4)	2.4 i (53MWL4)	92	03/92 – 10/98	3857	
FRONTERA A (5_MWL4)	2.4 i (53MWL4)	92	03/92 – 10/98		3887
FRONTERA A (5_MWL4)	2.5 TDS	85	09/96 – 10/98	3657	
FRONTERA A (5_MWL4)	2.5 TDS	85	09/96 – 10/98	3674	
FRONTERA A (5_MWL4)	2.5 TDS	85	09/96 – 10/98	3743	
FRONTERA A (5_MWL4)	2.5 TDS	85	09/96 – 10/98	3757	
FRONTERA A (5_MWL4)	2.5 TDS	85	09/96 – 10/98	3857	
FRONTERA A (5_MWL4)	2.5 TDS	85	09/96 – 10/98		3887
FRONTERA A (5_MWL4)	2.8 TD (5BMWL4)	83	03/95 – 10/98	3657	
FRONTERA A (5_MWL4)	2.8 TD (5BMWL4)	83	03/95 – 10/98	3674	
FRONTERA A (5_MWL4)	2.8 TD (5BMWL4)	83	03/95 – 10/98	3743	
FRONTERA A (5_MWL4)	2.8 TD (5BMWL4)	83	03/95 – 10/98	3757	
FRONTERA A (5_MWL4)	2.8 TD (5BMWL4)	83	03/95 – 10/98	3857	
FRONTERA A (5_MWL4)	2.8 TD (5BMWL4)	83	03/95 – 10/98		3887
FRONTERA A Sport (5_SUD2)	2.0 i (52SUD2, 55SUD2)	85	03/92 – 10/98	3657	
FRONTERA A Sport (5_SUD2)	2.0 i (52SUD2, 55SUD2)	85	03/92 – 10/98	3674	
FRONTERA A Sport (5_SUD2)	2.0 i (52SUD2, 55SUD2)	85	03/92 – 10/98	3743	
FRONTERA A Sport (5_SUD2)	2.0 i (52SUD2, 55SUD2)	85	03/92 – 10/98	3757	
FRONTERA A Sport (5_SUD2)	2.0 i (52SUD2, 55SUD2)	85	03/92 – 10/98	3857	
FRONTERA A Sport (5_SUD2)	2.0 i (52SUD2, 55SUD2)	85	03/92 – 10/98		3887
FRONTERA A Sport (5_SUD2)	2.5 TDS	85	09/96 – 10/98	3657	
FRONTERA A Sport (5_SUD2)	2.5 TDS	85	09/96 – 10/98	3674	
FRONTERA A Sport (5_SUD2)	2.5 TDS	85	09/96 – 10/98	3743	
FRONTERA A Sport (5_SUD2)	2.5 TDS	85	09/96 – 10/98	3757	
FRONTERA A Sport (5_SUD2)	2.5 TDS	85	09/96 – 10/98	3857	
FRONTERA A Sport (5_SUD2)	2.5 TDS	85	09/96 – 10/98		3887
FRONTERA A Sport (5_SUD2)	2.8 TD (53SUD2)	83	03/95 – 08/96	3657	
FRONTERA A Sport (5_SUD2)	2.8 TD (53SUD2)	83	03/95 – 08/96	3674	
FRONTERA A Sport (5_SUD2)	2.8 TD (53SUD2)	83	03/95 – 08/96	3743	
FRONTERA A Sport (5_SUD2)	2.8 TD (53SUD2)	83	03/95 – 08/96	3757	
FRONTERA A Sport (5_SUD2)	2.8 TD (53SUD2)	83	03/95 – 08/96	3857	
FRONTERA A Sport (5_SUD2)	2.8 TD (53SUD2)	83	03/95 – 08/96		3887
FRONTERA B (6B_)	2.2 i (6B_ZC, 6B_VF, 6B_66,6B_76)	100	10/98 -	3674	

MAKE & MODEL   		KW	YEAR		
OPEL					
FRONTERA B (6B_)	2.2 DTI (6B_ZC, 6B_VF, 6B_66, 6B_76)	85	10/98 – 09/02		3887
FRONTERA B (6B_)	2.2 i (6B_ZC, 6B_VF, 6B_66, 6B_76)	100	10/98 -		3887
FRONTERA B (6B_)	2.2 DTI	88	09/02 -	3674	
FRONTERA B (6B_)	2.2 DTI	88	09/02 -	3743	
FRONTERA B (6B_)	2.2 DTI	88	09/02 -		3887
FRONTERA B (6B_)	2.2 DTI (6B_ZC, 6B_VF, 6B_66, 6B_76)	85	10/98 – 09/02	3674	
FRONTERA B (6B_)	2.2 DTI (6B_ZC, 6B_VF, 6B_66, 6B_76)	85	10/98 – 09/02	3743	
FRONTERA B (6B_)	3.2 i (6B1VF, 6B1_6)	151	10/98 -	3743	
FRONTERA B (6B_)	3.2 i (6B1VF, 6B1_6)	151	10/98 -		3887
FRONTERA B (6B_)	FRONTERA B (6B_)	151	10/98 -	3674	
FRONTERA B (6B_)	2.2 i (6B_ZC, 6B_VF, 6B_66,6B_76)	100	10/98 -	3743	
GT	11	44	09/68 – 12/70	3318	
GT	11	44	09/68 – 12/70	3338	
GT	11	44	09/68 – 12/70	3353	
GT	11	44	09/68 – 12/70	3362	
GT	19	66	09/68 – 08/73	3318	
GT	19	66	09/68 – 08/73	3338	
GT	19	66	09/68 – 08/73	3353	
GT	19	66	09/68 – 08/73	3362	
GT Convertible	20	194	06/07 -		3853/1
INSIGNIA	14	103	04/11 -	4149	
INSIGNIA	16	85	07/08 -	4149	
INSIGNIA	18	103	07/08 -	4149	
INSIGNIA	1.4	103	04/11 -		4150
INSIGNIA	1.4 LPG	103	07/12 -	4149	
INSIGNIA	1.4 LPG	103	07/12 -		4150
INSIGNIA	1.6	85	07/08 -		4150
INSIGNIA	1.6 CDTi	88	07/15 -	4149	
INSIGNIA	1.6 CDTi	88	07/15 -		4150
INSIGNIA	1.6 CDTi	100	07/15 -	4149	
INSIGNIA	1.6 CDTi	100	07/15 -		4150
INSIGNIA	1.6 SIDI	125	03/13 -	4149	
INSIGNIA	1.6 SIDI	125	03/13 -		4150
INSIGNIA	1.6 Turbo	132	07/08 -	4149	
INSIGNIA	1.6 Turbo	132	07/08 -		4150
INSIGNIA	1.8	103	07/08 -		4150
INSIGNIA	2.0 Biturbo CDTI	140	07/08 -	4149	
INSIGNIA	2.0 Biturbo CDTI	140	07/08 -		4150
INSIGNIA	2.0 Biturbo CDTI	143	01/12 -	4149	
INSIGNIA	2.0 Biturbo CDTI	143	01/12 -		4150
INSIGNIA	2.0 Biturbo CDTI 4x4	140	05/09 -	4149	
INSIGNIA	2.0 Biturbo CDTI 4x4	140	05/09 -		4150
INSIGNIA	2.0 Biturbo CDTI 4x4	143	01/12 -	4149	
INSIGNIA	2.0 Biturbo CDTI 4x4	143	01/12 -		4150
INSIGNIA	2.0 CDTI	81	07/08 -	4149	
INSIGNIA	2.0 CDTI	81	07/08 -		4150
INSIGNIA	2.0 CDTI	88	03/12 -	4149	
INSIGNIA	2.0 CDTI	88	03/12 -		4150
INSIGNIA	2.0 CDTI	96	07/08 -	4149	
INSIGNIA	2.0 CDTI	96	07/08 -		4150
INSIGNIA	2.0 CDTI	103	07/13 -	4149	
INSIGNIA	2.0 CDTI	103	07/13 -		4150
INSIGNIA	2.0 CDTI	118	07/08 -	4149	
INSIGNIA	2.0 CDTI	118	07/08 -		4150
INSIGNIA	2.0 CDTI	120	07/13 -	4149	
INSIGNIA	2.0 CDTI	120	07/13 -		4150
INSIGNIA	2.0 CDTI	125	11/14 -	4149	
INSIGNIA	2.0 CDTI	125	11/14 -		4150
INSIGNIA	2.0 CDTI 4x4	118	06/10 -	4149	
INSIGNIA	2.0 CDTI 4x4	118	06/10 -		4150
INSIGNIA	2.0 CDTI 4x4	120	07/13 -	4149	
INSIGNIA	2.0 CDTI 4x4	120	07/13 -		4150
INSIGNIA	2.0 CDTI 4x4	125	11/14 -	4149	
INSIGNIA	2.0 CDTI 4x4	125	11/14 -		4150
INSIGNIA	2.0 E85 Turbo	162	09/10 -	4149	
INSIGNIA	2.0 E85 Turbo	162	09/10 -		4150
INSIGNIA	2.0 Turbo	162	07/08 -	4149	
INSIGNIA	2.0 Turbo	162	07/08 -		4150
INSIGNIA	2.0 Turbo	184	04/14 -	4149	
INSIGNIA	2.0 Turbo	184	04/14 -		4150
INSIGNIA	2.0 Turbo 4x4	162	07/08 -	4149	

MAKE & MODEL		KW	YEAR		
OPEL					
INSIGNIA	2.0 Turbo 4x4	162	07/08 -		4150
INSIGNIA	2.0 Turbo 4x4	184	09/11 -	4149	
INSIGNIA	2.0 Turbo 4x4	184	09/11 -		4150
INSIGNIA	2.8 V6 Turbo 4x4	191	07/08 -		4150
INSIGNIA	2.8 V6 Turbo OPC 4x4	239	07/09 -		4150
INSIGNIA Estate	14	103	09/11 -	4149	
INSIGNIA Estate	16	85	07/08 -	4149	
INSIGNIA Estate	18	103	07/08 -	4149	
INSIGNIA Estate	1.4	103	09/11 -		4150
INSIGNIA Estate	1.4 LPG	103	07/12 -	4149	
INSIGNIA Estate	1.4 LPG	103	07/12 -		4150
INSIGNIA Estate	1.6	85	07/08 -		4150
INSIGNIA Estate	1.6 CDTi	88	07/15 -	4149	
INSIGNIA Estate	1.6 CDTi	88	07/15 -		4150
INSIGNIA Estate	1.6 CDTi	100	07/15 -	4149	
INSIGNIA Estate	1.6 CDTi	100	07/15 -		4150
INSIGNIA Estate	1.6 SIDI	125	03/13 -	4149	
INSIGNIA Estate	1.6 SIDI	125	03/13 -		4150
INSIGNIA Estate	1.6 Turbo	132	01/09 -	4149	
INSIGNIA Estate	1.6 Turbo	132	01/09 -		4150
INSIGNIA Estate	1.8	103	07/08 -		4150
INSIGNIA Estate	2.0 Biturbo CDTI	140	07/08 -	4149	
INSIGNIA Estate	2.0 Biturbo CDTI	140	07/08 -		4150
INSIGNIA Estate	2.0 Biturbo CDTI	143	01/12 -	4149	
INSIGNIA Estate	2.0 Biturbo CDTI	143	01/12 -		4150
INSIGNIA Estate	2.0 Biturbo CDTI 4x4	140	07/08 -	4149	
INSIGNIA Estate	2.0 Biturbo CDTI 4x4	140	07/08 -		4150
INSIGNIA Estate	2.0 Biturbo CDTI 4x4	143	01/12 -	4149	
INSIGNIA Estate	2.0 Biturbo CDTI 4x4	143	01/12 -		4150
INSIGNIA Estate	2.0 CDTI	81	07/08 -	4149	
INSIGNIA Estate	2.0 CDTI	81	07/08 -		4150
INSIGNIA Estate	2.0 CDTI	88	03/12 -	4149	
INSIGNIA Estate	2.0 CDTI	88	03/12 -		4150
INSIGNIA Estate	2.0 CDTI	96	07/08 -	4149	
INSIGNIA Estate	2.0 CDTI	96	07/08 -		4150
INSIGNIA Estate	2.0 CDTI	103	07/13 -	4149	
INSIGNIA Estate	2.0 CDTI	103	07/13 -		4150
INSIGNIA Estate	2.0 CDTI	118	07/08 -	4149	
INSIGNIA Estate	2.0 CDTI	118	07/08 -		4150
INSIGNIA Estate	2.0 CDTI	120	07/13 -	4149	
INSIGNIA Estate	2.0 CDTI	120	07/13 -		4150
INSIGNIA Estate	2.0 CDTI	125	11/14 -	4149	
INSIGNIA Estate	2.0 CDTI	125	11/14 -		4150
INSIGNIA Estate	2.0 CDTI 4x4	118	06/10 -	4149	
INSIGNIA Estate	2.0 CDTI 4x4	118	06/10 -		4150
INSIGNIA Estate	2.0 CDTI 4x4	120	07/13 -	4149	
INSIGNIA Estate	2.0 CDTI 4x4	120	07/13 -		4150
INSIGNIA Estate	2.0 CDTI 4x4	125	11/14 -	4149	
INSIGNIA Estate	2.0 CDTI 4x4	125	11/14 -		4150
INSIGNIA Estate	2.0 E85 Turbo	162	09/10 -	4149	
INSIGNIA Estate	2.0 E85 Turbo	162	09/10 -		4150
INSIGNIA Estate	2.0 Turbo	162	07/08 -	4149	
INSIGNIA Estate	2.0 Turbo	162	07/08 -		4150
INSIGNIA Estate	2.0 Turbo	184	04/14 -	4149	
INSIGNIA Estate	2.0 Turbo	184	04/14 -		4150
INSIGNIA Estate	2.0 Turbo 4x4	162	07/08 -	4149	
INSIGNIA Estate	2.0 Turbo 4x4	162	07/08 -		4150
INSIGNIA Estate	2.0 Turbo 4x4	184	09/11 -	4149	
INSIGNIA Estate	2.0 Turbo 4x4	184	09/11 -		4150
INSIGNIA Estate	2.8 V6 Turbo 4x4	191	10/08 -		4150
INSIGNIA Estate	2.8 V6 Turbo OPC 4x4	239	07/09 -		4150
INSIGNIA Saloon	14	103	04/11 -	4149	
INSIGNIA Saloon	16	85	07/08 -	4149	
INSIGNIA Saloon	18	103	07/08 -	4149	
INSIGNIA Saloon	1.4	103	04/11 -		4150
INSIGNIA Saloon	1.4 LPG	103	07/12 -	4149	
INSIGNIA Saloon	1.4 LPG	103	07/12 -		4150
INSIGNIA Saloon	1.6	85	07/08 -		4150
INSIGNIA Saloon	1.6 CDTi	88	07/15 -	4149	
INSIGNIA Saloon	1.6 CDTi	88	07/15 -		4150
INSIGNIA Saloon	1.6 CDTi	100	07/15 -	4149	

MAKE & MODEL		KW	YEAR		
OPEL					
INSIGNIA Saloon	1.6 CDTi	100	07/15 -		4150
INSIGNIA Saloon	1.6 SIDI	125	03/13 -	4149	
INSIGNIA Saloon	1.6 SIDI	125	03/13 -		4150
INSIGNIA Saloon	1.6 Turbo	132	01/09 -	4149	
INSIGNIA Saloon	1.6 Turbo	132	01/09 -		4150
INSIGNIA Saloon	1.8	103	07/08 -		4150
INSIGNIA Saloon	2.0 Biturbo CDTI	140	07/08 -	4149	
INSIGNIA Saloon	2.0 Biturbo CDTI	140	07/08 -		4150
INSIGNIA Saloon	2.0 Biturbo CDTI	143	01/12 -	4149	
INSIGNIA Saloon	2.0 Biturbo CDTI	143	01/12 -		4150
INSIGNIA Saloon	2.0 Biturbo CDTI 4x4	140	07/08 -	4149	
INSIGNIA Saloon	2.0 Biturbo CDTI 4x4	140	07/08 -		4150
INSIGNIA Saloon	2.0 Biturbo CDTI 4x4	143	01/12 -	4149	
INSIGNIA Saloon	2.0 Biturbo CDTI 4x4	143	01/12 -		4150
INSIGNIA Saloon	2.0 CDTI	81	07/08 -	4149	
INSIGNIA Saloon	2.0 CDTI	81	07/08 -		4150
INSIGNIA Saloon	2.0 CDTI	88	03/12 -	4149	
INSIGNIA Saloon	2.0 CDTI	88	03/12 -		4150
INSIGNIA Saloon	2.0 CDTI	96	07/08 -	4149	
INSIGNIA Saloon	2.0 CDTI	96	07/08 -		4150
INSIGNIA Saloon	2.0 CDTI	103	07/13 -	4149	
INSIGNIA Saloon	2.0 CDTI	103	07/13 -		4150
INSIGNIA Saloon	2.0 CDTI	118	07/08 -	4149	
INSIGNIA Saloon	2.0 CDTI	118	07/08 -		4150
INSIGNIA Saloon	2.0 CDTI	120	07/13 -	4149	
INSIGNIA Saloon	2.0 CDTI	120	07/13 -		4150
INSIGNIA Saloon	2.0 CDTI	125	11/14 -	4149	
INSIGNIA Saloon	2.0 CDTI	125	11/14 -		4150
INSIGNIA Saloon	2.0 CDTI 4x4	118	06/10 -	4149	
INSIGNIA Saloon	2.0 CDTI 4x4	118	06/10 -		4150
INSIGNIA Saloon	2.0 CDTI 4x4	120	07/13 -	4149	
INSIGNIA Saloon	2.0 CDTI 4x4	120	07/13 -		4150
INSIGNIA Saloon	2.0 CDTI 4x4	125	11/14 -	4149	
INSIGNIA Saloon	2.0 CDTI 4x4	125	11/14 -		4150
INSIGNIA Saloon	2.0 Turbo	162	07/08 -	4149	
INSIGNIA Saloon	2.0 Turbo	162	07/08 -		4150
INSIGNIA Saloon	2.0 Turbo	184	04/14 -	4149	
INSIGNIA Saloon	2.0 Turbo	184	04/14 -		4150
INSIGNIA Saloon	2.0 Turbo 4x4	162	07/08 -	4149	
INSIGNIA Saloon	2.0 Turbo 4x4	162	07/08 -		4150
INSIGNIA Saloon	2.0 Turbo 4x4	184	09/11 -	4149	
INSIGNIA Saloon	2.0 Turbo 4x4	184	09/11 -		4150
INSIGNIA Saloon	2.0 Turbo E85	162	07/08 -	4149	
INSIGNIA Saloon	2.0 Turbo E85	162	07/08 -		4150
INSIGNIA Saloon	2.8 V6 Turbo 4x4	191	07/08 -		4150
INSIGNIA Saloon	2.8 V6 Turbo OPC 4x4	239	07/09 -		4150
KADETT B	1.1	33	09.65 - 07.71	3337	
KADETT B	1.1	37	08.71 - 08.73	3337	
KADETT B	1.1S	40	09.65 - 07.71	3337	
KADETT B	1.1SR	44	11.66 - 07.71	3337	
KADETT B	1.2 S	44	08.71 - 08.73	3337	
KADETT B	1.7	55	08.67 - 08.71	3337	
KADETT B Station Waaon	1.2	44	08.71 - 08.73	3337	
KADETT B Station Wagon	1.1	37	08.71 - 08.73	3337	
KADETT B Station Wagon	1.1	33	09.65 - 07.71	3337	
KADETT B Station Wagon	1.1	40	09.65 - 07.71	3337	
KADETT C	1.6 S	55	05/77 – 07/79	3335	
KADETT C	1.6 S	55	05/77 – 07/79	3365	
KADETT C City	1.6 S	55	05/77 – 07/79	3335	
KADETT C City	1.6 S	55	05/77 – 07/79	3365	
KADETT C Coupe	1.6 S	55	05/77 – 07/79	3335	
KADETT C Coupe	1.6 S	55	05/77 – 07/79	3365	
KADETT C Coupe	1.9 GT/E	77	09/75 – 07/77	3335	
KADETT C Coupe	1.9 GT/E	77	09/75 – 07/77	3365	
KADETT C Coupe	2.0 E Rallye	81	08/77 – 07/79	3335	
KADETT C Coupe	2.0 E Rallye	81	08/77 – 07/79	3365	
KADETT C Coupe	2.0 GT/E	85	08/77 – 07/79	3335	
KADETT C Coupe	2.0 GT/E	85	08/77 – 07/79	3365	
KADETT C Estate	1.6 S	55	05/77 – 07/79	3335	
KADETT C Estate	1.6 S	55	05/77 – 07/79	3365	
KADETT D (31_-34_, 41_-44_)	12	39	08/79 – 07/82	3410	

MAKE & MODEL		KW	YEAR		
OPEL					
KADETT D (31_-34_, 41_-44_)	12	40	08/82 – 08/84	3410	
KADETT D (31_-34_, 41_-44_)	1.2 S	44	08/79 – 08/84	3410	
KADETT D (31_-34_, 41_-44_)	1.3 N	44	08/79 – 08/84	3410	
KADETT D (31_-34_, 41_-44_)	1.3 S	55	08/79 – 08/84	3410	
KADETT D (31_-34_, 41_-44_)	1.6 D	40	03/82 – 08/84	3410	
KADETT D (31_-34_, 41_-44_)	1.6 S	66	09/81 – 08/84	3410	
KADETT D (31_-34_, 41_-44_)	1.8 GT/E	85	02/83 – 08/84	3410	
KADETT D Estate (35_, 36_, 45_, 46_)	12	39	08/79 – 07/82	3410	
KADETT D Estate (35_, 36_, 45_, 46_)	1.2 S	44	08/79 – 08/84	3410	
KADETT D Estate (35_, 36_, 45_, 46_)	1.3 N	44	08/79 – 08/84	3410	
KADETT D Estate (35_, 36_, 45_, 46_)	1.3 S	55	08/79 – 08/84	3410	
KADETT D Estate (35_, 36_, 45_, 46_)	1.6 D	40	03/82 – 08/84	3410	
KADETT D Estate (35_, 36_, 45_, 46_)	1.6 S	66	09/81 – 08/84	3410	
KADETT E (39_, 49_)	12	40	09/84 – 07/86	3410	
KADETT E (39_, 49_)	16	75	09/87 – 08/91	3410	
KADETT E (39_, 49_)	18	84	09/87 – 08/90	3410	
KADETT E (39_, 49_)	18	84	09/87 – 08/90	3470	
KADETT E (39_, 49_)	18	84	09/87 – 08/90	3505	
KADETT E (39_, 49_)	18	84	09/87 – 08/90	3615	
KADETT E (39_, 49_)	1.3 i CAT	44	09/85 – 08/91	3410	
KADETT E (39_, 49_)	1.3 N	44	09/84 – 08/89	3410	
KADETT E (39_, 49_)	1.3 S	55	09/84 – 08/87	3410	
KADETT E (39_, 49_)	1.4 i	44	01/90 – 08/91	3410	
KADETT E (39_, 49_)	1.4 S	55	01/90 – 08/91	3410	
KADETT E (39_, 49_)	1.5 TD	53	07/88 – 08/91	3410	
KADETT E (39_, 49_)	1.6 D	40	09/84 – 01/89	3410	
KADETT E (39_, 49_)	1.6 i	55	09/86 – 08/91	3410	
KADETT E (39_, 49_)	1.6 i CAT	55	09/86 – 08/91	3410	
KADETT E (39_, 49_)	1.6 S	60	09/86 – 08/91	3410	
KADETT E (39_, 49_)	1.6 S	66	09/84 – 08/86	3410	
KADETT E (39_, 49_)	1.7 D	42	02/89 – 08/91	3410	
KADETT E (39_, 49_)	1.8 i	66	09/90 – 08/91	3410	
KADETT E (39_, 49_)	1.8 i	66	09/90 – 08/91	3470	
KADETT E (39_, 49_)	1.8 i	66	09/90 – 08/91	3505	
KADETT E (39_, 49_)	1.8 i	66	09/90 – 08/91	3615	
KADETT E (39_, 49_)	1.8 i	74	10/85 – 08/86	3410	
KADETT E (39_, 49_)	1.8 i	74	10/85 – 08/86	3470	
KADETT E (39_, 49_)	1.8 i	74	10/85 – 08/86	3505	
KADETT E (39_, 49_)	1.8 i	74	10/85 – 08/86	3615	
KADETT E (39_, 49_)	1.8 i	85	09/84 – 08/86	3410	
KADETT E (39_, 49_)	1.8 i	85	09/84 – 08/86	3470	
KADETT E (39_, 49_)	1.8 i	85	09/84 – 08/86	3505	
KADETT E (39_, 49_)	1.8 i	85	09/84 – 08/86	3615	
KADETT E (39_, 49_)	1.8 S	62	09/87 – 08/91	3410	
KADETT E (39_, 49_)	1.8 S	62	09/87 – 08/91	3470	
KADETT E (39_, 49_)	1.8 S	62	09/87 – 08/91	3505	
KADETT E (39_, 49_)	1.8 S	62	09/87 – 08/91	3615	
KADETT E (39_, 49_)	2.0 i	85	03/87 – 08/91	3410	
KADETT E (39_, 49_)	2.0 i	85	03/87 – 08/91		3469
KADETT E (39_, 49_)	2.0 i	85	03/87 – 08/91	3470	
KADETT E (39_, 49_)	2.0 i	85	03/87 – 08/91	3505	
KADETT E (39_, 49_)	2.0 i	85	03/87 – 08/91	3615	
KADETT E (39_, 49_)	2.0 i CAT	85	03/87 – 08/91	3410	
KADETT E (39_, 49_)	2.0 i CAT	85	03/87 – 08/91		3469
KADETT E (39_, 49_)	2.0 i CAT	85	03/87 – 08/91	3470	
KADETT E (39_, 49_)	2.0 i CAT	85	03/87 – 08/91	3505	
KADETT E (39_, 49_)	2.0 i CAT	85	03/87 – 08/91	3615	
KADETT E Box (37_, 47_)	12	40	09/84 – 07/86	3410	
KADETT E Box (37_, 47_)	1.3 N	44	09/84 – 07/89	3410	
KADETT E Box (37_, 47_)	1.4 i	44	01/90 – 08/91	3410	
KADETT E Box (37_, 47_)	1.6 D	40	08/84 – 08/88	3410	
KADETT E Box (37_, 47_)	1.6 i	55	08/89 – 09/93	3410	
KADETT E Box (37_, 47_)	1.7 D	42	08/88 – 09/92	3410	
KADETT E Box (37_, 47_)	1.8 i	66	08/84 – 09/92	3410	
KADETT E Combo (38_, 48_)	16	60	09/86 – 12/91	3410	
KADETT E Combo (38_, 48_)	1.3 N	44	01/86 – 12/89	3410	
KADETT E Combo (38_, 48_)	1.3 S	55	01/86 – 12/89	3410	
KADETT E Combo (38_, 48_)	1.4 i	44	08/91 – 07/94	3410	
KADETT E Combo (38_, 48_)	1.4 S	55	07/89 – 08/91	3410	
KADETT E Combo (38_, 48_)	1.6 D	40	01/86 – 12/89	3410	
KADETT E Combo (38_, 48_)	1.6 i	55	08/91 – 07/94	3410	

MAKE & MODEL   		KW	YEAR		
OPEL					
KADETT E Combo (38_, 48_)	1.7 D	42	01/89 – 07/94	3410	
KADETT E Combo (38_, 48_)	1.7 D	44	07/92 – 07/94	3410	
KADETT E Convertible (43B_)	20	110	09/90 – 05/92	3410	
KADETT E Convertible (43B_)	20	110	09/90 – 05/92	3470	
KADETT E Convertible (43B_)	20	110	09/90 – 05/92	3505	
KADETT E Convertible (43B_)	20	110	09/90 – 05/92	3615	
KADETT E Convertible (43B_)	1.3 S	55	03/87 – 02/93	3410	
KADETT E Convertible (43B_)	1.4 i	44	01/90 – 08/91	3410	
KADETT E Convertible (43B_)	1.4 S	55	08/90 – 02/93	3410	
KADETT E Convertible (43B_)	1.6 i	55	10/86 – 02/93	3410	
KADETT E Convertible (43B_)	1.6 i	60	07/89 – 02/93	3410	
KADETT E Convertible (43B_)	1.6 i CAT	55	10/87 – 02/93	3410	
KADETT E Convertible (43B_)	2.0 GSi	115	09/90 – 05/92	3410	
KADETT E Convertible (43B_)	2.0 GSi	115	09/90 – 05/92	3470	
KADETT E Convertible (43B_)	2.0 GSi	115	09/90 – 05/92	3505	
KADETT E Convertible (43B_)	2.0 GSi	115	09/90 – 05/92	3615	
KADETT E Convertible (43B_)	2.0 i	85	10/86 – 02/93	3410	
KADETT E Convertible (43B_)	2.0 i	85	10/86 – 02/93	3470	
KADETT E Convertible (43B_)	2.0 i	85	10/86 – 02/93	3505	
KADETT E Convertible (43B_)	2.0 i	85	10/86 – 02/93	3615	
KADETT E Convertible (43B_)	2.0 i CAT	85	10/86 – 02/93	3410	
KADETT E Convertible (43B_)	2.0 i CAT	85	10/86 – 02/93	3470	
KADETT E Convertible (43B_)	2.0 i CAT	85	10/86 – 02/93	3505	
KADETT E Convertible (43B_)	2.0 i CAT	85	10/86 – 02/93	3615	
KADETT E Estate (35_, 36_, 45_, 46_)	12	40	09/84 – 07/86	3410	
KADETT E Estate (35_, 36_, 45_, 46_)	16	60	09/86 – 08/91	3410	
KADETT E Estate (35_, 36_, 45_, 46_)	1.3 i CAT	44	09/85 – 08/91	3410	
KADETT E Estate (35_, 36_, 45_, 46_)	1.3 N	44	09/84 – 08/91	3410	
KADETT E Estate (35_, 36_, 45_, 46_)	1.3 S	55	09/84 – 08/87	3410	
KADETT E Estate (35_, 36_, 45_, 46_)	1.4 i	44	01/90 – 08/91	3410	
KADETT E Estate (35_, 36_, 45_, 46_)	1.4 S	55	01/90 – 08/91	3410	
KADETT E Estate (35_, 36_, 45_, 46_)	1.5 TD	53	07/88 – 08/91	3410	
KADETT E Estate (35_, 36_, 45_, 46_)	1.6 D	40	09/84 – 01/89	3410	
KADETT E Estate (35_, 36_, 45_, 46_)	1.6 i	55	09/86 – 08/91	3410	
KADETT E Estate (35_, 36_, 45_, 46_)	1.6 i CAT	55	09/86 – 08/91	3410	
KADETT E Estate (35_, 36_, 45_, 46_)	1.6 S	66	09/84 – 08/86	3410	
KADETT E Estate (35_, 36_, 45_, 46_)	1.7 D	42	02/89 – 08/91	3410	
KADETT E Estate (35_, 36_, 45_, 46_)	1.8 E	74	10/85 – 08/86	3410	
KADETT E Estate (35_, 36_, 45_, 46_)	1.8 i	66	06/85 – 08/91	3410	
KADETT E Estate (35_, 36_, 45_, 46_)	1.8 i	85	09/84 – 08/86	3410	
KADETT E Estate (35_, 36_, 45_, 46_)	1.8 S	62	09/87 – 08/91	3410	
KADETT E Estate (35_, 36_, 45_, 46_)	2.0 i	85	09/87 – 08/91	3470	
KADETT E Estate (35_, 36_, 45_, 46_)	2.0 i	85	09/87 – 08/91	3505	
KADETT E Estate (35_, 36_, 45_, 46_)	2.0 i	85	09/87 – 08/91	3615	
KADETT E Estate (35_, 36_, 45_, 46_)	2.0 i CAT	85	09/87 – 08/91	3470	
KADETT E Estate (35_, 36_, 45_, 46_)	2.0 i CAT	85	09/87 – 08/91	3505	
KADETT E Estate (35_, 36_, 45_, 46_)	2.0 i CAT	85	09/87 – 08/91	3615	
KADETT E Hatchback (33_, 34_, 43_, 44_)	12	40	09/84 – 07/86	3410	
KADETT E Hatchback (33_, 34_, 43_, 44_)	1.3 i CAT	44	09/85 – 08/91	3410	
KADETT E Hatchback (33_, 34_, 43_, 44_)	1.3 N	44	09/84 – 08/91	3410	
KADETT E Hatchback (33_, 34_, 43_, 44_)	1.3 S	55	09/84 – 08/87	3410	
KADETT E Hatchback (33_, 34_, 43_, 44_)	1.4 i	44	01/90 – 08/91	3410	
KADETT E Hatchback (33_, 34_, 43_, 44_)	1.4 S	55	01/90 – 08/91	3410	
KADETT E Hatchback (33_, 34_, 43_, 44_)	1.4 S	60	09/89 – 08/91	3410	
KADETT E Hatchback (33_, 34_, 43_, 44_)	1.5 TD	53	07/88 – 08/91	3410	
KADETT E Hatchback (33_, 34_, 43_, 44_)	1.6 D	40	09/84 – 01/89	3410	
KADETT E Hatchback (33_, 34_, 43_, 44_)	1.6 i	55	09/86 – 08/91	3410	
KADETT E Hatchback (33_, 34_, 43_, 44_)	1.6 i CAT	55	09/86 – 08/91	3410	
KADETT E Hatchback (33_, 34_, 43_, 44_)	1.6 S	60	09/86 – 08/91	3410	
KADETT E Hatchback (33_, 34_, 43_, 44_)	1.6 S	66	09/84 – 08/86	3410	
KADETT E Hatchback (33_, 34_, 43_, 44_)	1.7 D	42	02/89 – 08/91	3410	
KADETT E Hatchback (33_, 34_, 43_, 44_)	1.8 E	74	10/85 – 08/86	3410	
KADETT E Hatchback (33_, 34_, 43_, 44_)	1.8 E	74	10/85 – 08/86	3470	
KADETT E Hatchback (33_, 34_, 43_, 44_)	1.8 E	74	10/85 – 08/86	3505	
KADETT E Hatchback (33_, 34_, 43_, 44_)	1.8 E	74	10/85 – 08/86	3615	
KADETT E Hatchback (33_, 34_, 43_, 44_)	1.8 GSI	85	09/84 – 08/86	3410	
KADETT E Hatchback (33_, 34_, 43_, 44_)	1.8 GSI	85	09/84 – 08/86	3470	
KADETT E Hatchback (33_, 34_, 43_, 44_)	1.8 GSI	85	09/84 – 08/86	3505	
KADETT E Hatchback (33_, 34_, 43_, 44_)	1.8 GSI	85	09/84 – 08/86	3615	
KADETT E Hatchback (33_, 34_, 43_, 44_)	1.8 i	66	06/85 – 08/91	3410	
KADETT E Hatchback (33_, 34_, 43_, 44_)	1.8 i	66	06/85 – 08/91	3470	

MAKE & MODEL		KW	YEAR		
OPEL					
KADETT E Hatchback (33_, 34_, 43_, 44_)	1.8 i	66	06/85 – 08/91	3505	
KADETT E Hatchback (33_, 34_, 43_, 44_)	1.8 i	66	06/85 – 08/91	3615	
KADETT E Hatchback (33_, 34_, 43_, 44_)	1.8 S	62	09/87 – 08/91	3410	
KADETT E Hatchback (33_, 34_, 43_, 44_)	1.8 S	62	09/87 – 08/91	3470	
KADETT E Hatchback (33_, 34_, 43_, 44_)	1.8 S	62	09/87 – 08/91	3505	
KADETT E Hatchback (33_, 34_, 43_, 44_)	1.8 S	62	09/87 – 08/91	3615	
KADETT E Hatchback (33_, 34_, 43_, 44_)	2.0 GSI	85	09/86 – 08/91	3410	
KADETT E Hatchback (33_, 34_, 43_, 44_)	2.0 GSI	85	09/86 – 08/91		3469
KADETT E Hatchback (33_, 34_, 43_, 44_)	2.0 GSI	85	09/86 – 08/91	3470	
KADETT E Hatchback (33_, 34_, 43_, 44_)	2.0 GSI	85	09/86 – 08/91	3505	
KADETT E Hatchback (33_, 34_, 43_, 44_)	2.0 GSI	85	09/86 – 08/91	3615	
KADETT E Hatchback (33_, 34_, 43_, 44_)	2.0 GSI	95	09/86 – 08/91	3410	
KADETT E Hatchback (33_, 34_, 43_, 44_)	2.0 GSI	95	09/86 – 08/91		3469
KADETT E Hatchback (33_, 34_, 43_, 44_)	2.0 GSI	95	09/86 – 08/91	3470	
KADETT E Hatchback (33_, 34_, 43_, 44_)	2.0 GSI	95	09/86 – 08/91	3505	
KADETT E Hatchback (33_, 34_, 43_, 44_)	2.0 GSI	95	09/86 – 08/91	3615	
KADETT E Hatchback (33_, 34_, 43_, 44_)	2.0 GSI 16V	110	03/88 – 08/91	3410	
KADETT E Hatchback (33_, 34_, 43_, 44_)	2.0 GSI 16V	110	03/88 – 08/91		3469
KADETT E Hatchback (33_, 34_, 43_, 44_)	2.0 GSI 16V	110	03/88 – 08/91	3470	
KADETT E Hatchback (33_, 34_, 43_, 44_)	2.0 GSI 16V	110	03/88 – 08/91	3505	
KADETT E Hatchback (33_, 34_, 43_, 44_)	2.0 GSI 16V	110	03/88 – 08/91	3615	
KADETT E Hatchback (33_, 34_, 43_, 44_)	2.0 GSI 16V	115	12/87 – 08/91	3410	
KADETT E Hatchback (33_, 34_, 43_, 44_)	2.0 GSI 16V	115	12/87 – 08/91		3469
KADETT E Hatchback (33_, 34_, 43_, 44_)	2.0 GSI 16V	115	12/87 – 08/91	3470	
KADETT E Hatchback (33_, 34_, 43_, 44_)	2.0 GSI 16V	115	12/87 – 08/91	3505	
KADETT E Hatchback (33_, 34_, 43_, 44_)	2.0 GSI 16V	115	12/87 – 08/91	3615	
KADETT E Hatchback (33_, 34_, 43_, 44_)	2.0 GSI 16V CAT	110	03/88 – 08/91	3410	
KADETT E Hatchback (33_, 34_, 43_, 44_)	2.0 GSI 16V CAT	110	03/88 – 08/91		3469
KADETT E Hatchback (33_, 34_, 43_, 44_)	2.0 GSI 16V CAT	110	03/88 – 08/91	3470	
KADETT E Hatchback (33_, 34_, 43_, 44_)	2.0 GSI 16V CAT	110	03/88 – 08/91	3505	
KADETT E Hatchback (33_, 34_, 43_, 44_)	2.0 GSI 16V CAT	110	03/88 – 08/91	3615	
KADETT E Hatchback (33_, 34_, 43_, 44_)	2.0 GSI CAT	85	09/86 – 08/91	3410	
KADETT E Hatchback (33_, 34_, 43_, 44_)	2.0 GSI CAT	85	09/86 – 08/91		3469
KADETT E Hatchback (33_, 34_, 43_, 44_)	2.0 GSI CAT	85	09/86 – 08/91	3470	
KADETT E Hatchback (33_, 34_, 43_, 44_)	2.0 GSI CAT	85	09/86 – 08/91	3505	
KADETT E Hatchback (33_, 34_, 43_, 44_)	2.0 GSI CAT	85	09/86 – 08/91	3615	
MANTA A (58_, 59_)	12	44	04/72 – 08/75	3335	
MANTA A (58_, 59_)	12	44	04/72 – 08/75	3365	
MANTA A (58_, 59_)	16	44	02/75 – 08/75	3335	
MANTA A (58_, 59_)	16	44	02/75 – 08/75	3365	
MANTA A (58_, 59_)	16	50	09/70 – 08/75	3335	
MANTA A (58_, 59_)	16	50	09/70 – 08/75	3365	
MANTA A (58_, 59_)	16	55	02/75 – 08/75	3335	
MANTA A (58_, 59_)	16	55	02/75 – 08/75	3365	
MANTA A (58_, 59_)	1.6 S	59	09/70 – 08/75	3335	
MANTA A (58_, 59_)	1.6 S	59	09/70 – 08/75	3365	
MANTA A (58_, 59_)	1.9 GT/E	77	02/74 – 08/75	3335	
MANTA A (58_, 59_)	1.9 GT/E	77	02/74 – 08/75	3365	
MANTA A (58_, 59_)	1.9 S	65	09/70 – 08/75	3335	
MANTA A (58_, 59_)	1.9 S	65	09/70 – 08/75	3365	
MANTA A (58_, 59_)	1.9 S	66	09/70 – 08/75	3335	
MANTA A (58_, 59_)	1.9 S	66	09/70 – 08/75	3365	
MANTA B (58_, 59_)	20	66	08/77 – 12/80	3335	
MANTA B (58_, 59_)	20	66	08/77 – 12/80	3365	
MANTA B (58_, 59_)	20	66	08/77 – 12/80	3410	
MANTA B (58_, 59_)	1.2 N	40	08/76 – 07/83	3335	
MANTA B (58_, 59_)	1.2 N	40	08/76 – 07/83	3365	
MANTA B (58_, 59_)	1.2 N	40	08/76 – 07/83	3410	
MANTA B (58_, 59_)	1.2 S	44	09/75 – 02/79	3335	
MANTA B (58_, 59_)	1.2 S	44	09/75 – 02/79	3365	
MANTA B (58_, 59_)	1.2 S	44	09/75 – 02/79	3410	
MANTA B (58_, 59_)	1.3 N	44	03/79 – 12/80	3410	
MANTA B (58_, 59_)	1.3 S	55	08/81 – 08/86	3410	
MANTA B (58_, 59_)	1.6 N	44	09/75 – 12/80	3335	
MANTA B (58_, 59_)	1.6 N	44	09/75 – 12/80	3365	
MANTA B (58_, 59_)	1.6 S	55	09/75 – 12/81	3335	
MANTA B (58_, 59_)	1.6 S	55	09/75 – 12/81	3365	
MANTA B (58_, 59_)	1.6 S	55	09/75 – 12/81	3410	
MANTA B (58_, 59_)	1.8 S	66	07/82 – 08/87	3410	
MANTA B (58_, 59_)	1.9 E	77	09/75 – 08/77	3335	
MANTA B (58_, 59_)	1.9 E	77	09/75 – 08/77	3365	

MAKE & MODEL   		KW	YEAR		
OPEL					
MANTA B (58_, 59_)	1.9 N	55	08/76 – 12/81	3335	
MANTA B (58_, 59_)	1.9 N	55	08/76 – 12/81	3365	
MANTA B (58_, 59_)	1.9 N	55	08/76 – 12/81	3410	
MANTA B (58_, 59_)	1.9 S	66	09/75 – 12/80	3335	
MANTA B (58_, 59_)	1.9 S	66	09/75 – 12/80	3365	
MANTA B (58_, 59_)	1.9 S	66	09/75 – 12/80	3410	
MANTA B (58_, 59_)	2.0 E	81	08/77 – 08/88	3335	
MANTA B (58_, 59_)	2.0 E	81	08/77 – 08/88	3365	
MANTA B (58_, 59_)	2.0 E	81	08/77 – 08/88	3410	
MANTA B (58_, 59_)	2.0 S	74	08/77 – 08/84	3335	
MANTA B (58_, 59_)	2.0 S	74	08/77 – 08/84	3365	
MANTA B (58_, 59_)	2.0 S	74	08/77 – 08/84	3410	
MANTA B (58_, 59_)	2.4 400	106	07/80 – 08/84	3410	
MANTA B CC (53_, 55_)	20	66	08/77 – 12/80	3335	
MANTA B CC (53_, 55_)	20	66	08/77 – 12/80	3365	
MANTA B CC (53_, 55_)	20	66	08/77 – 12/80	3410	
MANTA B CC (53_, 55_)	1.3 N	44	03/79 – 12/80	3410	
MANTA B CC (53_, 55_)	1.3 S	55	08/79 – 08/86	3410	
MANTA B CC (53_, 55_)	1.6 N	44	09/75 – 12/80	3335	
MANTA B CC (53_, 55_)	1.6 N	44	09/75 – 12/80	3365	
MANTA B CC (53_, 55_)	1.8 S	66	07/82 – 08/87	3410	
MANTA B CC (53_, 55_)	1.9 N	55	08/76 – 12/81	3335	
MANTA B CC (53_, 55_)	1.9 N	55	08/76 – 12/81	3365	
MANTA B CC (53_, 55_)	1.9 N	55	08/76 – 12/81	3410	
MANTA B CC (53_, 55_)	2.0 E	81	08/77 – 08/88	3335	
MANTA B CC (53_, 55_)	2.0 E	81	08/77 – 08/88	3365	
MANTA B CC (53_, 55_)	2.0 E	81	08/77 – 08/88	3410	
MANTA B CC (53_, 55_)	2.0 S	74	08/77 – 08/84	3335	
MANTA B CC (53_, 55_)	2.0 S	74	08/77 – 08/84	3365	
MANTA B CC (53_, 55_)	2.0 S	74	08/77 - 08/84	3410	
MERIVA	16	64	05/03 – 05/10	3846	
MERIVA	16	64	05/03 – 05/10		4040
MERIVA	16	64	05/03 – 05/10	4042	
MERIVA	16	77	01/06 – 05/10		4040
MERIVA	16	77	01/06 – 05/10	4042	
MERIVA	18	92	05/03 – 05/10		4040
MERIVA	18	92	05/03 – 05/10	4042	
MERIVA	1.3 CDTI	51	04/05 – 05/10		4040
MERIVA	1.3 CDTI	51	04/05 – 05/10	4042	
MERIVA	1.3 CDTI	55	09/03 – 05/10		4040
MERIVA	1.3 CDTI	55	09/03 – 05/10	4042	
MERIVA	1.4 16V Twinport	66	07/04 – 05/10	3846	
MERIVA	1.4 16V Twinport	66	07/04 – 05/10		4040
MERIVA	1.4 16V Twinport	66	07/04 – 05/10	4042	
MERIVA	1.4 16V Twinport LPG	66	07/04 – 05/10	3846	
MERIVA	1.4 16V Twinport LPG	66	07/04 – 05/10		4040
MERIVA	1.4 16V Twinport LPG	66	07/04 – 05/10	4042	
MERIVA	1.6 16V	74	05/03 – 01/06		4040
MERIVA	1.6 16V	74	05/03 – 01/06	4042	
MERIVA	1.6 Turbo	132	09/05 – 05/10		4040
MERIVA	1.6 Turbo	132	09/05 – 05/10	4042	
MERIVA	1.7 CDTI	74	09/03 – 05/10		4040
MERIVA	1.7 CDTI	74	09/03 – 05/10	4042	
MERIVA	1.7 CDTI	92	09/06 – 05/10		4040
MERIVA	1.7 CDTI	92	09/06 – 05/10	4042	
MERIVA	1.7 DTI	55	09/03 – 05/10		4040
MERIVA	1.7 DTI	55	09/03 – 05/10	4042	
MERIVA B	14	74	06/10 -	4042	
MERIVA B	14	88	06/10 -	4042	
MERIVA B	14	103	06/10 -	4042	
MERIVA B	1.3 CDTI	55	06/10 -	4042	
MERIVA B	1.3 CDTI	70	06/10 -	4042	
MERIVA B	1.4 LPG	88	06/11 -	4042	
MERIVA B	1.6 CDTI	70	01/14 -	4042	
MERIVA B	1.6 CDTI	81	03/14 -	4042	
MERIVA B	1.6 CDTi	100	08/13 -	4042	
MERIVA B	1.7 CDTI	74	06/10 -	4042	
MERIVA B	1.7 CDTI	81	06/10 -	4042	
MERIVA B	1.7 CDTI	96	06/10 -	4042	
MOKKA	14	103	04/13 -	4008	
MOKKA	16	85	06/12 -	4008	

MAKE & MODEL		KW	YEAR		
OPEL					
MOKKA	18	103	01/13 -	4008	
MOKKA	1.4	103	04/13 -	4014	
MOKKA	1.4 4x4	103	06/12 -	4008	
MOKKA	1.4 4x4	103	06/12 -	4014	
MOKKA	1.4 4x4	112	06/16 -	4008	
MOKKA	1.4 4x4	112	06/16 -	4014	
MOKKA	1.4 LPG	103	04/13 -	4008	
MOKKA	1.4 LPG	103	04/13 -	4014	
MOKKA	1.6	85	06/12 -	4014	
MOKKA	1.6 CDTI	81	06/15 -	4008	
MOKKA	1.6 CDTI	81	06/15 -	4014	
MOKKA	1.6 CDTI	100	01/15 -	4008	
MOKKA	1.6 CDTI	100	01/15 -	4014	
MOKKA	1.6 CDTI 4x4	100	01/15 -	4008	
MOKKA	1.6 CDTI 4x4	100	01/15 -	4014	
MOKKA	1.7 CDTI	96	06/12 -	4008	
MOKKA	1.7 CDTI	96	06/12 -	4014	
MOKKA	1.7 CDTI 4x4	96	06/12 -	4008	
MOKKA	1.7 CDTI 4x4	96	06/12 -	4014	
MOKKA	1.8	103	01/13 -	4014	
MOKKA	1.8 4x4	103	01/13 -	4008	
MOKKA	1.8 4x4	103	01/13 -	4014	
MONTEREY A (UBS_)	3.1 TD (UBS69_)	84	09/91 – 07/98	3743	
MONTEREY A (UBS_)	3.1 TD (UBS69_)	84	09/91 – 07/98		3887
MONTEREY A (UBS_)	3.2 (UBS25_)	130	06/92 – 07/98	3743	
MONTEREY A (UBS_)	3.2 (UBS25_)	130	06/92 – 07/98		3887
MONTEREY A (UBS_)	MONTEREY A (UBS_)	84	09/91 – 07/98	3674	
MONTEREY A (UBS_)	MONTEREY A (UBS_)	130	06/92 – 07/98	3674	
MONTEREY B	3.0 DTI	117	07/98 – 08/99	3743	
MONTEREY B	3.0 DTI	117	07/98 – 08/99		3887
MONTEREY B	3.5 V6 24V	158	07/98 – 08/99	3743	
MONTEREY B	3.5 V6 24V	158	07/98 – 08/99		3887
MONTEREY B	MONTEREY B	117	07/98 – 08/99	3674	
MONTEREY B	MONTEREY B	158	07/98 – 08/99	3674	
MOVANO B Box	2.3 CDTI [RWD]	74	05/10 -	4056	
MOVANO B Box	2.3 CDTI [RWD]	74	05/10 -		4057
MOVANO B Box	2.3 CDTI [RWD]	74	05/10 -		4132
MOVANO B Box	2.3 CDTI [RWD]	74	05/10 -		4172
MOVANO B Box	2.3 CDTI [RWD]	92	05/10 -	4056	
MOVANO B Box	2.3 CDTI [RWD]	92	05/10 -		4057
MOVANO B Box	2.3 CDTI [RWD]	92	05/10 -		4132
MOVANO B Box	2.3 CDTI [RWD]	92	05/10 -		4172
MOVANO B Box	2.3 CDTI [RWD]	96	11/16 -	4056	
MOVANO B Box	2.3 CDTI [RWD]	100	05/14 -	4056	
MOVANO B Box	2.3 CDTI [RWD]	100	05/14 -		4057
MOVANO B Box	2.3 CDTI [RWD]	100	05/14 -		4132
MOVANO B Box	2.3 CDTI [RWD]	100	05/14 -		4172
MOVANO B Box	2.3 CDTI [RWD]	107	05/10 -	4056	
MOVANO B Box	2.3 CDTI [RWD]	107	05/10 -		4057
MOVANO B Box	2.3 CDTI [RWD]	107	05/10 -		4132
MOVANO B Box	2.3 CDTI [RWD]	107	05/10 -		4172
MOVANO B Box	2.3 CDTI [RWD]	110	01/13 -	4056	
MOVANO B Box	2.3 CDTI [RWD]	110	01/13 -		4057
MOVANO B Box	2.3 CDTI [RWD]	110	01/13 -		4132
MOVANO B Box	2.3 CDTI [RWD]	110	01/13 -		4172
MOVANO B Box	2.3 CDTI [RWD]	120	05/14 -	4056	
MOVANO B Box	2.3 CDTI [RWD]	120	05/14 -		4057
MOVANO B Box	2.3 CDTI [RWD]	120	05/14 -		4132
MOVANO B Box	2.3 CDTI [RWD]	120	05/14 -		4172
MOVANO B Box	2.3 CDTI FWD	74	05/10 -	4056	
MOVANO B Box	2.3 CDTI FWD	74	05/10 -		4057
MOVANO B Box	2.3 CDTI FWD	81	02/12 -	4056	
MOVANO B Box	2.3 CDTI FWD	81	02/12 -		4057
MOVANO B Box	2.3 CDTI FWD	81	02/12 -		4132
MOVANO B Box	2.3 CDTI FWD	81	02/12 -		4172
MOVANO B Box	2.3 CDTI FWD	92	05/10 -	4056	
MOVANO B Box	2.3 CDTI FWD	92	05/10 -		4057
MOVANO B Box	2.3 CDTI FWD	96	11/16 -	4056	
MOVANO B Box	2.3 CDTI FWD	100	05/14 -	4056	
MOVANO B Box	2.3 CDTI FWD	100	05/14 -		4057
MOVANO B Box	2.3 CDTI FWD	100	05/14 -		4132

MAKE & MODEL		KW	YEAR		
OPEL					
MOVANO B Box	2.3 CDTI FWD	100	05/14 -		4172
MOVANO B Box	2.3 CDTI FWD	107	05/10 -	4056	
MOVANO B Box	2.3 CDTI FWD	107	05/10 -		4057
MOVANO B Box	2.3 CDTI FWD	110	01/13 -	4056	
MOVANO B Box	2.3 CDTI FWD	110	01/13 -		4057
MOVANO B Box	2.3 CDTI FWD	110	01/13 -		4132
MOVANO B Box	2.3 CDTI FWD	110	01/13 -		4172
MOVANO B Box	2.3 CDTI FWD	120	05/14 -	4056	
MOVANO B Box	2.3 CDTI FWD	120	05/14 -		4057
MOVANO B Box	2.3 CDTI FWD	120	05/14 -		4132
MOVANO B Box	2.3 CDTI FWD	120	05/14 -		4172
MOVANO B Box	2.3 CDTI FWD	125	11/16 -	4056	
MOVANO B Bus	2.3 CDTI	74	12/10 -	4056	
MOVANO B Bus	2.3 CDTI	74	12/10 -		4057
MOVANO B Bus	2.3 CDTI	81	05/14 -	4056	
MOVANO B Bus	2.3 CDTI	81	05/14 -		4057
MOVANO B Bus	2.3 CDTI	81	05/14 -		4132
MOVANO B Bus	2.3 CDTI	81	05/14 -		4172
MOVANO B Bus	2.3 CDTI	92	12/10 -	4056	
MOVANO B Bus	2.3 CDTI	92	12/10 -		4057
MOVANO B Bus	2.3 CDTI	100	05/14 -	4056	
MOVANO B Bus	2.3 CDTI	100	05/14 -		4057
MOVANO B Bus	2.3 CDTI	100	05/14 -		4132
MOVANO B Bus	2.3 CDTI	100	05/14 -		4172
MOVANO B Bus	2.3 CDTI	107	12/10 -	4056	
MOVANO B Bus	2.3 CDTI	107	12/10 -		4057
MOVANO B Bus	2.3 CDTI	110	01/13 -	4056	
MOVANO B Bus	2.3 CDTI	110	01/13 -		4057
MOVANO B Bus	2.3 CDTI	110	01/13 -		4132
MOVANO B Bus	2.3 CDTI	110	01/13 -		4172
MOVANO B Bus	2.3 CDTI	120	05/14 -	4056	
MOVANO B Bus	2.3 CDTI	120	05/14 -		4057
MOVANO B Bus	2.3 CDTI	120	05/14 -		4132
MOVANO B Bus	2.3 CDTI	120	05/14 -		4172
MOVANO B Bus	2.3 CDTI	125	07/15 -	4056	
MOVANO B Bus	2.3 CDTI	125	07/15 -		4057
MOVANO B Bus	2.3 CDTI	125	07/15 -		4132
MOVANO B Bus	2.3 CDTI	125	07/15 -		4172
MOVANO B Platform/Chassis	2.3 CDTI [RWD]	74	05/10 -	4056	
MOVANO B Platform/Chassis	2.3 CDTI [RWD]	74	05/10 -		4057
MOVANO B Platform/Chassis	2.3 CDTI [RWD]	74	05/10 -		4132
MOVANO B Platform/Chassis	2.3 CDTI [RWD]	74	05/10 -		4172
MOVANO B Platform/Chassis	2.3 CDTI [RWD]	92	05/10 -	4056	
MOVANO B Platform/Chassis	2.3 CDTI [RWD]	92	05/10 -		4057
MOVANO B Platform/Chassis	2.3 CDTI [RWD]	92	05/10 -		4132
MOVANO B Platform/Chassis	2.3 CDTI [RWD]	92	05/10 -		4172
MOVANO B Platform/Chassis	2.3 CDTI [RWD]	96	11/16 -	4056	
MOVANO B Platform/Chassis	2.3 CDTI [RWD]	100	05/14 -	4056	
MOVANO B Platform/Chassis	2.3 CDTI [RWD]	100	05/14 -		4057
MOVANO B Platform/Chassis	2.3 CDTI [RWD]	100	05/14 -		4132
MOVANO B Platform/Chassis	2.3 CDTI [RWD]	100	05/14 -		4172
MOVANO B Platform/Chassis	2.3 CDTI [RWD]	107	05/10 -	4056	
MOVANO B Platform/Chassis	2.3 CDTI [RWD]	107	05/10 -		4057
MOVANO B Platform/Chassis	2.3 CDTI [RWD]	107	05/10 -		4132
MOVANO B Platform/Chassis	2.3 CDTI [RWD]	107	05/10 -		4172
MOVANO B Platform/Chassis	2.3 CDTI [RWD]	110	01/13 -	4056	
MOVANO B Platform/Chassis	2.3 CDTI [RWD]	110	01/13 -		4057
MOVANO B Platform/Chassis	2.3 CDTI [RWD]	110	01/13 -		4132
MOVANO B Platform/Chassis	2.3 CDTI [RWD]	110	01/13 -		4172
MOVANO B Platform/Chassis	2.3 CDTI [RWD]	120	05/14 -	4056	
MOVANO B Platform/Chassis	2.3 CDTI [RWD]	120	05/14 -		4057
MOVANO B Platform/Chassis	2.3 CDTI [RWD]	120	05/14 -		4132
MOVANO B Platform/Chassis	2.3 CDTI [RWD]	120	05/14 -		4172
MOVANO B Platform/Chassis	2.3 CDTI FWD	74	05/10 -	4056	
MOVANO B Platform/Chassis	2.3 CDTI FWD	74	05/10 -		4057
MOVANO B Platform/Chassis	2.3 CDTI FWD	81	05/14 -	4056	
MOVANO B Platform/Chassis	2.3 CDTI FWD	81	05/14 -		4057
MOVANO B Platform/Chassis	2.3 CDTI FWD	81	05/14 -		4132
MOVANO B Platform/Chassis	2.3 CDTI FWD	81	05/14 -		4172
MOVANO B Platform/Chassis	2.3 CDTI FWD	92	05/10 -	4056	
MOVANO B Platform/Chassis	2.3 CDTI FWD	92	05/10 -		4057

MAKE & MODEL   		KW	YEAR		
OPEL					
MOVANO B Platform/Chassis	2.3 CDTI FWD	96	11/16 -	4056	
MOVANO B Platform/Chassis	2.3 CDTI FWD	100	05/14 -	4056	
MOVANO B Platform/Chassis	2.3 CDTI FWD	100	05/14 -		4057
MOVANO B Platform/Chassis	2.3 CDTI FWD	100	05/14 -		4132
MOVANO B Platform/Chassis	2.3 CDTI FWD	100	05/14 -		4172
MOVANO B Platform/Chassis	2.3 CDTI FWD	107	05/10 -	4056	
MOVANO B Platform/Chassis	2.3 CDTI FWD	107	05/10 -		4057
MOVANO B Platform/Chassis	2.3 CDTI FWD	110	01/13 -	4056	
MOVANO B Platform/Chassis	2.3 CDTI FWD	110	01/13 -		4057
MOVANO B Platform/Chassis	2.3 CDTI FWD	110	01/13 -		4132
MOVANO B Platform/Chassis	2.3 CDTI FWD	110	01/13 -		4172
MOVANO B Platform/Chassis	2.3 CDTI FWD	120	05/14 -	4056	
MOVANO B Platform/Chassis	2.3 CDTI FWD	120	05/14 -		4057
MOVANO B Platform/Chassis	2.3 CDTI FWD	120	05/14 -		4132
MOVANO B Platform/Chassis	2.3 CDTI FWD	120	05/14 -		4172
MOVANO B Platform/Chassis	2.3 CDTI FWD	125	11/16 -	4056	
MOVANO Box (F9)	1.9 DTI	59	09/00 – 10/01		3855
MOVANO Box (F9)	1.9 DTI	59	09/00 – 10/01	3856	
MOVANO Box (F9)	1.9 DTI	60	10/01 -		3855
MOVANO Box (F9)	1.9 DTI	60	10/01 -	3856	
MOVANO Box (F9)	2.2 DTI	66	09/00 -		3855
MOVANO Box (F9)	2.2 DTI	66	09/00 -	3856	
MOVANO Box (F9)	2.5 CDTI	74	10/03 -		3855
MOVANO Box (F9)	2.5 CDTI	74	10/03 -	3856	
MOVANO Box (F9)	2.5 CDTI	88	10/03 -		3855
MOVANO Box (F9)	2.5 CDTI	88	10/03 -	3856	
MOVANO Box (F9)	2.5 CDTI	107	10/03 -		3855
MOVANO Box (F9)	2.5 CDTI	107	10/03 -	3856	
MOVANO Box (F9)	2.5 D	59	01/99 – 09/00		3855
MOVANO Box (F9)	2.5 D	59	01/99 – 09/00	3856	
MOVANO Box (F9)	2.5 DTI	84	10/01 -		3855
MOVANO Box (F9)	2.5 DTI	84	10/01 -	3856	
MOVANO Box (F9)	2.5 DTi	73	10/03 -		3855
MOVANO Box (F9)	2.5 DTi	73	10/03 -	3856	
MOVANO Box (F9)	2.8 DTI	84	01/99 – 10/01		3855
MOVANO Box (F9)	2.8 DTI	84	01/99 – 10/01	3856	
MOVANO Box (F9)	3.0 DTI	100	10/03 -		3855
MOVANO Box (F9)	3.0 DTI	100	10/03 -	3856	
MOVANO Combi (J9)	1.9 DTI	59	09/00 – 10/01		3855
MOVANO Combi (J9)	1.9 DTI	59	09/00 – 10/01	3856	
MOVANO Combi (J9)	1.9 DTI	60	10/01 -		3855
MOVANO Combi (J9)	1.9 DTI	60	10/01 -	3856	
MOVANO Combi (J9)	2.2 DTI	66	09/00 -		3855
MOVANO Combi (J9)	2.2 DTI	66	09/00 -	3856	
MOVANO Combi (J9)	2.5 CDTI	73	10/03 – 12/06		3855
MOVANO Combi (J9)	2.5 CDTI	73	10/03 – 12/06	3856	
MOVANO Combi (J9)	2.5 CDTI	74	09/07 -		3855
MOVANO Combi (J9)	2.5 CDTI	74	09/07 -	3856	
MOVANO Combi (J9)	2.5 CDTI	88	08/06 -		3855
MOVANO Combi (J9)	2.5 CDTI	88	08/06 -	3856	
MOVANO Combi (J9)	2.5 CDTI	107	08/06 -		3855
MOVANO Combi (J9)	2.5 CDTI	107	08/06 -	3856	
MOVANO Combi (J9)	2.5 D	59	07/98 – 09/00		3855
MOVANO Combi (J9)	2.5 D	59	07/98 – 09/00	3856	
MOVANO Combi (J9)	2.5 DTI	84	10/01 -		3855
MOVANO Combi (J9)	2.5 DTI	84	10/01 -	3856	
MOVANO Combi (J9)	2.8 DTI	84	07/98 – 10/01		3855
MOVANO Combi (J9)	2.8 DTI	84	07/98 – 10/01	3856	
MOVANO Combi (J9)	3.0 DTi	100	10/03 -		3855
MOVANO Combi (J9)	3.0 DTi	100	10/03 -	3856	
MOVANO Dumptruck (H9)	2.2 DTI	66	09/00 -		3855
MOVANO Dumptruck (H9)	2.2 DTI	66	09/00 -	3856	
MOVANO Dumptruck (H9)	2.5 CDTI	74	08/06 -		3855
MOVANO Dumptruck (H9)	2.5 CDTI	74	08/06 -	3856	
MOVANO Dumptruck (H9)	2.5 CDTI	88	08/06 -		3855
MOVANO Dumptruck (H9)	2.5 CDTI	88	08/06 -	3856	
MOVANO Dumptruck (H9)	2.5 CDTI	107	08/06 -		3855
MOVANO Dumptruck (H9)	2.5 CDTI	107	08/06 -	3856	
MOVANO Dumptruck (H9)	2.5 D	59	01/99 – 09/00		3855
MOVANO Dumptruck (H9)	2.5 D	59	01/99 – 09/00	3856	
MOVANO Dumptruck (H9)	2.5 DTI	73	10/03 -		3855

MAKE & MODEL		KW	YEAR		
OPEL					
MOVANO Dumptruck (H9)	2.5 DTI	73	10/03 -	3856	
MOVANO Dumptruck (H9)	2.5 DTI	84	10/01 -		3855
MOVANO Dumptruck (H9)	2.5 DTI	84	10/01 -	3856	
MOVANO Dumptruck (H9)	2.8 DTI	84	01/99 – 10/01		3855
MOVANO Dumptruck (H9)	2.8 DTI	84	01/99 – 10/01	3856	
MOVANO Dumptruck (H9)	3.0 DTI	100	10/03 -		3855
MOVANO Dumptruck (H9)	3.0 DTI	100	10/03 -	3856	
MOVANO Platform/Chassis (U9, E9)	2.2 DTI	66	09/00 -		3855
MOVANO Platform/Chassis (U9, E9)	2.2 DTI	66	09/00 -	3856	
MOVANO Platform/Chassis (U9, E9)	2.5 CDTI	74	08/06 -		3855
MOVANO Platform/Chassis (U9, E9)	2.5 CDTI	74	08/06 -	3856	
MOVANO Platform/Chassis (U9, E9)	2.5 CDTI	88	08/06 -		3855
MOVANO Platform/Chassis (U9, E9)	2.5 CDTI	88	08/06 -	3856	
MOVANO Platform/Chassis (U9, E9)	2.5 CDTI	107	08/06 -		3855
MOVANO Platform/Chassis (U9, E9)	2.5 CDTI	107	08/06 -	3856	
MOVANO Platform/Chassis (U9, E9)	2.5 D	59	07/98 – 09/00		3855
MOVANO Platform/Chassis (U9, E9)	2.5 D	59	07/98 – 09/00	3856	
MOVANO Platform/Chassis (U9, E9)	2.5 DTI	84	10/01 -		3855
MOVANO Platform/Chassis (U9, E9)	2.5 DTI	84	10/01 -	3856	
MOVANO Platform/Chassis (U9, E9)	2.5 DTi	73	10/03 -		3855
MOVANO Platform/Chassis (U9, E9)	2.5 DTi	73	10/03 -	3856	
MOVANO Platform/Chassis (U9, E9)	2.8 DTI	84	07/98 – 10/01		3855
MOVANO Platform/Chassis (U9, E9)	2.8 DTI	84	07/98 – 10/01	3856	
MOVANO Platform/Chassis (U9, E9)	3.0 DTI	100	10/03 -		3855
MOVANO Platform/Chassis (U9, E9)	3.0 DTI	100	10/03 -	3856	
OMEGA A (16_, 17_, 19_)	18	65	09/87 – 03/94	3410	
OMEGA A (16_, 17_, 19_)	18	65	09/87 – 03/94	3470	
OMEGA A (16_, 17_, 19_)	18	65	09/87 – 03/94	3505	
OMEGA A (16_, 17_, 19_)	18	65	09/87 – 03/94	3615	
OMEGA A (16_, 17_, 19_)	18	65	09/87 – 03/94	3717	
OMEGA A (16_, 17_, 19_)	18	85	09/86 – 03/94	3410	
OMEGA A (16_, 17_, 19_)	18	85	09/86 – 03/94	3470	
OMEGA A (16_, 17_, 19_)	18	85	09/86 – 03/94	3505	
OMEGA A (16_, 17_, 19_)	18	85	09/86 – 03/94	3615	
OMEGA A (16_, 17_, 19_)	18	85	09/86 – 03/94	3717	
OMEGA A (16_, 17_, 19_)	20	73	09/90 – 03/94	3470	
OMEGA A (16_, 17_, 19_)	20	73	09/90 – 03/94	3505	
OMEGA A (16_, 17_, 19_)	20	73	09/90 – 03/94	3615	
OMEGA A (16_, 17_, 19_)	20	73	09/90 – 03/94	3717	
OMEGA A (16_, 17_, 19_)	20	74	09/90 – 03/94	3470	
OMEGA A (16_, 17_, 19_)	20	74	09/90 – 03/94	3505	
OMEGA A (16_, 17_, 19_)	20	74	09/90 – 03/94	3615	
OMEGA A (16_, 17_, 19_)	20	74	09/90 – 03/94	3717	
OMEGA A (16_, 17_, 19_)	20	85	09/87 – 04/94	3410	
OMEGA A (16_, 17_, 19_)	20	85	09/87 – 04/94	3470	
OMEGA A (16_, 17_, 19_)	20	85	09/87 – 04/94	3505	
OMEGA A (16_, 17_, 19_)	20	85	09/87 – 04/94	3615	
OMEGA A (16_, 17_, 19_)	20	85	09/87 – 04/94	3717	
OMEGA A (16_, 17_, 19_)	20	90	09/86 – 03/94	3410	
OMEGA A (16_, 17_, 19_)	20	90	09/86 – 03/94	3470	
OMEGA A (16_, 17_, 19_)	20	90	09/86 – 03/94	3505	
OMEGA A (16_, 17_, 19_)	20	90	09/86 – 03/94	3615	
OMEGA A (16_, 17_, 19_)	20	90	09/86 – 03/94	3717	
OMEGA A (16_, 17_, 19_)	1.8 N	60	09/86 – 08/87	3410	
OMEGA A (16_, 17_, 19_)	1.8 S	66	09/86 – 03/94	3410	
OMEGA A (16_, 17_, 19_)	1.8 S	66	09/86 – 03/94	3470	
OMEGA A (16_, 17_, 19_)	1.8 S	66	09/86 – 03/94	3505	
OMEGA A (16_, 17_, 19_)	1.8 S	66	09/86 – 03/94	3615	
OMEGA A (16_, 17_, 19_)	1.8 S	66	09/86 – 03/94	3717	
OMEGA A (16_, 17_, 19_)	2.0 i	85	09/86 – 03/94	3410	
OMEGA A (16_, 17_, 19_)	2.0 i	85	09/86 – 03/94	3470	
OMEGA A (16_, 17_, 19_)	2.0 i	85	09/86 – 03/94	3505	
OMEGA A (16_, 17_, 19_)	2.0 i	85	09/86 – 03/94	3615	
OMEGA A (16_, 17_, 19_)	2.0 i	85	09/86 – 03/94	3717	
OMEGA A (16_, 17_, 19_)	2.3 D	54	10/86 – 03/94	3410	
OMEGA A (16_, 17_, 19_)	2.3 D	54	10/86 – 03/94	3470	
OMEGA A (16_, 17_, 19_)	2.3 D	54	10/86 – 03/94	3505	
OMEGA A (16_, 17_, 19_)	2.3 D	54	10/86 – 03/94	3615	
OMEGA A (16_, 17_, 19_)	2.3 D	54	10/86 – 03/94	3717	
OMEGA A (16_, 17_, 19_)	2.3 TD	66	10/86 – 08/88	3410	
OMEGA A (16_, 17_, 19_)	2.3 TD Interc.	74	08/88 – 03/94	3410	

MAKE & MODEL		KW	YEAR		
OPEL					
OMEGA A (16_, 17_, 19_)	2.3 TD Interc.	74	08/88 – 03/94	3470	
OMEGA A (16_, 17_, 19_)	2.3 TD Interc.	74	08/88 – 03/94	3505	
OMEGA A (16_, 17_, 19_)	2.3 TD Interc.	74	08/88 – 03/94	3615	
OMEGA A (16_, 17_, 19_)	2.3 TD Interc.	74	08/88 – 03/94	3717	
OMEGA A (16_, 17_, 19_)	2.4 i	92	09/88 – 03/94	3470	
OMEGA A (16_, 17_, 19_)	2.4 i	92	09/88 – 03/94	3505	
OMEGA A (16_, 17_, 19_)	2.4 i	92	09/88 – 03/94	3615	
OMEGA A (16_, 17_, 19_)	2.4 i	92	09/88 – 03/94	3717	
OMEGA A (16_, 17_, 19_)	2.6 i	110	09/90 – 03/94	3717	
OMEGA A (16_, 17_, 19_)	2.6 i	110	09/90 – 03/94	3733	
OMEGA A (16_, 17_, 19_)	3.0 (3000)	115	03/87 – 12/87	3717	
OMEGA A (16_, 17_, 19_)	3.0 (3000)	130	03/87 – 09/90	3717	
OMEGA A (16_, 17_, 19_)	3.0 (3000) CAT	130	03/88 – 03/94	3717	
OMEGA A (16_, 17_, 19_)	3.0 (3000) CAT	130	03/88 – 03/94	3733	
OMEGA A (16_, 17_, 19_)	3.0 24V (3000)	147	09/89 – 03/94	3717	
OMEGA A (16_, 17_, 19_)	3.0 24V (3000)	147	09/89 – 03/94	3733	
OMEGA A (16_, 17_, 19_)	3.0 24V (3000)	150	09/89 – 03/94	3717	
OMEGA A (16_, 17_, 19_)	3.0 24V (3000)	150	09/89 – 03/94	3733	
OMEGA A (16_, 17_, 19_)	3.0 24V Evolution500	169	03/91 – 07/92	3717	
OMEGA A (16_, 17_, 19_)	3.0 24V Evolution500	169	03/91 – 07/92	3733	
OMEGA A (16_, 17_, 19_)	3.6 24V Lotus	277	08/90 – 09/92	3717	
OMEGA A (16_, 17_, 19_)	3.6 24V Lotus	277	08/90 – 09/92	3733	
OMEGA A Estate (66_, 67_)	18	65	09/87 – 03/94	3410	
OMEGA A Estate (66_, 67_)	18	65	09/87 – 03/94	3470	
OMEGA A Estate (66_, 67_)	18	65	09/87 – 03/94	3505	
OMEGA A Estate (66_, 67_)	18	65	09/87 – 03/94	3615	
OMEGA A Estate (66_, 67_)	18	65	09/87 – 03/94	3717	
OMEGA A Estate (66_, 67_)	18	85	09/86 – 03/94	3410	
OMEGA A Estate (66_, 67_)	18	85	09/86 – 03/94	3470	
OMEGA A Estate (66_, 67_)	18	85	09/86 – 03/94	3505	
OMEGA A Estate (66_, 67_)	18	85	09/86 – 03/94	3615	
OMEGA A Estate (66_, 67_)	18	85	09/86 – 03/94	3717	
OMEGA A Estate (66_, 67_)	20	74	09/90 – 03/94	3470	
OMEGA A Estate (66_, 67_)	20	74	09/90 – 03/94	3505	
OMEGA A Estate (66_, 67_)	20	74	09/90 – 03/94	3615	
OMEGA A Estate (66_, 67_)	20	74	09/90 – 03/94	3717	
OMEGA A Estate (66_, 67_)	20	85	09/87 – 04/94	3410	
OMEGA A Estate (66_, 67_)	20	85	09/87 – 04/94	3470	
OMEGA A Estate (66_, 67_)	20	85	09/87 – 04/94	3505	
OMEGA A Estate (66_, 67_)	20	85	09/87 – 04/94	3615	
OMEGA A Estate (66_, 67_)	20	85	09/87 – 04/94	3717	
OMEGA A Estate (66_, 67_)	20	90	09/86 – 03/94	3410	
OMEGA A Estate (66_, 67_)	20	90	09/86 – 03/94	3470	
OMEGA A Estate (66_, 67_)	20	90	09/86 – 03/94	3505	
OMEGA A Estate (66_, 67_)	20	90	09/86 – 03/94	3615	
OMEGA A Estate (66_, 67_)	20	90	09/86 – 03/94	3717	
OMEGA A Estate (66_, 67_)	26	135	09/87 – 04/94	3717	
OMEGA A Estate (66_, 67_)	26	135	09/87 – 04/94	3733	
OMEGA A Estate (66_, 67_)	30	115	03/87 – 03/94	3717	
OMEGA A Estate (66_, 67_)	30	115	03/87 – 03/94	3733	
OMEGA A Estate (66_, 67_)	30	130	03/87 – 09/90	3717	
OMEGA A Estate (66_, 67_)	30	130	03/87 – 09/90	3733	
OMEGA A Estate (66_, 67_)	1.8 N	60	09/86 – 08/87	3410	
OMEGA A Estate (66_, 67_)	1.8 N	60	09/86 – 08/87	3717	
OMEGA A Estate (66_, 67_)	1.8 S	66	09/86 – 03/94	3410	
OMEGA A Estate (66_, 67_)	1.8 S	66	09/86 – 03/94	3470	
OMEGA A Estate (66_, 67_)	1.8 S	66	09/86 – 03/94	3505	
OMEGA A Estate (66_, 67_)	1.8 S	66	09/86 – 03/94	3615	
OMEGA A Estate (66_, 67_)	1.8 S	66	09/86 – 03/94	3717	
OMEGA A Estate (66_, 67_)	2.0 i	73	09/90 – 03/94	3470	
OMEGA A Estate (66_, 67_)	2.0 i	73	09/90 – 03/94	3505	
OMEGA A Estate (66_, 67_)	2.0 i	73	09/90 – 03/94	3615	
OMEGA A Estate (66_, 67_)	2.0 i	73	09/90 – 03/94	3717	
OMEGA A Estate (66_, 67_)	2.0 i	85	09/86 – 03/94	3410	
OMEGA A Estate (66_, 67_)	2.0 i	85	09/86 – 03/94	3470	
OMEGA A Estate (66_, 67_)	2.0 i	85	09/86 – 03/94	3505	
OMEGA A Estate (66_, 67_)	2.0 i	85	09/86 – 03/94	3615	
OMEGA A Estate (66_, 67_)	2.0 i	85	09/86 – 03/94	3717	
OMEGA A Estate (66_, 67_)	2.3 D	54	09/86 – 03/94	3410	
OMEGA A Estate (66_, 67_)	2.3 D	54	09/86 – 03/94	3470	
OMEGA A Estate (66_, 67_)	2.3 D	54	09/86 – 03/94	3505	

BESER®

MAKE & MODEL		KW	YEAR		
OPEL					
OMEGA A Estate (66_, 67_)	2.3 D	54	09/86 – 03/94	3615	
OMEGA A Estate (66_, 67_)	2.3 D	54	09/86 – 03/94	3717	
OMEGA A Estate (66_, 67_)	2.3 TD	66	09/86 – 08/88	3410	
OMEGA A Estate (66_, 67_)	2.3 TD	66	09/86 – 08/88	3717	
OMEGA A Estate (66_, 67_)	2.3 TD Interc.	74	09/88 – 03/94	3410	
OMEGA A Estate (66_, 67_)	2.3 TD Interc.	74	09/88 – 03/94	3470	
OMEGA A Estate (66_, 67_)	2.3 TD Interc.	74	09/88 – 03/94	3505	
OMEGA A Estate (66_, 67_)	2.3 TD Interc.	74	09/88 – 03/94	3615	
OMEGA A Estate (66_, 67_)	2.3 TD Interc.	74	09/88 – 03/94	3717	
OMEGA A Estate (66_, 67_)	2.4 i	92	09/88 – 03/94	3470	
OMEGA A Estate (66_, 67_)	2.4 i	92	09/88 – 03/94	3505	
OMEGA A Estate (66_, 67_)	2.4 i	92	09/88 – 03/94	3615	
OMEGA A Estate (66_, 67_)	2.4 i	92	09/88 – 03/94	3717	
OMEGA A Estate (66_, 67_)	2.6 i	110	09/90 – 03/94	3717	
OMEGA A Estate (66_, 67_)	2.6 i	110	09/90 – 03/94	3733	
OMEGA A Estate (66_, 67_)	3.0 24V	147	09/89 – 03/94	3717	
OMEGA A Estate (66_, 67_)	3.0 24V	147	09/89 – 03/94	3733	
OMEGA A Estate (66_, 67_)	3.0 24V Omega 3000	150	09/88 – 04/94	3717	
OMEGA A Estate (66_, 67_)	3.0 24V Omega 3000	150	09/88 – 04/94	3733	
OMEGA A Estate (66_, 67_)	3.0 CAT	130	03/87 – 03/94	3717	
OMEGA A Estate (66_, 67_)	3.0 CAT	130	03/87 – 03/94	3733	
OMEGA B (25_, 26_, 27_)	20	85	03/94 – 09/99	3717	
OMEGA B (25_, 26_, 27_)	20	85	03/94 – 12/00	3717	
OMEGA B (25_, 26_, 27_)	20	85	03/94 – 09/99	3733	
OMEGA B (25_, 26_, 27_)	20	85	03/94 – 12/00	3733	
OMEGA B (25_, 26_, 27_)	20	85	03/94 – 09/99	3736	
OMEGA B (25_, 26_, 27_)	20	85	03/94 – 12/00	3736	
OMEGA B (25_, 26_, 27_)	20	90	05/94 – 05/99	3717	
OMEGA B (25_, 26_, 27_)	20	90	05/94 – 05/99	3733	
OMEGA B (25_, 26_, 27_)	20	90	05/94 – 05/99	3736	
OMEGA B (25_, 26_, 27_)	2.0 16V	100	03/94 – 09/99	3717	
OMEGA B (25_, 26_, 27_)	2.0 16V	100	03/94 – 09/99	3733	
OMEGA B (25_, 26_, 27_)	2.0 16V	100	03/94 – 09/99	3736	
OMEGA B (25_, 26_, 27_)	2.0 DTI 16V	74	09/97 – 09/00	3717	
OMEGA B (25_, 26_, 27_)	2.0 DTI 16V	74	09/97 – 09/00	3733	
OMEGA B (25_, 26_, 27_)	2.2 16V	106	09/99 – 07/03	3717	
OMEGA B (25_, 26_, 27_)	2.2 16V	106	09/99 – 07/03	3733	
OMEGA B (25_, 26_, 27_)	2.2 DTI 16V	81	09/00 – 07/03	3717	
OMEGA B (25_, 26_, 27_)	2.2 DTI 16V	81	09/00 – 07/03	3733	
OMEGA B (25_, 26_, 27_)	2.2 DTI 16V	86	01/01 – 07/03	3717	
OMEGA B (25_, 26_, 27_)	2.2 DTI 16V	86	01/01 – 07/03	3733	
OMEGA B (25_, 26_, 27_)	2.2 DTI 16V	88	09/00 – 07/03	3717	
OMEGA B (25_, 26_, 27_)	2.2 DTI 16V	88	09/00 – 07/03	3733	
OMEGA B (25_, 26_, 27_)	2.5 D	96	05/94 – 05/99	3717	
OMEGA B (25_, 26_, 27_)	2.5 D	96	05/94 – 05/99	3733	
OMEGA B (25_, 26_, 27_)	2.5 DTI	110	09/01 – 07/03	3717	
OMEGA B (25_, 26_, 27_)	2.5 DTI	110	09/01 – 07/03	3733	
OMEGA B (25_, 26_, 27_)	2.5 TD	96	04/94 – 07/03	3717	
OMEGA B (25_, 26_, 27_)	2.5 TD	96	04/94 – 07/03	3733	
OMEGA B (25_, 26_, 27_)	2.5 V6	125	03/94 – 09/00	3717	
OMEGA B (25_, 26_, 27_)	2.5 V6	125	03/94 – 09/00	3733	
OMEGA B (25_, 26_, 27_)	2.6 V6	132	09/00 – 07/03	3717	
OMEGA B (25_, 26_, 27_)	2.6 V6	132	09/00 – 07/03	3733	
OMEGA B (25_, 26_, 27_)	3.0 V6	155	04/94 – 02/01	3717	
OMEGA B (25_, 26_, 27_)	3.0 V6	155	04/94 – 02/01	3733	
OMEGA B (25_, 26_, 27_)	3.2 V6	160	02/01 – 07/03	3717	
OMEGA B (25_, 26_, 27_)	3.2 V6	160	02/01 – 07/03	3733	
OMEGA B Estate (21_, 22_, 23_)	20	85	03/94 – 09/99	3717	
OMEGA B Estate (21_, 22_, 23_)	20	85	03/94 – 09/99	3733	
OMEGA B Estate (21_, 22_, 23_)	20	85	03/94 – 09/99	3736	
OMEGA B Estate (21_, 22_, 23_)	20	90	05/94 – 05/99	3717	
OMEGA B Estate (21_, 22_, 23_)	20	90	05/94 – 05/99	3733	
OMEGA B Estate (21_, 22_, 23_)	20	90	05/94 – 05/99	3736	
OMEGA B Estate (21_, 22_, 23_)	26	138	05/94 – 05/99	3717	
OMEGA B Estate (21_, 22_, 23_)	26	138	05/94 – 05/99	3733	
OMEGA B Estate (21_, 22_, 23_)	2.0 16V	100	03/94 – 09/99	3717	
OMEGA B Estate (21_, 22_, 23_)	2.0 16V	100	03/94 – 09/99	3733	
OMEGA B Estate (21_, 22_, 23_)	2.0 16V	100	03/94 – 09/99	3736	
OMEGA B Estate (21_, 22_, 23_)	2.0 DTI 16V	74	09/97 – 09/00	3717	
OMEGA B Estate (21_, 22_, 23_)	2.0 DTI 16V	74	09/97 – 09/00	3733	
OMEGA B Estate (21_, 22_, 23_)	2.2 16V	106	09/99 – 07/03	3717	

MAKE & MODEL		KW	YEAR		
OPEL					
OMEGA B Estate (21_, 22_, 23_)	2.2 16V	106	09/99 – 07/03	3733	
OMEGA B Estate (21_, 22_, 23_)	2.2 DTI 16V	81	09/00 – 07/03	3717	
OMEGA B Estate (21_, 22_, 23_)	2.2 DTI 16V	81	09/00 – 07/03	3733	
OMEGA B Estate (21_, 22_, 23_)	2.2 DTI 16V	88	09/00 – 07/03	3717	
OMEGA B Estate (21_, 22_, 23_)	2.2 DTI 16V	88	09/00 – 07/03	3733	
OMEGA B Estate (21_, 22_, 23_)	2.5 DTI	110	09/01 – 07/03	3717	
OMEGA B Estate (21_, 22_, 23_)	2.5 DTI	110	09/01 – 07/03	3733	
OMEGA B Estate (21_, 22_, 23_)	2.5 TD	96	04/94 – 07/01	3717	
OMEGA B Estate (21_, 22_, 23_)	2.5 TD	96	04/94 – 07/01	3733	
OMEGA B Estate (21_, 22_, 23_)	2.5 V6	125	03/94 – 09/00	3717	
OMEGA B Estate (21_, 22_, 23_)	2.5 V6	125	03/94 – 09/00	3733	
OMEGA B Estate (21_, 22_, 23_)	2.6 V6	132	09/00 – 07/03	3717	
OMEGA B Estate (21_, 22_, 23_)	2.6 V6	132	09/00 – 07/03	3733	
OMEGA B Estate (21_, 22_, 23_)	3.0 V6	155	04/94 – 02/01	3717	
OMEGA B Estate (21_, 22_, 23_)	3.0 V6	155	04/94 – 02/01	3733	
OMEGA B Estate (21_, 22_, 23_)	3.2 V6	160	02/01 – 07/03	3717	
OMEGA B Estate (21_, 22_, 23_)	3.2 V6	160	02/01 – 07/03	3733	
REKORD E (17_-19_, 11_, 14_, 16_)	17	44	09/77 – 10/82	3335	
REKORD E (17_-19_, 11_, 14_, 16_)	17	44	09/77 – 10/82	3365	
REKORD E (17_-19_, 11_, 14_, 16_)	17	44	09/77 – 10/82	3410	
REKORD E (17_-19_, 11_, 14_, 16_)	18	55	11/82 – 08/86	3410	
REKORD E (17_-19_, 11_, 14_, 16_)	19	55	09/77 – 10/82	3335	
REKORD E (17_-19_, 11_, 14_, 16_)	19	55	09/77 – 10/82	3365	
REKORD E (17_-19_, 11_, 14_, 16_)	19	55	09/77 – 10/82	3410	
REKORD E (17_-19_, 11_, 14_, 16_)	20	66	09/77 – 10/82	3335	
REKORD E (17_-19_, 11_, 14_, 16_)	20	66	09/77 – 10/82	3365	
REKORD E (17_-19_, 11_, 14_, 16_)	20	66	09/77 – 10/82	3410	
REKORD E (17_-19_, 11_, 14_, 16_)	1.8 E	74	05/85 – 08/86	3410	
REKORD E (17_-19_, 11_, 14_, 16_)	1.8 S	66	11/82 – 08/86	3410	
REKORD E (17_-19_, 11_, 14_, 16_)	2.0 D	43	09/77 – 10/82	3335	
REKORD E (17_-19_, 11_, 14_, 16_)	2.0 D	43	09/77 – 10/82	3365	
REKORD E (17_-19_, 11_, 14_, 16_)	2.0 D	43	09/77 – 10/82	3410	
REKORD E (17_-19_, 11_, 14_, 16_)	2.0 E	81	09/77 – 10/84	3335	
REKORD E (17_-19_, 11_, 14_, 16_)	2.0 E	81	09/77 – 10/84	3365	
REKORD E (17_-19_, 11_, 14_, 16_)	2.0 E	81	09/77 – 10/84	3410	
REKORD E (17_-19_, 11_, 14_, 16_)	2.0 S	74	08/77 – 08/86	3335	
REKORD E (17_-19_, 11_, 14_, 16_)	2.0 S	74	08/77 – 08/86	3365	
REKORD E (17_-19_, 11_, 14_, 16_)	2.0 S	74	08/77 – 08/86	3410	
REKORD E (17_-19_, 11_, 14_, 16_)	2.1 D	44	09/77 – 07/78	3335	
REKORD E (17_-19_, 11_, 14_, 16_)	2.1 D	44	09/77 – 07/78	3365	
REKORD E (17_-19_, 11_, 14_, 16_)	2.2 D	48	08/78 – 08/83	3335	
REKORD E (17_-19_, 11_, 14_, 16_)	2.2 D	48	08/78 – 08/83	3365	
REKORD E (17_-19_, 11_, 14_, 16_)	2.2 D	48	08/78 – 08/83	3410	
REKORD E (17_-19_, 11_, 14_, 16_)	2.2 D	52	11/82 – 08/86	3410	
REKORD E (17_-19_, 11_, 14_, 16_)	2.2 E	85	11/84 – 08/86	3410	
REKORD E (17_-19_, 11_, 14_, 16_)	2.2 TD	63	06/84 – 08/86	3410	
REKORD E Estate (61_, 66_, 67_)	17	44	09/77 – 10/82	3335	
REKORD E Estate (61_, 66_, 67_)	17	44	09/77 – 10/82	3365	
REKORD E Estate (61_, 66_, 67_)	17	44	09/77 – 10/82	3410	
REKORD E Estate (61_, 66_, 67_)	18	55	11/82 – 08/86	3410	
REKORD E Estate (61_, 66_, 67_)	19	55	09/77 – 10/82	3335	
REKORD E Estate (61_, 66_, 67_)	19	55	09/77 – 10/82	3365	
REKORD E Estate (61_, 66_, 67_)	19	55	09/77 – 10/82	3410	
REKORD E Estate (61_, 66_, 67_)	20	66	09/77 – 10/82	3335	
REKORD E Estate (61_, 66_, 67_)	20	66	09/77 – 10/82	3365	
REKORD E Estate (61_, 66_, 67_)	20	66	09/77 – 10/82	3410	
REKORD E Estate (61_, 66_, 67_)	1.8 E	74	05/85 – 08/86	3410	
REKORD E Estate (61_, 66_, 67_)	1.8 S	66	11/82 – 08/86	3410	
REKORD E Estate (61_, 66_, 67_)	2.0 D	43	09/77 – 10/82	3335	
REKORD E Estate (61_, 66_, 67_)	2.0 D	43	09/77 – 10/82	3365	
REKORD E Estate (61_, 66_, 67_)	2.0 D	43	09/77 – 10/82	3410	
REKORD E Estate (61_, 66_, 67_)	2.0 E	81	09/77 – 10/84	3335	
REKORD E Estate (61_, 66_, 67_)	2.0 E	81	09/77 – 10/84	3365	
REKORD E Estate (61_, 66_, 67_)	2.0 E	81	09/77 – 10/84	3410	
REKORD E Estate (61_, 66_, 67_)	2.0 S	74	08/77 – 08/86	3335	
REKORD E Estate (61_, 66_, 67_)	2.0 S	74	08/77 – 08/86	3365	
REKORD E Estate (61_, 66_, 67_)	2.0 S	74	08/77 – 08/86	3410	
REKORD E Estate (61_, 66_, 67_)	2.1 D	44	09/77 – 07/78	3335	
REKORD E Estate (61_, 66_, 67_)	2.1 D	44	09/77 – 07/78	3365	
REKORD E Estate (61_, 66_, 67_)	2.2 D	48	08/78 – 08/83	3335	
REKORD E Estate (61_, 66_, 67_)	2.2 D	48	08/78 – 08/83	3365	

MAKE & MODEL		KW	YEAR		
OPEL					
REKORD E Estate (61_, 66_, 67_)	2.2 D	48	08/78 – 08/83	3410	
REKORD E Estate (61_, 66_, 67_)	2.2 E	85	11/84 – 08/86	3410	
REKORD E Estate (61_, 66_, 67_)	2.2 TD	63	06/84 – 08/86	3410	
REKORD E Estate (61_, 66_, 67_)	2.3 D	52	11/82 – 08/86	3410	
SENATOR B (29_)	30	115	09/87 – 09/93	3717	
SENATOR B (29_)	30	115	09/87 – 09/93	3733	
SENATOR B (29_)	30	130	01/88 – 09/90	3717	
SENATOR B (29_)	30	130	01/88 – 09/90	3733	
SENATOR B (29_)	36	147	09/91 – 08/93	3717	
SENATOR B (29_)	36	147	09/91 – 08/93	3733	
SENATOR B (29_)	2.5 i	103	09/90 – 09/93	3717	
SENATOR B (29_)	2.5 i	103	09/90 – 09/93	3733	
SENATOR B (29_)	2.6 i	110	09/90 – 09/93	3717	
SENATOR B (29_)	2.6 i	110	09/90 – 09/93	3733	
SENATOR B (29_)	3.0 24V	150	09/89 – 09/93	3717	
SENATOR B (29_)	3.0 24V	150	09/89 – 09/93	3733	
SENATOR B (29_)	3.0 i CAT	130	01/88 – 09/93	3717	
SENATOR B (29_)	3.0 i CAT	130	01/88 – 09/93	3733	
SIGNUM	18	90	05/03 -		3853/1
SIGNUM	18	103	09/05 -		3853/1
SIGNUM	1.8 (Z 18 XER)	103	09/05 -	4211	
SIGNUM	1.8 (Z 18 XE)	90	05/03 -	4211	
SIGNUM	1.9 CDTI	74	08/05 -		3853/1
SIGNUM	1.9 CDTI	88	04/04 -		3853/1
SIGNUM	1.9 CDTI	110	04/04 -		3853/1
SIGNUM	1.9 CDTI (Z 19 DT)	88	04/04 -	4211	
SIGNUM	1.9 CDTI (Z 19 DTH)	110	04/04 -	4211	
SIGNUM	1.9 CDTI (Z 19 DT)	74	08/05 -	4211	
SIGNUM	2.0 DTI	74	05/03 -		3853/1
SIGNUM	2.0 DTI (Y 20 DTH)	74	05/03 -	4211	
SIGNUM	2.0 Turbo	129	05/03 -		3853/1
SIGNUM	2.0 Turbo (Z 20 NET)	129	05/03 -	4211	
SIGNUM	2.2 direct	114	05/03 -		3853/1
SIGNUM	2.2 direct (Z 22 YH)	114	05/03 -	4211	
SIGNUM	2.2 DTI	92	05/03 -		3853/1
SIGNUM	2.2 DTI (Y 22 DTR)	92	05/03 -	4211	
SIGNUM	2.2 DTI 16V	86	05/03 – 06/08		3853/1
SIGNUM	2.8 V6 Turbo	169	09/05 -		3853/1
SIGNUM	2.8 V6 Turbo	184	01/06 -		3853/1
SIGNUM	2.8 V6 Turbo (Z 28 NEL)	169	09/05 -	4211	
SIGNUM	2.8 V6 Turbo (Z 28 NET)	184	01/06 -	4211	
SIGNUM	3.0 V6 CDTI	130	05/03 -		3853/1
SIGNUM	3.0 V6 CDTI	135	09/05 -		3853/1
SIGNUM	3.0 V6 CDTI (Y 30 DT)	130	05/03 -	4211	
SIGNUM	3.0 V6 CDTI (Z 30 DT)	135	09/05 -	4211	
SIGNUM	3.2 V6	155	05/03 -		3853/1
SIGNUM	3.2 V6 (Z 32 SE)	155	05/03 -	4211	
TIGRA (95_)	1.4 16V	63	08/97 – 12/00	3623	
TIGRA (95_)	1.4 16V	66	07/94 – 12/00	3623	
TIGRA (95_)	1.6 16V	74	08/97 – 08/98	3623	
TIGRA (95_)	1.6 16V	78	07/94 – 08/98	3623	
TIGRA TwinTop	14	66	06/04 -	3846	
TIGRA TwinTop	18	92	06/04 -	3846	
TIGRA TwinTop	1.3 CDTI	51	06/04 -	3846	
VECTRA A (86_, 87_)	16	51	08/92 – 07/93	3410	
VECTRA A (86_, 87_)	16	51	08/92 – 07/93	3623	
VECTRA A (86_, 87_)	16	60	09/88 – 05/93	3410	
VECTRA A (86_, 87_)	16	60	09/88 – 05/93	3623	
VECTRA A (86_, 87_)	20	74	09/88 – 09/89		3469
VECTRA A (86_, 87_)	20	74	09/88 – 09/89	3470	
VECTRA A (86_, 87_)	20	74	09/88 – 09/89	3505	
VECTRA A (86_, 87_)	20	74	09/88 – 09/89	3615	
VECTRA A (86_, 87_)	1.4 S	55	09/88 – 06/92	3410	
VECTRA A (86_, 87_)	1.4 S	55	09/88 – 06/92	3623	
VECTRA A (86_, 87_)	1.6 i	52	09/93 – 11/95	3410	
VECTRA A (86_, 87_)	1.6 i	52	09/93 – 11/95	3623	
VECTRA A (86_, 87_)	1.6 i	55	09/88 – 11/95	3410	
VECTRA A (86_, 87_)	1.6 i	55	09/93 – 11/95	3410	
VECTRA A (86_, 87_)	1.6 i	55	09/88 – 11/95	3623	
VECTRA A (86_, 87_)	1.6 i	55	09/93 – 11/95	3623	
VECTRA A (86_, 87_)	1.7 D	42	10/88 – 09/92	3410	

MAKE & MODEL		KW	YEAR		
OPEL					
VECTRA A (86_, 87_)	1.7 D	42	10/88 – 09/92	3470	
VECTRA A (86_, 87_)	1.7 D	42	10/88 – 09/92	3505	
VECTRA A (86_, 87_)	1.7 D	42	10/88 – 09/92	3615	
VECTRA A (86_, 87_)	1.7 D	42	10/88 – 09/92	3623	
VECTRA A (86_, 87_)	1.7 D	44	07/92 – 11/95	3410	
VECTRA A (86_, 87_)	1.7 D	44	07/92 – 11/95	3470	
VECTRA A (86_, 87_)	1.7 D	44	07/92 – 11/95	3505	
VECTRA A (86_, 87_)	1.7 D	44	07/92 – 11/95	3615	
VECTRA A (86_, 87_)	1.7 D	44	07/92 – 11/95	3623	
VECTRA A (86_, 87_)	1.7 TD	60	03/90 – 11/95	3410	
VECTRA A (86_, 87_)	1.7 TD	60	03/90 – 11/95	3470	
VECTRA A (86_, 87_)	1.7 TD	60	03/90 – 11/95	3505	
VECTRA A (86_, 87_)	1.7 TD	60	03/90 – 11/95	3615	
VECTRA A (86_, 87_)	1.7 TD	60	03/90 – 11/95	3623	
VECTRA A (86_, 87_)	1.8 i CAT	66	03/90 – 11/95	3410	
VECTRA A (86_, 87_)	1.8 i CAT	66	03/90 – 11/95	3470	
VECTRA A (86_, 87_)	1.8 i CAT	66	03/90 – 11/95	3505	
VECTRA A (86_, 87_)	1.8 i CAT	66	03/90 – 11/95	3615	
VECTRA A (86_, 87_)	1.8 i CAT	66	03/90 – 11/95	3623	
VECTRA A (86_, 87_)	1.8 S	65	09/88 – 07/89	3410	
VECTRA A (86_, 87_)	1.8 S	65	09/88 – 07/89	3470	
VECTRA A (86_, 87_)	1.8 S	65	09/88 – 07/89	3505	
VECTRA A (86_, 87_)	1.8 S	65	09/88 – 07/89	3615	
VECTRA A (86_, 87_)	1.8 S	65	09/88 – 07/89	3623	
VECTRA A (86_, 87_)	1.8 S	66	09/89 – 10/90	3410	
VECTRA A (86_, 87_)	1.8 S	66	09/89 – 10/90	3470	
VECTRA A (86_, 87_)	1.8 S	66	09/89 – 10/90	3505	
VECTRA A (86_, 87_)	1.8 S	66	09/89 – 10/90	3615	
VECTRA A (86_, 87_)	1.8 S	66	09/89 – 10/90	3623	
VECTRA A (86_, 87_)	1.8 S 4x4	65	01/89 – 07/89		3469
VECTRA A (86_, 87_)	1.8 S 4x4	65	01/89 – 07/89	3470	
VECTRA A (86_, 87_)	1.8 S 4x4	65	01/89 – 07/89	3505	
VECTRA A (86_, 87_)	1.8 S 4x4	65	01/89 – 07/89	3615	
VECTRA A (86_, 87_)	2.0 i	85	09/88 – 10/90		3469
VECTRA A (86_, 87_)	2.0 i	85	09/88 – 10/90	3470	
VECTRA A (86_, 87_)	2.0 i	85	09/88 – 10/90	3505	
VECTRA A (86_, 87_)	2.0 i	85	09/88 – 10/90	3615	
VECTRA A (86_, 87_)	2.0 i	95	09/88 – 09/92		3469
VECTRA A (86_, 87_)	2.0 i	95	09/88 – 09/92	3470	
VECTRA A (86_, 87_)	2.0 i	95	09/88 – 09/92	3505	
VECTRA A (86_, 87_)	2.0 i	95	09/88 – 09/92	3615	
VECTRA A (86_, 87_)	2.0 i 16V	100	06/94 – 11/95		3469
VECTRA A (86_, 87_)	2.0 i 16V	100	06/94 – 11/95	3470	
VECTRA A (86_, 87_)	2.0 i 16V	100	06/94 – 11/95	3505	
VECTRA A (86_, 87_)	2.0 i 16V	100	06/94 – 11/95	3615	
VECTRA A (86_, 87_)	2.0 i 16V 4x4	100	06/94 – 11/95		3469
VECTRA A (86_, 87_)	2.0 i 16V 4x4	100	06/94 – 11/95	3470	
VECTRA A (86_, 87_)	2.0 i 16V 4x4	100	06/94 – 11/95	3505	
VECTRA A (86_, 87_)	2.0 i 16V 4x4	100	06/94 – 11/95	3615	
VECTRA A (86_, 87_)	2.0 i 4x4	85	01/89 – 10/90		3469
VECTRA A (86_, 87_)	2.0 i 4x4	85	01/89 – 10/90	3470	
VECTRA A (86_, 87_)	2.0 i 4x4	85	01/89 – 10/90	3505	
VECTRA A (86_, 87_)	2.0 i 4x4	85	01/89 – 10/90	3615	
VECTRA A (86_, 87_)	2.0 i 4x4	95	01/89 – 09/92		3469
VECTRA A (86_, 87_)	2.0 i 4x4	95	01/89 – 09/92	3470	
VECTRA A (86_, 87_)	2.0 i 4x4	95	01/89 – 09/92	3505	
VECTRA A (86_, 87_)	2.0 i 4x4	95	01/89 – 09/92	3615	
VECTRA A (86_, 87_)	2.0 i 4x4 CAT	85	01/89 – 11/95		3469
VECTRA A (86_, 87_)	2.0 i 4x4 CAT	85	01/89 – 11/95	3470	
VECTRA A (86_, 87_)	2.0 i 4x4 CAT	85	01/89 – 11/95	3505	
VECTRA A (86_, 87_)	2.0 i 4x4 CAT	85	01/89 – 11/95	3615	
VECTRA A (86_, 87_)	2.0 i CAT	85	09/88 – 11/95		3469
VECTRA A (86_, 87_)	2.0 i CAT	85	09/88 – 11/95	3470	
VECTRA A (86_, 87_)	2.0 i CAT	85	09/88 – 11/95	3505	
VECTRA A (86_, 87_)	2.0 i CAT	85	09/88 – 11/95	3615	
VECTRA A (86_, 87_)	2.0 i Turbo 4x4	150	06/94 – 11/95		3469
VECTRA A (86_, 87_)	2.0 i Turbo 4x4	150	06/94 – 11/95	3736	
VECTRA A (86_, 87_)	2.5 CD 4x4	125	08/92 – 08/95		3469
VECTRA A (86_, 87_)	2.5 CD 4x4	125	08/92 – 08/95	3470	
VECTRA A (86_, 87_)	2.5 CD 4x4	125	08/92 – 08/95	3505	
VECTRA A (86_, 87_)	2.5 CD 4x4	125	08/92 – 08/95	3615	

MAKE & MODEL		KW	YEAR		
OPEL					
VECTRA A (86_, 87_)	2.5 V6	125	02/93 – 11/95		3469
VECTRA A (86_, 87_)	2.5 V6	125	02/93 – 11/95	3736	
VECTRA A (86_, 87_)	2000 16V 4x4	110	01/89 – 10/90		3469
VECTRA A (86_, 87_)	2000 16V 4x4	110	01/89 – 10/90	3470	
VECTRA A (86_, 87_)	2000 16V 4x4	110	01/89 – 10/90	3505	
VECTRA A (86_, 87_)	2000 16V 4x4	110	01/89 – 10/90	3615	
VECTRA A (86_, 87_)	2000/GT 16V	110	01/89 – 06/94		3469
VECTRA A (86_, 87_)	2000/GT 16V	110	01/89 – 06/94	3470	
VECTRA A (86_, 87_)	2000/GT 16V	110	01/89 – 06/94	3505	
VECTRA A (86_, 87_)	2000/GT 16V	110	01/89 – 06/94	3615	
VECTRA A (86_, 87_)	2000/GT 16V 4x4 CAT	110	02/90 – 11/95		3469
VECTRA A (86_, 87_)	2000/GT 16V 4x4 CAT	110	02/90 – 11/95	3470	
VECTRA A (86_, 87_)	2000/GT 16V 4x4 CAT	110	02/90 – 11/95	3505	
VECTRA A (86_, 87_)	2000/GT 16V 4x4 CAT	110	02/90 – 11/95	3615	
VECTRA A (86_, 87_)	2000/GT 16V CAT	110	02/90 – 11/95		3469
VECTRA A (86_, 87_)	2000/GT 16V CAT	110	02/90 – 11/95	3470	
VECTRA A (86_, 87_)	2000/GT 16V CAT	110	02/90 – 11/95	3505	
VECTRA A (86_, 87_)	2000/GT 16V CAT	110	02/90 – 11/95	3615	
VECTRA A Hatchback (88_, 89_)	20	74	04/88 – 09/89		3469
VECTRA A Hatchback (88_, 89_)	20	74	04/88 – 09/89	3470	
VECTRA A Hatchback (88_, 89_)	20	74	04/88 – 09/89	3505	
VECTRA A Hatchback (88_, 89_)	20	74	04/88 – 09/89	3615	
VECTRA A Hatchback (88_, 89_)	1.4 S	55	04/88 – 06/92	3410	
VECTRA A Hatchback (88_, 89_)	1.4 S	55	04/88 – 06/92	3623	
VECTRA A Hatchback (88_, 89_)	1.6 i	52	09/93 – 11/95	3410	
VECTRA A Hatchback (88_, 89_)	1.6 i	52	09/93 – 11/95	3623	
VECTRA A Hatchback (88_, 89_)	1.6 i	55	09/93 – 11/95	3410	
VECTRA A Hatchback (88_, 89_)	1.6 i	55	09/93 – 11/95	3623	
VECTRA A Hatchback (88_, 89_)	1.6 i CAT	55	09/88 – 11/95	3410	
VECTRA A Hatchback (88_, 89_)	1.6 i CAT	55	09/88 – 11/95	3623	
VECTRA A Hatchback (88_, 89_)	1.6 S	60	09/88 – 05/93	3410	
VECTRA A Hatchback (88_, 89_)	1.6 S	60	09/88 – 05/93	3623	
VECTRA A Hatchback (88_, 89_)	1.7 D	42	09/88 – 09/92	3410	
VECTRA A Hatchback (88_, 89_)	1.7 D	42	09/88 – 09/92	3470	
VECTRA A Hatchback (88_, 89_)	1.7 D	42	09/88 – 09/92	3505	
VECTRA A Hatchback (88_, 89_)	1.7 D	42	09/88 – 09/92	3615	
VECTRA A Hatchback (88_, 89_)	1.7 D	42	09/88 – 09/92	3623	
VECTRA A Hatchback (88_, 89_)	1.7 D	44	07/92 – 11/95	3410	
VECTRA A Hatchback (88_, 89_)	1.7 D	44	07/92 – 11/95	3470	
VECTRA A Hatchback (88_, 89_)	1.7 D	44	07/92 – 11/95	3505	
VECTRA A Hatchback (88_, 89_)	1.7 D	44	07/92 – 11/95	3615	
VECTRA A Hatchback (88_, 89_)	1.7 D	44	07/92 – 11/95	3623	
VECTRA A Hatchback (88_, 89_)	1.7 TD	60	03/90 – 11/95	3410	
VECTRA A Hatchback (88_, 89_)	1.7 TD	60	03/90 – 11/95	3470	
VECTRA A Hatchback (88_, 89_)	1.7 TD	60	03/90 – 11/95	3505	
VECTRA A Hatchback (88_, 89_)	1.7 TD	60	03/90 – 11/95	3615	
VECTRA A Hatchback (88_, 89_)	1.7 TD	60	03/90 – 11/95	3623	
VECTRA A Hatchback (88_, 89_)	1.8 i	66	09/88 – 10/90	3410	
VECTRA A Hatchback (88_, 89_)	1.8 i	66	09/88 – 10/90	3623	
VECTRA A Hatchback (88_, 89_)	1.8 i CAT	66	03/90 – 11/95	3410	
VECTRA A Hatchback (88_, 89_)	1.8 i CAT	66	03/90 – 11/95	3470	
VECTRA A Hatchback (88_, 89_)	1.8 i CAT	66	03/90 – 11/95	3505	
VECTRA A Hatchback (88_, 89_)	1.8 i CAT	66	03/90 – 11/95	3615	
VECTRA A Hatchback (88_, 89_)	1.8 i CAT	66	03/90 – 11/95	3623	
VECTRA A Hatchback (88_, 89_)	1.8 S	65	09/88 – 07/89	3410	
VECTRA A Hatchback (88_, 89_)	1.8 S	65	09/88 – 07/89	3623	
VECTRA A Hatchback (88_, 89_)	2.0 i	85	09/88 – 10/90		3469
VECTRA A Hatchback (88_, 89_)	2.0 i	85	09/88 – 10/90	3470	
VECTRA A Hatchback (88_, 89_)	2.0 i	85	09/88 – 10/90	3505	
VECTRA A Hatchback (88_, 89_)	2.0 i	85	09/88 – 10/90	3615	
VECTRA A Hatchback (88_, 89_)	2.0 i 16V	100	06/94 – 11/95		3469
VECTRA A Hatchback (88_, 89_)	2.0 i 16V	100	06/94 – 11/95	3470	
VECTRA A Hatchback (88_, 89_)	2.0 i 16V	100	06/94 – 11/95	3505	
VECTRA A Hatchback (88_, 89_)	2.0 i 16V	100	06/94 – 11/95	3615	
VECTRA A Hatchback (88_, 89_)	2.0 i 16V	110	02/89 – 10/90		3469
VECTRA A Hatchback (88_, 89_)	2.0 i 16V	110	02/89 – 10/90	3470	
VECTRA A Hatchback (88_, 89_)	2.0 i 16V	110	02/89 – 10/90	3505	
VECTRA A Hatchback (88_, 89_)	2.0 i 16V	110	02/89 – 10/90	3615	
VECTRA A Hatchback (88_, 89_)	2.0 i 16V CAT	110	02/90 – 11/95		3469
VECTRA A Hatchback (88_, 89_)	2.0 i 16V CAT	110	02/90 – 11/95	3470	
VECTRA A Hatchback (88_, 89_)	2.0 i 16V CAT	110	02/90 – 11/95	3505	

MAKE & MODEL		KW	YEAR		
OPEL					
VECTRA A Hatchback (88_, 89_)	2.0 i 16V CAT	110	02/90 – 11/95	3615	
VECTRA A Hatchback (88_, 89_)	2.0 i CAT	85	09/88 – 11/95		3469
VECTRA A Hatchback (88_, 89_)	2.0 i CAT	85	09/88 – 11/95	3470	
VECTRA A Hatchback (88_, 89_)	2.0 i CAT	85	09/88 – 11/95	3505	
VECTRA A Hatchback (88_, 89_)	2.0 i CAT	85	09/88 – 11/95	3615	
VECTRA A Hatchback (88_, 89_)	2.0 i GT	95	09/88 – 11/95		3469
VECTRA A Hatchback (88_, 89_)	2.0 i GT	95	09/88 – 11/95	3470	
VECTRA A Hatchback (88_, 89_)	2.0 i GT	95	09/88 – 11/95	3505	
VECTRA A Hatchback (88_, 89_)	2.0 i GT	95	09/88 – 11/95	3615	
VECTRA A Hatchback (88_, 89_)	2.5 V6	125	02/93 – 11/95		3469
VECTRA A Hatchback (88_, 89_)	2.5 V6	125	02/93 – 11/95	3736	
VECTRA B (36_)	1.6 GL	60	09/95 – 08/96	3470	
VECTRA B (36_)	1.6 GL	60	09/95 – 08/96	3505	
VECTRA B (36_)	1.6 GL	60	09/95 – 08/96	3615	
VECTRA B (36_)	1.6 GL	60	09/95 – 08/96	3665	
VECTRA B (36_)	1.6 i	55	10/95 – 04/02	3470	
VECTRA B (36_)	1.6 i	55	10/95 – 04/02	3470	
VECTRA B (36_)	1.6 i	55	10/95 – 04/02	3505	
VECTRA B (36_)	1.6 i	55	10/95 – 04/02	3505	
VECTRA B (36_)	1.6 i	55	10/95 – 04/02	3615	
VECTRA B (36_)	1.6 i	55	10/95 – 04/02	3615	
VECTRA B (36_)	1.6 i	55	10/95 – 04/02	3665	
VECTRA B (36_)	1.6 i	55	10/95 – 04/02	3665	
VECTRA B (36_)	1.6 i 16V	74	10/95 – 04/02	3470	
VECTRA B (36_)	1.6 i 16V	74	10/95 – 04/02	3505	
VECTRA B (36_)	1.6 i 16V	74	10/95 – 04/02	3615	
VECTRA B (36_)	1.6 i 16V	74	10/95 – 04/02	3665	
VECTRA B (36_)	1.6 i 16V	74	10/95 – 04/02	3717	
VECTRA B (36_)	1.7 TD	60	10/95 – 12/98	3470	
VECTRA B (36_)	1.7 TD	60	10/95 – 12/98	3505	
VECTRA B (36_)	1.7 TD	60	10/95 – 12/98	3615	
VECTRA B (36_)	1.7 TD	60	10/95 – 12/98	3717	
VECTRA B (36_)	1.8 i 16V	85	10/95 – 09/00	3470	
VECTRA B (36_)	1.8 i 16V	85	10/95 – 09/00	3470	
VECTRA B (36_)	1.8 i 16V	85	10/95 – 09/00	3505	
VECTRA B (36_)	1.8 i 16V	85	10/95 – 09/00	3505	
VECTRA B (36_)	1.8 i 16V	85	10/95 – 09/00	3615	
VECTRA B (36_)	1.8 i 16V	85	10/95 – 09/00	3615	
VECTRA B (36_)	1.8 i 16V	85	10/95 – 09/00	3665	
VECTRA B (36_)	1.8 i 16V	85	10/95 – 09/00	3665	
VECTRA B (36_)	1.8 i 16V	85	10/95 – 09/00	3717	
VECTRA B (36_)	1.8 i 16V	85	10/95 – 09/00	3717	
VECTRA B (36_)	1.8 i 16V	92	09/00 – 04/02	3470	
VECTRA B (36_)	1.8 i 16V	92	09/00 – 04/02	3505	
VECTRA B (36_)	1.8 i 16V	92	09/00 – 04/02	3615	
VECTRA B (36_)	1.8 i 16V	92	09/00 – 04/02	3665	
VECTRA B (36_)	1.8 i 16V	92	09/00 – 04/02	3717	
VECTRA B (36_)	2.0 DI 16V	60	11/96 – 04/02	3470	
VECTRA B (36_)	2.0 DI 16V	60	11/96 – 04/02	3505	
VECTRA B (36_)	2.0 DI 16V	60	11/96 – 04/02	3615	
VECTRA B (36_)	2.0 DI 16V	60	11/96 – 04/02	3665	
VECTRA B (36_)	2.0 DTI 16V	74	06/97 – 04/02	3470	
VECTRA B (36_)	2.0 DTI 16V	74	06/97 – 04/02	3505	
VECTRA B (36_)	2.0 DTI 16V	74	06/97 – 04/02	3615	
VECTRA B (36_)	2.0 DTI 16V	74	06/97 – 04/02	3665	
VECTRA B (36_)	2.0 DTI 16V	74	06/97 – 04/02	3717	
VECTRA B (36_)	2.0 i	82	10/95 – 04/02	3665	
VECTRA B (36_)	2.0 i	82	10/95 – 04/02	3717	
VECTRA B (36_)	2.0 i 16V	100	10/95 – 09/00	3665	
VECTRA B (36_)	2.0 i 16V	100	10/95 – 09/00	3717	
VECTRA B (36_)	2.2 DTI 16V	88	09/00 – 04/02	3665	
VECTRA B (36_)	2.2 DTI 16V	88	09/00 – 04/02	3717	
VECTRA B (36_)	2.2 DTI 16V	92	09/00 – 04/02	3665	
VECTRA B (36_)	2.2 DTI 16V	92	09/00 – 04/02	3717	
VECTRA B (36_)	2.2 i 16V	108	09/00 – 04/02	3665	
VECTRA B (36_)	2.2 i 16V	108	09/00 – 04/02	3717	
VECTRA B (36_)	2.5 i V6	125	10/95 – 09/00	3665	
VECTRA B (36_)	2.5 i V6	125	10/95 – 09/00	3717	
VECTRA B (36_)	2.6 i V6	125	09/00 – 04/02	3665	
VECTRA B (36_)	2.6 i V6	125	09/00 – 04/02	3717	
VECTRA B (36_)	i 500 2.5	143	05/98 – 09/00	3665	

MAKE & MODEL		KW	YEAR		
OPEL					
VECTRA B (36_)	i 500 2.5	143	05/98 – 09/00	3717	
VECTRA B Estate (31_)	1.6 i	55	11/96 – 06/00	3470	
VECTRA B Estate (31_)	1.6 i	55	11/96 – 06/00	3470	
VECTRA B Estate (31_)	1.6 i	55	11/96 – 06/00	3505	
VECTRA B Estate (31_)	1.6 i	55	11/96 – 06/00	3505	
VECTRA B Estate (31_)	1.6 i	55	11/96 – 06/00	3615	
VECTRA B Estate (31_)	1.6 i	55	11/96 – 06/00	3615	
VECTRA B Estate (31_)	1.6 i	55	11/96 – 06/00	3665	
VECTRA B Estate (31_)	1.6 i	55	11/96 – 06/00	3665	
VECTRA B Estate (31_)	1.6 i 16V	74	11/96 – 07/02	3470	
VECTRA B Estate (31_)	1.6 i 16V	74	11/96 – 07/02	3505	
VECTRA B Estate (31_)	1.6 i 16V	74	11/96 – 07/02	3615	
VECTRA B Estate (31_)	1.6 i 16V	74	11/96 – 07/02	3665	
VECTRA B Estate (31_)	1.6 i 16V	74	11/96 – 07/02	3717	
VECTRA B Estate (31_)	1.7 TD	60	11/96 – 12/97	3470	
VECTRA B Estate (31_)	1.7 TD	60	11/96 – 12/97	3505	
VECTRA B Estate (31_)	1.7 TD	60	11/96 – 12/97	3615	
VECTRA B Estate (31_)	1.7 TD	60	11/96 – 12/97	3717	
VECTRA B Estate (31_)	1.8 i 16V	85	11/96 – 09/00	3470	
VECTRA B Estate (31_)	1.8 i 16V	85	11/96 – 09/00	3470	
VECTRA B Estate (31_)	1.8 i 16V	85	11/96 – 09/00	3505	
VECTRA B Estate (31_)	1.8 i 16V	85	11/96 – 09/00	3505	
VECTRA B Estate (31_)	1.8 i 16V	85	11/96 – 09/00	3615	
VECTRA B Estate (31_)	1.8 i 16V	85	11/96 – 09/00	3615	
VECTRA B Estate (31_)	1.8 i 16V	85	11/96 – 09/00	3665	
VECTRA B Estate (31_)	1.8 i 16V	85	11/96 – 09/00	3665	
VECTRA B Estate (31_)	1.8 i 16V	85	11/96 – 09/00	3717	
VECTRA B Estate (31_)	1.8 i 16V	85	11/96 – 09/00	3717	
VECTRA B Estate (31_)	1.8 i 16V	92	09/00 – 07/03	3470	
VECTRA B Estate (31_)	1.8 i 16V	92	09/00 – 07/03	3505	
VECTRA B Estate (31_)	1.8 i 16V	92	09/00 – 07/03	3615	
VECTRA B Estate (31_)	1.8 i 16V	92	09/00 – 07/03	3665	
VECTRA B Estate (31_)	1.8 i 16V	92	09/00 – 07/03	3717	
VECTRA B Estate (31_)	2.0 DI 16V	60	11/96 – 06/00	3470	
VECTRA B Estate (31_)	2.0 DI 16V	60	11/96 – 06/00	3505	
VECTRA B Estate (31_)	2.0 DI 16V	60	11/96 – 06/00	3615	
VECTRA B Estate (31_)	2.0 DI 16V	60	11/96 – 06/00	3665	
VECTRA B Estate (31_)	2.0 DI 16V	60	11/96 – 06/00	3717	
VECTRA B Estate (31_)	2.0 DTI 16V	74	06/97 – 07/03	3470	
VECTRA B Estate (31_)	2.0 DTI 16V	74	06/97 – 07/03	3505	
VECTRA B Estate (31_)	2.0 DTI 16V	74	06/97 – 07/03	3615	
VECTRA B Estate (31_)	2.0 DTI 16V	74	06/97 – 07/03	3665	
VECTRA B Estate (31_)	2.0 DTI 16V	74	06/97 – 07/03	3717	
VECTRA B Estate (31_)	2.0 i	82	11/96 – 02/02	3665	
VECTRA B Estate (31_)	2.0 i	82	11/96 – 02/02	3717	
VECTRA B Estate (31_)	2.0 i 16V	100	11/96 – 09/00	3665	
VECTRA B Estate (31_)	2.0 i 16V	100	11/96 – 09/00	3717	
VECTRA B Estate (31_)	2.2 DTI 16V	88	09/00 – 04/02	3665	
VECTRA B Estate (31_)	2.2 DTI 16V	88	09/00 – 04/02	3717	
VECTRA B Estate (31_)	2.2 DTI 16V	92	09/00 – 07/03	3665	
VECTRA B Estate (31_)	2.2 DTI 16V	92	09/00 – 07/03	3717	
VECTRA B Estate (31_)	2.2 i 16V	108	09/00 – 07/03	3665	
VECTRA B Estate (31_)	2.2 i 16V	108	09/00 – 07/03	3717	
VECTRA B Estate (31_)	2.5 i V6	125	11/96 – 09/00	3665	
VECTRA B Estate (31_)	2.5 i V6	125	11/96 – 09/00	3717	
VECTRA B Estate (31_)	2.6 i V6	125	09/00 – 07/03	3665	
VECTRA B Estate (31_)	2.6 i V6	125	09/00 – 07/03	3717	
VECTRA B Estate (31_)	i 500 2.5	143	05/98 – 09/00	3665	
VECTRA B Estate (31_)	i 500 2.5	143	05/98 – 09/00	3717	
VECTRA B Hatchback (38_)	25	144	10/99 – 06/00	3665	
VECTRA B Hatchback (38_)	25	144	10/99 – 06/00	3717	
VECTRA B Hatchback (38_)	1.6 i	55	10/95 – 07/03	3470	
VECTRA B Hatchback (38_)	1.6 i	55	10/95 – 07/03	3470	
VECTRA B Hatchback (38_)	1.6 i	55	10/95 – 07/03	3505	
VECTRA B Hatchback (38_)	1.6 i	55	10/95 – 07/03	3505	
VECTRA B Hatchback (38_)	1.6 i	55	10/95 – 07/03	3615	
VECTRA B Hatchback (38_)	1.6 i	55	10/95 – 07/03	3615	
VECTRA B Hatchback (38_)	1.6 i	55	10/95 – 07/03	3665	
VECTRA B Hatchback (38_)	1.6 i	55	10/95 – 07/03	3665	
VECTRA B Hatchback (38_)	1.6 i 16V	74	10/95 – 07/02	3470	
VECTRA B Hatchback (38_)	1.6 i 16V	74	10/95 – 07/02	3505	

MAKE & MODEL		KW	YEAR		
OPEL					
VECTRA B Hatchback (38_)	1.6 i 16V	74	10/95 – 07/02	3615	
VECTRA B Hatchback (38_)	1.6 i 16V	74	10/95 – 07/02	3665	
VECTRA B Hatchback (38_)	1.6 i 16V	74	10/95 – 07/02	3717	
VECTRA B Hatchback (38_)	1.7 TD	60	10/95 – 12/98	3470	
VECTRA B Hatchback (38_)	1.7 TD	60	10/95 – 12/98	3505	
VECTRA B Hatchback (38_)	1.7 TD	60	10/95 – 12/98	3615	
VECTRA B Hatchback (38_)	1.7 TD	60	10/95 – 12/98	3717	
VECTRA B Hatchback (38_)	1.8 i 16V	85	10/95 – 09/00	3470	
VECTRA B Hatchback (38_)	1.8 i 16V	85	10/95 – 09/00	3470	
VECTRA B Hatchback (38_)	1.8 i 16V	85	10/95 – 09/00	3505	
VECTRA B Hatchback (38_)	1.8 i 16V	85	10/95 – 09/00	3505	
VECTRA B Hatchback (38_)	1.8 i 16V	85	10/95 – 09/00	3615	
VECTRA B Hatchback (38_)	1.8 i 16V	85	10/95 – 09/00	3615	
VECTRA B Hatchback (38_)	1.8 i 16V	85	10/95 – 09/00	3665	
VECTRA B Hatchback (38_)	1.8 i 16V	85	10/95 – 09/00	3665	
VECTRA B Hatchback (38_)	1.8 i 16V	85	10/95 – 09/00	3717	
VECTRA B Hatchback (38_)	1.8 i 16V	85	10/95 – 09/00	3717	
VECTRA B Hatchback (38_)	1.8 i 16V	92	09/00 – 07/03	3470	
VECTRA B Hatchback (38_)	1.8 i 16V	92	09/00 – 07/03	3505	
VECTRA B Hatchback (38_)	1.8 i 16V	92	09/00 – 07/03	3615	
VECTRA B Hatchback (38_)	1.8 i 16V	92	09/00 – 07/03	3665	
VECTRA B Hatchback (38_)	1.8 i 16V	92	09/00 – 07/03	3717	
VECTRA B Hatchback (38_)	2.0 DI 16V	60	11/96 – 06/00	3470	
VECTRA B Hatchback (38_)	2.0 DI 16V	60	11/96 – 06/00	3505	
VECTRA B Hatchback (38_)	2.0 DI 16V	60	11/96 – 06/00	3615	
VECTRA B Hatchback (38_)	2.0 DI 16V	60	11/96 – 06/00	3665	
VECTRA B Hatchback (38_)	2.0 DTI 16V	74	06/97 – 07/03	3470	
VECTRA B Hatchback (38_)	2.0 DTI 16V	74	06/97 – 07/03	3505	
VECTRA B Hatchback (38_)	2.0 DTI 16V	74	06/97 – 07/03	3615	
VECTRA B Hatchback (38_)	2.0 DTI 16V	74	06/97 – 07/03	3665	
VECTRA B Hatchback (38_)	2.0 DTI 16V	74	06/97 – 07/03	3717	
VECTRA B Hatchback (38_)	2.0 i	82	10/95 – 02/02	3665	
VECTRA B Hatchback (38_)	2.0 i	82	10/95 – 02/02	3717	
VECTRA B Hatchback (38_)	2.0 i 16V	100	10/95 – 09/00	3665	
VECTRA B Hatchback (38_)	2.0 i 16V	100	10/95 – 09/00	3717	
VECTRA B Hatchback (38_)	2.2 DTI 16V	88	09/00 – 04/02	3665	
VECTRA B Hatchback (38_)	2.2 DTI 16V	88	09/00 – 04/02	3717	
VECTRA B Hatchback (38_)	2.2 DTI 16V	92	09/00 – 07/03	3665	
VECTRA B Hatchback (38_)	2.2 DTI 16V	92	09/00 – 07/03	3717	
VECTRA B Hatchback (38_)	2.2 i 16V	108	09/00 – 07/03	3665	
VECTRA B Hatchback (38_)	2.2 i 16V	108	09/00 – 07/03	3717	
VECTRA B Hatchback (38_)	2.5 i V6	125	10/95 – 09/00	3665	
VECTRA B Hatchback (38_)	2.5 i V6	125	10/95 – 09/00	3717	
VECTRA B Hatchback (38_)	2.6 i V6	125	09/00 – 07/03	3665	
VECTRA B Hatchback (38_)	2.6 i V6	125	09/00 – 07/03	3717	
VECTRA C	16	77	01/06 -		3853/1
VECTRA C	18	81	04/02 -		3853/1
VECTRA C	18	103	01/06 -		3853/1
VECTRA C	1.6 (Z 16 XEP)	77	01/06 -	4211	
VECTRA C	1.6 (Z 16 XEP)	77	01/06 -	4211	
VECTRA C	1.6 (Z 16 XEP)	77	01/06 -	4211	
VECTRA C	1.6 (Z 16 XE)	74	08/05 -	4211	
VECTRA C	1.6 16V	74	06/04 -		3853/1
VECTRA C	1.6 16V (Z 16 XE)	74	06/04 -	4211	
VECTRA C	1.6 16V (Z 16 XE)	74	06/04 -	4211	
VECTRA C	1.8 (Z 18 XEL)	81	04/02 -	4211	
VECTRA C	1.8 (Z 18 XER)	103	01/06 -	4211	
VECTRA C	1.8 (Z 18 XER)	103	01/06 -	4211	
VECTRA C	1.8 (Z 18 XER)	103	01/06 -	4211	
VECTRA C	1.8 (Z 18 XE)	90	10/03 -	4211	
VECTRA C	1.8 16V	90	04/02 -		3853/1
VECTRA C	1.8 16V (Z 18 XE)	90	08/02 -	4211	
VECTRA C	1.8 16V (Z 18 XE)	90	04/02 -	4211	
VECTRA C	1.8 16V (Z 18 XEL)	81	08/02 – 12/06	4211	
VECTRA C	1.9 CDTI	74	10/05 -		3853/1
VECTRA C	1.9 CDTI	88	04/04 -		3853/1
VECTRA C	1.9 CDTI	110	04/04 -		3853/1
VECTRA C	1.9 CDTI (Z 19 DT)	74	10/05 -	4211	
VECTRA C	1.9 CDTI (Z 19 DT)	88	04/04 -	4211	
VECTRA C	1.9 CDTI (Z 19 DT)	88	04/04 -	4211	
VECTRA C	1.9 CDTI (Z 19 DT)	88	04/04 -	4211	

MAKE & MODEL   		KW	YEAR		
OPEL					
VECTRA C	1.9 CDTI (Z 19 DTH)	110	04/04 -	4211	
VECTRA C	1.9 CDTI (Z 19 DTH)	110	04/04 -	4211	
VECTRA C	1.9 CDTI (Z 19 DTH)	110	04/04 -	4211	
VECTRA C	1.9 CDTI (Z 19 DTL)	74	10/05 -	4211	
VECTRA C	1.9 CDTI (Z 19 DTL)	74	10/05 -	4211	
VECTRA C	2.0 16V Turbo	129	03/03 -		3853/1
VECTRA C	2.0 16V Turbo (Z 20 NET)	129	03/03 -	4211	
VECTRA C	2.0 16V Turbo (Z 20 NET)	129	03/03 -	4211	
VECTRA C	2.0 DTI (Y 20 DTH)	74	10/03 -	4211	
VECTRA C	2.0 DTI 16V	74	04/02 -		3853/1
VECTRA C	2.0 DTI 16V (Y 20 DTH)	74	08/02 -	4211	
VECTRA C	2.0 DTI 16V (Y 20 DTH)	74	04/02 -	4211	
VECTRA C	2.0 Turbo (Z 20 NET)	129	10/03 -	4211	
VECTRA C	2.2 16V	108	04/02 -		3853/1
VECTRA C	2.2 16V (Z 22 SE)	108	08/02 -	4211	
VECTRA C	2.2 16V (Z 22 SE)	108	04/02 -	4211	
VECTRA C	2.2 direct	114	10/03 -		3853/1
VECTRA C	2.2 direct (Z 22 YH)	114	10/03 -	4211	
VECTRA C	2.2 direct (Z 22 YH)	114	10/03 -	4211	
VECTRA C	2.2 direct (Z 22 YH)	114	10/03 -	4211	
VECTRA C	2.2 DTI (Y 22 DTR)	92	10/03 -	4211	
VECTRA C	2.2 DTI 16V	86	04/02 – 12/04		3853/1
VECTRA C	2.2 DTI 16V	92	04/02 -		3853/1
VECTRA C	2.2 DTI 16V (Y 22 DTR)	86	04/02 – 12/04	4211	
VECTRA C	2.2 DTI 16V (Y 22 DTR)	92	08/02 -	4211	
VECTRA C	2.2 DTI 16V (Y 22 DTR)	92	04/02 -	4211	
VECTRA C	2.8 V6 Turbo	169	08/05 -		3853/1
VECTRA C	2.8 V6 Turbo	184	08/06 -		3853/1
VECTRA C	2.8 V6 Turbo	188	08/05 -		3853/1
VECTRA C	2.8 V6 Turbo OPC	206	09/06 – 09/08		3853/1
VECTRA C	3.0 CDTI	130	06/03 -		3853/1
VECTRA C	3.0 CDTi	135	08/05 -		3853/1
VECTRA C	3.2 V6	155	08/02 -		3853/1
VECTRA C Estate	16	77	01/06 -		3853/1
VECTRA C Estate	18	90	10/03 -		3853/1
VECTRA C Estate	18	103	01/06 -		3853/1
VECTRA C Estate	1.6 16V	74	06/04 -		3853/1
VECTRA C Estate	1.9 CDTI	74	10/05 -		3853/1
VECTRA C Estate	1.9 CDTI	88	04/04 -		3853/1
VECTRA C Estate	1.9 CDTI	110	04/04 -		3853/1
VECTRA C Estate	2.0 DTI	74	10/03 -		3853/1
VECTRA C Estate	2.0 Turbo	129	10/03 -		3853/1
VECTRA C Estate	2.2 direct	114	10/03 -		3853/1
VECTRA C Estate	2.2 DTI	86	10/03 – 06/08		3853/1
VECTRA C Estate	2.2 DTI	92	10/03 -		3853/1
VECTRA C Estate	2.8 V6 Turbo	169	08/05 -		3853/1
VECTRA C Estate	2.8 V6 Turbo	184	01/07 -		3853/1
VECTRA C Estate	2.8 V6 Turbo	188	08/05 -		3853/1
VECTRA C Estate	2.8 V6 Turbo	206	01/07 -		3853/1
VECTRA C Estate	3.0 V6 CDTI	130	10/03 -		3853/1
VECTRA C Estate	3.0 V6 CDTI	135	08/05 -		3853/1
VECTRA C Estate	3.2 V6	155	10/03 -		3853/1
VECTRA C GTS	16	74	08/05 -		3853/1
VECTRA C GTS	16	77	01/06 -		3853/1
VECTRA C GTS	18	103	01/06 -		3853/1
VECTRA C GTS	1.8 16V	81	08/02 – 12/06		3853/1
VECTRA C GTS	1.8 16V	90	08/02 -		3853/1
VECTRA C GTS	1.9 CDTI	74	10/05 -		3853/1
VECTRA C GTS	1.9 CDTI	88	04/04 -		3853/1
VECTRA C GTS	1.9 CDTI	110	04/04 -		3853/1
VECTRA C GTS	2.0 16V Turbo	129	03/03 -		3853/1
VECTRA C GTS	2.0 DTI 16V	74	08/02 -		3853/1
VECTRA C GTS	2.2 16V	108	08/02 -		3853/1
VECTRA C GTS	2.2 direct	114	10/03 -		3853/1
VECTRA C GTS	2.2 DTI 16V	86	08/02 – 06/08		3853/1
VECTRA C GTS	2.2 DTI 16V	92	08/02 -		3853/1
VECTRA C GTS	2.8 V6 Turbo	169	08/05 -		3853/1
VECTRA C GTS	2.8 V6 Turbo	184	08/06 -		3853/1
VECTRA C GTS	2.8 V6 Turbo	188	08/05 -		3853/1
VECTRA C GTS	2.8 V6 Turbo	206	08/06 -		3853/1
VECTRA C GTS	3.0 CDTI	130	06/03 -		3853/1

MAKE & MODEL		KW	YEAR		
OPEL					
VECTRA C GTS	3.0 CDTi	135	08/05 -		3853/1
VECTRA C GTS	3.2 V6	155	08/02 -		3853/1
VIVARO Box	1.6 CDTI	66	06/14 -		3795/1
VIVARO Box	1.6 CDTI	66	06/14 -	4227	
VIVARO Box	1.6 CDTI	70	08/16 -		3795/1
VIVARO Box	1.6 CDTI	70	08/16 -	4227	
VIVARO Box	1.6 CDTI	85	06/14 -		3795/1
VIVARO Box	1.6 CDTI	85	06/14 -	4227	
VIVARO Box	1.6 CDTI	88	06/14 -		3795/1
VIVARO Box	1.6 CDTI	88	06/14 -	4227	
VIVARO Box	1.6 CDTI	92	03/16 -		3795/1
VIVARO Box	1.6 CDTI	92	03/16 -	4227	
VIVARO Box	1.6 CDTI	103	06/14 -		3795/1
VIVARO Box	1.6 CDTI	103	06/14 -	4227	
VIVARO Box	1.6 CDTI	107	03/16 -		3795/1
VIVARO Box	1.6 CDTI	107	03/16 -	4227	
VIVARO Box (F7)	1.9 DI	60	08/01 -		3795/1
VIVARO Box (F7)	1.9 DI	60	08/01 -	3848	
VIVARO Box (F7)	1.9 DTI	74	08/01 -		3795/1
VIVARO Box (F7)	1.9 DTI	74	08/01 -	3848	
VIVARO Box (F7)	2.0 16V	88	08/01 -		3795/1
VIVARO Box (F7)	2.0 16V	88	08/01 -	3848	
VIVARO Box (F7)	2.0 CDTI	66	08/06 -		3795/1
VIVARO Box (F7)	2.0 CDTI	66	08/06 -	3848	
VIVARO Box (F7)	2.0 CDTI	84	08/06 -		3795/1
VIVARO Box (F7)	2.0 CDTI	84	08/06 -	3848	
VIVARO Box (F7)	2.0 ECOTEC	86	08/06 -		3795/1
VIVARO Box (F7)	2.0 ECOTEC	86	08/06 -	3848	
VIVARO Box (F7)	2.5 CDTI	84	08/06 -		3795/1
VIVARO Box (F7)	2.5 CDTI	84	08/06 -	3848	
VIVARO Box (F7)	2.5 CDTI	107	08/06 -		3795/1
VIVARO Box (F7)	2.5 CDTI	107	08/06 -	3848	
VIVARO Box (F7)	2.5 DTI	99	05/03 -		3795/1
VIVARO Box (F7)	2.5 DTI	99	05/03 -	3848	
VIVARO Combi	1.6 CDTI	66	06/14 -		3795/1
VIVARO Combi	1.6 CDTI	66	06/14 -	4227	
VIVARO Combi	1.6 CDTI	70	04/15 -		3795/1
VIVARO Combi	1.6 CDTI	70	04/15 -	4227	
VIVARO Combi	1.6 CDTI	85	06/14 -		3795/1
VIVARO Combi	1.6 CDTI	85	06/14 -	4227	
VIVARO Combi	1.6 CDTI	88	06/14 -		3795/1
VIVARO Combi	1.6 CDTI	88	06/14 -	4227	
VIVARO Combi	1.6 CDTI	92	04/15 -		3795/1
VIVARO Combi	1.6 CDTI	92	04/15 -	4227	
VIVARO Combi	1.6 CDTI	103	06/14 -		3795/1
VIVARO Combi	1.6 CDTI	103	06/14 -	4227	
VIVARO Combi	1.6 CDTI	107	04/15 -		3795/1
VIVARO Combi	1.6 CDTI	107	04/15 -	4227	
VIVARO Combi (J7)	1.9 DI	60	08/01 -		3795/1
VIVARO Combi (J7)	1.9 DI	60	08/01 -	3848	
VIVARO Combi (J7)	1.9 DTI	74	08/01 -		3795/1
VIVARO Combi (J7)	1.9 DTI	74	08/01 -	3848	
VIVARO Combi (J7)	2.0 16V	88	08/01 -		3795/1
VIVARO Combi (J7)	2.0 16V	88	08/01 -	3848	
VIVARO Combi (J7)	2.0 CDTI	66	08/06 -		3795/1
VIVARO Combi (J7)	2.0 CDTI	66	08/06 -	3848	
VIVARO Combi (J7)	2.0 CDTI	84	08/06 -		3795/1
VIVARO Combi (J7)	2.0 CDTI	84	08/06 -	3848	
VIVARO Combi (J7)	2.0 ECOTEC	86	08/06 -		3795/1
VIVARO Combi (J7)	2.0 ECOTEC	86	08/06 -	3848	
VIVARO Combi (J7)	2.5 CDTI	84	08/06 -		3795/1
VIVARO Combi (J7)	2.5 CDTI	84	08/06 -	3848	
VIVARO Combi (J7)	2.5 CDTI	107	08/06 -		3795/1
VIVARO Combi (J7)	2.5 CDTI	107	08/06 -	3848	
VIVARO Combi (J7)	2.5 DTI	99	05/03 -		3795/1
VIVARO Combi (J7)	2.5 DTI	99	05/03 -	3848	
VIVARO Platform/Chassis	1.6 CDTI	66	06/14 -		3795/1
VIVARO Platform/Chassis	1.6 CDTI	66	06/14 -	4227	
VIVARO Platform/Chassis	1.6 CDTI	85	06/14 -		3795/1
VIVARO Platform/Chassis	1.6 CDTI	85	06/14 -	4227	
VIVARO Platform/Chassis	1.6 CDTI	88	08/15 -		3795/1

MAKE & MODEL   		KW	YEAR		
OPEL					
VIVARO Platform/Chassis	1.6 CDTI	88	08/15 -	4227	
VIVARO Platform/Chassis	1.6 CDTI	103	08/15 -		3795/1
VIVARO Platform/Chassis	1.6 CDTI	103	08/15 -	4227	
VIVARO Platform/Chassis (E7)	1.9 Di	60	08/06 -		3795/1
VIVARO Platform/Chassis (E7)	1.9 Di	60	08/06 -	3848	
VIVARO Platform/Chassis (E7)	1.9 DTI	74	08/06 -		3795/1
VIVARO Platform/Chassis (E7)	1.9 DTI	74	08/06 -	3848	
VIVARO Platform/Chassis (E7)	2.0 16V	88	08/06 -		3795/1
VIVARO Platform/Chassis (E7)	2.0 16V	88	08/06 -	3848	
VIVARO Platform/Chassis (E7)	2.0 CDTI	66	01/06 -		3795/1
VIVARO Platform/Chassis (E7)	2.0 CDTI	66	01/06 -	3848	
VIVARO Platform/Chassis (E7)	2.0 CDTI	84	08/06 -		3795/1
VIVARO Platform/Chassis (E7)	2.0 CDTI	84	08/06 -	3848	
VIVARO Platform/Chassis (E7)	2.0 ECOTEC	86	08/06 -		3795/1
VIVARO Platform/Chassis (E7)	2.0 ECOTEC	86	08/06 -	3848	
VIVARO Platform/Chassis (E7)	2.5 CDTI	84	08/06 -		3795/1
VIVARO Platform/Chassis (E7)	2.5 CDTI	84	08/06 -	3848	
VIVARO Platform/Chassis (E7)	2.5 CDTI	107	08/06 -		3795/1
VIVARO Platform/Chassis (E7)	2.5 CDTI	107	08/06 -	3848	
VIVARO Platform/Chassis (E7)	2.5 DTi	99	08/06 -		3795/1
VIVARO Platform/Chassis (E7)	2.5 DTi	99	08/06 -	3848	
ZAFIRA A (F75_)	18	81	02/03 – 06/05		4040
ZAFIRA A (F75_)	18	81	02/03 – 06/05	4042	
ZAFIRA A (F75_)	1.6 16V	74	04/99 – 06/05		4040
ZAFIRA A (F75_)	1.6 16V	74	04/99 – 06/05	4042	
ZAFIRA A (F75_)	1.6 CNG	71	09/01 – 06/05		4040
ZAFIRA A (F75_)	1.6 CNG	71	09/01 – 06/05	4042	
ZAFIRA A (F75_)	1.8 16V	85	04/99 – 09/00		4040
ZAFIRA A (F75_)	1.8 16V	85	04/99 – 09/00	4042	
ZAFIRA A (F75_)	1.8 16V	92	09/00 – 06/05		4040
ZAFIRA A (F75_)	1.8 16V	92	09/00 – 06/05	4042	
ZAFIRA A (F75_)	2.0 DI	63	07/99 – 06/00		4040
ZAFIRA A (F75_)	2.0 DI	63	07/99 – 06/00	4042	
ZAFIRA A (F75_)	2.0 DI 16V	60	07/99 – 06/05		4040
ZAFIRA A (F75_)	2.0 DI 16V	60	07/99 – 06/05	4042	
ZAFIRA A (F75_)	2.0 DTI 16V	74	09/00 – 06/05		4040
ZAFIRA A (F75_)	2.0 DTI 16V	74	09/00 – 06/05	4042	
ZAFIRA A (F75_)	2.0 OPC	141	09/01 – 06/05		4040
ZAFIRA A (F75_)	2.0 OPC	147	11/02 – 06/05		4040
ZAFIRA A (F75_)	2.2 16V	108	09/00 – 06/05		4040
ZAFIRA A (F75_)	2.2 16V	108	09/00 – 06/05	4042	
ZAFIRA A (F75_)	2.2 DTI 16V	86	01/02 – 06/05		4040
ZAFIRA A (F75_)	2.2 DTI 16V	86	01/02 – 06/05	4042	
ZAFIRA A (F75_)	2.2 DTI 16V	92	01/02 – 06/05		4040
ZAFIRA A (F75_)	2.2 DTI 16V	92	01/02 – 06/05	4042	
ZAFIRA B (A05)	16	77	07/05 -	4042	
ZAFIRA B (A05)	16	85	01/08 -	4042	
ZAFIRA B (A05)	18	88	06/13 -	4042	
ZAFIRA B (A05)	18	103	07/05 -	4042	
ZAFIRA B (A05)	20	147	07/05 -	4042	
ZAFIRA B (A05)	22	110	07/05 -	4042	
ZAFIRA B (A05)	1.6 CNG	69	01/06 -	4042	
ZAFIRA B (A05)	1.6 CNG Turbo	110	02/09 -	4042	
ZAFIRA B (A05)	1.7 CDTI	81	01/08 -	4042	
ZAFIRA B (A05)	1.7 CDTI	92	01/08 -	4042	
ZAFIRA B (A05)	1.9 CDTI	74	07/05 -	4042	
ZAFIRA B (A05)	1.9 CDTI	88	07/05 -	4042	
ZAFIRA B (A05)	1.9 CDTI	110	07/05 -	4042	
ZAFIRA B Van	18	103	07/05 -	4042	
ZAFIRA B Van	1.6 CNG Turbo	110	02/09 -	4042	
ZAFIRA B Van	1.7 CDTI	81	01/08 -	4042	
ZAFIRA B Van	1.7 CDTI	92	01/08 -	4042	
ZAFIRA TOURER C (P12)	14	88	10/11 -	4008	
ZAFIRA TOURER C (P12)	14	88	10/11 -	4149	
ZAFIRA TOURER C (P12)	14	103	10/11 -	4008	
ZAFIRA TOURER C (P12)	14	103	10/11 -	4149	
ZAFIRA TOURER C (P12)	18	85	10/11 -	4008	
ZAFIRA TOURER C (P12)	18	85	10/11 -	4149	
ZAFIRA TOURER C (P12)	18	103	10/11 -	4008	
ZAFIRA TOURER C (P12)	18	103	10/11 -	4149	
ZAFIRA TOURER C (P12)	1.4	88	10/11 -	4014	

MAKE & MODEL		KW	YEAR		
OPEL					
ZAFIRA TOURER C (P12)	1.4	103	10/11 -	4014	
ZAFIRA TOURER C (P12)	1.4 LPG	103	10/11 -	4008	
ZAFIRA TOURER C (P12)	1.4 LPG	103	10/11 -	4014	
ZAFIRA TOURER C (P12)	1.4 LPG	103	10/11 -	4149	
ZAFIRA TOURER C (P12)	1.6 CDTI	88	07/14 -	4008	
ZAFIRA TOURER C (P12)	1.6 CDTI	88	07/14 -	4014	
ZAFIRA TOURER C (P12)	1.6 CDTI	88	07/14 -	4149	
ZAFIRA TOURER C (P12)	1.6 CDTI	88	07/14 -	4230	
ZAFIRA TOURER C (P12)	1.6 CDTI	100	02/13 -	4008	
ZAFIRA TOURER C (P12)	1.6 CDTI	100	02/13 -	4014	
ZAFIRA TOURER C (P12)	1.6 CDTI	100	02/13 -	4149	
ZAFIRA TOURER C (P12)	1.6 CNG	110	10/11 -	4008	
ZAFIRA TOURER C (P12)	1.6 CNG	110	10/11 -	4014	
ZAFIRA TOURER C (P12)	1.6 CNG	110	10/11 -	4149	
ZAFIRA TOURER C (P12)	1.6 SIDI	125	12/12 -	4008	
ZAFIRA TOURER C (P12)	1.6 SIDI	125	12/12 -	4014	
ZAFIRA TOURER C (P12)	1.6 SIDI	125	12/12 -	4149	
ZAFIRA TOURER C (P12)	1.6 SIDI	147	07/13 -	4008	
ZAFIRA TOURER C (P12)	1.6 SIDI	147	07/13 -	4014	
ZAFIRA TOURER C (P12)	1.6 SIDI	147	07/13 -	4149	
ZAFIRA TOURER C (P12)	1.8	85	10/11 -	4014	
ZAFIRA TOURER C (P12)	1.8	103	10/11 -	4014	
ZAFIRA TOURER C (P12)	1.8 LPG	101	10/11 -	4008	
ZAFIRA TOURER C (P12)	1.8 LPG	101	10/11 -	4014	
ZAFIRA TOURER C (P12)	1.8 LPG	101	10/11 -	4149	
ZAFIRA TOURER C (P12)	2.0 BiTurbo CDTI	143	01/13 -	4008	
ZAFIRA TOURER C (P12)	2.0 BiTurbo CDTI	143	01/13 -	4014	
ZAFIRA TOURER C (P12)	2.0 BiTurbo CDTI	143	01/13 -	4149	
ZAFIRA TOURER C (P12)	2.0 CDTi	81	10/11 -	4008	
ZAFIRA TOURER C (P12)	2.0 CDTi	81	10/11 -	4014	
ZAFIRA TOURER C (P12)	2.0 CDTi	81	10/11 -	4149	
ZAFIRA TOURER C (P12)	2.0 CDTi	96	10/11 -	4008	
ZAFIRA TOURER C (P12)	2.0 CDTi	96	10/11 -	4014	
ZAFIRA TOURER C (P12)	2.0 CDTi	96	10/11 -	4149	
ZAFIRA TOURER C (P12)	2.0 CDTi	118	10/11 -	4008	
ZAFIRA TOURER C (P12)	2.0 CDTi	118	10/11 -	4014	
ZAFIRA TOURER C (P12)	2.0 CDTi	118	10/11 -	4149	
ZAFIRA TOURER C (P12)	2.0 CDTi	121	10/11 -	4008	
ZAFIRA TOURER C (P12)	2.0 CDTi	121	10/11 -	4014	
ZAFIRA TOURER C (P12)	2.0 CDTi	121	10/11 -	4149	
ZAFIRA TOURER C (P12)	2.0 CDTi	125	01/15 -	4008	
ZAFIRA TOURER C (P12)	2.0 CDTi	125	01/15 -	4014	
ZAFIRA TOURER C (P12)	2.0 CDTi	125	01/15 -	4149	
OPTARE					
TORO	TORO	115	01/08 -	3679	
PERPDUA					
KANCIL	07	23	03/03 -	3746	
KANCIL	07	33	10/98 -	3746	
KANCIL	08	30	08/94 -	3746	
KENARI (L9_)	10	41	10/00 -	3901	
MYVI	13	63	01/06 – 06/11	3928	
VIVA	08	39	07/07 -	3928	
VIVA	10	45	07/07 -	3928	
VIVA	066	35	07/07 -	3928	
PEUGEOT					
104	09	33	10/79 – 10/83	3329	
104	09	33	10/79 – 10/83	3542	
104	09	33	10/79 – 10/83	3806/1	
104	09	34	10/72 – 10/79	3329	
104	09	34	10/72 – 10/79	3542	
104	09	34	10/72 – 10/79	3806/1	
104	10	32	09/83 – 06/88	3329	
104	10	32	09/83 – 06/88	3542	
104	11	37	08/80 – 06/88	3329	
104	11	37	08/80 – 06/88	3542	
104	11	37	08/80 – 06/88	3806/1	
104	11	42	07/76 – 08/82	3329	
104	11	42	07/76 – 08/82	3542	
104	11	42	07/76 – 08/82	3806/1	
104	11	48	09/78 – 09/79	3329	

MAKE & MODEL		KW	YEAR		
PEUGEOT					
104	11	48	09/78 – 09/79	3542	
104	11	48	09/78 – 09/79	3806/1	
104	12	42	08/79 – 06/83	3329	
104	12	42	08/79 – 06/83	3542	
104	12	42	08/79 – 06/83	3806/1	
104	14	53	08/79 – 06/83	3329	
104	14	53	08/79 – 06/83	3542	
104	14	53	08/79 – 06/83	3806/1	
107	10	50	06/05 -	3987	
107	1.4 HDi	40	06/05 -	3987	
108	12	60	05/14 -	3987	
108	1.0 VTi	51	05/14 -	3987	
204	11	40	01/67 -	3377	
204	1.1 (XK)	39	01/67 – 05/69	3377	
204	1.1 (XK)	39	10/65 – 07/69	3377	
204	1.1 (XK4)	40	05/69 – 10/70	3377	
204	1.1 (XK4)	40	07/69 – 07/77	3377	
204	1.1 (XK5)	43	09/75 – 07/77	3377	
204	1.1 Grand Luxe	40	05/69 – 10/77	3403	
204	1.2 D (XLD)	29	05/68 – 05/73	3377	
204	1.3 D (XL4D)	33	01/73 – 10/77	3377	
204	1.4 D (XL4D)	33	09/73 – 12/77	3377	
204	1.4 D BD, U4D	33	01/67 -	3377	
205	1.6 GTI (180A (XU5J))	76	12/84 – 10/87	3372	
205	1.6 GTI (180A (XU5J))	76	12/84 – 10/87	3599	
205	1.9	96	08/90 – 07/92	3372	
205	1.9	96	08/90 – 07/92	3599	
205	1.9 (DFZ (XU9J1))	77	08/92 – 05/97	3372	
205	1.9 (DFZ (XU9J1))	77	08/92 – 05/97	3599	
205	1.9 (DKZ (XU9JAZ))	89	08/90 – 05/97	3372	
205	1.9 (DKZ (XU9JAZ))	89	08/90 – 05/97	3599	
205	1.9 GTI (D6B (XU9JA))	94	10/87 – 09/98	3372	
205	1.9 GTI (D6B (XU9JA))	94	10/87 – 09/98	3599	
205	1.9 GTI (DKZ (XU9JAZ))	88	10/87 – 10/94	3372	
205	1.9 GTI (DKZ (XU9JAZ))	88	10/87 – 10/94	3599	
205	1.9 GTI Cat (DFZ (XU9J1))	75	10/87 – 07/94	3372	
205	1.9 GTI Cat (DFZ (XU9J1))	75	10/87 – 07/94	3599	
206	14	56	07/06 – 02/09	3938	
206	16	78	01/06 – 02/09		3496
206	16	78	01/06 – 02/09	3820	
207	14	56	03/09 – 12/14	3820	
207	16	78	03/09 -	3820	
208	10	50	03/12 -		3529/1
208	12	60	03/12 -		3529/1
208	16	88	03/12 -		3529/1
208	16	115	03/12 -		3529/1
208	1.2 THP	81	01/13 -		3529/1
208	1.4 GPL	70	10/13 -		3529/1
208	1.4 HDi	50	03/12 -		3529/1
208	1.4 VTi	70	03/12 -		3529/1
208	1.6 BlueHDi 100	73	01/15 -		3529/1
208	1.6 BlueHDi 120	88	11/13 -		3529/1
208	1.6 GTi	147	08/12 -		3529/1
208	1.6 GTi	153	10/14 -		3529/1
208	1.6 HDi	68	03/12 -		3529/1
208	1.6 HDi	84	03/12 -		3529/1
208	1.6 HDi	85	04/14 -		3529/1
208	1.6 HDi / BlueHDi 75	55	01/13 -		3529/1
208	1.6 THP 165	121	03/15 -		3529/1
301	1.2 VTi 72	53	11/12 -	4201	
301	1.2 VTi 82	60	12/14 -	4201	
301	1.6 BlueHDi 100	73	04/14 -	4201	
301	1.6 HDI 90	68	11/12 -	4201	
301	1.6 VTi 115	85	11/12 -	4201	
304	1.3 (XL5S)	55	08/72 – 09/75	3377	
304	1.3 GL (XL5)	48	09/72 – 10/79	3377	
304	1.3 GT (XL3)	48	10/69 – 09/75	3377	
304	1.4 D (XL4D)	33	10/76 – 10/79	3377	
309	1.6	69	01/86 – 07/89	3372	
309	1.6	69	01/86 – 07/89	3599	
309	1.6 (180Z (XU5J))	76	11/85 – 09/88	3372	

MAKE & MODEL		KW	YEAR		
PEUGEOT					
309	1.6 (180Z (XU5J))	76	11/85 – 09/88	3599	
309	1.6 (B1A (XU51C))	59	10/85 – 07/89	3372	
309	1.6 (B1A (XU51C))	59	10/85 – 07/89	3599	
309	1.6 (B1D (XU51C))	59	10/85 – 07/89	3372	
309	1.6 (B1D (XU51C))	59	10/85 – 07/89	3599	
309	1.6 (B6B (XU5J))	76	11/85 – 09/88	3372	
309	1.6 (B6B (XU5J))	76	11/85 – 09/88	3599	
309	1.6 GTI	85	09/89 – 10/93	3372	
309	1.6 GTI	85	09/89 – 10/93	3599	
309	1.9 (D2B (XU9S))	75	10/85 – 07/89	3372	
309	1.9 (D2B (XU9S))	75	10/85 – 07/89	3599	
309	1.9 (DDZ (XU9M))	80	07/88 – 07/89	3372	
309	1.9 (DDZ (XU9M))	80	10/90 – 12/93	3372	
309	1.9 (DDZ (XU9M))	80	07/88 – 07/89	3599	
309	1.9 (DDZ (XU9M))	80	10/90 – 12/93	3599	
309	1.9 (DFZ (XU9J1))	72	03/86 – 07/89	3372	
309	1.9 (DFZ (XU9J1))	72	08/89 – 12/93	3372	
309	1.9 (DFZ (XU9J1))	72	03/86 – 07/89	3599	
309	1.9 (DFZ (XU9J1))	72	08/89 – 12/93	3599	
309	1.9 GTI (D6B (XU9JA))	94	10/86 – 07/89	3372	
309	1.9 GTI (D6B (XU9JA))	94	10/86 – 07/89	3599	
309	1.9 GTI (DKZ (XU9JAZ))	88	07/88 – 07/89	3372	
309	1.9 GTI (DKZ (XU9JAZ))	88	07/89 – 12/93	3372	
309	1.9 GTI (DKZ (XU9JAZ))	88	07/88 – 07/89	3599	
309	1.9 GTI (DKZ (XU9JAZ))	88	07/89 – 12/93	3599	
309	1.9 GTI 16V (D6C (XU9J4))	116	08/89 – 07/90	3372	
309	1.9 GTI 16V (D6C (XU9J4))	116	08/89 – 07/90	3599	
309	1.9 GTI 16V (DFW (XU9J4Z))	108	10/90 – 12/93	3372	
309	1.9 GTI 16V (DFW (XU9J4Z))	108	10/90 – 12/93	3599	
404	1.6 (XC6)	48	04/63 – 12/71	3377	
404	1.6 (XC6)	54	11/67 – 12/71	3377	
404	1.6 GT (XC6)	50	07/71 – 12/71	3377	
404	1.9 L, U10	48	04/63 -	3377	
408	20	105	03/11 -	3970	
408	1.6 16V	80	02/10 -	3970	
408	1.6 Turbo	122	02/10 -	3970	
408	2.0 16V	108	02/10 -	3970	
2008	1.2 THP 110	81	01/15 -		3529/1
2008	1.2 THP 130	96	01/15 -		3529/1
2008	1.2 VTi	60	03/13 -		3529/1
2008	1.4 HDi	50	06/13 -		3529/1
2008	1.6 BlueHDi 100	73	01/15 -		3529/1
2008	1.6 BlueHDi 120	88	07/14 -		3529/1
2008	1.6 BlueHDi 75	55	01/15 -		3529/1
2008	1.6 HDi	68	03/13 -		3529/1
2008	1.6 HDi	84	03/13 -		3529/1
2008	1.6 HDi	85	07/14 -		3529/1
2008	1.6 VTi	88	03/13 -		3529/1
3008	12	96	01/15 -	3970	
3008	1.6 BlueHDi 115	85	02/13 -	3970	
3008	1.6 BlueHDi 120	88	05/14 -	3970	
3008	1.6 HDi	80	06/09 -	3970	
3008	1.6 HDi	82	08/10 -	3970	
3008	1.6 HDi	84	03/13 -	3970	
3008	1.6 Turbo	121	05/14 -	3970	
3008	1.6 VTi	88	06/09 -	3970	
4008	1.6	86	05/12 -		4316
4008	2.0	110	05/13 -		4316
4008	1.6 HDi	84	05/12 -		4316
4008	1.6 HDi AWC	84	05/12 -		3893
4008	1.6 HDi AWC	84	05/12 -		4316
4008	1.8 HDi	110	05/12 -		4316
4008	1.8 HDi AWC	110	05/12 -		3893
4008	1.8 HDi AWC	110	05/12 -		4316
4008	2.0 AWC	110	05/12 -		3893
4008	2.0 AWC	110	05/12 -		4316
5008	1.6 16V	88	09/09 -	3964	
5008	1.6 HDi	80	09/09 -	3964	
5008	1.6 HDi	82	08/10 -	3964	
5008	1.6 HDi	84	03/13 -	3964	
1007 (KM_)	14	54	04/05 -	3820	

MAKE & MODEL		KW	YEAR		
PEUGEOT					
1007 (KM_)	1.4 16V	65	10/05 -	3820	
1007 (KM_)	1.4 HDi	50	04/05 -	3820	
1007 (KM_)	1.6 16V	80	04/05 -		3529/1
1007 (KM_)	1.6 16V	80	04/05 -	3820	
1007 (KM_)	1.6 HDi	80	06/07 -		3529/1
1007 (KM_)	1.6 HDi	80	06/07 -	3800	
104 Coupe	09	33	09/73 – 10/83	3329	
104 Coupe	09	33	09/73 – 10/83	3542	
104 Coupe	09	33	09/73 – 10/83	3806/1	
104 Coupe	11	37	08/79 – 06/88	3329	
104 Coupe	11	37	08/79 – 06/88	3542	
104 Coupe	11	37	08/79 – 06/88	3806/1	
104 Coupe	11	42	08/79 – 06/83	3329	
104 Coupe	11	42	08/79 – 06/83	3542	
104 Coupe	11	42	08/79 – 06/83	3806/1	
104 Coupe	11	48	09/73 – 09/79	3329	
104 Coupe	11	48	09/73 – 09/79	3542	
104 Coupe	11	48	09/73 – 09/79	3806/1	
104 Coupe	11	49	08/75 – 06/80	3329	
104 Coupe	11	49	08/75 – 06/80	3542	
104 Coupe	11	49	08/75 – 06/80	3806/1	
104 Coupe	14	53	08/79 – 06/84	3329	
104 Coupe	14	53	08/79 – 06/84	3542	
104 Coupe	14	53	08/79 – 06/84	3806/1	
106	1.0-1.1-1.3		94-	3489	
106	1.5D		94-	3488	
106	XSi 1.4		91-	3488	
106	XSi 1.4		91-	3489	
106	XT/XSi 1.6		94-	3489	
106 I (1A, 1C)	10	33	09/91 – 04/96	3380	
106 I (1A, 1C)	10	33	09/91 – 04/96	3381	
106 I (1A, 1C)	10	37	09/91 – 04/96	3380	
106 I (1A, 1C)	10	37	09/91 – 04/96	3381	
106 I (1A, 1C)	11	44	09/91 – 04/96	3380	
106 I (1A, 1C)	11	44	09/91 – 04/96	3381	
106 I (1A, 1C)	13	72	10/93 – 04/96	3380	
106 I (1A, 1C)	13	72	10/93 – 04/96	3381	
106 I (1A, 1C)	14	51	08/91 – 03/96	3380	
106 I (1A, 1C)	14	51	08/91 – 03/96	3381	
106 I (1A, 1C)	14	55	09/91 – 04/96	3380	
106 I (1A, 1C)	14	55	09/91 – 04/96	3381	
106 I (1A, 1C)	14	69	09/91 – 04/96	3380	
106 I (1A, 1C)	14	69	09/91 – 04/96	3381	
106 I (1A, 1C)	14	72	08/91 – 03/96	3380	
106 I (1A, 1C)	14	72	08/91 – 03/96	3381	
106 I (1A, 1C)	16	65	06/93 – 04/96	3380	
106 I (1A, 1C)	16	65	06/93 – 04/96	3381	
106 I (1A, 1C)	16	76	01/94 – 04/96	3380	
106 I (1A, 1C)	16	76	01/94 – 04/96	3381	
106 I (1A, 1C)	1.4 D	37	09/92 – 04/96	3380	
106 I (1A, 1C)	1.4 D	37	09/92 – 04/96	3381	
106 I (1A, 1C)	1.5 D	40	06/94 – 04/96	3380	
106 I (1A, 1C)	1.5 D	40	06/94 – 04/96	3381	
106 I (1A, 1C)	1.5 D	43	06/94 – 04/96	3380	
106 I (1A, 1C)	1.5 D	43	06/94 – 04/96	3381	
106 II (1)	1.0 i	33	05/96 -	3380	
106 II (1)	1.0 i	33	05/96 -	3381	
106 II (1)	1.0 i	37	01/97 -	3380	
106 II (1)	1.0 i	37	01/97 -	3381	
106 II (1)	1.1 i	44	05/96 -	3380	
106 II (1)	1.1 i	44	05/96 -	3381	
106 II (1)	1.4 i	55	05/96 -	3380	
106 II (1)	1.4 i	55	05/96 -	3381	
106 II (1)	1.5 D	40	05/96 -	3380	
106 II (1)	1.5 D	40	05/96 -	3381	
106 II (1)	1.5 D	42	04/98 -	3380	
106 II (1)	1.5 D	42	04/98 -	3381	
106 II (1)	1.6 i	65	05/96 -	3380	
106 II (1)	1.6 i	65	05/96 -	3381	
106 II (1)	1.6 i	65	05/96 -	3528	
106 II (1)	1.6 i	74	05/96 -		3496

MAKE & MODEL		KW	YEAR		
PEUGEOT					
106 II (1)	1.6 i	74	05/96 -	3528	
106 II (1)	1.6 S16	87	05/96 -		3496
106 II (1)	1.6 S16	87	05/96 -	3528	
106 II (1)	Electric	20	04/96 – 07/04	3380	
106 II (1)	Electric	20	04/96 – 07/04	3381	
106 Van (1_)	10	33	09/91 – 03/01	3380	
106 Van (1_)	10	33	09/91 – 03/01	3381	
106 Van (1_)	1.5 D	40	05/96 – 03/01	3380	
106 Van (1_)	1.5 D	40	05/96 – 03/01	3381	
106 Van (1_)	1.5 D	42	10/00 – 03/01	3380	
106 Van (1_)	1.5 D	42	10/00 – 03/01	3381	
106 Van (1_)	Electric	20	04/96 – 03/01	3380	
106 Van (1_)	Electric	20	04/96 – 03/01	3381	
205 (741A/C) 02.83-10.87	1.6 GTI (180A (XU5J))	76	12/84 – 10/87	3592	
205 (741A/C) 02.83-10.87	1.6 GTI (B6D (XU5JA))	85	02/83 – 07/87	3592	
205 Box	11	36	02/83 – 07/87	3380	
205 Box	11	36	02/83 – 07/87	3381	
205 Box	11	36	02/83 – 07/87	3474	
205 Box	11	36	02/83 – 07/87	3580	
205 Box	11	40	08/87 – 07/90	3380	
205 Box	11	40	08/87 – 07/90	3381	
205 Box	11	40	08/87 – 07/90	3474	
205 Box	11	40	08/87 – 07/90	3580	
205 Box	14	44	02/83 – 07/87	3380	
205 Box	14	44	02/83 – 07/87	3381	
205 Box	14	44	02/83 – 07/87	3474	
205 Box	14	44	02/83 – 07/87	3580	
205 Box	1.8 D	44	02/83 – 07/90	3380	
205 Box	1.8 D	44	02/83 – 07/90	3381	
205 Box	1.8 D	44	02/83 – 07/90	3474	
205 Box	1.8 D	44	02/83 – 07/90	3580	
205 I (741A/C)	10	33	02/83 – 10/87	3380	
205 I (741A/C)	10	33	02/83 – 10/87	3381	
205 I (741A/C)	10	33	02/83 – 10/87	3474	
205 I (741A/C)	10	33	02/83 – 10/87	3580	
205 I (741A/C)	11	36	02/83 – 10/87	3380	
205 I (741A/C)	11	36	02/83 – 10/87	3381	
205 I (741A/C)	11	36	02/83 – 10/87	3474	
205 I (741A/C)	11	36	02/83 – 10/87	3580	
205 I (741A/C)	11	37	02/83 – 10/87	3380	
205 I (741A/C)	11	37	02/83 – 10/87	3381	
205 I (741A/C)	11	37	02/83 – 10/87	3474	
205 I (741A/C)	11	37	02/83 – 10/87	3580	
205 I (741A/C)	13	47	02/84 – 10/87	3380	
205 I (741A/C)	13	47	02/84 – 10/87	3381	
205 I (741A/C)	13	47	02/84 – 10/87	3474	
205 I (741A/C)	13	47	02/84 – 10/87	3580	
205 I (741A/C)	14	44	02/83 – 10/87	3380	
205 I (741A/C)	14	44	02/83 – 10/87	3381	
205 I (741A/C)	14	44	02/83 – 10/87	3474	
205 I (741A/C)	14	44	02/83 – 10/87	3580	
205 I (741A/C)	14	53	02/83 – 10/87	3474	
205 I (741A/C)	14	53	02/83 – 10/87	3580	
205 I (741A/C)	14	58	10/85 – 10/87	3380	
205 I (741A/C)	14	58	10/85 – 10/87	3381	
205 I (741A/C)	14	58	10/85 – 10/87	3474	
205 I (741A/C)	14	58	10/85 – 10/87	3580	
205 I (741A/C)	14	59	02/83 – 10/87	3380	
205 I (741A/C)	14	59	02/83 – 10/87	3381	
205 I (741A/C)	14	59	02/83 – 10/87	3474	
205 I (741A/C)	14	59	02/83 – 10/87	3580	
205 I (741A/C)	15	63	02/84 – 10/87	3380	
205 I (741A/C)	15	63	02/84 – 10/87	3381	
205 I (741A/C)	15	63	02/84 – 10/87	3474	
205 I (741A/C)	15	63	02/84 – 10/87	3580	
205 I (741A/C)	16	53	03/87 – 10/87	3380	
205 I (741A/C)	16	53	03/87 – 10/87	3381	
205 I (741A/C)	16	53	03/87 – 10/87	3474	
205 I (741A/C)	16	53	03/87 – 10/87	3580	
205 I (741A/C)	16	55	08/86 – 10/87	3380	
205 I (741A/C)	16	55	08/86 – 10/87	3380	

MAKE & MODEL		KW	YEAR		
PEUGEOT					
205 I (741A/C)	16	55	08/86 – 10/87	3381	
205 I (741A/C)	16	55	08/86 – 10/87	3381	
205 I (741A/C)	16	55	08/86 – 10/87	3474	
205 I (741A/C)	16	55	08/86 – 10/87	3474	
205 I (741A/C)	16	55	08/86 – 10/87	3580	
205 I (741A/C)	16	55	08/86 – 10/87	3580	
205 I (741A/C)	2.0 (YN57)	53	02/83 – 10/87	3380	
205 I (741A/C)	2.0 (YN57)	53	02/83 – 10/87	3381	
205 I (741A/C)	1.6 GTI	76	12/84 – 10/87	3380	
205 I (741A/C)	1.6 GTI	76	12/84 – 10/87	3381	
205 I (741A/C)	1.6 GTI	76	12/84 – 10/87	3474	
205 I (741A/C)	1.6 GTI	76	12/84 – 10/87	3580	
205 I (741A/C)	1.7 Diesel	44	08/83 – 10/87	3380	
205 I (741A/C)	1.7 Diesel	44	08/83 – 10/87	3381	
205 I (741A/C)	1.7 Diesel	44	08/83 – 10/87	3474	
205 I (741A/C)	1.7 Diesel	44	08/83 – 10/87	3580	
205 I (741A/C)	1.9 GTI	75	03/87 – 10/87	3380	
205 I (741A/C)	1.9 GTI	75	03/87 – 10/87	3381	
205 I (741A/C)	1.9 GTI	75	03/87 – 10/87	3474	
205 I (741A/C)	1.9 GTI	75	03/87 – 10/87	3580	
205 I (741A/C)	1.9 GTI	94	10/86 – 10/87	3380	
205 I (741A/C)	1.9 GTI	94	10/86 – 10/87	3381	
205 I (741A/C)	1.9 GTI	94	10/86 – 10/87	3431	
205 I (741A/C)	1.9 GTI	94	10/86 – 10/87		3496
205 I (741A/C)	1.9 GTI	94	10/86 – 10/87	3503	
205 I (741A/C)	1.9 GTI	94	10/86 – 10/87	3580	
205 I Convertible (741B, 20D)	14	50	08/87 – 07/90	3380	
205 I Convertible (741B, 20D)	14	50	08/87 – 07/90	3381	
205 I Convertible (741B, 20D)	14	50	08/87 – 07/90	3474	
205 I Convertible (741B, 20D)	14	50	08/87 – 07/90	3580	
205 I Convertible (741B, 20D)	14	62	08/87 – 06/94	3380	
205 I Convertible (741B, 20D)	14	62	08/87 – 06/94	3381	
205 I Convertible (741B, 20D)	14	62	08/87 – 06/94	3474	
205 I Convertible (741B, 20D)	14	62	08/87 – 06/94	3580	
205 I Convertible (741B, 20D)	19	77	05/86 – 07/87	3380	
205 I Convertible (741B, 20D)	19	77	05/86 – 07/87	3381	
205 I Convertible (741B, 20D)	19	77	05/86 – 07/87	3474	
205 I Convertible (741B, 20D)	19	77	05/86 – 07/87	3580	
205 I Convertible (741B, 20D)	1.1 CJ	44	10/89 – 12/94	3380	
205 I Convertible (741B, 20D)	1.1 CJ	44	10/89 – 12/94	3381	
205 I Convertible (741B, 20D)	1.1 CJ	44	10/89 – 12/94	3474	
205 I Convertible (741B, 20D)	1.1 CJ	44	10/89 – 12/94	3580	
205 I Convertible (741B, 20D)	1.4 CJ	44	03/88 – 05/89	3380	
205 I Convertible (741B, 20D)	1.4 CJ	44	03/88 – 05/89	3381	
205 I Convertible (741B, 20D)	1.4 CJ	44	03/88 – 05/89	3474	
205 I Convertible (741B, 20D)	1.4 CJ	44	03/88 – 05/89	3580	
205 I Convertible (741B, 20D)	1.4 CJ	49	03/89 – 12/94	3380	
205 I Convertible (741B, 20D)	1.4 CJ	49	03/89 – 12/94	3381	
205 I Convertible (741B, 20D)	1.4 CJ	49	03/89 – 12/94	3474	
205 I Convertible (741B, 20D)	1.4 CJ	49	03/89 – 12/94	3580	
205 I Convertible (741B, 20D)	1.4 CJ	55	05/91 – 12/94	3380	
205 I Convertible (741B, 20D)	1.4 CJ	55	05/91 – 12/94	3381	
205 I Convertible (741B, 20D)	1.4 CJ	55	05/91 – 12/94	3474	
205 I Convertible (741B, 20D)	1.4 CJ	55	05/91 – 12/94	3580	
205 I Convertible (741B, 20D)	1.4 CJ CAT	44	01/89 – 09/93	3380	
205 I Convertible (741B, 20D)	1.4 CJ CAT	44	01/89 – 09/93	3381	
205 I Convertible (741B, 20D)	1.4 CJ CAT	44	01/89 – 09/93	3474	
205 I Convertible (741B, 20D)	1.4 CJ CAT	44	01/89 – 09/93	3580	
205 I Convertible (741B, 20D)	1.4 CT	58	04/86 – 12/88	3380	
205 I Convertible (741B, 20D)	1.4 CT	58	04/86 – 12/88	3381	
205 I Convertible (741B, 20D)	1.4 CT	58	04/86 – 12/88	3474	
205 I Convertible (741B, 20D)	1.4 CT	58	04/86 – 12/88	3580	
205 I Convertible (741B, 20D)	1.6 CJ	65	08/92 – 12/94	3380	
205 I Convertible (741B, 20D)	1.6 CJ	65	08/92 – 12/94	3381	
205 I Convertible (741B, 20D)	1.6 CJ	65	08/92 – 12/94	3474	
205 I Convertible (741B, 20D)	1.6 CJ	65	08/92 – 12/94	3580	
205 I Convertible (741B, 20D)	1.6 CTI	76	04/86 – 10/90	3380	
205 I Convertible (741B, 20D)	1.6 CTI	76	04/86 – 10/90	3381	
205 I Convertible (741B, 20D)	1.6 CTI	76	04/86 – 10/90	3474	
205 I Convertible (741B, 20D)	1.6 CTI	76	04/86 – 10/90	3580	
205 I Convertible (741B, 20D)	1.9 CTI	75	10/87 – 12/94	3380	

BESER

MAKE & MODEL		KW	YEAR		
PEUGEOT					
205 I Convertible (741B, 20D)	1.9 CTI	75	10/87 – 12/94	3381	
205 I Convertible (741B, 20D)	1.9 CTI	75	10/87 – 12/94	3431	
205 I Convertible (741B, 20D)	1.9 CTI	75	10/87 – 12/94	3474	
205 I Convertible (741B, 20D)	1.9 CTI	75	10/87 – 12/94		3496
205 I Convertible (741B, 20D)	1.9 CTI	75	10/87 – 12/94	3503	
205 I Convertible (741B, 20D)	1.9 CTI	75	10/87 – 12/94	3580	
205 I Convertible (741B, 20D)	1.9 CTi	74	08/87 – 07/90	3380	
205 I Convertible (741B, 20D)	1.9 CTi	74	08/87 – 07/90	3381	
205 I Convertible (741B, 20D)	1.9 CTi	74	08/87 – 07/90	3474	
205 I Convertible (741B, 20D)	1.9 CTi	74	08/87 – 07/90	3580	
205 II (20A/C)	10	33	10/87 – 09/98	3380	
205 II (20A/C)	10	33	10/87 – 09/98	3381	
205 II (20A/C)	10	33	10/87 – 09/98	3474	
205 II (20A/C)	10	33	10/87 – 09/98	3580	
205 II (20A/C)	10	37	08/92 – 05/97	3380	
205 II (20A/C)	10	37	08/92 – 05/97	3381	
205 II (20A/C)	10	37	08/92 – 05/97	3474	
205 II (20A/C)	10	37	08/92 – 05/97	3580	
205 II (20A/C)	11	36	10/87 – 10/90	3380	
205 II (20A/C)	11	36	10/87 – 10/90	3381	
205 II (20A/C)	11	36	10/87 – 10/90	3474	
205 II (20A/C)	11	36	10/87 – 10/90	3580	
205 II (20A/C)	11	40	10/87 – 10/90	3380	
205 II (20A/C)	11	40	10/87 – 10/90	3381	
205 II (20A/C)	11	40	10/87 – 10/90	3474	
205 II (20A/C)	11	40	10/87 – 10/90	3580	
205 II (20A/C)	11	44	07/89 - 09/98	3380	
205 II (20A/C)	11	44	07/89 - 09/98	3381	
205 II (20A/C)	11	44	07/89 – 09/98	3474	
205 II (20A/C)	11	44	07/89 – 09/98	3580	
205 II (20A/C)	12	47	01/87 – 12/90	3380	
205 II (20A/C)	12	47	01/87 – 12/90	3381	
205 II (20A/C)	12	47	01/87 – 12/90	3474	
205 II (20A/C)	12	47	01/87 – 12/90	3580	
205 II (20A/C)	13	47	08/90 – 07/92	3380	
205 II (20A/C)	13	47	08/90 – 07/92	3381	
205 II (20A/C)	13	47	08/90 – 07/92	3474	
205 II (20A/C)	13	47	08/90 – 07/92	3580	
205 II (20A/C)	14	44	10/87 – 05/89	3380	
205 II (20A/C)	14	44	10/87 – 05/89	3381	
205 II (20A/C)	14	44	10/87 – 05/89	3474	
205 II (20A/C)	14	44	10/87 – 05/89	3580	
205 II (20A/C)	14	49	10/87 – 10/90	3380	
205 II (20A/C)	14	49	10/87 – 10/90	3381	
205 II (20A/C)	14	49	10/87 – 10/90	3474	
205 II (20A/C)	14	49	10/87 – 10/90	3580	
205 II (20A/C)	14	50	08/90 – 07/92	3380	
205 II (20A/C)	14	50	08/90 – 07/92	3381	
205 II (20A/C)	14	50	08/90 – 07/92	3474	
205 II (20A/C)	14	50	08/90 – 07/92	3580	
205 II (20A/C)	14	53	01/87 – 07/88	3380	
205 II (20A/C)	14	53	01/87 – 07/88	3381	
205 II (20A/C)	14	53	01/87 – 07/88	3474	
205 II (20A/C)	14	53	01/87 – 07/88	3580	
205 II (20A/C)	14	55	07/88 – 09/98	3380	
205 II (20A/C)	14	55	08/90 – 07/98	3380	
205 II (20A/C)	14	55	07/88 – 09/98	3381	
205 II (20A/C)	14	55	08/90 – 07/98	3381	
205 II (20A/C)	14	55	07/88 – 09/98	3474	
205 II (20A/C)	14	55	08/90 – 07/98	3474	
205 II (20A/C)	14	55	07/88 – 09/98	3580	
205 II (20A/C)	14	55	08/90 – 07/98	3580	
205 II (20A/C)	14	58	07/88 – 05/89	3380	
205 II (20A/C)	14	58	07/88 – 05/89	3381	
205 II (20A/C)	14	58	07/88 – 05/89	3474	
205 II (20A/C)	14	58	07/88 – 05/89	3580	
205 II (20A/C)	14	62	06/87 – 12/89	3380	
205 II (20A/C)	14	62	06/87 – 12/89	3381	
205 II (20A/C)	14	62	06/87 – 12/89	3474	
205 II (20A/C)	14	62	06/87 – 12/89	3580	
205 II (20A/C)	14	63	06/87 – 12/89	3380	

MAKE & MODEL		KW	YEAR		
PEUGEOT					
205 II (20A/C)	14	63	06/87 – 12/89	3381	
205 II (20A/C)	14	63	06/87 – 12/89	3474	
205 II (20A/C)	14	63	06/87 – 12/89	3580	
205 II (20A/C)	16	53	10/87 – 09/98	3380	
205 II (20A/C)	16	53	10/87 – 09/98	3381	
205 II (20A/C)	16	53	10/87 – 09/98	3474	
205 II (20A/C)	16	53	10/87 – 09/98	3580	
205 II (20A/C)	16	55	10/87 – 09/98	3380	
205 II (20A/C)	16	55	10/87 – 09/98	3381	
205 II (20A/C)	16	55	10/87 – 09/98	3474	
205 II (20A/C)	16	55	10/87 – 09/98	3580	
205 II (20A/C)	16	66	08/90 – 07/92	3380	
205 II (20A/C)	16	66	08/90 – 07/92	3381	
205 II (20A/C)	16	66	08/90 – 07/92	3474	
205 II (20A/C)	16	66	08/90 – 07/92	3580	
205 II (20A/C)	19	77	08/92 – 05/97	3380	
205 II (20A/C)	19	77	08/92 – 05/97	3381	
205 II (20A/C)	19	77	08/92 – 05/97	3474	
205 II (20A/C)	19	77	08/92 – 05/97	3580	
205 II (20A/C)	19	89	08/90 – 05/97	3380	
205 II (20A/C)	19	89	08/90 – 05/97	3381	
205 II (20A/C)	19	89	08/90 – 05/97	3474	
205 II (20A/C)	19	89	08/90 – 05/97	3580	
205 II (20A/C)	19	96	08/90 – 07/92	3380	
205 II (20A/C)	19	96	08/90 – 07/92	3381	
205 II (20A/C)	19	96	08/90 – 07/92	3474	
205 II (20A/C)	19	96	08/90 – 07/92	3580	
205 II (20A/C)	1.1 XA	40	07/87 – 10/88	3380	
205 II (20A/C)	1.1 XA	40	07/87 – 10/88	3381	
205 II (20A/C)	1.1 XA	40	07/87 – 10/88	3474	
205 II (20A/C)	1.1 XA	40	07/87 – 10/88	3580	
205 II (20A/C)	1.3 Rallye	74	10/87 – 10/90	3380	
205 II (20A/C)	1.3 Rallye	74	10/87 – 10/90	3381	
205 II (20A/C)	1.3 Rallye	74	10/87 – 10/90	3474	
205 II (20A/C)	1.3 Rallye	74	10/87 – 10/90	3580	
205 II (20A/C)	1.4 CAT	44	08/87 – 09/93	3380	
205 II (20A/C)	1.4 CAT	44	08/87 – 09/93	3381	
205 II (20A/C)	1.4 CAT	44	08/87 – 09/93	3474	
205 II (20A/C)	1.4 CAT	44	08/87 – 09/93	3580	
205 II (20A/C)	1.6 Aut.	58	10/87 – 09/98	3380	
205 II (20A/C)	1.6 Aut.	58	10/87 – 09/98	3381	
205 II (20A/C)	1.6 Aut.	58	10/87 – 09/98	3474	
205 II (20A/C)	1.6 Aut.	58	10/87 – 09/98	3580	
205 II (20A/C)	1.6 Aut.	65	05/90 – 09/98	3380	
205 II (20A/C)	1.6 Aut.	65	05/90 – 09/98	3381	
205 II (20A/C)	1.6 Aut.	65	05/90 – 09/98	3474	
205 II (20A/C)	1.6 Aut.	65	05/90 – 09/98	3580	
205 II (20A/C)	1.6 GTI	76	10/87 – 12/89	3380	
205 II (20A/C)	1.6 GTI	76	10/87 – 12/89	3381	
205 II (20A/C)	1.6 GTI	76	10/87 – 12/89	3474	
205 II (20A/C)	1.6 GTI	76	10/87 – 12/89	3580	
205 II (20A/C)	1.6 GTI	85	10/87 – 12/89	3380	
205 II (20A/C)	1.6 GTI	85	10/87 – 12/89	3381	
205 II (20A/C)	1.6 GTI	85	10/87 – 12/89	3474	
205 II (20A/C)	1.6 GTI	85	10/87 – 12/89	3580	
205 II (20A/C)	1.6 GTX	69	01/87 – 10/91	3380	
205 II (20A/C)	1.6 GTX	69	01/87 – 10/91	3381	
205 II (20A/C)	1.6 GTX	69	01/87 – 10/91	3474	
205 II (20A/C)	1.6 GTX	69	01/87 – 10/91	3580	
205 II (20A/C)	1.7 Diesel	44	07/87 – 09/98	3380	
205 II (20A/C)	1.7 Diesel	44	07/87 – 09/98	3381	
205 II (20A/C)	1.7 Diesel	44	07/87 – 09/98	3474	
205 II (20A/C)	1.7 Diesel	44	07/87 – 09/98	3580	
205 II (20A/C)	1.8 TD	57	01/90 – 09/98	3380	
205 II (20A/C)	1.8 TD	57	01/90 – 09/98	3381	
205 II (20A/C)	1.8 TD	57	01/90 – 09/98	3474	
205 II (20A/C)	1.8 TD	57	01/90 – 09/98	3580	
205 II (20A/C)	1.8 XDT	58	08/90 – 05/97	3380	
205 II (20A/C)	1.8 XDT	58	08/90 – 05/97	3381	
205 II (20A/C)	1.8 XDT	58	08/90 – 05/97	3474	
205 II (20A/C)	1.8 XDT	58	08/90 – 05/97	3580	

MAKE & MODEL		KW	YEAR		
PEUGEOT					
205 II (20A/C)	1.9 Diesel	47	10/87 – 09/98	3380	
205 II (20A/C)	1.9 Diesel	47	10/87 – 09/98	3381	
205 II (20A/C)	1.9 Diesel	47	10/87 – 09/98	3474	
205 II (20A/C)	1.9 Diesel	47	10/87 – 09/98	3580	
205 II (20A/C)	1.9 Diesel	51	08/87 – 06/94	3380	
205 II (20A/C)	1.9 Diesel	51	08/87 – 06/94	3381	
205 II (20A/C)	1.9 Diesel	51	08/87 – 06/94	3474	
205 II (20A/C)	1.9 Diesel	51	08/87 – 06/94	3580	
205 II (20A/C)	1.9 GTI	75	10/87 – 05/89	3380	
205 II (20A/C)	1.9 GTI	75	10/87 – 05/89	3381	
205 II (20A/C)	1.9 GTI	75	10/87 – 05/89	3474	
205 II (20A/C)	1.9 GTI	75	10/87 – 05/89	3580	
205 II (20A/C)	1.9 GTI	88	10/87 – 10/94	3380	
205 II (20A/C)	1.9 GTI	88	10/87 – 10/94	3381	
205 II (20A/C)	1.9 GTI	88	10/87 – 10/94	3431	
205 II (20A/C)	1.9 GTI	88	10/87 – 10/94	3474	
205 II (20A/C)	1.9 GTI	88	10/87 – 10/94		3496
205 II (20A/C)	1.9 GTI	88	10/87 – 10/94	3503	
205 II (20A/C)	1.9 GTI	88	10/87 – 10/94	3580	
205 II (20A/C)	1.9 GTI	94	10/87 – 09/98	3380	
205 II (20A/C)	1.9 GTI	94	10/87 – 09/98	3381	
205 II (20A/C)	1.9 GTI	94	10/87 – 09/98	3431	
205 II (20A/C)	1.9 GTI	94	10/87 – 09/98	3474	
205 II (20A/C)	1.9 GTI	94	10/87 – 09/98		3496
205 II (20A/C)	1.9 GTI	94	10/87 – 09/98	3503	
205 II (20A/C)	1.9 GTI	94	10/87 – 09/98	3580	
205 II (20A/C)	1.9 GTI CAT	75	10/87 – 07/94	3380	
205 II (20A/C)	1.9 GTI CAT	75	10/87 – 07/94	3381	
205 II (20A/C)	1.9 GTI CAT	75	10/87 – 07/94	3431	
205 II (20A/C)	1.9 GTI CAT	75	10/87 – 07/94	3474	
205 II (20A/C)	1.9 GTI CAT	75	10/87 07/94		3496
205 II (20A/C)	1.9 GTI CAT	75	10/87 – 07/94	3503	
205 II (20A/C)	1.9 GTI CAT	75	10/87 – 07/94	3580	
206 CC (2D)	1.6 16V	80	09/00 -		3496
206 CC (2D)	1.6 HDi 110	80	04/05 -		3496
206 CC (2D)	2.0 S16	100	09/00 -		3496
206 Hatchback (2A/C)	10	48	09/02 – 02/07		3496
206 Hatchback (2A/C)	10	48	09/02 – 02/07	3759	
206 Hatchback (2A/C)	10	48	09/02 – 02/07	3938	
206 Hatchback (2A/C)	11	40	08/98 – 07/00	3759	
206 Hatchback (2A/C)	11	40	08/98 – 07/00	3938	
206 Hatchback (2A/C)	16	81	05/05 – 07/08		3496
206 Hatchback (2A/C)	1.1 i	44	09/98 -	3759	
206 Hatchback (2A/C)	1.1 i	44	09/98 -	3938	
206 Hatchback (2A/C)	1.4 16V	65	10/03 -		3496
206 Hatchback (2A/C)	1.4 HDi	51	09/02 – 02/07		3496
206 Hatchback (2A/C)	1.4 HDi	51	09/02 – 02/07	3938	
206 Hatchback (2A/C)	1.4 HDi eco 70	50	09/01 -	3938	
206 Hatchback (2A/C)	1.4 i	55	09/98 -	3938	
206 Hatchback (2A/C)	1.4 LPG	55	05/06 – 09/07	3938	
206 Hatchback (2A/C)	1.6 16V	80	12/00 -		3496
206 Hatchback (2A/C)	1.6 HDi 110	80	05/04 -		3496
206 Hatchback (2A/C)	1.6 i	65	09/98 – 12/00		3496
206 Hatchback (2A/C)	1.6 i	65	09/98 – 12/00	3938	
206 Hatchback (2A/C)	1.9 D	51	09/98 – 11/01		3496
206 Hatchback (2A/C)	1.9 D	51	09/98 – 11/01	3938	
206 Hatchback (2A/C)	2.0 HDI 90	66	12/99 -		3496
206 Hatchback (2A/C)	2.0 RC	130	07/03 -		3496
206 Hatchback (2A/C)	2.0 RC	130	07/03 -	3800	
206 Hatchback (2A/C)	2.0 S16	99	04/99 – 10/00		3496
206 Hatchback (2A/C)	2.0 S16	100	06/99 -		3496
206 Saloon	14	55	03/07 -	3938	
206 Saloon	1.4 HDi eco 70	50	09/08 -	3938	
206 Saloon	1.6 16V	80	03/07 -		3496
206 SW (2E/K)	11	44	07/02 -	3759	
206 SW (2E/K)	11	44	07/02 -	3938	
206 SW (2E/K)	14	55	07/02 -	3938	
206 SW (2E/K)	16	81	05/05 – 07/08		3496
206 SW (2E/K)	1.4 16V	65	10/03 -		3496
206 SW (2E/K)	1.4 HDi	50	07/02 -	3938	
206 SW (2E/K)	1.6 16V	80	07/02 -		3496

MAKE & MODEL   		KW	YEAR		
PEUGEOT					
206 SW (2E/K)	1.6 HDi 110	80	05/04 -		3496
206 SW (2E/K)	2.0 16V	100	07/02 -		3496
206 SW (2E/K)	2.0 HDi	66	07/02 -		3496
206 Van	1.4 HDi	50	09/01 – 03/09		3496
206 Van	1.4 HDi	50	09/01 – 03/09	3938	
206 Van	1.9 D	51	04/99 – 05/07		3496
206 Van	1.9 D	51	04/99 – 05/07	3938	
206+ (T3E)	11	44	01/09 -	3938	
206+ (T3E)	1.4 HDi eco 70	50	01/09 -	3938	
206+ (T3E)	1.4 i	54	09/10 -	3938	
206+ (T3E)	1.4 i	55	01/09 -	3938	
207 (WA_, WC_)	14	53	02/06 -		3529/1
207 (WA_, WC_)	14	53	02/06 -		3984
207 (WA_, WC_)	16	81	08/08 -		3529/1
207 (WA_, WC_)	16	81	08/08 -	3800	
207 (WA_, WC_)	16	90	09/07 – 12/13		3529/1
207 (WA_, WC_)	16	90	09/07 – 12/13	3800	
207 (WA_, WC_)	1.4 16V	65	02/06 -		3529/1
207 (WA_, WC_)	1.4 16V	65	02/06 -		3984
207 (WA_, WC_)	1.4 16V	70	06/07 -		3529/1
207 (WA_, WC_)	1.4 16V	70	06/07 -	3800	
207 (WA_, WC_)	1.4 16V	70	06/07 -		3984
207 (WA_, WC_)	1.4 16V	72	10/09 -		3529/1
207 (WA_, WC_)	1.4 16V	72	10/09 -	3800	
207 (WA_, WC_)	1.4 16V	72	10/09 -		3984
207 (WA_, WC_)	1.4 HDi	50	02/06 -		3529/1
207 (WA_, WC_)	1.4 HDi	50	02/06 -		3984
207 (WA_, WC_)	1.6 16V	80	02/06 -		3529/1
207 (WA_, WC_)	1.6 16V	80	02/06 -	3800	
207 (WA_, WC_)	1.6 16V	80	02/06 -		3984
207 (WA_, WC_)	1.6 16V RC	128	02/07 -		3529/1
207 (WA_, WC_)	1.6 16V RC	128	02/07 -		3984
207 (WA_, WC_)	1.6 16V Turbo	110	02/06 -		3529/1
207 (WA_, WC_)	1.6 16V Turbo	110	02/06 -	3800	
207 (WA_, WC_)	1.6 16V Turbo	110	02/06 -		3984
207 (WA_, WC_)	1.6 16V Turbo	115	10/09 -		3529/1
207 (WA_, WC_)	1.6 16V Turbo	115	10/09 -	3800	
207 (WA_, WC_)	1.6 16V VTi	88	02/07 -		3529/1
207 (WA_, WC_)	1.6 16V VTi	88	02/07 -	3800	
207 (WA_, WC_)	1.6 16V VTi	88	02/07 -		3984
207 (WA_, WC_)	1.6 HDi	66	02/06 -		3529/1
207 (WA_, WC_)	1.6 HDi	66	02/06 -	3800	
207 (WA_, WC_)	1.6 HDi	66	02/06 -		3984
207 (WA_, WC_)	1.6 HDi	68	11/09 -		3529/1
207 (WA_, WC_)	1.6 HDi	68	11/09 -	3800	
207 (WA_, WC_)	1.6 HDi	80	02/06 -		3529/1
207 (WA_, WC_)	1.6 HDi	80	02/06 -	3800	
207 (WA_, WC_)	1.6 HDi	80	02/06 -		3984
207 (WA_, WC_)	1.6 HDi 110	82	08/09 -		3529/1
207 (WA_, WC_)	1.6 HDi 110	82	08/09 -	3800	
207 CC (WD_)	16	90	09/10 – 12/11		3529/1
207 CC (WD_)	16	90	09/10 – 12/11	3800	
207 CC (WD_)	1.6 16V	88	02/07 -		3529/1
207 CC (WD_)	1.6 16V	88	02/07 -	3800	
207 CC (WD_)	1.6 16V	88	02/07 -		3984
207 CC (WD_)	1.6 16V Turbo	110	02/07 -		3529/1
207 CC (WD_)	1.6 16V Turbo	110	02/07 -	3800	
207 CC (WD_)	1.6 16V Turbo	110	02/07 -		3984
207 CC (WD_)	1.6 16V Turbo	115	10/09 -		3529/1
207 CC (WD_)	1.6 16V Turbo	115	10/09 -	3800	
207 CC (WD_)	1.6 HDi	80	02/07 -		3529/1
207 CC (WD_)	1.6 HDi	80	02/07 -	3800	
207 CC (WD_)	1.6 HDi	80	02/07 -		3984
207 CC (WD_)	1.6 HDi	82	08/09 -		3529/1
207 CC (WD_)	1.6 HDi	82	08/09 -	3800	
207 Saloon	14	56	11/08 -	3938	
207 Saloon	16	78	11/08 -	3938	
207 Saloon	1.6 Bioflex	83	01/08 -		3529/1
207 Saloon	1.6 Bioflex	83	01/08 -	3800	
207 Saloon	1.6 Bioflex	83	01/08 -		3984
207 SW (WK_)	14	54	06/07 -		3529/1

MAKE & MODEL		KW	YEAR		
PEUGEOT					
207 SW (WK_)	14	54	06/07 -		3984
207 SW (WK_)	1.4 16V	70	06/07 -		3529/1
207 SW (WK_)	1.4 16V	70	06/07 -	3800	
207 SW (WK_)	1.4 16V	70	06/07 -		3984
207 SW (WK_)	1.4 16V	72	11/09 -		3529/1
207 SW (WK_)	1.4 16V	72	11/09 -	3800	
207 SW (WK_)	1.4 16V	72	11/09 -		3984
207 SW (WK_)	1.6 16V	88	06/07 -		3529/1
207 SW (WK_)	1.6 16V	88	06/07 -	3800	
207 SW (WK_)	1.6 16V	88	06/07 -		3984
207 SW (WK_)	1.6 16V RC	128	02/07 -		3529/1
207 SW (WK_)	1.6 16V RC	128	02/07 -		3984
207 SW (WK_)	1.6 16V Turbo	110	02/07 -		3529/1
207 SW (WK_)	1.6 16V Turbo	110	02/07 -	3800	
207 SW (WK_)	1.6 16V Turbo	110	02/07 -		3984
207 SW (WK_)	1.6 HDi	66	06/07 -		3529/1
207 SW (WK_)	1.6 HDi	66	06/07 -	3800	
207 SW (WK_)	1.6 HDi	66	06/07 -		3984
207 SW (WK_)	1.6 HDi	68	11/09 -		3529/1
207 SW (WK_)	1.6 HDi	68	11/09 -	3800	
207 SW (WK_)	1.6 HDi	80	06/07 -		3529/1
207 SW (WK_)	1.6 HDi	80	06/07 -	3800	
207 SW (WK_)	1.6 HDi	80	06/07 -		3984
207 SW (WK_)	1.6 HDi	82	08/09 -		3529/1
207 SW (WK_)	1.6 HDi	82	08/09 -	3800	
207 Van	1.6 HDi	66	04/07 -		3529/1
207 Van	1.6 HDi	66	04/07 -	3800	
207 Van	1.6 HDi	66	04/07 -		3984
304 (_04B_)	1.3 (XL3)	48	03/70 – 09/73	3403	
304 (_04B_)	1.3 (XL3S)	55	09/72 – 07/76	3403	
304 (_04C_)	1.3 (XL3)	48	03/70 – 09/73	3403	
304 (_04C_)	1.3 (XL3S)	55	03/72 – 04/75	3403	
304 (_04D_)	1.1 (XK5)	43	10/76 – 10/80	3403	
304 (_04D_)	1.3 (XL5)	48	09.70 – 10.80	3342	
304 (_04D_)	1.3 (XL5)	48	09/70 – 10/80	3403	
304 (_04D_)	1.4 D (XL4D)	33	10.76 – 10.79	3342	
304 (_04D_)	1.4 D (XL4D)	33	10/76 – 10/79	3403	
304 (_04M_)	1.3 (XL5S)	55	08/72 – 09/75	3403	
304 (_04M_)	1.3 GL (XL5)	48	09.72 – 10.79	3342	
304 (_04M_)	1.3 GL (M01)	48	09/72 – 10/79	3329	
304 (_04M_)	1.3 GL (M01)	48	09/72 – 10/79	3542	
304 (_04M_)	1.3 GL (M01)	48	09/72 – 10/79	3806/1	
304 (_04M_)	1.3 GL (XL5)	48	09/72 – 10/79	3403	
304 (_04M_)	1.3 GT (XL3)	48	10/69 – 09/75	3403	
304 (_04M_)	1.4 D (XL4D)	33	10.76 – 10.79	3342	
304 (_04M_)	1.4 D (XL4D)	33	10/76 – 10/79	3403	
304 (_04M_)	1.4 D (M20)	33	10/76 – 10/79	3329	
304 (_04M_)	1.4 D (M20)	33	10/76 – 10/79	3542	
304 (_04M_)	1.4 D (M20)	33	10/76 – 10/79	3806/1	
304 Break (_04D_)	1.1 (D11)	43	10/76 – 10/80	3329	
304 Break (_04D_)	1.1 (D11)	43	10/76 – 10/80	3542	
304 Break (_04D_)	1.1 (D11)	43	10/76 – 10/80	3806/1	
304 Break (_04D_)	1.3 (D01)	48	09/70 – 10/80	3329	
304 Break (_04D_)	1.3 (D01)	48	09/70 – 10/80	3542	
304 Break (_04D_)	1.3 (D01)	48	09/70 – 10/80	3806/1	
304 Break (_04D_)	1.4 D	33	10/76 – 10/79	3329	
304 Break (_04D_)	1.4 D	33	10/76 – 10/79	3542	
304 Break (_04D_)	1.4 D	33	10/76 – 10/79	3806/1	
305 (581A)	1.1 GL	33	11.77 -	3342	
305 (581A)	1.3 (XL5)	48	11.77 – 09.82	3342	
305 (581A)	1.3 (118 (XL5))	44	11.77 – 09.82	3342	
305 (581A)	1.5 (117 (XR5S))	65	05.80 – 09.82	3342	
305 (581A)	1.5 (142 (XR5))	54	11.79 – 09.82	3342	
305 (581A)	1.5 Diesel (149 (XID))	36	11.77 – 09.82	3342	
305 (581D)	1.3 (118 (XL5))	44	08.80 – 09.82	3342	
305 (581D)	1.5 (142 (XR5))	54	08.80 – 09.82	3342	
305 (581D)	1.5 Diesel (149 (XID))	36	08.80 – 09.82	3342	
305 I (581A)	13	44	11/77 – 09/82	3329	
305 I (581A)	13	44	11/77 – 09/82	3542	
305 I (581A)	13	44	11/77 – 09/82	3806/1	
305 I (581A)	13	48	11/77 – 09/82	3329	

MAKE & MODEL		KW	YEAR		
PEUGEOT					
305 I (581A)	13	48	11/77 – 09/82	3542	
305 I (581A)	13	48	11/77 – 09/82	3806/1	
305 I (581A)	15	54	11/79 – 09/82	3329	
305 I (581A)	15	54	11/79 – 09/82	3542	
305 I (581A)	15	54	11/79 – 09/82	3806/1	
305 I (581A)	15	65	05/80 – 09/82	3329	
305 I (581A)	15	65	05/80 – 09/82	3542	
305 I (581A)	15	65	05/80 – 09/82	3806/1	
305 I (581A)	1.5 Diesel	36	11/77 – 09/82	3329	
305 I (581A)	1.5 Diesel	36	11/77 – 09/82	3542	
305 I (581A)	1.5 Diesel	36	11/77 – 09/82	3806/1	
305 I Break (581D)	13	44	08/80 – 09/82	3329	
305 I Break (581D)	13	44	08/80 – 09/82	3542	
305 I Break (581D)	13	44	08/80 – 09/82	3806/1	
305 I Break (581D)	15	54	08/80 – 09/82	3329	
305 I Break (581D)	15	54	08/80 – 09/82	3542	
305 I Break (581D)	15	54	08/80 – 09/82	3806/1	
305 I Break (581D)	1.5 Diesel	36	08/80 – 09/82	3329	
305 I Break (581D)	1.5 Diesel	36	08/80 – 09/82	3542	
305 I Break (581D)	1.5 Diesel	36	08/80 – 09/82	3806/1	
305 II (581M)	13	44	10/82 – 08/85	3380	
305 II (581M)	13	44	10/82 – 08/85	3381	
305 II (581M)	13	44	10/82 – 08/85	3474	
305 II (581M)	13	44	10/82 – 08/85	3580	
305 II (581M)	15	50	09/85 – 07/90	3380	
305 II (581M)	15	50	09/85 – 07/90	3381	
305 II (581M)	15	50	09/85 – 07/90	3474	
305 II (581M)	15	50	09/85 – 07/90	3580	
305 II (581M)	15	54	10/82 – 08/85	3380	
305 II (581M)	15	54	10/82 – 08/85	3381	
305 II (581M)	15	54	10/82 – 08/85	3474	
305 II (581M)	15	54	10/82 – 08/85	3580	
305 II (581M)	16	54	11/86 – 12/88	3380	
305 II (581M)	16	54	11/86 – 12/88	3381	
305 II (581M)	16	54	11/86 – 12/88	3474	
305 II (581M)	16	54	11/86 – 12/88	3580	
305 II (581M)	16	55	10/82 – 07/88	3380	
305 II (581M)	16	55	10/82 – 07/88	3381	
305 II (581M)	16	55	10/82 – 07/88	3474	
305 II (581M)	16	55	10/82 – 07/88	3580	
305 II (581M)	16	66	07/84 – 08/87	3380	
305 II (581M)	16	66	07/84 – 08/87	3381	
305 II (581M)	16	66	07/84 – 08/87	3474	
305 II (581M)	16	66	07/84 – 08/87	3580	
305 II (581M)	16	69	10/82 – 06/88	3380	
305 II (581M)	16	69	10/82 – 06/88	3381	
305 II (581M)	16	69	10/82 – 06/88	3474	
305 II (581M)	16	69	10/82 – 06/88	3580	
305 II (581M)	16	71	10/82 – 06/84	3380	
305 II (581M)	16	71	10/82 – 06/84	3381	
305 II (581M)	16	71	10/82 – 06/84	3474	
305 II (581M)	16	71	10/82 – 06/84	3580	
305 II (581M)	19	72	11/86 – 12/88	3380	
305 II (581M)	19	72	11/86 – 12/88	3381	
305 II (581M)	19	72	11/86 – 12/88	3474	
305 II (581M)	19	72	11/86 – 12/88	3580	
305 II (581M)	19	75	10/82 – 08/85	3380	
305 II (581M)	19	75	10/82 – 08/85	3381	
305 II (581M)	19	75	10/82 – 08/85	3474	
305 II (581M)	19	75	10/82 – 08/85	3580	
305 II (581M)	1.9 D	47	10/82 – 07/88	3380	
305 II (581M)	1.9 D	47	10/82 – 07/88	3381	
305 II (581M)	1.9 D	47	10/82 – 07/88	3474	
305 II (581M)	1.9 D	47	10/82 – 07/88	3580	
305 II (581M)	1.9 D	48	10/82 – 07/88	3380	
305 II (581M)	1.9 D	48	10/82 – 07/88	3381	
305 II (581M)	1.9 D	48	10/82 – 07/88	3474	
305 II (581M)	1.9 D	48	10/82 – 07/88	3580	
305 II Break (581E)	13	44	10/82 – 08/86	3380	
305 II Break (581E)	13	44	10/82 – 08/86	3381	
305 II Break (581E)	13	44	10/82 – 08/86	3474	

BESER

MAKE & MODEL		KW	YEAR		
PEUGEOT					
305 II Break (581E)	13	44	10/82 – 08/86	3580	
305 II Break (581E)	15	50	09/85 – 10/86	3380	
305 II Break (581E)	15	50	09/85 – 10/86	3381	
305 II Break (581E)	15	50	09/85 – 10/86	3474	
305 II Break (581E)	15	50	09/85 – 10/86	3580	
305 II Break (581E)	15	54	10/82 – 08/86	3380	
305 II Break (581E)	15	54	10/82 – 08/86	3381	
305 II Break (581E)	15	54	10/82 – 08/86	3474	
305 II Break (581E)	15	54	10/82 – 08/86	3580	
305 II Break (581E)	16	54	11/86 – 12/88	3380	
305 II Break (581E)	16	54	11/86 – 12/88	3381	
305 II Break (581E)	16	54	11/86 – 12/88	3474	
305 II Break (581E)	16	54	11/86 – 12/88	3580	
305 II Break (581E)	16	55	02/86 – 12/88	3380	
305 II Break (581E)	16	55	02/86 – 12/88	3381	
305 II Break (581E)	16	55	02/86 – 12/88	3474	
305 II Break (581E)	16	55	02/86 – 12/88	3580	
305 II Break (581E)	16	66	07/84 – 12/87	3380	
305 II Break (581E)	16	66	07/84 – 12/87	3381	
305 II Break (581E)	16	66	07/84 – 12/87	3474	
305 II Break (581E)	16	66	07/84 – 12/87	3580	
305 II Break (581E)	16	71	09/83 – 06/84	3380	
305 II Break (581E)	16	71	09/83 – 06/84	3381	
305 II Break (581E)	16	71	09/83 – 06/84	3474	
305 II Break (581E)	16	71	09/83 – 06/84	3580	
305 II Break (581E)	19	72	11/86 – 12/88	3380	
305 II Break (581E)	19	72	11/86 – 12/88	3381	
305 II Break (581E)	19	72	11/86 – 12/88	3474	
305 II Break (581E)	19	72	11/86 – 12/88	3580	
305 II Break (581E)	19	75	09/84 – 10/87	3380	
305 II Break (581E)	19	75	09/84 – 10/87	3381	
305 II Break (581E)	19	75	09/84 – 10/87	3474	
305 II Break (581E)	19	75	09/84 – 10/87	3580	
305 II Break (581E)	1.9 Diesel	47	10/82 – 12/88	3380	
305 II Break (581E)	1.9 Diesel	47	10/82 – 12/88	3381	
305 II Break (581E)	1.9 Diesel	47	10/82 – 12/88	3474	
305 II Break (581E)	1.9 Diesel	47	10/82 – 12/88	3580	
305 II Break (581E)	1.9 Diesel	48	10/82 – 12/88	3380	
305 II Break (581E)	1.9 Diesel	48	10/82 – 12/88	3381	
305 II Break (581E)	1.9 Diesel	48	10/82 – 12/88	3474	
305 II Break (581E)	1.9 Diesel	48	10/82 – 12/88	3580	
306 (7B, N3, N5)	11	44	06/94 – 05/01	3380	
306 (7B, N3, N5)	11	44	06/94 – 05/01	3381	
306 (7B, N3, N5)	11	44	06/94 – 05/01	3528	
306 (7B, N3, N5)	11	44	06/94 – 05/01	3759	
306 (7B, N3, N5)	16	66	07/00 – 05/01	3636	
306 (7B, N3, N5)	16	66	07/00 – 05/01	3644	
306 (7B, N3, N5)	16	72	10/00 – 05/01	3636	
306 (7B, N3, N5)	16	72	10/00 – 05/01	3644	
306 (7B, N3, N5)	18	74	10/95 – 04/97		3496
306 (7B, N3, N5)	18	74	10/95 – 04/97	3528	
306 (7B, N3, N5)	20	97	03/97 – 05/01		3496
306 (7B, N3, N5)	20	97	03/97 – 05/01	3636	
306 (7B, N3, N5)	20	97	03/97 – 05/01	3644	
306 (7B, N3, N5)	1.4 SL	55	06/94 – 05/01	3380	
306 (7B, N3, N5)	1.4 SL	55	06/94 – 05/01	3381	
306 (7B, N3, N5)	1.4 SL	55	06/94 – 05/01	3528	
306 (7B, N3, N5)	1.4 SL	55	06/94 – 05/01	3636	
306 (7B, N3, N5)	1.4 SL	55	06/94 – 05/01	3644	
306 (7B, N3, N5)	1.4 SL	55	06/94 – 05/01	3759	
306 (7B, N3, N5)	1.6 SR	65	06/94 – 10/00	3528	
306 (7B, N3, N5)	1.6 SR	65	06/94 – 10/00	3636	
306 (7B, N3, N5)	1.6 SR	65	06/94 – 10/00	3644	
306 (7B, N3, N5)	1.8 16V	81	03/97 – 05/01		3496
306 (7B, N3, N5)	1.8 16V	81	03/97 – 05/01	3636	
306 (7B, N3, N5)	1.8 16V	81	03/97 – 05/01	3644	
306 (7B, N3, N5)	1.8 ST	74	06/94 – 05/01		3496
306 (7B, N3, N5)	1.8 ST	74	06/94 – 05/01	3528	
306 (7B, N3, N5)	1.9 D	51	09/98 – 05/01	3528	
306 (7B, N3, N5)	1.9 D	51	09/98 – 05/01	3636	
306 (7B, N3, N5)	1.9 D	51	09/98 – 05/01	3644	

MAKE & MODEL   		KW	YEAR		
PEUGEOT					
306 (7B, N3, N5)	1.9 D	55	03/98 – 05/01	3528	
306 (7B, N3, N5)	1.9 D	69	02/94 – 04/97	3528	
306 (7B, N3, N5)	1.9 SLD	47	06/94 – 05/01	3528	
306 (7B, N3, N5)	1.9 SLD	50	06/94 – 05/01	3528	
306 (7B, N3, N5)	1.9 SRDT	66	06/94 – 05/01	3528	
306 (7B, N3, N5)	1.9 STD	51	02/94 – 10/95	3528	
306 (7B, N3, N5)	1.9 STD	51	02/94 – 10/95	3636	
306 (7B, N3, N5)	1.9 STD	51	02/94 – 10/95	3644	
306 (7B, N3, N5)	2.0 HDI 90	66	06/99 – 05/01		3496
306 (7B, N3, N5)	2.0 HDI 90	66	06/99 – 05/01	3636	
306 (7B, N3, N5)	2.0 HDI 90	66	06/99 – 05/01	3644	
306 (7B, N3, N5)	2.0 S16	110	06/94 – 05/01		3496
306 (7B, N3, N5)	2.0 S16	110	06/94 – 05/01	3610	
306 (7B, N3, N5)	2.0 S16	110	06/94 – 05/01	3636	
306 (7B, N3, N5)	2.0 S16	110	06/94 – 05/01	3644	
306 (7B, N3, N5)	2.0 S16	112	06/94 – 05/01		3496
306 (7B, N3, N5)	2.0 S16	112	06/94 – 05/01	3610	
306 (7B, N3, N5)	2.0 S16	112	06/94 – 05/01	3636	
306 (7B, N3, N5)	2.0 S16	112	06/94 – 05/01	3644	
306 (7B, N3, N5)	2.0 ST	89	07/94 – 05/01		3496
306 (7B, N3, N5)	2.0 ST	89	07/94 – 05/01	3610	
306 (7B, N3, N5)	2.0 ST	89	07/94 – 05/01	3636	
306 (7B, N3, N5)	2.0 ST	89	07/94 – 05/01	3644	
306 (7B, N3, N5)	2.0 S16	110	06/94-05/01	3557	
306 (7B, N3, N5)	2.0 S16	112	06/94-05/01	3557	
306 (7B, N3, N5)	2.0 ST	89	07/94-05/01	3557	
306 Break (7E, N3, N5)	16	65	03/97 – 10/00	3636	
306 Break (7E, N3, N5)	16	65	03/97 – 10/00	3644	
306 Break (7E, N3, N5)	16	72	10/00 – 04/02	3636	
306 Break (7E, N3, N5)	16	72	10/00 – 04/02	3644	
306 Break (7E, N3, N5)	18	74	03/97 – 04/02		3496
306 Break (7E, N3, N5)	18	74	03/97 – 04/02	3636	
306 Break (7E, N3, N5)	18	74	03/97 – 04/02	3644	
306 Break (7E, N3, N5)	20	97	03/97 – 04/02		3496
306 Break (7E, N3, N5)	20	97	03/97 – 04/02	3636	
306 Break (7E, N3, N5)	20	97	03/97 – 04/02	3644	
306 Break (7E, N3, N5)	1.8 16V	81	03/97 – 04/02		3496
306 Break (7E, N3, N5)	1.8 16V	81	03/97 – 04/02	3636	
306 Break (7E, N3, N5)	1.8 16V	81	03/97 – 04/02	3644	
306 Break (7E, N3, N5)	1.9 D	50	03/97 – 04/02		3496
306 Break (7E, N3, N5)	1.9 D	50	03/97 – 04/02	3636	
306 Break (7E, N3, N5)	1.9 D	50	03/97 – 04/02	3644	
306 Break (7E, N3, N5)	1.9 D	51	05/97 – 05/99		3496
306 Break (7E, N3, N5)	1.9 D	51	09/98 – 04/02		3496
306 Break (7E, N3, N5)	1.9 D	51	05/97 – 05/99	3636	
306 Break (7E, N3, N5)	1.9 D	51	09/98 – 04/02	3636	
306 Break (7E, N3, N5)	1.9 D	51	05/97 – 05/99	3644	
306 Break (7E, N3, N5)	1.9 D	51	09/98 – 04/02	3644	
306 Break (7E, N3, N5)	1.9 D	55	03/98 – 04/02		3496
306 Break (7E, N3, N5)	1.9 D	55	03/98 – 04/02	3636	
306 Break (7E, N3, N5)	1.9 D	55	03/98 – 04/02	3644	
306 Break (7E, N3, N5)	1.9 TD	66	02/97 – 04/02		3496
306 Break (7E, N3, N5)	1.9 TD	66	02/97 – 04/02	3636	
306 Break (7E, N3, N5)	1.9 TD	66	02/97 – 04/02	3644	
306 Break (7E, N3, N5)	2.0 HDI 90	66	06/99 – 04/02		3496
306 Break (7E, N3, N5)	2.0 HDI 90	66	06/99 – 04/02	3636	
306 Break (7E, N3, N5)	2.0 HDI 90	66	06/99 – 04/02	3644	
306 Convertible (7D, N3, N5)	16	65	04/96 – 10/00	3528	
306 Convertible (7D, N3, N5)	16	65	04/96 – 10/00	3636	
306 Convertible (7D, N3, N5)	16	65	04/96 – 10/00	3644	
306 Convertible (7D, N3, N5)	16	72	10/00 – 04/02	3636	
306 Convertible (7D, N3, N5)	16	72	10/00 – 04/02	3644	
306 Convertible (7D, N3, N5)	18	74	03/94 – 04/02		3496
306 Convertible (7D, N3, N5)	18	74	03/94 – 04/02	3528	
306 Convertible (7D, N3, N5)	20	89	03/94 – 04/02		3496
306 Convertible (7D, N3, N5)	20	89	03/94 – 04/02	3610	
306 Convertible (7D, N3, N5)	20	89	03/94 – 04/02	3636	
306 Convertible (7D, N3, N5)	20	89	03/94 – 04/02	3644	
306 Convertible (7D, N3, N5)	1.8 16V	81	07/00 – 04/02		3496
306 Convertible (7D, N3, N5)	1.8 16V	81	07/00 – 04/02	3636	
306 Convertible (7D, N3, N5)	1.8 16V	81	07/00 – 04/02	3644	

MAKE & MODEL		KW	YEAR		
PEUGEOT					
306 Convertible (7D, N3, N5)	2.0 16V	97	03/97 – 04/02		3496
306 Convertible (7D, N3, N5)	2.0 16V	97	03/97 – 04/02	3636	
306 Convertible (7D, N3, N5)	2.0 16V	97	03/97 – 04/02	3644	
306 Convertible (7D, N3, N5)	2.0 16V	99	03/97 – 04/02		3496
306 Convertible (7D, N3, N5)	2.0 16V	99	03/97 – 04/02	3636	
306 Convertible (7D, N3, N5)	2.0 16V	99	03/97 – 04/02	3644	
306 Convertible (7D, N3, N5)	2.0	89	03/94-04/02	3557	
306 Hatchback (7A, 7C, N3, N5)	11	44	05/93 – 05/01	3380	
306 Hatchback (7A, 7C, N3, N5)	11	44	05/93 – 05/01	3381	
306 Hatchback (7A, 7C, N3, N5)	11	44	05/93 – 05/01	3528	
306 Hatchback (7A, 7C, N3, N5)	11	44	05/93 – 05/01	3759	
306 Hatchback (7A, 7C, N3, N5)	14	55	05/93 – 05/01	3380	
306 Hatchback (7A, 7C, N3, N5)	14	55	05/93 – 05/01	3381	
306 Hatchback (7A, 7C, N3, N5)	14	55	05/93 – 05/01	3528	
306 Hatchback (7A, 7C, N3, N5)	14	55	05/93 – 05/01	3636	
306 Hatchback (7A, 7C, N3, N5)	14	55	05/93 – 05/01	3644	
306 Hatchback (7A, 7C, N3, N5)	14	55	05/93 – 05/01	3759	
306 Hatchback (7A, 7C, N3, N5)	16	65	05/93 – 10/00	3528	
306 Hatchback (7A, 7C, N3, N5)	16	65	05/93 – 10/00	3636	
306 Hatchback (7A, 7C, N3, N5)	16	65	05/93 – 10/00	3644	
306 Hatchback (7A, 7C, N3, N5)	16	66	07/00 – 05/01	3636	
306 Hatchback (7A, 7C, N3, N5)	16	66	07/00 – 05/01	3644	
306 Hatchback (7A, 7C, N3, N5)	16	72	10/00 – 05/01	3636	
306 Hatchback (7A, 7C, N3, N5)	16	72	10/00 – 05/01	3644	
306 Hatchback (7A, 7C, N3, N5)	18	74	05/93 – 05/01		3496
306 Hatchback (7A, 7C, N3, N5)	18	74	05/97 – 04/99		3496
306 Hatchback (7A, 7C, N3, N5)	18	74	05/93 – 05/01	3528	
306 Hatchback (7A, 7C, N3, N5)	18	74	05/97 – 04/99	3636	
306 Hatchback (7A, 7C, N3, N5)	18	74	05/97 – 04/99	3644	
306 Hatchback (7A, 7C, N3, N5)	1.8 16V	81	03/97 – 05/01		3496
306 Hatchback (7A, 7C, N3, N5)	1.8 16V	81	03/97 – 05/01	3528	
306 Hatchback (7A, 7C, N3, N5)	1.8 16V	81	03/97 – 05/01	3636	
306 Hatchback (7A, 7C, N3, N5)	1.8 16V	81	03/97 – 05/01	3644	
306 Hatchback (7A, 7C, N3, N5)	1.8 D	43	05/93 – 05/01	3528	
306 Hatchback (7A, 7C, N3, N5)	1.8 D	43	05/93 – 05/01	3636	
306 Hatchback (7A, 7C, N3, N5)	1.8 D	43	05/93 – 05/01	3644	
306 Hatchback (7A, 7C, N3, N5)	1.9 D	47	05/93 – 05/01	3528	
306 Hatchback (7A, 7C, N3, N5)	1.9 D	50	06/94 – 05/01	3528	
306 Hatchback (7A, 7C, N3, N5)	1.9 D	51	04/93 – 05/99	3528	
306 Hatchback (7A, 7C, N3, N5)	1.9 D	51	04/93 – 05/99	3636	
306 Hatchback (7A, 7C, N3, N5)	1.9 D	51	09/98 – 05/01	3636	
306 Hatchback (7A, 7C, N3, N5)	1.9 D	51	04/93 – 05/99	3644	
306 Hatchback (7A, 7C, N3, N5)	1.9 D	51	09/98 – 05/01	3644	
306 Hatchback (7A, 7C, N3, N5)	1.9 D	55	03/98 – 05/01	3636	
306 Hatchback (7A, 7C, N3, N5)	1.9 D	55	03/98 – 05/01	3644	
306 Hatchback (7A, 7C, N3, N5)	1.9 D	69	04/93 – 04/97	3528	
306 Hatchback (7A, 7C, N3, N5)	1.9 D	69	04/93 – 04/97	3636	
306 Hatchback (7A, 7C, N3, N5)	1.9 D	69	04/93 – 04/97	3644	
306 Hatchback (7A, 7C, N3, N5)	1.9 DT	66	05/93 – 05/01	3528	
306 Hatchback (7A, 7C, N3, N5)	2.0 16V	97	03/97 – 05/01		3496
306 Hatchback (7A, 7C, N3, N5)	2.0 16V	97	03/97 – 05/01	3528	
306 Hatchback (7A, 7C, N3, N5)	2.0 16V	97	03/97 – 05/01	3636	
306 Hatchback (7A, 7C, N3, N5)	2.0 16V	97	03/97 – 05/01	3644	
306 Hatchback (7A, 7C, N3, N5)	2.0 16V	99	03/97 – 06/00		3496
306 Hatchback (7A, 7C, N3, N5)	2.0 16V	99	03/97 – 06/00	3528	
306 Hatchback (7A, 7C, N3, N5)	2.0 16V	99	03/97 – 06/00	3636	
306 Hatchback (7A, 7C, N3, N5)	2.0 16V	99	03/97 – 06/00	3644	
306 Hatchback (7A, 7C, N3, N5)	2.0 HDI 90	66	06/99 – 05/01		3496
306 Hatchback (7A, 7C, N3, N5)	2.0 HDI 90	66	06/99 – 05/01	3636	
306 Hatchback (7A, 7C, N3, N5)	2.0 HDI 90	66	06/99 – 05/01	3644	
306 Hatchback (7A, 7C, N3, N5)	2.0 S16	110	06/94 – 05/01		3496
306 Hatchback (7A, 7C, N3, N5)	2.0 S16	110	06/94 – 05/01	3610	
306 Hatchback (7A, 7C, N3, N5)	2.0 S16	110	06/94 – 05/01	3636	
306 Hatchback (7A, 7C, N3, N5)	2.0 S16	110	06/94 – 05/01	3644	
306 Hatchback (7A, 7C, N3, N5)	2.0 S16	112	05/93 – 05/01		3496
306 Hatchback (7A, 7C, N3, N5)	2.0 S16	112	05/93 – 05/01	3610	
306 Hatchback (7A, 7C, N3, N5)	2.0 S16	112	05/93 – 05/01	3636	
306 Hatchback (7A, 7C, N3, N5)	2.0 S16	112	05/93 – 05/01	3644	
306 Hatchback (7A, 7C, N3, N5)	2.0 S16	120	03/96 – 05/01		3496
306 Hatchback (7A, 7C, N3, N5)	2.0 XSi	89	05/93 – 05/01		3496
306 Hatchback (7A, 7C, N3, N5)	2.0 XSi	89	05/93 – 05/01	3610	

MAKE & MODEL   		KW	YEAR		
PEUGEOT					
306 Hatchback (7A, 7C, N3, N5)	2.0 XSi	89	05/93 – 05/01	3636	
306 Hatchback (7A, 7C, N3, N5)	2.0 XSi	89	05/93 – 05/01	3644	
306 Hatchback (7A, 7C, N3, N5)	2.0 S16	110	06/94-05/01	3557	
306 Hatchback (7A, 7C, N3, N5)	2.0 S16	112	05/93-05/01	3557	
306 Hatchback (7A, 7C, N3, N5)	2.0 XSi	89	05/93-05/01	3557	
306 Van (N_, 7_)	1.9 D	69	02/94 – 04/99	3528	
306 Van (N_, 7_)	1.9 D	69	02/94 – 04/99	3636	
306 Van (N_, 7_)	1.9 D	69	02/94 – 04/99	3644	
306 Van (N_, 7_)	1.9 STD	51	02/94 – 10/95	3528	
306 Van (N_, 7_)	1.9 STD	51	02/94 – 10/95	3636	
306 Van (N_, 7_)	1.9 STD	51	02/94 – 10/95	3644	
307 (3A/C)	14	55	08/00 -		3529/1
307 (3A/C)	14	55	08/00 -		3984
307 (3A/C)	16	81	07/06 -		3529/1
307 (3A/C)	16	81	07/06 -	3800	
307 (3A/C)	16	81	07/06 -		3984
307 (3A/C)	20	105	08/08 -		3529/1
307 (3A/C)	20	105	08/08 -	3800	
307 (3A/C)	20	105	08/08 -		3984
307 (3A/C)	1.4 16V	65	11/03 -		3529/1
307 (3A/C)	1.4 16V	65	11/03 -	3800	
307 (3A/C)	1.4 16V	65	11/03 -		3984
307 (3A/C)	1.4 HDi	50	10/01 -		3529/1
307 (3A/C)	1.4 HDi	50	10/01 -		3984
307 (3A/C)	1.6 16V	80	08/00 -		3529/1
307 (3A/C)	1.6 16V	80	08/00 -	3800	
307 (3A/C)	1.6 16V	80	08/00 -		3984
307 (3A/C)	1.6 BioFlex	80	09/07 -		3529/1
307 (3A/C)	1.6 BioFlex	80	09/07 -	3800	
307 (3A/C)	1.6 BioFlex	80	09/07 -		3984
307 (3A/C)	1.6 HDi	66	04/05 -		3529/1
307 (3A/C)	1.6 HDi	66	04/05 -	3800	
307 (3A/C)	1.6 HDi	66	04/05 -		3984
307 (3A/C)	1.6 HDi 110	80	02/04 -		3529/1
307 (3A/C)	1.6 HDi 110	80	02/04 -	3800	
307 (3A/C)	1.6 HDi 110	80	02/04 -		3984
307 (3A/C)	2.0 16V	100	08/00 -		3529/1
307 (3A/C)	2.0 16V	100	08/00 -	3800	
307 (3A/C)	2.0 16V	100	08/00 -		3984
307 (3A/C)	2.0 16V	103	03/05 -		3529/1
307 (3A/C)	2.0 16V	103	03/05 -	3800	
307 (3A/C)	2.0 16V	103	03/05 -		3984
307 (3A/C)	2.0 16V	130	06/05 -		3529/1
307 (3A/C)	2.0 16V	130	06/05 -		3984
307 (3A/C)	2.0 HDi 110	79	08/00 -		3529/1
307 (3A/C)	2.0 HDi 110	79	08/00 -	3800	
307 (3A/C)	2.0 HDi 110	79	08/00 -		3984
307 (3A/C)	2.0 HDi 135	100	10/03 -		3529/1
307 (3A/C)	2.0 HDi 135	100	10/03 -		3984
307 (3A/C)	2.0 HDi 90	66	08/00 -		3529/1
307 (3A/C)	2.0 HDi 90	66	08/00 -	3800	
307 (3A/C)	2.0 HDi 90	66	08/00 -		3984
307 Break (3E)	14	55	04/02 – 09/03		3529/1
307 Break (3E)	14	55	04/02 – 09/03	3800	
307 Break (3E)	14	55	04/02 – 09/03		3984
307 Break (3E)	20	100	03/02 -		3529/1
307 Break (3E)	20	100	03/02 -	3800	
307 Break (3E)	20	100	03/02 -		3984
307 Break (3E)	1.4 16V	65	11/03 -		3529/1
307 Break (3E)	1.4 16V	65	11/03 -	3800	
307 Break (3E)	1.4 16V	65	11/03 -		3984
307 Break (3E)	1.4 HDi	50	03/02 -		3529/1
307 Break (3E)	1.4 HDi	50	03/02 -		3984
307 Break (3E)	1.6 16V	80	03/02 -		3529/1
307 Break (3E)	1.6 16V	80	03/02 -	3800	
307 Break (3E)	1.6 16V	80	03/02 -		3984
307 Break (3E)	1.6 BioFlex	80	09/07 -		3529/1
307 Break (3E)	1.6 BioFlex	80	09/07 -	3800	
307 Break (3E)	1.6 BioFlex	80	09/07 -		3984
307 Break (3E)	1.6 HDi	66	04/05 -		3529/1
307 Break (3E)	1.6 HDi	66	04/05 -	3800	
307 Break (3E)	1.6 HDi	66	04/05 -		3984

MAKE & MODEL		KW	YEAR		
PEUGEOT					
307 Break (3E)	1.6 HDi 110	80	02/04 -		3529/1
307 Break (3E)	1.6 HDi 110	80	02/04 -	3800	
307 Break (3E)	1.6 HDi 110	80	02/04 -		3984
307 Break (3E)	2.0 16V	103	03/05 -		3529/1
307 Break (3E)	2.0 16V	103	03/05 -	3800	
307 Break (3E)	2.0 16V	103	03/05 -		3984
307 Break (3E)	2.0 16V	130	06/05 -		3529/1
307 Break (3E)	2.0 16V	130	06/05 -		3984
307 Break (3E)	2.0 HDI 110	79	03/02 -		3529/1
307 Break (3E)	2.0 HDI 110	79	03/02 -	3800	
307 Break (3E)	2.0 HDI 110	79	03/02 -		3984
307 Break (3E)	2.0 HDI 90	66	03/02 -		3529/1
307 Break (3E)	2.0 HDI 90	66	03/02 -	3800	
307 Break (3E)	2.0 HDI 90	66	03/02 -		3984
307 Break (3E)	2.0 HDi 135	100	02/04 -		3529/1
307 Break (3E)	2.0 HDi 135	100	02/04 -		3984
307 CC (3B)	1.6 16V	80	02/05 -		3529/1
307 CC (3B)	1.6 16V	80	02/05 -	3800	
307 CC (3B)	1.6 16V	80	02/05 -		3984
307 CC (3B)	2.0 16V	100	10/03 -		3529/1
307 CC (3B)	2.0 16V	100	10/03 -	3800	
307 CC (3B)	2.0 16V	100	10/03 -		3984
307 CC (3B)	2.0 16V	103	03/05 -		3529/1
307 CC (3B)	2.0 16V	103	03/05 -	3800	
307 CC (3B)	2.0 16V	103	03/05 -		3984
307 CC (3B)	2.0 16V	130	10/03 -		3529/1
307 CC (3B)	2.0 16V	130	10/03 -		3984
307 CC (3B)	2.0 HDi 135	100	06/05 -		3529/1
307 CC (3B)	2.0 HDi 135	100	06/05 -		3984
307 Hatchback	16	78	02/08 – 12/14	3800	
307 Hatchback	20	108	02/08 -	3800	
307 Saloon	16	78	08/04 – 12/14	3800	
307 Saloon	20	99	08/04 – 05/06	3800	
307 Saloon	20	108	05/06 – 12/10	3800	
307 SW (3H)	14	55	04/02 – 09/03		3529/1
307 SW (3H)	14	55	04/02 – 09/03	3800	
307 SW (3H)	14	55	04/02 – 09/03		3984
307 SW (3H)	1.4 16V	65	11/03 -		3529/1
307 SW (3H)	1.4 16V	65	11/03 -	3800	
307 SW (3H)	1.4 16V	65	11/03 -		3984
307 SW (3H)	1.4 HDi 70	50	03/02 – 01/05		3529/1
307 SW (3H)	1.4 HDi 70	50	03/02 – 01/05	3800	
307 SW (3H)	1.4 HDi 70	50	03/02 – 01/05		3984
307 SW (3H)	1.6 16V	80	03/02 -		3529/1
307 SW (3H)	1.6 16V	80	03/02 -	3800	
307 SW (3H)	1.6 16V	80	03/02 -		3984
307 SW (3H)	1.6 BioFlex	80	09/07 -		3529/1
307 SW (3H)	1.6 BioFlex	80	09/07 -	3800	
307 SW (3H)	1.6 BioFlex	80	09/07 -		3984
307 SW (3H)	1.6 HDI 110	80	02/04 -		3529/1
307 SW (3H)	1.6 HDI 110	80	02/04 -	3800	
307 SW (3H)	1.6 HDI 110	80	02/04 -		3984
307 SW (3H)	1.6 HDI 90	66	12/06 -		3529/1
307 SW (3H)	1.6 HDI 90	66	12/06 -	3800	
307 SW (3H)	1.6 HDI 90	66	12/06 -		3984
307 SW (3H)	2.0 16V	100	03/02 -		3529/1
307 SW (3H)	2.0 16V	100	03/02 -	3800	
307 SW (3H)	2.0 16V	100	03/02 -		3984
307 SW (3H)	2.0 16V	103	03/05 -		3529/1
307 SW (3H)	2.0 16V	103	03/05 -	3800	
307 SW (3H)	2.0 16V	103	03/05 -		3984
307 SW (3H)	2.0 HDI 110	79	03/02 -		3529/1
307 SW (3H)	2.0 HDI 110	79	03/02 -	3800	
307 SW (3H)	2.0 HDI 110	79	03/02 -		3984
307 SW (3H)	2.0 HDI 90	66	03/02 -		3529/1
307 SW (3H)	2.0 HDI 90	66	03/02 -	3800	
307 SW (3H)	2.0 HDI 90	66	03/02 -		3984
307 SW (3H)	2.0 HDi 135	100	02/04 -		3529/1
307 SW (3H)	2.0 HDi 135	100	02/04 -		3984
308 (4A_, 4C_)	16	120	01/12 -		3529/1
308 (4A_, 4C_)	1.4 16V	70	09/07 -		3529/1

MAKE & MODEL		KW	YEAR		
PEUGEOT					
308 (4A_, 4C_)	1.4 16V	70	09/07 -	3970	
308 (4A_, 4C_)	1.4 16V	72	12/09 -		3529/1
308 (4A_, 4C_)	1.4 16V	72	12/09 -	3970	
308 (4A_, 4C_)	1.6 16V	88	09/07 -		3529/1
308 (4A_, 4C_)	1.6 16V	88	09/07 -	3970	
308 (4A_, 4C_)	1.6 16V	103	09/07 -		3529/1
308 (4A_, 4C_)	1.6 16V	103	09/07 -	3970	
308 (4A_, 4C_)	1.6 16V	110	09/07 -		3529/1
308 (4A_, 4C_)	1.6 16V	110	09/07 -	3970	
308 (4A_, 4C_)	1.6 16V	115	10/09 -		3529/1
308 (4A_, 4C_)	1.6 16V	128	03/08 -		3529/1
308 (4A_, 4C_)	1.6 16V	128	03/08 -	3970	
308 (4A_, 4C_)	1.6 BioFlex	80	04/08 -		3529/1
308 (4A_, 4C_)	1.6 BioFlex	80	04/08 -	3970	
308 (4A_, 4C_)	1.6 GTi	147	07/10 -		3971
308 (4A_, 4C_)	1.6 HDi	66	09/07 -		3529/1
308 (4A_, 4C_)	1.6 HDi	66	09/07 -	3970	
308 (4A_, 4C_)	1.6 HDi	68	11/09 -		3529/1
308 (4A_, 4C_)	1.6 HDi	68	11/09 -	3970	
308 (4A_, 4C_)	1.6 HDi	80	09/07 -		3529/1
308 (4A_, 4C_)	1.6 HDi	80	09/07 -	3970	
308 (4A_, 4C_)	1.6 HDi	82	12/09 -		3529/1
308 (4A_, 4C_)	1.6 HDi	82	12/09 -	3970	
308 (4A_, 4C_)	1.6 HDi	84	03/13 -		3529/1
308 (4A_, 4C_)	1.6 HDi	84	03/13 -	3970	
308 (4A_, 4C_)	2.0 HDi	100	09/07 -		3529/1
308 (4A_, 4C_)	2.0 HDi	100	09/07 -	3970	
308 (4A_, 4C_)	2.0 HDi	103	07/10 -		3529/1
308 (4A_, 4C_)	2.0 HDi	103	07/10 -	3970	
308 (4A_, 4C_)	2.0 HDi	103	07/10 -		3971
308 (4A_, 4C_)	2.0 HDi	110	10/11 -		3529/1
308 (4A_, 4C_)	2.0 HDi	110	10/11 -		3971
308 (4A_, 4C_)	2.0 HDi	120	04/12 -		3529/1
308 CC	1.6 16V	88	06/09 -		3529/1
308 CC	1.6 16V	88	06/09 -	3970	
308 CC	1.6 16V	103	06/09 -		3529/1
308 CC	1.6 16V	110	06/09 -		3529/1
308 CC	1.6 16V	115	06/09 -		3529/1
308 CC	1.6 HDi	82	06/09 -		3529/1
308 CC	1.6 HDi	82	06/09 -	3970	
308 CC	1.6 HDi	84	03/13 -		3529/1
308 CC	1.6 HDi	84	03/13 -	3970	
308 CC	2.0 HDi	100	04/09 -		3529/1
308 CC	2.0 HDi	103	04/09 -		3529/1
308 CC	2.0 HDi	120	06/09 -		3529/1
308 II	16	115	09/13 -	4201	
308 II	1.2 THP 110	81	11/13 -	4201	
308 II	1.2 THP 130	96	11/13 -	4201	
308 II	1.2 VTi 72	60	09/13 -	4201	
308 II	1.6 BlueHDi 120	88	11/13 -	4201	
308 II	1.6 GT 205	151	06/14 -	4201	
308 II	1.6 GTi	200	06/15 -	4201	
308 II	1.6 HDi	68	09/13 -	4201	
308 II	1.6 HDi / BlueHDi 115	85	09/13 -	4201	
308 II	1.6 HDi 100	73	04/14 -	4201	
308 II	1.6 THP 125	92	09/13 -	4201	
308 II	1.6 THP 150	110	03/14 -	4201	
308 II	1.6 THP 163	120	06/14 -	4201	
308 II	1.6 VTi	85	03/14 -	4201	
308 II	2.0 BlueHDi 150	110	11/13 -	4201	
308 II	2.0 GT HDi 180	133	06/14 -	4201	
308 SW	1.4 16V	70	09/07 -		3529/1
308 SW	1.4 16V	70	09/07 -	3970	
308 SW	1.4 16V	70	09/07 -		3971
308 SW	1.4 16V	72	12/09 -		3529/1
308 SW	1.4 16V	72	12/09 -	3970	
308 SW	1.4 16V	72	12/09 -		3971
308 SW	1.6 16V	88	09/07 -		3529/1
308 SW	1.6 16V	88	09/07 -	3970	
308 SW	1.6 16V	88	09/07 -		3971
308 SW	1.6 16V	103	09/07 -		3529/1

MAKE & MODEL		KW	YEAR		
PEUGEOT					
308 SW	1.6 16V	103	09/07 -	3970	
308 SW	1.6 16V	103	09/07 -		3971
308 SW	1.6 16V	110	09/07 -		3529/1
308 SW	1.6 16V	110	09/07 -	3970	
308 SW	1.6 16V	110	09/07 -		3971
308 SW	1.6 16V	115	10/09 -		3529/1
308 SW	1.6 16V	115	10/09 -	3970	
308 SW	1.6 16V	115	10/09 -		3971
308 SW	1.6 16V	128	03/08 -		3529/1
308 SW	1.6 16V	128	03/08 -	3970	
308 SW	1.6 16V	128	03/08 -		3971
308 SW	1.6 Bioflex	82	03/09 -		3529/1
308 SW	1.6 Bioflex	82	03/09 -	3970	
308 SW	1.6 Bioflex	82	03/09 -		3971
308 SW	1.6 HDi	66	09/07 -		3529/1
308 SW	1.6 HDi	66	09/07 -	3970	
308 SW	1.6 HDi	66	09/07 -		3971
308 SW	1.6 HDi	68	11/09 -		3529/1
308 SW	1.6 HDi	68	11/09 -	3970	
308 SW	1.6 HDi	68	11/09 -		3971
308 SW	1.6 HDi	80	09/07 -		3529/1
308 SW	1.6 HDi	80	09/07 -	3970	
308 SW	1.6 HDi	80	09/07 -		3971
308 SW	1.6 HDi	82	12/09 -		3529/1
308 SW	1.6 HDi	82	12/09 -	3970	
308 SW	1.6 HDi	82	12/09 -		3971
308 SW	1.6 HDi	84	03/13 -		3529/1
308 SW	1.6 HDi	84	03/13 -		3971
308 SW	1.6 HDi	84	03/13 -	4201	
308 SW	2.0 Bioflex	103	01/08 -		3529/1
308 SW	2.0 Bioflex	103	01/08 -	3970	
308 SW	2.0 Bioflex	103	01/08 -		3971
308 SW	2.0 HDi	100	09/07 -		3529/1
308 SW	2.0 HDi	100	09/07 -		3971
308 SW	2.0 HDi	103	09/07 -		3529/1
308 SW	2.0 HDi	103	09/07 -		3971
308 SW	2.0 HDi	110	04/11 -		3529/1
308 SW	2.0 HDi	110	04/11 -		3971
308 SW	2.0 HDi	120	06/09 -		3529/1
308 SW	2.0 HDi	120	06/09 -		3971
308 SW II	1.2 THP 110	81	03/14 -	4201	
308 SW II	1.2 THP 130	96	03/14 -	4201	
308 SW II	1.6 BlueHDi 100	73	04/14 -	4201	
308 SW II	1.6 BlueHDi 120	88	03/14 -	4201	
308 SW II	1.6 GT 205	151	06/14 -	4201	
308 SW II	1.6 HDi / BlueHDi 115	85	03/14 -	4201	
308 SW II	1.6 THP 125	92	03/14 -	4201	
308 SW II	1.6 THP 150	110	03/14 -	4201	
308 SW II	1.6 THP 155	115	03/14 -	4201	
308 SW II	1.6 THP 163	120	06/14 -	4201	
308 SW II	1.6 VTi	85	03/14 -	4201	
308 SW II	2.0 BlueHDi 150	110	03/14 -	4201	
308 SW II	2.0 BlueHDi 180	132	06/14 -	4201	
308 SW II	2.0 GT BlueHDi 180	133	06/14 -	4201	
309 I (10C, 10A)	11	40	10/85 – 07/89	3380	
309 I (10C, 10A)	11	40	10/85 – 07/89	3381	
309 I (10C, 10A)	11	40	10/85 – 07/89	3474	
309 I (10C, 10A)	11	40	10/85 – 07/89	3580	
309 I (10C, 10A)	13	47	10/85 – 07/89	3380	
309 I (10C, 10A)	13	47	10/85 – 07/89	3381	
309 I (10C, 10A)	13	47	10/85 – 07/89	3474	
309 I (10C, 10A)	13	47	10/85 – 07/89	3580	
309 I (10C, 10A)	14	49	03/89 – 07/89	3380	
309 I (10C, 10A)	14	49	03/89 – 07/89	3381	
309 I (10C, 10A)	14	49	03/89 – 07/89	3474	
309 I (10C, 10A)	14	49	03/89 – 07/89	3580	
309 I (10C, 10A)	14	55	03/89 – 07/89	3380	
309 I (10C, 10A)	14	55	03/89 – 07/89	3381	
309 I (10C, 10A)	14	55	03/89 – 07/89	3474	
309 I (10C, 10A)	14	55	03/89 – 07/89	3580	
309 I (10C, 10A)	14	62	03/89 – 07/89	3380	

MAKE & MODEL		KW	YEAR		
PEUGEOT					
309 I (10C, 10A)	14	62	03/89 – 07/89	3381	
309 I (10C, 10A)	14	62	03/89 – 07/89	3474	
309 I (10C, 10A)	14	62	03/89 – 07/89	3580	
309 I (10C, 10A)	15	63	06/87 – 12/89	3380	
309 I (10C, 10A)	15	63	06/87 – 12/89	3381	
309 I (10C, 10A)	15	63	06/87 – 12/89	3474	
309 I (10C, 10A)	15	63	06/87 – 12/89	3580	
309 I (10C, 10A)	16	53	08/87 – 07/89	3380	
309 I (10C, 10A)	16	53	08/87 – 07/89	3381	
309 I (10C, 10A)	16	53	08/87 – 07/89	3474	
309 I (10C, 10A)	16	53	08/87 – 07/89	3580	
309 I (10C, 10A)	16	55	10/85 – 07/89	3380	
309 I (10C, 10A)	16	55	10/85 – 07/89	3381	
309 I (10C, 10A)	16	55	10/85 – 07/89	3474	
309 I (10C, 10A)	16	55	10/85 – 07/89	3580	
309 I (10C, 10A)	16	59	10/85 – 07/89	3380	
309 I (10C, 10A)	16	59	10/85 – 07/89	3381	
309 I (10C, 10A)	16	59	10/85 – 07/89	3474	
309 I (10C, 10A)	16	59	10/85 – 07/89	3580	
309 I (10C, 10A)	16	69	01/86 – 07/89	3380	
309 I (10C, 10A)	16	69	01/86 – 07/89	3381	
309 I (10C, 10A)	16	69	01/86 – 07/89	3474	
309 I (10C, 10A)	16	69	01/86 – 07/89	3580	
309 I (10C, 10A)	16	76	11/85 – 09/88	3431	
309 I (10C, 10A)	16	76	11/85 – 09/88	3503	
309 I (10C, 10A)	16	83	07/86 – 06/89	3431	
309 I (10C, 10A)	16	83	07/86 – 06/89	3503	
309 I (10C, 10A)	19	72	03/86 – 07/89	3431	
309 I (10C, 10A)	19	72	03/86 – 07/89		3496
309 I (10C, 10A)	19	72	03/86 – 07/89	3503	
309 I (10C, 10A)	19	75	10/85 – 07/89	3380	
309 I (10C, 10A)	19	75	10/85 – 07/89	3381	
309 I (10C, 10A)	19	75	10/85 – 07/89	3474	
309 I (10C, 10A)	19	75	10/85 – 07/89	3580	
309 I (10C, 10A)	19	80	07/88 – 07/89	3380	
309 I (10C, 10A)	19	80	07/88 – 07/89	3381	
309 I (10C, 10A)	19	80	07/88 – 07/89	3474	
309 I (10C, 10A)	19	80	07/88 – 07/89	3580	
309 I (10C, 10A)	1.6 CAT	55	09/86 – 12/89	3380	
309 I (10C, 10A)	1.6 CAT	55	09/86 – 12/89	3381	
309 I (10C, 10A)	1.6 CAT	55	09/86 – 12/89	3474	
309 I (10C, 10A)	1.6 CAT	55	09/86 – 12/89	3580	
309 I (10C, 10A)	1.9 D	47	06/86 – 07/89	3380	
309 I (10C, 10A)	1.9 D	47	06/86 – 07/89	3381	
309 I (10C, 10A)	1.9 D	47	06/86 – 07/89	3474	
309 I (10C, 10A)	1.9 D	47	06/86 – 07/89	3580	
309 I (10C, 10A)	1.9 GTI	88	07/88 – 07/89	3431	
309 I (10C, 10A)	1.9 GTI	88	07/88 – 07/89		3496
309 I (10C, 10A)	1.9 GTI	88	07/88 – 07/89	3503	
309 I (10C, 10A)	1.9 GTI	94	10/86 – 07/89	3431	
309 I (10C, 10A)	1.9 GTI	94	10/86 – 07/89		3496
309 I (10C, 10A)	1.9 GTI	94	10/86 – 07/89	3503	
309 II (3C, 3A)	11	40	09/89 – 10/93	3380	
309 II (3C, 3A)	11	40	09/89 – 10/93	3381	
309 II (3C, 3A)	11	40	09/89 – 10/93	3474	
309 II (3C, 3A)	11	40	09/89 – 10/93	3580	
309 II (3C, 3A)	11	44	08/90 – 12/93	3380	
309 II (3C, 3A)	11	44	08/90 – 12/93	3381	
309 II (3C, 3A)	11	44	08/90 – 12/93	3474	
309 II (3C, 3A)	11	44	08/90 – 12/93	3580	
309 II (3C, 3A)	14	49	07/90 – 12/93	3380	
309 II (3C, 3A)	14	49	07/90 – 12/93	3381	
309 II (3C, 3A)	14	49	07/90 – 12/93	3474	
309 II (3C, 3A)	14	49	07/90 – 12/93	3580	
309 II (3C, 3A)	14	55	07/89 – 12/93	3380	
309 II (3C, 3A)	14	55	07/89 – 12/93	3381	
309 II (3C, 3A)	14	55	07/89 – 12/93	3474	
309 II (3C, 3A)	14	55	07/89 – 12/93	3580	
309 II (3C, 3A)	16	65	07/89 – 12/93	3380	
309 II (3C, 3A)	16	65	07/89 – 12/93	3381	
309 II (3C, 3A)	16	65	07/89 – 12/93	3474	

MAKE & MODEL		KW	YEAR		
PEUGEOT					
309 II (3C, 3A)	16	65	07/89 – 12/93	3580	
309 II (3C, 3A)	16	68	07/89 – 12/93	3380	
309 II (3C, 3A)	16	68	07/89 – 12/93	3381	
309 II (3C, 3A)	16	68	07/89 – 12/93	3474	
309 II (3C, 3A)	16	68	07/89 – 12/93	3580	
309 II (3C, 3A)	16	69	07/89 – 12/93	3380	
309 II (3C, 3A)	16	69	07/89 – 12/93	3381	
309 II (3C, 3A)	16	69	07/89 – 12/93	3474	
309 II (3C, 3A)	16	69	07/89 – 12/93	3580	
309 II (3C, 3A)	19	72	08/89 – 12/93	3380	
309 II (3C, 3A)	19	72	08/89 – 12/93	3381	
309 II (3C, 3A)	19	72	08/89 – 12/93	3474	
309 II (3C, 3A)	19	72	08/89 – 12/93	3580	
309 II (3C, 3A)	19	80	10/90 – 12/93	3380	
309 II (3C, 3A)	19	80	10/90 – 12/93	3381	
309 II (3C, 3A)	19	80	10/90 – 12/93	3474	
309 II (3C, 3A)	19	80	10/90 – 12/93	3580	
309 II (3C, 3A)	1.6 GTi	85	09/89 – 10/93	3431	
309 II (3C, 3A)	1.6 GTi	85	09/89 – 10/93		3496
309 II (3C, 3A)	1.6 GTi	85	09/89 – 10/93	3503	
309 II (3C, 3A)	1.8 Diesel	44	07/89 – 12/93	3380	
309 II (3C, 3A)	1.8 Diesel	44	07/89 – 12/93	3381	
309 II (3C, 3A)	1.8 Diesel	44	07/89 – 12/93	3474	
309 II (3C, 3A)	1.8 Diesel	44	07/89 – 12/93	3580	
309 II (3C, 3A)	1.8 TD	57	08/89 – 12/93	3380	
309 II (3C, 3A)	1.8 TD	57	08/89 – 12/93	3381	
309 II (3C, 3A)	1.8 TD	57	08/89 – 12/93	3474	
309 II (3C, 3A)	1.8 TD	57	08/89 – 12/93	3580	
309 II (3C, 3A)	1.9 Diesel	47	07/89 – 12/93	3380	
309 II (3C, 3A)	1.9 Diesel	47	07/89 – 12/93	3381	
309 II (3C, 3A)	1.9 Diesel	47	07/89 – 12/93	3474	
309 II (3C, 3A)	1.9 Diesel	47	07/89 – 12/93	3580	
309 II (3C, 3A)	1.9 GTI	88	07/89 – 12/93	3431	
309 II (3C, 3A)	1.9 GTI	88	07/89 – 12/93		3496
309 II (3C, 3A)	1.9 GTI	88	07/89 – 12/93	3503	
309 II (3C, 3A)	1.9 GTI 16V	108	10/90 – 12/93	3431	
309 II (3C, 3A)	1.9 GTI 16V	108	10/90 – 12/93		3496
309 II (3C, 3A)	1.9 GTI 16V	108	10/90 – 12/93	3503	
309 II (3C, 3A)	1.9 GTI 16V	116	08/89 – 07/90	3431	
309 II (3C, 3A)	1.9 GTI 16V	116	08/89 – 07/90		3496
309 II (3C, 3A)	1.9 GTI 16V	116	08/89 – 07/90	3503	
4007 (GP_)	20	108	11/10 -	3685	
4007 (GP_)	20	108	11/10 -		3893
4007 (GP_)	2.0 4x4	108	11/10 -	3685	
4007 (GP_)	2.0 4x4	108	11/10 -		3893
4007 (GP_)	2.2 HDi	115	02/07 -	3685	
4007 (GP_)	2.2 HDi	115	02/07 -		3893
4007 (GP_)	2.4 16V	125	01/08 -	3685	
4007 (GP_)	2.4 16V	125	01/08 -		3893
405 I (15B)	14	47	01/87 – 07/92	3380	
405 I (15B)	14	47	01/87 – 07/92	3381	
405 I (15B)	14	47	01/87 – 07/92	3457	
405 I (15B)	14	47	01/87 – 07/92	3580	
405 I (15B)	16	53	07/87 – 12/92	3380	
405 I (15B)	16	53	07/87 – 12/92	3381	
405 I (15B)	16	53	07/87 – 12/92	3457	
405 I (15B)	16	53	07/87 – 12/92	3580	
405 I (15B)	16	55	07/87 – 06/88	3380	
405 I (15B)	16	55	07/87 – 06/88	3381	
405 I (15B)	16	55	07/87 – 06/88	3457	
405 I (15B)	16	55	07/87 – 06/88	3580	
405 I (15B)	16	65	07/87 – 12/92	3380	
405 I (15B)	16	65	07/87 – 12/92	3381	
405 I (15B)	16	65	07/87 – 12/92	3457	
405 I (15B)	16	65	07/87 – 12/92	3580	
405 I (15B)	16	66	10/89 – 12/92	3380	
405 I (15B)	16	66	10/89 – 12/92	3381	
405 I (15B)	16	66	10/89 – 12/92	3457	
405 I (15B)	16	66	10/89 – 12/92	3580	
405 I (15B)	16	69	01/87 – 12/92	3380	
405 I (15B)	16	69	01/87 – 12/92	3381	

MAKE & MODEL   		KW	YEAR		
PEUGEOT					
405 I (15B)	16	69	01/87 – 12/92	3457	
405 I (15B)	16	69	01/87 – 12/92	3580	
405 I (15B)	19	70	07/87 – 12/92	3380	
405 I (15B)	19	70	07/87 – 12/92	3381	
405 I (15B)	19	70	07/87 – 12/92	3457	
405 I (15B)	19	70	07/87 – 12/92	3580	
405 I (15B)	19	80	07/88 – 12/92	3380	
405 I (15B)	19	80	07/88 – 12/92	3381	
405 I (15B)	19	80	07/88 – 12/92	3457	
405 I (15B)	19	80	07/88 – 12/92		3529
405 I (15B)	19	80	07/88 – 12/92	3580	
405 I (15B)	19	88	07/88 – 12/92	3380	
405 I (15B)	19	88	07/88 – 12/92	3381	
405 I (15B)	19	88	07/88 – 12/92	3457	
405 I (15B)	19	88	07/88 – 12/92		3529
405 I (15B)	19	88	07/88 – 12/92	3580	
405 I (15B)	19	90	01/89 – 12/92	3380	
405 I (15B)	19	90	01/89 – 12/92	3381	
405 I (15B)	19	90	01/89 – 12/92	3457	
405 I (15B)	19	90	01/89 – 12/92		3529
405 I (15B)	19	90	01/89 – 12/92	3580	
405 I (15B)	19	93	07/87 – 12/93	3380	
405 I (15B)	19	93	07/87 – 12/93	3381	
405 I (15B)	19	93	07/87 – 12/93	3457	
405 I (15B)	19	93	07/87 – 12/93		3529
405 I (15B)	19	93	07/87 – 12/93	3580	
405 I (15B)	1.8 Turbo Diesel	66	03/88 – 12/92	3380	
405 I (15B)	1.8 Turbo Diesel	66	03/88 – 12/92	3381	
405 I (15B)	1.8 Turbo Diesel	66	03/88 – 12/92	3457	
405 I (15B)	1.8 Turbo Diesel	66	03/88 – 12/92		3529
405 I (15B)	1.8 Turbo Diesel	66	03/88 – 12/92	3580	
405 I (15B)	1.9 4x4	80	07/88 – 12/92	3380	
405 I (15B)	1.9 4x4	80	07/88 – 12/92	3381	
405 I (15B)	1.9 4x4	80	07/88 – 12/92	3457	
405 I (15B)	1.9 4x4	80	07/88 – 12/92		3529
405 I (15B)	1.9 4x4	80	07/88 – 12/92	3580	
405 I (15B)	1.9 4x4	93	07/90 – 07/92	3380	
405 I (15B)	1.9 4x4	93	07/90 – 07/92	3381	
405 I (15B)	1.9 4x4	93	07/90 – 07/92	3457	
405 I (15B)	1.9 4x4	93	07/90 – 07/92		3529
405 I (15B)	1.9 4x4	93	07/90 – 07/92	3580	
405 I (15B)	1.9 Diesel	47	07/88 – 09/92	3380	
405 I (15B)	1.9 Diesel	47	07/88 – 09/92	3381	
405 I (15B)	1.9 Diesel	47	07/88 – 09/92	3457	
405 I (15B)	1.9 Diesel	47	07/88 – 09/92	3580	
405 I (15B)	1.9 Diesel	51	03/88 – 12/92	3380	
405 I (15B)	1.9 Diesel	51	03/88 – 12/92	3381	
405 I (15B)	1.9 Diesel	51	03/88 – 12/92	3457	
405 I (15B)	1.9 Diesel	51	03/88 – 12/92	3580	
405 I (15B)	1.9 Injection	77	07/87 – 12/92	3380	
405 I (15B)	1.9 Injection	77	07/87 – 12/92	3381	
405 I (15B)	1.9 Injection	77	07/87 – 12/92	3457	
405 I (15B)	1.9 Injection	77	07/87 – 12/92		3529
405 I (15B)	1.9 Injection	77	07/87 – 2/92	3580	
405 I (15B)	1.9 Sport MI-16	108	04/88 – 12/92	3380	
405 I (15B)	1.9 Sport MI-16	108	04/88 – 12/92	3381	
405 I (15B)	1.9 Sport MI-16	108	04/88 – 12/92	3457	
405 I (15B)	1.9 Sport MI-16	108	04/88 – 12/92		3529
405 I (15B)	1.9 Sport MI-16	108	04/88 – 12/92	3580	
405 I (15B)	1.9 Sport MI-16	116	07/87 – 11/91	3380	
405 I (15B)	1.9 Sport MI-16	116	07/87 – 11/91	3381	
405 I (15B)	1.9 Sport MI-16	116	07/87 – 11/91	3457	
405 I (15B)	1.9 Sport MI-16	116	07/87 – 11/91		3529
405 I (15B)	1.9 Sport MI-16	116	07/87 – 11/91	3580	
405 I (15B)	1.9 SPort MI-16 4x4	108	04/88 – 12/92	3380	
405 I (15B)	1.9 SPort MI-16 4x4	108	04/88 – 12/92	3381	
405 I (15B)	1.9 SPort MI-16 4x4	108	04/88 – 12/92	3457	
405 I (15B)	1.9 SPort MI-16 4x4	108	04/88 – 12/92		3529
405 I (15B)	1.9 SPort MI-16 4x4	108	04/88 – 12/92	3580	
405 I Break (15E)	16	53	10/88 – 08/92	3380	
405 I Break (15E)	16	53	10/88 – 08/92	3381	

MAKE & MODEL		KW	YEAR		
PEUGEOT					
405 I Break (15E)	16	53	10/88 – 08/92	3457	
405 I Break (15E)	16	53	10/88 – 08/92	3580	
405 I Break (15E)	16	55	10/88 – 08/92	3380	
405 I Break (15E)	16	55	10/88 – 08/92	3381	
405 I Break (15E)	16	55	10/88 – 08/92	3457	
405 I Break (15E)	16	55	10/88 – 08/92	3580	
405 I Break (15E)	16	65	10/88 – 08/92	3380	
405 I Break (15E)	16	65	10/88 – 08/92	3381	
405 I Break (15E)	16	65	10/88 – 08/92	3457	
405 I Break (15E)	16	65	10/88 – 08/92	3580	
405 I Break (15E)	16	66	10/88 – 08/92	3380	
405 I Break (15E)	16	66	10/88 – 08/92	3381	
405 I Break (15E)	16	66	10/88 – 08/92	3457	
405 I Break (15E)	16	66	10/88 – 08/92	3580	
405 I Break (15E)	16	68	05/88 – 07/92	3380	
405 I Break (15E)	16	68	05/88 – 07/92	3381	
405 I Break (15E)	16	68	05/88 – 07/92	3457	
405 I Break (15E)	16	68	05/88 – 07/92	3580	
405 I Break (15E)	16	69	10/88 – 08/92	3380	
405 I Break (15E)	16	69	10/88 – 08/92	3381	
405 I Break (15E)	16	69	10/88 – 08/92	3457	
405 I Break (15E)	16	69	10/88 – 08/92	3580	
405 I Break (15E)	19	70	10/88 – 08/92	3380	
405 I Break (15E)	19	70	10/88 – 08/92	3381	
405 I Break (15E)	19	70	10/88 – 08/92	3457	
405 I Break (15E)	19	70	10/88 – 08/92	3580	
405 I Break (15E)	19	72	05/88 – 07/92	3380	
405 I Break (15E)	19	72	05/88 – 07/92	3381	
405 I Break (15E)	19	72	05/88 – 07/92	3457	
405 I Break (15E)	19	72	05/88 – 07/92	3580	
405 I Break (15E)	19	77	10/88 – 08/92	3457	
405 I Break (15E)	19	77	10/88 – 08/92		3529
405 I Break (15E)	19	80	10/88 – 08/92	3457	
405 I Break (15E)	19	80	10/88 – 08/92		3529
405 I Break (15E)	19	88	10/88 – 08/92	3457	
405 I Break (15E)	19	88	10/88 – 08/92		3529
405 I Break (15E)	1.8 GLD	44	04/90 – 07/92	3380	
405 I Break (15E)	1.8 GLD	44	04/90 – 07/92	3381	
405 I Break (15E)	1.8 GLD	44	04/90 – 07/92	3457	
405 I Break (15E)	1.8 GLD	44	04/90 – 07/92	3580	
405 I Break (15E)	1.8 TD	66	10/88 – 08/92	3380	
405 I Break (15E)	1.8 TD	66	10/88 – 08/92	3381	
405 I Break (15E)	1.8 TD	66	10/88 – 08/92	3457	
405 I Break (15E)	1.8 TD	66	10/88 – 08/92		3529
405 I Break (15E)	1.8 TD	66	10/88 – 08/92	3580	
405 I Break (15E)	1.9 4x4	80	10/88 – 08/92	3457	
405 I Break (15E)	1.9 4x4	80	10/88 – 08/92		3529
405 I Break (15E)	1.9 4x4	88	07/90 – 07/92	3457	
405 I Break (15E)	1.9 4x4	88	07/90 – 07/92		3529
405 I Break (15E)	1.9 4x4	108	07/90 – 07/92	3457	
405 I Break (15E)	1.9 4x4	108	07/90 – 07/92		3529
405 I Break (15E)	1.9 All-wheel Drive	77	09/88 – 07/92	3457	
405 I Break (15E)	1.9 All-wheel Drive	77	09/88 – 07/92		3529
405 I Break (15E)	1.9 All-wheel Drive	116	06/87 – 07/92	3457	
405 I Break (15E)	1.9 All-wheel Drive	116	06/87 – 07/92		3529
405 I Break (15E)	1.9 D	47	10/88 – 08/92	3380	
405 I Break (15E)	1.9 D	47	10/88 – 08/92	3381	
405 I Break (15E)	1.9 D	47	10/88 – 08/92	3457	
405 I Break (15E)	1.9 D	47	10/88 – 08/92	3580	
405 I Break (15E)	1.9 D	51	10/88 – 08/92	3380	
405 I Break (15E)	1.9 D	51	10/88 – 08/92	3381	
405 I Break (15E)	1.9 D	51	10/88 – 08/92	3457	
405 I Break (15E)	1.9 D	51	10/88 – 08/92	3580	
405 II (4B)	14	55	08/92 – 10/95	3380	
405 II (4B)	14	55	08/92 – 10/95	3381	
405 II (4B)	14	55	08/92 – 10/95	3457	
405 II (4B)	14	55	08/92 – 10/95	3580	
405 II (4B)	16	65	08/92 – 10/95	3380	
405 II (4B)	16	65	08/92 – 10/95	3381	
405 II (4B)	16	65	08/92 – 10/95	3457	
405 II (4B)	16	65	08/92 – 10/95	3580	

MAKE & MODEL   		KW	YEAR		
PEUGEOT					
405 II (4B)	18	74	08/92 – 10/95	3380	
405 II (4B)	18	74	08/92 – 10/95	3381	
405 II (4B)	18	74	08/92 – 10/95	3457	
405 II (4B)	18	74	08/92 – 10/95		3529
405 II (4B)	18	74	08/92 – 10/95	3580	
405 II (4B)	20	89	08/92 – 10/95	3457	
405 II (4B)	20	89	08/92 – 10/95		3529
405 II (4B)	1.9 D	47	08/92 – 10/95	3380	
405 II (4B)	1.9 D	47	08/92 – 10/95	3381	
405 II (4B)	1.9 D	47	08/92 – 10/95	3457	
405 II (4B)	1.9 D	47	08/92 – 10/95	3580	
405 II (4B)	1.9 D	50	06/94 – 10/95	3380	
405 II (4B)	1.9 D	50	06/94 – 10/95	3381	
405 II (4B)	1.9 D	50	06/94 – 10/95	3457	
405 II (4B)	1.9 D	50	06/94 – 10/95	3580	
405 II (4B)	1.9 TD	66	08/92 – 10/95	3380	
405 II (4B)	1.9 TD	66	08/92 – 10/95	3381	
405 II (4B)	1.9 TD	66	08/92 – 10/95	3457	
405 II (4B)	1.9 TD	66	08/92 – 10/95		3529
405 II (4B)	1.9 TD	66	08/92 – 10/95	3580	
405 II (4B)	2.0 16V	110	06/94 – 10/95	3457	
405 II (4B)	2.0 16V	110	06/94 – 10/95		3529
405 II (4B)	2.0 MI-16	112	08/92 – 10/95	3457	
405 II (4B)	2.0 MI-16	112	08/92 – 10/95		3529
405 II (4B)	2.0 T 16 X4	144	08/92 – 10/95		3529
405 II (4B)	2.0 X4	89	08/92 – 10/95	3457	
405 II (4B)	2.0 X4	89	08/92 – 10/95		3529
405 II Break (4E)	14	55	08/92 – 10/96	3380	
405 II Break (4E)	14	55	08/92 – 10/96	3381	
405 II Break (4E)	14	55	08/92 – 10/96	3457	
405 II Break (4E)	14	55	08/92 – 10/96	3580	
405 II Break (4E)	14	58	07/93 – 06/94	3380	
405 II Break (4E)	14	58	07/93 – 06/94	3381	
405 II Break (4E)	14	58	07/93 – 06/94	3457	
405 II Break (4E)	14	58	07/93 – 06/94	3580	
405 II Break (4E)	16	65	08/92 – 10/96	3380	
405 II Break (4E)	16	65	08/92 – 10/96	3381	
405 II Break (4E)	16	65	08/92 – 10/96	3457	
405 II Break (4E)	16	65	08/92 – 10/96	3580	
405 II Break (4E)	18	74	08/92 – 10/96	3380	
405 II Break (4E)	18	74	08/92 – 10/96	3381	
405 II Break (4E)	18	74	08/92 – 10/96	3457	
405 II Break (4E)	18	74	08/92 – 10/96		3529
405 II Break (4E)	18	74	08/92 – 10/96	3580	
405 II Break (4E)	20	89	08/92 – 10/96	3457	
405 II Break (4E)	20	89	08/92 – 10/96		3529
405 II Break (4E)	1.9 D	47	08/92 – 10/96	3380	
405 II Break (4E)	1.9 D	47	08/92 – 10/96	3381	
405 II Break (4E)	1.9 D	47	08/92 – 10/96	3457	
405 II Break (4E)	1.9 D	47	08/92 – 10/96	3580	
405 II Break (4E)	1.9 D	50	06/94 – 10/96	3380	
405 II Break (4E)	1.9 D	50	06/94 – 10/96	3381	
405 II Break (4E)	1.9 D	50	06/94 – 10/96	3457	
405 II Break (4E)	1.9 D	50	06/94 – 10/96	3580	
405 II Break (4E)	1.9 D	51	09/93 – 12/95	3380	
405 II Break (4E)	1.9 D	51	09/93 – 12/95	3381	
405 II Break (4E)	1.9 D	51	09/93 – 12/95	3457	
405 II Break (4E)	1.9 D	51	09/93 – 12/95	3580	
405 II Break (4E)	1.9 TD	66	08/92 – 10/96	3380	
405 II Break (4E)	1.9 TD	66	08/92 – 10/96	3381	
405 II Break (4E)	1.9 TD	66	08/92 – 10/96	3457	
405 II Break (4E)	1.9 TD	66	08/92 – 10/96		3529
405 II Break (4E)	1.9 TD	66	08/92 – 10/96	3580	
405 II Break (4E)	2.0 4x4	89	08/92 – 10/96	3457	
405 II Break (4E)	2.0 4x4	89	08/92 – 10/96		3529
405 II Break (4E)	2.0 4x4	144	08/92 – 12/95		3529
406 (8B)	16	65	11/95 – 05/04	3750	
406 (8B)	18	66	05/97 – 05/04	3750	
406 (8B)	1.8 16V	81	11/95 – 10/00	3750	
406 (8B)	1.8 16V	85	10/00 – 05/04	3750	
406 (8B)	1.9 D	55	10/96 – 05/04	3750	

MAKE & MODEL		KW	YEAR		
PEUGEOT					
406 Break (8E/F)	18	66	05/97 – 10/04	3750	
406 Break (8E/F)	1.8 16V	81	10/96 – 10/00	3750	
406 Break (8E/F)	1.8 16V	85	10/00 – 10/04	3750	
406 Break (8E/F)	1.9 D	55	10/96 – 10/04	3750	
406 Coupe (8C)	2.0 16V	99	04/99 – 09/04		3680
407 (6C_)	2.0 Hdi (RHR (DW10BTED4)	100	10/05 -	3939	
407 (6D_)	18	85	05/04 -		3946
407 (6D_)	20	100	05/04 -		3946
407 (6D_)	22	116	05/04 -	3940	
407 (6D_)	22	116	05/04 -		3946
407 (6D_)	30	155	05/04 -	3940	
407 (6D_)	30	155	05/04 -		3946
407 (6D_)	1.6 HDi 110	80	05/04 -		3946
407 (6D_)	1.8 (6FZ (EW7J4)	85	05/04 -	3939	
407 (6D_)	1.8 16V	92	09/05 -		3946
407 (6D_)	2.0 16V	103	09/05 -		3946
407 (6D_)	2.0 Bioflex	103	09/07 -		3946
407 (6D_)	2.0 HDi	103	08/08 -		3946
407 (6D_)	2.0 HDi	110	02/10 -		3946
407 (6D_)	2.0 HDi	120	07/09 -		3946
407 (6D_)	2.0 HDi 135	100	05/04 -		3946
407 (6D_)	2.2 16V	120	09/05 -	3940	
407 (6D_)	2.2 16V	120	09/05 -		3946
407 (6D_)	2.2 HDi	120	06/08 -	3940	
407 (6D_)	2.2 HDi	120	06/08 -		3946
407 (6D_)	2.2 HDi 170	125	05/06 -	3940	
407 (6D_)	2.2 HDi 170	125	05/06 -		3946
407 (6D_)	2.7 HDi	150	10/05 -	3940	
407 (6D_)	2.7 HDi	150	10/05 -		3946
407 (6E_)	1.8 (6FZ (EW7J4)	85	05/04 -	3939	
407 Coupe (6C_)	2.0 HDi	100	10/05 -		3946
407 Coupe (6C_)	2.0 HDi	103	09/08 – 12/09	3940	
407 Coupe (6C_)	2.0 HDi	103	09/08 – 12/09		3946
407 Coupe (6C_)	2.0 HDi	110	02/10 -		3946
407 Coupe (6C_)	2.0 HDi	120	06/09 -		3946
407 Coupe (6C_)	2.2 16V	120	10/05 -	3940	
407 Coupe (6C_)	2.2 16V	120	10/05 -		3946
407 Coupe (6C_)	2.7 HDi	150	10/05 -	3940	
407 Coupe (6C_)	2.7 HDi	150	10/05 -		3946
407 Coupe (6C_)	3.0 HDi	177	06/09 -	3940	
407 Coupe (6C_)	3.0 HDi	177	06/09 -		3946
407 Coupe (6C_)	3.0 V6	155	10/05 -	3940	
407 Coupe (6C_)	3.0 V6	155	10/05 -		3946
407 SW (6E_)	18	85	05/04 -		3946
407 SW (6E_)	20	100	05/04 -		3946
407 SW (6E_)	22	116	05/04 -	3940	
407 SW (6E_)	22	116	05/04 -		3946
407 SW (6E_)	30	155	05/04 -	3940	
407 SW (6E_)	30	155	05/04 -		3946
407 SW (6E_)	1.6 HDi 110	80	05/04 -		3946
407 SW (6E_)	1.8 16V	92	09/05 -		3946
407 SW (6E_)	2.0 16V	103	09/05 -		3946
407 SW (6E_)	2.0 Bioflex	103	01/08 -		3946
407 SW (6E_)	2.0 HDi	103	08/08 -		3946
407 SW (6E_)	2.0 HDi	110	02/10 -		3946
407 SW (6E_)	2.0 HDi	120	07/09 -		3946
407 SW (6E_)	2.0 HDi 135	100	05/04 -		3946
407 SW (6E_)	2.2 16V	120	09/05 -	3940	
407 SW (6E_)	2.2 16V	120	09/05 -		3946
407 SW (6E_)	2.2 HDi	120	06/08 -	3940	
407 SW (6E_)	2.2 HDi	120	06/08 -		3946
407 SW (6E_)	2.2 HDi 170	125	05/06 -	3940	
407 SW (6E_)	2.2 HDi 170	125	05/06 -		3946
407 SW (6E_)	2.7 HDi	150	10/05 -	3940	
407 SW (6E_)	2.7 HDi	150	10/05 -		3946
408 (6D_)	1.8 16V (6FY (EW7A)	92	09/05 -	3939	
408 (6E_)	1.8 16V (6FY (EW7A)	92	09/05 -	3939	
408 Saloon	16	78	01/10 -	3800	
408 Saloon	16	78	01/10 -	3970	
408 Saloon	20	108	01/10 -	3800	
408 Saloon	20	108	01/10 -	3970	

MAKE & MODEL		KW	YEAR		
PEUGEOT					
409 (6D_)	2.0 (RFN (EW10J4)	100	05/04 -	3939	
409 (6E_)	2.0 (RFN (EW10J4)	100	05/04 -	3939	
410 (6D_)	2.0 16V (RFJ (EW10A)	103	09/05 -	3939	
410 (6E_)	2.0 16V (RFJ (EW10A)	103	09/05 -	3939	
411 (6D_)	1.6 HDi 110 (9HY (DV6TED4)	80	05/04 -	3939	
411 (6E_)	2.0 Bioflex (RFJ (EW10A)	103	01/08 -	3939	
412 (6E_)	1.6 HDi 110 (9HY (DV6TED4)	80	05/04 -	3939	
413 (6E_)	2.0 HDi 135 (RHR (DW10BTED4)	100	05/04 -	3939	
414 (6E_)	2.0 Hdi (RHR (DW10BTED4)	103	08/08 -	3939	
504	ONLY SOUTH AMERICA			3517	
504 (A_, M_)	18	55	09/79 – 08/82	3321	
504 (A_, M_)	18	55	09/79 – 08/82	3340	
504 (A_, M_)	18	55	09/79 – 08/82	3358	
504 (A_, M_)	18	55	09/79 – 08/82	3364	
504 (A_, M_)	1.8 (A01, A03)	60	07/68 – 02/71	3321	
504 (A_, M_)	1.8 (A01, A03)	60	07/68 – 02/71	3340	
504 (A_, M_)	1.8 (A01, A03)	60	07/68 – 02/71	3358	
504 (A_, M_)	1.8 (A01, A03)	60	07/68 – 02/71	3364	
504 (A_, M_)	1.8 (M03)	58	01/71 – 06/83	3321	
504 (A_, M_)	1.8 (M03)	58	01/71 – 06/83	3340	
504 (A_, M_)	1.8 (M03)	58	01/71 – 06/83	3358	
504 (A_, M_)	1.8 (M03)	58	01/71 – 06/83	3364	
504 (A_, M_)	1.8 Injection (A02)	71	07/68 – 02/71	3321	
504 (A_, M_)	1.8 Injection (A02)	71	07/68 – 02/71	3340	
504 (A_, M_)	1.8 Injection (A02)	71	07/68 – 02/71	3358	
504 (A_, M_)	1.8 Injection (A02)	71	07/68 – 02/71	3364	
504 (A_, M_)	1.9 D (M20)	40	03/73 – 07/86	3321	
504 (A_, M_)	1.9 D (M20)	40	03/73 – 07/86	3340	
504 (A_, M_)	1.9 D (M20)	40	03/73 – 07/86	3358	
504 (A_, M_)	1.9 D (M20)	40	03/73 – 07/86	3364	
504 (A_, M_)	2.0 (A1, A13, MY1, MY3)	71	03/71 – 06/86	3321	
504 (A_, M_)	2.0 (A1, A13, MY1, MY3)	71	03/71 – 06/86	3340	
504 (A_, M_)	2.0 (A1, A13, MY1, MY3)	71	03/71 – 06/86	3358	
504 (A_, M_)	2.0 (A1, A13, MY1, MY3)	71	03/71 – 06/86	3364	
504 (A_, M_)	2.0 TI (A12, A14)	78	01/71 – 06/83	3321	
504 (A_, M_)	2.0 TI (A12, A14)	78	01/71 – 06/83		3323
504 (A_, M_)	2.0 TI (A12, A14)	78	01/71 – 06/83	3340	
504 (A_, M_)	2.0 TI (A12, A14)	78	01/71 – 06/83	3358	
504 (A_, M_)	2.0 TI (A12, A14)	78	01/71 – 06/83	3364	
504 (A_, M_)	2.1 D (A20, M20)	48	02/71 – 07/86	3321	
504 (A_, M_)	2.1 D (A20, M20)	48	02/71 – 07/86	3340	
504 (A_, M_)	2.1 D (A20, M20)	48	02/71 – 07/86	3358	
504 (A_, M_)	2.1 D (A20, M20)	48	02/71 – 07/86	3364	
504 (A_, M_)	2.3 D (A40, A45)	51	07/75 – 12/83	3321	
504 (A_, M_)	2.3 D (A40, A45)	51	07/75 – 12/83	3340	
504 (A_, M_)	2.3 D (A40, A45)	51	07/75 – 12/83	3358	
504 (A_, M_)	2.3 D (A40, A45)	51	07/75 – 12/83	3364	
504 Break (D_, F_)	1.8 (F01, E01)	54	04/71 – 07/86	3321	
504 Break (D_, F_)	1.8 (F01, E01)	54	04/71 – 07/86	3340	
504 Break (D_, F_)	1.8 (F01, E01)	54	04/71 – 07/86	3358	
504 Break (D_, F_)	1.8 (F01, E01)	54	04/71 – 07/86	3364	
504 Break (D_, F_)	2.0 (D11, F11)	68	04/71 – 07/86	3321	
504 Break (D_, F_)	2.0 (D11, F11)	68	04/71 – 07/86	3340	
504 Break (D_, F_)	2.0 (D11, F11)	68	04/71 – 07/86	3358	
504 Break (D_, F_)	2.0 (D11, F11)	68	04/71 – 07/86	3364	
504 Break (D_, F_)	2.1 D (E20, F20)	48	04/71 – 07/86	3321	
504 Break (D_, F_)	2.1 D (E20, F20)	48	04/71 – 07/86	3340	
504 Break (D_, F_)	2.1 D (E20, F20)	48	04/71 – 07/86	3358	
504 Break (D_, F_)	2.1 D (E20, F20)	48	04/71 – 07/86	3364	
504 Break (D_, F_)	2.3 D (D40, F40)	51	07/75 – 07/86	3321	
504 Break (D_, F_)	2.3 D (D40, F40)	51	07/75 – 07/86	3340	
504 Break (D_, F_)	2.3 D (D40, F40)	51	07/75 – 07/86	3358	
504 Break (D_, F_)	2.3 D (D40, F40)	51	07/75 – 07/86	3364	
504 Cabrio	2.0	75	10/74 – 08/82		3322
504 Cabrio	2.0	78	08/82 – 12/89		3322
504 Convertible	20	75	10/74 – 08/82	3321	
504 Convertible	20	75	10/74 – 08/82		3323
504 Convertible	20	75	10/74 – 08/82	3340	
504 Convertible	20	75	10/74 – 08/82	3358	
504 Convertible	20	75	10/74 – 08/82	3364	
504 Convertible	20	78	08/82 – 08/84	3321	

MAKE & MODEL		KW	YEAR		
PEUGEOT					
504 Convertible	20	78	08/82 – 08/84		3323
504 Convertible	20	78	08/82 – 08/84	3340	
504 Convertible	20	78	08/82 – 08/84	3358	
504 Convertible	20	78	08/82 – 08/84	3364	
504 Coupe	20	75	10/74 – 08/82	3321	
504 Coupe	20	75	10/74 – 08/82		3323
504 Coupe	20	75	10/74 – 08/82	3340	
504 Coupe	20	75	10/74 – 08/82	3358	
504 Coupe	20	75	10/74 – 08/82	3364	
504 Coupe	20	78	08/82 – 08/84		3323
504 Coupe	27	106	10/77 – 08/84	3321	
504 Coupe	27	106	10/77 – 08/84	3340	
504 Coupe	27	106	10/77 – 08/84	3358	
504 Coupe	27	106	10/77 – 08/84	3364	
504 Coupe	2.0	75	10/74 – 08/82		3322
504 Coupe	2.0	78	08/82 – 08/84		3322
504 Coupe	2.7	106	10/77 – 08/84		3322
504 Pick-up	2.3 D	51	01/80 – 12/89		3322
504 Sedan	1.8	71	07/68 – 02/71		3322
504 Sedan	2.0	69	09/79 – 08/82		3322
504 Sedan	2.0	71	03/71 – 06/86		3322
504 Sedan	2.0	78	01/71 – 06/83		3322
504 Sedan	2.3	51	07/75 – 12/83		3322
504 Staion Wagon	2.0	51	07/75 – 07/86		3322
504 Staion Wagon	2.0	68	04/71 – 07/86		3322
505	ONLY SOUTH AMERICA			3517	
505 (551A)	18	55	06/81 – 10/85		3323
505 (551A)	18	55	06/81 – 10/85	3405	
505 (551A)	18	60	01/82 – 10/85		3323
505 (551A)	18	60	01/82 – 10/85	3405	
505 (551A)	18	62	09/85 – 10/86		3323
505 (551A)	18	62	09/85 – 10/86	3405	
505 (551A)	20	69	09/83 – 09/85		3323
505 (551A)	20	69	09/83 – 09/85	3405	
505 (551A)	20	71	11/80 – 12/85		3323
505 (551A)	20	71	11/80 – 12/85	3405	
505 (551A)	20	72	09/85 – 09/95		3323
505 (551A)	20	72	09/85 – 09/95	3405	
505 (551A)	20	79	09/80 – 11/82		3323
505 (551A)	20	79	09/80 – 11/82	3405	
505 (551A)	22	84	03/86 – 12/93		3323
505 (551A)	22	84	03/86 – 12/93	3405	
505 (551A)	22	85	05/81 – 10/84		3323
505 (551A)	22	85	05/81 – 10/84	3405	
505 (551A)	22	89	10/85 – 08/91		3323
505 (551A)	22	89	10/85 – 08/91	3405	
505 (551A)	1.8	55	06/81 – 10/85	3442	
505 (551A)	1.8	60	01/82 – 10/85	3442	
505 (551A)	1.8	62	09/85 – 10/86	3442	
505 (551A)	2.0	69	09/83 – 09/85	3442	
505 (551A)	2.0	71	11/80 – 12/85	3442	
505 (551A)	2.0	72	09/85 – 09/95	3442	
505 (551A)	2.0	79	09/80 – 11/82	3442	
505 (551A)	2.0 GTi	83	10/89 – 08/91		3323
505 (551A)	2.0 GTi	83	10/89 – 08/91	3405	
505 (551A)	2.0 GTi	83	10/89 – 08/91	3442	
505 (551A)	2.0 TI,STI	81	08/79 – 10/86		3323
505 (551A)	2.0 TI,STI	81	08/79 – 10/86	3405	
505 (551A)	2.0 TI,STI	81	08/79 – 10/86	3442	
505 (551A)	2.2	84	03/86 – 12/93	3442	
505 (551A)	2.2	85	05/81 – 10/84	3442	
505 (551A)	2.2	89	10/85 – 08/91	3442	
505 (551A)	2.2 GTI	90	08/83 – 12/93		3323
505 (551A)	2.2 GTI	90	08/83 – 12/93	3405	
505 (551A)	2.2 GTI	90	08/83 – 12/93	3442	
505 (551A)	2.2 GTI	96	08/83 – 12/93		3323
505 (551A)	2.2 GTI	96	08/83 – 12/93	3405	
505 (551A)	2.2 GTI	96	08/83 – 12/93	3442	
505 (551A)	2.2 Turbo	132	07/85 – 09/88		3323
505 (551A)	2.2 Turbo	132	07/85 – 09/88	3405	
505 (551A)	2.2 Turbo	132	07/85 – 09/88	3442	

MAKE & MODEL		KW	YEAR		
PEUGEOT					
505 (551A)	2.2 Turbo Injection	110	01/86 – 12/87		3323
505 (551A)	2.2 Turbo Injection	110	01/86 – 12/87	3405	
505 (551A)	2.2 Turbo Injection	110	01/86 – 12/87	3442	
505 (551A)	2.2 Turbo Injection	114	03/84 – 10/88		3323
505 (551A)	2.2 Turbo Injection	114	03/84 – 10/88	3405	
505 (551A)	2.2 Turbo Injection	114	03/84 – 10/88	3442	
505 (551A)	2.2 Turbo Injection	128	06/87 – 12/88		3323
505 (551A)	2.2 Turbo Injection	128	06/87 – 12/88	3405	
505 (551A)	2.2 Turbo Injection	128	06/87 – 12/88	3442	
505 (551A)	2.3 Turbo Diesel	59	09/80 – 06/86		3323
505 (551A)	2.3 Turbo Diesel	59	09/80 – 06/86	3405	
505 (551A)	2.3 Turbo Diesel	59	09/80 – 06/86	3442	
505 (551A)	2.5 Diesel	51	10/81 – 11/90		3323
505 (551A)	2.5 Diesel	51	10/81 – 11/90	3405	
505 (551A)	2.5 Diesel	51	10/81 – 11/90	3442	
505 (551A)	2.5 Diesel	55	06/81 – 12/93		3323
505 (551A)	2.5 Diesel	55	06/81 – 12/93	3405	
505 (551A)	2.5 Diesel	55	06/81 – 12/93	3442	
505 (551A)	2.5 Turbo Diesel	66	10/83 – 12/93		3323
505 (551A)	2.5 Turbo Diesel	66	10/83 – 12/93	3405	
505 (551A)	2.5 Turbo Diesel	66	10/83 – 12/93	3442	
505 (551A)	2.5 Turbo Diesel	70	10/83 – 12/90		3323
505 (551A)	2.5 Turbo Diesel	70	10/83 – 12/90	3405	
505 (551A)	2.5 Turbo Diesel	70	10/83 – 12/90	3442	
505 (551A)	2.5 Turbo Diesel	77	10/86 – 12/93		3323
505 (551A)	2.5 Turbo Diesel	77	10/86 – 12/93	3405	
505 (551A)	2.5 Turbo Diesel	77	10/86 – 12/93	3442	
505 (551A)	2.8 GTI V6	105	06/86 – 12/93		3323
505 (551A)	2.8 GTI V6	105	06/86 – 12/93	3405	
505 (551A)	2.8 GTI V6	105	06/86 – 12/93	3442	
505 Break (551D)	20	60	04/82 – 11/87		3323
505 Break (551D)	20	60	04/82 – 11/87	3405	
505 Break (551D)	20	69	08/83 – 12/85		3323
505 Break (551D)	20	69	08/83 – 12/85	3405	
505 Break (551D)	20	72	09/85 – 11/87		3323
505 Break (551D)	20	72	09/85 – 11/87	3405	
505 Break (551D)	22	84	01/86 – 12/93		3323
505 Break (551D)	22	84	01/86 – 12/93	3405	
505 Break (551D)	2.0	60	04/82 – 11/87	3442	
505 Break (551D)	2.0	69	08/83 – 12/85	3442	
505 Break (551D)	2.0	72	09/85 – 11/87	3442	
505 Break (551D)	2.2	84	01/86 – 12/93	3442	
505 Break (551D)	2.2 GTI	90	09/85 – 12/86		3323
505 Break (551D)	2.2 GTI	90	09/85 – 12/86	3405	
505 Break (551D)	2.2 GTI	90	09/85 – 12/86	3442	
505 Break (551D)	2.3 Diesel	59	04/82 – 06/86		3323
505 Break (551D)	2.3 Diesel	59	04/82 – 06/86	3405	
505 Break (551D)	2.3 Diesel	59	04/82 – 06/86	3442	
505 Break (551D)	2.5 Diesel	51	01/86 – 12/93		3323
505 Break (551D)	2.5 Diesel	51	01/86 – 12/93	3405	
505 Break (551D)	2.5 Diesel	51	01/86 – 12/93	3442	
505 Break (551D)	2.5 Diesel	55	08/83 – 12/93		3323
505 Break (551D)	2.5 Diesel	55	08/83 – 12/93	3405	
505 Break (551D)	2.5 Diesel	55	08/83 – 12/93	3442	
505 Break (551D)	2.5 Turbo Diesel	66	10/85 – 11/87		3323
505 Break (551D)	2.5 Turbo Diesel	66	10/85 – 11/87	3405	
505 Break (551D)	2.5 Turbo Diesel	66	10/85 – 11/87	3442	
505 Break (551D)	2.5 Turbo Diesel	77	10/86 – 12/93		3323
505 Break (551D)	2.5 Turbo Diesel	77	10/86 – 12/93	3405	
505 Break (551D)	2.5 Turbo Diesel	77	10/86 – 12/93	3442	
604 (561A_)	2.3 TD	59	09/79 – 05/83		3323
604 (561A_)	2.3 TD	59	09/79 – 05/83	3405	
604 (561A_)	2.3 TD	59	09/79 – 05/83	3442	
604 (561A_)	2.5 TD	66	08/83 – 12/86		3323
604 (561A_)	2.5 TD	66	08/83 – 12/86	3405	
604 (561A_)	2.5 TD	66	08/83 – 12/86	3442	
604 (561A_)	2.7 SL	100	08/77 – 05/83		3323
604 (561A_)	2.7 SL	100	08/77 – 05/83	3405	
604 (561A_)	2.7 SL	100	08/77 – 05/83	3442	
604 (561A_)	2.7 TI,STI	106	08/77 – 05/83		3323
604 (561A_)	2.7 TI,STI	106	08/77 – 05/83	3405	

MAKE & MODEL		KW	YEAR		
PEUGEOT					
604 (561A_)	2.7 TI,STI	106	08/77 – 05/83	3442	
604 (561A_)	2.8 GTI	110	09/83 – 07/87		3323
604 (561A_)	2.8 GTI	110	09/83 – 07/87	3405	
604 (561A_)	2.8 GTI	110	09/83 – 07/87	3442	
605 (6B)	20	79	02/90 – 09/99		3680
605 (6B)	20	84	06/89 – 09/99		3680
605 (6B)	20	89	06/89 – 09/99		3680
605 (6B)	30	123	08/89 – 06/94		3680
605 (6B)	30	123	10/89 – 09/99		3680
605 (6B)	30	147	08/89 – 06/94		3680
605 (6B)	2.0 16V	97	07/94 – 09/99		3680
605 (6B)	2.0 Turbo	104	07/92 – 09/99		3680
605 (6B)	2.0 Turbo	108	07/91 – 09/99		3680
605 (6B)	2.1 D	60	06/89 – 07/95		3680
605 (6B)	2.1 TD 12V	80	08/94 – 09/99		3680
605 (6B)	2.1 Turbo Diesel	80	06/89 – 09/99		3680
605 (6B)	2.5 Turbo Diesel	95	07/94 – 09/99		3680
605 (6B)	3.0 SV 24	147	08/89 – 09/99		3680
605 (6B)	3.0 V6	140	04/97 – 09/99		3680
607 (9D, 9U)	20	100	02/00 -		3946
607 (9D, 9U)	2.0 HDI	80	05/00 -		3946
607 (9D, 9U)	2.0 HDI	100	09/05 -		3946
607 (9D, 9U)	2.2 16V	116	02/00 -		3946
607 (9D, 9U)	2.2 16V	120	09/05 -		3946
607 (9D, 9U)	2.2 HDI	98	02/00 -		3946
607 (9D, 9U)	2.2 HDi	125	05/06 -		3946
607 (9D, 9U)	2.7 HDi 24V	150	12/04 -		3946
607 (9D, 9U)	3.0 V6 24V	152	02/00 -		3946
607 (9D, 9U)	3.0 V6 24V	155	03/04 -		3946
806 (221)	18	73	07/95 – 08/02	3799	
807 (E)	20	100	06/02 -	3986	
807 (E)	22	116	06/02 -	3986	
807 (E)	2.0 16V	103	09/05 -	3986	
807 (E)	2.0 HDI	100	06/06 -	3986	
807 (E)	2.0 HDi	79	06/02 -	3986	
807 (E)	2.0 HDi	80	04/04 – 05/06	3986	
807 (E)	2.0 HDi	88	02/06 -	3986	
807 (E)	2.0 HDi	120	06/09 -	3986	
807 (E)	2.2 HDi	94	06/02 -	3986	
807 (E)	2.2 HDi	100	04/04 -	3986	
BIPPER (AA_)	1.3 HDi 75	55	10/10 -	3826/3	
BIPPER Tepee	1.3 HDi 75	55	10/10 -	3826/3	
BIPPER Tepee	1.3 HDi 80	59	12/15 -	3826/3	
BOXER Box	2.0 BlueHDi 110	81	07/15 -	3922	
BOXER Box	2.0 BlueHDi 110	81	07/15 -	3981	
BOXER Box	2.0 BlueHDi 110	81	07/15 -	4171	
BOXER Box	2.0 BlueHDi 110	81	07/15 -		4224
BOXER Box	2.0 BlueHDi 130	96	07/15 -	3922	
BOXER Box	2.0 BlueHDi 130	96	07/15 -	3981	
BOXER Box	2.0 BlueHDi 130	96	07/15 -	4171	
BOXER Box	2.0 BlueHDi 130	96	07/15 -		4224
BOXER Box	2.0 BlueHDi 160	120	07/15 -	3922	
BOXER Box	2.0 BlueHDi 160	120	07/15 -	3981	
BOXER Box	2.0 BlueHDi 160	120	07/15 -	4171	
BOXER Box	2.0 BlueHDi 160	120	07/15 -		4224
BOXER Box	2.2 HDi 100	74	04/06 -	3922	
BOXER Box	2.2 HDi 100	74	04/06 -	3981	
BOXER Box	2.2 HDi 100	74	04/06 -	4171	
BOXER Box	2.2 HDi 110	81	03/11 -	3922	
BOXER Box	2.2 HDi 110	81	03/11 -	3981	
BOXER Box	2.2 HDi 110	81	03/11 -	4171	
BOXER Box	2.2 HDi 120	88	04/06 -	3922	
BOXER Box	2.2 HDi 120	88	04/06 -	3981	
BOXER Box	2.2 HDi 120	88	04/06 -	4171	
BOXER Box	2.2 HDi 130	96	03/11 -	3922	
BOXER Box	2.2 HDi 130	96	03/11 -	3981	
BOXER Box	2.2 HDi 130	96	03/11 -	4171	
BOXER Box	2.2 HDi 150	110	03/11 -	3922	
BOXER Box	2.2 HDi 150	110	03/11 -	3981	
BOXER Box	2.2 HDi 150	110	03/11 -	4171	
BOXER Box	3.0 HDi	115	07/06 -	3922	

MAKE & MODEL   		KW	YEAR		
PEUGEOT					
BOXER Box	3.0 HDi	115	07/06 -	3981	
BOXER Box	3.0 HDi	115	07/06 -	4171	
BOXER Box	3.0 HDi 145	107	04/10 -	3922	
BOXER Box	3.0 HDi 145	107	04/10 -	3981	
BOXER Box	3.0 HDi 145	107	04/10 -	4171	
BOXER Box	3.0 HDi 160	116	04/06 -	3922	
BOXER Box	3.0 HDi 160	116	04/06 -	3981	
BOXER Box	3.0 HDi 160	116	04/06 -	4171	
BOXER Box	3.0 HDi 175	130	03/11 -	3922	
BOXER Box	3.0 HDi 175	130	03/11 -	3981	
BOXER Box	3.0 HDi 175	130	03/11 -	4171	
BOXER Box (230L)	1.9 D	50	07/99 – 04/02	3559	
BOXER Box (230L)	1.9 D	50	07/99 – 04/02	3595	
BOXER Box (230L)	1.9 D	50	07/99 – 04/02	3834	
BOXER Box (230L)	1.9 D	50	07/99 – 04/02	3835	
BOXER Box (230L)	1.9 D	50	07/99 – 04/02		3914
BOXER Box (230L)	1.9 D	51	03/94 – 04/02	3559	
BOXER Box (230L)	1.9 D	51	03/94 – 04/02	3595	
BOXER Box (230L)	1.9 D	51	03/94 – 04/02	3834	
BOXER Box (230L)	1.9 D	51	03/94 – 04/02	3835	
BOXER Box (230L)	1.9 D	51	03/94 – 04/02		3914
BOXER Box (230L)	1.9 DT 4x4	66	03/96 – 09/98	3559	
BOXER Box (230L)	1.9 DT 4x4	66	03/96 – 09/98	3595	
BOXER Box (230L)	1.9 DT 4x4	66	03/96 – 09/98	3834	
BOXER Box (230L)	1.9 DT 4x4	66	03/96 – 09/98	3835	
BOXER Box (230L)	1.9 DT 4x4	66	03/96 – 09/98		3914
BOXER Box (230L)	1.9 TD	66	07/99 – 04/02	3559	
BOXER Box (230L)	1.9 TD	66	07/99 – 04/02	3595	
BOXER Box (230L)	1.9 TD	66	07/99 – 04/02	3834	
BOXER Box (230L)	1.9 TD	66	07/99 – 04/02	3835	
BOXER Box (230L)	1.9 TD	66	07/99 – 04/02		3914
BOXER Box (230L)	1.9 TD	68	03/94 – 04/02	3559	
BOXER Box (230L)	1.9 TD	68	03/94 – 04/02	3595	
BOXER Box (230L)	1.9 TD	68	03/94 – 04/02	3834	
BOXER Box (230L)	1.9 TD	68	03/94 – 04/02	3835	
BOXER Box (230L)	1.9 TD	68	03/94 – 04/02		3914
BOXER Box (230L)	2.0 4x4	80	03/96 – 09/98	3559	
BOXER Box (230L)	2.0 4x4	80	03/96 – 09/98	3595	
BOXER Box (230L)	2.0 4x4	80	03/96 – 09/98	3834	
BOXER Box (230L)	2.0 4x4	80	03/96 – 09/98	3835	
BOXER Box (230L)	2.0 4x4	80	03/96 – 09/98		3914
BOXER Box (230L)	2.0 HDI	62	08/01 – 04/02	3559	
BOXER Box (230L)	2.0 HDI	62	08/01 – 04/02	3595	
BOXER Box (230L)	2.0 HDI	62	08/01 – 04/02	3834	
BOXER Box (230L)	2.0 HDI	62	08/01 – 04/02	3835	
BOXER Box (230L)	2.0 HDI	62	08/01 – 04/02		3914
BOXER Box (230L)	2.0 i	80	06/94 – 04/02	3559	
BOXER Box (230L)	2.0 i	80	06/94 – 04/02	3595	
BOXER Box (230L)	2.0 i	80	06/94 – 04/02	3834	
BOXER Box (230L)	2.0 i	80	06/94 – 04/02	3835	
BOXER Box (230L)	2.0 i	80	06/94 – 04/02		3914
BOXER Box (230L)	2.5 D	63	03/94 – 04/02	3559	
BOXER Box (230L)	2.5 D	63	03/94 – 04/02	3595	
BOXER Box (230L)	2.5 D	63	03/94 – 04/02	3834	
BOXER Box (230L)	2.5 D	63	03/94 – 04/02	3835	
BOXER Box (230L)	2.5 D	63	03/94 – 04/02		3914
BOXER Box (230L)	2.5 D 4x4	63	07/99 – 04/02	3559	
BOXER Box (230L)	2.5 D 4x4	63	07/99 – 04/02	3595	
BOXER Box (230L)	2.5 D 4x4	63	07/99 – 04/02	3834	
BOXER Box (230L)	2.5 D 4x4	63	07/99 – 04/02	3835	
BOXER Box (230L)	2.5 D 4x4	63	07/99 – 04/02		3914
BOXER Box (230L)	2.5 DT	62	10/97 – 11/01	3559	
BOXER Box (230L)	2.5 DT	62	10/97 – 11/01	3595	
BOXER Box (230L)	2.5 DT	62	10/97 – 11/01	3834	
BOXER Box (230L)	2.5 DT	62	10/97 – 11/01	3835	
BOXER Box (230L)	2.5 DT	62	10/97 – 11/01		3914
BOXER Box (230L)	2.5 TD	76	03/94 – 04/02	3559	
BOXER Box (230L)	2.5 TD	76	03/94 – 04/02	3595	
BOXER Box (230L)	2.5 TD	76	03/94 – 04/02	3834	
BOXER Box (230L)	2.5 TD	76	03/94 – 04/02	3835	
BOXER Box (230L)	2.5 TD	76	03/94 – 04/02		3914

MAKE & MODEL		KW	YEAR		
PEUGEOT					
BOXER Box (230L)	2.5 TDI	79	01/97 – 04/02	3559	
BOXER Box (230L)	2.5 TDI	79	01/97 – 04/02	3595	
BOXER Box (230L)	2.5 TDI	79	01/97 – 04/02	3834	
BOXER Box (230L)	2.5 TDI	79	01/97 – 04/02	3835	
BOXER Box (230L)	2.5 TDI	79	01/97 – 04/02		3914
BOXER Box (230L)	2.5 TDI 4x4	79	07/99 – 04/02	3559	
BOXER Box (230L)	2.5 TDI 4x4	79	07/99 – 04/02	3595	
BOXER Box (230L)	2.5 TDI 4x4	79	07/99 – 04/02	3834	
BOXER Box (230L)	2.5 TDI 4x4	79	07/99 – 04/02	3835	
BOXER Box (230L)	2.5 TDI 4x4	79	07/99 – 04/02		3914
BOXER Box (230L)	2.8 D	64	01/99 – 02/02	3559	
BOXER Box (230L)	2.8 D	64	01/99 – 02/02	3595	
BOXER Box (230L)	2.8 D	64	01/99 – 02/02	3834	
BOXER Box (230L)	2.8 D	64	01/99 – 02/02	3835	
BOXER Box (230L)	2.8 D	64	01/99 – 02/02		3914
BOXER Box (230L)	2.8 HDI	94	11/00 – 04/02	3559	
BOXER Box (230L)	2.8 HDI	94	11/00 – 04/02	3595	
BOXER Box (230L)	2.8 HDI	94	11/00 – 04/02	3834	
BOXER Box (230L)	2.8 HDI	94	11/00 – 04/02	3835	
BOXER Box (230L)	2.8 HDI	94	11/00 – 04/02		3914
BOXER Box (230L)	2.8 HDi	93	10/00 – 11/01	3559	
BOXER Box (230L)	2.8 HDi	93	10/00 – 11/01	3595	
BOXER Box (230L)	2.8 HDi	93	10/00 – 11/01	3834	
BOXER Box (230L)	2.8 HDi	93	10/00 – 11/01	3835	
BOXER Box (230L)	2.8 HDi	93	10/00 – 11/01		3914
BOXER Box (230L)	2.8 HDi 4x4	93	10/00 – 11/01	3559	
BOXER Box (230L)	2.8 HDi 4x4	93	10/00 – 11/01	3595	
BOXER Box (230L)	2.8 HDi 4x4	93	10/00 – 11/01	3834	
BOXER Box (230L)	2.8 HDi 4x4	93	10/00 – 11/01	3835	
BOXER Box (230L)	2.8 HDi 4x4	93	10/00 – 11/01		3914
BOXER Box (230L)	2.8 HDi 4x4	94	10/00 – 04/02	3559	
BOXER Box (230L)	2.8 HDi 4x4	94	10/00 – 04/02	3595	
BOXER Box (230L)	2.8 HDi 4x4	94	10/00 – 04/02	3834	
BOXER Box (230L)	2.8 HDi 4x4	94	10/00 – 04/02	3835	
BOXER Box (230L)	2.8 HDi 4x4	94	10/00 – 04/02		3914
BOXER Box (244)	20	81	04/02 -	3834	
BOXER Box (244)	20	81	04/02 -	3835	
BOXER Box (244)	20	81	04/02 -		3914
BOXER Box (244)	2.0 HDi	62	04/02 -	3834	
BOXER Box (244)	2.0 HDi	62	04/02 -	3835	
BOXER Box (244)	2.0 HDi	62	04/02 -		3914
BOXER Box (244)	2.2 HDi	74	04/02 -	3834	
BOXER Box (244)	2.2 HDi	74	04/02 -	3835	
BOXER Box (244)	2.2 HDi	74	04/02 -		3914
BOXER Box (244)	2.8 HDi	93	09/05 – 09/09	3834	
BOXER Box (244)	2.8 HDi	93	09/05 – 09/09	3835	
BOXER Box (244)	2.8 HDi	93	09/05 – 09/09		3914
BOXER Box (244)	2.8 HDi	94	04/02 -	3834	
BOXER Box (244)	2.8 HDi	94	04/02 -	3835	
BOXER Box (244)	2.8 HDi	94	04/02 -		3914
BOXER Box (244)	2.8 HDi	107	04/04 -	3834	
BOXER Box (244)	2.8 HDi	107	04/04 -	3835	
BOXER Box (244)	2.8 HDi	107	04/04 -		3914
BOXER Box (244)	2.8 HDi 4x4	94	04/02 -	3834	
BOXER Box (244)	2.8 HDi 4x4	94	04/02 -	3835	
BOXER Box (244)	2.8 HDi 4x4	94	04/02 -		3914
BOXER Bus	2.0 BlueHDi 110	81	07/15 -	3922	
BOXER Bus	2.0 BlueHDi 110	81	07/15 -	3981	
BOXER Bus	2.0 BlueHDi 110	81	07/15 -	4171	
BOXER Bus	2.0 BlueHDi 110	81	07/15 -		4224
BOXER Bus	2.0 BlueHDi 130	96	07/15 -	3922	
BOXER Bus	2.0 BlueHDi 130	96	07/15 -	3981	
BOXER Bus	2.0 BlueHDi 130	96	07/15 -	4171	
BOXER Bus	2.0 BlueHDi 130	96	07/15 -		4224
BOXER Bus	2.0 BlueHDi 160	120	07/15 -	3922	
BOXER Bus	2.0 BlueHDi 160	120	07/15 -	3981	
BOXER Bus	2.0 BlueHDi 160	120	07/15 -	4171	
BOXER Bus	2.0 BlueHDi 160	120	07/15 -		4224
BOXER Bus	2.2 HDi 100	74	04/06 -	3922	
BOXER Bus	2.2 HDi 100	74	04/06 -	3981	
BOXER Bus	2.2 HDi 100	74	04/06 -	4171	

MAKE & MODEL   		KW	YEAR		
PEUGEOT					
BOXER Bus	2.2 HDi 110	81	03/11 -	3922	
BOXER Bus	2.2 HDi 110	81	03/11 -	3981	
BOXER Bus	2.2 HDi 110	81	03/11 -	4171	
BOXER Bus	2.2 HDi 120	88	04/06 -	3922	
BOXER Bus	2.2 HDi 120	88	04/06 -	3981	
BOXER Bus	2.2 HDi 120	88	04/06 -	4171	
BOXER Bus	2.2 HDi 130	96	03/11 -	3922	
BOXER Bus	2.2 HDi 130	96	03/11 -	3981	
BOXER Bus	2.2 HDi 130	96	03/11 -	4171	
BOXER Bus	2.2 HDi 150	110	03/11 -	3922	
BOXER Bus	2.2 HDi 150	110	03/11 -	3981	
BOXER Bus	2.2 HDi 150	110	03/11 -	4171	
BOXER Bus	3.0 HDi 145	107	04/10 -	3922	
BOXER Bus	3.0 HDi 145	107	04/10 -	3981	
BOXER Bus	3.0 HDi 145	107	04/10 -	4171	
BOXER Bus	3.0 HDi 160	116	04/06 -	3922	
BOXER Bus	3.0 HDi 160	116	04/06 -	3981	
BOXER Bus	3.0 HDi 160	116	04/06 -	4171	
BOXER Bus	3.0 HDi 175	130	03/11 -	3922	
BOXER Bus	3.0 HDi 175	130	03/11 -	3981	
BOXER Bus	3.0 HDi 175	130	03/11 -	4171	
BOXER Bus (230P)	1.9 D	51	03/94 – 04/02	3559	
BOXER Bus (230P)	1.9 D	51	03/94 – 04/02	3595	
BOXER Bus (230P)	1.9 D	51	03/94 – 04/02	3834	
BOXER Bus (230P)	1.9 D	51	03/94 – 04/02	3835	
BOXER Bus (230P)	1.9 D	51	03/94 – 04/02		3914
BOXER Bus (230P)	1.9 TD	66	08/94 – 04/02	3559	
BOXER Bus (230P)	1.9 TD	66	08/94 – 04/02	3595	
BOXER Bus (230P)	1.9 TD	66	08/94 – 04/02	3834	
BOXER Bus (230P)	1.9 TD	66	08/94 – 04/02	3835	
BOXER Bus (230P)	1.9 TD	66	08/94 – 04/02		3914
BOXER Bus (230P)	1.9 TD	68	03/94 – 04/02	3559	
BOXER Bus (230P)	1.9 TD	68	03/94 – 04/02	3595	
BOXER Bus (230P)	1.9 TD	68	03/94 – 04/02	3834	
BOXER Bus (230P)	1.9 TD	68	03/94 – 04/02	3835	
BOXER Bus (230P)	1.9 TD	68	03/94 – 04/02		3914
BOXER Bus (230P)	1.9 TD 4x4	68	07/96 – 04/02	3559	
BOXER Bus (230P)	1.9 TD 4x4	68	07/96 – 04/02	3595	
BOXER Bus (230P)	1.9 TD 4x4	68	07/96 – 04/02	3834	
BOXER Bus (230P)	1.9 TD 4x4	68	07/96 – 04/02	3835	
BOXER Bus (230P)	1.9 TD 4x4	68	07/96 – 04/02		3914
BOXER Bus (230P)	2.0 i	80	03/94 – 04/02	3559	
BOXER Bus (230P)	2.0 i	80	03/94 – 04/02	3595	
BOXER Bus (230P)	2.0 i	80	03/94 – 04/02	3834	
BOXER Bus (230P)	2.0 i	80	03/94 – 04/02	3835	
BOXER Bus (230P)	2.0 i	80	03/94 – 04/02		3914
BOXER Bus (230P)	2.0 i 4x4	80	08/96 – 04/02	3559	
BOXER Bus (230P)	2.0 i 4x4	80	08/96 – 04/02	3595	
BOXER Bus (230P)	2.0 i 4x4	80	08/96 – 04/02	3834	
BOXER Bus (230P)	2.0 i 4x4	80	08/96 – 04/02	3835	
BOXER Bus (230P)	2.0 i 4x4	80	08/96 – 04/02		3914
BOXER Bus (230P)	2.5 D	63	08/94 – 04/02	3559	
BOXER Bus (230P)	2.5 D	63	08/94 – 04/02	3595	
BOXER Bus (230P)	2.5 D	63	08/94 – 04/02	3834	
BOXER Bus (230P)	2.5 D	63	08/94 – 04/02	3835	
BOXER Bus (230P)	2.5 D	63	08/94 – 04/02		3914
BOXER Bus (230P)	2.5 D 4x4	63	07/96 – 04/02	3559	
BOXER Bus (230P)	2.5 D 4x4	63	07/96 – 04/02	3595	
BOXER Bus (230P)	2.5 D 4x4	63	07/96 – 04/02	3834	
BOXER Bus (230P)	2.5 D 4x4	63	07/96 – 04/02	3835	
BOXER Bus (230P)	2.5 D 4x4	63	07/96 – 04/02		3914
BOXER Bus (230P)	2.5 DT	62	10/97 – 11/01	3559	
BOXER Bus (230P)	2.5 DT	62	10/97 – 11/01	3595	
BOXER Bus (230P)	2.5 DT	62	10/97 – 11/01	3834	
BOXER Bus (230P)	2.5 DT	62	10/97 – 11/01	3835	
BOXER Bus (230P)	2.5 DT	62	10/97 – 11/01		3914
BOXER Bus (230P)	2.5 TD	76	07/94 – 04/02	3559	
BOXER Bus (230P)	2.5 TD	76	07/94 – 04/02	3595	
BOXER Bus (230P)	2.5 TD	76	07/94 – 04/02	3834	
BOXER Bus (230P)	2.5 TD	76	07/94 – 04/02	3835	
BOXER Bus (230P)	2.5 TD	76	07/94 – 04/02		3914

MAKE & MODEL		KW	YEAR		
PEUGEOT					
BOXER Bus (230P)	2.5 TD 4x4	76	07/96 – 04/02	3559	
BOXER Bus (230P)	2.5 TD 4x4	76	07/96 – 04/02	3595	
BOXER Bus (230P)	2.5 TD 4x4	76	07/96 – 04/02	3834	
BOXER Bus (230P)	2.5 TD 4x4	76	07/96 – 04/02	3835	
BOXER Bus (230P)	2.5 TD 4x4	76	07/96 – 04/02		3914
BOXER Bus (230P)	2.5 TDI	79	01/97 – 04/02	3559	
BOXER Bus (230P)	2.5 TDI	79	01/97 – 04/02	3595	
BOXER Bus (230P)	2.5 TDI	79	01/97 – 04/02	3834	
BOXER Bus (230P)	2.5 TDI	79	01/97 – 04/02	3835	
BOXER Bus (230P)	2.5 TDI	79	01/97 – 04/02		3914
BOXER Bus (230P)	2.5 TDI 4x4	79	01/97 – 04/02	3559	
BOXER Bus (230P)	2.5 TDI 4x4	79	01/97 – 04/02	3595	
BOXER Bus (230P)	2.5 TDI 4x4	79	01/97 – 04/02	3834	
BOXER Bus (230P)	2.5 TDI 4x4	79	01/97 – 04/02	3835	
BOXER Bus (230P)	2.5 TDI 4x4	79	01/97 – 04/02		3914
BOXER Bus (230P)	2.8 D	64	01/99 – 02/02	3559	
BOXER Bus (230P)	2.8 D	64	01/99 – 02/02	3595	
BOXER Bus (230P)	2.8 D	64	01/99 – 02/02	3834	
BOXER Bus (230P)	2.8 D	64	01/99 – 02/02	3835	
BOXER Bus (230P)	2.8 D	64	01/99 – 02/02		3914
BOXER Bus (230P)	2.8 HDI	94	11/00 – 04/02	3559	
BOXER Bus (230P)	2.8 HDI	94	11/00 – 04/02	3595	
BOXER Bus (230P)	2.8 HDI	94	11/00 – 04/02	3834	
BOXER Bus (230P)	2.8 HDI	94	11/00 – 04/02	3835	
BOXER Bus (230P)	2.8 HDI	94	11/00 – 04/02		3914
BOXER Bus (230P)	2.8 HDi	93	10/00 – 11/01	3559	
BOXER Bus (230P)	2.8 HDi	93	10/00 – 11/01	3595	
BOXER Bus (230P)	2.8 HDi	93	10/00 – 11/01	3834	
BOXER Bus (230P)	2.8 HDi	93	10/00 – 11/01	3835	
BOXER Bus (230P)	2.8 HDi	93	10/00 – 11/01		3914
BOXER Bus (230P)	2.8 HDi 4x4	94	10/00 – 04/02	3559	
BOXER Bus (230P)	2.8 HDi 4x4	94	10/00 – 04/02	3595	
BOXER Bus (230P)	2.8 HDi 4x4	94	10/00 – 04/02	3834	
BOXER Bus (230P)	2.8 HDi 4x4	94	10/00 – 04/02	3835	
BOXER Bus (230P)	2.8 HDi 4x4	94	10/00 – 04/02		3914
BOXER Bus (230P)	2.8 HDi All-wheel Drive	93	10/00 – 11/01	3559	
BOXER Bus (230P)	2.8 HDi All-wheel Drive	93	10/00 – 11/01	3595	
BOXER Bus (230P)	2.8 HDi All-wheel Drive	93	10/00 – 11/01	3834	
BOXER Bus (230P)	2.8 HDi All-wheel Drive	93	10/00 – 11/01	3835	
BOXER Bus (230P)	2.8 HDi All-wheel Drive	93	10/00 – 11/01		3914
BOXER Bus (244, Z_)	20	81	04/02 -	3834	
BOXER Bus (244, Z_)	20	81	04/02 -	3835	
BOXER Bus (244, Z_)	20	81	04/02 -		3914
BOXER Bus (244, Z_)	2.0 HDi	62	04/02 -	3834	
BOXER Bus (244, Z_)	2.0 HDi	62	04/02 -	3835	
BOXER Bus (244, Z_)	2.0 HDi	62	04/02 -		3914
BOXER Bus (244, Z_)	2.2 HDi	74	04/02 -	3834	
BOXER Bus (244, Z_)	2.2 HDi	74	04/02 -	3835	
BOXER Bus (244, Z_)	2.2 HDi	74	04/02 -		3914
BOXER Bus (244, Z_)	2.8 HDi	94	04/02 -	3834	
BOXER Bus (244, Z_)	2.8 HDi	94	04/02 -	3835	
BOXER Bus (244, Z_)	2.8 HDi	94	04/02 -		3914
BOXER Bus (244, Z_)	2.8 HDi	107	04/04 -	3834	
BOXER Bus (244, Z_)	2.8 HDi	107	04/04 -	3835	
BOXER Bus (244, Z_)	2.8 HDi	107	04/04 -		3914
BOXER Bus (244, Z_)	2.8 HDi 4x4	94	04/02 -	3834	
BOXER Bus (244, Z_)	2.8 HDi 4x4	94	04/02 -	3835	
BOXER Bus (244, Z_)	2.8 HDi 4x4	94	04/02 -		3914
BOXER Platform/Chassis	2.0 BlueHDi 110	81	07/15 -	3922	
BOXER Platform/Chassis	2.0 BlueHDi 110	81	07/15 -	3981	
BOXER Platform/Chassis	2.0 BlueHDi 110	81	07/15 -	4171	
BOXER Platform/Chassis	2.0 BlueHDi 110	81	07/15 -		4224
BOXER Platform/Chassis	2.0 BlueHDi 130	96	07/15 -	3922	
BOXER Platform/Chassis	2.0 BlueHDi 130	96	07/15 -	3981	
BOXER Platform/Chassis	2.0 BlueHDi 130	96	07/15 -	4171	
BOXER Platform/Chassis	2.0 BlueHDi 130	96	07/15 -		4224
BOXER Platform/Chassis	2.0 BlueHDi 160	120	07/15 -	3922	
BOXER Platform/Chassis	2.0 BlueHDi 160	120	07/15 -	3981	
BOXER Platform/Chassis	2.0 BlueHDi 160	120	07/15 -	4171	
BOXER Platform/Chassis	2.0 BlueHDi 160	120	07/15 -		4224
BOXER Platform/Chassis	2.2 HDi 100	74	04/06 -	3922	

MAKE & MODEL   		KW	YEAR		
PEUGEOT					
BOXER Platform/Chassis	2.2 HDi 100	74	04/06 -	3981	
BOXER Platform/Chassis	2.2 HDi 100	74	04/06 -	4171	
BOXER Platform/Chassis	2.2 HDi 110	81	03/11 -	3922	
BOXER Platform/Chassis	2.2 HDi 110	81	03/11 -	3981	
BOXER Platform/Chassis	2.2 HDi 110	81	03/11 -	4171	
BOXER Platform/Chassis	2.2 HDi 120	88	04/06 -	3922	
BOXER Platform/Chassis	2.2 HDi 120	88	04/06 -	3981	
BOXER Platform/Chassis	2.2 HDi 120	88	04/06 -	4171	
BOXER Platform/Chassis	2.2 HDi 130	96	03/11 -	3922	
BOXER Platform/Chassis	2.2 HDi 130	96	03/11 -	3981	
BOXER Platform/Chassis	2.2 HDi 130	96	03/11 -	4171	
BOXER Platform/Chassis	2.2 HDi 150	110	03/11 -	3922	
BOXER Platform/Chassis	2.2 HDi 150	110	03/11 -	3981	
BOXER Platform/Chassis	2.2 HDi 150	110	03/11 -	4171	
BOXER Platform/Chassis	3.0 HDi	115	02/07 -	3922	
BOXER Platform/Chassis	3.0 HDi	115	02/07 -	3981	
BOXER Platform/Chassis	3.0 HDi	115	02/07 -	4171	
BOXER Platform/Chassis	3.0 HDi 145	107	04/10 -	3922	
BOXER Platform/Chassis	3.0 HDi 145	107	04/10 -	3981	
BOXER Platform/Chassis	3.0 HDi 145	107	04/10 -	4171	
BOXER Platform/Chassis	3.0 HDi 160	116	04/06 -	3922	
BOXER Platform/Chassis	3.0 HDi 160	116	04/06 -	3981	
BOXER Platform/Chassis	3.0 HDi 160	116	04/06 -	4171	
BOXER Platform/Chassis	3.0 HDi 175	130	03/11 -	3922	
BOXER Platform/Chassis	3.0 HDi 175	130	03/11 -	3981	
BOXER Platform/Chassis	3.0 HDi 175	130	03/11 -	4171	
BOXER Platform/Chassis (244)	2.0 HDi	62	04/02 -	3834	
BOXER Platform/Chassis (244)	2.0 HDi	62	04/02 -	3835	
BOXER Platform/Chassis (244)	2.0 HDi	62	04/02 -		3914
BOXER Platform/Chassis (244)	2.2 HDi	74	04/02 -	3834	
BOXER Platform/Chassis (244)	2.2 HDi	74	04/02 -	3835	
BOXER Platform/Chassis (244)	2.2 HDi	74	04/02 -		3914
BOXER Platform/Chassis (244)	2.8 HDi	94	04/02 -	3834	
BOXER Platform/Chassis (244)	2.8 HDi	94	04/02 -	3835	
BOXER Platform/Chassis (244)	2.8 HDi	94	04/02 -		3914
BOXER Platform/Chassis (244)	2.8 HDi	107	04/04 -	3834	
BOXER Platform/Chassis (244)	2.8 HDi	107	04/04 -	3835	
BOXER Platform/Chassis (244)	2.8 HDi	107	04/04 -		3914
BOXER Platform/Chassis (244)	2.8 HDi 4x4	94	04/02 -	3834	
BOXER Platform/Chassis (244)	2.8 HDi 4x4	94	04/02 -	3835	
BOXER Platform/Chassis (244)	2.8 HDi 4x4	94	04/02 -		3914
BOXER Platform/Chassis (ZCT_)	20	81	12/01 – 04/02	3559	
BOXER Platform/Chassis (ZCT_)	20	81	12/01 – 04/02	3595	
BOXER Platform/Chassis (ZCT_)	20	81	12/01 – 04/02	3834	
BOXER Platform/Chassis (ZCT_)	20	81	12/01 – 04/02	3835	
BOXER Platform/Chassis (ZCT_)	20	81	12/01 – 04/02		3914
BOXER Platform/Chassis (ZCT_)	1.9 TD	66	06/94 – 04/02	3559	
BOXER Platform/Chassis (ZCT_)	1.9 TD	66	06/94 – 04/02	3595	
BOXER Platform/Chassis (ZCT_)	1.9 TD	66	06/94 – 04/02	3834	
BOXER Platform/Chassis (ZCT_)	1.9 TD	66	06/94 – 04/02	3835	
BOXER Platform/Chassis (ZCT_)	1.9 TD	66	06/94 – 04/02		3914
BOXER Platform/Chassis (ZCT_)	1.9 TD	68	07/94 – 04/02	3559	
BOXER Platform/Chassis (ZCT_)	1.9 TD	68	07/94 – 04/02	3595	
BOXER Platform/Chassis (ZCT_)	1.9 TD	68	07/94 – 04/02	3834	
BOXER Platform/Chassis (ZCT_)	1.9 TD	68	07/94 – 04/02	3835	
BOXER Platform/Chassis (ZCT_)	1.9 TD	68	07/94 – 04/02		3914
BOXER Platform/Chassis (ZCT_)	2.0 i	80	06/94 – 04/02	3559	
BOXER Platform/Chassis (ZCT_)	2.0 i	80	06/94 – 04/02	3595	
BOXER Platform/Chassis (ZCT_)	2.0 i	80	06/94 – 04/02	3834	
BOXER Platform/Chassis (ZCT_)	2.0 i	80	06/94 – 04/02	3835	
BOXER Platform/Chassis (ZCT_)	2.0 i	80	06/94 – 04/02		3914
BOXER Platform/Chassis (ZCT_)	2.5 D	63	03/94 – 04/02	3559	
BOXER Platform/Chassis (ZCT_)	2.5 D	63	03/94 – 04/02	3595	
BOXER Platform/Chassis (ZCT_)	2.5 D	63	03/94 – 04/02	3834	
BOXER Platform/Chassis (ZCT_)	2.5 D	63	03/94 – 04/02	3835	
BOXER Platform/Chassis (ZCT_)	2.5 D	63	03/94 – 04/02		3914
BOXER Platform/Chassis (ZCT_)	2.5 D 4x4	63	07/99 – 04/02	3559	
BOXER Platform/Chassis (ZCT_)	2.5 D 4x4	63	07/99 – 04/02	3595	
BOXER Platform/Chassis (ZCT_)	2.5 D 4x4	63	07/99 – 04/02	3834	
BOXER Platform/Chassis (ZCT_)	2.5 D 4x4	63	07/99 – 04/02	3835	
BOXER Platform/Chassis (ZCT_)	2.5 D 4x4	63	07/99 – 04/02		3914

MAKE & MODEL		KW	YEAR		
PEUGEOT					
BOXER Platform/Chassis (ZCT_)	2.5 TD	76	03/94 – 04/02	3559	
BOXER Platform/Chassis (ZCT_)	2.5 TD	76	03/94 – 04/02	3595	
BOXER Platform/Chassis (ZCT_)	2.5 TD	76	03/94 – 04/02	3834	
BOXER Platform/Chassis (ZCT_)	2.5 TD	76	03/94 – 04/02	3835	
BOXER Platform/Chassis (ZCT_)	2.5 TD	76	03/94 – 04/02		3914
BOXER Platform/Chassis (ZCT_)	2.5 TDI	79	01/97 – 04/02	3559	
BOXER Platform/Chassis (ZCT_)	2.5 TDI	79	01/97 – 04/02	3595	
BOXER Platform/Chassis (ZCT_)	2.5 TDI	79	01/97 – 04/02	3834	
BOXER Platform/Chassis (ZCT_)	2.5 TDI	79	01/97 – 04/02	3835	
BOXER Platform/Chassis (ZCT_)	2.5 TDI	79	01/97 – 04/02		3914
BOXER Platform/Chassis (ZCT_)	2.5 TDI 4x4	79	07/99 – 04/02	3559	
BOXER Platform/Chassis (ZCT_)	2.5 TDI 4x4	79	07/99 – 04/02	3595	
BOXER Platform/Chassis (ZCT_)	2.5 TDI 4x4	79	07/99 – 04/02	3834	
BOXER Platform/Chassis (ZCT_)	2.5 TDI 4x4	79	07/99 – 04/02	3835	
BOXER Platform/Chassis (ZCT_)	2.5 TDI 4x4	79	07/99 – 04/02		3914
BOXER Platform/Chassis (ZCT_)	2.8 D	64	01/99 – 02/02	3559	
BOXER Platform/Chassis (ZCT_)	2.8 D	64	01/99 – 02/02	3595	
BOXER Platform/Chassis (ZCT_)	2.8 D	64	01/99 – 02/02	3834	
BOXER Platform/Chassis (ZCT_)	2.8 D	64	01/99 – 02/02	3835	
BOXER Platform/Chassis (ZCT_)	2.8 D	64	01/99 – 02/02		3914
BOXER Platform/Chassis (ZCT_)	2.8 HDI	94	11/00 – 04/02	3559	
BOXER Platform/Chassis (ZCT_)	2.8 HDI	94	11/00 – 04/02	3595	
BOXER Platform/Chassis (ZCT_)	2.8 HDI	94	11/00 – 04/02	3834	
BOXER Platform/Chassis (ZCT_)	2.8 HDI	94	11/00 – 04/02	3835	
BOXER Platform/Chassis (ZCT_)	2.8 HDI	94	11/00 – 04/02		3914
BOXER Platform/Chassis (ZCT_)	2.8 HDi	93	10/00 – 11/01	3559	
BOXER Platform/Chassis (ZCT_)	2.8 HDi	93	10/00 – 11/01	3595	
BOXER Platform/Chassis (ZCT_)	2.8 HDi	93	10/00 – 11/01	3834	
BOXER Platform/Chassis (ZCT_)	2.8 HDi	93	10/00 – 11/01	3835	
BOXER Platform/Chassis (ZCT_)	2.8 HDi	93	10/00 – 11/01		3914
BOXER Platform/Chassis (ZCT_)	2.8 HDi All-wheel Drive	93	10/00 – 11/01	3559	
BOXER Platform/Chassis (ZCT_)	2.8 HDi All-wheel Drive	93	10/00 – 11/01	3595	
BOXER Platform/Chassis (ZCT_)	2.8 HDi All-wheel Drive	93	10/00 – 11/01	3834	
BOXER Platform/Chassis (ZCT_)	2.8 HDi All-wheel Drive	93	10/00 – 11/01	3835	
BOXER Platform/Chassis (ZCT_)	2.8 HDi All-wheel Drive	93	10/00 – 11/01		3914
EXPERT (224)	16	58	02/96 – 12/06	3799	
EXPERT (224)	16	58	02/96 – 12/06	3986	
EXPERT (224)	18	74	10/96 – 09/00	3799	
EXPERT (224)	18	74	10/96 – 09/00	3986	
EXPERT (224)	20	100	07/00 – 12/06	3799	
EXPERT (224)	20	100	07/00 – 12/06	3986	
EXPERT (224)	1.9 D	51	02/96 – 12/06	3799	
EXPERT (224)	1.9 D	51	12/03 – 12/06	3799	
EXPERT (224)	1.9 D	51	02/96 – 12/06	3986	
EXPERT (224)	1.9 D	51	12/03 – 12/06	3986	
EXPERT (224)	1.9 TD	66	02/96 – 12/06	3799	
EXPERT (224)	1.9 TD	66	02/96 – 12/06	3986	
EXPERT (224)	1.9 TD	68	02/96 – 12/06	3799	
EXPERT (224)	1.9 TD	68	02/96 – 12/06	3986	
EXPERT (224)	2.0 HDI	80	07/00 – 12/06	3799	
EXPERT (224)	2.0 HDI	80	07/00 – 12/06	3986	
EXPERT (224)	2.0 HDI 16V	80	07/00 – 12/06	3799	
EXPERT (224)	2.0 HDI 16V	80	07/00 – 12/06	3986	
EXPERT (224)	2.0 HDi	69	10/00 – 11/03	3799	
EXPERT (224)	2.0 HDi	69	10/00 – 11/03	3986	
EXPERT Box (222)	16	58	02/96 – 12/06	3799	
EXPERT Box (222)	16	58	02/96 – 12/06	3986	
EXPERT Box (222)	18	74	10/96 – 09/00	3799	
EXPERT Box (222)	20	100	09/02 – 12/06	3799	
EXPERT Box (222)	20	100	09/02 – 12/06	3986	
EXPERT Box (222)	1.9 D	51	02/96 – 12/06	3799	
EXPERT Box (222)	1.9 D	51	02/96 – 12/06	3986	
EXPERT Box (222)	1.9 D 70	51	12/98 – 12/06	3799	
EXPERT Box (222)	1.9 D 70	51	12/98 – 12/06	3986	
EXPERT Box (222)	1.9 TD	66	02/96 – 12/06	3799	
EXPERT Box (222)	1.9 TD	66	02/96 – 12/06	3986	
EXPERT Box (222)	1.9 TD	68	02/96 – 12/06	3799	
EXPERT Box (222)	1.9 TD	68	02/96 – 12/06	3986	
EXPERT Box (222)	2.0 HDI	69	07/00 – 12/06	3799	
EXPERT Box (222)	2.0 HDI	69	07/00 – 12/06	3986	
EXPERT Box (222)	2.0 HDI	80	07/00 – 12/06	3799	

MAKE & MODEL		KW	YEAR		
PEUGEOT					
EXPERT Box (222)	2.0 HDI	80	07/00 – 12/06	3799	
EXPERT Box (222)	2.0 HDI	80	07/00 – 12/06	3986	
EXPERT Box (222)	2.0 HDI	80	07/00 – 12/06	3986	
EXPERT Box (VF3A_, VF3U_, VF3X_)	1.6 HDi 90 16V	66	01/07 -	3972	
EXPERT Box (VF3A_, VF3U_, VF3X_)	1.6 HDi 90 16V	66	01/07 -		4151
EXPERT Box (VF3A_, VF3U_, VF3X_)	1.6 HDi 90 8V	66	01/07 -	3972	
EXPERT Box (VF3A_, VF3U_, VF3X_)	1.6 HDi 90 8V	66	01/07 -		4151
EXPERT Box (VF3A_, VF3U_, VF3X_)	2.0 16V	103	01/07 -	3972	
EXPERT Box (VF3A_, VF3U_, VF3X_)	2.0 16V	103	01/07 -		4151
EXPERT Box (VF3A_, VF3U_, VF3X_)	2.0 HDi 100	72	03/11 -	3972	
EXPERT Box (VF3A_, VF3U_, VF3X_)	2.0 HDi 100	72	03/11 -		4151
EXPERT Box (VF3A_, VF3U_, VF3X_)	2.0 HDi 120	88	01/07 -	3972	
EXPERT Box (VF3A_, VF3U_, VF3X_)	2.0 HDi 120	88	01/07 -		4151
EXPERT Box (VF3A_, VF3U_, VF3X_)	2.0 HDi 120 4x4	88	01/10 -	3972	
EXPERT Box (VF3A_, VF3U_, VF3X_)	2.0 HDi 120 4x4	88	01/10 -		4151
EXPERT Box (VF3A_, VF3U_, VF3X_)	2.0 HDi 130	94	03/11 -	3972	
EXPERT Box (VF3A_, VF3U_, VF3X_)	2.0 HDi 130	94	03/11 -		4151
EXPERT Box (VF3A_, VF3U_, VF3X_)	2.0 HDi 130 4x4	94	01/12 -	3972	
EXPERT Box (VF3A_, VF3U_, VF3X_)	2.0 HDi 130 4x4	94	01/12 -		4151
EXPERT Box (VF3A_, VF3U_, VF3X_)	2.0 HDi 140	100	01/07 -	3972	
EXPERT Box (VF3A_, VF3U_, VF3X_)	2.0 HDi 140	100	01/07 -		4151
EXPERT Box (VF3A_, VF3U_, VF3X_)	2.0 HDi 165	120	09/09 -	3972	
EXPERT Box (VF3A_, VF3U_, VF3X_)	2.0 HDi 165	120	09/09 -		4151
EXPERT Platform/Chassis	1.6 HDi 90 16V	66	01/07 -	3972	
EXPERT Platform/Chassis	1.6 HDi 90 16V	66	01/07 -		4151
EXPERT Platform/Chassis	2.0 HDi 120	88	01/07 -	3972	
EXPERT Platform/Chassis	2.0 HDi 120	88	01/07 -		4151
EXPERT Platform/Chassis	2.0 HDi 140	100	01/07 -	3972	
EXPERT Platform/Chassis	2.0 HDi 140	100	01/07 -		4151
EXPERT Platform/Chassis (223)	16	58	02/96 – 12/06	3986	
EXPERT Platform/Chassis (223)	1.9 D	51	02/96 – 12/06	3986	
EXPERT Platform/Chassis (223)	1.9 D	51	06/98 – 11/03	3986	
EXPERT Platform/Chassis (223)	1.9 TD	66	02/96 – 12/06	3986	
EXPERT Platform/Chassis (223)	1.9 TD	68	02/96 – 12/06	3986	
EXPERT Platform/Chassis (223)	2.0 HDi	80	10/00 – 10/06	3986	
EXPERT Tepee (VF3V_)	1.6 HDi 90 16V	66	01/07 -	3972	
EXPERT Tepee (VF3V_)	1.6 HDi 90 16V	66	01/07 -		4151
EXPERT Tepee (VF3V_)	1.6 HDi 90 8V	66	01/07 -	3972	
EXPERT Tepee (VF3V_)	1.6 HDi 90 8V	66	01/07 -		4151
EXPERT Tepee (VF3V_)	2.0 16V	103	01/07 -	3972	
EXPERT Tepee (VF3V_)	2.0 16V	103	01/07 -		4151
EXPERT Tepee (VF3V_)	2.0 HDi 100	72	03/11 -	3972	
EXPERT Tepee (VF3V_)	2.0 HDi 100	72	03/11 -		4151
EXPERT Tepee (VF3V_)	2.0 HDi 120	88	01/07 -	3972	
EXPERT Tepee (VF3V_)	2.0 HDi 120	88	01/07 -		4151
EXPERT Tepee (VF3V_)	2.0 HDi 120 4x4	88	01/07 -	3972	
EXPERT Tepee (VF3V_)	2.0 HDi 120 4x4	88	01/07 -		4151
EXPERT Tepee (VF3V_)	2.0 HDi 130	94	03/11 -	3972	
EXPERT Tepee (VF3V_)	2.0 HDi 130	94	03/11 -		4151
EXPERT Tepee (VF3V_)	2.0 HDi 130 4x4	94	03/11 -	3972	
EXPERT Tepee (VF3V_)	2.0 HDi 130 4x4	94	03/11 -		4151
EXPERT Tepee (VF3V_)	2.0 HDi 140	100	01/07 -	3972	
EXPERT Tepee (VF3V_)	2.0 HDi 140	100	01/07 -		4151
EXPERT Tepee (VF3V_)	2.0 HDi 165	120	09/09 -	3972	
EXPERT Tepee (VF3V_)	2.0 HDi 165	120	09/09 -		4151
J5 Box (280L)	1.8	51	01/83 – 11/88	3440	
J5 Box (280L)	2.0	55	09/87 – 08/90	3440	
J5 Box (280L)	2.0	58	09/81 – 08/90	3440	
J5 Box (280L)	2.5 D	54	09/81 – 08/90	3440	
J5 Box (280L)	2.5 D	54	09/81 – 08/90	3543	
J5 Box (280L)	2.5 DT	70	09/81 – 08/90	3543	
J5 Box (290L)	18	51	09/90 – 01/94	3440	
J5 Box (290L)	20	62	09/90 – 01/94	3440	
J5 Box (290L)	1.9 D	51	10/90 – 03/94	3440	
J5 Box (290L)	2.5 D	54	09/90 – 01/94	3440	
J5 Box (290L)	2.5 D	54	09/90 – 01/94	3543	
J5 Box (290L)	2.5 D 4x4	54	10/90 – 03/94	3440	
J5 Box (290L)	2.5 D 4x4	54	10/90 – 03/94	3543	
J5 Box (290L)	2.5 DT	70	09/90 – 01/94	3543	
J5 Box (290L)	2.5 TD 4x4	70	10/90 – 03/94	3543	
J5 Bus (280P)	2.0	55	09/81 – 09/90	3440	

MAKE & MODEL   		KW	YEAR		
PEUGEOT					
J5 Bus (280P)	2.0	58	01/83 – 09/90	3440	
J5 Bus (280P)	2.5 D	54	09/81 – 09/90	3440	
J5 Bus (280P)	2.5 D	54	09/81 – 09/90	3543	
J5 Bus (290P)	1.9 D	51	10/90 – 02/94	3440	
J5 Bus (290P)	2.0	62	10/90 – 02/94	3440	
J5 Bus (290P)	2.5 D	54	10/90 – 02/94	3440	
J5 Bus (290P)	2.5 D	54	10/90 – 02/94	3543	
J5 Bus (290P)	2.5 D 4x4	54	10/90 – 02/94	3440	
J5 Bus (290P)	2.5 D 4x4	54	10/90 – 02/94	3543	
J5 Bus (290P)	2.5 TD	70	10/90 – 02/94	3543	
J5 Bus (290P)	2.5 TD 4x4	70	10/90 – 02/94	3543	
J5 Platform/Chassis (280L)	2.0	55	01/86 – 11/88	3440	
J5 Platform/Chassis (280L)	2.0	58	01/83 – 11/88	3440	
J5 Platform/Chassis (280L)	2.5 D	54	09/81 – 09/90	3440	
J5 Platform/Chassis (280L)	2.5 D	54	09/81 – 09/90	3543	
J5 Platform/Chassis (280L)	2.5 D 4x4	54	09/81 – 08/90	3440	
J5 Platform/Chassis (280L)	2.5 D 4x4	54	09/81 – 08/90	3543	
J5 Platform/Chassis (280L)	2.5 DT	70	09/81 – 08/90	3543	
J5 Platform/Chassis (290L)	1.9 D	51	10/90 – 02/94	3440	
J5 Platform/Chassis (290L)	2.0	62	10/90 – 02/94	3440	
J5 Platform/Chassis (290L)	2.5 D	54	10/90 – 02/94	3440	
J5 Platform/Chassis (290L)	2.5 D	54	10/90 – 02/94	3543	
J5 Platform/Chassis (290L)	2.5 D 4x4	54	10/90 – 02/94	3440	
J5 Platform/Chassis (290L)	2.5 D 4x4	54	10/90 – 02/94	3543	
J5 Platform/Chassis (290L)	2.5 TD	70	10/90 – 02/94	3543	
J5 Platform/Chassis (290L)	2.5 TD 4x4	70	10/90 – 02/94	3543	
J9 Box	16	44	03/80 – 06/87	3366/1	
J9 Box	20	57	03/80 – 06/87	3366/1	
J9 Box	2.1 D	41	03/80 – 06/87	3366	
J9 Box	2.1 D	41	03/80 – 06/87	3366/1	
J9 Box	2.3 D	49	03/80 – 07/82	3366/1	
J9 Box	2.5 D	53	07/82 – 06/87	3366/1	
J9 Bus	20	57	03/80 – 06/87	3366/1	
J9 Bus	2.3 D	49	03/80 – 07/82	3366/1	
J9 Bus	2.5 D	53	08/82 – 06/87	3366/1	
J9 Platform/Chassis	20	57	03/80 – 06/87	3366/1	
J9 Platform/Chassis	2.3 D	49	03/80 – 07/82	3366/1	
J9 Platform/Chassis	2.5 D	53	07/82 – 06/87	3366/1	
PARTNER Box (5) / RANCH Box (5)	11	44	06/96 -	3636	
PARTNER Box (5) / RANCH Box (5)	11	44	06/96 -	3644	
PARTNER Box (5) / RANCH Box (5)	11	44	06/96 -	3820	
PARTNER Box (5) / RANCH Box (5)	14	54	11/02 – 10/06	3820	
PARTNER Box (5) / RANCH Box (5)	14	55	06/96 -	3636	
PARTNER Box (5) / RANCH Box (5)	14	55	06/96 -	3644	
PARTNER Box (5) / RANCH Box (5)	14	55	06/96 -	3820	
PARTNER Box (5) / RANCH Box (5)	16	80	09/00 – 10/02	3636	
PARTNER Box (5) / RANCH Box (5)	16	80	09/00 – 10/02	3644	
PARTNER Box (5) / RANCH Box (5)	16	80	09/00 – 10/02	3820	
PARTNER Box (5) / RANCH Box (5)	18	66	03/97 – 08/00	3636	
PARTNER Box (5) / RANCH Box (5)	18	66	03/97 08/00	3644	
PARTNER Box (5) / RANCH Box (5)	18	66	03/97 – 08/00	3820	
PARTNER Box (5) / RANCH Box (5)	1.4 BiFuel	55	04/03 -	3820	
PARTNER Box (5) / RANCH Box (5)	1.6 HDi 75	55	02/06 -		3529/1
PARTNER Box (5) / RANCH Box (5)	1.6 HDi 75	55	02/06 -	3820	
PARTNER Box (5) / RANCH Box (5)	1.6 HDi 90	66	02/06 -		3529/1
PARTNER Box (5) / RANCH Box (5)	1.6 HDi 90	66	02/06 -	3820	
PARTNER Box (5) / RANCH Box (5)	1.8 D	43	06/96 -	3636	
PARTNER Box (5) / RANCH Box (5)	1.8 D	43	06/96 -	3644	
PARTNER Box (5) / RANCH Box (5)	1.8 D	43	06/96 -	3820	
PARTNER Box (5) / RANCH Box (5)	1.8 D	44	11/96 – 02/98	3636	
PARTNER Box (5) / RANCH Box (5)	1.8 D	44	11/96 – 02/98	3644	
PARTNER Box (5) / RANCH Box (5)	1.9 D	50	05/96 – 12/98	3636	
PARTNER Box (5) / RANCH Box (5)	1.9 D	50	05/96 – 12/98	3644	
PARTNER Box (5) / RANCH Box (5)	1.9 D	51	06/96 -	3636	
PARTNER Box (5) / RANCH Box (5)	1.9 D	51	06/96 -	3636	
PARTNER Box (5) / RANCH Box (5)	1.9 D	51	06/96 -	3644	
PARTNER Box (5) / RANCH Box (5)	1.9 D	51	06/96 -	3644	
PARTNER Box (5) / RANCH Box (5)	1.9 D	51	06/96 -	3820	
PARTNER Box (5) / RANCH Box (5)	1.9 D	51	06/96 -	3820	
PARTNER Box (5) / RANCH Box (5)	1.9 D 4x4	51	04/04 -	3820	
PARTNER Box (5) / RANCH Box (5)	2.0 HDi	66	04/00 -		3529/1

MAKE & MODEL   		KW	YEAR		
PEUGEOT					
PARTNER Box (5) / RANCH Box (5)	2.0 HDi	66	04/00 -	3636	
PARTNER Box (5) / RANCH Box (5)	2.0 HDi	66	04/00 -	3644	
PARTNER Box (5) / RANCH Box (5)	2.0 HDi	66	04/00 -	3820	
PARTNER Box (5) / RANCH Box (5)	2.0 HDi 4x4	66	04/04 -		3529/1
PARTNER Box (5) / RANCH Box (5)	2.0 HDi 4x4	66	04/04 -	3820	
PARTNER Box (5) / RANCH Box (5)	Electric	25	04/96 – 12/02	3636	
PARTNER Box (5) / RANCH Box (5)	Electric	25	04/96 – 12/02	3644	
PARTNER Box (5) / RANCH Box (5)	Electric	25	04/96 – 12/02	3820	
PARTNER Box / RANCH Box	16	66	04/08 -	3964	
PARTNER Box / RANCH Box	16	66	04/08 -		3971
PARTNER Box / RANCH Box	16	72	11/10 -	3964	
PARTNER Box / RANCH Box	16	72	11/10 -		3971
PARTNER Box / RANCH Box	16	80	04/08 -	3964	
PARTNER Box / RANCH Box	16	80	04/08 -		3971
PARTNER Box / RANCH Box	16	88	04/10 -	3964	
PARTNER Box / RANCH Box	16	88	04/10 -		3971
PARTNER Box / RANCH Box	1.6 BlueHDi 100	73	04/15 -	3964	
PARTNER Box / RANCH Box	1.6 BlueHDi 100	73	04/15 -		3971
PARTNER Box / RANCH Box	1.6 BlueHDi 120	88	04/15 -	3964	
PARTNER Box / RANCH Box	1.6 BlueHDi 120	88	04/15 -		3971
PARTNER Box / RANCH Box	1.6 HDi	55	04/08 -	3964	
PARTNER Box / RANCH Box	1.6 HDi	55	04/08 -		3971
PARTNER Box / RANCH Box	1.6 HDi	66	03/13 -	3964	
PARTNER Box / RANCH Box	1.6 HDi	66	03/13 -		3971
PARTNER Box / RANCH Box	1.6 HDi	80	04/08 -	3964	
PARTNER Box / RANCH Box	1.6 HDi	80	04/08 -		3971
PARTNER Box / RANCH Box	1.6 HDi	82	08/10 -	3964	
PARTNER Box / RANCH Box	1.6 HDi	82	08/10 -		3971
PARTNER Box / RANCH Box	1.6 HDi	84	03/13 -	3964	
PARTNER Box / RANCH Box	1.6 HDi	84	03/13 -		3971
PARTNER Box / RANCH Box	1.6 HDi / BlueHDi 75	55	01/14 -	3964	
PARTNER Box / RANCH Box	1.6 HDi / BlueHDi 75	55	01/14 -		3971
PARTNER Box / RANCH Box	1.6 HDi 16V	66	04/08 -	3964	
PARTNER Box / RANCH Box	1.6 HDi 16V	66	04/08 -		3971
PARTNER Box / RANCH Box	1.6 HDi 16V 4x4	66	04/12 -	3964	
PARTNER Box / RANCH Box	1.6 HDi 16V 4x4	66	04/12 -		3971
PARTNER Box / RANCH Box	1.6 HDi 90	68	04/10 -	3964	
PARTNER Box / RANCH Box	1.6 HDi 90	68	04/10 -		3971
PARTNER Box / RANCH Box	Électrique	49	06/13 -	3964	
PARTNER Box / RANCH Box	Électrique	49	06/13 -		3971
PARTNER Combispace (5F) / RANCH Combispace (5F)	11	44	06/96 -	3636	
PARTNER Combispace (5F) / RANCH Combispace (5F)	11	44	06/96 -	3644	
PARTNER Combispace (5F) / RANCH Combispace (5F)	11	44	06/96 -	3820	
PARTNER Combispace (5F) / RANCH Combispace (5F)	14	54	11/02 – 10/06	3820	
PARTNER Combispace (5F) / RANCH Combispace (5F)	14	55	06/96 -	3636	
PARTNER Combispace (5F) / RANCH Combispace (5F)	14	55	06/96 -	3644	
PARTNER Combispace (5F) / RANCH Combispace (5F)	14	55	06/96 -	3820	
PARTNER Combispace (5F) / RANCH Combispace (5F)	18	66	05/97 -	3636	
PARTNER Combispace (5F) / RANCH Combispace (5F)	18	66	05/97 -	3644	
PARTNER Combispace (5F) / RANCH Combispace (5F)	18	66	05/97 -	3820	
PARTNER Combispace (5F) / RANCH Combispace (5F)	1.6 16V	80	07/01 -		3529/1
PARTNER Combispace (5F) / RANCH Combispace (5F)	1.6 16V	80	07/01 -	3636	
PARTNER Combispace (5F) / RANCH Combispace (5F)	1.6 16V	80	07/01 -	3644	
PARTNER Combispace (5F) / RANCH Combispace (5F)	1.6 16V	80	07/01 -	3820	
PARTNER Combispace (5F) / RANCH Combispace (5F)	1.6 HDi 75	55	02/06 -		3529/1
PARTNER Combispace (5F) / RANCH Combispace (5F)	1.6 HDi 75	55	02/06 -	3820	
PARTNER Combispace (5F) / RANCH Combispace (5F)	1.6 HDi 90	66	10/05 -		3529/1
PARTNER Combispace (5F) / RANCH Combispace (5F)	1.6 HDi 90	66	10/05 -	3820	
PARTNER Combispace (5F) / RANCH Combispace (5F)	1.9 D	50	06/96 -	3636	
PARTNER Combispace (5F) / RANCH Combispace (5F)	1.9 D	50	06/96 -	3644	
PARTNER Combispace (5F) / RANCH Combispace (5F)	1.9 D	50	06/96 -	3820	
PARTNER Combispace (5F) / RANCH Combispace (5F)	1.9 D	51	05/96 – 12/98	3636	
PARTNER Combispace (5F) / RANCH Combispace (5F)	1.9 D	51	12/98 -	3636	
PARTNER Combispace (5F) / RANCH Combispace (5F)	1.9 D	51	05/96 – 12/98	3644	
PARTNER Combispace (5F) / RANCH Combispace (5F)	1.9 D	51	12/98 -	3644	
PARTNER Combispace (5F) / RANCH Combispace (5F)	1.9 D	51	12/98 -	3820	
PARTNER Combispace (5F) / RANCH Combispace (5F)	1.9 D 4x4	51	04/04 – 08/05	3820	
PARTNER Combispace (5F) / RANCH Combispace (5F)	2.0 HDI	66	02/00 -		3529/1
PARTNER Combispace (5F) / RANCH Combispace (5F)	2.0 HDI	66	02/00 -	3636	
PARTNER Combispace (5F) / RANCH Combispace (5F)	2.0 HDI	66	02/00 -	3644	
PARTNER Combispace (5F) / RANCH Combispace (5F)	2.0 HDI	66	02/00 -	3820	

MAKE & MODEL		KW	YEAR		
PEUGEOT					
PARTNER Combispace (5F) / RANCH Combispace (5F)	2.0 HDi 4x4	66	04/04 – 08/05		3529/1
PARTNER Combispace (5F) / RANCH Combispace (5F)	2.0 HDi 4x4	66	04/04 – 08/05	3820	
PARTNER Combispace (5F) / RANCH Combispace (5F)	Electric	28	01/98 – 12/01	3636	
PARTNER Combispace (5F) / RANCH Combispace (5F)	Electric	28	01/98 – 12/01	3644	
PARTNER Combispace (5F) / RANCH Combispace (5F)	Electric	28	01/98 – 12/01	3820	
PARTNER Platform/Chassis / RANCH Platform/Chassis	1.6 HDi	55	01/09 -	3964	
PARTNER Platform/Chassis / RANCH Platform/Chassis	1.6 HDi	55	01/09 -		3971
PARTNER Platform/Chassis / RANCH Platform/Chassis	1.6 HDi	66	03/13 -	3964	
PARTNER Platform/Chassis / RANCH Platform/Chassis	1.6 HDi	66	03/13 -		3971
PARTNER Platform/Chassis / RANCH Platform/Chassis	1.6 HDi 16V	66	01/09 -	3964	
PARTNER Platform/Chassis / RANCH Platform/Chassis	1.6 HDi 16V	66	01/09 -		3971
PARTNER Tepee / RANCH Tepee	16	66	04/08 -	3964	
PARTNER Tepee / RANCH Tepee	16	66	04/08 -		3971
PARTNER Tepee / RANCH Tepee	16	72	08/10 -	3964	
PARTNER Tepee / RANCH Tepee	16	72	08/10 -		3971
PARTNER Tepee / RANCH Tepee	16	80	04/08 -	3964	
PARTNER Tepee / RANCH Tepee	16	80	04/08 -		3971
PARTNER Tepee / RANCH Tepee	16	81	09/08 -	3964	
PARTNER Tepee / RANCH Tepee	16	81	09/08 -		3971
PARTNER Tepee / RANCH Tepee	16	88	04/10 -	3964	
PARTNER Tepee / RANCH Tepee	16	88	04/10 -		3971
PARTNER Tepee / RANCH Tepee	1.2 THP	81	02/16 -	3964	
PARTNER Tepee / RANCH Tepee	1.2 THP	81	02/16 -		3971
PARTNER Tepee / RANCH Tepee	1.6 BlueHDi 100	73	12/14 -	3964	
PARTNER Tepee / RANCH Tepee	1.6 BlueHDi 100	73	12/14 -		3971
PARTNER Tepee / RANCH Tepee	1.6 BlueHDi 120	88	12/14 -	3964	
PARTNER Tepee / RANCH Tepee	1.6 BlueHDi 120	88	12/14 -		3971
PARTNER Tepee / RANCH Tepee	1.6 BlueHDi 75	55	01/15 -	3964	
PARTNER Tepee / RANCH Tepee	1.6 BlueHDi 75	55	01/15 -		3971
PARTNER Tepee / RANCH Tepee	1.6 HDi	55	04/08 -	3964	
PARTNER Tepee / RANCH Tepee	1.6 HDi	55	04/08 -		3971
PARTNER Tepee / RANCH Tepee	1.6 HDi	66	03/13 -	3964	
PARTNER Tepee / RANCH Tepee	1.6 HDi	66	03/13 -		3971
PARTNER Tepee / RANCH Tepee	1.6 HDi	80	04/08 -	3964	
PARTNER Tepee / RANCH Tepee	1.6 HDi	80	04/08 -		3971
PARTNER Tepee / RANCH Tepee	1.6 HDi	82	08/10 -	3964	
PARTNER Tepee / RANCH Tepee	1.6 HDi	82	08/10 -		3971
PARTNER Tepee / RANCH Tepee	1.6 HDi	84	03/13 -	3964	
PARTNER Tepee / RANCH Tepee	1.6 HDi	84	03/13 -		3971
PARTNER Tepee / RANCH Tepee	1.6 HDi 16V	66	04/08 -	3964	
PARTNER Tepee / RANCH Tepee	1.6 HDi 16V	66	04/08 -		3971
PARTNER Tepee / RANCH Tepee	1.6 HDi 90	68	04/10 -	3964	
PARTNER Tepee / RANCH Tepee	1.6 HDi 90	68	04/10 -		3971
	1.1 i	40	01/97 -	3380	
	1.1 i	40	01/97 -	3381	
PIAGGIO					
PORTER Box	10	33	02/93 – 05/98	3746	
PORTER Box	10	35	07/94 – 07/02	3746	
PORTER Box	1.2 D	47	01/11 -	3746	
PORTER Box	1.2 D	26	05/95 -	3746	
PORTER Box	13	52	01/11 -	3746	
PORTER Box	13	53	01/11 -	3746	
PORTER Box	1.3 16V	48	06/98 -	3746	
PORTER Box	1.3 16V 4x4	48	06/98 -	3746	
PORTER Box	1.3 i 16V	48	05/98 -	3746	
PORTER Box	1.3 i 16V 4x4	48	05/98 -	3746	
PORTER Box	1.3 LPG	52	01/11 -	3746	
PORTER Box	1.3 LPG	53	01/11 -	3746	
PORTER Box	1.3 LPG	48	06/98 -	3746	
PORTER Box	1.4 D	28	04/98 -	3746	
PORTER Box	ELECTRO	11	06/98 -	3746	
PORTER Box	Elektro	18	01/11 -	3746	
PORTER Bus	1.2 D	47	01/11 -	3746	
PORTER Bus	13	52	01/11 -	3746	
PORTER Bus	13	53	01/11 -	3746	
PORTER Bus	13	47	08/04 -	3746	
PORTER Bus	1.3 LPG	52	01/11 -	3746	
PORTER Bus	1.3 LPG	53	01/11 -	3746	
PORTER Bus	Elektro	18	01/11 -	3746	
PORTER Bus	Elektro	11	01/95 -	3746	
PORTER Dumptruck	1.2 D	47	01/11 -	3746	

MAKE & MODEL   		KW	YEAR		
PIAGGIO					
PORTER Dumptruck	13	52	01/11 -	3746	
PORTER Dumptruck	13	53	01/11 -	3746	
PORTER Dumptruck	1.3 LPG	52	01/11 -	3746	
PORTER Dumptruck	1.3 LPG	53	01/11 -	3746	
PORTER Dumptruck	Elektro	18	01/11 -	3746	
PORTER Platform/Chassis	10	33	02/93 – 06/94	3746	
PORTER Platform/Chassis	10	35	07/94 -	3746	
PORTER Platform/Chassis	1.2 D	47	01/11 -	3746	
PORTER Platform/Chassis	1.2 D	26	05/95 -	3746	
PORTER Platform/Chassis	13	52	01/11 -	3746	
PORTER Platform/Chassis	13	53	01/11 -	3746	
PORTER Platform/Chassis	1.3 16V	48	06/98 -	3746	
PORTER Platform/Chassis	1.3 16V 4x4	48	06/98 -	3746	
PORTER Platform/Chassis	1.3 CNG	52	01/11 -	3746	
PORTER Platform/Chassis	1.3 i 16V	48	05/98 -	3746	
PORTER Platform/Chassis	1.3 i 16V 4x4	48	05/98 -	3746	
PORTER Platform/Chassis	1.3 LPG	52	01/11 -	3746	
PORTER Platform/Chassis	1.3 LPG	53	01/11 -	3746	
PORTER Platform/Chassis	1.3 LPG	48	06/98 -	3746	
PORTER Platform/Chassis	1.4 D	28	04/98 -	3746	
PORTER Platform/Chassis	ELECTRIC	11	06/98 -	3746	
PORTER Platform/Chassis	Elektro	18	01/11 -	3746	
M500	0.5 D	4	01.04 -		3747
PININFARINA					
SPIDEREUROPA (DS)	2000	76	11/84 – 11/85		3317
SPIDEREUROPA (DS)	2000	76	11/84 – 11/85	3351	
SPIDEREUROPA (DS)	2000	76	11/84 – 11/85	3466	
SPIDEREUROPA (DS)	2000	76	11/84 – 11/85	3468	
SPIDEREUROPA (DS)	2000	77	03/82 – 09/85		3317
SPIDEREUROPA (DS)	2000	77	03/82 – 09/85	3351	
SPIDEREUROPA (DS)	2000	77	03/82 – 09/85	3466	
SPIDEREUROPA (DS)	2000	77	03/82 – 09/85	3468	
SPIDEREUROPA (DS)	2000 Volumex	99	06/83 – 11/85		3317
SPIDEREUROPA (DS)	2000 Volumex	99	06/83 – 11/85	3351	
SPIDEREUROPA (DS)	2000 Volumex	99	06/83 – 11/85	3466	
PYLMOUTH					
LASER	1.8i		88-89	3401	
NEON Coupe	20	98	10/94 – 09/99	4197	
NEON Coupe	20	107	10/94 – 09/99	4197	
NEON II Saloon	2.0 16V	98	08/99 -	4197	
NEON II Saloon	2.0 16V	112	09/99 -	4197	
NEON Saloon	2.0 16V	98	05/94 – 08/99	4197	
NEON Saloon	2.0 16V	107	06/94 – 08/99	4197	
NEON Saloon	2.0 16V	112	04/96 – 08/99	4197	
SUNDANCE Coupe	2.2	67	10/89 – 09/94	3867	
SUNDANCE Coupe	2.2 Turbo	129	10/89 – 09/91	3867	
SUNDANCE Saloon	2.2	67	10/89 – 09/94	3867	
SUNDANCE Saloon	2.2 Turbo	129	10/89 – 09/91	3867	
VOYAGER / GRAND VOYAGER	30	112	01/95 – 03/01	4197	
VOYAGER / GRAND VOYAGER	2.0 i	98	01/95 – 03/01	4197	
VOYAGER / GRAND VOYAGER	2.4 i	111	01/95 – 03/01	4197	
VOYAGER / GRAND VOYAGER	2.5 TD	85	01/95 – 03/01	4197	
VOYAGER / GRAND VOYAGER	3.3 Flex-Fuel	116	01/98 – 03/01	4197	
VOYAGER / GRAND VOYAGER	3.3 i	116	01/95 – 03/01	4197	
VOYAGER / GRAND VOYAGER	3.8 i	122	01/95 – 03/01	4197	
VOYAGER / GRAND VOYAGER	3.8 i	131	01/95 – 03/01	4197	
VOYAGER / GRAND VOYAGER	3.8 i AWD	122	01/95 – 03/01	4197	
VOYAGER / GRAND VOYAGER	3.8 i AWD	131	01/95 – 03/01	4197	
POLSKI					
125P Sedán (Large family car-D Segment)	1.3		80-	3357	
125P Sedán (Large family car-D Segment)	1.5		80-	3357	
127P Fastback (Subcompact car-B Segment)	0.9		69-	3357	
132P Sedán (Large family car-D Segment)	1.6		73-	3357	
132P Sedán (Large family car-D Segment)	1.8		73-	3357	
PONTIAC					
SOLSTICE Convertible	2.4 VVTi	132	03/05 – 12/09		3853/1
GTO I-II (U.S.A.)	All models		09/63 -	4189	
FIREBIRD	5.0	112	12.81 - 10.89	3864	

MAKE & MODEL		KW	YEAR		
PORSCHE					
911	27	110	09/73 – 08/75	3320	
911	27	110	09/73 – 08/75	3350	
911	27	121	09/75 – 06/77	3320	
911	27	121	09/75 – 06/77	3350	
911	32	160	08/86 – 08/89	3320	
911	32	160	08/86 – 08/89	3350	
911	2.0 L	96	01/63 – 08/67		3326
911	2.0 L	96	01/63 – 08/67	3360	
911	2.0 L	96	01/63 – 08/67	3361	
911	2.0 L	110	08/67 – 11/68		3326
911	2.0 L	110	08/67 – 11/68	3360	
911	2.0 L	110	08/67 – 11/68	3361	
911	2.7 S Carrera	129	08/73 – 01/76	3320	
911	2.7 S Carrera	129	08/73 – 01/76	3350	
911	2.7 SC Carrera RS	154	08/72 – 01/79	3320	
911	2.7 SC Carrera RS	154	08/72 – 01/79	3350	
911	3.0 SC	150	08/80 – 07/83	3320	
911	3.0 SC	150	08/80 – 07/83	3350	
911	3.0 SC Carrera	132	07/77 – 06/80	3320	
911	3.0 SC Carrera	132	07/77 – 06/80	3350	
911	3.0 SC Carrera	138	09/79 – 06/80	3320	
911	3.0 SC Carrera	138	09/79 – 06/80	3350	
911	3.0 SC Carrera	147	09/75 – 06/77	3320	
911	3.0 SC Carrera	147	09/75 – 06/77	3350	
911	3.0 SC Carrera	154	03/74 – 10/83	3320	
911	3.0 SC Carrera	154	03/74 – 10/83	3350	
911	3.2 SC Carrera	152	02/84 – 06/87	3320	
911	3.2 SC Carrera	152	02/84 – 06/87	3350	
911	3.2 SC Carrera	170	08/83 – 08/89	3320	
911	3.2 SC Carrera	170	08/83 – 08/89	3350	
914	17	59	01/69 – 12/73	3318	
914	17	59	01/69 – 12/73	3338	
914	17	59	01/69 – 12/73	3353	
914	17	59	01/69 – 12/73	3362	
914	18	63	08/73 – 02/76	3318	
914	18	63	08/73 – 02/76	3338	
914	18	63	08/73 – 02/76	3353	
914	18	63	08/73 – 02/76	3362	
914	20	74	01/72 – 12/75	3318	
914	20	74	01/72 – 12/75	3338	
914	20	74	01/72 – 12/75	3353	
914	20	74	01/72 – 12/75	3362	
914	/6 2.0	81	11/69 – 12/73	3318	
914	/6 2.0	81	11/69 – 12/73	3338	
914	/6 2.0	81	11/69 – 12/73	3353	
914	/6 2.0	81	11/69 – 12/73	3362	
911 Convertible	3.0 SC	150	08/82 – 07/83	3320	
911 Convertible	3.0 SC	150	08/82 – 07/83	3350	
911 Convertible	3.2 Carrera Speedster	160	08/86 – 08/89	3320	
911 Convertible	3.2 Carrera Speedster	160	08/86 – 08/89	3350	
911 Convertible	3.2 Carrera Speedster	170	08/86 – 08/89	3320	
911 Convertible	3.2 Carrera Speedster	170	08/86 – 08/89	3350	
911 Convertible	3.2 SC Carrera	152	10/84 – 08/89	3320	
911 Convertible	3.2 SC Carrera	152	10/84 – 08/89	3350	
911 Convertible	3.2 SC Carrera	170	08/83 – 08/84	3320	
911 Convertible	3.2 SC Carrera	170	08/83 – 08/84	3350	
911 Targa	27	110	09/73 – 08/75	3320	
911 Targa	27	110	09/73 – 08/75	3350	
911 Targa	27	121	09/75 – 06/77	3320	
911 Targa	27	121	09/75 – 06/77	3350	
911 Targa	2.7 S	129	08/73 – 01/76	3320	
911 Targa	2.7 S	129	08/73 – 01/76	3350	
911 Targa	3.0 SC Carrera	132	07/77 – 06/80	3320	
911 Targa	3.0 SC Carrera	132	07/77 – 06/80	3350	
911 Targa	3.0 SC Carrera	138	09/79 – 06/80	3320	
911 Targa	3.0 SC Carrera	138	09/79 – 06/80	3350	
911 Targa	3.0 SC Carrera	147	09/75 – 06/77	3320	
911 Targa	3.0 SC Carrera	147	09/75 – 06/77	3350	
CAYENNE (92A)	3.6	220	06/10 -		4310
CAYENNE (92A)	4.8 GTS	309	06/12 -		4310
CAYENNE (92A)	3.0 Diesel	155	06/10 -		4310

MAKE & MODEL		KW	YEAR		
PORSCHE					
CAYENNE (92A)	3.0 Diesel	176	06/10 -		4310
CAYENNE (92A)	3.0 Diesel	180	06/11 -		4310
CAYENNE (92A)	3.0 Diesel	184	08/14 -		4310
CAYENNE (92A)	3.0 Diesel	193	10/14 -		4310
CAYENNE (92A)	3.0 S	245	04/11 -		4310
CAYENNE (92A)	3.0 S E-Hybrid	245	06/10 -		4310
CAYENNE (92A)	3.0 S E-Hybrid	306	10/14 -		4310
CAYENNE (92A)	3.6 GTS	324	02/15 -		4310
CAYENNE (92A)	3.6 S	309	10/14 -		4310
CAYENNE (92A)	4.2 S Diesel	281	10/12 -		4310
CAYENNE (92A)	4.2 S Diesel	283	10/14 -		4310
CAYENNE (92A)	4.8 S	294	06/10 -		4310
CAYENNE (92A)	4.8 Turbo	382	10/14 -		4310
CAYENNE (92A)	4.8 Turbo	397	06/10 -		4310
CAYENNE (92A)	4.8 Turbo	368	06/10 -		4310
CAYENNE (92A)	4.8 Turbo S	405	10/12 -		4310
CAYENNE (9PA)	32	184	10/03 – 09/07	4075	
CAYENNE (9PA)	32	184	10/03 – 09/07		4076
CAYENNE (9PA)	36	213	02/07 – 09/10	4075	
CAYENNE (9PA)	36	213	02/07 – 09/10		4076
CAYENNE (9PA)	3.0 TDI	176	02/09 – 09/10	4075	
CAYENNE (9PA)	3.0 TDI	176	02/09 – 09/10		4076
CAYENNE (9PA)	GTS 4.8	298	10/07 – 09/10	4075	
CAYENNE (9PA)	GTS 4.8	298	10/07 – 09/10		4076
CAYENNE (9PA)	S 4.5	250	09/02 – 09/07	4075	
CAYENNE (9PA)	S 4.5	250	09/02 – 09/07		4076
CAYENNE (9PA)	S 4.8	283	02/07 – 09/10	4075	
CAYENNE (9PA)	S 4.8	283	02/07 – 09/10		4076
CAYENNE (9PA)	Turbo 4.5	331	09/02 – 09/07	4075	
CAYENNE (9PA)	Turbo 4.5	331	09/02 – 09/07		4076
CAYENNE (9PA)	Turbo 4.5	331	09/02 - 09/07	4309	
CAYENNE (9PA)	Turbo S 4.8	404	08/08 09/10	4309	
CAYENNE (9PA)	Turbo S 4.5	383	03/06 - 09/07	4309	
CAYENNE (9PA)	Turbo S 4.8	368	02/07 - 09/10	4309	
CAYENNE (9PA)	Turbo S 4.8	397	02/07 - 09/10	4309	
CAYENNE (9PA)	Turbo S 4.5	368	01/04 - 09/07	4309	
PANAMERA (970)	3.0 S E-Hybrid	245	03/11 - 07/13	4309	
PANAMERA (970)	3.0 S E-Hybrid	279	03/11 - 07/13	4309	
PANAMERA (970)	3.0 S E-Hybrid	306	07/13 - 10/16	4309	
PANAMERA (970)	4.8 4S	294	09/09 - 07/13	4309	
PANAMERA (970)	4.8 GTS	316	01/12 - 07/13	4309	
PANAMERA (970)	4.8 S	294	09/09 - 07/13	4309	
PANAMERA (970)	4.8 Turbo	368	09/09 - 07/13	4309	
PANAMERA (970)	4.8 Turbo	397	08/10 - 07/13	4309	
PANAMERA (970)	4.8 Turbo S	404	05/11 - 07/13	4309	
TOUAREG (7LA, 7L6, 7L7)	3.0 V6 TDI	165	11/04 - 05/10	4309	
TOUAREG (7LA, 7L6, 7L7)	3.2 V6	177	11/04 - 11/06	4309	
TOUAREG (7LA, 7L6, 7L7)	3.6 V6 FSI	206	10/05 - 05/10	4309	
TOUAREG (7LA, 7L6, 7L7)	4.2 V8 FSI	257	06/06 - 05/10	4309	
TOUAREG (7LA, 7L6, 7L7)	5.0 R50 TDI	257	08/07 - 05/10	4309	
TOUAREG (7LA, 7L6, 7L7)	5.0 V10 TDI	230	10/02 - 05/10	4309	
TOUAREG (7LA, 7L6, 7L7)	6.0 W12	331	08/04 - 05/10	4309	
TOUAREG (7P5, 7P6)	3.0 V6 TDI	150	01/10 -		4310
TOUAREG (7P5, 7P6)	3.0 V6 TDI	165	06/10 -		4310
TOUAREG (7P5, 7P6)	3.0 V6 TDI	176	01/10 -		4310
TOUAREG (7P5, 7P6)	3.0 V6 TDI	180	05/11 -		4310
TOUAREG (7P5, 7P6)	3.0 V6 TDI	193	09/14 -		4310
TOUAREG (7P5, 7P6)	3.0 V6 TSI	213	08/10 -		4310
TOUAREG (7P5, 7P6)	3.0 V6 TSI	235	01/15 -		4310
TOUAREG (7P5, 7P6)	3.0 V6 TSI Hybrid	245	04/10 -		4310
TOUAREG (7P5, 7P6)	3.6 V6 FSI	183	08/10 -		4310
TOUAREG (7P5, 7P6)	3.6 V6 FSI	206	04/10 -		4310
TOUAREG (7P5, 7P6)	4.2 V8 FSI	265	01/11 -		4310
TOUAREG (7P5, 7P6)	4.2 V8 TDI	250	01/10 -		4310
PROTON					
AEROBACK Hatchback (C2_A, C9_L)	13	50	01/91 – 09/93	3604	
AEROBACK Hatchback (C2_A, C9_L)	13	50	10/88 – 06/91	3604	
AEROBACK Hatchback (C2_A, C9_L)	13	55	10/88 – 11/96	3604	
AEROBACK Hatchback (C2_A, C9_L)	15	55	01/91 – 09/93	3604	
AEROBACK Hatchback (C2_A, C9_L)	15	55	10/88 – 06/91	3604	
AEROBACK Hatchback (C2_A, C9_L)	15	66	01/91 – 11/96	3604	

MAKE & MODEL		KW	YEAR		
PROTON					
AEROBACK Hatchback (C2_A, C9_L)	1.5 LX	66	10/88 – 11/96	3604	
AEROBACK Hatchback (C2_A, C9_L)	1.6 EX	70	10/88 – 11/96	3604	
GEN 2 (CM_)	13	60	06/04 -	3604	
GEN 2 (CM_)	13	70	06/04 -	3604	
GEN 2 (CM_)	16	82	06/04 -	3604	
IMPIAN	16	76	09/01 -	3604	
IMPIAN	16	76	09/01 -		4062
JUMBUCK Pickup	15	64	05/02 -	3604	
PERDANA	2.0 i 16V	101	02/95 -	3622	
PERDANA	2.0 i 16V	101	02/95 -		4108
PERDANA	2.0 i V6	110	02/99 -	3622	
PERDANA	2.0 i V6	110	02/99 -		4108
PERSONA 300 (C9_M)	13	55	08/00 -	3604	
PERSONA 300 (C9_M)	316	70	03/96 -	3622	
PERSONA 300 (C9_M)	1.8 GTi	103	08/00 -	3622	
PERSONA 300 (C9_M)	313i	55	03/96 -	3604	
PERSONA 300 (C9_M)	315 GLi/GLSi	66	03/96 -	3604	
PERSONA 300 (C9_M)	315 GLSi	64	09/96 -	3604	
PERSONA 300 (C9_M)	316 GLXi	83	03/96 -	3622	
PERSONA 300 (C9_M)	318 16V GTI	99	03/96 -	3622	
PERSONA 400 (C9_S)	13	57	10/05 -	3604	
PERSONA 400 (C9_S)	413	55	01/94 -	3604	
PERSONA 400 (C9_S)	418	85	05/96 -	3622	
PERSONA 400 (C9_S)	415 GLi/GLSi	66	01/94 -	3604	
PERSONA 400 (C9_S)	416 GLXi	83	01/94 -	3622	
PERSONA 400 (C9_S)	420 GLS D	48	05/96 -	3604	
PERSONA 400 (C9_S)	420 TD	60	09/96 -	3604	
PERSONA 400 Hatchback (C9_C, C9_S)	18	99	08/00 – 12/01	3622	
PERSONA 400 Hatchback (C9_C, C9_S)	413 GLSi	55	01/94 -	3604	
PERSONA 400 Hatchback (C9_C, C9_S)	415 GLi/GLSi	66	01/94 -	3604	
PERSONA 400 Hatchback (C9_C, C9_S)	416 GLXi	83	01/94 -	3622	
PERSONA 400 Hatchback (C9_C, C9_S)	418 GLXi	85	05/96 -	3622	
PERSONA 400 Hatchback (C9_C, C9_S)	420 D	60	09/96 -	3604	
PERSONA 400 Hatchback (C9_C, C9_S)	420 GLS D	48	05/96 -	3604	
PUTRA Coupe	1.8 EXi	103	01/95 11/00	3622	
SALOON Saloon (C2_S)	13	50	01/91 – 09/93	3604	
SALOON Saloon (C2_S)	13	55	10/92 – 06/96	3604	
SALOON Saloon (C2_S)	15	55	01/91 – 09/93	3604	
SALOON Saloon (C2_S)	15	66	01/91 – 11/96	3604	
SATRIA (C9_M)	13	55	07/96 -	3604	
SATRIA (C9_M)	13	55	08/00 -	3604	
SATRIA (C9_M)	15	64	07/00 -	3604	
SATRIA (C9_M)	15	66	04/96 -	3604	
SATRIA (C9_M)	16	70	07/97 -	3622	
SATRIA (C9_M)	16	83	07/97 -	3622	
SATRIA (C9_M)	1.8 GTi	103	08/00 -	3622	
SAVVY	1.2	55	10/05 -	3951	
WIRA	13	55	08/00 -	3604	
WIRA	13	57	10/05 -	3604	
WIRA	15	64	08/00 -	3604	
WIRA	15	67	10/05 -	3604	
WIRA	16	70	08/00 – 02/02	3622	
WIRA	18	99	08/00 – 12/01	3622	
WIRA	2.0 D	48	01/00 -	3604	
WIRA Hatchback	13	55	08/00 -	3604	
WIRA Hatchback	13	57	10/05 -	3604	
WIRA Hatchback	15	64	08/00 -	3604	
WIRA Hatchback	15	67	10/05 -	3604	
WIRA Hatchback	18	99	08/00 – 12/01	3622	
WIRA Hatchback	2.0 D	48	01/00 -	3604	
PUCH					
G-MODELL (W 460)	230 G	75	02/80 – 07/87	3513	
G-MODELL (W 460)	230 G	75	02/80 – 07/87		3804
G-MODELL (W 460)	230 GE	92	04/82 – 08/92	3513	
G-MODELL (W 460)	230 GE	92	04/82 – 08/92		3804
G-MODELL (W 460)	240 GD	53	03/79 – 08/87	3513	
G-MODELL (W 460)	240 GD	53	03/79 – 08/87		3804
G-MODELL (W 460)	250 GD	62	10/87 – 12/92	3513	
G-MODELL (W 460)	250 GD	62	10/87 – 12/92		3804
G-MODELL (W 460)	280 GE	110	08/84 – 08/89	3513	
G-MODELL (W 460)	280 GE	110	08/84 – 08/89		3804

MAKE & MODEL		KW	YEAR		
PUCH					
G-MODELL (W 460)	300 GD	65	12/79 – 12/91	3513	
G-MODELL (W 460)	300 GD	65	12/79 – 12/91		3804
G-MODELL (W 461)	230 GE	92	06/93 -	3513	
G-MODELL (W 461)	230 GE	92	06/93 – 07/00		3804
G-MODELL (W 461)	290 GD/G 290 D	70	04/92 -	3513	
G-MODELL (W 461)	290 GD/G 290 D	70	04/92 – 08/97		3804
G-MODELL (W 461)	G 290 TD	88	07/97 -	3513	
G-MODELL (W 461)	G 290 TD	88	07/97 – 12/99		3804
G-MODELL (W 463)	230 GE	93	06/90 – 06/93	3513	
G-MODELL (W 463)	230 GE	93	06/90 – 06/93		3804
G-MODELL (W 463)	300 GD	83	09/89 -	3513	
G-MODELL (W 463)	300 GD	83	09/89 – 08/93		3804
G-MODELL (W 463)	300 GE	125	06/90 -	3513	
G-MODELL (W 463)	300 GE	125	06/90 – 08/93		3804
G-MODELL (W 463)	350 G Turbo D	100	09/91 -	3513	
G-MODELL (W 463)	350 G Turbo D	100	09/91 – 08/96		3804
G-MODELL (W 463)	G 300 TD	130	08/96 -	3513	
G-MODELL (W 463)	G 300 TD	130	08/96 – 12/99		3804
G-MODELL (W 463)	G 320	155	09/94 – 12/97	3513	
G-MODELL (W 463)	G 320	155	09/94 – 12/97		3804
G-MODELL (W 463)	G 36 AMG	200	01/95 -	3513	
G-MODELL (W 463)	G 36 AMG	200	01/95 – 04/98		3804
G-MODELL (W 463)	G 500	218	04/98 -	3513	
G-MODELL (W 463)	G 500	218	04/98 – 12/99		3804
G-MODELL (W 463)	G 55 AMG	260	04/99 -	3513	
G-MODELL (W 463)	G 55 AMG	260	04/99 – 12/99		3804
RELIANT					
SCIMITAR SABRE Roadster	1800 Ti	99	01/92 – 08/94	3624	
SCIMITAR SABRE Roadster	2.0 i	99	08/94 – 12/95	3624	
RELY					
V5	18	97	09/09 -		3911
V5	1.9 TD	93	09/09 -		3911
V5	20	102	09/09 -		3911
RENAULT					
11 (B/C37_)	1.1 (B/C371)	35	03/83 – 06/86	3380	
11 (B/C37_)	1.1 (B/C371)	35	03/83 – 06/86	3381	
11 (B/C37_)	1.1 (B/C371)	35	03/83 – 06/86	3431	
11 (B/C37_)	1.1 (B/C371)	35	03/83 – 06/86	3503	
11 (B/C37_)	1.1 (B/C371)	35	03/83 – 06/86	3580	
11 (B/C37_)	1.2 (B/C37S)	40	10/84 – 12/88	3380	
11 (B/C37_)	1.2 (B/C37S)	40	10/84 – 12/88	3381	
11 (B/C37_)	1.2 (B/C37S)	40	10/84 – 12/88	3431	
11 (B/C37_)	1.2 (B/C37S)	40	10/84 – 12/88	3503	
11 (B/C37_)	1.2 (B/C37S)	40	10/84 – 12/88	3580	
11 (B/C37_)	1.4 (B/C372, B/C37C)	44	03/83 – 12/88	3380	
11 (B/C37_)	1.4 (B/C372, B/C37C)	44	03/83 – 12/88	3381	
11 (B/C37_)	1.4 (B/C372, B/C37C)	44	03/83 – 12/88	3431	
11 (B/C37_)	1.4 (B/C372, B/C37C)	44	03/83 – 12/88	3503	
11 (B/C37_)	1.4 (B/C372, B/C37C)	44	03/83 – 12/88	3580	
11 (B/C37_)	1.4 (B/C373)	50	03/83 – 12/85	3380	
11 (B/C37_)	1.4 (B/C373)	50	03/83 – 12/85	3381	
11 (B/C37_)	1.4 (B/C373)	50	03/83 – 12/85	3431	
11 (B/C37_)	1.4 (B/C373)	50	03/83 – 12/85	3503	
11 (B/C37_)	1.4 (B/C373)	50	03/83 – 12/85	3580	
11 (B/C37_)	1.4 (B/C373)	53	05/83 – 12/85	3380	
11 (B/C37_)	1.4 (B/C373)	53	05/83 – 12/85	3381	
11 (B/C37_)	1.4 (B/C373)	53	05/83 – 12/85	3431	
11 (B/C37_)	1.4 (B/C373)	53	05/83 – 12/85	3503	
11 (B/C37_)	1.4 (B/C373)	53	05/83 – 12/85	3580	
11 (B/C37_)	1.4 (B/C373, B/C37R)	49	03/83 – 12/88	3380	
11 (B/C37_)	1.4 (B/C373, B/C37R)	49	03/83 – 12/88	3381	
11 (B/C37_)	1.4 (B/C373, B/C37R)	49	03/83 – 12/88	3431	
11 (B/C37_)	1.4 (B/C373, B/C37R)	49	03/83 – 12/88	3503	
11 (B/C37_)	1.4 (B/C373, B/C37R)	49	03/83 – 12/88	3580	
11 (B/C37_)	1.4 Turbo (B/C375)	77	04/84 – 12/86	3380	
11 (B/C37_)	1.4 Turbo (B/C375)	77	04/84 – 12/86	3381	
11 (B/C37_)	1.4 Turbo (B/C375)	77	04/84 – 12/86	3431	
11 (B/C37_)	1.4 Turbo (B/C375)	77	04/84 – 12/86		3496
11 (B/C37_)	1.4 Turbo (B/C375)	77	04/84 – 12/86	3503	
11 (B/C37_)	1.4 Turbo (B/C375)	77	04/84 – 12/86	3580	

MAKE & MODEL		KW	YEAR		
RENAULT					
11 (B/C37_)	1.4 Turbo (B/C375)	85	10/86 – 12/88	3380	
11 (B/C37_)	1.4 Turbo (B/C375)	85	10/86 – 12/88	3381	
11 (B/C37_)	1.4 Turbo (B/C375)	85	10/86 – 12/88	3431	
11 (B/C37_)	1.4 Turbo (B/C375)	85	10/86 – 12/88		3496
11 (B/C37_)	1.4 Turbo (B/C375)	85	10/86 – 12/88	3503	
11 (B/C37_)	1.4 Turbo (B/C375)	85	10/86 – 12/88	3580	
11 (B/C37_)	1.6 D (B/C374)	40	08/83 – 12/88	3380	
11 (B/C37_)	1.6 D (B/C374)	40	08/83 – 12/88	3381	
11 (B/C37_)	1.6 D (B/C374)	40	08/83 – 12/88	3431	
11 (B/C37_)	1.6 D (B/C374)	40	08/83 – 12/88	3503	
11 (B/C37_)	1.6 D (B/C374)	40	08/83 – 12/88	3580	
11 (B/C37_)	1.7 (B/C376)	59	10/83 – 12/87	3380	
11 (B/C37_)	1.7 (B/C376)	59	10/83 – 12/87	3381	
11 (B/C37_)	1.7 (B/C376)	59	10/83 – 12/87	3431	
11 (B/C37_)	1.7 (B/C376)	59	10/83 – 12/87	3503	
11 (B/C37_)	1.7 (B/C376)	59	10/83 – 12/87	3580	
11 (B/C37_)	1.7 (B/C37D)	64	06/87 – 12/88	3380	
11 (B/C37_)	1.7 (B/C37D)	64	06/87 – 12/88	3381	
11 (B/C37_)	1.7 (B/C37D)	64	06/87 – 12/88	3431	
11 (B/C37_)	1.7 (B/C37D)	64	06/87 – 12/88	3503	
11 (B/C37_)	1.7 (B/C37D)	64	06/87 – 12/88	3580	
11 (B/C37_)	1.7 (B/C37E)	69	06/87 – 12/88	3380	
11 (B/C37_)	1.7 (B/C37E)	69	06/87 – 12/88	3381	
11 (B/C37_)	1.7 (B/C37E)	69	06/87 – 12/88	3431	
11 (B/C37_)	1.7 (B/C37E)	69	06/87 – 12/88	3503	
11 (B/C37_)	1.7 (B/C37E)	69	06/87 – 12/88	3580	
11 (B/C37_)	1.7 (B/C37F)	55	10/84 – 12/88	3380	
11 (B/C37_)	1.7 (B/C37F)	55	10/84 – 12/88	3381	
11 (B/C37_)	1.7 (B/C37F)	55	10/84 – 12/88	3431	
11 (B/C37_)	1.7 (B/C37F)	55	10/84 – 12/88	3503	
11 (B/C37_)	1.7 (B/C37F)	55	10/84 – 12/88	3580	
11 (B/C37_)	1.7 (B/C37L)	54	10/86 – 12/88	3380	
11 (B/C37_)	1.7 (B/C37L)	54	10/86 – 12/88	3381	
11 (B/C37_)	1.7 (B/C37L)	54	10/86 – 12/88	3431	
11 (B/C37_)	1.7 (B/C37L)	54	10/86 – 12/88	3503	
11 (B/C37_)	1.7 (B/C37L)	54	10/86 – 12/88	3580	
11 (B/C37_)	1.7 (B/C37N)	65	10/86 – 12/88	3380	
11 (B/C37_)	1.7 (B/C37N)	65	10/86 – 12/88	3381	
11 (B/C37_)	1.7 (B/C37N)	65	10/86 – 12/88	3431	
11 (B/C37_)	1.7 (B/C37N)	65	10/86 – 12/88	3503	
11 (B/C37_)	1.7 (B/C37N)	65	10/86 – 12/88	3580	
11 Box (S37_)	1.1 (S371)	35	03/83 – 06/86	3380	
11 Box (S37_)	1.1 (S371)	35	03/83 – 06/86	3381	
11 Box (S37_)	1.1 (S371)	35	03/83 – 06/86	3431	
11 Box (S37_)	1.1 (S371)	35	03/83 – 06/86	3503	
11 Box (S37_)	1.1 (S371)	35	03/83 – 06/86	3580	
11 Box (S37_)	1.2 (S37S)	40	10/84 – 12/88	3380	
11 Box (S37_)	1.2 (S37S)	40	10/84 – 12/88	3381	
11 Box (S37_)	1.2 (S37S)	40	10/84 – 12/88	3431	
11 Box (S37_)	1.2 (S37S)	40	10/84 – 12/88	3503	
11 Box (S37_)	1.2 (S37S)	40	10/84 – 12/88	3580	
11 Box (S37_)	1.4 (S372)	44	03/83 – 09/86	3380	
11 Box (S37_)	1.4 (S372)	44	03/83 – 09/86	3381	
11 Box (S37_)	1.4 (S372)	44	03/83 – 09/86	3431	
11 Box (S37_)	1.4 (S372)	44	03/83 – 09/86	3503	
11 Box (S37_)	1.4 (S372)	44	03/83 – 09/86	3580	
11 Box (S37_)	1.4 (S373)	50	03/83 – 12/86	3380	
11 Box (S37_)	1.4 (S373)	50	03/83 – 12/86	3381	
11 Box (S37_)	1.4 (S373)	50	03/83 – 12/86	3431	
11 Box (S37_)	1.4 (S373)	50	03/83 – 12/86	3503	
11 Box (S37_)	1.4 (S373)	50	03/83 – 12/86	3580	
11 Box (S37_)	1.6 D (S374)	40	08/83 – 12/88	3380	
11 Box (S37_)	1.6 D (S374)	40	08/83 – 12/88	3381	
11 Box (S37_)	1.6 D (S374)	40	08/83 – 12/88	3431	
11 Box (S37_)	1.6 D (S374)	40	08/83 – 12/88	3503	
11 Box (S37_)	1.6 D (S374)	40	08/83 – 12/88	3580	
14 (121_)	1.2 (1210)	42	05/76 – 01/80	3329	
14 (121_)	1.2 (1210)	42	05/76 – 01/80	3348	
14 (121_)	1.2 (1210)	42	05/76 – 01/80	3349	
14 (121_)	1.2 (1210)	42	05/76 – 01/80	3542	
14 (121_)	1.2 (1210)	42	05/76 – 01/80	3806/1	

MAKE & MODEL		KW	YEAR		
RENAULT					
14 (121_)	1.2 (1210)	43	01/80 – 12/83	3329	
14 (121_)	1.2 (1210)	43	01/80 – 12/83	3348	
14 (121_)	1.2 (1210)	43	01/80 – 12/83	3349	
14 (121_)	1.2 (1210)	43	01/80 – 12/83	3542	
14 (121_)	1.2 (1210)	43	01/80 – 12/83	3806/1	
14 (121_)	1.4 (1212)	52	09/79 – 06/83	3329	
14 (121_)	1.4 (1212)	52	09/79 – 06/83	3348	
14 (121_)	1.4 (1212)	52	09/79 – 06/83	3349	
14 (121_)	1.4 (1212)	52	09/79 – 06/83	3542	
14 (121_)	1.4 (1212)	52	09/79 – 06/83	3806/1	
14 (121_)	1.4 (1213)	44	12/81 – 12/83	3329	
14 (121_)	1.4 (1213)	44	12/81 – 12/83	3348	
14 (121_)	1.4 (1213)	44	12/81 – 12/83	3349	
14 (121_)	1.4 (1213)	44	12/81 – 12/83	3542	
14 (121_)	1.4 (1213)	44	12/81 – 12/83	3806/1	
18 (134_)	1.4 (1340)	47	04/78 – 07/86	3329/1	
18 (134_)	1.4 (1340)	47	04/78 – 07/86	3348	
18 (134_)	1.4 (1340)	47	04/78 – 07/86	3349	
18 (134_)	1.4 (1340)	47	04/78 – 07/86	3380	
18 (134_)	1.4 (1340)	47	04/78 – 07/86	3381	
18 (134_)	1.4 (1340)	47	04/78 – 07/86	3431	
18 (134_)	1.4 (1340)	47	04/78 – 07/86	3503	
18 (134_)	1.4 (1340)	47	04/78 – 07/86	3580	
18 (134_)	1.6 (1341)	54	04/82 – 07/86	3329/1	
18 (134_)	1.6 (1341)	54	04/82 – 07/86	3348	
18 (134_)	1.6 (1341)	54	04/82 – 07/86	3349	
18 (134_)	1.6 (1341)	54	04/82 – 07/86	3380	
18 (134_)	1.6 (1341)	54	04/82 – 07/86	3381	
18 (134_)	1.6 (1341)	54	04/82 – 07/86	3431	
18 (134_)	1.6 (1341)	54	04/82 – 07/86	3503	
18 (134_)	1.6 (1341)	54	04/82 – 07/86	3580	
18 (134_)	1.6 (1341)	58	04/78 – 09/82	3329/1	
18 (134_)	1.6 (1341)	58	04/78 – 09/82	3348	
18 (134_)	1.6 (1341)	58	04/78 – 09/82	3349	
18 (134_)	1.6 TS (1342)	71	05/82 – 07/86	3380	
18 (134_)	1.6 TS (1342)	71	05/82 – 07/86	3381	
18 (134_)	1.6 TS (1342)	71	05/82 – 07/86	3431	
18 (134_)	1.6 TS (1342)	71	05/82 – 07/86	3503	
18 (134_)	1.6 TS (1342)	71	05/82 – 07/86	3580	
18 (134_)	1.6 Turbo (1345)	80	10/80 – 09/82		3333
18 (134_)	1.6 Turbo (1345)	80	10/80 – 09/82	3380	
18 (134_)	1.6 Turbo (1345)	80	10/80 – 09/82	3381	
18 (134_)	1.6 Turbo (1345)	80	10/80 – 09/82	3431	
18 (134_)	1.6 Turbo (1345)	80	10/80 – 09/82	3503	
18 (134_)	1.6 Turbo (1345)	80	10/80 – 09/82	3580	
18 (134_)	1.6 Turbo (1345)	92	10/82 – 07/86		3333
18 (134_)	1.6 Turbo (1345)	92	10/82 – 07/86	3380	
18 (134_)	1.6 Turbo (1345)	92	10/82 – 07/86	3381	
18 (134_)	1.6 Turbo (1345)	92	10/82 – 07/86	3431	
18 (134_)	1.6 Turbo (1345)	92	10/82 – 07/86	3503	
18 (134_)	1.6 Turbo (1345)	92	10/82 – 07/86	3580	
18 (134_)	2.0 (1343)	77	05/82 – 07/86	3380	
18 (134_)	2.0 (1343)	77	05/82 – 07/86	3381	
18 (134_)	2.0 (1343)	77	05/82 – 07/86	3431	
18 (134_)	2.0 (1343)	77	05/82 – 07/86	3503	
18 (134_)	2.0 (1343)	77	05/82 – 07/86	3580	
18 (134_)	2.1 Diesel	53	11/81 – 07/86	3380	
18 (134_)	2.1 Diesel	53	11/81 – 07/86	3381	
18 (134_)	2.1 Diesel	53	11/81 – 07/86	3431	
18 (134_)	2.1 Diesel	53	11/81 – 07/86	3503	
18 (134_)	2.1 Diesel	53	11/81 – 07/86	3580	
18 (134_)	2.1 Diesel (1344)	49	11/81 – 07/86	3380	
18 (134_)	2.1 Diesel (1344)	49	11/81 – 07/86	3381	
18 (134_)	2.1 Diesel (1344)	49	11/81 – 07/86	3431	
18 (134_)	2.1 Diesel (1344)	49	11/81 – 07/86	3503	
18 (134_)	2.1 Diesel (1344)	49	11/81 – 07/86	3580	
18 (134_)	2.1 TD	65	11/81 – 07/86	3380	
18 (134_)	2.1 TD	65	11/81 – 07/86	3381	
18 (134_)	2.1 TD	65	11/81 – 07/86	3431	
18 (134_)	2.1 TD	65	11/81 – 07/86	3503	
18 (134_)	2.1 TD	65	11/81 – 07/86	3580	

MAKE & MODEL		KW	YEAR		
RENAULT					
18 (134_)	2.2 i	76	06/84 – 07/86	3380	
18 (134_)	2.2 i	76	06/84 – 07/86	3381	
18 (134_)	2.2 i	76	06/84 – 07/86	3431	
18 (134_)	2.2 i	76	06/84 – 07/86	3503	
18 (134_)	2.2 i	76	06/84 – 07/86	3580	
18 Variable (135_)	1.4 (1350)	47	05/79 – 07/86	3329/1	
18 Variable (135_)	1.4 (1350)	47	05/79 – 07/86	3348	
18 Variable (135_)	1.4 (1350)	47	05/79 – 07/86	3349	
18 Variable (135_)	1.4 (1350)	47	05/79 – 07/86	3380	
18 Variable (135_)	1.4 (1350)	47	05/79 – 07/86	3381	
18 Variable (135_)	1.4 (1350)	47	05/79 – 07/86	3431	
18 Variable (135_)	1.4 (1350)	47	05/79 – 07/86	3503	
18 Variable (135_)	1.4 (1350)	47	05/79 – 07/86	3580	
18 Variable (135_)	1.6 (1351)	54	01/82 – 07/86	3329/1	
18 Variable (135_)	1.6 (1351)	54	01/82 – 07/86	3348	
18 Variable (135_)	1.6 (1351)	54	01/82 – 07/86	3349	
18 Variable (135_)	1.6 (1351)	54	01/82 – 07/86	3380	
18 Variable (135_)	1.6 (1351)	54	01/82 – 07/86	3381	
18 Variable (135_)	1.6 (1351)	54	01/82 – 07/86	3431	
18 Variable (135_)	1.6 (1351)	54	01/82 – 07/86	3503	
18 Variable (135_)	1.6 (1351)	54	01/82 – 07/86	3580	
18 Variable (135_)	1.6 (1351)	58	05/79 – 09/82	3329/1	
18 Variable (135_)	1.6 (1351)	58	05/79 – 09/82	3348	
18 Variable (135_)	1.6 (1351)	58	05/79 – 09/82	3349	
18 Variable (135_)	1.6 (1351)	58	05/79 – 09/82	3380	
18 Variable (135_)	1.6 (1351)	58	05/79 – 09/82	3381	
18 Variable (135_)	1.6 (1351)	58	05/79 – 09/82	3431	
18 Variable (135_)	1.6 (1351)	58	05/79 – 09/82	3503	
18 Variable (135_)	1.6 (1351)	58	05/79 – 09/82	3580	
18 Variable (135_)	1.6 4x4	54	01/83 – 07/86	3380	
18 Variable (135_)	1.6 4x4	54	01/83 – 07/86	3381	
18 Variable (135_)	1.6 4x4	54	01/83 – 07/86	3431	
18 Variable (135_)	1.6 4x4	54	01/83 – 07/86	3503	
18 Variable (135_)	1.6 4x4	54	01/83 – 07/86	3580	
18 Variable (135_)	1.6 TS	71	05/82 – 07/86	3380	
18 Variable (135_)	1.6 TS	71	05/82 – 07/86	3381	
18 Variable (135_)	1.6 TS	71	05/82 – 07/86	3431	
18 Variable (135_)	1.6 TS	71	05/82 – 07/86	3503	
18 Variable (135_)	1.6 TS	71	05/82 – 07/86	3580	
18 Variable (135_)	2.0 (1353)	77	10/81 – 07/86	3380	
18 Variable (135_)	2.0 (1353)	77	10/81 – 07/86	3381	
18 Variable (135_)	2.0 (1353)	77	10/81 – 07/86	3431	
18 Variable (135_)	2.0 (1353)	77	10/81 – 07/86	3503	
18 Variable (135_)	2.0 (1353)	77	10/81 – 07/86	3580	
18 Variable (135_)	2.0 4x4	76	05/83 – 12/86	3380	
18 Variable (135_)	2.0 4x4	76	05/83 – 12/86	3381	
18 Variable (135_)	2.0 4x4	76	05/83 – 12/86	3431	
18 Variable (135_)	2.0 4x4	76	05/83 – 12/86	3503	
18 Variable (135_)	2.0 4x4	76	05/83 – 12/86	3580	
18 Variable (135_)	2.1 Diesel	53	05/79 – 07/86	3329/1	
18 Variable (135_)	2.1 Diesel	53	05/79 – 07/86	3348	
18 Variable (135_)	2.1 Diesel	53	05/79 – 07/86	3349	
18 Variable (135_)	2.1 Diesel	53	05/79 – 07/86	3380	
18 Variable (135_)	2.1 Diesel	53	05/79 – 07/86	3381	
18 Variable (135_)	2.1 Diesel	53	05/79 – 07/86	3431	
18 Variable (135_)	2.1 Diesel	53	05/79 – 07/86	3503	
18 Variable (135_)	2.1 Diesel	53	05/79 – 07/86	3580	
18 Variable (135_)	2.1 Diesel (1354)	49	11/80 – 07/86	3329/1	
18 Variable (135_)	2.1 Diesel (1354)	49	11/80 – 07/86	3348	
18 Variable (135_)	2.1 Diesel (1354)	49	11/80 – 07/86	3349	
18 Variable (135_)	2.1 Diesel (1354)	49	11/80 – 07/86	3380	
18 Variable (135_)	2.1 Diesel (1354)	49	11/80 – 07/86	3381	
18 Variable (135_)	2.1 Diesel (1354)	49	11/80 – 07/86	3431	
18 Variable (135_)	2.1 Diesel (1354)	49	11/80 – 07/86	3503	
18 Variable (135_)	2.1 Diesel (1354)	49	11/80 – 07/86	3580	
19 I (B/C53_)	12	40	01/88 – 12/92	3380	
19 I (B/C53_)	12	40	01/88 – 12/92	3381	
19 I (B/C53_)	12	40	01/88 – 12/92	3431	
19 I (B/C53_)	12	40	01/88 – 12/92	3503	
19 I (B/C53_)	12	40	01/88 – 12/92	3580	
19 I (B/C53_)	14	55	09/90 – 04/92	3380	

MAKE & MODEL   		KW	YEAR		
RENAULT					
19 I (B/C53_)	14	55	09/90 – 04/92	3381	
19 I (B/C53_)	14	55	09/90 – 04/92	3431	
19 I (B/C53_)	14	55	09/90 – 04/92	3503	
19 I (B/C53_)	14	55	09/90 – 04/92	3580	
19 I (B/C53_)	14	59	01/88 – 12/92	3380	
19 I (B/C53_)	14	59	01/88 – 12/92	3381	
19 I (B/C53_)	14	59	01/88 – 12/92	3431	
19 I (B/C53_)	14	59	01/88 – 12/92	3503	
19 I (B/C53_)	14	59	01/88 – 12/92	3580	
19 I (B/C53_)	1.4 (B/C532) CAT	43	01/89 – 04/92	3380	
19 I (B/C53_)	1.4 (B/C532) CAT	43	01/89 – 04/92	3381	
19 I (B/C53_)	1.4 (B/C532) CAT	43	01/89 – 04/92	3431	
19 I (B/C53_)	1.4 (B/C532) CAT	43	01/89 – 04/92	3503	
19 I (B/C53_)	1.4 (B/C532) CAT	43	01/89 – 04/92	3580	
19 I (B/C53_)	1.4 (B/C53P)	43	01/89 – 12/89	3380	
19 I (B/C53_)	1.4 (B/C53P)	43	01/89 – 12/89	3381	
19 I (B/C53_)	1.4 (B/C53P)	43	01/89 – 12/89	3431	
19 I (B/C53_)	1.4 (B/C53P)	43	01/89 – 12/89	3503	
19 I (B/C53_)	1.4 (B/C53P)	43	01/89 – 12/89	3580	
19 I (B/C53_)	1.7 (B/C53B)	54	09/88 – 04/92	3380	
19 I (B/C53_)	1.7 (B/C53B)	54	09/88 – 04/92	3381	
19 I (B/C53_)	1.7 (B/C53B)	54	09/88 – 04/92	3431	
19 I (B/C53_)	1.7 (B/C53B)	54	09/88 – 04/92		3496
19 I (B/C53_)	1.7 (B/C53B)	54	09/88 – 04/92	3503	
19 I (B/C53_)	1.7 (B/C53B)	54	09/88 – 04/92	3580	
19 I (B/C53_)	1.7 (B/C53C)	66	09/88 – 04/92	3380	
19 I (B/C53_)	1.7 (B/C53C)	66	09/88 – 04/92	3381	
19 I (B/C53_)	1.7 (B/C53C)	66	09/88 – 04/92	3431	
19 I (B/C53_)	1.7 (B/C53C)	66	09/88 – 04/92		3496
19 I (B/C53_)	1.7 (B/C53C)	66	09/88 – 04/92	3503	
19 I (B/C53_)	1.7 (B/C53C)	66	09/88 – 04/92	3580	
19 I (B/C53_)	1.8 16V (B/C53D)	99	06/89 – 04/92	3380	
19 I (B/C53_)	1.8 16V (B/C53D)	99	06/89 – 04/92	3381	
19 I (B/C53_)	1.8 16V (B/C53D)	99	06/89 – 04/92	3431	
19 I (B/C53_)	1.8 16V (B/C53D)	99	06/89 – 04/92	3503	
19 I (B/C53_)	1.8 16V (B/C53D)	99	06/89 – 04/92	3580	
19 I (B/C53_)	1.9 D (B/C534, B/C53J)	47	09/88 – 04/92	3380	
19 I (B/C53_)	1.9 D (B/C534, B/C53J)	47	09/88 – 04/92	3381	
19 I (B/C53_)	1.9 D (B/C534, B/C53J)	47	09/88 – 04/92	3431	
19 I (B/C53_)	1.9 D (B/C534, B/C53J)	47	09/88 – 04/92		3496
19 I (B/C53_)	1.9 D (B/C534, B/C53J)	47	09/88 – 04/92	3503	
19 I (B/C53_)	1.9 D (B/C534, B/C53J)	47	09/88 – 04/92	3580	
19 I (B/C53_)	1.9 DT	68	09/90 – 04/92	3380	
19 I (B/C53_)	1.9 DT	68	09/90 – 04/92	3381	
19 I (B/C53_)	1.9 DT	68	09/90 – 04/92	3431	
19 I (B/C53_)	1.9 DT	68	09/90 – 04/92		3496
19 I (B/C53_)	1.9 DT	68	09/90 – 04/92	3503	
19 I (B/C53_)	1.9 DT	68	09/90 – 04/92	3580	
19 I Box (S53_)	12	40	01/88 – 12/92	3380	
19 I Box (S53_)	12	40	01/88 – 12/92	3381	
19 I Box (S53_)	12	40	01/88 – 12/92	3431	
19 I Box (S53_)	12	40	01/88 – 12/92		3496
19 I Box (S53_)	12	40	01/88 – 12/92	3503	
19 I Box (S53_)	12	40	01/88 – 12/92	3580	
19 I Box (S53_)	14	59	01/88 – 12/92	3380	
19 I Box (S53_)	14	59	01/88 – 12/92	3381	
19 I Box (S53_)	14	59	01/88 – 12/92	3431	
19 I Box (S53_)	14	59	01/88 – 12/92		3496
19 I Box (S53_)	14	59	01/88 – 12/92	3503	
19 I Box (S53_)	14	59	01/88 – 12/92	3580	
19 I Box (S53_)	1.9 D	48	01/88 – 12/92	3380	
19 I Box (S53_)	1.9 D	48	01/88 – 12/92	3381	
19 I Box (S53_)	1.9 D	48	01/88 – 12/92	3431	
19 I Box (S53_)	1.9 D	48	01/88 – 12/92		3496
19 I Box (S53_)	1.9 D	48	01/88 – 12/92	3503	
19 I Box (S53_)	1.9 D	48	01/88 – 12/92	3580	
19 I Cabriolet (D53_)	17	55	07/91 – 04/92	3380	
19 I Cabriolet (D53_)	17	55	07/91 – 04/92	3381	
19 I Cabriolet (D53_)	17	55	07/91 – 04/92	3431	
19 I Cabriolet (D53_)	17	55	07/91 – 04/92		3496
19 I Cabriolet (D53_)	17	55	07/91 – 04/92	3503	

MAKE & MODEL   		KW	YEAR		
RENAULT					
19 I Cabriolet (D53_)	17	55	07/91 – 04/92	3580	
19 I Cabriolet (D53_)	17	70	07/91 – 04/92	3380	
19 I Cabriolet (D53_)	17	70	07/91 – 04/92	3381	
19 I Cabriolet (D53_)	17	70	07/91 – 04/92	3431	
19 I Cabriolet (D53_)	17	70	07/91 – 04/92		3496
19 I Cabriolet (D53_)	17	70	07/91 – 04/92	3503	
19 I Cabriolet (D53_)	17	70	07/91 – 04/92	3580	
19 I Cabriolet (D53_)	1.8 16V (D53D)	101	07/91 – 04/92	3380	
19 I Cabriolet (D53_)	1.8 16V (D53D)	101	07/91 – 04/92	3381	
19 I Cabriolet (D53_)	1.8 16V (D53D)	101	07/91 – 04/92	3431	
19 I Cabriolet (D53_)	1.8 16V (D53D)	101	07/91 – 04/92	3503	
19 I Cabriolet (D53_)	1.8 16V (D53D)	101	07/91 – 04/92	3580	
19 I Chamade (L53_)	12	40	01/88 – 12/92	3380	
19 I Chamade (L53_)	12	40	01/88 – 12/92	3381	
19 I Chamade (L53_)	12	40	01/88 – 12/92	3431	
19 I Chamade (L53_)	12	40	01/88 – 12/92		3496
19 I Chamade (L53_)	12	40	01/88 – 12/92	3503	
19 I Chamade (L53_)	12	40	01/88 – 12/92	3580	
19 I Chamade (L53_)	14	55	09/90 – 04/92	3380	
19 I Chamade (L53_)	14	55	09/90 – 04/92	3381	
19 I Chamade (L53_)	14	55	09/90 – 04/92	3431	
19 I Chamade (L53_)	14	55	09/90 – 04/92		3496
19 I Chamade (L53_)	14	55	09/90 – 04/92	3503	
19 I Chamade (L53_)	14	55	09/90 – 04/92	3580	
19 I Chamade (L53_)	14	57	07/88 – 08/90	3380	
19 I Chamade (L53_)	14	57	07/88 – 08/90	3381	
19 I Chamade (L53_)	14	57	07/88 – 08/90	3431	
19 I Chamade (L53_)	14	57	07/88 – 08/90		3496
19 I Chamade (L53_)	14	57	07/88 – 08/90	3503	
19 I Chamade (L53_)	14	57	07/88 – 08/90	3580	
19 I Chamade (L53_)	1.4 (L532, L53P)	43	07/88 – 04/92	3380	
19 I Chamade (L53_)	1.4 (L532, L53P)	43	07/88 – 04/92	3381	
19 I Chamade (L53_)	1.4 (L532, L53P)	43	07/88 – 04/92	3431	
19 I Chamade (L53_)	1.4 (L532, L53P)	43	07/88 – 04/92		3496
19 I Chamade (L53_)	1.4 (L532, L53P)	43	07/88 – 04/92	3503	
19 I Chamade (L53_)	1.4 (L532, L53P)	43	07/88 – 04/92	3580	
19 I Chamade (L53_)	1.7 (L53B)	54	10/89 – 04/92	3380	
19 I Chamade (L53_)	1.7 (L53B)	54	10/89 – 04/92	3381	
19 I Chamade (L53_)	1.7 (L53B)	54	10/89 – 04/92	3431	
19 I Chamade (L53_)	1.7 (L53B)	54	10/89 – 04/92		3496
19 I Chamade (L53_)	1.7 (L53B)	54	10/89 – 04/92	3503	
19 I Chamade (L53_)	1.7 (L53B)	54	10/89 – 04/92	3580	
19 I Chamade (L53_)	1.7 (L53C)	66	07/88 – 04/92	3380	
19 I Chamade (L53_)	1.7 (L53C)	66	07/88 – 04/92	3381	
19 I Chamade (L53_)	1.7 (L53C)	66	07/88 – 04/92	3431	
19 I Chamade (L53_)	1.7 (L53C)	66	07/88 – 04/92		3496
19 I Chamade (L53_)	1.7 (L53C)	66	07/88 – 04/92	3503	
19 I Chamade (L53_)	1.7 (L53C)	66	07/88 – 04/92	3580	
19 I Chamade (L53_)	1.7 (L53F)	79	08/88 – 12/92	3380	
19 I Chamade (L53_)	1.7 (L53F)	79	08/88 – 12/92	3381	
19 I Chamade (L53_)	1.7 (L53F)	79	08/88 – 12/92	3431	
19 I Chamade (L53_)	1.7 (L53F)	79	08/88 – 12/92		3496
19 I Chamade (L53_)	1.7 (L53F)	79	08/88 – 12/92	3503	
19 I Chamade (L53_)	1.7 (L53F)	79	08/88 – 12/92	3580	
19 I Chamade (L53_)	1.8 16V (L53D)	99	10/89 – 04/92	3380	
19 I Chamade (L53_)	1.8 16V (L53D)	99	10/89 – 04/92	3381	
19 I Chamade (L53_)	1.8 16V (L53D)	99	10/89 – 04/92	3431	
19 I Chamade (L53_)	1.8 16V (L53D)	99	10/89 – 04/92	3503	
19 I Chamade (L53_)	1.8 16V (L53D)	99	10/89 – 04/92	3580	
19 I Chamade (L53_)	1.9 D (L534, L53J)	47	10/89 – 04/92	3380	
19 I Chamade (L53_)	1.9 D (L534, L53J)	47	10/89 – 04/92	3381	
19 I Chamade (L53_)	1.9 D (L534, L53J)	47	10/89 – 04/92	3431	
19 I Chamade (L53_)	1.9 D (L534, L53J)	47	10/89 – 04/92		3496
19 I Chamade (L53_)	1.9 D (L534, L53J)	47	10/89 – 04/92	3503	
19 I Chamade (L53_)	1.9 D (L534, L53J)	47	10/89 – 04/92	3580	
19 I Chamade (L53_)	1.9 TD (L53K)	68	09/90 – 04/92	3380	
19 I Chamade (L53_)	1.9 TD (L53K)	68	09/90 – 04/92	3381	
19 I Chamade (L53_)	1.9 TD (L53K)	68	09/90 – 04/92	3431	
19 I Chamade (L53_)	1.9 TD (L53K)	68	09/90 – 04/92		3496
19 I Chamade (L53_)	1.9 TD (L53K)	68	09/90 – 04/92	3503	
19 I Chamade (L53_)	1.9 TD (L53K)	68	09/90 – 04/92	3580	

BESER

MAKE & MODEL		KW	YEAR		
RENAULT					
19 II (B/C53_)	12	40	04/92 – 12/95	3380	
19 II (B/C53_)	12	40	04/92 – 12/95	3381	
19 II (B/C53_)	12	40	04/92 – 12/95	3431	
19 II (B/C53_)	12	40	04/92 – 12/95		3496
19 II (B/C53_)	12	40	04/92 – 12/95	3503	
19 II (B/C53_)	12	40	04/92 – 12/95	3580	
19 II (B/C53_)	12	44	05/92 – 09/94	3380	
19 II (B/C53_)	12	44	05/92 – 09/94	3381	
19 II (B/C53_)	12	44	05/92 – 09/94	3431	
19 II (B/C53_)	12	44	05/92 – 09/94		3496
19 II (B/C53_)	12	44	05/92 – 09/94	3503	
19 II (B/C53_)	12	44	05/92 – 09/94	3580	
19 II (B/C53_)	14	59	01/92 – 12/95	3380	
19 II (B/C53_)	14	59	01/92 – 12/95	3381	
19 II (B/C53_)	14	59	01/92 – 12/95	3431	
19 II (B/C53_)	14	59	01/92 – 12/95		3496
19 II (B/C53_)	14	59	01/92 – 12/95	3503	
19 II (B/C53_)	14	59	01/92 – 12/95	3580	
19 II (B/C53_)	14	60	10/96 – 06/01	3380	
19 II (B/C53_)	14	60	10/96 – 06/01	3381	
19 II (B/C53_)	14	60	10/96 – 06/01	3431	
19 II (B/C53_)	14	60	10/96 – 06/01		3496
19 II (B/C53_)	14	60	10/96 – 06/01	3503	
19 II (B/C53_)	14	60	10/96 – 06/01	3580	
19 II (B/C53_)	17	69	10/96 – 06/01	3380	
19 II (B/C53_)	17	69	10/96 – 06/01	3381	
19 II (B/C53_)	17	69	10/96 – 06/01	3431	
19 II (B/C53_)	17	69	10/96 – 06/01		3496
19 II (B/C53_)	17	69	10/96 – 06/01	3503	
19 II (B/C53_)	17	69	10/96 – 06/01	3580	
19 II (B/C53_)	17	79	05/92 – 09/94	3380	
19 II (B/C53_)	17	79	05/92 – 09/94	3381	
19 II (B/C53_)	17	79	05/92 – 09/94	3431	
19 II (B/C53_)	17	79	05/92 – 09/94		3496
19 II (B/C53_)	17	79	05/92 – 09/94	3503	
19 II (B/C53_)	17	79	05/92 – 09/94	3580	
19 II (B/C53_)	1.4 (B/C532)	43	04/92 – 12/95	3380	
19 II (B/C53_)	1.4 (B/C532)	43	04/92 – 12/95	3381	
19 II (B/C53_)	1.4 (B/C532)	43	04/92 – 12/95	3431	
19 II (B/C53_)	1.4 (B/C532)	43	04/92 – 12/95		3496
19 II (B/C53_)	1.4 (B/C532)	43	04/92 – 12/95	3503	
19 II (B/C53_)	1.4 (B/C532)	43	04/92 – 12/95	3580	
19 II (B/C53_)	1.4 (B/C535)	55	01/92 – 12/95	3380	
19 II (B/C53_)	1.4 (B/C535)	55	01/92 – 12/95	3381	
19 II (B/C53_)	1.4 (B/C535)	55	01/92 – 12/95	3431	
19 II (B/C53_)	1.4 (B/C535)	55	01/92 – 12/95		3496
19 II (B/C53_)	1.4 (B/C535)	55	01/92 – 12/95	3503	
19 II (B/C53_)	1.4 (B/C535)	55	01/92 – 12/95	3580	
19 II (B/C53_)	1.7 (B/C53B)	54	04/92 – 12/95	3380	
19 II (B/C53_)	1.7 (B/C53B)	54	04/92 – 12/95	3381	
19 II (B/C53_)	1.7 (B/C53B)	54	04/92 – 12/95	3431	
19 II (B/C53_)	1.7 (B/C53B)	54	04/92 – 12/95		3496
19 II (B/C53_)	1.7 (B/C53B)	54	04/92 – 12/95	3503	
19 II (B/C53_)	1.7 (B/C53B)	54	04/92 – 12/95	3580	
19 II (B/C53_)	1.7 (B/C53C)	66	04/92 – 12/95	3380	
19 II (B/C53_)	1.7 (B/C53C)	66	04/92 – 12/95	3381	
19 II (B/C53_)	1.7 (B/C53C)	66	04/92 – 12/95	3431	
19 II (B/C53_)	1.7 (B/C53C)	66	04/92 – 12/95		3496
19 II (B/C53_)	1.7 (B/C53C)	66	04/92 – 12/95	3503	
19 II (B/C53_)	1.7 (B/C53C)	66	04/92 – 12/95	3580	
19 II (B/C53_)	1.8 (5/353A)	66	04/92 – 12/95	3380	
19 II (B/C53_)	1.8 (5/353A)	66	04/92 – 12/95	3381	
19 II (B/C53_)	1.8 (5/353A)	66	04/92 – 12/95	3431	
19 II (B/C53_)	1.8 (5/353A)	66	04/92 – 12/95		3496
19 II (B/C53_)	1.8 (5/353A)	66	04/92 – 12/95	3503	
19 II (B/C53_)	1.8 (5/353A)	66	04/92 – 12/95	3580	
19 II (B/C53_)	1.8 (5/353F, B/C538)	79	05/94 – 12/95	3380	
19 II (B/C53_)	1.8 (5/353F, B/C538)	79	05/94 – 12/95	3381	
19 II (B/C53_)	1.8 (5/353F, B/C538)	79	05/94 – 12/95	3431	
19 II (B/C53_)	1.8 (5/353F, B/C538)	79	05/94 – 12/95		3496
19 II (B/C53_)	1.8 (5/353F, B/C538)	79	05/94 – 12/95	3503	

MAKE & MODEL		KW	YEAR		
RENAULT					
19 II (B/C53_)	1.8 (5/353F, B/C538)	79	05/94 – 12/95	3580	
19 II (B/C53_)	1.8 (B/C538)	81	04/92 – 05/94	3380	
19 II (B/C53_)	1.8 (B/C538)	81	04/92 – 05/94	3381	
19 II (B/C53_)	1.8 (B/C538)	81	04/92 – 05/94	3431	
19 II (B/C53_)	1.8 (B/C538)	81	04/92 – 05/94		3496
19 II (B/C53_)	1.8 (B/C538)	81	04/92 – 05/94	3503	
19 II (B/C53_)	1.8 (B/C538)	81	04/92 – 05/94	3580	
19 II (B/C53_)	1.8 (B/C53Y)	65	04/92 – 12/95	3380	
19 II (B/C53_)	1.8 (B/C53Y)	65	04/92 – 12/95	3381	
19 II (B/C53_)	1.8 (B/C53Y)	65	04/92 – 12/95	3431	
19 II (B/C53_)	1.8 (B/C53Y)	65	04/92 – 12/95		3496
19 II (B/C53_)	1.8 (B/C53Y)	65	04/92 – 12/95	3503	
19 II (B/C53_)	1.8 (B/C53Y)	65	04/92 – 12/95	3580	
19 II (B/C53_)	1.8 16V (B/C53D)	99	04/92 – 12/95	3380	
19 II (B/C53_)	1.8 16V (B/C53D)	99	04/92 – 12/95	3381	
19 II (B/C53_)	1.8 16V (B/C53D)	99	04/92 – 12/95	3431	
19 II (B/C53_)	1.8 16V (B/C53D)	99	04/92 – 12/95	3503	
19 II (B/C53_)	1.8 16V (B/C53D)	99	04/92 – 12/95	3580	
19 II (B/C53_)	1.9 D (B/C53J)	47	04/92 – 12/95	3380	
19 II (B/C53_)	1.9 D (B/C53J)	47	04/92 – 12/95	3381	
19 II (B/C53_)	1.9 D (B/C53J)	47	04/92 – 12/95	3431	
19 II (B/C53_)	1.9 D (B/C53J)	47	04/92 – 12/95		3496
19 II (B/C53_)	1.9 D (B/C53J)	47	04/92 – 12/95	3503	
19 II (B/C53_)	1.9 D (B/C53J)	47	04/92 – 12/95	3580	
19 II (B/C53_)	1.9 dT (B/C53T)	66	04/92 – 12/95	3380	
19 II (B/C53_)	1.9 dT (B/C53T)	66	04/92 – 12/95	3381	
19 II (B/C53_)	1.9 dT (B/C53T)	66	04/92 – 12/95	3431	
19 II (B/C53_)	1.9 dT (B/C53T)	66	04/92 – 12/95		3496
19 II (B/C53_)	1.9 dT (B/C53T)	66	04/92 – 12/95	3503	
19 II (B/C53_)	1.9 dT (B/C53T)	66	04/92 – 12/95	3580	
19 II Box (S53_)	12	40	03/92 – 12/95	3380	
19 II Box (S53_)	12	40	03/92 – 12/95	3381	
19 II Box (S53_)	12	40	03/92 – 12/95	3431	
19 II Box (S53_)	12	40	03/92 – 12/95		3496
19 II Box (S53_)	12	40	03/92 – 12/95	3503	
19 II Box (S53_)	12	40	03/92 – 12/95	3580	
19 II Box (S53_)	14	59	03/92 – 12/95	3380	
19 II Box (S53_)	14	59	03/92 – 12/95	3381	
19 II Box (S53_)	14	59	03/92 – 12/95	3431	
19 II Box (S53_)	14	59	03/92 – 12/95		3496
19 II Box (S53_)	14	59	03/92 – 12/95	3503	
19 II Box (S53_)	14	59	03/92 – 12/95	3580	
19 II Box (S53_)	1.9 D	48	03/92 – 12/95	3380	
19 II Box (S53_)	1.9 D	48	03/92 – 12/95	3381	
19 II Box (S53_)	1.9 D	48	03/92 – 12/95	3431	
19 II Box (S53_)	1.9 D	48	03/92 – 12/95		3496
19 II Box (S53_)	1.9 D	48	03/92 – 12/95	3503	
19 II Box (S53_)	1.9 D	48	03/92 – 12/95	3580	
19 II Box (S53_)	1.9 dT	68	03/92 – 12/95	3380	
19 II Box (S53_)	1.9 dT	68	03/92 – 12/95	3381	
19 II Box (S53_)	1.9 dT	68	03/92 – 12/95	3431	
19 II Box (S53_)	1.9 dT	68	03/92 – 12/95		3496
19 II Box (S53_)	1.9 dT	68	03/92 – 12/95	3503	
19 II Box (S53_)	1.9 dT	68	03/92 – 12/95	3580	
19 II Cabriolet (D53_, 853_)	1.7 (D53C)	66	04/92 – 09/93	3380	
19 II Cabriolet (D53_, 853_)	1.7 (D53C)	66	04/92 – 09/93	3381	
19 II Cabriolet (D53_, 853_)	1.7 (D53C)	66	04/92 – 09/93	3431	
19 II Cabriolet (D53_, 853_)	1.7 (D53C)	66	04/92 – 09/93		3496
19 II Cabriolet (D53_, 853_)	1.7 (D53C)	66	04/92 – 09/93	3503	
19 II Cabriolet (D53_, 853_)	1.7 (D53C)	66	04/92 – 09/93	3580	
19 II Cabriolet (D53_, 853_)	1.8 (853A)	66	09/93 – 06/96	3380	
19 II Cabriolet (D53_, 853_)	1.8 (853A)	66	09/93 – 06/96	3381	
19 II Cabriolet (D53_, 853_)	1.8 (853A)	66	09/93 – 06/96	3431	
19 II Cabriolet (D53_, 853_)	1.8 (853A)	66	09/93 – 06/96		3496
19 II Cabriolet (D53_, 853_)	1.8 (853A)	66	09/93 – 06/96	3503	
19 II Cabriolet (D53_, 853_)	1.8 (853A)	66	09/93 – 06/96	3580	
19 II Cabriolet (D53_, 853_)	1.8 (D53V, 853F, D53C)	79	07/94 – 06/96	3380	
19 II Cabriolet (D53_, 853_)	1.8 (D53V, 853F, D53C)	79	07/94 – 06/96	3381	
19 II Cabriolet (D53_, 853_)	1.8 (D53V, 853F, D53C)	79	07/94 – 06/96	3431	
19 II Cabriolet (D53_, 853_)	1.8 (D53V, 853F, D53C)	79	07/94 – 06/96	3503	
19 II Cabriolet (D53_, 853_)	1.8 (D53V, 853F, D53C)	79	07/94 – 06/96	3580	

MAKE & MODEL		KW	YEAR		
RENAULT					
19 II Cabriolet (D53_, 853_)	1.8 (D53Y)	65	04/92 – 06/96	3380	
19 II Cabriolet (D53_, 853_)	1.8 (D53Y)	65	04/92 – 06/96	3381	
19 II Cabriolet (D53_, 853_)	1.8 (D53Y)	65	04/92 – 06/96	3431	
19 II Cabriolet (D53_, 853_)	1.8 (D53Y)	65	04/92 – 06/96		3496
19 II Cabriolet (D53_, 853_)	1.8 (D53Y)	65	04/92 – 06/96	3503	
19 II Cabriolet (D53_, 853_)	1.8 (D53Y)	65	04/92 – 06/96	3580	
19 II Cabriolet (D53_, 853_)	1.8 16V (D53D)	99	04/92 – 06/96	3380	
19 II Cabriolet (D53_, 853_)	1.8 16V (D53D)	99	04/92 – 06/96	3381	
19 II Cabriolet (D53_, 853_)	1.8 16V (D53D)	99	04/92 – 06/96	3431	
19 II Cabriolet (D53_, 853_)	1.8 16V (D53D)	99	04/92 – 06/96	3503	
19 II Cabriolet (D53_, 853_)	1.8 16V (D53D)	99	04/92 – 06/96	3580	
19 II Chamade (L53_)	14	44	05/92 – 09/94	3380	
19 II Chamade (L53_)	14	44	05/92 – 09/94	3381	
19 II Chamade (L53_)	14	44	05/92 – 09/94	3431	
19 II Chamade (L53_)	14	44	05/92 – 09/94		3496
19 II Chamade (L53_)	14	44	05/92 – 09/94	3503	
19 II Chamade (L53_)	14	44	05/92 – 09/94	3580	
19 II Chamade (L53_)	14	57	10/94 – 11/95	3380	
19 II Chamade (L53_)	14	57	10/94 – 11/95	3381	
19 II Chamade (L53_)	14	57	10/94 – 11/95	3431	
19 II Chamade (L53_)	14	57	10/94 – 11/95		3496
19 II Chamade (L53_)	14	57	10/94 – 11/95	3503	
19 II Chamade (L53_)	14	57	10/94 – 11/95	3580	
19 II Chamade (L53_)	14	59	10/94 – 11/95	3380	
19 II Chamade (L53_)	14	59	10/94 – 11/95	3381	
19 II Chamade (L53_)	14	59	10/94 – 11/95	3431	
19 II Chamade (L53_)	14	59	10/94 – 11/95		3496
19 II Chamade (L53_)	14	59	10/94 – 11/95	3503	
19 II Chamade (L53_)	14	59	10/94 – 11/95	3580	
19 II Chamade (L53_)	17	55	05/92 – 11/95	3380	
19 II Chamade (L53_)	17	55	05/92 – 11/95	3381	
19 II Chamade (L53_)	17	55	05/92 – 11/95	3431	
19 II Chamade (L53_)	17	55	05/92 – 11/95		3496
19 II Chamade (L53_)	17	55	05/92 – 11/95	3503	
19 II Chamade (L53_)	17	55	05/92 – 11/95	3580	
19 II Chamade (L53_)	18	67	05/92 – 09/94	3380	
19 II Chamade (L53_)	18	67	05/92 – 09/94	3381	
19 II Chamade (L53_)	18	67	05/92 – 09/94	3431	
19 II Chamade (L53_)	18	67	05/92 – 09/94		3496
19 II Chamade (L53_)	18	67	05/92 – 09/94	3503	
19 II Chamade (L53_)	18	67	05/92 – 09/94	3580	
19 II Chamade (L53_)	18	79	05/92 – 11/95	3380	
19 II Chamade (L53_)	18	79	05/92 – 11/95	3381	
19 II Chamade (L53_)	18	79	05/92 – 11/95	3431	
19 II Chamade (L53_)	18	79	05/92 – 11/95		3496
19 II Chamade (L53_)	18	79	05/92 – 11/95	3503	
19 II Chamade (L53_)	18	79	05/92 – 11/95	3580	
19 II Chamade (L53_)	1.4 (532)	43	04/92 – 12/95	3380	
19 II Chamade (L53_)	1.4 (532)	43	04/92 – 12/95	3381	
19 II Chamade (L53_)	1.4 (532)	43	04/92 – 12/95	3431	
19 II Chamade (L53_)	1.4 (532)	43	04/92 – 12/95		3496
19 II Chamade (L53_)	1.4 (532)	43	04/92 – 12/95	3503	
19 II Chamade (L53_)	1.4 (532)	43	04/92 – 12/95	3580	
19 II Chamade (L53_)	1.4 (L535)	55	11/93 – 12/95	3380	
19 II Chamade (L53_)	1.4 (L535)	55	11/93 – 12/95	3381	
19 II Chamade (L53_)	1.4 (L535)	55	11/93 – 12/95	3431	
19 II Chamade (L53_)	1.4 (L535)	55	11/93 – 12/95		3496
19 II Chamade (L53_)	1.4 (L535)	55	11/93 – 12/95	3503	
19 II Chamade (L53_)	1.4 (L535)	55	11/93 – 12/95	3580	
19 II Chamade (L53_)	1.7 (L533)	68	01/93 – 08/95	3380	
19 II Chamade (L53_)	1.7 (L533)	68	01/93 – 08/95	3381	
19 II Chamade (L53_)	1.7 (L533)	68	01/93 – 08/95	3431	
19 II Chamade (L53_)	1.7 (L533)	68	01/93 – 08/95		3496
19 II Chamade (L53_)	1.7 (L533)	68	01/93 – 08/95	3503	
19 II Chamade (L53_)	1.7 (L533)	68	01/93 – 08/95	3580	
19 II Chamade (L53_)	1.7 (L53B)	54	04/92 – 12/95	3380	
19 II Chamade (L53_)	1.7 (L53B)	54	04/92 – 12/95	3381	
19 II Chamade (L53_)	1.7 (L53B)	54	04/92 – 12/95	3431	
19 II Chamade (L53_)	1.7 (L53B)	54	04/92 – 12/95		3496
19 II Chamade (L53_)	1.7 (L53B)	54	04/92 – 12/95	3503	
19 II Chamade (L53_)	1.7 (L53B)	54	04/92 – 12/95	3580	

BESER

MAKE & MODEL		KW	YEAR		
RENAULT					
19 II Chamade (L53_)	1.7 (L53C)	66	04/92 – 12/95	3380	
19 II Chamade (L53_)	1.7 (L53C)	66	04/92 – 12/95	3381	
19 II Chamade (L53_)	1.7 (L53C)	66	04/92 – 12/95	3431	
19 II Chamade (L53_)	1.7 (L53C)	66	04/92 – 12/95		3496
19 II Chamade (L53_)	1.7 (L53C)	66	04/92 – 12/95	3503	
19 II Chamade (L53_)	1.7 (L53C)	66	04/92 – 12/95	3580	
19 II Chamade (L53_)	1.8 (453A/F)	66	04/92 – 12/95	3380	
19 II Chamade (L53_)	1.8 (453A/F)	66	04/92 – 12/95	3381	
19 II Chamade (L53_)	1.8 (453A/F)	66	04/92 – 12/95	3431	
19 II Chamade (L53_)	1.8 (453A/F)	66	04/92 – 12/95		3496
19 II Chamade (L53_)	1.8 (453A/F)	66	04/92 – 12/95	3503	
19 II Chamade (L53_)	1.8 (453A/F)	66	04/92 – 12/95	3580	
19 II Chamade (L53_)	1.8 (L538)	81	04/92 – 05/94	3380	
19 II Chamade (L53_)	1.8 (L538)	81	04/92 – 05/94	3381	
19 II Chamade (L53_)	1.8 (L538)	81	04/92 – 05/94	3431	
19 II Chamade (L53_)	1.8 (L538)	81	04/92 – 05/94		3496
19 II Chamade (L53_)	1.8 (L538)	81	04/92 – 05/94	3503	
19 II Chamade (L53_)	1.8 (L538)	81	04/92 – 05/94	3580	
19 II Chamade (L53_)	1.8 (L53V, L538)	79	05/94 – 12/95	3380	
19 II Chamade (L53_)	1.8 (L53V, L538)	79	05/94 – 12/95	3381	
19 II Chamade (L53_)	1.8 (L53V, L538)	79	05/94 – 12/95	3431	
19 II Chamade (L53_)	1.8 (L53V, L538)	79	05/94 – 12/95		3496
19 II Chamade (L53_)	1.8 (L53V, L538)	79	05/94 – 12/95	3503	
19 II Chamade (L53_)	1.8 (L53V, L538)	79	05/94 – 12/95	3580	
19 II Chamade (L53_)	1.8 (L53Y)	65	04/92 – 12/95	3380	
19 II Chamade (L53_)	1.8 (L53Y)	65	04/92 – 12/95	3381	
19 II Chamade (L53_)	1.8 (L53Y)	65	04/92 – 12/95	3431	
19 II Chamade (L53_)	1.8 (L53Y)	65	04/92 – 12/95		3496
19 II Chamade (L53_)	1.8 (L53Y)	65	04/92 – 12/95	3503	
19 II Chamade (L53_)	1.8 (L53Y)	65	04/92 – 12/95	3580	
19 II Chamade (L53_)	1.8 16V (L53D)	99	04/92 – 12/95	3380	
19 II Chamade (L53_)	1.8 16V (L53D)	99	04/92 – 12/95	3381	
19 II Chamade (L53_)	1.8 16V (L53D)	99	04/92 – 12/95	3431	
19 II Chamade (L53_)	1.8 16V (L53D)	99	04/92 – 12/95	3503	
19 II Chamade (L53_)	1.8 16V (L53D)	99	04/92 – 12/95	3580	
19 II Chamade (L53_)	1.9 D	68	05/92 – 11/95	3380	
19 II Chamade (L53_)	1.9 D	68	05/92 – 11/95	3381	
19 II Chamade (L53_)	1.9 D	68	05/92 – 11/95	3431	
19 II Chamade (L53_)	1.9 D	68	05/92 – 11/95		3496
19 II Chamade (L53_)	1.9 D	68	05/92 – 11/95	3503	
19 II Chamade (L53_)	1.9 D	68	05/92 – 11/95	3580	
19 II Chamade (L53_)	1.9 D (L53J)	47	04/92 – 12/95	3380	
19 II Chamade (L53_)	1.9 D (L53J)	47	04/92 – 12/95	3381	
19 II Chamade (L53_)	1.9 D (L53J)	47	04/92 – 12/95	3431	
19 II Chamade (L53_)	1.9 D (L53J)	47	04/92 – 12/95		3496
19 II Chamade (L53_)	1.9 D (L53J)	47	04/92 – 12/95	3503	
19 II Chamade (L53_)	1.9 D (L53J)	47	04/92 – 12/95	3580	
19 II Chamade (L53_)	1.9 dT (L53T)	66	04/92 – 12/95	3380	
19 II Chamade (L53_)	1.9 dT (L53T)	66	04/92 – 12/95	3381	
19 II Chamade (L53_)	1.9 dT (L53T)	66	04/92 – 12/95	3431	
19 II Chamade (L53_)	1.9 dT (L53T)	66	04/92 – 12/95		3496
19 II Chamade (L53_)	1.9 dT (L53T)	66	04/92 – 12/95	3503	
19 II Chamade (L53_)	1.9 dT (L53T)	66	04/92 – 12/95	3580	
20 (127_)	1.6 (1271)	66	10/75 – 05/77	3329/1	
20 (127_)	1.6 (1271)	66	10/75 – 05/77	3348	
20 (127_)	1.6 (1271)	66	10/75 – 05/77	3349	
20 (127_)	1.6 (1271)	71	05/77 – 12/83	3329/1	
20 (127_)	1.6 (1271)	71	05/77 – 12/83	3348	
20 (127_)	1.6 (1271)	71	05/77 – 12/83	3349	
20 (127_)	1.6 (1271)	71	05/77 – 12/83	3380	
20 (127_)	1.6 (1271)	71	05/77 – 12/83	3381	
20 (127_)	1.6 (1271)	71	05/77 – 12/83	3431	
20 (127_)	1.6 (1271)	71	05/77 – 12/83	3503	
20 (127_)	1.6 (1271)	71	05/77 – 12/83	3580	
20 (127_)	2.0 (1272)	80	10/77 – 10/80	3527	
20 (127_)	2.0 (1277)	76	10/80 – 12/83	3380	
20 (127_)	2.0 (1277)	76	10/80 – 12/83	3381	
20 (127_)	2.0 (1277)	76	10/80 – 12/83	3431	
20 (127_)	2.0 (1277)	76	10/80 – 12/83	3503	
20 (127_)	2.0 (1277)	76	10/80 – 12/83	3527	
20 (127_)	2.0 (1277)	76	10/80 – 12/83	3580	

MAKE & MODEL		KW	YEAR		
RENAULT					
20 (127_)	2.1 Diesel (1276)	47	10/80 – 12/83	3380	
20 (127_)	2.1 Diesel (1276)	47	10/80 – 12/83	3381	
20 (127_)	2.1 Diesel (1276)	47	10/80 – 12/83	3431	
20 (127_)	2.1 Diesel (1276)	47	10/80 – 12/83	3503	
20 (127_)	2.1 Diesel (1276)	47	10/80 – 12/83	3580	
20 (127_)	2.1 TD	63	01/82 – 12/83	3380	
20 (127_)	2.1 TD	63	01/82 – 12/83	3381	
20 (127_)	2.1 TD	63	01/82 – 12/83	3431	
20 (127_)	2.1 TD	63	01/82 – 12/83	3503	
20 (127_)	2.1 TD	63	01/82 – 12/83	3580	
20 (127_)	2.2 (1279)	85	10/80 – 12/83	3380	
20 (127_)	2.2 (1279)	85	10/80 – 12/83	3381	
20 (127_)	2.2 (1279)	85	10/80 – 12/83	3431	
20 (127_)	2.2 (1279)	85	10/80 – 12/83	3503	
20 (127_)	2.2 (1279)	85	10/80 – 12/83	3527	
20 (127_)	2.2 (1279)	85	10/80 – 12/83	3580	
21 (B48_)	17	55	07/89 – 05/93	3380	
21 (B48_)	17	55	07/89 – 05/93	3381	
21 (B48_)	17	55	07/89 – 05/93	3431	
21 (B48_)	17	55	07/89 – 05/93	3503	
21 (B48_)	17	55	07/89 – 05/93	3580	
21 (B48_)	17	65	07/89 – 05/93	3380	
21 (B48_)	17	65	07/89 – 05/93	3381	
21 (B48_)	17	65	07/89 – 05/93	3431	
21 (B48_)	17	65	07/89 – 05/93	3503	
21 (B48_)	17	65	07/89 – 05/93	3580	
21 (B48_)	2.2 (B48K)	79	09/89 – 06/94		3333
21 (B48_)	1.4 (B48D)	51	09/89 – 05/93	3380	
21 (B48_)	1.4 (B48D)	51	09/89 – 05/93	3381	
21 (B48_)	1.4 (B48D)	51	09/89 – 05/93	3431	
21 (B48_)	1.4 (B48D)	51	09/89 – 05/93	3503	
21 (B48_)	1.4 (B48D)	51	09/89 – 05/93	3580	
21 (B48_)	1.7 (B48E)	66	09/89 – 06/94	3380	
21 (B48_)	1.7 (B48E)	66	09/89 – 06/94	3381	
21 (B48_)	1.7 (B48E)	66	09/89 – 06/94	3431	
21 (B48_)	1.7 (B48E)	66	09/89 – 06/94	3503	
21 (B48_)	1.7 (B48E)	66	09/89 – 06/94	3580	
21 (B48_)	1.7 (B48F)	54	09/89 – 10/92	3380	
21 (B48_)	1.7 (B48F)	54	09/89 – 10/92	3381	
21 (B48_)	1.7 (B48F)	54	09/89 – 10/92	3431	
21 (B48_)	1.7 (B48F)	54	09/89 – 10/92	3503	
21 (B48_)	1.7 (B48F)	54	09/89 – 10/92	3580	
21 (B48_)	1.9 D (B48H, B48I)	47	09/89 – 01/94	3380	
21 (B48_)	1.9 D (B48H, B48I)	47	09/89 – 01/94	3381	
21 (B48_)	1.9 D (B48H, B48I)	47	09/89 – 01/94	3431	
21 (B48_)	1.9 D (B48H, B48I)	47	09/89 – 01/94	3503	
21 (B48_)	1.9 D (B48H, B48I)	47	09/89 – 01/94	3580	
21 (B48_)	2.0 (B48C)	88	09/89 – 12/93		3333
21 (B48_)	2.0 (B48C)	88	09/89 – 12/93	3428	
21 (B48_)	2.0 (B48C)	88	09/89 – 12/93		3596
21 (B48_)	2.0 (B48R/Y)	99	02/90 – 10/92		3333
21 (B48_)	2.0 (B48R/Y)	99	02/90 – 10/92	3428	
21 (B48_)	2.0 (B48R/Y)	99	02/90 – 10/92		3596
21 (B48_)	2.0 4x4 (B48R/Y)	99	09/90 – 10/92		3333
21 (B48_)	2.0 4x4 (B48R/Y)	99	09/90 – 10/92	3428	
21 (B48_)	2.0 4x4 (B48R/Y)	99	09/90 – 10/92		3596
21 (B48_)	2.0 TXi	100	07/89 – 05/93		3333
21 (B48_)	2.0 TXi	100	07/89 – 05/93	3428	
21 (B48_)	2.0 TXi	100	07/89 – 05/93		3596
21 (B48_)	2.1 D (B480)	51	04/92 – 06/94		3333
21 (B48_)	2.1 D (B480)	51	04/92 – 06/94	3428	
21 (B48_)	2.1 D (B480)	51	04/92 – 06/94		3596
21 (B48_)	2.1 D (B48V/B48O)	53	09/89 – 12/92		3333
21 (B48_)	2.1 D (B48V/B48O)	53	09/89 – 12/92	3428	
21 (B48_)	2.1 D (B48V/B48O)	53	09/89 – 12/92		3596
21 (B48_)	2.1 Turbo-D (B486, B488, B48V)	65	09/89 – 06/94		3333
21 (B48_)	2.1 Turbo-D (B486, B488, B48V)	65	09/89 – 06/94	3428	
21 (B48_)	2.1 Turbo-D (B486, B488, B48V)	65	09/89 – 06/94		3596
21 (B48_)	2.2 (B48K)	79	09/89 – 06/94	3428	
21 (B48_)	2.2 (B48K)	79	09/89 – 06/94		3596
21 (B48_)	2.2 4x4 (B48K)	79	07/90 – 06/94		3333

BESER

MAKE & MODEL		KW	YEAR		
RENAULT					
21 (B48_)	2.2 4x4 (B48K)	79	07/90 – 06/94	3428	
21 (B48_)	2.2 4x4 (B48K)	79	07/90 – 06/94		3596
21 Box (S48_)	17	65	06/86 – 04/95	3380	
21 Box (S48_)	17	65	06/86 – 04/95	3381	
21 Box (S48_)	17	65	06/86 – 04/95	3431	
21 Box (S48_)	17	65	06/86 – 04/95	3503	
21 Box (S48_)	17	65	06/86 – 04/95	3580	
21 Box (S48_)	1.9 D	47	06/86 – 08/94	3428	
21 Box (S48_)	2.1 D	49	06/86 – 08/94		3333
21 Box (S48_)	2.1 D	49	06/86 – 08/94	3428	
21 Box (S48_)	2.1 D	49	06/86 – 08/94		3596
21 Estate (K48_)	20	75	06/91 – 05/93		3333
21 Estate (K48_)	20	75	06/91 – 05/93	3428	
21 Estate (K48_)	20	75	06/91 – 05/93		3596
21 Estate (K48_)	20	86	07/89 – 06/92		3333
21 Estate (K48_)	20	86	07/89 – 06/92	3428	
21 Estate (K48_)	20	86	07/89 – 06/92		3596
21 Estate (K48_)	1.7 (K/S481)	55	06/86 – 03/93	3380	
21 Estate (K48_)	1.7 (K/S481)	55	06/86 – 03/93	3381	
21 Estate (K48_)	1.7 (K/S481)	55	06/86 – 03/93	3431	
21 Estate (K48_)	1.7 (K/S481)	55	06/86 – 03/93	3503	
21 Estate (K48_)	1.7 (K/S481)	55	06/86 – 03/93	3580	
21 Estate (K48_)	1.7 (K/S482)	65	10/86 – 12/88	3380	
21 Estate (K48_)	1.7 (K/S482)	65	10/86 – 12/88	3381	
21 Estate (K48_)	1.7 (K/S482)	65	10/86 – 12/88	3431	
21 Estate (K48_)	1.7 (K/S482)	65	10/86 – 12/88	3503	
21 Estate (K48_)	1.7 (K/S482)	65	10/86 – 12/88	3580	
21 Estate (K48_)	1.7 (K48E)	66	10/89 – 12/93	3380	
21 Estate (K48_)	1.7 (K48E)	66	10/89 – 12/93	3381	
21 Estate (K48_)	1.7 (K48E)	66	10/89 – 12/93	3431	
21 Estate (K48_)	1.7 (K48E)	66	10/89 – 12/93	3503	
21 Estate (K48_)	1.7 (K48E)	66	10/89 – 12/93	3580	
21 Estate (K48_)	1.7 (K48E)	69	06/86 – 12/89	3380	
21 Estate (K48_)	1.7 (K48E)	69	06/86 – 12/89	3381	
21 Estate (K48_)	1.7 (K48E)	69	06/86 – 12/89	3431	
21 Estate (K48_)	1.7 (K48E)	69	06/86 – 12/89	3503	
21 Estate (K48_)	1.7 (K48E)	69	06/86 – 12/89	3580	
21 Estate (K48_)	1.7 (K48F) CAT	54	05/88 – 06/93	3380	
21 Estate (K48_)	1.7 (K48F) CAT	54	05/88 – 06/93	3381	
21 Estate (K48_)	1.7 (K48F) CAT	54	05/88 – 06/93	3431	
21 Estate (K48_)	1.7 (K48F) CAT	54	05/88 – 06/93	3503	
21 Estate (K48_)	1.7 (K48F) CAT	54	05/88 – 06/93	3580	
21 Estate (K48_)	1.7 (K48M)	54	06/86 – 12/89	3380	
21 Estate (K48_)	1.7 (K48M)	54	06/86 – 12/89	3381	
21 Estate (K48_)	1.7 (K48M)	54	06/86 – 12/89	3431	
21 Estate (K48_)	1.7 (K48M)	54	06/86 – 12/89	3503	
21 Estate (K48_)	1.7 (K48M)	54	06/86 – 12/89	3580	
21 Estate (K48_)	1.7 (K48N)	64	06/87 – 04/89	3380	
21 Estate (K48_)	1.7 (K48N)	64	06/87 – 04/89	3381	
21 Estate (K48_)	1.7 (K48N)	64	06/87 – 04/89	3431	
21 Estate (K48_)	1.7 (K48N)	64	06/87 – 04/89	3503	
21 Estate (K48_)	1.7 (K48N)	64	06/87 – 04/89	3580	
21 Estate (K48_)	1.9 D	47	03/86 – 08/94	3380	
21 Estate (K48_)	1.9 D	47	03/86 – 08/94	3381	
21 Estate (K48_)	1.9 D	47	03/86 – 08/94	3431	
21 Estate (K48_)	1.9 D	47	03/86 – 08/94	3503	
21 Estate (K48_)	1.9 D	47	03/86 – 08/94	3580	
21 Estate (K48_)	2.0 (K483)	85	06/86 – 12/88		3333
21 Estate (K48_)	2.0 (K483)	85	06/86 – 12/88	3428	
21 Estate (K48_)	2.0 (K483)	85	06/86 – 12/88		3596
21 Estate (K48_)	2.0 (K48C)	88	03/86 – 12/93		3333
21 Estate (K48_)	2.0 (K48C)	88	03/86 – 12/93	3428	
21 Estate (K48_)	2.0 (K48C)	88	03/86 – 12/93		3596
21 Estate (K48_)	2.0 (K48R)	99	06/90 – 02/94		3333
21 Estate (K48_)	2.0 (K48R)	99	06/90 – 02/94	3428	
21 Estate (K48_)	2.0 (K48R)	99	06/90 – 02/94		3596
21 Estate (K48_)	2.0 4x4	88	03/89 – 12/93		3333
21 Estate (K48_)	2.0 4x4	88	03/89 – 12/93	3428	
21 Estate (K48_)	2.0 4x4	88	03/89 – 12/93		3596
21 Estate (K48_)	2.1 D (K/S486)	48	10/86 – 09/90		3333
21 Estate (K48_)	2.1 D (K/S486)	48	10/86 – 09/90	3428	

BESER

MAKE & MODEL		KW	YEAR		
RENAULT					
21 Estate (K48_)	2.1 D (K/S486)	48	10/86 – 09/90		3596
21 Estate (K48_)	2.1 D (K/S48V, K/S48O)	53	08/89 – 12/92		3333
21 Estate (K48_)	2.1 D (K/S48V, K/S48O)	53	08/89 – 12/92	3428	
21 Estate (K48_)	2.1 D (K/S48V, K/S48O)	53	08/89 – 12/92		3596
21 Estate (K48_)	2.1 D (K480)	51	02/92 – 09/95		3333
21 Estate (K48_)	2.1 D (K480)	51	02/92 – 09/95	3428	
21 Estate (K48_)	2.1 D (K480)	51	02/92 – 09/95		3596
21 Estate (K48_)	2.1 D 4x4 (K486)	48	10/88 – 05/92	3428	
21 Estate (K48_)	2.1 Turbo-D (K48A, K48W, K487, K488)	65	10/86 – 11/93		3333
21 Estate (K48_)	2.1 Turbo-D (K48A, K48W, K487, K488)	65	10/86 – 11/93	3428	
21 Estate (K48_)	2.1 Turbo-D (K48A, K48W, K487, K488)	65	10/86 – 11/93		3596
21 Estate (K48_)	2.2 (K48K)	79	06/86 – 11/93		3333
21 Estate (K48_)	2.2 (K48K)	79	06/86 – 11/93	3428	
21 Estate (K48_)	2.2 (K48K)	79	06/86 – 11/93		3596
21 Estate (K48_)	2.2 4x4 (K48K)	79	06/86 – 12/93		3333
21 Estate (K48_)	2.2 4x4 (K48K)	79	06/86 – 12/93	3428	
21 Estate (K48_)	2.2 4x4 (K48K)	79	06/86 – 12/93		3596
21 Saloon (L48_)	20	76	04/88 – 06/89		3333
21 Saloon (L48_)	20	76	04/88 – 06/89	3428	
21 Saloon (L48_)	20	76	04/88 – 06/89		3596
21 Saloon (L48_)	20	78	05/91 – 10/93		3333
21 Saloon (L48_)	20	78	05/91 – 10/93	3428	
21 Saloon (L48_)	20	78	05/91 – 10/93		3596
21 Saloon (L48_)	20	86	04/86 – 06/89		3333
21 Saloon (L48_)	20	86	04/86 – 06/89	3428	
21 Saloon (L48_)	20	86	04/86 – 06/89		3596
21 Saloon (L48_)	1.4 (L48D)	51	06/88 – 10/93	3428	
21 Saloon (L48_)	1.7 (L481)	55	03/86 – 12/87	3380	
21 Saloon (L48_)	1.7 (L481)	55	03/86 – 12/87	3381	
21 Saloon (L48_)	1.7 (L481)	55	03/86 – 12/87	3431	
21 Saloon (L48_)	1.7 (L481)	55	03/86 – 12/87	3503	
21 Saloon (L48_)	1.7 (L481)	55	03/86 – 12/87	3580	
21 Saloon (L48_)	1.7 (L482)	65	03/86 – 03/93	3380	
21 Saloon (L48_)	1.7 (L482)	65	03/86 – 03/93	3381	
21 Saloon (L48_)	1.7 (L482)	65	03/86 – 03/93	3431	
21 Saloon (L48_)	1.7 (L482)	65	03/86 – 03/93	3503	
21 Saloon (L48_)	1.7 (L482)	65	03/86 – 03/93	3580	
21 Saloon (L48_)	1.7 (L48E)	66	09/89 – 02/94	3380	
21 Saloon (L48_)	1.7 (L48E)	66	09/89 – 02/94	3381	
21 Saloon (L48_)	1.7 (L48E)	66	09/89 – 02/94	3431	
21 Saloon (L48_)	1.7 (L48E)	66	09/89 – 02/94	3503	
21 Saloon (L48_)	1.7 (L48E)	66	09/89 – 02/94	3580	
21 Saloon (L48_)	1.7 (L48E)	69	03/86 – 02/94	3380	
21 Saloon (L48_)	1.7 (L48E)	69	03/86 – 02/94	3381	
21 Saloon (L48_)	1.7 (L48E)	69	03/86 – 02/94	3431	
21 Saloon (L48_)	1.7 (L48E)	69	03/86 – 02/94	3503	
21 Saloon (L48_)	1.7 (L48E)	69	03/86 – 02/94	3580	
21 Saloon (L48_)	1.7 (L48M, L48F)	54	07/86 – 02/94	3380	
21 Saloon (L48_)	1.7 (L48M, L48F)	54	07/86 – 02/94	3381	
21 Saloon (L48_)	1.7 (L48M, L48F)	54	07/86 – 02/94	3431	
21 Saloon (L48_)	1.7 (L48M, L48F)	54	07/86 – 02/94	3503	
21 Saloon (L48_)	1.7 (L48M, L48F)	54	07/86 – 02/94	3580	
21 Saloon (L48_)	1.7 (L48N)	64	06/87 – 04/89	3380	
21 Saloon (L48_)	1.7 (L48N)	64	06/87 – 04/89	3381	
21 Saloon (L48_)	1.7 (L48N)	64	06/87 – 04/89	3431	
21 Saloon (L48_)	1.7 (L48N)	64	06/87 – 04/89	3503	
21 Saloon (L48_)	1.7 (L48N)	64	06/87 – 04/89	3580	
21 Saloon (L48_)	1.9 D (L48H, L48I)	47	08/89 – 10/93	3380	
21 Saloon (L48_)	1.9 D (L48H, L48I)	47	08/89 – 10/93	3381	
21 Saloon (L48_)	1.9 D (L48H, L48I)	47	08/89 – 10/93	3431	
21 Saloon (L48_)	1.9 D (L48H, L48I)	47	08/89 – 10/93	3503	
21 Saloon (L48_)	1.9 D (L48H, L48I)	47	08/89 – 10/93	3580	
21 Saloon (L48_)	2.0 (L483)	85	03/86 – 12/88		3333
21 Saloon (L48_)	2.0 (L483)	85	03/86 – 12/88	3428	
21 Saloon (L48_)	2.0 (L483)	85	03/86 – 12/88		3596
21 Saloon (L48_)	2.0 (L489)	75	03/86 – 10/93		3333
21 Saloon (L48_)	2.0 (L489)	75	03/86 – 10/93	3428	
21 Saloon (L48_)	2.0 (L489)	75	03/86 – 10/93		3596
21 Saloon (L48_)	2.0 (L48C)	88	03/86 – 12/93		3333
21 Saloon (L48_)	2.0 (L48C)	88	03/86 – 12/93	3428	
21 Saloon (L48_)	2.0 (L48C)	88	03/86 – 12/93		3596

MAKE & MODEL		KW	YEAR		
RENAULT					
21 Saloon (L48_)	2.0 (L48R)	99	02/90 – 06/94		3333
21 Saloon (L48_)	2.0 (L48R)	99	02/90 – 06/94	3428	
21 Saloon (L48_)	2.0 (L48R)	99	02/90 – 06/94		3596
21 Saloon (L48_)	2.0 4x4 (L48R)	99	12/89 – 02/94		3333
21 Saloon (L48_)	2.0 4x4 (L48R)	99	12/89 – 02/94	3428	
21 Saloon (L48_)	2.0 4x4 (L48R)	99	12/89 – 02/94		3596
21 Saloon (L48_)	2.0 Turbo (L485)	129	04/87 – 03/90		3333
21 Saloon (L48_)	2.0 Turbo (L485)	129	04/87 – 03/90	3428	
21 Saloon (L48_)	2.0 Turbo (L485)	129	04/87 – 03/90		3596
21 Saloon (L48_)	2.0 Turbo (L48L)	119	02/90 – 10/92		3333
21 Saloon (L48_)	2.0 Turbo (L48L)	119	02/90 – 10/92	3428	
21 Saloon (L48_)	2.0 Turbo (L48L)	119	02/90 – 10/92		3596
21 Saloon (L48_)	2.0 Turbo 4x4	129	08/89 – 10/93		3333
21 Saloon (L48_)	2.0 Turbo 4x4	129	08/89 – 10/93	3428	
21 Saloon (L48_)	2.0 Turbo 4x4	129	08/89 – 10/93		3596
21 Saloon (L48_)	2.0 Turbo 4x4 (L48L)	119	02/90 – 10/92		3333
21 Saloon (L48_)	2.0 Turbo 4x4 (L48L)	119	02/90 – 10/92	3428	
21 Saloon (L48_)	2.0 Turbo 4x4 (L48L)	119	02/90 – 10/92		3596
21 Saloon (L48_)	2.1 D (L480)	51	10/92 – 06/94		3333
21 Saloon (L48_)	2.1 D (L480)	51	10/92 – 06/94	3428	
21 Saloon (L48_)	2.1 D (L480)	51	10/92 – 06/94		3596
21 Saloon (L48_)	2.1 D (L486)	48	03/86 – 12/89		3333
21 Saloon (L48_)	2.1 D (L486)	48	03/86 – 12/89	3428	
21 Saloon (L48_)	2.1 D (L486)	48	03/86 – 12/89		3596
21 Saloon (L48_)	2.1 D (L48V, L48O)	53	05/89 – 06/94		3333
21 Saloon (L48_)	2.1 D (L48V, L48O)	53	05/89 – 06/94	3428	
21 Saloon (L48_)	2.1 D (L48V, L48O)	53	05/89 – 06/94		3596
21 Saloon (L48_)	2.1 TD	50	04/86 – 06/89		3333
21 Saloon (L48_)	2.1 TD	50	04/86 – 06/89	3428	
21 Saloon (L48_)	2.1 TD	50	04/86 – 06/89		3596
21 Saloon (L48_)	2.1 Turbo-D (L48A, L48W, L487, L488)	65	03/86 – 06/94		3333
21 Saloon (L48_)	2.1 Turbo-D (L48A, L48W, L487, L488)	65	03/86 – 06/94	3428	
21 Saloon (L48_)	2.1 Turbo-D (L48A, L48W, L487, L488)	65	03/86 – 06/94		3596
21 Saloon (L48_)	2.2 (L48K)	79	07/86 – 02/94		3333
21 Saloon (L48_)	2.2 (L48K)	79	07/86 – 02/94	3428	
21 Saloon (L48_)	2.2 (L48K)	79	07/86 – 02/94		3596
21 Saloon (L48_)	2.2 4x4 (L48K)	79	07/90 – 02/94		3333
21 Saloon (L48_)	2.2 4x4 (L48K)	79	07/90 – 02/94	3428	
21 Saloon (L48_)	2.2 4x4 (L48K)	79	07/90 – 02/94		3596
25 (B29_)	20	88	03/87 – 12/93		3333
25 (B29_)	20	88	03/87 – 12/93	3431	
25 (B29_)	20	88	03/87 – 12/93	3503	
25 (B29_)	2.0 (B297)	74	04/84 – 12/92		3333
25 (B29_)	2.0 (B297)	74	04/84 – 12/92	3431	
25 (B29_)	2.0 (B297)	74	04/84 – 12/92	3503	
25 (B29_)	2.0 12V	103	06/88 – 12/93		3333
25 (B29_)	2.0 12V	103	06/88 – 12/93	3431	
25 (B29_)	2.0 12V	103	06/88 – 12/93	3503	
25 (B29_)	2.0 12V (B294)	99	06/89 – 12/92		3333
25 (B29_)	2.0 12V (B294)	99	06/89 – 12/92	3431	
25 (B29_)	2.0 12V (B294)	99	06/89 – 12/92	3503	
25 (B29_)	2.1 Diesel (B296)	46	04/84 – 05/89		3333
25 (B29_)	2.1 Diesel (B296)	46	04/84 – 05/89	3431	
25 (B29_)	2.1 Diesel (B296)	46	04/84 – 05/89	3503	
25 (B29_)	2.1 Diesel (B296)	51	06/89 – 12/92		3333
25 (B29_)	2.1 Diesel (B296)	51	06/89 – 12/92	3431	
25 (B29_)	2.1 Diesel (B296)	51	06/89 – 12/92	3503	
25 (B29_)	2.1 Turbo-D FWD (B290, B29W)	63	04/84 – 12/92		3333
25 (B29_)	2.1 Turbo-D FWD (B290, B29W)	63	04/84 – 12/92	3431	
25 (B29_)	2.1 Turbo-D FWD (B290, B29W)	63	04/84 – 12/92	3503	
25 (B29_)	2.2 (B29)	76	11/85 – 03/89		3333
25 (B29_)	2.2 (B29)	76	11/85 – 03/89	3431	
25 (B29_)	2.2 (B29)	76	11/85 – 03/89	3503	
25 (B29_)	2.2 (B29B)	79	09/86 – 12/92		3333
25 (B29_)	2.2 (B29B)	79	09/86 – 12/92	3431	
25 (B29_)	2.2 (B29B)	79	09/86 – 12/92	3503	
25 (B29_)	2.2 (B29B)	79	09/86 – 12/92	3539	
25 (B29_)	2.2 (B29B)	79	09/86 – 12/92	3546	
25 (B29_)	2.2 (B29E)	89	04/84 – 12/89		3333
25 (B29_)	2.2 (B29E)	89	04/84 – 12/89	3431	
25 (B29_)	2.2 (B29E)	89	04/84 – 12/89	3503	

MAKE & MODEL   		KW	YEAR		
RENAULT					
25 (B29_)	2.2 (B29E)	89	04/84 – 12/89	3539	
25 (B29_)	2.2 (B29E)	89	04/84 – 12/89	3546	
25 (B29_)	2.2 (B29E)	91	04/84 – 12/89		3333
25 (B29_)	2.2 (B29E)	91	04/84 – 12/89	3431	
25 (B29_)	2.2 (B29E)	91	04/84 – 12/89	3503	
25 (B29_)	2.2 (B29E)	91	04/84 – 12/89	3539	
25 (B29_)	2.2 (B29E)	91	04/84 – 12/89	3546	
25 (B29_)	2.4 V6 Turbo (B295)	133	10/84 – 05/90		3333
25 (B29_)	2.4 V6 Turbo (B295)	133	10/84 – 05/90	3539	
25 (B29_)	2.4 V6 Turbo (B295)	133	10/84 – 05/90	3546	
25 (B29_)	2.5 V6 Turbo (B29G)	151	01/90 – 12/92		3333
25 (B29_)	2.5 V6 Turbo (B29G)	151	01/90 – 12/92	3539	
25 (B29_)	2.5 V6 Turbo (B29G)	151	01/90 – 12/92	3546	
25 (B29_)	2.7 V6 Injection (B298)	104	04/84 – 08/89		3333
25 (B29_)	2.7 V6 Injection (B298)	104	04/84 – 08/89	3539	
25 (B29_)	2.7 V6 Injection (B298)	104	04/84 – 08/89	3546	
25 (B29_)	2.8 V6 (B293)	115	06/87 – 02/90		3333
25 (B29_)	2.8 V6 (B293)	115	06/87 – 02/90	3539	
25 (B29_)	2.8 V6 (B293)	115	06/87 – 02/90	3546	
25 (B29_)	2.8 V6 Injection (B29A)	100	06/86 – 02/88		3333
25 (B29_)	2.8 V6 Injection (B29A)	100	06/86 – 02/88	3539	
25 (B29_)	2.8 V6 Injection (B29A)	100	06/86 – 02/88	3546	
25 (B29_)	2.8 V6 Injection (B29F)	110	06/87 – 12/92		3333
25 (B29_)	2.8 V6 Injection (B29F)	110	06/87 – 12/92	3539	
25 (B29_)	2.8 V6 Injection (B29F)	110	06/87 – 12/92	3546	
30 (127_)	2.1 Turbo-D (1270)	63	02/82 – 03/86	3380	
30 (127_)	2.1 Turbo-D (1270)	63	02/82 – 03/86	3381	
30 (127_)	2.1 Turbo-D (1270)	63	02/82 – 03/86	3431	
30 (127_)	2.1 Turbo-D (1270)	63	02/82 – 03/86	3503	
30 (127_)	2.1 Turbo-D (1270)	63	02/82 – 03/86	3580	
30 (127_)	2.6 (1273)	92	08/76 – 08/78		3333
30 (127_)	2.6 (1273)	96	02/75 – 07/76		3333
30 (127_)	2.6 TS (1275)	94	07/78 – 01/84		3333
30 (127_)	2.6 TX (1278)	105	10/78 – 12/83		3333
4 (112_)	10	31	12/85 – 06/93	3329	
4 (112_)	10	31	12/85 – 06/93	3542	
4 (112_)	11	32	06/86 – 06/90	3329	
4 (112_)	11	32	06/86 – 06/90	3542	
4 (112_)	0.8 (1123)	21	10/83 – 10/88	3329	
4 (112_)	0.8 (1123)	21	10/83 – 10/88	3374	
4 (112_)	0.8 (1123)	21	10/83 – 10/88	3542	
4 (112_)	0.8 (1123)	25	09/71 – 12/88	3329	
4 (112_)	0.8 (1123)	25	09/71 – 12/88	3374	
4 (112_)	0.8 (1123)	25	09/71 – 12/88	3542	
4 (112_)	1.0	31	12/85 – 06/93	3374	
4 (112_)	1.0 (112C)	25	06/87 – 06/93	3329	
4 (112_)	1.0 (112C)	25	06/87 – 06/93	3374	
4 (112_)	1.0 (112C)	25	06/87 – 06/93	3542	
4 (112_)	1.1	32	06/86 – 06/90	3374	
4 (112_)	1.1 (1128, S128)	25	06/78 – 06/90	3329	
4 (112_)	1.1 (1128, S128)	25	06/78 – 06/90	3374	
4 (112_)	1.1 (1128, S128)	25	06/78 – 06/90	3542	
4 Box (R21_, R23_)	08	19	09/71 – 08/82	3329	
4 Box (R21_, R23_)	08	19	09/71 – 08/82	3374	
4 Box (R21_, R23_)	08	19	09/71 – 08/82	3542	
4 Box (R21_, R23_)	10	25	06/87 – 12/93	3329	
4 Box (R21_, R23_)	10	25	06/87 – 12/93	3542	
4 Box (R21_, R23_)	0.8 (2106)	25	09/66 – 12/88	3329	
4 Box (R21_, R23_)	0.8 (2106)	25	09/66 – 12/88	3374	
4 Box (R21_, R23_)	0.8 (2106)	25	09/66 – 12/88	3542	
4 Box (R21_, R23_)	0.8 (2391)	21	04/83 – 07/89	3329	
4 Box (R21_, R23_)	0.8 (2391)	21	04/83 – 07/89	3374	
4 Box (R21_, R23_)	0.8 (2391)	21	04/83 – 07/89	3542	
4 Box (R21_, R23_)	1.0	25	06/87 – 12/93	3374	
4 Box (R21_, R23_)	1.1 (239B)	26	07/82 – 05/89	3329	
4 Box (R21_, R23_)	1.1 (239B)	26	07/82 – 05/89	3374	
4 Box (R21_, R23_)	1.1 (239B)	26	07/82 – 05/89	3542	
5 (122_)	14	81	06/84 – 01/85	3329/1	
5 (122_)	14	81	06/84 – 01/85		3333
5 (122_)	14	81	06/84 – 01/85	3348	
5 (122_)	14	81	06/84 – 01/85	3349	

MAKE & MODEL		KW	YEAR		
RENAULT					
5 (122_)	1.0 (1222, 1392)	32	01/72 – 12/85	3329	
5 (122_)	1.0 (1222, 1392)	32	01/72 – 12/85	3374	
5 (122_)	1.0 (1222, 1392)	32	01/72 – 12/85	3542	
5 (122_)	1.1 (1227, 1397)	33	09/80 – 12/85	3329	
5 (122_)	1.1 (1227, 1397)	33	09/80 – 12/85	3374	
5 (122_)	1.1 (1227, 1397)	33	09/80 – 12/85	3542	
5 (122_)	1.3 (1224, 1394)	47	09/75 – 09/84	3329	
5 (122_)	1.3 (1224, 1394)	47	09/75 – 09/84	3374	
5 (122_)	1.3 (1224, 1394)	47	09/75 – 09/84	3542	
5 (122_)	1.3 (1225)	31	09/76 – 09/79	3329	
5 (122_)	1.3 (1225)	31	09/76 – 09/79	3374	
5 (122_)	1.3 (1225)	31	09/76 – 09/79	3542	
5 (122_)	1.3 (1225, 1395)	33	06/79 – 09/84	3329	
5 (122_)	1.3 (1225, 1395)	33	06/79 – 09/84	3374	
5 (122_)	1.3 (1225, 1395)	33	06/79 – 09/84	3542	
5 (122_)	1.3 Automatik (1225, 1395)	40	06/79 – 09/84	3329	
5 (122_)	1.3 Automatik (1225, 1395)	40	06/79 – 09/84	3374	
5 (122_)	1.3 Automatik (1225, 1395)	40	06/79 – 09/84	3542	
5 (122_)	1.4 (1229, 1399)	46	01/82 – 12/85	3329	
5 (122_)	1.4 (1229, 1399)	46	01/82 – 12/85	3374	
5 (122_)	1.4 (1229, 1399)	46	01/82 – 12/85	3542	
5 (122_)	1.4 Alpine A5 (1223)	68	09/77 – 09/81	3329	
5 (122_)	1.4 Alpine A5 (1223)	68	09/77 – 09/81	3374	
5 (122_)	1.4 Alpine A5 (1223)	68	09/77 – 09/81	3542	
5 (122_)	1.4 Alpine Turbo (122B)	79	10/81 – 01/85	3329/1	
5 (122_)	1.4 Alpine Turbo (122B)	79	10/81 – 01/85		3333
5 (122_)	1.4 Alpine Turbo (122B)	79	10/81 – 01/85	3348	
5 (122_)	1.4 Alpine Turbo (122B)	79	10/81 – 01/85	3349	
5 (122_)	1.4 Automatik (1229, 1399)	43	06/82 – 09/84	3329	
5 (122_)	1.4 Automatik (1229, 1399)	43	06/82 – 09/84	3374	
5 (122_)	1.4 Automatik (1229, 1399)	43	06/82 – 09/84	3542	
9 (L42_)	1.1 (L421)	35	09/81 – 05/87	3380	
9 (L42_)	1.1 (L421)	35	09/81 – 05/87	3381	
9 (L42_)	1.1 (L421)	35	09/81 – 05/87	3431	
9 (L42_)	1.1 (L421)	35	09/81 – 05/87	3503	
9 (L42_)	1.1 (L421)	35	09/81 – 05/87	3580	
9 (L42_)	1.2 (L42S)	40	09/85 – 12/88	3380	
9 (L42_)	1.2 (L42S)	40	09/85 – 12/88	3381	
9 (L42_)	1.2 (L42S)	40	09/85 – 12/88	3431	
9 (L42_)	1.2 (L42S)	40	09/85 – 12/88	3503	
9 (L42_)	1.2 (L42S)	40	09/85 – 12/88	3580	
9 (L42_)	1.4 (L422, L42C)	44	12/81 – 12/88	3380	
9 (L42_)	1.4 (L422, L42C)	44	12/81 – 12/88	3381	
9 (L42_)	1.4 (L422, L42C)	44	12/81 – 12/88	3431	
9 (L42_)	1.4 (L422, L42C)	44	12/81 – 12/88	3503	
9 (L42_)	1.4 (L422, L42C)	44	12/81 – 12/88	3580	
9 (L42_)	1.4 (L423)	53	09/81 – 12/85	3380	
9 (L42_)	1.4 (L423)	53	09/81 – 12/85	3381	
9 (L42_)	1.4 (L423)	53	09/81 – 12/85	3431	
9 (L42_)	1.4 (L423)	53	09/81 – 12/85	3503	
9 (L42_)	1.4 (L423)	53	09/81 – 12/85	3580	
9 (L42_)	1.4 (L423, L42R)	49	09/85 – 12/88	3380	
9 (L42_)	1.4 (L423, L42R)	49	09/85 – 12/88	3381	
9 (L42_)	1.4 (L423, L42R)	49	09/85 – 12/88	3431	
9 (L42_)	1.4 (L423, L42R)	49	09/85 – 12/88	3503	
9 (L42_)	1.4 (L423, L42R)	49	09/85 – 12/88	3580	
9 (L42_)	1.4 Automatik (L423)	50	09/81 – 12/85	3380	
9 (L42_)	1.4 Automatik (L423)	50	09/81 – 12/85	3381	
9 (L42_)	1.4 Automatik (L423)	50	09/81 – 12/85	3431	
9 (L42_)	1.4 Automatik (L423)	50	09/81 – 12/85	3503	
9 (L42_)	1.4 Automatik (L423)	50	09/81 – 12/85	3580	
9 (L42_)	1.4 Turbo	85	12/86 – 12/89	3380	
9 (L42_)	1.4 Turbo	85	12/86 – 12/89	3381	
9 (L42_)	1.4 Turbo	85	12/86 – 12/89	3431	
9 (L42_)	1.4 Turbo	85	12/86 – 12/89		3496
9 (L42_)	1.4 Turbo	85	12/86 – 12/89	3503	
9 (L42_)	1.4 Turbo	85	12/86 – 12/89	3580	
9 (L42_)	1.4 Turbo (L425)	77	04/84 – 12/86	3380	
9 (L42_)	1.4 Turbo (L425)	77	04/84 – 12/86	3381	
9 (L42_)	1.4 Turbo (L425)	77	04/84 – 12/86	3431	
9 (L42_)	1.4 Turbo (L425)	77	04/84 – 12/86		3496

MAKE & MODEL   		KW	YEAR		
RENAULT					
9 (L42_)	1.4 Turbo (L425)	77	04/84 – 12/86	3503	
9 (L42_)	1.4 Turbo (L425)	77	04/84 – 12/86	3580	
9 (L42_)	1.6 D (L424)	40	10/82 – 12/88	3380	
9 (L42_)	1.6 D (L424)	40	10/82 – 12/88	3381	
9 (L42_)	1.6 D (L424)	40	10/82 – 12/88	3431	
9 (L42_)	1.6 D (L424)	40	10/82 – 12/88	3503	
9 (L42_)	1.6 D (L424)	40	10/82 – 12/88	3580	
9 (L42_)	1.7 (L426)	59	09/84 – 12/89	3380	
9 (L42_)	1.7 (L426)	59	09/84 – 12/89	3381	
9 (L42_)	1.7 (L426)	59	09/84 – 12/89	3431	
9 (L42_)	1.7 (L426)	59	09/84 – 12/89	3503	
9 (L42_)	1.7 (L426)	59	09/84 – 12/89	3580	
9 (L42_)	1.7 (L42E)	69	06/87 – 12/88	3380	
9 (L42_)	1.7 (L42E)	69	06/87 – 12/88	3381	
9 (L42_)	1.7 (L42E)	69	06/87 – 12/88	3431	
9 (L42_)	1.7 (L42E)	69	06/87 – 12/88	3503	
9 (L42_)	1.7 (L42E)	69	06/87 – 12/88	3580	
9 (L42_)	1.7 (L42F)	54	10/86 – 12/88	3380	
9 (L42_)	1.7 (L42F)	54	10/86 – 12/88	3381	
9 (L42_)	1.7 (L42F)	54	10/86 – 12/88	3431	
9 (L42_)	1.7 (L42F)	54	10/86 – 12/88	3503	
9 (L42_)	1.7 (L42F)	54	10/86 – 12/88	3580	
9 (L42_)	1.7 (L42L)	55	10/86 – 12/88	3380	
9 (L42_)	1.7 (L42L)	55	10/86 – 12/88	3381	
9 (L42_)	1.7 (L42L)	55	10/86 – 12/88	3431	
9 (L42_)	1.7 (L42L)	55	10/86 – 12/88	3503	
9 (L42_)	1.7 (L42L)	55	10/86 – 12/88	3580	
9 (L42_)	1.7 (L42N)	65	10/86 – 12/88	3380	
9 (L42_)	1.7 (L42N)	65	10/86 – 12/88	3381	
9 (L42_)	1.7 (L42N)	65	10/86 – 12/88	3431	
9 (L42_)	1.7 (L42N)	65	10/86 – 12/88	3503	
9 (L42_)	1.7 (L42N)	65	10/86 – 12/88	3580	
ALASKAN	2.3 dCi 190 4x4 (U3MD)	140	09.17 -	4307	
AVANTIME (DE0_)	2.0 16V Turbo (DE0U, DE0V)	120	11/01 – 05/03		3529
AVANTIME (DE0_)	2.0 16V Turbo (DE0U, DE0V)	120	11/01 – 05/03		3529/2
AVANTIME (DE0_)	2.2 dCi (DE01)	110	05/02 – 05/03		3529
AVANTIME (DE0_)	2.2 dCi (DE01)	110	05/02 – 05/03		3529/2
AVANTIME (DE0_)	3.0 V6 (DE04, DE0T)	152	09/01 – 05/03		3529
AVANTIME (DE0_)	3.0 V6 (DE04, DE0T)	152	09/01 – 05/03		3529/2
B Kombi Van 70		53	01/83 – 12/90	3537	
B Kombi Van 90		68	04/86 – 09/90	3537	
B Kombi Van 90		71	08/90 – 01/92	3537	
B Platform sasi 70		53	01/83 – 12/90	3537	
B Platform sasi 90		71	08/90 – 01/92	3537	
B Platform sasl 90		68	04/86 – 09/90	3537	
CAPTUR (J5_)	0.9 TCe 90	66	06/13 -	3983	
CAPTUR (J5_)	1.2 T	85	06/15 -	3964/1	
CAPTUR (J5_)	1.2 TCe 120	87	01/16 -	3964/1	
CAPTUR (J5_)	1.2 TCe 120	88	06/13 -	3964/1	
CAPTUR (J5_)	1.5 dCi 110	81	01/15 -	3964/1	
CAPTUR (J5_)	1.5 dCi 90	66	06/13 -	3964/1	
CLIO IV Grandtour (K98)	0.9 TCe 90 (H4B 400)	66	01/13 -	4253	
CLIO IV Grandtour (K98)	1.2 16V (D4F 740)	54	01/13 -	4253	
CLIO IV Grandtour (K98)	1.2 TCe 120 (H5F 403)	88	03/13 -	4253	
CLIO IV Grandtour (K98)	1.2 TCe 120 (H5F 412)	87	01/16 -	4253	
CLIO IV Grandtour (K98)	1.5 dCi 75 (K9K 612)	55	01/13 -	4253	
CLIO IV Grandtour (K98)	1.5 dCi 90 (K9K 608)	66	01/13 -	4253	
CLIO (B/C57_, 5/357_)	1.1 (C1E 700)	49	04/92 – 08/92	3372	
CLIO (B/C57_, 5/357_)	1.1 (C1E 700)	49	04/92 – 08/92	3599	
CLIO (B/C57_, 5/357_)	1.2 (E5F 710)	60	05/90 – 03/96	3372	
CLIO (B/C57_, 5/357_)	1.2 (E5F 710)	60	05/90 – 03/96	3599	
CLIO (B/C57_, 5/357_)	1.2 (E7F 700)	58	05/90 – 09/98	3372	
CLIO (B/C57_, 5/357_)	1.2 (E7F 700)	58	05/90 – 09/98	3599	
CLIO (B/C57_, 5/357_)	1.2 (E7F 708)	58	05/90 – 09/98	3372	
CLIO (B/C57_, 5/357_)	1.2 (E7F 708)	58	05/90 – 09/98	3599	
CLIO (B/C57_, 5/357_)	1.2 (E7F 750)	58	05/90 – 09/98	3372	
CLIO (B/C57_, 5/357_)	1.2 (E7F 750)	58	05/90 – 09/98	3599	
CLIO (B/C57_, 5/357_)	1.2 (B/C57R) (E7F 706)	54	01/91 – 06/96	3372	
CLIO (B/C57_, 5/357_)	1.2 (B/C57R) (E7F 706)	54	01/91 – 06/96	3599	
CLIO (B/C57_, 5/357_)	1.4 (E6J 712)	78	05/90 – 02/98	3372	
CLIO (B/C57_, 5/357_)	1.4 (E6J 712)	78	05/90 – 02/98	3599	

MAKE & MODEL   		KW	YEAR		
RENAULT					
CLIO (B/C57_, 5/357_)	1.4 (E6J 713)	78	05/90 – 02/98	3372	
CLIO (B/C57_, 5/357_)	1.4 (E6J 713)	78	05/90 – 02/98	3599	
CLIO (B/C57_, 5/357_)	1.4 (E6J 760)	78	05/90 – 02/98	3372	
CLIO (B/C57_, 5/357_)	1.4 (E6J 760)	78	05/90 – 02/98	3599	
CLIO (B/C57_, 5/357_)	1.4 (E7J 601)	79	01/91 – 09/98	3372	
CLIO (B/C57_, 5/357_)	1.4 (E7J 601)	79	01/91 – 09/98	3599	
CLIO (B/C57_, 5/357_)	1.4 (E7J 710)	80	01/91 – 09/98	3372	
CLIO (B/C57_, 5/357_)	1.4 (E7J 710)	80	01/91 – 09/98	3599	
CLIO (B/C57_, 5/357_)	1.4 (E7J 718)	79	01/91 – 09/98	3372	
CLIO (B/C57_, 5/357_)	1.4 (E7J 718)	79	01/91 – 09/98	3599	
CLIO (B/C57_, 5/357_)	1.4 (E7J 719)	79	01/91 – 09/98	3372	
CLIO (B/C57_, 5/357_)	1.4 (E7J 719)	79	01/91 – 09/98	3599	
CLIO (B/C57_, 5/357_)	1.4 (E7J 754)	79	01/91 – 09/98	3372	
CLIO (B/C57_, 5/357_)	1.4 (E7J 754)	79	01/91 – 09/98	3599	
CLIO (B/C57_, 5/357_)	1.4 (E7J 756)	75	01/91 – 09/98	3372	
CLIO (B/C57_, 5/357_)	1.4 (E7J 756)	75	01/91 – 09/98	3599	
CLIO (B/C57_, 5/357_)	1.4 (E7J 757)	75	01/91 – 09/98	3372	
CLIO (B/C57_, 5/357_)	1.4 (E7J 757)	75	01/91 – 09/98	3599	
CLIO (B/C57_, 5/357_)	1.7 (F2N 770)	92	01/91 – 12/93	3372	
CLIO (B/C57_, 5/357_)	1.7 (F2N 770)	92	01/91 – 12/93	3599	
CLIO (B/C57_, 5/357_)	1.8 (F3P 710)	88	01/91 – 09/98	3372	
CLIO (B/C57_, 5/357_)	1.8 (F3P 710)	88	01/91 – 09/98	3599	
CLIO (B/C57_, 5/357_)	1.8 (F3P 710)	95	01/91 – 09/98	3372	
CLIO (B/C57_, 5/357_)	1.8 (F3P 710)	95	01/91 – 09/98	3599	
CLIO (B/C57_, 5/357_)	1.8 (F3P 714)	88	01/91 – 09/98	3372	
CLIO (B/C57_, 5/357_)	1.8 (F3P 714)	88	01/91 – 09/98	3599	
CLIO (B/C57_, 5/357_)	1.9 D (F8Q 730)	64	01/91 – 09/98	3372	
CLIO (B/C57_, 5/357_)	1.9 D (F8Q 730)	64	01/91 – 09/98	3599	
CLIO (B/C57_, 5/357_)	1.9 D (F8Q 732)	64	01/91 – 09/98	3372	
CLIO (B/C57_, 5/357_)	1.9 D (F8Q 732)	64	01/91 – 09/98	3599	
CLIO Grandtour (KR0/1_)	1.2 16V	76	09/10 -		3529/2
CLIO Grandtour (KR0/1_)	1.2 16V	76	09/10 -	3983	
CLIO Grandtour (KR0/1_)	1.2 16V (KR02, KR0J)	55	02/08 -		3529/2
CLIO Grandtour (KR0/1_)	1.2 16V (KR02, KR0J)	55	02/08 -	3983	
CLIO Grandtour (KR0/1_)	1.2 16V (KR0E)	58	02/08 -		3529/2
CLIO Grandtour (KR0/1_)	1.2 16V (KR0E)	58	02/08 -	3983	
CLIO Grandtour (KR0/1_)	1.2 16V (KR0P)	74	02/08 -		3529/2
CLIO Grandtour (KR0/1_)	1.2 16V (KR0P)	74	02/08 -	3983	
CLIO Grandtour (KR0/1_)	1.2 16V Hi-Flex (KR0S)	55	07/08 -		3529/2
CLIO Grandtour (KR0/1_)	1.2 16V Hi-Flex (KR0S)	55	07/08 -	3983	
CLIO Grandtour (KR0/1_)	1.4 16V	72	02/10 -		3529/2
CLIO Grandtour (KR0/1_)	1.5 dCi	48	02/10 -		3529/2
CLIO Grandtour (KR0/1_)	1.5 dCi	55	08/10 -		3529/2
CLIO Grandtour (KR0/1_)	1.5 dCi	65	08/10 -		3529/2
CLIO Grandtour (KR0/1_)	1.5 dCi (KR0F)	63	02/08 -		3529/2
CLIO Grandtour (KR0/1_)	1.5 dCi (KR0G)	50	02/08 -		3529/2
CLIO Grandtour (KR0/1_)	1.5 dCi (KR0H)	78	02/08 -		3529/2
CLIO Grandtour (KR0/1_)	1.5 dCi (KR1C, KR1N)	76	02/08 -		3529/2
CLIO Grandtour (KR0/1_)	1.6 16V (KR0B)	82	02/08 -		3529/2
CLIO Grandtour (KR0/1_)	1.6 16V (KR10)	94	11/08 -		3529/2
CLIO Grandtour (KR0/1_)	1.5 dCi	48	02/10 -	3983	
CLIO Grandtour (KR0/1_)	1.5 dCi	55	08/10 -	3983	
CLIO Grandtour (KR0/1_)	1.5 dCi	65	08/10 -	3983	
CLIO Grandtour (KR0/1_)	1.4 16V	72	02/10 -	3983	
CLIO Grandtour (KR0/1_)	1.5 dCi (KR0F)	63	02/08 -	3983	
CLIO Grandtour (KR0/1_)	1.5 dCi (KR0G)	50	02/08 -	3983	
CLIO Grandtour (KR0/1_)	1.5 dCi (KR0H)	78	02/08 -	3983	
CLIO Grandtour (KR0/1_)	1.5 dCi (KR1C, KR1N)	76	02/08 -	3983	
CLIO Grandtour (KR0/1_)	1.6 16V (KR0B)	82	02/08 -	3983	
CLIO Grandtour (KR0/1_)	1.6 16V (KR10)	94	11/08 -	3983	
CLIO I (B/C57_, 5/357_)	11	34	01/91 – 09/98	3380	
CLIO I (B/C57_, 5/357_)	11	34	01/91 – 09/98	3381	
CLIO I (B/C57_, 5/357_)	11	34	01/91 – 09/98	3431	
CLIO I (B/C57_, 5/357_)	11	34	01/91 – 09/98	3495	
CLIO I (B/C57_, 5/357_)	11	34	01/91 – 09/98	3503	
CLIO I (B/C57_, 5/357_)	11	34	01/91 – 09/98	3580	
CLIO I (B/C57_, 5/357_)	11	36	04/92 – 08/92	3380	
CLIO I (B/C57_, 5/357_)	11	36	04/92 – 08/92	3381	
CLIO I (B/C57_, 5/357_)	11	36	04/92 – 08/92	3431	
CLIO I (B/C57_, 5/357_)	11	36	04/92 – 08/92	3495	
CLIO I (B/C57_, 5/357_)	11	36	04/92 – 08/92	3503	

MAKE & MODEL		KW	YEAR		
RENAULT					
CLIO I (B/C57_, 5/357_)	11	36	04/92 – 08/92	3580	
CLIO I (B/C57_, 5/357_)	14	57	05/90 – 02/98	3380	
CLIO I (B/C57_, 5/357_)	14	57	05/90 – 02/98	3381	
CLIO I (B/C57_, 5/357_)	14	57	05/90 – 02/98	3431	
CLIO I (B/C57_, 5/357_)	14	57	05/90 – 02/98		3496
CLIO I (B/C57_, 5/357_)	14	57	05/90 – 02/98	3503	
CLIO I (B/C57_, 5/357_)	14	57	05/90 – 02/98	3580	
CLIO I (B/C57_, 5/357_)	14	59	01/91 – 09/98	3380	
CLIO I (B/C57_, 5/357_)	14	59	01/91 – 09/98	3381	
CLIO I (B/C57_, 5/357_)	14	59	01/91 – 09/98	3431	
CLIO I (B/C57_, 5/357_)	14	59	01/91 – 09/98		3496
CLIO I (B/C57_, 5/357_)	14	59	01/91 – 09/98	3503	
CLIO I (B/C57_, 5/357_)	14	59	01/91 – 09/98	3580	
CLIO I (B/C57_, 5/357_)	18	66	08/90 – 04/96	3431	
CLIO I (B/C57_, 5/357_)	18	66	08/90 – 04/96		3496
CLIO I (B/C57_, 5/357_)	18	66	08/90 – 04/96	3503	
CLIO I (B/C57_, 5/357_)	18	70	01/91 – 09/98	3431	
CLIO I (B/C57_, 5/357_)	18	70	01/91 – 09/98		3496
CLIO I (B/C57_, 5/357_)	18	70	01/91 – 09/98	3503	
CLIO I (B/C57_, 5/357_)	1.2 (5/357Y, 5/357K)	40	01/96 – 09/98	3380	
CLIO I (B/C57_, 5/357_)	1.2 (5/357Y, 5/357K)	40	01/96 – 09/98	3381	
CLIO I (B/C57_, 5/357_)	1.2 (5/357Y, 5/357K)	40	01/96 – 09/98	3431	
CLIO I (B/C57_, 5/357_)	1.2 (5/357Y, 5/357K)	40	01/96 – 09/98		3496
CLIO I (B/C57_, 5/357_)	1.2 (5/357Y, 5/357K)	40	01/96 – 09/98	3503	
CLIO I (B/C57_, 5/357_)	1.2 (5/357Y, 5/357K)	40	01/96 – 09/98	3580	
CLIO I (B/C57_, 5/357_)	1.2 (5/357Y, 5/357K)	43	01/96 – 09/98	3380	
CLIO I (B/C57_, 5/357_)	1.2 (5/357Y, 5/357K)	43	01/96 – 09/98	3381	
CLIO I (B/C57_, 5/357_)	1.2 (5/357Y, 5/357K)	43	01/96 – 09/98	3431	
CLIO I (B/C57_, 5/357_)	1.2 (5/357Y, 5/357K)	43	01/96 – 09/98		3496
CLIO I (B/C57_, 5/357_)	1.2 (5/357Y, 5/357K)	43	01/96 – 09/98	3503	
CLIO I (B/C57_, 5/357_)	1.2 (5/357Y, 5/357K)	43	01/96 – 09/98	3580	
CLIO I (B/C57_, 5/357_)	1.2 (B/C/S572)	44	05/90 – 03/96	3380	
CLIO I (B/C57_, 5/357_)	1.2 (B/C/S572)	44	05/90 – 03/96	3381	
CLIO I (B/C57_, 5/357_)	1.2 (B/C/S572)	44	05/90 – 03/96	3431	
CLIO I (B/C57_, 5/357_)	1.2 (B/C/S572)	44	05/90 – 03/96		3496
CLIO I (B/C57_, 5/357_)	1.2 (B/C/S572)	44	05/90 – 03/96	3503	
CLIO I (B/C57_, 5/357_)	1.2 (B/C/S572)	44	05/90 – 03/96	3580	
CLIO I (B/C57_, 5/357_)	1.2 (B/C/S577)	40	01/96 – 12/96	3380	
CLIO I (B/C57_, 5/357_)	1.2 (B/C/S577)	40	01/96 – 12/96	3381	
CLIO I (B/C57_, 5/357_)	1.2 (B/C/S577)	40	01/96 – 12/96	3431	
CLIO I (B/C57_, 5/357_)	1.2 (B/C/S577)	40	01/96 – 12/96		3496
CLIO I (B/C57_, 5/357_)	1.2 (B/C/S577)	40	01/96 – 12/96	3503	
CLIO I (B/C57_, 5/357_)	1.2 (B/C/S577)	40	01/96 – 12/96	3580	
CLIO I (B/C57_, 5/357_)	1.2 (B/C/S57A, B/C57S,5/357F, 5/357J, 5/357L,	43	05/90 – 09/98	3380	
CLIO I (B/C57_, 5/357_)	1.2 (B/C/S57A, B/C57S,5/357F, 5/357J, 5/357L,	43	05/90 – 09/98	3381	
CLIO I (B/C57_, 5/357_)	1.2 (B/C/S57A, B/C57S,5/357F, 5/357J,	43	05/90 – 09/98	3431	
CLIO I (B/C57_, 5/357_)	1.2 (B/C/S57A, B/C57S,5/357F, 5/357J, 5/357L,5/357R)	43	05/90 – 09/98		3496
CLIO I (B/C57_, 5/357_)	1.2 (B/C/S57A, B/C57S,5/357R)5/357F, 5/357J,	43	05/90 – 09/98	3503	
CLIO I (B/C57_, 5/357_)	1.2 (B/C/S57A, B/C57S,5/357R)5/357F, 5/357J,	43	05/90 – 09/98	3580	
CLIO I (B/C57_, 5/357_)	1.2 (B/C57R)	40	01/91 – 06/96	3380	
CLIO I (B/C57_, 5/357_)	1.2 (B/C57R)	40	01/91 – 06/96	3381	
CLIO I (B/C57_, 5/357_)	1.2 (B/C57R)	40	01/91 – 06/96	3431	
CLIO I (B/C57_, 5/357_)	1.2 (B/C57R)	40	01/91 – 06/96		3496
CLIO I (B/C57_, 5/357_)	1.2 (B/C57R)	40	01/91 – 06/96	3503	
CLIO I (B/C57_, 5/357_)	1.2 (B/C57R)	40	01/91 – 06/96	3580	
CLIO I (B/C57_, 5/357_)	1.4 (B/C57T, B/C57Y)	58	01/91 – 09/98	3380	
CLIO I (B/C57_, 5/357_)	1.4 (B/C57T, B/C57Y)	58	01/91 – 09/98	3381	
CLIO I (B/C57_, 5/357_)	1.4 (B/C57T, B/C57Y)	58	01/91 – 09/98	3431	
CLIO I (B/C57_, 5/357_)	1.4 (B/C57T, B/C57Y)	58	01/91 – 09/98		3496
CLIO I (B/C57_, 5/357_)	1.4 (B/C57T, B/C57Y)	58	01/91 – 09/98	3503	
CLIO I (B/C57_, 5/357_)	1.4 (B/C57T, B/C57Y)	58	01/91 – 09/98	3580	
CLIO I (B/C57_, 5/357_)	1.4 (B57J, C57J)	55	01/91 – 09/98	3380	
CLIO I (B/C57_, 5/357_)	1.4 (B57J, C57J)	55	01/91 – 09/98	3381	
CLIO I (B/C57_, 5/357_)	1.4 (B57J, C57J)	55	01/91 – 09/98	3431	
CLIO I (B/C57_, 5/357_)	1.4 (B57J, C57J)	55	01/91 – 09/98		3496
CLIO I (B/C57_, 5/357_)	1.4 (B57J, C57J)	55	01/91 – 09/98	3503	
CLIO I (B/C57_, 5/357_)	1.4 (B57J, C57J)	55	01/91 – 09/98	3580	
CLIO I (B/C57_, 5/357_)	1.7 (B/C574)	68	01/91 – 12/93	3431	
CLIO I (B/C57_, 5/357_)	1.7 (B/C574)	68	01/91 – 12/93		3496
CLIO I (B/C57_, 5/357_)	1.7 (B/C574)	68	01/91 – 12/93	3503	
CLIO I (B/C57_, 5/357_)	1.8 (B/C578)	66	08/94 – 09/98	3431	

MAKE & MODEL   		KW	YEAR		
RENAULT					
CLIO I (B/C57_, 5/357_)	1.8 (B/C578)	66	08/94 – 09/98		3496
CLIO I (B/C57_, 5/357_)	1.8 (B/C578)	66	08/94 – 09/98	3503	
CLIO I (B/C57_, 5/357_)	1.8 (B/C57C, B/C57U)	65	01/91 – 09/98	3431	
CLIO I (B/C57_, 5/357_)	1.8 (B/C57C, B/C57U)	65	01/91 – 09/98		3496
CLIO I (B/C57_, 5/357_)	1.8 (B/C57C, B/C57U)	65	01/91 – 09/98	3503	
CLIO I (B/C57_, 5/357_)	1.8 16V (C57D)	99	01/91 – 03/96	3431	
CLIO I (B/C57_, 5/357_)	1.8 16V (C57D)	99	01/91 – 03/96	3503	
CLIO I (B/C57_, 5/357_)	1.8 Rsi (B/C579)	80	01/93 – 08/95	3431	
CLIO I (B/C57_, 5/357_)	1.8 Rsi (B/C579)	80	01/93 – 08/95		3496
CLIO I (B/C57_, 5/357_)	1.8 Rsi (B/C579)	80	01/93 – 08/95	3503	
CLIO I (B/C57_, 5/357_)	1.8 Rsi (B/C57H)	79	08/95 – 09/98	3431	
CLIO I (B/C57_, 5/357_)	1.8 Rsi (B/C57H)	79	08/95 – 09/98		3496
CLIO I (B/C57_, 5/357_)	1.8 Rsi (B/C57H)	79	08/95 – 09/98	3503	
CLIO I (B/C57_, 5/357_)	1.9 D	40	01/97 – 09/98	3380	
CLIO I (B/C57_, 5/357_)	1.9 D	40	01/97 – 09/98	3381	
CLIO I (B/C57_, 5/357_)	1.9 D	40	01/97 – 09/98	3431	
CLIO I (B/C57_, 5/357_)	1.9 D	40	01/97 – 09/98		3496
CLIO I (B/C57_, 5/357_)	1.9 D	40	01/97 – 09/98	3503	
CLIO I (B/C57_, 5/357_)	1.9 D	40	01/97 – 09/98	3580	
CLIO I (B/C57_, 5/357_)	1.9 D	48	05/96 – 02/98	3380	
CLIO I (B/C57_, 5/357_)	1.9 D	48	05/96 – 02/98	3381	
CLIO I (B/C57_, 5/357_)	1.9 D	48	05/96 – 02/98	3431	
CLIO I (B/C57_, 5/357_)	1.9 D	48	05/96 – 02/98		3496
CLIO I (B/C57_, 5/357_)	1.9 D	48	05/96 – 02/98	3503	
CLIO I (B/C57_, 5/357_)	1.9 D	48	05/96 – 02/98	3580	
CLIO I (B/C57_, 5/357_)	1.9 D (B/C/S576, B/C/S57L)	47	01/91 – 09/98	3380	
CLIO I (B/C57_, 5/357_)	1.9 D (B/C/S576, B/C/S57L)	47	01/91 – 09/98	3381	
CLIO I (B/C57_, 5/357_)	1.9 D (B/C/S576, B/C/S57L)	47	01/91 – 09/98	3431	
CLIO I (B/C57_, 5/357_)	1.9 D (B/C/S576, B/C/S57L)	47	01/91 – 09/98		3496
CLIO I (B/C57_, 5/357_)	1.9 D (B/C/S576, B/C/S57L)	47	01/91 – 09/98	3503	
CLIO I (B/C57_, 5/357_)	1.9 D (B/C/S576, B/C/S57L)	47	01/91 – 09/98	3580	
CLIO I (B/C57_, 5/357_)	Electric	21	05/96 – 02/98	3380	
CLIO I (B/C57_, 5/357_)	Electric	21	05/96 – 02/98	3381	
CLIO I (B/C57_, 5/357_)	Electric	21	05/96 – 02/98	3431	
CLIO I (B/C57_, 5/357_)	Electric	21	05/96 – 02/98	3503	
CLIO I (B/C57_, 5/357_)	Electric	21	05/96 – 02/98	3580	
CLIO I (B/C57_, 5/357_)	Williams (B/C57M)	108	01/94 – 09/98	3431	
CLIO I (B/C57_, 5/357_)	Williams (B/C57M)	108	01/94 – 09/98	3503	
CLIO I Box (S57_)	11	34	01/91 – 09/98	3380	
CLIO I Box (S57_)	11	34	01/91 – 09/98	3381	
CLIO I Box (S57_)	11	34	01/91 – 09/98	3431	
CLIO I Box (S57_)	11	34	01/91 – 09/98	3495	
CLIO I Box (S57_)	11	34	01/91 – 09/98		3496
CLIO I Box (S57_)	11	34	01/91 – 09/98	3503	
CLIO I Box (S57_)	11	34	01/91 – 09/98	3580	
CLIO I Box (S57_)	12	40	01/91 – 09/98	3380	
CLIO I Box (S57_)	12	40	06/94 – 02/98	3380	
CLIO I Box (S57_)	12	40	01/91 – 09/98	3381	
CLIO I Box (S57_)	12	40	06/94 – 02/98	3381	
CLIO I Box (S57_)	12	40	01/91 – 09/98	3431	
CLIO I Box (S57_)	12	40	06/94 – 02/98	3431	
CLIO I Box (S57_)	12	40	01/91 – 09/98		3496
CLIO I Box (S57_)	12	40	06/94 – 02/98		3496
CLIO I Box (S57_)	12	40	01/91 – 09/98	3503	
CLIO I Box (S57_)	12	40	06/94 – 02/98	3503	
CLIO I Box (S57_)	12	40	01/91 – 09/98	3580	
CLIO I Box (S57_)	12	40	06/94 – 02/98	3580	
CLIO I Box (S57_)	12	44	01/91 – 09/98	3380	
CLIO I Box (S57_)	12	44	01/91 – 09/98	3381	
CLIO I Box (S57_)	12	44	01/91 – 09/98	3431	
CLIO I Box (S57_)	12	44	01/91 – 09/98		3496
CLIO I Box (S57_)	12	44	01/91 – 09/98	3503	
CLIO I Box (S57_)	12	44	01/91 – 09/98	3580	
CLIO I Box (S57_)	1.9 D	48	01/91 – 09/98	3380	
CLIO I Box (S57_)	1.9 D	48	01/91 – 09/98	3381	
CLIO I Box (S57_)	1.9 D	48	01/91 – 09/98	3431	
CLIO I Box (S57_)	1.9 D	48	01/91 – 09/98		3496
CLIO I Box (S57_)	1.9 D	48	01/91 – 09/98	3503	
CLIO I Box (S57_)	1.9 D	48	01/91 – 09/98	3580	
CLIO I Box (S57_)	1.9 RND	40	04/96 – 02/98	3380	
CLIO I Box (S57_)	1.9 RND	40	04/96 – 02/98	3381	

MAKE & MODEL   		KW	YEAR		
RENAULT					
CLIO I Box (S57_)	1.9 RND	40	04/96 – 02/98	3431	
CLIO I Box (S57_)	1.9 RND	40	04/96 – 02/98		3496
CLIO I Box (S57_)	1.9 RND	40	04/96 – 02/98	3503	
CLIO I Box (S57_)	1.9 RND	40	04/96 – 02/98	3580	
CLIO II (BB0/1/2_, CB0/1/2_)	10	40	02/00 – 05/01	3431	
CLIO II (BB0/1/2_, CB0/1/2_)	10	40	02/00 – 05/01	3503	
CLIO II (BB0/1/2_, CB0/1/2_)	10	52	06/01 – 04/05	3431	
CLIO II (BB0/1/2_, CB0/1/2_)	10	52	06/01 – 04/05	3503	
CLIO II (BB0/1/2_, CB0/1/2_)	12	55	06/01 -	3431	
CLIO II (BB0/1/2_, CB0/1/2_)	12	55	06/01 -		3496
CLIO II (BB0/1/2_, CB0/1/2_)	12	55	06/01 -	3503	
CLIO II (BB0/1/2_, CB0/1/2_)	16	81	11/04 – 02/09	3431	
CLIO II (BB0/1/2_, CB0/1/2_)	16	81	11/04 – 02/09		3496
CLIO II (BB0/1/2_, CB0/1/2_)	16	81	11/04 – 02/09	3503	
CLIO II (BB0/1/2_, CB0/1/2_)	1.6 16V (BB01, BB0H, BB0T, BB14, BB1D, BB1R, BB2KL...)	79	09/98 -	3503	
CLIO II (BB0/1/2_, CB0/1/2_)	1.6 (B/CB0D)	66	09/98 – 05/05	3503	
CLIO II (BB0/1/2_, CB0/1/2_)	1.6 16V (BB01, BB0H, BB0T, BB14, BB1D,	79	09/98 -	3431	
CLIO II (BB0/1/2_, CB0/1/2_)	1.2 (BB0A, BB0F, BB10, BB1K, BB28, BB2D,	43	09/98 -	3431	
CLIO II (BB0/1/2_, CB0/1/2_)	1.2 (BB0A, BB0F, BB10, BB1K, BB28, BB2D,	43	09/98 -		3496
CLIO II (BB0/1/2_, CB0/1/2_)	1.2 (BB0A, BB0F, BB10, BB1K, BB28, BB2D,	43	09/98 -	3503	
CLIO II (BB0/1/2_, CB0/1/2_)	1.2 (BB0A, CB0A)	44	03/99 – 05/01	3431	
CLIO II (BB0/1/2_, CB0/1/2_)	1.2 (BB0A, CB0A)	44	03/99 – 05/01	3503	
CLIO II (BB0/1/2_, CB0/1/2_)	1.2 16V	54	06/06 -	3431	
CLIO II (BB0/1/2_, CB0/1/2_)	1.2 16V	54	06/01 -		3496
CLIO II (BB0/1/2_, CB0/1/2_)	1.2 16V	54	06/06 -	3503	
CLIO II (BB0/1/2_, CB0/1/2_)	1.2 16V (BB05, BB0W, BB11, BB27, BB2T,	55	06/01 -	3431	
CLIO II (BB0/1/2_, CB0/1/2_)	1.2 16V (BB05, BB0W, BB11, BB27, BB2T,	55	06/01 -		3496
CLIO II (BB0/1/2_, CB0/1/2_)	1.2 16V (BB05, BB0W, BB11, BB27, BB2T,	55	06/01 -	3503	
CLIO II (BB0/1/2_, CB0/1/2_)	1.2 LPG	43	09/98 – 06/09	3431	
CLIO II (BB0/1/2_, CB0/1/2_)	1.2 LPG	43	09/98 – 06/09		3496
CLIO II (BB0/1/2_, CB0/1/2_)	1.2 LPG	43	09/98 – 06/09	3503	
CLIO II (BB0/1/2_, CB0/1/2_)	1.4 (B/CB0C)	55	09/98 – 05/05	3431	
CLIO II (BB0/1/2_, CB0/1/2_)	1.4 (B/CB0C)	55	09/98 – 05/05		3496
CLIO II (BB0/1/2_, CB0/1/2_)	1.4 (B/CB0C)	55	09/98 – 05/05	3503	
CLIO II (BB0/1/2_, CB0/1/2_)	1.4 16V (B/CB0L)	70	10/99 – 09/04	3431	
CLIO II (BB0/1/2_, CB0/1/2_)	1.4 16V (B/CB0L)	70	10/99 – 09/04		3496
CLIO II (BB0/1/2_, CB0/1/2_)	1.4 16V (B/CB0L)	70	10/99 – 09/04	3503	
CLIO II (BB0/1/2_, CB0/1/2_)	1.4 16V (B/CB0P)	72	08/00 -	3431	
CLIO II (BB0/1/2_, CB0/1/2_)	1.4 16V (B/CB0P)	72	08/00 -		3496
CLIO II (BB0/1/2_, CB0/1/2_)	1.4 16V (B/CB0P)	72	08/00 -	3503	
CLIO II (BB0/1/2_, CB0/1/2_)	1.5 dCi	42	06/01 – 12/06	3431	
CLIO II (BB0/1/2_, CB0/1/2_)	1.5 dCi	42	06/01 – 12/06	3503	
CLIO II (BB0/1/2_, CB0/1/2_)	1.5 dCi	74	01/04 -	3431	
CLIO II (BB0/1/2_, CB0/1/2_)	1.5 dCi	74	01/04 -		3496
CLIO II (BB0/1/2_, CB0/1/2_)	1.5 dCi	74	01/04 -	3503	
CLIO II (BB0/1/2_, CB0/1/2_)	1.5 dCi (B/C2J)	50	08/04 -	3431	
CLIO II (BB0/1/2_, CB0/1/2_)	1.5 dCi (B/C2J)	50	08/04 -		3496
CLIO II (BB0/1/2_, CB0/1/2_)	1.5 dCi (B/C2J)	50	08/04 -	3503	
CLIO II (BB0/1/2_, CB0/1/2_)	1.5 dCi (B/CB03)	59	06/01 – 10/03	3431	
CLIO II (BB0/1/2_, CB0/1/2_)	1.5 dCi (B/CB03)	59	06/01 – 10/03		3496
CLIO II (BB0/1/2_, CB0/1/2_)	1.5 dCi (B/CB03)	59	06/01 – 10/03	3503	
CLIO II (BB0/1/2_, CB0/1/2_)	1.5 dCi (B/CB07)	48	06/01 -	3431	
CLIO II (BB0/1/2_, CB0/1/2_)	1.5 dCi (B/CB07)	48	06/01 -		3496
CLIO II (BB0/1/2_, CB0/1/2_)	1.5 dCi (B/CB07)	48	06/01 -	3503	
CLIO II (BB0/1/2_, CB0/1/2_)	1.5 dCi (B/CB08)	60	06/01 -	3431	
CLIO II (BB0/1/2_, CB0/1/2_)	1.5 dCi (B/CB08)	60	06/01 -		3496
CLIO II (BB0/1/2_, CB0/1/2_)	1.5 dCi (B/CB08)	60	06/01 -	3503	
CLIO II (BB0/1/2_, CB0/1/2_)	1.5 dCi (B/CB3M)	47	06/05 -	3431	
CLIO II (BB0/1/2_, CB0/1/2_)	1.5 dCi (B/CB3M)	47	06/05 -		3496
CLIO II (BB0/1/2_, CB0/1/2_)	1.5 dCi (B/CB3M)	47	06/05 -	3503	
CLIO II (BB0/1/2_, CB0/1/2_)	1.5 dCi (B/CB3N)	62	02/07 -	3431	
CLIO II (BB0/1/2_, CB0/1/2_)	1.5 dCi (B/CB3N)	62	02/07 -		3496
CLIO II (BB0/1/2_, CB0/1/2_)	1.5 dCi (B/CB3N)	62	02/07 -	3503	
CLIO II (BB0/1/2_, CB0/1/2_)	1.6 (B/CB0D)	66	09/98 – 05/05		3496
CLIO II (BB0/1/2_, CB0/1/2_)	1.6 (B/CB0D)	66	09/98 – 05/05	3431	
CLIO II (BB0/1/2_, CB0/1/2_)	1.6 16V (BB01, BB0H, BB0T, BB14, BB1D,	79	09/98 -		3496
CLIO II (BB0/1/2_, CB0/1/2_)	1.6 Flex	81	05/00 – 12/06	3431	
CLIO II (BB0/1/2_, CB0/1/2_)	1.6 Flex	81	05/00 – 12/06		3496
CLIO II (BB0/1/2_, CB0/1/2_)	1.6 Flex	81	05/00 – 12/06	3503	
CLIO II (BB0/1/2_, CB0/1/2_)	1.6 Hi-Flex (CB0H)	86	01/05 – 02/10	3431	
CLIO II (BB0/1/2_, CB0/1/2_)	1.6 Hi-Flex (CB0H)	86	01/05 – 02/10		3496

MAKE & MODEL		KW	YEAR		
RENAULT					
CLIO II (BB0/1/2_ , CB0/1/2_)	1.6 Hi-Flex (CB0H)	86	01/05 – 02/10	3503	
CLIO II (BB0/1/2_ , CB0/1/2_)	1.9 D (B/CB0E)	47	09/98 – 05/05	3431	
CLIO II (BB0/1/2_ , CB0/1/2_)	1.9 D (B/CB0E)	47	09/98 – 05/05		3496
CLIO II (BB0/1/2_ , CB0/1/2_)	1.9 D (B/CB0E)	47	09/98 – 05/05	3503	
CLIO II (BB0/1/2_ , CB0/1/2_)	1.9 D (B/CB0J)	48	02/00 – 05/01	3431	
CLIO II (BB0/1/2_ , CB0/1/2_)	1.9 D (B/CB0J)	48	02/00 – 05/01		3496
CLIO II (BB0/1/2_ , CB0/1/2_)	1.9 D (B/CB0J)	48	02/00 – 05/01	3503	
CLIO II (BB0/1/2_ , CB0/1/2_)	1.9 dTi (B/CB0U)	59	12/99 – 05/05	3431	
CLIO II (BB0/1/2_ , CB0/1/2_)	1.9 dTi (B/CB0U)	59	12/99 – 05/05		3496
CLIO II (BB0/1/2_ , CB0/1/2_)	1.9 dTi (B/CB0U)	59	12/99 – 05/05	3503	
CLIO II (BB0/1/2_ , CB0/1/2_)	2.0 16V Sport	132	01/04 -		3496
CLIO II (BB0/1/2_ , CB0/1/2_)	2.0 16V Sport (CB0M)	70	02/00 -		3496
CLIO II (BB0/1/2_ , CB0/1/2_)	1.2 (BB0A, CB0A)	44	06/06 -		3496
CLIO II Box (SB0/1/2_)	1.1 (SB0A, SB0F, SB1K, SB2D)	43	09/98 -	3431	
CLIO II Box (SB0/1/2_)	1.1 (SB0A, SB0F, SB1K, SB2D)	43	09/98 -	3503	
CLIO II Box (SB0/1/2_)	1.2 (SB0A, SB0F, SB10)	44	03/99 – 10/03	3431	
CLIO II Box (SB0/1/2_)	1.2 (SB0A, SB0F, SB10)	44	03/99 – 10/03	3503	
CLIO II Box (SB0/1/2_)	1.5 dCi	50	04/04 -	3431	
CLIO II Box (SB0/1/2_)	1.5 dCi	50	04/04 -	3503	
CLIO II Box (SB0/1/2_)	1.5 dCi	59	06/01 – 10/04	3431	
CLIO II Box (SB0/1/2_)	1.5 dCi	59	06/01 – 10/04	3503	
CLIO II Box (SB0/1/2_)	1.5 dCi	60	11/03 -	3431	
CLIO II Box (SB0/1/2_)	1.5 dCi	60	11/03 -	3503	
CLIO II Box (SB0/1/2_)	1.5 dCi (SB07)	48	06/01 -	3431	
CLIO II Box (SB0/1/2_)	1.5 dCi (SB07)	48	06/01 -	3503	
CLIO II Box (SB0/1/2_)	1.9 D (SB0E)	47	09/98 -	3431	
CLIO II Box (SB0/1/2_)	1.9 D (SB0E)	47	09/98 -	3503	
CLIO II Box (SB0/1/2_)	1.9 D (SB0J)	48	02/00 – 05/01	3431	
CLIO II Box (SB0/1/2_)	1.9 D (SB0J)	48	02/00 – 05/01	3503	
CLIO II Box (SB0/1/2_)	1.9 D (SB0R)	40	03/99 – 01/00	3431	
CLIO II Box (SB0/1/2_)	1.9 D (SB0R)	40	03/99 – 01/00	3503	
CLIO II Box (SB0/1/2_)	1.9 DTi (SB0U)	59	02/00 – 05/01	3431	
CLIO II Box (SB0/1/2_)	1.9 DTi (SB0U)	59	02/00 – 05/01	3503	
CLIO III (BR0/1, CR0/1)	1.5 dCi (C/BR0G, C/BR1G)	50	06/05 -	3983	
CLIO III (BR0/1, CR0/1)	1.5 dCi (C/BR0G, C/BR1G)	50	06/05 -		3529/2
CLIO III (BR0/1, CR0/1)	1.6 16V (BR09, BR0T, CR09, CR0T)	65	06/05 -	3983	
CLIO III (BR0/1, CR0/1)	2.0 16V (BR0C, BR0K, CR0C, CR0K)	102	09/06 -	3983	
CLIO III (BR0/1, CR0/1)	1.2 (BR01, BR03, BR0E, CR0E)	57	10/05 -		3529/2
CLIO III (BR0/1, CR0/1)	1.2 16V	58	06/05 -		3529/2
CLIO III (BR0/1, CR0/1)	1.2 16V	58	06/05 -	3983	
CLIO III (BR0/1, CR0/1)	1.2 16V	76	09/10 -		3529/2
CLIO III (BR0/1, CR0/1)	1.2 16V	76	09/10 -	3983	
CLIO III (BR0/1, CR0/1)	1.2 16V (BR02, BR0J, BR11, CR02, CR0J,	55	06/05 -		3529/2
CLIO III (BR0/1, CR0/1)	1.2 16V (BR02, BR0J, BR11, CR02, CR0J,	55	06/05 -	3983	
CLIO III (BR0/1, CR0/1)	1.2 16V (BR0P, CR0P)	74	05/07 -	3983	
CLIO III (BR0/1, CR0/1)	1.2 16V (BR0R, BR1D, BR1L, CR0R)	48	06/05 -	3983	
CLIO III (BR0/1, CR0/1)	1.2 16V Hi-Flex (BR1U, CR1U)	55	07/08 -		3529/2
CLIO III (BR0/1, CR0/1)	1.2 16V Hi-Flex (BR1U, CR1U)	55	07/08 -	3983	
CLIO III (BR0/1, CR0/1)	1.2 Ethanol	55	07/08 -		3529/2
CLIO III (BR0/1, CR0/1)	1.2 Ethanol	55	07/08 -	3983	
CLIO III (BR0/1, CR0/1)	1.4 16V	72	06/05 -		3529/2
CLIO III (BR0/1, CR0/1)	1.4 16V	72	06/05 -	3983	
CLIO III (BR0/1, CR0/1)	1.5 dCi	47	06/05 -		3529/2
CLIO III (BR0/1, CR0/1)	1.5 dCi	48	05/05 -		3529/2
CLIO III (BR0/1, CR0/1)	1.5 dCi	55	08/10 -		3529/2
CLIO III (BR0/1, CR0/1)	1.5 dCi	60	11/07 -		3529/2
CLIO III (BR0/1, CR0/1)	1.5 dCi	65	08/10 -		3529/2
CLIO III (BR0/1, CR0/1)	1.5 dCi	47	06/05 -	3983	
CLIO III (BR0/1, CR0/1)	1.5 dCi	48	05/05 -	3983	
CLIO III (BR0/1, CR0/1)	1.5 dCi	55	08/10 -	3983	
CLIO III (BR0/1, CR0/1)	1.5 dCi	60	11/07 -	3983	
CLIO III (BR0/1, CR0/1)	1.5 dCi	65	08/10 -	3983	
CLIO III (BR0/1, CR0/1)	1.5 dCi (BR0H, CR0H)	78	06/05 -		3529/2
CLIO III (BR0/1, CR0/1)	1.5 dCi (BR0H, CR0H)	78	06/05 -	3983	
CLIO III (BR0/1, CR0/1)	1.5 dCi (BR17, CR17)	63	06/05 -	3983	
CLIO III (BR0/1, CR0/1)	1.5 dCi (BR17, CR17)	63	06/05 -		3529/2
CLIO III (BR0/1, CR0/1)	1.5 dCi (BR1C, CR1C)	76	06/05 -	3983	
CLIO III (BR0/1, CR0/1)	1.5 dCi (BR1C, CR1C)	76	06/05 -		3529/2
CLIO III (BR0/1, CR0/1)	1.6 16V (BR05, BR0B, BR0Y,BR15, BR1J, BR1M, BR1Y, CR0B...)	82	06/05 -		3529/2
CLIO III (BR0/1, CR0/1)	1.6 16V (BR05, BR0B, BR0Y,BR15, BR1J, BR1M, BR1Y, CR0B...)	82	06/05 -	3983	
CLIO III (BR0/1, CR0/1)	1.6 16V (BR09, BR0T, CR09, CR0T)	76	06/05 -		3529/2

MAKE & MODEL		KW	YEAR		
RENAULT					
CLIO III (BR0/1, CR0/1)	1.6 16V GT (BR10, CR10)	94	06/09 -		3529/2
CLIO III (BR0/1, CR0/1)	1.6 16V GT (BR10, CR10)	94	06/09 -	3983	
CLIO III (BR0/1, CR0/1)	1.6 Hi-Flex	86	05/05 – 02/10		3529/2
CLIO III (BR0/1, CR0/1)	1.6 Hi-Flex	86	05/05 – 02/10	3983	
CLIO III (BR0/1, CR0/1)	2.0 16V (BR0C, BR0K, CR0C, CR0K)	102	09/06 -		3529/2
CLIO III (BR0/1, CR0/1)	2.0 16V Sport	145	02/06 -		3529/2
CLIO III (BR0/1, CR0/1)	2.0 16V Sport	145	02/06 -	4137	
CLIO III (BR0/1, CR0/1)	2.0 16V Sport	148	09/08 -		3529/2
CLIO III (BR0/1, CR0/1)	2.0 16V Sport	148	09/08 -	4137	
CLIO III (BR0/1, CR0/1)	1.2 16V (BR0R, BR1D, BR1L, CR0R)	74	05/07 -		3529/2
CLIO III (BR0/1, CR0/1)	1.2 (BR01, BR03, BR0E, CR0E)	57	10/05 -	3983	
CLIO III (BR0/1, CR0/1)	1.2 16V (BR0P, CR0P)	74	05/07 -		3529/2
CLIO IV	1.6 RS	147	03/13 -		3529/2
CLIO IV	1.6 RS Trophy	162	03/15 -		3529/2
CLIO IV (B98)	0.9 TCe 90 (H4B 400)	66	11/12 -	4253	
CLIO IV (B98)	1.2 16V (D4F 740)	54	11/12 -	4253	
CLIO IV (B98)	1.2 TCe 120 (H5F 403)	88	03/13 -	4253	
CLIO IV (B98)	1.2 TCe 120 (H5F 412)	87	01/16 -	4253	
CLIO IV (B98)	1.5 dCi 110 (K9K 646)	81	06/16 -	4253	
CLIO IV (B98)	1.5 dCi 75 (K9K 612)	55	11/12 -	4253	
CLIO IV (B98)	1.5 dCi 90 (K9K 608)	66	11/12 -	4253	
CLIO IV (B98)	1.6 RS (M5M 400)	147	03/13 -	4253	
CLIO IV (B98)	1.6 RS (M5M 450)	147	03/13 -	4253	
CLIO IV (B98)	1.6 RS Trophy	162	03/15 -	4253	
CLIO IV (BH_)	0.9 TCe 90	66	11/12 -	3983	
CLIO IV (BH_)	1.2 16V	54	11/12 -	3983	
CLIO IV (BH_)	1.2 TCe 120	87	01/16 -	3983	
CLIO IV (BH_)	1.2 TCe 120	88	03/13 -	3983	
CLIO IV (BH_)	1.2 TCe 120	88	03/13 -	4140	
CLIO IV (BH_)	1.5 dCi 110	81	06/16 -	3983	
CLIO IV (BH_)	1.5 dCi 75	55	11/12 -	3983	
CLIO IV (BH_)	1.5 dCi 75	55	11/12 -	4140	
CLIO IV (BH_)	1.5 dCi 90	66	11/12 -	3983	
CLIO IV (BH_)	1.5 dCi 90	66	11/12 -	4140	
CLIO IV Grandtour (KH_)	0.9 TCe 90	66	01/13 -	3983	
CLIO IV Grandtour (KH_)	0.9 TCe 90	66	01/13 -	4140	
CLIO IV Grandtour (KH_)	1.2 16V	54	01/13 -	3983	
CLIO IV Grandtour (KH_)	1.2 16V	54	01/13 -	4140	
CLIO IV Grandtour (KH_)	1.2 TCe 120	87	01/16 -	3983	
CLIO IV Grandtour (KH_)	1.2 TCe 120	88	03/13 -	3983	
CLIO IV Grandtour (KH_)	1.2 TCe 120	88	03/13 -	4140	
CLIO IV Grandtour (KH_)	1.5 dCi 110	81	06/16 -	3983	
CLIO IV Grandtour (KH_)	1.5 dCi 75	55	01/13 -	3983	
CLIO IV Grandtour (KH_)	1.5 dCi 75	55	01/13 -	4140	
CLIO IV Grandtour (KH_)	1.5 dCi 90	66	01/13 -	3983	
CLIO IV Grandtour (KH_)	1.5 dCi 90	66	01/13 -	4140	
DUSTER (HS_)	20	98	02/12 -	3964/1	
DUSTER (HS_)	20	98	02/12 -	3983	
DUSTER (HS_)	1.5 dCi	66	06/11 -	3964/1	
DUSTER (HS_)	1.5 dCi	66	06/11 -	3983	
DUSTER (HS_)	1.6 16V (HSAT)	75	02/12 -	3964/1	
DUSTER (HS_)	1.6 16V (HSAT)	75	02/12 -	3983	
DUSTER (HS_)	2.0 4x4	99	02/12 -	3964/1	
DUSTER (HS_)	2.0 4x4	99	02/12 -	3983	
ESPACE	2.0 (J6R 234)	80	07/84 – 12/90	3372	
ESPACE	2.0 (J6R 234)	80	07/84 – 12/90	3599	
ESPACE	2.0 (J6R 236)	80	07/84 – 12/90	3372	
ESPACE	2.0 (J6R 236)	80	07/84 – 12/90	3599	
ESPACE	2.0 i (J7R 760)	87	03/88 – 12/92	3372	
ESPACE	2.0 i (J7R 760)	87	01/89 – 12/90	3372	
ESPACE	2.0 i (J7R 760)	87	03/88 – 12/92	3599	
ESPACE	2.0 i (J7R 760)	87	01/89 – 12/90	3599	
ESPACE	2.1 TD (J8S 240)	65	10/84 – 12/90	3372	
ESPACE	2.1 TD (J8S 240)	65	10/84 – 12/90	3599	
ESPACE	2.1 TD (J8S 774)	65	10 84 – 12/90	3372	
ESPACE	2.1 TD (J8S 774)	65	10 84 – 12/90	3599	
ESPACE	2.2 (J7T 770)	79	07/86 – 12/90	3372	
ESPACE	2.2 (J7T 770)	79	01/88 – 12/90	3372	
ESPACE	2.2 (J7T 770)	79	07/86 – 12/90	3599	
ESPACE	2.2 (J7T 770)	79	01/88 – 12/90	3599	
ESPACE II (J/S63_)	2.0 (J7R 768)	76	01/91 – 10/96		3454

BESER®

MAKE & MODEL		KW	YEAR		
RENAULT					
ESPACE II (J/S63_)	2.1 TD (J8S 610)	65	01/91 – 10/96		3454
ESPACE II (J/S63_)	2.1 TD (J8S 612)	66	11/94 – 10/96		3454
ESPACE II (J/S63_)	2.1 TD (J8S 772)	65	01/91 – 10/96		3454
ESPACE II (J/S63_)	2.1 TD (J8S 778)	65	01/91 – 10/96		3454
ESPACE II (J/S63_)	2.1 TD (J8S 776)	65	01/91 – 10/96		3454
ESPACE II (J/S63_)	2.2 (J7T 772)	79	01/91 – 10/96		3454
ESPACE II (J/S63_)	2.2 (J7T 772)	79	03/91 – 12/96		3454
ESPACE II (J/S63_)	2.2 (J7T 773)	79	01/91 – 10/96		3454
ESPACE II (J/S63_)	2.2 (J7T 773)	79	03/91 – 12/96		3454
ESPACE II (J/S63_)	2.2 (J7T 776)	79	01/91 – 10/96		3454
ESPACE II (J/S63_)	2.8 V6 (Z7W 712)	110	01/91 – 10/96		3454
ESPACE II (J/S63_)	2.8 V6 (Z7W 713)	110	01/91 – 10/96		3454
ESPACE II (J/S63_)	2.8 V6 (Z7W 717)	110	01/91 – 10/96		3454
ESPACE (J11_)	2.0 i (J7R 760)	87	03/88 – 12/92		3454
ESPACE (J11_)	2.0 i (J7R 760)	87	01/89 – 12/90		3454
ESPACE (J11_)	2.1 TD (J8S 240)	65	10/84 – 12/90		3454
ESPACE (J11_)	2.1 TD (J8S 774)	65	10/84 – 12/90		3454
ESPACE (J11_)	2.2 (J7T 770)	79	07/86 -12/90		3454
ESPACE (J11_)	2.2 (J7T 770)	79	01/88 – 12/90		3454
ESPACE I (J11_)	2.0 (J/S112)	74	01/88 – 12/90		3333
ESPACE I (J11_)	2.0 (J/S112)	74	01/88 – 12/90	3380	
ESPACE I (J11_)	2.0 (J/S112)	74	01/88 – 12/90	3381	
ESPACE I (J11_)	2.0 (J/S112)	74	01/88 – 12/90	3431	
ESPACE I (J11_)	2.0 (J/S112)	74	01/88 – 12/90	3503	
ESPACE I (J11_)	2.0 (J/S112)	74	01/88 – 12/90	3580	
ESPACE I (J11_)	2.0 (J/S112)	80	07/84 – 12/90		3333
ESPACE I (J11_)	2.0 (J/S112)	80	07/84 – 12/90	3380	
ESPACE I (J11_)	2.0 (J/S112)	80	07/84 – 12/90	3381	
ESPACE I (J11_)	2.0 (J/S112)	80	07/84 – 12/90	3431	
ESPACE I (J11_)	2.0 (J/S112)	80	07/84 – 12/90	3503	
ESPACE I (J11_)	2.0 (J/S112)	80	07/84 – 12/90	3580	
ESPACE I (J11_)	2.0 i (J116)	87	01/89 – 12/90		3333
ESPACE I (J11_)	2.0 i (J116)	87	01/89 – 12/90	3380	
ESPACE I (J11_)	2.0 i (J116)	87	01/89 – 12/90	3381	
ESPACE I (J11_)	2.0 i (J116)	87	01/89 – 12/90	3431	
ESPACE I (J11_)	2.0 i (J116)	87	01/89 – 12/90	3503	
ESPACE I (J11_)	2.0 i (J116)	87	01/89 – 12/90	3580	
ESPACE I (J11_)	2.0 i Quadra (J116)	87	03/88 – 12/92		3333
ESPACE I (J11_)	2.0 i Quadra (J116)	87	03/88 – 12/92	3380	
ESPACE I (J11_)	2.0 i Quadra (J116)	87	03/88 – 12/92	3381	
ESPACE I (J11_)	2.0 i Quadra (J116)	87	03/88 – 12/92	3431	
ESPACE I (J11_)	2.0 i Quadra (J116)	87	03/88 – 12/92	3503	
ESPACE I (J11_)	2.0 i Quadra (J116)	87	03/88 – 12/92	3580	
ESPACE I (J11_)	2.1 TD (J/S115)	65	10/84 – 12/90		3333
ESPACE I (J11_)	2.1 TD (J/S115)	65	10/84 – 12/90	3380	
ESPACE I (J11_)	2.1 TD (J/S115)	65	10/84 – 12/90	3381	
ESPACE I (J11_)	2.1 TD (J/S115)	65	10/84 – 12/90	3431	
ESPACE I (J11_)	2.1 TD (J/S115)	65	10/84 – 12/90	3503	
ESPACE I (J11_)	2.1 TD (J/S115)	65	10/84 – 12/90	3580	
ESPACE I (J11_)	2.2 (J117)	79	07/86 – 12/90		3333
ESPACE I (J11_)	2.2 (J117)	79	07/86 – 12/90	3380	
ESPACE I (J11_)	2.2 (J117)	79	07/86 – 12/90	3381	
ESPACE I (J11_)	2.2 (J117)	79	07/86 – 12/90	3431	
ESPACE I (J11_)	2.2 (J117)	79	07/86 – 12/90	3503	
ESPACE I (J11_)	2.2 (J117)	79	07/86 – 12/90	3580	
ESPACE I (J11_)	2.2 Quadra (J117)	79	01/88 – 12/90		3333
ESPACE I (J11_)	2.2 Quadra (J117)	79	01/88 – 12/90	3380	
ESPACE I (J11_)	2.2 Quadra (J117)	79	01/88 – 12/90	3381	
ESPACE I (J11_)	2.2 Quadra (J117)	79	01/88 – 12/90	3431	
ESPACE I (J11_)	2.2 Quadra (J117)	79	01/88 – 12/90	3503	
ESPACE I (J11_)	2.2 Quadra (J117)	79	01/88 – 12/90	3580	
ESPACE II (J/S63_)	2.0 (J636)	76	01/91 – 10/96		3333
ESPACE II (J/S63_)	2.1 RTDT Quadra	65	01/91 – 05/92		3333
ESPACE II (J/S63_)	2.1 TD (J633, J634, J/S635, J/S63D)	65	01/91 – 10/96		3333
ESPACE II (J/S63_)	2.1 TD (J63E)	66	11/94 – 10/96		3333
ESPACE II (J/S63_)	2.2 (J/S637, J63G)	79	01/91 – 10/96		3333
ESPACE II (J/S63_)	2.2 4x4 (J/S637, J63G)	79	03/91 – 12/96		3333
ESPACE II (J/S63_)	2.8 V6 (J638, J63J)	110	01/91 – 10/96		3333
ESPACE II (J/S63_)	2.8 V6 (J638, J63J)	110	01/91 – 10/96	3539	
ESPACE II (J/S63_)	2.8 V6 (J638, J63J)	110	01/91 – 10/96	3546	
ESPACE III (JE0_)	20	102	09/01 – 10/02		3529

MAKE & MODEL		KW	YEAR		
RENAULT					
ESPACE III (JE0_)	1.9 dTi (JE0M)	72	02/99 – 10/02		3529
ESPACE III (JE0_)	1.9 dTi (JE0M)	72	02/99 – 10/02		3596
ESPACE III (JE0_)	2.0 (JE0A)	84	11/96 – 10/00		3529
ESPACE III (JE0_)	2.0 (JE0A)	84	11/96 – 10/00		3596
ESPACE III (JE0_)	2.0 16V (JE0N, JE0L, JE02)	103	10/98 – 10/02		3529
ESPACE III (JE0_)	2.0 16V (JE0N, JE0L, JE02)	103	10/98 – 10/02		3529/2
ESPACE III (JE0_)	2.0 16V (JE0N, JE0L, JE02)	103	10/98 – 10/02		3596
ESPACE III (JE0_)	2.2 12V TD (JE0E, JE0H, JE0P)	83	11/96 – 10/00		3529
ESPACE III (JE0_)	2.2 12V TD (JE0E, JE0H, JE0P)	83	11/96 – 10/00		3596
ESPACE III (JE0_)	2.2 D	84	11/97 – 01/00		3596
ESPACE III (JE0_)	2.2 dCi (JE0K)	95	10/00 – 10/02		3529
ESPACE III (JE0_)	2.2 dCi (JE0K)	95	10/00 – 10/02		3529/2
ESPACE III (JE0_)	2.2 dCi (JE0K)	95	10/00 – 10/02	3848	
ESPACE III (JE0_)	2.2 dCi (JEOS)	85	07/00 – 10/02		3529
ESPACE III (JE0_)	2.2 dCi (JEOS)	85	07/00 – 10/02		3529/2
ESPACE III (JE0_)	2.2 dCi (JEOS)	85	07/00 – 10/02	3848	
ESPACE III (JE0_)	3.0 (JE0D)	123	11/96 – 10/98		3596
ESPACE III (JE0_)	3.0 V6 24V (JE0G, JE0R)	140	10/98 – 10/02		3529
ESPACE III (JE0_)	3.0 V6 24V (JE0G, JE0R)	140	10/98 – 10/02		3529/2
ESPACE III (JE0_)	3.0 V6 24V (JE0G, JE0R)	140	10/98 – 10/02		3596
ESPACE III (JE0_)	3.0 V6 24V (JE0G, JE0R)	140	10/98 – 10/02	3848	
ESPACE IV (JK0/1_)	1.9 dCi (JK0U)	85	04/03 – 02/05		3853
ESPACE IV (JK0/1_)	1.9 dCi (JK0U, JK0G)	88	11/02 -		3853
ESPACE IV (JK0/1_)	2.0 (JK09)	100	11/02 -		3853
ESPACE IV (JK0/1_)	2.0 (JK0A, JK1D, JK0N)	125	04/05 -		3853
ESPACE IV (JK0/1_)	2.0 (JK0K)	98	11/02 – 02/05		3853
ESPACE IV (JK0/1_)	2.0 dCi (JK01, JK02, JK1J, JK1K)	110	01/06 -		3853
ESPACE IV (JK0/1_)	2.0 dCi (JK02, JK03)	96	01/06 -		3853
ESPACE IV (JK0/1_)	2.0 dCi (JK03, JK04)	127	01/06 -		3853
ESPACE IV (JK0/1_)	2.0 Turbo (JK0A, JK0B, JK0N)	120	11/02 -		3853
ESPACE IV (JK0/1_)	2.2 dCi (JK07)	102	02/06 -		3853
ESPACE IV (JK0/1_)	2.2 dCi (JK0H)	110	11/02 -		3853
ESPACE IV (JK0/1_)	3.0 dCi	120	09/05 -		3853
ESPACE IV (JK0/1_)	3.0 dCi (JK0E, JK0Y)	133	01/06 -		3853
ESPACE IV (JK0/1_)	3.0 dCi (JK0J, JK0V)	130	11/02 -		3853
ESPACE IV (JK0/1_)	3.5 V6 (JK00, JK0F, JK0P, JK0S, JK0W)	177	11/02 -		3853
ESPACE V (JR_)	1.6 dCi 130	96	06/15 -		4287
ESPACE V (JR_)	1.6 dCi 160	118	06/15 -		4287
ESPACE V (JR_)	1.6 TCe 200	147	02/15 -		4287
FLUENCE (L30_)	16	86	01/13 -	3964/1	
FLUENCE (L30_)	2.0 16V	101	05/11 -		4142
FLUENCE (L30_)	1.5 dCi	70	07/14 -		3529/2
FLUENCE (L30_)	1.5 dCi	70	07/14 -	3964/1	
FLUENCE (L30_)	1.5 dCi (L30A)	63	02/10 -		3529/2
FLUENCE (L30_)	1.5 dCi (L30A)	63	02/10 -	3964/1	
FLUENCE (L30_)	1.5 dCi (L30A)	63	02/10 -		4142
FLUENCE (L30_)	1.5 dCi (L30B)	78	02/10 -		3529/2
FLUENCE (L30_)	1.5 dCi (L30B)	78	02/10 -	3964/1	
FLUENCE (L30_)	1.5 dCi (L30B)	78	02/10 -		4142
FLUENCE (L30_)	1.5 dCi (L30D, L30L)	81	02/10 -		3529/2
FLUENCE (L30_)	1.5 dCi (L30D, L30L)	81	02/10 -	3964/1	
FLUENCE (L30_)	1.5 dCi (L30D, L30L)	81	02/10 -		4142
FLUENCE (L30_)	1.5 dCi (L30S)	66	02/10 -		3529/2
FLUENCE (L30_)	1.5 dCi (L30S)	66	02/10 -	3964/1	
FLUENCE (L30_)	1.5 dCi (L30S)	66	02/10 -		4142
FLUENCE (L30_)	1.6 16V	82	02/10 -		3529/2
FLUENCE (L30_)	1.6 16V	82	02/10 -	3964/1	
FLUENCE (L30_)	1.6 16V	82	02/10 -		4142
FLUENCE (L30_)	1.6 16V (L301, L30F, L30P, L30R)	81	02/10 -		3529/2
FLUENCE (L30_)	1.6 16V (L301, L30F, L30P, L30R)	81	02/10 -	3964/1	
FLUENCE (L30_)	1.6 16V (L301, L30F, L30P, L30R)	81	02/10 -		4142
FLUENCE (L30_)	1.6 dCi	96	07/14 -		3529/2
FLUENCE (L30_)	1.6 dCi	96	07/14 -	3964/1	
FLUENCE (L30_)	2.0 16V	101	05/11 -		3529/2
FLUENCE (L30_)	2.0 16V	101	05/11 -	3964/1	
FLUENCE (L30_)	2.0 16V (L30C, L30G, L30T, L30V)	103	02/10 -		3529/2
FLUENCE (L30_)	2.0 16V (L30C, L30G, L30T, L30V)	103	02/10 -	3964/1	
FLUENCE (L30_)	2.0 16V (L30C, L30G, L30T, L30V)	103	02/10 -		4142
FLUENCE (L30_)	Z.E.	70	02/12 -		3529/2
FLUENCE (L30_)	Z.E.	70	02/12 -	3964/1	
FLUENCE (L30_)	Z.E.	70	02/12 -		4142

MAKE & MODEL		KW	YEAR		
RENAULT					
FR1	FR 1 E		01/83 -	3707	
FR1	FR 1 GT, T		01/83 -	3707	
FR1	FR 1 T1, T2		01/83 -	3707	
FR1	FR 1 TX, GTX		01/83 -	3707	
FR1	FR 1 wheel 5.4m (L3)		01/83 -	3707	
FR1	FR 1 wheel 6.2m (L1)		01/83 -	3707	
FUEGO (136_)	1.4 TL/GTL	47	02/80 – 10/85	3380	
FUEGO (136_)	1.4 TL/GTL	47	02/80 – 10/85	3381	
FUEGO (136_)	1.4 TL/GTL	47	02/80 – 10/85	3431	
FUEGO (136_)	1.4 TL/GTL	47	02/80 – 10/85	3503	
FUEGO (136_)	1.4 TL/GTL	47	02/80 – 10/85	3580	
FUEGO (136_)	1.6 TS/GTS (1362)	71	10/80 – 10/85	3380	
FUEGO (136_)	1.6 TS/GTS (1362)	71	10/80 – 10/85	3381	
FUEGO (136_)	1.6 TS/GTS (1362)	71	10/80 – 10/85	3431	
FUEGO (136_)	1.6 TS/GTS (1362)	71	10/80 – 10/85	3503	
FUEGO (136_)	1.6 TS/GTS (1362)	71	10/80 – 10/85	3580	
FUEGO (136_)	1.6 Turbo (1365)	97	08/83 – 10/85		3333
FUEGO (136_)	1.6 Turbo (1365)	97	08/83 – 10/85	3380	
FUEGO (136_)	1.6 Turbo (1365)	97	08/83 – 10/85	3381	
FUEGO (136_)	1.6 Turbo (1365)	97	08/83 – 10/85	3431	
FUEGO (136_)	1.6 Turbo (1365)	97	08/83 – 10/85	3503	
FUEGO (136_)	1.6 Turbo (1365)	97	08/83 – 10/85	3580	
FUEGO (136_)	2.0 TX/GTX (1363)	81	10/80 – 10/85	3380	
FUEGO (136_)	2.0 TX/GTX (1363)	81	10/80 – 10/85	3381	
FUEGO (136_)	2.0 TX/GTX (1363)	81	10/80 – 10/85	3431	
FUEGO (136_)	2.0 TX/GTX (1363)	81	10/80 – 10/85	3503	
FUEGO (136_)	2.0 TX/GTX (1363)	81	10/80 – 10/85	3580	
FUEGO (136_)	1.6 (A2M 723)	52	04/83 – 10/85	3372	
FUEGO (136_)	1.6 (A2M 723)	52	04/83 – 10/85	3599	
FUEGO (136_)	1.6 TS/GTS (843 723)	71	10/80 – 10/85	3372	
FUEGO (136_)	1.6 TS/GTS (843 723)	71	10/80 – 10/85	3599	
FUEGO (136_)	1.6 TS/GTS (843 724)	71	10/80 – 10/85	3372	
FUEGO (136_)	1.6 TS/GTS (843 724)	71	10/80 – 10/85	3599	
FUEGO (136_)	1.6 TS/GTS (A6M 725)	71	10/80 – 10/85	3372	
FUEGO (136_)	1.6 TS/GTS (A6M 725)	71	10/80 – 10/85	3599	
FUEGO (136_)	1.6 TS/GTS (A6M 726)	71	10/80 – 10/85	3372	
FUEGO (136_)	1.6 TS/GTS (A6M 726)	71	10/80 – 10/85	3599	
FUEGO (136_)	1.6 Turbo (A5L 750)	97	08/83 – 10/85	3372	
FUEGO (136_)	1.6 Turbo (A5L 750)	97	08/83 – 10/85	3599	
FUEGO (136_)	2.0 TX/GTX (829 710)	81	10/80 – 10/85	3372	
FUEGO (136_)	2.0 TX/GTX (829 710)	81	10/80 – 10/85	3599	
FUEGO (136_)	2.0 TX/GTX (J6R 710)	81	10/80 – 10/85	3372	
FUEGO (136_)	2.0 TX/GTX (J6R 710)	81	10/80 – 10/85	3599	
FUEGO (136_)	2.0 TX/GTX (J6R 712)	81	10/80 – 10/85	3372	
FUEGO (136_)	2.0 TX/GTX (J6R 712)	81	10/80 – 10/85	3599	
FUEGO (136_)	2.0 TX/GTX (J6R 713)	81	10/80 – 10/85	3372	
FUEGO (136_)	2.0 TX/GTX (J6R 713)	81	10/80 – 10/85	3599	
FUEGO (136_)	2.0 TX/GTX (J6R 715)	81	10/80 – 10/85	3372	
FUEGO (136_)	2.0 TX/GTX (J6R 715)	81	10/80 – 10/85	3599	
FUEGO (136_)	2.0 TX/GTX (J6R 726)	81	10/80 – 10/85	3372	
FUEGO (136_)	2.0 TX/GTX (J6R 726)	81	10/80 – 10/85	3599	
FUEGO (136_)	2.1 TD (J8S 712)	65	08/82 – 10/85	3372	
FUEGO (136_)	2.1 TD (J8S 712)	65	08/82 – 10/85	3599	
GRAND SCÉNIC II (JM0/1_)	16	82	06/06 – 11/08		3529/2
GRAND SCÉNIC II (JM0/1_)	16	83	04/04 -	3849	
GRAND SCÉNIC II (JM0/1_)	20	99	04/04 -	3849	
GRAND SCÉNIC II (JM0/1_)	20	120	04/04 -	3849	
GRAND SCÉNIC II (JM0/1_)	1.5 dCi	60	04/04 -		3529/2
GRAND SCÉNIC II (JM0/1_)	1.5 dCi	60	04/04 -	3849	
GRAND SCÉNIC II (JM0/1_)	1.5 dCi	76	06/06 – 11/08		3529/2
GRAND SCÉNIC II (JM0/1_)	1.5 dCi (JM02, JM13)	74	04/04 -	3849	
GRAND SCÉNIC II (JM0/1_)	1.5 dCi (JM1E)	78	05/05 -	3849	
GRAND SCÉNIC II (JM0/1_)	1.9 dCi	85	05/05 – 01/09		3529/2
GRAND SCÉNIC II (JM0/1_)	1.9 dCi	85	05/05 – 01/09	3849	
GRAND SCÉNIC II (JM0/1_)	1.9 dCi (JM0G, JM12, JM1G JM2C)	88	04/04 -	3849	
GRAND SCÉNIC II (JM0/1_)	1.9 dCi (JM14)	96	05/05 -	3849	
GRAND SCÉNIC II (JM0/1_)	1.9 dCi (JM15)	81	05/05 -	3849	
GRAND SCÉNIC II (JM0/1_)	2.0 dCi (JM1K)	110	09/05 -	3849	
GRAND SCÉNIC III (JZ0/1_)	1.2 TCe	85	04/12 -		3529/2
GRAND SCÉNIC III (JZ0/1_)	1.2 TCe	85	04/12 -		4287
GRAND SCÉNIC III (JZ0/1_)	1.2 TCe (JZ16)	97	01/13 -		3529/2

MAKE & MODEL		KW	YEAR		
RENAULT					
GRAND SCÉNIC III (JZ0/1_)	1.2 TCe (JZ16)	97	01/13 -		4287
GRAND SCÉNIC III (JZ0/1_)	1.4 16V (JZ0F)	96	02/09 -		3529/2
GRAND SCÉNIC III (JZ0/1_)	1.4 16V (JZ0F)	96	02/09 -		4287
GRAND SCÉNIC III (JZ0/1_)	1.5 dCi	63	04/09 -		3529/2
GRAND SCÉNIC III (JZ0/1_)	1.5 dCi	63	04/09 -	3964/1	
GRAND SCÉNIC III (JZ0/1_)	1.5 dCi	63	04/09 -		4287
GRAND SCÉNIC III (JZ0/1_)	1.5 dCi	70	11/10 -		3529/2
GRAND SCÉNIC III (JZ0/1_)	1.5 dCi	70	11/10 -		4287
GRAND SCÉNIC III (JZ0/1_)	1.5 dCi	78	02/09 -		3529/2
GRAND SCÉNIC III (JZ0/1_)	1.5 dCi	78	02/09 -		4287
GRAND SCÉNIC III (JZ0/1_)	1.5 dCi	81	04/09 -		3529/2
GRAND SCÉNIC III (JZ0/1_)	1.5 dCi	81	04/09 -		4287
GRAND SCÉNIC III (JZ0/1_)	1.6 16V (JZ0U)	81	02/09 -		3529/2
GRAND SCÉNIC III (JZ0/1_)	1.6 16V (JZ0U)	81	02/09 -		4287
GRAND SCÉNIC III (JZ0/1_)	1.6 16V Bifuel	81	02/09 -		3529/2
GRAND SCÉNIC III (JZ0/1_)	1.6 16V Bifuel	81	02/09 -	3964/1	
GRAND SCÉNIC III (JZ0/1_)	1.6 16V Bifuel	81	02/09 -		4287
GRAND SCÉNIC III (JZ0/1_)	1.6 dCi (JZ00, JZ12)	96	04/11 -		3529/2
GRAND SCÉNIC III (JZ0/1_)	1.6 dCi (JZ00, JZ12)	96	04/11 -		4287
GRAND SCÉNIC III (JZ0/1_)	1.9 dCi	96	02/09 -		3529/2
GRAND SCÉNIC III (JZ0/1_)	1.9 dCi	96	02/09 -		4287
GRAND SCÉNIC III (JZ0/1_)	2.0 16V (JZ0G)	103	02/09 -		3529/2
GRAND SCÉNIC III (JZ0/1_)	2.0 16V (JZ0G)	103	02/09 -		4287
GRAND SCÉNIC III (JZ0/1_)	2.0 dCi (JZ0L)	118	04/09 -		3529/2
GRAND SCÉNIC III (JZ0/1_)	2.0 dCi (JZ0L)	118	04/09 -		4142
GRAND SCÉNIC III (JZ0/1_)	2.0 dCi (JZ0Y)	110	02/09 -		3529/2
GRAND SCÉNIC III (JZ0/1_)	2.0 dCi (JZ0Y)	110	02/09 -		4142
KADJAR (HA_, HL_)	1.2 TCe 130	96	06/15 -	4282	
KADJAR (HA_, HL_)	1.2 TCe 130	96	06/15 -		4283
KADJAR (HA_, HL_)	1.5 dCi 110	81	06/15 -	4282	
KADJAR (HA_, HL_)	1.5 dCi 110	81	06/15 -		4283
KADJAR (HA_, HL_)	1.6 dCi 130	96	06/15 -	4282	
KADJAR (HA_, HL_)	1.6 dCi 130	96	06/15 -		4283
KADJAR (HA_, HL_)	1.6 dCi 130 4x4	96	06/15 -	4282	
KADJAR (HA_, HL_)	1.6 dCi 130 4x4	96	06/15 -		4283
KANGOO (KC0/1)	1.9 dTi (KCOU)	59	02/00 -	3659	
KANGOO (KC0/1)	1.5 dCI	42	07/03 -	3659	
KANGOO (KC0/1)	1.5 dCi	45	04/05 – 06/10	3659	
KANGOO (KC0/1)	1.5 dCi	50	06/05 -	3659	
KANGOO (KC0/1)	1.5 dCi	62	06/05 -	3659	
KANGOO (KC0/1)	1.5 dCi (KC07)	48	12/01 -	3659	
KANGOO (KC0/1)	1.5 dCi (KC08,KC09)	60	07/02 -	3659	
KANGOO (KC0/1)	D 55 1.9 (KCOD)	40	08/97 -	3659	
KANGOO (KC0/1)	1.2 (KCOA, KCOK, KCOF,KCOI)	43	08/97 -	3659	
KANGOO (KC0/1)	1.4 (KCOC, KCOH, KCOB, KCOM)	55	08/97 -	3659	
KANGOO (KC0/1)	D 65 1.9 (KCOE, KC02, KCOJ, KCON)	47	08/97 -	3659	
KANGOO (KC0/1_)	1.9 dCi 4x4 (KC0V)	59	10/01 -		4093
KANGOO (KC0/1_)	1.6 16V 4x4 (KC0P, KC0L)	70	10/01 -		4093
KANGOO (KC0/1_)	1.6 16V 4x4 (KC0P, KC0S, KC0L)	70	10/01 -	3849	
KANGOO (KC0/1_)	1.9 dCi 4x4	62	10/03 -	3849	
KANGOO (KC0/1_)	1.9 dCi 4x4	62	10/03 -		4093
KANGOO (KC0/1_)	1.9 dCi 4x4 (KC0V)	59	10/01 -	3849	
KANGOO (KCO/1)	1.2 16V (KC05, KC06, KC03, KCOT, KCOW,	55	06/01 -	3659	
KANGOO (KCO/I)	1.6 16V bivalent	60	06/05 -	3659	
KANGOO / GRAND KANGOO (KW0/1_)	1.2 TCe 115	84	07/13 -	3966	
KANGOO / GRAND KANGOO (KW0/1_)	1.2 TCe 115	84	07/13 -		3967
KANGOO / GRAND KANGOO (KW0/1_)	1.2 TCe 115	84	07/13 -	3983	
KANGOO / GRAND KANGOO (KW0/1_)	1.5 dCi	55	11/12 -	3966	
KANGOO / GRAND KANGOO (KW0/1_)	1.5 dCi	55	11/12 -		3967
KANGOO / GRAND KANGOO (KW0/1_)	1.5 dCi	55	11/12 -	3983	
KANGOO / GRAND KANGOO (KW0/1_)	1.5 dCi	66	11/12 -	3966	
KANGOO / GRAND KANGOO (KW0/1_)	1.5 dCi	66	11/12 -		3967
KANGOO / GRAND KANGOO (KW0/1_)	1.5 dCi	66	11/12 -	3983	
KANGOO / GRAND KANGOO (KW0/1_)	1.5 dCi	78	02/08 -	3966	
KANGOO / GRAND KANGOO (KW0/1_)	1.5 dCi	78	02/08 -		3967
KANGOO / GRAND KANGOO (KW0/1_)	1.5 dCi	78	02/08 -	3983	
KANGOO / GRAND KANGOO (KW0/1_)	1.5 dCi (KW0A)	50	02/08 -	3966	
KANGOO / GRAND KANGOO (KW0/1_)	1.5 dCi (KW0A)	50	02/08 -		3967
KANGOO / GRAND KANGOO (KW0/1_)	1.5 dCi (KW0A)	50	02/08 -	3983	
KANGOO / GRAND KANGOO (KW0/1_)	1.5 dCi (KW0B)	63	02/08 -	3966	
KANGOO / GRAND KANGOO (KW0/1_)	1.5 dCi (KW0B)	63	02/08 -		3967

BEŞER

MAKE & MODEL		KW	YEAR		
RENAULT					
KANGOO / GRAND KANGOO (KW0/1_)	1.5 dCi (KW0B)	63	02/08 -	3983	
KANGOO / GRAND KANGOO (KW0/1_)	1.5 dCi (KW0C, KW0F)	76	02/08 -	3966	
KANGOO / GRAND KANGOO (KW0/1_)	1.5 dCi (KW0C, KW0F)	76	02/08 -		3967
KANGOO / GRAND KANGOO (KW0/1_)	1.5 dCi (KW0C, KW0F)	76	02/08 -	3983	
KANGOO / GRAND KANGOO (KW0/1_)	1.5 dCi 110	80	09/10 -	3966	
KANGOO / GRAND KANGOO (KW0/1_)	1.5 dCi 110	80	09/10 -		3967
KANGOO / GRAND KANGOO (KW0/1_)	1.5 dCi 110	80	09/10 -	3983	
KANGOO / GRAND KANGOO (KW0/1_)	1.5 dCi 110	81	03/13 -	3966	
KANGOO / GRAND KANGOO (KW0/1_)	1.5 dCi 110	81	03/13 -		3967
KANGOO / GRAND KANGOO (KW0/1_)	1.5 dCi 110	81	03/13 -	3983	
KANGOO / GRAND KANGOO (KW0/1_)	1.6 (KW00, KW0Y)	64	02/08 -	3966	
KANGOO / GRAND KANGOO (KW0/1_)	1.6 (KW00, KW0Y)	64	02/08 -		3967
KANGOO / GRAND KANGOO (KW0/1_)	1.6 (KW00, KW0Y)	64	02/08 -	3983	
KANGOO / GRAND KANGOO (KW0/1_)	1.6 16V (KW0D)	78	02/08 -	3966	
KANGOO / GRAND KANGOO (KW0/1_)	1.6 16V (KW0D)	78	02/08 -		3967
KANGOO / GRAND KANGOO (KW0/1_)	1.6 16V (KW0D)	78	02/08 -	3983	
KANGOO / GRAND KANGOO (KW0/1_)	1.6 16V Hi-Flex	78	02/08 -	3966	
KANGOO / GRAND KANGOO (KW0/1_)	1.6 16V Hi-Flex	78	02/08 -		3967
KANGOO / GRAND KANGOO (KW0/1_)	1.6 16V Hi-Flex	78	02/08 -	3983	
KANGOO BE BOP (KW0/1_)	1.5 dCi	80	06/09 -	3966	
KANGOO BE BOP (KW0/1_)	1.5 dCi	80	06/09 -		3967
KANGOO BE BOP (KW0/1_)	1.5 dCi	80	06/09 -	3983	
KANGOO BE BOP (KW0/1_)	1.5 dCi (KW0F)	76	02/09 -	3966	
KANGOO BE BOP (KW0/1_)	1.5 dCi (KW0F)	76	02/09 -		3967
KANGOO BE BOP (KW0/1_)	1.5 dCi (KW0F)	76	02/09 -	3983	
KANGOO BE BOP (KW0/1_)	1.5 dCi (KW0G)	66	06/09 -	3966	
KANGOO BE BOP (KW0/1_)	1.5 dCi (KW0G)	66	06/09 -		3967
KANGOO BE BOP (KW0/1_)	1.5 dCi (KW0G)	66	06/09 -	3983	
KANGOO BE BOP (KW0/1_)	1.5 dCi 75	55	09/10 -	3966	
KANGOO BE BOP (KW0/1_)	1.5 dCi 75	55	09/10 -		3967
KANGOO BE BOP (KW0/1_)	1.5 dCi 75	55	09/10 -	3983	
KANGOO BE BOP (KW0/1_)	1.6 (KW0D)	78	02/09 -	3966	
KANGOO BE BOP (KW0/1_)	1.6 (KW0D)	78	02/09 -		3967
KANGOO BE BOP (KW0/1_)	1.6 (KW0D)	78	02/09 -	3983	
KANGOO Express (FC0/1)	1.2 (FCIA)	44	07/98 – 07/01	3659	
KANGOO Express (FC0/1)	1.2 (FCOI,FCOA,FCOF)	43	08/97 -	3659	
KANGOO Express (FC0/1)	1.4 (FCOC, FCOB, FCOH, FCOM)	55	08/97 -	3659	
KANGOO Express (FC0/1)	1.5 dCi	45	10/05 -	3659	
KANGOO Express (FC0/1)	1.5 dCi (FC07, FCIR)	48	12/01 -	3659	
KANGOO Express (FC0/1)	1.5 dCi (FCIE)	50	06/05 -	3659	
KANGOO Express (FC0/1)	1.5 dCi (FCIR)	42	12/02 -	3659	
KANGOO Express (FC0/1)	1.9 D (FCOJ)	48	09/99 – 06/03	3659	
KANGOO Express (FC0/1)	1.9 dTi (FCOU)	59	02/00 -	3659	
KANGOO Express (FC0/1) D 55	1.9 (FCOD)	40	08/97 -	3659	
KANGOO Express (FC0/1) D 65	1.9 (FCOE, FC02,FCOJ,FCON)	47	08/97 -	3659	
KANGOO Express (FC0/1)	1.2 16V (FC05)	55	10/01-	3659	
KANGOO Express (FC0/1_)	1.9 dCi 4x4 (FC0V)	59	10/01 -	3849	
KANGOO Express (FC0/1_)	1.9 dCi 4x4 (FC0V)	62	07/03 -	3849	
KANGOO Express (FC0/1_)	1.6 16V 4x4 (FC0L, FC0P, FC0S)	70	10/01 -	3849	
KANGOO Express (FC0/1_)	1.6 16V 4x4 (FC0L, FC0P, FC0S)	70	10/01 -		4093
KANGOO Express (FC0/1_)	1.9 dCi 4x4 (FC0V)	59	10/01 -		4093
KANGOO Express (FC0/1_)	1.9 dCi 4x4 (FC0V)	62	07/03 -		4093
KANGOO Express (FW0/1_)	16	64	02/08 -	3966	
KANGOO Express (FW0/1_)	16	64	02/08 -		3967
KANGOO Express (FW0/1_)	16	64	02/08 -	3983	
KANGOO Express (FW0/1_)	1.2 TCe 115	84	07/13 -	3966	
KANGOO Express (FW0/1_)	1.2 TCe 115	84	07/13 -		3967
KANGOO Express (FW0/1_)	1.2 TCe 115	84	07/13 -	3983	
KANGOO Express (FW0/1_)	1.5 dCi	50	02/08 -	3966	
KANGOO Express (FW0/1_)	1.5 dCi	50	02/08 -		3967
KANGOO Express (FW0/1_)	1.5 dCi	50	02/08 -	3983	
KANGOO Express (FW0/1_)	1.5 dCi (FW0F)	76	02/08 -	3966	
KANGOO Express (FW0/1_)	1.5 dCi (FW0F)	76	02/08 -		3967
KANGOO Express (FW0/1_)	1.5 dCi (FW0F)	76	02/08 -	3983	
KANGOO Express (FW0/1_)	1.5 dCi 110	80	09/10 -	3966	
KANGOO Express (FW0/1_)	1.5 dCi 110	80	09/10 -		3967
KANGOO Express (FW0/1_)	1.5 dCi 110	80	09/10 -	3983	
KANGOO Express (FW0/1_)	1.5 dCi 110	81	09/13 -	3966	
KANGOO Express (FW0/1_)	1.5 dCi 110	81	09/13 -		3967
KANGOO Express (FW0/1_)	1.5 dCi 110	81	09/13 -	3983	
KANGOO Express (FW0/1_)	1.5 dCi 75	55	09/10 -	3966	

MAKE & MODEL		KW	YEAR		
RENAULT					
KANGOO Express (FW0/1_)	1.5 dCi 75	55	09/10 -		3967
KANGOO Express (FW0/1_)	1.5 dCi 75	55	09/10 -	3983	
KANGOO Express (FW0/1_)	1.5 dCi 85 (FW0A, FW0B)	63	02/08 -	3966	
KANGOO Express (FW0/1_)	1.5 dCi 85 (FW0A, FW0B)	63	02/08 -		3967
KANGOO Express (FW0/1_)	1.5 dCi 85 (FW0A, FW0B)	63	02/08 -	3983	
KANGOO Express (FW0/1_)	1.5 dCi 90 (FW0G)	66	06/09 -	3966	
KANGOO Express (FW0/1_)	1.5 dCi 90 (FW0G)	66	06/09 -		3967
KANGOO Express (FW0/1_)	1.5 dCi 90 (FW0G)	66	06/09 -	3983	
KANGOO Express (FW0/1_)	1.6 16V	78	02/08 -	3966	
KANGOO Express (FW0/1_)	1.6 16V	78	02/08 -		3967
KANGOO Express (FW0/1_)	1.6 16V	78	02/08 -	3983	
KANGOO Express (FW0/1_)	1.6 16V LPG	72	02/08 -	3966	
KANGOO Express (FW0/1_)	1.6 16V LPG	72	02/08 -		3967
KANGOO Express (FW0/1_)	1.6 16V LPG	72	02/08 -	3983	
KANGOO Express (FW0/1_)	Z.E.	44	10/11 -	3966	
KANGOO Express (FW0/1_)	Z.E.	44	10/11 -		3967
KANGOO Express (FW0/1_)	Z.E.	44	10/11 -	3983	
KOLEOS (HY_)	20	103	08/13 -		3933
KOLEOS (HY_)	20	103	08/13 -	4143	
KOLEOS (HY_)	2.0 dCi (HY0K)	110	09/08 -		3933
KOLEOS (HY_)	2.0 dCi (HY0K)	110	09/08 -	4143	
KOLEOS (HY_)	2.0 dCi 4x4 (HY0B)	127	09/08 -		3933
KOLEOS (HY_)	2.0 dCi 4x4 (HY0B)	127	09/08 -	4143	
KOLEOS (HY_)	2.0 dCi 4x4 (HY0K)	110	09/08 -		3933
KOLEOS (HY_)	2.0 dCi 4x4 (HY0K)	110	09/08 -	4143	
KOLEOS (HY_)	2.5 (HY0C, HY0N)	126	09/08 -		3933
KOLEOS (HY_)	2.5 (HY0C, HY0N)	126	09/08 -	4143	
KOLEOS (HY_)	2.5 4x4 (HY0C, HY0N)	126	09/08 -		3933
KOLEOS (HY_)	2.5 4x4 (HY0C, HY0N)	126	09/08 -	4143	
LAGUNA Coupe (DT0/1)	1.5 dCi	81	03/12 -		3853/1
LAGUNA Coupe (DT0/1)	1.5 dCi	81	03/12 -	3950	
LAGUNA Coupe (DT0/1)	2.0 16V Turbo	125	09/08 -		3853/1
LAGUNA Coupe (DT0/1)	2.0 16V Turbo	125	09/08 -	4134	
LAGUNA Coupe (DT0/1)	2.0 dCi	127	09/08 -		3853/1
LAGUNA Coupe (DT0/1)	2.0 dCi	127	09/08 -	4134	
LAGUNA Coupe (DT0/1)	2.0 dCi (DT01, DT09, DT12, DT1D)	110	09/08 -		3853/1
LAGUNA Coupe (DT0/1)	2.0 dCi (DT01, DT09, DT12, DT1D)	110	09/08 -	4134	
LAGUNA Coupe (DT0/1)	2.0 dCi GT (DT11, DT1E, DT1N)	131	09/08 -	4134	
LAGUNA Coupe (DT0/1)	2.0 GT	150	09/08 -		3853/1
LAGUNA Coupe (DT0/1)	3.0 dCi	177	01/12 -		3853/1
LAGUNA Coupe (DT0/1)	3.0 dCi	177	01/12 -	4134	
LAGUNA Coupe (DT0/1)	3.0 dCi (DT03)	173	09/08 -		3853/1
LAGUNA Coupe (DT0/1)	3.0 dCi (DT03)	173	09/08 -	4134	
LAGUNA Coupe (DT0/1)	3.5 V6 (DT0P)	175	09/08 -		3853/1
LAGUNA Coupe (DT0/1)	3.5 V6 (DT0P)	175	09/08 -	4134	
LAGUNA Coupe (DT0/1)	2.0 dCi GT (DT11, DT1E,DT1N)	131	09/08 -		3853/1
LAGUNA I (B56_, 556_)	18	69	06/95 – 02/01	3539	
LAGUNA I (B56_, 556_)	18	69	06/95 – 02/01	3546	
LAGUNA I (B56_, 556_)	18	69	06/95 – 02/01		3596
LAGUNA I (B56_, 556_)	18	70	06/95 – 06/98	3539	
LAGUNA I (B56_, 556_)	18	70	06/95 – 06/98	3546	
LAGUNA I (B56_, 556_)	18	70	06/95 – 06/98		3596
LAGUNA I (B56_, 556_)	20	70	11/93 – 03/01	3539	
LAGUNA I (B56_, 556_)	20	70	11/93 – 03/01	3546	
LAGUNA I (B56_, 556_)	20	70	11/93 – 03/01		3596
LAGUNA I (B56_, 556_)	20	80	03/99 – 03/01	3539	
LAGUNA I (B56_, 556_)	20	80	03/99 – 03/01	3546	
LAGUNA I (B56_, 556_)	20	84	06/95 – 02/01	3539	
LAGUNA I (B56_, 556_)	20	84	06/95 – 02/01	3546	
LAGUNA I (B56_, 556_)	20	84	06/95 – 02/01		3596
LAGUNA I (B56_, 556_)	20	103	06/95 – 02/01	3539	
LAGUNA I (B56_, 556_)	20	103	06/95 – 02/01	3546	
LAGUNA I (B56_, 556_)	20	103	06/95 – 02/01		3596
LAGUNA I (B56_, 556_)	1.6 16V (B568, B561)	79	11/97 – 03/01	3539	
LAGUNA I (B56_, 556_)	1.6 16V (B568, B561)	79	11/97 – 03/01	3546	
LAGUNA I (B56_, 556_)	1.8 (B56A/B)	66	11/93 – 03/01	3539	
LAGUNA I (B56_, 556_)	1.8 (B56A/B)	66	11/93 – 03/01	3546	
LAGUNA I (B56_, 556_)	1.8 (B56A/B)	66	11/93 – 03/01		3596
LAGUNA I (B56_, 556_)	1.8 (B56S/T/0)	66	08/95 – 03/01	3539	
LAGUNA I (B56_, 556_)	1.8 (B56S/T/0)	66	08/95 – 03/01	3546	
LAGUNA I (B56_, 556_)	1.8 (B56S/T/0)	66	08/95 – 03/01		3596

BEŞER

MAKE & MODEL		KW	YEAR		
RENAULT					
LAGUNA I (B56_, 556_)	1.8 (B56Z)	69	08/95 – 03/01	3539	
LAGUNA I (B56_, 556_)	1.8 (B56Z)	69	08/95 – 03/01	3546	
LAGUNA I (B56_, 556_)	1.8 (B56Z)	69	08/95 – 03/01		3596
LAGUNA I (B56_, 556_)	1.8 16V (B563, B564)	88	04/98 – 03/01	3539	
LAGUNA I (B56_, 556_)	1.8 16V (B563, B564)	88	04/98 – 03/01	3546	
LAGUNA I (B56_, 556_)	1.9 dTi (B56J)	72	10/97 – 03/01	3539	
LAGUNA I (B56_, 556_)	1.9 dTi (B56J)	72	10/97 – 03/01	3546	
LAGUNA I (B56_, 556_)	2.0 (B56C/H/N)	83	11/93 – 03/01	3539	
LAGUNA I (B56_, 556_)	2.0 (B56C/H/N)	83	11/93 – 03/01	3546	
LAGUNA I (B56_, 556_)	2.0 (B56C/H/N)	83	11/93 – 03/01		3596
LAGUNA I (B56_, 556_)	2.0 16V (B56D/M)	102	06/95 – 03/01	3539	
LAGUNA I (B56_, 556_)	2.0 16V (B56D/M)	102	06/95 – 03/01	3546	
LAGUNA I (B56_, 556_)	2.0 16V (B56D/M)	102	06/95 – 03/01		3596
LAGUNA I (B56_, 556_)	2.2 D (B56F/2)	61	11/93 – 03/01	3539	
LAGUNA I (B56_, 556_)	2.2 D (B56F/2)	61	11/93 – 03/01	3546	
LAGUNA I (B56_, 556_)	2.2 D (B56F/2)	61	11/93 – 03/01		3596
LAGUNA I (B56_, 556_)	2.2 dT (B569)	83	03/96 – 03/01	3539	
LAGUNA I (B56_, 556_)	2.2 dT (B569)	83	03/96 – 03/01	3546	
LAGUNA I (B56_, 556_)	2.2 dT (B569)	83	03/96 – 03/01		3596
LAGUNA I (B56_, 556_)	3.0 (B56E/R, B565)	123	11/93 – 03/01	3539	
LAGUNA I (B56_, 556_)	3.0 (B56E/R, B565)	123	11/93 – 03/01	3546	
LAGUNA I (B56_, 556_)	3.0 (B56E/R, B565)	123	11/93 – 03/01		3596
LAGUNA I (B56_, 556_)	3.0 24V (B56V)	140	03/97 – 03/01	3539	
LAGUNA I (B56_, 556_)	3.0 24V (B56V)	140	03/97 – 03/01	3546	
LAGUNA I Grandtour (K56_)	20	84	10/98 – 01/01	3539	
LAGUNA I Grandtour (K56_)	20	84	10/98 – 01/01	3546	
LAGUNA I Grandtour (K56_)	1.6 16V (K568)	79	11/97 – 03/01	3539	
LAGUNA I Grandtour (K56_)	1.6 16V (K568)	79	11/97 – 03/01	3546	
LAGUNA I Grandtour (K56_)	1.8 (K56S/T/0)	66	09/95 – 03/01	3539	
LAGUNA I Grandtour (K56_)	1.8 (K56S/T/0)	66	09/95 – 03/01	3546	
LAGUNA I Grandtour (K56_)	1.8 (K56S/T/0)	66	09/95 – 03/01		3596
LAGUNA I Grandtour (K56_)	1.8 (K56Z)	69	09/95 – 03/01	3539	
LAGUNA I Grandtour (K56_)	1.8 (K56Z)	69	09/95 – 03/01	3546	
LAGUNA I Grandtour (K56_)	1.8 (K56Z)	69	09/95 – 03/01		3596
LAGUNA I Grandtour (K56_)	1.8 16V (K563, K564)	88	04/98 – 03/01	3539	
LAGUNA I Grandtour (K56_)	1.8 16V (K563, K564)	88	04/98 – 03/01	3546	
LAGUNA I Grandtour (K56_)	1.9 dTi (K56J)	72	10/97 – 03/01	3539	
LAGUNA I Grandtour (K56_)	1.9 dTi (K56J)	72	10/97 – 03/01	3546	
LAGUNA I Grandtour (K56_)	2.0 (K56C/H)	83	09/95 – 03/01	3539	
LAGUNA I Grandtour (K56_)	2.0 (K56C/H)	83	09/95 – 03/01	3546	
LAGUNA I Grandtour (K56_)	2.0 (K56C/H)	83	09/95 – 03/01		3596
LAGUNA I Grandtour (K56_)	2.0 16V (K56D/M)	102	09/95 – 03/01	3539	
LAGUNA I Grandtour (K56_)	2.0 16V (K56D/M)	102	09/95 – 03/01	3546	
LAGUNA I Grandtour (K56_)	2.0 16V (K56D/M)	102	09/95 – 03/01		3596
LAGUNA I Grandtour (K56_)	2.2 D (K56F/2, S56F)	61	09/95 – 03/01	3539	
LAGUNA I Grandtour (K56_)	2.2 D (K56F/2, S56F)	61	09/95 – 03/01	3546	
LAGUNA I Grandtour (K56_)	2.2 D (K56F/2, S56F)	61	09/95 – 03/01		3596
LAGUNA I Grandtour (K56_)	2.2 dT (K569)	83	03/96 – 03/01	3539	
LAGUNA I Grandtour (K56_)	2.2 dT (K569)	83	03/96 – 03/01	3546	
LAGUNA I Grandtour (K56_)	2.2 dT (K569)	83	03/96 – 03/01		3596
LAGUNA I Grandtour (K56_)	3.0 (K56R, K565)	123	02/96 – 03/01	3539	
LAGUNA I Grandtour (K56_)	3.0 (K56R, K565)	123	02/96 – 03/01	3546	
LAGUNA I Grandtour (K56_)	3.0 (K56R, K565)	123	02/96 – 03/01		3596
LAGUNA I Grandtour (K56_)	3.0 24V (K56V)	140	03/97 – 03/01	3539	
LAGUNA I Grandtour (K56_)	3.0 24V (K56V)	140	03/97 – 03/01	3546	
LAGUNA I Grandtour (K56_)	3.0 24V (K56V)	140	03/97 – 03/01		3596
LAGUNA II (BG0/1_)	1.8 16V (BG0B, BG0C, BG0J, BG0M, BG0V)	89	03/01 -	3852	
LAGUNA II (BG0/1_)	2.0 16V IDE (BG0N)	103	04/01 -	3852	
LAGUNA II (BG0/1_)	2.0 16V Turbo (BG0S, BG0Z, BG1L, BG1M)	120	01/03 -	3852	
LAGUNA II (BG0/1_)	1.6 16V (BG0A, BG0L)	79	03/01 -	3852	
LAGUNA II (BG0/1_)	1.6 16V (BG0A, BG0L)	79	03/01 -		3853
LAGUNA II (BG0/1_)	1.6 16V (BG0A, BG0L)	79	03/01 -	3950	
LAGUNA II (BG0/1_)	1.6 16V (BG1G, BG1H)	82	02/05 -	3852	
LAGUNA II (BG0/1_)	1.6 16V (BG1G, BG1H)	82	02/05 -		3853
LAGUNA II (BG0/1_)	1.6 16V (BG1G, BG1H)	82	02/05 -	3950	
LAGUNA II (BG0/1_)	1.8 16V (BG04, BG0B, BG0C BG0V)	86	03/01 -	3852	
LAGUNA II (BG0/1_)	1.8 16V (BG04, BG0B, BG0C BG0V)	86	03/01 -		3853
LAGUNA II (BG0/1_)	1.8 16V (BG04, BG0B, BG0C BG0V)	86	03/01 -	3950	
LAGUNA II (BG0/1_)	1.8 16V (BG06, BG0J, BG0M)	85	03/01 -	3950	
LAGUNA II (BG0/1_)	1.8 16V (BG06, BG0J, BG0M)	85	03/01 -	3852	
LAGUNA II (BG0/1_)	1.8 16V (BG06, BG0J, BG0M)	85	03/01 -		3853

MAKE & MODEL   		KW	YEAR		
RENAULT					
LAGUNA II (BG0/1_)	1.8 16V (BG0B, BG0C, BG0J, BG0M, BG0V)	89	03/01 -		3853
LAGUNA II (BG0/1_)	1.8 16V (BG0B, BG0C, BG0J, BG0M, BG0V)	89	03/01 -	3950	
LAGUNA II (BG0/1_)	1.8 16V (BG0B, BG0M)	88	03/01 -	3852	
LAGUNA II (BG0/1_)	1.8 16V (BG0B, BG0M)	88	03/01 -		3853
LAGUNA II (BG0/1_)	1.8 16V (BG0B, BG0M)	88	03/01 -	3950	
LAGUNA II (BG0/1_)	1.9 dCI (BG0E)	77	06/01 -	3852	
LAGUNA II (BG0/1_)	1.9 dCI (BG0E)	77	06/01 -		3853
LAGUNA II (BG0/1_)	1.9 dCI (BG0E)	77	06/01 -	3950	
LAGUNA II (BG0/1_)	1.9 dCi	79	03/01 -	3852	
LAGUNA II (BG0/1_)	1.9 dCi	79	03/01 -		3853
LAGUNA II (BG0/1_)	1.9 dCi	79	03/01 -	3950	
LAGUNA II (BG0/1_)	1.9 dCi	85	09/05 -	3852	
LAGUNA II (BG0/1_)	1.9 dCi	85	09/05 -		3853
LAGUNA II (BG0/1_)	1.9 dCi	85	09/05 -	3950	
LAGUNA II (BG0/1_)	1.9 dCi	92	09/05 -	3852	
LAGUNA II (BG0/1_)	1.9 dCi	92	09/05 -		3853
LAGUNA II (BG0/1_)	1.9 dCi	92	09/05 -	3950	
LAGUNA II (BG0/1_)	1.9 dCi (BG05)	68	03/04 -	3852	
LAGUNA II (BG0/1_)	1.9 dCi (BG05)	68	03/04 -		3853
LAGUNA II (BG0/1_)	1.9 dCi (BG05)	68	03/04 -	3950	
LAGUNA II (BG0/1_)	1.9 dCi (BG08, BG0G)	88	03/01 -	3852	
LAGUNA II (BG0/1_)	1.9 dCi (BG08, BG0G)	88	03/01 -		3853
LAGUNA II (BG0/1_)	1.9 dCi (BG08, BG0G)	88	03/01 -	3950	
LAGUNA II (BG0/1_)	1.9 dCi (BG0R)	74	10/01 -	3852	
LAGUNA II (BG0/1_)	1.9 dCi (BG0R)	74	10/01 -		3853
LAGUNA II (BG0/1_)	1.9 dCi (BG0R)	74	10/01 -	3950	
LAGUNA II (BG0/1_)	1.9 dCi (BG1A, BG1V)	96	05/05 -	3852	
LAGUNA II (BG0/1_)	1.9 dCi (BG1A, BG1V)	96	05/05 -		3853
LAGUNA II (BG0/1_)	1.9 dCi (BG1A, BG1W)	81	01/05 -	3852	
LAGUNA II (BG0/1_)	1.9 dCi (BG1A, BG1W)	81	01/05 -		3853
LAGUNA II (BG0/1_)	1.9 dCi (BG1A, BG1W)	81	01/05 -	3950	
LAGUNA II (BG0/1_)	2.0 16V	98	08/02 -	3852	
LAGUNA II (BG0/1_)	2.0 16V	98	08/02 -		3853
LAGUNA II (BG0/1_)	2.0 16V	98	08/02 -	3950	
LAGUNA II (BG0/1_)	2.0 16V	125	01/05 -		3853
LAGUNA II (BG0/1_)	2.0 16V	150	01/05 -		3853
LAGUNA II (BG0/1_)	2.0 16V (BG00, BG0K, BG0P, BG0W)	99	08/02 -	3950	
LAGUNA II (BG0/1_)	2.0 16V (BG00, BG0K, BG0P,BG0W)	99	08/02 -	3852	
LAGUNA II (BG0/1_)	2.0 16V (BG00, BG0K, BG0P,BG0W)	99	08/02 -		3853
LAGUNA II (BG0/1_)	2.0 16V IDE (BG0N)	103	04/01 -	3950	
LAGUNA II (BG0/1_)	2.0 16V IDE (BG0N)	103	04/01 -		3853
LAGUNA II (BG0/1_)	2.0 16V Turbo (BG0S, BG0Z, BG1L, BG1M)	120	01/03 -		3853
LAGUNA II (BG0/1_)	2.0 dCi (BG14, BG1S)	127	01/06 -		3853
LAGUNA II (BG0/1_)	2.0 dCi (BG1T)	110	08/05 -	3852	
LAGUNA II (BG0/1_)	2.0 dCi (BG1T)	110	08/05 -		3853
LAGUNA II (BG0/1_)	2.2 dCi	102	05/05 -	3852	
LAGUNA II (BG0/1_)	2.2 dCi	102	05/05 -		3853
LAGUNA II (BG0/1_)	2.2 dCi (BG09)	85	04/04 – 10/05	3852	
LAGUNA II (BG0/1_)	2.2 dCi (BG09)	85	04/04 – 10/05		3853
LAGUNA II (BG0/1_)	2.2 dCi (BG0F)	110	10/01 -	3852	
LAGUNA II (BG0/1_)	2.2 dCi (BG0F)	110	10/01 -		3853
LAGUNA II (BG0/1_)	3.0 V6 24V (BG01, BG02, BG0D, BG0Y)	152	03/01 -		3853
LAGUNA II Grandtour (KG0/1_)	2.0 16V	98	10/04 – 09/07	3852	
LAGUNA II Grandtour (KG0/1_)	1.9 dCi (KG1V)	96	05/05 -	3852	
LAGUNA II Grandtour (KG0/1_)	2.0 16V (KG00, KG0K, KG0W)	99	08/02 -	3852	
LAGUNA II Grandtour (KG0/1_)	2.0 16V Turbo (KG0S, KG0Z, KG1L, KG1M)	120	01/03 -	3852	
LAGUNA II Grandtour (KG0/1_)	1.6 16V	82	02/05 -	3852	
LAGUNA II Grandtour (KG0/1_)	1.6 16V	82	02/05 -		3853
LAGUNA II Grandtour (KG0/1_)	1.6 16V	82	02/05 -	3950	
LAGUNA II Grandtour (KG0/1_)	1.6 16V (KG0A, KG0L)	79	03/01 -	3852	
LAGUNA II Grandtour (KG0/1_)	1.6 16V (KG0A, KG0L)	79	03/01 -		3853
LAGUNA II Grandtour (KG0/1_)	1.6 16V (KG0A, KG0L)	79	03/01 -	3950	
LAGUNA II Grandtour (KG0/1_)	1.6 FlexFuel	76	06/01 – 10/03	3852	
LAGUNA II Grandtour (KG0/1_)	1.6 FlexFuel	76	06/01 – 10/03		3853
LAGUNA II Grandtour (KG0/1_)	1.6 FlexFuel	76	06/01 – 10/03	3950	
LAGUNA II Grandtour (KG0/1_)	1.8 16V	86	03/01 -	3852	
LAGUNA II Grandtour (KG0/1_)	1.8 16V	86	03/01 -		3853
LAGUNA II Grandtour (KG0/1_)	1.8 16V	86	03/01 -	3950	
LAGUNA II Grandtour (KG0/1_)	1.8 16V	89	03/01 -	3852	
LAGUNA II Grandtour (KG0/1_)	1.8 16V	89	03/01 -		3853
LAGUNA II Grandtour (KG0/1_)	1.8 16V	89	03/01 -	3950	

MAKE & MODEL		KW	YEAR		
RENAULT					
LAGUNA II Grandtour (KG0/1_)	1.8 16V (KG0B, KG0M)	88	03/01 -	3852	
LAGUNA II Grandtour (KG0/1_)	1.8 16V (KG0B, KG0M)	88	03/01 -		3853
LAGUNA II Grandtour (KG0/1_)	1.8 16V (KG0J)	85	03/01 -	3852	
LAGUNA II Grandtour (KG0/1_)	1.8 16V (KG0J)	85	03/01 -		3853
LAGUNA II Grandtour (KG0/1_)	1.8 16V (KG0J)	85	03/01 -	3950	
LAGUNA II Grandtour (KG0/1_)	1.9 dCI (KG0E)	77	06/01 -	3852	
LAGUNA II Grandtour (KG0/1_)	1.9 dCI (KG0E)	77	06/01 -		3853
LAGUNA II Grandtour (KG0/1_)	1.9 dCI (KG0E)	77	06/01 -	3950	
LAGUNA II Grandtour (KG0/1_)	1.9 dCi	66	08/03 – 09/07	3852	
LAGUNA II Grandtour (KG0/1_)	1.9 dCi	66	08/03 – 09/07		3853
LAGUNA II Grandtour (KG0/1_)	1.9 dCi	66	08/03 – 09/07	3950	
LAGUNA II Grandtour (KG0/1_)	1.9 dCi	79	03/01 -	3852	
LAGUNA II Grandtour (KG0/1_)	1.9 dCi	79	03/01 -		3853
LAGUNA II Grandtour (KG0/1_)	1.9 dCi	79	03/01 -	3950	
LAGUNA II Grandtour (KG0/1_)	1.9 dCi	92	09/05 -	3852	
LAGUNA II Grandtour (KG0/1_)	1.9 dCi	92	09/05 -		3853
LAGUNA II Grandtour (KG0/1_)	1.9 dCi (KG05)	68	03/04 -	3852	
LAGUNA II Grandtour (KG0/1_)	1.9 dCi (KG05)	68	03/04 -		3853
LAGUNA II Grandtour (KG0/1_)	1.9 dCi (KG05)	68	03/04 -	3950	
LAGUNA II Grandtour (KG0/1_)	1.9 dCi (KG0E, KG0R)	74	10/01 -	3852	
LAGUNA II Grandtour (KG0/1_)	1.9 dCi (KG0E, KG0R)	74	10/01 -		3853
LAGUNA II Grandtour (KG0/1_)	1.9 dCi (KG0E, KG0R)	74	10/01 -	3950	
LAGUNA II Grandtour (KG0/1_)	1.9 dCi (KG0G)	88	03/01 -	3852	
LAGUNA II Grandtour (KG0/1_)	1.9 dCi (KG0G)	88	03/01 -		3853
LAGUNA II Grandtour (KG0/1_)	1.9 dCi (KG0G)	88	03/01 -	3950	
LAGUNA II Grandtour (KG0/1_)	1.9 dCi (KG12)	85	08/05 – 09/07	3852	
LAGUNA II Grandtour (KG0/1_)	1.9 dCi (KG12)	85	08/05 – 09/07		3853
LAGUNA II Grandtour (KG0/1_)	1.9 dCi (KG1A, KG1W)	81	01/05 -		3853
LAGUNA II Grandtour (KG0/1_)	1.9 dCi (KG1A, KG1W)	81	01/05 -	3950	
LAGUNA II Grandtour (KG0/1_)	1.9 dCi (KG1A, KG1W)	81	01/05 -	3852	
LAGUNA II Grandtour (KG0/1_)	1.9 dCi (KG1V)	96	05/05 -		3853
LAGUNA II Grandtour (KG0/1_)	1.9 dCi (KG1V)	96	05/05 -	3950	
LAGUNA II Grandtour (KG0/1_)	2.0 16V	98	10/04 – 09/07		3853
LAGUNA II Grandtour (KG0/1_)	2.0 16V	98	10/04 – 09/07	3950	
LAGUNA II Grandtour (KG0/1_)	2.0 16V	125	01/05 -		3853
LAGUNA II Grandtour (KG0/1_)	2.0 16V	150	01/05 -		3853
LAGUNA II Grandtour (KG0/1_)	2.0 16V (KG00, KG0K, KG0W)	99	08/02 -		3853
LAGUNA II Grandtour (KG0/1_)	2.0 16V (KG00, KG0K, KG0W)	99	08/02 -	3950	
LAGUNA II Grandtour (KG0/1_)	2.0 16V IDE (KG0N)	103	04/01 -		3853
LAGUNA II Grandtour (KG0/1_)	2.0 16V IDE (KG0N)	103	04/01 -	3852	
LAGUNA II Grandtour (KG0/1_)	2.0 16V Turbo (KG0S, KG0Z, KG1L, KG1M)	120	01/03 -		3853
LAGUNA II Grandtour (KG0/1_)	2.0 dCi (KG1S)	127	01/06 -		3853
LAGUNA II Grandtour (KG0/1_)	2.0 dCi (KG1T)	110	08/05 -	3852	
LAGUNA II Grandtour (KG0/1_)	2.0 dCi (KG1T)	110	08/05 -		3853
LAGUNA II Grandtour (KG0/1_)	2.0 Flex	95	09/02 – 05/05	3852	
LAGUNA II Grandtour (KG0/1_)	2.0 Flex	95	09/02 – 05/05		3853
LAGUNA II Grandtour (KG0/1_)	2.0 Flex	95	09/02 – 05/05	3950	
LAGUNA II Grandtour (KG0/1_)	2.2 dCi	102	05/05 -	3852	
LAGUNA II Grandtour (KG0/1_)	2.2 dCi	102	05/05 -		3853
LAGUNA II Grandtour (KG0/1_)	2.2 dCi (KG09)	85	04/04 – 10/05	3852	
LAGUNA II Grandtour (KG0/1_)	2.2 dCi (KG09)	85	04/04 – 10/05		3853
LAGUNA II Grandtour (KG0/1_)	2.2 dCi (KG0F)	110	10/01 -	3852	
LAGUNA II Grandtour (KG0/1_)	2.2 dCi (KG0F)	110	10/01 -		3853
LAGUNA II Grandtour (KG0/1_)	3.0 V6 24V (KG0D)	152	03/01 -		3853
LAGUNA III (BT0/1)	1.6 16V (BT04, BT0D, BT0U)	81	10/07 -	3950	
LAGUNA III (BT0/1)	2.0 dCi (BT0M, BT0N, BT19)	127	01/08 -		3853/1
LAGUNA III (BT0/1)	2.0 dCi GT (BT1E, BT1N)	131	03/08 -		3853/1
LAGUNA III (BT0/1)	2.0 dCi GT (BT1E, BT1N)	131	03/08 -	4134	
LAGUNA III (BT0/1)	1.5 dCi (BT00, BT0A, BT0T, BT1J)	81	10/07 -		3853/1
LAGUNA III (BT0/1)	1.5 dCi (BT00, BT0A, BT0T, BT1J)	81	10/07 -	3950	
LAGUNA III (BT0/1)	1.6 16V (BT04, BT0D, BT0U)	81	10/07 -		3853/1
LAGUNA III (BT0/1)	2.0 16V (BT05, BT0F, BT0W)	103	10/07 -		3853/1
LAGUNA III (BT0/1)	2.0 16V (BT05, BT0F, BT0W)	103	10/07 -	4134	
LAGUNA III (BT0/1)	2.0 16V Hi-Flex (BT1H)	103	10/07 -		3853/1
LAGUNA III (BT0/1)	2.0 16V Hi-Flex (BT1H)	103	10/07 -	4134	
LAGUNA III (BT0/1)	2.0 16V Turbo	125	10/07 -		3853/1
LAGUNA III (BT0/1)	2.0 16V Turbo	125	10/07 -	4134	
LAGUNA III (BT0/1)	2.0 dCi (BT01, BT09, BT12, BT1S)	110	10/07 -		3853/1
LAGUNA III (BT0/1)	2.0 dCi (BT01, BT09, BT12, BT1S)	110	10/07 -	4134	
LAGUNA III (BT0/1)	2.0 dCi (BT08, BT0K, BT0J, BT14, BT1A, BT1D)	96	10/07 -		3853/1
LAGUNA III (BT0/1)	2.0 dCi (BT08, BT0K, BT0J, BT14, BT1A, BT1D)	96	10/07 -	4134	

MAKE & MODEL		KW	YEAR		
RENAULT					
LAGUNA III (BT0/1)	2.0 dCi (BT0M, BT0N, BT19)	127	01/08 -	4134	
LAGUNA III (BT0/1)	2.0 GT	150	03/08 -		3853/1
LAGUNA III (BT0/1)	3.0 dCi (BT03, BT13)	173	09/08 -		3853/1
LAGUNA III (BT0/1)	3.5 V6 (BT0C, BT0P)	175	04/08 -		3853/1
LAGUNA III Grandtour (KT0/1)	1.5 dCi (KT0A)	81	10/07 -	3950	
LAGUNA III Grandtour (KT0/1)	1.6 16V (KT0D)	81	10/07 -	3950	
LAGUNA III Grandtour (KT0/1)	2.0 GT	150	03/08 -		3853/1
LAGUNA III Grandtour (KT0/1)	3.0 dCi (KT03, KT13)	173	09/08 -		3853/1
LAGUNA III Grandtour (KT0/1)	3.5 V6 (KT0C, KT0P)	175	04/08 -		3853/1
LAGUNA III Grandtour (KT0/1)	2.0 16V Turbo	125	10/07 -		3853/1
LAGUNA III Grandtour (KT0/1)	1.6 16V (KT0D)	81	10/07 -		3853/1
LAGUNA III Grandtour (KT0/1)	2.0 16V (KT0F, KT0W)	103	10/07 -		3853/1
LAGUNA III Grandtour (KT0/1)	2.0 16V Hi-Flex (KT1H)	103	10/07 -		3853/1
LAGUNA III Grandtour (KT0/1)	2.0 dCi GT (KT11, KT1E, KT1N)	131	03/08 -		3853/1
LAGUNA III Grandtour (KT0/1)	1.5 dCi (KT0A)	81	10/07 -		3853/1
LAGUNA III Grandtour (KT0/1)	2.0 dCi (KT01, KT08, KT0K, KT0J, KT1A, KT1D)	96	10/07 -		3853/1
LAGUNA III Grandtour (KT0/1)	2.0 dCi (KT01, KT09, KT12, KT1S)	110	10/07 -		3853/1
LAGUNA III Grandtour (KT0/1)	2.0 dCi (KT0M, KT0N, KT19)	127	01/08 -		3853/1
LAGUNA III Grandtour (KT0/1)	2.0 16V Turbo	125	10/07 -	4134	
LAGUNA III Grandtour (KT0/1)	2.0 dCi (KT01, KT08, KT0K, KT0J, KT1A, KT1D)	96	10/07 -	4134	
LAGUNA III Grandtour (KT0/1)	2.0 dCi (KT0M, KT0N, KT19)	127	01/08 -	4134	
LAGUNA III Grandtour (KT0/1)	2.0 16V (KT0F, KT0W)	103	10/07 -	4134	
LAGUNA III Grandtour (KT0/1)	2.0 16V Hi-Flex (KT1H)	103	10/07 -	4134	
LAGUNA III Grandtour (KT0/1)	2.0 dCi (KT01, KT09, KT12, KT1S)	110	10/07 -	4134	
LAGUNA III Grandtour (KT0/1)	2.0 dCi GT (KT11, KT1E, KT1N)	131	03/08 -	4134	
LATITUDE (L70_)	1.5 dCi (L70R)	81	07/10 -	4134	
LATITUDE (L70_)	2.0 16V (L70B)	103	02/11 -	4134	
LATITUDE (L70_)	2.0 16V eco2 Flexfuel (L70B)	103	02/11 -	4134	
LATITUDE (L70_)	2.0 dCi	130	02/11 -	4134	
LATITUDE (L70_)	2.0 dCi 150 (L70H)	110	02/11 -	4134	
LATITUDE (L70_)	2.0 dCi 175 (L70Y)	127	05/11 -	4134	
LATITUDE (L70_)	2.5 V6 (L702, L703, L704, L707)	130	05/11 -	4134	
LOGAN II MCV / TONDAR (K52)	1.5 DCI (K9K 838)	62	12/13 -	4253	
LOGAN II / TONDAR (L52)	1.6 (K4M 842)	75	04/14 -	4253	
LOGAN EXPRESS (US_)	16	64	04/07 -	3983	
LOGAN EXPRESS (US_)	16	64	04/07 -	4141/1	
LOGAN EXPRESS (US_)	1.5 dCi	50	04/07 -	3983	
LOGAN EXPRESS (US_)	1.5 dCi	50	04/07 -	4141/1	
LOGAN I (LS_)	14	55	09/04 -	3431	
LOGAN I (LS_)	14	55	09/04 -	3503	
LOGAN I (LS_)	16	64	09/04 -	3431	
LOGAN I (LS_)	16	64	09/04 -	3503	
LOGAN I (LS_)	16	77	04/07 -	3431	
LOGAN I (LS_)	16	77	04/07 -	3503	
LOGAN I (LS_)	1.5 dCi	48	06/11 -	3431	
LOGAN I (LS_)	1.5 dCi	48	06/11 -	3503	
LOGAN I (LS_)	1.5 dCi	50	04/07 -	3431	
LOGAN I (LS_)	1.5 dCi	50	04/07 -	3503	
LOGAN I (LS_)	1.5 dCi	63	02/08 -	3431	
LOGAN I (LS_)	1.5 dCi	63	02/08 -	3503	
LOGAN I Estate (KS_)	14	55	10/07 -	3431	
LOGAN I Estate (KS_)	14	55	10/07 -	3503	
LOGAN I Estate (KS_)	16	64	04/07 -	3431	
LOGAN I Estate (KS_)	16	64	04/07 -	3503	
LOGAN I Estate (KS_)	16	77	04/07 -	3431	
LOGAN I Estate (KS_)	16	77	04/07 -	3503	
LOGAN I Estate (KS_)	1.5 dCi	48	06/11 -	3431	
LOGAN I Estate (KS_)	1.5 dCi	48	06/11 -	3503	
LOGAN I Estate (KS_)	1.5 dCi	50	04/07 -	3431	
LOGAN I Estate (KS_)	1.5 dCi	50	04/07 -	3503	
LOGAN I Estate (KS_)	1.5 dCi	63	02/08 -	3431	
LOGAN I Estate (KS_)	1.5 dCi	63	02/08 -	3503	
LOGAN I Estate (KS_)	1.5 dCi	63	02/08 -	3983	
LOGAN I Estate (KS_)	1.5 dCi	63	02/08 -	4141/1	
LOGAN I Estate (KS_)	1.5 dCi	66	06/11 -	3431	
LOGAN I Estate (KS_)	1.5 dCi	66	06/11 -	3503	
LOGAN II (B8_)	16	75	04/14 -	4140	
LOGAN II Estate (K8_)	16	59	12/13 -	3983	
LOGAN II Estate (K8_)	16	59	12/13 -	4141/1	
LOGAN II Estate (K8_)	1.2 16V	54	12/13 -	4140	
LOGAN II Estate (K8_)	1.2 16V LPG	53	12/13 -	4140	

BEŞER

MAKE & MODEL		KW	YEAR	
RENAULT				
LOGAN II Estate (K8_)	1.5 dCi	62	12/13 -	3983
LOGAN II Estate (K8_)	1.5 dCi	62	12/13 -	4141/1
MASCOTT Box Body / Estate	9.035	63	01/99 – 12/01	3575
MASCOTT Box Body / Estate	9.035	63	01/99 – 12/01	3645
MASCOTT Box Body / Estate	11.035	78	01/99 – 06/04	3575
MASCOTT Box Body / Estate	11.035	78	01/99 – 06/04	3645
MASCOTT Box Body / Estate	11.050	78	01/99 – 06/04	3575
MASCOTT Box Body / Estate	11.050	78	01/99 – 06/04	3645
MASCOTT Box Body / Estate	11.055	78	01/99 – 06/04	3575
MASCOTT Box Body / Estate	11.055	78	01/99 – 06/04	3645
MASCOTT Box Body / Estate	11.055	78	01/99 – 06/04	3942/A
MASCOTT Box Body / Estate	13.035	92	01/99 – 06/04	3575
MASCOTT Box Body / Estate	13.035	92	01/99 – 06/04	3645
MASCOTT Box Body / Estate	13.055	92	01/99 – 06/04	3575
MASCOTT Box Body / Estate	13.055	92	01/99 – 06/04	3645
MASCOTT Box Body / Estate	13.055	92	01/99 – 06/04	3942/A
MASCOTT Box Body / Estate	14.035	103	01/01 – 06/04	3575
MASCOTT Box Body / Estate	14.035	103	01/01 – 06/04	3645
MASCOTT Box Body / Estate	14.055	103	01/01 – 06/04	3575
MASCOTT Box Body / Estate	14.055	103	01/01 – 06/04	3645
MASCOTT Box Body / Estate	14.055	103	01/01 – 06/04	3942/A
MASCOTT Box Body / Estate	120.35 (A02100003)	85	05/04 – 10/10	3575
MASCOTT Box Body / Estate	120.35 (A02100003)	85	05/04 – 10/10	3645
MASCOTT Box Body / Estate	120.55 (A02300005)	85	05/04 – 10/10	3575
MASCOTT Box Body / Estate	120.55 (A02300005)	85	05/04 – 10/10	3645
MASCOTT Box Body / Estate	120.55 (A02300005)	85	05/04 – 10/10	3942/A
MASCOTT Box Body / Estate	150.35 (A02300161)	107	10/01 – 06/04	3575
MASCOTT Box Body / Estate	150.35 (A02300161)	107	10/01 – 06/04	3645
MASCOTT Box Body / Estate	150.55 (A02300164)	107	10/01 – 06/04	3575
MASCOTT Box Body / Estate	150.55 (A02300164)	107	10/01 – 06/04	3645
MASCOTT Box Body / Estate	150.55 (A02300164)	107	10/01 – 06/04	3942/A
MASCOTT Box Body / Estate	150.65 (A00300166)	107	10/01 – 06/04	3575
MASCOTT Box Body / Estate	150.65 (A00300166)	107	10/01 – 06/04	3645
MASCOTT Box Body / Estate	150.65 (A00300166)	107	10/01 – 06/04	3942/A
MASCOTT Box Body / Estate	160.35 (A02100013)	115	05/04 – 10/10	3575
MASCOTT Box Body / Estate	160.35 (A02100013)	115	05/04 – 10/10	3645
MASCOTT Box Body / Estate	160.55 (A02300015)	115	05/04 – 10/10	3575
MASCOTT Box Body / Estate	160.55 (A02300015)	115	05/04 – 10/10	3645
MASCOTT Box Body / Estate	160.55 (A02300015)	115	05/04 – 10/10	3942/A
MASCOTT Dumptruck	90	78	01/00 – 06/04	3575
MASCOTT Dumptruck	90	78	01/00 – 06/04	3645
MASCOTT Dumptruck	110	78	01/00 – 06/04	3575
MASCOTT Dumptruck	110	78	01/00 – 06/04	3645
MASCOTT Platform/Chassis	90	63	01/99 – 12/01	3575
MASCOTT Platform/Chassis	90	63	01/99 – 12/01	3645
MASCOTT Platform/Chassis	110	78	01/99 – 06/04	3575
MASCOTT Platform/Chassis	110	78	01/99 – 06/04	3645
MASCOTT Platform/Chassis	110	78	01/99 – 06/04	3942/A
MASCOTT Platform/Chassis	130	92	01/99 – 06/04	3575
MASCOTT Platform/Chassis	130	92	01/99 – 06/04	3645
MASCOTT Platform/Chassis	130	92	01/99 – 06/04	3942/A
MASCOTT Platform/Chassis	140	103	01/01 – 06/04	3575
MASCOTT Platform/Chassis	140	103	01/01 – 06/04	3645
MASCOTT Platform/Chassis	160.55 (A00300015, A01300015)	115	05/04 – 12/10	3575
MASCOTT Platform/Chassis	160.65 (A00500017, A01500017, B03200017)	115	05/04 – 12/10	3575
MASCOTT Platform/Chassis	120.35 (A00100003, A01100003)	85	05/04 – 12/10	3575
MASCOTT Platform/Chassis	120.35 (A00100003, A01100003)	85	05/04 – 12/10	3645
MASCOTT Platform/Chassis	120.55 (A00300005, A01300005)	85	05/04 – 12/10	3575
MASCOTT Platform/Chassis	120.55 (A00300005, A01300005)	85	05/04 – 12/10	3645
MASCOTT Platform/Chassis	120.55 (A00300005, A01300005)	85	05/04 – 12/10	3942/A
MASCOTT Platform/Chassis	120.65 (A00500007)	85	05/04 – 12/10	3575
MASCOTT Platform/Chassis	120.65 (A00500007)	85	05/04 – 12/10	3645
MASCOTT Platform/Chassis	120.65 (A00500007)	85	05/04 – 12/10	3942/A
MASCOTT Platform/Chassis	150.35 (A00300161)	107	10/01 – 06/04	3575
MASCOTT Platform/Chassis	150.35 (A00300161)	107	10/01 – 06/04	3645
MASCOTT Platform/Chassis	150.35 (A00300164)	107	10/01 – 06/04	3575
MASCOTT Platform/Chassis	150.35 (A00300164)	107	10/01 – 06/04	3645
MASCOTT Platform/Chassis	150.35 (A00300164)	107	10/01 – 06/04	3942/A
MASCOTT Platform/Chassis	160.35 (A00100013, A01100013)	115	05/04 – 12/10	3575
MASCOTT Platform/Chassis	160.35 (A00100013, A01100013)	115	05/04 – 12/10	3645
MASCOTT Platform/Chassis	160.55 (A00300015, A01300015)	115	05/04 – 12/10	3645

MAKE & MODEL		KW	YEAR		
RENAULT					
MASCOTT Platform/Chassis	160.55 (A00300015, A01300015)	115	05/04 – 12/10	3942/A	
MASCOTT Platform/Chassis	160.65 (A00500017, A01500017, B03200017)	115	05/04 – 12/10	3645	
MASCOTT Platform/Chassis	160.65 (A00500017, A01500017, B03200017)	115	05/04 – 12/10	3942/A	
MASTER I Box (T	2.0	60	06/85 – 10/89	3526	
MASTER I Box (T	2.4 D	52	07/83 – 08/86	3526	
MASTER I Box (T	2.4 D	53	09/86 – 12/92	3526	
MASTER I Box (T	28-35 2,5 D	55	08/89 – 07/98	3526	
MASTER I Box (T	28-35 2,5 TD	72	08/89 – 07/98	3526	
MASTER I Box (T	28-35 2.0	58	10/86 – 07/98	3526	
MASTER I Box (T	28-35 2.0	59	08/80 – 10/86	3526	
MASTER I Box (T	28-35 2.1 D	44	08/80 – 07/98	3526	
MASTER I Box (T	28-35 2.4 D	52	08/80 – 08/89	3526	
MASTER I Box (T	30 2,2	67	08/80 – 07/98	3526	
MASTER I Box (T	35 2,5 TD	69	08/89 – 07/98	3526	
MASTER I Bus (T)	35 2,5 TD	69	08/89 – 07/98	3526	
MASTER I Bus (T	2.0	60	06/85 – 10/89	3526	
MASTER I Bus (T	2.1 D	44	11/89 – 04/95	3526	
MASTER I Bus (T	2.4 D	53	09/86 – 10/89	3526	
MASTER I Bus (T	28-35 2,5 TD	72	08/89 – 07/98	3526	
MASTER I Bus (T	28-35 2.0	58	10/86 – 07/98	3526	
MASTER I Bus (T	28-35 2.0	59	08/80 – 09/86	3526	
MASTER I Bus (T	28-35 2.1 D	44	08/80 – 07/98	3526	
MASTER I Bus (T	28-35 2.4 D	52	08/80 – 08/89	3526	
MASTER I Bus (T	28-35 2.5 D	55	08/89 – 07/98	3526	
MASTER I Bus (T	30 2,2	67	08/80 – 07/98	3526	
MASTER I Platform/Chassis (P	28-35 2.0	58	10/86 – 07/98	3526	
MASTER I Platform/Chassis (P	02.02.2017	71	08/93 – 02/98	3526	
MASTER I Platform/Chassis (P	2.0	60	11/89 – 07/93	3526	
MASTER I Platform/Chassis (P	2.0	60	11/89 – 12/95	3526	
MASTER I Platform/Chassis (P	2.1 D	46	11/89 – 07/93	3526	
MASTER I Platform/Chassis (P	2.4 D	52	08/93 – 02/98	3526	
MASTER I Platform/Chassis (P	2.5 D	55	07/80 – 10/89	3526	
MASTER I Platform/Chassis (P	2.5 DT	69	11/89 – 10/93	3526	
MASTER I Platform/Chassis (P	2.5 DT	70	08/93 – 02/98	3526	
MASTER I Platform/Chassis (P	28-35 2.0	59	10/82 – 09/86	3526	
MASTER I Platform/Chassis (P	28-35 2.5 D	52	09/80 – 07/98	3526	
MASTER II Box (FD)	1.9 dCi 80	60	11/01 -		3855
MASTER II Box (FD)	1.9 dCi 80	60	11/01 -	3856	
MASTER II Box (FD)	1.9 dTI	59	09/00 -		3855
MASTER II Box (FD)	1.9 dTI	59	09/00 -	3856	
MASTER II Box (FD)	2.2 dCI 90	66	09/00 -		3855
MASTER II Box (FD)	2.2 dCI 90	66	09/00 -	3856	
MASTER II Box (FD)	2.5 D	59	07/98 – 01/01		3855
MASTER II Box (FD)	2.5 D	59	07/98 – 01/01	3856	
MASTER II Box (FD)	2.5 dCi	74	08/06 -		3855
MASTER II Box (FD)	2.5 dCi	74	08/06 -	3856	
MASTER II Box (FD)	2.5 dCi	88	08/06 -		3855
MASTER II Box (FD)	2.5 dCi	88	08/06 -	3856	
MASTER II Box (FD)	2.5 dCi	107	08/06 -		3855
MASTER II Box (FD)	2.5 dCi	107	08/06 -	3856	
MASTER II Box (FD)	2.5 dCi 100 (FD0U, FD0V)	73	10/03 -		3855
MASTER II Box (FD)	2.5 dCi 100 (FD0U, FD0V)	73	10/03 -	3856	
MASTER II Box (FD)	2.5 dCi 120	84	10/01 -		3855
MASTER II Box (FD)	2.5 dCi 120	84	10/01 -	3856	
MASTER II Box (FD)	2.8 dTI	84	07/98 – 10/01		3855
MASTER II Box (FD)	2.8 dTI	84	07/98 – 10/01	3856	
MASTER II Box (FD)	3.0 dCi 120	85	06/05 -		3855
MASTER II Box (FD)	3.0 dCi 120	85	06/05 -	3856	
MASTER II Box (FD)	3.0 dCi 140 (HD0S, FD0S, HD1S)	100	10/03 -		3855
MASTER II Box (FD)	3.0 dCi 140 (HD0S, FD0S, HD1S)	100	10/03 -	3856	
MASTER II Box (FD)	3.0 dCi 160	115	06/05 -		3855
MASTER II Box (FD)	3.0 dCi 160	115	06/05 -	3856	
MASTER II Bus (JD)	1.9 dCi 80	60	11/01 -		3855
MASTER II Bus (JD)	1.9 dCi 80	60	11/01 -	3856	
MASTER II Bus (JD)	1.9 dTI	59	09/00 -		3855
MASTER II Bus (JD)	1.9 dTI	59	09/00 -	3856	
MASTER II Bus (JD)	2.2 dCI 90	66	09/00 -		3855
MASTER II Bus (JD)	2.2 dCI 90	66	09/00 -	3856	
MASTER II Bus (JD)	2.5 D	59	07/98 – 01/01		3855
MASTER II Bus (JD)	2.5 D	59	07/98 – 01/01	3856	
MASTER II Bus (JD)	2.5 dCi	74	08/06 -		3855

BEŞER

MAKE & MODEL		KW	YEAR		
RENAULT					
MASTER II Bus (JD)	2.5 dCi	74	08/06 -	3856	
MASTER II Bus (JD)	2.5 dCi	88	08/06 -		3855
MASTER II Bus (JD)	2.5 dCi	88	08/06 -	3856	
MASTER II Bus (JD)	2.5 dCi	107	08/06 -		3855
MASTER II Bus (JD)	2.5 dCi	107	08/06 -	3856	
MASTER II Bus (JD)	2.5 dCi 100 (JDCV)	73	10/03 -		3855
MASTER II Bus (JD)	2.5 dCi 100 (JDCV)	73	10/03 -	3856	
MASTER II Bus (JD)	2.5 dCi 120	84	10/01 -		3855
MASTER II Bus (JD)	2.5 dCi 120	84	10/01 -	3856	
MASTER II Bus (JD)	2.8 dTI	84	07/98 – 10/01		3855
MASTER II Bus (JD)	2.8 dTI	84	07/98 – 10/01	3856	
MASTER II Bus (JD)	3.0 dCi 140 (JD0T)	100	10/03 -		3855
MASTER II Bus (JD)	3.0 dCi 140 (JD0T)	100	10/03 -	3856	
MASTER II Platform/Chassis (ED/HD/UD)	2.2 dCI 90	66	09/00 -		3855
MASTER II Platform/Chassis (ED/HD/UD)	2.2 dCI 90	66	09/00 -	3856	
MASTER II Platform/Chassis (ED/HD/UD)	2.5 D	59	07/98 – 01/01		3855
MASTER II Platform/Chassis (ED/HD/UD)	2.5 D	59	07/98 – 01/01	3856	
MASTER II Platform/Chassis (ED/HD/UD)	2.5 dCi	74	08/06 -		3855
MASTER II Platform/Chassis (ED/HD/UD)	2.5 dCi	74	08/06 -	3856	
MASTER II Platform/Chassis (ED/HD/UD)	2.5 dCi	88	08/06 -		3855
MASTER II Platform/Chassis (ED/HD/UD)	2.5 dCi	88	08/06 -	3856	
MASTER II Platform/Chassis (ED/HD/UD)	2.5 dCi	107	08/06 -		3855
MASTER II Platform/Chassis (ED/HD/UD)	2.5 dCi	107	08/06 -	3856	
MASTER II Platform/Chassis (ED/HD/UD)	2.5 dCi 100 (ED4V, ED8V)	73	10/03 -		3855
MASTER II Platform/Chassis (ED/HD/UD)	2.5 dCi 100 (ED4V, ED8V)	73	10/03 -	3856	
MASTER II Platform/Chassis (ED/HD/UD)	2.5 dCi 120	84	10/01 -		3855
MASTER II Platform/Chassis (ED/HD/UD)	2.5 dCi 120	84	10/01 -	3856	
MASTER II Platform/Chassis (ED/HD/UD)	2.8 dTI	84	07/98 – 10/01		3855
MASTER II Platform/Chassis (ED/HD/UD)	2.8 dTI	84	07/98 – 10/01	3856	
MASTER II Platform/Chassis (ED/HD/UD)	3.0 dCi 120	85	06/05 -		3855
MASTER II Platform/Chassis (ED/HD/UD)	3.0 dCi 120	85	06/05 -	3856	
MASTER II Platform/Chassis (ED/HD/UD)	3.0 dCi 140 (ED0S, UD0S)	100	10/03 -		3855
MASTER II Platform/Chassis (ED/HD/UD)	3.0 dCi 140 (ED0S, UD0S)	100	10/03 -	3856	
MASTER II Platform/Chassis (ED/HD/UD)	3.0 dCi 160	115	06/05 -		3855
MASTER II Platform/Chassis (ED/HD/UD)	3.0 dCi 160	115	06/05 -	3856	
MASTER III Box (FV)	2.3 dCi 150 [RWD]	110	03/13 -		4172
MASTER III Box (FV)	2.3 dCi 110 FWD	81	09/14 -		4172
MASTER III Box (FV)	2.3 dCi 125 [RWD] (FV0C, FV0D, FV0H, FV0J)	92	02/10 -		4172
MASTER III Box (FV)	2.3 dCi 100 [RWD] (FV0B, FV0C, FV0D)	74	02/10 -		4172
MASTER III Box (FV)	2.3 dCi 100 [RWD] (FV0B,FV0C, FV0D)	74	02/10 -		4057
MASTER III Box (FV)	2.3 dCi 100 [RWD] (FV0B,FV0C, FV0D)	74	02/10 -	4056	
MASTER III Box (FV)	2.3 dCi 100 FWD (FV0A, FV0B, FV0G, FV0K)	74	02/10 -		4057
MASTER III Box (FV)	2.3 dCi 110 FWD	81	09/14 -		4172
MASTER III Box (FV)	2.3 dCi 110 FWD	81	09/14 -		4057
MASTER III Box (FV)	2.3 dCi 110 FWD	81	09/14 -	4056	
MASTER III Box (FV)	2.3 dCi 125 [RWD] (FV0C, FV0D, FV0H, FV0J)	92	02/10 -		4057
MASTER III Box (FV)	2.3 dCi 125 FWD (FV0C, FV0D)	92	02/10 -		4057
MASTER III Box (FV)	2.3 dCi 130 [RWD]	96	03/12 -	4056	
MASTER III Box (FV)	2.3 dCi 130 FWD	96	06/16 -	4056	
MASTER III Box (FV)	2.3 dCi 130 FWD	96	06/16 -		4057
MASTER III Box (FV)	2.3 dCi 130 FWD	96	06/16 -		4172
MASTER III Box (FV)	2.3 dCi 135 [RWD]	100	07/14 -	4056	
MASTER III Box (FV)	2.3 dCi 135 [RWD]	100	07/14 -		4057
MASTER III Box (FV)	2.3 dCi 135 [RWD]	100	07/14 -		4172
MASTER III Box (FV)	2.3 dCi 135 FWD	100	07/14 -	4056	
MASTER III Box (FV)	2.3 dCi 135 FWD	100	07/14 -		4057
MASTER III Box (FV)	2.3 dCi 135 FWD	100	07/14 -		4172
MASTER III Box (FV)	2.3 dCi 135 FWD	100	07/14 -		4172
MASTER III Box (FV)	2.3 dCi 145 [RWD] (FV0E, FV0F, FV0J)	107	02/10 -	4056	
MASTER III Box (FV)	2.3 dCi 145 [RWD] (FV0E, FV0F, FV0J)	107	02/10 -		4057
MASTER III Box (FV)	2.3 dCi 145 [RWD] (FV0E, FV0F, FV0J)	107	02/10 -		4172
MASTER III Box (FV)	2.3 dCi 145 FWD (FV0E, FV0F, FV0H, FV0J)	107	02/10 -	4056	
MASTER III Box (FV)	2.3 dCi 145 FWD (FV0E, FV0F, FV0H, FV0J)	107	02/10 -		4057
MASTER III Box (FV)	2.3 dCi 150 [RWD]	110	03/13 -	4056	
MASTER III Box (FV)	2.3 dCi 150 [RWD]	110	03/13 -		4057
MASTER III Box (FV)	2.3 dCi 150 FWD	110	03/13 -	4056	
MASTER III Box (FV)	2.3 dCi 150 FWD	110	03/13 -		4057
MASTER III Box (FV)	2.3 dCi 150 FWD	110	03/13 -		4172
MASTER III Box (FV)	2.3 dCi 165 [RWD]	120	07/14 -	4056	
MASTER III Box (FV)	2.3 dCi 165 [RWD]	120	07/14 -		4057
MASTER III Box (FV)	2.3 dCi 165 [RWD]	120	07/14 -		4172

MAKE & MODEL		KW	YEAR		
RENAULT					
MASTER III Box (FV)	2.3 dCi 165 FWD	120	07/14 -	4056	
MASTER III Box (FV)	2.3 dCi 165 FWD	120	07/14 -		4057
MASTER III Box (FV)	2.3 dCi 165 FWD	120	07/14 -		4172
MASTER III Box (FV)	2.3 dCi 165 FWD	120	07/14 -		4172
MASTER III Box (FV)	2.3 dCi 170 FWD	125	07/15 -	4056	
MASTER III Box (FV)	2.3 dCi 170 FWD	125	07/15 -		4057
MASTER III Box (FV)	2.3 dCi 170 FWD	125	07/15 -		4172
MASTER III Box (FV)	2.3 dCi 170 FWD	125	07/15 -		4172
MASTER III Box (FV)	2.3 dCi 100 [RWD] (FV0B, FV0C, FV0D)	74	02/10 -		4132
MASTER III Box (FV)	2.3 dCi 110 FWD	81	09/14		4132
MASTER III Box (FV)	2.3 dCi 110 FWD	81	09/14 -		4132
MASTER III Box (FV)	2.3 dCi 125 [RWD] (FV0C, FV0D, FV0H, FV0J)	92	02/10 -		4132
MASTER III Box (FV)	2.3 dCi 135 FWD	100	07/14 -		4132
MASTER III Box (FV)	2.3 dCi 165 FWD	120	07/14 -		4132
MASTER III Box (FV)	2.3 dCi 170 FWD	125	07/15 -		4132
MASTER III Box (FV)	2.3 dCi 130 FWD	96	06/16 -		4132
MASTER III Box (FV)	2.3 dCi 135 [RWD]	100	07/14 -		4132
MASTER III Box (FV)	2.3 dCi 135 FWD	100	07/14 -		4132
MASTER III Box (FV)	2.3 dCi 145 [RWD] (FV0E, FV0F, FV0J)	107	02/10 -		4132
MASTER III Box (FV)	2.3 dCi 150 [RWD]	110	03/13 -		4132
MASTER III Box (FV)	2.3 dCi 150 FWD	110	03/13 -		4132
MASTER III Box (FV)	2.3 dCi 165 [RWD]	120	07/14 -		4132
MASTER III Box (FV)	2.3 dCi 165 FWD	120	07/14 -		4132
MASTER III Box (FV)	2.3 dCi 170 FWD	125	07/15 -		4132
MASTER III Box (FV)	2.3 dCi 100 FWD (FV0A, FV0B, FV0G, FV0K)	74	02/10 -	4056	
MASTER III Box (FV)	2.3 dCi 125 [RWD] (FV0C, FV0D, FV0H, FV0J)	92	02/10 -	4056	
MASTER III Box (FV)	2.3 dCi 125 FWD (FV0C, FV0D)	92	02/10 -	4056	
MASTER III Bus (JV)	2.3 dCi 135 FWD	100	07/14 -		4057
MASTER III Bus (JV)	2.3 dCi 165 FWD	120	07/14 -		4057
MASTER III Bus (JV)	2.3 dCi 100 FWD (JV0A, JV0B)	74	02/11 -	4056	
MASTER III Bus (JV)	2.3 dCi 100 FWD (JV0A, JV0B)	74	02/11 -		4057
MASTER III Bus (JV)	2.3 dCi 110 FWD	81	09/14 -	4056	
MASTER III Bus (JV)	2.3 dCi 110 FWD	81	09/14 -		4057
MASTER III Bus (JV)	2.3 dCi 125 FWD (JV0C, JV0D, JV0H)	92	02/11 -	4056	
MASTER III Bus (JV)	2.3 dCi 125 FWD (JV0C, JV0D, JV0H)	92	02/11 -		4057
MASTER III Bus (JV)	2.3 dCi 130 FWD	96	05/13 -	4056	
MASTER III Bus (JV)	2.3 dCi 135 FWD	100	07/14 -	4056	
MASTER III Bus (JV)	2.3 dCi 145 FWD (JV0F, JV0H)	107	02/11 -	4056	
MASTER III Bus (JV)	2.3 dCi 145 FWD (JV0F, JV0H)	107	02/11 -		4057
MASTER III Bus (JV)	2.3 dCi 150 FWD	110	10/12 -	4056	
MASTER III Bus (JV)	2.3 dCi 150 FWD	110	10/12 -		4057
MASTER III Bus (JV)	2.3 dCi 165 FWD	120	07/14 -	4056	
MASTER III Bus (JV)	2.3 dCi 170 FWD	125	07/15 -	4056	
MASTER III Bus (JV)	2.3 dCi 170 FWD	125	07/05 -		4057
MASTER III Platform/Chassis (EV, HV, UV)	2.3 dCi 100 FWD (EV0A,EV0B, HV0A, HV0B, HV0G, UV0A...)	74	02/10 -	4056	
MASTER III Platform/Chassis (EV, HV, UV)	2.3 dCi 125 [RWD] (HV0C,HV0D, UV0C, UV0D, UV0H, UV0J)	92	02/10 -	4056	
MASTER III Platform/Chassis (EV, HV, UV)	2.3 dCi 125 FWD (EV0C,EV0D, EV0J, HV0C,	92	02/10 -	4056	
MASTER III Platform/Chassis (EV, HV, UV)	2.3 dCi 145 FWD (EV0E, EV0F, HV0E, HV0F,	107	02/10 -	4056	
MASTER III Platform/Chassis (EV, HV, UV)	2.3 dCi 150 [RWD]	110	03/13 -	4056	
MASTER III Platform/Chassis (EV, HV, UV)	2.3 dCi 150 [RWD]	110	03/13 -		4057
MASTER III Platform/Chassis (EV, HV, UV)	2.3 dCi 150 [RWD]	110	03/13 -		4132
MASTER III Platform/Chassis (EV, HV, UV)	2.3 dCi 150 [RWD]	110	03/13 -		4172
MASTER III Platform/Chassis (EV, HV, UV)	2.3 dCi 150 FWD	110	03/13 -	4056	
MASTER III Platform/Chassis (EV, HV, UV)	2.3 dCi 150 FWD	110	03/13 -		4057
MASTER III Platform/Chassis (EV, HV, UV)	2.3 dCi 150 FWD	110	03/13 -		4132
MASTER III Platform/Chassis (EV, HV, UV)	2.3 dCi 150 FWD	110	03/13 -		4172
MASTER III Platform/Chassis (EV, HV, UV)	2.3 dCi 165 [RWD]	120	07/14 -	4056	
MASTER III Platform/Chassis (EV, HV, UV)	2.3 dCi 165 [RWD]	120	07/14 -		4057
MASTER III Platform/Chassis (EV, HV, UV)	2.3 dCi 165 [RWD]	120	07/14 -		4132
MASTER III Platform/Chassis (EV, HV, UV)	2.3 dCi 165 [RWD]	120	07/14 -		4172
MASTER III Platform/Chassis (EV, HV, UV)	2.3 dCi 165 FWD	120	07/14 -	4056	
MASTER III Platform/Chassis (EV, HV, UV)	2.3 dCi 165 FWD	120	07/14 -		4057
MASTER III Platform/Chassis (EV, HV, UV)	2.3 dCi 165 FWD	120	07/14 -		4132
MASTER III Platform/Chassis (EV, HV, UV)	2.3 dCi 165 FWD	120	07/14 -		4172
MASTER III Platform/Chassis (EV, HV, UV)	2.3 dCi 170 FWD	125	06/16 -	4056	
MASTER III Platform/Chassis (EV, HV, UV)	2.3 dCi 170 FWD	125	06/16 -		4057
MASTER III Platform/Chassis (EV, HV, UV)	2.3 dCi 170 FWD	125	06/16 -		4132
MASTER III Platform/Chassis (EV, HV, UV)	2.3 dCi 170 FWD	125	06/16 -		4172
MASTER III Platform/Chassis (EV, HV, UV)	2.3 dCi 145 [RWD] (UV0F, UV0E)	107	02/10 -		4057
MASTER III Platform/Chassis (EV, HV, UV)	2.3 dCi 110 FWD	81	09/14 -		4057
MASTER III Platform/Chassis (EV, HV, UV)	2.3 dCi 135 [RWD]	100	07/14 -		4057

MAKE & MODEL   		KW	YEAR		
RENAULT					
MASTER III Platform/Chassis (EV, HV, UV)	2.3 dCi 100 [RWD] (UV0C, UV0D, HV0C, HV0D)	74	02/10 -		4057
MASTER III Platform/Chassis (EV, HV, UV)	2.3 dCi 100 FWD (EV0A,EV0B, HV0A, HV0B, HV0G, UV0A...)	74	02/10 -		4057
MASTER III Platform/Chassis (EV, HV, UV)	2.3 dCi 125 [RWD] (HV0C,HV0D, UV0C, UV0D, UV0H, UV0J)	92	02/10 -		4057
MASTER III Platform/Chassis (EV, HV, UV)	2.3 dCi 125 FWD (EV0C,EV0D, EV0J, HV0C, HV0D, HV0H...)	92	02/10 -		4057
MASTER III Platform/Chassis (EV, HV, UV)	2.3 dCi 145 FWD (EV0E,EV0F, HV0E, HV0F, UV0E,UV0F)	107	02/10 -		4057
MASTER III Platform/Chassis (EV, HV, UV)	2.3 dCi 145 [RWD] (UV0F, UV0E)	107	02/10 -		4172
MASTER III Platform/Chassis (EV, HV, UV)	2.3 dCi 100 [RWD] (UV0C, UV0D, HV0C, HV0D)	74	02/10 -		4172
MASTER III Platform/Chassis (EV, HV, UV)	2.3 dCi 110 FWD	81	09/14 -		4172
MASTER III Platform/Chassis (EV, HV, UV)	2.3 dCi 125 [RWD] (HV0C,HV0D, UV0C, UV0D, UV0H, UV0J)	92	02/10 -		4172
MASTER III Platform/Chassis (EV, HV, UV)	2.3 dCi 135 [RWD]	100	07/14 -		4172
MASTER III Platform/Chassis (EV, HV, UV)	2.3 dCi 145 [RWD] (UV0F, UV0E)	107	02/10 -		4132
MASTER III Platform/Chassis (EV, HV, UV)	2.3 dCi 100 [RWD] (UV0C, UV0D, HV0C, HV0D)	74	02/10 -		4132
MASTER III Platform/Chassis (EV, HV, UV)	2.3 dCi 110 FWD	81	09/14 -		4132
MASTER III Platform/Chassis (EV, HV, UV)	2.3 dCi 125 [RWD] (HV0C,HV0D, UV0C, UV0D, UV0H, UV0J)	92	02/10 -		4132
MASTER III Platform/Chassis (EV, HV, UV)	2.3 dCi 135 [RWD]	100	07/14 -		4132
MASTER III Platform/Chassis (EV, HV, UV)	2.3 dCi 100 [RWD] (UV0C, UV0D, HV0C, HV0D)	74	02/10 -	4056	
MASTER III Platform/Chassis (EV, HV, UV)	2.3 dCi 145 [RWD] (UV0F, UV0E)	107	02/10 -	4056	
MASTER III Platform/Chassis (EV, HV, UV)	2.3 dCi 135 [RWD]	100	07/14 -	4056	
MASTER III Platform/Chassis (EV, HV, UV)	2.3 dCi 135 FWD	100	07/14 -	4056	
MASTER III Platform/Chassis (EV, HV, UV)	2.3 dCi 110 FWD	81	09/14 -	4056	
MASTER III Platform/Chassis (EV, HV, UV)	2.3 dCi 130 FWD	96	03/12 -	4056	
Maxity	11.028	81	03/07 -	3965/1	
Maxity	11.028	81	03/07 -	3965/1	
Maxity	11.032	81	03/07 -	3965/1	
Maxity	11.032	81	03/07 -	3965/1	
Maxity	11.035	81	03/07 -	3965/1	
Maxity	11.035	81	03/07 -	3965/1	
Maxity	13.035	96	03/07 -	3965/1	
Maxity	13.035	96	03/07 -	3965/1	
Maxity	13.045	96	03/07 -	3942/A	
Maxity	13.045	96	03/07 -	3942/A	
Maxity	15.035	110	03/07 -	3965/1	
Maxity	15.035	110	03/07 -	3965/1	
Maxity	15.045	110	03/07 -	3942/A	
Maxity	15.045	110	03/07 -	3942/A	
MEGANE CC (EZ0/1_)	1.2 TCe (EZ16)	97	01/13 -		3529/2
MEGANE CC (EZ0/1_)	1.2 TCe (EZ16)	97	01/13 -	3964/1	
MEGANE CC (EZ0/1_)	1.4 TCe (EZ0F, EZ1V)	96	06/10 -		3529/2
MEGANE CC (EZ0/1_)	1.4 TCe (EZ0F, EZ1V)	96	06/10 -	3964/1	
MEGANE CC (EZ0/1_)	1.5 dCi (EZ09, EZ1G, EZ0D)	81	06/10 -		3529/2
MEGANE CC (EZ0/1_)	1.5 dCi (EZ09, EZ1G, EZ0D)	81	06/10 -	3964/1	
MEGANE CC (EZ0/1_)	1.6 16V (EZ0U, EZ1U)	81	06/10 -		3529/2
MEGANE CC (EZ0/1_)	1.6 16V (EZ0U, EZ1U)	81	06/10 -	3964/1	
MEGANE CC (EZ0/1_)	1.6 dCi (EZ00)	96	04/11 -		3529/2
MEGANE CC (EZ0/1_)	1.6 dCi (EZ00)	96	04/11 -	3964/1	
MEGANE CC (EZ0/1_)	1.9 dCi (EZ0J, EZ1S)	96	06/10 -		3529/2
MEGANE CC (EZ0/1_)	1.9 dCi (EZ0J, EZ1S)	96	06/10 -	3964/1	
MEGANE CC (EZ0/1_)	2.0 CVT (EZ0G, EZ1E, EZ1P)	103	06/10 -		3529/2
MEGANE CC (EZ0/1_)	2.0 CVT (EZ0G, EZ1E, EZ1P)	103	06/10 -	3964/1	
MEGANE CC (EZ0/1_)	2.0 dCi (EZ0L)	118	06/10 -		3529/2
MEGANE CC (EZ0/1_)	2.0 TCe (EZ1T)	132	06/10 -		3529/2
MEGANE CC (EZ0/1_)	2.0 TCe (EZ1T)	132	06/10 -	4137	
MEGANE CC (EZ0/1_)	2.0 Turbo	195	10/11 -		3529/2
MEGANE I (BA0/1_)	20	85	05/98 – 05/01	3431	
MEGANE I (BA0/1_)	20	85	05/98 – 05/01	3503	
MEGANE I (BA0/1_)	1.6 16V (BA11, BA04, BA0B, BA1J)	70	03/99 – 08/03		3496
MEGANE I (BA0/1_)	1.4 16V (BA0D, BA1H, BA0W, BA10)	70	03/99 – 08/03	3431	
MEGANE I (BA0/1_)	1.4 16V (BA0D, BA1H, BA0W, BA10)	70	03/99 – 08/03		3496
MEGANE I (BA0/1_)	1.4 16V (BA0D, BA1H, BA0W, BA10)	70	03/99 – 08/03	3503	
MEGANE I (BA0/1_)	1.4 e (BA0E, BA0V)	55	01/96 – 08/03	3431	
MEGANE I (BA0/1_)	1.4 e (BA0E, BA0V)	55	01/96 – 08/03	3503	
MEGANE I (BA0/1_)	1.4 Eco (BA0T)	52	01/96 – 03/99	3431	
MEGANE I (BA0/1_)	1.4 Eco (BA0T)	52	01/96 – 03/99	3503	
MEGANE I (BA0/1_)	1.6 e (BA0F, BA0S)	66	01/96 – 03/99	3431	
MEGANE I (BA0/1_)	1.6 e (BA0F, BA0S)	66	01/96 – 03/99	3503	
MEGANE I (BA0/1_)	1.6 i (BA0L)	55	01/96 – 03/99	3431	
MEGANE I (BA0/1_)	1.6 i (BA0L)	55	01/96 – 03/99	3503	
MEGANE I (BA0/1_)	1.9 D	69	04/96 – 02/01	3431	
MEGANE I (BA0/1_)	1.9 D	69	04/96 – 02/01	3503	
MEGANE I (BA0/1_)	1.9 D Eco (B/SA0U, BA0A)	47	01/96 – 08/03	3431	
MEGANE I (BA0/1_)	1.9 D Eco (B/SA0U, BA0A)	47	01/96 – 08/03	3503	

MAKE & MODEL   		KW	YEAR		
RENAULT					
MEGANE I (BA0/1_)	1.9 DCi	77	03/99 – 08/03	3431	
MEGANE I (BA0/1_)	1.9 DCi	77	03/99 – 08/03		3496
MEGANE I (BA0/1_)	1.9 DCi	77	03/99 – 08/03	3503	
MEGANE I (BA0/1_)	1.9 dCi (BA05, BA1F)	75	02/01 – 08/03		3496
MEGANE I (BA0/1_)	1.9 dT (B/SA0K, B/SA0Y)	66	01/96 – 08/03	3431	
MEGANE I (BA0/1_)	1.9 dT (B/SA0K, B/SA0Y)	66	01/96 – 08/03		3496
MEGANE I (BA0/1_)	1.9 dT (B/SA0K, B/SA0Y)	66	01/96 – 08/03	3503	
MEGANE I (BA0/1_)	1.9 DTi	60	02/00 – 09/00	3431	
MEGANE I (BA0/1_)	1.9 DTi	60	02/00 – 09/00		3496
MEGANE I (BA0/1_)	1.9 DTi	60	02/00 – 09/00	3503	
MEGANE I (BA0/1_)	1.9 dTi (BA08, BA0N)	72	03/97 – 02/01	3431	
MEGANE I (BA0/1_)	1.9 dTi (BA08, BA0N)	72	03/97 – 02/01		3496
MEGANE I (BA0/1_)	1.9 dTi (BA08, BA0N)	72	03/97 – 02/01	3503	
MEGANE I (BA0/1_)	1.9 dTi (BA1U)	59	02/01 – 08/03		3496
MEGANE I (BA0/1_)	1.9 TDI	69	09/96 – 08/03	3431	
MEGANE I (BA0/1_)	1.9 TDI	69	09/96 – 08/03		3496
MEGANE I (BA0/1_)	1.9 TDI	69	09/96 – 08/03	3503	
MEGANE I (BA0/1_)	2.0 16V (BA0H)	108	07/96 – 08/03		3496
MEGANE I (BA0/1_)	2.0 16V (BA0H)	108	07/96 – 08/03	3539	
MEGANE I (BA0/1_)	2.0 16V (BA0H)	108	07/96 – 08/03	3546	
MEGANE I (BA0/1_)	2.0 i	80	03/99 – 08/03	3431	
MEGANE I (BA0/1_)	2.0 i	80	03/99 – 08/03	3503	
MEGANE I (BA0/1_)	2.0 i (BA0G)	84	01/96 – 08/03	3431	
MEGANE I (BA0/1_)	2.0 i (BA0G)	84	01/96 – 08/03	3503	
MEGANE I (BA0/1_)	1.4 Eco (BA0T)	52	01/96 – 03/99		3496
MEGANE I (BA0/1_)	1.6 LPG	80	10/00 – 08/02		3496
MEGANE I (BA0/1_)	1.8 16V (BA06, BA12, BA1A, BA1M, BA1R)	77	02/00 – 05/01		3496
MEGANE I Cabriolet (EA0/1_)	1.4 16V (EA0D, EA1H, EA0W, EA10)	70	03/99 – 08/03	3431	
MEGANE I Cabriolet (EA0/1_)	1.4 16V (EA0D, EA1H, EA0W, EA10)	70	03/99 – 08/03		3496
MEGANE I Cabriolet (EA0/1_)	1.4 16V (EA0D, EA1H, EA0W, EA10)	70	03/99 – 08/03	3503	
MEGANE I Cabriolet (EA0/1_)	1.6 16V (EA0B, EA04, EA11)	79	03/99 – 08/03		3496
MEGANE I Cabriolet (EA0/1_)	1.6 e (EA0F)	66	10/96 – 03/99	3431	
MEGANE I Cabriolet (EA0/1_)	1.6 e (EA0F)	66	10/96 – 03/99	3503	
MEGANE I Cabriolet (EA0/1_)	2.0 (EA0G)	84	04/97 – 08/03	3431	
MEGANE I Cabriolet (EA0/1_)	2.0 (EA0G)	84	04/97 – 08/03	3503	
MEGANE I Cabriolet (EA0/1_)	2.0 16V	102	01/02 – 08/03		3496
MEGANE I Cabriolet (EA0/1_)	2.0 16V (EA0H)	108	10/96 – 11/99		3496
MEGANE I Cabriolet (EA0/1_)	2.0 16V (EA0H)	108	10/96 – 11/99	3539	
MEGANE I Cabriolet (EA0/1_)	2.0 16V (EA0H)	108	10/96 – 11/99	3546	
MEGANE I Cabriolet (EA0/1_)	2.0 16V IDE (EA03, EA0P, EA14)	103	11/99 – 08/03		3496
MEGANE I Cabriolet (EA0/1_)	2.0 i (EA0G)	80	03/99 – 08/03	3431	
MEGANE I Cabriolet (EA0/1_)	2.0 i (EA0G)	80	03/99 – 08/03	3503	
MEGANE I Classic (LA0/1_)	20	85	05/98 – 05/01	3431	
MEGANE I Classic (LA0/1_)	20	85	05/98 – 05/01	3503	
MEGANE I Classic (LA0/1_)	1.4 (LA0E, LA0V)	55	09/96 – 08/03	3431	
MEGANE I Classic (LA0/1_)	1.4 (LA0E, LA0V)	55	09/96 – 08/03	3503	
MEGANE I Classic (LA0/1_)	1.4 16V (LA0D, LA1H, IA0W, LA10)	70	03/99 – 08/03	3431	
MEGANE I Classic (LA0/1_)	1.4 16V (LA0D, LA1H, IA0W, LA10)	70	03/99 – 08/03	3503	
MEGANE I Classic (LA0/1_)	1.6 e (LA0F, LA0S)	66	09/96 – 03/99	3431	
MEGANE I Classic (LA0/1_)	1.6 e (LA0F, LA0S)	66	09/96 – 03/99	3503	
MEGANE I Classic (LA0/1_)	1.6 i (LA0L)	55	09/96 – 03/99	3431	
MEGANE I Classic (LA0/1_)	1.6 i (LA0L)	55	09/96 – 03/99	3503	
MEGANE I Classic (LA0/1_)	1.9 D (LA0A, LA0U)	47	09/96 – 08/03	3431	
MEGANE I Classic (LA0/1_)	1.9 D (LA0A, LA0U)	47	09/96 – 08/03	3503	
MEGANE I Classic (LA0/1_)	1.9 dCi	77	03/99 – 09/00		3496
MEGANE I Classic (LA0/1_)	1.9 dCi (LA05, LA1F)	75	02/01 – 08/03		3496
MEGANE I Classic (LA0/1_)	1.9 dT (LA0K, LA0Y)	66	09/96 – 08/03	3431	
MEGANE I Classic (LA0/1_)	1.9 dT (LA0K, LA0Y)	66	09/96 – 08/03	3503	
MEGANE I Classic (LA0/1_)	1.9 dTi (LA08, LA0N)	72	03/97 – 02/01	3431	
MEGANE I Classic (LA0/1_)	1.9 dTi (LA08, LA0N)	72	03/97 – 02/01		3496
MEGANE I Classic (LA0/1_)	1.9 dTi (LA08, LA0N)	72	03/97 – 02/01	3503	
MEGANE I Classic (LA0/1_)	1.9 dTi (LA1U)	59	02/01 – 08/03		3496
MEGANE I Classic (LA0/1_)	1.9 TDI	69	09/96 – 08/03	3431	
MEGANE I Classic (LA0/1_)	1.9 TDI	69	09/96 – 08/03		3496
MEGANE I Classic (LA0/1_)	1.9 TDI	69	09/96 – 08/03	3503	
MEGANE I Classic (LA0/1_)	2.0 i (LA07, LA0G)	84	09/96 – 08/03	3431	
MEGANE I Classic (LA0/1_)	2.0 i (LA07, LA0G)	84	09/96 – 08/03	3503	
MEGANE I Classic (LA0/1_)	2.0 i (LA0G)	80	03/99 – 08/03	3431	
MEGANE I Classic (LA0/1_)	2.0 i (LA0G)	80	03/99 – 08/03	3503	
MEGANE I Classic (LA0/1_)	1.4 16V (LA0D, LA1H, IA0W, LA10)	59	03/99 – 08/03		3496
MEGANE I Classic (LA0/1_)	1.6 16V (La04, LA11, LA0B, LA1C, LA1J)	69	03/99 – 08/03		3496

MAKE & MODEL		KW	YEAR		
RENAULT					
MEGANE I Classic (LA0/1_)	1.8 16V (LA06, LA12, LA1A, LA1M, LA1R)	70	01/01 – 08/03		3496
MEGANE I Coach (DA0/1_)	1.4 16V (DA0D, DA1H, DA0W, DA10)	70	03/99 – 08/03		3496
MEGANE I Coach (DA0/1_)	1.4 16V (DA0D, DA1H, DA0W,DA10)	70	03/99 – 08/03	3503	
MEGANE I Coach (DA0/1_)	1.4 16V (DA0D, DA1H, DA0W,DA10)	70	03/99 – 08/03	3431	
MEGANE I Coach (DA0/1_)	1.6 16V (DA0B, DA04, DA11)	79	03/99 – 08/03		3496
MEGANE I Coach (DA0/1_)	1.6 e (DA0F)	66	03/96 – 03/99	3431	
MEGANE I Coach (DA0/1_)	1.6 e (DA0F)	66	03/96 – 03/99	3503	
MEGANE I Coach (DA0/1_)	1.9 dCi (DA05, DA1F)	75	02/01 – 08/03		3496
MEGANE I Coach (DA0/1_)	1.9 dCi (DA05, DA1F)	75	02/01 – 08/03	3539	
MEGANE I Coach (DA0/1_)	1.9 dCi (DA05, DA1F)	75	02/01 – 08/03	3546	
MEGANE I Coach (DA0/1_)	1.9 dTi (DA0N)	72	03/97 – 02/01	3431	
MEGANE I Coach (DA0/1_)	1.9 dTi (DA0N)	72	03/97 – 02/01	3503	
MEGANE I Coach (DA0/1_)	1.9 dTi (DA0N)	72	03/97 – 02/01	3539	
MEGANE I Coach (DA0/1_)	1.9 dTi (DA0N)	72	03/97 – 02/01	3546	
MEGANE I Coach (DA0/1_)	2.0 16V	102	01/02 – 08/03		3496
MEGANE I Coach (DA0/1_)	2.0 16V (DA0H)	108	03/96 – 11/99		3496
MEGANE I Coach (DA0/1_)	2.0 16V (DA0H)	108	03/96 – 11/99	3539	
MEGANE I Coach (DA0/1_)	2.0 16V (DA0H)	108	03/96 – 11/99	3546	
MEGANE I Coach (DA0/1_)	2.0 16V IDE (DA03, DA0P, DA14)	103	11/99 – 08/03		3496
MEGANE I Coach (DA0/1_)	2.0 i	80	03/99 – 08/03	3431	
MEGANE I Coach (DA0/1_)	2.0 i	80	03/99 – 08/03	3503	
MEGANE I Coach (DA0/1_)	2.0 i (DA0G)	84	03/96 – 08/03	3431	
MEGANE I Coach (DA0/1_)	2.0 i (DA0G)	84	03/96 – 08/03	3503	
MEGANE I Grandtour (KA0/1_)	1.4 16V (KA0D, KA1H, KA0W, KA10)	70	03/99 – 08/03	3431	
MEGANE I Grandtour (KA0/1_)	1.4 16V (KA0D, KA1H, KA0W, KA10)	70	03/99 – 08/03		3529
MEGANE I Grandtour (KA0/1_)	1.4 16V (KA0D, KA1H, KA0W,KA10)	70	03/99 – 08/03	3503	
MEGANE I Grandtour (KA0/1_)	1.4 e (KA0V)	55	03/99 – 08/03	3431	
MEGANE I Grandtour (KA0/1_)	1.4 e (KA0V)	55	03/99 – 08/03	3503	
MEGANE I Grandtour (KA0/1_)	1.6 e (KA0F)	66	03/99 – 08/03	3431	
MEGANE I Grandtour (KA0/1_)	1.6 e (KA0F)	66	03/99 – 08/03	3503	
MEGANE I Grandtour (KA0/1_)	1.9 D (KA0J, KA0R)	47	04/99 – 08/03	3431	
MEGANE I Grandtour (KA0/1_)	1.9 D (KA0J, KA0R)	47	04/99 – 08/03	3503	
MEGANE I Grandtour (KA0/1_)	1.9 dCi (KA05, KA1F)	75	02/01 – 08/03		3529
MEGANE I Grandtour (KA0/1_)	1.9 dTi (KA0N)	72	03/99 – 02/01		3529
MEGANE I Grandtour (KA0/1_)	1.9 dTi (KA1U)	59	02/01 – 08/03		3529
MEGANE I Grandtour (KA0/1_)	1.8 16V (KA0S, KA12, KA1A, KA1M, KA1R)	85	01/01 – 08/03		3529
MEGANE I Grandtour (KA0/1_)	1.6 16V (KA0B, KA04, KA11)	79	03/99 – 08/03		3529
MEGANE II (BM0/1_, CM0/1_)	16	77	06/05 – 02/08		3529
MEGANE II (BM0/1_, CM0/1_)	16	77	06/05 – 02/08	3849	
MEGANE II (BM0/1_, CM0/1_)	20	102	06/06 – 12/10		3529/2
MEGANE II (BM0/1_, CM0/1_)	20	169	08/06 – 02/08		3853
MEGANE II (BM0/1_, CM0/1_)	1.4 16V	60	10/03 – 02/08		3529
MEGANE II (BM0/1_, CM0/1_)	1.4 16V	60	10/03 – 02/08	3850	
MEGANE II (BM0/1_, CM0/1_)	1.4 16V (BM0B, CM0B)	72	11/02 – 02/08		3529
MEGANE II (BM0/1_, CM0/1_)	1.4 16V (BM0B, CM0B)	72	11/02 – 02/08	3850	
MEGANE II (BM0/1_, CM0/1_)	1.5 dCi	63	05/05 – 02/08		3529
MEGANE II (BM0/1_, CM0/1_)	1.5 dCi	63	05/05 – 02/08	3849	
MEGANE II (BM0/1_, CM0/1_)	1.5 dCi	74	10/03 – 03/06		3529
MEGANE II (BM0/1_, CM0/1_)	1.5 dCi	74	10/03 – 03/06	3849	
MEGANE II (BM0/1_, CM0/1_)	1.5 dCi	76	01/07 – 02/08		3529
MEGANE II (BM0/1_, CM0/1_)	1.5 dCi	78	05/05 – 06/08		3529
MEGANE II (BM0/1_, CM0/1_)	1.5 dCi	78	05/05 – 06/08	3849	
MEGANE II (BM0/1_, CM0/1_)	1.5 dCi (BM0F, CM0F)	60	11/02 – 02/08		3529
MEGANE II (BM0/1_, CM0/1_)	1.5 dCi (BM0F, CM0F)	60	11/02 – 02/08	3849	
MEGANE II (BM0/1_, CM0/1_)	1.6 16V	82	01/06 – 06/08		3529
MEGANE II (BM0/1_, CM0/1_)	1.6 16V (BM0C, CM0C)	83	11/02 – 02/08		3529
MEGANE II (BM0/1_, CM0/1_)	1.6 16V (BM0C, CM0C)	83	11/02 – 02/08	3849	
MEGANE II (BM0/1_, CM0/1_)	1.6 Flex-Fuel	77	01/07 – 02/08		3529
MEGANE II (BM0/1_, CM0/1_)	1.9 dCi	66	11/02 – 12/05		3529
MEGANE II (BM0/1_, CM0/1_)	1.9 dCi	66	11/02 – 12/05	3849	
MEGANE II (BM0/1_, CM0/1_)	1.9 dCi	68	03/04 – 08/06		3529
MEGANE II (BM0/1_, CM0/1_)	1.9 dCi	68	03/04 – 08/06	3849	
MEGANE II (BM0/1_, CM0/1_)	1.9 dCi	81	05/05 – 02/08		3529
MEGANE II (BM0/1_, CM0/1_)	1.9 dCi	81	05/05 – 02/08	3849	
MEGANE II (BM0/1_, CM0/1_)	1.9 dCi	85	11/02 – 02/08		3529
MEGANE II (BM0/1_, CM0/1_)	1.9 dCi	85	11/02 – 02/08	3849	
MEGANE II (BM0/1_, CM0/1_)	1.9 dCi	96	05/05 – 12/09		3529
MEGANE II (BM0/1_, CM0/1_)	1.9 dCi	96	05/05 – 12/09	3849	
MEGANE II (BM0/1_, CM0/1_)	1.9 dCi (BM0G, CM0G)	88	11/02 – 02/08		3529
MEGANE II (BM0/1_, CM0/1_)	1.9 dCi (BM0G, CM0G)	88	11/02 – 02/08	3849	
MEGANE II (BM0/1_, CM0/1_)	2.0	169	08/06 – 02/08	4137	

BESER

MAKE & MODEL		KW	YEAR		
RENAULT					
MEGANE II (BM0/1_, CM0/1_)	2.0 16V (BM0U, CM0U)	99	11/02 – 02/08		3529
MEGANE II (BM0/1_, CM0/1_)	2.0 16V (BM0U, CM0U)	99	11/02 – 02/08	3849	
MEGANE II (BM0/1_, CM0/1_)	2.0 16V Turbo	120	05/04 – 02/08		3529
MEGANE II (BM0/1_, CM0/1_)	2.0 16V Turbo	120	05/04 – 02/08	3849	
MEGANE II (BM0/1_, CM0/1_)	2.0 dCi	127	01/07 – 02/08		3529
MEGANE II (BM0/1_, CM0/1_)	2.0 dCi	127	01/07 – 02/08	4137	
MEGANE II (BM0/1_, CM0/1_)	2.0 dCi (BM1K, CM1K)	110	09/05 – 02/08		3529
MEGANE II (BM0/1_, CM0/1_)	2.0 dCi (BM1K, CM1K)	110	09/05 – 02/08	3849	
MEGANE II (BM0/1_, CM0/1_)	2.0 Renault Sport	165	05/04 – 10/09		3853
MEGANE II (BM0/1_, CM0/1_)	2.0 Renault Sport	165	05/04 – 10/09	4137	
MEGANE II (BM0/1_, CM0/1_B84_C84)	1.4 16V (K4J 732)	60	10.03 – 02.08	3827	
MEGANE II (LM0/1_L84)	1.4 (K4J 730)	72	09.03 -	3827	
MEGANE II (LM0/1_L84)	1.4 (K4J 732)	60	09.03 -	3827	
MEGANE II (LM0/1_L84)	1.4 (K4J 740)	72	09.03 -	3827	
MEGANE II (LM0/1_L84)	1.6 (K4M 762)	77	05.05 -	3827	
MEGANE II (LM0/1_L84)	1.6 (K4M 768)	75	09.03 -	3827	
MEGANE II Coupé-Cabriolet (EM0/1_)	16	83	09/03 – 03/09		3529
MEGANE II Coupé-Cabriolet (EM0/1_)	16	83	09/03 – 03/09	3849	
MEGANE II Coupé-Cabriolet (EM0/1_)	20	99	09/03 – 12/09		3529
MEGANE II Coupé-Cabriolet (EM0/1_)	20	99	09/03 – 12/09	3849	
MEGANE II Coupé-Cabriolet (EM0/1_)	20	102	09/03 – 02/07		3529/2
MEGANE II Coupé-Cabriolet (EM0/1_)	20	102	09/03 – 02/07	3849	
MEGANE II Coupé-Cabriolet (EM0/1_)	1.5 dCi (EM16)	76	01/07 – 06/09		3529
MEGANE II Coupé-Cabriolet (EM0/1_)	1.5 dCi (EM1E)	78	03/06 – 06/08		3529
MEGANE II Coupé-Cabriolet (EM0/1_)	1.6 16V	82	01/06 – 06/08		3529
MEGANE II Coupé-Cabriolet (EM0/1_)	1.9 dCi	81	05/05 – 03/09		3529
MEGANE II Coupé-Cabriolet (EM0/1_)	1.9 dCi	81	05/05 – 03/09	3849	
MEGANE II Coupé-Cabriolet (EM0/1_)	1.9 dCi	85	09/03 – 03/09		3529
MEGANE II Coupé-Cabriolet (EM0/1_)	1.9 dCi	85	09/03 – 03/09	3849	
MEGANE II Coupé-Cabriolet (EM0/1_)	1.9 dCi	88	09/03 – 03/09		3529
MEGANE II Coupé-Cabriolet (EM0/1_)	1.9 dCi	88	09/03 – 03/09	3849	
MEGANE II Coupé-Cabriolet (EM0/1_)	1.9 dCi	96	05/05 – 02/07		3529
MEGANE II Coupé-Cabriolet (EM0/1_)	1.9 dCi	96	05/05 – 02/07	3849	
MEGANE II Coupé-Cabriolet (EM0/1_)	2.0 16V Turbo	120	05/04 – 03/09		3529
MEGANE II Coupé-Cabriolet (EM0/1_)	2.0 16V Turbo	120	05/04 – 03/09	3849	
MEGANE II Coupé-Cabriolet (EM0/1_)	2.0 dCi	110	09/05 – 03/09		3529
MEGANE II Coupé-Cabriolet (EM0/1_)	2.0 dCi	110	09/05 – 03/09	3849	
MEGANE II Estate (KM0/1_)	14	72	08/03 – 07/09		3529
MEGANE II Estate (KM0/1_)	14	72	08/03 – 07/09	3849	
MEGANE II Estate (KM0/1_)	14	72	08/03 – 07/09	3850	
MEGANE II Estate (KM0/1_)	16	83	08/03 – 07/09		3529
MEGANE II Estate (KM0/1_)	16	83	08/03 – 07/09	3849	
MEGANE II Estate (KM0/1_)	20	99	08/03 - 07/09		3529
MEGANE II Estate (KM0/1_)	20	99	08/03 – 07/09	3849	
MEGANE II Estate (KM0/1_)	20	102	12/06 – 01/11		3529/2
MEGANE II Estate (KM0/1_)	1.5 dCi	60	08/03 – 05/06		3529
MEGANE II Estate (KM0/1_)	1.5 dCi	60	08/03 – 05/06	3849	
MEGANE II Estate (KM0/1_)	1.5 dCi	63	05/05 – 07/09		3529
MEGANE II Estate (KM0/1_)	1.5 dCi	63	05/05 – 07/09	3849	
MEGANE II Estate (KM0/1_)	1.5 dCi	74	02/04 – 03/06		3529
MEGANE II Estate (KM0/1_)	1.5 dCi	74	02/04 – 03/06	3849	
MEGANE II Estate (KM0/1_)	1.5 dCi (KM13)	76	01/07 – 07/09		3529
MEGANE II Estate (KM0/1_)	1.5 dCi (KM16, KM1E)	78	05/05 – 06/08		3529
MEGANE II Estate (KM0/1_)	1.5 dCi (KM16, KM1E)	78	05/05 – 06/08	3849	
MEGANE II Estate (KM0/1_)	1.6 16V	77	05/05 – 07/09		3529/2
MEGANE II Estate (KM0/1_)	1.6 16V	77	05/05 – 07/09	3849	
MEGANE II Estate (KM0/1_)	1.6 16V	82	01/06 – 08/09		3529
MEGANE II Estate (KM0/1_)	1.6 16V Hi-Flex	77	02/08 – 07/09		3529
MEGANE II Estate (KM0/1_)	1.9 dCi	66	04/04 – 12/05		3529/2
MEGANE II Estate (KM0/1_)	1.9 dCi	66	04/04 – 12/05	3849	
MEGANE II Estate (KM0/1_)	1.9 dCi	68	03/04 – 02/07		3529
MEGANE II Estate (KM0/1_)	1.9 dCi	68	03/04 – 02/07	3849	
MEGANE II Estate (KM0/1_)	1.9 dCi	81	05/05 – 07/09		3529
MEGANE II Estate (KM0/1_)	1.9 dCi	81	05/05 – 07/09	3849	
MEGANE II Estate (KM0/1_)	1.9 dCi	85	05/05 – 07/09		3529
MEGANE II Estate (KM0/1_)	1.9 dCi	85	05/05 – 07/09	3849	
MEGANE II Estate (KM0/1_)	1.9 dCi	88	08/03 – 07/09		3529
MEGANE II Estate (KM0/1_)	1.9 dCi	88	08/03 – 07/09	3849	
MEGANE II Estate (KM0/1_)	1.9 dCi	96	05/05 – 07/09		3529
MEGANE II Estate (KM0/1_)	1.9 dCi	96	05/05 – 07/09	3849	
MEGANE II Estate (KM0/1_)	2.0 dCi	110	09/05 – 07/09		3529

MAKE & MODEL		KW	YEAR		
RENAULT					
MEGANE II Estate (KM0/1_)	2.0 dCi	110	09/05 – 07/09	3849	
MEGANE II Grandtour (KM0/1_K84)	1.4 (K4J 730)	72	08.03 – 07.09	3827	
MEGANE II Grandtour (KM0/1_K84)	1.4 (K4J 740)	72	08.03 – 07.09	3827	
MEGANE II Saloon (LM0/1_)	14	60	09/03 -		3529
MEGANE II Saloon (LM0/1_)	14	60	09/03 -	3850	
MEGANE II Saloon (LM0/1_)	14	72	09/03 -		3529
MEGANE II Saloon (LM0/1_)	14	72	09/03 -	3850	
MEGANE II Saloon (LM0/1_)	16	75	09/03 -		3529
MEGANE II Saloon (LM0/1_)	16	75	09/03 -	3849	
MEGANE II Saloon (LM0/1_)	16	77	05/05 -		3529
MEGANE II Saloon (LM0/1_)	16	77	05/05 -	3849	
MEGANE II Saloon (LM0/1_)	16	81	09/03 – 11/08		3529/2
MEGANE II Saloon (LM0/1_)	16	81	09/03 – 11/08	3849	
MEGANE II Saloon (LM0/1_)	16	83	09/03 -		3529
MEGANE II Saloon (LM0/1_)	16	83	09/03 -	3849	
MEGANE II Saloon (LM0/1_)	20	99	09/03 -		3529
MEGANE II Saloon (LM0/1_)	20	99	09/03 -	3849	
MEGANE II Saloon (LM0/1_)	1.5 dCi	60	09/03 -		3529
MEGANE II Saloon (LM0/1_)	1.5 dCi	60	09/03 -	3849	
MEGANE II Saloon (LM0/1_)	1.5 dCi	63	05/05 -		3529
MEGANE II Saloon (LM0/1_)	1.5 dCi	63	05/05 -	3849	
MEGANE II Saloon (LM0/1_)	1.5 dCi	74	02/04 -		3529
MEGANE II Saloon (LM0/1_)	1.5 dCi	74	02/04 -	3849	
MEGANE II Saloon (LM0/1_)	1.5 dCi	76	01/07 -		3529
MEGANE II Saloon (LM0/1_)	1.5 dCi	78	05/05 -		3529
MEGANE II Saloon (LM0/1_)	1.5 dCi	78	05/05 -	3849	
MEGANE II Saloon (LM0/1_)	1.6 16V	82	01/06 -		3529
MEGANE II Saloon (LM0/1_)	1.6 Hi-Flex	85	03/06 -		3529
MEGANE II Saloon (LM0/1_)	1.9 dCi	66	09/03 – 12/05		3529
MEGANE II Saloon (LM0/1_)	1.9 dCi	66	09/03 – 12/05	3849	
MEGANE II Saloon (LM0/1_)	1.9 dCi	68	03/04 -		3529
MEGANE II Saloon (LM0/1_)	1.9 dCi	68	03/04 -	3849	
MEGANE II Saloon (LM0/1_)	1.9 dCi	96	05/05 -		3529
MEGANE II Saloon (LM0/1_)	1.9 dCi	96	05/05 -	3849	
MEGANE II Saloon (LM0/1_)	1.9 dCi (LM0G, LM1G, LM2C)	88	09/03 -		3529
MEGANE II Saloon (LM0/1_)	1.9 dCi (LM0G, LM1G, LM2C)	88	09/03 -	3849	
MEGANE II Saloon (LM0/1_)	1.9 dCi (LM14, LM1D)	81	05/05 -		3529
MEGANE II Saloon (LM0/1_)	1.9 dCi (LM14, LM1D)	81	05/05 -	3849	
MEGANE II Saloon (LM0/1_)	2.0 dCi	110	09/05 -		3529
MEGANE II Saloon (LM0/1_)	2.0 dCi	110	09/05 -	3849	
MEGANE III Coupe (DZ0/1_)	1.2 TCe	85	03/12 -		3529/2
MEGANE III Coupe (DZ0/1_)	1.2 TCe	85	03/12 -	3964/1	
MEGANE III Coupe (DZ0/1_)	1.2 TCe (DZ16)	97	01/13 -		3529/2
MEGANE III Coupe (DZ0/1_)	1.2 TCe (DZ16)	97	01/13 -	3964/1	
MEGANE III Coupe (DZ0/1_)	1.4 TCe (DZ0F, DZ1V)	96	04/09 -		3529/2
MEGANE III Coupe (DZ0/1_)	1.4 TCe (DZ0F, DZ1V)	96	04/09 -	3964/1	
MEGANE III Coupe (DZ0/1_)	1.5 dCi	70	07/14 -		3529/2
MEGANE III Coupe (DZ0/1_)	1.5 dCi	70	07/14 -	3964/1	
MEGANE III Coupe (DZ0/1_)	1.5 dCi (DZ09, DZ0D, DZ1F, DZ1G)	81	02/09 -	3964/1	
MEGANE III Coupe (DZ0/1_)	1.5 dCi (DZ0A)	63	11/08 -		3529/2
MEGANE III Coupe (DZ0/1_)	1.5 dCi (DZ0A)	63	11/08 -	3964/1	
MEGANE III Coupe (DZ0/1_)	1.5 dCi (DZ0B)	78	02/09 -		3529/2
MEGANE III Coupe (DZ0/1_)	1.5 dCi (DZ0B)	78	02/09 -	3964/1	
MEGANE III Coupe (DZ0/1_)	1.5 dCi (DZ0C, DZ1A)	66	11/08 -		3529/2
MEGANE III Coupe (DZ0/1_)	1.5 dCi (DZ0C, DZ1A)	66	11/08 -	3964/1	
MEGANE III Coupe (DZ0/1_)	1.6 16V (DZ0H)	74	11/08 -		3529/2
MEGANE III Coupe (DZ0/1_)	1.6 16V (DZ0H)	74	11/08 -	3964/1	
MEGANE III Coupe (DZ0/1_)	1.6 16V (DZ0U, DZ1B, DZ1H)	81	11/08 -		3529/2
MEGANE III Coupe (DZ0/1_)	1.6 16V (DZ0U, DZ1B, DZ1H)	81	11/08 -	3964/1	
MEGANE III Coupe (DZ0/1_)	1.6 16V Bifuel (DZ03, DZ1Y)	81	11/08 -		3529/2
MEGANE III Coupe (DZ0/1_)	1.6 16V Bifuel (DZ03, DZ1Y)	81	11/08 -	3964/1	
MEGANE III Coupe (DZ0/1_)	1.6 dCi (DZ00)	96	04/11 -		3529/2
MEGANE III Coupe (DZ0/1_)	1.6 dCi (DZ00)	96	04/11 -	3964/1	
MEGANE III Coupe (DZ0/1_)	1.9 dCi (DZ0N, DZ0J, DZ1J, DZ1K)	96	11/08 -		3529/2
MEGANE III Coupe (DZ0/1_)	1.9 dCi (DZ0N, DZ0J, DZ1J, DZ1K)	96	11/08 -	3964/1	
MEGANE III Coupe (DZ0/1_)	2.0 CVT (DZ0G, DZ1E)	103	05/09 -		3529/2
MEGANE III Coupe (DZ0/1_)	2.0 dCi	120	07/12 -		3529/2
MEGANE III Coupe (DZ0/1_)	2.0 dCi (DZ0L)	118	04/09 -		3529/2
MEGANE III Coupe (DZ0/1_)	2.0 dCi (DZ0Y)	110	04/09 -		3529/2
MEGANE III Coupe (DZ0/1_)	2.0 R.S.	195	11/08 -		3529/2
MEGANE III Coupe (DZ0/1_)	2.0 R.S.	201	07/14 -		3529/2

MAKE & MODEL   		KW	YEAR		
RENAULT					
MEGANE III Coupe (DZ0/1_)	2.0 TCe	140	06/12 -		3529/2
MEGANE III Coupe (DZ0/1_)	2.0 TCe (DZ0K)	132	11/08 -		3529/2
MEGANE III Coupe (DZ0/1_)	2.0 TCe (DZ1N)	184	05/09 -		3529/2
MEGANE III Coupe (DZ0/1_)	2.0 TCe 220	162	11/13 -		3529/2
MEGANE III Coupe (DZ0/1_)	2.0 TCe 220	162	11/13 -	4137	
MEGANE III Coupe (DZ0/1_)	2.0 CVT (DZ0G, DZ1E)	103	05/09 -	3964/1	
MEGANE III Coupe (DZ0/1_)	1.5 dCi (DZ09, DZ0D, DZ1F, DZ1G)	85	07/14 -		3529/2
MEGANE III Grandtour (KZ0/1)	1.2 TCe	85	03/12 -		3529/2
MEGANE III Grandtour (KZ0/1)	1.2 TCe (KZ16)	97	01/13 -		3529/2
MEGANE III Grandtour (KZ0/1)	1.4 TCe (KZ0F, KZ1V)	96	05/09 -		3529/2
MEGANE III Grandtour (KZ0/1)	1.5 dCi	63	03/09 -		3529/2
MEGANE III Grandtour (KZ0/1)	1.5 dCi	63	03/09 -		4142
MEGANE III Grandtour (KZ0/1)	1.5 dCi	70	11/13 -		3529/2
MEGANE III Grandtour (KZ0/1)	1.5 dCi (KZ09, KZ0D, KZ1G, KZ1M, KZ1W)	81	02/09 -		3529/2
MEGANE III Grandtour (KZ0/1)	1.5 dCi (KZ0C, KZ1A)	66	05/09 -		3529/2
MEGANE III Grandtour (KZ0/1)	1.5 dCi (KZ0C, KZ1A)	66	05/09 -	3964/1	
MEGANE III Grandtour (KZ0/1)	1.5 dCi (KZ1M, KZ1W)	78	02/09 -		3529/2
MEGANE III Grandtour (KZ0/1)	1.5 dCi (KZ1M, KZ1W)	78	02/09 -	3964/1	
MEGANE III Grandtour (KZ0/1)	1.6 16V (KZ0H)	74	05/09 -		3529/2
MEGANE III Grandtour (KZ0/1)	1.6 16V (KZ0H)	74	05/09 -	3964/1	
MEGANE III Grandtour (KZ0/1)	1.6 16V (KZ0U, KZ1B, KZ1U)	81	05/09 -		3529/2
MEGANE III Grandtour (KZ0/1)	1.6 16V (KZ0U, KZ1B, KZ1U)	81	05/09 -	3964/1	
MEGANE III Grandtour (KZ0/1)	1.6 16V Bifuel (KZ03)	81	11/08 -		3529/2
MEGANE III Grandtour (KZ0/1)	1.6 16V Bifuel (KZ03)	81	11/08 -	3964/1	
MEGANE III Grandtour (KZ0/1)	1.6 dCi (KZ00, KZ12)	96	04/11 -		3529/2
MEGANE III Grandtour (KZ0/1)	1.6 dCi (KZ00, KZ12)	96	04/11 -	3964/1	
MEGANE III Grandtour (KZ0/1)	1.9 dCi (KZ0J, KZ0N, KZ1S)	96	05/09 -		3529/2
MEGANE III Grandtour (KZ0/1)	1.9 dCi (KZ0J, KZ0N, KZ1S)	96	05/09 -	3964/1	
MEGANE III Grandtour (KZ0/1)	2.0 CVT (KZ0G, KZ1P)	103	05/09 -		3529/2
MEGANE III Grandtour (KZ0/1)	2.0 CVT (KZ0G, KZ1P)	103	05/09 -	3964/1	
MEGANE III Grandtour (KZ0/1)	2.0 dCi	120	07/12 -		3529/2
MEGANE III Grandtour (KZ0/1)	2.0 dCi (KZ0L)	118	04/09 -		3529/2
MEGANE III Grandtour (KZ0/1)	2.0 dCi (KZ0Y)	110	10/10 -		3529/2
MEGANE III Grandtour (KZ0/1)	2.0 TCe	140	09/12 -		3529/2
MEGANE III Grandtour (KZ0/1)	2.0 TCe	162	09/12 -		3529/2
MEGANE III Grandtour (KZ0/1)	2.0 TCe	162	09/12 -	3964/1	
MEGANE III Grandtour (KZ0/1)	2.0 TCe (KZ0K, KZ1T)	132	11/08 -		3529/2
MEGANE III Grandtour (KZ0/1)	1.2 TCe	85	03/12 -	3964/1	
MEGANE III Grandtour (KZ0/1)	1.2 TCe (KZ16)	97	01/13 -	3964/1	
MEGANE III Grandtour (KZ0/1)	1.4 TCe (KZ0F, KZ1V)	96	05/09 -	3964/1	
MEGANE III Grandtour (KZ0/1)	1.5 dCi	70	11/13 -	3964/1	
MEGANE III Grandtour (KZ0/1)	1.5 dCi (KZ09, KZ0D, KZ1G, KZ1M, KZ1W)	81	02/09 -	3964/1	
MEGANE III Grandtour (KZ0/1)	1.5 dCi	63	03/09 -	3964/1	
MEGANE III Hatchback (BZ0_)	20	105	01/11 -		3529/2
MEGANE III Hatchback (BZ0_)	20	105	01/11 -	3964/1	
MEGANE III Hatchback (BZ0_)	1.2 TCe	85	03/12 -		3529/2
MEGANE III Hatchback (BZ0_)	1.2 TCe	85	03/12 -	3964/1	
MEGANE III Hatchback (BZ0_)	1.2 TCe (BZ16)	97	01/13 -		3529/2
MEGANE III Hatchback (BZ0_)	1.2 TCe (BZ16)	97	01/13 -	3964/1	
MEGANE III Hatchback (BZ0_)	1.4 TCe (BZ0F, BZ1V)	96	04/09 -		3529/2
MEGANE III Hatchback (BZ0_)	1.4 TCe (BZ0F, BZ1V)	96	04/09 -	3964/1	
MEGANE III Hatchback (BZ0_)	1.5 dCi	63	12/09 -		3529/2
MEGANE III Hatchback (BZ0_)	1.5 dCi	63	12/09 -	3964/1	
MEGANE III Hatchback (BZ0_)	1.5 dCi	70	11/13 -		3529/2
MEGANE III Hatchback (BZ0_)	1.5 dCi	70	11/13 -	3964/1	
MEGANE III Hatchback (BZ0_)	1.5 dCi	78	02/09 -		3529/2
MEGANE III Hatchback (BZ0_)	1.5 dCi	78	02/09 -	3964/1	
MEGANE III Hatchback (BZ0_)	1.5 dCi (BZ09, BZ0D)	81	02/09 -		3529/2
MEGANE III Hatchback (BZ0_)	1.5 dCi (BZ09, BZ0D)	81	02/09 -	3964/1	
MEGANE III Hatchback (BZ0_)	1.5 dCi (BZ0C)	66	11/08 -		3529/2
MEGANE III Hatchback (BZ0_)	1.5 dCi (BZ0C)	66	11/08 -	3964/1	
MEGANE III Hatchback (BZ0_)	1.6 16V	82	11/08 -		3529/2
MEGANE III Hatchback (BZ0_)	1.6 16V	82	11/08 -	3964/1	
MEGANE III Hatchback (BZ0_)	1.6 16V (BZ0H)	74	11/08 -		3529/2
MEGANE III Hatchback (BZ0_)	1.6 16V (BZ0H)	74	11/08 -	3964/1	
MEGANE III Hatchback (BZ0_)	1.6 16V (BZ1B, BZ1H)	81	11/08 -		3529/2
MEGANE III Hatchback (BZ0_)	1.6 16V (BZ1B, BZ1H)	81	11/08 -	3964/1	
MEGANE III Hatchback (BZ0_)	1.6 16V Bifuel (BZ03)	81	11/08 -		3529/2
MEGANE III Hatchback (BZ0_)	1.6 16V Bifuel (BZ03)	81	11/08 -	3964/1	
MEGANE III Hatchback (BZ0_)	1.6 dCi (BZ00, BZ12)	96	04/11 -		3529/2
MEGANE III Hatchback (BZ0_)	1.6 dCi (BZ00, BZ12)	96	04/11 -	3964/1	

MAKE & MODEL		KW	YEAR		
RENAULT					
MEGANE III Hatchback (BZ0_)	1.9 dCi (BZ0N, BZ0J)	96	11/08 -		3529/2
MEGANE III Hatchback (BZ0_)	1.9 dCi (BZ0N, BZ0J)	96	11/08 -	3964/1	
MEGANE III Hatchback (BZ0_)	2.0 CVT (BZ0G, BZ1P)	103	02/09 -		3529/2
MEGANE III Hatchback (BZ0_)	2.0 CVT (BZ0G, BZ1P)	103	02/09 -	3964/1	
MEGANE III Hatchback (BZ0_)	2.0 dCi	120	07/12 -		3529/2
MEGANE III Hatchback (BZ0_)	2.0 dCi (BZ0L)	118	04/09 -		3529/2
MEGANE III Hatchback (BZ0_)	2.0 dCi (BZ0Y)	110	10/10 -		3529/2
MEGANE III Hatchback (BZ0_)	2.0 TCe	140	06/12 -		3529/2
MEGANE III Hatchback (BZ0_)	2.0 TCe (BZ0K)	132	11/08 -		3529/2
MEGANE III Hatchback (BZ0_)	2.0 TCe 220	162	11/13 -		3529/2
MEGANE III Hatchback (BZ0_)	2.0 TCe 220	162	11/13 -	3964/1	
MEGANE IV			2015	4280	
MEGANE IV (B9A/M_)	1.2 TCe 100 (B9MS)	74	11/15 -		3529/2
MEGANE IV (B9A/M_)	1.2 TCe 130 (B9MR)	97	11/15 -		3529/2
MEGANE IV (B9A/M_)	1.5 dCi 110 (B9A3)	81	11/15 -		3529/2
MEGANE IV (B9A/M_)	1.5 dCi 90 (B9A1)	66	11/15 -		3529/2
MEGANE IV (B9A/M_)	1.6 dCi 130 (B9A4)	96	11/15 -		3529/2
MEGANE IV (B9A/M_)	1.6 TCe 205 (B9MV)	151	11/15 -		4287
MEGANE IV Grandtour (K9A/M_)	1.6 TCe 205	151	04/16 -		4287
MEGANE Scenic (JA0/1_)	1.4 i (JA0E)	55	01/97 – 09/99	3431	
MEGANE Scenic (JA0/1_)	1.4 i (JA0E)	55	01/97 – 09/99	3503	
MEGANE Scenic (JA0/1_)	1.4 i (JA0E)	55	01/97 – 09/99	3539	
MEGANE Scenic (JA0/1_)	1.4 i (JA0E)	55	01/97 – 09/99	3546	
MEGANE Scenic (JA0/1_)	1.6 16V (JA0B, JA04, JA11)	79	04/98 – 10/99		3529
MEGANE Scenic (JA0/1_)	1.6 e (JA0F)	66	10/96 – 10/99	3431	
MEGANE Scenic (JA0/1_)	1.6 e (JA0F)	66	10/96 – 10/99	3503	
MEGANE Scenic (JA0/1_)	1.6 e (JA0F)	66	10/96 – 10/99	3539	
MEGANE Scenic (JA0/1_)	1.6 e (JA0F)	66	10/96 – 10/99	3546	
MEGANE Scenic (JA0/1_)	1.6 i (JA0L)	55	01/97 – 09/99	3431	
MEGANE Scenic (JA0/1_)	1.6 i (JA0L)	55	01/97 – 09/99	3503	
MEGANE Scenic (JA0/1_)	1.6 i (JA0L)	55	01/97 – 09/99	3539	
MEGANE Scenic (JA0/1_)	1.6 i (JA0L)	55	01/97 – 09/99	3546	
MEGANE Scenic (JA0/1_)	1.9 D (JA0J)	47	03/97 – 09/99		3529
MEGANE Scenic (JA0/1_)	1.9 D (JA0J)	47	03/97 – 09/99	3539	
MEGANE Scenic (JA0/1_)	1.9 D (JA0J)	47	03/97 – 09/99	3546	
MEGANE Scenic (JA0/1_)	1.9 dT (JA0K, JA0Y)	66	01/97 – 09/99		3529
MEGANE Scenic (JA0/1_)	1.9 dT (JA0K, JA0Y)	66	01/97 – 09/99	3539	
MEGANE Scenic (JA0/1_)	1.9 dT (JA0K, JA0Y)	66	01/97 – 09/99	3546	
MEGANE Scenic (JA0/1_)	1.9 dTi (JA0N)	72	04/97 – 09/99		3529
MEGANE Scenic (JA0/1_)	1.9 dTi (JA0N)	72	04/97 – 09/99	3539	
MEGANE Scenic (JA0/1_)	1.9 dTi (JA0N)	72	04/97 – 09/99	3546	
MEGANE Scenic (JA0/1_)	2.0 i (JA0G)	80	01/99 – 09/99		3529
MEGANE Scenic (JA0/1_)	2.0 i (JA0G)	80	01/99 – 09/99	3539	
MEGANE Scenic (JA0/1_)	2.0 i (JA0G)	80	01/99 – 09/99	3546	
MEGANE Scenic (JA0/1_)	2.0 i (JA0G)	84	01/97 – 09/99		3529
MEGANE Scenic (JA0/1_)	2.0 i (JA0G)	84	01/97 – 09/99	3539	
MEGANE Scenic (JA0/1_)	2.0 i (JA0G)	84	01/97 – 09/99	3546	
MEGANE Scenic (JA0/1_)	2.0 RXE 4x4	84	05/97 – 10/99		3529
MEGANE Scenic (JA0/1_)	2.0 RXE 4x4	84	05/97 – 10/99	3539	
MEGANE Scenic (JA0/1_)	2.0 RXE 4x4	84	05/97 – 10/99	3546	
MESSENGER Damper1i arac; B 120.35		90	09/96 – 06/99	3537	
MESSENGER Damper1i arac; B 120.65		90	09/96 – 06/99	3537	
MESSENGER Damperli arac; B 120.55		90	09/96 – 06/99	3537	
MESSENGER Kombi Van B 120.55 (FN60F5)		85	01/94 – 09/96	3537	
MESSENGER Kombi Van B 80.35 (FN40B5)		55	09/90 – 06/99	3537	
MESSENGER Kombi Van B 80.45 (FN40A5)		55	09/90 – 06/99	3537	
MESSENGER Kornbi Van B 110.45 4x4 (4x4F06)		78	09/96 – 06/99	3537	
MESSENGER Kornbi Van B 120.35		90	09/96 – 06/99	3537	
MESSENGER Kornbi Van B 120.55 (FN60F7)		90	09/96 – 06/99	3537	
MESSENGER Platform si B 120.55 (FNGOFS)		85	01/94 – 09/96	3537	
MESSENGER Platform si B 110.45 4x4 (4x4F06)		78	09/96 – 06/99	3537	
MESSENGER Platform sasi B 120.35 (FN40B5)		85	10/91 – 07/96	3537	
MESSENGER Platform sasi B 120.35 (FN40B7)		90	09/96 – 06/99	3537	
MESSENGER Platform sasi B 120.55 (FN60F7)		90	09/96 – 06/99	3537	
MESSENGER Platform sasi B 120.65 (FN60F6)		85	01/94 – 09/96	3537	
MESSENGER Platform sasi B 80.35 (FN40B5)		55	09/90 – 06/99	3537	
MESSENGER Platform sasi B 80.45 (FN40A5)		55	09/90 – 06/99	3537	
MESSENGER Platform sasl B 120.65 (FN60F8)		90	09/96 – 06/99	3537	
Midliner	S 120.08/A (T 4.40 A/3)	88	11/92 – 10/94	3773	
Midliner	S 120.08/A (T 4.40 CC)	88	11/92 – 10/94	3773	
Midliner	S 120.08/A (T 4.40)	82	09/90 – 11/92	3773	

MAKE & MODEL		KW	YEAR		
RENAULT					
Midliner	S 135.08/A (T 4.40 B/3)	102	02/94 – 05/96	3773	
Midliner	S 135.08/A (T 4.40 B/3)	102	02/94 – 05/96	3773	
Midliner	S 135.08/A,S 150.08/A (MIDR 04.02.26 A/41)	100	05/96 – 01/00	3773	
Midliner	S 135.08/A,S 150.08/A (MIDR 04.02.26 B/41)	100	05/96 – 01/00	3773	
Midliner	S 140.08/A,S 140.08/B (MIDS 06.02.12 C)	103	01/90 – 09/93	3773	
Midliner	S 140.08/A,S 140.08/B (MIDS 06.02.12 C)	103	01/90 – 09/93	3773	
Midliner	S 140.09/B (MIDS 06.02.12 C)	103	01/90 – 09/93	3773	
Midliner	S 140.09/B (MIDS 06.02.12 C)	103	01/90 – 09/93	3773	
Midliner	S 150.08/A,S 150.08/B (MIDR 06.02.26 U)	110	11/92 – 01/94	3773	
Midliner	S 150.08/A,S 150.08/B (MIDS 06.02.12 D/3)	110	01/94 – 05/96	3773	
Midliner	S 150.08/B (MIDR 06.02.26 U)	110	11/92 – 01/94	3773	
Midliner	S 150.08/B (MIDS 06.02.12 D/3)	110	01/94 – 05/96	3773	
Midliner	S 150.09/B (MIDR 06.02.26 U)	110	11/92 – 01/94	3773	
Midliner	S 150.09/B (MIDS 06.02.12 D/3)	110	01/94 – 05/96	3773	
Midliner	S 150.09/B (MIDS 06.02.12 D/3)	110	01/94 – 05/96	3773	
Midliner	S 150.09/B,S 135.09/B (MIDR 04.02.26 A/41)	100	05/96 – 01/00	3773	
Midliner	S 150.09/B,S 135.09/B (MIDR 04.02.26 B/41)	100	05/96 – 01/00	3773	
Midliner	S 160.08/A,S 160.08/B (MIDS 06.02.12 B)	117	01/90 – 09/93	3773	
Midliner	S 160.09/B (MIDS 06.02.12 B)	117	01/90 – 09/93	3773	
Midliner	S 180.08/A (MIDR 06.02.26 V/41)	132	05/96 – 01/00	3773	
Midliner	S 180.08/A,S 180.08/B (MIDR 06.02.26 V)	129	11/92 – 10/96	3773	
Midliner	S 180.08/A,S 180.08/B (MIDR 06.02.26 V)	129	11/92 – 10/96	3773	
Midliner	S 180.09/B (MIDR 06.02.26 V)	129	11/92 – 10/96	3773	
Midliner	S 180.09/B (MIDR 06.02.26 V)	129	11/92 – 10/96	3773	
Midliner	S 180.09/B (MIDR 06.02.26 V/41)	132	05/96 – 01/00	3773	
Midliner	S 210.08/A (MIDR 06.02.26 W)	151	04/95 – 01/00	3773	
Midliner	S 210.08/A (MIDR 06.02.26 W/41)	151	04/95 – 01/00	3773	
Midliner	S 210.09/B (MIDR 06.02.26 W)	151	04/95 – 01/00	3773	
Midliner	S 210.09/B (MIDR 06.02.26 W/41)	151	04/95 – 01/00	3773	
MODUS / GRAND MODUS (F/JP0_)	12	76	04/11 -		3529/2
MODUS / GRAND MODUS (F/JP0_)	12	76	04/11 -	3983	
MODUS / GRAND MODUS (F/JP0_)	1.2 (FP0C, FP0K, FP0P)	48	05/05 -		3529/2
MODUS / GRAND MODUS (F/JP0_)	1.2 (FP0C, FP0K, FP0P)	48	05/05 -	3983	
MODUS / GRAND MODUS (F/JP0_)	1.2 (JP0C, JP0K, FP0C, FP0K FP0P, JP0P,	55	12/04 -		3529/2
MODUS / GRAND MODUS (F/JP0_)	1.2 (JP0C, JP0K, FP0C, FP0K, FP0P, JP0P,	55	12/04 -	3983	
MODUS / GRAND MODUS (F/JP0_)	1.2 (JP0S)	58	12/04 -		3529/2
MODUS / GRAND MODUS (F/JP0_)	1.2 (JP0S)	58	12/04 -	3983	
MODUS / GRAND MODUS (F/JP0_)	1.2 16V (JP0W)	74	05/07 -		3529/2
MODUS / GRAND MODUS (F/JP0_)	1.2 16V (JP0W)	74	05/07 -	3983	
MODUS / GRAND MODUS (F/JP0_)	1.2 16V Hi-Flex	55	10/08 -		3529/2
MODUS / GRAND MODUS (F/JP0_)	1.2 16V Hi-Flex	55	10/08 -	3983	
MODUS / GRAND MODUS (F/JP0_)	1.4 (JP01, JP0J)	72	12/04 -		3529/2
MODUS / GRAND MODUS (F/JP0_)	1.4 (JP01, JP0J)	72	12/04 -	3983	
MODUS / GRAND MODUS (F/JP0_)	1.5 dCi (FP0D, JP0D)	60	09/04 -		3529/2
MODUS / GRAND MODUS (F/JP0_)	1.5 dCi (FP0D, JP0D)	60	09/04 -	3983	
MODUS / GRAND MODUS (F/JP0_)	1.5 dCi (FP0E, JP0E)	48	12/04 -		3529/2
MODUS / GRAND MODUS (F/JP0_)	1.5 dCi (FP0E, JP0E)	48	12/04 -	3983	
MODUS / GRAND MODUS (F/JP0_)	1.5 dCi (FP0F, JP0F)	63	12/04 -		3529/2
MODUS / GRAND MODUS (F/JP0_)	1.5 dCi (FP0F, JP0F)	63	12/04 -	3983	
MODUS / GRAND MODUS (F/JP0_)	1.5 dCi (FP0G, JP0G)	50	12/04 -		3529/2
MODUS / GRAND MODUS (F/JP0_)	1.5 dCi (FP0G, JP0G)	50	12/04 -	3983	
MODUS / GRAND MODUS (F/JP0_)	1.5 dCi (JP02)	76	05/07 -		3529/2
MODUS / GRAND MODUS (F/JP0_)	1.5 dCi (JP02)	76	05/07 -	3983	
MODUS / GRAND MODUS (F/JP0_)	1.5 dCi (JP0G, JP0H)	78	05/05 -		3529/2
MODUS / GRAND MODUS (F/JP0_)	1.5 dCi (JP0G, JP0H)	78	05/05 -	3983	
MODUS / GRAND MODUS (F/JP0_)	1.5 dCi 75	55	10/10 -		3529/2
MODUS / GRAND MODUS (F/JP0_)	1.5 dCi 75	55	10/10 -	3983	
MODUS / GRAND MODUS (F/JP0_)	1.5 dCi 90	65	10/10 -		3529/2
MODUS / GRAND MODUS (F/JP0_)	1.5 dCi 90	65	10/10 -	3983	
MODUS / GRAND MODUS (F/JP0_)	1.6 (JP03, JP0B, JP0U, JP0Y, JP1G)	82	12/04 -		3529/2
MODUS / GRAND MODUS (F/JP0_)	1.6 (JP03, JP0B, JP0U, JP0Y,JP1G)	82	12/04 -	3983	
MODUS / GRAND MODUS (F/JP0_)	1.6 (JP0L, JP0V)	65	12/04 -		3529/2
MODUS / GRAND MODUS (F/JP0_)	1.6 (JP0L, JP0V)	65	12/04 -	3983	
QM5	2.0 dCi 4x4	127	09/07 -		3933
QM5	2.0 dCi 4x4	127	09/07 -	4143	
R 11	1.1 (C1E 720)	35	03/83 – 06/86	3372	
R 11	1.1 (C1E 720)	35	03/83 – 06/86	3599	
R 11	1.2 (C1G 700)	40	10/84 – 12/88	3372	
R 11	1.2 (C1G 700)	40	10/84 – 12/88	3599	
R 11	1.2 (C1G 710)	40	10/84 – 12/88	3372	
R 11	1.2 (C1G 710)	40	10/84 – 12/88	3599	

BESER

MAKE & MODEL		KW	YEAR		
RENAULT					
R 11	1.4 (C1J 715)	44	03/83 – 12/88	3372	
R 11	1.4 (C1J 715)	44	03/83 – 12/88	3599	
R 11	1.4 (C2J 717)	53	05/83 – 12/85	3372	
R 11	1.4 (C2J 717)	53	05/83 – 12/85	3599	
R 11	1.4 (C2J 718)	50	03/83 – 12/85	3372	
R 11	1.4 (C2J 718)	50	03/83 – 12/85	3599	
R 11	1.4 (C2J 720)	49	03/83 – 12/88	3372	
R 11	1.4 (C2J 720)	49	03/83 – 12/88	3599	
R 11	1.4 (C2J 730)	44	03.83-12.88	3372	
R 11	1.4 (C2J 730)	44	03.83-12.88	3599	
R 11	1.4 (C2J 755)	53	05/83 – 12/85	3372	
R 11	1.4 (C2J 755)	53	05/83 – 12/85	3599	
R 11	1.4 (C2J 757)	50	03/83 – 12/85	3372	
R 11	1.4 (C2J 757)	50	03/83 – 12/85	3599	
R 11	1.4 (C2J 766)	49	03/83 – 12/88	3372	
R 11	1.4 (C2J 766)	49	03/83 – 12/88	3599	
R 11	1.4 (C2J 767)	49	03/83 – 12/88	3372	
R 11	1.4 (C2J 767)	49	03/83 – 12/88	3599	
R 11	1.4 (C2J 768)	49	03/83 – 12/88	3372	
R 11	1.4 (C2J 768)	49	03/83 – 12/88	3599	
R 11	1.4 Turbo (C1J 760)	77	04/84 – 12/86	3372	
R 11	1.4 Turbo (C1J 760)	77	04/84 – 12/86	3599	
R 11	1.4 Turbo (C1J 764)	77	04/84 – 12/86	3372	
R 11	1.4 Turbo (C1J 764)	77	04/84 – 12/86	3599	
R 11	1.4 Turbo (C1J 764)	87	02/84 – 06/86	3372	
R 11	1.4 Turbo (C1J 764)	87	02/84 – 06/86	3599	
R 11	1.4 Turbo (C1J 770)	85	10/86 – 12/88	3372	
R 11	1.4 Turbo (C1J 770)	85	10/86 – 12/88	3599	
R 11	1.4 Turbo (C1J 782)	85	10/86 – 12/88	3372	
R 11	1.4 Turbo (C1J 782)	85	10/86 – 12/88	3599	
R 11	1.6 D (F8M 700)	40	08/83 – 12/88	3372	
R 11	1.6 D (F8M 700)	40	08/83 – 12/88	3599	
R 11	1.6 D (F8M 720)	40	08/83 – 12/88	3372	
R 11	1.6 D (F8M 720)	40	08/83 – 12/88	3599	
R 11	1.6 D (F8M 730)	40	08/83 – 12/88	3372	
R 11	1.6 D (F8M 730)	40	08/83 – 12/88	3599	
R 11	1.7 (F2N 700)	59	10/83 – 12/87	3372	
R 11	1.7 (F2N 700)	59	10/83 – 12/87	3599	
R 11	1.7 (F2N 704)	59	10/83 – 12/87	3372	
R 11	1.7 (F2N 704)	59	10/83 – 12/87	3599	
R 11	1.7 (F2N 708)	65	10/86 – 12/88	3372	
R 11	1.7 (F2N 708)	65	10/86 – 12/88	3599	
R 11	1.7 (F2N 710)	65	10/86 – 12/88	3372	
R 11	1.7 (F2N 710)	65	10/86 – 12/88	3599	
R 11	1.7 (F2N 730)	54	10/86 – 12/88	3372	
R 11	1.7 (F2N 730)	54	10/86 – 12/88	3599	
R 11	1.7 (F2N 732)	64	06/87 – 12/88	3372	
R 11	1.7 (F2N 732)	64	06/87 – 12/88	3599	
R 11	1.7 (F2N 742)	64	06/87 – 12/88	3372	
R 11	1.7 (F2N 742)	64	06/87 – 12/88	3599	
R 11	1.7 (F2N 798)	65	10/86 – 12/88	3372	
R 11	1.7 (F2N 798)	65	10/86 – 12/88	3599	
R 11	1.7 (F3N 718)	55	10/84 – 12/88	3372	
R 11	1.7 (F3N 718)	55	10/84 – 12/88	3599	
R 12	1.3	40	10/70 – 08/80	3330	
R 12	1.3	40	10/69 – 08/80	3330	
R 12	1.3 (810.02)	37	07.75 – 04.80	3341	
R 12	1.3 (810.02)	37	07.75 – 04.80	3341	
R 12	1.3 (810.02)	37	07.75 – 04.80	3345	
R 12	1.3 (810.02)	37	07.75 – 04.80	3345	
R 12	1.3 (810.05)	44	08/73 – 08/80	3330	
R 12	1.3 (810.06)	44	08/73 – 08/80	3330	
R 12	1.3 (810-02/97)	40	10.69 – 08.80	3341	
R 12	1.3 (810-02/97)	40	10.69 – 08.80	3345	
R 12	1.3 TS (810.05)	44	08/72 – 08/80	3330	
R 12	1.3 TS (810.05)	44	08.72 – 08.80	3341	
R 12	1.3 TS (810.05)	44	08.72 – 08.80	3345	
R 12	1.3 TS (810.06)	44	08/72 – 08/80	3330	
R 12	1.3 TS (810.06)	44	08.72 – 08.80	3341	
R 12	1.3 TS (810.06)	44	08.72 – 08.80	3345	
R 12	1.4 (C1J 791)	49	08.76 – 05.79	3341	

BESER

MAKE & MODEL		KW	YEAR		
RENAULT					
R 12	1.4 (C1J 791)	49	08.76 – 05.79	3345	
R 12	1.6 (821.10)	50	08/70 – 08/76	3330	
R 12	1.6 (821.10)	50	08.70 – 08.76	3341	
R 12	1.6 (821.10)	50	08.70 – 08.76	3345	
R 12	1.6 (821.11)	50	08/70 – 08/76	3330	
R 12	1.6 (821.11)	50	08.70 – 08.76	3341	
R 12	1.6 (821.11)	50	08.70 – 08.76	3345	
R 12	ONLY SOUTH AMERICA			3481	
R 12 (117_)	1.3 (810.02)	37	07.75 – 04.80	3341	
R 12 (117_)	1.3 (810.02)	37	07.75 – 04.80	3345	
R 12 (117_)	1.3 (810.05)	44	08.73 – 08.80	3341	
R 12 (117_)	1.3 (810.05)	44	08.73 – 08.80	3345	
R 12 (117_)	1.3 (810.06)	44	08.73 – 08.80	3341	
R 12 (117_)	1.3 (810.06)	44	08.73 – 08.80	3345	
R 12 (117_)	1.3 (810-02/97)	40	10.70 – 08.80	3341	
R 12 (117_)	1.3 (810-02/97)	40	10.70 – 08.80	3345	
R 14 (121_)	1.2 (129)	42	05.76 – 01.80	3342	
R 14 (121_)	1.2 (129)	58	01.80 – 12.83	3342	
R 14 (121_)	1.4 (150)	71	09.79 – 06.83	3342	
R 14 (121_)	1.4 (X5J)	60	12.81 – 12.83	3342	
R 15	1.3 (810.05)	44	03.72 – 10.80	3341	
R 15	1.3 (810.05)	44	03.72 – 10.80	3345	
R 15 (130_)	1.6 (807.10)	66	03.72 – 10.80	3342	
R 16 (115_)	1.5 (697.01)	40	09.65 – 10.75	3342	
R 16 (115_)	1.6 TA	52	01.69 – 08.80	3342	
R 16 (115_)	1.6 TL (821)	40	07.75 – 08.80	3342	
R 16 (115_)	1.6 TL (821)	48	01.71 – 08.80	3342	
R 16 (115_)	1.6 TL (821.03)	48	01.71 – 08.80	3342	
R 16 (115_)	1.6 TL (821.04)	48	01.71 – 08.80	3342	
R 16 (115_)	1.6 TS (807)	61	09.68 – 08.80	3342	
R 16 (115_)	1.6 TS (807.04)	61	09.68 – 08.80	3342	
R 16 (115_)	1.6 TS (807.05)	61	09.68 – 08.80	3342	
R 16 (115_)	1.6 TX (843)	68	06.74 – 08.80	3342	
R 16 (115_)	1.6 TX (843.01)	68	06.74 – 08.80	3342	
R 17	1.6 Gordini	79	03/74 – 10/80		3454
R 17 (115_)	1.6 (807.10)	66	03.72 – 10.80	3342	
R 17 (115_)	1.6 (843.05)	68	06.74 – 08.79	3342	
R 17 (115_)	1.6 Gordini (844.12)	79	03.74 – 10.80	3342	
R 18	1.4 (847 720)	47	05/79 – 07/86	3330	
R 18	1.4 (847 720)	47	04/78 – 07/86	3330	
R 18	1.4 (847 720)	47	05.79 – 07.86	3342	
R 18	1.4 (847 722)	47	05/79 – 07/86	3330	
R 18	1.4 (847 722)	47	04/78 – 07/86	3330	
R 18	1.4 (847 722)	47	05.79 – 07.86	3342	
R 18	1.4 (847 722)	47	05/79 – 07/86	3372	
R 18	1.4 (847 722)	47	05/79 – 07/86	3599	
R 18	1.4 (847 720)	47	05/79 – 07/86	3330	
R 18	1.4 (847 722)	47	05/79 – 07/86	3330	
R 18	1.6 (841 717)	54	01/82 – 07/86	3372	
R 18	1.6 (841 717)	54	01/83 – 07/86	3372	
R 18	1.6 (841 717)	54	01/82 – 07/86	3599	
R 18	1.6 (841 717)	54	01/83 – 07/86	3599	
R 18	1.6 (841 725)	58	04/78 – 09/82	3330	
R 18	1.6 (841 726)	58	04/78 – 09/82	3330	
R 18	1.6 (A7L 752)	82	10/83 – 09/86	3372	
R 18	1.6 (A7L 752)	82	10/83 – 09/86	3599	
R 18	1.6 (841 725)	58	05/79 – 09/82	3330	
R 18	1.6 (841 725)	58	02/79 – 06/81	3330	
R 18	1.6 (841 726)	58	05/79 – 09/82	3330	
R 18	1.6 (A2M 723)	54	01/82 – 07/86	3372	
R 18	1.6 (A2M 723)	54	01/83 – 07/86	3372	
R 18	1.6 (A2M 723)	54	01/82 – 07/86	3599	
R 18	1.6 (A2M 723)	54	01/83 – 07/86	3599	
R 18	1.6 TS (A6M 725)	71	05/82 – 07/86	3372	
R 18	1.6 TS (A6M 725)	71	05/82 – 07/86	3599	
R 18	1.6 TS (A6M 726)	71	05/82 – 07/86	3372	
R 18	1.6 TS (A6M 726)	71	05/82 – 07/86	3599	
R 18	1.6 Turbo (807 727)	80	10/80 – 09/82	3330	
R 18	1.6 Turbo (807 727)	80	09/82 – 07/86	3372	
R 18	1.6 Turbo (807 727)	80	09/82 – 07/86	3599	
R 18	1.6 Turbo (A5L 717)	92	10/82 – 07/86	3372	

MAKE & MODEL		KW	YEAR		
RENAULT					
R 18	1.6 Turbo (A5L 717)	92	10/82 – 07/86	3599	
R 18	1.6 Turbo (A5L 718)	92	10/82 – 07/86	3372	
R 18	1.6 Turbo (A5L 718)	92	10/82 – 07/86	3599	
R 18	14 (847 720)	47	05/79 – 07/86	3372	
R 18	14 (847 720)	47	05/79 – 07/86	3599	
R 18	2.0 (J6R 714)	76	05/83 – 12/86	3372	
R 18	2.0 (J6R 714)	76	05/83 – 12/86	3599	
R 18	2.0 (J6R 716)	76	05/83 – 12/86	3372	
R 18	2.0 (J6R 716)	76	05/83 – 12/86	3599	
R 18	2.0 (J6R 716)	77	10/81 – 07/86	3372	
R 18	2.0 (J6R 716)	77	10/81 – 07/86	3599	
R 18	2.1 Diesel (852 710)	49	11/80 – 07/86	3372	
R 18	2.1 Diesel (852 710)	49	11/80 – 07/86	3599	
R 18	2.1 Diesel (J8S 711)	49	11/80 – 07/86	3372	
R 18	2.1 Diesel (J8S 711)	49	11/80 – 07/86	3599	
R 18	2.1 Diesel (J8S 711)	53	05/79 – 07/86	3372	
R 18	2.1 Diesel (J8S 711)	53	05/79 – 07/86	3599	
R 18	1.6 Turbo (A5L 718)	92	10/82 – 07/86		3454
R 18	1.6 Turbo (A5L 717)	92	10/82 – 07/86		3454
R 18 (134)	1.4 (847 720)	47	04.78 – 07.86	3342	
R 18 (134)	1.4 (847 722)	47	04.78 – 07.86	3342	
R 18 (134)	1.6 (841 725)	58	04.78 – 09.82	3342	
R 18 (134)	1.6 (841 726)	58	04.78 – 09.82	3342	
R 18 (135_)	1.4 (847 720)	47	05.79 – 07.86	3342	
R 18 (135_)	1.4 (847 722)	47	05.79 – 07.86	3342	
R 18 (135_)	1.6 (841 725)	58	05.79 -09.82	3342	
R 18 (135_)	1.6 (841 725)	58	02.79 – 06.81	3342	
R 18 (135_)	1.6 (841 726)	58	05.79 – 09.82	3342	
R 19	1.2 (C1G 730)	40	01/88 – 12/92	3372	
R 19	1.2 (C1G 730)	40	01/88 – 12/92	3599	
R 19	1.4 (C2J 772)	43	07/88 – 04/92	3372	
R 19	1.4 (C2J 772)	43	07/88 – 04/92	3599	
R 19	1.4 (C3J 710)	43	07/88 – 04/92	3372	
R 19	1.4 (C3J 710)	43	07/88 – 04/92	3599	
R 19	1.4 (E6J 700)	57	07/88 – 08/90	3372	
R 19	1.4 (E6J 700)	57	07/88 – 08/90	3599	
R 19	1.4 (E6J 701)	57	07/88 – 08/90	3372	
R 19	1.4 (E6J 701)	57	07/88 – 08/90	3599	
R 19	1.4 (E7J 700)	55	09/90 – 04/92	3372	
R 19	1.4 (E7J 700)	55	09/90 – 04/92	3599	
R 19	1.7 (F2N 720)	68	09/88 – 12/92	3372	
R 19	1.7 (F2N 720)	68	09/88 – 12/92	3599	
R 19	1.7 (F2N 721)	68	09/88 – 12/92	3372	
R 19	1.7 (F2N 721)	68	09/88 – 12/92	3599	
R 19	1.7 (F3N 740)	54	10/89 – 04/92	3372	
R 19	1.7 (F3N 740)	54	10/89 – 04/92	3599	
R 19	1.7 (F3N 741)	54	10/89 – 04/92	3372	
R 19	1.7 (F3N 741)	54	10/89 – 04/92	3599	
R 19	1.7 (F3N 742)	66	07/88 – 04/92	3372	
R 19	1.7 (F3N 742)	66	07/88 – 04/92	3599	
R 19	1.7 (F3N 743)	66	07/88 – 04/92	3372	
R 19	1.7 (F3N 743)	66	07/88 – 04/92	3599	
R 19	1.7 (F3N 746)	79	08/88 – 12/92	3372	
R 19	1.7 (F3N 746)	79	08/88 – 12/92	3599	
R 19	1.8 16V (F7P 704)	99	10/89 – 04/92	3372	
R 19	1.8 16V (F7P 704)	99	10/89 – 04/92	3599	
R 19	1.9 D (F8Q 706)	47	10/89 – 04/92	3372	
R 19	1.9 D (F8Q 706)	47	10/89 – 04/92	3599	
R 19	1.9 D (F8Q 742)	47	10/89 – 04/92	3372	
R 19	1.9 D (F8Q 742)	47	10/89 – 04/92	3599	
R 19	1.9 dT	66	09/90 – 04/92	3372	
R 19	1.9 dT	66	09/90 – 04/92	3599	
R 19	1.9 TD (F8Q 740)	68	09/90 – 04/92	3372	
R 19	1.9 TD (F8Q 740)	68	09/90 – 04/92	3599	
R 20 (127)	1.6 (843 720)	71	05.77 – 12.83	3342	
R 20 (127)	1.6 (843 721)	71	05.77 – 12.83	3342	
R 20 (127)	1.6 (843)	66	10.75 – 05.77	3342	
R 20 (127_)	1.6 (843 720)	71	05/77 – 12/83	3372	
R 20 (127_)	1.6 (843 720)	71	05/77 – 12/83	3599	
R 20 (127_)	1.6 (843 721)	71	05/77 – 12/83	3372	
R 20 (127_)	1.6 (843 721)	71	05/77 – 12/83	3599	

MAKE & MODEL		KW	YEAR		
RENAULT					
R 20 (127_)	2.0 (829 702)	76	10/80 – 12/83	3372	
R 20 (127_)	2.0 (829 702)	76	10/80 – 12/83	3599	
R 20 (127_)	2.0 (829 703)	76	10/80 – 12/83	3372	
R 20 (127_)	2.0 (829 703)	76	10/80 – 12/83	3599	
R 20 (127_)	2.1 Diesel (852)	47	10/80 – 12/83	3372	
R 20 (127_)	2.1 Diesel (852)	47	10/80 – 12/83	3599	
R 20 (127_)	2.1 TD (J8S 702)	63	01/82 – 12/83	3372	
R 20 (127_)	2.1 TD (J8S 702)	63	01/82 – 12/83	3599	
R 21	1.4 (C2J 770)	51	06/88 – 10/93	3372	
R 21	1.4 (C2J 770)	51	06/88 – 10/93	3599	
R 21	1.7	70	04/86 – 06/89	3372	
R 21	1.7	70	04/86 – 06/89	3599	
R 21	1.7 (F2N 710)	65	03/86 – 03/93	3372	
R 21	1.7 (F2N 710)	65	03/86 – 03/93	3599	
R 21	1.7 (F2N 712)	55	03/86 – 12/87	3372	
R 21	1.7 (F2N 712)	55	03/86 – 12/87	3599	
R 21	1.7 (F2N 750)	54	07/86 – 02/94	3372	
R 21	1.7 (F2N 750)	54	07/86 – 02/94	3599	
R 21	1.7 (F2N 752)	64	06/87 – 04/89	3372	
R 21	1.7 (F2N 752)	64	06/87 – 04/89	3599	
R 21	1.7 (F3N 722)	66	09/89 – 02/94	3372	
R 21	1.7 (F3N 722)	66	09/89 – 02/94	3599	
R 21	1.7 (F3N 722)	69	03/86 – 02/94	3372	
R 21	1.7 (F3N 722)	69	03/86 – 02/94	3599	
R 21	1.7 (F3N 723)	66	09/89 – 02/94	3372	
R 21	1.7 (F3N 723)	66	09/89 – 02/94	3599	
R 21	1.7 (F3N 723)	69	03/86 – 02/94	3372	
R 21	1.7 (F3N 723)	69	03/86 – 02/94	3599	
R 21	1.7 (F3N 726)	54	07/86 – 02/94	3372	
R 21	1.7 (F3N 726)	54	07/86 – 02/94	3599	
R 21	1.9 D (F8Q 710)	47	08/89 – 10/93	3372	
R 21	1.9 D (F8Q 710)	47	08/89 – 10/93	3599	
R 21	2.0 (B48R/Y) (J7R 740)	135	02/90 – 10/92		3454
R 21	2.0 (B48R/Y) (J7R 740)	135	09/90 – 10/92		3454
R 21	2.0 TXi (J7R 740)	136	07/89 – 05/93		3454
R 21	2.0 TXi (J7R 754)	136	07/89 – 05/93		3454
R 21	2.1 D (J8S 600)	72	09/89 – 12/92		3454
R 21	2.1 D (J8S 704)	68	07/89 – 05/93		3454
R 21	2.1 D (J8S 740)	72	09/89 – 12/92		3454
R 21	2.1 D (J8S 784)	68	07/89 – 05/93		3454
R 21	2.1 D (J8S 784)	69	04/92 – 06/94		3454
R 21	2.1 Turbo-D (J8S 714)	88	09/89 – 06/94		3454
R 21	2.1 Turbo-D (J8S 786)	88	09/89 – 06/94		3454
R 21	2.1 Turbo-D (J8S 788)	88	09/89 – 06/94		3454
R 21	2.2 (J7T 754)	107	09/89 – 06/94		3454
R 21	2.2 (J7T 754)	107	07/90 – 06/94		3454
R 21	2.2 (J7T 755)	107	09/89 – 06/94		3454
R 21	2.2 (J7T 755)	107	07/90 – 06/94		3454
R 21	2.2 (J7T 755)	110	07/89 – 05/93		3454
R 25 (B29_)	2.0 (J6R 706)	74	04/84 – 12/92	3372	
R 25 (B29_)	2.0 (J6R 706)	74	04/84 – 12/92	3599	
R 25 (B29_)	2.0 (J6R 707)	74	04/84 – 12/92	3372	
R 25 (B29_)	2.0 (J6R 707)	74	04/84 – 12/92	3599	
R 25 (B29_)	2.0 (J6R 760)	74	04/84 – 12/92	3372	
R 25 (B29_)	2.0 (J6R 760)	74	04/84 – 12/92	3599	
R 25 (B29_)	2.0 (J6R 762)	74	04/84 – 12/92	3372	
R 25 (B29_)	2.0 (J6R 762)	74	04/84 – 12/92	3599	
R 25 (B29_)	2.0 (J6R 763)	74	04/84 – 12/92	3372	
R 25 (B29_)	2.0 (J6R 763)	74	04/84 – 12/92	3599	
R 25 (B29_)	2.0 (J7R 722)	88	03/87 – 12/93	3372	
R 25 (B29_)	2.0 (J7R 722)	88	03/87 – 12/93	3599	
R 25 (B29_)	2.0 (J7R 723)	88	03/87 – 12/93	3372	
R 25 (B29_)	2.0 (J7R 723)	88	03/87 – 12/93	3599	
R 25 (B29_)	2.0 12V (J7R 720)	103	06/88 – 12/93	3372	
R 25 (B29_)	2.0 12V (J7R 720)	103	06/88 – 12/93	3599	
R 25 (B29_)	2.0 12V (J7R 721)	103	06/88 – 12/93	3372	
R 25 (B29_)	2.0 12V (J7R 721)	103	06/88 – 12/93	3599	
R 25 (B29_)	2.0 12V (J7R 726)	99	06/89 – 12/92	3372	
R 25 (B29_)	2.0 12V (J7R 726)	99	06/89 – 12/92	3599	
R 25 (B29_)	2.1 Diesel (J8S 706)	46	04/84 – 05/89	3372	
R 25 (B29_)	2.1 Diesel (J8S 706)	46	04/84 – 05/89	3599	

MAKE & MODEL		KW	YEAR		
RENAULT					
R 25 (B29_)	2.1 Diesel (J8S 736)	51	06/89 – 12/92	3372	
R 25 (B29_)	2.1 Diesel (J8S 736)	51	06/89 – 12/92	3599	
R 25 (B29_)	2.1 Turbo-D (J8S 708)	63	04/84 – 12/92	3372	
R 25 (B29_)	2.1 Turbo-D (J8S 708)	63	04/84 – 12/92	3599	
R 25 (B29_)	2.1 Turbo-D (J8S 738)	63	04/84 – 12/92	3372	
R 25 (B29_)	2.1 Turbo-D (J8S 738)	63	04/84 – 12/92	3599	
R 25 (B29_)	2.2 (J7T 706)	89	04/84 – 12/89	3372	
R 25 (B29_)	2.2 (J7T 706)	89	04/84 – 12/89	3599	
R 25 (B29_)	2.2 (J7T 707)	89	04/84 – 12/89	3372	
R 25 (B29_)	2.2 (J7T 707)	89	04/84 – 12/89	3599	
R 25 (B29_)	2.2 (J7T 708)	76	11/85 – 03/89	3372	
R 25 (B29_)	2.2 (J7T 708)	76	11/85 – 03/89	3599	
R 25 (B29_)	2.2 (J7T 708)	79	09/86 – 12/92	3372	
R 25 (B29_)	2.2 (J7T 708)	79	09/86 – 12/92	3599	
R 25 (B29_)	2.2 (J7T 714)	89	04/84 – 12/89	3372	
R 25 (B29_)	2.2 (J7T 714)	89	04/84 – 12/89	3599	
R 25 (B29_)	2.2 (J7T 730)	91	04/84 – 12/89	3372	
R 25 (B29_)	2.2 (J7T 730)	91	04/84 – 12/89	3599	
R 25 (B29_)	2.2 (J7T 731)	91	04/84 – 12/89	3372	
R 25 (B29_)	2.2 (J7T 731)	91	04/84 – 12/89	3599	
R 25 (B29_)	2.2 (J7T 732)	76	11/85 – 03/89	3372	
R 25 (B29_)	2.2 (J7T 732)	76	11/85 – 03/89	3599	
R 25 (B29_)	2.2 (J7T 732)	79	09/86 – 12/92	3372	
R 25 (B29_)	2.2 (J7T 732)	79	09/86 – 12/92	3599	
R 25 (B29_)	2.2 (J7T 733)	79	09/86 – 12/92	3372	
R 25 (B29_)	2.2 (J7T 733)	79	09/86 – 12/92	3599	
R 25 (B29_)	2.2 (J7T 715)	89	04/84 – 12/89	3372	
R 25 (B29_)	2.2 (J7T 715)	89	04/84 – 12/89	3599	
R 25 (B29_)	2.0 (J6R 707)	74	04/84 – 12/92		3454
R 25 (B29_)	2.0 (J6R 760)	74	04/84 – 12/92		3454
R 25 (B29_)	2.0 (J6R 762)	74	04/84 – 12/92		3454
R 25 (B29_)	2.0 (J6R 763)	74	04/84 – 12/92		3454
R 25 (B29_)	2.0 (J7R 722)	88	03/87 – 12/93		3454
R 25 (B29_)	2.0 (J7R 723)	88	03/87 – 12/93		3454
R 25 (B29_)	2.0 12V (J7R 720)	103	06/88 – 12/93		3454
R 25 (B29_)	2.0 12V (J7R 726)	99	06/89 – 12/92		3454
R 25 (B29_)	2.1 Diesel (J8S 706)	46	04/84 – 05/89		3454
R 25 (B29_)	2.1 Diesel (J8S 736)	51	06/89 – 12/92		3454
R 25 (B29_)	2.1 Turbo-D (J8S 708)	63	04/84 – 12/92		3454
R 25 (B29_)	2.1 Turbo-D (J8S 738)	63	04/84 – 12/92		3454
R 25 (B29_)	2.2 (J7T 706)	89	04/84 – 12/89		3454
R 25 (B29_)	2.2 (J7T 707)	89	04/84 – 12/89		3454
R 25 (B29_)	2.2 (J7T 708)	76	11/85 – 03/89		3454
R 25 (B29_)	2.2 (J7T 708)	79	09/86 – 12/92		3454
R 25 (B29_)	2.2 (J7T 714)	89	04/84 – 12/89		3454
R 25 (B29_)	2.2 (J7T 715)	89	04/84 – 12/89		3454
R 25 (B29_)	2.2 (J7T 730)	91	04/84 – 12/89		3454
R 25 (B29_)	2.2 (J7T 731)	91	04/84 – 12/89		3454
R 25 (B29_)	2.2 (J7T 732)	76	11/85 – 03/89		3454
R 25 (B29_)	2.2 (J7T 732)	79	09/86 – 12/92		3454
R 25 (B29_)	2.2 (J7T 733)	79	09/86 – 12/92		3454
R 25 (B29_)	2.4 V6 Turbo (Z7U 702)	133	10/84 – 05/90		3454
R 25 (B29_)	2.5 V6 Turbo (Z7U 700)	151	01/90 – 12/92		3454
R 25 (B29_)	2.7 V6 Injection (Z7V 708)	104	04/84 – 08/89		3454
R 25 (B29_)	2.7 V6 Injection (Z7V 709)	104	04/84 – 08/89		3454
R 25 (B29_)	2.7 V6 Injection (Z7V 711)	104	04/84 – 08/89		3454
R 25 (B29_)	2.8 V6 (Z7W 700)	115	06/87 – 02/90		3454
R 25 (B29_)	2.8 V6 Injection (Z7W 702)	100	06/86 – 02/88		3454
R 25 (B29_)	2.8 V6 Injection (Z7W 706)	110	06/87 – 12/92		3454
R 25 (B29_)	2.8 V6 Injection (Z7W 707)	110	06/87 – 12/92		3454
R 25 (B29_)	2.8 V6 Injection (Z7W 709)	110	06/87 – 12/92		3454
R 25 (B29_)	20 (J6R 706)	74	04/84 – 12/92		3454
R 4 (112)	1.0 (689 710)	31	12.85 – 06.93	3342	
R 4 (112)	1.0 (C1C 708)	25	06.87 – 06.93	3342	
R 4 (112)	1.1 (688 712)	25	06.78 – 06.90	3342	
R 4 (112)	1.1 (688 712)	33	02.78 – 03.84	3342	
R 4 (112)	1.1 (C1E 714)	25	06.78 – 06.90	3342	
R 4 (112)	1.1 (C1E 714)	32	06.86 – 06.90	3342	
R 4 (112)	1.1 (C1E 719)	25	06.78 – 06.90	3342	
R 4 (R21_,R23_)	1.0 (C1C 708)	25	06.87 – 12.93	3342	
R 4 (R21_,R23_)	1.1 (688 711)	25	10.76 – 07.89	3342	

MAKE & MODEL		KW	YEAR		
RENAULT					
R 4 (R21_,R23_)	1.1 (688 712)	25	10.76 – 07.89	3342	
R 4 (R21_,R23_)	1.1 (C1E 714)	25	10.76 – 07.89	3342	
R 4 (R21_,R23_)	1.1 (C1E 718)	25	10.76 – 07.89	3342	
R 4 (R21_,R23_)	1.1 (C1E 718)	26	07.82 – 05.89	3342	
R 4 (R21_,R23_)	1.1 (C1E 719)	25	10.76 – 07.89	3342	
R 4 (R21_,R23_)	1.1 (C1E 719)	26	07.82 – 05.89	3342	
R 5	1.4 (840 730)	118	09/80 – 03/85	3330	
R 5	1.4 Alpine A5 (840 725)	68	09/77 – 09/81	3330	
R 5	1.4 Alpine Turbo (840 726)	79	10/81 – 01/85	3330	
R 5	1.4 Alpine Turbo (C6J 750)	79	10/81 – 01/85	3330	
R 5	1.4 Turbo (840 730)	118	06/80 – 01/85	3330	
R 5 / LE CAR (122_)	13	47	09.75 – 09.84	3342	
R 5 / LE CAR (122_)	0.8 (800 710)	26	10.72 – 08.84	3342	
R 5 / LE CAR (122_)	0.8 (800 710)	27	01.82 – 12.84	3342	
R 5 / LE CAR (122_)	1.0 (689 710)	32	01.72 – 12.85	3342	
R 5 / LE CAR (122_)	1.1 (688 713)	33	09.80 – 12.85	3342	
R 5 / LE CAR (122_)	1.1 (C1E 726)	33	09.80 – 12.85	3342	
R 5 / LE CAR (122_)	1.3 (810 719)	33	06.79 – 09.84	3342	
R 5 / LE CAR (122_)	1.3 (810 726)	31	09.76 – 09.79	3342	
R 5 / LE CAR (122_)	1.3 Automatik (810 729)	40	06.79 – 09.84	3342	
R 5 / LE CAR (122_)	1.4 (840 730)	118	09.80 – 03.85	3342	
R 5 / LE CAR (122_)	1.4 (847 725)	46	01.82 – 12.85	3342	
R 5 / LE CAR (122_)	1.4 (C2J 713)	46	01.82 – 12.85	3342	
R 5 / LE CAR (122_)	1.4 Alpine A5 (840 725)	68	09.77 – 09.81	3342	
R 5 / LE CAR (122_)	1.4 Alpine Turbo (840 726)	79	10.81 – 01.85	3342	
R 5 / LE CAR (122_)	1.4 Alpine Turbo (C6J 750)	79	10.81 – 01.85	3342	
R 5 / LE CAR (122_)	1.4 Automatik	43	06.82 – 09.84	3342	
R 5 / LE CAR (122_)	1.4 Turbo (840 730)	118	06.80 – 01.85	3342	
R 5 / LE CAR (122_) 01.72-12.85	1.4 Alpine Turbo (840 726)	79	10/81 – 01/85	3592	
R 5 / LE CAR (122_) 01.72-12.86	1.4 Alpine Turbo (C6J 750)	79	10/81 – 01/85	3592	
R 5 (238_)	0.8 (800 710)	26	10.72 – 08.84	3342	
R 5 (238_)	1.0 (689 710)	32	01.72 – 12.85	3342	
R 5 (238_)	1.1 (688 713)	33	09.80 – 12.85	3342	
R 5 (238_)	1.1 (C1E 726)	33	09.80 – 12.85	3342	
R 5 (238_)	1.3 (810 726)	32	03.76 – 08.82	3342	
R 6 (118_)	11	45	08.70 – 04.87	3342	
R 6 (118_)	11	48	07.71 – 04.80	3342	
R 7 (124_)	10	37	03.75 – 12.82	3342	
R 7 (124_)	1.2 TL, GTL	35	03.75 -	3342	
RAPID Box (F40_, G40_)	10	27	02/86 – 05/92	3380	
RAPID Box (F40_, G40_)	10	27	02/86 – 05/92	3381	
RAPID Box (F40_, G40_)	10	27	02/86 – 05/92	3431	
RAPID Box (F40_, G40_)	10	27	02/86 – 05/92	3495	
RAPID Box (F40_, G40_)	10	27	02/86 – 05/92	3503	
RAPID Box (F40_, G40_)	10	27	02/86 – 05/92	3580	
RAPID Box (F40_, G40_)	10	31	09/85 – 08/91	3380	
RAPID Box (F40_, G40_)	10	31	09/85 – 08/91	3381	
RAPID Box (F40_, G40_)	10	31	09/85 – 08/91	3431	
RAPID Box (F40_, G40_)	10	31	09/85 – 08/91	3495	
RAPID Box (F40_, G40_)	10	31	09/85 – 08/91	3503	
RAPID Box (F40_, G40_)	10	31	09/85 – 08/91	3580	
RAPID Box (F40_, G40_)	11	34	09/85 – 08/91	3380	
RAPID Box (F40_, G40_)	11	34	09/85 – 08/91	3381	
RAPID Box (F40_, G40_)	11	34	09/85 – 08/91	3431	
RAPID Box (F40_, G40_)	11	34	09/85 – 08/91	3495	
RAPID Box (F40_, G40_)	11	34	09/85 – 08/91	3503	
RAPID Box (F40_, G40_)	11	34	09/85 – 08/91	3580	
RAPID Box (F40_, G40_)	11	35	09/93 – 04/95	3380	
RAPID Box (F40_, G40_)	11	35	09/93 – 04/95	3381	
RAPID Box (F40_, G40_)	11	35	09/93 – 04/95	3431	
RAPID Box (F40_, G40_)	11	35	09/93 – 04/95	3503	
RAPID Box (F40_, G40_)	11	35	09/93 – 04/95	3580	
RAPID Box (F40_, G40_)	12	40	09/91 – 08/93	3380	
RAPID Box (F40_, G40_)	12	40	09/91 – 08/93	3381	
RAPID Box (F40_, G40_)	12	40	09/91 – 08/93	3431	
RAPID Box (F40_, G40_)	12	40	09/91 – 08/93	3503	
RAPID Box (F40_, G40_)	12	40	09/91 – 08/93	3580	
RAPID Box (F40_, G40_)	12	48	05/95 – 11/98	3380	
RAPID Box (F40_, G40_)	12	48	05/95 – 11/98	3381	
RAPID Box (F40_, G40_)	12	48	05/95 – 11/98	3431	
RAPID Box (F40_, G40_)	12	48	05/95 – 11/98	3503	

MAKE & MODEL		KW	YEAR		
RENAULT					
RAPID Box (F40_, G40_)	12	48	05/95 – 11/98	3580	
RAPID Box (F40_, G40_)	14	43	09/91 – 08/93	3380	
RAPID Box (F40_, G40_)	14	43	09/91 – 08/93	3381	
RAPID Box (F40_, G40_)	14	43	09/91 – 08/93	3431	
RAPID Box (F40_, G40_)	14	43	09/91 – 08/93	3503	
RAPID Box (F40_, G40_)	14	43	09/91 – 08/93	3580	
RAPID Box (F40_, G40_)	14	54	09/91 – 08/93	3380	
RAPID Box (F40_, G40_)	14	54	09/91 – 08/93	3381	
RAPID Box (F40_, G40_)	14	54	09/91 – 08/93	3431	
RAPID Box (F40_, G40_)	14	54	09/91 – 08/93	3503	
RAPID Box (F40_, G40_)	14	54	09/91 – 08/93	3580	
RAPID Box (F40_, G40_)	14	59	05/95 – 08/97	3380	
RAPID Box (F40_, G40_)	14	59	05/95 – 08/97	3381	
RAPID Box (F40_, G40_)	14	59	05/95 – 08/97	3431	
RAPID Box (F40_, G40_)	14	59	05/95 – 08/97	3503	
RAPID Box (F40_, G40_)	14	59	05/95 – 08/97	3580	
RAPID Box (F40_, G40_)	1.1 (F401)	33	07/85 – 04/95	3380	
RAPID Box (F40_, G40_)	1.1 (F401)	33	07/85 – 04/95	3381	
RAPID Box (F40_, G40_)	1.1 (F401)	33	07/85 – 04/95	3431	
RAPID Box (F40_, G40_)	1.1 (F401)	33	07/85 – 04/95	3495	
RAPID Box (F40_, G40_)	1.1 (F401)	33	07/85 – 04/95	3503	
RAPID Box (F40_, G40_)	1.1 (F401)	33	07/85 – 04/95	3580	
RAPID Box (F40_, G40_)	1.1 (F40H)	33	06/87 – 09/91	3380	
RAPID Box (F40_, G40_)	1.1 (F40H)	33	06/87 – 09/91	3381	
RAPID Box (F40_, G40_)	1.1 (F40H)	33	06/87 – 09/91	3431	
RAPID Box (F40_, G40_)	1.1 (F40H)	33	06/87 – 09/91	3495	
RAPID Box (F40_, G40_)	1.1 (F40H)	33	06/87 – 09/91	3503	
RAPID Box (F40_, G40_)	1.1 (F40H)	33	06/87 – 09/91	3580	
RAPID Box (F40_, G40_)	1.2 (F406, G40A)	40	09/91 – 03/98	3380	
RAPID Box (F40_, G40_)	1.2 (F406, G40A)	40	09/91 – 03/98	3381	
RAPID Box (F40_, G40_)	1.2 (F406, G40A)	40	09/91 – 03/98	3431	
RAPID Box (F40_, G40_)	1.2 (F406, G40A)	40	09/91 – 03/98	3503	
RAPID Box (F40_, G40_)	1.2 (F406, G40A)	40	09/91 – 03/98	3580	
RAPID Box (F40_, G40_)	1.4 (F402)	43	07/85 – 08/91	3380	
RAPID Box (F40_, G40_)	1.4 (F402)	43	07/85 – 08/91	3381	
RAPID Box (F40_, G40_)	1.4 (F402)	43	07/85 – 08/91	3431	
RAPID Box (F40_, G40_)	1.4 (F402)	43	07/85 – 08/91	3503	
RAPID Box (F40_, G40_)	1.4 (F402)	43	07/85 – 08/91	3580	
RAPID Box (F40_, G40_)	1.4 (F407) CAT	43	08/88 – 03/98	3380	
RAPID Box (F40_, G40_)	1.4 (F407) CAT	43	08/88 – 03/98	3381	
RAPID Box (F40_, G40_)	1.4 (F407) CAT	43	08/88 – 03/98	3431	
RAPID Box (F40_, G40_)	1.4 (F407) CAT	43	08/88 – 03/98	3503	
RAPID Box (F40_, G40_)	1.4 (F407) CAT	43	08/88 – 03/98	3580	
RAPID Box (F40_, G40_)	1.4 (F40D)	58	01/94 – 03/98	3380	
RAPID Box (F40_, G40_)	1.4 (F40D)	58	01/94 – 03/98	3381	
RAPID Box (F40_, G40_)	1.4 (F40D)	58	01/94 – 03/98	3431	
RAPID Box (F40_, G40_)	1.4 (F40D)	58	01/94 – 03/98	3503	
RAPID Box (F40_, G40_)	1.4 (F40D)	58	01/94 – 03/98	3580	
RAPID Box (F40_, G40_)	1.4 (F40M)	44	03/86 – 08/91	3380	
RAPID Box (F40_, G40_)	1.4 (F40M)	44	03/86 – 08/91	3381	
RAPID Box (F40_, G40_)	1.4 (F40M)	44	03/86 – 08/91	3431	
RAPID Box (F40_, G40_)	1.4 (F40M)	44	03/86 – 08/91	3503	
RAPID Box (F40_, G40_)	1.4 (F40M)	44	03/86 – 08/91	3580	
RAPID Box (F40_, G40_)	1.4 (F40U, F40V)	55	09/91 – 03/98	3380	
RAPID Box (F40_, G40_)	1.4 (F40U, F40V)	55	09/91 – 03/98	3381	
RAPID Box (F40_, G40_)	1.4 (F40U, F40V)	55	09/91 – 03/98	3431	
RAPID Box (F40_, G40_)	1.4 (F40U, F40V)	55	09/91 – 03/98	3503	
RAPID Box (F40_, G40_)	1.4 (F40U, F40V)	55	09/91 – 03/98	3580	
RAPID Box (F40_, G40_)	1.6 D	40	09/93 – 04/95	3380	
RAPID Box (F40_, G40_)	1.6 D	40	09/93 – 04/95	3381	
RAPID Box (F40_, G40_)	1.6 D	40	09/93 – 04/95	3431	
RAPID Box (F40_, G40_)	1.6 D	40	09/93 – 04/95	3503	
RAPID Box (F40_, G40_)	1.6 D	40	09/93 – 04/95	3580	
RAPID Box (F40_, G40_)	1.6 D (F404)	40	03/86 – 08/98	3380	
RAPID Box (F40_, G40_)	1.6 D (F404)	40	03/86 – 08/98	3381	
RAPID Box (F40_, G40_)	1.6 D (F404)	40	03/86 – 08/98	3431	
RAPID Box (F40_, G40_)	1.6 D (F404)	40	03/86 – 08/98	3503	
RAPID Box (F40_, G40_)	1.6 D (F404)	40	03/86 – 08/98	3580	
RAPID Box (F40_, G40_)	1.9 D (F40P, F40N, F40E)	47	09/91 – 03/98	3380	
RAPID Box (F40_, G40_)	1.9 D (F40P, F40N, F40E)	47	09/91 – 03/98	3381	
RAPID Box (F40_, G40_)	1.9 D (F40P, F40N, F40E)	47	09/91 – 03/98	3431	

BESER

MAKE & MODEL		KW	YEAR		
RENAULT					
RAPID Box (F40_, G40_)	1.9 D (F40P, F40N, F40E)	47	09/91 – 03/98	3503	
RAPID Box (F40_, G40_)	1.9 D (F40P, F40N, F40E)	47	09/91 – 03/98	3580	
RAPID Box (F40_, G40_)	1.9 D (F40R)	40	09/94 – 03/98	3380	
RAPID Box (F40_, G40_)	1.9 D (F40R)	40	09/94 – 03/98	3381	
RAPID Box (F40_, G40_)	1.9 D (F40R)	40	09/94 – 03/98	3431	
RAPID Box (F40_, G40_)	1.9 D (F40R)	40	09/94 – 03/98	3503	
RAPID Box (F40_, G40_)	1.9 D (F40R)	40	09/94 – 03/98	3580	
RODEO 4	08	25	08.71 – 11.81	3342	
RODEO 5	11	35	11.81 – 12.87	3342	
RODEO 5	13	43	07.81 – 02.84	3342	
RODEO 6	08	25	05.70 – 08.73	3342	
RODEO 6	11	35	08.73 – 11.81	3342	
SAFRANE (B54_) 04.92-10.97	3.0 Biturbo (Z7X 726)	193	02/93 – 07/96	3592	
SAFRANE (B54_) 04.92-10.97	3.0 V6 (Z7X 721)	123	12/92 – 07/96	3592	
SAFRANE (B54_) 04.92-10.97	3.0 V6 (Z7X 722)	123	12/92 – 07/96	3592	
SAFRANE (B54_) 04.92-10.97	3.0 V6 (Z7X 723)	123	12/92 – 07/96	3592	
SAFRANE I (B54_)	30	125	02/93 – 06/96	3539	
SAFRANE I (B54_)	30	125	02/93 – 06/96	3546	
SAFRANE I (B54_)	30	125	02/93 – 06/96		3596
SAFRANE I (B54_)	2.0 (B540)	77	11/92 – 07/96	3539	
SAFRANE I (B54_)	2.0 (B540)	77	11/92 – 07/96	3546	
SAFRANE I (B54_)	2.0 (B540)	77	11/92 – 07/96		3596
SAFRANE I (B54_)	2.0 12V (B542, B54E)	97	04/92 – 07/96	3539	
SAFRANE I (B54_)	2.0 12V (B542, B54E)	97	04/92 – 07/96	3546	
SAFRANE I (B54_)	2.0 12V (B542, B54E)	97	04/92 – 07/96		3596
SAFRANE I (B54_)	2.1 dT (B546)	65	11/93 – 07/96	3539	
SAFRANE I (B54_)	2.1 dT (B546)	65	11/93 – 07/96	3546	
SAFRANE I (B54_)	2.1 dT (B546)	65	11/93 – 07/96		3596
SAFRANE I (B54_)	2.2 (B541)	79	04/92 – 07/96	3539	
SAFRANE I (B54_)	2.2 (B541)	79	04/92 – 07/96	3546	
SAFRANE I (B54_)	2.2 (B541)	79	04/92 – 07/96		3596
SAFRANE I (B54_)	2.2 (B543)	101	04/92 – 07/96	3539	
SAFRANE I (B54_)	2.2 (B543)	101	04/92 – 07/96	3546	
SAFRANE I (B54_)	2.2 (B543)	101	04/92 – 07/96		3596
SAFRANE I (B54_)	2.5 dT (B548)	83	12/92 – 07/96	3539	
SAFRANE I (B54_)	2.5 dT (B548)	83	12/92 – 07/96	3546	
SAFRANE I (B54_)	2.5 dT (B548)	83	12/92 – 07/96		3596
SAFRANE I (B54_)	3.0 Biturbo 4x4 (B545)	193	02/93 – 07/96		3596
SAFRANE I (B54_)	3.0 V6 (B54B, B544)	123	12/92 – 07/96	3539	
SAFRANE I (B54_)	3.0 V6 (B54B, B544)	123	12/92 – 07/96	3546	
SAFRANE I (B54_)	3.0 V6 (B54B, B544)	123	12/92 – 07/96		3596
SAFRANE I (B54_)	3.0 V6 4x4 (B54B, B544)	123	12/92 – 07/96	3539	
SAFRANE I (B54_)	3.0 V6 4x4 (B54B, B544)	123	12/92 – 07/96	3546	
SAFRANE I (B54_)	3.0 V6 4x4 (B54B, B544)	123	12/92 – 07/96		3596
SAFRANE II (B54_)	2.0 16V (B54L)	100	07/96 – 12/00	3539	
SAFRANE II (B54_)	2.0 16V (B54L)	100	07/96 – 12/00	3546	
SAFRANE II (B54_)	2.0 16V (B54L)	100	07/96 – 12/00		3596
SAFRANE II (B54_)	2.2 dT (B54G)	83	07/96 – 12/00	3539	
SAFRANE II (B54_)	2.2 dT (B54G)	83	07/96 – 12/00	3546	
SAFRANE II (B54_)	2.2 dT (B54G)	83	07/96 – 12/00		3596
SAFRANE II (B54_)	2.5 20V (B54F)	121	07/96 – 12/00	3539	
SAFRANE II (B54_)	2.5 20V (B54F)	121	07/96 – 12/00	3546	
SAFRANE II (B54_)	2.5 20V (B54F)	121	07/96 – 12/00		3596
SAFRANE II (B54_)	2.9 24V (B54N)	140	03/99 – 12/00	3539	
SAFRANE II (B54_)	2.9 24V (B54N)	140	03/99 – 12/00	3546	
SAFRANE II (B54_)	2.9 24V (B54N)	140	03/99 – 12/00		3596
SAFRANE II (B54_)	3.0 V6 (B54M)	123	07/96 – 12/00	3539	
SAFRANE II (B54_)	3.0 V6 (B54M)	123	07/96 – 12/00	3546	
SAFRANE II (B54_)	3.0 V6 (B54M)	123	07/96 – 12/00		3596
SANDERO II /STEPWAY II (B52)	1.5 DCI (K9K 830)	62	12/13 -	4253	
SANDERO II /STEPWAY II (B52)	1.6	75	04/14 -	4253	
SANDERO II /STEPWAY II (B52)	1.6	78	09/16 -	4253	
SANDERO/STEPWAY I	14	55	02/09 -	3431	
SANDERO/STEPWAY I	14	55	02/09 -	3503	
SANDERO/STEPWAY I	16	62	11/10 -	3431	
SANDERO/STEPWAY I	16	62	11/10 -	3503	
SANDERO/STEPWAY I	16	64	02/09 -	3431	
SANDERO/STEPWAY I	16	64	02/09 -	3503	
SANDERO/STEPWAY I	16	75	12/07 -	3431	
SANDERO/STEPWAY I	16	75	12/07 -	3503	
SANDERO/STEPWAY I	16	76	12/07 -	3431	

MAKE & MODEL		KW	YEAR		
RENAULT					
SANDERO/STEPWAY I	16	76	12/07 -	3503	
SANDERO/STEPWAY II (B8_)	16	59	11/13 -	4140	
SANDERO/STEPWAY II (B8_)	16	75	04/14 -	4140	
SANDERO/STEPWAY II (B8_)	1.2 16V	54	12/13 -	4140	
SANDERO/STEPWAY II (B8_)	1.2 16V LPG	53	12/13 -	4140	
SANDERO/STEPWAY II (B8_)	1.5 dCi	62	12/13 -	4140	
SCÉNIC I (JA0/1_)	16	75	03/01 – 08/03		3529
SCÉNIC I (JA0/1_)	16	79	09/99 – 09/03		3529
SCÉNIC I (JA0/1_)	16	81	06/01 – 09/03		3529
SCÉNIC I (JA0/1_)	1.4 16V (JA0D, JA1H, Ja0W, JA10)	70	09/99 – 08/03		3529
SCÉNIC I (JA0/1_)	1.6 16V	85	09/99 – 08/03		3529
SCÉNIC I (JA0/1_)	1.6 BiFuel	79	09/99 – 04/01		3529
SCÉNIC I (JA0/1_)	1.8 16V (JA12, JA1R, JA1M, JA1A)	85	01/01 – 08/03		3529
SCÉNIC I (JA0/1_)	1.8 4x4	85	07/00 – 04/01		3529
SCÉNIC I (JA0/1_)	1.9 D	47	09/99 – 03/01		3529
SCÉNIC I (JA0/1_)	1.9 dCi (JA05, JA1F)	75	09/99 – 08/03		3529
SCÉNIC I (JA0/1_)	1.9 dCi RX4	74	12/02 – 08/03		3529
SCÉNIC I (JA0/1_)	1.9 dCi RX4	75	11/00 – 08/03		3529
SCÉNIC I (JA0/1_)	1.9 dTi (JA0N)	72	09/99 – 08/03		3529
SCÉNIC I (JA0/1_)	1.9 dTi (JA1U)	59	02/01 – 08/03		3529
SCÉNIC I (JA0/1_)	2.0 16V	103	09/99 – 08/03		3529
SCÉNIC I (JA0/1_)	2.0 16V (JA1B, JA1D)	102	07/00 – 08/03		3529
SCÉNIC I (JA0/1_)	2.0 16V RX4	102	06/00 – 08/03		3529
SCÉNIC II (JM0/1_)	16	77	06/06 -		3529/2
SCÉNIC II (JM0/1_)	20	101	02/08 – 04/09		3529/2
SCÉNIC II (JM0/1_)	1.4 (JM0B, JM0H, JM1A)	72	06/03 -		3529/2
SCÉNIC II (JM0/1_)	1.4 (JM0B, JM0H, JM1A)	72	06/03 -	3849	
SCÉNIC II (JM0/1_)	1.5 dCi (JM02, JM13)	74	11/03 -		3529/2
SCÉNIC II (JM0/1_)	1.5 dCi (JM02, JM13)	74	11/03 -	3849	
SCÉNIC II (JM0/1_)	1.5 dCi (JM0F)	60	06/03 -		3529/2
SCÉNIC II (JM0/1_)	1.5 dCi (JM0F)	60	06/03 -	3849	
SCÉNIC II (JM0/1_)	1.5 dCi (JM16)	76	01/07 -		3529/2
SCÉNIC II (JM0/1_)	1.5 dCi (JM1E)	78	05/05 -		3529/2
SCÉNIC II (JM0/1_)	1.5 dCi (JM1E)	78	05/05 -	3849	
SCÉNIC II (JM0/1_)	1.5 dCi (JM1F)	63	05/05 -		3529/2
SCÉNIC II (JM0/1_)	1.5 dCi (JM1F)	63	05/05 -	3849	
SCÉNIC II (JM0/1_)	1.6 (JM0C, JM0J, JM1B)	83	06/03 -		3529/2
SCÉNIC II (JM0/1_)	1.6 (JM0C, JM0J, JM1B)	83	06/03 -	3849	
SCÉNIC II (JM0/1_)	1.6 16V (JM1R)	82	10/05 -		3529/2
SCÉNIC II (JM0/1_)	1.9 D	85	06/06 -		3529/2
SCÉNIC II (JM0/1_)	1.9 dCi	92	06/03 -		3529/2
SCÉNIC II (JM0/1_)	1.9 dCi (JM0G, JM12, JM1G, JM2C)	88	06/03 -		3529/2
SCÉNIC II (JM0/1_)	1.9 dCi (JM0G, JM12, JM1G, JM2C)	88	06/03 -	3849	
SCÉNIC II (JM0/1_)	1.9 dCi (JM14)	96	05/05 -		3529/2
SCÉNIC II (JM0/1_)	1.9 dCi (JM14)	96	05/05 -	3849	
SCÉNIC II (JM0/1_)	1.9 dCi (JM15)	81	05/05 -		3529/2
SCÉNIC II (JM0/1_)	2.0 (JM05, JM0U, JM1N, JM1U, JM2V)	99	06/03 -	3849	
SCÉNIC II (JM0/1_)	2.0 16V Turbo (JM0W)	120	05/04 -		3529/2
SCÉNIC II (JM0/1_)	2.0 16V Turbo (JM0W)	120	05/04 -	3849	
SCÉNIC II (JM0/1_)	2.0 dCi (JM1K)	110	09/05 -	3849	
SCÉNIC II (JM0/1_)	2.0 (JM05, JM0U, JM1N, JM1U, JM2V)	110	05/04 -		3529/2
SCÉNIC II (JM0/1_J84)	1.4 (K4J 730)	72	06.03 -	3827	
SCÉNIC II (JM0/1_J84)	1.4 (K4J 740)	72	06.03 -	3827	
SCÉNIC II (JM0/1_J84)	1.4 (K4J 770)	72	06.03 -	3827	
SCÉNIC II (JM0/1_J84)	1.5 Dci (K9K 722)	60	06.03 -	3827	
SCÉNIC II (JM0/1_J84)	1.5 Dci (K9K 728)	74	11.03 -	3827	
SCÉNIC II (JM0/1_J84)	1.5 Dci (K9K 729)	74	11.03 -	3827	
SCÉNIC II (JM0/1_J84)	1.6 (K4M 761)	83	06.03 -	3827	
SCÉNIC II (JM0/1_J84)	1.6 (K4M 782)	83	06.03 -	3827	
SCÉNIC III (JZ0/1_)	1.2 TCe	85	04/12 -		3529/2
SCÉNIC III (JZ0/1_)	1.2 TCe (JZ16)	97	01/13 -		3529/2
SCÉNIC III (JZ0/1_)	1.4 16V (JZ0F)	96	02/09 -		3529/2
SCÉNIC III (JZ0/1_)	1.5 dCi	63	04/09 -		3529/2
SCÉNIC III (JZ0/1_)	1.5 dCi	63	04/09 -	3964/1	
SCÉNIC III (JZ0/1_)	1.5 dCi	70	11/10 -		3529/2
SCÉNIC III (JZ0/1_)	1.5 dCi	70	11/10 -	3964/1	
SCÉNIC III (JZ0/1_)	1.5 dCi	78	02/09 -		3529/2
SCÉNIC III (JZ0/1_)	1.5 dCi	78	02/09 -	3964/1	
SCÉNIC III (JZ0/1_)	1.5 dCi	81	04/09 -		3529/2
SCÉNIC III (JZ0/1_)	1.5 dCi	81	04/09 -	3964/1	
SCÉNIC III (JZ0/1_)	1.6 16V (JZ0U)	81	02/09 -		3529/2

BESER®

MAKE & MODEL		KW	YEAR		
RENAULT					
SCÉNIC III (JZ0/1_)	1.6 16V (JZ0U)	81	02/09 -	3964/1	
SCÉNIC III (JZ0/1_)	1.6 dCi (JZ00, JZ12)	96	04/11 -		3529/2
SCÉNIC III (JZ0/1_)	1.6 E85 (JZ03)	81	02/09 -		3529/2
SCÉNIC III (JZ0/1_)	1.6 E85 (JZ03)	81	02/09 -	3964/1	
SCÉNIC III (JZ0/1_)	1.9 dCi	96	02/09 -		3529/2
SCÉNIC III (JZ0/1_)	2.0 16V (JZ0G, JZ1E)	103	02/09 -		3529/2
SCÉNIC III (JZ0/1_)	2.0 dCi (JZ0L)	118	04/09 -		3529/2
SCÉNIC III (JZ0/1_)	2.0 dCi (JZ0Y)	110	02/09 -		3529/2
SPORT SPIDER (EF0_)	20	108	12/95 – 08/96	3539	
SPORT SPIDER (EF0_)	20	108	12/95 – 08/96	3546	
SPORT SPIDER (EF0_)	2.0 16V	110	03/95 – 10/99	3539	
SPORT SPIDER (EF0_)	2.0 16V	110	03/95 – 10/99	3546	
SUPER 5	1.1 (C1E 750)	35	10/89 – 12/90	3372	
SUPER 5	1.1 (C1E 750)	35	10/89 – 12/90	3599	
SUPER 5	1.2 (C1G 702)	40	01/87 – 08/90	3372	
SUPER 5	1.2 (C1G 702)	40	01/87 – 08/90	3599	
SUPER 5	1.2 (C1G 720)	40	01/87 – 08/90	3372	
SUPER 5	1.2 (C1G 720)	40	01/87 – 08/90	3599	
SUPER 5	1.2 (C1G 722)	40	01/87 – 08/90	3372	
SUPER 5	1.2 (C1G 722)	40	01/87 – 08/90	3599	
SUPER 5	1.4 (C2J 700)	52	10/84 – 07/89	3372	
SUPER 5	1.4 (C2J 700)	52	10/84 – 07/89	3599	
SUPER 5	1.4 (C2J 780)	52	10/84 – 07/89	3372	
SUPER 5	1.4 (C2J 780)	52	10/84 – 07/89	3599	
SUPER 5	1.4 (C2J 781)	52	10/84 – 07/89	3372	
SUPER 5	1.4 (C2J 781)	52	10/84 – 07/89	3599	
SUPER 5	1.4 (C2J 782)	49	06/87 – 07/89	3372	
SUPER 5	1.4 (C2J 782)	49	06/87 – 07/89	3599	
SUPER 5	1.4 (C2J 784)	44	06/87 – 08/90	3372	
SUPER 5	1.4 (C2J 784)	44	06/87 – 08/90	3599	
SUPER 5	1.4 (C2J 788)	52	10/84 – 07/89	3372	
SUPER 5	1.4 (C2J 788)	52	10/84 – 07/89	3599	
SUPER 5	1.4 (C2J 789)	52	10/84 – 07/89	3372	
SUPER 5	1.4 (C2J 789)	52	10/84 – 07/89	3599	
SUPER 5	1.4 (C2J 798)	52	10/84 – 07/89	3372	
SUPER 5	1.4 (C2J 798)	52	10/84 – 07/89	3599	
SUPER 5	1.4 (C1J 768)	43	10/84 – 06/88	3372	
SUPER 5	1.4 (C1J 768)	43	10/84 – 06/88	3599	
SUPER 5	1.4 (C1J 780)	43	10/84 – 06/88	3372	
SUPER 5	1.4 (C1J 780)	43	10/84 – 06/88	3599	
SUPER 5	1.4 Cat (B/C/407) (C3J 700)	43	10/85 – 12/96	3372	
SUPER 5	1.4 Cat (B/C/407) (C3J 700)	43	10/85 – 12/96	3599	
SUPER 5	1.4 Cat (B/C/407) (C3J 702)	43	10/85 – 12/96	3372	
SUPER 5	1.4 Cat (B/C/407) (C3J 702)	43	10/85 – 12/96	3599	
SUPER 5	1.4 Cat (B/C/407) (C3J 760)	43	10/85 – 12/96	3372	
SUPER 5	1.4 Cat (B/C/407) (C3J 760)	43	10/85 – 12/96	3599	
SUPER 5	1.4 Turbo (C1J 782)	88	04/85 – 08/90	3372	
SUPER 5	1.4 Turbo (C1J 782)	88	04/85 – 08/90	3599	
SUPER 5	1.4 Turbo (C1J 784)	88	04/85 – 08/90	3372	
SUPER 5	1.4 Turbo (C1J 784)	88	04/85 – 08/90	3599	
SUPER 5	1.4 Turbo (C1J 788)	85	08/85 – 06/89	3372	
SUPER 5	1.4 Turbo (C1J 788)	85	08/85 – 06/89	3599	
SUPER 5	1.4 Turbo (C1J 788)	88	04/85 – 08/90	3372	
SUPER 5	1.4 Turbo (C1J 788)	88	04/85 – 08/90	3599	
SUPER 5	1.4 Turbo GT (840 730)	118	01/85 – 05/91	3372	
SUPER 5	1.4 Turbo GT (840 730)	118	01/85 – 05/91	3599	
SUPER 5	1.6 D (F8M 720)	40	08/85 – 12/96	3372	
SUPER 5	1.6 D (F8M 720)	40	08/85 – 12/96	3599	
SUPER 5	1.6 D (F8M 730)	40	04/85 – 12/90	3372	
SUPER 5	1.6 D (F8M 730)	40	08/85 – 12/96	3372	
SUPER 5	1.6 D (F8M 730)	40	04/85 – 12/90	3599	
SUPER 5	1.6 D (F8M 730)	40	08/85 – 12/96	3599	
SUPER 5	1.7 (F2N 740)	64	06/87 – 03/95	3372	
SUPER 5	1.7 (F2N 740)	64	06/87 – 03/95	3599	
SUPER 5	1.7 (F2N 742)	64	06/87 – 03/95	3372	
SUPER 5	1.7 (F2N 742)	64	06/87 – 03/95	3599	
SUPER 5	1.7 (F3N 716)	54	10/86 – 03/95	3372	
SUPER 5	1.7 (F3N 716)	54	10/86 – 03/95	3599	
SUPER 5	1.7 (F3N 717)	54	10/86 – 03/95	3372	
SUPER 5	1.7 (F3N 717)	54	10/86 – 03/95	3599	
SUPER 5 (B/C40_)	11	35	10/89 – 12/90	3495	

MAKE & MODEL		KW	YEAR		
RENAULT					
SUPER 5 (B/C40_)	17	66	09/88 – 09/90	3380	
SUPER 5 (B/C40_)	17	66	09/88 – 09/90	3381	
SUPER 5 (B/C40_)	17	66	09/88 – 09/90	3431	
SUPER 5 (B/C40_)	17	66	09/88 – 09/90		3496
SUPER 5 (B/C40_)	17	66	09/88 – 09/90	3503	
SUPER 5 (B/C40_)	17	66	09/88 – 09/90	3580	
SUPER 5 (B/C40_)	1.0 (B/C/400)	30	10/84 – 10/88	3495	
SUPER 5 (B/C40_)	1.1 (B/C/401)	34	10/84 – 10/88	3495	
SUPER 5 (B/C40_)	1.1 (B/C/401, B/C40H)	33	01/86 – 03/95	3495	
SUPER 5 (B/C40_)	1.2 (B/C40F)	40	01/87 – 08/90	3380	
SUPER 5 (B/C40_)	1.2 (B/C40F)	40	01/87 – 08/90	3381	
SUPER 5 (B/C40_)	1.2 (B/C40F)	40	01/87 – 08/90	3431	
SUPER 5 (B/C40_)	1.2 (B/C40F)	40	01/87 – 08/90	3503	
SUPER 5 (B/C40_)	1.2 (B/C40F)	40	01/87 – 08/90	3580	
SUPER 5 (B/C40_)	1.4 (B/C/407) CAT	43	10/85 – 12/96	3380	
SUPER 5 (B/C40_)	1.4 (B/C/407) CAT	43	10/85 – 12/96	3381	
SUPER 5 (B/C40_)	1.4 (B/C/407) CAT	43	10/85 – 12/96	3431	
SUPER 5 (B/C40_)	1.4 (B/C/407) CAT	43	10/85 – 12/96	3503	
SUPER 5 (B/C40_)	1.4 (B/C/407) CAT	43	10/85 – 12/96	3580	
SUPER 5 (B/C40_)	1.4 (B/C402)	43	10/84 – 06/88	3380	
SUPER 5 (B/C40_)	1.4 (B/C402)	43	10/84 – 06/88	3381	
SUPER 5 (B/C40_)	1.4 (B/C402)	43	10/84 – 06/88	3431	
SUPER 5 (B/C40_)	1.4 (B/C402)	43	10/84 – 06/88	3503	
SUPER 5 (B/C40_)	1.4 (B/C402)	43	10/84 – 06/88	3580	
SUPER 5 (B/C40_)	1.4 (B/C403)	52	10/84 – 07/89	3380	
SUPER 5 (B/C40_)	1.4 (B/C403)	52	10/84 – 07/89	3381	
SUPER 5 (B/C40_)	1.4 (B/C403)	52	10/84 – 07/89	3431	
SUPER 5 (B/C40_)	1.4 (B/C403)	52	10/84 – 07/89	3503	
SUPER 5 (B/C40_)	1.4 (B/C403)	52	10/84 – 07/89	3580	
SUPER 5 (B/C40_)	1.4 (B/C40J)	49	06/87 – 07/89	3380	
SUPER 5 (B/C40_)	1.4 (B/C40J)	49	06/87 – 07/89	3381	
SUPER 5 (B/C40_)	1.4 (B/C40J)	49	06/87 – 07/89	3431	
SUPER 5 (B/C40_)	1.4 (B/C40J)	49	06/87 – 07/89	3503	
SUPER 5 (B/C40_)	1.4 (B/C40J)	49	06/87 – 07/89	3580	
SUPER 5 (B/C40_)	1.4 (B/C40M)	44	06/87 – 08/90	3380	
SUPER 5 (B/C40_)	1.4 (B/C40M)	44	06/87 – 08/90	3381	
SUPER 5 (B/C40_)	1.4 (B/C40M)	44	06/87 – 08/90	3431	
SUPER 5 (B/C40_)	1.4 (B/C40M)	44	06/87 – 08/90	3503	
SUPER 5 (B/C40_)	1.4 (B/C40M)	44	06/87 – 08/90	3580	
SUPER 5 (B/C40_)	1.4 Turbo	85	08/85 – 06/89	3380	
SUPER 5 (B/C40_)	1.4 Turbo	85	08/85 – 06/89	3381	
SUPER 5 (B/C40_)	1.4 Turbo	85	08/85 – 06/89	3431	
SUPER 5 (B/C40_)	1.4 Turbo	85	08/85 – 06/89		3496
SUPER 5 (B/C40_)	1.4 Turbo	85	08/85 – 06/89	3503	
SUPER 5 (B/C40_)	1.4 Turbo	85	08/85 – 06/89	3580	
SUPER 5 (B/C40_)	1.4 Turbo (C405)	88	04/85 – 08/90	3380	
SUPER 5 (B/C40_)	1.4 Turbo (C405)	88	04/85 – 08/90	3381	
SUPER 5 (B/C40_)	1.4 Turbo (C405)	88	04/85 – 08/90	3431	
SUPER 5 (B/C40_)	1.4 Turbo (C405)	88	04/85 – 08/90		3496
SUPER 5 (B/C40_)	1.4 Turbo (C405)	88	04/85 – 08/90	3503	
SUPER 5 (B/C40_)	1.4 Turbo (C405)	88	04/85 – 08/90	3580	
SUPER 5 (B/C40_)	1.4 Turbo GT (C405)	118	01/85 – 05/91	3380	
SUPER 5 (B/C40_)	1.4 Turbo GT (C405)	118	01/85 – 05/91	3381	
SUPER 5 (B/C40_)	1.4 Turbo GT (C405)	118	01/85 – 05/91	3431	
SUPER 5 (B/C40_)	1.4 Turbo GT (C405)	118	01/85 – 05/91		3496
SUPER 5 (B/C40_)	1.4 Turbo GT (C405)	118	01/85 – 05/91	3503	
SUPER 5 (B/C40_)	1.4 Turbo GT (C405)	118	01/85 – 05/91	3580	
SUPER 5 (B/C40_)	1.6 D	40	04/85 – 12/90	3380	
SUPER 5 (B/C40_)	1.6 D	40	04/85 – 12/90	3381	
SUPER 5 (B/C40_)	1.6 D	40	04/85 – 12/90	3431	
SUPER 5 (B/C40_)	1.6 D	40	04/85 – 12/90	3503	
SUPER 5 (B/C40_)	1.6 D	40	04/85 – 12/90	3580	
SUPER 5 (B/C40_)	1.6 D (B/C/404)	40	08/85 – 12/96	3380	
SUPER 5 (B/C40_)	1.6 D (B/C/404)	40	08/85 – 12/96	3381	
SUPER 5 (B/C40_)	1.6 D (B/C/404)	40	08/85 – 12/96	3431	
SUPER 5 (B/C40_)	1.6 D (B/C/404)	40	08/85 – 12/96	3503	
SUPER 5 (B/C40_)	1.6 D (B/C/404)	40	08/85 – 12/96	3580	
SUPER 5 (B/C40_)	1.7 (B/C408)	54	10/86 – 03/95	3380	
SUPER 5 (B/C40_)	1.7 (B/C408)	54	10/86 – 03/95	3381	
SUPER 5 (B/C40_)	1.7 (B/C408)	54	10/86 – 03/95	3431	
SUPER 5 (B/C40_)	1.7 (B/C408)	54	10/86 – 03/95	3503	

MAKE & MODEL		KW	YEAR		
RENAULT					
SUPER 5 (B/C40_)	1.7 (B/C408)	54	10/86 – 03/95	3580	
SUPER 5 (B/C40_)	1.7 (B/C40K, B/C40G)	64	06/87 – 03/95	3380	
SUPER 5 (B/C40_)	1.7 (B/C40K, B/C40G)	64	06/87 – 03/95	3381	
SUPER 5 (B/C40_)	1.7 (B/C40K, B/C40G)	64	06/87 – 03/95	3431	
SUPER 5 (B/C40_)	1.7 (B/C40K, B/C40G)	64	06/87 – 03/95		3496
SUPER 5 (B/C40_)	1.7 (B/C40K, B/C40G)	64	06/87 – 03/95	3503	
SUPER 5 (B/C40_)	1.7 (B/C40K, B/C40G)	64	06/87 – 03/95	3580	
SUPER 5 (B/C40_)	1.7 i (C409)	69	10/86 – 08/91	3380	
SUPER 5 (B/C40_)	1.7 i (C409)	69	10/86 – 08/91	3381	
SUPER 5 (B/C40_)	1.7 i (C409)	69	10/86 – 08/91	3431	
SUPER 5 (B/C40_)	1.7 i (C409)	69	10/86 – 08/91		3496
SUPER 5 (B/C40_)	1.7 i (C409)	69	10/86 – 08/91	3503	
SUPER 5 (B/C40_)	1.7 i (C409)	69	10/86 – 08/91	3580	
SUPER 5 Box (S40_)	14	44	09/85 – 07/86	3380	
SUPER 5 Box (S40_)	14	44	09/85 – 07/86	3381	
SUPER 5 Box (S40_)	14	44	09/85 – 07/86	3431	
SUPER 5 Box (S40_)	14	44	09/85 – 07/86	3503	
SUPER 5 Box (S40_)	14	44	09/85 – 07/86	3580	
SUPER 5 Box (S40_)	14	85	04/85 – 10/87	3380	
SUPER 5 Box (S40_)	14	85	04/85 – 10/87	3381	
SUPER 5 Box (S40_)	14	85	04/85 – 10/87	3431	
SUPER 5 Box (S40_)	14	85	04/85 – 10/87	3503	
SUPER 5 Box (S40_)	14	85	04/85 – 10/87	3580	
SUPER 5 Box (S40_)	1.0 (S400)	30	10/84 – 10/88	3495	
SUPER 5 Box (S40_)	1.1 (S401)	34	10/84 – 12/96	3495	
SUPER 5 Box (S40_)	1.2 (S40F, S407)	44	01/87 – 12/96	3380	
SUPER 5 Box (S40_)	1.2 (S40F, S407)	44	01/87 – 12/96	3381	
SUPER 5 Box (S40_)	1.2 (S40F, S407)	44	01/87 – 12/96	3431	
SUPER 5 Box (S40_)	1.2 (S40F, S407)	44	01/87 – 12/96	3503	
SUPER 5 Box (S40_)	1.2 (S40F, S407)	44	01/87 – 12/96	3580	
SUPER 5 Box (S40_)	1.6 D (S404)	40	10/84 – 12/96	3380	
SUPER 5 Box (S40_)	1.6 D (S404)	40	10/84 – 12/96	3381	
SUPER 5 Box (S40_)	1.6 D (S404)	40	10/84 – 12/96	3431	
SUPER 5 Box (S40_)	1.6 D (S404)	40	10/84 – 12/96	3503	
SUPER 5 Box (S40_)	1.6 D (S404)	40	10/84 – 12/96	3580	
TALISMAN (L2M_)	25	140	07/13 -	4134	
TALISMAN (L2M_)	35	190	07/13 -	4134	
TALISMAN (L2M_)	1.5 dCi 110	81	11/15 -	4134	
TALISMAN (L2M_)	1.6 dCi 130	96	11/15 -	4134	
TALISMAN (L2M_)	1.6 dCi 160	118	06/15 -	4134	
TALISMAN (L2M_)	1.6 TCe 150	110	11/15 -	4134	
TALISMAN (L2M_)	1.6 TCe 200	147	11/15 -	4134	
TALISMAN Grandtour (KP_)	1.5 dCi 110	81	03/16 -	4134	
TALISMAN Grandtour (KP_)	1.6 dCi 130	96	03/16 -	4134	
TALISMAN Grandtour (KP_)	1.6 dCi 160	118	03/16 -	4134	
TALISMAN Grandtour (KP_)	1.6 TCe 150	110	03/16 -	4134	
TALISMAN Grandtour (KP_)	1.6 TCe 200	147	03/16 -	4134	
THALIA I (LB0/1/2_)	12	43	02/98 – 10/03	3431	
THALIA I (LB0/1/2_)	12	43	02/98 – 10/03	3503	
THALIA I (LB0/1/2_)	14	55	08/00 -	3431	
THALIA I (LB0/1/2_)	14	55	08/00 -	3503	
THALIA I (LB0/1/2_)	16	66	03/98 -	3431	
THALIA I (LB0/1/2_)	16	66	03/98 -	3503	
THALIA I (LB0/1/2_)	20	124	09/01 -	3431	
THALIA I (LB0/1/2_)	20	124	09/01 -		3496
THALIA I (LB0/1/2_)	20	124	09/01 -	3503	
THALIA I (LB0/1/2_)	1.2 16V	55	04/02 -	3431	
THALIA I (LB0/1/2_)	1.2 16V	55	04/02 -	3503	
THALIA I (LB0/1/2_)	1.4 16V	72	08/00 -	3431	
THALIA I (LB0/1/2_)	1.4 16V	72	08/00 -	3503	
THALIA I (LB0/1/2_)	1.5 dCi	47	06/05 -	3431	
THALIA I (LB0/1/2_)	1.5 dCi	47	06/05 -	3503	
THALIA I (LB0/1/2_)	1.5 dCi	48	04/02 -	3431	
THALIA I (LB0/1/2_)	1.5 dCi	48	04/02 -	3503	
THALIA I (LB0/1/2_)	1.5 dCi	50	02/03 -	3431	
THALIA I (LB0/1/2_)	1.5 dCi	50	02/03 -	3503	
THALIA I (LB0/1/2_)	1.5 dCi	59	06/01 – 10/03	3431	
THALIA I (LB0/1/2_)	1.5 dCi	59	06/01 – 10/03	3503	
THALIA I (LB0/1/2_)	1.5 dCi	60	06/01 -	3431	
THALIA I (LB0/1/2_)	1.5 dCi	60	06/01 -	3503	
THALIA I (LB0/1/2_)	1.6 16V	79	04/02 -	3431	

MAKE & MODEL		KW	YEAR		
RENAULT					
THALIA I (LB0/1/2_)	1.6 16V	79	04/02 -	3503	
THALIA I (LB0/1/2_)	1.9 D	48	02/98 – 05/01	3431	
THALIA I (LB0/1/2_)	1.9 D	48	02/98 – 05/01	3503	
THALIA II (LU1/2_)	14	55	09/08 – 06/14	3431	
THALIA II (LU1/2_)	14	55	09/08 – 06/14	3503	
THALIA II (LU1/2_)		77	09/08 -		3529/2
THALIA II (LU1/2_)	0.9 TCe	66	09/14 -	4140	
THALIA II (LU1/2_)	1.2 16V (LU2V)	55	09/08 -		3529/2
THALIA II (LU1/2_)	1.2 16V (LU2V)	55	09/08 -	3983	
THALIA II (LU1/2_)	1.2 LPG	55	01/10 – 12/13	3431	
THALIA II (LU1/2_)	1.2 LPG	55	01/10 – 12/13	3503	
THALIA II (LU1/2_)	1.5 dCi	47	09/08 -		3529/2
THALIA II (LU1/2_)	1.5 dCi	47	09/08 -	3983	
THALIA II (LU1/2_)	1.5 dCi	48	01/09 -		3529/2
THALIA II (LU1/2_)	1.5 dCi	48	01/09 -	3983	
THALIA II (LU1/2_)	1.5 dCi	55	11/12 – 06/14		3529/2
THALIA II (LU1/2_)	1.5 dCi	55	11/12 – 06/14	3983	
THALIA II (LU1/2_)	1.5 dCi	62	09/08 -		3529/2
THALIA II (LU1/2_)	1.5 dCi	62	09/08 -	3983	
THALIA II (LU1/2_)	1.5 dCi	66	01/09 -		3529/2
THALIA II (LU1/2_)	1.5 dCi	66	01/09 -	3983	
THALIA II (LU1/2_)	1.6 16V	77	09/08 -	3983	
THALIA III	1.2 16V	55	12/13 -	3431	
THALIA III	1.2 16V	55	12/13 -	3503	
THALIA III	1.5 dCi	66	12/13 -	3431	
THALIA III	1.5 dCi	66	12/13 -	3503	
TRAFIC Box (T1, T3, T4)	14	35	03/80 – 04/89	3482	
TRAFIC Box (T1, T3, T4)	14	35	03/80 – 04/89	3527	
TRAFIC Box (T1, T3, T4)	16	48	01/83 – 06/86	3482	
TRAFIC Box (T1, T3, T4)	16	48	01/83 – 06/86	3527	
TRAFIC Box (T1, T3, T4)	17	50	06/86 – 04/89	3482	
TRAFIC Box (T1, T3, T4)	17	50	06/86 – 04/89	3527	
TRAFIC Box (T1, T3, T4)	20	58	07/80 – 04/85	3482	
TRAFIC Box (T1, T3, T4)	20	58	07/80 – 04/85	3482	
TRAFIC Box (T1, T3, T4)	20	58	07/80 – 04/85	3527	
TRAFIC Box (T1, T3, T4)	20	58	07/80 – 04/85	3527	
TRAFIC Box (T1, T3, T4)	20	59	06/86 – 04/89	3482	
TRAFIC Box (T1, T3, T4)	20	59	06/86 – 04/89	3527	
TRAFIC Box (T1, T3, T4)	20	60	05/85 – 02/89	3482	
TRAFIC Box (T1, T3, T4)	20	60	05/85 – 02/89	3527	
TRAFIC Box (T1, T3, T4)	1.6 4x4	48	08/85 – 06/86	3482	
TRAFIC Box (T1, T3, T4)	1.6 4x4	48	08/85 – 06/86	3527	
TRAFIC Box (T1, T3, T4)	2.0 4x4	59	06/86 – 04/89	3482	
TRAFIC Box (T1, T3, T4)	2.0 4x4	59	06/86 – 04/89	3527	
TRAFIC Box (T1, T3, T4)	2.1 D	43	05/86 – 02/89	3482	
TRAFIC Box (T1, T3, T4)	2.1 D	43	09/80 – 04/89	3482	
TRAFIC Box (T1, T3, T4)	2.1 D	43	05/86 – 02/89	3527	
TRAFIC Box (T1, T3, T4)	2.1 D	43	09/80 – 04/89	3527	
TRAFIC Box (T1, T3, T4)	2.1 D 4x4	43	11/86 – 04/89	3482	
TRAFIC Box (T1, T3, T4)	2.1 D 4x4	43	11/86 – 04/89	3527	
TRAFIC Box (TXX)	14	35	05/89 – 06/91	3482	
TRAFIC Box (TXX)	14	35	05/89 – 06/91	3527	
TRAFIC Box (TXX)	17	50	08/92 – 08/94	3482	
TRAFIC Box (TXX)	17	50	08/92 – 08/94	3527	
TRAFIC Box (TXX)	17	51	03/89 – 08/94	3482	
TRAFIC Box (TXX)	17	51	03/89 – 08/94	3527	
TRAFIC Box (TXX)	20	59	05/89 – 08/90	3482	
TRAFIC Box (TXX)	20	59	05/89 – 08/90	3527	
TRAFIC Box (TXX)	22	70	05/89 – 06/94	3482	
TRAFIC Box (TXX)	22	70	05/89 – 06/94	3527	
TRAFIC Box (TXX)	22	74	06/94 – 10/97	3482	
TRAFIC Box (TXX)	22	74	06/94 – 10/97	3527	
TRAFIC Box (TXX)	1.9 D	44	06/97 – 03/01	3482	
TRAFIC Box (TXX)	1.9 D	44	06/97 – 03/01	3527	
TRAFIC Box (TXX)	2.1 D	43	05/89 – 06/94	3482	
TRAFIC Box (TXX)	2.1 D	43	05/89 – 06/94	3527	
TRAFIC Box (TXX)	2.1 D	47	06/94 – 10/97	3482	
TRAFIC Box (TXX)	2.1 D	47	06/94 – 10/97	3527	
TRAFIC Box (TXX)	2.2 4x4	70	05/89 – 06/94	3482	
TRAFIC Box (TXX)	2.2 4x4	70	05/89 – 06/94	3527	
TRAFIC Box (TXX)	2.2 4x4	74	06/94 – 10/97	3482	

MAKE & MODEL   		KW	YEAR		
RENAULT					
TRAFIC Box (TXX)	2.2 4x4	74	06/94 – 10/97	3527	
TRAFIC Box (TXX)	2.5 D	55	05/89 – 03/01	3482	
TRAFIC Box (TXX)	2.5 D	55	05/89 – 03/01	3527	
TRAFIC Box (TXX)	2.5 D	56	03/89 – 08/94	3482	
TRAFIC Box (TXX)	2.5 D	56	03/89 – 08/94	3527	
TRAFIC Box (TXX)	2.5 D 4x4	55	05/89 – 03/01	3482	
TRAFIC Box (TXX)	2.5 D 4x4	55	05/89 – 03/01	3527	
TRAFIC Bus (T5, T6, T7)	14	35	03/80 – 04/89	3482	
TRAFIC Bus (T5, T6, T7)	14	35	03/80 – 04/89	3527	
TRAFIC Bus (T5, T6, T7)	16	48	01/84 – 06/86	3482	
TRAFIC Bus (T5, T6, T7)	16	48	01/84 – 06/86	3527	
TRAFIC Bus (T5, T6, T7)	17	50	06/86 – 04/89	3482	
TRAFIC Bus (T5, T6, T7)	17	50	06/86 – 04/89	3527	
TRAFIC Bus (T5, T6, T7)	20	58	07/80 – 04/85	3482	
TRAFIC Bus (T5, T6, T7)	20	58	07/80 – 04/85	3527	
TRAFIC Bus (T5, T6, T7)	20	59	06/86 – 04/89	3482	
TRAFIC Bus (T5, T6, T7)	20	59	06/86 – 04/89	3527	
TRAFIC Bus (T5, T6, T7)	1.6 4x4	48	03/80 – 08/86	3482	
TRAFIC Bus (T5, T6, T7)	1.6 4x4	48	03/80 – 08/86	3527	
TRAFIC Bus (T5, T6, T7)	2.0 4x4	59	06/86 – 04/89	3482	
TRAFIC Bus (T5, T6, T7)	2.0 4x4	59	06/86 – 04/89	3527	
TRAFIC Bus (T5, T6, T7)	2.1 D	43	03/80 – 04/89	3482	
TRAFIC Bus (T5, T6, T7)	2.1 D	43	03/80 – 04/89	3527	
TRAFIC Bus (T5, T6, T7)	2.1 D 4x4	43	05/85 – 02/89	3482	
TRAFIC Bus (T5, T6, T7)	2.1 D 4x4	43	05/85 – 02/89	3527	
TRAFIC Bus (TXW)	17	50	08/92 – 08/94	3482	
TRAFIC Bus (TXW)	17	50	08/92 – 08/94	3527	
TRAFIC Bus (TXW)	20	59	05/89 – 08/90	3482	
TRAFIC Bus (TXW)	20	59	05/89 – 08/90	3527	
TRAFIC Bus (TXW)	22	70	05/89 – 06/94	3482	
TRAFIC Bus (TXW)	22	70	05/89 – 06/94	3527	
TRAFIC Bus (TXW)	22	74	06/94 – 10/97	3482	
TRAFIC Bus (TXW)	22	74	06/94 – 10/97	3527	
TRAFIC Bus (TXW)	1.9 D	44	06/97 – 03/01	3482	
TRAFIC Bus (TXW)	1.9 D	44	06/97 – 03/01	3527	
TRAFIC Bus (TXW)	2.1 D	43	05/89 – 06/94	3482	
TRAFIC Bus (TXW)	2.1 D	43	05/89 – 06/94	3527	
TRAFIC Bus (TXW)	2.1 D	47	06/94 – 10/97	3482	
TRAFIC Bus (TXW)	2.1 D	47	06/94 – 10/97	3527	
TRAFIC Bus (TXW)	2.2 4x4	70	05/89 – 06/94	3482	
TRAFIC Bus (TXW)	2.2 4x4	70	05/89 – 06/94	3527	
TRAFIC Bus (TXW)	2.2 4x4	74	06/94 – 10/97	3482	
TRAFIC Bus (TXW)	2.2 4x4	74	06/94 – 10/97	3527	
TRAFIC Bus (TXW)	2.5 D	55	05/89 – 03/01	3482	
TRAFIC Bus (TXW)	2.5 D	55	05/89 – 03/01	3527	
TRAFIC Bus (TXW)	2.5 D 4x4	55	08/89 – 03/01	3482	
TRAFIC Bus (TXW)	2.5 D 4x4	55	08/89 – 03/01	3527	
TRAFIC II Box (FL)	1.9 dCi	59	04/01 – 07/03		3795/1
TRAFIC II Box (FL)	1.9 dCi	59	04/01 – 07/03	3848	
TRAFIC II Box (FL)	1.9 dCi	75	03/01 -		3795/1
TRAFIC II Box (FL)	1.9 dCi	75	03/01 -	3848	
TRAFIC II Box (FL)	1.9 dCi 100 (FL0C)	74	03/01 -		3795/1
TRAFIC II Box (FL)	1.9 dCi 100 (FL0C)	74	03/01 -	3848	
TRAFIC II Box (FL)	1.9 dCi 80 (FL0B)	60	03/01 -		3795/1
TRAFIC II Box (FL)	1.9 dCi 80 (FL0B)	60	03/01 -	3848	
TRAFIC II Box (FL)	2.0 (FL0A)	88	03/01 -		3795/1
TRAFIC II Box (FL)	2.0 (FL0A)	88	03/01 -	3848	
TRAFIC II Box (FL)	2.0 16V	86	08/06 -		3795/1
TRAFIC II Box (FL)	2.0 16V	86	08/06 -	3848	
TRAFIC II Box (FL)	2.0 dCi 115 (FL01, FL0U)	84	08/06 -		3795/1
TRAFIC II Box (FL)	2.0 dCi 115 (FL01, FL0U)	84	08/06 -	3848	
TRAFIC II Box (FL)	2.0 dCi 90 (FL0H)	66	08/06 -		3795/1
TRAFIC II Box (FL)	2.0 dCi 90 (FL0H)	66	08/06 -	3848	
TRAFIC II Box (FL)	2.5 dCi	84	08/07 -		3795/1
TRAFIC II Box (FL)	2.5 dCi	84	08/07 -	3848	
TRAFIC II Box (FL)	2.5 dCi 135 (FL0D)	99	05/03 -		3795/1
TRAFIC II Box (FL)	2.5 dCi 135 (FL0D)	99	05/03 -	3848	
TRAFIC II Box (FL)	2.5 dCi 145 (FL0J)	107	08/06 -		3795/1
TRAFIC II Box (FL)	2.5 dCi 145 (FL0J)	107	08/06 -	3848	
TRAFIC II Box (FL)	2.5 DTi	99	03/03 – 07/03		3795/1
TRAFIC II Box (FL)	2.5 DTi	99	03/03 – 07/03	3848	

MAKE & MODEL		KW	YEAR		
RENAULT					
TRAFIC II Bus (JL)	1.9 dCI 100 (JL0C)	74	03/01 -		3795/1
TRAFIC II Bus (JL)	1.9 dCI 100 (JL0C)	74	03/01 -	3848	
TRAFIC II Bus (JL)	1.9 dCI 80 (JL0B)	60	03/01 -		3795/1
TRAFIC II Bus (JL)	1.9 dCI 80 (JL0B)	60	03/01 -	3848	
TRAFIC II Bus (JL)	1.9 dCi	59	04/01 – 07/03		3795/1
TRAFIC II Bus (JL)	1.9 dCi	59	04/01 – 07/03	3848	
TRAFIC II Bus (JL)	2.0 (JL0A)	88	03/01 -		3795/1
TRAFIC II Bus (JL)	2.0 (JL0A)	88	03/01 -	3848	
TRAFIC II Bus (JL)	2.0 16V	86	08/06 -		3795/1
TRAFIC II Bus (JL)	2.0 16V	86	08/06 -	3848	
TRAFIC II Bus (JL)	2.0 dCi 115 (JL0H)	84	08/06 -		3795/1
TRAFIC II Bus (JL)	2.0 dCi 115 (JL0H)	84	08/06 -	3848	
TRAFIC II Bus (JL)	2.0 dCi 90 (JL0H)	66	08/06 -		3795/1
TRAFIC II Bus (JL)	2.0 dCi 90 (JL0H)	66	08/06 -	3848	
TRAFIC II Bus (JL)	2.5 dCi 115	84	02/08 -		3795/1
TRAFIC II Bus (JL)	2.5 dCi 115	84	02/08 -	3848	
TRAFIC II Bus (JL)	2.5 dCi 135 (JL0D)	99	05/03 -		3795/1
TRAFIC II Bus (JL)	2.5 dCi 135 (JL0D)	99	05/03 -	3848	
TRAFIC II Bus (JL)	2.5 dCi 145 (JL0J)	107	08/06 -		3795/1
TRAFIC II Bus (JL)	2.5 dCi 145 (JL0J)	107	08/06 -	3848	
TRAFIC II Bus (JL)	2.5 DTi	99	03/03 – 07/03		3795/1
TRAFIC II Bus (JL)	2.5 DTi	99	03/03 – 07/03	3848	
TRAFIC II Platform/Chassis (EL)	1.9 dCi	59	09/01 – 07/03		3795/1
TRAFIC II Platform/Chassis (EL)	1.9 dCi	59	09/01 – 07/03	3848	
TRAFIC II Platform/Chassis (EL)	1.9 dCi 100 (EL0C)	74	03/01 -		3795/1
TRAFIC II Platform/Chassis (EL)	1.9 dCi 100 (EL0C)	74	03/01 -	3848	
TRAFIC II Platform/Chassis (EL)	1.9 dCi 80 (EL0B)	60	03/01 -		3795/1
TRAFIC II Platform/Chassis (EL)	1.9 dCi 80 (EL0B)	60	03/01 -	3848	
TRAFIC II Platform/Chassis (EL)	2.0 (EL0A)	88	03/01 -		3795/1
TRAFIC II Platform/Chassis (EL)	2.0 (EL0A)	88	03/01 -	3848	
TRAFIC II Platform/Chassis (EL)	2.0 16V	86	08/06 -		3795/1
TRAFIC II Platform/Chassis (EL)	2.0 16V	86	08/06 -	3848	
TRAFIC II Platform/Chassis (EL)	2.0 dCi 115 (EL0H)	84	08/06 -		3795/1
TRAFIC II Platform/Chassis (EL)	2.0 dCi 115 (EL0H)	84	08/06 -	3848	
TRAFIC II Platform/Chassis (EL)	2.0 dCi 90 (EL0H)	66	08/06 -		3795/1
TRAFIC II Platform/Chassis (EL)	2.0 dCi 90 (EL0H)	66	08/06 -	3848	
TRAFIC II Platform/Chassis (EL)	2.5 dCi	84	08/07 -		3795/1
TRAFIC II Platform/Chassis (EL)	2.5 dCi	84	08/07 -	3848	
TRAFIC II Platform/Chassis (EL)	2.5 dCi 135 (EL0D)	99	03/01 -		3795/1
TRAFIC II Platform/Chassis (EL)	2.5 dCi 135 (EL0D)	99	03/01 -	3848	
TRAFIC II Platform/Chassis (EL)	2.5 dCi 145 (EL0J)	107	08/06 -		3795/1
TRAFIC II Platform/Chassis (EL)	2.5 dCi 145 (EL0J)	107	08/06 -	3848	
TRAFIC III Box (FG_)	1.6 dCi 115	85	05/14 -	4227	
TRAFIC III Box (FG_)	1.6 dCi 120	88	05/14 -	4227	
TRAFIC III Box (FG_)	1.6 dCi 125	92	07/15 -		3795/1
TRAFIC III Box (FG_)	1.6 dCi 125	92	07/15 -	4227	
TRAFIC III Box (FG_)	1.6 dCi 140	103	05/14 -	4227	
TRAFIC III Box (FG_)	1.6 dCi 145	107	07/15 -		3795/1
TRAFIC III Box (FG_)	1.6 dCi 145	107	07/15 -	4227	
TRAFIC III Box (FG_)	1.6 dCi 90	66	05/14 -	4227	
TRAFIC III Box (FG_)	1.6 dCi 95	70	07/15 -		3795/1
TRAFIC III Box (FG_)	1.6 dCi 95	70	07/15 -	4227	
TRAFIC III Bus (JG_)	1.6 dCi 115	85	05/14 -		3795/1
TRAFIC III Bus (JG_)	1.6 dCi 115	85	05/14 -	4227	
TRAFIC III Bus (JG_)	1.6 dCi 120	88	05/14 -		3795/1
TRAFIC III Bus (JG_)	1.6 dCi 120	88	05/14 -	4227	
TRAFIC III Bus (JG_)	1.6 dCi 125	92	07/15 -		3795/1
TRAFIC III Bus (JG_)	1.6 dCi 125	92	07/15 -	4227	
TRAFIC III Bus (JG_)	1.6 dCi 140	103	05/14 -		3795/1
TRAFIC III Bus (JG_)	1.6 dCi 140	103	05/14 -	4227	
TRAFIC III Bus (JG_)	1.6 dCi 145	107	07/15 -		3795/1
TRAFIC III Bus (JG_)	1.6 dCi 145	107	07/15 -	4227	
TRAFIC III Bus (JG_)	1.6 dCi 90	66	05/14 -		3795/1
TRAFIC III Bus (JG_)	1.6 dCi 90	66	05/14 -	4227	
TRAFIC III Bus (JG_)	1.6 dCi 95	70	07/15 -		3795/1
TRAFIC III Bus (JG_)	1.6 dCi 95	70	07/15 -	4227	
TRAFIC III Platform/Chassis (EG_)	1.6 dCi 125	92	07/15 -		3795/1
TRAFIC III Platform/Chassis (EG_)	1.6 dCi 125	92	07/15 -	4227	
TRAFIC III Platform/Chassis (EG_)	1.6 dCi 145	107	07/15 -		3795/1
TRAFIC III Platform/Chassis (EG_)	1.6 dCi 145	107	07/15 -	4227	
TRAFIC III Platform/Chassis (EG_)	1.6 dCi 90	66	05/14 -	4227	

MAKE & MODEL   		KW	YEAR		
RENAULT					
TRAFIC Panelvan/Van (TXX) 2.1D		43	05/89 – 06/94	3537	
TRAFIC Platform/Chassis (P6)	14	35	03/80 – 04/89	3482	
TRAFIC Platform/Chassis (P6)	14	35	03/80 – 04/89	3527	
TRAFIC Platform/Chassis (P6)	16	48	03/80 – 06/86	3482	
TRAFIC Platform/Chassis (P6)	16	48	03/80 – 06/86	3527	
TRAFIC Platform/Chassis (P6)	17	50	06/86 – 04/89	3482	
TRAFIC Platform/Chassis (P6)	17	50	06/86 – 04/89	3527	
TRAFIC Platform/Chassis (P6)	20	59	03/80 – 04/89	3482	
TRAFIC Platform/Chassis (P6)	20	59	03/80 – 04/89	3527	
TRAFIC Platform/Chassis (P6)	20	63	03/80 – 12/86	3482	
TRAFIC Platform/Chassis (P6)	20	63	03/80 – 12/86	3527	
TRAFIC Platform/Chassis (P6)	2.0 4x4	60	05/85 – 02/89	3482	
TRAFIC Platform/Chassis (P6)	2.0 4x4	60	05/85 – 02/89	3527	
TRAFIC Platform/Chassis (P6)	2.1 D	43	03/80 – 04/89	3482	
TRAFIC Platform/Chassis (P6)	2.1 D	43	07/80 – 04/85	3482	
TRAFIC Platform/Chassis (P6)	2.1 D	43	03/80 – 04/89	3527	
TRAFIC Platform/Chassis (P6)	2.1 D	43	07/80 – 04/85	3527	
TRAFIC Platform/Chassis (P6)	2.1 D	44	05/85 – 02/89	3482	
TRAFIC Platform/Chassis (P6)	2.1 D	44	05/85 – 02/89	3527	
TRAFIC Platform/Chassis (P6)	2.1 D 4x4	43	05/85 – 02/89	3482	
TRAFIC Platform/Chassis (P6)	2.1 D 4x4	43	05/85 – 02/89	3527	
TRAFIC Platform/Chassis (P6)	2.5 D	51	03/80 – 04/89	3482	
TRAFIC Platform/Chassis (P6)	2.5 D	51	03/80 – 04/89	3527	
TRAFIC Platform/Chassis (PXX)	17	50	05/89 – 08/94	3482	
TRAFIC Platform/Chassis (PXX)	17	50	05/89 – 08/94	3527	
TRAFIC Platform/Chassis (PXX)	20	60	03/89 – 12/91	3482	
TRAFIC Platform/Chassis (PXX)	20	60	03/89 – 12/91	3527	
TRAFIC Platform/Chassis (PXX)	22	70	05/89 – 06/94	3482	
TRAFIC Platform/Chassis (PXX)	22	70	05/89 – 06/94	3527	
TRAFIC Platform/Chassis (PXX)	22	74	09/94 – 04/98	3482	
TRAFIC Platform/Chassis (PXX)	22	74	09/94 – 04/98	3527	
TRAFIC Platform/Chassis (PXX)	2.0 [RWD]	59	05/89 – 10/97	3482	
TRAFIC Platform/Chassis (PXX)	2.0 [RWD]	59	05/89 – 10/97	3527	
TRAFIC Platform/Chassis (PXX)	2.1 D	47	09/94 – 04/98	3482	
TRAFIC Platform/Chassis (PXX)	2.1 D	47	09/94 – 04/98	3527	
TRAFIC Platform/Chassis (PXX)	2.1 D [RWD]	43	05/89 – 06/94	3482	
TRAFIC Platform/Chassis (PXX)	2.1 D [RWD]	43	05/89 – 06/94	3527	
TRAFIC Platform/Chassis (PXX)	2.1 D [RWD]	47	06/94 – 10/97	3482	
TRAFIC Platform/Chassis (PXX)	2.1 D [RWD]	47	06/94 – 10/97	3527	
TRAFIC Platform/Chassis (PXX)	2.2 4x4	74	09/94 – 04/98	3482	
TRAFIC Platform/Chassis (PXX)	2.2 4x4	74	09/94 – 04/98	3527	
TRAFIC Platform/Chassis (PXX)	2.5 D	51	05/89 – 03/01	3482	
TRAFIC Platform/Chassis (PXX)	2.5 D	51	05/89 – 03/01	3527	
TRAFIC Platform/Chassis (PXX)	2.5 D	55	05/98 – 03/01	3482	
TRAFIC Platform/Chassis (PXX)	2.5 D	55	05/98 – 03/01	3527	
TRAFIC Platform/Chassis (PXX)	2.5 D	56	03/89 – 08/94	3482	
TRAFIC Platform/Chassis (PXX)	2.5 D	56	03/89 – 08/94	3527	
TRAFIC Platform/Chassis (PXX)	2.5 D	58	09/94 – 04/98	3482	
TRAFIC Platform/Chassis (PXX)	2.5 D	58	09/94 – 04/98	3527	
TRAFIC Platform/Chassis (PXX)	2.5 D 4x4	56	03/89 – 08/94	3482	
TRAFIC Platform/Chassis (PXX)	2.5 D 4x4	56	03/89 – 08/94	3527	
TRAFIC Platform/Chassis (PXX)	2.5 D 4x4	58	09/94 – 01/99	3482	
TRAFIC Platform/Chassis (PXX)	2.5 D 4x4	58	09/94 – 01/99	3527	
TWINGO I (C06_)	12	44	09/98 – 08/00	3431	
TWINGO I (C06_)	12	44	09/98 – 08/00	3503	
TWINGO I (C06_)	1.2 (C063, C064)	40	03/93 – 10/96	3495	
TWINGO I (C06_)	1.2 (C066, C068)	43	05/96 -	3431	
TWINGO I (C06_)	1.2 (C066, C068)	43	05/96 -	3495	
TWINGO I (C06_)	1.2 (C066, C068)	43	05/96 -	3503	
TWINGO I (C06_)	1.2 (C067)	40	05/96 -	3431	
TWINGO I (C06_)	1.2 (C067)	40	05/96 -	3495	
TWINGO I (C06_)	1.2 (C067)	40	05/96 -	3503	
TWINGO I (C06_)	1.2 16V (C060)	44	08/04 – 06/07	3431	
TWINGO I (C06_)	1.2 16V (C060)	44	08/04 – 06/07	3503	
TWINGO I (C06_)	1.2 16V (C06C, C06D, C06K)	55	01/01 -	3431	
TWINGO I (C06_)	1.2 16V (C06C, C06D, C06K)	55	01/01 -	3503	
TWINGO I (C06_)	1.2 LPG	44	10/03 -	3431	
TWINGO I (C06_)	1.2 LPG	44	10/03 -	3503	
TWINGO I Box (S06_)	1.2 (S063, S064)	40	03/93 – 05/96	3495	
TWINGO I Box (S06_)	1.2 (S066, S068)	43	05/96 -	3431	
TWINGO I Box (S06_)	1.2 (S066, S068)	43	05/96 -	3495	

MAKE & MODEL		KW	YEAR		
RENAULT					
TWINGO I Box (S06_)	1.2 (S066, S068)	43	05/96 -	3503	
TWINGO II (CN0_)	1.2 (CN0D)	43	03/07 -	3431	
TWINGO II (CN0_)	1.2 (CN0D)	43	03/07 -	3503	
TWINGO II (CN0_)	1.2 16V (CN04, CN0A, CN0B)	55	03/07 -	3431	
TWINGO II (CN0_)	1.2 16V (CN04, CN0A, CN0B)	55	03/07 -	3503	
TWINGO II (CN0_)	1.2 16V (CN0K, CN0V)	56	03/07 -	3431	
TWINGO II (CN0_)	1.2 16V (CN0K, CN0V)	56	03/07 -	3503	
TWINGO II (CN0_)	1.2 TCe 100 (CN0P)	75	02/11 -	3431	
TWINGO II (CN0_)	1.2 TCe 100 (CN0P)	75	02/11 -	3503	
TWINGO II (CN0_)	1.2 Turbo (CN0C, CN0F)	74	03/07 -	3431	
TWINGO II (CN0_)	1.2 Turbo (CN0C, CN0F)	74	03/07 -	3503	
TWINGO II (CN0_)	1.5 dCi (CN0E)	47	03/07 -	3431	
TWINGO II (CN0_)	1.5 dCi (CN0E)	47	03/07 -	3503	
TWINGO II (CN0_)	1.5 dCi (CN0U)	62	04/08 -	3431	
TWINGO II (CN0_)	1.5 dCi (CN0U)	62	04/08 -	3503	
TWINGO II (CN0_)	1.5 dCi 75	55	10/10 -	3431	
TWINGO II (CN0_)	1.5 dCi 75	55	10/10 -	3503	
TWINGO II (CN0_)	1.5 dCi 90	63	10/10 -	3431	
TWINGO II (CN0_)	1.5 dCi 90	63	10/10 -	3503	
TWINGO II (CN0_)	1.6 RS (CN0N, CN0R, CN0S)	98	05/08 -		3529/2
TWINGO II (CN0_)	1.6 RS (CN0N, CN0R, CN0S)	98	05/08 -	3950	
TWINGO III (BCM_)	0.9 TCe 90	66	09/14 -	4140	
TWINGO III (BCM_)	1.0 SCe 70	51	09/15 -	4140	
TWINGO III (BCM_)	1.0 SCe 70	52	09/14 -	4140	
VEL SATIS (BJ0_)	2.0 16 V Turbo	125	04/04 -		3853
VEL SATIS (BJ0_)	2.0 16V Turbo (BJ0K)	120	06/02 -		3853
VEL SATIS (BJ0_)	2.0 dCi (BJ03)	110	08/05 -		3853
VEL SATIS (BJ0_)	2.0 dCi (BJ03, BJ0B)	127	01/06 -		3853
VEL SATIS (BJ0_)	2.0 Turbo	108	04/05 -		3853
VEL SATIS (BJ0_)	2.2 dCi	83	12/04 -		3853
VEL SATIS (BJ0_)	2.2 dCi (BJ0E, BJ0F)	110	06/02 -		3853
VEL SATIS (BJ0_)	2.2 dCi (BJ0E, BJ0F, BJ0G, BJ0H)	102	09/04 -		3853
VEL SATIS (BJ0_)	2.2 dCi (BJ0H)	85	04/04 -		3853
VEL SATIS (BJ0_)	3.0 dCi (BJ0J, BJ0N)	130	06/02 -		3853
VEL SATIS (BJ0_)	3.0 dCi (BJ0S)	133	06/06 -		3853
VEL SATIS (BJ0_)	3.5 (BJ01)	170	10/04 -		3853
VEL SATIS (BJ0_)	3.5 V6 (BJ0R, BJ0V, BJ0U)	177	06/02 -		3853
WIND (E4M_)	1.2 (E4MF)	74	07/10 -		3529/2
WIND (E4M_)	1.2 (E4MF)	74	07/10 -	3950	
WIND (E4M_)	1.2 TCe 100 (E4MA)	75	02/11 -		3529/2
WIND (E4M_)	1.2 TCe 100 (E4MA)	75	02/11 -	3950	
WIND (E4M_)	1.6 (E4MB, E4MC)	98	07/10 -		3529/2
WIND (E4M_)	1.6 (E4MB, E4MC)	98	07/10 -	3950	
ZOE (BFM_)	ZOE	65	06/12 -	3983	
	CB05...)			3431	
REX MOTORCYCLES					
ESCAPE	Escape 25	1	01/03 – 12/06		4270
ESCAPE	Escape 50	2	01/03 – 12/06		4270
ROEWE (SAIC)					
550	1.8 Turbo	118	06/08 -	3943	
750	1.8 Turbo	118	03/08 -	3943	
750	25	135	01/07 -	3943	
ROLLS-ROYCE					
PHANTOM	675	338	08/02 -	4208	
PHANTOM (RR1)	6.75 (N73 B68 A)	338	08/02 -		4179
PHANTOM (RR2)	6.8 V12 (N73 B68 A)	338	03/06 -		4179
PHANTOM (RR3)	6.8 V12 (N73 B68 A)	338	01/07 -		4179
PHANTOM Coupe	6.75 V12	338	01/07 -	4208	
PHANTOM Drophead Coupe	6.75 V12	338	03/06 -	4208	
ROVER					
200 (RF)	211	44	01/98 – 03/00	3683	
200 (RF)	214 i	55	11/95 – 03/00	3683	
200 (RF)	214 Si	76	11/95 – 03/00	3683	
200 (RF)	216 Si	82	11/95 – 03/00	3683	
200 (RF)	218 K Vi	107	11/95 – 03/00	3683	
200 (RF)	218 Si	88	08/99 – 03/00	3683	
200 (RF)	220 D/SD	63	11/95 – 03/00	3683	
200 (RF)	220 SDi	77	11/95 – 03/00	3683	
200 Convertible (XW)	214 1.4	66	01/92 – 11/99	3872	

MAKE & MODEL   		KW	YEAR		
ROVER					
200 Convertible (XW)	214 1.4	66	01/92 – 11/99		4212
200 Convertible (XW)	214 1.4	70	04/90 – 09/92	3872	
200 Convertible (XW)	214 1.4	70	04/90 – 09/92		4212
200 Convertible (XW)	214 1.4i 16V	76	01/93 – 11/99	3872	
200 Convertible (XW)	214 1.4i 16V	76	01/93 – 11/99		4212
200 Convertible (XW)	216 1.6	82	04/90 – 02/96	3872	
200 Convertible (XW)	216 1.6	82	04/90 – 02/96		4212
200 Convertible (XW)	216 1.6i	90	01/92 – 11/99	3872	
200 Convertible (XW)	216 1.6i	90	01/92 – 11/99		4212
200 Convertible (XW)	216 1.6i 16V	82	01/96 – 11/99	3872	
200 Convertible (XW)	216 1.6i 16V	82	01/96 – 11/99		4212
200 Coupe (XW)	20	152	10/92 – 09/97	3683	
200 Coupe (XW)	20	152	10/92 – 09/97	3872	
200 Coupe (XW)	20	152	10/92 – 09/97		4212
200 Coupe (XW)	216	82	01/96 – 12/97	3683	
200 Coupe (XW)	216	82	01/96 – 12/97	3872	
200 Coupe (XW)	216	82	01/96 – 12/97		4212
200 Coupe (XW)	216	90	10/92 – 06/99	3683	
200 Coupe (XW)	216	90	10/92 – 06/99	3872	
200 Coupe (XW)	216	90	10/92 – 06/99		4212
200 Coupe (XW)	220 GSi	100	05/94 – 06/99	3683	
200 Coupe (XW)	220 GSi	100	05/94 – 06/99	3872	
200 Coupe (XW)	220 GSi	100	05/94 – 06/99		4212
200 Coupe (XW)	220 Turbo	147	10/92 – 06/99	3683	
200 Coupe (XW)	220 Turbo	147	10/92 – 06/99	3872	
200 Coupe (XW)	220 Turbo	147	10/92 – 06/99		4212
200 Hatchback (RF)	211	44	01/98 – 03/00	3872	
200 Hatchback (RF)	211	44	01/98 – 03/00		4212
200 Hatchback (RF)	214 i	55	11/95 – 03/00	3872	
200 Hatchback (RF)	214 i	55	11/95 – 03/00		4212
200 Hatchback (RF)	214 Si	76	11/95 – 03/00	3872	
200 Hatchback (RF)	214 Si	76	11/95 – 03/00		4212
200 Hatchback (RF)	216 Si	82	11/95 – 03/00	3872	
200 Hatchback (RF)	216 Si	82	11/95 – 03/00		4212
200 Hatchback (RF)	218 K Vi	107	11/95 – 03/00	3872	
200 Hatchback (RF)	218 K Vi	107	11/95 – 03/00		4212
200 Hatchback (RF)	218 Si	88	08/99 – 03/00	3872	
200 Hatchback (RF)	218 Si	88	08/99 – 03/00		4212
200 Hatchback (RF)	220 D/SD	63	11/95 – 03/00	3872	
200 Hatchback (RF)	220 D/SD	63	11/95 – 03/00		4212
200 Hatchback (RF)	220 SDi	77	11/95 – 03/00	3872	
200 Hatchback (RF)	220 SDi	77	11/95 – 03/00		4212
200 Hatchback (XW)	214	55	09/93 – 10/95	3683	
200 Hatchback (XW)	214	55	09/93 – 10/95	3872	
200 Hatchback (XW)	214	55	09/93 – 10/95		4212
200 Hatchback (XW)	214 GSi/Si	70	01/90 – 10/95	3683	
200 Hatchback (XW)	214 GSi/Si	70	01/90 – 10/95	3872	
200 Hatchback (XW)	214 GSi/Si	70	01/90 – 10/95		4212
200 Hatchback (XW)	214 GSi/Si	76	12/92 – 10/95	3683	
200 Hatchback (XW)	214 GSi/Si	76	12/92 – 10/95	3872	
200 Hatchback (XW)	214 GSi/Si	76	12/92 – 10/95		4212
200 Hatchback (XW)	214 Si/Gsi	66	10/89 – 10/95	3683	
200 Hatchback (XW)	214 Si/Gsi	66	10/89 – 10/95	3872	
200 Hatchback (XW)	214 Si/Gsi	66	10/89 – 10/95		4212
200 Hatchback (XW)	216 GSi	82	10/89 – 10/95	3683	
200 Hatchback (XW)	216 GSi	82	10/89 – 10/95	3872	
200 Hatchback (XW)	216 GSi	82	10/89 – 10/95		4212
200 Hatchback (XW)	216 GSi	85	10/89 – 10/95	3683	
200 Hatchback (XW)	216 GSi	85	10/89 – 10/95	3872	
200 Hatchback (XW)	216 GSi	85	10/89 – 10/95		4212
200 Hatchback (XW)	216 GTi	90	09/90 – 10/95	3683	
200 Hatchback (XW)	216 GTi	90	09/90 – 10/95	3872	
200 Hatchback (XW)	216 GTi	90	09/90 – 10/95		4212
200 Hatchback (XW)	216 GTi	96	09/90 – 10/95	3683	
200 Hatchback (XW)	216 GTi	96	09/90 – 10/95	3872	
200 Hatchback (XW)	216 GTi	96	09/90 – 10/95		4212
200 Hatchback (XW)	218 D	52	09/91 – 10/95	3683	
200 Hatchback (XW)	218 D	52	09/91 – 10/95	3872	
200 Hatchback (XW)	218 D	52	09/91 – 10/95		4212
200 Hatchback (XW)	218 TD	65	09/91 – 10/95	3683	
200 Hatchback (XW)	218 TD	65	09/91 – 10/95	3872	

MAKE & MODEL		KW	YEAR		
ROVER					
200 Hatchback (XW)	218 TD	65	09/91 – 10/95		4212
200 Hatchback (XW)	220 GTi	100	01/93 – 10/95	3683	
200 Hatchback (XW)	220 GTi	100	01/93 – 10/95	3872	
200 Hatchback (XW)	220 GTi	100	01/93 – 10/95		4212
200 Hatchback (XW)	220 GTi	103	09/91 – 10/95	3683	
200 Hatchback (XW)	220 GTi	103	09/91 – 10/95	3872	
200 Hatchback (XW)	220 GTi	103	09/91 – 10/95		4212
200 Hatchback (XW)	220 Turbo	147	01/93 – 10/95	3683	
200 Hatchback (XW)	220 Turbo	147	01/93 – 10/95	3872	
200 Hatchback (XW)	220 Turbo	147	01/93 – 10/95		4212
2000-3500 (P6)	3500	104	04/68 – 05/76	3416	
2000-3500 (P6)	3500	110	04/68 – 05/76	3416	
2000-3500 (P6)	2200 (TC)	83	09/63 – 05/76	3416	
2000-3500 Hatchback (SD1)	2000	74	10/82 – 10/86	3423/1	
2000-3500 Hatchback (SD1)	2300	88	09/77 – 10/86	3416	
2000-3500 Hatchback (SD1)	2300	88	09/77 – 10/86	3423/1	
2000-3500 Hatchback (SD1)	2600	99	09/77 – 10/82	3416	
2000-3500 Hatchback (SD1)	3500	115	06/76 – 10/86	3416	
2000-3500 Hatchback (SD1)	3500	115	06/76 – 10/86	3423/1	
2000-3500 Hatchback (SD1)	2400 TD	67	05/82 – 10/86	3416	
2000-3500 Hatchback (SD1)	2400 TD	67	05/82 – 10/86	3423/1	
2000-3500 Hatchback (SD1)	2600 S	93	10/82 – 10/86	3423/1	
2000-3500 Hatchback (SD1)	3500 Vitesse	142	10/82 – 10/86	3423/1	
25 (RF)	11	44	11/99 – 05/05	3683	
25 (RF)	11	44	11/99 – 05/05	3872	
25 (RF)	11	44	11/99 – 05/05		4212
25 (RF)	11	55	09/99 – 06/01	3683	
25 (RF)	11	55	09/99 – 06/01	3872	
25 (RF)	11	55	09/99 – 06/01		4212
25 (RF)	1.1 16V	55	01/04 – 05/05	3683	
25 (RF)	1.1 16V	55	01/04 – 05/05	3872	
25 (RF)	1.1 16V	55	01/04 – 05/05		4212
25 (RF)	1.4 16V	62	10/99 – 05/05	3683	
25 (RF)	1.4 16V	62	10/99 – 05/05	3872	
25 (RF)	1.4 16V	62	10/99 – 05/05		4212
25 (RF)	1.4 16V	76	10/99 – 05/05	3683	
25 (RF)	1.4 16V	76	10/99 – 05/05	3872	
25 (RF)	1.4 16V	76	10/99 – 05/05		4212
25 (RF)	1.6 16V	80	10/99 – 05/05	3683	
25 (RF)	1.6 16V	80	10/99 – 05/05	3872	
25 (RF)	1.6 16V	80	10/99 – 05/05		4212
25 (RF)	1.8 16V	85	10/99 – 05/05	3683	
25 (RF)	1.8 16V	85	10/99 – 05/05	3872	
25 (RF)	1.8 16V	85	10/99 – 05/05		4212
25 (RF)	1.8 16V	107	02/00 – 05/05	3683	
25 (RF)	1.8 16V	107	02/00 – 05/05	3872	
25 (RF)	1.8 16V	107	02/00 – 05/05		4212
25 (RF)	2.0 iDT	74	10/99 – 05/05	3683	
25 (RF)	2.0 iDT	74	10/99 – 05/05	3872	
25 (RF)	2.0 iDT	74	10/99 – 05/05		4212
25 (RF)	2.0 iDT	83	01/02 – 12/04	3683	
25 (RF)	2.0 iDT	83	01/02 – 12/04	3872	
25 (RF)	2.0 iDT	83	01/02 – 12/04		4212
400 (RT)	414	55	03/96 – 12/99	3683	
400 (RT)	414	55	03/96 – 12/99	3872	
400 (RT)	414	55	03/96 – 12/99		4212
400 (RT)	414 Si	76	05/95 – 03/00	3683	
400 (RT)	414 Si	76	05/95 – 03/00	3872	
400 (RT)	414 Si	76	05/95 – 03/00		4212
400 (RT)	416 Si	82	05/95 – 03/00	3683	
400 (RT)	416 Si	82	05/95 – 03/00	3872	
400 (RT)	416 Si	82	05/95 – 03/00		4212
400 (RT)	416 Si	83	05/95 – 03/00	3683	
400 (RT)	416 Si	83	05/95 – 03/00	3872	
400 (RT)	416 Si	83	05/95 – 03/00		4212
400 (RT)	416 Si	85	05/95 – 03/00	3683	
400 (RT)	416 Si	85	05/95 – 03/00	3872	
400 (RT)	416 Si	85	05/95 – 03/00		4212
400 (RT)	420 D	63	11/95 – 03/00	3683	
400 (RT)	420 D	63	11/95 – 03/00	3872	
400 (RT)	420 D	63	11/95 – 03/00		4212

MAKE & MODEL   		KW	YEAR		
ROVER					
400 (RT)	420 Di	77	05/95 – 03/00	3683	
400 (RT)	420 Di	77	05/95 – 03/00	3872	
400 (RT)	420 Di	77	05/95 – 03/00		4212
400 (RT)	420 Si Lux	100	12/95 – 03/00	3683	
400 (RT)	420 Si Lux	100	12/95 – 03/00	3872	
400 (RT)	420 Si Lux	100	12/95 – 03/00		4212
400 (XW)	414	70	01/93 – 04/95	3683	
400 (XW)	414	70	01/93 – 04/95	3872	
400 (XW)	414	70	01/93 – 04/95		4212
400 (XW)	2.0 Turbo GSi Sport	152	10/92 – 04/95	3683	
400 (XW)	2.0 Turbo GSi Sport	152	10/92 – 04/95	3872	
400 (XW)	2.0 Turbo GSi Sport	152	10/92 – 04/95		4212
400 (XW)	414 GSI/SI	66	04/90 – 04/95	3683	
400 (XW)	414 GSI/SI	66	04/90 – 04/95	3872	
400 (XW)	414 GSI/SI	66	04/90 – 04/95		4212
400 (XW)	414 GSI/SI CAT	76	01/93 – 04/95	3683	
400 (XW)	414 GSI/SI Cat	76	10/92 – 04/95	3872	
400 (XW)	414 GSI/SI Cat	76	10/92 – 04/95		4212
400 (XW)	416 GSI	82	04/90 – 04/95	3683	
400 (XW)	416 GSI	82	04/90 – 04/95	3872	
400 (XW)	416 GSI	82	04/90 – 04/95		4212
400 (XW)	416 GSI/GSE	85	04/90 – 04/95	3683	
400 (XW)	416 GSI/GSE	85	04/90 – 04/95	3872	
400 (XW)	416 GSI/GSE	85	04/90 – 04/95		4212
400 (XW)	416 GTI	90	04/90 – 04/95	3683	
400 (XW)	416 GTI	90	04/90 – 04/95	3872	
400 (XW)	416 GTI	90	04/90 – 04/95		4212
400 (XW)	416 GTI/GTE	96	04/90 – 04/95	3683	
400 (XW)	416 GTI/GTE	96	04/90 – 04/95	3872	
400 (XW)	416 GTI/GTE	96	04/90 – 04/95		4212
400 (XW)	418 D	49	09/91 – 04/95	3683	
400 (XW)	418 D	49	09/91 – 04/95	3872	
400 (XW)	418 D	49	09/91 – 04/95		4212
400 (XW)	418 TD	65	09/91 – 04/95	3683	
400 (XW)	418 TD	65	09/91 – 04/95	3872	
400 (XW)	418 TD	65	09/91 – 04/95		4212
400 (XW)	420 GSI/SLI/GTI/Vite	100	01/93 – 04/95	3683	
400 (XW)	420 GSI/SLI/GTI/Vite	100	01/93 – 04/95	3872	
400 (XW)	420 GSI/SLI/GTI/Vite	100	01/93 – 04/95		4212
400 (XW)	420 GTI/GSI/Vitesse	103	02/92 – 04/95	3683	
400 (XW)	420 GTI/GSI/Vitesse	103	02/92 – 04/95	3872	
400 (XW)	420 GTI/GSI/Vitesse	103	02/92 – 04/95		4212
400 (XW)	420 Turbo	147	01/93 – 04/95	3683	
400 (XW)	420 Turbo	147	01/93 – 04/95	3872	
400 (XW)	420 Turbo	147	01/93 – 04/95		4212
400 Hatchback (RT)	414	55	03/96 – 12/97	3683	
400 Hatchback (RT)	414	55	03/96 – 12/97	3872	
400 Hatchback (RT)	414	55	03/96 – 12/97		4212
400 Hatchback (RT)	414 Si	76	05/95 – 03/00	3683	
400 Hatchback (RT)	414 Si	76	05/95 – 03/00	3872	
400 Hatchback (RT)	414 Si	76	05/95 – 03/00		4212
400 Hatchback (RT)	416 Si	82	05/95 – 03/00	3683	
400 Hatchback (RT)	416 Si	82	05/95 – 03/00	3872	
400 Hatchback (RT)	416 Si	82	05/95 – 03/00		4212
400 Hatchback (RT)	416 Si	83	06/95 – 03/00	3683	
400 Hatchback (RT)	416 Si	83	06/95 – 03/00	3872	
400 Hatchback (RT)	416 Si	83	06/95 – 03/00		4212
400 Hatchback (RT)	416 Si	85	06/95 – 03/00	3683	
400 Hatchback (RT)	416 Si	85	06/95 – 03/00	3872	
400 Hatchback (RT)	416 Si	85	06/95 – 03/00		4212
400 Hatchback (RT)	420 D	63	11/95 – 03/00	3683	
400 Hatchback (RT)	420 D	63	11/95 – 03/00	3872	
400 Hatchback (RT)	420 D	63	11/95 – 03/00		4212
400 Hatchback (RT)	420 Di	77	05/95 – 03/00	3683	
400 Hatchback (RT)	420 Di	77	05/95 – 03/00	3872	
400 Hatchback (RT)	420 Di	77	05/95 – 03/00		4212
400 Hatchback (RT)	420 Si Lux	100	12/95 – 03/00	3683	
400 Hatchback (RT)	420 Si Lux	100	12/95 – 03/00	3872	
400 Hatchback (RT)	420 Si Lux	100	12/95 – 03/00		4212
400 Tourer (XW)	1.6 i	82	05/94 – 11/98	3683	
400 Tourer (XW)	1.6 i	82	05/94 – 11/98	3872	

MAKE & MODEL		KW	YEAR		
ROVER					
400 Tourer (XW)	1.6 i	82	05/94 – 11/98		4212
400 Tourer (XW)	1.6 i	90	05/94 – 11/98	3683	
400 Tourer (XW)	1.6 i	90	05/94 – 11/98	3872	
400 Tourer (XW)	1.6 i	90	05/94 – 11/98		4212
400 Tourer (XW)	1.8 i	107	06/96 – 11/98	3683	
400 Tourer (XW)	1.8 i	107	06/96 – 11/98	3872	
400 Tourer (XW)	1.8 i	107	06/96 – 11/98		4212
400 Tourer (XW)	1.8 TD	65	09/93 – 11/98	3683	
400 Tourer (XW)	1.8 TD	65	09/93 – 11/98	3872	
400 Tourer (XW)	1.8 TD	65	09/93 – 11/98		4212
400 Tourer (XW)	2.0 i	100	05/94 – 11/98	3683	
400 Tourer (XW)	2.0 i	100	05/94 – 11/98	3872	
400 Tourer (XW)	2.0 i	100	05/94 – 11/98		4212
45 (RT)	14	76	02/00 – 05/05	3683	
45 (RT)	14	76	02/00 – 05/05	3872	
45 (RT)	14	76	02/00 – 05/05		4212
45 (RT)	16	80	02/00 – 05/05	3683	
45 (RT)	16	80	02/00 – 05/05	3872	
45 (RT)	16	80	02/00 – 05/05		4212
45 (RT)	18	86	02/00 – 05/05	3683	
45 (RT)	18	86	02/00 – 05/05	3872	
45 (RT)	18	86	02/00 – 05/05		4212
45 (RT)	2.0 iDT	74	02/00 – 05/05	3683	
45 (RT)	2.0 iDT	74	02/00 – 05/05	3872	
45 (RT)	2.0 iDT	74	02/00 – 05/05		4212
45 (RT)	2.0 iDT	83	01/04 – 05/05	3683	
45 (RT)	2.0 iDT	83	01/04 – 05/05	3872	
45 (RT)	2.0 iDT	83	01/04 – 05/05		4212
45 (RT)	2.0 V6	110	02/00 – 05/05	3683	
45 (RT)	2.0 V6	110	02/00 – 05/05	3872	
45 (RT)	2.0 V6	110	02/00 – 05/05		4212
45 Saloon (RT)	14	76	02/00 – 05/05	3683	
45 Saloon (RT)	14	76	02/00 – 05/05	3872	
45 Saloon (RT)	14	76	02/00 – 05/05		4212
45 Saloon (RT)	16	80	02/00 – 05/05	3683	
45 Saloon (RT)	16	80	02/00 – 05/05	3872	
45 Saloon (RT)	16	80	02/00 – 05/05		4212
45 Saloon (RT)	18	86	02/00 – 05/05	3683	
45 Saloon (RT)	18	86	02/00 – 05/05	3872	
45 Saloon (RT)	18	86	02/00 – 05/05		4212
45 Saloon (RT)	2.0 iDT	74	02/00 – 05/05	3683	
45 Saloon (RT)	2.0 iDT	74	02/00 – 05/05	3872	
45 Saloon (RT)	2.0 iDT	74	02/00 – 05/05		4212
45 Saloon (RT)	2.0 iDT	83	01/04 – 05/05	3683	
45 Saloon (RT)	2.0 iDT	83	01/04 – 05/05	3872	
45 Saloon (RT)	2.0 iDT	83	01/04 – 05/05		4212
45 Saloon (RT)	2.0 V6	110	02/00 – 05/05	3683	
45 Saloon (RT)	2.0 V6	110	02/00 – 05/05	3872	
45 Saloon (RT)	2.0 V6	110	02/00 – 05/05		4212
600 (RH)	618 i/Si	85	03/96 – 02/99	3704	
600 (RH)	618 i/Si	85	03/96 – 02/99		4148
600 (RH)	620 i	85	08/93 – 06/96	3704	
600 (RH)	620 i	85	08/93 – 06/96		4148
600 (RH)	620 Sdi	77	12/94 – 02/99	3704	
600 (RH)	620 Sdi	77	12/94 – 02/99		4148
600 (RH)	620 Si	96	08/93 – 02/99	3704	
600 (RH)	620 Si	96	08/93 – 02/99		4148
600 (RH)	620 Ti Vitesse	147	07/94 – 02/99	3704	
600 (RH)	620 Ti Vitesse	147	07/94 – 02/99		4148
600 (RH)	623 Si	116	08/93 – 02/99	3704	
600 (RH)	623 Si	116	08/93 – 02/99		4148
75 (RJ)	18	88	02/99 – 05/05	3943	
75 (RJ)	1.8 Turbo	110	05/03 – 05/05	3943	
75 (RJ)	2.0 CDT	85	02/99 – 05/05	3943	
75 (RJ)	2.0 CDTi	96	02/03 – 05/05	3943	
75 (RJ)	2.0 V6	110	02/99 – 05/05	3943	
75 (RJ)	2.5 V6	129	02/99 – 10/01	3943	
75 (RJ)	2.5 V6	130	10/01 – 05/05	3943	
75 (RJ)	4.6 V8	191	10/04-05/05	4347	
75 Tourer (RJ)	18	88	08/01 – 05/05	3943	
75 Tourer (RJ)	1.8 Turbo	110	05/03 – 05/05	3943	

MAKE & MODEL		KW	YEAR		
ROVER					
75 Tourer (RJ)	2.0 CDT	85	08/01 – 05/05	3943	
75 Tourer (RJ)	2.0 CDTi	96	02/03 – 05/05	3943	
75 Tourer (RJ)	2.0 V6	110	08/01 – 05/05	3943	
75 Tourer (RJ)	2.5 V6	130	08/01 – 05/05	3943	
75 Tourer (RJ)	4.6 V8	191	10/03-05/05	4347	
800 (XS)	27	127	10/87 – 09/88	3683	
800 (XS)	27	127	10/87 – 09/88	3872	
800 (XS)	820	74	10/88 – 10/91	3631	
800 (XS)	2.0 E	84	10/88 – 10/91	3631	
800 (XS)	820 16 V I/SI (XS)	103	10/86 – 10/88	3631	
800 (XS)	820 16V Turbo (RS)	132	01/92 – 02/99	3683	
800 (XS)	820 16V Turbo (RS)	132	01/92 – 02/99	3872	
800 (XS)	820 I/SI (RS)	100	01/92 – 02/99	3631	
800 (XS)	820 I/SI (RS)	100	01/92 – 02/99	3683	
800 (XS)	820 I/SI (RS)	100	01/92 – 02/99	3872	
800 (XS)	820 SE/SI	88	10/86 – 12/91	3631	
800 (XS)	820 SI (XS)	98	10/88 – 12/91	3631	
800 (XS)	820 Sport	145	04/94 – 03/96	3683	
800 (XS)	820 Sport	145	04/94 – 03/96	3872	
800 (XS)	820e	88	10/86 – 10/91	3631	
800 (XS)	825 D/SD (XS)	87	01/90 – 02/99	3683	
800 (XS)	825 D/SD (XS)	87	01/90 – 02/99	3872	
800 (XS)	825 SI/Sterling (XS)	123	10/86 – 10/88	3683	
800 (XS)	825 SI/Sterling (XS)	123	10/86 – 10/88	3872	
800 (XS)	825 SI/Sterling (XS)	127	01/87 – 12/91	3683	
800 (XS)	825 SI/Sterling (XS)	127	01/87 – 12/91	3872	
800 (XS)	825 SI/Sterling (XS) CAT	110	10/86 – 12/91	3683	
800 (XS)	825 SI/Sterling Catalytic-Conv(XS)	110	10/86 – 12/91	3872	
800 (XS)	825 Si Lux (RS)	129	04/96 – 02/99	3683	
800 (XS)	825 Si Lux (RS)	129	04/96 – 02/99	3872	
800 (XS)	827 SI/Sterling (XS)	130	02/88 – 12/91	3683	
800 (XS)	827 SI/Sterling (XS)	130	02/88 – 12/91	3872	
800 (XS)	827 SI/Sterling (XS) CAT	124	02/88 – 02/99	3683	
800 (XS)	827 SI/Sterling Catalytic-Conv (XS)	124	02/88 – 02/99	3872	
800 Coupe	825 SD	87	09/93 – 02/99	3683	
800 Coupe	825 SD	87	09/93 – 02/99	3872	
800 Coupe	825 Si (RS)	129	04/96 – 02/99	3683	
800 Coupe	825 Si (RS)	129	04/96 – 02/99	3872	
800 Coupe	827 24V (RS)	124	08/92 – 02/99	3683	
800 Coupe	827 24V (RS)	124	08/92 – 02/99	3872	
800 Hatchback (XS)	20	74	08/87 – 10/91	3631	
800 Hatchback (XS)	20	100	08/87 – 09/88	3631	
800 Hatchback (XS)	2.5 Si	129	02/96 – 10/98	3683	
800 Hatchback (XS)	2.5 Si	129	02/96 – 10/98	3872	
800 Hatchback (XS)	820 16V Turbo (RS)	132	01/92 – 02/99	3683	
800 Hatchback (XS)	820 16V Turbo (RS)	132	01/92 – 02/99	3872	
800 Hatchback (XS)	820 I/SI (XS)	100	01/93 – 02/99	3683	
800 Hatchback (XS)	820 I/SI (XS)	100	01/93 – 02/99	3872	
800 Hatchback (XS)	820 i/Si (XS)	103	10/88 – 12/91	3631	
800 Hatchback (XS)	820 SE/SI	88	10/86 – 12/91	3631	
800 Hatchback (XS)	820 SI (XS)	98	10/88 – 12/91	3631	
800 Hatchback (XS)	820 Sport	145	04/94 – 03/96	3683	
800 Hatchback (XS)	820 Sport	145	04/94 – 03/96	3872	
800 Hatchback (XS)	825 D/SD (XS)	87	01/92 – 02/99	3683	
800 Hatchback (XS)	825 D/SD (XS)	87	01/92 – 02/99	3872	
800 Hatchback (XS)	827 24V I/SI (RS) CAT	124	01/92 – 02/99	3683	
800 Hatchback (XS)	827 24V I/SI Cat (RS)	124	01/92 – 02/99	3872	
800 Hatchback (XS)	827 Vitesse (XS) CAT	124	10/88 – 12/91	3683	
800 Hatchback (XS)	827 Vitesse Catalytic-Conv (XS)	124	10/88 – 12/91	3872	
800 Hatchback (XS)	827 Vitesse/SLI	130	10/88 – 12/91	3683	
800 Hatchback (XS)	827 Vitesse/SLI	130	10/88 – 12/91	3872	
CABRIOLET (XW)	16	82	04/90 – 02/96	3683	
CABRIOLET (XW)	214 1.4	66	01/92 – 11/99	3683	
CABRIOLET (XW)	214 1.4	70	04/90 – 09/92	3683	
CABRIOLET (XW)	214 1.4i 16V	76	01/93 – 11/99	3683	
CABRIOLET (XW)	216 1.6i	90	01/92 – 11/99	3683	
CABRIOLET (XW)	216 1.6i 16V	82	01/96 – 11/99	3683	
COUPE	1.6 16 V	82	03/96 – 11/99	3683	
COUPE	1.6 16 V	82	03/96 – 11/99	3872	
COUPE	1.6 16 V	82	03/96 – 11/99		4212
COUPE	1.8 16 V	107	03/96 – 11/99	3683	

MAKE & MODEL		KW	YEAR		
ROVER					
COUPE	1.8 16 V	107	03/96 – 11/99	3872	
COUPE	1.8 16 V	107	03/96 – 11/99		4212
MAESTRO	13	49	09/90 – 01/95	3624	
MAESTRO	13	51	09/90 – 01/95	3624	
MAESTRO	16	63	09/90 – 01/95	3624	
MAESTRO	2.0 D	44	09/90 – 10/92	3624	
MAESTRO	2.0 TD	60	09/90 – 01/95	3624	
MONTEGO	16	61	10/90 – 09/92	3624	
MONTEGO	2.0 D Turbo	60	10/88 – 10/95	3624	
MONTEGO	2.0 GTi	86	10/88 – 10/91	3624	
MONTEGO	2.0 i CAT	75	12/90 – 10/94	3624	
MONTEGO Estate (XE)	13	50	10/84 – 10/88	3624	
MONTEGO Estate (XE)	16	61	10/90 – 09/92	3624	
MONTEGO Estate (XE)	2.0 GTI/LXI	75	12/90 – 12/93	3624	
MONTEGO Estate (XE)	2.0 GTi	86	10/88 – 10/91	3624	
MONTEGO Estate (XE)	2.0 Turbo-D	60	01/93 – 12/93	3624	
STREETWISE	14	62	08/03 – 05/05	3683	
STREETWISE	14	62	08/03 – 05/05	3872	
STREETWISE	14	62	08/03 – 05/05		4212
STREETWISE	14	76	08/03 – 05/05	3683	
STREETWISE	14	76	08/03 – 05/05	3872	
STREETWISE	14	76	08/03 – 05/05		4212
STREETWISE	16	80	01/04 – 05/05	3683	
STREETWISE	16	80	01/04 – 05/05	3872	
STREETWISE	16	80	01/04 – 05/05		4212
STREETWISE	18	86	08/03 – 05/05	3683	
STREETWISE	18	86	08/03 – 05/05	3872	
STREETWISE	18	86	08/03 – 05/05		4212
STREETWISE	2.0 TD	74	08/03 – 05/05	3683	
STREETWISE	2.0 TD	74	08/03 – 05/05	3872	
STREETWISE	2.0 TD	74	08/03 – 05/05		4212
SAAB					
90	20	74	08/84 – 08/87		3326
90	20	74	08/84 – 08/87	3360	
90	20	74	08/84 – 08/87	3361	
99	20	70	10/72 – 08/74	3318	
99	20	70	10/72 – 08/74		3326
99	20	70	10/72 – 08/74	3338	
99	20	70	10/72 – 08/74	3353	
99	20	70	10/72 – 08/74	3360	
99	20	70	10/72 – 08/74	3361	
99	20	70	10/72 – 08/74	3362	
99	2.0 EMS	81	04/72 – 08/74	3318	
99	2.0 EMS	81	04/72 – 08/74		3326
99	2.0 EMS	81	04/72 – 08/74	3338	
99	2.0 EMS	81	04/72 – 08/74	3353	
99	2.0 EMS	81	04/72 – 08/74	3360	
99	2.0 EMS	81	04/72 – 08/74	3361	
99	2.0 EMS	81	04/72 – 08/74	3362	
99	2.0 EMS	87	09/74 – 12/78		3326
99	2.0 EMS	87	09/74 – 12/78	3360	
99	2.0 EMS	87	09/74 – 12/78	3361	
99	2.0 GL	74	09/74 – 12/84		3326
99	2.0 GL	74	09/74 – 12/84	3360	
99	2.0 GL	74	09/74 – 12/84	3361	
9000	20	99	10/88 – 08/90		3583
9000	23	110	10/89 – 01/92		3583
9000	23	165	09/90 – 10/98		3583
9000	2.0 -16	94	01/89 – 01/93		3583
9000	2.0 -16 CD	96	09/93 – 12/98		3583
9000	2.0 -16 CD	110	09/93 – 12/98		3583
9000	2.0 -16 Turbo	118	05/88 – 08/93		3583
9000	2.0 -16 Turbo	127	03/90 – 09/93		3583
9000	2.0 -16 Turbo	129	04/85 – 12/91		3583
9000	2.0 -16 Turbo CD	108	09/92 – 12/98		3583
9000	2.0 -16 Turbo CD	120	09/88 – 08/93		3583
9000	2.0 -16 Turbo CD	136	09/89 – 12/98		3583
9000	2.0 Carlsson	143	09/89 – 08/90		3583
9000	2.0 T16	150	06/89 – 10/90		3583
9000	2.3 -16 CD	107	08/89 – 12/98		3583
9000	2.3 -16 CD Turbo	147	07/90 – 12/98		3583

MAKE & MODEL		KW	YEAR		
SAAB					
9000	2.3 -16 CDE	108	09/93 – 12/98		3583
9000	2.3 -16 CDE Eco-Power	125	09/93 – 12/98		3583
9000	2.3 -16 Turbo	143	09/90 – 08/93		3583
9000	3.0 -24 V6 CD/CDE	155	07/94 – 12/98		3583
900 I (AC4, AM4)	20	74	10/85 – 09/88		3326
900 I (AC4, AM4)	20	74	10/85 – 09/88	3360	
900 I (AC4, AM4)	20	74	10/85 – 09/88	3361	
900 I (AC4, AM4)	20	74	10/85 – 09/88		3583
900 I (AC4, AM4)	20	80	09/83 – 03/84		3326
900 I (AC4, AM4)	20	80	09/83 – 03/84	3360	
900 I (AC4, AM4)	20	80	09/83 – 03/84	3361	
900 I (AC4, AM4)	20	98	10/87 – 10/91		3583
900 I (AC4, AM4)	2.0 -16	92	01/86 – 12/88		3326
900 I (AC4, AM4)	2.0 -16	92	01/86 – 12/88	3360	
900 I (AC4, AM4)	2.0 -16	92	01/86 – 12/88	3361	
900 I (AC4, AM4)	2.0 -16	92	01/86 – 12/88		3583
900 I (AC4, AM4)	2.0 -16	93	01/89 – 12/93		3583
900 I (AC4, AM4)	2.0 8V Turbo	114	01/88 – 12/90		3583
900 I (AC4, AM4)	2.0 c	74	07/82 – 12/88		3326
900 I (AC4, AM4)	2.0 c	74	07/82 12/88	3360	
900 I (AC4, AM4)	2.0 c	74	07/82 – 12/88	3361	
900 I (AC4, AM4)	2.0 c	74	07/82 – 12/88		3583
900 I (AC4, AM4)	2.0 c	79	11/80 – 08/84		3326
900 I (AC4, AM4)	2.0 c	79	11/80 – 08/84	3360	
900 I (AC4, AM4)	2.0 c	79	11/80 – 08/84	3361	
900 I (AC4, AM4)	2.0 EMS	87	01/79 – 12/80		3326
900 I (AC4, AM4)	2.0 EMS	87	01/79 – 12/80	3360	
900 I (AC4, AM4)	2.0 EMS	87	01/79 – 12/80	3361	
900 I (AC4, AM4)	2.0 i	81	09/85 - 08/90		3326
900 I (AC4, AM4)	2.0 i	81	09/85 – 08/90	3360	
900 I (AC4, AM4)	2.0 i	81	09/85 – 08/90	3361	
900 I (AC4, AM4)	2.0 i	81	09/85 – 08/90		3583
900 I (AC4, AM4)	2.0 i	85	11/80 – 08/90		3326
900 I (AC4, AM4)	2.0 i	85	11/80 – 08/90	3360	
900 I (AC4, AM4)	2.0 i	85	11/80 – 08/90	3361	
900 I (AC4, AM4)	2.0 i	85	11/80 – 08/90		3583
900 I (AC4, AM4)	2.0 S Turbo-16	104	07/91 – 12/93		3583
900 I (AC4, AM4)	2.0 S Turbo-16	107	01/92 – 12/93		3583
900 I (AC4, AM4)	2.0 Turbo	103	10/86 – 12/91		3326
900 I (AC4, AM4)	2.0 Turbo	103	10/86 – 12/91	3360	
900 I (AC4, AM4)	2.0 Turbo	103	10/86 – 12/91	3361	
900 I (AC4, AM4)	2.0 Turbo	103	10/86 – 12/91		3583
900 I (AC4, AM4)	2.0 Turbo	107	10/80 – 07/85		3326
900 I (AC4, AM4)	2.0 Turbo	107	10/80 – 07/85	3360	
900 I (AC4, AM4)	2.0 Turbo	107	10/80 – 07/85	3361	
900 I (AC4, AM4)	2.0 Turbo	110	01/86 – 12/88		3326
900 I (AC4, AM4)	2.0 Turbo	110	01/86 – 12/88	3360	
900 I (AC4, AM4)	2.0 Turbo	110	01/86 – 12/88	3361	
900 I (AC4, AM4)	2.0 Turbo	110	01/86 – 12/88		3583
900 I (AC4, AM4)	2.0 Turbo-16	118	11/85 – 12/93		3326
900 I (AC4, AM4)	2.0 Turbo-16	118	11/85 – 12/93	3360	
900 I (AC4, AM4)	2.0 Turbo-16	118	11/85 – 12/93	3361	
900 I (AC4, AM4)	2.0 Turbo-16	118	11/85 – 12/93		3583
900 I (AC4, AM4)	2.0 Turbo-16 S	129	01/84 – 12/88		3326
900 I (AC4, AM4)	2.0 Turbo-16 S	129	01/84 – 12/88	3360	
900 I (AC4, AM4)	2.0 Turbo-16 S	129	01/84 – 12/88	3361	
900 I (AC4, AM4)	2.0 Turbo-16 S	129	01/84 – 12/88		3583
900 I (AC4, AM4)	2.0 Turbo-16 S CAT	129	01/89 – 12/93		3583
900 I (AC4, AM4)	2.1 -16	100	08/90 – 12/93		3583
900 I (AC4, AM4)	2.1 16 S	107	10/89 – 07/92		3583
900 I Combi Coupe	20	74	04/84 – 10/91		3326
900 I Combi Coupe	20	74	04/84 – 10/91	3360	
900 I Combi Coupe	20	74	04/84 – 10/91	3361	
900 I Combi Coupe	20	74	04/84 – 10/91		3583
900 I Combi Coupe	20	80	06/78 – 03/84		3326
900 I Combi Coupe	20	80	06/78 – 03/84	3360	
900 I Combi Coupe	20	80	06/78 – 03/84	3361	
900 I Combi Coupe	2.0 -16	92	01/86 – 12/88		3326
900 I Combi Coupe	2.0 -16	92	01/86 – 12/88	3360	
900 I Combi Coupe	2.0 -16	92	01/86 – 12/88	3361	
900 I Combi Coupe	2.0 -16	92	01/86 – 12/88		3583

MAKE & MODEL   		KW	YEAR		
SAAB					
900 I Combi Coupe	2.0 -16	93	01/89 – 08/92		3583
900 I Combi Coupe	2.0 -16	107	05/91 – 10/93		3583
900 I Combi Coupe	2.0 c	74	09/79 – 12/88		3326
900 I Combi Coupe	2.0 c	74	09/79 – 12/88	3360	
900 I Combi Coupe	2.0 c	74	09/79 – 12/88	3361	
900 I Combi Coupe	2.0 c	74	09/79 – 12/88		3583
900 I Combi Coupe	2.0 c	79	09/78 – 08/84		3326
900 I Combi Coupe	2.0 c	79	09/78 – 08/84	3360	
900 I Combi Coupe	2.0 c	79	09/78 - 08/84	3361	
900 I Combi Coupe	2.0 EMS	87	09/78 – 08/79		3326
900 I Combi Coupe	2.0 EMS	87	09/78 – 08/79	3360	
900 I Combi Coupe	2.0 EMS	87	09/78 – 08/79	3361	
900 I Combi Coupe	2.0 i	81	09/85 – 08/90		3326
900 I Combi Coupe	2.0 i	81	09/85 – 08/90	3360	
900 I Combi Coupe	2.0 i	81	09/85 – 08/90	3361	
900 I Combi Coupe	2.0 i	81	09/85 – 08/90		3583
900 I Combi Coupe	2.0 i	85	11/80 – 12/88		3326
900 I Combi Coupe	2.0 i	85	11/80 – 12/88	3360	
900 I Combi Coupe	2.0 i	85	11/80 – 12/88	3361	
900 I Combi Coupe	2.0 i	85	11/80 – 12/88		3583
900 I Combi Coupe	2.0 S Turbo-16	104	09/91 – 07/93		3583
900 I Combi Coupe	2.0 T8	114	10/86 – 09/89		3326
900 I Combi Coupe	2.0 T8	114	10/86 – 09/89	3360	
900 I Combi Coupe	2.0 T8	114	10/86 – 09/89	3361	
900 I Combi Coupe	2.0 T8	114	10/86 – 09/89		3583
900 I Combi Coupe	2.0 Turbo	103	10/86 – 12/91		3326
900 I Combi Coupe	2.0 Turbo	103	10/86 – 12/91	3360	
900 I Combi Coupe	2.0 Turbo	103	10/86 – 12/91	3361	
900 I Combi Coupe	2.0 Turbo	103	10/86 – 12/91		3583
900 I Combi Coupe	2.0 Turbo	107	09/78 – 07/85		3326
900 I Combi Coupe	2.0 Turbo	107	09/78 – 07/85	3360	
900 I Combi Coupe	2.0 Turbo	107	09/78 – 07/85	3361	
900 I Combi Coupe	2.0 Turbo	110	01/86 – 12/88		3326
900 I Combi Coupe	2.0 Turbo	110	01/86 – 12/88	3360	
900 I Combi Coupe	2.0 Turbo	110	01/86 – 12/88	3361	
900 I Combi Coupe	2.0 Turbo	110	01/86 – 12/88		3583
900 I Combi Coupe	2.0 Turbo-16	118	11/85 – 06/94		3326
900 I Combi Coupe	2.0 Turbo-16	118	11/85 – 06/94	3360	
900 I Combi Coupe	2.0 Turbo-16	118	11/85 – 06/94	3361	
900 I Combi Coupe	2.0 Turbo-16	118	11/85 – 06/94		3583
900 I Combi Coupe	2.0 Turbo-16	132	01/93 – 06/94		3583
900 I Combi Coupe	2.0 Turbo-16 S	129	02/84 – 12/88		3326
900 I Combi Coupe	2.0 Turbo-16 S	129	02/84 – 12/88	3360	
900 I Combi Coupe	2.0 Turbo-16 S	129	02/84 – 12/88	3361	
900 I Combi Coupe	2.0 Turbo-16 S	129	02/84 – 12/88		3583
900 I Combi Coupe	2.0 Turbo-16 S CAT	125	01/89 – 12/93		3583
900 I Combi Coupe	2.1 -16	100	09/90 – 07/93		3583
900 I Combi Coupe	2.1 16 S	107	10/89 – 07/92		3583
900 I Convertible	20	81	10/85 – 09/89		3326
900 I Convertible	20	81	10/85 – 09/89	3360	
900 I Convertible	20	81	10/85 – 09/89	3361	
900 I Convertible	20	81	10/85 – 09/89		3583
900 I Convertible	20	107	05/91 – 10/93		3583
900 I Convertible	20	125	10/89 – 10/93		3583
900 I Convertible	2.0 -16	93	01/90 – 06/94		3583
900 I Convertible	2.0 16v	98	04/90 – 12/90		3583
900 I Convertible	2.0 S Turbo-16	104	09/91 – 06/94		3583
900 I Convertible	2.0 Turbo-16	118	11/86 – 06/94		3326
900 I Convertible	2.0 Turbo-16	118	11/86 – 06/94	3360	
900 I Convertible	2.0 Turbo-16	118	11/86 – 06/94	3361	
900 I Convertible	2.0 Turbo-16	118	11/86 – 06/94		3583
900 I Convertible	2.0 Turbo-16 S	129	11/86 – 06/94		3326
900 I Convertible	2.0 Turbo-16 S	129	11/86 – 06/94	3360	
900 I Convertible	2.0 Turbo-16 S	129	11/86 – 06/94	3361	
900 I Convertible	2.0 Turbo-16 S	129	11/86 – 06/94		3583
900 I Convertible	2.1 -16	100	08/90 – 06/94		3583
900 I Convertible	2.1 16 S	107	10/89 – 07/92		3583
900 II	2.0 -16 Turbo	136	07/93 – 02/98		3469
900 II	2.0 -16 Turbo	136	07/93 – 02/98	3717	
900 II	2.0 -16 Turbo	136	07/93 – 02/98	3736	
900 II	2.0 i	96	08/94 – 02/98		3469

MAKE & MODEL		KW	YEAR		
SAAB					
900 II	2.0 i	96	08/94 – 02/98	3717	
900 II	2.0 i	96	08/94 – 02/98	3736	
900 II	2.0 i	98	07/93 – 07/94		3469
900 II	2.0 i	98	07/93 – 07/94	3736	
900 II	2.3 -16	110	07/93 – 02/98		3469
900 II	2.3 -16	110	07/93 – 02/98	3717	
900 II	2.3 -16	110	07/93 – 02/98	3736	
900 II	2.5 -24 V6	125	07/93 – 02/98		3469
900 II	2.5 -24 V6	125	07/93 – 02/98	3717	
900 II	2.5 -24 V6	125	07/93 – 02/98	3736	
900 II Convertible	2.0 -16 Turbo	136	12/93 – 02/98		3469
900 II Convertible	2.0 -16 Turbo	136	12/93 – 02/98	3717	
900 II Convertible	2.0 -16 Turbo	136	12/93 – 02/98	3736	
900 II Convertible	2.0 i	96	12/93 – 02/98		3469
900 II Convertible	2.0 i	96	12/93 – 02/98	3717	
900 II Convertible	2.0 i	96	12/93 – 02/98	3736	
900 II Convertible	2.3 -16	110	12/93 – 02/98		3469
900 II Convertible	2.3 -16	110	12/93 – 02/98	3717	
900 II Convertible	2.3 -16	110	12/93 – 02/98	3736	
900 II Convertible	2.5 -24 V6	125	12/93 – 02/98		3469
900 II Convertible	2.5 -24 V6	125	12/93 – 02/98	3717	
900 II Convertible	2.5 -24 V6	125	12/93 – 02/98	3736	
900 II Coupe	2.0 -16 Turbo	136	12/93 – 02/98		3469
900 II Coupe	2.0 -16 Turbo	136	12/93 – 02/98	3717	
900 II Coupe	2.0 -16 Turbo	136	12/93 – 02/98	3736	
900 II Coupe	2.0 i	96	08/94 – 02/98		3469
900 II Coupe	2.0 i	96	08/94 – 02/98	3717	
900 II Coupe	2.0 i	96	08/94 – 02/98	3736	
900 II Coupe	2.0 i	98	12/93 – 07/94		3469
900 II Coupe	2.0 i	98	12/93 – 07/94	3736	
900 II Coupe	2.3 -16	110	12/93 – 02/98		3469
900 II Coupe	2.3 -16	110	12/93 – 02/98	3717	
900 II Coupe	2.3 -16	110	12/93 – 02/98	3736	
900 II Coupe	2.5 -24 V6	125	12/93 – 02/98		3469
900 II Coupe	2.5 -24 V6	125	12/93 – 02/98	3717	
900 II Coupe	2.5 -24 V6	125	12/93 – 02/98	3736	
9000 Hatchback	20	99	10/88 – 01/90		3583
9000 Hatchback	23	110	01/90 – 12/93		3583
9000 Hatchback	2.0 -16	92	12/85 – 12/88		3583
9000 Hatchback	2.0 -16	94	12/85 – 08/88		3583
9000 Hatchback	2.0 -16 CS	94	01/89 – 12/98		3583
9000 Hatchback	2.0 -16 CS	96	09/93 – 12/98		3583
9000 Hatchback	2.0 -16 ND Turbo	110	09/93 – 12/98		3583
9000 Hatchback	2.0 -16 Turbo	118	09/84 – 08/93		3583
9000 Hatchback	2.0 -16 Turbo	120	05/88 – 08/93		3583
9000 Hatchback	2.0 -16 Turbo	127	06/89 – 12/92		3583
9000 Hatchback	2.0 -16 Turbo	129	09/84 – 12/91		3583
9000 Hatchback	2.0 -16 Turbo CS	136	09/88 – 12/98		3583
9000 Hatchback	2.0 16v	143	09/89 – 01/90		3583
9000 Hatchback	2.0 T16	150	06/89 – 10/90		3583
9000 Hatchback	2.3 -16 Aero CS	162	02/93 – 12/98		3583
9000 Hatchback	2.3 -16 Aero CS	165	02/93 – 12/98		3583
9000 Hatchback	2.3 -16 CS	107	09/89 – 12/98		3583
9000 Hatchback	2.3 -16 CSE	108	09/93 – 12/98		3583
9000 Hatchback	2.3 -16 CSE Eco Power	125	09/93 – 12/98		3583
9000 Hatchback	2.3 -16 Turbo	143	09/90 – 12/98		3583
9000 Hatchback	2.3 -16 Turbo CSE	147	09/93 – 12/98		3583
9000 Hatchback	3.0 -24 V6 CS/CSE	155	07/94 – 12/98		3583
9-3 II (YS3F)	1,8t (B207E)	110	08/03 – 02/15	4211	
9-3 II (YS3F)	1,8t (B207E)	110	09/02 – 02/15	4211	
9-3 II (YS3F)	1,8t BioPower (B207E)	110	01/07 – 02/15	4211	
9-3 II (YS3F)	1,8t BioPower (B207E)	110	01/07 – 02/15	4211	
9-3 II (YS3F)	1,8t BioPower (B207L)	129	01/07 – 02/15	4211	
9-3 II (YS3F)	1.8 i (Z 18 XE)	90	03/05 – 02/15	4211	
9-3 II (YS3F)	1.8 i (Z 18 XE)	90	01/04 – 02/15	4211	
9-3 II (YS3F)	1.8t 2.0 (B207E)	110	03/05 – 02/15	4211	
9-3 II (YS3F)	1.9 TiD (Z 19 DT)	88	09/04 – 02/15	4211	
9-3 II (YS3F)	1.9 TiD (Z 19 DTH)	110	01/06 – 02/15	4211	
9-3 II (YS3F)	1.9 TiD (Z 19 DTH)	110	03/05 – 02/15	4211	
9-3 II (YS3F)	1.9 TiD (Z 19 DTH)	110	09/04 – 02/15	4211	
9-3 II (YS3F)	1.9 TiD (Z 19 DTJ)	88	03/05 – 02/15	4211	

MAKE & MODEL		KW	YEAR		
SAAB					
9-3 II (YS3F)	1.9 TTiD (A 19 DTR)	132	12/07 – 02/15	4211	
9-3 II (YS3F)	1.9 TTiD (A 19 DTR)	132	12/07 – 02/15	4211	
9-3 II (YS3F)	1.9 TTiD (Z 19 DTR)	132	12/07 – 02/15	4211	
9-3 II (YS3F)	1.9 TTiD (Z 19 DTR)	132	12/07 – 02/15	4211	
9-3 II (YS3F)	1.9 TTiD (Z 19 DTR)	132	12/07 – 02/15	4211	
9-3 II (YS3F)	2.0 (B207L)	143	04/06 – 09/07	4211	
9-3 II (YS3F)	2.0 (B207L)	143	04/06 – 09/07	4211	
9-3 II (YS3F)	2.0 T (B207L)	129	08/03 – 02/15	4211	
9-3 II (YS3F)	2.0 T (B207L)	129	03/05 – 02/15	4211	
9-3 II (YS3F)	2.0 T (B207L)	129	09/02 – 02/15	4211	
9-3 II (YS3F)	2.0 T (B207E)	110	03/05 – 02/15	4211	
9-3 II (YS3F)	2.0 T (B207R)	154	08/03 – 02/15	4211	
9-3 II (YS3F)	2.0 T (B207R)	154	03/05 – 02/15	4211	
9-3 II (YS3F)	2.0 T (B207R)	154	06/08 – 02/15	4211	
9-3 II (YS3F)	2.0 T (B207R)	154	09/02 – 02/15	4211	
9-3 II (YS3F)	2.0 t BioPower	145	06/07 -	4211	
9-3 II (YS3F)	2.0 t BioPower (B207E)	110	01/07 – 02/15	4211	
9-3 II (YS3F)	2.0 t BioPower (B207L)	129	01/07 – 02/15	4211	
9-3 II (YS3F)	2.0 t BioPower (B207L)	129	01/07 – 02/15	4211	
9-3 II (YS3F)	2.0 t BioPower (B207L)	129	01/07 – 02/15	4211	
9-3 II (YS3F)	2.0 t BioPower (B207M)	147	06/07 – 02/15	4211	
9-3 II (YS3F)	2.0 t BioPower (B207R)	145	06/07 – 02/15	4211	
9-3 II (YS3F)	2.0 t BioPower (B207R)	145	06/07 – 02/15	4211	
9-3 II (YS3F)	2.0 t BioPower (B207R)	154	09/02 – 02/15	4211	
9-3 II (YS3F)	2.0 Turbo (B207R)	154	01/08 – 02/15	4211	
9-3 II (YS3F)	2.0 Turbo Performance (B207R)	185	04/04 – 02/15	4211	
9-3 II (YS3F)	2.0 Turbo Performance (B207R)	185	04/04 – 02/15	4211	
9-3 II (YS3F)	2.2 TiD (D223L)	92	09/02 – 02/15	4211	
9-3 II (YS3F)	2.8 Turbo V6 (B284L)	188	12/07 – 02/15	4211	
9-3 II (YS3F)	2.8 Turbo V6 (B284L)	188	12/07 – 02/15	4211	
9-3 II (YS3F)	2.8 Turbo V6 (B284L)	188	12/07 – 02/15	4211	
9-3 II (YS3F)	2.8 Turbo V6 (LP9)	184	02/06 – 02/15	4211	
9-3 II (YS3F)	2.8 Turbo V6 (LP9)	184	03/05 – 02/15	4211	
9-3 II (YS3F)	2.8 Turbo V6 (LP9)	184	03/05 – 02/15	4211	
9-3 (YS3D)	23	169	09/99 – 01/02	3717	
9-3 (YS3D)	2.0 i	96	02/98 – 09/02	3717	
9-3 (YS3D)	2.0 SE Turbo	147	02/98 – 09/02	3717	
9-3 (YS3D)	2.0 Turbo	110	01/01 – 09/02	3717	
9-3 (YS3D)	2.0 Turbo	113	10/98 – 09/02	3717	
9-3 (YS3D)	2.0 Turbo	136	02/98 – 09/02	3717	
9-3 (YS3D)	2.0 Turbo	151	10/99 – 09/02	3717	
9-3 (YS3D)	2.2 TiD	85	02/98 – 11/00	3717	
9-3 (YS3D)	2.2 TiD	92	11/00 – 09/02	3717	
9-3 (YS3D)	2.3 i	110	02/98 – 09/02	3717	
9-3 (YS3D)	2.3 Turbo	165	10/98 – 09/02	3717	
9-3 (YS3F)	1,8t	110	09/02 – 02/15		3853/1
9-3 (YS3F)	1,8t BioPower	110	01/07 – 02/15		3853/1
9-3 (YS3F)	1,8t BioPower	129	05/09 – 02/15		3853/1
9-3 (YS3F)	1.8 i	90	01/04 – 02/15		3853/1
9-3 (YS3F)	1.9 TiD	88	09/04 – 02/15		3853/1
9-3 (YS3F)	1.9 TiD	110	09/04 – 02/15		3853/1
9-3 (YS3F)	1.9 TTiD	96	12/07 – 02/15		3853/1
9-3 (YS3F)	1.9 TTiD	118	12/07 – 02/15		3853/1
9-3 (YS3F)	1.9 TTiD	132	12/07 – 02/15		3853/1
9-3 (YS3F)	2.0 t	120	01/07 – 02/15		3853/1
9-3 (YS3F)	2.0 t	129	09/02 – 02/15		3853/1
9-3 (YS3F)	2.0 t	154	09/02 – 02/15		3853/1
9-3 (YS3F)	2.0 t	162	01/11 – 02/15		3853/1
9-3 (YS3F)	2.0 t	177	05/09 – 02/15		3853/1
9-3 (YS3F)	2.0 t Bio Power	120	01/07 – 02/15		3853/1
9-3 (YS3F)	2.0 t Bio Power	162	01/11 – 02/15		3853/1
9-3 (YS3F)	2.0 t BioPower	129	01/07 – 02/15		3853/1
9-3 (YS3F)	2.0 t BioPower	145	06/07 – 02/15		3853/1
9-3 (YS3F)	2.0 t BioPower	147	05/09 – 02/15		3853/1
9-3 (YS3F)	2.0 t BioPower	154	09/02 – 02/15		3853/1
9-3 (YS3F)	2.0 t BioPower XWD	120	01/08 – 02/15		3853/1
9-3 (YS3F)	2.0 t BioPower XWD	154	01/08 – 02/15		3853/1
9-3 (YS3F)	2.0 t BioPower XWD	162	01/08 – 02/15		3853/1
9-3 (YS3F)	2.0 t XWD	120	01/07 – 02/15		3853/1
9-3 (YS3F)	2.0 t XWD	162	01/08 – 02/15		3853/1
9-3 (YS3F)	2.0 t XWD	177	05/09 – 02/15		3853/1

MAKE & MODEL		KW	YEAR		
SAAB					
9-3 (YS3F)	2.0 Turbo Performance	185	04/04 – 02/15		3853/1
9-3 (YS3F)	2.0 Turbo XWD	154	01/08 – 02/15		3853/1
9-3 (YS3F)	2.2 TiD	92	09/02 – 02/15		3853/1
9-3 (YS3F)	2.8 Turbo V6	169	03/05 – 02/15		3853/1
9-3 (YS3F)	2.8 Turbo V6	184	03/05 – 02/15		3853/1
9-3 (YS3F)	2.8 Turbo V6	188	12/07 – 02/15		3853/1
9-3 (YS3F)	2.8 Turbo V6	203	04/08 – 02/15		3853/1
9-3 (YS3F)	2.8 Turbo V6 XWD	206	05/08 – 02/15		3853/1
9-3 Cabriolet (YS3D)	23	169	09/99 – 01/02	3717	
9-3 Cabriolet (YS3D)	2.0 i	96	02/98 – 08/03	3717	
9-3 Cabriolet (YS3D)	2.0 SE Turbo	147	02/98 – 08/03	3717	
9-3 Cabriolet (YS3D)	2.0 Turbo	110	01/01 – 08/03	3717	
9-3 Cabriolet (YS3D)	2.0 Turbo	113	10/98 – 08/03	3717	
9-3 Cabriolet (YS3D)	2.0 Turbo	136	02/98 – 08/03	3717	
9-3 Cabriolet (YS3D)	2.0 Turbo	151	10/99 – 08/03	3717	
9-3 Cabriolet (YS3D)	2.3 i	110	02/98 – 08/03	3717	
9-3 Cabriolet (YS3D)	2.3 Turbo	165	10/99 – 08/03	3717	
9-3 Convertible (YS3F)	1,8t	110	08/03 – 02/15		3853/1
9-3 Convertible (YS3F)	1,8t BioPower	110	01/07 – 02/15		3853/1
9-3 Convertible (YS3F)	1,8t BioPower	129	01/07 – 02/15		3853/1
9-3 Convertible (YS3F)	1.8 i	90	01/04 – 02/15		3853/1
9-3 Convertible (YS3F)	1.9 TiD	88	09/04 – 02/15		3853/1
9-3 Convertible (YS3F)	1.9 TiD	110	01/06 – 02/15		3853/1
9-3 Convertible (YS3F)	1.9 TTiD	96	12/07 – 02/15		3853/1
9-3 Convertible (YS3F)	1.9 TTiD	118	12/07 – 02/15		3853/1
9-3 Convertible (YS3F)	1.9 TTiD	132	12/07 – 02/15		3853/1
9-3 Convertible (YS3F)	2.0 t	120	01/11 – 02/15		3853/1
9-3 Convertible (YS3F)	2.0 t	129	08/03 – 02/15		3853/1
9-3 Convertible (YS3F)	2.0 t	154	08/03 – 02/15		3853/1
9-3 Convertible (YS3F)	2.0 t	162	01/11 – 02/15		3853/1
9-3 Convertible (YS3F)	2.0 t BioPower	120	01/11 – 02/15		3853/1
9-3 Convertible (YS3F)	2.0 t BioPower	129	01/07 – 02/15		3853/1
9-3 Convertible (YS3F)	2.0 t BioPower	147	06/07 – 02/15		3853/1
9-3 Convertible (YS3F)	2.0 t BioPower	162	01/11 – 02/15		3853/1
9-3 Convertible (YS3F)	2.0 Turbo Performance	185	04/04 – 02/15		3853/1
9-3 Convertible (YS3F)	2.8 Turbo V6	169	02/06 – 02/15		3853/1
9-3 Convertible (YS3F)	2.8 Turbo V6	184	02/06 – 02/15		3853/1
9-3 Convertible (YS3F)	2.8 Turbo V6	188	12/07 – 02/15		3853/1
9-3 Convertible (YS3F)	2.8 Turbo V6	203	02/09 – 02/15		3853/1
9-3 Convertible (YS3F)	2.8 Turbo V6	206	02/09 – 02/15		3853/1
9-3 Estate (YS3F)	1.8 i	90	03/05 – 02/15		3853/1
9-3 Estate (YS3F)	1.8t 2.0	110	03/05 – 02/15		3853/1
9-3 Estate (YS3F)	1.9 TiD	88	03/05 – 02/15		3853/1
9-3 Estate (YS3F)	1.9 TiD	110	03/05 – 02/15		3853/1
9-3 Estate (YS3F)	1.9 TTiD	96	12/07 – 02/15		3853/1
9-3 Estate (YS3F)	1.9 TTiD	118	12/07 – 02/15		3853/1
9-3 Estate (YS3F)	1.9 TTiD	132	12/07 – 02/15		3853/1
9-3 Estate (YS3F)	2.0 t	110	03/05 – 02/15		3853/1
9-3 Estate (YS3F)	2.0 t	120	01/07 – 02/15		3853/1
9-3 Estate (YS3F)	2.0 t	129	03/05 – 02/15		3853/1
9-3 Estate (YS3F)	2.0 t	147	02/09 – 02/15		3853/1
9-3 Estate (YS3F)	2.0 t	154	03/05 – 02/15		3853/1
9-3 Estate (YS3F)	2.0 t	162	01/11 – 02/15		3853/1
9-3 Estate (YS3F)	2.0 t	177	05/09 – 02/15		3853/1
9-3 Estate (YS3F)	2.0 t Bio Power	147	02/09 – 02/15		3853/1
9-3 Estate (YS3F)	2.0 t Bio Power XWD	154	06/08 – 02/15		3853/1
9-3 Estate (YS3F)	2.0 t BioPower	110	01/07 – 02/15		3853/1
9-3 Estate (YS3F)	2.0 t BioPower	120	01/11 – 02/15		3853/1
9-3 Estate (YS3F)	2.0 t BioPower	129	01/07 – 02/15		3853/1
9-3 Estate (YS3F)	2.0 t BioPower	145	06/07 – 02/15		3853/1
9-3 Estate (YS3F)	2.0 t BioPower	162	01/11 – 02/15		3853/1
9-3 Estate (YS3F)	2.0 t BioPower XWD	120	01/11 – 02/15		3853/1
9-3 Estate (YS3F)	2.0 t BioPower XWD	162	01/11 – 02/15		3853/1
9-3 Estate (YS3F)	2.0 t XWD	120	01/07 – 02/15		3853/1
9-3 Estate (YS3F)	2.0 t XWD	154	06/08 – 02/15		3853/1
9-3 Estate (YS3F)	2.0 t XWD	162	01/11 – 02/15		3853/1
9-3 Estate (YS3F)	2.0 t XWD	177	05/09 – 02/15		3853/1
9-3 Estate (YS3F)	2.8 Turbo V6	169	03/05 – 02/15		3853/1
9-3 Estate (YS3F)	2.8 Turbo V6	184	03/05 – 02/15		3853/1
9-3 Estate (YS3F)	2.8 Turbo V6	188	12/07 – 02/15		3853/1
9-3 Estate (YS3F)	2.8 Turbo V6	203	05/08 – 02/15		3853/1

MAKE & MODEL		KW	YEAR		
SAAB					
9-3 Estate (YS3F)	2.8 Turbo V6 XWD	206	05/08 – 02/15		3853/1
9-3X	1.9 TTiD	132	02/09 – 12/12		3853/1
9-3X	2.0 t BioPower XWD	154	02/09 – 12/12		3853/1
9-3X	2.0 t BioPower XWD	162	01/11 – 12/12		3853/1
9-3X	2.0 t XWD	154	02/09 – 12/12		3853/1
9-5 (YS3E)	2.3 Turbo	162	07/03 – 12/09	3665	
9-5 (YS3E)	2.3 Turbo	184	09/01 – 12/09	3665	
9-5 (YS3E)	2.3 Turbo	191	11/05 – 12/09	3665	
9-5 (YS3G)	1.6 Turbo	132	05/10 – 01/12	4149	
9-5 (YS3G)	1.6 Turbo	132	05/10 – 01/12		4150
9-5 (YS3G)	2.0 t BioPower	162	05/10 – 01/12	4149	
9-5 (YS3G)	2.0 t BioPower	162	05/10 – 01/12		4150
9-5 (YS3G)	2.0 t BioPower XWD	162	05/10 – 01/12	4149	
9-5 (YS3G)	2.0 t BioPower XWD	162	05/10 – 01/12		4150
9-5 (YS3G)	2.0 TiD	118	05/10 – 01/12	4149	
9-5 (YS3G)	2.0 TiD	118	05/10 – 01/12		4150
9-5 (YS3G)	2.0 TTiD	140	05/10 – 01/12	4149	
9-5 (YS3G)	2.0 TTiD	140	05/10 – 01/12		4150
9-5 (YS3G)	2.0 TTiD XWD	140	05/10 – 01/12	4149	
9-5 (YS3G)	2.0 TTiD XWD	140	05/10 – 01/12		4150
9-5 (YS3G)	2.0 Turbo	162	05/10 – 01/12	4149	
9-5 (YS3G)	2.0 Turbo	162	05/10 – 01/12		4150
9-5 (YS3G)	2.0 Turbo XWD	162	05/10 – 01/12	4149	
9-5 (YS3G)	2.0 Turbo XWD	162	05/10 – 01/12		4150
9-5 (YS3G)	2.8 Turbo V6 XWD	221	05/10 – 01/12	4149	
9-5 (YS3G)	2.8 Turbo V6 XWD	221	05/10 – 01/12		4150
9-5 Estate (YS3E)	2.3 Turbo	162	07/03 – 12/09	3665	
9-5 Estate (YS3E)	2.3 Turbo	184	09/01 – 12/09	3665	
9-5 Estate (YS3E)	2.3 Turbo	191	01/06 – 12/09	3665	
9-7X	4.2	213	12/05-07/12	4221	
9-7X	4.2	213	12/05-07/12		4219
9-7X	5.3	220	06/04-07/12	4221	
9-7X	5.3	220	06.04 - 07.12	4218	
9-7X	5.3	220	06/04-07/12		4219
9-7X	6.0 AWD	295	09/07-12/09		4219
9-7X	6.0 AWD	295	09/07-12/09	4221	
99 Combi Coupe	20	79	03/76 – 05/78		3326
99 Combi Coupe	20	79	03/76 – 05/78	3360	
99 Combi Coupe	20	79	03/76 – 05/78	3361	
99 Combi Coupe	2.0 i	87	01/81 – 12/84		3326
99 Combi Coupe	2.0 i	87	01/81 – 12/84	3360	
99 Combi Coupe	2.0 i	87	01/81 – 12/84	3361	
99 Combi Coupe	2.0 Turbo	107	10/77 – 06/80		3326
99 Combi Coupe	2.0 Turbo	107	10/77 – 06/80	3360	
99 Combi Coupe	2.0 Turbo	107	10/77 – 06/80	3361	
SAMSUNG					
QM5	25	126	12/06 -		3933
QM5	25	126	12/06 -	4143	
QM5	2.0 dCi	110	12/06 -		3933
QM5	2.0 dCi	110	12/06 -	4143	
QM5	2.0 dCi 4WD	110	12/06 -		3933
QM5	2.0 dCi 4WD	110	12/06 -	4143	
QM5	2.5 4WD	126	12/06 -		3933
QM5	2.5 4WD	126	12/06 -	4143	
SCION					
FR (U.S.A.)	2.0 S (FA20)	149	09/12 -		4258
SEAT					
1500	15	55	01.66 -	3346	
1500	15	55	01.66 -	3346	
124 Estate (Large family car-D Segment)	1.2 D1200 (124 A.000)		70-74	3357	
124 Estate (Large family car-D Segment)	1.2 LS1200 (124 A.000)		70-76	3357	
124 Sedán (Large family car-D Segment)	1.2 D1200 (124 A.000)		68-76	3357	
124 Sedán (Large family car-D Segment)	1.2 LS1200 (FA12)		68-80	3357	
124 Sedán (Large family car-D Segment)	1.4 1430		70-76	3357	
124 Sedán (Large family car-D Segment)	1.6		75-76	3357	
124 Sedán (Large family car-D Segment)	1.6 (FC16)		76-80	3357	
124 Sedán (Large family car-D Segment)	1.6 1430 Especial		70-76	3357	
124 Sedán (Large family car-D Segment)	1.8		75-80	3357	
124 Sedán (Large family car-D Segment)	2.0		79-80	3357	

MAKE & MODEL   		KW	YEAR		
SEAT					
127 (127A) Fastback (Subcompact car-B Segment)	0.9 (A112 A5.000)		72-82	3357	
127 (127A) Fastback (Subcompact car-B Segment)	1.0		72-82	3357	
128 Sedán (Subcompact car-B Segment)	1.2		76-80	3357	
131 Sedán (Compact car-C Segment)	1.5		82-85	3357	
131 Sedán (Compact car-C Segment)	1.6 (132 BB OA O)		82-85	3357	
131 Sedán (Compact car-C Segment)	2.0 (131 C4.000)		78-85	3357	
132 Sedán (Large family car-D Segment)	1.6		73-80	3357	
132 Sedán (Large family car-D Segment)	1.8		73-80	3357	
132 Sedán (Large family car-D Segment)	2.0 D		73-80	3357	
133 Fastback (City car-A Segment)	0.8 (DG)		74-79	3357	
850 Sedán (Subcompact car-B Segment)	0.9		72-75	3357	
850 Sedán (Subcompact car-B Segment)	0.9		66-74	3357	
850 Sedán (Subcompact car-B Segment)	0.9		66-74	3357	
850 Sedán (Subcompact car-B Segment)	0.9		70-75	3357	
ALHAMBRA (7V8, 7V9)	1.8 T 20V	110	10/97 – 03/10	3506	
ALHAMBRA (7V8, 7V9)	1.8 T 20V	110	10/97 – 03/10	4095	
ALHAMBRA (7V8, 7V9)	1.9 TDI	66	04/96 – 03/10	3506	
ALHAMBRA (7V8, 7V9)	1.9 TDI	81	08/96 – 06/00	3506	
ALHAMBRA (7V8, 7V9)	1.9 TDI	85	06/00 – 03/10	3506	
ALHAMBRA (7V8, 7V9)	1.9 TDI	96	11/02 – 11/08	4095	
ALHAMBRA (7V8, 7V9)	1.9 TDI	110	05/05 – 05/07	4095	
ALHAMBRA (7V8, 7V9)	1.9 TDI 4motion	85	06/00 – 03/10	4095	
ALHAMBRA (7V8, 7V9)	2.0 i	85	04/96 – 03/10	3506	
ALHAMBRA (7V8, 7V9)	2.0 TDI	103	11/05 – 03/10	4095	
ALHAMBRA (7V8, 7V9)	2.8 V6	150	06/00 – 03/10	4095	
ALHAMBRA (7V8, 7V9)	2.8 V6 4motion	150	06/00 – 03/10	4095	
ALTEA (5P1)	16	75	03/04 -		3529/1
ALTEA (5P1)	16	75	03/04 -	3782	
ALTEA (5P1)	16	75	03/04 -		4135
ALTEA (5P1)	1.2 TSI	77	04/10 -		3529/1
ALTEA (5P1)	1.2 TSI	77	04/10 -	3782	
ALTEA (5P1)	1.2 TSI	77	04/10 -		4135
ALTEA (5P1)	1.4 16V	63	05/06 -		3529/1
ALTEA (5P1)	1.4 16V	63	05/06 -	3782	
ALTEA (5P1)	1.4 16V	63	05/06 -		4135
ALTEA (5P1)	1.4 TSI	92	11/07 -		3529/1
ALTEA (5P1)	1.4 TSI	92	11/07 -	3904	
ALTEA (5P1)	1.4 TSI	92	11/07 -		4135
ALTEA (5P1)	1.6 LPG	75	09/09 -		3529/1
ALTEA (5P1)	1.6 LPG	75	09/09 -	3782	
ALTEA (5P1)	1.6 LPG	75	09/09 -		4135
ALTEA (5P1)	1.6 TDI	66	11/10 -		3529/1
ALTEA (5P1)	1.6 TDI	66	11/10 -	3782	
ALTEA (5P1)	1.6 TDI	66	11/10 -		4135
ALTEA (5P1)	1.6 TDI	77	10/09 -		3529/1
ALTEA (5P1)	1.6 TDI	77	10/09 -	3782	
ALTEA (5P1)	1.6 TDI	77	10/09 -	3904	
ALTEA (5P1)	1.6 TDI	77	10/09 -		4135
ALTEA (5P1)	1.8 TFSI	118	01/07 -		3529/1
ALTEA (5P1)	1.8 TFSI	118	01/07 -	3904	
ALTEA (5P1)	1.8 TFSI	118	01/07 -		4135
ALTEA (5P1)	1.9 TDI	66	08/09 -		3529/1
ALTEA (5P1)	1.9 TDI	66	08/09 -	3782	
ALTEA (5P1)	1.9 TDI	66	08/09 -		4135
ALTEA (5P1)	1.9 TDI	77	04/04 -		3529/1
ALTEA (5P1)	1.9 TDI	77	04/04 -	3782	
ALTEA (5P1)	1.9 TDI	77	04/04 -	3904	
ALTEA (5P1)	1.9 TDI	77	04/04 -		4135
ALTEA (5P1)	2.0 FSI	110	05/04 – 03/09		3529/1
ALTEA (5P1)	2.0 FSI	110	05/04 – 03/09	3904	
ALTEA (5P1)	2.0 FSI	110	05/04 – 03/09		4135
ALTEA (5P1)	2.0 TDI	100	03/04 – 05/09		3529/1
ALTEA (5P1)	2.0 TDI	100	03/04 – 05/09	3904	
ALTEA (5P1)	2.0 TDI	100	03/04 – 05/09		4135
ALTEA (5P1)	2.0 TDI	103	11/05 -		3529/1
ALTEA (5P1)	2.0 TDI	103	11/05 -	3904	
ALTEA (5P1)	2.0 TDI	103	11/05 -		4135
ALTEA (5P1)	2.0 TDI	125	03/06 -		3529/1
ALTEA (5P1)	2.0 TDI	125	03/06 -	3904	
ALTEA (5P1)	2.0 TDI 16V	103	03/04 -		3529/1
ALTEA (5P1)	2.0 TDI 16V	103	03/04 -	3904	

MAKE & MODEL		KW	YEAR		
SEAT					
ALTEA (5P1)	2.0 TDI 16V	103	03/04 -		4135
ALTEA (5P1)	2.0 TFSI	147	04/06 – 05/09		3529/1
ALTEA (5P1)	2.0 TFSI	147	04/06 – 05/09	3904	
ALTEA XL (5P5, 5P8)	16	75	10/06 -		3529/1
ALTEA XL (5P5, 5P8)	16	75	10/06 -	3782	
ALTEA XL (5P5, 5P8)	16	75	10/06 -		4135
ALTEA XL (5P5, 5P8)	1.2 TSI	77	04/10 -		3529/1
ALTEA XL (5P5, 5P8)	1.2 TSI	77	04/10 -	3782	
ALTEA XL (5P5, 5P8)	1.2 TSI	77	04/10 -		4135
ALTEA XL (5P5, 5P8)	1.4 16V	63	10/06 -		3529/1
ALTEA XL (5P5, 5P8)	1.4 16V	63	10/06 -	3782	
ALTEA XL (5P5, 5P8)	1.4 16V	63	10/06 -		4135
ALTEA XL (5P5, 5P8)	1.4 TSI	92	11/07 -		3529/1
ALTEA XL (5P5, 5P8)	1.4 TSI	92	11/07 -	3904	
ALTEA XL (5P5, 5P8)	1.4 TSI	92	11/07 -		4135
ALTEA XL (5P5, 5P8)	1.6 LPG	75	09/09 -		3529/1
ALTEA XL (5P5, 5P8)	1.6 LPG	75	09/09 -	3782	
ALTEA XL (5P5, 5P8)	1.6 LPG	75	09/09 -		4135
ALTEA XL (5P5, 5P8)	1.6 Multifuel	75	10/06 -		3529/1
ALTEA XL (5P5, 5P8)	1.6 Multifuel	75	10/06 -	3782	
ALTEA XL (5P5, 5P8)	1.6 Multifuel	75	10/06 -		4135
ALTEA XL (5P5, 5P8)	1.6 TDI	66	11/10 -		3529/1
ALTEA XL (5P5, 5P8)	1.6 TDI	66	11/10 -	3782	
ALTEA XL (5P5, 5P8)	1.6 TDI	66	11/10 -		4135
ALTEA XL (5P5, 5P8)	1.6 TDI	77	10/09 -		3529/1
ALTEA XL (5P5, 5P8)	1.6 TDI	77	10/09 -	3782	
ALTEA XL (5P5, 5P8)	1.6 TDI	77	10/09 -		4135
ALTEA XL (5P5, 5P8)	1.8 TFSI	118	01/07 -		3529/1
ALTEA XL (5P5, 5P8)	1.8 TFSI	118	01/07 -	3904	
ALTEA XL (5P5, 5P8)	1.8 TFSI	118	01/07 -		4135
ALTEA XL (5P5, 5P8)	1.9 TDI	66	08/09 -		3529/1
ALTEA XL (5P5, 5P8)	1.9 TDI	66	08/09 -	3782	
ALTEA XL (5P5, 5P8)	1.9 TDI	66	08/09 -		4135
ALTEA XL (5P5, 5P8)	1.9 TDI	77	10/06 -		3529/1
ALTEA XL (5P5, 5P8)	1.9 TDI	77	10/06 -	3782	
ALTEA XL (5P5, 5P8)	1.9 TDI	77	10/06 -	3904	
ALTEA XL (5P5, 5P8)	1.9 TDI	77	10/06 -		4135
ALTEA XL (5P5, 5P8)	1.9 TDI 4x4	77	06/09 – 12/10	3782	
ALTEA XL (5P5, 5P8)	1.9 TDI 4x4	77	06/09 – 12/10	3904	
ALTEA XL (5P5, 5P8)	1.9 TDI 4x4	77	06/09 – 12/10		3905
ALTEA XL (5P5, 5P8)	1.9 TDI 4x4	77	06/09 – 12/10		4135
ALTEA XL (5P5, 5P8)	2.0 FSI	110	10/06 – 03/09		3529/1
ALTEA XL (5P5, 5P8)	2.0 FSI	110	10/06 – 03/09	3904	
ALTEA XL (5P5, 5P8)	2.0 FSI	110	10/06 – 03/09		4135
ALTEA XL (5P5, 5P8)	2.0 TDI	100	11/06 – 03/09		3529/1
ALTEA XL (5P5, 5P8)	2.0 TDI	100	11/06 – 03/09	3904	
ALTEA XL (5P5, 5P8)	2.0 TDI	100	11/06 – 03/09		4135
ALTEA XL (5P5, 5P8)	2.0 TDI	103	10/06 -		3529/1
ALTEA XL (5P5, 5P8)	2.0 TDI	103	10/06 -	3904	
ALTEA XL (5P5, 5P8)	2.0 TDI	103	10/06 -		4135
ALTEA XL (5P5, 5P8)	2.0 TDI	125	06/07 -		3529/1
ALTEA XL (5P5, 5P8)	2.0 TDI	125	06/07 -	3904	
ALTEA XL (5P5, 5P8)	2.0 TDI 16V	103	10/06 -		3529/1
ALTEA XL (5P5, 5P8)	2.0 TDI 16V	103	10/06 -	3904	
ALTEA XL (5P5, 5P8)	2.0 TDI 16V	103	10/06 -		4135
ALTEA XL (5P5, 5P8)	2.0 TDI 16V 4x4	103	10/10 -		3529/1
ALTEA XL (5P5, 5P8)	2.0 TDI 16V 4x4	103	10/10 -	3782	
ALTEA XL (5P5, 5P8)	2.0 TDI 16V 4x4	103	10/10 -	3904	
ALTEA XL (5P5, 5P8)	2.0 TDI 16V 4x4	103	10/10 -		4135
ALTEA XL (5P5, 5P8)	2.0 TDI 4x4	103	06/07 -		3529/1
ALTEA XL (5P5, 5P8)	2.0 TDI 4x4	103	06/07 -	3904	
ALTEA XL (5P5, 5P8)	2.0 TDI 4x4	103	06/07 -		4135
ALTEA XL (5P5, 5P8)	2.0 TDI 4x4	125	06/07 -		3529/1
ALTEA XL (5P5, 5P8)	2.0 TDI 4x4	125	06/07 -	3904	
ALTEA XL (5P5, 5P8)	2.0 TFSI	147	10/06 – 05/09		3529/1
ALTEA XL (5P5, 5P8)	2.0 TFSI	147	10/06 – 05/09	3904	
ALTEA XL (5P5, 5P8)	2.0 TFSI 4x4	147	06/07 – 05/09		3529/1
ALTEA XL (5P5, 5P8)	2.0 TFSI 4x4	147	06/07 – 05/09	3904	
ALTEA XL (5P5, 5P8)	2.0 TFSI 4x4	155	05/09 -		3529/1
ALTEA XL (5P5, 5P8)	2.0 TFSI 4x4	155	05/09 -	3904	
AROSA (6H)	10	37	05/97 – 06/04	3566	

MAKE & MODEL   		KW	YEAR		
SEAT					
AROSA (6H)	10	37	10/98 – 01/01	3566	
AROSA (6H)	14	44	05/97 – 06/04	3566	
AROSA (6H)	1.4 16V	74	01/00 – 06/04		3529/1
AROSA (6H)	1.4 16V	74	01/00 – 06/04	3566	
AROSA (6H)	1.4 TDI	55	01/00 – 06/04	3566	
AROSA (6H)	1.7 SDI	44	08/97 – 06/04	3566	
ATECA (KH7	1.0 TSI (CHZJ)	85	05/16 -	4228	
ATECA (KH7	1.0 TSI (CHZD)	85	05/16 -	4228	
ATECA (KH7	1.4 TSI (CZEA)	110	06/16 -	4228	
ATECA (KH7	1.4 TSI (CZEA)	110	06/16 -	4228	
ATECA (KH7	1.6 TDI (DDYA)	85	04/16 -	4228	
ATECA (KH7	2.0 TDI (DFFA)	110	04/16 -	4228	
ATECA (KH7	2.0 TDI (DFFA)	110	04/16 -	4228	
ATECA (KH7	2.0 TDI (DFHA)	140	06/16 -	4228	
ATECA (KH7)	1.0 TSI (CHZJ)	85	05/16 -		4241
ATECA (KH7)	1.0 TSI (CHZD)	85	05/16 -		4241
ATECA (KH7)	1.4 TSI (CZEA)	110	06/16 -		4241
ATECA (KH7)	1.4 TSI (CZEA)	110	06/16 -		4241
ATECA (KH7)	1.6 TDI (DDYA)	85	04/16 -		4241
ATECA (KH7)	2.0 TDI (DFFA)	110	04/16 -		4241
ATECA (KH7)	2.0 TDI (DFFA)	110	04/16 -		4241
ATECA (KH7)	2.0 TDI (DFHA)	140	06/16 -		4241
CORDOBA II (6K2)	1.6 (AEH)	74	06/99 – 10/02	3682	
CORDOBA II (6K2)	1.6 (AKL)	74	06/99 – 10/02	3682	
CORDOBA II (6K2)	1.6 (APF)	74	06/99 – 10/02	3682	
CORDOBA II (6K2)	1.6 (AUR)	74	06/99 – 10/02	3682	
CORDOBA II (6K2)	1.9 TDI (AHU)	66	06/99 – 10/02	3682	
CORDOBA II (6K2)	1.9 TDI (ASK)	81	06/99 – 10/02	3682	
CORDOBA II (6K2)	1.9 TDI (ASV)	81	06/99 – 10/02	3682	
CORDOBA II (6K2)	1.9 TDI (AGR)	66	06/99 – 10/02	3682	
CORDOBA II (6K2)	1.9 TDI (ALH)	66	06/99 – 10/02	3682	
CORDOBA (6K1, 6K2)	13	40	02/93 – 08/94	3538	
CORDOBA (6K1, 6K2)	13	40	02/93 – 08/94	3585	
CORDOBA (6K1, 6K2)	13	40	02/93 – 08/94	3637	
CORDOBA (6K1, 6K2)	14	40	12/97 – 04/99	3538	
CORDOBA (6K1, 6K2)	14	40	12/97 – 04/99	3585	
CORDOBA (6K1, 6K2)	14	40	12/97 – 04/99	3637	
CORDOBA (6K1, 6K2)	1.0 i	37	09/96 – 06/99	3538	
CORDOBA (6K1, 6K2)	1.0 i	37	09/96 – 06/99	3637	
CORDOBA (6K1, 6K2)	1.3	40	02/93 – 08/94	3441	
CORDOBA (6K1, 6K2)	1.3	40	02/93 – 08/94	3444	
CORDOBA (6K1, 6K2)	1.4	40	12/97 – 04/99	3441	
CORDOBA (6K1, 6K2)	1.4	40	12/97 – 04/99	3444	
CORDOBA (6K1, 6K2)	1.4 i	44	06/94 – 06/99	3441	
CORDOBA (6K1, 6K2)	1.4 i	44	06/94 – 06/99	3444	
CORDOBA (6K1, 6K2)	1.4 i	44	06/94 – 06/99	3538	
CORDOBA (6K1, 6K2)	1.4 i	44	06/94 – 06/99	3585	
CORDOBA (6K1, 6K2)	1.4 i	44	06/94 – 06/99	3637	
CORDOBA (6K1, 6K2)	1.4 i 16V	74	09/96 – 06/99	3538	
CORDOBA (6K1, 6K2)	1.4 i 16V	74	09/96 – 06/99	3637	
CORDOBA (6K1, 6K2)	1.6 i	55	02/93 – 06/99	3444	
CORDOBA (6K1, 6K2)	1.6 i	55	05/94 – 06/99	3486	
CORDOBA (6K1, 6K2)	1.6 i	55	02/93 – 06/99	3538	
CORDOBA (6K1, 6K2)	1.6 i	55	02/93 – 06/99	3585	
CORDOBA (6K1, 6K2)	1.6 i	55	02/93 – 06/99	3637	
CORDOBA (6K1, 6K2)	1.6 i	55	05/94 – 06/99	3637	
CORDOBA (6K1, 6K2)	1.8 i	66	02/93 – 06/99	3444	
CORDOBA (6K1, 6K2)	1.8 i	66	02/93 – 06/99	3486	
CORDOBA (6K1, 6K2)	1.8 i	66	02/93 – 06/99	3538	
CORDOBA (6K1, 6K2)	1.8 i	66	02/93 – 06/99	3585	
CORDOBA (6K1, 6K2)	1.8 i	66	02/93 – 06/99	3637	
CORDOBA (6K1, 6K2)	1.8 i 16V	95	10/93 – 08/96		3529
CORDOBA (6K1, 6K2)	1.8 i 16V	95	10/93 – 08/96	3531	
CORDOBA (6K1, 6K2)	1.9 D	47	01/96 – 08/96	3538	
CORDOBA (6K1, 6K2)	1.9 D	47	01/96 – 08/96	3637	
CORDOBA (6K1, 6K2)	1.9 D	50	02/93 – 08/96	3444	
CORDOBA (6K1, 6K2)	1.9 D	50	02/93 – 08/96	3486	
CORDOBA (6K1, 6K2)	1.9 D	50	02/93 – 08/96	3538	
CORDOBA (6K1, 6K2)	1.9 D	50	02/93 – 08/96	3585	
CORDOBA (6K1, 6K2)	1.9 D	50	02/93 – 08/96	3637	
CORDOBA (6K1, 6K2)	1.9 SDI	47	08/96 – 06/99	3538	

MAKE & MODEL		KW	YEAR		
SEAT					
CORDOBA (6K1, 6K2)	1.9 SDI	47	08/96 – 06/99	3637	
CORDOBA (6K1, 6K2)	1.9 TD	55	02/93 – 08/96	3444	
CORDOBA (6K1, 6K2)	1.9 TD	55	02/93 – 08/96	3486	
CORDOBA (6K1, 6K2)	1.9 TD	55	02/93 – 08/96	3538	
CORDOBA (6K1, 6K2)	1.9 TD	55	02/93 – 08/96	3585	
CORDOBA (6K1, 6K2)	1.9 TD	55	02/93 – 08/96	3637	
CORDOBA (6K1, 6K2)	1.9 TDI	66	08/96 – 06/99		3529
CORDOBA (6K1, 6K2)	1.9 TDI	81	03/97 – 06/99		3529
CORDOBA (6K1, 6K2)	2.0 i	85	02/93 – 06/99		3529
CORDOBA (6K1, 6K2)	2.0 i	85	02/93 – 06/99	3531	
CORDOBA (6K1, 6K2)	2.0 i 16V	110	08/96 – 06/99		3529/1
CORDOBA (6K1, 6K2)	2.0 i 16V	110	08/96 – 06/99	3551	
CORDOBA (6K2)	10	37	06/99 – 10/02		3529/1
CORDOBA (6K2)	10	37	06/99 – 10/02	3637	
CORDOBA (6K2)	14	44	06/99 – 10/02		3529/1
CORDOBA (6K2)	14	44	06/99 – 10/02	3637	
CORDOBA (6K2)	16	55	06/99 – 10/02		3529/1
CORDOBA (6K2)	16	55	06/99 – 10/02	3637	
CORDOBA (6K2)	16	74	06/99 – 10/02		3529/1
CORDOBA (6K2)	16	74	06/99 – 10/02	3637	
CORDOBA (6K2)	1.4 16V	55	05/00 – 10/02		3529/1
CORDOBA (6K2)	1.4 16V	55	05/00 – 10/02	3637	
CORDOBA (6K2)	1.4 16V	74	02/00 – 10/02		3529/1
CORDOBA (6K2)	1.4 16V	74	02/00 – 10/02	3637	
CORDOBA (6K2)	1.8 T 20V Cupra	115	07/00 – 10/02		3529/1
CORDOBA (6K2)	1.8 T 20V Cupra	115	07/00 – 10/02	3551	
CORDOBA (6K2)	1.9 SDI	50	06/99 – 10/02		3529/1
CORDOBA (6K2)	1.9 SDI	50	06/99 – 10/02	3637	
CORDOBA (6K2)	1.9 TDI	66	06/99 – 10/02		3529/1
CORDOBA (6K2)	1.9 TDI	66	06/99 – 10/02	3637	
CORDOBA (6K2)	1.9 TDI	81	06/99 – 10/02		3529/1
CORDOBA (6K2)	1.9 TDI	81	06/99 – 10/02	3551	
CORDOBA (6L2)	12	47	10/02 – 06/06		3529/1
CORDOBA (6L2)	12	47	10/02 – 06/06	3782/1	
CORDOBA (6L2)	16	74	04/03 – 11/09		3529/1
CORDOBA (6L2)	16	74	04/03 – 11/09	3782/1	
CORDOBA (6L2)	20	85	09/02 – 11/09		3529/1
CORDOBA (6L2)	1.2 12V	51	05/06 – 11/09		3529/1
CORDOBA (6L2)	1.2 12V	51	05/06 – 11/09	3782/1	
CORDOBA (6L2)	1.4 16V	55	09/02 – 12/07		3529/1
CORDOBA (6L2)	1.4 16V	55	09/02 – 12/07	3782/1	
CORDOBA (6L2)	1.4 16V	63	05/06 – 11/09		3529/1
CORDOBA (6L2)	1.4 16V	63	05/06 – 11/09	3782/1	
CORDOBA (6L2)	1.4 16V	74	10/02 – 11/09		3529/1
CORDOBA (6L2)	1.4 16V	74	10/02 – 11/09	3782/1	
CORDOBA (6L2)	1.4 TDI	51	05/05 – 11/09		3529/1
CORDOBA (6L2)	1.4 TDI	51	05/05 – 11/09	3782/1	
CORDOBA (6L2)	1.4 TDI	55	10/02 – 12/05		3529/1
CORDOBA (6L2)	1.4 TDI	55	10/02 – 12/05	3782/1	
CORDOBA (6L2)	1.4 TDI	59	06/05 – 11/09		3529/1
CORDOBA (6L2)	1.4 TDI	59	06/05 – 11/09	3782/1	
CORDOBA (6L2)	1.6 16V	77	11/06 – 11/09		3529/1
CORDOBA (6L2)	1.6 16V	77	11/06 – 11/09	3782/1	
CORDOBA (6L2)	1.9 SDI	47	09/02 – 11/09		3529/1
CORDOBA (6L2)	1.9 SDI	47	09/02 – 11/09	3782/1	
CORDOBA (6L2)	1.9 TDI	74	09/02 – 11/09		3529/1
CORDOBA (6L2)	1.9 TDI	74	09/02 – 11/09	3782/1	
CORDOBA (6L2)	1.9 TDI	96	10/02 – 11/09		3529/1
CORDOBA (6L2)	1.9 TDI	96	10/02 – 11/09	3782/1	
CORDOBA Vario (6K5)	14	44	06/99 – 12/02		3529/1
CORDOBA Vario (6K5)	14	44	06/99 – 12/02	3637	
CORDOBA Vario (6K5)	16	55	06/99 – 12/02		3529/1
CORDOBA Vario (6K5)	16	55	06/99 – 12/02	3637	
CORDOBA Vario (6K5)	16	74	06/99 – 12/02		3529/1
CORDOBA Vario (6K5)	1.4 16V	55	06/99 – 12/02		3529/1
CORDOBA Vario (6K5)	1.4 16V	55	06/99 – 12/02	3637	
CORDOBA Vario (6K5)	1.4 i	44	09/96 – 06/99	3538	
CORDOBA Vario (6K5)	1.4 i	44	09/96 – 06/99	3637	
CORDOBA Vario (6K5)	1.6 i	55	05/97 – 06/99	3538	
CORDOBA Vario (6K5)	1.6 i	55	09/96 – 06/99	3538	
CORDOBA Vario (6K5)	1.6 i	55	05/97 – 06/99	3637	

MAKE & MODEL		KW	YEAR		
SEAT					
CORDOBA Vario (6K5)	1.6 i	55	09/96 – 06/99	3637	
CORDOBA Vario (6K5)	1.9 SDI	47	09/96 – 06/99	3538	
CORDOBA Vario (6K5)	1.9 SDI	47	09/96 – 06/99	3637	
CORDOBA Vario (6K5)	1.9 SDI	50	06/99 – 12/02		3529/1
CORDOBA Vario (6K5)	1.9 SDI	50	06/99 – 12/02	3637	
CORDOBA Vario (6K5)	1.9 TDI	66	08/96 – 06/99		3529
CORDOBA Vario (6K5)	1.9 TDI	66	06/99 – 12/02		3529/1
CORDOBA Vario (6K5)	1.9 TDI	66	06/99 – 12/02	3637	
CORDOBA Vario (6K5)	1.9 TDI	81	07/97 – 06/99		3529
CORDOBA Vario (6K5)	1.9 TDI	81	06/99 – 12/02		3529/1
EXEO (3R2)	16	75	03/09 – 09/10		3529
EXEO (3R2)	16	75	03/09 – 09/10	3896	
EXEO (3R2)	1.8 T	110	12/08 – 05/10		3529
EXEO (3R2)	1.8 TSI	88	09/10 -		3529
EXEO (3R2)	1.8 TSI	88	09/10 -	3896	
EXEO (3R2)	1.8 TSI	118	05/10 -		3529
EXEO (3R2)	2.0 TDI	88	12/08 -		3529
EXEO (3R2)	2.0 TDI	88	12/08 -	3896	
EXEO (3R2)	2.0 TDI	105	12/08 -		3529
EXEO (3R2)	2.0 TDI	105	12/08 -	3896	
EXEO (3R2)	2.0 TDI	125	02/09 -		3529
EXEO (3R2)	2.0 TFSI	147	03/09 -		3905
EXEO (3R2)	2.0 TFSI	155	05/10 -		3905
EXEO ST (3R5)	16	75	06/09 – 09/10		3529
EXEO ST (3R5)	16	75	06/09 – 09/10	3896	
EXEO ST (3R5)	1.8 T	110	06/09 – 05/10		3529
EXEO ST (3R5)	1.8 TSI	88	09/10 -		3529
EXEO ST (3R5)	1.8 TSI	88	09/10 -	3896	
EXEO ST (3R5)	1.8 TSI	118	05/10 -		3529
EXEO ST (3R5)	2.0 TDI	88	07/09 -		3529
EXEO ST (3R5)	2.0 TDI	88	07/09 -	3896	
EXEO ST (3R5)	2.0 TDI	105	05/09 -		3529
EXEO ST (3R5)	2.0 TDI	105	05/09 -	3896	
EXEO ST (3R5)	2.0 TDI	125	05/09 -		3529
EXEO ST (3R5)	2.0 TFSI	147	06/09 -		3905
EXEO ST (3R5)	2.0 TFSI	155	05/10 -		3905
FURA (025A)	09	29	03/84 – 12/86	3316	
FURA (025A)	09	29	03/84 – 12/86	3424/1	
FURA (025A)	09	31	01/82 – 06/86	3316	
FURA (025A)	09	31	01/82 – 06/86	3424/1	
FURA (025A)	09	33	01/82 – 06/86	3316	
FURA (025A)	09	33	01/82 – 06/86	3424/1	
FURA (025A)	14	55	01/82 – 06/86	3316	
FURA (025A)	14	55	01/82 – 06/86	3424/1	
FURA (025A) Fastback (Subcompact car-B Segment)	0.9 (09 NCA)		84-86	3357	
FURA (025A) Fastback (Subcompact car-B Segment)	0.9 (100 GL 3000)		82-86	3357	
FURA (025A) Fastback (Subcompact car-B Segment)	0.9 (100 GL 7000)		84-86	3357	
FURA (025A) Fastback (Subcompact car-B Segment)	0.9 (HB 90)		82-86	3357	
FURA (025A) Fastback (Subcompact car-B Segment)	1.4 (127 B.7000)		82-86	3357	
IBIZA I (021A)	09	29	08/90 – 05/93	3424/1	
IBIZA I (021A)	09	32	08/86 – 05/93	3424/1	
IBIZA I (021A)	12	44	11/84 – 12/93	3424/1	
IBIZA I (021A)	12	46	11/84 – 12/93	3424/1	
IBIZA I (021A)	15	63	11/84 – 05/93	3424/1	
IBIZA I (021A)	17	72	01/91 – 05/93	3424/1	
IBIZA I (021A)	17	76	01/91 – 05/93	3424/1	
IBIZA I (021A)	1.2 i	52	01/89 – 05/93	3424/1	
IBIZA I (021A)	1.5 i	65	10/86 – 05/93	3424/1	
IBIZA I (021A)	1.5 i	74	10/86 – 05/93	3424/1	
IBIZA I (021A)	1.5 i CAT	66	10/86 – 05/93	3424/1	
IBIZA I (021A)	1.7 D	40	06/84 – 05/93	3424/1	
IBIZA I (021A)	1.7 D	42	08/90 – 05/93	3424/1	
IBIZA II (6K1)	10	33	03/93 – 09/96	3538	
IBIZA II (6K1)	10	33	03/93 – 09/96	3637	
IBIZA II (6K1)	14	40	12/97 – 04/99	3441	
IBIZA II (6K1)	14	40	12/97 – 04/99	3538	
IBIZA II (6K1)	14	40	12/97 – 04/99	3585	
IBIZA II (6K1)	14	40	12/97 – 04/99	3637	
IBIZA II (6K1)	1.0 i	37	09/96 – 08/99	3538	
IBIZA II (6K1)	1.0 i	37	09/96 – 08/99	3637	
IBIZA II (6K1)	1.3 i	40	03/93 – 08/99	3538	

MAKE & MODEL		KW	YEAR		
SEAT					
IBIZA II (6K1)	1.3 i	40	03/93 – 08/99	3637	
IBIZA II (6K1)	1.4	40	12/97 – 04/99	3444	
IBIZA II (6K1)	1.4 i	44	09/93 – 08/99	3441	
IBIZA II (6K1)	1.4 i	44	09/93 – 08/99	3444	
IBIZA II (6K1)	1.4 i	44	09/93 – 08/99	3538	
IBIZA II (6K1)	1.4 i	44	09/93 – 08/99	3585	
IBIZA II (6K1)	1.4 i	44	09/93 – 08/99	3637	
IBIZA II (6K1)	1.4 i 16V	74	06/97 – 08/99	3538	
IBIZA II (6K1)	1.4 i 16V	74	06/97 – 08/99	3637	
IBIZA II (6K1)	1.6 i	55	03/93 – 08/99	3444	
IBIZA II (6K1)	1.6 i	55	09/94 – 06/99	3486	
IBIZA II (6K1)	1.6 i	55	03/93 – 08/99	3538	
IBIZA II (6K1)	1.6 i	55	03/93 – 08/99	3585	
IBIZA II (6K1)	1.6 i	55	03/93 – 08/99	3637	
IBIZA II (6K1)	1.6 i	55	09/94 – 06/99	3637	
IBIZA II (6K1)	1.6 i	74	04/96 – 08/99	3637	
IBIZA II (6K1)	1.8 i	66	03/93 – 08/99	3444	
IBIZA II (6K1)	1.8 i	66	03/93 – 08/99	3486	
IBIZA II (6K1)	1.8 i	66	03/93 – 08/99	3538	
IBIZA II (6K1)	1.8 i	66	03/93 – 08/99	3585	
IBIZA II (6K1)	1.8 i	66	03/93 – 08/99	3637	
IBIZA II (6K1)	1.8 i 16V	95	11/93 – 08/96		3529
IBIZA II (6K1)	1.8 i 16V	95	11/93 – 08/96	3531	
IBIZA II (6K1)	1.9 D	47	04/93 – 08/96	3538	
IBIZA II (6K1)	1.9 D	47	04/93 – 08/96	3637	
IBIZA II (6K1)	1.9 D	50	10/94 – 08/96	3444	
IBIZA II (6K1)	1.9 D	50	10/94 – 08/96	3486	
IBIZA II (6K1)	1.9 D	50	10/94 – 08/96	3538	
IBIZA II (6K1)	1.9 D	50	10/94 – 08/96	3585	
IBIZA II (6K1)	1.9 D	50	10/94 – 08/96	3637	
IBIZA II (6K1)	1.9 SDI	47	08/96 – 08/99	3538	
IBIZA II (6K1)	1.9 SDI	47	08/96 – 08/99	3637	
IBIZA II (6K1)	1.9 TD	55	03/93 – 08/96	3444	
IBIZA II (6K1)	1.9 TD	55	03/93 – 08/96	3486	
IBIZA II (6K1)	1.9 TD	55	03/93 – 08/96	3538	
IBIZA II (6K1)	1.9 TD	55	03/93 – 08/96	3585	
IBIZA II (6K1)	1.9 TD	55	03/93 – 08/96	3637	
IBIZA II (6K1)	1.9 TDI	66	08/96 – 08/99		3529
IBIZA II (6K1)	1.9 TDI	81	02/97 – 08/99		3529
IBIZA II (6K1)	2.0 i	85	03/93 – 08/99		3529
IBIZA II (6K1)	2.0 i	85	03/93 – 08/99	3531	
IBIZA II (6K1)	2.0 i 16V	110	08/96 – 08/99		3529/1
IBIZA II (6K1)	2.0 i 16V	110	08/96 – 08/99	3551	
IBIZA III (6K1)	10	37	08/99 – 02/02		3529/1
IBIZA III (6K1)	10	37	08/99 – 02/02	3637	
IBIZA III (6K1)	14	44	08/99 – 02/02		3529/1
IBIZA III (6K1)	14	44	08/99 – 02/02	3637	
IBIZA III (6K1)	16	55	08/99 – 02/02		3529/1
IBIZA III (6K1)	16	55	08/99 – 02/02	3637	
IBIZA III (6K1)	16	74	08/99 – 02/02		3529/1
IBIZA III (6K1)	16	74	08/99 – 02/02	3637	
IBIZA III (6K1)	1.0 16V	51	10/99 – 02/02		3529/1
IBIZA III (6K1)	1.0 16V	51	10/99 – 02/02	3637	
IBIZA III (6K1)	1.4 16V	55	05/00 – 02/02		3529/1
IBIZA III (6K1)	1.4 16V	55	05/00 – 02/02	3637	
IBIZA III (6K1)	1.4 16V	74	08/99 – 02/02		3529/1
IBIZA III (6K1)	1.4 16V	74	08/99 – 02/02	3637	
IBIZA III (6K1)	1.8 T 20V Cupra	115	07/00 – 02/02		3529/1
IBIZA III (6K1)	1.8 T 20V Cupra	115	07/00 – 02/02	3551	
IBIZA III (6K1)	1.9 SDI	50	08/99 – 02/02		3529/1
IBIZA III (6K1)	1.9 SDI	50	08/99 – 02/02	3637	
IBIZA III (6K1)	1.9 TDI	66	08/99 – 02/02		3529/1
IBIZA III (6K1)	1.9 TDI	66	08/99 – 02/02	3637	
IBIZA III (6K1)	1.9 TDI	81	08/99 – 02/02		3529/1
IBIZA III (6K1)	1.9 TDI	81	08/99 – 02/02	3551	
IBIZA IV (6L1)	12	44	06/07 – 05/08		3529/1
IBIZA IV (6L1)	12	44	06/07 – 05/08	3782	
IBIZA IV (6L1)	12	44	06/07 – 05/08	3782/1	
IBIZA IV (6L1)	12	47	02/02 – 06/06		3529/1
IBIZA IV (6L1)	12	47	02/02 – 06/06	3782	
IBIZA IV (6L1)	12	47	02/02 – 06/06	3782/1	

MAKE & MODEL		KW	YEAR		
SEAT					
IBIZA IV (6L1)	16	74	02/03 – 11/09		3529/1
IBIZA IV (6L1)	16	74	02/03 – 11/09	3782	
IBIZA IV (6L1)	16	74	02/03 – 11/09	3782/1	
IBIZA IV (6L1)	16	74	02/03 – 11/09		4152
IBIZA IV (6L1)	20	85	04/02 – 11/09		3529/1
IBIZA IV (6L1)	20	85	04/02 – 11/09	3782	
IBIZA IV (6L1)	20	85	04/02 – 11/09	3782/1	
IBIZA IV (6L1)	20	85	04/02 – 11/09	4138	
IBIZA IV (6L1)	20	85	04/02 – 11/09		4152
IBIZA IV (6L1)	1.2	44	06/07 – 05/08		4152
IBIZA IV (6L1)	1.2	47	02/02 – 06/06		4152
IBIZA IV (6L1)	1.2 12V	51	05/06 – 11/09		3529/1
IBIZA IV (6L1)	1.2 12V	51	05/06 – 11/09	3782	
IBIZA IV (6L1)	1.2 12V	51	05/06 – 1/09	3782/1	
IBIZA IV (6L1)	1.2 12V	51	05/06 – 11/09		4152
IBIZA IV (6L1)	1.4 16V	55	02/02 – 12/07		3529/1
IBIZA IV (6L1)	1.4 16V	55	02/02 – 12/07	3782	
IBIZA IV (6L1)	1.4 16V	55	02/02 – 12/07	3782/1	
IBIZA IV (6L1)	1.4 16V	55	02/02 – 12/07	4138	
IBIZA IV (6L1)	1.4 16V	55	02/02 – 12/07		4152
IBIZA IV (6L1)	1.4 16V	63	05/06 – 11/09		3529/1
IBIZA IV (6L1)	1.4 16V	63	05/06 – 11/09	3782	
IBIZA IV (6L1)	1.4 16V	63	05/06 – 11/09	3782/1	
IBIZA IV (6L1)	1.4 16V	63	05/06 – 11/09	4138	
IBIZA IV (6L1)	1.4 16V	63	05/06 – 11/09		4152
IBIZA IV (6L1)	1.4 16V	74	02/02 – 11/09		3529/1
IBIZA IV (6L1)	1.4 16V	74	02/02 – 11/09	3782	
IBIZA IV (6L1)	1.4 16V	74	02/02 – 11/09	3782/1	
IBIZA IV (6L1)	1.4 16V	74	02/02 – 11/09	4138	
IBIZA IV (6L1)	1.4 16V	74	02/02 – 11/09		4152
IBIZA IV (6L1)	1.4 TDI	51	05/05 – 11/09		3529/1
IBIZA IV (6L1)	1.4 TDI	51	05/05 – 11/09	3782	
IBIZA IV (6L1)	1.4 TDI	51	05/05 – 11/09	3782/1	
IBIZA IV (6L1)	1.4 TDI	51	05/05 – 11/09		4152
IBIZA IV (6L1)	1.4 TDI	55	05/02 – 12/05		3529/1
IBIZA IV (6L1)	1.4 TDI	55	05/02 – 12/05	3782	
IBIZA IV (6L1)	1.4 TDI	55	05/02 – 12/05	3782/1	
IBIZA IV (6L1)	1.4 TDI	55	05/02 – 12/05		4152
IBIZA IV (6L1)	1.4 TDI	59	06/05 – 11/09		3529/1
IBIZA IV (6L1)	1.4 TDI	59	06/05 – 11/09	3782	
IBIZA IV (6L1)	1.4 TDI	59	06/05 – 11/09	3782/1	
IBIZA IV (6L1)	1.4 TDI	59	06/05 – 11/09		4152
IBIZA IV (6L1)	1.6 16V	77	11/06 – 11/09		3529/1
IBIZA IV (6L1)	1.6 16V	77	11/06 – 11/09	3782	
IBIZA IV (6L1)	1.6 16V	77	11/06 – 11/09	3782/1	
IBIZA IV (6L1)	1.6 16V	77	11/06 – 11/09	4138	
IBIZA IV (6L1)	1.6 16V	77	11/06 – 11/09		4152
IBIZA IV (6L1)	1.8 T Cupra R	132	01/04 – 02/08		3529/1
IBIZA IV (6L1)	1.8 T Cupra R	132	01/04 – 02/08		4152
IBIZA IV (6L1)	1.8 T FR	110	12/03 – 05/08		3529/1
IBIZA IV (6L1)	1.8 T FR	110	12/03 – 05/08	4138	
IBIZA IV (6L1)	1.8 T FR	110	12/03 – 05/08		4152
IBIZA IV (6L1)	1.9 SDI	47	02/02 – 12/05		3529/1
IBIZA IV (6L1)	1.9 SDI	47	02/02 – 12/05	3782	
IBIZA IV (6L1)	1.9 SDI	47	02/02 – 12/05	3782/1	
IBIZA IV (6L1)	1.9 SDI	47	02/02 – 12/05		4152
IBIZA IV (6L1)	1.9 TDI	74	02/02 – 11/09		3529/1
IBIZA IV (6L1)	1.9 TDI	74	02/02 – 11/09	3782	
IBIZA IV (6L1)	1.9 TDI	74	02/02 – 11/09	3782/1	
IBIZA IV (6L1)	1.9 TDI	74	02/02 – 11/09		4152
IBIZA IV (6L1)	1.9 TDI	96	02/02 – 11/09		3529/1
IBIZA IV (6L1)	1.9 TDI	96	02/02 – 11/09	3782	
IBIZA IV (6L1)	1.9 TDI	96	02/02 – 11/09	3782/1	
IBIZA IV (6L1)	1.9 TDI	96	02/02 – 11/09	4138	
IBIZA IV (6L1)	1.9 TDI	96	02/02 – 11/09		4152
IBIZA IV (6L1)	1.9 TDI Cupra R	118	03/04 – 02/08		3529/1
IBIZA IV (6L1)	1.9 TDI Cupra R	118	03/04 – 02/08		4152
IBIZA V (6J5, 6P1)	10	55	05/15 -		3529/1
IBIZA V (6J5, 6P1)	10	55	05/15 -	3782/1	
IBIZA V (6J5, 6P1)	10	55	05/15 -	3904	
IBIZA V (6J5, 6P1)	12	44	07/09 -		3529/1

MAKE & MODEL		KW	YEAR		
SEAT					
IBIZA V (6J5, 6P1)	12	44	07/09 -	3782	
IBIZA V (6J5, 6P1)	12	44	07/09 -	3782/1	
IBIZA V (6J5, 6P1)	12	51	03/08 -		3529/1
IBIZA V (6J5, 6P1)	12	51	03/08 -	3782	
IBIZA V (6J5, 6P1)	12	51	03/08 -	3782/1	
IBIZA V (6J5, 6P1)	14	63	03/08 -		3529/1
IBIZA V (6J5, 6P1)	14	63	03/08 -	3782	
IBIZA V (6J5, 6P1)	14	63	03/08 -	3782/1	
IBIZA V (6J5, 6P1)	16	77	05/08 -		3529/1
IBIZA V (6J5, 6P1)	16	77	05/08 -	3782	
IBIZA V (6J5, 6P1)	16	77	05/08 -	3782/1	
IBIZA V (6J5, 6P1)	20	85	10/08 -		3529/1
IBIZA V (6J5, 6P1)	20	85	10/08 -	3782/1	
IBIZA V (6J5, 6P1)	20	85	10/08 -	3904	
IBIZA V (6J5, 6P1)	1.0 TSI	70	05/15 -		3529/1
IBIZA V (6J5, 6P1)	1.0 TSI	70	05/15 -	3782/1	
IBIZA V (6J5, 6P1)	1.0 TSI	70	05/15 -	3904	
IBIZA V (6J5, 6P1)	1.0 TSI	81	05/15 -		3529/1
IBIZA V (6J5, 6P1)	1.0 TSI	81	05/15 -	3782/1	
IBIZA V (6J5, 6P1)	1.0 TSI	81	05/15 -	3904	
IBIZA V (6J5, 6P1)	1.2 TDI	55	05/10 -		3529/1
IBIZA V (6J5, 6P1)	1.2 TDI	55	05/10 -	3782	
IBIZA V (6J5, 6P1)	1.2 TDI	55	05/10 -	3782/1	
IBIZA V (6J5, 6P1)	1.2 TSI	63	08/12 -		3529/1
IBIZA V (6J5, 6P1)	1.2 TSI	63	08/12 -	3782	
IBIZA V (6J5, 6P1)	1.2 TSI	63	08/12 -	3782/1	
IBIZA V (6J5, 6P1)	1.2 TSI	66	05/15 -		3529/1
IBIZA V (6J5, 6P1)	1.2 TSI	66	05/15 -	3782/1	
IBIZA V (6J5, 6P1)	1.2 TSI	66	05/15 -	3904	
IBIZA V (6J5, 6P1)	1.2 TSI	77	09/10 -		3529/1
IBIZA V (6J5, 6P1)	1.2 TSI	77	09/10 -	3782	
IBIZA V (6J5, 6P1)	1.2 TSI	77	09/10 -	3782/1	
IBIZA V (6J5, 6P1)	1.2 TSI	81	09/15 -		3529/1
IBIZA V (6J5, 6P1)	1.2 TSI	81	09/15 -	3782/1	
IBIZA V (6J5, 6P1)	1.2 TSI	81	09/15 -	3904	
IBIZA V (6J5, 6P1)	1.4 TDI	55	05/15 -		3529/1
IBIZA V (6J5, 6P1)	1.4 TDI	55	05/15 -	3782/1	
IBIZA V (6J5, 6P1)	1.4 TDI	55	05/15 -	3904	
IBIZA V (6J5, 6P1)	1.4 TDI	59	07/08 – 06/10		3529/1
IBIZA V (6J5, 6P1)	1.4 TDI	59	07/08 – 06/10	3782	
IBIZA V (6J5, 6P1)	1.4 TDI	59	07/08 – 06/10	3782/1	
IBIZA V (6J5, 6P1)	1.4 TDI	66	05/15 -		3529/1
IBIZA V (6J5, 6P1)	1.4 TDI	66	05/15 -	3782/1	
IBIZA V (6J5, 6P1)	1.4 TDI	66	05/15 -	3904	
IBIZA V (6J5, 6P1)	1.4 TDI	77	05/15 -		3529/1
IBIZA V (6J5, 6P1)	1.4 TDI	77	05/15 -	3782/1	
IBIZA V (6J5, 6P1)	1.4 TDI	77	05/15 -	3904	
IBIZA V (6J5, 6P1)	1.4 TSI	103	10/13 -		3529/1
IBIZA V (6J5, 6P1)	1.4 TSI	103	10/13 -	3782/1	
IBIZA V (6J5, 6P1)	1.4 TSI	103	10/13 -	3904	
IBIZA V (6J5, 6P1)	1.4 TSI	110	06/09 -		3529/1
IBIZA V (6J5, 6P1)	1.4 TSI	110	11/15 -		3529/1
IBIZA V (6J5, 6P1)	1.4 TSI	110	11/15 -	3782/1	
IBIZA V (6J5, 6P1)	1.4 TSI	110	06/09 -	3904	
IBIZA V (6J5, 6P1)	1.4 TSI	110	11/15 -	3904	
IBIZA V (6J5, 6P1)	1.6 LPG	60	05/11 -		3529/1
IBIZA V (6J5, 6P1)	1.6 LPG	60	05/11 -	3782	
IBIZA V (6J5, 6P1)	1.6 LPG	60	05/11 -	3782/1	
IBIZA V (6J5, 6P1)	1.6 TDI	66	05/09 -		3529/1
IBIZA V (6J5, 6P1)	1.6 TDI	66	05/09 -	3782	
IBIZA V (6J5, 6P1)	1.6 TDI	66	05/09 -	3782/1	
IBIZA V (6J5, 6P1)	1.6 TDI	77	05/09 -		3529/1
IBIZA V (6J5, 6P1)	1.6 TDI	77	05/09 -	3782/1	
IBIZA V (6J5, 6P1)	1.9 TDI	66	07/08 – 06/10		3529/1
IBIZA V (6J5, 6P1)	1.9 TDI	66	07/08 – 06/10	3782	
IBIZA V (6J5, 6P1)	1.9 TDI	66	07/08 – 06/10	3782/1	
IBIZA V (6J5, 6P1)	1.9 TDI	77	03/08 – 06/10		3529/1
IBIZA V (6J5, 6P1)	1.9 TDI	77	03/08 – 06/10	3782/1	
IBIZA V (6J5, 6P1)	1.9 TDI	77	03/08 – 06/10	3904	
IBIZA V (6J5, 6P1)	2.0 TDI	105	01/10 -		3529/1
IBIZA V (6J5, 6P1)	2.0 TDI	105	01/10 -	3782/1	

MAKE & MODEL		KW	YEAR		
SEAT					
IBIZA V (6J5, 6P1)	2.0 TDI	105	01/10 -	3904	
IBIZA V SPORTCOUPE (6J1, 6P5)	10	55	05/15 -		3529/1
IBIZA V SPORTCOUPE (6J1, 6P5)	10	55	05/15 -	3782/1	
IBIZA V SPORTCOUPE (6J1, 6P5)	10	55	05/15 -	3904	
IBIZA V SPORTCOUPE (6J1, 6P5)	12	44	07/09 -		3529/1
IBIZA V SPORTCOUPE (6J1, 6P5)	12	44	07/09 -	3782	
IBIZA V SPORTCOUPE (6J1, 6P5)	12	44	07/09 -	3782/1	
IBIZA V SPORTCOUPE (6J1, 6P5)	12	51	07/08 -		3529/1
IBIZA V SPORTCOUPE (6J1, 6P5)	12	51	07/08 -	3782	
IBIZA V SPORTCOUPE (6J1, 6P5)	12	51	07/08 -	3782/1	
IBIZA V SPORTCOUPE (6J1, 6P5)	14	63	07/08 -		3529/1
IBIZA V SPORTCOUPE (6J1, 6P5)	14	63	07/08 -	3782	
IBIZA V SPORTCOUPE (6J1, 6P5)	14	63	07/08 -	3782/1	
IBIZA V SPORTCOUPE (6J1, 6P5)	16	77	07/08 -		3529/1
IBIZA V SPORTCOUPE (6J1, 6P5)	16	77	07/08 -	3782	
IBIZA V SPORTCOUPE (6J1, 6P5)	16	77	07/08 -	3782/1	
IBIZA V SPORTCOUPE (6J1, 6P5)	20	85	10/08 -		3529/1
IBIZA V SPORTCOUPE (6J1, 6P5)	20	85	10/08 -	3782/1	
IBIZA V SPORTCOUPE (6J1, 6P5)	20	85	10/08 -	3904	
IBIZA V SPORTCOUPE (6J1, 6P5)	1.0 TSI	70	05/15 -		3529/1
IBIZA V SPORTCOUPE (6J1, 6P5)	1.0 TSI	70	05/15 -	3782/1	
IBIZA V SPORTCOUPE (6J1, 6P5)	1.0 TSI	70	05/15 -	3904	
IBIZA V SPORTCOUPE (6J1, 6P5)	1.0 TSI	81	05/15 -		3529/1
IBIZA V SPORTCOUPE (6J1, 6P5)	1.0 TSI	81	05/15 -	3782/1	
IBIZA V SPORTCOUPE (6J1, 6P5)	1.0 TSI	81	05/15 -	3904	
IBIZA V SPORTCOUPE (6J1, 6P5)	1.2 TDI	55	05/10 -		3529/1
IBIZA V SPORTCOUPE (6J1, 6P5)	1.2 TDI	55	05/10 -	3782	
IBIZA V SPORTCOUPE (6J1, 6P5)	1.2 TDI	55	05/10 -	3782/1	
IBIZA V SPORTCOUPE (6J1, 6P5)	1.2 TSI	63	08/12 -		3529/1
IBIZA V SPORTCOUPE (6J1, 6P5)	1.2 TSI	63	08/12 -	3782/1	
IBIZA V SPORTCOUPE (6J1, 6P5)	1.2 TSI	63	08/12 -	3904	
IBIZA V SPORTCOUPE (6J1, 6P5)	1.2 TSI	66	05/15 -		3529/1
IBIZA V SPORTCOUPE (6J1, 6P5)	1.2 TSI	66	05/15 -	3782/1	
IBIZA V SPORTCOUPE (6J1, 6P5)	1.2 TSI	66	05/15 -	3904	
IBIZA V SPORTCOUPE (6J1, 6P5)	1.2 TSI	77	09/10 -		3529/1
IBIZA V SPORTCOUPE (6J1, 6P5)	1.2 TSI	77	09/10 -	3782	
IBIZA V SPORTCOUPE (6J1, 6P5)	1.2 TSI	77	09/10 -	3782/1	
IBIZA V SPORTCOUPE (6J1, 6P5)	1.2 TSI	81	09/15 -		3529/1
IBIZA V SPORTCOUPE (6J1, 6P5)	1.2 TSI	81	09/15 -	3782/1	
IBIZA V SPORTCOUPE (6J1, 6P5)	1.2 TSI	81	09/15 -	3904	
IBIZA V SPORTCOUPE (6J1, 6P5)	1.4 TDI	55	05/15 -		3529/1
IBIZA V SPORTCOUPE (6J1, 6P5)	1.4 TDI	55	05/15 -	3782/1	
IBIZA V SPORTCOUPE (6J1, 6P5)	1.4 TDI	55	05/15 -	3904	
IBIZA V SPORTCOUPE (6J1, 6P5)	1.4 TDI	59	07/08 – 06/10		3529/1
IBIZA V SPORTCOUPE (6J1, 6P5)	1.4 TDI	59	07/08 – 06/10	3782	
IBIZA V SPORTCOUPE (6J1, 6P5)	1.4 TDI	59	07/08 – 06/10	3782/1	
IBIZA V SPORTCOUPE (6J1, 6P5)	1.4 TDI	66	05/15 -		3529/1
IBIZA V SPORTCOUPE (6J1, 6P5)	1.4 TDI	66	05/15 -	3782/1	
IBIZA V SPORTCOUPE (6J1, 6P5)	1.4 TDI	66	05/15 -	3904	
IBIZA V SPORTCOUPE (6J1, 6P5)	1.4 TDI	77	05/15 -		3529/1
IBIZA V SPORTCOUPE (6J1, 6P5)	1.4 TDI	77	05/15 -	3782/1	
IBIZA V SPORTCOUPE (6J1, 6P5)	1.4 TDI	77	05/15 -	3904	
IBIZA V SPORTCOUPE (6J1, 6P5)	1.4 TSI	103	10/13 -		3529/1
IBIZA V SPORTCOUPE (6J1, 6P5)	1.4 TSI	103	10/13 -	3782/1	
IBIZA V SPORTCOUPE (6J1, 6P5)	1.4 TSI	103	10/13 -	3904	
IBIZA V SPORTCOUPE (6J1, 6P5)	1.4 TSI	110	06/09 -		3529/1
IBIZA V SPORTCOUPE (6J1, 6P5)	1.4 TSI	110	11/15 -		3529/1
IBIZA V SPORTCOUPE (6J1, 6P5)	1.4 TSI	110	11/15 -	3782/1	
IBIZA V SPORTCOUPE (6J1, 6P5)	1.4 TSI	110	06/09 -	3904	
IBIZA V SPORTCOUPE (6J1, 6P5)	1.4 TSI	110	11/15 -	3904	
IBIZA V SPORTCOUPE (6J1, 6P5)	1.4 TSI Cupra	132	06/09 -		3529/1
IBIZA V SPORTCOUPE (6J1, 6P5)	1.4 TSI Cupra	132	06/09 -	3904	
IBIZA V SPORTCOUPE (6J1, 6P5)	1.6 LPG	60	05/11 -		3529/1
IBIZA V SPORTCOUPE (6J1, 6P5)	1.6 LPG	60	05/11 -	3782	
IBIZA V SPORTCOUPE (6J1, 6P5)	1.6 LPG	60	05/11 -	3782/1	
IBIZA V SPORTCOUPE (6J1, 6P5)	1.6 TDI	66	05/09 -		3529/1
IBIZA V SPORTCOUPE (6J1, 6P5)	1.6 TDI	66	05/09 -	3782	
IBIZA V SPORTCOUPE (6J1, 6P5)	1.6 TDI	66	05/09 -	3782/1	
IBIZA V SPORTCOUPE (6J1, 6P5)	1.6 TDI	77	05/09 -		3529/1
IBIZA V SPORTCOUPE (6J1, 6P5)	1.6 TDI	77	05/09 -	3782/1	
IBIZA V SPORTCOUPE (6J1, 6P5)	1.6 TDI	77	05/09 -	3904	

MAKE & MODEL		KW	YEAR		
SEAT					
IBIZA V SPORTCOUPE (6J1, 6P5)	1.8 TSI Cupra	141	11/15 -		3529/1
IBIZA V SPORTCOUPE (6J1, 6P5)	1.8 TSI Cupra	141	11/15 -	3782/1	
IBIZA V SPORTCOUPE (6J1, 6P5)	1.8 TSI Cupra	141	11/15 -	3904	
IBIZA V SPORTCOUPE (6J1, 6P5)	1.9 TDI	66	07/08 – 06/10		3529/1
IBIZA V SPORTCOUPE (6J1, 6P5)	1.9 TDI	66	07/08 – 06/10	3782	
IBIZA V SPORTCOUPE (6J1, 6P5)	1.9 TDI	66	07/08 – 06/10	3782/1	
IBIZA V SPORTCOUPE (6J1, 6P5)	1.9 TDI	77	07/08 – 06/10		3529/1
IBIZA V SPORTCOUPE (6J1, 6P5)	1.9 TDI	77	07/08 – 06/10	3782/1	
IBIZA V SPORTCOUPE (6J1, 6P5)	1.9 TDI	77	07/08 – 06/10	3904	
IBIZA V SPORTCOUPE (6J1, 6P5)	2.0 TDI	105	01/10 -		3529/1
IBIZA V SPORTCOUPE (6J1, 6P5)	2.0 TDI	105	01/10 -	3782/1	
IBIZA V SPORTCOUPE (6J1, 6P5)	2.0 TDI	105	01/10 -	3904	
IBIZA V ST (6J8, 6P8)	10	55	05/15 -		3529/1
IBIZA V ST (6J8, 6P8)	10	55	05/15 -	3782/1	
IBIZA V ST (6J8, 6P8)	10	55	05/15 -	3904	
IBIZA V ST (6J8, 6P8)	12	44	05/10 -		3529/1
IBIZA V ST (6J8, 6P8)	12	44	05/10 -	3782	
IBIZA V ST (6J8, 6P8)	12	44	05/10 -	3782/1	
IBIZA V ST (6J8, 6P8)	12	51	05/10 -		3529/1
IBIZA V ST (6J8, 6P8)	12	51	05/10 -	3782	
IBIZA V ST (6J8, 6P8)	12	51	05/10 -	3782/1	
IBIZA V ST (6J8, 6P8)	14	63	03/10 -		3529/1
IBIZA V ST (6J8, 6P8)	14	63	03/10 -	3782	
IBIZA V ST (6J8, 6P8)	14	63	03/10 -	3782/1	
IBIZA V ST (6J8, 6P8)	1.0 TSI	70	05/15 -		3529/1
IBIZA V ST (6J8, 6P8)	1.0 TSI	70	05/15 -	3782/1	
IBIZA V ST (6J8, 6P8)	1.0 TSI	70	05/15 -	3904	
IBIZA V ST (6J8, 6P8)	1.0 TSI	81	05/15 -		3529/1
IBIZA V ST (6J8, 6P8)	1.0 TSI	81	05/15 -	3782/1	
IBIZA V ST (6J8, 6P8)	1.0 TSI	81	05/15 -	3904	
IBIZA V ST (6J8, 6P8)	1.2 TDI	55	04/10 -		3529/1
IBIZA V ST (6J8, 6P8)	1.2 TDI	55	04/10 -	3782	
IBIZA V ST (6J8, 6P8)	1.2 TDI	55	04/10 -	3782/1	
IBIZA V ST (6J8, 6P8)	1.2 TSI	63	09/12 -		3529/1
IBIZA V ST (6J8, 6P8)	1.2 TSI	63	09/12 -	3782	
IBIZA V ST (6J8, 6P8)	1.2 TSI	63	09/12 -	3782/1	
IBIZA V ST (6J8, 6P8)	1.2 TSI	66	05/15 -		3529/1
IBIZA V ST (6J8, 6P8)	1.2 TSI	66	05/15 -	3782/1	
IBIZA V ST (6J8, 6P8)	1.2 TSI	66	05/15 -	3904	
IBIZA V ST (6J8, 6P8)	1.2 TSI	77	09/10 -		3529/1
IBIZA V ST (6J8, 6P8)	1.2 TSI	77	09/10 -	3782	
IBIZA V ST (6J8, 6P8)	1.2 TSI	77	09/10 -	3782/1	
IBIZA V ST (6J8, 6P8)	1.2 TSI	81	09/15 -		3529/1
IBIZA V ST (6J8, 6P8)	1.2 TSI	81	09/15 -	3782/1	
IBIZA V ST (6J8, 6P8)	1.2 TSI	81	09/15 -	3904	
IBIZA V ST (6J8, 6P8)	1.4 TDI	55	05/15 -		3529/1
IBIZA V ST (6J8, 6P8)	1.4 TDI	55	05/15 -	3782/1	
IBIZA V ST (6J8, 6P8)	1.4 TDI	55	05/15 -	3904	
IBIZA V ST (6J8, 6P8)	1.4 TDI	66	05/15 -		3529/1
IBIZA V ST (6J8, 6P8)	1.4 TDI	66	05/15 -	3782/1	
IBIZA V ST (6J8, 6P8)	1.4 TDI	66	05/15 -	3904	
IBIZA V ST (6J8, 6P8)	1.4 TDI	77	05/15 -		3529/1
IBIZA V ST (6J8, 6P8)	1.4 TDI	77	05/15 -	3782/1	
IBIZA V ST (6J8, 6P8)	1.4 TDI	77	05/15 -	3904	
IBIZA V ST (6J8, 6P8)	1.4 TSI	103	10/13 -		3529/1
IBIZA V ST (6J8, 6P8)	1.4 TSI	103	10/13 -	3782/1	
IBIZA V ST (6J8, 6P8)	1.4 TSI	103	10/13 -	3904	
IBIZA V ST (6J8, 6P8)	1.4 TSI	110	02/12 -		3529/1
IBIZA V ST (6J8, 6P8)	1.4 TSI	110	11/15 -		3529/1
IBIZA V ST (6J8, 6P8)	1.4 TSI	110	11/15 -	3782/1	
IBIZA V ST (6J8, 6P8)	1.4 TSI	110	02/12 -	3904	
IBIZA V ST (6J8, 6P8)	1.4 TSI	110	11/15 -	3904	
IBIZA V ST (6J8, 6P8)	1.6 TDI	66	03/10 -		3529/1
IBIZA V ST (6J8, 6P8)	1.6 TDI	66	03/10 -	3782	
IBIZA V ST (6J8, 6P8)	1.6 TDI	66	03/10 -	3782/1	
IBIZA V ST (6J8, 6P8)	1.6 TDI	77	03/10 -		3529/1
IBIZA V ST (6J8, 6P8)	1.6 TDI	77	03/10 -	3782/1	
IBIZA V ST (6J8, 6P8)	1.6 TDI	77	03/10 -	3904	
INCA (6K9)	1.4 i	44	11/95 – 06/03	3551	
INCA (6K9)	1.6 i	55	11/95 – 05/98	3551	
INCA (6K9)	1.9 D	47	11/95 – 06/03	3551	

MAKE & MODEL		KW	YEAR		
SEAT					
INCA (6K9)	1.9 SDI	47	11/95 – 06/03	3551	
LEON III ST (5F8)	1.0 TSI (CHZD)	85	05/15 -	4228	
LEON III ST (5F8)	1.2 TSI (CJZA)	77	08/13 -	4228	
LEON III ST (5F8)	1.2 TSI (CJZB)	63	11/13 -	4228	
LEON III ST (5F8)	1.2 TSI (CYVB)	81	05/14 -	4228	
LEON III ST (5F8)	1.4 TGI (CPWA)	81	10/13 -	4228	
LEON III ST (5F8)	1.4 TSI (CHPA)	103	10/13 -	4228	
LEON III ST (5F8)	1.4 TSI (CPTA)	103	10/13 -	4228	
LEON III ST (5F8)	1.4 TSI (CXSA)	90	10/13 -	4228	
LEON III ST (5F8)	1.4 TSI (CZCA)	92	05/14 -	4228	
LEON III ST (5F8)	1.4 TSI (CZEA)	110	05/14 -	4228	
LEON III ST (5F8)	1.6 TDI (CLHA)	77	10/13 -	4228	
LEON III ST (5F8)	1.6 TDI (CLHA)	77	04/14 -	4228	
LEON III ST (5F8)	1.6 TDI (CLHB)	66	11/13 -	4228	
LEON III ST (5F8)	1.6 TDI (CRKB)	81	09/13 -	4228	
LEON III ST (5F8)	1.6 TDI (CRKB)	81	11/14 -	4228	
LEON III ST (5F8)	1.8 TFSI (CJSA)	132	10/13 -	4228	
LEON III ST (5F8)	1.8 TSI (CJSA)	132	11/14 -	4228	
LEON III ST (5F8)	1.8 TSI (CJSB)	132	11/14 -	4228	
LEON III ST (5F8)	2.0 TDI (CRBC)	110	04/14 -	4228	
LEON III ST (5F8)	2.0 TDI (CRVC)	105	10/13 -	4228	
LEON III ST (5F8)	2.0 TDI (CKFC)	110	10/13 -	4228	
LEON III ST (5F8)	2.0 TDI (CRLB)	110	04/14 -	4228	
LEON III ST (5F8)	2.0 TDI (CRMB)	110	10/13 -	4228	
LEON III ST (5F8)	2.0 TDI (CRMB)	110	04/14 -	4228	
LEON III ST (5F8)	2.0 TDI (CRVA)	81	11/13 -	4228	
LEON III ST (5F8)	2.0 TDI (CUNA)	135	08/13 -	4228	
LEON III ST (5F8)	2.0 TDI (CUNA)	135	11/14 -	4228	
LEON III ST (5F8)	2.0 TDI (CUPA)	135	08/13 -	4228	
LEON (1M1)	16	74	11/99 – 06/06		3529/1
LEON (1M1)	16	74	11/99 – 06/06	3782	
LEON (1M1)	16	74	11/99 – 06/06	3782/1	
LEON (1M1)	16	75	10/05 – 06/06		3529/1
LEON (1M1)	16	75	10/05 – 06/06	3782	
LEON (1M1)	16	75	10/05 – 06/06	3782/1	
LEON (1M1)	28	150	05/02 – 06/04		3529/1
LEON (1M1)	28	150	05/02 – 06/04	3590/1	
LEON (1M1)	1.4 16V	55	11/99 – 06/06		3529/1
LEON (1M1)	1.4 16V	55	11/99 – 06/06	3782	
LEON (1M1)	1.4 16V	55	11/99 – 06/06	3782/1	
LEON (1M1)	1.6 16 V	77	09/00 – 06/06		3529/1
LEON (1M1)	1.6 16 V	77	09/00 – 06/06	3782	
LEON (1M1)	1.6 16 V	77	09/00 – 06/06	3782/1	
LEON (1M1)	1.8 20V	92	11/99 – 06/06		3529/1
LEON (1M1)	1.8 20V	92	11/99 – 06/06	3782	
LEON (1M1)	1.8 20V	92	11/99 – 06/06	3782/1	
LEON (1M1)	1.8 20V T	132	11/99 – 06/06		3529/1
LEON (1M1)	1.8 20V T	132	11/99 – 06/06	3590/1	
LEON (1M1)	1.8 20V T 4	132	11/99 – 06/06		3529/1
LEON (1M1)	1.8 20V T 4	132	11/99 – 06/06	3590/1	
LEON (1M1)	1.8 T Cupra R	154	02/02 – 06/06		3529/1
LEON (1M1)	1.8 T Cupra R	154	02/02 – 06/06	3590/1	
LEON (1M1)	1.8 T Cupra R	165	07/03 – 06/06		3529/1
LEON (1M1)	1.9 SDI	50	11/99 – 06/06		3529/1
LEON (1M1)	1.9 SDI	50	11/99 – 06/06	3782	
LEON (1M1)	1.9 SDI	50	11/99 – 06/06	3782/1	
LEON (1M1)	1.9 TDI	66	11/99 – 06/06		3529/1
LEON (1M1)	1.9 TDI	66	11/99 – 06/06	3782	
LEON (1M1)	1.9 TDI	66	11/99 – 06/06	3782/1	
LEON (1M1)	1.9 TDI	74	10/05 – 06/06		3529/1
LEON (1M1)	1.9 TDI	74	10/05 – 06/06	3782	
LEON (1M1)	1.9 TDI	74	10/05 – 06/06	3782/1	
LEON (1M1)	1.9 TDI	81	11/99 – 06/06		3529/1
LEON (1M1)	1.9 TDI	81	11/99 – 06/06	3782	
LEON (1M1)	1.9 TDI	81	11/99 – 06/06	3782/1	
LEON (1M1)	1.9 TDI	96	05/03 – 06/06		3529/1
LEON (1M1)	1.9 TDI	96	05/03 – 06/06	3590/1	
LEON (1M1)	1.9 TDI	110	09/00 – 06/06		3529/1
LEON (1M1)	1.9 TDI	110	09/00 – 06/06	3590/1	
LEON (1M1)	1.9 TDI Syncro	110	05/02 – 06/06		3529/1
LEON (1M1)	1.9 TDI Syncro	110	05/02 – 06/06	3590/1	

MAKE & MODEL		KW	YEAR		
SEAT					
LEON (1M1)	2.8 Cupra 4	150	02/01 – 06/06		3529/1
LEON (1M1)	2.8 Cupra 4	150	02/01 – 06/06	3590/1	
LEON (1P1)	16	75	07/05 – 12/12		3529/1
LEON (1P1)	16	75	07/05 – 12/12	3782	
LEON (1P1)	16	75	07/05 – 12/12		3905
LEON (1P1)	16	75	07/05 – 12/12		4135
LEON (1P1)	1.2 TSI	77	02/10 – 12/12		3529/1
LEON (1P1)	1.2 TSI	77	02/10 – 12/12	3782	
LEON (1P1)	1.2 TSI	77	02/10 – 12/12		3905
LEON (1P1)	1.2 TSI	77	02/10 – 12/12		4135
LEON (1P1)	1.4 16V	63	06/06 – 12/12		3529/1
LEON (1P1)	1.4 16V	63	06/06 – 12/12	3782	
LEON (1P1)	1.4 16V	63	06/06 – 12/12		3905
LEON (1P1)	1.4 16V	63	06/06 – 12/12		4135
LEON (1P1)	1.4 TSI	92	11/07 – 12/12		3529/1
LEON (1P1)	1.4 TSI	92	11/07 – 12/12	3904	
LEON (1P1)	1.4 TSI	92	11/07 – 12/12		3905
LEON (1P1)	1.4 TSI	92	11/07 – 12/12		4135
LEON (1P1)	1.6 LPG	75	12/09 – 12/12		3529/1
LEON (1P1)	1.6 LPG	75	12/09 – 12/12	3904	
LEON (1P1)	1.6 LPG	75	12/09 – 12/12		4135
LEON (1P1)	1.6 MultiFuel	75	11/10 – 12/12		3529/1
LEON (1P1)	1.6 MultiFuel	75	11/10 – 12/12	3782	
LEON (1P1)	1.6 MultiFuel	75	11/10 – 12/12	3904	
LEON (1P1)	1.6 MultiFuel	75	11/10 – 12/12		4135
LEON (1P1)	1.6 TDI	66	11/10 – 12/12		3529/1
LEON (1P1)	1.6 TDI	66	11/10 – 12/12	3782	
LEON (1P1)	1.6 TDI	77	02/10 – 12/12		3529/1
LEON (1P1)	1.6 TDI	77	02/10 – 12/12	3782	
LEON (1P1)	1.6 TDI	77	02/10 – 12/12	3904	
LEON (1P1)	1.6 TDI	77	02/10 – 12/12		4135
LEON (1P1)	1.8 TSI	118	06/07 – 12/12		3529/1
LEON (1P1)	1.8 TSI	118	06/07 – 12/12	3904	
LEON (1P1)	1.8 TSI	118	06/07 – 12/12		3905
LEON (1P1)	1.8 TSI	118	06/07 – 12/12		4135
LEON (1P1)	1.9 TDI	66	06/07 – 12/10		3529/1
LEON (1P1)	1.9 TDI	66	06/07 – 12/10	3782	
LEON (1P1)	1.9 TDI	66	06/07 – 12/10		3905
LEON (1P1)	1.9 TDI	66	06/07 – 12/10		4135
LEON (1P1)	1.9 TDI	77	07/05 – 12/10		3529/1
LEON (1P1)	1.9 TDI	77	07/05 – 12/10	3782	
LEON (1P1)	1.9 TDI	77	07/05 – 12/10		3905
LEON (1P1)	1.9 TDI	77	07/05 – 12/10		4135
LEON (1P1)	1.9 TDi	81	10/05 – 12/12		3529/1
LEON (1P1)	2.0 Cupra R	195	09/09 – 12/12		3529/1
LEON (1P1)	2.0 Cupra R	195	09/09 – 12/12		3905
LEON (1P1)	2.0 Cupra R	195	09/09 – 12/12		4135
LEON (1P1)	2.0 FSI	110	07/05 – 05/10		3529/1
LEON (1P1)	2.0 FSI	110	07/05 – 05/10	3904	
LEON (1P1)	2.0 FSI	110	07/05 – 05/10		3905
LEON (1P1)	2.0 FSI	110	07/05 – 05/10		4135
LEON (1P1)	2.0 TDI	100	07/05 – 05/10		3529/1
LEON (1P1)	2.0 TDI	100	07/05 – 05/10	3904	
LEON (1P1)	2.0 TDI	100	07/05 – 05/10		3905
LEON (1P1)	2.0 TDI	100	07/05 – 05/10		4135
LEON (1P1)	2.0 TDI	103	10/05 – 10/10		3529/1
LEON (1P1)	2.0 TDI	103	10/05 – 10/10	3904	
LEON (1P1)	2.0 TDI	103	10/05 – 10/10		3905
LEON (1P1)	2.0 TDI	103	10/05 – 10/10		4135
LEON (1P1)	2.0 TDI	125	05/06 – 12/12		3529/1
LEON (1P1)	2.0 TDI	125	05/06 – 12/12	3904	
LEON (1P1)	2.0 TDI	125	05/06 – 12/12		3905
LEON (1P1)	2.0 TDI	125	05/06 – 12/12		4135
LEON (1P1)	2.0 TDI 16V	103	07/05 – 12/12		3529/1
LEON (1P1)	2.0 TDI 16V	103	07/05 – 12/12	3904	
LEON (1P1)	2.0 TDI 16V	103	07/05 – 12/12		3905
LEON (1P1)	2.0 TDI 16V	103	07/05 – 12/12		4135
LEON (1P1)	2.0 TFSI	136	09/05 – 05/06		3529/1
LEON (1P1)	2.0 TFSI	136	09/05 – 05/06	3904	
LEON (1P1)	2.0 TFSI	136	09/05 – 05/06		3905
LEON (1P1)	2.0 TFSI	136	09/05 – 05/06		4135

MAKE & MODEL		KW	YEAR		
SEAT					
LEON (1P1)	2.0 TFSI	147	05/05 – 03/09		3529/1
LEON (1P1)	2.0 TFSI	147	05/05 – 03/09	3904	
LEON (1P1)	2.0 TFSI	147	05/05 – 03/09		3905
LEON (1P1)	2.0 TFSI	147	05/05 – 03/09		4135
LEON (1P1)	2.0 TFSI	155	06/09 – 12/12	3904	
LEON (1P1)	2.0 TFSI	155	06/09 – 12/12		3905
LEON (1P1)	2.0 TFSI	177	11/06 – 05/11		3905
LEON (5F1)	1.0 TSI	85	05/15 -		3529/1
LEON (5F1)	1.0 TSI	85	05/15 -	4295	
LEON (5F1)	1.2 TSI	63	12/12 -		3529/1
LEON (5F1)	1.2 TSI	63	12/12 -	4295	
LEON (5F1)	1.2 TSI	77	01/13 -		3529/1
LEON (5F1)	1.2 TSI	77	01/13 -	4295	
LEON (5F1)	1.2 TSI	81	04/14 -		3529/1
LEON (5F1)	1.2 TSI	81	04/14 -	4295	
LEON (5F1)	1.4 TGI	81	02/13 -		3529/1
LEON (5F1)	1.4 TGI	81	02/13 -	4295	
LEON (5F1)	1.4 TSI	90	11/12 -		3529/1
LEON (5F1)	1.4 TSI	92	05/14 -		3529/1
LEON (5F1)	1.4 TSI	103	09/12 -		3529/1
LEON (5F1)	1.4 TSI	110	05/14 -		3529/1
LEON (5F1)	1.4 TSI	110	05/14 -		3905
LEON (5F1)	1.6 TDI	66	11/12 -		3529/1
LEON (5F1)	1.6 TDI	66	11/12 -	4295	
LEON (5F1)	1.6 TDI	77	11/12 -		3529/1
LEON (5F1)	1.6 TDI	77	11/12 -	4295	
LEON (5F1)	1.6 TDI	81	09/13 -		3529/1
LEON (5F1)	1.6 TDI	81	09/13 -	4295	
LEON (5F1)	1.6 TDI	85	01/17 -	4295	
LEON (5F1)	1.8 TSI	132	02/13 -		3529/1
LEON (5F1)	1.8 TSI	132	02/13 -		3905
LEON (5F1)	2.0 Cupra	195	10/13 -		3905
LEON (5F1)	2.0 Cupra	206	10/13 -		3905
LEON (5F1)	2.0 Cupra	213	10/15 -		3529/1
LEON (5F1)	2.0 TDI	81	05/13 -		3529/1
LEON (5F1)	2.0 TDI	105	05/13 -		3529/1
LEON (5F1)	2.0 TDI	110	10/12 -		3529/1
LEON (5F1)	2.0 TDI	135	09/12 -		3529/1
LEON (5F1)	1.0 TSI	85	05/15 -		4336
LEON (5F1)	1.2 TSI	63	12/12 -		4336
LEON (5F1)	1.2 TSI	77	01/13 -		4336
LEON (5F1)	1.2 TSI	81	04/14 -		4336
LEON (5F1)	1.4 TGI	81	02/13 -		4336
LEON (5F1)	1.4 TSI	90	11/12 -		4336
LEON (5F1)	1.4 TSI	103	09/12 -		4336
LEON (5F1)	1.6 TDI	77	11/12 -		4336
LEON (5F1)	1.6 TDI	81	09/13 -		4336
LEON (5F1)	1.6 TDI	66	11/12 -		4336
LEON (5F1)	1.8 TSI	132	02/13 -		4336
LEON (5F1)	2.0 TDI	105	05/13 -		4336
LEON (5F1)	2.0 TDI	135	09/12 -		4336
LEON (5F1)	2.0 TDI	81	05/13 -		4336
LEON (5F1)	2.0 TDI	110	10/12 -		4336
LEON III (5F1)	1.0 TSI (CHZD)	85	05/15 -	4228	
LEON III (5F1)	1.2 TSI (CJZA)	77	01/13 -	4228	
LEON III (5F1)	1.2 TSI (CYVB)	81	04/14 -	4228	
LEON III (5F1)	1.2 TSI (CJZB)	63	12/12 -	4228	
LEON III (5F1)	1.4 TGI (CPWA)	81	02/13 -	4228	
LEON III (5F1)	1.4 TSI (CHPA)	103	09/12 -	4228	
LEON III (5F1)	1.4 TSI (CMBA)	90	11/12 -	4228	
LEON III (5F1)	1.4 TSI (CPTA)	103	09/12 -	4228	
LEON III (5F1)	1.4 TSI (CZCA)	92	05/14 -	4228	
LEON III (5F1)	1.4 TSI (CZEA)	110	05/14 -	4228	
LEON III (5F1)	1.6 TDI (CLHA)	77	11/12 -	4228	
LEON III (5F1)	1.6 TDI (CLHB)	66	11/12 -	4228	
LEON III (5F1)	1.6 TDI (CRKB)	81	09/13 -	4228	
LEON III (5F1)	1.8 TFSI (CJSA)	132	02/13 -	4228	
LEON III (5F1)	2.0 TDI (CRVC)	105	05/13 -	4228	
LEON III (5F1)	2.0 TDI (CKFC)	110	10/12 -	4228	
LEON III (5F1)	2.0 TDI (CRMB)	110	10/12 -	4228	
LEON III (5F1)	2.0 TDI (CRVA)	81	05/13 -	4228	

MAKE & MODEL		KW	YEAR		
SEAT					
LEON III (5F1)	2.0 TDI (CUNA)	135	09/12 -	4228	
LEON III (5F1)	2.0 TDI (CUPA)	135	09/12 -	4228	
LEON III SC (5F5)	1.0 TSI (CHZD)	85	05/15 -	4228	
LEON III SC (5F5)	1.2 TSI (CJZA)	77	02/13 -	4228	
LEON III SC (5F5)	1.2 TSI (CYVB)	81	05/14 -	4228	
LEON III SC (5F5)	1.2 TSI (CJZB)	63	01/13 -	4228	
LEON III SC (5F5)	1.4 TSI (CHPA)	103	02/13 -	4228	
LEON III SC (5F5)	1.4 TSI (CMBA)	90	02/13 -	4228	
LEON III SC (5F5)	1.4 TSI (CPTA)	103	02/13 -	4228	
LEON III SC (5F5)	1.4 TSI (CZCA)	92	05/14 -	4228	
LEON III SC (5F5)	1.4 TSI (CZEA)	110	05/14 -	4228	
LEON III SC (5F5)	1.6 TDI (CLHA)	77	02/13 -	4228	
LEON III SC (5F5)	1.6 TDI (CLHB)	66	02/13 -	4228	
LEON III SC (5F5)	1.6 TDI (CRKB)	81	09/13 -	4228	
LEON III SC (5F5)	1.8 TFSI (CJSA)	132	02/13 -	4228	
LEON III SC (5F5)	2.0 TDI (CKFC)	110	02/13 -	4228	
LEON III SC (5F5)	2.0 TDI (CRMB)	110	02/13 -	4228	
LEON III SC (5F5)	2.0 TDI (CRVA)	81	02/13 -	4228	
LEON III SC (5F5)	2.0 TDI (CUNA)	135	03/13 -	4228	
LEON III SC (5F5)	2.0 TDI (CUPA)	135	03/13 -	4228	
LEON III SC (5F5)	2.0 TDI (CRVC)	105	05/13 -	4228	
LEON SC (5F5)	1.0 TSI	85	05/15 -		3529/1
LEON SC (5F5)	1.0 TSI	85	05/15 -	4295	
LEON SC (5F5)	1.0 TSI	85	05/15 -		4336
LEON SC (5F5)	1.2 TSI	63	01/13 -		3529/1
LEON SC (5F5)	1.2 TSI	63	01/13 -	4295	
LEON SC (5F5)	1.2 TSI	77	02/13 -		3529/1
LEON SC (5F5)	1.2 TSI	77	02/13 -	4295	
LEON SC (5F5)	1.2 TSI	81	05/14 -		3529/1
LEON SC (5F5)	1.4 TSI	90	02/13 -		3529/1
LEON SC (5F5)	1.4 TSI	92	05/14 -		3529/1
LEON SC (5F5)	1.4 TSI	103	02/13 -		3529/1
LEON SC (5F5)	1.4 TSI	110	05/14 -		3529/1
LEON SC (5F5)	1.4 TSI	110	05/14 -		3905
LEON SC (5F5)	1.6 TDI	66	02/13 -		3529/1
LEON SC (5F5)	1.6 TDI	66	02/13 -	4295	
LEON SC (5F5)	1.6 TDI	77	02/13 -		3529/1
LEON SC (5F5)	1.6 TDI	77	02/13 -	4295	
LEON SC (5F5)	1.6 TDI	81	09/13 -		3529/1
LEON SC (5F5)	1.6 TDI	81	09/13 -	4295	
LEON SC (5F5)	1.8 TSI	132	02/13 -		3529/1
LEON SC (5F5)	1.8 TSI	132	02/13 -		3905
LEON SC (5F5)	2.0 Cupra	195	10/13 -		3905
LEON SC (5F5)	2.0 Cupra	206	10/13 -		3905
LEON SC (5F5)	2.0 Cupra	213	10/15 -		3529/1
LEON SC (5F5)	2.0 TDI	81	02/13 -		3529/1
LEON SC (5F5)	2.0 TDI	105	05/13 -		3529/1
LEON SC (5F5)	2.0 TDI	110	02/13 -		3529/1
LEON SC (5F5)	2.0 TDI	135	03/13 -		3529/1
LEON SC (5F5)	1.2 TSI	63	01/13 -		4336
LEON ST (5F8)	1.0 TSI	85	05/15 -		3529/1
LEON ST (5F8)	1.0 TSI	85	05/15 -	4295	
LEON ST (5F8)	1.2 TSI	63	11/13 -		3529/1
LEON ST (5F8)	1.2 TSI	63	11/13 -	4295	
LEON ST (5F8)	1.2 TSI	77	08/13 -		3529/1
LEON ST (5F8)	1.2 TSI	77	08/13 -	4295	
LEON ST (5F8)	1.2 TSI	81	05/14 -		3529/1
LEON ST (5F8)	1.2 TSI	81	05/14 -	4295	
LEON ST (5F8)	1.4 TGI	81	10/13 -		3529/1
LEON ST (5F8)	1.4 TGI	81	10/13 -	4295	
LEON ST (5F8)	1.4 TSI	90	10/13 -		3529/1
LEON ST (5F8)	1.4 TSI	92	05/14 -		3529/1
LEON ST (5F8)	1.4 TSI	103	10/13 -		3529/1
LEON ST (5F8)	1.4 TSI	110	05/14 -		3529/1
LEON ST (5F8)	1.4 TSI	110	05/14 -		3905
LEON ST (5F8)	1.6 TDI	66	11/13 -		3529/1
LEON ST (5F8)	1.6 TDI	66	11/13 -	4295	
LEON ST (5F8)	1.6 TDI	77	10/13 -		3529/1
LEON ST (5F8)	1.6 TDI	77	10/13 -	4295	
LEON ST (5F8)	1.6 TDI	81	09/13 -		3529/1
LEON ST (5F8)	1.6 TDI	81	09/13 -	4295	

MAKE & MODEL		KW	YEAR		
SEAT					
LEON ST (5F8)	1.6 TDI	85	01/17 -	4295	
LEON ST (5F8)	1.6 TDI 4Drive	77	04/14 -		3529/1
LEON ST (5F8)	1.6 TDI 4Drive	77	04/14 -		3905
LEON ST (5F8)	1.6 TDI 4Drive	77	04/14 -	4295	
LEON ST (5F8)	1.6 TDI 4Drive	81	11/14 -		3529/1
LEON ST (5F8)	1.6 TDI 4Drive	81	11/14 -	4295	
LEON ST (5F8)	1.8 TSI	132	10/13 -		3529/1
LEON ST (5F8)	1.8 TSI	132	10/13 -		3905
LEON ST (5F8)	1.8 TSI	132	10/13 -		4336
LEON ST (5F8)	1.8 TSI 4Drive	132	11/14 -		3529/1
LEON ST (5F8)	1.8 TSI 4Drive	132	11/14 -		3905
LEON ST (5F8)	1.8 TSI 4Drive	132	11/14 -		4336
LEON ST (5F8)	2.0 Cupra	195	10/13 -		3905
LEON ST (5F8)	2.0 Cupra	206	10/13 -		3905
LEON ST (5F8)	2.0 Cupra	213	10/15 -		3529/1
LEON ST (5F8)	2.0 Cupra	213	10/15 -	4295	
LEON ST (5F8)	2.0 TDI	81	11/13 -		3529/1
LEON ST (5F8)	2.0 TDI	105	10/13 -		3529/1
LEON ST (5F8)	2.0 TDI	110	10/13 -		3529/1
LEON ST (5F8)	2.0 TDI	135	08/13 -		3529/1
LEON ST (5F8)	2.0 TDI 4Drive	110	04/14 -		3529/1
LEON ST (5F8)	2.0 TDI 4Drive	135	11/14 -		3529/1
LEON ST (5F8)	2.0 TDI 4Drive	135	11/14 -		3905
LEON ST (5F8)	1.2 TSI	77	08/13 -		4336
LEON ST (5F8)	1.2 TSI	81	05/14 -		4336
LEON ST (5F8)	1.2 TSI	63	11/13 -		4336
LEON ST (5F8)	1.4 TGI	81	10/13 -		4336
LEON ST (5F8)	1.4 TSI	90	10/13 -		4336
LEON ST (5F8)	1.4 TSI	103	10/13 -		4336
LEON ST (5F8)	1.6 TDI	66	11/13 -		4336
LEON ST (5F8)	1.6 TDI	81	09/13 -		4336
LEON ST (5F8)	1.6 TDI	77	10/13 -		4336
LEON ST (5F8)	1.6 TDI 4Drive	77	04/14 -		4336
LEON ST (5F8)	1.6 TDI 4Drive	81	11/14 -		4336
LEON ST (5F8)	2.0 Cupra	213	10/15 -		4336
LEON ST (5F8)	2.0 TDI	81	11/13 -		4336
LEON ST (5F8)	2.0 TDI	105	10/13 -		4336
LEON ST (5F8)	2.0 TDI	110	10/13 -		4336
LEON ST (5F8)	2.0 TDI	135	08/13 -		4336
LEON ST (5F8)	2.0 TDI 4Drive	110	04/14 -		4336
LEON ST (5F8)	2.0 TDI 4Drive	135	11/14 -		4336
MALAGA (023A)	12	44	05/85 – 12/93	3424/1	
MALAGA (023A)	12	47	11/84 – 12/93	3424/1	
MALAGA (023A)	15	63	05/85 – 12/93	3424/1	
MALAGA (023A)	1.2 i	52	12/89 – 12/93	3424/1	
MALAGA (023A)	1.5 i	74	01/87 – 12/93	3424/1	
MALAGA (023A)	1.5 i CAT	66	10/86 – 12/93	3424/1	
MALAGA (023A)	1.7 D	40	05/85 – 12/93	3424/1	
MALAGA (023A)	1.7 D	42	05/90 – 12/93	3424/1	
MARBELLA (28)	08	25	08/86 – 12/93	3424/1	
MARBELLA (28)	09	29	01/87 – 12/93	3424/1	
MARBELLA (28)	09	32	07/97 – 10/98	3424/1	
MARBELLA (28)	0.9 CAT	29	01/90 – 11/96	3424/1	
MARBELLA (28)	0.9 CAT	30	11/96 – 10/98	3424/1	
MARBELLA Box (028A)	08	25	01/87 – 12/93	3424/1	
MARBELLA Box (028A)	09	29	01/87 – 12/93	3424/1	
MARBELLA Box (028A)	0.9 CAT	29	01/87 – 12/93	3424/1	
Mii (KF1_)	10	44	10/11 -	3782/1	
Mii (KF1_)	10	55	10/11 -	3782/1	
Mii (KF1_)	1.0 EcoFuel	50	11/12 -	3782/1	
Only South America				3761	
PANDA (141A) Fastback (City car-A Segment)	0.9 (100 GL 3000)		80-86	3357	
RITMO (138)	1.7 D	41	10/79 – 09/83	3316	
RITMO (138)	1.7 D	41	10/79 – 09/83	3424/1	
RITMO (138) Fastback (Compact car-C Segment)	1.2		78-83	3357	
RITMO (138) Fastback (Compact car-C Segment)	1.4		78-83	3357	
RITMO (138) Fastback (Compact car-C Segment)	1.7 D		79-83	3357	
RONDA (022A)	12	44	10/84 – 12/86	3424/1	
RONDA (022A)	12	47	08/83 – 05/85	3424/1	
RONDA (022A)	14	54	06/82 – 11/88	3424/1	
RONDA (022A)	15	63	09/84 – 12/86	3424/1	

MAKE & MODEL		KW	YEAR		
SEAT					
RONDA (022A)	16	68	08/83 – 09/85	3424/1	
RONDA (022A)	1.7 Diesel	40	06/82 – 12/86	3424/1	
RONDA (022A)	1.7 Diesel	41	06/82 – 12/86	3424/1	
TERRA (24)	09	29	02/87 – 12/96	3424/1	
TERRA (24)	0.9 CAT	29	02/92 – 12/94	3424/1	
TERRA (24)	1.3 D	33	03/90 – 12/94	3424/1	
TERRA (24)	1.4 D	35	10/90 – 12/95	3424/1	
TERRA Box (024A)	09	29	01/87 – 12/95	3424/1	
TERRA Box (024A)	0.9 CAT	29	01/90 – 12/95	3424/1	
TERRA Box (024A)	1.3 D	33	03/90 – 02/92	3424/1	
TERRA Box (024A)	1.4 D	35	10/90 – 02/92	3424/1	
TOLEDO II (1M2)	1.4 16V (AHW)	55	01/00 – 05/02	3682	
TOLEDO II (1M2)	1.4 16V (APE)	55	01/00 – 05/02	3682	
TOLEDO II (1M2)	1.4 16V (AUA)	55	01/00 – 05/02	3682	
TOLEDO II (1M2)	1.4 16V (AXP)	55	01/00 – 05/02	3682	
TOLEDO II (1M2)	1.4 16V (BCA)	55	01/00 – 05/02	3682	
TOLEDO II (1M2)	1.6 (AEH)	74	10/98 – 07/04	3682	
TOLEDO II (1M2)	1.6 (AKL)	74	10/98 – 07/04	3682	
TOLEDO II (1M2)	1.6 (APF)	74	10/98 – 07/04	3682	
TOLEDO II (1M2)	1.9 SDI (AQM)	50	11/99 – 06/04	3682	
TOLEDO II (1M2)	1.9 TDI (ASV)	81	10/98 – 07/04	3682	
TOLEDO II (1M2)	1.9 TDI (AGR)	66	03/99 – 07/04	3682	
TOLEDO II (1M2)	1.9 TDI (AHF)	81	10/98 – 07/04	3682	
TOLEDO II (1M2)	1.9 TDI (ALH)	66	03/99 – 07/04	3682	
TOLEDO I (1L)	1.6 i	52	05/91 – 12/93	3444	
TOLEDO I (1L)	1.6 i	52	05/91 – 12/93	3538	
TOLEDO I (1L)	1.6 i	52	05/91 – 12/93	3551	
TOLEDO I (1L)	1.6 i	52	05/91 – 12/93	3585	
TOLEDO I (1L)	1.6 i	52	05/91 – 12/93	3637	
TOLEDO I (1L)	1.6 i	54	05/91 – 03/99	3444	
TOLEDO I (1L)	1.6 i	54	05/91 – 03/99	3538	
TOLEDO I (1L)	1.6 i	54	05/91 – 03/99	3551	
TOLEDO I (1L)	1.6 i	54	05/91 – 03/99	3585	
TOLEDO I (1L)	1.6 i	54	05/91 – 03/99	3637	
TOLEDO I (1L)	1.6 i	55	01/93 – 03/99	3444	
TOLEDO I (1L)	1.6 i	55	01/93 – 03/99	3538	
TOLEDO I (1L)	1.6 i	55	01/93 – 03/99	3551	
TOLEDO I (1L)	1.6 i	55	01/93 – 03/99	3585	
TOLEDO I (1L)	1.6 i	55	01/93 – 03/99	3637	
TOLEDO I (1L)	1.6 i	74	11/96 – 03/99	3444	
TOLEDO I (1L)	1.6 i	74	11/96 – 03/99	3538	
TOLEDO I (1L)	1.6 i	74	11/96 – 03/99	3551	
TOLEDO I (1L)	1.6 i	74	11/96 – 03/99	3585	
TOLEDO I (1L)	1.6 i	74	11/96 – 03/99	3637	
TOLEDO I (1L)	1.8 16V	92	05/91 – 03/99		3529
TOLEDO I (1L)	1.8 16V	92	05/91 – 03/99		3529/1
TOLEDO I (1L)	1.8 16V	92	05/91 – 03/99	3531	
TOLEDO I (1L)	1.8 16V	98	05/91 – 03/99		3529
TOLEDO I (1L)	1.8 16V	98	05/91 – 03/99		3529/1
TOLEDO I (1L)	1.8 16V	98	05/91 – 03/99	3531	
TOLEDO I (1L)	1.8 GT	102	05/91 – 11/92		3529
TOLEDO I (1L)	1.8 GT	102	05/91 – 11/92		3529/1
TOLEDO I (1L)	1.8 GT	102	05/91 – 11/92	3531	
TOLEDO I (1L)	1.8 i	65	05/91 – 12/96	3444	
TOLEDO I (1L)	1.8 i	65	05/91 – 12/96	3538	
TOLEDO I (1L)	1.8 i	65	05/91 – 12/96	3585	
TOLEDO I (1L)	1.8 i	65	05/91 – 12/96	3637	
TOLEDO I (1L)	1.8 i	66	11/93 – 12/96	3444	
TOLEDO I (1L)	1.8 i	66	11/93 – 12/96	3538	
TOLEDO I (1L)	1.8 i	66	11/93 – 12/96	3585	
TOLEDO I (1L)	1.8 i	66	11/93 – 12/96	3637	
TOLEDO I (1L)	1.9 D	47	12/95 – 03/99	3444	
TOLEDO I (1L)	1.9 D	47	12/95 – 03/99	3538	
TOLEDO I (1L)	1.9 D	47	12/95 – 03/99	3585	
TOLEDO I (1L)	1.9 D	47	12/95 – 03/99	3637	
TOLEDO I (1L)	1.9 D	50	05/91 – 03/99	3444	
TOLEDO I (1L)	1.9 D	50	05/91 – 03/99	3538	
TOLEDO I (1L)	1.9 D	50	05/91 – 03/99	3585	
TOLEDO I (1L)	1.9 D	50	05/91 – 03/99	3637	
TOLEDO I (1L)	1.9 TD	55	05/91 – 03/99	3444	
TOLEDO I (1L)	1.9 TD	55	05/91 – 03/99	3538	

MAKE & MODEL		KW	YEAR		
SEAT					
TOLEDO I (1L)	1.9 TD	55	05/91 – 03/99	3585	
TOLEDO I (1L)	1.9 TD	55	05/91 – 03/99	3637	
TOLEDO I (1L)	1.9 TDI	66	08/95 – 03/99	3531	
TOLEDO I (1L)	1.9 TDI	66	08/95 – 03/99	3551	
TOLEDO I (1L)	1.9 TDI	81	11/96 – 03/99	3531	
TOLEDO I (1L)	1.9 TDI	81	11/96 – 03/99	3551	
TOLEDO I (1L)	2.0 i	85	05/91 – 03/99		3529
TOLEDO I (1L)	2.0 i	85	05/91 – 03/99		3529/1
TOLEDO I (1L)	2.0 i	85	05/91 – 03/99	3531	
TOLEDO I (1L)	2.0 i 16V	110	11/93 – 03/99		3529/1
TOLEDO I (1L)	2.0 i 16V	110	11/93 – 03/99	3551	
TOLEDO II (1M2)	16	74	10/98 – 07/04		3529/1
TOLEDO II (1M2)	16	74	10/98 – 07/04	3782	
TOLEDO II (1M2)	16	74	10/98 – 07/04	3782/1	
TOLEDO II (1M2)	16	75	08/05 – 05/06		3529/1
TOLEDO II (1M2)	16	75	08/05 – 05/06	3782	
TOLEDO II (1M2)	16	75	08/05 – 05/06	3782/1	
TOLEDO II (1M2)	1.4 16V	55	01/00 – 05/02		3529/1
TOLEDO II (1M2)	1.4 16V	55	01/00 – 05/02	3782	
TOLEDO II (1M2)	1.4 16V	55	01/00 – 05/02	3782/1	
TOLEDO II (1M2)	1.6 16V	77	06/00 – 05/06		3529/1
TOLEDO II (1M2)	1.6 16V	77	06/00 – 05/06	3782	
TOLEDO II (1M2)	1.6 16V	77	06/00 – 05/06	3782/1	
TOLEDO II (1M2)	1.8 20V	92	10/98 – 07/04		3529/1
TOLEDO II (1M2)	1.8 20V	92	10/98 – 07/04	3782	
TOLEDO II (1M2)	1.8 20V	92	10/98 – 07/04	3782/1	
TOLEDO II (1M2)	1.8 20VT	132	09/00 – 07/04		3529/1
TOLEDO II (1M2)	1.8 20VT	132	09/00 – 07/04	3590/1	
TOLEDO II (1M2)	1.9 SDI	50	11/99 – 06/04		3529/1
TOLEDO II (1M2)	1.9 TDI	66	03/99 – 07/04		3529/1
TOLEDO II (1M2)	1.9 TDI	66	03/99 – 07/04	3782	
TOLEDO II (1M2)	1.9 TDI	66	03/99 – 07/04	3782/1	
TOLEDO II (1M2)	1.9 TDI	81	10/98 – 07/04		3529/1
TOLEDO II (1M2)	1.9 TDI	81	10/98 – 07/04	3782	
TOLEDO II (1M2)	1.9 TDI	81	10/98 – 07/04	3782/1	
TOLEDO II (1M2)	1.9 TDI	96	05/03 – 05/06		3529/1
TOLEDO II (1M2)	1.9 TDI	96	05/03 – 05/06	3590/1	
TOLEDO II (1M2)	1.9 TDI	110	10/00 – 07/04		3529/1
TOLEDO II (1M2)	1.9 TDI	110	10/00 – 07/04	3590/1	
TOLEDO II (1M2)	2.3 V5	110	10/98 – 11/00		3529/1
TOLEDO II (1M2)	2.3 V5	110	10/98 – 11/00	3590/1	
TOLEDO II (1M2)	2.3 V5 20V	125	09/00 – 11/03		3529/1
TOLEDO II (1M2)	2.3 V5 20V	125	09/00 – 11/03	3590/1	
TOLEDO III (5P2)	16	75	10/04 – 05/09		3529/1
TOLEDO III (5P2)	16	75	10/04 – 05/09	3782	
TOLEDO III (5P2)	1.4 16V	63	05/06 – 05/09		3529/1
TOLEDO III (5P2)	1.4 16V	63	05/06 – 05/09	3782	
TOLEDO III (5P2)	1.4 16V	63	05/06 – 05/09		3905
TOLEDO III (5P2)	1.8 TFSI	118	01/07 – 05/09		3529/1
TOLEDO III (5P2)	1.8 TFSI	118	01/07 – 05/09	3904	
TOLEDO III (5P2)	1.9 TDI	77	10/04 – 05/09		3529/1
TOLEDO III (5P2)	1.9 TDI	77	10/04 – 05/09	3782	
TOLEDO III (5P2)	1.9 TDI	77	10/04 – 05/09	3904	
TOLEDO III (5P2)	2.0 FSI	110	10/04 – 05/09		3529/1
TOLEDO III (5P2)	2.0 FSI	110	10/04 – 05/09	3904	
TOLEDO III (5P2)	2.0 TDI	100	09/04 – 05/09		3529/1
TOLEDO III (5P2)	2.0 TDI	100	09/04 – 05/09	3904	
TOLEDO III (5P2)	2.0 TDI	103	11/05 – 05/09		3529/1
TOLEDO III (5P2)	2.0 TDI	103	11/05 – 05/09	3904	
TOLEDO III (5P2)	2.0 TDI	125	01/06 – 05/09		3529/1
TOLEDO III (5P2)	2.0 TDI	125	01/06 – 05/09	3904	
TOLEDO III (5P2)	2.0 TDI 16V	103	04/04 – 05/09		3529/1
TOLEDO III (5P2)	2.0 TDI 16V	103	04/04 – 05/09	3904	
TOLEDO III (5P2)	2.0 TFSI	147	11/05 – 05/09		3529/1
TOLEDO III (5P2)	2.0 TFSI	147	11/05 – 05/09	3904	
TOLEDO IV (KG3)	12	55	07/12 -		3529/1
TOLEDO IV (KG3)	12	55	07/12 -	3782/1	
TOLEDO IV (KG3)	12	55	07/12 -	3904	
TOLEDO IV (KG3)	16	77	07/13 -		3529/1
TOLEDO IV (KG3)	16	77	07/13 -	3782/1	
TOLEDO IV (KG3)	16	77	07/13 -	3904	

MAKE & MODEL		KW	YEAR		
SEAT					
TOLEDO IV (KG3)	1.2 TSI	63	07/12 -		3529/1
TOLEDO IV (KG3)	1.2 TSI	63	07/12 -	3782/1	
TOLEDO IV (KG3)	1.2 TSI	63	07/12 -	3904	
TOLEDO IV (KG3)	1.2 TSI	66	05/15 -		3529/1
TOLEDO IV (KG3)	1.2 TSI	66	05/15 -	3782/1	
TOLEDO IV (KG3)	1.2 TSI	66	05/15 -	3904	
TOLEDO IV (KG3)	1.2 TSI	77	07/12 -		3529/1
TOLEDO IV (KG3)	1.2 TSI	77	07/12 -	3782/1	
TOLEDO IV (KG3)	1.2 TSI	77	07/12 -	3904	
TOLEDO IV (KG3)	1.2 TSI	81	05/15 -		3529/1
TOLEDO IV (KG3)	1.2 TSI	81	05/15 -	3782/1	
TOLEDO IV (KG3)	1.2 TSI	81	05/15 -	3904	
TOLEDO IV (KG3)	1.4 TDI	66	05/15 -		3529/1
TOLEDO IV (KG3)	1.4 TDI	66	05/15 -	3782/1	
TOLEDO IV (KG3)	1.4 TDI	66	05/15 -	3904	
TOLEDO IV (KG3)	1.4 TSI	90	07/12 -		3529/1
TOLEDO IV (KG3)	1.4 TSI	90	07/12 -	3782/1	
TOLEDO IV (KG3)	1.4 TSI	90	07/12 -	3904	
TOLEDO IV (KG3)	1.4 TSI	92	05/15 -		3529/1
TOLEDO IV (KG3)	1.4 TSI	92	05/15 -	3782/1	
TOLEDO IV (KG3)	1.4 TSI	92	05/15 -	3904	
TOLEDO IV (KG3)	1.6 TDI	66	06/13 -		3529/1
TOLEDO IV (KG3)	1.6 TDI	66	06/13 -	3782/1	
TOLEDO IV (KG3)	1.6 TDI	66	06/13 -	3904	
TOLEDO IV (KG3)	1.6 TDI	77	07/12 -		3529/1
TOLEDO IV (KG3)	1.6 TDI	77	07/12 -	3782/1	
TOLEDO IV (KG3)	1.6 TDI	77	07/12 -	3904	
TOLEDO IV (KG3)	1.6 TDI	85	05/15 -		3529/1
TOLEDO IV (KG3)	1.6 TDI	85	05/15 -	3782/1	
TOLEDO IV (KG3)	1.6 TDI	85	05/15 -	3904	
SKODA					
130	G,GL (S136)	46	05/88 – 10/91	3404	
130	GL	39	08/87 – 10/91	3404	
130	GL (S135)	43	05/88 – 10/91	3404	
130	L,GL	45	02/85 – 10/91	3404	
105,120 (742)	1.0 105 S,L	34	08/76 – 12/90	3406	
105,120 (742)	1.0 105 S,L,GL	33	08/76 – 08/83	3406	
105,120 (742)	1.2 120 L	38	08/76 – 12/90	3406	
105,120 (742)	1.2 120 LS	43	08/76 – 12/90	3406	
105,120 (744)	1.0 105 S,L	32	02/88 – 12/90	3406	
105,120 (744)	1.0 105 S,L,LS	33	10/83 – 12/90	3406	
105,120 (744)	1.2 120 GLS	43	02/83 – 12/90	3406	
105,120 (744)	1.2 120 L	35	08/87 – 12/90	3406	
105,120 (744)	1.2 120 L	38	10/83 – 12/90	3406	
CITIGO	10	44	10/11 -	3782/1	
CITIGO	10	55	10/11 -	3782/1	
CITIGO	1.0 CNG	50	11/12 -	3782	
CITIGO	1.0 CNG	50	11/12 -	3782/1	
FABIA	12	44	12/06 – 12/14		3529/1
FABIA	12	44	12/06 – 12/14	3566	
FABIA	12	51	01/07 – 12/14		3529/1
FABIA	12	51	01/07 – 12/14	3566	
FABIA	14	63	01/07 – 12/14		3529/1
FABIA	16	77	04/07 – 12/14		3529/1
FABIA	1.2 TDI	55	05/10 – 12/14		3529/1
FABIA	1.2 TSI	63	03/10 – 12/14		3529/1
FABIA	1.2 TSI	77	03/10 – 12/14		3529/1
FABIA	1.4 TDI	51	02/07 – 03/10		3529/1
FABIA	1.4 TDI	51	02/07 – 03/10	3566	
FABIA	1.4 TDI	59	01/07 – 03/10		3529/1
FABIA	1.4 TSI RS	132	05/10 – 12/14		3529/1
FABIA	1.6 TDI	55	04/10 – 12/14		3529/1
FABIA	1.6 TDI	66	03/10 – 12/14		3529/1
FABIA	1.6 TDI	77	03/10 – 12/14		3529/1
FABIA	1.9 TDI	77	04/07 – 03/10		3529/1
FABIA (542)	12	44	12/06 – 12/14	3782	
FABIA (542)	12	44	12/06 – 12/14	3782/1	
FABIA (542)	12	51	01/07 – 12/14	3782	
FABIA (542)	12	51	01/07 – 12/14	3782/1	
FABIA (542)	14	63	01/07 – 12/14	3782	
FABIA (542)	14	63	01/07 – 12/14	3782/1	

MAKE & MODEL		KW	YEAR		
SKODA					
FABIA (542)	14	63	01/07 – 12/14	4138	
FABIA (542)	16	77	04/07 – 12/14	3782	
FABIA (542)	16	77	04/07 – 12/14	3782/1	
FABIA (542)	16	77	04/07 – 12/14	4138	
FABIA (542)	1.2 12V	44	11/11 – 12/14	3782/1	
FABIA (542)	1.2 12V	44	11/11 – 12/14	4200	
FABIA (542)	1.2 TDI	55	05/10 – 12/14	3782/1	
FABIA (542)	1.2 TDI	55	05/10 – 12/14	3904	
FABIA (542)	1.2 TSI	63	03/10 – 12/14	3782	
FABIA (542)	1.2 TSI	63	03/10 – 12/14	3782/1	
FABIA (542)	1.2 TSI	63	03/10 – 12/14	4138	
FABIA (542)	1.2 TSI	77	03/10 – 12/14	3782/1	
FABIA (542)	1.2 TSI	77	03/10 – 12/14	3904	
FABIA (542)	1.4 TDI	51	02/07 – 03/10	3782	
FABIA (542)	1.4 TDI	51	02/07 – 03/10	3782/1	
FABIA (542)	1.4 TDI	59	01/07 – 03/10	3782	
FABIA (542)	1.4 TDI	59	01/07 – 03/10	3782/1	
FABIA (542)	1.4 TDI	59	01/07 – 03/10	4138	
FABIA (542)	1.4 TSI RS	132	05/10 – 12/14	3904	
FABIA (542)	1.6 TDI	55	04/10 – 12/14	3782/1	
FABIA (542)	1.6 TDI	55	04/10 – 12/14	3904	
FABIA (542)	1.6 TDI	66	03/10 – 12/14	3782	
FABIA (542)	1.6 TDI	66	03/10 – 12/14	3782/1	
FABIA (542)	1.6 TDI	66	03/10 – 12/14	4138	
FABIA (542)	1.6 TDI	77	03/10 – 12/14	3782	
FABIA (542)	1.6 TDI	77	03/10 – 12/14	3782/1	
FABIA (542)	1.6 TDI	77	03/10 – 12/14	4138	
FABIA (542)	1.9 TDI	77	04/07 – 03/10	3782	
FABIA (542)	1.9 TDI	77	04/07 – 03/10	3782/1	
FABIA (542)	1.9 TDI	77	04/07 – 03/10	4138	
FABIA (5J_)	14	63	12/08 -		3529/1
FABIA (5J_)	14	63	12/08 -	3782	
FABIA (5J_)	14	63	12/08 -	3782/1	
FABIA (5J_)	16	77	12/08 -		3529/1
FABIA (5J_)	16	77	12/08 – 12/15	3782	
FABIA (5J_)	16	77	12/08 – 12/15	3782/1	
FABIA (6Y2)	10	37	12/99 – 08/02	3566	
FABIA (6Y2)	12	40	08/02 – 03/08	3566	
FABIA (6Y2)	12	47	01/03 – 03/08	3782	
FABIA (6Y2)	12	47	01/03 – 03/08	3782/1	
FABIA (6Y2)	14	44	08/00 – 08/02	3782	
FABIA (6Y2)	14	44	08/00 – 08/02	3782/1	
FABIA (6Y2)	14	50	08/99 – 05/03	3782	
FABIA (6Y2)	14	50	08/99 – 05/03	3782/1	
FABIA (6Y2)	20	85	12/99 – 03/08		3529/1
FABIA (6Y2)	20	85	12/99 – 03/08	4138	
FABIA (6Y2)	20	85	12/99 – 03/08		4152
FABIA (6Y2)	1.4 16V	55	12/99 – 03/08		3529/1
FABIA (6Y2)	1.4 16V	55	12/99 – 03/08	3782	
FABIA (6Y2)	1.4 16V	55	12/99 – 03/08	3782/1	
FABIA (6Y2)	1.4 16V	55	12/99 – 03/08		4152
FABIA (6Y2)	1.4 16V	74	12/99 – 03/08		3529/1
FABIA (6Y2)	1.4 16V	74	12/99 – 03/08	3782	
FABIA (6Y2)	1.4 16V	74	12/99 – 03/08	3782/1	
FABIA (6Y2)	1.4 16V	74	12/99 – 03/08		4152
FABIA (6Y2)	1.4 TDI	51	10/05 – 03/08		3529/1
FABIA (6Y2)	1.4 TDI	51	10/05 – 03/08	3782	
FABIA (6Y2)	1.4 TDI	51	10/05 – 03/08	3782/1	
FABIA (6Y2)	1.4 TDI	51	10/05 – 03/08		4152
FABIA (6Y2)	1.4 TDI	55	04/03 – 03/08		3529/1
FABIA (6Y2)	1.4 TDI	55	04/03 – 03/08	3782	
FABIA (6Y2)	1.4 TDI	55	04/03 – 03/08	3782/1	
FABIA (6Y2)	1.4 TDI	55	04/03 – 03/08		4152
FABIA (6Y2)	1.4 TDI	59	10/05 – 03/08		3529/1
FABIA (6Y2)	1.4 TDI	59	10/05 – 03/08	3782	
FABIA (6Y2)	1.4 TDI	59	10/05 – 03/08	3782/1	
FABIA (6Y2)	1.4 TDI	59	10/05 – 03/08		4152
FABIA (6Y2)	1.9 SDI	47	12/99 – 03/08	3782	
FABIA (6Y2)	1.9 SDI	47	12/99 – 03/08	3782/1	
FABIA (6Y2)	1.9 TDI	74	01/00 – 03/08		3529/1
FABIA (6Y2)	1.9 TDI	74	01/00 – 03/08	3782	

MAKE & MODEL		KW	YEAR		
SKODA					
FABIA (6Y2)	1.9 TDI	74	01/00 – 03/08	3782/1	
FABIA (6Y2)	1.9 TDI	74	01/00 – 03/08		4152
FABIA (6Y2)	1.9 TDI RS	96	06/03 – 03/08		3529/1
FABIA (6Y2)	1.9 TDI RS	96	06/03 – 03/08	4138	
FABIA (NJ3)	10	44	08/14 -		3529/1
FABIA (NJ3)	10	44	08/14 -	3782/1	
FABIA (NJ3)	10	44	08/14 -	3904	
FABIA (NJ3)	10	44	08/14 -	4200	
FABIA (NJ3)	10	55	08/14 -		3529/1
FABIA (NJ3)	10	55	08/14 -	3782/1	
FABIA (NJ3)	10	55	08/14 -	3904	
FABIA (NJ3)	10	55	08/14 -	4200	
FABIA (NJ3)	16	81	01/15 -		3529/1
FABIA (NJ3)	16	81	01/15 -	3782/1	
FABIA (NJ3)	16	81	01/15 -	3904	
FABIA (NJ3)	1.2 TSI	66	08/14 -		3529/1
FABIA (NJ3)	1.2 TSI	66	08/14 -	3782/1	
FABIA (NJ3)	1.2 TSI	66	08/14 -	3904	
FABIA (NJ3)	1.2 TSI	66	08/14 -	4200	
FABIA (NJ3)	1.2 TSI	81	08/14 -		3529/1
FABIA (NJ3)	1.2 TSI	81	08/14 -	3782/1	
FABIA (NJ3)	1.2 TSI	81	08/14 -	3904	
FABIA (NJ3)	1.2 TSI	81	08/14 -	4200	
FABIA (NJ3)	1.4 TDI	55	05/15 -		3529/1
FABIA (NJ3)	1.4 TDI	55	05/15 -	3782/1	
FABIA (NJ3)	1.4 TDI	55	05/15 -	3904	
FABIA (NJ3)	1.4 TDI	66	08/14 -		3529/1
FABIA (NJ3)	1.4 TDI	66	08/14 -	3782/1	
FABIA (NJ3)	1.4 TDI	66	08/14 -	3904	
FABIA (NJ3)	1.4 TDI	66	08/14 -	4200	
FABIA (NJ3)	1.4 TDI	77	08/14 -		3529/1
FABIA (NJ3)	1.4 TDI	77	08/14 -	3782/1	
FABIA (NJ3)	1.4 TDI	77	08/14 -	3904	
FABIA (NJ3)	1.4 TDI	77	08/14 -	4200	
FABIA Combi	12	44	10/07 – 11/14		3529/1
FABIA Combi	12	44	10/07 – 11/14	3566	
FABIA Combi	12	51	10/07 – 12/14		3529/1
FABIA Combi	12	51	10/07 – 12/14	3566	
FABIA Combi	14	63	10/07 – 12/14		3529/1
FABIA Combi	16	77	10/07 – 12/14		3529/1
FABIA Combi	1.2 TDI	55	05/10 – 12/14		3529/1
FABIA Combi	1.2 TSI	63	03/10 – 12/14		3529/1
FABIA Combi	1.2 TSI	77	03/10 – 12/14		3529/1
FABIA Combi	1.4 TDI	51	10/07 – 03/10		3529/1
FABIA Combi	1.4 TDI	51	10/07 – 03/10	3566	
FABIA Combi	1.4 TDI	59	10/07 – 03/10		3529/1
FABIA Combi	1.4 TSI RS	132	05/10 – 12/14		3529/1
FABIA Combi	1.6 TDI	55	04/10 – 12/14		3529/1
FABIA Combi	1.6 TDI	66	03/10 – 12/14		3529/1
FABIA Combi	1.6 TDI	77	03/10 – 12/14		3529/1
FABIA Combi	1.9 TDI	77	10/07 – 03/10		3529/1
FABIA Combi (545)	12	44	10/07 – 11/14	3782	
FABIA Combi (545)	12	44	10/07 – 11/14	3782/1	
FABIA Combi (545)	12	51	10/07 – 12/14	3782	
FABIA Combi (545)	12	51	10/07 – 12/14	3782/1	
FABIA Combi (545)	14	63	10/07 – 12/14	3782	
FABIA Combi (545)	14	63	10/07 – 12/14	3782/1	
FABIA Combi (545)	14	63	10/07 – 12/14	3904	
FABIA Combi (545)	16	77	10/07 – 12/14	3782	
FABIA Combi (545)	16	77	10/07 – 12/14	3782/1	
FABIA Combi (545)	16	77	10/07 – 12/14	3904	
FABIA Combi (545)	1.2 12V	44	11/11 – 12/14	3782/1	
FABIA Combi (545)	1.2 12V	44	11/11 – 12/14	4200	
FABIA Combi (545)	1.2 TDI	55	05/10 – 12/14	3782	
FABIA Combi (545)	1.2 TDI	55	05/10 – 12/14	3782/1	
FABIA Combi (545)	1.2 TDI	55	05/10 – 12/14	3904	
FABIA Combi (545)	1.2 TSI	63	03/10 – 12/14	3782	
FABIA Combi (545)	1.2 TSI	63	03/10 – 12/14	3782/1	
FABIA Combi (545)	1.2 TSI	63	03/10 – 12/14	3904	
FABIA Combi (545)	1.2 TSI	77	03/10 – 12/14	3782	
FABIA Combi (545)	1.2 TSI	77	03/10 – 12/14	3782/1	

MAKE & MODEL   		KW	YEAR		
SKODA					
FABIA Combi (545)	1.2 TSI	77	03/10 – 12/14	3904	
FABIA Combi (545)	1.4 TDI	51	10/07 – 03/10	3782	
FABIA Combi (545)	1.4 TDI	51	10/07 – 03/10	3782/1	
FABIA Combi (545)	1.4 TDI	59	10/07 – 03/10	3782	
FABIA Combi (545)	1.4 TDI	59	10/07 – 03/10	3782/1	
FABIA Combi (545)	1.4 TDI	59	10/07 – 03/10	3904	
FABIA Combi (545)	1.4 TSI RS	132	05/10 – 12/14	3904	
FABIA Combi (545)	1.6 TDI	55	04/10 – 12/14	3782	
FABIA Combi (545)	1.6 TDI	55	04/10 – 12/14	3782/1	
FABIA Combi (545)	1.6 TDI	55	04/10 – 12/14	3904	
FABIA Combi (545)	1.6 TDI	66	03/10 – 12/14	3782	
FABIA Combi (545)	1.6 TDI	66	03/10 – 12/14	3782/1	
FABIA Combi (545)	1.6 TDI	66	03/10 – 12/14	3904	
FABIA Combi (545)	1.6 TDI	77	03/10 – 12/14	3782	
FABIA Combi (545)	1.6 TDI	77	03/10 – 12/14	3782/1	
FABIA Combi (545)	1.6 TDI	77	03/10 – 12/14	3904	
FABIA Combi (545)	1.9 TDI	77	10/07 – 03/10	3782	
FABIA Combi (545)	1.9 TDI	77	10/07 – 03/10	4138	
FABIA Combi (6Y5)	12	40	07/01 – 12/07	3566	
FABIA Combi (6Y5)	12	47	01/03 – 12/07	3782	
FABIA Combi (6Y5)	12	47	01/03 – 12/07	3782/1	
FABIA Combi (6Y5)	14	44	04/00 – 03/03	3782	
FABIA Combi (6Y5)	14	44	04/00 – 03/03	3782/1	
FABIA Combi (6Y5)	14	50	04/00 – 05/03	3782	
FABIA Combi (6Y5)	14	50	04/00 – 05/03	3782/1	
FABIA Combi (6Y5)	20	85	04/00 – 12/07		3529/1
FABIA Combi (6Y5)	20	85	04/00 – 12/07	4138	
FABIA Combi (6Y5)	20	85	04/00 – 12/07		4152
FABIA Combi (6Y5)	1.4 16V	55	05/00 – 12/07		3529/1
FABIA Combi (6Y5)	1.4 16V	55	05/00 – 12/07	3782	
FABIA Combi (6Y5)	1.4 16V	55	05/00 – 12/07	3782/1	
FABIA Combi (6Y5)	1.4 16V	55	05/00 – 12/07		4152
FABIA Combi (6Y5)	1.4 16V	59	04/06 – 12/07		3529/1
FABIA Combi (6Y5)	1.4 16V	59	04/06 – 12/07	3782	
FABIA Combi (6Y5)	1.4 16V	59	04/06 – 12/07	3782/1	
FABIA Combi (6Y5)	1.4 16V	59	04/06 – 12/07		4152
FABIA Combi (6Y5)	1.4 16V	74	04/00 – 12/07		3529/1
FABIA Combi (6Y5)	1.4 16V	74	04/00 – 12/07	3782	
FABIA Combi (6Y5)	1.4 16V	74	04/00 – 12/07	3782/1	
FABIA Combi (6Y5)	1.4 16V	74	04/00 – 12/07		4152
FABIA Combi (6Y5)	1.4 TDI	51	10/05 – 12/07		3529/1
FABIA Combi (6Y5)	1.4 TDI	51	10/05 – 12/07	3782	
FABIA Combi (6Y5)	1.4 TDI	51	10/05 – 12/07	3782/1	
FABIA Combi (6Y5)	1.4 TDI	51	10/05 – 12/07		4152
FABIA Combi (6Y5)	1.4 TDI	55	04/03 – 12/07		3529/1
FABIA Combi (6Y5)	1.4 TDI	55	04/03 – 12/07	3782	
FABIA Combi (6Y5)	1.4 TDI	55	04/03 – 12/07	3782/1	
FABIA Combi (6Y5)	1.4 TDI	55	04/03 – 12/07		4152
FABIA Combi (6Y5)	1.4 TDI	59	10/05 – 12/07		3529/1
FABIA Combi (6Y5)	1.4 TDI	59	10/05 – 12/07	3782	
FABIA Combi (6Y5)	1.4 TDI	59	10/05 – 12/07	3782/1	
FABIA Combi (6Y5)	1.4 TDI	59	10/05 – 12/07		4152
FABIA Combi (6Y5)	1.9 SDI	47	04/00 – 12/07	3782	
FABIA Combi (6Y5)	1.9 SDI	47	04/00 – 12/07	3782/1	
FABIA Combi (6Y5)	1.9 TDI	74	04/00 – 12/07		3529/1
FABIA Combi (6Y5)	1.9 TDI	74	04/00 – 12/07	3782	
FABIA Combi (6Y5)	1.9 TDI	74	04/00 – 12/07	3782/1	
FABIA Combi (6Y5)	1.9 TDI	74	04/00 – 12/07		4152
FABIA Estate (NJ5)	10	44	10/14 -		3529/1
FABIA Estate (NJ5)	10	44	10/14 -	3782/1	
FABIA Estate (NJ5)	10	44	10/14 -	3904	
FABIA Estate (NJ5)	10	44	10/14 -	4200	
FABIA Estate (NJ5)	10	55	10/14 -		3529/1
FABIA Estate (NJ5)	10	55	10/14 -	3782/1	
FABIA Estate (NJ5)	10	55	10/14 -	3904	
FABIA Estate (NJ5)	10	55	10/14 -	4200	
FABIA Estate (NJ5)	16	81	01/15 -		3529/1
FABIA Estate (NJ5)	16	81	01/15 -	3782/1	
FABIA Estate (NJ5)	16	81	01/15 -	3904	
FABIA Estate (NJ5)	1.2 TSI	66	10/14 -		3529/1
FABIA Estate (NJ5)	1.2 TSI	66	10/14 -	3782/1	

MAKE & MODEL		KW	YEAR		
SKODA					
FABIA Estate (NJ5)	1.2 TSI	66	10/14 -	3904	
FABIA Estate (NJ5)	1.2 TSI	66	10/14 -	4200	
FABIA Estate (NJ5)	1.2 TSI	81	10/14 -		3529/1
FABIA Estate (NJ5)	1.2 TSI	81	10/14 -	3782/1	
FABIA Estate (NJ5)	1.2 TSI	81	10/14 -	3904	
FABIA Estate (NJ5)	1.2 TSI	81	10/14 -	4200	
FABIA Estate (NJ5)	1.4 TDI	55	05/15 -		3529/1
FABIA Estate (NJ5)	1.4 TDI	55	05/15 -	3782/1	
FABIA Estate (NJ5)	1.4 TDI	55	05/15 -	3904	
FABIA Estate (NJ5)	1.4 TDI	66	10/14 -		3529/1
FABIA Estate (NJ5)	1.4 TDI	66	10/14 -	3782/1	
FABIA Estate (NJ5)	1.4 TDI	66	10/14 -	3904	
FABIA Estate (NJ5)	1.4 TDI	66	10/14 -	4200	
FABIA Estate (NJ5)	1.4 TDI	77	10/14 -		3529/1
FABIA Estate (NJ5)	1.4 TDI	77	10/14 -	3782/1	
FABIA Estate (NJ5)	1.4 TDI	77	10/14 -	3904	
FABIA Estate (NJ5)	1.4 TDI	77	10/14 -	4200	
FABIA Praktik	12	40	07/01 – 12/07	3566	
FABIA Praktik	12	47	01/03 – 12/07	3782	
FABIA Praktik	12	47	01/03 – 12/07	3782/1	
FABIA Praktik	14	50	07/01 – 05/03	3782	
FABIA Praktik	14	50	07/01 – 05/03	3782/1	
FABIA Praktik	1.4 TDI	51	10/05 – 12/07		3529/1
FABIA Praktik	1.4 TDI	51	10/05 – 12/07	3782	
FABIA Praktik	1.4 TDI	51	10/05 – 12/07	3782/1	
FABIA Praktik	1.4 TDI	51	10/05 – 12/07		4152
FABIA Praktik	1.9 SDI	47	07/01 – 12/07	3782	
FABIA Praktik	1.9 SDI	47	07/01 – 12/07	3782/1	
FABIA Saloon (6Y3)	12	40	07/01 – 12/07	3566	
FABIA Saloon (6Y3)	12	47	01/03 – 12/07	3782	
FABIA Saloon (6Y3)	12	47	01/03 – 12/07	3782/1	
FABIA Saloon (6Y3)	14	44	04/00 – 08/02	3782	
FABIA Saloon (6Y3)	14	44	04/00 – 08/02	3782/1	
FABIA Saloon (6Y3)	14	50	07/01 – 05/03	3782	
FABIA Saloon (6Y3)	14	50	07/01 – 05/03	3782/1	
FABIA Saloon (6Y3)	20	85	12/99 – 12/07		3529/1
FABIA Saloon (6Y3)	20	85	12/99 – 12/07	4138	
FABIA Saloon (6Y3)	20	85	12/99 – 12/07		4152
FABIA Saloon (6Y3)	1.4 16V	55	10/99 – 12/07		3529/1
FABIA Saloon (6Y3)	1.4 16V	55	10/99 – 12/07	3782	
FABIA Saloon (6Y3)	1.4 16V	55	10/99 – 12/07	3782/1	
FABIA Saloon (6Y3)	1.4 16V	55	10/99 – 12/07		4152
FABIA Saloon (6Y3)	1.4 16V	59	04/06 – 12/07		3529/1
FABIA Saloon (6Y3)	1.4 16V	59	04/06 – 12/07	3782	
FABIA Saloon (6Y3)	1.4 16V	59	04/06 – 12/07	3782/1	
FABIA Saloon (6Y3)	1.4 16V	59	04/06 – 12/07		4152
FABIA Saloon (6Y3)	1.4 16V	74	12/99 – 12/07		3529/1
FABIA Saloon (6Y3)	1.4 16V	74	12/99 – 12/07	3782	
FABIA Saloon (6Y3)	1.4 16V	74	12/99 – 12/07	3782/1	
FABIA Saloon (6Y3)	1.4 16V	74	12/99 – 12/07		4152
FABIA Saloon (6Y3)	1.4 TDI	51	10/05 – 12/07		3529/1
FABIA Saloon (6Y3)	1.4 TDI	51	10/05 – 12/07	3782	
FABIA Saloon (6Y3)	1.4 TDI	51	10/05 – 12/07	3782/1	
FABIA Saloon (6Y3)	1.4 TDI	51	10/05 – 12/07		4152
FABIA Saloon (6Y3)	1.4 TDI	55	04/03 – 12/07		3529/1
FABIA Saloon (6Y3)	1.4 TDI	55	04/03 – 12/07	3782	
FABIA Saloon (6Y3)	1.4 TDI	55	04/03 – 12/07	3782/1	
FABIA Saloon (6Y3)	1.4 TDI	55	04/03 – 12/07		4152
FABIA Saloon (6Y3)	1.4 TDI	59	10/05 – 12/07		3529/1
FABIA Saloon (6Y3)	1.4 TDI	59	10/05 – 12/07	3782	
FABIA Saloon (6Y3)	1.4 TDI	59	10/05 – 12/07	3782/1	
FABIA Saloon (6Y3)	1.4 TDI	59	10/05 – 12/07		4152
FABIA Saloon (6Y3)	1.9 SDI	47	11/99 – 12/07	3782	
FABIA Saloon (6Y3)	1.9 SDI	47	11/99 – 12/07	3782/1	
FABIA Saloon (6Y3)	1.9 TDI	74	01/00 – 12/07		3529/1
FABIA Saloon (6Y3)	1.9 TDI	74	01/00 – 12/07	3782	
FABIA Saloon (6Y3)	1.9 TDI	74	01/00 – 12/07	3782/1	
FABIA Saloon (6Y3)	1.9 TDI	74	01/00 – 12/07		4152
FAVORIT (781)	1.3 (781)	50	01/94 – 09/94	3731	
FAVORIT (781)	1.3 135 (781)	42	12/91 – 09/94	3731	
FAVORIT (781)	1.3 135 (781)	43	12/91 – 09/94	3731	

MAKE & MODEL		KW	YEAR		
SKODA					
FAVORIT (781)	1.3 135 (781)	44	10/90 – 09/94	3731	
FAVORIT (781)	1.3 135 X,LX,GLX (781)	40	01/90 – 09/94	3731	
FAVORIT (781)	1.3 135L (781)	43	05/89 – 09/94	3731	
FAVORIT (781)	1.3 136 (781)	45	10/90 – 09/94	3731	
FAVORIT Forman (785)	13	50	01/94 – 06/95	3731	
FAVORIT Forman (785)	1.3 (135 E)	40	09/91 – 06/95	3731	
FAVORIT Forman (785)	1.3 (135)	44	12/91 – 06/95	3731	
FAVORIT Forman (785)	1.3 (136)	45	08/91 – 06/95	3731	
FAVORIT Pickup (787)	13	40	12/92 – 06/97	3731	
FAVORIT Pickup (787)	13	42	12/92 – 06/97	3731	
FAVORIT Pickup (787)	13	50	12/92 – 06/97	3731	
FELICIA I (6U1)	13	40	10/94 – 03/98	3731	
FELICIA I (6U1)	13	43	10/94 – 03/98	3731	
FELICIA I (6U1)	13	50	10/94 – 03/98	3731	
FELICIA I (6U1)	1.6 LX	55	08/95 – 03/98	3731	
FELICIA I (6U1)	1.9 D	47	10/95 – 03/98	3731	
FELICIA I Estate (6U5)	13	43	08/95 – 03/98	3731	
FELICIA I Estate (6U5)	1.3 LX	40	08/95 – 03/98	3731	
FELICIA I Estate (6U5)	1.3 LXI	50	08/95 – 03/98	3731	
FELICIA I Estate (6U5)	1.6 GLX	55	08/95 – 03/98	3731	
FELICIA I Estate (6U5)	1.9 D	47	10/95 – 03/98	3731	
FELICIA I Fun (797)	13	40	06/97 – 04/02	3731	
FELICIA I Fun (797)	13	50	06/97 – 04/02	3731	
FELICIA I Fun (797)	16	55	06/97 – 04/02	3731	
FELICIA I Fun (797)	1.9 D	47	06/97 – 04/02	3731	
FELICIA II (6U1)	13	40	01/98 – 06/01	3731	
FELICIA II (6U1)	13	43	01/98 – 06/01	3731	
FELICIA II (6U1)	13	50	01/98 – 06/01	3731	
FELICIA II (6U1)	16	55	01/98 – 06/01	3731	
FELICIA II (6U1)	1.9 D	47	01/98 – 06/01	3731	
FELICIA II Estate (6U5)	13	50	01/98 – 06/01	3731	
FELICIA II Estate (6U5)	16	55	01/98 – 06/01	3731	
FELICIA II Estate (6U5)	1.9 D	47	01/98 – 06/01	3731	
KODIAQ (NS7)	1.4 TSI	92	03/17 -	4228	
KODIAQ (NS7)	1.4 TSI	110	03/17 -	4228	
KODIAQ (NS7)	1.4 TSI (CZEA)	110	03/17 -	4228	
KODIAQ (NS7)	2.0 TDI	110	03/17 -	4228	
KODIAQ (NS7)	2.0 TDI (DFGA)	110	03/17 -	4228	
KODIAQ (NS7)	2.0 TDI (DFHA)	140	03/17 -	4228	
KODIAQ (NS7)	2.0 TSI (CZPA)	132	03/17 -	4228	
OCTAVIA (1U2)	14	44	04/99 – 03/01	3782	
OCTAVIA (1U2)	14	44	04/99 – 03/01	3782/1	
OCTAVIA (1U2)	16	55	09/96 – 09/04		3529/1
OCTAVIA (1U2)	16	55	09/96 – 09/04	3782	
OCTAVIA (1U2)	16	55	09/96 – 09/04	3782/1	
OCTAVIA (1U2)	16	74	02/97 – 12/07		3529/1
OCTAVIA (1U2)	16	74	02/97 – 12/07	3782	
OCTAVIA (1U2)	16	74	02/97 – 12/07	3782/1	
OCTAVIA (1U2)	16	75	11/00 – 12/10		3529/1
OCTAVIA (1U2)	16	75	11/00 – 12/10	3782	
OCTAVIA (1U2)	16	75	11/00 – 12/10	3782/1	
OCTAVIA (1U2)	18	92	09/96 – 07/00		3529/1
OCTAVIA (1U2)	18	92	09/96 – 07/00	3782	
OCTAVIA (1U2)	18	92	09/96 – 07/00	3782/1	
OCTAVIA (1U2)	20	85	04/99 – 05/07		3529/1
OCTAVIA (1U2)	20	85	04/99 – 05/07	3782	
OCTAVIA (1U2)	20	85	04/99 – 05/07	3782/1	
OCTAVIA (1U2)	1.4 (AMD)	44	04/99 – 03/01	3682	
OCTAVIA (1U2)	1.4 16V	55	09/00 – 12/10		3529/1
OCTAVIA (1U2)	1.4 16V	55	09/00 – 12/10	3782	
OCTAVIA (1U2)	1.4 16V	55	09/00 – 12/10	3782/1	
OCTAVIA (1U2)	1.6 (AEH)	74	02/97 – 12/07	3682	
OCTAVIA (1U2)	1.6 (AKL)	74	02/97 – 12/07	3682	
OCTAVIA (1U2)	1.6 (AEE)	55	09/96 – 09/04	3682	
OCTAVIA (1U2)	1.8 T	110	08/97 – 12/10		3529/1
OCTAVIA (1U2)	1.8 T	110	08/97 – 12/10	3590/1	
OCTAVIA (1U2)	1.8 T 4x4	110	05/01 – 05/06		3529/1
OCTAVIA (1U2)	1.8 T 4x4	110	05/01 – 05/06	3590/1	
OCTAVIA (1U2)	1.9 SDI	50	06/97 – 12/03	3782	
OCTAVIA (1U2)	1.9 SDI	50	06/97 – 12/03	3782/1	
OCTAVIA (1U2)	1.9 TDI	66	09/96 – 03/10		3529/1

MAKE & MODEL   		KW	YEAR		
SKODA					
OCTAVIA (1U2)	1.9 TDI	66	09/96 – 03/10	3782	
OCTAVIA (1U2)	1.9 TDI	66	09/96 – 03/10	3782/1	
OCTAVIA (1U2)	1.9 TDI	74	10/05 – 12/10		3529/1
OCTAVIA (1U2)	1.9 TDI	74	10/05 – 12/10	3782	
OCTAVIA (1U2)	1.9 TDI	74	10/05 – 12/10	3782/1	
OCTAVIA (1U2)	1.9 TDI	81	08/97 – 01/06		3529/1
OCTAVIA (1U2)	1.9 TDI	81	08/97 – 01/06	3782	
OCTAVIA (1U2)	1.9 TDI	81	08/97 – 01/06	3782/1	
OCTAVIA (1U2)	1.9 TDI	96	09/02 – 09/04		3529/1
OCTAVIA (1U2)	1.9 TDI	96	09/02 – 09/04	3590/1	
OCTAVIA (1U2)	1.9 TDI	96	09/02 – 09/04	3782	
OCTAVIA (1U2)	1.9 TDI	96	09/02 – 09/04	3782/1	
OCTAVIA (1U2)	RS 1.8 T	132	05/01 – 01/06		3529/1
OCTAVIA (1U2)	RS 1.8 T	132	05/01 – 01/06	3590/1	
OCTAVIA (1U5)	1.6 (AEH)	74	07/98 – 12/07	3682	
OCTAVIA (1U5)	1.6 (AKL)	74	07/98 – 12/07	3682	
OCTAVIA (1U5)	1.6 (AEE)	55	07/98 – 09/04	3682	
OCTAVIA (1Z3)	14	55	05/04 – 05/06		3529/1
OCTAVIA (1Z3)	14	55	05/04 – 05/06	3782	
OCTAVIA (1Z3)	14	55	05/04 – 05/06		3905
OCTAVIA (1Z3)	14	55	05/04 – 05/06		4135
OCTAVIA (1Z3)	14	59	06/04 – 04/13		3529/1
OCTAVIA (1Z3)	14	59	06/04 – 04/13	3782	
OCTAVIA (1Z3)	14	59	06/04 – 04/13		3905
OCTAVIA (1Z3)	14	59	06/04 – 04/13		4135
OCTAVIA (1Z3)	16	75	06/04 – 06/13		3529/1
OCTAVIA (1Z3)	16	75	06/04 – 06/13	3782	
OCTAVIA (1Z3)	16	75	06/04 – 06/13		3905
OCTAVIA (1Z3)	16	75	06/04 – 06/13		4135
OCTAVIA (1Z3)	16	77	06/07 – 04/10	3904	
OCTAVIA (1Z3)	20	85	06/07 – 04/10	3904	
OCTAVIA (1Z3)	1.2 TSI	77	02/10 – 06/13		3529/1
OCTAVIA (1Z3)	1.2 TSI	77	02/10 – 06/13	3782	
OCTAVIA (1Z3)	1.2 TSI	77	02/10 – 06/13		3905
OCTAVIA (1Z3)	1.2 TSI	77	02/10 – 06/13		4135
OCTAVIA (1Z3)	1.4 TSI	90	11/08 – 06/13		3529/1
OCTAVIA (1Z3)	1.4 TSI	90	11/08 – 06/13	3782	
OCTAVIA (1Z3)	1.4 TSI	90	11/08 – 06/13		3905
OCTAVIA (1Z3)	1.4 TSI	90	11/08 – 06/13		4135
OCTAVIA (1Z3)	1.6 FSI	85	02/04 – 10/08		3529/1
OCTAVIA (1Z3)	1.6 FSI	85	02/04 – 10/08	3782	
OCTAVIA (1Z3)	1.6 FSI	85	02/04 – 10/08		3905
OCTAVIA (1Z3)	1.6 FSI	85	02/04 – 10/08		4135
OCTAVIA (1Z3)	1.6 LPG	75	08/09 – 11/12		3529/1
OCTAVIA (1Z3)	1.6 LPG	75	08/09 – 11/12	3782	
OCTAVIA (1Z3)	1.6 LPG	75	08/09 – 11/12		3905
OCTAVIA (1Z3)	1.6 LPG	75	08/09 – 11/12		4135
OCTAVIA (1Z3)	1.6 MultiFuel	75	01/08 – 06/13		3529/1
OCTAVIA (1Z3)	1.6 MultiFuel	75	01/08 – 06/13	3782	
OCTAVIA (1Z3)	1.6 MultiFuel	75	01/08 – 06/13		3905
OCTAVIA (1Z3)	1.6 MultiFuel	75	01/08 – 06/13		4135
OCTAVIA (1Z3)	1.6 TDI	77	06/09 – 04/13		3529/1
OCTAVIA (1Z3)	1.6 TDI	77	06/09 – 04/13	3782	
OCTAVIA (1Z3)	1.6 TDI	77	06/09 – 04/13		3905
OCTAVIA (1Z3)	1.6 TDI	77	06/09 – 04/13		4135
OCTAVIA (1Z3)	1.8 TSI	112	03/09 – 06/13		3529/1
OCTAVIA (1Z3)	1.8 TSI	112	03/09 – 06/13	3904	
OCTAVIA (1Z3)	1.8 TSI	112	03/09 – 06/13		3905
OCTAVIA (1Z3)	1.8 TSI	112	03/09 – 06/13		4135
OCTAVIA (1Z3)	1.8 TSI	118	06/07 – 04/13		3529/1
OCTAVIA (1Z3)	1.8 TSI	118	06/07 – 04/13	3904	
OCTAVIA (1Z3)	1.8 TSI	118	06/07 – 04/13		3905
OCTAVIA (1Z3)	1.8 TSI	118	06/07 – 04/13		4135
OCTAVIA (1Z3)	1.9 TDI	77	06/04 – 12/10		3529/1
OCTAVIA (1Z3)	1.9 TDI	77	06/04 – 12/10	3782	
OCTAVIA (1Z3)	1.9 TDI	77	06/04 – 12/10		3905
OCTAVIA (1Z3)	1.9 TDI	77	06/04 – 12/10		4135
OCTAVIA (1Z3)	2.0 FSI	110	11/04 – 10/08		3529/1
OCTAVIA (1Z3)	2.0 FSI	110	11/04 – 10/08	3904	
OCTAVIA (1Z3)	2.0 FSI	110	11/04 – 10/08		3905
OCTAVIA (1Z3)	2.0 FSI	110	11/04 – 10/08		4135

MAKE & MODEL   		KW	YEAR		
SKODA					
OCTAVIA (1Z3)	2.0 RS	147	10/05 – 02/13	3904	
OCTAVIA (1Z3)	2.0 RS	147	10/05 – 02/13		3905
OCTAVIA (1Z3)	2.0 TDI	81	03/10 – 06/13	3904	
OCTAVIA (1Z3)	2.0 TDI	81	03/10 – 06/13		4135
OCTAVIA (1Z3)	2.0 TDI	100	02/04 – 05/10		3529/1
OCTAVIA (1Z3)	2.0 TDI	100	02/04 – 05/10	3904	
OCTAVIA (1Z3)	2.0 TDI	100	02/04 – 05/10		3905
OCTAVIA (1Z3)	2.0 TDI	100	02/04 – 05/10		4135
OCTAVIA (1Z3)	2.0 TDI	103	11/05 – 05/10		3529/1
OCTAVIA (1Z3)	2.0 TDI	103	11/05 – 05/10	3904	
OCTAVIA (1Z3)	2.0 TDI	103	11/05 – 05/10		3905
OCTAVIA (1Z3)	2.0 TDI	103	11/05 – 05/10		4135
OCTAVIA (1Z3)	2.0 TDI 16V	103	02/04 – 04/13		3529/1
OCTAVIA (1Z3)	2.0 TDI 16V	103	02/04 – 04/13	3904	
OCTAVIA (1Z3)	2.0 TDI 16V	103	02/04 – 04/13		3905
OCTAVIA (1Z3)	2.0 TDI 16V	103	02/04 – 04/13		4135
OCTAVIA (1Z3)	2.0 TDI RS	125	04/06 – 02/13	3904	
OCTAVIA (1Z3)	2.0 TDI RS	125	04/06 – 02/13		3905
OCTAVIA (5E3)	16	81	01/14 -		3529/1
OCTAVIA (5E3)	1.0 TSI	85	05/16 -	4295	
OCTAVIA (5E3)	1.2 TSI	63	11/12 -		3529/1
OCTAVIA (5E3)	1.2 TSI	63	11/12 -	4295	
OCTAVIA (5E3)	1.2 TSI	77	11/12 -		3529/1
OCTAVIA (5E3)	1.2 TSI	77	11/12 -	4295	
OCTAVIA (5E3)	1.2 TSI	81	05/15 -		3529/1
OCTAVIA (5E3)	1.2 TSI	81	05/15 -	4295	
OCTAVIA (5E3)	1.4 TSI	103	11/12 -		3529/1
OCTAVIA (5E3)	1.4 TSI	103	11/12 -	4295	
OCTAVIA (5E3)	1.4 TSI	110	08/14 -		3529/1
OCTAVIA (5E3)	1.4 TSI	110	08/14 -	4295	
OCTAVIA (5E3)	1.4 TSI	110	05/14 -	4295	
OCTAVIA (5E3)	1.4 TSI G-TEC	81	11/13 -		3529/1
OCTAVIA (5E3)	1.4 TSI G-TEC	81	11/13 -	4295	
OCTAVIA (5E3)	1.6	77	01/14 -	4295	
OCTAVIA (5E3)	1.6	81	01/14 -	4295	
OCTAVIA (5E3)	1.6	81	05/14 -	4295	
OCTAVIA (5E3)	1.6 TDI	66	11/12 -		3529/1
OCTAVIA (5E3)	1.6 TDI	66	11/12 -	4295	
OCTAVIA (5E3)	1.6 TDI	77	11/12 -		3529/1
OCTAVIA (5E3)	1.6 TDI	77	11/12 -	4295	
OCTAVIA (5E3)	1.6 TDI	81	05/13 -		3529/1
OCTAVIA (5E3)	1.6 TDI	81	05/13 -	3782	
OCTAVIA (5E3)	1.6 TDI	81	05/13 -	3904	
OCTAVIA (5E3)	1.6 TDI	81	05/13 -		3905
OCTAVIA (5E3)	1.6 TDI	81	05/13 -		4135
OCTAVIA (5E3)	1.6 TDI	81	05/13 -	4295	
OCTAVIA (5E3)	1.6 TDI 4x4	77	09/14 -		3529/1
OCTAVIA (5E3)	1.6 TDI 4x4	77	09/14 -	4295	
OCTAVIA (5E3)	1.6 TDI 4x4	81	05/15 -		3529/1
OCTAVIA (5E3)	1.6 TDI 4x4	81	05/15 -	4295	
OCTAVIA (5E3)	1.8 TSI	132	11/12 -		3529/1
OCTAVIA (5E3)	1.8 TSI 4x4	132	09/14 -		3529/1
OCTAVIA (5E3)	1.8 TSI 4x4	132	09/14 -	4295	
OCTAVIA (5E3)	2.0 TDI	105	11/12 -		3529/1
OCTAVIA (5E3)	2.0 TDI	105	11/12 -	4295	
OCTAVIA (5E3)	2.0 TDI	110	11/12 -		3529/1
OCTAVIA (5E3)	2.0 TDI	110	11/12 -	4295	
OCTAVIA (5E3)	2.0 TDI / TDI RS 4x4	135	09/14 -		3529/1
OCTAVIA (5E3)	2.0 TDI / TDI RS 4x4	135	09/14 -	4295	
OCTAVIA (5E3)	2.0 TDI 4x4	110	09/14 -		3529/1
OCTAVIA (5E3)	2.0 TDI 4x4	110	09/14 -	4295	
OCTAVIA (5E3)	2.0 TDI RS	135	05/13 -		3529/1
OCTAVIA (5E3)	2.0 TSI RS	162	05/13 -		3529/1
OCTAVIA (5E3)	2.0 TSI RS	169	05/15 -		3529/1
OCTAVIA (5E3)	2.0 TSI RS	169	05/15 -	4295	
OCTAVIA (5E3)	1.6	81	05/14 -		4336
OCTAVIA (5E3)	1.4 TSI	110	05/14 -		4336
OCTAVIA Combi (1U5)	16	55	07/98 – 09/04		3529/1
OCTAVIA Combi (1U5)	16	55	07/98 – 09/04	3782	
OCTAVIA Combi (1U5)	16	55	07/98 – 09/04	3782/1	
OCTAVIA Combi (1U5)	16	74	07/98 – 12/07		3529/1

MAKE & MODEL		KW	YEAR		
SKODA					
OCTAVIA Combi (1U5)	16	74	07/98 – 12/07	3782	
OCTAVIA Combi (1U5)	16	74	07/98 – 12/07	3782/1	
OCTAVIA Combi (1U5)	16	75	09/00 – 12/10		3529/1
OCTAVIA Combi (1U5)	16	75	09/00 – 12/10	3782	
OCTAVIA Combi (1U5)	16	75	09/00 – 12/10	3782/1	
OCTAVIA Combi (1U5)	20	85	04/99 – 05/07		3529/1
OCTAVIA Combi (1U5)	20	85	04/99 – 05/07	3782	
OCTAVIA Combi (1U5)	20	85	04/99 – 05/07	3782/1	
OCTAVIA Combi (1U5)	1.4 16V	55	08/00 – 12/10	3782	
OCTAVIA Combi (1U5)	1.4 16V	55	08/00 – 12/10	3782/1	
OCTAVIA Combi (1U5)	1.8 20V	92	07/98 – 07/00		3529/1
OCTAVIA Combi (1U5)	1.8 20V	92	07/98 – 07/00	3782	
OCTAVIA Combi (1U5)	1.8 20V	92	07/98 – 07/00	3782/1	
OCTAVIA Combi (1U5)	1.8 T	110	07/98 – 12/10		3529/1
OCTAVIA Combi (1U5)	1.8 T	110	07/98 – 12/10	3590/1	
OCTAVIA Combi (1U5)	1.8 T 4x4	110	05/01 – 05/06		3529/1
OCTAVIA Combi (1U5)	1.8 T 4x4	110	05/01 – 05/06	3590/1	
OCTAVIA Combi (1U5)	1.9 SDI	50	07/98 – 12/03	3782	
OCTAVIA Combi (1U5)	1.9 SDI	50	07/98 – 12/03	3782/1	
OCTAVIA Combi (1U5)	1.9 TDI	66	07/98 – 03/10		3529/1
OCTAVIA Combi (1U5)	1.9 TDI	66	07/98 – 03/10	3782	
OCTAVIA Combi (1U5)	1.9 TDI	66	07/98 – 03/10	3782/1	
OCTAVIA Combi (1U5)	1.9 TDI	74	08/00 – 12/10		3529/1
OCTAVIA Combi (1U5)	1.9 TDI	74	08/00 – 12/10	3782	
OCTAVIA Combi (1U5)	1.9 TDI	74	08/00 – 12/10	3782/1	
OCTAVIA Combi (1U5)	1.9 TDI	81	07/98 – 01/06		3529/1
OCTAVIA Combi (1U5)	1.9 TDI	81	07/98 – 01/06	3782	
OCTAVIA Combi (1U5)	1.9 TDI	81	07/98 – 01/06	3782/1	
OCTAVIA Combi (1U5)	1.9 TDI	96	09/02 – 09/04		3529/1
OCTAVIA Combi (1U5)	1.9 TDI	96	09/02 – 09/04	3590/1	
OCTAVIA Combi (1U5)	1.9 TDI	96	09/02 – 09/04	3782	
OCTAVIA Combi (1U5)	1.9 TDI	96	09/02 – 09/04	3782/1	
OCTAVIA Combi (1U5)	1.9 TDI 4x4	66	11/99 – 02/06		3529/1
OCTAVIA Combi (1U5)	1.9 TDI 4x4	66	11/99 – 02/06	3782	
OCTAVIA Combi (1U5)	1.9 TDI 4x4	66	11/99 – 02/06	3782/1	
OCTAVIA Combi (1U5)	1.9 TDI 4x4	74	09/00 – 01/06		3529/1
OCTAVIA Combi (1U5)	1.9 TDI 4x4	74	09/00 – 01/06	3782	
OCTAVIA Combi (1U5)	1.9 TDI 4x4	74	09/00 – 01/06	3782/1	
OCTAVIA Combi (1U5)	2.0 4x4	85	08/00 – 09/04		3529/1
OCTAVIA Combi (1U5)	2.0 4x4	85	08/00 – 09/04	3782	
OCTAVIA Combi (1U5)	2.0 4x4	85	08/00 – 09/04	3782/1	
OCTAVIA Combi (1U5)	2.0 4x4	88	01/00 – 12/10		3529/1
OCTAVIA Combi (1U5)	2.0 4x4	88	01/00 – 12/10	3782	
OCTAVIA Combi (1U5)	2.0 4x4	88	01/00 – 12/10	3782/1	
OCTAVIA Combi (1U5)	RS 1.8 T	132	08/02 – 01/06		3529/1
OCTAVIA Combi (1U5)	RS 1.8 T	132	08/02 – 01/06	3590/1	
OCTAVIA Combi (1Z5)	14	55	05/04 – 05/06		3529/1
OCTAVIA Combi (1Z5)	14	55	05/04 – 05/06	3782	
OCTAVIA Combi (1Z5)	14	55	05/04 – 05/06		3905
OCTAVIA Combi (1Z5)	14	55	05/04 – 05/06		4135
OCTAVIA Combi (1Z5)	14	59	05/06 – 06/13		3529/1
OCTAVIA Combi (1Z5)	14	59	05/06 – 06/13	3782	
OCTAVIA Combi (1Z5)	14	59	05/06 – 06/13		3905
OCTAVIA Combi (1Z5)	14	59	05/06 – 06/13		4135
OCTAVIA Combi (1Z5)	16	75	09/04 – 06/13		3529/1
OCTAVIA Combi (1Z5)	16	75	09/04 – 06/13	3782	
OCTAVIA Combi (1Z5)	16	75	09/04 – 06/13		3905
OCTAVIA Combi (1Z5)	16	75	09/04 – 06/13		4135
OCTAVIA Combi (1Z5)	1.2 TSI	77	02/10 – 04/13		3529/1
OCTAVIA Combi (1Z5)	1.2 TSI	77	02/10 – 04/13	3782	
OCTAVIA Combi (1Z5)	1.2 TSI	77	02/10 – 04/13		3905
OCTAVIA Combi (1Z5)	1.2 TSI	77	02/10 – 04/13		4135
OCTAVIA Combi (1Z5)	1.4 TSI	90	11/08 – 06/13		3529/1
OCTAVIA Combi (1Z5)	1.4 TSI	90	11/08 – 06/13	3782	
OCTAVIA Combi (1Z5)	1.4 TSI	90	11/08 – 06/13		3905
OCTAVIA Combi (1Z5)	1.4 TSI	90	11/08 – 06/13		4135
OCTAVIA Combi (1Z5)	1.6 FSI	85	02/04 – 10/08		3529/1
OCTAVIA Combi (1Z5)	1.6 FSI	85	02/04 – 10/08	3782	
OCTAVIA Combi (1Z5)	1.6 FSI	85	02/04 – 10/08		3905
OCTAVIA Combi (1Z5)	1.6 FSI	85	02/04 – 10/08		4135
OCTAVIA Combi (1Z5)	1.6 LPG	75	08/09 – 11/12		3529/1

MAKE & MODEL   		KW	YEAR		
SKODA					
OCTAVIA Combi (1Z5)	1.6 LPG	75	08/09 – 11/12	3782	
OCTAVIA Combi (1Z5)	1.6 LPG	75	08/09 – 11/12		3905
OCTAVIA Combi (1Z5)	1.6 LPG	75	08/09 – 11/12		4135
OCTAVIA Combi (1Z5)	1.6 MultiFuel	75	01/08 – 06/13		3529/1
OCTAVIA Combi (1Z5)	1.6 MultiFuel	75	01/08 – 06/13	3782	
OCTAVIA Combi (1Z5)	1.6 MultiFuel	75	01/08 – 06/13		3905
OCTAVIA Combi (1Z5)	1.6 MultiFuel	75	01/08 – 06/13		4135
OCTAVIA Combi (1Z5)	1.6 TDI	77	06/09 – 04/13		3529/1
OCTAVIA Combi (1Z5)	1.6 TDI	77	06/09 – 04/13	3782	
OCTAVIA Combi (1Z5)	1.6 TDI	77	06/09 – 04/13		3905
OCTAVIA Combi (1Z5)	1.6 TDI	77	06/09 – 04/13		4135
OCTAVIA Combi (1Z5)	1.6 TDI 4x4	77	06/09 – 02/13		3529/1
OCTAVIA Combi (1Z5)	1.6 TDI 4x4	77	06/09 – 02/13	3782	
OCTAVIA Combi (1Z5)	1.6 TDI 4x4	77	06/09 – 02/13		3905
OCTAVIA Combi (1Z5)	1.6 TDI 4x4	77	06/09 – 02/13		4135
OCTAVIA Combi (1Z5)	1.8 TSI	112	03/09 – 06/13		3529/1
OCTAVIA Combi (1Z5)	1.8 TSI	112	03/09 – 06/13	3782	
OCTAVIA Combi (1Z5)	1.8 TSI	112	03/09 – 06/13		3905
OCTAVIA Combi (1Z5)	1.8 TSI	112	03/09 – 06/13		4135
OCTAVIA Combi (1Z5)	1.8 TSI	118	06/07 – 04/13		3529/1
OCTAVIA Combi (1Z5)	1.8 TSI	118	06/07 – 04/13	3904	
OCTAVIA Combi (1Z5)	1.8 TSI	118	06/07 – 04/13		3905
OCTAVIA Combi (1Z5)	1.8 TSI	118	06/07 – 04/13		4135
OCTAVIA Combi (1Z5)	1.8 TSI 4x4	112	03/09 – 02/13		3529/1
OCTAVIA Combi (1Z5)	1.8 TSI 4x4	112	03/09 – 02/13	3904	
OCTAVIA Combi (1Z5)	1.8 TSI 4x4	112	03/09 – 02/13		3905
OCTAVIA Combi (1Z5)	1.8 TSI 4x4	112	03/09 – 02/13		4135
OCTAVIA Combi (1Z5)	1.8 TSI 4x4	118	11/08 – 02/13		3529/1
OCTAVIA Combi (1Z5)	1.8 TSI 4x4	118	11/08 – 02/13	3904	
OCTAVIA Combi (1Z5)	1.8 TSI 4x4	118	11/08 – 02/13		3905
OCTAVIA Combi (1Z5)	1.8 TSI 4x4	118	11/08 – 02/13		4135
OCTAVIA Combi (1Z5)	1.9 TDI	77	09/04 – 12/10		3529/1
OCTAVIA Combi (1Z5)	1.9 TDI	77	09/04 – 12/10	3782	
OCTAVIA Combi (1Z5)	1.9 TDI	77	09/04 – 12/10		3905
OCTAVIA Combi (1Z5)	1.9 TDI	77	09/04 – 12/10		4135
OCTAVIA Combi (1Z5)	1.9 TDI 4x4	77	11/04 – 12/10		3529/1
OCTAVIA Combi (1Z5)	1.9 TDI 4x4	77	11/04 – 12/10	3782	
OCTAVIA Combi (1Z5)	1.9 TDI 4x4	77	11/04 – 12/10		3905
OCTAVIA Combi (1Z5)	1.9 TDI 4x4	77	11/04 – 12/10		4135
OCTAVIA Combi (1Z5)	2.0 FSI	110	11/04 – 10/08		3529/1
OCTAVIA Combi (1Z5)	2.0 FSI	110	11/04 – 10/08	3904	
OCTAVIA Combi (1Z5)	2.0 FSI	110	11/04 – 10/08		3905
OCTAVIA Combi (1Z5)	2.0 FSI	110	11/04 – 10/08		4135
OCTAVIA Combi (1Z5)	2.0 FSI 4x4	110	11/04 – 10/08		3529/1
OCTAVIA Combi (1Z5)	2.0 FSI 4x4	110	11/04 – 10/08	3904	
OCTAVIA Combi (1Z5)	2.0 FSI 4x4	110	11/04 – 10/08		3905
OCTAVIA Combi (1Z5)	2.0 FSI 4x4	110	11/04 – 10/08		4135
OCTAVIA Combi (1Z5)	2.0 RS	147	10/05 – 02/13	3904	
OCTAVIA Combi (1Z5)	2.0 RS	147	10/05 – 02/13		3905
OCTAVIA Combi (1Z5)	2.0 TDI	81	03/10 – 06/13		3529/1
OCTAVIA Combi (1Z5)	2.0 TDI	81	03/10 – 06/13	3904	
OCTAVIA Combi (1Z5)	2.0 TDI	81	03/10 – 06/13		3905
OCTAVIA Combi (1Z5)	2.0 TDI	81	03/10 – 06/13		4135
OCTAVIA Combi (1Z5)	2.0 TDI	103	11/05 – 05/10		3529/1
OCTAVIA Combi (1Z5)	2.0 TDI	103	11/05 – 05/10	3904	
OCTAVIA Combi (1Z5)	2.0 TDI	103	11/05 – 05/10		3905
OCTAVIA Combi (1Z5)	2.0 TDI	103	11/05 – 05/10		4135
OCTAVIA Combi (1Z5)	2.0 TDI 16V	100	02/04 – 05/10		3529/1
OCTAVIA Combi (1Z5)	2.0 TDI 16V	100	02/04 – 05/10	3904	
OCTAVIA Combi (1Z5)	2.0 TDI 16V	100	02/04 – 05/10		3905
OCTAVIA Combi (1Z5)	2.0 TDI 16V	100	02/04 – 05/10		4135
OCTAVIA Combi (1Z5)	2.0 TDI 16V	103	02/04 – 05/13		3529/1
OCTAVIA Combi (1Z5)	2.0 TDI 16V	103	02/04 – 05/13	3904	
OCTAVIA Combi (1Z5)	2.0 TDI 16V	103	02/04 – 05/13		3905
OCTAVIA Combi (1Z5)	2.0 TDI 16V	103	02/04 – 05/13		4135
OCTAVIA Combi (1Z5)	2.0 TDI 16V 4x4	103	05/10 – 02/13		3529/1
OCTAVIA Combi (1Z5)	2.0 TDI 16V 4x4	103	05/10 – 02/13	3904	
OCTAVIA Combi (1Z5)	2.0 TDI 16V 4x4	103	05/10 – 02/13		3905
OCTAVIA Combi (1Z5)	2.0 TDI 16V 4x4	103	05/10 – 02/13		4135
OCTAVIA Combi (1Z5)	2.0 TDI 4x4	81	05/11 – 02/13		3529/1
OCTAVIA Combi (1Z5)	2.0 TDI 4x4	81	05/11 – 02/13	3904	

MAKE & MODEL		KW	YEAR		
SKODA					
OCTAVIA Combi (1Z5)	2.0 TDI 4x4	81	05/11 – 02/13		3905
OCTAVIA Combi (1Z5)	2.0 TDI 4x4	81	05/11 – 02/13		4135
OCTAVIA Combi (1Z5)	2.0 TDI 4x4	103	07/06 – 05/10		3529/1
OCTAVIA Combi (1Z5)	2.0 TDI 4x4	103	07/06 – 05/10	3904	
OCTAVIA Combi (1Z5)	2.0 TDI 4x4	103	07/06 – 05/10		3905
OCTAVIA Combi (1Z5)	2.0 TDI 4x4	103	07/06 – 05/10		4135
OCTAVIA Combi (1Z5)	2.0 TDI RS	125	04/06 – 02/13	3904	
OCTAVIA Combi (1Z5)	2.0 TDI RS	125	04/06 – 02/13		3905
OCTAVIA Combi (5E5)	16	81	01/14 -		3529/1
OCTAVIA Combi (5E5)	1.0 TSI	85	05/16 -	4295	
OCTAVIA Combi (5E5)	1.2 TSI	63	11/12 -		3529/1
OCTAVIA Combi (5E5)	1.2 TSI	63	11/12 -	4295	
OCTAVIA Combi (5E5)	1.2 TSI	77	11/12 -		3529/1
OCTAVIA Combi (5E5)	1.2 TSI	77	11/12 -	4295	
OCTAVIA Combi (5E5)	1.2 TSI	81	05/15 -		3529/1
OCTAVIA Combi (5E5)	1.2 TSI	81	05/15 -	4295	
OCTAVIA Combi (5E5)	1.4 TSI	103	11/12 -		3529/1
OCTAVIA Combi (5E5)	1.4 TSI	103	11/12 -	4295	
OCTAVIA Combi (5E5)	1.4 TSI	110	08/14 -		3529/1
OCTAVIA Combi (5E5)	1.4 TSI	110	08/14 -	4295	
OCTAVIA Combi (5E5)	1.4 TSI G-TEC	81	11/13 -		3529/1
OCTAVIA Combi (5E5)	1.4 TSI G-TEC	81	11/13 -	4295	
OCTAVIA Combi (5E5)	1.6	81	01/14 -	4295	
OCTAVIA Combi (5E5)	1.6 TDI	66	11/12 -		3529/1
OCTAVIA Combi (5E5)	1.6 TDI	66	11/12 -	4295	
OCTAVIA Combi (5E5)	1.6 TDI	77	11/12 -		3529/1
OCTAVIA Combi (5E5)	1.6 TDI	77	11/12 -	4295	
OCTAVIA Combi (5E5)	1.6 TDI	81	05/13 -		3529/1
OCTAVIA Combi (5E5)	1.6 TDI	81	05/13 -	3782	
OCTAVIA Combi (5E5)	1.6 TDI	81	05/13 -	3904	
OCTAVIA Combi (5E5)	1.6 TDI	81	05/13 -		3905
OCTAVIA Combi (5E5)	1.6 TDI	81	05/13 -		4135
OCTAVIA Combi (5E5)	1.6 TDI	81	05/13 -	4295	
OCTAVIA Combi (5E5)	1.6 TDI 4x4	77	11/12 -		3529/1
OCTAVIA Combi (5E5)	1.6 TDI 4x4	77	11/12 -	4295	
OCTAVIA Combi (5E5)	1.6 TDI 4x4	81	05/15 -		3529/1
OCTAVIA Combi (5E5)	1.6 TDI 4x4	81	05/15 -	4295	
OCTAVIA Combi (5E5)	1.8 TSI	132	11/12 -		3529/1
OCTAVIA Combi (5E5)	1.8 TSI 4x4	132	11/12 -		3529/1
OCTAVIA Combi (5E5)	2.0 TDI	105	11/12 -		3529/1
OCTAVIA Combi (5E5)	2.0 TDI	105	11/12 -	4295	
OCTAVIA Combi (5E5)	2.0 TDI	110	11/12 -		3529/1
OCTAVIA Combi (5E5)	2.0 TDI	110	11/12 -	4295	
OCTAVIA Combi (5E5)	2.0 TDI / TDI RS 4x4	135	09/14 -		3529/1
OCTAVIA Combi (5E5)	2.0 TDI / TDI RS 4x4	135	09/14 -	4295	
OCTAVIA Combi (5E5)	2.0 TDI 4x4	110	11/12 -		3529/1
OCTAVIA Combi (5E5)	2.0 TDI 4x4	110	11/12 -	4295	
OCTAVIA Combi (5E5)	2.0 TDI RS	135	05/13 -		3529/1
OCTAVIA Combi (5E5)	2.0 TSI RS	162	11/12 -		3529/1
OCTAVIA Combi (5E5)	2.0 TSI RS	169	05/15 -		3529/1
OCTAVIA Combi (5E5)	2.0 TSI RS	169	05/15 -	4295	
OCTAVIA III (5E3)	1.0 TSI (CHZD)	85	05/16 -	4228	
OCTAVIA III (5E3)	1.2 TSI (CJZA)	77	11/12 -	4228	
OCTAVIA III (5E3)	1.2 TSI (CJZB)	63	11/12 -	4228	
OCTAVIA III (5E3)	1.2 TSI (CYVB)	81	05/15 -	4228	
OCTAVIA III (5E3)	1.4 TSI (CHPA)	103	11/12 -	4228	
OCTAVIA III (5E3)	1.4 TSI (CHPB)	110	08/14 -	4228	
OCTAVIA III (5E3)	1.4 TSI (CZDA)	110	08/14 -	4228	
OCTAVIA III (5E3)	1.4 TSI G-TEC (CPWA)	81	11/13 -	4228	
OCTAVIA III (5E3)	1.6 (CWVA)	81	01/14 -	4228	
OCTAVIA III (5E3)	1.6 TDI (CLHA)	77	11/12 -	4228	
OCTAVIA III (5E3)	1.6 TDI (CLHA)	77	09/14 -	4228	
OCTAVIA III (5E3)	1.6 TDI (CLHB)	66	11/12 -	4228	
OCTAVIA III (5E3)	1.6 TDI (CRKB)	81	05/13 -	4228	
OCTAVIA III (5E3)	1.8 TSI (CJSA)	132	11/12 -	4228	
OCTAVIA III (5E3)	1.8 TSI (CJSA)	132	09/14 -	4228	
OCTAVIA III (5E3)	2.0 TDI (CRVC)	105	11/12 -	4228	
OCTAVIA III (5E3)	2.0 TDI (CKFB)	105	11/12 -	4228	
OCTAVIA III (5E3)	2.0 TDI (CKFC)	110	11/12 -	4228	
OCTAVIA III (5E3)	2.0 TDI (CKFC)	110	09/14 -	4228	
OCTAVIA III (5E3)	2.0 TDI (CUPA)	135	05/13 -	4228	

MAKE & MODEL		KW	YEAR		
SKODA					
OCTAVIA III (5E3)	2.0 TDI / TDI RS (CUNA)	135	09/14 -	4228	
OCTAVIA III (5E3)	2.0 TDI / TDI RS (CUPA)	135	09/14 -	4228	
OCTAVIA III (5E3)	2.0 TSI RS (CHHA)	169	05/15 -	4228	
OCTAVIA III (5E3)	2.0 TSI RS (CHHB)	162	05/13 -	4228	
OCTAVIA III (5E3, NL3, NR3)	1.6 TDI	66	11/12 -		4336
OCTAVIA III (5E3, NL3, NR3)	1.6 TDI	77	11/12 -		4336
OCTAVIA III (5E3, NL3, NR3)	1.6 TDI 4x4	81	05/15 -		4336
OCTAVIA III (5E3, NL3, NR3)	1.6 TDI 4x4	77	09/14 -		4336
OCTAVIA III (5E3, NL3, NR3)	1.8 TSI	132	11/12 -		4336
OCTAVIA III (5E3, NL3, NR3)	2.0 TDI	110	11/12 -		4336
OCTAVIA III (5E3, NL3, NR3)	2.0 TSI RS	162	05/13 -		4336
OCTAVIA III (5E3, NL3, NR3)	1.6	81	01/14 -		4336
OCTAVIA III (5E3, NL3, NR3)	1.0 TSI	85	05/16 -		4336
OCTAVIA III (5E3, NL3, NR3)	1.2 TSI	63	11/12 -		4336
OCTAVIA III (5E3, NL3, NR3)	1.2 TSI	77	11/12 -		4336
OCTAVIA III (5E3, NL3, NR3)	1.2 TSI	81	05/15 -		4336
OCTAVIA III (5E3, NL3, NR3)	1.4 TSI	103	11/12 -		4336
OCTAVIA III (5E3, NL3, NR3)	1.4 TSI	110	08/14 -		4336
OCTAVIA III (5E3, NL3, NR3)	1.4 TSI G-TEC	81	11/13 -		4336
OCTAVIA III (5E3, NL3, NR3)	1.8 TSI 4x4	132	09/14 -		4336
OCTAVIA III (5E3, NL3, NR3)	2.0 TDI	105	11/12 -		4336
OCTAVIA III (5E3, NL3, NR3)	2.0 TDI / TDI RS 4x4	135	09/14 -		4336
OCTAVIA III (5E3, NL3, NR3)	2.0 TDI 4x4	110	09/14 -		4336
OCTAVIA III (5E3, NL3, NR3)	2.0 TDI RS	135	05/13 -		4336
OCTAVIA III (5E3, NL3, NR3)	2.0 TSI RS	169	05/15 -		4336
OCTAVIA III (5E3, NL3, NR3)	2.0 TSI RS	180	02/17 -		4336
OCTAVIA III (5E5)	1.0 TSI (CHZD)	85	05/16 -	4228	
OCTAVIA III (5E5)	1.2 TSI (CJZA)	77	11/12 -	4228	
OCTAVIA III (5E5)	1.2 TSI (CJZB)	63	11/12 -	4228	
OCTAVIA III (5E5)	1.2 TSI (CYVB)	81	05/15 -	4228	
OCTAVIA III (5E5)	1.4 TSI (CHPA)	103	11/12 -	4228	
OCTAVIA III (5E5)	1.4 TSI (CHPB)	110	08/14 -	4228	
OCTAVIA III (5E5)	1.4 TSI (CZDA)	110	08/14 -	4228	
OCTAVIA III (5E5)	1.4 TSI G-TEC (CPWA)	81	11/13 -	4228	
OCTAVIA III (5E5)	1.6 (CWVA)	81	01/14 -	4228	
OCTAVIA III (5E5)	1.6 TDI (CLHA)	77	11/12 -	4228	
OCTAVIA III (5E5)	1.6 TDI (CLHA)	77	11/12 -	4228	
OCTAVIA III (5E5)	1.6 TDI (CLHB)	66	11/12 -	4228	
OCTAVIA III (5E5)	1.6 TDI (CRKB)	81	05/13 -	4228	
OCTAVIA III (5E5)	1.8 TSI (CJSA)	132	11/12 -	4228	
OCTAVIA III (5E5)	1.8 TSI (CJSB)	132	11/12 -	4228	
OCTAVIA III (5E5)	1.8 TSI (CJSB)	132	11/12 -	4228	
OCTAVIA III (5E5)	2.0 TDI (CRVC)	105	11/12 -	4228	
OCTAVIA III (5E5)	2.0 TDI (CKFB)	105	11/12 -	4228	
OCTAVIA III (5E5)	2.0 TDI (CKFC)	110	11/12 -	4228	
OCTAVIA III (5E5)	2.0 TDI (CKFC)	110	11/12 -	4228	
OCTAVIA III (5E5)	2.0 TDI (CUPA)	135	05/13 -	4228	
OCTAVIA III (5E5)	2.0 TDI / TDI RS (CUNA)	135	09/14 -	4228	
OCTAVIA III (5E5)	2.0 TDI / TDI RS (CUPA)	135	09/14 -	4228	
OCTAVIA III (5E5)	2.0 TSI RS (CHHA)	169	05/15 -	4228	
OCTAVIA III (5E5)	2.0 TSI RS (CHHB)	162	11/12 -	4228	
OCTAVIA III Combi (5E5)	1.0 TSI	85	05/16 -		4336
OCTAVIA III Combi (5E5)	1.2 TSI	77	11/12 -		4336
OCTAVIA III Combi (5E5)	1.6	81	01/14 -		4336
OCTAVIA III Combi (5E5)	1.6 TDI 4x4	81	05/15 -		4336
OCTAVIA III Combi (5E5)	1.2 TSI	63	11/12 -		4336
OCTAVIA III Combi (5E5)	1.2 TSI	81	05/15 -		4336
OCTAVIA III Combi (5E5)	1.4 TSI	103	11/12 -		4336
OCTAVIA III Combi (5E5)	1.4 TSI	110	08/14 -		4336
OCTAVIA III Combi (5E5)	1.4 TSI G-TEC	81	11/13 -		4336
OCTAVIA III Combi (5E5)	1.6 TDI	66	11/12 -		4336
OCTAVIA III Combi (5E5)	1.6 TDI	77	11/12 -		4336
OCTAVIA III Combi (5E5)	1.6 TDI 4x4	77	11/12 -		4336
OCTAVIA III Combi (5E5)	1.8 TSI	132	11/12 -		4336
OCTAVIA III Combi (5E5)	1.8 TSI 4x4	132	11/12 -		4336
OCTAVIA III Combi (5E5)	2.0 TDI	110	11/12 -		4336
OCTAVIA III Combi (5E5)	2.0 TDI	105	11/12 -		4336
OCTAVIA III Combi (5E5)	2.0 TDI / TDI RS 4x4	135	09/14 -		4336
OCTAVIA III Combi (5E5)	2.0 TDI 4x4	110	11/12 -		4336
OCTAVIA III Combi (5E5)	2.0 TDI RS	135	05/13 -		4336
OCTAVIA III Combi (5E5)	2.0 TSI RS	162	11/12 -		4336

MAKE & MODEL		KW	YEAR		
SKODA					
OCTAVIA III Combi (5E5)	2.0 TSI RS	169	05/15 -		4336
OCTAVIA III Combi (5E5)	2.0 TSI RS	180	02/17 -		4336
RAPID (120G, 130G, 135G)	1.2 (120G)	43	02/83 – 12/90	3406	
RAPID (120G, 130G, 135G)	1.3 (130G)	39	08/87 – 10/91	3404	
RAPID (120G, 130G, 135G)	1.3 (130G)	45	03/85 – 08/88	3404	
RAPID (120G, 130G, 135G)	1.3 S (135GL)	43	09/84 – 12/90	3404	
RAPID (NH3)	12	55	07/12 -		3529/1
RAPID (NH3)	12	55	07/12 -	3782/1	
RAPID (NH3)	12	55	07/12 -	3904	
RAPID (NH3)	16	77	07/12 -		3529/1
RAPID (NH3)	16	77	07/12 -	3782/1	
RAPID (NH3)	16	77	07/12 -	3904	
RAPID (NH3)	1.2 TSI	63	07/12 -		3529/1
RAPID (NH3)	1.2 TSI	63	07/12 -	3782/1	
RAPID (NH3)	1.2 TSI	63	07/12 -	3904	
RAPID (NH3)	1.2 TSI	66	05/15 -		3529/1
RAPID (NH3)	1.2 TSI	66	05/15 -	3782/1	
RAPID (NH3)	1.2 TSI	77	07/12 -		3529/1
RAPID (NH3)	1.2 TSI	77	07/12 -	3782/1	
RAPID (NH3)	1.2 TSI	77	07/12 -	3904	
RAPID (NH3)	1.2 TSI	81	05/15 -		3529/1
RAPID (NH3)	1.2 TSI	81	05/15 -	3782/1	
RAPID (NH3)	1.4 TDI	66	05/15 -		3529/1
RAPID (NH3)	1.4 TDI	66	05/15 -	3782/1	
RAPID (NH3)	1.4 TSI	90	07/12 -		3529/1
RAPID (NH3)	1.4 TSI	90	07/12 -	3782/1	
RAPID (NH3)	1.4 TSI	90	07/12 -	3904	
RAPID (NH3)	1.4 TSI	92	05/15 -		3529/1
RAPID (NH3)	1.4 TSI	92	05/15 -	3782/1	
RAPID (NH3)	1.6 TDI	66	08/13 -		3529/1
RAPID (NH3)	1.6 TDI	66	08/13 -	3782/1	
RAPID (NH3)	1.6 TDI	66	08/13 -	3904	
RAPID (NH3)	1.6 TDI	77	07/12 -		3529/1
RAPID (NH3)	1.6 TDI	77	07/12 -	3782/1	
RAPID (NH3)	1.6 TDI	77	07/12 -	3904	
RAPID (NH3)	1.6 TDI	85	05/15 -		3529/1
RAPID (NH3)	1.6 TDI	85	05/15 -	3782/1	
RAPID Spaceback (NH1)	12	55	07/12 -		3529/1
RAPID Spaceback (NH1)	12	55	07/12 -	3782/1	
RAPID Spaceback (NH1)	12	55	07/12 -	3904	
RAPID Spaceback (NH1)	16	77	07/12 -		3529/1
RAPID Spaceback (NH1)	16	77	07/12 -	3782/1	
RAPID Spaceback (NH1)	16	77	07/12 -	3904	
RAPID Spaceback (NH1)	1.2 TSI	63	07/12 -		3529/1
RAPID Spaceback (NH1)	1.2 TSI	63	07/12 -	3782/1	
RAPID Spaceback (NH1)	1.2 TSI	63	07/12 -	3904	
RAPID Spaceback (NH1)	1.2 TSI	66	05/15 -		3529/1
RAPID Spaceback (NH1)	1.2 TSI	66	05/15 -	3782/1	
RAPID Spaceback (NH1)	1.2 TSI	77	07/12 -		3529/1
RAPID Spaceback (NH1)	1.2 TSI	77	07/12 -	3782/1	
RAPID Spaceback (NH1)	1.2 TSI	77	07/12 -	3904	
RAPID Spaceback (NH1)	1.2 TSI	81	05/15 -		3529/1
RAPID Spaceback (NH1)	1.2 TSI	81	05/15 -	3782/1	
RAPID Spaceback (NH1)	1.4 TDI	66	05/15 -		3529/1
RAPID Spaceback (NH1)	1.4 TDI	66	05/15 -	3782/1	
RAPID Spaceback (NH1)	1.4 TSI	90	07/12 -		3529/1
RAPID Spaceback (NH1)	1.4 TSI	90	07/12 -	3782/1	
RAPID Spaceback (NH1)	1.4 TSI	90	07/12 -	3904	
RAPID Spaceback (NH1)	1.4 TSI	92	05/15 -		3529/1
RAPID Spaceback (NH1)	1.4 TSI	92	05/15 -	3782/1	
RAPID Spaceback (NH1)	1.6 TDI	66	08/13 -		3529/1
RAPID Spaceback (NH1)	1.6 TDI	66	08/13 -	3782/1	
RAPID Spaceback (NH1)	1.6 TDI	66	08/13 -	3904	
RAPID Spaceback (NH1)	1.6 TDI	77	07/12 -		3529/1
RAPID Spaceback (NH1)	1.6 TDI	77	07/12 -	3782/1	
RAPID Spaceback (NH1)	1.6 TDI	77	07/12 -	3904	
RAPID Spaceback (NH1)	1.6 TDI	85	05/15 -		3529/1
RAPID Spaceback (NH1)	1.6 TDI	85	05/15 -	3782/1	
ROOMSTER (5J)	12	47	05/06 – 01/07		3529/1
ROOMSTER (5J)	12	47	05/06 – 01/07	3782	
ROOMSTER (5J)	12	47	05/06 – 01/07	3782/1	

MAKE & MODEL		KW	YEAR		
SKODA					
ROOMSTER (5J)	12	47	05/06 – 01/07	4138	
ROOMSTER (5J)	12	51	01/07 – 05/15		3529/1
ROOMSTER (5J)	12	51	01/07 – 05/15	3782	
ROOMSTER (5J)	12	51	01/07 – 05/15	3782/1	
ROOMSTER (5J)	12	51	01/07 – 05/15	4138	
ROOMSTER (5J)	14	63	09/06 – 05/15		3529/1
ROOMSTER (5J)	14	63	09/06 – 05/15	3782	
ROOMSTER (5J)	14	63	09/06 – 05/15	3782/1	
ROOMSTER (5J)	14	63	09/06 – 05/15	4138	
ROOMSTER (5J)	16	77	09/06 – 05/15		3529/1
ROOMSTER (5J)	16	77	09/06 – 05/15	3782	
ROOMSTER (5J)	16	77	09/06 – 05/15	3782/1	
ROOMSTER (5J)	16	77	09/06 – 05/15	4138	
ROOMSTER (5J)	1.2 TDI	55	03/10 – 05/15		3529/1
ROOMSTER (5J)	1.2 TDI	55	03/10 – 05/15	3782/1	
ROOMSTER (5J)	1.2 TDI	55	03/10 – 05/15	3904	
ROOMSTER (5J)	1.2 TSI	63	03/10 – 05/15		3529/1
ROOMSTER (5J)	1.2 TSI	63	03/10 – 05/15	3782/1	
ROOMSTER (5J)	1.2 TSI	63	03/10 – 05/15	3904	
ROOMSTER (5J)	1.2 TSI	77	03/10 – 05/15		3529/1
ROOMSTER (5J)	1.2 TSI	77	03/10 – 05/15	3782/1	
ROOMSTER (5J)	1.2 TSI	77	03/10 – 05/15	3904	
ROOMSTER (5J)	1.4 TDI	51	07/06 – 03/10		3529/1
ROOMSTER (5J)	1.4 TDI	51	07/06 – 03/10	3782	
ROOMSTER (5J)	1.4 TDI	51	07/06 – 03/10	3782/1	
ROOMSTER (5J)	1.4 TDI	51	07/06 – 03/10	4138	
ROOMSTER (5J)	1.4 TDI	59	09/06 – 03/10		3529/1
ROOMSTER (5J)	1.4 TDI	59	09/06 – 03/10	3782	
ROOMSTER (5J)	1.4 TDI	59	09/06 – 03/10	3782/1	
ROOMSTER (5J)	1.4 TDI	59	09/06 – 03/10	4138	
ROOMSTER (5J)	1.6 TDI	66	03/10 – 05/15		3529/1
ROOMSTER (5J)	1.6 TDI	66	03/10 – 05/15	3782/1	
ROOMSTER (5J)	1.6 TDI	66	03/10 – 05/15	3904	
ROOMSTER (5J)	1.6 TDI	77	03/10 – 05/15		3529/1
ROOMSTER (5J)	1.6 TDI	77	03/10 – 05/15	3782/1	
ROOMSTER (5J)	1.6 TDI	77	03/10 – 05/15	3904	
ROOMSTER (5J)	1.9 TDI	74	03/06 – 05/06		3529/1
ROOMSTER (5J)	1.9 TDI	74	03/06 – 05/06	3782	
ROOMSTER (5J)	1.9 TDI	74	03/06 – 05/06	3782/1	
ROOMSTER (5J)	1.9 TDI	74	03/06 – 05/06	4138	
ROOMSTER (5J)	1.9 TDI	77	09/06 – 03/10		3529/1
ROOMSTER (5J)	1.9 TDI	77	09/06 – 03/10	3782	
ROOMSTER (5J)	1.9 TDI	77	09/06 – 03/10	3782/1	
ROOMSTER (5J)	1.9 TDI	77	09/06 – 03/10	4138	
ROOMSTER Praktik (5J)	12	51	03/07 – 05/15		3529/1
ROOMSTER Praktik (5J)	12	51	03/07 – 05/15	3566	
ROOMSTER Praktik (5J)	12	51	03/07 – 05/15	3782	
ROOMSTER Praktik (5J)	12	51	03/07 – 05/15	3782/1	
ROOMSTER Praktik (5J)	12	51	03/07 – 05/15	4138	
ROOMSTER Praktik (5J)	14	63	03/07 – 05/15		3529/1
ROOMSTER Praktik (5J)	14	63	03/07 – 05/15	3566	
ROOMSTER Praktik (5J)	14	63	03/07 – 05/15	3782	
ROOMSTER Praktik (5J)	14	63	03/07 – 05/15	3782/1	
ROOMSTER Praktik (5J)	14	63	03/07 – 05/15	4138	
ROOMSTER Praktik (5J)	1.2 TDI	55	03/10 – 05/15		3529/1
ROOMSTER Praktik (5J)	1.2 TDI	55	03/10 – 05/15	3782/1	
ROOMSTER Praktik (5J)	1.2 TDI	55	03/10 – 05/15	3904	
ROOMSTER Praktik (5J)	1.2 TSI	63	03/10 – 05/15		3529/1
ROOMSTER Praktik (5J)	1.2 TSI	63	03/10 – 05/15	3782/1	
ROOMSTER Praktik (5J)	1.2 TSI	63	03/10 – 05/15	3904	
ROOMSTER Praktik (5J)	1.4 TDI	51	03/07 – 03/10		3529/1
ROOMSTER Praktik (5J)	1.4 TDI	51	03/07 – 03/10	3566	
ROOMSTER Praktik (5J)	1.4 TDI	51	03/07 – 03/10	3782	
ROOMSTER Praktik (5J)	1.4 TDI	51	03/07 – 03/10	3782/1	
ROOMSTER Praktik (5J)	1.4 TDI	51	03/07 – 03/10	4138	
ROOMSTER Praktik (5J)	1.4 TDI	59	03/07 – 03/10		3529/1
ROOMSTER Praktik (5J)	1.4 TDI	59	03/07 – 03/10	3566	
ROOMSTER Praktik (5J)	1.4 TDI	59	03/07 – 03/10	3782	
ROOMSTER Praktik (5J)	1.4 TDI	59	03/07 – 03/10	3782/1	
ROOMSTER Praktik (5J)	1.4 TDI	59	03/07 – 03/10	4138	
ROOMSTER Praktik (5J)	1.6 TDI	66	03/10 – 05/15		3529/1

BEŞER

MAKE & MODEL		KW	YEAR		
SKODA					
ROOMSTER Praktik (5J)	1.6 TDI	66	03/10 – 05/15	3782/1	
ROOMSTER Praktik (5J)	1.6 TDI	66	03/10 – 05/15	3904	
SUPERB	1.8 TSI	118	08/09 -	3904	
SUPERB	2.0 TSI	147	08/09 -	3904	
SUPERB III (3V3)	1.4 TSI (CZCA)	92	03/15 -	4228	
SUPERB III (3V3)	1.4 TSI (CZCA)	92	03/15 -		4270
SUPERB III (3V3)	1.4 TSI (CZDA)	110	03/15 -	4228	
SUPERB III (3V3)	1.4 TSI (CZDA)	110	03/15 -	4228	
SUPERB III (3V3)	1.4 TSI (CZDA)	110	03/15 -		4270
SUPERB III (3V3)	1.4 TSI (CZDA)	110	03/15 -		4270
SUPERB III (3V3)	1.4 TSI (CZEA)	110	03/15 -	4228	
SUPERB III (3V3)	1.4 TSI (CZEA)	110	03/15 -	4228	
SUPERB III (3V3)	1.4 TSI (CZEA)	110	03/15 -		4270
SUPERB III (3V3)	1.4 TSI (CZEA)	110	03/15 -		4270
SUPERB III (3V3)	1.6 TDI (DCXA)	88	03/15 -	4228	
SUPERB III (3V3)	1.6 TDI (DCXA)	88	03/15 -		4270
SUPERB III (3V3)	1.6 TDI (DCZA)	88	03/15 -	4228	
SUPERB III (3V3)	1.6 TDI (DCZA)	88	03/15 -		4270
SUPERB III (3V3)	1.8 TSI (CJSA)	132	03/15 -	4228	
SUPERB III (3V3)	1.8 TSI (CJSA)	132	03/15 -		4270
SUPERB III (3V3)	1.8 TSI (CJSC)	132	03/15 -	4228	
SUPERB III (3V3)	1.8 TSI (CJSC)	132	03/15 -		4270
SUPERB III (3V3)	2.0 TDI (CRLB)	110	03/15 -	4228	
SUPERB III (3V3)	2.0 TDI (CRLB)	110	03/15 -	4228	
SUPERB III (3V3)	2.0 TDI (CRLB)	110	03/15 -		4270
SUPERB III (3V3)	2.0 TDI (CRLB)	110	03/15 -		4270
SUPERB III (3V3)	2.0 TDI (DDAA)	140	03/15 -	4228	
SUPERB III (3V3)	2.0 TDI (DDAA)	140	03/15 -	4228	
SUPERB III (3V3)	2.0 TDI (DDAA)	140	03/15 -		4270
SUPERB III (3V3)	2.0 TDI (DDAA)	140	03/15 -		4270
SUPERB III (3V3)	2.0 TDI (DFCA)	140	03/15 -	4228	
SUPERB III (3V3)	2.0 TDI (DFCA)	140	03/15 -	4228	
SUPERB III (3V3)	2.0 TDI (DFCA)	140	03/15 -		4270
SUPERB III (3V3)	2.0 TDI (DFCA)	140	03/15 -		4270
SUPERB III (3V3)	2.0 TDI (DFEA)	110	03/15 -	4228	
SUPERB III (3V3)	2.0 TDI (DFEA)	110	03/15 -	4228	
SUPERB III (3V3)	2.0 TDI (DFEA)	110	03/15 -		4270
SUPERB III (3V3)	2.0 TDI (DFEA)	110	03/15 -		4270
SUPERB III (3V3)	2.0 TSI (CHHB)	162	03/15 -	4228	
SUPERB III (3V3)	2.0 TSI (CHHB)	162	03/15 -		4270
SUPERB III (3V3)	2.0 TSI (CJXA)	206	03/15 -	4228	
SUPERB III (3V3)	2.0 TSI (CJXA)	206	03/15 -		4270
SUPERB III (3V5)	1.4 TSI (CZCA)	92	03/15 -	4228	
SUPERB III (3V5)	1.4 TSI (CZCA)	92	03/15 -		4270
SUPERB III (3V5)	1.4 TSI (CZDA)	110	03/15 -	4228	
SUPERB III (3V5)	1.4 TSI (CZDA)	110	03/15 -	4228	
SUPERB III (3V5)	1.4 TSI (CZDA)	110	03/15 -		4270
SUPERB III (3V5)	1.4 TSI (CZDA)	110	03/15 -		4270
SUPERB III (3V5)	1.4 TSI (CZEA)	110	03/15 -	4228	
SUPERB III (3V5)	1.4 TSI (CZEA)	110	03/15 -	4228	
SUPERB III (3V5)	1.4 TSI (CZEA)	110	03/15 -		4270
SUPERB III (3V5)	1.4 TSI (CZEA)	110	03/15 -		4270
SUPERB III (3V5)	1.6 TDI (DCXA)	88	03/15 -	4228	
SUPERB III (3V5)	1.6 TDI (DCXA)	88	03/15 -		4270
SUPERB III (3V5)	1.6 TDI (DCZA)	88	03/15 -	4228	
SUPERB III (3V5)	1.6 TDI (DCZA)	88	03/15 -		4270
SUPERB III (3V5)	1.8 TSI (CJSA)	132	03/15 -	4228	
SUPERB III (3V5)	1.8 TSI (CJSA)	132	03/15 -		4270
SUPERB III (3V5)	1.8 TSI (CJSC)	132	03/15 -	4228	
SUPERB III (3V5)	1.8 TSI (CJSC)	132	03/15 -		4270
SUPERB III (3V5)	2.0 TDI (CRLB)	110	03/15 -	4228	
SUPERB III (3V5)	2.0 TDI (CRLB)	110	03/15 -	4228	
SUPERB III (3V5)	2.0 TDI (CRLB)	110	03/15 -		4270
SUPERB III (3V5)	2.0 TDI (CRLB)	110	03/15 -		4270
SUPERB III (3V5)	2.0 TDI (DDAA)	140	03/15 -	4228	
SUPERB III (3V5)	2.0 TDI (DDAA)	140	03/15 -	4228	
SUPERB III (3V5)	2.0 TDI (DDAA)	140	03/15 -		4270
SUPERB III (3V5)	2.0 TDI (DDAA)	140	03/15 -		4270
SUPERB III (3V5)	2.0 TDI (DFCA)	140	03/15 -	4228	
SUPERB III (3V5)	2.0 TDI (DFCA)	140	03/15 -	4228	
SUPERB III (3V5)	2.0 TDI (DFCA)	140	03/15 -		4270

BESER

MAKE & MODEL		KW	YEAR		
SKODA					
SUPERB III (3V5)	2.0 TDI (DFCA)	140	03/15 -		4270
SUPERB III (3V5)	2.0 TDI (DFEA)	110	03/15 -	4228	
SUPERB III (3V5)	2.0 TDI (DFEA)	110	03/15 -	4228	
SUPERB III (3V5)	2.0 TDI (DFEA)	110	03/15 -		4270
SUPERB III (3V5)	2.0 TDI (DFEA)	110	03/15 -		4270
SUPERB III (3V5)	2.0 TSI (CHHB)	162	03/15 -	4228	
SUPERB III (3V5)	2.0 TSI (CHHB)	162	03/15 -		4270
SUPERB III (3V5)	2.0 TSI (CJXA)	206	03/15 -	4228	
SUPERB III (3V5)	2.0 TSI (CJXA)	206	03/15 -		4270
SUPERB (3T4)	1.4 TSI	92	07/08 – 05/15	3904	
SUPERB (3T4)	1.4 TSI	92	07/08 – 05/15		3905
SUPERB (3T4)	1.4 TSI	92	07/08 – 05/15		4135
SUPERB (3T4)	1.6 TDI	77	09/10 – 05/15	3904	
SUPERB (3T4)	1.6 TDI	77	09/10 – 05/15		3905
SUPERB (3T4)	1.6 TDI	77	09/10 – 05/15		4135
SUPERB (3T4)	1.8 TSI	112	03/09 – 05/15	3904	
SUPERB (3T4)	1.8 TSI	112	03/09 – 05/15		3905
SUPERB (3T4)	1.8 TSI	112	03/09 – 05/15		4135
SUPERB (3T4)	1.8 TSI	118	03/08 – 05/15	3904	
SUPERB (3T4)	1.8 TSI	118	03/08 – 05/15		3905
SUPERB (3T4)	1.8 TSI	118	03/08 – 05/15		4135
SUPERB (3T4)	1.8 TSI 4x4	112	03/09 – 05/15	3904	
SUPERB (3T4)	1.8 TSI 4x4	112	03/09 – 05/15		4135
SUPERB (3T4)	1.8 TSI 4x4	118	11/08 – 05/15	3904	
SUPERB (3T4)	1.8 TSI 4x4	118	11/08 – 05/15		4135
SUPERB (3T4)	1.9 TDI	77	03/08 – 11/10	3904	
SUPERB (3T4)	1.9 TDI	77	03/08 – 11/10		3905
SUPERB (3T4)	1.9 TDI	77	03/08 – 11/10		4135
SUPERB (3T4)	2.0 TDI	103	03/08 – 05/10	3904	
SUPERB (3T4)	2.0 TDI	103	03/08 – 05/10		3905
SUPERB (3T4)	2.0 TDI	103	03/08 – 05/10		4135
SUPERB (3T4)	2.0 TDI	125	07/08 – 05/15	3904	
SUPERB (3T4)	2.0 TDI	125	07/08 – 05/15		3905
SUPERB (3T4)	2.0 TDI	125	07/08 – 05/15		4135
SUPERB (3T4)	2.0 TDI 16V	103	01/09 – 05/15	3904	
SUPERB (3T4)	2.0 TDI 16V	103	01/09 – 05/15		3905
SUPERB (3T4)	2.0 TDI 16V	103	01/09 – 05/15		4135
SUPERB (3T4)	2.0 TDI 16V 4x4	103	11/10 – 05/15	3904	
SUPERB (3T4)	2.0 TDI 16V 4x4	103	11/10 – 05/15		4135
SUPERB (3T4)	2.0 TDI 4x4	125	09/08 – 05/15	3904	
SUPERB (3T4)	2.0 TDI 4x4	125	09/08 – 05/15		3905
SUPERB (3T4)	2.0 TDI 4x4	125	09/08 – 05/15		4135
SUPERB (3T4)	2.0 TSI	147	05/10 – 05/15		3905
SUPERB (3U4)	20	85	12/01 – 03/08		3529/1
SUPERB (3U4)	1.8 T	110	12/01 – 03/08		3529/1
SUPERB (3U4)	1.9 TDI	74	08/02 – 10/05		3529/1
SUPERB (3U4)	1.9 TDI	77	10/05 – 05/07		3529/1
SUPERB (3U4)	1.9 TDI	85	01/07 – 03/08		3529/1
SUPERB (3U4)	1.9 TDI	96	12/01 – 03/08		3529/1
SUPERB (3U4)	2.0 TDI	103	10/05 – 03/08		3529/1
SUPERB (3U4)	2.5 TDI	114	12/01 – 08/03		3529/1
SUPERB (3U4)	2.5 TDI	120	06/03 – 03/08		3529/1
SUPERB (3U4)	2.8 V6	140	06/02 – 03/08		3529/1
SUPERB (3U4)	2.8 V6	142	12/01 – 03/08		3529/1
SUPERB Estate (3T5)	1.4 TSI	92	10/09 – 05/15	3904	
SUPERB Estate (3T5)	1.4 TSI	92	10/09 – 05/15		3905
SUPERB Estate (3T5)	1.4 TSI	92	10/09 – 05/15		4135
SUPERB Estate (3T5)	1.6 TDI	77	09/10 – 05/15	3904	
SUPERB Estate (3T5)	1.6 TDI	77	09/10 – 05/15		3905
SUPERB Estate (3T5)	1.6 TDI	77	09/10 – 05/15		4135
SUPERB Estate (3T5)	1.8 TSI	112	10/09 – 05/15	3904	
SUPERB Estate (3T5)	1.8 TSI	112	10/09 – 05/15		3905
SUPERB Estate (3T5)	1.8 TSI	112	10/09 – 05/15		4135
SUPERB Estate (3T5)	1.8 TSI	118	10/09 – 05/15	3904	
SUPERB Estate (3T5)	1.8 TSI	118	10/09 – 05/15		3905
SUPERB Estate (3T5)	1.8 TSI	118	10/09 – 05/15		4135
SUPERB Estate (3T5)	1.8 TSI 4x4	112	10/09 – 05/15	3904	
SUPERB Estate (3T5)	1.8 TSI 4x4	112	10/09 – 05/15		4135
SUPERB Estate (3T5)	1.8 TSI 4x4	118	10/09 – 05/15	3904	
SUPERB Estate (3T5)	1.8 TSI 4x4	118	10/09 – 05/15		4135
SUPERB Estate (3T5)	1.9 TDI	77	10/09 – 11/10	3904	

MAKE & MODEL		KW	YEAR		
SKODA					
SUPERB Estate (3T5)	1.9 TDI	77	10/09 – 11/10		3905
SUPERB Estate (3T5)	1.9 TDI	77	10/09 – 11/10		4135
SUPERB Estate (3T5)	2.0 TDI	103	10/09 – 03/10	3904	
SUPERB Estate (3T5)	2.0 TDI	103	10/09 – 03/10		3905
SUPERB Estate (3T5)	2.0 TDI	103	10/09 – 03/10		4135
SUPERB Estate (3T5)	2.0 TDI	125	10/09 – 05/15	3904	
SUPERB Estate (3T5)	2.0 TDI	125	10/09 – 05/15		3905
SUPERB Estate (3T5)	2.0 TDI	125	10/09 – 05/15		4135
SUPERB Estate (3T5)	2.0 TDI 16V	103	10/09 – 05/15	3904	
SUPERB Estate (3T5)	2.0 TDI 16V	103	10/09 – 05/15		3905
SUPERB Estate (3T5)	2.0 TDI 16V	103	10/09 – 05/15		4135
SUPERB Estate (3T5)	2.0 TDI 16V 4x4	103	11/10 – 05/15	3904	
SUPERB Estate (3T5)	2.0 TDI 16V 4x4	103	11/10 – 05/15		4135
SUPERB Estate (3T5)	2.0 TDI 4x4	125	10/09 – 05/15	3904	
SUPERB Estate (3T5)	2.0 TDI 4x4	125	10/09 – 05/15		4135
SUPERB Estate (3T5)	2.0 TSI	147	05/10 – 05/15		3905
YETI (5L)	16	81	04/14 -		3529/1
YETI (5L)	16	81	04/14 -	3782	
YETI (5L)	16	81	04/14 -	3904	
YETI (5L)	16	81	04/14 -		4135
YETI (5L)	1.2 TSI	77	09/09 -		3529/1
YETI (5L)	1.2 TSI	77	09/09 -	3782	
YETI (5L)	1.2 TSI	77	09/09 -	3904	
YETI (5L)	1.2 TSI	81	05/15 -		3529/1
YETI (5L)	1.2 TSI	81	05/15 -	3782	
YETI (5L)	1.2 TSI	81	05/15 -	3904	
YETI (5L)	1.2 TSI	81	05/15 -		4135
YETI (5L)	1.4 TSI	90	06/10 -		3529/1
YETI (5L)	1.4 TSI	90	06/10 -	3782	
YETI (5L)	1.4 TSI	90	06/10 -	3904	
YETI (5L)	1.4 TSI	92	05/15 -		3529/1
YETI (5L)	1.4 TSI	92	05/15 -	3782	
YETI (5L)	1.4 TSI	92	05/15 -	3904	
YETI (5L)	1.4 TSI	92	05/15 -		4135
YETI (5L)	1.4 TSI 4x4	110	05/15 -		3529/1
YETI (5L)	1.4 TSI 4x4	110	05/15 -	3782	
YETI (5L)	1.4 TSI 4x4	110	05/15 -	3904	
YETI (5L)	1.4 TSI 4x4	110	05/15 -		4135
YETI (5L)	1.6 TDI	77	11/10 -	3782	
YETI (5L)	1.6 TDI	77	11/10 -	3904	
YETI (5L)	1.6 TDI	77	11/10 -		3905
YETI (5L)	1.6 TDI	77	11/10 -		4135
YETI (5L)	1.8 TSI 4x4	112	11/09 -	3904	
YETI (5L)	1.8 TSI 4x4	112	11/09 -		3905
YETI (5L)	1.8 TSI 4x4	112	11/09 -		4135
YETI (5L)	1.8 TSI 4x4	118	05/09 -	3904	
YETI (5L)	1.8 TSI 4x4	118	05/09 -		3905
YETI (5L)	1.8 TSI 4x4	118	05/09 -		4135
YETI (5L)	2.0 TDI	81	11/09 -	3782	
YETI (5L)	2.0 TDI	81	11/09 -	3904	
YETI (5L)	2.0 TDI	81	11/09 -		3905
YETI (5L)	2.0 TDI	81	11/09 -		4135
YETI (5L)	2.0 TDI	103	11/11 -	3904	
YETI (5L)	2.0 TDI	103	11/11 -		3905
YETI (5L)	2.0 TDI	103	11/11 -		4135
YETI (5L)	2.0 TDI	110	05/15 -		3529/1
YETI (5L)	2.0 TDI	110	05/15 -	3782	
YETI (5L)	2.0 TDI	110	05/15 -	3904	
YETI (5L)	2.0 TDI	110	05/15 -		4135
YETI (5L)	2.0 TDI 4x4	81	11/09 -	3782	
YETI (5L)	2.0 TDI 4x4	81	11/09 -	3904	
YETI (5L)	2.0 TDI 4x4	81	11/09 -		3905
YETI (5L)	2.0 TDI 4x4	81	11/09 -		4135
YETI (5L)	2.0 TDI 4x4	103	05/09 -	3904	
YETI (5L)	2.0 TDI 4x4	103	05/09 -		3905
YETI (5L)	2.0 TDI 4x4	103	05/09 -		4135
YETI (5L)	2.0 TDI 4x4	110	05/15 -		3529/1
YETI (5L)	2.0 TDI 4x4	110	05/15 -	3782	
YETI (5L)	2.0 TDI 4x4	110	05/15 -	3904	
YETI (5L)	2.0 TDI 4x4	110	05/15 -		4135
YETI (5L)	2.0 TDI 4x4	125	11/09 -	3904	

MAKE & MODEL   		KW	YEAR		
SKODA					
YETI (5L)	2.0 TDI 4x4	125	11/09 -		3905
YETI (5L)	2.0 TDI 4x4	125	11/09 -		4135
SMART					
CABRIO (450)	0.6 (450.432)	52	06/02 – 01/04	4281	
CABRIO (450)	0.6 (S1OLA1, 450.441,450.442, 450.443)	40	03/00 – 01/04	4281	
CABRIO (450)	0.6 (S1OLD2, 450.452)	45	01/01 – 01/04	4281	
CABRIO (450)	0.7 (450.433)	55	01/03 – 01/04	4281	
CABRIO (450)	0.7 (450.452, 450.432)	45	01/03 – 01/04	4281	
CABRIO (450)	0.8 CDI (S1OLC1, 450.401,450.402, 450.403,	30	03/01 – 01/04	4281	
CITY-COUPE (450)	0.6 (450.330, 450.332)	52	06/02 – 01/04	4281	
CITY-COUPE (450)	0.6 (450.352, 450.353)	45	01/01 – 01/04	4281	
CITY-COUPE (450)	0.6 (S1CLA1, 450.341)	40	07/98 – 01/04	4281	
CITY-COUPE (450)	0.6 (S1CLB1, 450.331,450.336)	33	07/98 – 01/04	4281	
CITY-COUPE (450)	0.7 (450.330)	37	01/03 – 01/04	4281	
CITY-COUPE (450)	0.7 (450.333)	55	01/03 – 01/04	4281	
CITY-COUPE (450)	0.7 (450.352, 450.353)	45	01/03 – 01/04	4281	
CITY-COUPE (450)	0.8 CDI (S1CLC1, 450.300,450.301, 450.302,	30	11/99 – 01/04	4281	
CROSSBLADE (450)	0.6 (450.418)	52	06/02 – 12/03	4281	
FORFOUR (454)	1.1 (454.030)	55	01/04 – 06/06		4062
FORFOUR (454)	1.1 (454.033)	47	02/05 – 06/06		4062
FORFOUR (454)	1.3 (454.031)	70	01/04 – 06/06		4062
FORFOUR (454)	1.5 (454.032)	80	01/04 – 06/06		4062
FORFOUR (454)	1.5 (454.032)	90	01/04 – 06/06		4062
FORFOUR (454)	1.5 BRABUS (454.034)	130	05/05 – 06/06		4062
FORFOUR (454)	1.5 CDI (454.000)	50	09/04 – 06/06		4062
FORFOUR (454)	1.5 CDI (454.001)	70	09/04 – 06/06		4062
FORFOUR Hatchback (453)	0.9 (453.044, 453.053)	66	11/14 -	4140	
FORFOUR Hatchback (453)	0.9 Brabus (453.062)	80	07/16 -	4140	
FORFOUR Hatchback (453)	1.0 (453.041)	45	11/14 -	4140	
FORFOUR Hatchback (453)	1.0 (453.042)	52	07/14 -	4140	
FORTWO Cabrio (450)	0.7 (450.433)	55	01/04 – 01/07	4281	
FORTWO Cabrio (450)	0.7 (450.452)	45	01/04 – 01/07	4281	
FORTWO Cabrio (450)	0.8 CDI (450.401, 450.402,450.403, 450.400)	30	01/04 – 01/07	4281	
FORTWO Cabrio (451)	0.8 CDi (451.400)	33	01/07 -	4281	
FORTWO Cabrio (451)	0.8 CDi (451.401)	40	08/09 -	4281	
FORTWO Cabrio (451)	1.0 (451.431, 451.480)	52	01/07 -	4281	
FORTWO Cabrio (451)	1.0 Brabus	88	04/12 -	4281	
FORTWO Cabrio (451)	1.0 Brabus (451.433)	72	01/08 -	4281	
FORTWO Cabrio (451)	1.0 Turbo (451.432)	62	01/07 -	4281	
FORTWO Cabrio (451)	1.0 Turbo Brabus (451.433)	75	07/10 -	4281	
FORTWO Cabrio (451)	electric drive (451.490)	35	12/11 – 12/12	4281	
FORTWO Cabrio (451)	electric drive (451.490,451.491)	20	12/10 – 12/12	4281	
FORTWO Cabrio (451)	electric drive (451.490,451.491)	55	01/13 -	4281	
FORTWO Cabrio (451)	electric drive (451.491)	30	11/09 – 12/11	4281	
FORTWO Cabrio (451)	electric drive Brabus (451.492)	60	01/13 -	4281	
FORTWO Convertible (453)	0.9 (453.444, 453.453)	66	09/15 -	4140	
FORTWO Convertible (453)	0.9 Brabus (453.462)	80	07/16 -	4140	
FORTWO Convertible (453)	1.0 (453.442, 453.443)	52	09/15 -	4140	
FORTWO Coupe (450)	0.7 (450.330)	37	01/04 – 01/07	4281	
FORTWO Coupe (450)	0.7 (450.333)	55	01/04 – 01/07	4281	
FORTWO Coupe (450)	0.7 (450.352, 450.332)	45	01/04 – 01/07	4281	
FORTWO Coupe (450)	0.8 CDI (450.300, 450.301,450.302, 450.303,	30	01/04 – 01/07	4281	
FORTWO Coupe (451)	0.8 CDi (451.300)	33	01/07 -	4281	
FORTWO Coupe (451)	0.8 CDi (451.301)	40	08/09 -	4281	
FORTWO Coupe (451)	1.0 (451.330, 451.334)	45	01/07 -	4281	
FORTWO Coupe (451)	1.0 (451.331, 451.380)	52	01/07 -	4281	
FORTWO Coupe (451)	1.0 Brabus (451.333)	72	01/08 -	4281	
FORTWO Coupe (451)	1.0 Turbo (451.332)	62	01/07 -	4281	
FORTWO Coupe (451)	1.0 Turbo Brabus (451.333)	75	07/10 -	4281	
FORTWO Coupe (451)	electric drive (451.390)	35	12/11 – 12/12	4281	
FORTWO Coupe (451)	electric drive (451.390,451.391)	55	01/13 -	4281	
FORTWO Coupe (451)	electric drive (451.391)	30	11/09 – 12/11	4281	
FORTWO Coupe (451)	electric drive (451.391,451.390)	20	12/10 – 12/12	4281	
FORTWO Coupe (451)	electric drive Brabus (451.392)	60	01/13 -	4281	
FORTWO Coupe (453)	0.9 (453.344, 453.353)	66	09/14 -	4140	
FORTWO Coupe (453)	0.9 Brabus (453.362)	80	07/16 -	4140	
FORTWO Coupe (453)	1.0 (453.341)	45	11/14 -	4140	
FORTWO Coupe (453)	1.0 (453.342, 453.343)	52	07/14 -	4140	
ROADSTER (452)	0.7 (452.432)	45	04/03 – 11/05	4281	
ROADSTER (452)	0.7 (452.434)	60	04/03 – 11/05	4281	

MAKE & MODEL		KW	YEAR		
SKODA					
ROADSTER (452)	0.7 Brabus (452.437)	74	12/03 – 11/05	4281	
ROADSTER Coupe (452)	0.7 (452.332)	45	06/03 – 11/05	4281	
ROADSTER Coupe (452)	0.7 (452.334)	60	04/03 – 11/05	4281	
ROADSTER Coupe (452)	0.7 Brabus (452.337)	74	12/03 – 11/05	4281	
SSANGYONG					
ACTYON I	23	110	11/06 -	3843	
ACTYON I	23	110	11/06 -		3895
ACTYON I	2.0 Xdi	100	07/07 -	3843	
ACTYON I	2.0 Xdi	100	07/07 -		3895
ACTYON I	2.0 Xdi	104	11/05 -	3843	
ACTYON I	2.0 Xdi	104	11/05 -		3895
ACTYON I	2.3 4x4	110	11/06 -	3843	
ACTYON I	2.3 4x4	110	11/06 -		3895
ACTYON I	200 Xdi 4WD	100	07/07 -	3843	
ACTYON I	200 Xdi 4WD	100	07/07 -		3895
ACTYON I	200 Xdi 4WD	104	10/06 -	3843	
ACTYON I	200 Xdi 4WD	104	10/06 -		3895
ACTYON II	20	110	08/12 -	3960	
ACTYON II	20	110	08/12 -		4061
ACTYON II	2.0 4x4	110	08/12 -	3960	
ACTYON II	2.0 4x4	110	08/12 -		4061
ACTYON II	2.0 XDi	110	08/12 -	3960	
ACTYON II	2.0 XDi	110	08/12 -		4061
ACTYON II	2.0 XDi 4x4	110	08/12 -	3960	
ACTYON II	2.0 XDi 4x4	110	08/12 -		4061
ACTYON II	2.0 XDi 4x4	129	03/13 -	3960	
ACTYON II	2.0 XDi 4x4	129	03/13 -		4061
ACTYON SPORTS I (QJ)	2.0 Xdi	104	04/07 -	3843	
ACTYON SPORTS I (QJ)	2.0 Xdi	104	04/07 -		3895
ACTYON SPORTS I (QJ)	2.0 Xdi	114	09/11 -	3960	
ACTYON SPORTS I (QJ)	2.0 Xdi	114	09/11 -		4061
ACTYON SPORTS I (QJ)	2.0 Xdi 4WD	104	04/07 -	3843	
ACTYON SPORTS I (QJ)	2.0 Xdi 4WD	104	04/07 -		3895
ACTYON SPORTS I (QJ)	2.0 Xdi 4WD	114	09/11 -	3960	
ACTYON SPORTS I (QJ)	2.0 Xdi 4WD	114	09/11 -		4061
ACTYON SPORTS II	2.0 Xdi	114	10/12 -		3895
ACTYON SPORTS II	2.0 Xdi 4WD	114	10/12 -		3895
ISTANA Box	2.9 D	70	10/92 – 05/95	3689	
ISTANA Box	2.9 D	90	06/95 -	3689	
ISTANA Bus	23	110	06/95 -	3689	
ISTANA Bus	2.9 D	90	06/95 -	3689	
ISTANA Bus	2.9 TD	70	10/92 – 05/95	3689	
KORANDO	20	110	02/12 -	3960	
KORANDO	20	110	02/12 -		4061
KORANDO	2.0 4WD	110	02/12 -	3960	
KORANDO	2.0 e-XDi	110	02/12 -	3960	
KORANDO	2.0 e-XDi	110	02/12 -		4061
KORANDO	2.0 e-XDi	129	11/10 -	3960	
KORANDO	2.0 e-XDi	129	11/10 -		4061
KORANDO	2.0 e-XDi 4WD	110	02/12 -	3960	
KORANDO	2.0 e-XDi 4WD	110	02/12 -		4061
KORANDO	2.0 e-XDi 4WD	129	11/10 -	3960	
KORANDO	2.0 e-XDi 4WD	129	11/10 -		4061
KORANDO	2.2 Xdi	131	07/15 -	3960	
KORANDO	2.2 Xdi	131	07/15 -		4061
KORANDO	2.2 Xdi 4WD	131	07/15 -	3960	
KORANDO	2.2 Xdi 4WD	131	07/15 -		4061
KYRON	23	110	01/10 -	3843	
KYRON	23	110	01/10 -		3895
KYRON	2.0 Xdi	100	01/10 -	3843	
KYRON	2.0 Xdi	100	01/10 -		3895
KYRON	2.0 Xdi	104	05/05 -	3843	
KYRON	2.0 Xdi	104	05/05 -		3895
KYRON	2.0 Xdi 4x4	100	01/10 -	3843	
KYRON	2.0 Xdi 4x4	100	01/10 -		3895
KYRON	2.0 Xdi 4x4	104	05/05 -	3843	
KYRON	2.0 Xdi 4x4	104	05/05 -		3895
KYRON	2.7 Xdi	120	03/06 -	3843	
KYRON	2.7 Xdi	120	03/06 -		3895
KYRON	2.7 Xdi	121	05/05 -	3843	
KYRON	2.7 Xdi	121	05/05 -		3895

MAKE & MODEL		KW	YEAR		
SSANGYONG					
KYRON	3.2 M320 4x4	162	03/08 -	3843	
REXTON (GAB_)	32	162	04/02 -	3843	
REXTON (GAB_)	32	162	04/02 -		3895
REXTON (GAB_)	2.3 RX230 4x4	110	05/02 -	3843	
REXTON (GAB_)	2.3 RX230 4x4	110	05/02 -		3895
REXTON (GAB_)	2.7 D 4x4	137	05/06 -	3843	
REXTON (GAB_)	2.7 D 4x4	137	05/06 -		3895
REXTON (GAB_)	2.7 Xdi	120	08/04 -	3843	
REXTON (GAB_)	2.7 Xdi	120	08/04 -		3895
REXTON (GAB_)	2.7 Xdi	121	03/05 – 08/06	3843	
REXTON (GAB_)	2.7 Xdi	121	03/05 – 08/06		3895
REXTON (GAB_)	2.7 Xdi 4x4	118	03/11 -	3843	
REXTON (GAB_)	2.7 Xdi 4x4	118	03/11 -		3895
REXTON (GAB_)	2.7 Xdi Turbo 4x4	132	03/11 -	3843	
REXTON (GAB_)	2.7 Xdi Turbo 4x4	132	03/11 -		3895
REXTON (GAB_)	2.8 4x4	201	03/03 – 06/06	3843	
REXTON (GAB_)	2.8 4x4	201	03/03 – 06/06		3895
REXTON (GAB_)	2.8 RX280 4x4	142	03/03 -	3843	
REXTON (GAB_)	2.8 RX280 4x4	142	03/03 -		3895
REXTON (GAB_)	2.9 TD	88	04/02 -	3843	
REXTON (GAB_)	2.9 TD	88	04/02 -		3895
REXTON W	2.0 Xdi	114	07/12 -		3895
REXTON W	2.0 Xdi All-wheel Drive	114	07/12 -		3895
REXTON W	2.2 Xdi	131	07/15 -		3895
REXTON W	2.2 Xdi All-wheel Drive	131	07/15 -		3895
REXTON W	2.7 Xdi All-wheel Drive	121	07/12 -		3895
REXTON W	2.7 Xdi All-wheel Drive	137	10/12 -		3895
RODIUS	32	162	05/05 -	3976/1	
RODIUS	2.7 Xdi	120	05/05 -	3976/1	
RODIUS	2.7 Xdi	121	05/05 -	3976/1	
RODIUS	2.7 Xdi 4WD	120	05/05 -	3976/1	
RODIUS	2.7 Xdi 4WD	121	05/05 -	3976/1	
RODIUS	3.2 4WD	162	07/07 -	3976/1	
RODIUS II	2.0 Xdi	114	07/13 -	3976/1	
RODIUS II	2.0 Xdi 4WD	114	07/13 -	3976/1	
RODIUS II	2.2 Xdi	131	07/15 -	3976/1	
RODIUS II	2.2 Xdi 4WD	131	07/15 -	3976/1	
STAVIC	2.7 270 sXDi	121	02/05 -	3976/1	
STAVIC	2.7 270 sXDi 4x4	121	02/05 -	3976/1	
STAVIC	3.2 4x4	162	02/05 -	3976/1	
TIVOLI	16	94	04/15 -		4061
TIVOLI	1.6	93	04/15 -		4343
TIVOLI	1.6 XDi 160	85	04/15 -		4061
TIVOLI	1.6	94	04/15 -		4343
TIVOLI	1.6 XDi 160	85	04/15 -		4343
TIVOLI	1.6 GPL	94	04/15 -		4343
XLV Closed Off-Road Vehicle	1.6 GPL	94	05/16 -		4061
XLV Closed Off-Road Vehicle	1.6 GPL All-wheel Drive	94	05/16 -		4061
XLV Closed Off-Road Vehicle	e-XDi 160	85	04/16 -		4061
XLV Closed Off-Road Vehicle	e-XDi 160 All-wheel Drive	85	04/16 -		4061
XLV Closed Off-Road Vehicle	e-XGi 160	94	04/16 -		4061
XLV Closed Off-Road Vehicle	e-XGi 160 All-wheel Drive	94	04/16 -		4061
XLV Closed Off-Road Vehicle	1.6 GPL	94	05/16 -		4343
XLV Closed Off-Road Vehicle	e-XDi 160	85	04/16 -		4343
XLV Closed Off-Road Vehicle	e-XGi 160	93	05/16 -		4343
XLV Closed Off-Road Vehicle	e-XGi 160	94	04/16 -		4343
SUBARU					
1400	1.4 GL, GSR		01/72 -	3601	
1600	1.6 4WD		01/76 -	3601	
BRZ	20	147	06/12 -	3912	
BRZ	20	147	06/12 -		4213
BRZ	2.0 (FA20)	147	06/12 -		4258
FORESTER (SF)	2.0 AWD	90	08/97 – 09/02		3913
FORESTER (SF)	2.0 AWD	90	08/97 – 09/02	4079	
FORESTER (SF)	2.0 AWD	92	06/98 – 09/02		3913
FORESTER (SF)	2.0 AWD	92	06/98 – 09/02	4079	
FORESTER (SF)	2.0 S Turbo AWD	125	06/98 – 04/01		3913
FORESTER (SF)	2.0 S Turbo AWD	125	06/98 – 04/01	4079	
FORESTER (SF)	2.0 S Turbo AWD	130	04/01 – 09/02		3913
FORESTER (SF)	2.0 S Turbo AWD	130	04/01 – 09/02	4079	
FORESTER (SF)	2.5 AWD	123	07/97 – 05/02		3913

BEŞER®

MAKE & MODEL		KW	YEAR		
SUBARU					
FORESTER (SF)	2.5 AWD	123	07/97 – 05/02	4079	
FORESTER (SG)	2.0 AWD	92	09/02 -	3912	
FORESTER (SG)	2.0 AWD	92	09/02 -		3913
FORESTER (SG)	2.0 S Turbo AWD	130	09/02 -	3912	
FORESTER (SG)	2.0 S Turbo AWD	130	09/02 -		3913
FORESTER (SG)	2.0 X AWD	116	09/05 -	3912	
FORESTER (SG)	2.0 X AWD	116	09/05 -		3913
FORESTER (SG)	2.5 AWD	121	07/05 -	3912	
FORESTER (SG)	2.5 AWD	121	07/05 -		3913
FORESTER (SG)	2.5 AWD	155	12/03 -	3912	
FORESTER (SG)	2.5 AWD	155	12/03 -		3913
FORESTER (SG)	2.5 AWD	171	01/05 -	3912	
FORESTER (SG)	2.5 AWD	185	05/05 – 09/05	3912	
FORESTER (SG)	2.5 RX Nato AWD	115	11/02 – 08/05	3912	
FORESTER (SG)	2.5 RX Nato AWD	115	11/02 – 08/05		3913
FORESTER (SG)	2.5 XT AWD	169	09/05 -	3912	
FORESTER (SH)	2.0 AWD	110	01/08 -	3912	
FORESTER (SH)	2.0 AWD	110	01/10 -	3912	
FORESTER (SH)	2.0 AWD	110	01/08 -		4213
FORESTER (SH)	2.0 AWD	110	01/10 -		4213
FORESTER (SH)	2.0 D AWD	108	09/08 -	3912	
FORESTER (SH)	2.0 D AWD	108	09/08 -		4213
FORESTER (SH)	2.5 AWD	126	01/09 -	3912	
FORESTER (SH)	2.5 AWD	126	01/09 -		4213
FORESTER (SH)	2.5 AWD	169	06/08 -	3912	
FORESTER (SH)	2.5 AWD	169	06/08 -		4213
FORESTER (SH)	2.5 Turbo AWD	193	02/11 -		4213
FORESTER (SJ)	2.0 D AWD	108	03/13 -	3912	
FORESTER (SJ)	2.0 D AWD	108	03/13 -		4213
FORESTER (SJ)	2.0 i AWD	110	03/13 -	3912	
FORESTER (SJ)	2.0 i AWD	110	03/13 -		4213
FORESTER (SJ)	2.0 XT AWD	177	03/13 -	3912	
FORESTER (SJ)	2.0 XT AWD	177	03/13 -		4213
FORESTER (SJ)	2.5 AWD	126	07/14 -		4213
FORESTER III (SH)	2.0 D (EE20)	108	09/08 – 09/13	4081	
FORESTER III (SH)	2.0 D (EE20Z)	108	09/08 – 09/13	4081	
FORESTER IV (SJ)	2.0 D (EE20)	108	03/13 -	4081	
FORESTER IV (SJ)	2.0 D (EE20)	108	03/13 -		4258
FORESTER IV (SJ)	2.0 D (EE20Z)	108	03/13 -	4081	
FORESTER IV (SJ)	2.0 D (EE20Z)	108	03/13 -		4258
FORESTER IV (SJ)	2.0 i (FB 20)	110	03/13 -		4258
FORESTER IV (SJ)	2.0 XT (FA20)	177	03/13 -		4258
IMPREZA III (GR, GH, G3)	2.5 (EJ257)	221	01/08 -		4258
IMPREZA Coupe (GFC)	16	66	12/96 – 12/00	3426	
IMPREZA Coupe (GFC)	16	66	12/96 – 12/00	3764	
IMPREZA Coupe (GFC)	16	66	12/96 – 12/00		4080
IMPREZA Coupe (GFC)	16	70	09/98 – 09/00	3426	
IMPREZA Coupe (GFC)	16	70	09/98 – 09/00		4080
IMPREZA Coupe (GFC)	20	92	09/98 – 09/00	3426	
IMPREZA Coupe (GFC)	20	92	09/98 – 09/00	3764	
IMPREZA Coupe (GFC)	20	92	09/98 – 09/00		3913
IMPREZA Coupe (GFC)	20	92	09/98 – 09/00		4080
IMPREZA Coupe (GFC)	1.6 AWD	66	12/96 – 12/00	3426	
IMPREZA Coupe (GFC)	1.6 AWD	66	12/96 – 12/00	3764	
IMPREZA Coupe (GFC)	1.6 AWD	66	12/96 – 12/00		4080
IMPREZA Coupe (GFC)	2.0 AWD	85	12/95 – 12/00	3426	
IMPREZA Coupe (GFC)	2.0 AWD	85	12/95 – 12/00	3764	
IMPREZA Coupe (GFC)	2.0 AWD	85	12/95 – 12/00		3913
IMPREZA Coupe (GFC)	2.0 AWD	85	12/95 – 12/00		4080
IMPREZA Coupe (GFC)	2.0 AWD	206	09/98 – 09/00		3913
IMPREZA Coupe (GFC)	2.0 i	85	11/95 – 09/00	3426	
IMPREZA Coupe (GFC)	2.0 i	85	11/95 – 09/00	3764	
IMPREZA Coupe (GFC)	2.0 i	85	11/95 – 09/00		3913
IMPREZA Coupe (GFC)	2.0 i	85	11/95 – 09/00		4080
IMPREZA Coupe (GFC)	2.0 Turbo AWD	155	12/96 – 12/00	4078	
IMPREZA Coupe (GFC)	2.0 Turbo AWD	155	12/96 – 12/00	4079	
IMPREZA Coupe (GFC)	2.0 Turbo AWD	155	12/96 – 12/00		4080
IMPREZA Coupe (GFC)	2.2 AWD	96	09/98 – 09/00	3764	
IMPREZA Coupe (GFC)	2.2 AWD	97	11/95 – 08/98	3764	
IMPREZA Coupe (GFC)	2.2 i	96	09/98 – 09/00	3764	
IMPREZA Estate (GF)	16	66	01/93 – 08/98	3426	

MAKE & MODEL   		KW	YEAR		
SUBARU					
IMPREZA Estate (GF)	16	66	01/93 – 08/98	3764	
IMPREZA Estate (GF)	16	66	01/93 – 08/98		4080
IMPREZA Estate (GF)	20	85	09/96 – 08/98	3764	
IMPREZA Estate (GF)	20	85	09/96 – 08/98		4080
IMPREZA Estate (GF)	1.5 L	66	09/98 – 09/00	3764	
IMPREZA Estate (GF)	1.5 L	66	09/98 – 09/00		4080
IMPREZA Estate (GF)	1.5 L	70	11/95 – 08/98	3426	
IMPREZA Estate (GF)	1.5 L	70	11/95 – 08/98	3764	
IMPREZA Estate (GF)	1.5 L	70	11/95 – 08/98		4080
IMPREZA Estate (GF)	1.6 i	70	06/98 – 12/00	3764	
IMPREZA Estate (GF)	1.6 i	70	06/98 – 12/00		4080
IMPREZA Estate (GF)	1.6 i AWD	66	08/92 – 12/00	3426	
IMPREZA Estate (GF)	1.6 i AWD	66	08/92 – 12/00	3764	
IMPREZA Estate (GF)	1.6 i AWD	66	08/92 – 12/00		4080
IMPREZA Estate (GF)	1.6 i AWD	70	06/98 – 12/00	3764	
IMPREZA Estate (GF)	1.6 i AWD	70	06/98 – 12/00		4080
IMPREZA Estate (GF)	1.8 i	76	11/95 – 06/96	3426	
IMPREZA Estate (GF)	1.8 i	76	11/95 – 06/96		4080
IMPREZA Estate (GF)	1.8 i AWD	76	08/92 – 12/00	3426	
IMPREZA Estate (GF)	1.8 i AWD	76	08/92 – 12/00	3764	
IMPREZA Estate (GF)	1.8 i AWD	76	08/92 – 12/00		4080
IMPREZA Estate (GF)	2.0 i	92	09/98 – 09/00	3764	
IMPREZA Estate (GF)	2.0 i	92	09/98 – 09/00		4080
IMPREZA Estate (GF)	2.0 i 16V AWD	92	06/98 – 12/00	3426	
IMPREZA Estate (GF)	2.0 i 16V AWD	92	06/98 – 12/00	3764	
IMPREZA Estate (GF)	2.0 i 16V AWD	92	06/98 – 12/00		3913
IMPREZA Estate (GF)	2.0 i 16V AWD	92	06/98 – 12/00		4080
IMPREZA Estate (GF)	2.0 i AWD	85	12/95 – 12/00	3426	
IMPREZA Estate (GF)	2.0 i AWD	85	12/95 – 12/00	3764	
IMPREZA Estate (GF)	2.0 i AWD	85	12/95 – 12/00		3913
IMPREZA Estate (GF)	2.0 i AWD	85	12/95 – 12/00		4080
IMPREZA Estate (GF)	2.0 i Turbo AWD	155	03/94 – 12/00		3913
IMPREZA Estate (GF)	2.0 i Turbo AWD	155	03/94 – 12/00	4078	
IMPREZA Estate (GF)	2.0 i Turbo AWD	155	03/94 – 12/00	4079	
IMPREZA Estate (GF)	2.0 Turbo GT AWD	160	06/98 – 12/00		3913
IMPREZA Estate (GF)	2.0 Turbo GT AWD	160	06/98 – 12/00	4078	
IMPREZA Estate (GF)	2.0 Turbo GT AWD	160	06/98 – 12/00	4079	
IMPREZA Estate (GF)	2.2 GX AWD	96	09/98 – 09/00	3764	
IMPREZA Estate (GF)	2.2 GX AWD	97	11/95 – 08/98	3764	
IMPREZA Estate (GG)	15	74	06/01 – 08/05		3913
IMPREZA Estate (GG)	15	74	06/01 – 08/05	4036	
IMPREZA Estate (GG)	15	81	10/05 -		3913
IMPREZA Estate (GG)	15	81	10/05 -	4036	
IMPREZA Estate (GG)	22	94	06/01 – 08/05	3912	
IMPREZA Estate (GG)	22	94	06/01 – 08/05		3913
IMPREZA Estate (GG)	1.5 AWD	77	05/06 -	3912	
IMPREZA Estate (GG)	1.5 AWD	77	05/06 -		3913
IMPREZA Estate (GG)	1.5 AWD	77	05/06 -	4036	
IMPREZA Estate (GG)	1.5 AWD	81	10/05 -		3913
IMPREZA Estate (GG)	1.5 AWD	81	10/05 -	4036	
IMPREZA Estate (GG)	1.6 AWD	70	12/00 -	3764	
IMPREZA Estate (GG)	1.6 AWD	70	12/00 -	3912	
IMPREZA Estate (GG)	1.6 AWD	70	12/00 -		3913
IMPREZA Estate (GG)	1.6 AWD	70	12/00 -	4079	
IMPREZA Estate (GG)	2.0 AWD	92	12/00 -	3764	
IMPREZA Estate (GG)	2.0 AWD	92	12/00 -	3912	
IMPREZA Estate (GG)	2.0 AWD	92	12/00 -		3913
IMPREZA Estate (GG)	2.0 AWD	92	12/00 -	4079	
IMPREZA Estate (GG)	2.0 i R AWD	118	09/05 – 06/07	3912	
IMPREZA Hatchback	2.0 i AWD	92	12/02 – 12/07		3913
IMPREZA Hatchback	2.0 i AWD	92	12/02 – 12/07	4079	
IMPREZA Hatchback	2.0 i AWD	118	10/05 – 12/07		3913
IMPREZA Hatchback	2.0 i AWD	118	10/05 – 12/07	4079	
IMPREZA Hatchback	2.0 i WRX AWD	168	12/02 – 09/05		3913
IMPREZA Hatchback	2.0 i WRX AWD	168	12/02 – 09/05	4079	
IMPREZA Hatchback	2.0 WRX STi AWD	195	12/02 – 09/05		3913
IMPREZA Hatchback	2.0 WRX STi AWD	195	12/02 – 09/05	4079	
IMPREZA Hatchback	2.5 AWD	112	12/02 – 09/05		3913
IMPREZA Hatchback	2.5 AWD	112	12/02 – 09/05	4079	
IMPREZA Hatchback (GP)	1.6 i	84	06/12 -	3912	
IMPREZA Hatchback (GP)	1.6 i	84	06/12 -	4036	

MAKE & MODEL		KW	YEAR		
SUBARU					
IMPREZA Hatchback (GP)	1.6 i	84	06/12 -		4213
IMPREZA Hatchback (GP)	1.6 i AWD	84	06/12 -	3912	
IMPREZA Hatchback (GP)	1.6 i AWD	84	06/12 -	4036	
IMPREZA Hatchback (GP)	1.6 i AWD	84	06/12 -		4213
IMPREZA Hatchback (GP)	2.0 AWD	110	01/12 -		4213
IMPREZA Hatchback (GP)	2.0 Hybrid AWD	110	04/16 -		4213
IMPREZA Hatchback (GR, GH, G3)	1.5 AWD	79	02/08 -	3912	
IMPREZA Hatchback (GR, GH, G3)	1.5 AWD	79	02/08 -		4213
IMPREZA Hatchback (GR, GH, G3)	1.5 F	79	02/08 -	3912	
IMPREZA Hatchback (GR, GH, G3)	1.5 F	79	02/08 -		4213
IMPREZA Hatchback (GR, GH, G3)	2.0 D AWD	80	01/11 -	3912	
IMPREZA Hatchback (GR, GH, G3)	2.0 D AWD	80	01/11 -		4213
IMPREZA Hatchback (GR, GH, G3)	2.0 D AWD	110	01/09 -	3912	
IMPREZA Hatchback (GR, GH, G3)	2.0 D AWD	110	01/09 -		4213
IMPREZA Hatchback (GR, GH, G3)	2.0 R AWD	110	01/08 -	3912	
IMPREZA Hatchback (GR, GH, G3)	2.0 R AWD	110	01/08 -		4213
IMPREZA Hatchback (GR, GH, G3)	2.5 AWD	169	01/08 -	3912	
IMPREZA Hatchback (GR, GH, G3)	2.5 AWD	169	01/08 -		4213
IMPREZA Hatchback (GR, GH, G3)	2.5 WRX S AWD	188	02/09 – 12/10	3912	
IMPREZA Hatchback (GR, GH, G3)	2.5 WRX S AWD	188	02/09 – 12/10		4213
IMPREZA Hatchback (GR, GH, G3)	2.5 WRX SE AWD	195	09/08 -	3912	
IMPREZA Hatchback (GR, GH, G3)	2.5 WRX SE AWD	195	09/08 -		4213
IMPREZA IV / WRX (GP)	1.6 i (FB16)	84	06/12 -		4258
IMPREZA IV / WRX (GP)	1.6 i (FB16)	84	06/12 -		4258
IMPREZA IV / WRX (GP)	2.5 WRX	171	09/12 -	4081	
IMPREZA IV / WRX (GP)	2.5 WRX	171	09/12 -		4258
IMPREZA IV / WRX (GP)	2.5 WRX SE	195	06/12 -		4258
IMPREZA IV / WRX (GP)	2.5 WRX STI (EJ257)	224	06/12 -	4081	
IMPREZA IV / WRX (GP)	2.5 WRX STI (EJ257)	224	06/12 -		4258
IMPREZA Saloon (GC)	15	70	11/94 – 08/98	3426	
IMPREZA Saloon (GC)	15	70	11/94 – 08/98	3764	
IMPREZA Saloon (GC)	15	70	11/94 – 08/98		4080
IMPREZA Saloon (GC)	1.6 i	66	08/92 – 12/00	3426	
IMPREZA Saloon (GC)	1.6 i	66	08/92 – 12/00	3764	
IMPREZA Saloon (GC)	1.6 i	66	08/92 – 12/00		4080
IMPREZA Saloon (GC)	1.6 i	70	06/98 – 12/00	3426	
IMPREZA Saloon (GC)	1.6 i	70	06/98 – 12/00	3764	
IMPREZA Saloon (GC)	1.6 i	70	06/98 – 12/00		4080
IMPREZA Saloon (GC)	1.6 i AWD	66	08/92 – 12/00	3426	
IMPREZA Saloon (GC)	1.6 i AWD	66	08/92 – 12/00	3764	
IMPREZA Saloon (GC)	1.6 i AWD	66	08/92 – 12/00		4080
IMPREZA Saloon (GC)	1.6 i AWD	70	06/98 – 12/00	3426	
IMPREZA Saloon (GC)	1.6 i AWD	70	06/98 – 12/00	3764	
IMPREZA Saloon (GC)	1.6 i AWD	70	06/98 – 12/00		4080
IMPREZA Saloon (GC)	1.8 i	76	11/95 – 06/96	3426	
IMPREZA Saloon (GC)	1.8 i	76	11/95 – 06/96		4080
IMPREZA Saloon (GC)	1.8 i AWD	76	08/92 – 12/00	3426	
IMPREZA Saloon (GC)	1.8 i AWD	76	08/92 – 12/00	3764	
IMPREZA Saloon (GC)	1.8 i AWD	76	08/92 – 12/00		4080
IMPREZA Saloon (GC)	2.0 AWD	206	09/98 – 09/00		3913
IMPREZA Saloon (GC)	2.0 i	85	07/96 – 08/98	3426	
IMPREZA Saloon (GC)	2.0 i	85	07/96 – 08/98		4080
IMPREZA Saloon (GC)	2.0 i	92	09/98 – 09/00	3426	
IMPREZA Saloon (GC)	2.0 i	92	09/98 – 09/00		4080
IMPREZA Saloon (GC)	2.0 i AWD	85	10/95 – 12/00	3426	
IMPREZA Saloon (GC)	2.0 i AWD	85	10/95 – 12/00	3764	
IMPREZA Saloon (GC)	2.0 i AWD	85	10/95 – 12/00		3913
IMPREZA Saloon (GC)	2.0 i AWD	85	10/95 – 12/00		4080
IMPREZA Saloon (GC)	2.0 i AWD	92	06/98 – 12/00	3426	
IMPREZA Saloon (GC)	2.0 i AWD	92	06/98 – 12/00	3764	
IMPREZA Saloon (GC)	2.0 i AWD	92	06/98 – 12/00		3913
IMPREZA Saloon (GC)	2.0 i AWD	92	06/98 – 12/00		4080
IMPREZA Saloon (GC)	2.0 Turbo GT AWD	155	03/94 – 12/00		3913
IMPREZA Saloon (GC)	2.0 Turbo GT AWD	155	03/94 – 12/00	4079	
IMPREZA Saloon (GC)	2.0 Turbo GT AWD	155	03/94 – 12/00		4080
IMPREZA Saloon (GC)	2.0 Turbo GT AWD	160	06/98 – 12/00		3913
IMPREZA Saloon (GC)	2.0 Turbo GT AWD	160	06/98 – 12/00		4080
IMPREZA Saloon (GC)	2.2 GX AWD	96	09/98 – 09/00	3764	
IMPREZA Saloon (GC)	2.2 GX AWD	97	11/95 – 08/98	3764	
IMPREZA Saloon (GD)	15	74	06/01 – 09/05	3912	
IMPREZA Saloon (GD)	15	74	06/01 – 09/05		3913

MAKE & MODEL		KW	YEAR		
SUBARU					
IMPREZA Saloon (GD)	15	74	06/01 – 09/05	4036	
IMPREZA Saloon (GD)	15	81	10/05 -		3913
IMPREZA Saloon (GD)	15	81	10/05 -	4036	
IMPREZA Saloon (GD)	22	94	06/01 – 08/05	3912	
IMPREZA Saloon (GD)	22	94	06/01 – 08/05		3913
IMPREZA Saloon (GD)	1.5 AWD	77	05/06 -		3913
IMPREZA Saloon (GD)	1.5 AWD	77	05/06 -	4036	
IMPREZA Saloon (GD)	1.5 AWD	81	10/05 -		3913
IMPREZA Saloon (GD)	1.5 AWD	81	10/05 -	4036	
IMPREZA Saloon (GD)	1.6 AWD	70	12/00 -	3912	
IMPREZA Saloon (GD)	1.6 AWD	70	12/00 -		3913
IMPREZA Saloon (GD)	1.6 AWD	70	12/00 -	4036	
IMPREZA Saloon (GD)	2.0 i AWD	92	12/00 -		3913
IMPREZA Saloon (GD)	2.0 i AWD	92	12/00 -	4079	
IMPREZA Saloon (GD)	2.0 i AWD	150	12/01 – 11/02		3913
IMPREZA Saloon (GD)	2.0 i AWD	150	12/01 – 11/02	4079	
IMPREZA Saloon (GD)	2.0 i R AWD	118	09/05 -	3912	
IMPREZA Saloon (GD)	2.0 i WRX AWD	168	12/02 – 09/05		3913
IMPREZA Saloon (GD)	2.0 i WRX AWD	168	12/02 – 09/05	4079	
IMPREZA Saloon (GD)	2.5 AWD	130	03/01 – 09/05	3912	
IMPREZA Saloon (GD)	2.5 AWD	130	03/01 – 09/05		3913
IMPREZA Saloon (GD)	2.5 AWD	130	03/01 – 09/05	4079	
IMPREZA Saloon (GD)	2.5 i AWD	112	12/02 – 09/05	3912	
IMPREZA Saloon (GD)	2.5 i AWD	112	12/02 – 09/05		3913
IMPREZA Saloon (GR)	15	79	02/08 -	3912	
IMPREZA Saloon (GR)	15	79	02/08 -		4213
IMPREZA Saloon (GR)	1.5 AWD	79	02/08 -	3912	
IMPREZA Saloon (GR)	1.5 AWD	79	02/08 -		4213
IMPREZA Saloon (GR)	2.0 i AWD	110	01/11 -	3912	
IMPREZA Saloon (GR)	2.0 i AWD	110	01/11 -		4213
JUSTY I (KAD)	1000	37	05/87 – 10/95	3394	
JUSTY I (KAD)	1000	40	11/84 – 06/89	3394	
JUSTY I (KAD)	1200	49	05/87 – 10/95	3394	
JUSTY I (KAD)	1000 4WD (KAD-A)	37	05/87 – 11/94	3394	
JUSTY I (KAD)	1000 4WD (KAD-A)	40	11/84 – 12/90	3394	
JUSTY I (KAD)	1200 4WD	50	10/86 – 12/90	3394	
JUSTY I (KAD)	1200 4WD	55	10/90 – 12/94	3394	
JUSTY I (KAD)	1200 4WD (KAD-A)	49	05/87 – 05/91	3394	
JUSTY IV	10	51	01/07 -	3928	
JUSTY IV	10	51	01/07 -	4122	
JUSTY IV	1.3 AWD	67	03/08 -	3928	
LEGACY IV / LIBERTY (BL, BP)	2.0 (EJ20)	101	09/03 – 10/05	4081	
LEGACY IV / LIBERTY (BL, BP)	2.0 (EJ20)	121	06/05 – 04/09	4081	
LEGACY IV / LIBERTY (BL, BP)	2.0 (EJ20Y)	132	06/05 – 04/09	4081	
LEGACY IV / LIBERTY (BL, BP)	2.0 (EJ20Y)	140	06/05 – 04/09	4081	
LEGACY IV / LIBERTY (BL, BP)	2.0 D (EE20)	110	02/08 – 12/09	4081	
LEGACY IV / LIBERTY (BL, BP)	2.0 D (EE20Z)	110	02/08 – 12/09	4081	
LEGACY IV / LIBERTY (BL, BP)	2.0 R (EJ204)	110	09/07 – 12/09	4081	
LEGACY IV / LIBERTY (BL, BP)	2.0 Turbo	180	09/03 – 11/06	4081	
LEGACY IV / LIBERTY (BL, BP)	2.5 (EJ25)	121	09/03 – 04/09	4081	
LEGACY IV / LIBERTY (BL, BP)	3.0 R (EZ30)	180	09/03 – 06/09	4081	
LEGACY IV / LIBERTY (BL, BP, B13_)	2.0	121	09/03 -	4081	
LEGACY IV / LIBERTY (BL, BP, B13_)	2.0 (EJ20)	101	09/03 – 10/05	4081	
LEGACY IV / LIBERTY (BL, BP, B13_)	2.0 (EJ20)	121	06/05 – 04/09	4081	
LEGACY IV / LIBERTY (BL, BP, B13_)	2.0 (EJ20Y)	132	06/05 – 04/09	4081	
LEGACY IV / LIBERTY (BL, BP, B13_)	2.0 (EJ20Y)	140	06/05 – 04/09	4081	
LEGACY IV / LIBERTY (BL, BP, B13_)	2.0 D (EE20)	110	02/08 – 12/09	4081	
LEGACY IV / LIBERTY (BL, BP, B13_)	2.0 D (EE20Z)	110	02/08 – 12/09	4081	
LEGACY IV / LIBERTY (BL, BP, B13_)	2.0 R (EJ204)	110	09/07 – 12/09	4081	
LEGACY IV / LIBERTY (BL, BP, B13_)	2.0 Turbo	180	09/03 – 11/06	4081	
LEGACY IV / LIBERTY (BL, BP, B13_)	2.5 (EJ25)	121	09/03 – 04/09	4081	
LEGACY IV / LIBERTY (BL, BP, B13_)	3.0 R (EZ30)	180	09/03 – 04/09	4081	
LEGACY V / LIBERTY (BM, BR)	3.6 (EZ36D)	191	09/09 – 12/14		4258
LEGACY I (BC)	16	70	05/89 – 12/93	3426	
LEGACY I (BC)	16	70	05/89 – 12/93		4080
LEGACY I (BC)	20	85	08/91 – 12/93	3426	
LEGACY I (BC)	20	85	08/91 – 12/93		4080
LEGACY I (BC)	1800	76	01/89 – 12/93	3426	
LEGACY I (BC)	1800	76	01/89 – 12/93		4080
LEGACY I (BC)	1800 4WD	76	01/89 – 09/91	3426	
LEGACY I (BC)	1800 4WD	76	01/89 – 09/91		4080

MAKE & MODEL		KW	YEAR		
SUBARU					
LEGACY I (BC)	2.0 GL	103	08/91 – 12/93	3426	
LEGACY I (BC)	2.0 GL	103	08/91 – 12/93		4080
LEGACY I (BC)	2000 4WD	85	08/91 – 07/94	3426	
LEGACY I (BC)	2000 4WD	85	08/91 – 07/94		4080
LEGACY I (BC)	2000 Turbo 4WD	147	05/92 – 07/94	4078	
LEGACY I (BC)	2000 Turbo 4WD	147	05/92 – 07/94		4080
LEGACY I (BC)	2200 4WD	100	01/89 – 07/94	3426	
LEGACY I (BC)	2200 4WD	100	01/89 – 07/94		4080
LEGACY I Estate (BC, BJF)	1800	76	01/89 – 07/94	3426	
LEGACY I Estate (BC, BJF)	1800	76	01/89 – 07/94		4080
LEGACY I Estate (BC, BJF)	2000	85	09/91 – 12/93	3426	
LEGACY I Estate (BC, BJF)	2000	85	09/91 – 12/93		4080
LEGACY I Estate (BC, BJF)	1.6 GL	70	05/89 – 12/93	3426	
LEGACY I Estate (BC, BJF)	1.6 GL	70	05/89 – 12/93		4080
LEGACY I Estate (BC, BJF)	1800 4WD	76	01/89 – 07/94	3426	
LEGACY I Estate (BC, BJF)	1800 4WD	76	01/89 – 07/94		4080
LEGACY I Estate (BC, BJF)	2000 4WD	85	09/91 – 07/94	3426	
LEGACY I Estate (BC, BJF)	2000 4WD	85	09/91 – 07/94		4080
LEGACY I Estate (BC, BJF)	2000 Turbo Super 4WD	147	05/92 – 07/94	4078	
LEGACY I Estate (BC, BJF)	2000 Turbo Super 4WD	147	05/92 – 07/94		4080
LEGACY I Estate (BC, BJF)	2200 Super 4WD	100	01/89 – 07/94	3426	
LEGACY I Estate (BC, BJF)	2200 Super 4WD	100	01/89 – 07/94		4080
LEGACY II (BD)	22	94	07/94 – 11/98		4080
LEGACY II (BD)	1.8 4WD	76	05/96 – 09/98		4080
LEGACY II (BD)	2.0 i	85	09/94 – 03/99		4080
LEGACY II (BD)	2.0 i 4WD	85	09/94 – 03/99		4080
LEGACY II (BD)	2.2 i 4WD	94	09/94 – 03/99		4080
LEGACY II (BD)	2.2 i 4WD	96	06/96 – 03/99		4080
LEGACY II (BD)	2.5 i 4WD	110	06/96 – 03/99	4079	
LEGACY II (BD)	2.5 i 4WD	110	06/96 – 03/99		4080
LEGACY II (BD, BG)	22	94	07/94 – 11/98	3426	
LEGACY II (BD, BG)	22	94	07/94 – 11/98	3764	
LEGACY II (BD, BG)	1.8 4WD	76	05/96 – 09/98	3426	
LEGACY II (BD, BG)	1.8 4WD	76	05/96 – 09/98	3764	
LEGACY II (BD, BG)	2.0 i	85	09/94 – 03/99	3426	
LEGACY II (BD, BG)	2.0 i	85	09/94 – 03/99	3764	
LEGACY II (BD, BG)	2.0 i 4WD	85	09/94 – 03/99	3426	
LEGACY II (BD, BG)	2.0 i 4WD	85	09/94 – 03/99	3764	
LEGACY II (BD, BG)	2.2 i 4WD	94	09/94 – 03/99	3426	
LEGACY II (BD, BG)	2.2 i 4WD	94	09/94 – 03/99	3764	
LEGACY II (BD, BG)	2.2 i 4WD	96	06/96 – 03/99	3426	
LEGACY II (BD, BG)	2.2 i 4WD	96	06/96 – 03/99	3764	
LEGACY II Estate (BD, BG)	2.0 i	85	09/94 – 11/98	3426	
LEGACY II Estate (BD, BG)	2.0 i	85	09/94 – 11/98	3764	
LEGACY II Estate (BD, BG)	2.0 i 4WD	85	09/94 – 11/98	3426	
LEGACY II Estate (BD, BG)	2.0 i 4WD	85	09/94 – 11/98	3764	
LEGACY II Estate (BD, BG)	2.2 i 4WD	94	02/94 – 12/98	3426	
LEGACY II Estate (BD, BG)	2.2 i 4WD	94	02/94 – 12/98	3764	
LEGACY II Estate (BD, BG)	2.2 i 4WD	96	06/96 – 11/98	3764	
LEGACY II Estate (BG)	2.0 i	85	09/94 – 11/98		4080
LEGACY II Estate (BG)	2.0 i 4WD	85	09/94 – 11/98		4080
LEGACY II Estate (BG)	2.2 i 4WD	94	02/94 – 12/98		4080
LEGACY II Estate (BG)	2.2 i 4WD	96	06/96 – 11/98		4080
LEGACY II Estate (BG)	2.5 i 4WD	110	06/96 – 11/98	4079	
LEGACY II Estate (BG)	2.5 i 4WD	110	06/96 – 11/98		4080
LEGACY III (BE)	2.0 AWD	92	04/99 – 08/03		3913
LEGACY III (BE)	2.0 AWD	92	04/99 – 08/03	4079	
LEGACY III (BE)	2.0 AWD	92	04/99 – 08/03		4080
LEGACY III (BE)	2.0 AWD	206	06/02 – 08/03		3913
LEGACY III (BE)	2.0 AWD	206	06/02 – 08/03	4079	
LEGACY III (BE)	2.0 RSK AWD	191	08/00 – 08/03		3913
LEGACY III (BE)	2.0 RSK AWD	191	08/00 – 08/03	4079	
LEGACY III (BE)	2.5 AWD	115	10/98 – 08/03		3913
LEGACY III (BE)	2.5 AWD	115	10/98 – 08/03	4079	
LEGACY III (BE)	2.5 AWD	115	10/98 – 08/03		4080
LEGACY III (BE)	3.0 H6 AWD	154	08/00 – 08/03		3913
LEGACY III (BE)	3.0 H6 AWD	154	08/00 – 08/03	4079	
LEGACY III (BE, BH)	2.0 AWD	92	04/99 – 08/03	3764	
LEGACY III Estate (BE, BH)	2.0 AWD	92	12/98 – 08/03	3764	
LEGACY III Estate (BH)	2.0 AWD	92	12/98 – 08/03		3913
LEGACY III Estate (BH)	2.0 AWD	92	12/98 – 08/03	4079	

MAKE & MODEL   		KW	YEAR		
SUBARU					
LEGACY III Estate (BH)	2.0 AWD	92	12/98 – 08/03		4080
LEGACY III Estate (BH)	2.0 AWD	206	06/02 – 08/03		3913
LEGACY III Estate (BH)	2.0 AWD	206	06/02 – 08/03	4079	
LEGACY III Estate (BH)	2.0 RSK AWD	191	08/00 – 08/03		3913
LEGACY III Estate (BH)	2.0 RSK AWD	191	08/00 – 08/03	4079	
LEGACY III Estate (BH)	2.5 AWD	115	12/98 – 08/03		3913
LEGACY III Estate (BH)	2.5 AWD	115	12/98 – 08/03	4079	
LEGACY III Estate (BH)	2.5 AWD	115	12/98 – 08/03		4080
LEGACY III Estate (BH)	3.0 H6 AWD	154	08/00 – 08/03		3913
LEGACY III Estate (BH)	3.0 H6 AWD	154	08/00 – 08/03	4079	
LEGACY IV (BL)	2.0 AWD	101	09/03 -	3912	
LEGACY IV (BL)	2.0 AWD	101	09/03 -		4213
LEGACY IV (BL)	2.0 AWD	121	06/05 -	3912	
LEGACY IV (BL)	2.0 AWD	121	06/05 -		4213
LEGACY IV (BL)	2.0 AWD	132	06/05 -		3913
LEGACY IV (BL)	2.0 AWD	140	06/05 -		3913
LEGACY IV (BL)	2.0 D AWD	110	02/08 -	3912	
LEGACY IV (BL)	2.0 D AWD	110	02/08 -		4213
LEGACY IV (BL)	2.0 R AWD	110	09/07 -	3912	
LEGACY IV (BL)	2.0 R AWD	110	09/07 -		4213
LEGACY IV (BL)	2.5 AWD	121	09/03 -	3912	
LEGACY IV (BL)	2.5 AWD	121	09/03 -		4213
LEGACY IV (BL)	2.5 i AWD	127	09/07 -	3912	
LEGACY IV (BL)	2.5 i AWD	127	09/07 -		4213
LEGACY IV (BL)	3.0 R AWD	180	09/03 -		3913
LEGACY IV Estate (BP)	2.0 AWD	101	09/03 -	3912	
LEGACY IV Estate (BP)	2.0 AWD	101	09/03 -		4213
LEGACY IV Estate (BP)	2.0 AWD	121	06/05 -		3913
LEGACY IV Estate (BP)	2.0 AWD	132	06/05 -		3913
LEGACY IV Estate (BP)	2.0 AWD	140	06/05 -		3913
LEGACY IV Estate (BP)	2.0 D AWD	110	02/08 -	3912	
LEGACY IV Estate (BP)	2.0 D AWD	110	02/08 -		4213
LEGACY IV Estate (BP)	2.0 R AWD	110	09/07 -	3912	
LEGACY IV Estate (BP)	2.0 R AWD	110	09/07 -		4213
LEGACY IV Estate (BP)	2.5 AWD	121	09/03 -	3912	
LEGACY IV Estate (BP)	2.5 AWD	121	09/03 -		4213
LEGACY IV Estate (BP)	2.5 i AWD	127	01/08 -	3912	
LEGACY IV Estate (BP)	2.5 i AWD	127	01/08 -		4213
LEGACY IV Estate (BP)	3.0 R AWD	180	09/03 -		3913
LEGACY OUTBACK (BG)	25	110	01/96 – 12/99	4078	
LEGACY OUTBACK (BG)	25	110	01/96 – 12/99	4079	
LEGACY OUTBACK (BG)	25	110	01/96 – 12/99		4080
LEGACY V (BM)	2.0 D AWD	110	09/09 -	3912	
LEGACY V (BM)	2.0 D AWD	110	09/09 -		4213
LEGACY V (BM)	2.0 i AWD	110	09/09 -	3912	
LEGACY V (BM)	2.0 i AWD	110	09/09 -		4213
LEGACY V (BM)	2.5 i AWD	123	09/09 -	3912	
LEGACY V (BM)	2.5 i AWD	123	09/09 -		4213
LEGACY V / LIBERTY (BM, BR)	2.5 GT (EJ255)	195	07/10 – 12/14	4081	
LEGACY V / LIBERTY (BM, BR)	2.5 GT (EJ255)	195	07/10 – 12/14	4081	
LEGACY V / LIBERTY (BM, BR)	2.5 i	125	01/12 -	4081	
LEGACY V / LIBERTY (BM, BR)	2.5 i (EJ253)	123	09/09 – 12/14	4081	
LEGACY V / LIBERTY (BM, BR)	2.5 i (EJ253)	123	09/09 – 12/14	4081	
LEGACY V / LIBERTY (BM, BR)	2.5 i (FB25)	127	07/12 – 12/14	4081	
LEGACY V / LIBERTY (BM, BR)	2.5 i (FB25)	127	07/12 – 12/14	4081	
LEGACY V / LIBERTY (BM, BR)	2.5 i (FB25A)	127	07/12 – 12/14	4081	
LEGACY V / LIBERTY (BM, BR)	2.5 i (FB25B)	127	07/12 – 12/14	4081	
LEGACY V / LIBERTY (BM, BR)	3.6 (EZ36D)	191	09/09 – 12/14	4081	
LEGACY V Estate (BR)	2.0 D AWD	108	01/13 -	3912	
LEGACY V Estate (BR)	2.0 D AWD	108	01/13 -		4213
LEGACY V Estate (BR)	2.0 D AWD	110	09/09 -	3912	
LEGACY V Estate (BR)	2.0 D AWD	110	09/09 -		4213
LEGACY V Estate (BR)	2.0 i AWD	110	09/09 -	3912	
LEGACY V Estate (BR)	2.0 i AWD	110	09/09 -		4213
LEGACY V Estate (BR)	2.5 i AWD	123	09/09 -	3912	
LEGACY V Estate (BR)	2.5 i AWD	123	09/09 -		4213
LEGACY V Estate (BR)	2.5 i AWD	127	07/12 -		4213
LEGACY VI (BN, BS)	2.5 (FB25)	129	01/15 -	4081	
LEONE I	1.4 1400 DL, GL	48	01/72 -	3601	
LEONE I	1.4 1400 GFT	48	01/72 -	3601	
LEONE II	1.6 1600 (EA71)	63	03/79 – 10/84	3601	

BESER

MAKE & MODEL		KW	YEAR		
SUBARU					
LEONE III	1.3 1300 (EA65)	48	11/84 – 09/91	3395	
LEONE III	1.6 (EA71)	52	06/85 – 07/90	3395	
LEONE III	1.6 1600 (EA71)	55	11/84 – 09/91	3395	
LEONE III	1.8 (EA82)	66	06/85 – 07/87	3395	
LEONE III	1.8 (EA82)	77	06/85 – 07/86	3395	
LEONE III	1.8 1800 (EA82)	66	11/84 – 12/90	3395	
LEONE III	1.8 1800 (EA82)	72	01/88 – 12/90	3395	
LEONE III	1.8 1800 (EA82)	88	01/88 – 12/90	3395	
LEONE III	1.8 1800 Turbo (EA82)	96	03/89 – 12/90	3395	
LEONE III	1.8 1800 Turbo (EA82)	100	11/84 – 12/90	3395	
LEONE III	1.8 GL (EA81)	59	08/86 – 07/89	3395	
LEONE III	1.8 Turbo (EA82)	100	06/85 – 07/86	3395	
LEONE III	1800 (EA82)	66	01/85 – 12/89	3395	
LEONE III	1800 Cat (EA82)	70	07/86 – 09/91	3395	
LEVORG	1.6 (FB16)	125	09/15 -	4081	
LEVORG	2.0 (FA20)	221	03/15 -	4081	
LIBERO Bus (E10, E12)	1.0 4WD (E10, KJ6)	37	01/83 – 12/87	3394	
LIBERO Bus (E10, E12)	1.2 4WD (E12, KJ8)	38	08/86 – 02/00	3394	
LIBERO Bus (E10, E12)	1.2 i 4WD (E12, FA)	40	08/91 – 02/00	3394	
MV / BRAT / BRUMBY (AS_)	1.6 (EA71)	52	06/78 – 04/81	3601	
OUTBACK (BE, BH)	2.5 AWD	115	10/00 – 08/03		3913
OUTBACK (BE, BH)	2.5 AWD	115	10/00 – 08/03	4079	
OUTBACK (BE, BH)	3.0 H6 AWD	154	10/00 – 08/03		3913
OUTBACK (BE, BH)	3.0 H6 AWD	154	10/00 – 08/03	4079	
OUTBACK (BL, BP)	2.0 AWD	101	09/03 – 10/05	3912	
OUTBACK (BL, BP)	2.0 AWD	101	09/03 – 10/05		3913
OUTBACK (BL, BP)	2.0 AWD	101	09/03 – 10/05		4213
OUTBACK (BL, BP)	2.0 D (EE20Z)	110	03/15 -	4081	
OUTBACK (BL, BP)	2.0 D AWD	110	09/08 – 09/09	3912	
OUTBACK (BL, BP)	2.0 D AWD	110	09/08 – 09/09		3913
OUTBACK (BL, BP)	2.0 D AWD	110	09/08 – 09/09		4213
OUTBACK (BL, BP)	2.0 DIT	177	10/14 -	4081	
OUTBACK (BL, BP)	2.5 (FB25)	129	03/15 -	4081	
OUTBACK (BL, BP)	2.5 (FB25A)	127	10/14 -	4081	
OUTBACK (BL, BP)	2.5 AWD	121	11/03 – 09/09	3912	
OUTBACK (BL, BP)	2.5 AWD	121	11/03 – 09/09		3913
OUTBACK (BL, BP)	2.5 AWD	121	11/03 – 09/09	4079	
OUTBACK (BL, BP)	2.5 AWD	121	11/03 – 09/09		4213
OUTBACK (BL, BP)	2.5 AWD	127	09/08 – 09/09	3912	
OUTBACK (BL, BP)	2.5 AWD	127	09/08 – 09/09		3913
OUTBACK (BL, BP)	2.5 AWD	127	09/08 – 09/09		4213
OUTBACK (BL, BP)	3.0 (EZ30)	180	11/03 – 09/09	4081	
OUTBACK (BL, BP)	3.0 AWD	180	11/03 – 09/09	3912	
OUTBACK (BL, BP)	3.0 AWD	180	11/03 – 09/09		3913
OUTBACK (BL, BP)	3.0 AWD	180	11/03 – 09/09		4213
OUTBACK (BL, BP)	3.6	182	06/11 -	4081	
OUTBACK (BL, BP)	3.6	206	01/10 -	4081	
OUTBACK (BL, BP)	3.6 (EZ36D)	191	10/14 -	4081	
OUTBACK (BL, BP)	3.6 R (EZ36D)	191	09/09 -	4081	
OUTBACK (BL, BP)	3.6 R (EZ36D)	188	01/12 -	4081	
OUTBACK (BM, BR)	3.6	182	06/11 -		4258
OUTBACK (BM, BR)	3.6	206	01/10 -		4258
OUTBACK (BM, BR)	3.6 R (EZ36D)	188	01/12 -		4258
OUTBACK (BM, BR)	3.6 R (EZ36D)	191	09/09 -		4258
OUTBACK (BR)	2.0 D AWD	108	01/13 -	3912	
OUTBACK (BR)	2.0 D AWD	108	01/13 -		4213
OUTBACK (BR)	2.0 D AWD	110	09/09 -	3912	
OUTBACK (BR)	2.0 D AWD	110	09/09 -		4213
OUTBACK (BR)	2.5 i AWD	123	09/09 -	3912	
OUTBACK (BR)	2.5 i AWD	123	09/09 -		4213
OUTBACK (BR)	2.5 i AWD	127	01/13 -	3912	
OUTBACK (BR)	2.5 i AWD	127	01/13 -		4213
OUTBACK (BS)	2.5 AWD	127	10/14 -		4213
OUTBACK (BS)	3.6 AWD	191	10/14 -		4213
REX II	700	27	08/82 – 06/89	3394	
SVX (CX)	3.3 AWD	184	02/94 – 12/97	3692	
SVX (CX)	3.3 AWD	184	02/94 – 12/97	3760	
SVX (CX)	3.3 AWD	184	02/94 – 12/97		4080
SVX (CX)	3.3 i 24V 4WD (CXW)	162	09/94 – 12/97	3692	
SVX (CX)	3.3 i 24V 4WD (CXW)	162	09/94 – 12/97	3760	
SVX (CX)	3.3 i 24V 4WD (CXW)	162	09/94 – 12/97		4080

MAKE & MODEL		KW	YEAR		
SUBARU					
SVX (CX)	3.3 i 24V 4WD (CXW)	169	09/92 – 09/94	3692	
SVX (CX)	3.3 i 24V 4WD (CXW)	169	09/92 – 09/94	3760	
SVX (CX)	3.3 i 24V 4WD (CXW)	169	09/92 – 09/94		4080
TREZIA	1.3 (NSP120X)	73	03/11 -	3953	
TREZIA	1.3 (NSP120X)	73	03/11 -		3954
TREZIA	1.4 D	66	03/11 -	3953	
TREZIA	1.4 D	66	03/11 -		3954
TRIBECA (B9)	3.0 (EZ30)	180	10/06 -		4258
TRIBECA (B9)	3.0 (EZ30)	184	01/05 -		4258
TRIBECA (B9)	3.0 (EZ30)	180	10/06 -	4081	
TRIBECA (B9)	3.0 (EZ30)	184	01/05 -	4081	
TRIBECA (B9)	3.6 (EZ36D)	188	09/09 -		4258
TRIBECA (B9)	3.6 (EZ36D)	190	09/07 -	4081	
TRIBECA (B9)	3.6 (EZ36D)	190	09/07 -		4258
WRX / IMPREZA IV (GJ)	STi (EJ257)	221	06/14 -		4258
WRX / IMPREZA IV (GJ)	STi (EJ257)	221	06/14 -	4081	
XV	1.6 i AWD	84	03/12 -		4213
XV	2.0 D AWD	80	03/12 -		4213
XV	2.0 D AWD	108	03/12 -		4213
XV	2.0 i AWD	110	03/12 -		4213
SUZUKI					
ALTO	0.8 (SB308/CA)	29	01/86 – 12/88	3509	
ALTO (FF)	1.1 (RF410)	46	09/04 – 12/08	3928	
ALTO (HA12, HA23)	13	63	10/98 – 09/00	3602	
ALTO (HA12, HA23)	16	71	10/98 – 09/00	3602	
ALTO (SS80)	08	29	10/83 – 08/84	3509	
ALTO (SS80)	0.8 (SS80F, SS80G)	29	06/82 – 08/84	3509	
APV ARENA	1.6		06-08	4199	
BALENO (EG)	13	52	09/96 – 05/02	3602	
BALENO (EG)	15	71	03/95 – 12/09	3602	
BALENO (EG)	1.3 i 16V	63	07/95 – 05/02	3602	
BALENO (EG)	1.6 i 16V	72	07/95 – 05/02	3602	
BALENO (EG)	1.6 i 16V 4x4	72	07/95 – 05/02	3602	
BALENO (EG)	1.8 GTX	89	03/96 – 05/02	3602	
BALENO (EG)	1.8 i 4x4	89	03/96 – 05/02	3602	
BALENO Estate (EG)	1.3 16V	63	03/97 – 05/02	3602	
BALENO Estate (EG)	1.6 i 16V	72	08/96 – 05/02	3602	
BALENO Estate (EG)	1.6 i 16V	73	08/96 – 05/02	3602	
BALENO Estate (EG)	1.6 i 16V 4x4	72	08/96 – 05/02	3602	
BALENO Estate (EG)	1.6 i 16V 4x4	73	08/96 – 05/02	3602	
BALENO Estate (EG)	1.8 i 16V	89	08/96 – 05/02	3602	
BALENO Estate (EG)	1.8 i 16V 4x4	89	08/96 – 05/02	3602	
BALENO Estate (EG)	1.9 TD	55	04/98 – 05/02	3602	
BALENO Hatchback (EG)	13	52	09/96 – 05/02	3602	
BALENO Hatchback (EG)	1.3 i 16V	63	07/95 – 05/02	3602	
BALENO Hatchback (EG)	1.6 i 16V	72	07/95 – 05/02	3602	
BALENO Hatchback (EG)	1.6 i 16V 4x4	72	07/95 – 05/02	3602	
BALENO Hatchback (EG)	1.8 GTX	89	03/96 – 05/02	3602	
BALENO Hatchback (EG)	1.8 i 4x4	89	03/96 – 05/02	3602	
CAPPUCINO (EA)	0.7 (EA11)	47	02/92 – 08/95	3511	
CARRY Box (FD)	13	58	03/99 -	3928	
CARRY Box (FD)	1.3 16 V	58	03/00 -	3928	
CARRY Box (FD)	1.3 4x4	56	02/99 – 09/04	3928	
CARRY Pickup (FD, DA5_T, DA6_T)	1.3 4x4	58	10/00 – 07/05	3928	
CELERIO (LF)	1.0 (AVK310)	50	03/14 -	3928	
GRAND VITARA I (FT, HT)	1.6 4x4 (SQ 416)	69	03/98 – 07/03	3883	
GRAND VITARA I (FT, HT)	1.6 4x4 (SQ 416)	69	03/98 07/03	3884	
GRAND VITARA I (FT, HT)	1.6 4x4 (SQ 416)	73	02/00 09/02	3884	
GRAND VITARA I (FT, HT)	2.0 4x4 (SQ 420)	94	03/98 – 07/03	3883	
GRAND VITARA I (FT, HT)	2.0 4x4 (SQ 420)	94	03/98 07/03	3884	
GRAND VITARA I (FT, HT)	2.0 HDI 110 16V 4x4 (SQ 420D)	80	07/01 09/05	3884	
GRAND VITARA I (FT, HT)	2.0 HDI 110 4x4 (SQ 420D)	80	07/01 09/05	3884	
GRAND VITARA I (FT, HT)	2.0 TD 4x4 (SQ 420D)	63	04/00 09/05	3884	
GRAND VITARA I (FT, HT)	2.0 TD 4x4 (SQ 420D)	64	03/98 07/03	3884	
GRAND VITARA I (FT, HT)	2.5 V6 24V 4x4 (SQ 625)	106	04/98 07/03	3884	
GRAND VITARA I (FT, HT)	2.5 V6 24V 4x4 (SQ 625)	116	04/01 07/03	3884	
GRAND VITARA I (FT, HT)	2.7 4x4 (JA 627)	127	09/01 07/03	3884	
GRAND VITARA I (FT, HT)	2.7 4x4 (JA 627)	135	04/03 07/03	3884	
GRAND VITARA I (FT, HT)	2.0 HDI 110 16V 4x4 (SQ 420D)	80	07/01 – 09/05	4000	
GRAND VITARA II (JT, TE, TD)	1.9 DDiS All-wheel Drive (JB419D)	95	10/05 – 02/15	3929	
GRAND VITARA II (JT, TE, TD)	1.6 All-wheel Drive (JB416)	73	09/05 – 02/15	3929	

MAKE & MODEL		KW	YEAR		
SUZUKI					
GRAND VITARA II (JT, TE, TD)	1.6 All-wheel Drive (JB416)	78	04/05 -	3929	
GRAND VITARA II (JT, TE, TD)	2.0 All-wheel Drive (JB420)	103	10/05 – 02/15	3929	
GRAND VITARA II (JT, TE, TD)	2.0 HDi All-wheel Drive	80	01/06 – 02/15	3929	
GRAND VITARA II (JT, TE, TD)	2.4 All-wheel Drive (JB424)	120	09/13 – 02/15	3929	
GRAND VITARA II (JT, TE, TD)	2.4 All-wheel Drive (JB424)	122	01/09 -	3929	
GRAND VITARA II (JT, TE, TD)	2.4 All-wheel Drive (JB424)	124	01/09 -	3929	
GRAND VITARA II (JT, TE, TD)	3.2 All-wheel Drive (JB632)	171	01/09 – 02/15	3929	
IGNIS (FH)	1.3 (RG413)	61	10/00 – 09/03	3928	
IGNIS (FH)	1.3 4WD (RG413)	61	10/00 – 09/03	3928	
IGNIS I (FH)	1.3 (HV51, HX51, RG413)	61	10/00 - 09/03		4303
IGNIS I (FH)	1.3 4WD (RG413)	61	10/00 - 09/03		4303
IGNIS II (MH)	1.3 (RM413)	69	09/03 -	3928	
IGNIS II (MH)	1.3 4x4 (RM413)	69	09/03 -	3928	
IGNIS II (MH)	1.3 DDiS (RM413D)	51	09/03 -	3928	
IGNIS II (MH)	1.5 (RM415)	73	09/03 -	3928	
IGNIS II (MH)	1.5 4x4 (RM415)	73	09/03 -	3928	
IGNIS II (MH)	1.5 Sport (RM415)	80	12/03 -	3928	
IGNIS II (MH)	1.5 Sport (RM415)	80			4303
JIMNY (FJ)	1.5 DDiS 4WD (SN415D)	48	12/03 -	3883	
JIMNY (FJ)	1.5 DDiS 4x4	63	08/05 -	3883	
KIZASHI (FR)	2.4 (A6B 424)	131	10/10 -		4148
KIZASHI (FR)	2.4 (A6B 424)	138	04/12 -		4148
KIZASHI (FR)	2.4 4WD (A6B 424)	138	10/10 -		4148
KIZASHI (FR)	2.4 4x4 (A6B 424)	131	10/10 -		4148
LANDY (SC25)	2.0	102	01/07 – 12/09		3933
LANDY (SC25)	2.0 4WD	96	01/07 – 12/09		3933
LANDY (SC26)	2.0	106	01/10 -	3952	
LANDY (SC26)	2.0	108	01/10 -	3952	
LIANA (ER, RH_)	2.3	114	04/04 -	3899	
SPLASH (EX)	1.0 (A5B 310)	48	01/08 -	3983/1	
SPLASH (EX)	1.0 (A5B 310)	50	06/11 -	3983/1	
SPLASH (EX)	1.2 (A5B 412)	63	01/08 -	3983/1	
SPLASH (EX)	1.2 VVT (A5B 412)	66	06/11 -	3983/1	
SPLASH (EX)	1.2 VVT (A5B 412)	67	08/12 -	3983/1	
SPLASH (EX)	1.2 VVT (A5B 412)	69	09/10 -	3983/1	
SPLASH (EX)	1.3 CDTI (A5B 413D)	55	01/08 -	3983/1	
SUPER CARRY Bus (ED)	10	30	09/94 – 03/99	3509	
SUPER CARRY Bus (ED)	10	31	10/92 – 03/99	3509	
SUPER CARRY Bus (ED)	1.0 (SK)	33	10/85 – 03/99	3509	
SUPER CARRY Bus (ED)	1.0 (SK410)	30	09/94 – 03/99	4034	
SUPER CARRY Bus (ED)	1.0 (SK410)	31	10/92 – 03/99	4034	
SUPER CARRY Bus (ED)	1.0 (SK410)	33	10/85 – 03/99	4034	
SWIFT Convertible (SF413)	1.3 i (SF413, AK35)	50	09/91 – 10/96	3745	
SWIFT II Hatchback (EA, MA)	13	51	03/89 – 10/96	3745	
SWIFT II Hatchback (EA, MA)	1.0 (SF310, AA44)	37	03/89 – 05/01	3745	
SWIFT II Hatchback (EA, MA)	1.0 i (SF310, AA44)	39	01/95 – 12/05	3745	
SWIFT II Hatchback (EA, MA)	1.0 i (SF310, AA44)	40	03/89 – 12/91	3745	
SWIFT II Hatchback (EA, MA)	1.3 (SF413, AB35)	50	03/89 – 05/01	3745	
SWIFT II Hatchback (EA, MA)	1.3 (SF413, AB35)	52	03/89 – 12/91	3745	
SWIFT II Hatchback (EA, MA)	1.3 4WD (SF413, AA35)	50	03/89 – 05/01	3745	
SWIFT II Hatchback (EA, MA)	1.3 4WD (SF413, AF35)	52	10/89 – 12/91	3745	
SWIFT II Saloon (AH, AJ)	1.3 (SF413, AH35)	52	03/89 – 12/91	3745	
SWIFT II Saloon (AH, AJ)	1.3 (SF413, AH35, MA)	50	01/91 – 12/95	3745	
SWIFT III (MZ, EZ)	1.3 (RS 413)	68	02/05 -	3983/1	
SWIFT III (MZ, EZ)	1.3 4x4 (RS 413)	66	01/06 -	3983/1	
SWIFT III (MZ, EZ)	1.3 4x4 (RS 413)	68	02/05 -	3983/1	
SWIFT III (MZ, EZ)	1.3 DDiS (RS 413D)	51	08/05 -	3983/1	
SWIFT III (MZ, EZ)	1.3 DDiS (RS 413D)	55	08/05 -	3983/1	
SWIFT III (MZ, EZ)	1.5 (RS 415)	75	02/05 -	3983/1	
SWIFT III (MZ, EZ)	1.5 4x4 (RS 415)	74	02/05 -	3983/1	
SWIFT III (MZ, EZ)	1.6 (RS 416)	92	05/06 -	3983/1	
SWIFT III (MZ, EZ)	1.6 (RS 416)	92	05/06 -		4148
SWIFT IV (FZ, NZ)	1.2 (AZG 412)	66	10/10 -	4122	
SWIFT IV (FZ, NZ)	1.2 (AZH 412)	69	10/10 -	4122	
SWIFT IV (FZ, NZ)	1.2 (AZH 412, AZG 412)	67	08/12 -	4122	
SWIFT IV (FZ, NZ)	1.2 4WD (AZH 412, AZG 412)	67	08/12 -	4122	
SWIFT IV (FZ, NZ)	1.2 4x4 (AZG 412)	66	10/10 -	4122	
SWIFT IV (FZ, NZ)	1.2 4x4 (AZH 412)	69	10/10 -	4122	
SWIFT IV (FZ, NZ)	1.3 DDiS (AZG 413D)	55	10/10 -	4122	
SWIFT IV (FZ, NZ)	1.6 (AZG 416, AZH 416)	100	01/12 -	4122	
SX4 (EY, GY)	20	107	06/06 -		4148

MAKE & MODEL   		KW	YEAR		
SUZUKI					
SX4 (EY, GY)	1.5 (RW 415)	73	06/06 – 07/10		4148
SX4 (EY, GY)	1.5 VVT (RW 415)	82	07/10 -		4148
SX4 (EY, GY)	1.5 VVT 4x4 (RW 415)	82	07/10 -		4148
SX4 (EY, GY)	1.6 (RW 416)	74	06/06 -		4148
SX4 (EY, GY)	1.6 DDIS (RW 416D)	66	04/07 -		4148
SX4 (EY, GY)	1.6 VVT (RW 416)	79	06/06 -		4148
SX4 (EY, GY)	1.6 VVT (RW 416)	88	07/09 -		4148
SX4 (EY, GY)	1.6 VVT 4x4 (RW 416)	79	06/06 -		4148
SX4 (EY, GY)	1.6 VVT 4x4 (RW 416)	82	07/09 -		4148
SX4 (EY, GY)	1.6 VVT 4x4 (RW 416)	88	07/09 -		4148
SX4 (EY, GY)	1.9 DDiS (RW 419D)	88	06/06 -		4148
SX4 (EY, GY)	1.9 DDiS 4x4 (RW 419D)	88	06/06 -		4148
SX4 (EY, GY)	2.0 4x4	107	06/06 -		4148
SX4 (EY, GY)	2.0 DDiS (RW 420D)	99	07/09 -		4148
SX4 (EY, GY)	2.0 DDiS 4x4 (RW 420D)	99	07/09 -		4148
SX4 Hatchback	16	80	04/07 – 12/15	3699	
SX4 Hatchback	16	80	04/07 – 12/15	3779	
SX4 Hatchback	18	92	03/09 -	3699	
SX4 Hatchback	18	92	03/09 -	3779	
SX4 Saloon	16	80	11/06 – 12/15	3699	
SX4 Saloon	16	80	11/06 – 12/15	3779	
SX4 Saloon	18	92	03/09 – 12/10	3699	
SX4 Saloon	18	92	03/09 – 12/10	3779	
SX4 Saloon	18	96	12/10 -	3699	
SX4 Saloon	18	96	12/10 -	3779	
SX4 Saloon (GY)	1.6 (RW 416)	74	10/07 -		4148
SX4 Saloon (GY)	1.6 (RW 416)	75	10/07 -		4148
SX4 Saloon (GY)	1.6 (RW 416)	79	10/07 -		4148
SX4 Saloon (GY)	1.6 (RW 416)	88	10/07 -		4148
SX4 Saloon (GY)	1.6 AWD (RW 416)	88	10/07 -		4148
VITARA (ET, TA)	2.0 TD Intercooler All-wheel Drive (SV 420D)	64	12/95 – 03/98	3884	
VITARA (ET, TA)	1.6 (SE 416)	70	02/91 – 03/98	3882	
VITARA (ET, TA)	1.6 All-wheel Drive (SE 416)	60	07/88 – 12/91	3882	
VITARA (ET, TA)	1.6 All-wheel Drive (SE 416)	60	07/88 12/91	3884	
VITARA (ET, TA)	1.6 All-wheel Drive (TA, TA01)	59	07/88 – 03/98	3882	
VITARA (ET, TA)	1.6 All-wheel Drive (TA, TA01)	59	07/88 03/98	3884	
VITARA (ET, TA)	1.6 i 16V All-wheel Drive (ET, TA02)	71	07/90 – 03/98	3882	
VITARA (ET, TA)	1.6 i 16V All-wheel Drive (ET, TA02)	71	07/90 03/98	3884	
VITARA (ET, TA)	1.9 D All-wheel Drive (SE419TD)	50	01/95 – 03/98	3882	
VITARA (ET, TA)	1.9 D All-wheel Drive (SE419TD)	55	08/96 – 03/98	3882	
VITARA (ET, TA)	2.0 16V All-wheel Drive	97	12/96 – 03/98	3884	
VITARA (ET, TA)	2.0 TD All-wheel Drive (SV 420D)	52	12/94 – 03/98	3884	
VITARA (ET, TA)	2.0 V6 24V All-wheel Drive (SV620)	100	12/94 – 03/98	3884	
VITARA (ET, TA)	2.5 V6 24V All-wheel Drive (FT)	118	12/95 – 03/98	3884	
VITARA Cabrio (ET, TA)	1.6	59	07/88 – 01/95	3882	
VITARA Cabrio (ET, TA)	1.6 i 16V	71	07/90 – 03/99	3882	
VITARA Cabrio (ET, TA)	1.9 D (SE 419TD)	50	01/95 – 03/98	3882	
VITARA Cabrio (ET, TA)	1.9 D (SE 419TD)	55	08/96 – 03/99	3882	
VITARA Cabrio (ET, TA)	2.0 16V	97	12/96 – 03/99	3884	
WAGON R (CH_)	10	34	04/02 – 07/04	4027	
WAGON R (CH_)	10	48	06/00 – 07/04	4027	
WAGON R (CH_)	11	37	01/03 – 07/04	4027	
WAGON R (CH_)	12	51	01/01 – 09/05	4027	
WAGON R (CH_)	14	67	09/05 – 03/06	4027	
WAGON R+ (EM)	1.0 (SR410)	48	02/98 – 05/00	4027	
WAGON R+ (EM)	1.2 (SR412)	51	02/98 – 05/00	4027	
WAGON R+ (EM)	1.2 4WD (SR412)	51	02/98 – 05/00	4027	
WAGON R+ (MM)	10	51	08/00 – 07/03	4027	
WAGON R+ (MM)	1.0 XT Plus	74	08/00 – 07/01	4027	
X-90 (EL)	1.6 i 16V (SZ 416)	71	09/95 – 12/97	3882	
X-90 (EL)	1.6 i 16V 4x4	71	09/95 – 12/97	3882	
XL7 (DA, DB)	3.6 All-wheel Drive	185	01/07 – 12/09	3929	
TALBOT					
1307-1510	Simca 1510 1.4	51	01/80 – 04/84	3318	
1307-1510	Simca 1510 1.4	51	01/80 – 04/84	3338	
1307-1510	Simca 1510 1.4	51	01/80 – 04/84	3353	
1307-1510	Simca 1510 1.4	51	01/80 – 04/84	3362	
AVENGER	16	51	09/73 – 04/75	3380	
AVENGER	16	51	09/73 – 04/75	3381	
AVENGER	16	51	09/73 – 04/75	3580	
EXPRESS 1000 -1500 Bus	1.8	51	07/83 – 10/90	3440	

MAKE & MODEL		KW	YEAR		
TALBOT					
EXPRESS 1000 -1500 Bus	1.9 D	51	07/87 – 10/90	3440	
EXPRESS 1000 -1500 Bus	2.0	57	07/82 – 10/90	3440	
EXPRESS 1000 -1500 Bus	2.5 D	54	07/82 – 10/94	3440	
EXPRESS 1000 -1500 Bus	2.5 TD	70	06/87 – 10/94	3543	
EXPRESS 1000 -1500 Platform/Chassis	2.0	57	07/82 – 10/94	3440	
EXPRESS 1000 -1500 Platform/Chassis	2.5 D	54	07/82 – 10/94	3440	
EXPRESS 1000 -1500 Platform/Chassis	2.5 D All-wheel Drive	54	11/88 – 10/94	3440	
EXPRESS 1000 -1500 Platform/Chassis	2.5 TD	70	06/87 – 10/94	3543	
EXPRESS 1000 -1500 Platform/Chassis	2.5 TD All-wheel Drive	70	11/88 – 10/94	3543	
EXPRESS 1000 -1800 Box	1.8	51	07/81 – 10/90	3440	
EXPRESS 1000 -1800 Box	1.9 D	51	07/87 – 10/90	3440	
EXPRESS 1000 -1800 Box	2.0	57	07/82 – 10/90	3440	
EXPRESS 1000 -1800 Box	2.5 D	54	07/82 – 10/94	3440	
EXPRESS 1000 -1800 Box	2.5 D	54	07/82 – 10/94	3543	
EXPRESS 1000 -1800 Box	2.5 D All-wheel Drive	54	11/88 – 10/94	3440	
EXPRESS 1000 -1800 Box	2.5 D All-wheel Drive	54	11/88 – 10/94	3543	
EXPRESS 1000 -1800 Box	2.5 TD	70	06/87 – 10/94	3543	
EXPRESS 1000 -1800 Box	2.5 TD All-wheel Drive	70	11/88 – 10/94	3543	
HORIZON	11	40	01/79 – 09/84	3318	
HORIZON	11	40	01/79 – 09/84	3338	
HORIZON	11	40	01/79 – 09/84	3353	
HORIZON	11	40	01/79 – 09/84	3362	
HORIZON	13	43	09/78 – 09/84	3318	
HORIZON	13	43	09/78 – 09/84	3338	
HORIZON	13	43	09/78 – 09/84	3353	
HORIZON	13	43	09/78 – 09/84	3362	
HORIZON	13	50	02/78 – 01/80	3318	
HORIZON	13	50	02/78 – 01/80	3338	
HORIZON	13	50	02/78 – 01/80	3353	
HORIZON	13	50	02/78 – 01/80	3362	
HORIZON	14	51	07/79 – 06/86	3318	
HORIZON	14	51	07/79 – 06/86	3338	
HORIZON	14	51	07/79 – 06/86	3353	
HORIZON	14	51	07/79 – 06/86	3362	
HORIZON	14	61	07/79 – 06/86	3318	
HORIZON	14	61	07/79 – 06/86	3338	
HORIZON	14	61	07/79 – 06/86	3353	
HORIZON	14	61	07/79 – 06/86	3362	
MURENA	16	66	08/81 – 01/85		3333
MURENA	21	85	09/80 – 07/84		3333
MURENA	2.1 S	103	04/83 – 01/85		3333
RANCHO	14	59	01/77 – 07/84	3318	
RANCHO	14	59	01/77 – 07/84	3338	
RANCHO	14	59	01/77 – 07/84	3353	
RANCHO	14	59	01/77 – 07/84	3362	
SAMBA (51A)	09	31	01/81 – 12/85	3329	
SAMBA (51A)	09	31	01/81 – 12/85	3542	
SAMBA (51A)	11	37	01/81 – 06/86	3329	
SAMBA (51A)	11	37	01/81 – 06/86	3542	
SAMBA (51A)	14	44	06/83 – 10/86	3329	
SAMBA (51A)	14	44	06/83 – 10/86	3542	
SAMBA (51A)	14	53	01/81 – 06/86	3329	
SAMBA (51A)	14	53	01/81 – 06/86	3542	
SAMBA (51A)	1.2 Rallye	65	01/83 – 10/86	3329	
SAMBA (51A)	1.2 Rallye	65	01/83 – 10/86	3542	
SAMBA (51A)	1.4 Rallye	58	01/83 – 10/86	3329	
SAMBA (51A)	1.4 Rallye	58	01/83 – 10/86	3542	
SAMBA Convertible (51E)	14	58	01/81 – 06/86	3329	
SAMBA Convertible (51E)	14	58	01/81 – 06/86	3542	
SIMCA 1100 Break/Tourisme	11	44	10/76 – 09/79		3326
SIMCA 1100 Break/Tourisme	11	44	10/76 – 09/79	3360	
SIMCA 1100 Break/Tourisme	11	44	10/76 – 09/79	3361	
SIMCA 1100 Break/Tourisme	1.3 Spezial	55	07/74 – 11/76		3326
SIMCA 1100 Break/Tourisme	1.3 Spezial	55	07/74 – 11/76	3360	
SIMCA 1100 Break/Tourisme	1.3 Spezial	55	07/74 – 11/76	3361	
SIMCA 1100 Hatchback	1.1 LE,LX,GLS,ES	37	10/76 – 01/80		3326
SIMCA 1100 Hatchback	1.1 LE,LX,GLS,ES	37	10/76 – 01/80	3360	
SIMCA 1100 Hatchback	1.1 LE,LX,GLS,ES	37	10/76 – 01/80	3361	
SIMCA 1100 Hatchback	1.1 LE,LX,GLS,ES	43	10/76 – 01/80		3326
SIMCA 1100 Hatchback	1.1 LE,LX,GLS,ES	43	10/76 – 01/80	3360	
SIMCA 1100 Hatchback	1.1 LE,LX,GLS,ES	43	10/76 – 01/80	3361	

MAKE & MODEL		KW	YEAR		
TALBOT					
SIMCA 1100 Hatchback	1.1 LS,GLS	40	11/73 – 09/77		3326
SIMCA 1100 Hatchback	1.1 LS,GLS	40	11/73 – 09/77	3360	
SIMCA 1100 Hatchback	1.1 LS,GLS	40	11/73 – 09/77	3361	
SIMCA 1100 Hatchback	1.1 LS,GLS	44	10/68 – 05/76		3326
SIMCA 1100 Hatchback	1.1 LS,GLS	44	10/68 – 05/76	3360	
SIMCA 1100 Hatchback	1.1 LS,GLS	44	10/68 – 05/76	3361	
SPITFIRE	1.2 MK I	46	10/62 – 12/65	3311	
TAGORA	21	85	06/80 – 12/83	3405	
TAGORA	26	122	08/81 – 10/83		3323
TAGORA	26	122	08/81 – 10/83	3405	
TAGORA	2.3 Turbo Diesel	59	08/81 – 12/87	3405	
TOYOTA					
4 RUNNER (KZN18_, VZN18_, RZN18_)	27	112	11/95 – 07/02	3560	
4 RUNNER (KZN18_, VZN18_, RZN18_)	34	136	11/95 - 07/02	3560	
4 RUNNER (KZN18_, VZN18_, RZN18_)	1.8 2WD	83	08/00 – 11/02	3560	
4 RUNNER (KZN18_, VZN18_, RZN18_)	2.7 4WD	112	11/95 – 08/02	3560	
4 RUNNER (KZN18_, VZN18_, RZN18_)	3.0 Turbo-D	92	11/95 – 11/02	3560	
4 RUNNER (KZN18_, VZN18_, RZN18_)	3.4 4WD	136	09/98 – 11/02	3560	
4 RUNNER (KZN18_, VZN18_, RZN18_)	4.0 VVTi	183	08/02 – 11/02	3693	
4 RUNNER (RN1_, VZN1_)	2.4 D	66	08/89 – 11/95	3560	
4 RUNNER (RN1_, VZN1_)	2.7 i	112	11/95 – 03/96	3560	
4 RUNNER (RN1_, VZN1_)	3.0 (VZN130_, VZN131_)	105	07/90 – 11/95	3560	
4 RUNNER (RN1_, VZN1_)	3.0 4WD (VZN100_, VZN110_, VZN130_,	112	08/88 – 10/95	3560	
4 RUNNER (RN1_, VZN1_)	3.4 i	136	11/95 – 03/96	3560	
4 RUNNER (RN1_, VZN1_)	3.0 Turbo-D (KZN130_)	92	10/93 – 03/96	3560	
4 RUNNER (RN5_, LN5_, VZN6_, RN7_, RN6_)	2.4 4WD	82	08/87 – 07/89	3371	
4 RUNNER (RN5_, LN5_, VZN6_, RN7_, RN6_)	2.4 4WD	82	08/87 – 07/89	3560	
4 RUNNER (UZN21_, KZN21_, GRN21_)	4.0 4WD	183	11/02 – 07/09	3693	
6GT 86 / 86 / 8 (ZN6_)	2.0 GT (FA20)	147	03/12 -		4258
ALLION II (_T26_)	15	81	07/07 -	3953	
ALLION II (_T26_)	18	106	07/07 -	3953	
ALLION II (_T26_)	20	116	07/07 -	3953	
ALLION II (_T26_)	1.8 4WD	98	07/07 -	3953	
ALPHARD (_H1_)	2.4	96	09/03 – 04/08	4003	
ALPHARD (_H1_)	2.4	117	09/03 – 04/08	4003	
ALPHARD (_H1_)	2.4 4WD	117	09/03 – 04/08	4003	
ALPHARD (_H1_)	2.4 Hybrid	117	09/03 – 04/08	4003	
ALPHARD (_H1_)	2.4 Hybrid 4WD	96	09/03 – 04/08	4003	
ALPHARD (_H1_)	2.4 Hybrid 4WD	117	09/03 – 04/08	4003	
ALPHARD (_H1_)	3.0	162	04/03 – 04/08	4003	
ALPHARD (_H1_)	3.0 4WD	162	04/03 – 04/08	4003	
ALPHARD / VELLFIRE (_H2_)	24	123	04/08 – 12/14		4154
ALPHARD / VELLFIRE (_H2_)	24	125	04/08 – 12/14		4154
ALPHARD / VELLFIRE (_H2_)	35	202	04/08 – 12/14		4154
ALPHARD / VELLFIRE (_H2_)	35	206	04/08 – 12/14		4154
ALPHARD / VELLFIRE (_H2_)	2.4 4WD	125	04/08 – 12/14		4154
ALPHARD / VELLFIRE (_H2_)	2.4 Hybrid	110	12/11 – 12/14		4154
ALPHARD / VELLFIRE (_H2_)	3.5 4WD	206	04/08 – 12/14		4154
ALTEZZA (_E1_)	20	114	01/99 – 07/05		4085
ALTEZZA (_E1_)	20	114	01/99 – 07/05	4086	
ALTEZZA (_E1_)	30	157	07/01 – 07/05		4085
ALTEZZA (_E1_)	30	157	07/01 – 07/05	4086	
ALTEZZA (_E1_)	2.0 VVTi	118	01/99 – 07/05		4085
ALTEZZA (_E1_)	2.0 VVTi	118	01/99 – 07/05	4086	
ALTEZZA (_E1_)	2.0 VVTi	147	02/99 – 07/05		4085
ALTEZZA (_E1_)	2.0 VVTi	147	02/99 – 07/05	4086	
ALTEZZA GITA (_XE1_)	20	114	01/99 – 06/01	3915	
ALTEZZA GITA (_XE1_)	20	114	01/99 – 06/01		4085
ALTEZZA GITA (_XE1_)	30	157	07/01 – 06/05	3915	
ALTEZZA GITA (_XE1_)	30	157	07/01 – 06/05		4085
ARISTO (_S14_)	30	169	10/90 – 07/97	3915	
ARISTO (_S14_)	30	169	10/90 – 07/97		4099
ARISTO (_S14_)	30	205	10/90 – 09/96	3915	
ARISTO (_S14_)	30	205	10/90 – 09/96		4099
ARISTO (_S14_)	4.0 4WD	173	10/92 – 07/97	3915	
ARISTO (_S14_)	4.0 4WD	173	10/92 – 07/97		4099
ARISTO (_S16_)	30	170	08/97 – 09/04	3915	
ARISTO (_S16_)	30	170	08/97 – 09/04		4085
ARISTO (_S16_)	30	206	08/97 – 09/04	3915	
ARISTO (_S16_)	30	206	08/97 – 09/04		4085
ARISTO (_S16_)	43	224	04/99 – 09/04	3915	

MAKE & MODEL		KW	YEAR		
TOYOTA					
ARISTO (_S16_)	43	224	04/99 – 09/04		4085
AURION II (ACV5_, GSV5_)	3.5 (GSV50) (2GR-FE)	200	09/11 -		4202
AURION (_V4_)	24	116	03/06 – 07/09	3948	
AURION (_V4_)	35	200	03/06 – 09/11	3948	
AURION (_V4_)	35	235	03/06 – 09/11	3948	
AURION (_V4_) Sedán (Executive car-E Segment)	3.5 (2GR-FSE)	235	03.06-09.11	4019	
AURION (_V4_) Sedán (Executive car-E Segment)	3.5 (GSV40) (2GR-FE)	200	03.06-09.11	4019	
AURION (_V5_)	3.5 (GSV50)	200	09/11 -	3948	
AURION (_V5_)	3.5 (GSV50)	200	09/11 -		3949
AURION II (_V5_) Sedán (Executive car-E Segment)	3.5 (GSV50) (2GR-FE)	200	09.11-	4019	
AURIS (_E15_)	1.33 Dual-VVTi (NRE150_)	73	01/10 – 09/12	3953	
AURIS (_E15_)	1.33 Dual-VVTi (NRE150_)	73	01/10 – 09/12		4037
AURIS (_E15_)	1.33 Dual-VVTi (NRE150_)	74	05/09 – 09/12	3953	
AURIS (_E15_)	1.33 Dual-VVTi (NRE150_)	74	05/09 – 09/12		3954
AURIS (_E15_)	1.33 Dual-VVTi (NRE150_)	74	05/09 – 09/12		4037
AURIS (_E15_)	1.4 (ZZE150_)	71	03/07 – 09/12	3953	
AURIS (_E15_)	1.4 (ZZE150_)	71	03/07 – 09/12		3954
AURIS (_E15_)	1.4 (ZZE150_)	71	03/07 – 09/12		4037
AURIS (_E15_)	1.4 D-4D (NDE150_)	66	03/07 – 09/12	3953	
AURIS (_E15_)	1.4 D-4D (NDE150_)	66	03/07 – 09/12		3954
AURIS (_E15_)	1.4 D-4D (NDE150_)	66	03/07 – 09/12		4037
AURIS (_E15_)	1.5 (NZE151_)	81	09/09 – 09/12	3953	
AURIS (_E15_)	1.5 (NZE151_)	81	09/09 – 09/12		3954
AURIS (_E15_)	1.5 4WD (NZE154_)	77	09/09 – 09/12	3953	
AURIS (_E15_)	1.5 4WD (NZE154_)	77	09/09 – 09/12		3954
AURIS (_E15_)	1.6 (ZRE151_)	91	03/07 – 09/12	3953	
AURIS (_E15_)	1.6 (ZRE151_)	91	03/07 – 09/12		3954
AURIS (_E15_)	1.6 (ZRE151_)	91	03/07 – 09/12		4037
AURIS (_E15_)	1.6 (ZRE151_)	97	05/09 – 09/12	3953	
AURIS (_E15_)	1.6 (ZRE151_)	97	05/09 – 09/12		3954
AURIS (_E15_)	1.6 (ZRE151_)	97	05/09 – 09/12		4037
AURIS (_E15_)	1.8 (ZRE152_)	100	10/06 – 09/12	3953	
AURIS (_E15_)	1.8 (ZRE152_)	100	10/06 – 09/12		3954
AURIS (_E15_)	1.8 (ZRE152_)	100	10/06 – 09/12		4037
AURIS (_E15_)	1.8 (ZRE152_)	106	02/09 – 09/12	3953	
AURIS (_E15_)	1.8 (ZRE152_)	106	02/09 – 09/12		3954
AURIS (_E15_)	1.8 (ZRE152_)	108	02/09 – 09/12		4037
AURIS (_E15_)	1.8 4WD (ZRE154_)	100	02/09 – 09/12	3953	
AURIS (_E15_)	1.8 4WD (ZRE154_)	100	02/09 – 09/12		3954
AURIS (_E15_)	1.8 Hybrid (ZWE150_)	73	09/10 – 09/12		3954
AURIS (_E15_)	1.8 Hybrid (ZWE150_)	73	09/10 – 09/12	4077	
AURIS (_E15_)	2.0 D-4D (ADE150_)	93	03/07 – 09/12		4037
AURIS (_E15_)	2.0 D-4D (ADE150_)	93	03/07 – 09/12	4147	
AURIS (_E15_)	2.2 D (ADE157_)	130	03/07 – 09/12		4037
AURIS (_E15_)	2.2 D (ADE157_)	130	03/07 – 09/12	4147	
AURIS (_E18_)	1.2 (NRE185_)	85	03/15 -		4037
AURIS (_E18_)	1.2 (NRE185_)	85	03/15 -	4176	
AURIS (_E18_)	1.3 (NRE180_)	73	10/12 -		4037
AURIS (_E18_)	1.3 (NRE180_)	73	10/12 -	4176	
AURIS (_E18_)	1.4 D-4D (NDE180_)	66	10/12 -		4037
AURIS (_E18_)	1.4 D-4D (NDE180_)	66	10/12 -	4176	
AURIS (_E18_)	1.5 (NZE181_)	80	10/12 -		4037
AURIS (_E18_)	1.5 (NZE181_)	80	10/12 -	4176	
AURIS (_E18_)	1.5 4WD (NZE184_)	77	10/12 -		4037
AURIS (_E18_)	1.5 4WD (NZE184_)	77	10/12 -	4176	
AURIS (_E18_)	1.6 (ZRE181_, ZRE185_)	97	10/12 -		4037
AURIS (_E18_)	1.6 (ZRE181_, ZRE185_)	97	10/12 -	4176	
AURIS (_E18_)	1.6 D4-D (WWE185_)	82	04/15 -		4037
AURIS (_E18_)	1.6 D4-D (WWE185_)	82	04/15 -	4176	
AURIS (_E18_)	1.8 (ZRE182)	103	10/12 -		4037
AURIS (_E18_)	1.8 (ZRE182)	103	10/12 -	4176	
AURIS (_E18_)	1.8 (ZRE186_)	106	10/12 -		4037
AURIS (_E18_)	1.8 (ZRE186_)	106	10/12 -	4176	
AURIS (_E18_)	1.8 Hybrid (ZWE186_)	73	10/12 -		4037
AURIS (_E18_)	1.8 Hybrid (ZWE186_)	73	10/12 -	4077	
AURIS (_E18_)	1.8 Hybrid (ZWE186_)	73	10/12 -	4176	
AURIS (_E18_)	2.0 D-4D (ADE186_)	91	10/12 -		4037
AURIS (_E18_)	2.0 D-4D (ADE186_)	91	10/12 -	4147	
AURIS (_E18_)	2.0 D-4D (ADE186_)	91	10/12 -	4176	
AURIS (NDE15_)	1.4 D-4D (1ND-TV)	66	03/07 – 04/13	3956	
AURIS / BLADE (NRE15_, ZZE15_, ADE15_, ZRE15_, NDE15_)	1.33 Dual-VVTi (1NR-FE)	73	01/10 – 09/12	3956	

MAKE & MODEL		KW	YEAR		
TOYOTA					
AURIS / BLADE (NRE15_, ZZE15_, ADE15_, ZRE15_, NDE15_)	1.33 Dual-VVTi (1NR-FE)	74	05/09 – 09/12	3956	
AURIS / BLADE (NRE15_, ZZE15_, ADE15_, ZRE15_, NDE15_)	1.4 (ZZE150_) (4ZZ-FE)	71	03/07 – 09/12	3956	
AURIS / BLADE (NRE15_, ZZE15_, ADE15_, ZRE15_, NDE15_)	1.5 (1NZ-FE)	77	09/09 – 09/12	3956	
AURIS / BLADE (NRE15_, ZZE15_, ADE15_, ZRE15_, NDE15_)	1.5 (1NZ-FE)	81	09/09 – 09/12	3956	
AURIS / BLADE (NRE15_, ZZE15_, ADE15_, ZRE15_, NDE15_)	1.6 (1ZR-FAE)	97	05/09 – 09/12	3956	
AURIS / BLADE (NRE15_, ZZE15_, ADE15_, ZRE15_, NDE15_)	1.6 (ZRE151_) (1ZR-FE)	91	03/07 – 09/12	3956	
AURIS / BLADE (NRE15_, ZZE15_, ADE15_, ZRE15_, NDE15_)	1.8 (2ZR-FAE)	100	02/09 – 09/12	3956	
AURIS / BLADE (NRE15_, ZZE15_, ADE15_, ZRE15_, NDE15_)	1.8 (2ZR-FAE)	106	02/09 – 09/12	3956	
AURIS / BLADE (NRE15_, ZZE15_, ADE15_, ZRE15_, NDE15_)	1.8 (2ZR-FAE)	108	02/09 – 09/12	3956	
AURIS / BLADE (NRE15_, ZZE15_, ADE15_, ZRE15_, NDE15_)	1.8 (ZRE152_) (2ZR-FE)	100	10/06 – 09/12	3956	
AURIS / BLADE (NRE15_, ZZE15_, ADE15_, ZRE15_, NDE15_)	1.8 Hybrid (2ZR-FXE)	73	09/10 – 09/12	3956	
AURIS II (ZRE18_, NZE18_)	1.4 D-4D (1ND-TV)	66	03/13 -	3956	
AURIS TOURING SPORTS (_E18_)	1.2 (NRE185_)	85	03/15 -		4037
AURIS TOURING SPORTS (_E18_)	1.2 (NRE185_)	85	03/15 -	4176	
AURIS TOURING SPORTS (_E18_)	1.3 (NRE180_)	73	07/13 -		4037
AURIS TOURING SPORTS (_E18_)	1.3 (NRE180_)	73	07/13 -	4176	
AURIS TOURING SPORTS (_E18_)	1.4 D-4D (NDE180_)	66	07/13 -		4037
AURIS TOURING SPORTS (_E18_)	1.4 D-4D (NDE180_)	66	07/13 -	4176	
AURIS TOURING SPORTS (_E18_)	1.6 (ZRE185_)	97	07/13 -		4037
AURIS TOURING SPORTS (_E18_)	1.6 (ZRE185_)	97	07/13 -	4176	
AURIS TOURING SPORTS (_E18_)	1.6 D4-D (WWE185_)	82	04/15 -		4037
AURIS TOURING SPORTS (_E18_)	1.6 D4-D (WWE185_)	82	04/15 -	4176	
AURIS TOURING SPORTS (_E18_)	1.8 Hybrid (ZWE186_)	73	07/13 -		4037
AURIS TOURING SPORTS (_E18_)	1.8 Hybrid (ZWE186_)	73	07/13 -	4176	
AURIS TOURING SPORTS (_E18_)	2.0 D-4D (ADE186_)	91	07/13 -		4037
AURIS TOURING SPORTS (_E18_)	2.0 D-4D (ADE186_)	91	07/13 -	4147	
AURIS VAN Box (_E18_)	1.4 D-4D (NDE180_)	66	03/13 -		4037
AURIS VAN Box (_E18_)	1.4 D-4D (NDE180_)	66	03/13 -	4176	
AVALON (_X1_) Sedán (Luxury car-F Segment)	3.0 (1MZ-FE)	140	03.95-05.05	4019	
AVALON Saloon (_X1_)	3.0 (MCX10_)	140	03/95 – 05/05		4098
AVALON Saloon (_X2_)	24	112	08/01 – 04/05	3822	
AVALON Saloon (_X2_)	24	112	08/01 – 04/05		4032
AVALON Saloon (_X2_)	30	137	08/01 – 04/05	3822	
AVALON Saloon (_X2_)	30	137	08/01 – 04/05		4032
AVALON Saloon (_X2_)	30	145	04/00 – 06/05		4032
AVALON Saloon (_X2_)	3.0	145	04/00 – 06/05	4003	
AVALON Saloon (_X3_)	3.5 (GSX30_)	206	01/05 – 09/12	4003	
AVALON Saloon (_X3_)	3.5 (GSX30_)	206	01/05 – 09/12		4032
AVANZA (F60_)	1.3 (F601)	65	09.02 - 10.11	3927	
AVANZA (F60_)	1.5 (F602)	80	09.06 - 12.11	3927	
AVENSIS (_T22_)	1.6 (AT220_)	74	09/97 – 10/00		3776
AVENSIS (_T22_)	1.6 (AT220_)	81	09/97 – 10/00		3776
AVENSIS (_T22_)	1.6 VVT-i (ZZT220_)	81	10/00 – 02/03		3776
AVENSIS (_T22_)	1.8 (AT221_)	81	09/97 – 10/00		3776
AVENSIS (_T22_)	1.8 VVT-i (ZZT221_)	95	10/00 – 02/03		3776
AVENSIS (_T22_)	2.0 (ST220_)	94	09/97 – 10/00		3776
AVENSIS (_T22_)	2.0 D (CT220_)	61	10/97 – 05/98		3776
AVENSIS (_T22_)	2.0 D-4D (CDT220_)	81	10/99 – 02/03		3776
AVENSIS (_T22_)	2.0 TD (CT220_)	66	09/97 – 02/03		3776
AVENSIS (_T22_)	2.0 VVT-i (AZT220_)	110	10/00 – 02/03		3776
AVENSIS (_T25_)	1.6 VVT-i (ZZT250_)	81	04/03 – 11/08	3890	
AVENSIS (_T25_)	1.6 VVT-i (ZZT250_)	81	04/03 – 11/08		4154
AVENSIS (_T25_)	1.8 (ZZT251_)	95	04/03 – 11/08	3890	
AVENSIS (_T25_)	1.8 (ZZT251_)	95	04/03 – 11/08		4154
AVENSIS (_T25_)	2.0 (AZT250_)	108	04/03 – 11/08	3890	
AVENSIS (_T25_)	2.0 (AZT250_)	108	04/03 – 11/08		4154
AVENSIS (_T25_)	2.0 D-4D (ADT250_)	93	03/06 – 11/08	3890	
AVENSIS (_T25_)	2.0 D-4D (ADT250_)	93	03/06 – 11/08		4154
AVENSIS (_T25_)	2.0 D-4D (CDT250_)	85	04/03 – 11/08	3890	
AVENSIS (_T25_)	2.0 D-4D (CDT250_)	85	04/03 – 11/08		4154
AVENSIS (_T25_)	2.2 D-4D (ADT251_)	110	10/05 – 11/08	3890	
AVENSIS (_T25_)	2.2 D-4D (ADT251_)	110	10/05 – 11/08		4154
AVENSIS (_T25_)	2.2 D-CAT (ADT251_)	130	07/05 – 11/08	3890	
AVENSIS (_T25_)	2.2 D-CAT (ADT251_)	130	07/05 – 11/08		4154
AVENSIS (_T25_)	2.2 TD	74	04/05 – 11/08	3890	
AVENSIS (_T25_)	2.2 TD	74	04/05 – 11/08		4154
AVENSIS (_T25_)	2.4 (AZT251_)	120	10/03 – 11/08	3890	
AVENSIS (_T25_)	2.4 (AZT251_)	120	10/03 – 11/08		4154
AVENSIS (_T25_)	2.4 (AZT251_)	125	09/03 – 11/08	3890	
AVENSIS (_T25_)	2.4 (AZT251_)	125	09/03 – 11/08		4154
AVENSIS Estate (_T25_)	1.6 VVT-i (ZZT250_)	81	04/03 – 11/08	3890	

MAKE & MODEL		KW	YEAR		
TOYOTA					
AVENSIS Estate (_T25_)	1.6 VVT-i (ZZT250_)	81	04/03 – 11/08		4154
AVENSIS Estate (_T25_)	1.8 (ZZT251_)	95	04/03 – 11/08	3890	
AVENSIS Estate (_T25_)	1.8 (ZZT251_)	95	04/03 – 11/08		4154
AVENSIS Estate (_T25_)	2.0 (AZT250_)	108	04/03 – 11/08	3890	
AVENSIS Estate (_T25_)	2.0 (AZT250_)	108	04/03 – 11/08		4154
AVENSIS Estate (_T25_)	2.0 D-4D (ADT250_)	93	03/06 – 11/08	3890	
AVENSIS Estate (_T25_)	2.0 D-4D (ADT250_)	93	03/06 – 11/08		4154
AVENSIS Estate (_T25_)	2.0 D-4D (CDT250_)	85	04/03 – 11/08	3890	
AVENSIS Estate (_T25_)	2.0 D-4D (CDT250_)	85	04/03 – 11/08		4154
AVENSIS Estate (_T25_)	2.0 VVTi (AZT250_)	114	04/03 – 11/08	3890	
AVENSIS Estate (_T25_)	2.0 VVTi (AZT250_)	114	04/03 – 11/08		4154
AVENSIS Estate (_T25_)	2.2 D-4D (ADT251_)	110	10/05 – 11/08	3890	
AVENSIS Estate (_T25_)	2.2 D-4D (ADT251_)	110	10/05 – 11/08		4154
AVENSIS Estate (_T25_)	2.2 D-CAT (ADT251_)	130	07/05 – 11/08	3890	
AVENSIS Estate (_T25_)	2.2 D-CAT (ADT251_)	130	07/05 – 11/08		4154
AVENSIS Estate (_T25_)	2.2 TD	74	04/05 – 11/08	3890	
AVENSIS Estate (_T25_)	2.2 TD	74	04/05 – 11/08		4154
AVENSIS Estate (_T25_)	2.4 (AZT251_)	120	10/03 – 11/08	3890	
AVENSIS Estate (_T25_)	2.4 (AZT251_)	120	10/03 – 11/08		4154
AVENSIS Estate (_T25_)	2.4 (AZT251_)	125	09/03 – 11/08	3890	
AVENSIS Estate (_T25_)	2.4 (AZT251_)	125	09/03 – 11/08		4154
AVENSIS Estate (_T27_)	1.6 (ZRT270_)	97	02/09 -		4146
AVENSIS Estate (_T27_)	1.6 (ZRT270_)	97	02/09 -	4147	
AVENSIS Estate (_T27_)	1.6 D4-D (WWT270_)	82	04/15 -		4146
AVENSIS Estate (_T27_)	1.6 D4-D (WWT270_)	82	04/15 -	4147	
AVENSIS Estate (_T27_)	1.8 (ZRT271_)	108	02/09 -		4146
AVENSIS Estate (_T27_)	1.8 (ZRT271_)	108	02/09 -	4147	
AVENSIS Estate (_T27_)	2.0 (ZRT272_)	112	02/09 -		4146
AVENSIS Estate (_T27_)	2.0 (ZRT272_)	112	02/09 -	4147	
AVENSIS Estate (_T27_)	2.0 D-4D (ADT270_)	91	11/11 -		4146
AVENSIS Estate (_T27_)	2.0 D-4D (ADT270_)	91	11/11 -	4147	
AVENSIS Estate (_T27_)	2.0 D-4D (ADT270_)	93	02/09 -		4146
AVENSIS Estate (_T27_)	2.0 D-4D (ADT270_)	93	02/09 -	4147	
AVENSIS Estate (_T27_)	2.0 D-4D (WWT271_)	105	04/15 -		4146
AVENSIS Estate (_T27_)	2.0 D-4D (WWT271_)	105	04/15 -	4147	
AVENSIS Estate (_T27_)	2.2 D-4D (ADT271_)	110	02/09 -		4146
AVENSIS Estate (_T27_)	2.2 D-4D (ADT271_)	130	02/09 -		4146
AVENSIS Liftback (_T22_)	1.6 (AT220_)	74	09/97 – 10/00		3776
AVENSIS Liftback (_T22_)	1.6 (AT220_)	81	09/97 – 10/00		3776
AVENSIS Liftback (_T22_)	1.6 (ZZT220_)	81	10/00 – 02/03		3776
AVENSIS Liftback (_T22_)	1.8 (AT221_)	81	09/97 – 10/00		3776
AVENSIS Liftback (_T22_)	1.8 (ZZT221_)	95	10/00 – 02/03		3776
AVENSIS Liftback (_T22_)	2.0 (AZT220_)	110	10/00 – 02/03		3776
AVENSIS Liftback (_T22_)	2.0 (ST220_)	94	09/97 – 10/00		3776
AVENSIS Liftback (_T22_)	2.0 D-4D (CDT220_)	81	10/99 – 02/03		3776
AVENSIS Liftback (_T22_)	2.0 TD (CT220_)	66	09/97 – 02/03		3776
AVENSIS Saloon (_T25_)	1.6 VVT-i (ZZT250_)	81	04/03 – 11/08	3890	
AVENSIS Saloon (_T25_)	1.6 VVT-i (ZZT250_)	81	04/03 – 11/08		4154
AVENSIS Saloon (_T25_)	1.8 (ZZT251_)	95	04/03 – 11/08	3890	
AVENSIS Saloon (_T25_)	1.8 (ZZT251_)	95	04/03 – 11/08		4154
AVENSIS Saloon (_T25_)	2.0 (AZT250_)	108	04/03 – 11/08	3890	
AVENSIS Saloon (_T25_)	2.0 (AZT250_)	108	04/03 – 11/08		4154
AVENSIS Saloon (_T25_)	2.0 D-4D (ADT250_)	93	03/06 – 11/08	3890	
AVENSIS Saloon (_T25_)	2.0 D-4D (ADT250_)	93	03/06 – 11/08		4154
AVENSIS Saloon (_T25_)	2.0 D-4D (CDT250_)	85	04/03 – 11/08	3890	
AVENSIS Saloon (_T25_)	2.0 D-4D (CDT250_)	85	04/03 – 11/08		4154
AVENSIS Saloon (_T25_)	2.0 VVTi (AZT250_)	114	04/03 – 11/08	3890	
AVENSIS Saloon (_T25_)	2.0 VVTi (AZT250_)	114	04/03 – 11/08		4154
AVENSIS Saloon (_T25_)	2.2 D-4D (ADT251_)	110	10/05 – 11/08	3890	
AVENSIS Saloon (_T25_)	2.2 D-4D (ADT251_)	110	10/05 – 11/08		4154
AVENSIS Saloon (_T25_)	2.2 D-CAT (ADT251_)	130	07/05 – 11/08	3890	
AVENSIS Saloon (_T25_)	2.2 D-CAT (ADT251_)	130	07/05 – 11/08		4154
AVENSIS Saloon (_T25_)	2.2 TD	74	04/05 – 11/08	3890	
AVENSIS Saloon (_T25_)	2.2 TD	74	04/05 – 11/08		4154
AVENSIS Saloon (_T25_)	2.4 (AZT251_)	120	10/03 – 11/08	3890	
AVENSIS Saloon (_T25_)	2.4 (AZT251_)	120	10/03 – 11/08		4154
AVENSIS Saloon (_T25_)	2.4 (AZT251_)	125	09/03 – 11/08	3890	
AVENSIS Saloon (_T25_)	2.4 (AZT251_)	125	09/03 – 11/08		4154
AVENSIS Saloon (_T27_)	1.6 (ZRT270_)	97	11/08 -		4146
AVENSIS Saloon (_T27_)	1.6 (ZRT270_)	97	11/08 -	4147	
AVENSIS Saloon (_T27_)	1.6 D4-D (WWT270_)	82	04/15 -		4146

MAKE & MODEL   		KW	YEAR		
TOYOTA					
AVENSIS Saloon (_T27_)	1.6 D4-D (WWT270_)	82	04/15 -	4147	
AVENSIS Saloon (_T27_)	1.8 (ZRT271_)	108	11/08 -		4146
AVENSIS Saloon (_T27_)	1.8 (ZRT271_)	108	11/08 -	4147	
AVENSIS Saloon (_T27_)	2.0 (ZRT272_)	112	11/08 -		4146
AVENSIS Saloon (_T27_)	2.0 (ZRT272_)	112	11/08 -	4147	
AVENSIS Saloon (_T27_)	2.0 D-4D (ADT270_)	91	11/11 -		4146
AVENSIS Saloon (_T27_)	2.0 D-4D (ADT270_)	91	11/11 -	4147	
AVENSIS Saloon (_T27_)	2.0 D-4D (ADT270_)	93	11/08 -		4146
AVENSIS Saloon (_T27_)	2.0 D-4D (ADT270_)	93	11/08 -	4147	
AVENSIS Saloon (_T27_)	2.0 D-4D (WWT271_)	105	04/15 -		4146
AVENSIS Saloon (_T27_)	2.2 D-4D (ADT271_)	110	11/08 -		4146
AVENSIS Saloon (_T27_)	2.2 D-4D (ADT271_)	130	11/08 -		4146
AVENSIS Station Wagon (_T22_)	1.6 (AT220_)	74	09/97 – 10/00		3776
AVENSIS Station Wagon (_T22_)	1.6 (AT220_, ZZT220_)	81	09/97 – 10/00		3776
AVENSIS Station Wagon (_T22_)	1.6 (ZZT250_)	81	10/00 – 02/03		3776
AVENSIS Station Wagon (_T22_)	1.8 (AT221_)	81	09/97 – 10/00		3776
AVENSIS Station Wagon (_T22_)	1.8 (ZZT221_)	95	10/00 – 02/03		3776
AVENSIS Station Wagon (_T22_)	2.0 (AZT220_)	110	10/00 – 02/03		3776
AVENSIS Station Wagon (_T22_)	2.0 (ST220_)	94	09/97 – 10/00		3776
AVENSIS Station Wagon (_T22_)	2.0 D (CT220_)	61	10/97 – 05/98		3776
AVENSIS Station Wagon (_T22_)	2.0 D-4D (CDT220_)	81	10/99 – 02/03		3776
AVENSIS Station Wagon (_T22_)	2.0 TD (CT220_)	66	09/97 – 02/03		3776
AVENSIS VERSO (_M2_)	2.0 D-4D (CLM20_)	85	08/01 – 08/05	4013	
AVENSIS VERSO (_M2_)	2.0 VVT-i (ACM20_)	110	08/01 – 11/09	4013	
AVENSIS VERSO (_M2_)	2.4 VVTi 4WD (ACM21_)	115	11/03 – 08/06	4013	
AVENSIS VERSO (_M2_)	2.4 VVTi GLS (ACM21)	115	10/03 – 11/09	4013	
AYGO (_B1_)	1.0 (KGB10_)	50	07/05 -	3987	
AYGO (_B1_)	1.0 GPL (KGB10_)	50	07/05 -	3987	
AYGO (_B1_)	1.4 HDi (WNB10_)	40	07/05 – 08/10	3987	
AYGO (_B4_)	1.0 (KGB40_)	51	05/14 -	3987	
AYGO (_B4_)	1.2 (PAB40_)	60	05/14 -	3987	
bB II (QNC2_)	13	68	12/05 -	3928	
bB II (QNC2_)	15	80	12/05 -	3928	
bB II (QNC2_)	1.3 4WD	68	12/05 -	3928	
BREVIS (JCG1_)	30	162	10/99 – 06/07		4085
BREVIS (JCG1_)	2.5 4WD	147	10/99 – 09/02		4085
CAMRY (_CV1_, _XV1_, _V1_)	22	93	02/93 – 04/95	3554	
CAMRY (_CV1_, _XV1_, _V1_)	22	93	02/93 – 04/95	3651	
CAMRY (_CV1_, _XV1_, _V1_)	2.2 (SXV10_)	100	06/91 – 08/96	3554	
CAMRY (_CV1_, _XV1_, _V1_)	2.2 (SXV10_)	100	06/91 – 08/96	3651	
CAMRY (_V1_)	22	93	02/93 – 04/95		3776
CAMRY (_V1_)	22	93	02/93 – 04/95	4086	
CAMRY (_V1_)	30	135	09/93 – 07/96		3776
CAMRY (_V1_)	30	135	09/93 – 07/96	4086	
CAMRY (_V1_)	30	136	02/93 – 09/95		3776
CAMRY (_V1_)	30	136	02/93 – 09/95	4086	
CAMRY (_V1_)	2.2 (SXV10_)	100	06/91 – 08/96		3776
CAMRY (_V1_)	2.2 (SXV10_)	100	06/91 – 08/96	4086	
CAMRY (_V1_)	3.0 (VCV10_)	138	06/91 – 08/96		3776
CAMRY (_V1_)	3.0 (VCV10_)	138	06/91 – 08/96	4086	
CAMRY (_V2_)	1.8 i (SV20_)	66	10/86 – 08/88		3776
CAMRY (_V2_)	2.0 (SV21_)	94	11/86 – 05/91		3776
CAMRY (_V2_)	2.0 Gli 16V (SV21_)	89	11/86 – 05/91		3776
CAMRY (_V2_)	2.2 (SXV20_)	93	11/00 – 11/01		3776
CAMRY (_V2_)	2.2 (SXV20_)	93	11/00 – 11/01	3822	
CAMRY (_V2_)	2.2 (SXV20_)	93	11/00 – 11/01		3876
CAMRY (_V2_)	2.2 (SXV20_)	93	11/00 – 11/01	4086	
CAMRY (_V2_)	2.2 (SXV20_)	96	08/96 – 11/01		3776
CAMRY (_V2_)	2.2 (SXV20_)	96	08/96 – 11/01	3822	
CAMRY (_V2_)	2.2 (SXV20_)	96	08/96 – 11/01		3876
CAMRY (_V2_)	2.2 (SXV20_)	96	08/96 – 11/01	4086	
CAMRY (_V2_)	3.0 (VDV10)	140	08/96 – 07/01		3776
CAMRY (_V2_)	3.0 (VDV10)	140	08/96 – 07/01	3822	
CAMRY (_V2_)	3.0 (VDV10)	140	08/96 – 07/01		3876
CAMRY (_V2_)	3.0 (VDV10)	140	08/96 – 07/01	4086	
CAMRY (_V2_)	3.0 24V (MCV20_)	140	08/96 – 11/01		3776
CAMRY (_V2_)	3.0 24V (MCV20_)	140	08/96 – 11/01	3822	
CAMRY (_V2_)	3.0 24V (MCV20_)	140	08/96 – 11/01		3876
CAMRY (_V2_)	3.0 24V (MCV20_)	140	08/96 – 11/01	4086	
CAMRY (_V2_)	3.0 V6 (MCV20_)	135	08/96 – 11/01		3776
CAMRY (_V2_)	3.0 V6 (MCV20_)	135	08/96 – 11/01	3822	

MAKE & MODEL		KW	YEAR		
TOYOTA					
CAMRY (_V2_)	3.0 V6 (MCV20_)	135	08/96 – 11/01		3876
CAMRY (_V2_)	3.0 V6 (MCV20_)	135	08/96 – 11/01	4086	
CAMRY (_V3_) Sedán (Executive car-E Segment)	2.0 (ACV51_) (1AZ-FE)	109	09.11-	4019	
CAMRY (_V3_) Sedán (Executive car-E Segment)	2.4 (ACV30_, ACV36) (2AZ-FE)	112	11.01-11.06	4019	
CAMRY (_V3_) Sedán (Executive car-E Segment)	2.4 (ACV40) (2AZ-FE)	116	01.06-09.11	4019	
CAMRY (_V3_) Sedán (Executive car-E Segment)	2.4 (ACV40_)	127	01.06-09.11	4019	
CAMRY (_V3_) Sedán (Executive car-E Segment)	2.4 (ACV40_) (2AZ-FE)	123	01.06-09.11	4019	
CAMRY (_V3_) Sedán (Executive car-E Segment)	2.5 (ASV50_)	135	01.12-	4019	
CAMRY (_V3_) Sedán (Executive car-E Segment)	2.5 (ASV50_) (2AR-FE)	133	09.11-	4019	
CAMRY (_V3_) Sedán (Executive car-E Segment)	2.5 Hybrid (AVV50_) (2AR-FXE)	118	09.11-	4019	
CAMRY (_V3_) Sedán (Executive car-E Segment)	2.5 Hybrid (AVV50_) (2JM)	118	09.11-	4019	
CAMRY (_V3_) Sedán (Executive car-E Segment)	3.0 (1MZ-FE)	141	09.02-11.06	4019	
CAMRY (_V3_) Sedán (Executive car-E Segment)	3.5 (GSV50_) (2GR-FE)	204	09.11-	4019	
CAMRY (ACV4_)	200 (ACV41_)	108	06/06 – 12/15	3948	
CAMRY (ACV4_)	200 (ACV41_)	108	06/06 – 12/15		3949
CAMRY (ACV4_)	240 (ACV40_)	123	06/06 – 12/11	3948	
CAMRY (ACV4_)	240 (ACV40_)	123	06/06 – 12/11		3949
CAMRY (ACV4_)	240 H (ACV40_)	110	04/10 -	3948	
CAMRY (ACV4_)	240 H (ACV40_)	110	04/10 -		3949
CAMRY (AVV5_, XV5_)	2.0 (1AZ-FE)	109	09/11 -		4202
CAMRY (AVV5_, XV5_)	2.5 (ASV50)	135	01/12 -		4202
CAMRY (AVV5_, XV5_)	2.5 (ASV50) (2AR-FE)	133	09/11 -		4202
CAMRY (AVV5_, XV5_)	2.5 Hybrid (2AR-FXE)	118	09/11 -		4202
CAMRY (AVV5_, XV5_)	2.5 Hybrid (2JM)	118	09/11 -		4202
CAMRY (AVV5_, XV5_)	3.5 (2GR-FE)	204	09/11 -		4202
CAMRY Liftback (CV1_, SV1_)	1.8 (SV10_)	66	02/83 – 10/86	3402	
CAMRY Liftback (CV1_, SV1_)	1.8 (SV10_)	66	02/83 – 10/86	3472	
CAMRY Liftback (CV1_, SV1_)	1.8 Turbo-D (CV10_)	54	10/84 – 01/88	3402	
CAMRY Liftback (CV1_, SV1_)	1.8 Turbo-D (CV10_)	54	10/84 – 01/88	3472	
CAMRY Liftback (CV1_, SV1_)	2.0 (SV11_)	73	04/86 – 01/88	3402	
CAMRY Liftback (CV1_, SV1_)	2.0 (SV11_)	73	04/86 – 01/88	3472	
CAMRY Saloon (_V3_)	20	110	08/01 – 11/06	3910	
CAMRY Saloon (_V3_)	20	110	08/01 – 11/06		3911
CAMRY Saloon (_V3_)	20	110	08/01 – 11/06	3948	
CAMRY Saloon (_V3_)	30	141	09/02 – 11/06	3910	
CAMRY Saloon (_V3_)	30	141	09/02 – 11/06		3911
CAMRY Saloon (_V3_)	30	141	09/02 – 11/06	3948	
CAMRY Saloon (_V3_)	35	197	01/06 – 11/06	3948	
CAMRY Saloon (_V3_)	35	197	01/06 – 11/06		3949
CAMRY Saloon (_V3_)	2.0	110	08/01 – 11/06	4003	
CAMRY Saloon (_V3_)	2.4 (ACV30_)	112	11/01 – 11/06		3776
CAMRY Saloon (_V3_)	2.4 (ACV30_)	112	11/01 – 11/06	3910	
CAMRY Saloon (_V3_)	2.4 (ACV30_)	112	11/01 – 11/06		3911
CAMRY Saloon (_V3_)	2.4 (ACV30_)	112	11/01 – 11/06	3948	
CAMRY Saloon (_V3_)	2.4 (ACV30_)	112	11/01 - 11/06	4003	
CAMRY Saloon (_V3_)	2.4 Hybrid	105	01/06 – 11/06	3948	
CAMRY Saloon (_V3_)	2.4 Hybrid	105	01/06 – 11/06		3949
CAMRY Saloon (_V3_)	3.0	141	09/02 – 11/06	4003	
CAMRY Saloon (_V3_)	3.0 (MCV30_)	137	08/01 – 11/06		3776
CAMRY Saloon (_V3_)	3.0 (MCV30_)	137	08/01 – 11/06	3910	
CAMRY Saloon (_V3_)	3.0 (MCV30_)	137	08/01 – 11/06		3911
CAMRY Saloon (_V3_)	3.0 (MCV30_)	137	08/01 – 11/06	3948	
CAMRY Saloon (_V3_)	3.0 (MCV30_)	137	08/01 – 11/06	4003	
CAMRY Saloon (_V3_)	3.3 (MCV31_)	165	07/03 – 01/06	3910	
CAMRY Saloon (_V3_)	3.3 (MCV31_)	165	07/03 – 01/06		3911
CAMRY Saloon (_V3_)	3.3 (MCV31_)	165	07/03 – 01/06	4003	
CAMRY Saloon (_V4_)	20	108	01/06 – 09/11	3948	
CAMRY Saloon (_V4_)	20	108	01/06 – 09/11		3949
CAMRY Saloon (_V4_)	24	127	10/06 – 09/11	3948	
CAMRY Saloon (_V4_)	24	127	10/06 – 09/11		3949
CAMRY Saloon (_V4_)	25	129	01/10 – 09/11	3948	
CAMRY Saloon (_V4_)	25	129	01/10 – 09/11		3949
CAMRY Saloon (_V4_)	2.4 (ACV40)	116	01/06 – 09/11	3948	
CAMRY Saloon (_V4_)	2.4 (ACV40)	116	01/06 – 09/11		3949
CAMRY Saloon (_V4_)	2.4 (ACV40_)	123	01/06 – 09/11	3948	
CAMRY Saloon (_V4_)	2.4 (ACV40_)	123	01/06 – 09/11		3949
CAMRY Saloon (_V4_)	2.4 Hybrid	105	01/06 – 09/11	3948	
CAMRY Saloon (_V4_)	2.4 Hybrid	105	01/06 – 09/11		3949
CAMRY Saloon (_V4_)	2.4 Hybrid	110	01/06 – 09/11	3948	
CAMRY Saloon (_V4_)	2.4 Hybrid	110	01/06 – 09/11		3949
CAMRY Saloon (_V4_)	3.5 (GSV40_)	204	01/08 – 09/11	3948	

BESER

MAKE & MODEL		KW	YEAR		
TOYOTA					
CAMRY Saloon (_V4_)	3.5 (GSV40_)	204	01/08 – 09/11		3949
CAMRY Saloon (_V5_)	2.0 (ACV51_)	109	09/11 -	3948	
CAMRY Saloon (_V5_)	2.0 (ACV51_)	109	09/11 -		3949
CAMRY Saloon (_V5_)	2.5 (ASV50_)	133	09/11 -	3948	
CAMRY Saloon (_V5_)	2.5 (ASV50_)	133	09/11 -		3949
CAMRY Saloon (_V5_)	2.5 Hybrid (AVV50_)	115	09/11 -	3948	
CAMRY Saloon (_V5_)	2.5 Hybrid (AVV50_)	115	09/11 -		3949
CAMRY Saloon (_V5_)	2.5 Hybrid (AVV50_)	118	09/11 -	3948	
CAMRY Saloon (_V5_)	2.5 Hybrid (AVV50_)	118	09/11 -		3949
CAMRY Saloon (_V5_)	3.5 (GSV50_)	183	12/12 -	3948	
CAMRY Saloon (_V5_)	3.5 (GSV50_)	183	12/12 -		3949
CAMRY Saloon (_V5_)	3.5 (GSV50_)	204	09/11 -	3948	
CAMRY Saloon (_V5_)	3.5 (GSV50_)	204	09/11 -		3949
CAMRY Saloon (CV1_, SV1_)	18	66	02/83 – 10/86	3402	
CAMRY Saloon (CV1_, SV1_)	18	66	02/83 – 10/86	3472	
CAMRY Saloon (CV1_, SV1_)	1.8 Turbo-D (CV10_)	54	11/83 – 01/88	3402	
CAMRY Saloon (CV1_, SV1_)	1.8 Turbo-D (CV10_)	54	11/83 – 01/88	3472	
CAMRY Saloon (CV1_, SV1_)	2.0 (SV11_)	73	04/86 – 01/88	3402	
CAMRY Saloon (CV1_, SV1_)	2.0 (SV11_)	73	04/86 – 01/88	3472	
CAMRY Saloon (CV1_, SV1_)	2.0 GLI (SV11_)	79	03/83 – 10/86	3402	
CAMRY Saloon (CV1_, SV1_)	2.0 GLI (SV11_)	79	03/83 – 10/86	3472	
CAMRY Station Wagon (_V1_)	2.2 (SXV10, SDV10)	93	02/93 – 04/95		3776
CAMRY Station Wagon (_V1_)	2.2 (SXV10_)	100	03/92 – 07/96		3776
CAMRY Station Wagon (_V1_)	2.2 (SXV10_)	100	03/92 – 07/96	4086	
CAMRY Station Wagon (_V1_)	3.0 (VCV10_)	138	03/92 – 07/96		3776
CAMRY Station Wagon (_V1_)	3.0 (VCV10_)	138	03/92 – 07/96	4086	
CAMRY Station Wagon (_XV1_, _CV1_, _V10)	2.2 (SXV10, SDV10)	93	02/93 – 04/95	3554	
CAMRY Station Wagon (_XV1_, _CV1_, _V10)	2.2 (SXV10, SDV10)	93	02/93 – 04/95	3651	
CAMRY Station Wagon (_XV1_, _CV1_, _V10)	2.2 (SXV10_)	100	03/92 – 07/96	3554	
CAMRY Station Wagon (_XV1_, _CV1_, _V10)	2.2 (SXV10_)	100	03/92 – 07/96	3651	
CARINA II-III (TA4K, TA6K	1.6 (2T)	54	03.81 – 01.82	3336	
CARINA II-III (TA4K, TA6K	1.6 (2T)	55	04.78 – 09.83	3336	
CARINA II-III (TA4K, TA6K	1.8 (3T-C)	57	08.82 – 12.82	3336	
CARINA II-III (TA4K, TA6K)	1.6 (2T)	54	03/81 – 01/82	3314	
CARINA II-III (TA4K, TA6K)	1.6 (2T)	55	04/78 – 09/83	3314	
CARINA II-III (TA4K, TA6K)	1.8 (3T-C)	57	08/82 – 12/82	3314	
CARINA II-III (TA4L, TA6_L)	1.6 (2T)	55	01/78 – 09/83	3314	
CARINA II-III (TA4L, TA6_L)	1.6 (2T)	55	01.78 – 09.83	3336	
CARINA II-III (TA4L, TA6_L)	1.8 (3T)	57	01/78 – 05/83	3314	
CARINA II-III (TA4L, TA6_L)	1.8 (3T)	57	01.78 – 05.83	3336	
CARINA II-III (TA4L, TA6_L)	1.8 (3T-C)	57	01/78 – 05/83	3314	
CARINA II-III (TA4L, TA6_L)	1.8 (3T-C)	57	01.78 – 05.83	3336	
CARINA (TA1_)	1.6 (2T)	55	02/76 – 03/78	3314	
CARINA (TA1_)	1.6 (2T)	55	02.76 – 03.78	3336	
CARINA (TA1_)	1.6 (2T)	58	05/73 – 03/78	3314	
CARINA (TA1_)	1.6 (2T)	58	05.73 – 03.78	3336	
CARINA (TA1_)	1.6 (2TB)	63	10/75 – 03/78	3314	
CARINA (TA1_)	1.6 (2TB)	63	10.75 – 03.78	3336	
CARINA (TA4L, TA6_L)	1.8 (TA62_)	57	01/78 – 05/83	3579	
CARINA (TA4L, TA6_L)	1.8 (TA62_)	63	01/82 – 09/83	3579	
CARINA E (_T19_)	2.0 GTi (ST191)	116	04/92 – 02/94		3776
CARINA E (_T19_)	2.0 GTi 16V (ST191_)	129	03/94 – 09/97		3776
CARINA E (AT19_)	1.6 (AT190)	73	12/93 – 09/97	3554	
CARINA E (AT19_)	1.6 (AT190)	73	12/93 – 09/97	3651	
CARINA E (AT19_)	1.6 (AT190)	85	12/93 – 09/97	3554	
CARINA E (AT19_)	1.6 (AT190)	85	12/93 – 09/97	3651	
CARINA E (AT19_)	1.6 16V (AT190_)	78	10/95 – 09/97	3554	
CARINA E (AT19_)	1.6 16V (AT190_)	78	10/95 – 09/97	3651	
CARINA E (AT19_)	1.6 GLI (AT190)	79	04/92 – 09/97	3554	
CARINA E (AT19_)	1.6 GLI (AT190)	79	04/92 – 09/97	3651	
CARINA E (AT19_)	1.8 (AT191)	79	01/95 – 09/97	3554	
CARINA E (AT19_)	1.8 (AT191)	79	01/95 – 09/97	3651	
CARINA E (AT19_)	2.0 D (CT190)	54	04/92 – 01/96	3554	
CARINA E (AT19_)	2.0 D (CT190)	54	04/92 – 01/96	3651	
CARINA E (AT19_)	2.0 GLI (ST191)	98	04/92 – 09/97	3554	
CARINA E (AT19_)	2.0 GLI (ST191)	98	04/92 – 09/97	3651	
CARINA E (AT19_)	2.0 i (ST191)	93	12/93 – 09/97	3554	
CARINA E (AT19_)	2.0 i (ST191)	93	12/93 – 09/97	3651	
CARINA E (AT19_)	2.0 TD (CT190)	61	01/96 – 09/97	3554	
CARINA E (AT19_)	2.0 TD (CT190)	61	01/96 – 09/97	3651	
CARINA E Saloon (_T19_)	1.6 (AT190)	73	01/95 – 09/97	3554	

BEŞER

MAKE & MODEL		KW	YEAR		
TOYOTA					
CARINA E Saloon (_T19_)	1.6 (AT190)	73	01/95 – 09/97	3651	
CARINA E Saloon (_T19_)	1.6 (AT190)	78	10/95 – 09/97	3554	
CARINA E Saloon (_T19_)	1.6 (AT190)	78	10/95 – 09/97	3651	
CARINA E Saloon (_T19_)	1.6 (AT190)	79	01/93 – 09/97	3554	
CARINA E Saloon (_T19_)	1.6 (AT190)	79	01/93 – 09/97	3651	
CARINA E Saloon (_T19_)	1.6 16V (AT190_)	85	12/94 – 09/97	3554	
CARINA E Saloon (_T19_)	1.6 16V (AT190_)	85	12/94 – 09/97	3651	
CARINA E Saloon (_T19_)	1.8 i 16V (AT191)	79	01/95 – 09/97	3554	
CARINA E Saloon (_T19_)	1.8 i 16V (AT191)	79	01/95 – 09/97	3651	
CARINA E Saloon (_T19_)	2.0 (ST191)	98	01/93 – 09/97	3554	
CARINA E Saloon (_T19_)	2.0 (ST191)	98	01/93 – 09/97	3651	
CARINA E Saloon (_T19_)	2.0 D (CT190)	54	08/92 – 01/96	3554	
CARINA E Saloon (_T19_)	2.0 D (CT190)	54	08/92 – 01/96	3651	
CARINA E Saloon (_T19_)	2.0 GTi (ST191_)	116	04/92 – 02/94		3776
CARINA E Saloon (_T19_)	2.0 GTi 16V (ST191_)	129	03/94 – 09/97		3776
CARINA E Saloon (_T19_)	2.0 i (ST191)	93	12/92 – 09/97	3554	
CARINA E Saloon (_T19_)	2.0 i (ST191)	93	12/92 – 09/97	3651	
CARINA E Saloon (_T19_)	2.0 TD (CT190_)	61	01/96 – 09/97	3554	
CARINA E Saloon (_T19_)	2.0 TD (CT190_)	61	01/96 – 09/97	3651	
CARINA E Sportswagon (_T19_)	16	85	04/92 – 09/97	3554	
CARINA E Sportswagon (_T19_)	16	85	04/92 – 09/97	3651	
CARINA E Sportswagon (_T19_)	1.6 GLI (AT190_)	79	01/93 – 09/97	3554	
CARINA E Sportswagon (_T19_)	1.6 GLI (AT190_)	79	01/93 – 09/97	3651	
CARINA E Sportswagon (_T19_)	1.6 i (AT190_)	73	02/95 – 09/97	3554	
CARINA E Sportswagon (_T19_)	1.6 i (AT190_)	73	02/95 – 09/97	3651	
CARINA E Sportswagon (_T19_)	1.8 GL	92	10/94 – 09/97	3554	
CARINA E Sportswagon (_T19_)	1.8 GL	92	10/94 – 09/97	3651	
CARINA E Sportswagon (_T19_)	1.8 i (AT191_)	79	02/95 – 09/97	3554	
CARINA E Sportswagon (_T19_)	1.8 i (AT191_)	79	02/95 – 09/97	3651	
CARINA E Sportswagon (_T19_)	2.0 D (CT190_)	54	01/93 – 01/96	3554	
CARINA E Sportswagon (_T19_)	2.0 D (CT190_)	54	01/93 – 01/96	3651	
CARINA E Sportswagon (_T19_)	2.0 GLI (ST191_)	98	01/93 – 09/97	3554	
CARINA E Sportswagon (_T19_)	2.0 GLI (ST191_)	98	01/93 – 09/97	3651	
CARINA E Sportswagon (_T19_)	2.0 i (ST191_)	93	05/95 – 09/97	3554	
CARINA E Sportswagon (_T19_)	2.0 i (ST191_)	93	05/95 – 09/97	3651	
CARINA E Sportswagon (_T19_)	2.0 TD (CT190_)	61	01/96 – 09/97	3554	
CARINA E Sportswagon (_T19_)	2.0 TD (CT190_)	61	01/96 – 09/97	3651	
CARINA II (_T17_)	1.6 (AT171_)	66	12/87 – 11/89	3402	
CARINA II (_T17_)	1.6 (AT171_)	66	12/87 – 11/89	3472	
CARINA II (_T17_)	1.6 (AT171_)	72	12/87 – 03/92	3402	
CARINA II (_T17_)	1.6 (AT171_)	72	12/87 – 03/92	3472	
CARINA II (_T17_)	1.6 (AT171_)	75	12/87 – 03/92	3402	
CARINA II (_T17_)	1.6 (AT171_)	75	12/87 – 03/92	3472	
CARINA II (_T17_)	2.0 D (CT170_)	54	03/88 – 06/92	3402	
CARINA II (_T17_)	2.0 D (CT170_)	54	03/88 – 06/92	3472	
CARINA II (_T17_)	2.0 GLI (ST171)	89	12/87 – 03/92	3402	
CARINA II (_T17_)	2.0 GLI (ST171)	89	12/87 – 03/92	3472	
CARINA II (_T17_)	2.0 GLI (ST171)	89	12/87 – 03/92		3776
CARINA II (ST151_, ST150_, AT151_)	1.6 (AT151_)	55	10/83 – 11/87	3402	
CARINA II (ST151_, ST150_, AT151_)	1.6 (AT151_)	55	10/83 – 11/87	3472	
CARINA II (ST151_, ST150_, AT151_)	1.6 (AT151_)	62	10/83 – 11/87	3402	
CARINA II (ST151_, ST150_, AT151_)	1.6 (AT151_)	62	10/83 – 11/87	3472	
CARINA II (ST151_, ST150_, AT151_)	1.6 (AT151_)	63	10/86 – 11/87	3402	
CARINA II (ST151_, ST150_, AT151_)	1.6 (AT151_)	63	10/86 – 11/87	3472	
CARINA II (ST151_, ST150_, AT151_)	1.8 GLI (ST150)	74	10/83 – 11/87	3402	
CARINA II (ST151_, ST150_, AT151_)	1.8 GLI (ST150)	74	10/83 – 11/87	3472	
CARINA II (ST151_, ST150_, AT151_)	2.0 D (CT150)	51	12/85 – 11/87	3402	
CARINA II (ST151_, ST150_, AT151_)	2.0 D (CT150)	51	12/85 – 11/87	3472	
CARINA II (ST151_, ST150_, AT151_)	2.0 D (CT150_)	50	02/84 – 05/88	3402	
CARINA II (ST151_, ST150_, AT151_)	2.0 D (CT150_)	50	02/84 – 05/88	3472	
CARINA II Saloon (_T17_)	2.0 GLI (ST171)	89	12/87 – 03/92		3776
CARINA II Saloon (CT15_)	1.6 (AT151_)	55	10/83 – 11/87	3402	
CARINA II Saloon (CT15_)	1.6 (AT151_)	55	10/83 – 11/87	3472	
CARINA II Saloon (CT15_)	1.6 (AT151_)	62	10/83 – 11/87	3402	
CARINA II Saloon (CT15_)	1.6 (AT151_)	62	10/83 – 11/87	3472	
CARINA II Saloon (CT15_)	1.8 GLI (ST150)	74	10/83 – 11/87	3402	
CARINA II Saloon (CT15_)	1.8 GLI (ST150)	74	10/83 – 11/87	3472	
CARINA II Saloon (CT15_)	2.0 D (CT150_)	50	02/84 – 05/88	3402	
CARINA II Saloon (CT15_)	2.0 D (CT150_)	50	02/84 – 05/88	3472	
CARINA II Saloon (ST17_, AT17, CT17_)	1.6 (AT171_)	66	12/87 – 08/90	3402	
CARINA II Saloon (ST17_, AT17, CT17_)	1.6 (AT171_)	66	12/87 – 08/90	3472	

MAKE & MODEL		KW	YEAR		
TOYOTA					
CARINA II Saloon (ST17_, AT17, CT17_)	1.6 (AT171_)	72	12/87 – 03/92	3402	
CARINA II Saloon (ST17_, AT17, CT17_)	1.6 (AT171_)	72	12/87 – 03/92	3472	
CARINA II Saloon (ST17_, AT17, CT17_)	1.6 (AT171_)	75	12/87 – 03/92	3402	
CARINA II Saloon (ST17_, AT17, CT17_)	1.6 (AT171_)	75	12/87 – 03/92	3472	
CARINA II Saloon (ST17_, AT17, CT17_)	2.0 D (CT170_)	54	03/88 – 06/92	3402	
CARINA II Saloon (ST17_, AT17, CT17_)	2.0 D (CT170_)	54	03/88 – 06/92	3472	
CARINA II Saloon (ST17_, AT17, CT17_)	2.0 GLI (ST171)	89	12/87 – 03/92	3402	
CARINA II Saloon (ST17_, AT17, CT17_)	2.0 GLI (ST171)	89	12/87 – 03/92	3472	
CARINA II Station Wagon (_T17_)	2.0 (ST171_)	89	12/87 – 04/92		3776
CARINA II Station Wagon (AT17_, CT17_, ST17_)	1.6 (AT171_)	66	12/87 – 12/89	3402	
CARINA II Station Wagon (AT17_, CT17_, ST17_)	1.6 (AT171_)	66	12/87 – 12/89	3472	
CARINA II Station Wagon (AT17_, CT17_, ST17_)	1.6 (AT171_)	72	12/87 – 03/92	3402	
CARINA II Station Wagon (AT17_, CT17_, ST17_)	1.6 (AT171_)	72	12/87 – 03/92	3472	
CARINA II Station Wagon (AT17_, CT17_, ST17_)	1.6 (AT171_)	75	12/87 – 03/92	3402	
CARINA II Station Wagon (AT17_, CT17_, ST17_)	1.6 (AT171_)	75	12/87 – 03/92	3472	
CARINA II Station Wagon (AT17_, CT17_, ST17_)	2.0 (ST171_)	89	12/87 – 04/92	3402	
CARINA II Station Wagon (AT17_, CT17_, ST17_)	2.0 (ST171_)	89	12/87 – 04/92	3472	
CARINA II Station Wagon (AT17_, CT17_, ST17_)	2.0 D (CT170_)	54	12/87 – 01/92	3402	
CARINA II Station Wagon (AT17_, CT17_, ST17_)	2.0 D (CT170_)	54	12/87 – 01/92	3472	
CARINA Station Wagon (CA6_, TA6_)	1.8 (TA62_)	57	08/82 – 12/82	3579	
CELICA II (RA4_, TA4_)	1.6 GT (TA4C) (2T-G)	80	04/78 – 07/81	3376	
CELICA II (RA4_, TA4_)	1.6 GT (TA4C) (2T-G)	81	04/80 – 07/81	3376	
CELICA II (RA4_, TA4_)	1.6 LT (TA4C) (2TB)	55	02/79 – 07/81	3376	
CELICA II (RA4_, TA4_)	1.6 ST (TA4C, TA60) (2TB)	63	08/77 – 07/81	3376	
CELICA II (RA4_, TA4_)	1.6 ST (TA4C, TA60) (4A-L)	63	08/77 – 07/81	3376	
CELICA II (RA4_, TA4_)	1.6 ST (TA60) (2T)	66	02/79 – 07/81	3376	
CELICA II (TA60, RA40, RA6_)	1.6 ST (TA60) (2TB)	63	08/77 – 07/81	3376	
CELICA II (TA60, RA40, RA6_)	2.0 XT (RA40) (18R)	65	01/80 – 07/81	3376	
CELICA II (TA60, RA40, RA6_)	2.0 XT (RA40) (18R)	66	02/79 – 07/81	3376	
CELICA (_T16_)	2.0 (ST162_)	110	01/87 – 08/89		3776
CELICA (_T20_)	2.0 i 16V (ST202/GT)	129	11/93 – 11/99	4086	
CELICA (_T20_)	2.0 i 16V (ST202_)	125	04/96 – 11/99	4086	
CELICA (_T23_)	1.8 16V TS (ZZT231_)	141	08/99 – 09/05		3788
CELICA (_T23_)	1.8 16V VT-i (ZZT230_)	105	08/99 – 07/05		3788
CELICA (AT16_, ST16_)	1.6 (AT160_)	63	04/86 – 08/89	3402	
CELICA (AT16_, ST16_)	1.6 (AT160_)	63	04/86 – 08/89	3472	
CELICA (AT16_, ST16_)	1.6 GT 16V (AT160_)	91	04/86 – 08/89	3402	
CELICA (AT16_, ST16_)	1.6 GT 16V (AT160_)	91	04/86 – 08/89	3472	
CELICA (AT16_, ST16_)	2.0 (ST162_)	110	01/87 – 08/89	3402	
CELICA (AT16_, ST16_)	2.0 (ST162_)	110	01/87 – 08/89	3472	
CELICA (RA2_, TA2_)	1.6	76	11/71 – 06/76	3314	
CELICA (RA2_, TA2_)	1.6	76	11.71 – 06.76	3336	
CELICA (RA2_, TA2_)	1.6 GT (2T-G)	79	12/74 – 03/78	3314	
CELICA (RA2_, TA2_)	1.6 GT (2T-G)	79	12.74 – 03.78	3336	
CELICA (RA2_, TA2_)	1.6 LT (2T)	55	02/76 – 03/78	3314	
CELICA (RA2_, TA2_)	1.6 LT (2T)	55	02.76 – 03.78	3336	
CELICA (RA2_, TA2_)	1.6 LT (2TJ)	58	05/73 – 03/78	3314	
CELICA (RA2_, TA2_)	1.6 LT (2TJ)	58	05.73 – 03.78	3336	
CELICA (RA2_, TA2_)	1.6 ST (2TB)	63	05/73 – 03/78	3314	
CELICA (RA2_, TA2_)	1.6 ST (2TB)	63	05.73 – 03.78	3336	
CELICA (RA2_, TA2_)	2.0 (18R)	63	10/75 – 07/77	3376	
CELICA (ST20_, AT20_)	1.8 i 16V (AT200/ST)	85	11/93 – 11/99	3554	
CELICA (ST20_, AT20_)	1.8 i 16V (AT200/ST)	85	11/93 – 11/99	3651	
CELICA (ZZT23_)	1.8 16V TS (ZZT231_)	141	08/99 – 09/05	3769	
CELICA (ZZT23_)	1.8 16V VT-i (ZZT230_)	105	08/99 – 07/05	3769	
CELICA Convertible (_T16_)	2.0 GT (ST162)	103	08/85 – 08/89		3776
CELICA Convertible (_T16_)	2.0 GT (ST162)	110	10/86 – 08/89		3776
CELICA Convertible (_T18_)	2.0 GTi (ST182)	115	10/89 – 11/93		3776
CELICA Convertible (_T20_)	2.0 GTi	129	08/94 – 08/99	4086	
CELICA Convertible (_T20_)	2.0 i 16V	125	11/93 – 08/99	4086	
CELICA Convertible (ST16_, AT16_)	2.0 GT (ST162)	103	08/85 – 08/89	3402	
CELICA Convertible (ST16_, AT16_)	2.0 GT (ST162)	103	08/85 – 08/89	3472	
CELICA Convertible (ST16_, AT16_)	2.0 GT (ST162)	110	10/86 – 08/89	3402	
CELICA Convertible (ST16_, AT16_)	2.0 GT (ST162)	110	10/86 – 08/89	3472	
CELICA Coupe	(_T18J 1.6 STI (AT180)	77	10/89 - 11/93	3701	
CELICA Coupe (_A6_)	1.6 (AA63_)	91	12/83 – 12/85	3579	
CELICA Coupe (_T16_)	2.0 Turbo 4WD (ST165_)	136	03/88 – 08/89		3776
CELICA Coupe (_T18_)	22	100	10/89 – 10/93		3776
CELICA Coupe (_T18_)	1.6 STI (AT180)	77	10/89 – 11/93		3776
CELICA Coupe (_T18_)	2.0 GTi (ST182)	115	10/89 – 11/93		3776
CELICA Coupe (_T18_)	2.0 Turbo 4WD (ST185)	150	10/89 – 11/93		3776

MAKE & MODEL		KW	YEAR		
TOYOTA					
CELICA Coupe (_T18_)	2.0 Turbo 4WD (ST185)	153	10/89 – 11/93		3776
CELICA Coupe (AT18_, ST18_)	1.6 STI (AT180)	77	10/89 – 11/93	3402	
CELICA Coupe (AT18_, ST18_)	1.6 STI (AT180)	77	10/89 – 11/93	3472	
CELICA Coupe (ST16_, AT16_)	2.0 Turbo 4WD (ST165_)	136	03/88 – 08/89	3402	
CELICA Coupe (ST16_, AT16_)	2.0 Turbo 4WD (ST165_)	136	03/88 – 08/89	3472	
CELICA Hatchback (_T16_)	2.0 GT	110	08/85 – 08/89		3776
CELICA Hatchback (_T16_)	2.0 GT (ST162_)	103	09/85 – 08/89		3776
CELICA Hatchback (ST16_, AT16_)	1.6 (AT160_)	63	04/86 – 08/89	3402	
CELICA Hatchback (ST16_, AT16_)	1.6 (AT160_)	63	04/86 – 08/89	3472	
CELICA Hatchback (ST16_, AT16_)	1.6 GT (AT160_)	85	08/87 – 08/89	3402	
CELICA Hatchback (ST16_, AT16_)	1.6 GT (AT160_)	85	08/87 – 08/89	3472	
CELICA Hatchback (ST16_, AT16_)	1.6 GT 16V (AT160_)	91	09/85 – 08/89	3402	
CELICA Hatchback (ST16_, AT16_)	1.6 GT 16V (AT160_)	91	09/85 – 08/89	3472	
CELICA Hatchback (ST16_, AT16_)	2.0 GT	110	08/85 – 08/89	3402	
CELICA Hatchback (ST16_, AT16_)	2.0 GT	110	08/85 – 08/89	3472	
CELICA Hatchback (ST16_, AT16_)	2.0 GT (ST162_)	103	09/85 – 08/89	3402	
CELICA Hatchback (ST16_, AT16_)	2.0 GT (ST162_)	103	09/85 – 08/89	3472	
CELICA III SUPRA	2.8	104	08/81 – 12/85	3418	
CELICA III SUPRA	2.8 (MA61_)	125	08/81 – 12/85	3418	
CELSIOR (UCF2_)	40	206	10/96 – 08/00	3915	
CELSIOR (UCF2_)	40	206	10/96 – 08/00		4085
CELSIOR (UCF3_)	4.3 VVTi	208	09/00 – 08/06	3915	
CELSIOR (UCF3_)	4.3 VVTi	208	09/00 – 08/06		4085
CHASER III-IV	42.949	107	08/84 -	3418	
CHASER III-IV	1.8 D		08/84 -	3418	
CHASER III-IV	2.0	77	08/84 – 09/91	3418	
CHASER III-IV	2.0	110	08/84 -	3418	
CHASER III-IV	2.0	110	08/84 -	3418	
CHASER III-IV	2.0 24V	110	08/86 – 08/91	3418	
CHASER III-IV	2.2 D	49	08/84 -	3418	
CHASER III-IV	2.2 D	49	08/84 -	3418	
CHASER III-IV	2.4 TD	69	08/84 -	3418	
CHASER III-IV (_X7_, _X8_)	2.0 (1G-FE)	110	08.86-08.91	3666	
CHASER III-IV (_X7_, _X8_)	2.0 (1G-FE)	110	08.86-08.91	3672	
CHASER III-IV (_X7_, _X8_)	2.0 24V (1G-FE)	110	08.86-08.91	3666	
CHASER III-IV (_X7_, _X8_)	2.0 24V (1G-FE)	110	08.86-08.91	3672	
CHASER III-IV (_X7_, _X8_)	20 (21R)	77	08.84-09.91	3666	
CHASER III-IV (_X7_, _X8_)	20 (21R)	77	08.84-09.91	3672	
CHASER (_X10_)	2.5 VVTi	147	10/96 – 05/01	4086	
CHASER (_X10_)	2.5 VVTi	147	10/96 – 05/01		4099
CHASER (_X10_)	2.5 VVTi	206	10/96 – 05/01	3915	
CHASER (_X10_)	2.0 (GX100_)	99	09.96 - 05.01		4114
CHASER (_X9_)	18	94	10/93 – 08/96	3554	
CHASER (_X9_)	18	94	10/93 – 08/96	3651	
CHASER (_X9_)	20	110	10/92 – 08/96	3554	
CHASER (_X9_)	20	110	10/92 – 08/96	3651	
CHASER (_X9_)	2.4 D	63	10/92 – 08/96	3554	
CHASER (_X9_)	2.4 D	63	10/92 – 08/96	3651	
CHASER (_X9_)	2.4 TD	69	10/92 – 08/96	3554	
CHASER (_X9_)	2.4 TD	69	10/92 – 08/96	3651	
CHASER V (_X9_)	2.4 D (2L)	63	10.92-08.96	3666	
CHASER V (_X9_)	2.4 D (2L)	63	10.92-08.96	3672	
COASTER II (FB3_, HB3_, BB2_, RB2_)	24 (22R)	72	05/82 – 09/89	3930	
COASTER II (FB3_, HB3_, BB2_, RB2_)	3.4 BB 21, 26V		05/82 -	3930	
COASTER II (FB3_, HB3_, BB2_, RB2_)	4.2 D (1H-Z)	59	10/87 – 01/93	3930	
COASTER II (FB3_, HB3_, BB2_, RB2_)	4.2 D (1H-Z)	92	10/87 – 01/93	3930	
COASTER (BB1_, RB1_)	2.4 (22R)	72	08/77 – 04/82	3930	
COASTER (BB1_, RB1_)	20 (5R)	64	08/77 – 04/82	3930	
COASTER (BB1_, RB1_)	3.2 D (2B)	56	08/77 – 04/82	3930	
COASTER III (TRB5_, XZB5_, RZB4_, HZB5_, BZB5_, BB4_)	4.2 D (1H-Z)	96	02/93 – 10/03	3930	
COROLLA	16	90	10/10 -	3953	
COROLLA	16	90	10/10 -		3954
COROLLA	18	93	02/04 – 01/07		3788
COROLLA	18	101	02/04 – 01/07	3953	
COROLLA	18	101	02/04 – 01/07		3954
COROLLA	18	103	10/10 -	3953	
COROLLA	18	103	10/10 -		3954
COROLLA	20	106	10/10 -	3953	
COROLLA	20	106	10/10 -		3954
COROLLA III (KE)	1.2 (3K)	40	07.75 – 01.80	3346	
COROLLA III (KE)	1.2 (3K-B)	40	07.75 – 01.80	3346	

BESER

MAKE & MODEL		KW	YEAR		
TOYOTA					
COROLLA III (KE)	1.2 (3K-H)	40	07.75 – 01.80	3346	
COROLLA III (KE)	1.2 (3K)	40	07/75 – 01/80	3710	
COROLLA III (KE)	1.2 (3K-B)	40	07/75 – 01/80	3710	
COROLLA III (KE)	1.2 (3K-H)	40	07/75 – 01/80	3710	
COROLLA II-III (KE, TE)	1.2 (3K-B)	40	09.76 – 01.80	3346	
COROLLA II-III (KE, TE)	1.2 (3K-B)	40	09/76 – 01/80	3710	
COROLLA II-III (KE, TE)	1.2 (3K-C)	40	09.76 – 01.80	3346	
COROLLA II-III (KE, TE)	1.2 (3K-C)	40	09/76 – 01/80	3710	
COROLLA II-III (KE, TE)	1.2 (3K-H)	40	09.76 – 01.80	3346	
COROLLA II-III (KE, TE)	1.2 (3K-H)	40	09/76 – 01/80	3710	
COROLLA II-III (KE, TE)	1.6 (2T)	54	09/76 – 01/80	3709	
COROLLA II-III (KE, TE)	1.6 (2TB)	62	09/76 – 01/80	3709	
COROLLA III-IV (KE)	1.2 (3K-B)	40	07.75 – 01.80	3346	
COROLLA III-IV (KE)	1.2 (3K-B)	40	07/75 – 01/80	3710	
COROLLA III-IV (KE)	1.2 (3K-C)	40	07.75 – 01.80	3346	
COROLLA III-IV (KE)	1.2 (3K-C)	40	07/75 – 01/80	3710	
COROLLA III-IV (KE)	1.2 (3K-H)	40	07.75 – 01.80	3346	
COROLLA III-IV (KE)	1.2 (3K-H)	40	07/75 – 01/80	3710	
COROLLA II-IV (KE)	1.2 (3K-B)	40	08.74 – 12.80	3346	
COROLLA II-IV (KE)	1.2 (3K-C)	40	08.74 – 12.80	3346	
COROLLA II-IV (KE)	1.2 (3K-H)	40	08.74 – 12.80	3346	
COROLLA II-IV (KE)	1.2 (3K-B)	40	08/74 – 12/80	3710	
COROLLA II-IV (KE)	1.2 (3K-B)	43	10/72 – 07/79	3710	
COROLLA II-IV (KE)	1.2 (3K-C)	40	08/74 – 12/80	3710	
COROLLA II-IV (KE)	1.2 (3K-C)	43	10/72 – 07/79	3710	
COROLLA II-IV (KE)	1.2 (3K-H)	40	08/74 – 12/80	3710	
COROLLA II-IV (KE)	1.2 (3K-H)	43	10/72 – 07/79	3710	
COROLLA IV (_E7_)	1.3 (4K)	44	09/79 – 06/83	3709	
COROLLA IV (_E7_)	1.3 (4K)	48	02/82 – 08/87	3709	
COROLLA IV (_E7_)	1.3 (4K)	48	02/82 – 06/83	3709	
COROLLA IV (_E7_)	1.3 (4K-C)	44	12/79 – 01/82	3709	
COROLLA IV (_E7_)	1.6 (2T)	55	10/82 – 09/83	3709	
COROLLA IV (_E7_)	1.6 GT (2T-G)	81	05/80 – 09/83	3709	
COROLLA IV (_E7_)	1.8 D (1C)	43	01/83 – 09/83	3709	
COROLLA IV (_E7_)	1.8 D (1C)	44	05/83 – 08/87	3709	
COROLLA IV / T18	1.3 (4K)	44	09/79 – 01/82	3709	
COROLLA IV / T18	1.3 (4K)	48	02/82 – 05/83	3709	
COROLLA IV / T18	1.6 (2T)	54	09/79 – 05/83	3709	
COROLLA IV / T18	1.6 (2T)	55	09/79 – 05/83	3709	
COROLLA IV / T18	1.6 (2TB)	63	09/79 – 05/83	3709	
COROLLA IV / T18	1.6 GT (2T-G)	81	05/80 – 09/83	3709	
COROLLA IV / T18	1.8 (3T-C)	57	09/79 – 05/82	3709	
COROLLA IV / T18	1.8 D (1C)	48	01/83 – 09/83	3709	
COROLLA IV / T18 (_E7_)			09/79 -	3314	
COROLLA IV / T18 (_E7_)			09.79 -	3336	
COROLLA (_E10_)	16	76	07/92 – 07/95	3554	
COROLLA (_E10_)	16	76	07/92 – 07/95	3651	
COROLLA (_E10_)	16	85	05/92 – 07/95	3554	
COROLLA (_E10_)	16	85	05/92 – 07/95	3651	
COROLLA (_E10_)	1.3 12V (EE100_)	53	07/92 – 04/97	3554	
COROLLA (_E10_)	1.3 12V (EE100_)	53	07/92 – 04/97	3651	
COROLLA (_E10_)	1.3 XLI (EE101_)	55	09/95 – 04/97	3554	
COROLLA (_E10_)	1.3 XLI (EE101_)	55	09/95 – 04/97	3651	
COROLLA (_E10_)	1.3 XLI 16V (EE101)	65	07/92 – 09/95	3554	
COROLLA (_E10_)	1.3 XLI 16V (EE101)	65	07/92 – 09/95	3651	
COROLLA (_E10_)	1.6 Si (AE101_)	84	09/95 – 04/97	3554	
COROLLA (_E10_)	1.6 Si (AE101_)	84	09/95 – 04/97	3651	
COROLLA (_E10_)	1.8 i	85	11/92 – 09/94	3554	
COROLLA (_E10_)	1.8 i	85	11/92 – 09/94	3651	
COROLLA (_E10_)	2.0 D (CE100_)	53	07/92 – 04/97	3554	
COROLLA (_E10_)	2.0 D (CE100_)	53	07/92 – 04/97	3651	
COROLLA (_E11_)	18	85	08/98 – 06/02	3554	
COROLLA (_E11_)	18	85	08/98 – 06/02	3651	
COROLLA (_E11_)	1.4 (EE111_)	63	04/97 – 02/00	3554	
COROLLA (_E11_)	1.4 (EE111_)	63	04/97 – 02/00	3651	
COROLLA (_E11_)	1.4 (EE111_)	63	04/97 – 02/00		3776
COROLLA (_E11_)	1.4 16V (ZZE111_)	71	02/00 – 11/01	3554	
COROLLA (_E11_)	1.4 16V (ZZE111_)	71	02/00 – 11/01	3651	
COROLLA (_E11_)	1.4 16V (ZZE111_)	71	02/00 – 11/01		3776
COROLLA (_E11_)	1.6 16V (ZZE112_)	81	02/00 – 11/01		3776
COROLLA (_E11_)	1.6 Aut. (AE111_)	79	04/97 – 02/00	3554	

BESER®

MAKE & MODEL		KW	YEAR		
TOYOTA					
COROLLA (_E11_)	1.6 Aut. (AE111_)	79	04/97 – 02/00	3651	
COROLLA (_E11_)	1.6 Aut. (AE111_)	79	04/97 – 02/00		3776
COROLLA (_E11_)	1.9 D (WZE110_)	51	02/00 – 11/01	3554	
COROLLA (_E11_)	1.9 D (WZE110_)	51	02/00 – 11/01	3651	
COROLLA (_E11_)	1.9 D (WZE110_)	51	02/00 – 11/01		3776
COROLLA (_E11_)	2.0 D (CE110_)	53	04/97 – 02/00	3554	
COROLLA (_E11_)	2.0 D (CE110_)	53	04/97 – 02/00	3651	
COROLLA (_E11_)	2.0 D (CE110_)	53	04/97 – 02/00		3776
COROLLA (_E11_)	2.0 D-4D (CDE110_)	66	09/00 – 11/01		3776
COROLLA (_E11_)	2.0 D-4D (CDE110_)	66	09/00 – 11/01		3825
COROLLA (_E12_)	1.4 D (NDE120_)	66	07/04 – 02/07	3817	
COROLLA (_E12_)	1.4 D (NDE120_)	66	07/04 – 02/07		3825
COROLLA (_E12_)	1.4 VVT-i (ZZE120_)	71	01/02 – 12/06		3788
COROLLA (_E12_)	1.4 VVT-i (ZZE120_)	71	01/02 – 12/06	3817	
COROLLA (_E12_)	1.4 VVT-i (ZZE120_)	71	01/02 – 12/06		3825
COROLLA (_E12_)	1.6 VVT-i (ZZE121_)	81	01/02 – 12/06		3788
COROLLA (_E12_)	1.6 VVT-i (ZZE121_)	81	01/02 – 12/06	3817	
COROLLA (_E12_)	1.6 VVT-i (ZZE121_)	81	01/02 – 12/06		3825
COROLLA (_E12_)	1.8 VVTi	100	06/04 – 02/07		3788
COROLLA (_E12_)	1.8 VVTL-i TS	141	01/02 – 02/07		3788
COROLLA (_E12_)	1.8 VVTL-i TS	141	01/02 – 02/07	3817	
COROLLA (_E12_)	1.8 VVTL-i TS	141	01/02 – 02/07		3825
COROLLA (_E12_)	1.8 VVTL-i TS (ZZE123_)	160	10/05 – 12/06	3817	
COROLLA (_E12_)	1.8 VVTL-i TS (ZZE123_)	160	10/05 – 12/06		3825
COROLLA (_E12_)	1.8 VVTL-i TS (ZZE123_)	165	02/05 – 02/07		3788
COROLLA (_E12_)	1.8 VVTL-i TS (ZZE123_)	165	02/05 – 02/07	3817	
COROLLA (_E12_)	1.8 VVTL-i TS (ZZE123_)	165	02/05 – 02/07		3825
COROLLA (_E12_)	2.0 D-4D (CDE120_)	66	01/02 – 12/06		3788
COROLLA (_E12_)	2.0 D-4D (CDE120_)	66	01/02 – 12/06	3817	
COROLLA (_E12_)	2.0 D-4D (CDE120_)	66	01/02 – 12/06		3825
COROLLA (_E12_)	2.0 D-4D (CDE120R_, CDE120L_)	81	01/02 – 12/06	3817	
COROLLA (_E12_)	2.0 D-4D (CDE120R_, CDE120L_)	81	01/02 – 12/06		3825
COROLLA (_E12_)	2.0 D-4D (CDE120R_, CDE120L_)	85	05/03 – 02/07		3825
COROLLA (_E12_)	2.0 D-4D (CDE120R_, CDE120L_)	85	05/03 – 02/07	3817	
COROLLA (_E8_)	1.3 (AE80)	51	06/83 – 10/84	3402	
COROLLA (_E8_)	1.3 (AE80)	51	06/83 – 10/84	3472	
COROLLA (_E8_)	1.3 (AE80/EE80)	55	10/84 – 08/87	3402	
COROLLA (_E8_)	1.3 (AE80/EE80)	55	10/84 – 08/87	3472	
COROLLA (_E8_)	1.6 (AE82)	53	08/85 – 08/87	3402	
COROLLA (_E8_)	1.6 (AE82)	53	08/85 – 08/87	3472	
COROLLA (_E8_)	1.6 (AE82)	62	06/83 – 08/87	3402	
COROLLA (_E8_)	1.6 (AE82)	62	06/83 – 08/87	3472	
COROLLA (_E8_)	1.6 (AE82_)	54	12/85 – 05/88	3402	
COROLLA (_E8_)	1.6 (AE82_)	54	12/85 – 05/88	3472	
COROLLA (_E8_)	1.8 D (CE80_)	43	06/83 – 05/88	3402	
COROLLA (_E8_)	1.8 D (CE80_)	43	06/83 – 05/88	3472	
COROLLA (_E8_)	1.8 D (CE80_)	47	06/83 – 06/89	3402	
COROLLA (_E8_)	1.8 D (CE80_)	47	06/83 – 06/89	3472	
COROLLA (_E9_)	13	60	05/87 – 04/92	3402	
COROLLA (_E9_)	13	60	05/87 – 04/92	3472	
COROLLA (_E9_)	1.3 i (EE90)	55	08/87 – 12/92	3402	
COROLLA (_E9_)	1.3 i (EE90)	55	08/87 – 12/92	3472	
COROLLA (_E9_)	1.6 (AE92)	66	08/87 – 12/89	3402	
COROLLA (_E9_)	1.6 (AE92)	66	08/87 – 12/89	3472	
COROLLA (_E9_)	1.6 i	77	11/89 – 06/93	3402	
COROLLA (_E9_)	1.6 i	77	11/89 – 06/93	3472	
COROLLA (_E9_)	1.6 i 4WD (AE92_)	77	10/87 – 08/90	3402	
COROLLA (_E9_)	1.6 i 4WD (AE92_)	77	10/87 – 08/90	3472	
COROLLA (_E9_)	1.8 D (CE90_)	47	07/87 – 06/93	3402	
COROLLA (_E9_)	1.8 D (CE90_)	47	07/87 – 06/93	3472	
COROLLA (_E9_)	1.8 D (CE90_)	49	11/89 – 06/93	3402	
COROLLA (_E9_)	1.8 D (CE90_)	49	11/89 – 06/93	3472	
COROLLA (CDE12_, ZZE12_, NDE12_, ZDE12_)	1.8 VVTi	100	06/04 – 02/07	3769	
COROLLA (CDE12_, ZZE12_, NDE12_, ZDE12_)	1.8 VVTL-i TS (ZZE123_)	165	02/05 – 02/07	3769	
COROLLA Compact (_E10_)	1.3 12V (EE100_)	53	07/92 – 05/95	3554	
COROLLA Compact (_E10_)	1.3 12V (EE100_)	53	07/92 – 05/95	3651	
COROLLA Compact (_E10_)	1.3 XLI (EE101_)	55	09/95 – 04/97	3554	
COROLLA Compact (_E10_)	1.3 XLI (EE101_)	55	09/95 – 04/97	3651	
COROLLA Compact (_E10_)	1.3 XLI 16V (EE101)	65	07/92 – 09/95	3554	
COROLLA Compact (_E10_)	1.3 XLI 16V (EE101)	65	07/92 – 09/95	3651	
COROLLA Compact (_E10_)	1.6 Si (AE101_)	84	07/92 – 04/97	3554	

BESER

MAKE & MODEL   		KW	YEAR		
TOYOTA					
COROLLA Compact (_E10_)	1.6 Si (AE101_)	84	07/92 – 04/97	3651	
COROLLA Compact (_E10_)	1.8 GT (AE102_)	86	11/92 – 05/95	3554	
COROLLA Compact (_E10_)	1.8 GT (AE102_)	86	11/92 – 05/95	3651	
COROLLA Compact (_E10_)	1.8 GTi 4WD	81	11/92 – 04/95	3554	
COROLLA Compact (_E10_)	1.8 GTi 4WD	81	11/92 – 04/95	3651	
COROLLA Compact (_E10_)	2.0 D (CE100_)	53	07/92 – 04/97	3554	
COROLLA Compact (_E10_)	2.0 D (CE100_)	53	07/92 – 04/97	3651	
COROLLA Compact (_E11_)	1.4 (EE111_)	63	04/97 – 02/00	3554	
COROLLA Compact (_E11_)	1.4 (EE111_)	63	04/97 – 02/00	3651	
COROLLA Compact (_E11_)	1.4 (EE111_)	63	04/97 – 02/00		3776
COROLLA Compact (_E11_)	1.4 (ZZE111_)	71	02/00 – 01/02	3554	
COROLLA Compact (_E11_)	1.4 (ZZE111_)	71	02/00 – 01/02	3651	
COROLLA Compact (_E11_)	1.4 (ZZE111_)	71	02/00 – 01/02		3776
COROLLA Compact (_E11_)	1.6 (AE111_)	81	04/97 – 02/00	3554	
COROLLA Compact (_E11_)	1.6 (AE111_)	81	04/97 – 02/00	3651	
COROLLA Compact (_E11_)	1.6 (AE111_)	81	04/97 – 02/00		3776
COROLLA Compact (_E11_)	1.6 (ZZE112_)	81	02/00 – 01/02		3776
COROLLA Compact (_E11_)	1.6 Aut. (AE111_)	79	04/97 – 02/00	3554	
COROLLA Compact (_E11_)	1.6 Aut. (AE111_)	79	04/97 – 02/00	3651	
COROLLA Compact (_E11_)	1.6 Aut. (AE111_)	79	04/97 – 02/00		3776
COROLLA Compact (_E11_)	1.9 D (WZE110_)	51	02/00 – 01/02	3554	
COROLLA Compact (_E11_)	1.9 D (WZE110_)	51	02/00 – 01/02	3651	
COROLLA Compact (_E11_)	1.9 D (WZE110_)	51	02/00 – 01/02		3776
COROLLA Compact (_E11_)	2.0 D (CE110_)	53	04/97 – 02/00	3554	
COROLLA Compact (_E11_)	2.0 D (CE110_)	53	04/97 – 02/00	3651	
COROLLA Compact (_E11_)	2.0 D (CE110_)	53	04/97 – 02/00		3776
COROLLA Compact (_E11_)	2.0 D-4D (CDE110_)	66	09/00 – 01/02		3776
COROLLA Compact (_E9_)	1.3 (EE90)	55	08/87 – 12/89	3402	
COROLLA Compact (_E9_)	1.3 (EE90)	55	08/87 – 12/89	3472	
COROLLA Compact (_E9_)	1.6 (AE92)	66	08/87 – 04/92	3402	
COROLLA Compact (_E9_)	1.6 (AE92)	66	08/87 – 04/92	3472	
COROLLA Compact (_E9_)	1.6 GTi (AE92, AE93)	85	08/87 – 04/92	3402	
COROLLA Compact (_E9_)	1.6 GTi (AE92, AE93)	85	08/87 – 04/92	3472	
COROLLA Compact (_E9_)	1.6 i (AE92)	77	08/89 – 04/92	3402	
COROLLA Compact (_E9_)	1.6 i (AE92)	77	08/89 – 04/92	3472	
COROLLA Compact (_E9_)	1.8 D (CE90)	47	08/87 – 04/92	3402	
COROLLA Compact (_E9_)	1.8 D (CE90)	47	08/87 – 04/92	3472	
COROLLA Compact (_E9_)	1.8 D (CE90)	49	08/89 – 04/92	3402	
COROLLA Compact (_E9_)	1.8 D (CE90)	49	08/89 – 04/92	3472	
COROLLA Coupe (AE86)	1.6 16V (AE86_)	85	12/85 – 04/87	3579	
COROLLA Coupe (AE86)	1.6 GT 16V (AE86)	91	08/83 – 07/87	3579	
COROLLA Coupe (AE86)	1.6 SR 16V	57	05/83 – 04/87	3402	
COROLLA Coupe (AE86)	1.6 SR 16V	57	05/83 – 04/87	3472	
COROLLA Estate (_E12_)	18	100	06/04 – 02/07		3788
COROLLA Estate (_E12_)	1.4 D4-D (NDE120_)	66	07/04 – 02/07	3817	
COROLLA Estate (_E12_)	1.4 D4-D (NDE120_)	66	07/04 – 02/07		3825
COROLLA Estate (_E12_)	1.4 VVT-i (ZZE120_)	71	01/02 – 02/07		3788
COROLLA Estate (_E12_)	1.4 VVT-i (ZZE120_)	71	01/02 – 02/07	3817	
COROLLA Estate (_E12_)	1.4 VVT-i (ZZE120_)	71	01/02 – 02/07		3825
COROLLA Estate (_E12_)	1.6 VVT-i (ZZE121_)	81	01/02 – 02/07		3788
COROLLA Estate (_E12_)	1.6 VVT-i (ZZE121_)	81	01/02 – 02/07	3817	
COROLLA Estate (_E12_)	1.6 VVT-i (ZZE121_)	81	01/02 – 02/07		3825
COROLLA Estate (_E12_)	1.8 4WD	100	12/01 – 02/07		3788
COROLLA Estate (_E12_)	2.0 D-4D (CDE120_)	66	01/02 – 02/07		3788
COROLLA Estate (_E12_)	2.0 D-4D (CDE120_)	66	01/02 – 02/07	3817	
COROLLA Estate (_E12_)	2.0 D-4D (CDE120_)	66	01/02 – 02/07		3825
COROLLA Estate (_E12_)	2.0 D-4D (CDE120_)	85	04/04 – 02/07		3788
COROLLA Estate (_E12_)	2.0 D-4D (CDE120_)	85	04/04 – 02/07	3817	
COROLLA Estate (_E12_)	2.0 D-4D (CDE120_)	85	04/04 – 02/07		3825
COROLLA Estate (_E12J_, _E12T_)	18	100	06/04 – 02/07	3769	
COROLLA Estate (_E12J_, _E12T_)	1.4 D4-D (NDE120_)	66	07/04 – 02/07	3769	
COROLLA Estate (_E12J_, _E12T_)	1.4 VVT-i (ZZE120_)	71	01/02 – 02/07	3769	
COROLLA Estate (_E12J_, _E12T_)	1.6 VVT-i (ZZE121_)	81	01/02 – 02/07	3769	
COROLLA Estate (_E12J_, _E12T_)	1.8 4WD	100	12/01 – 02/07	3769	
COROLLA EX	16	88	05/07 – 12/14		3876
COROLLA EX	16	90	05/07 – 12/14	3953	
COROLLA EX	16	90	05/07 – 12/14		3954
COROLLA FX Compact (E8B)	16	54	01/87 – 09/87	3402	
COROLLA FX Compact (E8B)	16	54	01/87 – 09/87	3472	
COROLLA FX Compact (E8B)	16	55	08/84 – 08/87	3402	
COROLLA FX Compact (E8B)	16	55	08/84 – 08/87	3472	

BEŞER

MAKE & MODEL		KW	YEAR		
TOYOTA					
COROLLA FX Compact (E8B)	1.3 (EE80_)	55	08/85 – 08/87	3402	
COROLLA FX Compact (E8B)	1.3 (EE80_)	55	08/85 – 08/87	3472	
COROLLA FX Compact (E8B)	1.6 GT 16V (AE82_)	89	08/85 – 08/87	3402	
COROLLA FX Compact (E8B)	1.6 GT 16V (AE82_)	89	08/85 – 08/87	3472	
COROLLA FX Compact (E8B)	1.8 D (CE80_)	43	01/85 – 05/88	3402	
COROLLA FX Compact (E8B)	1.8 D (CE80_)	43	01/85 – 05/88	3472	
COROLLA FX Compact (E8B)	1.8 D (CE80_)	47	08/85 – 08/87	3402	
COROLLA FX Compact (E8B)	1.8 D (CE80_)	47	08/85 – 08/87	3472	
COROLLA Liftback (_E10_)	1.3 12V (EE100_)	53	07/92 – 05/95	3554	
COROLLA Liftback (_E10_)	1.3 12V (EE100_)	53	07/92 – 05/95	3651	
COROLLA Liftback (_E10_)	1.3 XLI (EE101_)	65	07/92 – 04/97	3554	
COROLLA Liftback (_E10_)	1.3 XLI (EE101_)	65	07/92 – 04/97	3651	
COROLLA Liftback (_E10_)	1.6 GLI (AE101_)	84	07/92 – 04/97	3554	
COROLLA Liftback (_E10_)	1.6 GLI (AE101_)	84	07/92 – 04/97	3651	
COROLLA Liftback (_E10_)	1.8 GT (AE102_)	86	11/92 – 05/95	3554	
COROLLA Liftback (_E10_)	1.8 GT (AE102_)	86	11/92 – 05/95	3651	
COROLLA Liftback (_E10_)	2.0 D (CE100_)	53	07/92 – 04/97	3554	
COROLLA Liftback (_E10_)	2.0 D (CE100_)	53	07/92 – 04/97	3651	
COROLLA Liftback (_E11_)	1.4 (EE111_)	63	04/97 – 02/00	3554	
COROLLA Liftback (_E11_)	1.4 (EE111_)	63	04/97 – 02/00	3651	
COROLLA Liftback (_E11_)	1.4 (EE111_)	63	04/97 – 02/00		3776
COROLLA Liftback (_E11_)	1.4 (ZZE111_)	71	02/00 – 01/02	3554	
COROLLA Liftback (_E11_)	1.4 (ZZE111_)	71	02/00 – 01/02	3651	
COROLLA Liftback (_E11_)	1.4 (ZZE111_)	71	02/00 – 01/02		3776
COROLLA Liftback (_E11_)	1.6 (AE111_)	81	04/97 – 02/00	3554	
COROLLA Liftback (_E11_)	1.6 (AE111_)	81	04/97 – 02/00	3651	
COROLLA Liftback (_E11_)	1.6 (AE111_)	81	04/97 – 02/00		3776
COROLLA Liftback (_E11_)	1.6 (ZZE112_)	81	02/00 – 01/02		3776
COROLLA Liftback (_E11_)	1.6 Aut. (AE111_)	79	04/97 – 02/00	3554	
COROLLA Liftback (_E11_)	1.6 Aut. (AE111_)	79	04/97 – 02/00	3651	
COROLLA Liftback (_E11_)	1.6 Aut. (AE111_)	79	04/97 – 02/00		3776
COROLLA Liftback (_E11_)	1.8 (AE112)	85	09/98 – 11/01	3554	
COROLLA Liftback (_E11_)	1.8 (AE112)	85	09/98 – 11/01	3651	
COROLLA Liftback (_E11_)	1.9 D (WZE110_)	51	02/00 – 01/02	3554	
COROLLA Liftback (_E11_)	1.9 D (WZE110_)	51	02/00 – 01/02	3651	
COROLLA Liftback (_E11_)	1.9 D (WZE110_)	51	02/00 – 01/02		3776
COROLLA Liftback (_E11_)	2.0 D (CE110)	53	04/97 – 02/00	3554	
COROLLA Liftback (_E11_)	2.0 D (CE110)	53	04/97 – 02/00	3651	
COROLLA Liftback (_E11_)	2.0 D (CE110)	53	04/97 – 02/00		3776
COROLLA Liftback (_E11_)	2.0 D-4D (CDE110_)	66	09/00 – 01/02		3776
COROLLA Liftback (_E8_)	1.3 (AE80)	51	06/83 – 09/84	3402	
COROLLA Liftback (_E8_)	1.3 (AE80)	51	06/83 – 09/84	3472	
COROLLA Liftback (_E8_)	1.3 (EE80)	55	01/85 – 08/87	3402	
COROLLA Liftback (_E8_)	1.3 (EE80)	55	01/85 – 08/87	3472	
COROLLA Liftback (_E8_)	1.6 (AE82)	54	08/85 – 08/87	3402	
COROLLA Liftback (_E8_)	1.6 (AE82)	54	08/85 – 08/87	3472	
COROLLA Liftback (_E8_)	1.6 (AE82)	62	06/83 – 08/87	3402	
COROLLA Liftback (_E8_)	1.6 (AE82)	62	06/83 – 08/87	3472	
COROLLA Liftback (_E8_)	1.6 (AE82_)	63	07/85 – 05/88	3402	
COROLLA Liftback (_E8_)	1.6 (AE82_)	63	07/85 – 05/88	3472	
COROLLA Liftback (_E8_)	1.8 D (CE80)	47	06/83 – 08/87	3402	
COROLLA Liftback (_E8_)	1.8 D (CE80)	47	06/83 – 08/87	3472	
COROLLA Liftback (_E8_)	1.8 D (CE80_)	43	06/83 – 05/88	3402	
COROLLA Liftback (_E8_)	1.8 D (CE80_)	43	06/83 – 05/88	3472	
COROLLA Liftback (_E9_)	13	60	07/87 – 04/92	3402	
COROLLA Liftback (_E9_)	13	60	07/87 – 04/92	3472	
COROLLA Liftback (_E9_)	16	70	08/87 – 04/92	3402	
COROLLA Liftback (_E9_)	16	70	08/87 – 04/92	3472	
COROLLA Liftback (_E9_)	1.3 i (EE90)	55	08/87 – 04/92	3402	
COROLLA Liftback (_E9_)	1.3 i (EE90)	55	08/87 – 04/92	3472	
COROLLA Liftback (_E9_)	1.6 (AE92)	66	08/87 – 04/92	3402	
COROLLA Liftback (_E9_)	1.6 (AE92)	66	08/87 – 04/92	3472	
COROLLA Liftback (_E9_)	1.6 (AE92)	77	08/89 – 04/92	3402	
COROLLA Liftback (_E9_)	1.6 (AE92)	77	08/89 – 04/92	3472	
COROLLA Liftback (_E9_)	1.6 GTI (AE92_)	92	07/87 – 06/93	3402	
COROLLA Liftback (_E9_)	1.6 GTI (AE92_)	92	07/87 – 06/93	3472	
COROLLA Liftback (_E9_)	1.8 D (CE90)	47	08/87 – 04/92	3402	
COROLLA Liftback (_E9_)	1.8 D (CE90)	47	08/87 – 04/92	3472	
COROLLA Liftback (_E9_)	1.8 D (CE90)	49	08/89 – 04/92	3402	
COROLLA Liftback (_E9_)	1.8 D (CE90)	49	08/89 – 04/92	3472	
COROLLA Saloon (_E12_)	18	100	11/01 – 07/07		3788

MAKE & MODEL		KW	YEAR		
TOYOTA					
COROLLA Saloon (_E12_)	1.4 D-4D (NDE120_)	66	07/04 – 07/07	3817	
COROLLA Saloon (_E12_)	1.4 D-4D (NDE120_)	66	07/04 – 07/07		3825
COROLLA Saloon (_E12_)	1.4 VVT-i (ZZE120_)	71	08/02 – 07/07		3788
COROLLA Saloon (_E12_)	1.4 VVT-i (ZZE120_)	71	08/02 – 07/07	3817	
COROLLA Saloon (_E12_)	1.4 VVT-i (ZZE120_)	71	08/02 – 07/07		3825
COROLLA Saloon (_E12_)	1.4 VVT-i (ZZE120_)	71	08/02 – 07/07	3953	
COROLLA Saloon (_E12_)	1.6 VVT-i (ZZE121_)	81	08/02 – 07/07	3817	
COROLLA Saloon (_E12_)	1.6 VVT-i (ZZE121_)	81	08/02 – 07/07		3825
COROLLA Saloon (_E12_)	2.0 D-4D (CDE120_)	66	08/02 – 07/07		3788
COROLLA Saloon (_E12_)	2.0 D-4D (CDE120_)	66	08/02 – 07/07	3817	
COROLLA Saloon (_E12_)	2.0 D-4D (CDE120_)	66	08/02 – 07/07		3825
COROLLA Saloon (_E12_)	2.0 D-4D (CDE120_)	85	06/04 – 07/07	3817	
COROLLA Saloon (_E12_)	2.0 D-4D (CDE120_)	85	06/04 – 07/07		3825
COROLLA Saloon (_E12J_, _E12T_)	18	100	11/01 – 07/07	3769	
COROLLA Saloon (_E12J_, _E12T_)	1.6 VVT-i (ZZE121_)	81	08/02 – 07/07	3769	
COROLLA Saloon (_E15_)	16	97	01/09 -	3953	
COROLLA Saloon (_E15_)	16	97	01/09 -		3954
COROLLA Saloon (_E15_)	18	106	08/10 -		4037
COROLLA Saloon (_E15_)	18	106	08/10 -	4147	
COROLLA Saloon (_E15_)	18	108	01/09 -		4037
COROLLA Saloon (_E15_)	18	108	01/09 -	4147	
COROLLA Saloon (_E15_)	18	111	08/10 -	3953	
COROLLA Saloon (_E15_)	18	111	08/10 -		3954
COROLLA Saloon (_E15_)	133	74	01/07 -	3953	
COROLLA Saloon (_E15_)	133	74	01/07 -		3954
COROLLA Saloon (_E15_)	1.4 D-4D	66	10/06 -	3953	
COROLLA Saloon (_E15_)	1.4 D-4D	66	10/06 -		3954
COROLLA Saloon (_E15_)	1.4 VVT-i	71	01/07 -	3953	
COROLLA Saloon (_E15_)	1.4 VVT-i	71	01/07 -		3954
COROLLA Saloon (_E15_)	1.6 Dual VVTi (ZRE141)	91	01/07 -	3953	
COROLLA Saloon (_E15_)	1.6 Dual VVTi (ZRE141)	91	01/07 -		3954
COROLLA Saloon (_E15_)	1.6 VVTi (ZRE141_)	90	07/10 – 05/14	3953	
COROLLA Saloon (_E15_)	1.6 VVTi (ZRE141_)	90	07/10 – 05/14		4037
COROLLA Saloon (_E15_)	1.6 VVTi (ZRE141_)	90	07/10 – 05/14	4176	
COROLLA Saloon (_E15_)	1.8 VVTi	103	08/10 -		4037
COROLLA Saloon (_E15_)	1.8 VVTi	103	08/10 -	4147	
COROLLA Saloon (_E15_)	1.8 VVTL-i (ZZE152)	100	05/07 -	3953	
COROLLA Saloon (_E15_)	1.8 VVTL-i (ZZE152)	100	05/07 -		3954
COROLLA Saloon (_E15_)	2.0 D-4D	93	01/07 -	3953	
COROLLA Saloon (_E15_)	2.0 D-4D	93	01/07 -		3954
COROLLA Saloon (_E18_, ZRE17_)	1.3 (NRE180_)	73	06/13 -		3954
COROLLA Saloon (_E18_, ZRE17_)	1.3 (NRE180_)	73	06/13 -	4176	
COROLLA Saloon (_E18_, ZRE17_)	1.4 D-4D (NDE180_)	66	06/13 -		3954
COROLLA Saloon (_E18_, ZRE17_)	1.4 D-4D (NDE180_)	66	06/13 -	4176	
COROLLA Saloon (_E18_, ZRE17_)	1.6 (ZRE171_)	90	06/13 -	3953	
COROLLA Saloon (_E18_, ZRE17_)	1.6 (ZRE171_)	90	06/13 -		3954
COROLLA Saloon (_E18_, ZRE17_)	1.6 (ZRE171_)	90	06/13 -	4176	
COROLLA Saloon (_E18_, ZRE17_)	1.6 (ZRE181_)	97	06/13 -	3953	
COROLLA Saloon (_E18_, ZRE17_)	1.6 (ZRE181_)	97	06/13 -		3954
COROLLA Saloon (_E18_, ZRE17_)	1.6 (ZRE181_)	97	06/13 -	4176	
COROLLA Saloon (_E18_, ZRE17_)	1.6 BiFuel	90	06/13 -	3953	
COROLLA Saloon (_E18_, ZRE17_)	1.6 BiFuel	90	06/13 -		3954
COROLLA Saloon (_E18_, ZRE17_)	1.6 BiFuel	90	06/13 -	4176	
COROLLA Saloon (_E18_, ZRE17_)	1.8 VVTi	103	06/13 -	3953	
COROLLA Saloon (_E18_, ZRE17_)	1.8 VVTi	103	06/13 -		3954
COROLLA Saloon (_E18_, ZRE17_)	1.8 VVTi	103	06/13 -	4176	
COROLLA Saloon (_E18_, ZRE17_)	1.8 VVT-i	111	12/13 -	3953	
COROLLA Saloon (_E18_, ZRE17_)	2.0 VVT-i (ZRE173_)	105	10/13 -	3953	
COROLLA Saloon (_E18_, ZRE17_)	2.0 VVT-i (ZRE173_)	105	10/13 -		3954
COROLLA Station Wagon (_E9_)	1.3 (EE90)	55	12/87 – 06/92	3402	
COROLLA Station Wagon (_E9_)	1.3 (EE90)	55	12/87 – 06/92	3472	
COROLLA Station Wagon (_E9_)	1.6 (AE92)	66	02/88 – 05/92	3402	
COROLLA Station Wagon (_E9_)	1.6 (AE92)	66	02/88 – 05/92	3472	
COROLLA Station Wagon (_E9_)	1.6 (AE92)	70	12/87 – 04/92	3402	
COROLLA Station Wagon (_E9_)	1.6 (AE92)	70	12/87 – 04/92	3472	
COROLLA Station Wagon (_E9_)	1.6 4WD	70	02/88 – 08/92	3402	
COROLLA Station Wagon (_E9_)	1.6 4WD	70	02/88 – 08/92	3472	
COROLLA Station Wagon (_E9_)	1.6 XLI (AE92_)	77	11/89 – 06/92	3402	
COROLLA Station Wagon (_E9_)	1.6 XLI (AE92_)	77	11/89 – 06/92	3472	
COROLLA Station Wagon (_E9_)	1.6 XLI 4WD (AE95)	77	08/88 – 06/92	3402	
COROLLA Station Wagon (_E9_)	1.6 XLI 4WD (AE95)	77	08/88 – 06/92	3472	

MAKE & MODEL		KW	YEAR		
TOYOTA					
COROLLA Station Wagon (_E9_)	1.8 D (CE90)	47	12/87 – 06/92	3402	
COROLLA Station Wagon (_E9_)	1.8 D (CE90)	47	12/87 – 06/92	3472	
COROLLA Station Wagon (_E9_)	1.8 D (CE90)	49	08/89 – 06/92	3402	
COROLLA Station Wagon (_E9_)	1.8 D (CE90)	49	08/89 – 06/92	3472	
COROLLA Verso (_E12_)	18	92	09/01 – 05/04		3788
COROLLA Verso (_E12_)	1.6 VVT-i (ZZE121_)	81	01/02 – 05/04		3788
COROLLA Verso (_E12_)	1.8 VVT-i (ZZE122_)	99	01/02 – 05/04		3788
COROLLA Verso (_E12_)	1.8 VVTi 4WD	99	10/01 – 02/04	3890	
COROLLA Verso (_E12_)	1.8 VVTi 4WD	99	10/01 – 02/04		4154
COROLLA Verso (_E12_)	2.0 D-4D	85	09/01 – 05/04	3890	
COROLLA Verso (_E12_)	2.0 D-4D	85	09/01 – 05/04		4154
COROLLA Verso (_E12_)	2.0 D-4D (CDE120_)	66	01/02 – 05/04		3788
COROLLA Verso (ZDE12_, CDE12_)	18	92	09/01 – 05/04	3769	
COROLLA Verso (ZDE12_, CDE12_)	1.6 VVT-i (ZZE121_)	81	01/02 – 05/04	3769	
COROLLA Verso (ZER_, ZZE12_, R1_)	15	80	03/04 – 03/09	3890	
COROLLA Verso (ZER_, ZZE12_, R1_)	15	80	03/04 – 03/09		4154
COROLLA Verso (ZER_, ZZE12_, R1_)	18	92	03/04 – 03/09	3890	
COROLLA Verso (ZER_, ZZE12_, R1_)	18	92	03/04 – 03/09		4154
COROLLA Verso (ZER_, ZZE12_, R1_)	1.3 VVTi	64	03/04 – 03/09	3890	
COROLLA Verso (ZER_, ZZE12_, R1_)	1.3 VVTi	64	03/04 – 03/09		4154
COROLLA Verso (ZER_, ZZE12_, R1_)	1.4 D-4D	66	03/04 – 03/09	3890	
COROLLA Verso (ZER_, ZZE12_, R1_)	1.4 D-4D	66	03/04 – 03/09		4154
COROLLA Verso (ZER_, ZZE12_, R1_)	1.6 (ZNR10_)	81	04/04 – 03/09	3890	
COROLLA Verso (ZER_, ZZE12_, R1_)	1.6 (ZNR10_)	81	04/04 – 03/09		4154
COROLLA Verso (ZER_, ZZE12_, R1_)	1.8 (ZNR11_)	95	04/04 – 03/09	3890	
COROLLA Verso (ZER_, ZZE12_, R1_)	1.8 (ZNR11_)	95	04/04 – 03/09		4154
COROLLA Verso (ZER_, ZZE12_, R1_)	2.0 D-4D (CUR10_)	85	04/04 – 03/09	3890	
COROLLA Verso (ZER_, ZZE12_, R1_)	2.0 D-4D (CUR10_)	85	04/04 – 03/09		4154
COROLLA Verso (ZER_, ZZE12_, R1_)	2.2 D-4D (AUR10_)	100	10/05 – 03/09	3890	
COROLLA Verso (ZER_, ZZE12_, R1_)	2.2 D-4D (AUR10_)	100	10/05 – 03/09		4154
COROLLA Verso (ZER_, ZZE12_, R1_)	2.2 D-4D (AUR10_)	130	10/05 – 03/09	3890	
COROLLA Verso (ZER_, ZZE12_, R1_)	2.2 D-4D (AUR10_)	130	10/05 – 03/09		4154
COROLLA Wagon (_E11_)	1.4 (EE111_)	63	04/97 – 02/00	3554	
COROLLA Wagon (_E11_)	1.4 (EE111_)	63	04/97 – 02/00	3651	
COROLLA Wagon (_E11_)	1.4 16V (ZZE111_)	71	02/00 – 10/01	3554	
COROLLA Wagon (_E11_)	1.4 16V (ZZE111_)	71	02/00 – 10/01	3651	
COROLLA Wagon (_E11_)	1.6 (AE111_)	81	04/97 – 02/00	3554	
COROLLA Wagon (_E11_)	1.6 (AE111_)	81	04/97 – 02/00	3651	
COROLLA Wagon (_E11_)	1.6 Aut. (AE111_)	79	04/97 – 02/00	3554	
COROLLA Wagon (_E11_)	1.6 Aut. (AE111_)	79	04/97 – 02/00	3651	
COROLLA Wagon (_E11_)	1.8 4WD (AE115_)	81	04/97 – 10/01	3554	
COROLLA Wagon (_E11_)	1.8 4WD (AE115_)	81	04/97 – 10/01	3651	
COROLLA Wagon (_E11_)	1.9 D (WZE110_)	51	02/00 – 10/01	3554	
COROLLA Wagon (_E11_)	1.9 D (WZE110_)	51	02/00 – 10/01	3651	
COROLLA Wagon (_E11_)	2.0 D (CE110_)	53	04/97 – 02/00	3554	
COROLLA Wagon (_E11_)	2.0 D (CE110_)	53	04/97 – 02/00	3651	
COROLLA Wagon (_E10_)	16	76	07/92 – 07/95	3554	
COROLLA Wagon (_E10_)	16	76	07/92 – 07/95	3651	
COROLLA Wagon (_E10_)	18	81	09/92 – 04/97	3554	
COROLLA Wagon (_E10_)	18	81	09/92 – 04/97	3651	
COROLLA Wagon (_E10_)	1.3 12V (EE100_)	53	07/92 – 05/95	3554	
COROLLA Wagon (_E10_)	1.3 12V (EE100_)	53	07/92 – 05/95	3651	
COROLLA Wagon (_E10_)	1.3 XLI (EE101_)	55	09/95 – 04/97	3554	
COROLLA Wagon (_E10_)	1.3 XLI (EE101_)	55	09/95 – 04/97	3651	
COROLLA Wagon (_E10_)	1.3 XLI 16V (EE101_)	65	07/92 – 09/95	3554	
COROLLA Wagon (_E10_)	1.3 XLI 16V (EE101_)	65	07/92 – 09/95	3651	
COROLLA Wagon (_E10_)	1.6 Si (AE101_)	84	07/92 – 04/97	3554	
COROLLA Wagon (_E10_)	1.6 Si (AE101_)	84	07/92 – 04/97	3651	
COROLLA Wagon (_E10_)	1.8 16V 4WD (AE103_)	81	09/95 – 04/97	3554	
COROLLA Wagon (_E10_)	1.8 16V 4WD (AE103_)	81	09/95 – 04/97	3651	
COROLLA Wagon (_E10_)	1.8 4WD	92	08/95 – 04/97	3554	
COROLLA Wagon (_E10_)	1.8 4WD	92	08/95 – 04/97	3651	
COROLLA Wagon (_E10_)	1.8 XL	88	09/92 – 11/93	3554	
COROLLA Wagon (_E10_)	1.8 XL	88	09/92 – 11/93	3651	
COROLLA Wagon (_E10_)	1.8 XL 4WD	88	09/92 – 11/93	3554	
COROLLA Wagon (_E10_)	1.8 XL 4WD	88	09/92 – 11/93	3651	
COROLLA Wagon (_E10_)	2.0 D (CE100_)	53	07/92 – 04/97	3554	
COROLLA Wagon (_E10_)	2.0 D (CE100_)	53	07/92 – 04/97	3651	
COROLLA Wagon (_E11_)	1.4 (EE111_)	63	04/97 – 02/00		3776
COROLLA Wagon (_E11_)	1.4 16V (ZZE111_)	71	02/00 – 10/01		3776
COROLLA Wagon (_E11_)	1.6 (AE111_)	81	04/97 – 02/00		3776

MAKE & MODEL   		KW	YEAR		
TOYOTA					
COROLLA Wagon (_E11_)	1.6 16V (ZZE112_)	81	02/00 – 10/01		3776
COROLLA Wagon (_E11_)	1.6 Aut. (AE111_)	79	04/97 – 02/00		3776
COROLLA Wagon (_E11_)	1.8 4WD (AE115_)	81	04/97 – 10/01		3776
COROLLA Wagon (_E11_)	1.9 D (WZE110_)	51	02/00 – 10/01		3776
COROLLA Wagon (_E11_)	2.0 D (CE110_)	53	04/97 – 02/00		3776
COROLLA Wagon (_E11_)	2.0 D-4D	85	04/97 – 10/01	3817	
COROLLA Wagon (_E11_)	2.0 D-4D	85	04/97 – 10/01		3825
COROLLA Wagon (_E11_)	2.0 D-4D (CDE110_)	66	09/00 – 10/01		3776
CORONA V (RT118)	1.5 DLX	48	02/70 -	3314	
CORONA V (RT118)	1.5 DLX	48	02.70 -	3336	
CORONA V (RT118)	1.6 (12R)	49	02.72 – 07.73	3336	
CORONA V (RT118)	1.6 (12R)	49	02/72 – 07/73	3314	
CORONA V (RT118)	1.6 (DLX)	50	02/70 -	3314	
CORONA V (RT118)	1.6 DLX	50	02.70 -	3336	
CORONA V (RT118)	2.0	55	02/70 -	3314	
CORONA V (RT118)	2.0	55	02.70 -	3336	
CORONA V (RT118)	2.0 (18R)	65	09.75 – 05.79	3336	
CORONA V (RT118)	2.0 (18R)	65	09/75 – 05/79	3375	
CORONA V (RT118)	2.0 (18R-G)	88	02.70 – 07.73	3336	
CORONA V (RT118)	2.0 (18R)	65	09/75 – 05/79	3314	
CORONA V (RT118)	2.0 (18R-G)	88	02/70 – 07/73	3314	
CORONA VI (RT1_)	1.8 DLX, Special	63	08/73 -	3314	
CORONA VI (RT1_)	1.8 DLX, Special	63	08.73 -	3336	
CORONA VI (RT1_)	2.0 (18R)	65	01/76 – 05/79	3314	
CORONA VI (RT1_)	2.0 (18R)	65	01.76 – 05.79	3336	
CORONA VI (RT1_)	2.0 (18R)	65	01/76 – 05/79	3375	
CORONA VI (RT1_)	2.0 Mark II (18R)	65	12/75 – 10/77	3314	
CORONA VI (RT1_)	2.0 Mark II (18R)	65	12/75 – 10/77	3314	
CORONA VI (RT1_)	2.0 Mark II (18R)	65	12.75 – 10.77	3336	
CORONA VI (RT1_)	2.0 Mark II (18R)	65	12.75 – 10.77	3336	
CORONA VI (RT1_)	All models		08/73 -	3375	
CORONA VI (RT13_, TT13_	18	63	09/78 -	3375	
CORONA VI (RT13_, TT13_)	1.8 (3T)	63	06/79 – 07/81	3709	
CORSA Hatchback	13	65	11/94 – 09/99	3402	
CORSA Hatchback	13	65	11/94 – 09/99	3472	
CORSA Hatchback	15	70	11/94 – 09/99	3402	
CORSA Hatchback	15	70	11/94 – 09/99	3472	
CORSA Hatchback	1.5 D	40	11/94 – 09/99	3402	
CORSA Hatchback	1.5 D	40	11/94 – 09/99	3472	
CORSA Saloon	13	65	11/94 – 09/99	3402	
CORSA Saloon	13	65	11/94 – 09/99	3472	
CORSA Saloon	15	70	11/94 – 09/99	3402	
CORSA Saloon	15	70	11/94 – 09/99	3472	
CORSA Saloon	1.5 D	40	11/94 – 09/99	3402	
CORSA Saloon	1.5 D	40	11/94 – 09/99	3472	
COSTA	All models		01/86 -	3930	
CRESSIDA II	2.0	77	02/81 – 03/85	3418	
CRESSIDA II	2.2 D	49	06/81 – 03/85	3418	
CRESSIDA III	2.4 D Turbo	69	12/84 -	3418	
CRESSIDA III	2.4 TD	90	11/84 – 09/88	3418	
CRESSIDA III	2.4 TD (2L-T)	90	05/85 – 09/88	3418	
CRESSIDA III	2.8 (5M-GE)	170	05/85 – 09/88	3418	
CRESSIDA III	2.8 (5M-E)	144	05/85 – 09/88	3418	
CRESSIDA III	2.8 i GL, Gli	111	12/84 -	3418	
CRESSIDA III	2.8 i GL, Gli	111	12/84 -	3418	
CRESSIDA IV (MX83)	2.0 (1G-FE)	125	10/88 – 09/91	3666	
CRESSIDA IV (MX83)	2.0 (1G-FE)	125	10/88 – 09/91	3672	
CRESSIDA IV (MX83)	2.4 TD (2L-TII)	69	10/88 – 01/93	3666	
CRESSIDA IV (MX83)	2.4 TD (2L-TII)	69	10/88 – 01/93	3672	
CRESSIDA IV (MX83)	2.5 Turbo (1JZ-GTE)	206	10/91 – 09/92	3666	
CRESSIDA IV (MX83)	2.5 Turbo (1JZ-GTE)	206	10/91 – 09/92	3672	
CRESSIDA IV (MX83)	3.0 (7M-GE)	147	10/88 – 09/92	3666	
CRESSIDA IV (MX83)	3.0 (7M-GE)	147	10/88 – 09/92	3672	
CRESSIDA IV (RX8_)	2.0 (1G-FE)	110	10/88 – 09/92	3666	
CRESSIDA IV (RX8_)	2.0 (1G-FE)	110	10/88 – 09/92	3672	
CRESSIDA IV (RX8_)	2.4 TD (2L-TII)	69	10/88 – 09/92	3666	
CRESSIDA IV (RX8_)	2.4 TD (2L-TII)	69	10/88 – 09/92	3672	
CRESSIDA IV (RX8_)	3.0 (7M-GE)	147	10/88 – 09/92	3666	
CRESSIDA IV (RX8_)	3.0 (7M-GE)	147	10/88 – 09/92	3672	
CRESTA II	2.0 (1G-GE)	110	08/84 – 08/88	3418	
CRESTA II	2.0 (21R)	77	08/84 – 05/87	3418	

BESER

MAKE & MODEL		KW	YEAR		
TOYOTA					
CRESTA II	2.0 24V (1G-FE)	110	08/84 – 08/88	3418	
CRESTA II	2.4 (22R)	81	06/87 – 08/88	3418	
CRESTA II	2.8 (5M-GE)	125	11/84 – 08/88	3418	
CRESTA III-IV (_X8_)	2.0 (1G-GE)	110	09/88 – 10/96	3666	
CRESTA III-IV (_X8_)	2.0 (1G-GE)	110	09/88 – 10/96	3672	
CRESTA III-IV (_X8_)	2.4 D (2L)	63	09/88 – 10/96	3666	
CRESTA III-IV (_X8_)	2.4 D (2L)	63	09/88 – 10/96	3672	
CRESTA III-IV (_X8_)	2.8 (5M-E)	99	09/88 – 08/90	3666	
CRESTA III-IV (_X8_)	2.8 (5M-E)	99	09/88 – 08/90	3672	
CRESTA III-IV (_X8_)	3.0 (7M-GE)	150	09/88 – 10/96	3666	
CRESTA III-IV (_X8_)	3.0 (7M-GE)	150	09/88 – 10/96	3672	
CRESTA Sedan	2.0	118	10.96 - 09.01	4117	
CROWN V (MS8_, RS8_)	All models		09/74 -	3375	
CROWN VI (_S1_)	2.2 D (L)	53	04.80-07.83	3369	
CROWN VI (_S1_)	2.8 i Super Saloon (5M-GE)	125	02.84-03.85	3369	
CROWN VI (_S1_)	2.8 SI (5M-E)	107	04.80-07.83	3369	
CROWN VI (_S1_)	2.8 SI (5M)	107	04.80-07.83	3369	
CROWN COMFORT X-XI-XII (_S1_)	2.0 LPG (1TR-FPE)	83	01/96 – 07/08	3666	
CROWN COMFORT X-XI-XII (_S1_)	2.0 LPG (1TR-FPE)	83	01/96 – 07/08	3672	
CROWN Saloon (_S17_)	4.0 (UZS171_, UZS173_, UZS175_)	206	09/99 – 05/04		4085
CROWN Saloon (_S17_)	4.0 (UZS171_, UZS173_, UZS175_)	206	09/99 – 05/04	4086	
CROWN Saloon (_S20_)	3.5 Hybrid	218	02/08 – 11/12		4113
CROWN Saloon (_S20_)	3.5 Hybrid	218	02/08 11/12	4276	
CROWN Saloon (_S20_)	3.5 V6	232	02/08 – 11/12		4113
CROWN Saloon (_S20_)	3.5 V6	232	02/08 11/12	4276	
CROWN Saloon (_S20_)	4.3 V8 4WD	206	04/09 – 11/12	3910	
CROWN Saloon (_S20_)	4.6	255	04/09 11/12	4276	
CROWN Saloon (CRS_, JZS_, GRS18_, UZS_)	4.3 Royal Saloon	206	09/03 – 02/08	3910	
CROWN Saloon (CRS_, JZS_, GRS18_, UZS_)	4.3 Royal Saloon 4WD	206	09/03 – 02/08	3910	
CROWN Saloon (GRS21_, AWS21_)	3.5 V6	232	12/12 -	4276	
DARIO TERIOS	13	63	01/03 – 12/06	3604	
DARIO TERIOS	1.3 All-wheel Drive	63	01/03 – 12/06	3604	
DUET (M11_, M10_)	10	40	09/98 – 04/04	3901	
DYNA	1.6	51	08/77 – 04/79	3379	
DYNA	2.0	72	08/77 – 08/84	3379	
DYNA	2.0	79	09/84 – 08/87	3379	
DYNA	2.4 D (2L)	55	08/77 – 04/79	3379	
DYNA	2.4 D (2J)	55	09/84 – 08/87	3379	
DYNA	3.0 D (11B)	75	08/77 – 04/79	3379	
DYNA	3.4 D (13B)	66	09/84 – 08/87	3379	
DYNA	3.7 D (14B)	71	08/77 – 04/79	3379	
DYNA 200	22 (4Y)	69	10/93 – 05/95	3930	
DYNA 200	3.0 D (11B)	75	01/85 – 05/95	3930	
DYNA 200	3.4 D (3B)	66	10/89 – 05/95	3930	
DYNA 200	3.7 D (14B)	71	08/88 – 05/95	3930	
DYNA Platform/Chassis (KD_, LY_, TRY2_, KDY2_,XZU4_, XZU3_,)	2.5 D4d	75	08/01 -	3777	
DYNA Platform/Chassis (KD_, LY_, TRY2_, KDY2_,XZU4_, XZU3_,	2.0 LPG 4WD	85	09/06 -	3777	
DYNA Platform/Chassis (KD_, LY_, TRY2_, KDY2_,XZU4_, XZU3_,	3.0 D4d (KDY22_, KDY23_,KDY25_, KDY26_)	106	09/06 -	3777	
DYNA Platform/Chassis (KD_, LY_, TRY2_, KDY2_,XZU4_, XZU3_,	3.0 D4d (KDY261_, KDY251_,KDY231_, KDY221_)	80	09/06 -	3777	
DYNA Platform/Chassis (KD_, LY_, TRY2_, KDY2_,XZU4_, XZU3_,	2.0 4WD	98	09/06 -	3777	
DYNA Platform/Chassis (KD_, LY_, TRY2_, KDY2_,XZU4_, XZU3_,	3.0 D4d 4WD	106	09/06 -	3777	
DYNA Platform/Chassis (KD_, LY_, TRY2_, KDY2_,XZU4_, XZU3_,	2.0	98	09/06 -	3777	
DYNA Platform/Chassis (KD_, LY_, TRY2_, KDY2_,XZU4_, XZU3_,	3.0 D4d	65	08/01 -	3777	
DYNA Platform/Chassis (KD_, LY_, TRY2_, KDY2_,XZU4_, XZU3_,	4.6 D4d	96	06/03 -	3777	
DYNA Platform/Chassis (KD_, LY_, TRY2_, KDY2_,XZU4_, XZU3_,	2.5 D4d	65	08/01 -	3777	
DYNA Platform/Chassis (KD_, LY_, TRY2_, KDY2_,XZU4_, XZU3_,	2.0 LPG	85	09/06 -	3777	
ECHO Saloon (NCP1_)	1.5 VVTi (NCP12_)	78	08/99 – 08/05	3768	
ESQUIRE (_R8_)	20	112	10/14 -	3953	
ESQUIRE (_R8_)	1.8 Hybrid	73	10/14 -	3953	
ESQUIRE (_R8_)	2.0 4WD	112	10/14 -	3953	
FJ CRUISER (GSJ1_)	4.0 (GSJ10_)	178	01/06 – 10/10	3693	
FJ CRUISER (GSJ1_)	4.0 4WD (GSJ15_)	178	01/06 – 10/10	3693	
FJ CRUISER (GSJ1_)	4.0 4WD (GSJ15_)	193	11/10 -	3693	
FJ CRUISER (GSJ1_)	4.0 4WD (GSJ15_)	200	12/10 -	3693	
FJ CRUISER (GSJ1_)	4.0 4WD (GSJ15_)	203	01/11 -	3693	
FORTUNER II / SW4 (_AN16_)	2.4 D (2GD-FTV)	110	05/15 -	4239	
FORTUNER II / SW4 (_AN16_)	2.4 D (2GD-FTV)	110	05/15 -	4239	
FORTUNER II / SW4 (_AN16_)	2.7 (2TR-FE)	120	01/16 -	4239	
FORTUNER II / SW4 (_AN16_)	2.7 (2TR-FE)	122	05/15 -	4239	
FORTUNER II / SW4 (_AN16_)	2.7 (2TR-FE)	122	05/15 -	4239	
FORTUNER II / SW4 (_AN16_)	2.8 D (1GD-FTV)	130	05/15 -	4239	

MAKE & MODEL		KW	YEAR		
TOYOTA					
FORTUNER II / SW4 (_AN16_)	2.8 D (1GD-FTV)	130	05/15 -	4239	
FORTUNER II / SW4 (_AN16_)	3.0 TDI (1KD-FTV)	130	10/15 -	4239	
FORTUNER II / SW4 (_AN16_)	4.0 V6	175	11/15 -	4239	
FORTUNER (_AN16_)	27	120	01/16 -	3891	
FORTUNER (_AN16_)	27	122	05/15 -	3891	
FORTUNER (_AN16_)	2.4 D	110	05/15 -	3891	
FORTUNER (_AN16_)	2.4 D 4WD	110	05/15 -	3891	
FORTUNER (_AN16_)	2.7 4WD	122	05/15 -	3891	
FORTUNER (_AN16_)	2.8 D	130	05/15 -	3891	
FORTUNER (_AN16_)	2.8 D 4WD	130	05/15 -	3891	
GAIA (CXM1_, SXM1_, ACM1_)	2.0 VVTi	112	05/98 – 10/03	3554	
GAIA (CXM1_, SXM1_, ACM1_)	2.0 VVTi	112	05/98 – 10/03	3651	
GAIA (CXM1_, SXM1_, ACM1_)	2.0 VVTi 4WD	112	05/98 – 10/03	3554	
GAIA (CXM1_, SXM1_, ACM1_)	2.0 VVTi 4WD	112	05/98 – 10/03	3651	
GAIA (CXM1_, SXM1_, ACM1_)	2.2 TD	69	10/98 – 10/03	3554	
GAIA (CXM1_, SXM1_, ACM1_)	2.2 TD	69	10/98 – 10/03	3651	
GRANVIA (_H2_, _H1_)	24	100	08/95 – 12/04	3777	
GRANVIA (_H2_, _H1_)	24	100	08/95 – 12/04		4275
GRANVIA (_H2_, _H1_)	27	112	08/95 – 12/04	3777	
GRANVIA (_H2_, _H1_)	27	112	08/95 – 12/04		4275
GRANVIA (_H2_, _H1_)	34	140	08/95 – 12/04	3777	
GRANVIA (_H2_, _H1_)	34	140	08/95 – 12/04		4275
GRANVIA (_H2_, _H1_)	3.0 TDi	96	08/95 – 12/04	3777	
GRANVIA (_H2_, _H1_)	3.0 TDi	96	08/95 – 12/04		4275
GT 86 Coupe (ZN6_)	2.0 GT (ZN6AC_, ZN6BC_)	147	03/12 -		4213
HARRIER (_U1_)	24	118	06/00 – 01/03		3776
HARRIER (_U1_)	24	118	06/00 – 01/03	3822	
HARRIER (_U1_)	2.2 4WD	103	03/98 – 01/03		3776
HARRIER (_U1_)	2.2 4WD	103	03/98 – 01/03	3822	
HARRIER (_U1_)	2.4 4WD	118	06/00 – 01/03		3776
HARRIER (_U1_)	2.4 4WD	118	06/00 – 01/03	3822	
HARRIER (_U1_)	3.0 4WD	164	03/98 – 01/03		3776
HARRIER (_U1_)	3.0 4WD	164	03/98 – 01/03	3822	
HARRIER (_U3_)	2.4 4WD (ACU35_)	118	10/03 – 06/12	4105	
HARRIER (_U3_)	2.4 4WD (ACU35_)	118	10/03 – 06/12		4111
HARRIER (_U3_)	3.0 4WD (MCU35_, MCU36_)	150	10/03 – 12/08	4105	
HARRIER (_U3_)	3.0 4WD (MCU35_, MCU36_)	150	10/03 – 12/08		4111
HARRIER (_U3_)	3.3 4WD	171	10/03 – 12/08	4105	
HARRIER (_U3_)	3.3 4WD	171	10/03 – 12/08		4111
HARRIER (_U3_)	3.3 Hybrid (MHU38_)	155	04/05 – 05/12	4105	
HARRIER (_U3_)	3.3 Hybrid (MHU38_)	155	04/05 – 05/12		4111
HARRIER (_U3_)	3.5 4WD (GSU35_, GSU36_)	206	04/05 – 12/08	4105	
HARRIER (_U3_)	3.5 4WD (GSU35_, GSU36_)	206	04/05 – 12/08		4111
HARRIER (_U6_)	2.0 (ZSU60W)	111	10/13 -		3949
HARRIER (_U6_)	2.0 (ZSU60W)	111	10/13 -	4077	
HARRIER (_U6_)	2.0 4WD (ZSU65W)	111	10/13 -		3949
HARRIER (_U6_)	2.0 4WD (ZSU65W)	111	10/13 -	4077	
HIACE I Box (RH1_, LH3_, RH3_, RH2_, LH2_, LH1_)	1.6 (RH20-30)	49	02/77 – 03/83	3414	
HIACE I Box (RH1_, LH3_, RH3_, RH2_, LH2_, LH1_)	2.0 (RH25-32)	65	07/77 – 03/83	3414	
HIACE I Box (RH1_, LH3_, RH3_, RH2_, LH2_, LH1_)	2.2 D (LH20-30)	46	01/79 – 03/83	3414	
HIACE I Wagon (LH1_, RH1_, LH3_, RH3_, LH2_, RH2_)	1.6 (RH20_, RH30_)	49	02/77 – 11/82	3414	
HIACE II Box (LH5_, YH7_, LH7_, LH6_, YH6_, YH5_)	18	58	03/83 – 11/89	3414	
HIACE II Box (LH5_, YH7_, LH7_, LH6_, YH6_, YH5_)	20	65	01/84 – 11/89	3414	
HIACE II Box (LH5_, YH7_, LH7_, LH6_, YH6_, YH5_)	2.2 4WD	69	09/87 – 08/89	3414	
HIACE II Box (LH5_, YH7_, LH7_, LH6_, YH6_, YH5_)	2.2 4WD	69	09/87 – 08/89	3777	
HIACE II Box (LH5_, YH7_, LH7_, LH6_, YH6_, YH5_)	2.2 D	49	03/83 – 11/89	3414	
HIACE II Box (LH5_, YH7_, LH7_, LH6_, YH6_, YH5_)	2.2 D	49	03/83 – 11/89	3777	
HIACE II Box (LH5_, YH7_, LH7_, LH6_, YH6_, YH5_)	2.4 D	55	05/84 – 11/89	3414	
HIACE II Box (LH5_, YH7_, LH7_, LH6_, YH6_, YH5_)	2.4 D	55	05/84 – 11/89	3777	
HIACE II Box (LH5_, YH7_, LH7_, LH6_, YH6_, YH5_)	2.4 D 4WD	55	04/84 – 07/87	3414	
HIACE II Box (LH5_, YH7_, LH7_, LH6_, YH6_, YH5_)	2.4 D 4WD	55	04/84 – 07/87	3777	
HIACE II Box (LH5_, YH7_, LH7_,LH6_, YH6_,YH5_)	20	65	01/84 – 11/89	3777	
HIACE II Box (LH5_,YH7_, LH7_, LH6_, YH6_, YH5_)	18	58	03/83 – 11/89	3777	
HIACE II Wagon (LH7_, LH5_, LH6_, YH7_, YH6_,YH5_)	1.8 (H5G)	58	03/83 – 11/89	3414	
HIACE II Wagon (LH7_, LH5_, LH6_, YH7_, YH6_,YH5_)	2.2 D (H5G)	49	03/83 – 11/89	3414	
HIACE II Wagon (LH7_, LH5_, LH6_, YH7_, YH6_,YH5_)	2.0 (YH51_, YH61_)	65	01/85 – 08/89	3414	
HIACE II Wagon (LH7_, LH5_, LH6_, YH7_, YH6_,YH5_)	2.4 D (H5G)	55	08/84 – 08/89	3414	
HIACE II Wagon (LH7_, LH5_, LH6_, YH7_, YH6_,YH5_)	2.4 D 4WD (H5F)	54	01/87 – 01/88	3777	
HIACE II Wagon (LH7_, LH5_, LH6_, YH7_, YH6_,YH5_)	1.8	58	03/83 – 11/89	3777	
HIACE II Wagon (LH7_, LH5_, LH6_, YH7_, YH6_,YH5_)	2.0 (YH51_, YH61_)	65	01/85 – 08/89	3777	
HIACE II Wagon (LH7_, LH5_, LH6_, YH7_, YH6_,YH5_)	2.2 D (H5G)	49	03/83 – 11/89	3777	

BESER

MAKE & MODEL		KW	YEAR		
TOYOTA					
HIACE II Wagon (LH7_, LH5_, LH6_, YH7_, YH6_,YH5_)	2.4 D (H5G)	55	08/84 – 08/89	3777	
HIACE III Box (YH7_, LH6_, LH7_, LH5_, YH5_, YH6_)	24	88	08/89 – 08/95	3714	
HIACE III Box (YH7_, LH6_, LH7_, LH5_, YH5_, YH6_)	24	88	08/89 – 08/95	3777	
HIACE III Box (YH7_, LH6_, LH7_, LH5_, YH5_, YH6_)	2.0 (RCH102_, RCH112_)	74	02/90 – 08/95	3714	
HIACE III Box (YH7_, LH6_, LH7_, LH5_, YH5_, YH6_)	2.0 (RCH102_, RCH112_)	74	02/90 – 08/95	3777	
HIACE III Box (YH7_, LH6_, LH7_, LH5_, YH5_, YH6_)	2.4 4WD (RCH103_, RCH113_)	88	08/89 – 08/95	3714	
HIACE III Box (YH7_, LH6_, LH7_, LH5_, YH5_, YH6_)	2.4 4WD (RCH103_, RCH113_)	88	08/89 – 08/95	3777	
HIACE III Box (YH7_, LH6_, LH7_, LH5_, YH5_, YH6_)	2.4 D	57	09/89 – 08/95	3714	
HIACE III Box (YH7_, LH6_, LH7_, LH5_, YH5_, YH6_)	2.4 D	57	09/89 – 08/95	3777	
HIACE III Box (YH7_, LH6_, LH7_, LH5_, YH5_, YH6_)	2.4 D (LH10_, LH11_)	55	08/89 – 08/95	3714	
HIACE III Box (YH7_, LH6_, LH7_, LH5_, YH5_, YH6_)	2.4 D (LH10_, LH11_)	55	08/89 – 08/95	3777	
HIACE III Box (YH7_, LH6_, LH7_, LH5_, YH5_, YH6_)	2.4 D 4WD	57	09/89 – 08/95	3714	
HIACE III Box (YH7_, LH6_, LH7_, LH5_, YH5_, YH6_)	2.4 D 4WD	57	09/89 – 08/95	3777	
HIACE III Box (YH7_, LH6_, LH7_, LH5_, YH5_, YH6_)	2.4 D 4WD (LXH22_, LXH12_, LH114_,)	55	08/89 – 07/99	3777	
HIACE III Box (YH7_, LH6_, LH7_, LH5_, YH5_, YH6_)	2.4 D 4WD (LXH22_, LXH12_,LH114_, LH112_,)	55	08/89 – 07/99	3714	
HIACE III Box (YH7_, LH6_, LH7_, LH5_, YH5_, YH6_)	2.5 D-4D 4WD	65	08/01 – 08/04	3777	
HIACE III Box (YH7_, LH6_, LH7_, LH5_, YH5_, YH6_)	2.8 D	61	08/89 – 08/00	3714	
HIACE III Box (YH7_, LH6_, LH7_, LH5_, YH5_, YH6_)	3.0 D	65	08/98 – 08/04	3777	
HIACE III Wagon (_H1_)	24	85	11/96 – 08/04	3777	
HIACE III Wagon (_H1_)	2.0 (RZH102)	74	08/89 – 04/98	3777	
HIACE III Wagon (_H1_)	2.4 (RZH103)	88	08/89 – 08/95	3777	
HIACE III Wagon (_H1_)	2.5 D-4D 4WD	75	08/01 – 08/04	3777	
HIACE III Wagon (_H1_)	2.4 D 4WD (LH51_, LH61_, LH66_, LH71_)	55	08/087 – 08/95	3777	
HIACE III Wagon (_H1_)	2.4 4WD (RZH103_, RZH109_, RZH113_, RZH115_)	88	08/89 – 07/95	3777	
HIACE III Wagon (_H1_)	2.4 D (LH102)	55	08/09 – 08/95	3777	
HIACE III Wagon (_H1_)	2.4 D (LH5_, LH6_, LH7_, LH10_, LH11_)	57	08/87 – 12/04	3777	
HIACE III Wagon (LH1_, RZH1_)	2.0 (RZH102)	74	08/89 – 04/98	3714	
HIACE III Wagon (LH1_, RZH1_)	2.4 (RZH103)	88	08/89 – 08/95	3714	
HIACE III Wagon (LH1_, RZH1_)	2.4 4WD (RZH103_, RZH109_, RZH113_,)	88	08/89 – 07/95	3714	
HIACE III Wagon (LH1_, RZH1_)	2.8 D	61	08/89 – 08/00	3714	
HIACE III Wagon (LH1_, RZH1_)	3.0 D	65	08/98 – 08/04	3714	
HIACE III Wagon (LH1_, RZH1_)	2.4 D (LH5_, LH6_, LH7_, LH10_, LH11_)	57	08/87 – 12/04	3714	
HIACE III Wagon (LH1_, RZH1_)	2.4 D 4WD (LH51_, LH61_, LH66_, LH71_)	55	08/87 – 08/95	3714	
HIACE IV Box (LXH1_, RZH1_, LH1_)	2.4 (RCH12_, RCH22_)	85	08/95 – 02/05	3777	
HIACE IV Box (LXH1_, RZH1_, LH1_)	2.4 4WD (RCH18_, RCH28_)	85	08/95 – 04/98	3777	
HIACE IV Box (LXH1_, RZH1_, LH1_)	2.4 D (LXH12_, LXH22_)	55	09/95 – 08/01	3777	
HIACE IV Box (LXH1_, RZH1_, LH1_)	2.4 D (LXH12_, LXH22_)	58	08/95 – 08/06	3777	
HIACE IV Box (LXH1_, RZH1_, LH1_)	2.4 D (LXH12_, LXH22_)	61	08/95 – 07/01	3777	
HIACE IV Box (LXH1_, RZH1_, LH1_)	2.4 i (RZH10)	88	08/95 – 02/05	3777	
HIACE IV Box (LXH1_, RZH1_, LH1_)	2.4 TD (LXH12_, LXH22_)	66	08/95 – 08/06	3777	
HIACE IV Box (LXH1_, RZH1_, LH1_)	2.4 TD 4WD (LXH18_, LXH28_)	66	08/95 – 08/06	3777	
HIACE IV Box (LXH1_, RZH1_, LH1_)	2.5 D-4D (KLH12_, KLH22_)	65	11/01 – 08/06	3777	
HIACE IV Box (LXH1_, RZH1_, LH1_)	2.5 D-4D (KLH12_, KLH22_)	75	11/01 – 08/06	3777	
HIACE IV Box (LXH1_, RZH1_, LH1_)	2.5 D-4D 4WD (KLH12_, KLH22_)	75	11/01 – 08/06	3777	
HIACE IV Box (LXH1_, RZH1_, LH1_)	2.7 (RCH13_, RCH23_)	105	04/98 – 08/06	3777	
HIACE IV Box (LXH1_, RZH1_, LH1_)	2.7 4WD (RCH19_, RCH29_)	106	04/98 -	3777	
HIACE IV Bus (_H1_, _H2_)	2.4 (RCH12_, RCH22_)	85	08/95 – 04/98	3777	
HIACE IV Bus (_H1_, _H2_)	2.4 4WD (RCH18_)	85	08/95 – 04/98	3777	
HIACE IV Bus (_H1_, _H2_)	2.4 D	61	08/95 – 08/06	3777	
HIACE IV Bus (_H1_, _H2_)	2.4 D (LH10_, LH11_, LXH12_)	55	07/99 – 08/06	3777	
HIACE IV Bus (_H1_, _H2_)	2.4 D (LH10_, LH11_, LXH12_, LXH22_)	58	08/95 – 08/06	3777	
HIACE IV Bus (_H1_, _H2_)	2.4 TD (LXH12_, LXH22_)	66	08/95 – 08/06	3777	
HIACE IV Bus (_H1_, _H2_)	2.4 TD 4WD (H18/28)	66	08/95 – 08/06	3777	
HIACE IV Bus (_H1_, _H2_)	2.5 D-4D (KLH12_)	65	11/01 – 08/06	3777	
HIACE IV Bus (_H1_, _H2_)	2.5 D-4D (KLH12_, KLH22_)	75	11/01 – 08/06	3777	
HIACE IV Bus (_H1_, _H2_)	2.5 D-4D 4WD (KLH12_, KLH22_)	75	08/01 – 07/06	3777	
HIACE IV Bus (_H1_, _H2_)	2.7 (RCH13_, RCH23_)	105	04/98 – 11/01	3777	
HIACE IV Bus (_H1_, _H2_)	2.7 (RCH13_, RCH23_)	106	11/01 – 12/06	3777	
HIACE IV Bus (_H1_, _H2_)	2.7 4WD (RCH13_, RCH19_,RCH23_)	106	07/99 -	3777	
HIACE IV Bus (_H1_, _H2_)	2.7 4WD (RCH19_)	105	04/98 – 08/06	3777	
HIGHLANDER (ASU4_, GSU4_)	2.7 (ASU40_)	140	05/09 -		4254
HIGHLANDER (ASU4_, GSU4_)	3.5 4WD (GSU45_)	201	05/09 -		4254
HILUX Closed Off-Road Vehicle (RZN1_, LN1_)	27	107	08/01 – 07/04	3693	
HILUX Closed Off-Road Vehicle (RZN1_, LN1_)	2.4 TD 4WD	66	08/97 – 07/01	3693	
HILUX Closed Off-Road Vehicle (RZN1_, LN1_)	3.0 D	67	08/02 – 07/04	3693	
HILUX Closed Off-Road Vehicle (RZN1_, LN1_)	3.4 4WD	131	08/00 – 07/04	3693	
HILUX Closed Off-Road Vehicle (RZN1_, LN1_)	3.4 4WD	136	11/95 – 07/00	3693	
HILUX Closed Off-Road Vehicle (ZN13_, LN9_, RN1_,YN8_, LN8_	2.4 TD 4WD	66	08/89 – 11/95	3560	
HILUX II Pickup (_N1_, LN8_, RN5_, LN6_, YN6_,YN5_, LN5_, R	2.0 (YN57)	65	01/84 – 12/86	3371	
HILUX II Pickup (_N1_, LN8_, RN5_, LN6_, YN6_,YN5_, LN5_, R	2.4 D 4WD	55	01/84 – 08/88	3371	
HILUX II Pickup (_N1_, LN8_, RN5_, LN6_, YN6_,YN5_, LN5_, R	2.4	75	10/88 – 12/97	3560	

MAKE & MODEL		KW	YEAR		
TOYOTA					
HILUX VII Pickup (_N1_, _N2_, _N3_)	2.5 D-4D (KUN15_)	88	12/07 -	3998	
HILUX VII Pickup (_N1_, _N2_, _N3_)	2.5 D-4D (KUN15_, KUN25_, KUN35_)	75	10/05 -	3998	
HILUX VII Pickup (_N1_, _N2_, _N3_)	2.0	98	02/05 -	3998	
HILUX VII Pickup (_N1_, _N2_, _N3_)	2.5 D 4WD (KUN25_)	75	10/05 -	3998	
HILUX VII Pickup (_N1_, _N2_, _N3_)	2.5 D-4D 4WD (KDN14_,KDN15_, KDN16_, KDN17_, KDN19_...)	106	01/10 -	3998	
HILUX VII Pickup (_N1_, _N2_, _N3_)	2.5 D-4D 4WD (KUN25_)	88	12/07 -	3998	
HILUX VII Pickup (_N1_, _N2_, _N3_)	2.7	118	08/05 -	3998	
HILUX VII Pickup (_N1_, _N2_, _N3_)	2.7 4WD	118	08/05 -	3998	
HILUX VII Pickup (_N1_, _N2_, _N3_)	3.0 D (KUN16)	120	08/05 – 09/06	3998	
HILUX VII Pickup (_N1_, _N2_, _N3_)	3.0 D (KUN16)	126	10/06 -	3998	
HILUX VII Pickup (_N1_, _N2_, _N3_)	4.0 4WD	175	08/05 -	3998	
HILUX VIII Pickup (_N1_)	2.7 4WD (TGN126_)	118	05/15 -	3891	
HILUX VIII Pickup (_N1_)	2.7 4WD (TGN126_)	122	05/15 -	3891	
HILUX VIII Pickup (_N1_)	2.0 (TGN110_, TGN120_)	102	08/15 -	3891	
HILUX VIII Pickup (_N1_)	2.4 D (GUN112_, GUN122_, GUN135_)	110	05/15 -	3891	
HILUX VIII Pickup (_N1_)	2.4 D 4WD (GUN125_)	110	05/15 -	3891	
HILUX VIII Pickup (_N1_)	2.5 D (KUN112_, KUN122_, KUN135_)	75	08/15 -	3891	
HILUX VIII Pickup (_N1_)	2.5 D 4WD (KUN125_)	106	08/15 -	3891	
HILUX VIII Pickup (_N1_)	2.7 (TGN111_, TGN121_)	122	05/15 -	3891	
HILUX VIII Pickup (_N1_)	2.8 D (GUN123_, GUN136_)	130	05/15 -	3891	
HILUX VIII Pickup (_N1_)	2.8 D 4WD (GUN126_)	130	05/15 -	3891	
HiAce Bus (Minibus-M2-Segment)	1.6 (RH20_, RH30_)	49	02/77 – 11/82	3379	
HiAce Bus (Minibus-M2-Segment)	1.8	58	02/77-	3379	
HiAce Bus (Minibus-M2-Segment)	2.2 D (LH20_, LH30_) (L)	49	09/79 – 10/82	3379	
HiAce Furgón (LCVs-N1 Segment)	1.6 (12R)	49	02/77 – 03/83	3379	
HiAce Furgón (LCVs-N1 Segment)	2.0 (18R)	65	07/77 – 03/83	3379	
HiAce Furgón (LCVs-N1 Segment)	2.2 D (L)	46	01/79 – 03/83	3379	
HiLux II-III / PICKUP	1.6 (12R)	49	08/78 – 07/83	3379	
HiLux VIII (GUN1_)	2.4 D (GUN122) (2GD-FTV)	110	07/15 -	4239	
HiLux VIII (GUN1_)	2.4 D (GUN125) (2GD-FTV)	110	07/15 -	4239	
HiLux VIII (GUN1_)	2.7 (2TR-FE)	122	05/15 -	4239	
HiLux VIII (GUN1_)	2.8 D (GUN123) (1GD-FTV)	125	07/15 -	4239	
HiLux VIII (GUN1_)	2.8 D (GUN126) (1GD-FTV)	130	07/15 -	4239	
HiLux VIII (GUN1_M70/M80)	2.0 (1TR-FE)	102	08/15 -	4239	
HiLux VIII (GUN1_M70/M80)	2.4 D (2GD-FTV)	110	05/15 -	4239	
HiLux VIII (GUN1_M70/M80)	2.4 D (2GD-FTV)	110	05/15 -	4239	
HiLux VIII (GUN1_M70/M80)	2.5 D (2KD-FTV)	75	08/15 -	4239	
HiLux VIII (GUN1_M70/M80)	2.5 D (2KD-FTV)	106	08/15 -	4239	
HiLux VIII (GUN1_M70/M80)	2.7 (2TR-FE)	121	05/15 -	4239	
HiLux VIII (GUN1_M70/M80)	2.7 (2TR-FE)	122	05/15 -	4239	
HiLux VIII (GUN1_M70/M80)	2.7 (TGN126_) (2TR-FE)	118	05/15 -	4239	
HiLux VIII (GUN1_M70/M80)	2.8 D (1GD-FTV)	130	05/15 -	4239	
HiLux VIII (GUN1_M70/M80)	2.8 D (1GD-FTV)	130	05/15 -	4239	
HiLux VIII (GUN1_M70/M80)	2.8 D (GUN123) (1GD-FTV)	125	07/15 -	4239	
HiLux VIII (GUN1_M70/M80)	4.0 (1GR-FE)	175	07/15 -	4239	
HiLux VIII (GUN1_M70/M80)	4.0 (1GR-FE)	175	07/15 -	4239	
INNOVA I (_N4_)	2.0 (TGN40_)	100	07/03 -	3982	
INNOVA I (_N4_)	2.5 D (KUN40_)	75	08/04 -	3982	
INNOVA I (_N4_)	2.7 (TGN41_)	118	08/04 -	3982	
IQ (_J1_)	1.0 (KGJ10_)	50	01/09 -		3954
IQ (_J1_)	1.33 (NGJ10_)	69	01/09 -		3954
IQ (_J1_)	1.33 (NGJ10_)	72	01/09 -		3954
IQ (_J1_)	1.4 D-4D (NUJ10_)	66	01/09 -		3954
ISIS (_M1_)	1.8 VVTi	97	07/04 -	3910	
ISIS (_M1_)	1.8 VVTi	106	04/07 -	3910	
ISIS (_M1_)	1.8 VVTi 4WD	98	04/07 -	3910	
ISIS (_M1_)	2.0 VVTi	114	07/04 -	3910	
ISIS (_M1_)	2.0 VVTi	116	04/07 -	3910	
ISIS (_M1_)	2.0 VVTi 4WD	114	07/04 -	3910	
IST (NCP6_)	1.3 VVTi	63	05/04 – 07/07	3769	
IST (NCP6_)	1.5 VVTi	80	05/04 – 07/07	3769	
IST (NCP6_)	1.5 VVTi	80	05/04 – 07/07		3788
KLUGER (_U3_)	2.4 (ACU20_)	115	06/00 – 05/07		3911
KLUGER (_U3_)	2.4 (ACU20_)	115	06/00 – 05/07	4082	
KLUGER (_U3_)	2.4 (ACU20_)	115	06/00 – 05/07		4111
KLUGER (_U3_)	2.4 (ACU20_)	118	06/00 – 05/07		3911
KLUGER (_U3_)	2.4 (ACU20_)	118	06/00 – 05/07	4082	
KLUGER (_U3_)	2.4 (ACU20_)	118	06/00 – 05/07		4111
KLUGER (_U3_)	2.4 4WD (ACU25_)	115	06/00 – 09/03		3911
KLUGER (_U3_)	2.4 4WD (ACU25_)	115	06/00 – 09/03	4082	
KLUGER (_U3_)	2.4 4WD (ACU25_)	118	06/00 – 09/03		3911

MAKE & MODEL		KW	YEAR		
TOYOTA					
KLUGER (_U3_)	2.4 4WD (ACU25_)	118	06/00 – 09/03	4082	
KLUGER (_U3_)	3.0 (MCU20_)	164	11/00 – 07/03		3911
KLUGER (_U3_)	3.0 (MCU20_)	164	11/00 – 07/03	4082	
KLUGER (_U3_)	3.0 (MCU20_)	164	11/00 – 07/03		4111
KLUGER (_U3_)	3.0 4WD (MCU25_)	150	10/03 – 05/07		3911
KLUGER (_U3_)	3.0 4WD (MCU25_)	150	10/03 – 05/07	4082	
KLUGER (_U3_)	3.0 4WD (MCU25_)	150	10/03 – 05/07		4111
KLUGER (_U3_)	3.0 4WD (MCU25_)	164	11/00 – 07/03		3911
KLUGER (_U3_)	3.0 4WD (MCU25_)	164	11/00 – 07/03	4082	
KLUGER (_U3_)	3.0 4WD (MCU25_)	164	11/00 – 07/03		4111
KLUGER (_U3_)	3.3 (MCU23_)	171	08/03 – 05/07	4082	
KLUGER (_U3_)	3.3 (MCU23_)	171	08/03 – 05/07		4111
KLUGER (_U3_)	3.3 4WD (MCU28_)	171	08/03 – 05/07	4082	
KLUGER (_U3_)	3.3 4WD (MCU28_)	171	08/03 – 05/07		4111
KLUGER (_U3_)	3.3 Hybrid (MHU23_)	200	03/05 – 05/07	4082	
KLUGER (_U3_)	3.3 Hybrid (MHU23_)	200	03/05 – 05/07		4111
KLUGER (_U3_)	3.3 Hybrid 4WD (MHU28_)	200	03/05 – 05/07	4082	
KLUGER (_U3_)	3.3 Hybrid 4WD (MHU28_)	200	03/05 – 05/07		4111
KLUGER (_U4_)	35	201	05/07 -		4254
KLUGER (_U4_)	35	201	05/07 -	4255	
KLUGER (_U4_)	2.7 VVTi	140	05/07 -		4254
KLUGER (_U4_)	2.7 VVTi	140	05/07 -	4255	
KLUGER (_U4_)	2.7 VVTi 4WD	140	05/07 -		4254
KLUGER (_U4_)	2.7 VVTi 4WD	140	05/07 -	4255	
KLUGER (_U4_)	3.5 4WD	201	05/07 -		4254
KLUGER (_U4_)	3.5 4WD	201	05/07 -	4255	
KLUGER (_U5_)	3.5 Hybrid AWD (GVU58_)	209	09/13 -	4255	
KLUGER (_U5_)	3.5 Hybrid AWD (GVU58_)	209	09/13 -		4256
LAND CRUISER (_J6_)	3.4 Diesel (BJ60_V)	66	10/81 – 08/87	3371	
LAND CRUISER (_J6_)	4.0 (FJ62_G)	115	08/87 – 12/89	3371	
LAND CRUISER (_J6_)	4.0 (FJ62_V)	101	11/84 – 08/87	3371	
LAND CRUISER (_J6_)	4.0 Diesel (HJ60)	74	01/82 – 12/85	3371	
LAND CRUISER (_J6_)	4.0 Diesel (HJ60)	76	01/85 – 12/87	3371	
LAND CRUISER (_J6_)	4.0 Diesel (HJ60_V)	77	10/81 – 01/88	3371	
LAND CRUISER (_J6_)	4.0 Turbo-D (HJ61_V)	100	10/85 – 12/89	3371	
LAND CRUISER (_J6_)	4.2 (FJ60_V)	88	10/81 – 01/88	3371	
LAND CRUISER (BJ4_)	3.6 D (HJ45_V)	66	04/79 – 07/80	3371	
LAND CRUISER (LJ12_, KZJ12_, TRJ12_, KDJ12_,GRJ12_)	2.7 (RZJ12)	112	09/02 – 08/04	3693	
LAND CRUISER (LJ12_, KZJ12_, TRJ12_, KDJ12_,GRJ12_)	2.7 (TRJ12)	120	11/03 – 07/09	3693	
LAND CRUISER (LJ12_, KZJ12_, TRJ12_, KDJ12_,GRJ12_)	3.0 D	70	09/02 – 07/09	3693	
LAND CRUISER (LJ12_, KZJ12_, TRJ12_, KDJ12_,GRJ12_)	3.0 D-4D (KDJ120, KDJ125)	122	08/04 – 07/09	3693	
LAND CRUISER (LJ12_, KZJ12_, TRJ12_, KDJ12_,GRJ12_)	3.0 D-4D (KDJ120, KDJ125)	127	09/02 – 07/09	3693	
LAND CRUISER (LJ12_, KZJ12_, TRJ12_, KDJ12_,GRJ12_)	3.0 D-4D (KDJ120, KDJ150, KDJ125)	120	01/03 – 07/09	3693	
LAND CRUISER (LJ12_, KZJ12_, TRJ12_, KDJ12_,GRJ12_)	3.0 D-4D (KZJ12)	92	09/02 – 07/09	3693	
LAND CRUISER (LJ12_, KZJ12_, TRJ12_, KDJ12_,GRJ12_)	3.4	136	09/02 – 08/04	3693	
LAND CRUISER (LJ12_, KZJ12_, TRJ12_, KDJ12_,GRJ12_)	4.0	179	09/02 – 08/04	3693	
LAND CRUISER (LJ12_, KZJ12_, TRJ12_, KDJ12_,GRJ12_)	4.0 (GRJ12, GRJ125)	183	01/03 – 07/09	3693	
LAND CRUISER (LJ12_, KZJ12_, TRJ12_, KDJ12_,GRJ12_)	4.0 (GRJ120)	203	08/05 – 07/09	3693	
LAND CRUISER (PZJ7_, KZJ7_, HZJ7_, BJ7_, LJ7_,RJ7)	2.4 (RJ70_, RJ73_)	77	11/84 – 05/93	3371	
LAND CRUISER (PZJ7_, KZJ7_, HZJ7_, BJ7_, LJ7_,RJ7)	2.4 (RJ70_, RJ73_)	81	11/84 – 05/93	3371	
LAND CRUISER (PZJ7_, KZJ7_, HZJ7_, BJ7_, LJ7_,RJ7)	2.4 (RJ70_V, RJ73_V)	84	12/88 – 12/96	3371	
LAND CRUISER (PZJ7_, KZJ7_, HZJ7_, BJ7_, LJ7_,RJ7)	2.4 D (LJ70_)	53	11/84 – 10/85	3371	
LAND CRUISER (PZJ7_, KZJ7_, HZJ7_, BJ7_, LJ7_,RJ7)	2.4 TD (LJ70_, LJ73_)	63	10/85 – 05/90	3371	
LAND CRUISER (PZJ7_, KZJ7_, HZJ7_, BJ7_, LJ7_,RJ7)	3.4 D (BJ70_V, BJ73_)	70	11/84 – 12/96	3371	
LAND CRUISER (PZJ7_, KZJ7_, HZJ7_, BJ7_, LJ7_,RJ7)	3.4 TD (BJ71_V)	91	10/85 – 08/86	3371	
LAND CRUISER (PZJ7_, KZJ7_, HZJ7_, BJ7_, LJ7_,RJ7)	4.0 D 4x4	74	08/87 – 12/89	3371	
LAND CRUISER (PZJ7_, KZJ7_, HZJ7_, BJ7_, LJ7_,RJ7_)	2.7 4WD	108	11/97 – 04/05	3560	
LAND CRUISER (PZJ7_, KZJ7_, HZJ7_, BJ7_, LJ7_,RJ7_)	3.0 D 4WD (KZN205)	87	11/01 – 04/05	3560	
LAND CRUISER (PZJ7_, KZJ7_, HZJ7_, BJ7_, LJ7_,RJ7_)	2.4 (RJ70_V, RJ73_V)	84	12/88 – 12/96	3560	
LAND CRUISER (PZJ7_, KZJ7_, HZJ7_, BJ7_, LJ7_,RJ7_)	2.4 TD (LJ70)	66	01/90 – 05/93	3560	
LAND CRUISER (PZJ7_, KZJ7_, HZJ7_, BJ7_, LJ7_,RJ7_)	3.0 TD (KZJ70_, KZJ73_,KZJ77_)	92	05/93 – 05/96	3560	
LAND CRUISER (PZJ7_, KZJ7_, HZJ7_, BJ7_, LJ7_,RJ7_)	3.4 D (BJ70_V, BJ73_)	70	11/81 – 12/96	3560	
LAND CRUISER (PZJ7_, KZJ7_, HZJ7_, BJ7_, LJ7_,RJ7_)	3.5 D 4x4 (PZJ75, PZJ70)	85	01/90 – 12/94	3560	
LAND CRUISER (PZJ7_, KZJ7_, HZJ7_, BJ7_, LJ7_,RJ7_)	4.2 D (HZJ7_V)	96	01/90 –	3560	
LAND CRUISER (PZJ7_, KZJ7_, HZJ7_, BJ7_, LJ7_,RJ7_)	4.5 TD 24V 4x4 (VDJ76, VDJ78)	151	03/07 -	3829	
LAND CRUISER (PZJ7_, KZJ7_, HZJ7_, BJ7_, LJ7_,RJ7_)	2.4 TD (LJ70)	66	01/90 – 05/93	3693	
LAND CRUISER (PZJ7_, KZJ7_, HZJ7_, BJ7_, LJ7_,RJ7_)	2.4 (RJ70_V, RJ73_V)	84	12/88 – 12/96	3693	
LAND CRUISER (PZJ7_, KZJ7_, HZJ7_, BJ7_, LJ7_,RJ7_)	4.5 TD 24V 4x4 (VDJ76,VDJ78)	151	03/07 -	3693	
LAND CRUISER 100	45	155	10/03 – 04/07	3693	
LAND CRUISER 100	45	155	10/03 – 04/07	3829	
LAND CRUISER 100	4.7 All-wheel Drive	175	10/03 – 07/07	3829	

MAKE & MODEL		KW	YEAR		
TOYOTA					
LAND CRUISER 100	4.7 All-wheel Drive	175	10/03 – 07/07	3830	
LAND CRUISER 100 (FZJ1_, UZJ1_)	4.2 D (HZJ105)	96	03/98 – 08/07	3829	
LAND CRUISER 100 (FZJ1_, UZJ1_)	4.2 D (HZJ105)	96	03/98 – 08/07	3830	
LAND CRUISER 100 (FZJ1_, UZJ1_)	4.2 TD (HDJ100_)	150	01/98 – 08/07	3829	
LAND CRUISER 100 (FZJ1_, UZJ1_)	4.2 TD (HDJ100_)	150	01/98 – 08/07	3830	
LAND CRUISER 100 (FZJ1_, UZJ1_)	4.7 (UZJ100)	175	02/02 – 08/07	3829	
LAND CRUISER 100 (FZJ1_, UZJ1_)	4.7 (UZJ100)	175	02/02 – 08/07	3830	
LAND CRUISER 100 (FZJ1_, UZJ1_)	4.7 (UZJ100_)	173	01/98 – 08/07	3829	
LAND CRUISER 100 (FZJ1_, UZJ1_)	4.7 (UZJ100_)	173	01/98 – 08/07	3830	
LAND CRUISER 150 (TRJ15_, KDJ15_, GRJ15_,GDJ15_)	4.0 V6 Dual VVTi	205	01/10 -	3693	
LAND CRUISER 150 (TRJ15_, KDJ15_, GRJ15_,GDJ15_)	4.0 V6 VVT-i (GRJ150_)	207	01/10 -	3693	
LAND CRUISER 150 (TRJ15_, KDJ15_, GRJ15_,GDJ15_)	2.7	120	01/10 -	3693	
LAND CRUISER 150 (TRJ15_, KDJ15_, GRJ15_,GDJ15_)	2.8 D-4D (GDJ150_)	130	06/15 -	3693	
LAND CRUISER 150 (TRJ15_, KDJ15_, GRJ15_,GDJ15_)	3.0 D-4D	127	08/09 -	3693	
LAND CRUISER 150 (TRJ15_, KDJ15_, GRJ15_,GDJ15_)	3.0 D-4D (KDJ155_, KDJ150_)	140	08/09 -	3693	
LAND CRUISER 150 (TRJ15_, KDJ15_, GRJ15_,GDJ15_)	4.0 V6 VVTi	183	01/10 -	3693	
LAND CRUISER 150 (TRJ15_, KDJ15_, GRJ15_,GDJ15_)	4.0 V6 VVTi	203	01/10 -	3693	
LAND CRUISER 150 (TRJ15_, KDJ15_, GRJ15_,GDJ15_)	4.0 V6 VVT-i (GRJ150_)	207	01/10 -	3891	
LAND CRUISER 150 (TRJ15_, KDJ15_, GRJ15_,GDJ15_)	4.0 V6 VVTi	183	01/10 -	3891	
LAND CRUISER 150 (TRJ15_, KDJ15_, GRJ15_,GDJ15_)	2.8 D-4D (GDJ150_)	130	06/15 -	3891	
LAND CRUISER 150 (TRJ15_, KDJ15_, GRJ15_,GDJ15_)	3.0 D-4D (KDJ150_)	127	08/09 -	3891	
LAND CRUISER 150 (TRJ15_, KDJ15_, GRJ15_,GDJ15_)	4.0 V6 Dual VVTi	205	01/10 -	3891	
LAND CRUISER 150 (TRJ15_, KDJ15_, GRJ15_,GDJ15_)	4.0 V6 VVTi	203	01/10 -	3891	
LAND CRUISER 150 (TRJ15_, KDJ15_, GRJ15_,GDJ15_)	2.7	120	01/10 -	3891	
LAND CRUISER 150 (TRJ15_, KDJ15_, GRJ15_,GDJ15_)	3.0 D-4D (KDJ155_, KDJ150_)	140	08/09 -	3891	
LAND CRUISER 200	47	202	12/07 -	3996	
LAND CRUISER 200	4.0 All-wheel Drive	179	12/07 -	3996	
LAND CRUISER 200 (GRJ2_, UZJ2_, VDJ2_)	4.0 (GRJ200_)	176	01/10 -	3996	
LAND CRUISER 200 (GRJ2_, UZJ2_, VDJ2_)	4.0 (GRJ200_)	176	01/10 -		3997
LAND CRUISER 200 (GRJ2_, UZJ2_, VDJ2_)	4.5 D V8 (VDJ200)	210	01/08 -	3996	
LAND CRUISER 200 (GRJ2_, UZJ2_, VDJ2_)	4.5 D V8 (VDJ200)	210	01/08 -		3997
LAND CRUISER 200 (GRJ2_, UZJ2_, VDJ2_)	4.5 D4-D	173	08/07 -	3996	
LAND CRUISER 200 (GRJ2_, UZJ2_, VDJ2_)	4.5 D4-D	173	08/07 -		3997
LAND CRUISER 200 (GRJ2_, UZJ2_, VDJ2_)	4.5 D4-D	200	01/12 -	3996	
LAND CRUISER 200 (GRJ2_, UZJ2_, VDJ2_)	4.5 D4-D	200	01/12 -		3997
LAND CRUISER 200 (GRJ2_, UZJ2_, VDJ2_)	4.5 D-4D (VDJ200)	195	01/08 -	3996	
LAND CRUISER 200 (GRJ2_, UZJ2_, VDJ2_)	4.5 D-4D (VDJ200)	195	01/08 -		3997
LAND CRUISER 200 (GRJ2_, UZJ2_, VDJ2_)	4.6 V8	227	09/10 -	3996	
LAND CRUISER 200 (GRJ2_, UZJ2_, VDJ2_)	4.6 V8	227	09/10 -		3997
LAND CRUISER 200 (GRJ2_, UZJ2_, VDJ2_)	4.6 V8 (_URJ202W_)	234	01/12 -	3996	
LAND CRUISER 200 (GRJ2_, UZJ2_, VDJ2_)	4.6 V8 (_URJ202W_)	234	01/12 -		3997
LAND CRUISER 200 (GRJ2_, UZJ2_, VDJ2_)	4.7 V8 (UZJ200)	202	08/07 -	3996	
LAND CRUISER 200 (GRJ2_, UZJ2_, VDJ2_)	4.7 V8 (UZJ200)	202	08/07 -		3997
LAND CRUISER 200 (GRJ2_, UZJ2_, VDJ2_)	4.7 V8 (UZJ200)	212	01/08 -	3996	
LAND CRUISER 200 (GRJ2_, UZJ2_, VDJ2_)	4.7 V8 (UZJ200)	212	01/08 -		3997
LAND CRUISER 200 (GRJ2_, UZJ2_, VDJ2_)	5.7 V8 (URJ200_)	284	08/07 -	3996	
LAND CRUISER 200 (GRJ2_, UZJ2_, VDJ2_)	5.7 V8 (URJ200_)	284	08/07 -		3997
LAND CRUISER 80 (_J8_)	4.0 (FJ80_)	115	01/90 – 08/92	3673	
LAND CRUISER 80 (_J8_)	4.0 (FJ80_)	115	01/90 – 08/92	3693	
LAND CRUISER 80 (_J8_)	4.2 D (HZJ80_)	99	01/90 – 12/97	3673	
LAND CRUISER 80 (_J8_)	4.2 D (HZJ80_)	99	01/90 – 12/97	3693	
LAND CRUISER 80 (_J8_)	4.2 TD (HDJ80)	118	10/92 – 12/97	3673	
LAND CRUISER 80 (_J8_)	4.2 TD (HDJ80)	118	10/92 – 12/97	3693	
LAND CRUISER 80 (_J8_)	4.2 TD (HDJ80)	123	01/90 – 12/97	3673	
LAND CRUISER 80 (_J8_)	4.2 TD (HDJ80)	123	01/90 – 12/97	3693	
LAND CRUISER 80 (_J8_)	4.2 TD 24V (HDJ80_)	125	03/95 – 12/97	3673	
LAND CRUISER 80 (_J8_)	4.2 TD 24V (HDJ80_)	125	03/95 – 12/97	3693	
LAND CRUISER 80 (_J8_)	4.5 24V (FZJ80_)	151	08/92 – 12/97	3673	
LAND CRUISER 80 (_J8_)	4.5 24V (FZJ80_)	151	08/92 – 12/97	3693	
LAND CRUISER 90 (_J9_)	47	175	08/02 -	3829	
LAND CRUISER 90 (_J9_)	47	175	08/02 -	3830	
LAND CRUISER 90 (_J9_)	3.0 D-4D (KDJ90, KDJ95, KDJ 125)	120	10/00 -	3560	
LAND CRUISER 90 (_J9_)	3.0 D-4D (KDJ90, KDJ95, KDJ 125)	120	10/00 -	3693	
LAND CRUISER 90 (_J9_)	3.0 TD	103	04/95 – 07/00	3560	
LAND CRUISER 90 (_J9_)	3.0 TD	103	04/95 – 07/00	3693	
LAND CRUISER 90 (_J9_)	3.0 TD (KZJ90_, KZJ95_)	92	04/96 -	3560	
LAND CRUISER 90 (_J9_)	3.0 TD (KZJ90_, KZJ95_)	92	04/96 -	3693	
LAND CRUISER 90 (_J9_)	3.4 i 24V (VZJ90_, VZJ95_)	131	04/96 -	3560	
LAND CRUISER 90 (_J9_)	3.4 i 24V (VZJ90_, VZJ95_)	131	04/96 -	3693	
LAND CRUISER 90 (_J9_)	CCCCC	110	04/95 – 07/02	3560	
LAND CRUISER Hardtop (_J7_)	2.4 TD (LJ70_)	66	07/90 – 05/96	3560	

BEŞER

MAKE & MODEL		KW	YEAR		
TOYOTA					
LAND CRUISER Hardtop (_J7_)	3.0 TD (KZJ70_)	92	05/93 – 05/96	3560	
LAND CRUISER Hardtop (_J7_)	4.2 D (HZJ80_)	123	07/90 – 07/92	3673	
LAND CRUISER Hardtop (_J7_)	4.2 D (HZJ80_)	123	07/90 – 07/92	3693	
LAND CRUISER Pickup (_J4_)	3.6 D (HJ45_P)	66	01/75 – 07/80	3371	
LAND CRUISER Pickup (_J4_)	3.9 (FJ45_P)	96	03/69 – 01/75	3371	
LAND CRUISER Pickup (_J7_)	4.0 4x4	170	03/07 -	3996	
LAND CRUISER Pickup (_J7_)	4.0 4x4	170	03/07 -		4085
LAND CRUISER Pickup (_J7_)	4.2 D 4x4	100	03/07 -	3693	
LAND CRUISER Pickup (_J7_)	4.2 D 4x4	100	03/07 -	3829	
LAND CRUISER Pickup (_J7_)	4.2 D 4x4 (HZJ7	96	01/90 –	3560	
LAND CRUISER Pickup (_J7_)	4.5 MPFi 4x4	179	03/07 -	3693	
LAND CRUISER Pickup (_J7_)	4.5 MPFi 4x4	179	03/07 -	3829	
LAND CRUISER PRADO (J15)	40	202	06/10 -	3693	
LITEACE / SPACIA (_R2_LG)	1.5 (KR21LG) (5K)	52	01/92 – 01/95	4088	
LITEACE / SPACIA (_R2_LG)	2.0 D (2C)	53	01/92 – 05/94	4088	
LITEACE / SPACIA (_R2_LG)	2.2 (4Y-EC)	72	01/92 – 01/95	4088	
LITEACE / SPACIA (_R2_LG)	2.2 D (3C-TE)	66	02/95 – 08/97	4088	
LITEACE NOAH	1.5		08-	4199	
MARK II	1.8 (1S-L)	66	11/83 – 03/88	3418	
MARK II	1.8 (1S-U)	74	08/82 – 10/83	3418	
MARK II	1.8 (13T-U)	70	08/80 – 10/83	3418	
MARK II	2.0 (1G-GEU)	107	08/80 – 10/83	3418	
MARK II	2.0 (1G-GTEU)	107	11/84 – 03/88	3418	
MARK II	2.0 (2S-EL)	79	11/83 – 03/88	3418	
MARK II	2.0 (1G-EU)	92	08/80 – 10/83	3418	
MARK II	2.0 (1G-EU)	96	11/83 – 03/88	3418	
MARK II	2.2 DX (L)	53	08/80 – 10/83	3418	
MARK II	2.4 D (2L-TII)	61	11/84 – 03/88	3418	
MARK II	2.4 TD (2L-TE)	71	11/84 – 03/88	3418	
MARK II	2.4 TD (2L-TII)	65	08/81 – 10/83	3418	
MARK II	1.8 (4S-FI)	77	04/88 – 09/92	3666	
MARK II	1.8 (4S-FI)	77	04/88 – 09/92	3672	
MARK II	2.0 (1G-FE)	99	04/88 – 09/92	3666	
MARK II	2.0 (1G-FE)	99	04/88 – 09/92	3672	
MARK II	2.0 (1G-GE)	110	04/88 – 09/92	3666	
MARK II	2.0 (1G-GE)	110	04/88 – 09/92	3672	
MARK II	2.4 TD (2L-TE)	69	04/88 – 09/92	3666	
MARK II	2.4 TD (2L-TE)	69	04/88 – 09/96	3672	
MARK II (SXV2_, MCV2_, LX1_, JZX1_, GX1_)	2.0 (1G-FE)	100	04/88 – 09/96	3666	
MARK II (SXV2_, MCV2_, LX1_, JZX1_, GX1_)	2.0 (1G-FE)	100	04/88 – 09/96	3672	
MARK II (SXV2_, MCV2_, LX1_, JZX1_, GX1_)	2.4 D (2L)	54	04/88 – 09/96	3666	
MARK II (SXV2_, MCV2_, LX1_, JZX1_, GX1_)	2.4 D (2L)	54	04/88 – 09/96	3672	
MARK II Estate (SXV2_, MCV2_, LX1_, JZX1_, GX1_)	22	96	08/96 – 07/01	3554	
MARK II Estate (SXV2_, MCV2_, LX1_, JZX1_, GX1_)	22	96	08/96 – 07/01	3651	
MARK II Estate (SXV2_, MCV2_, LX1_, JZX1_, GX1_)	25	147	08/96 – 07/01	3554	
MARK II Estate (SXV2_, MCV2_, LX1_, JZX1_, GX1_)	25	147	08/96 – 07/01	3651	
MARK II Estate (SXV2_, MCV2_, LX1_, JZX1_, GX1_)	30	166	08/96 – 07/01		4099
MARK II Estate (SXV2_, MCV2_, LX1_,JZX1_,GX1_)	25	147	08/96 – 07/01		3776
MARK II Estate (SXV2_, MCV2_,LX1_,JZX1_,GX1_)	22	96	08/96 – 07/01		3776
MARK II Saloon	2.0 VVTi	118	10/96 – 09/01	3554	
MARK II Saloon	2.0 VVTi	118	10/96 – 09/01	3651	
MARK II Saloon (_X10_)	2.5 VVTi	206	10/96 – 09/01	3915	
MARK II Saloon (_X10_)	3.0 VVTi	162	10/96 – 09/01		4099
MARK X II (GRX13_)	35	234	10/09 -		4113
MARK X II (GRX13_)	3.5	234	10/09 -	4276	
MARK X ZiO (_A1_)	24	120	09/07 -		3949
MARK X ZiO (_A1_)	24	120	09/07 -	4077	
MARK X ZiO (_A1_)	35	206	09/07 -		3949
MARK X ZiO (_A1_)	35	206	09/07 -	4077	
MARK X ZiO (_A1_)	2.4 4WD	120	09/07 -		3949
MARK X ZiO (_A1_)	2.4 4WD	120	09/07 -	4077	
MATRIX (_E13_)	1.8 VVTi	96	09/01 – 02/04		3788
MATRIX (_E13_)	1.8 VVTi 4WD	91	09/01 – 02/04		3788
MATRIX (_E14_)	1.8 (ZRE142_)	97	01/08 – 05/14		3949
MATRIX (_E14_)	1.8 (ZRE142_)	97	01/08 – 05/14	3953	
MATRIX (_E14_)	2.4 (AZE14_)	117	01/08 – 05/14		3949
MATRIX (_E14_)	2.4 (AZE14_)	117	01/08 – 05/14	3953	
MIRAI (JPD1_)	FCV (JPD10_)	113	10/14 -	4077	
MIRAI (JPD1_)	FCV (JPD10_)	113	10/14 -		4256
MR 2 I (AW1_)	1.6 16V (AW11)	85	11/84 – 06/90	3402	
MR 2 I (AW1_)	1.6 16V (AW11)	85	11/84 – 06/90	3472	

MAKE & MODEL   		KW	YEAR		
TOYOTA					
MR 2 I (AW1_)	1.6 16V (AW11)	91	11/84 – 06/90	3402	
MR 2 I (AW1_)	1.6 16V (AW11)	91	11/84 – 06/90	3472	
NADIA	20	100	04/98 – 08/03	3822	
NADIA	2.0 4WD	107	04/98 – 08/03	3822	
NADIA	2.2 TD 4WD	66	04/98 – 08/03	3822	
NOAH/VOXY (_R6_)	20	112	12/01 – 06/07	4013	
NOAH/VOXY (_R6_)	2.0 4WD	112	12/01 – 06/07	4013	
NOAH/VOXY (_R7_)	20	116	06/07 -	3953	
NOAH/VOXY (_R7_)	2.0 4WD	114	06/07 – 09/13	3953	
NOAH/VOXY (_R8_)	20	111	10/13 -	3953	
NOAH/VOXY (_R8_)	20	116	10/13 -	3953	
NOAH/VOXY (_R8_)	1.8 Hybrid (ZWR80_)	73	10/13 -	3953	
NOAH/VOXY (_R8_)	2.0 4WD	111	10/13 -	3953	
OPA (ZCT1_, ACT1_)	18	100	04/00 – 08/03		3876
OPA (ZCT1_, ACT1_)	20	112	08/00 – 04/05		3876
OPA (ZCT1_, ACT1_)	1.8 4WD	92	04/00 – 08/03		3876
OPTIMO	All models		01/86 -	3930	
PASEO Convertible (EL54_)	1.5 (EL54_)	66	10/96 – 01/98	3402	
PASEO Convertible (EL54_)	1.5 (EL54_)	66	10/96 – 01/98	3472	
PASEO Convertible (EL54_)	1.5 (EL54_)	81	10/96 – 01/98	3402	
PASEO Convertible (EL54_)	1.5 (EL54_)	81	10/96 – 01/98	3472	
PASEO Coupe (EL44_)	15	74	04/91 – 08/95	3402	
PASEO Coupe (EL44_)	15	74	04/91 – 08/95	3472	
PASEO Coupe (EL44_)	15	85	06/88 – 07/95	3402	
PASEO Coupe (EL44_)	15	85	06/88 – 07/95	3472	
PASEO Coupe (EL54_)	13	65	08/95 – 06/99	3402	
PASEO Coupe (EL54_)	13	65	08/95 – 06/99	3472	
PASEO Coupe (EL54_)	1.5 (EL54_)	81	08/95 – 06/99	3402	
PASEO Coupe (EL54_)	1.5 (EL54_)	81	08/95 – 06/99	3472	
PASEO Coupe (EL54_)	1.5 (EL54_)	85	08/95 – 06/99	3402	
PASEO Coupe (EL54_)	1.5 (EL54_)	85	08/95 – 06/99	3472	
PASEO Coupe (EL54_)	1.5 16V (EL54_)	66	08/95 – 06/99	3402	
PASEO Coupe (EL54_)	1.5 16V (EL54_)	66	08/95 – 06/99	3472	
PASSO (_NC1_, _XC1_)	10	51	06/05 – 01/10	3928	
PASSO (_NC1_, _XC1_)	13	77	06/05 – 12/07	3928	
PASSO (_NC1_, _XC1_)	1.0 4WD	51	06/05 – 01/10	3928	
PICKUP II (U.S.A.)	2.2		09/78 -	3379	
PICKUP II (U.S.A.)	2.2		09/78 -	3379	
PICKUP II (U.S.A.)	2.2 4WD		09/78 -	3379	
PICKUP II (U.S.A.)	2.2 4WD		09/78 -	3379	
PICKUP II (U.S.A.)	2.2 D	59	07/78 -	3379	
PICKUP II (U.S.A.)	2.4		09/78 -	3379	
PICKUP II (U.S.A.)	2.4 4WD		09/78 -	3379	
PICNIC (CXM1_, SXM1_)	2.0 (SXM10_)	90	01/01 – 12/01	3554	
PICNIC (CXM1_, SXM1_)	2.0 (SXM10_)	90	01/01 – 12/01	3651	
PICNIC (CXM1_, SXM1_)	2.0 (SXM10_)	100	05/96 – 04/01	3554	
PICNIC (CXM1_, SXM1_)	2.0 (SXM10_)	100	05/96 – 04/01	3651	
PICNIC (CXM1_, SXM1_)	2.0 16V (SXM10_)	94	05/96 – 12/01	3554	
PICNIC (CXM1_, SXM1_)	2.0 16V (SXM10_)	94	05/96 – 12/01	3651	
PICNIC (CXM1_, SXM1_)	2.2 D (CMX10_)	66	08/97 – 12/01	3554	
PICNIC (CXM1_, SXM1_)	2.2 D (CMX10_)	66	08/97 – 12/01	3651	
PIXIS Bus (S3_M)	0.7	38	12/11 -	4337	
PIXIS Bus (S3_M)	0.7 4WD	38	12/11 -	4337	
PIXIS Bus (S3_M)	0.7	47	12/11 -	4337	
PIXIS Bus (S3_M)	0.7 4WD	47	12/11 -	4337	
PLATZ (NCP1_, SCP1_)	1.5 4WD (NCP13_)	78	09/02 – 08/05	3768	
PLATZ (NCP1_, SCP1_)	1.0 (SCP11_)	50	04/99 – 08/05	3768	
PLATZ (NCP1_, SCP1_)	1.3 (NCP16_)	63	08/99 – 08/05	3768	
PLATZ (NCP1_, SCP1_)	1.3 4WD (NCP16_)	63	08/99 – 08/05	3768	
PLATZ (NCP1_, SCP1_)	1.5 (NCP12_)	78	04/99 – 08/05	3768	
PORTE II (_P14_)	15	80	08/12 -	3958	
PORTE II (_P14_)	1.5 4WD	76	08/12 -	3958	
PRADO	4.0 All-wheel Drive	179	10/03 – 06/10	3693	
PREMIO (_T26_)	18	106	07/07 – 11/12	3953	
PREMIO (_T26_)	20	116	07/07 -	3953	
PREMIO (_T26_)	1.5 (NZT260)	81	07/07 -	3953	
PREMIO (_T26_)	1.5 (NZT260)	81	07/07 -	3958	
PREMIO (_T26_)	1.8 4WD	98	07/07 -	3953	
PREMIO (_T26_)	2.0 4WD	116	07/07 -	3953	
PREVIA (_R1_, _R2_)	24	97	05/90 – 08/00	4071	
PREVIA (_R1_, _R2_)	24	97	05/90 – 08/00		4072

BESER®

MAKE & MODEL		KW	YEAR		
TOYOTA					
PREVIA (_R1_, _R2_)	2.4 4WD	97	05/90 – 08/00	4071	
PREVIA (_R1_, _R2_)	2.4 4WD	97	05/90 – 08/00		4072
PREVIA (_R1_, _R2_)	2.4 4WD	110	05/90 – 12/99	4071	
PREVIA (_R1_, _R2_)	2.4 4WD	110	05/90 – 12/99		4072
PREVIA (_R3_)	20	94	10/00 – 08/03	3822	
PREVIA (_R3_)	24	115	08/00 – 01/06	3822	
PREVIA (_R3_)	35	206	02/00 – 01/06		4154
PREVIA (_R3_)	2.0 D-4D (CLR30_)	85	03/01 – 01/06	3822	
PREVIA (_R3_)	3.0 VVTi	162	08/00 – 12/05	3822	
PREVIA (_R3_)	3.0 VVTi	162	08/00 – 12/05	4003	
PREVIA (_R3_)	3.0 VVTi 4WD	162	02/00 – 12/05	3822	
PREVIA (_R3_)	3.0 VVTi 4WD	162	02/00 – 12/05	4003	
PREVIA (_R3_)	3.5 4WD	206	02/00 – 01/06		4154
PREVIA (TCR2_, TCR1_)	24	97	05/90 – 08/00	3634	
PREVIA (TCR2_, TCR1_)	2.4 4WD	97	05/90 – 08/00	3634	
PREVIA (TCR2_, TCR1_)	2.4 4WD	110	05/90 – 12/99	3634	
PREVIA / ESTIMA / TARAGO (TCR2_, TCR1_)	2.4 (2TZ-FE)	97	05/90 – 08/00	4088	
PREVIA / ESTIMA / TARAGO (TCR2_, TCR1_)	2.4 (2TZ-FE)	97	05/90 – 08/00	4088	
PREVIA / ESTIMA / TARAGO (TCR2_, TCR1_)	2.4 (2TZ-FZE)	110	05/90 – 12/99	4088	
PREVIA / ESTIMA / TARAGO (TCR2_, TCR1_)	2.4 GX	110	01/94 – 07/97	4088	
PREVIA III (_R5_)	24	125	10/05 -		4154
PREVIA III (_R5_)	35	202	01/06 -		4154
PREVIA III (_R5_)	35	206	01/06 -		4154
PREVIA III (_R5_)	2.4 Hybrid (_AHR2_)	110	05/12 -		4154
PREVIA III (_R5_)	3.5 4WD	206	01/06 -		4154
PRIUS (_W5_)	1.8 Hybrid	90	09/15 -		3954
PRIUS (_W5_)	1.8 Hybrid (ZVW5_)	72	09/15 -		3954
PRIUS (_W5_)	1.8 Hybrid E-Four 4WD	72	09/15 -		3954
PRIUS Hatchback (_W2_)	1.5 (NHW2_)	57	08/03 – 03/09		3788
PRIUS Hatchback (_W2_)	1.5 (NHW2_)	57	08/03 – 03/09		3876
PRIUS Hatchback (NHW20_)	1.5 (NHW20_)	57	08/03 – 03/09	3769	
PRIUS Saloon (_W1_)	1.5 Hybrid (NHW1_)	53	05/00 – 01/04		3788
PRIUS Saloon (NHW11_)	1.5 Hybrid (NHW11_)	53	05/00 – 01/04	3769	
PROACE Box Body / Estate (MDX_)	2.0 D-4D (MDX321_, MDX331_)	94	06/13 – 03/16		4151
PROACE Box Body / Estate (MDX_)	2.0 D-4D (MDX621_, MDX631_)	120	06/13 – 03/16		4151
PROACE Box Body / Estate (MDX_)	1.6 D-4D (MDX921_, MDX931_)	66	06/13 – 03/16	3972	
PROACE Box Body / Estate (MDX_)	1.6 D-4D (MDX921_, MDX931_)	66	06/13 – 03/16		4151
PROACE Box Body / Estate (MDX_)	2.0 D-4D (MDX321_, MDX331_)	94	06/13 – 03/16	3972	
PROACE Box Body / Estate (MDX_)	2.0 D-4D (MDX621_, MDX631_)	120	06/13 – 03/16	3972	
PROGRES (JCG1_)	25	147	05/98 – 05/07		4085
PROGRES (JCG1_)	25	147	05/98 – 05/07	4086	
PROGRES (JCG1_)	30	162	05/98 – 05/07		4085
PROGRES (JCG1_)	30	162	05/98 – 05/07	4086	
RACTIS (_P10_)	1.5 4WD (NCP105_)	77	09/05 – 08/10		3954
RAUM MPV (EXZ1_)	15	66	05/97 – 03/03	3402	
RAUM MPV (EXZ1_)	15	66	05/97 – 03/03	3472	
RAUM MPV (EXZ1_)	15	69	08/97 – 04/03	3402	
RAUM MPV (EXZ1_)	15	69	08/97 – 04/03	3472	
RAUM MPV (EXZ1_)	1.5 4WD	67	08/97 – 04/03	3402	
RAUM MPV (EXZ1_)	1.5 4WD	67	08/97 – 04/03	3472	
RAV 4 I (SXA1_)	20	99	06/97 – 09/99	3554	
RAV 4 I (SXA1_)	20	99	06/97 – 09/99	3651	
RAV 4 I (SXA1_)	2.0 4WD	95	06/94 – 06/00	3554	
RAV 4 I (SXA1_)	2.0 4WD	95	06/94 – 06/00	3651	
RAV 4 I (SXA1_)	2.0 4WD	99	01/94 – 09/99	3554	
RAV 4 I (SXA1_)	2.0 4WD	99	01/94 – 09/99	3651	
RAV 4 I (SXA1_)	2.0 4WD	121	01/94 – 09/99	3554	
RAV 4 I (SXA1_)	2.0 4WD	121	01/94 – 09/99	3651	
RAV 4 I Cabrio (SXA1_)	2.0 16V 4WD	94	12/97 – 06/00	3554	
RAV 4 I Cabrio (SXA1_)	2.0 16V 4WD	94	12/97 – 06/00	3651	
RAV 4 II (_A2_)	1.8 VVTi (ZCA25_, ZCA26_)	92	08/03 – 11/05		4153
RAV 4 II (_A2_)	1.8 VVTi (ZCA25_, ZCA26_)	92	08/00 – 11/05	4158	
RAV 4 II (_A2_)	2.0 D-4D 4WD (CLA20_, CLA21_)	85	05/01 – 11/05		4153
RAV 4 II (_A2_)	2.0 D-4D 4WD (CLA20_, CLA21_)	85	05/01 – 11/05	4158	
RAV 4 II (_A2_)	2.0 VVTi 4WD	110	08/03 – 11/05		4153
RAV 4 II (_A2_)	2.0 VVTi 4WD	110	06/00 – 11/05	4158	
RAV 4 II (_A2_)	2.4 VVTi 4WD	112	08/03 – 11/05		4153
RAV 4 II (_A2_)	2.4 VVTi 4WD	112	08/03 – 11/05	4158	
RAV 4 III (_A3_)	2.0 (ZSA35_)	116	12/08 -		3949
RAV 4 III (_A3_)	2.0 (ZSA35_)	116	12/08 -	3953	
RAV 4 III (_A3_)	2.0 (ZSA35_)	116	12/08 -	4077	

MAKE & MODEL   		KW	YEAR		
TOYOTA					
RAV 4 III (_A3_)	2.0 4WD (ZSA30_)	116	12/08 -		3949
RAV 4 III (_A3_)	2.0 4WD (ZSA30_)	116	12/08 -	3953	
RAV 4 III (_A3_)	2.0 4WD (ZSA30_)	116	12/08 -	4077	
RAV 4 III (_A3_)	2.0 VVT-i	109	03/09 -		3949
RAV 4 III (_A3_)	2.0 VVT-i	109	03/09 -	4077	
RAV 4 III (_A3_)	2.0 VVT-i 4WD	109	03/09 -		3949
RAV 4 III (_A3_)	2.0 VVT-i 4WD	109	03/09 -	4077	
RAV 4 III (_A3_)	2.0 VVT-i 4WD (ACA30_)	112	03/06 -		3949
RAV 4 III (_A3_)	2.0 VVT-i 4WD (ACA30_)	112	03/06 -	3953	
RAV 4 III (_A3_)	2.0 VVT-i 4WD (ACA30_)	112	03/06 -	4077	
RAV 4 III (_A3_)	2.2 D-4D (ALA35_)	110	12/08 – 12/13		3949
RAV 4 III (_A3_)	2.2 D-4D (ALA35_)	110	12/08 – 12/13	3953	
RAV 4 III (_A3_)	2.2 D-4D (ALA35_)	110	12/08 – 12/13	4077	
RAV 4 III (_A3_)	2.2 D-4D 4WD (ALA30_)	100	03/06 -		3949
RAV 4 III (_A3_)	2.2 D-4D 4WD (ALA30_)	100	03/06 -	3953	
RAV 4 III (_A3_)	2.2 D-4D 4WD (ALA30_)	100	03/06 -	4077	
RAV 4 III (_A3_)	2.2 D-4D 4WD (ALA30_)	110	12/08 – 12/13		3949
RAV 4 III (_A3_)	2.2 D-4D 4WD (ALA30_)	110	12/08 – 12/13	3953	
RAV 4 III (_A3_)	2.2 D-4D 4WD (ALA30_)	110	12/08 – 12/13	4077	
RAV 4 III (_A3_)	2.2 D-CAT 4WD (ALA30_)	130	03/06 -		3949
RAV 4 III (_A3_)	2.2 D-CAT 4WD (ALA30_)	130	03/06 -	3953	
RAV 4 III (_A3_)	2.2 D-CAT 4WD (ALA30_)	130	03/06 -	4077	
RAV 4 III (_A3_)	2.4 VVTi	125	11/05 -		3949
RAV 4 III (_A3_)	2.4 VVTi	125	11/05 -	3953	
RAV 4 III (_A3_)	2.4 VVTi	125	11/05 -	4077	
RAV 4 III (_A3_)	2.4 VVTi 4WD	125	11/05 -		3949
RAV 4 III (_A3_)	2.4 VVTi 4WD	125	11/05 -	4077	
RAV 4 III (_A3_)	3.5 4WD	206	08/07 -		3949
RAV 4 III (_A3_)	3.5 4WD	206	08/07 -	3953	
RAV 4 III (_A3_)	3.5 VVTi 4WD	201	11/05 -		3949
RAV 4 III (_A3_)	3.5 VVTi 4WD	201	11/05 -	3953	
RAV 4 IV (_A4_)	2.0 D4-D (ALA40_)	91	12/12 -		3949
RAV 4 IV (_A4_)	2.0 D4-D (ALA40_)	91	12/12 -	4077	
RAV 4 IV (_A4_)	2.0 D4-D (ALA40_)	91	12/12 -	4255	
RAV 4 IV (_A4_)	2.0 D-4D (WWA42_)	105	10/15 -		3949
RAV 4 IV (_A4_)	2.0 D-4D (WWA42_)	105	10/15 -	4077	
RAV 4 IV (_A4_)	2.0 D-4D (WWA42_)	105	10/15 -	4255	
RAV 4 IV (_A4_)	2.0 D4-D 4WD (ALA41_)	91	01/13 -		3949
RAV 4 IV (_A4_)	2.0 D4-D 4WD (ALA41_)	91	01/13 -	4077	
RAV 4 IV (_A4_)	2.0 D4-D 4WD (ALA41_)	91	01/13 -	4255	
RAV 4 IV (_A4_)	2.0 VVT-i	107	12/12 -		3949
RAV 4 IV (_A4_)	2.0 VVT-i	107	12/12 -	4077	
RAV 4 IV (_A4_)	2.0 VVT-i 4WD (ZSA44_)	111	12/12 -		3949
RAV 4 IV (_A4_)	2.0 VVT-i 4WD (ZSA44_)	111	12/12 -	4077	
RAV 4 IV (_A4_)	2.0 VVT-i 4WD (ZSA44_)	111	12/12 -	4255	
RAV 4 IV (_A4_)	2.0 VVT-i 4WD (ZSA44_)	112	04/15 -		3949
RAV 4 IV (_A4_)	2.0 VVT-i 4WD (ZSA44_)	112	04/15 -	4077	
RAV 4 IV (_A4_)	2.0 VVT-i 4WD (ZSA44_)	112	04/15 -	4255	
RAV 4 IV (_A4_)	2.2 D4-D 4WD	110	12/12 -		3949
RAV 4 IV (_A4_)	2.2 D4-D 4WD	110	12/12 -	4077	
RAV 4 IV (_A4_)	2.2 D4-D 4WD	110	12/12 -	4255	
RAV 4 IV (_A4_)	2.5 Hybrid (AVA42_, AVA44_)	114	10/15 -		3949
RAV 4 IV (_A4_)	2.5 Hybrid (AVA42_, AVA44_)	114	10/15 -	4077	
RAV 4 IV (_A4_)	2.5 Hybrid (AVA42_, AVA44_)	114	10/15 -	4255	
RAV 4 IV (_A4_)	2.5 Hybrid 4WD (AVA44_)	114	10/15 -		3949
RAV 4 IV (_A4_)	2.5 Hybrid 4WD (AVA44_)	114	10/15 -	4077	
RAV 4 IV (_A4_)	2.5 Hybrid 4WD (AVA44_)	114	10/15 -	4255	
RAV 4 IV (_A4_)	2.5 VVT-i	131	12/12 -		3949
RAV 4 IV (_A4_)	2.5 VVT-i	131	12/12 -	4077	
RAV 4 IV (_A4_)	2.5 VVT-i 4WD	131	12/12 -		3949
RAV 4 IV (_A4_)	2.5 VVT-i 4WD	131	12/12 -	4077	
RAV 4 IV (_A4_)	2.5 VVT-i 4WD	132	12/12 -		3949
RAV 4 IV (_A4_)	2.5 VVT-i 4WD	132	12/12 -	3953	
RAV 4 IV (_A4_)	2.5 VVT-i 4WD	132	12/12 -	4077	
RAV4 Closed Off-Road Vehicle	20	110	04/09 – 08/13		3949
RAV4 Closed Off-Road Vehicle	20	110	04/09 – 08/13	4077	
RAV4 Closed Off-Road Vehicle	2.0 4x4	110	04/09 – 08/13		3949
RAV4 Closed Off-Road Vehicle	2.0 4x4	110	04/09 – 08/13	4077	
RAV4 Closed Off-Road Vehicle	2.4 4x4	125	04/09 – 08/13		3949
RAV4 Closed Off-Road Vehicle	2.4 4x4	125	04/09 – 08/13	4077	
RUSH Closed Off-Road Vehicle (F700_)	13	63	03/06 -	3604	

MAKE & MODEL		KW	YEAR		
TOYOTA					
RUSH Closed Off-Road Vehicle (F700_)	15	80	03/06 -	3604	
RUSH Closed Off-Road Vehicle (F700_)	1.5 4WD	80	03/06 -	3604	
SAI (AZK1_)	2.4 Hybrid	110	11/09 -		3949
SAI (AZK1_)	2.4 Hybrid	110	11/09 -	3953	
SEQUOIA (_K3_, _K4_)	4.7 (UCK35_)	175	09/00 – 10/07	3996	
SEQUOIA (_K3_, _K4_)	4.7 (UCK35_)	175	09/00 – 10/07		3997
SEQUOIA (_K3_, _K4_)	4.7 4WD (UCK45_)	175	09/00 – 10/07	3996	
SEQUOIA (_K3_, _K4_)	4.7 4WD (UCK45_)	175	09/00 – 10/07		3997
SEQUOIA (_K3_, _K4_)	4.7 4WD (UCK45_)	204	09/00 – 10/07	3996	
SEQUOIA (_K3_, _K4_)	4.7 4WD (UCK45_)	204	09/00 – 10/07		3997
SEQUOIA (_K6_)	4.7 4WD (UCK65_)	206	11/07 -	3996	
SEQUOIA (_K6_)	4.7 4WD (UCK65_)	206	11/07 -		3997
SEQUOIA (_K6_)	5.7 4WD (USK65_)	284	11/07 -	3996	
SEQUOIA (_K6_)	5.7 4WD (USK65_)	284	11/07 -		3997
SIENNA (_L2_)	3.3 (MCL20_)	169	01/03 – 12/06	4003	
SIENNA (_L2_)	3.3 4WD (MCL25_)	169	01/03 – 11/09	4003	
SIENNA (_L3_)	2.7 (ASL30_)	140	09/10 – 07/13	4255	
SIENNA (_L3_)	2.7 (ASL30_)	140	09/10 – 07/13		4256
SIENNA (_L3_)	3.5 (GSL30_)	196	01/10 -	4255	
SIENNA (_L3_)	3.5 (GSL30_)	196	01/10 -		4256
SIENNA (_L3_)	3.5 (GSL30_)	198	01/10 -	4255	
SIENNA (_L3_)	3.5 (GSL30_)	198	01/10 -		4256
SIENNA (_L3_)	3.5 4WD (GSL35_)	196	01/10 – 12/12	4255	
SIENNA (_L3_)	3.5 4WD (GSL35_)	196	01/10 – 12/12		4256
SIENNA (_L3_)	3.5 4WD (GSL35_)	198	01/10 -	4255	
SIENNA (_L3_)	3.5 4WD (GSL35_)	198	01/10 -		4256
SIENTA (_P17_)	15	79	01/16 -	3953	
SIENTA (_P17_)	15	79	01/16 -		4256
SIENTA (_P17_)	15	81	06/15 -	3953	
SIENTA (_P17_)	15	81	06/15 -		4256
SIENTA (_P17_)	1.5 4WD	76	06/15 -	3953	
SIENTA (_P17_)	1.5 4WD	76	06/15 -		4256
SIENTA (_P17_)	1.5 Hybrid	54	06/15 -	3953	
SIENTA (_P17_)	1.5 Hybrid	54	06/15 -		4256
SOARER Coupe (_Z3_)	30	166	09/90 – 09/00	4086	
SOARER Coupe (_Z3_)	30	166	09/90 – 09/00		4099
SOARER Coupe (_Z3_)	40	191	05/92 – 09/00		4099
SOARER Coupe (_Z3_)	2.5 Turbo	206	09/90 – 09/00		4099
SOLARA Convertible (_V3_)	24	117	02/04 – 11/08	3822	
SOLARA Convertible (_V3_)	24	117	02/04 – 11/08		3876
SOLARA Convertible (_V3_)	30	137	02/04 – 11/08	3822	
SOLARA Convertible (_V3_)	30	137	02/04 – 11/08		3876
SOLARA Convertible (_V3_)	3.3 (MCV31_)	165	02/04 – 11/08	3822	
SOLARA Convertible (_V3_)	3.3 (MCV31_)	165	02/04 – 11/08		3876
SOLARA Coupe (_V3_)	30	137	07/03 – 07/08	3822	
SOLARA Coupe (_V3_)	30	137	07/03 – 07/08		3876
SOLARA Coupe (_V3_)	2.4 (ACV30_)	117	07/03 – 11/08	3822	
SOLARA Coupe (_V3_)	2.4 (ACV30_)	117	07/03 – 11/08		3876
SOLARA Coupe (_V3_)	3.3 (MCV31_)	165	07/03 – 07/08	3822	
SOLARA Coupe (_V3_)	3.3 (MCV31_)	165	07/03 – 07/08		3876
SPADE (_P14_)	15	80	08/12 -	3958	
SPADE (_P14_)	1.5 4WD	76	08/12 -	3958	
SPRINTER CARIB (AE11_)	16	81	08/95 – 10/01	3402	
SPRINTER CARIB (AE11_)	16	81	08/95 – 10/01	3472	
SPRINTER CARIB (AE11_)	18	85	08/95 – 10/01	3402	
SPRINTER CARIB (AE11_)	18	85	08/95 – 10/01	3472	
SPRINTER CARIB (AE11_)	1.8 4WD	85	08/95 – 10/01	3402	
SPRINTER CARIB (AE11_)	1.8 4WD	85	08/95 – 10/01	3472	
SPRINTER CARIB (AE11_)	1.8 4WD	92	04/95 – 11/02	3402	
SPRINTER CARIB (AE11_)	1.8 4WD	92	04/95 – 11/02	3472	
SPRINTER Saloon (_E11_)	13	65	06/92 – 11/00	3402	
SPRINTER Saloon (_E11_)	13	65	06/92 – 11/00	3472	
SPRINTER Saloon (_E11_)	16	100	04/95 – 11/00	3402	
SPRINTER Saloon (_E11_)	16	100	04/95 – 11/00	3472	
STARLET (EP8_, NP8_)	1.0 (EP80_)	40	12/89 – 12/92	3402	
STARLET (EP8_, NP8_)	1.0 (EP80_)	40	12/89 – 12/92	3472	
STARLET (EP8_, NP8_)	1.3 12V (EP81) CAT	55	12/89 – 03/96	3402	
STARLET (EP8_, NP8_)	1.3 12V (EP81) CAT	55	12/89 – 03/96	3472	
STARLET (EP8_, NP8_)	1.3 12V (EP81_)	55	12/89 – 12/92	3402	
STARLET (EP8_, NP8_)	1.3 12V (EP81_)	55	12/89 – 12/92	3472	
STARLET (EP8_, NP8_)	1.3 XL	52	12/89 – 12/91	3402	

MAKE & MODEL		KW	YEAR		
TOYOTA					
STARLET (EP8_, NP8_)	1.3 XL	52	12/89 – 12/91	3472	
STARLET (EP8_, NP8_)	1.5 D (NP80_)	40	12/89 – 03/96	3402	
STARLET (EP8_, NP8_)	1.5 D (NP80_)	40	12/89 – 03/96	3472	
STARLET (EP9_)	1.3 (EP91_, EP95_)	55	01/96 – 10/99	3402	
STARLET (EP9_)	1.3 (EP91_, EP95_)	55	01/96 – 10/99	3472	
SUPRA (A7)	3.0 24V (MA70)	150	01/86 – 08/88	3701	
SUPRA (A7)	3.0 Turbo (MA70)	173	09/87 – 04/93	3701	
SUPRA (A7)	3.0 Turbo (MA70)	175	08/88 – 05/93	3701	
SUPRA (_A8_)	3.0 i (JZA80_)	168	05/93 – 07/02	3915	
TACOMA (U.S.A.)	2.4 16V		09/94 – 12/00	3672	
TACOMA (U.S.A.)	2.4 16V		09/94 – 12/00	3672	
TACOMA (U.S.A.)	2.4 16V		01/95 -	3672	
TACOMA (U.S.A.)	2.4 16V		01/95 -	3672	
TACOMA (U.S.A.)	2.4 16V		01/95 – 12/06	3672	
TACOMA (U.S.A.)	2.7 16V		09/94 – 12/00	3672	
TACOMA (U.S.A.)	2.7 16V		09/94 – 12/00	3672	
TACOMA (U.S.A.)	2.7 16V		01/95 -	3672	
TACOMA (U.S.A.)	2.7 16V		01/95 -	3672	
TACOMA (U.S.A.)	2.7 16V		01/95 – 12/06	3672	
TACOMA (U.S.A.)	3.4 24V		09/94 – 12/00	3672	
TACOMA (U.S.A.)	3.4 24V		09/94 – 12/00	3672	
TACOMA (U.S.A.)	3.4 24V		01/95 -	3672	
TACOMA (U.S.A.)	3.4 24V		01/95 -	3672	
TACOMA (U.S.A.)	3.4 24V		01/95 – 12/06	3672	
TACOMA (U.S.A.)	4.0 24V		09/94 – 12/00	3672	
TACOMA (U.S.A.)	4.0 24V		01/95 -	3672	
TERCEL (_L1_ , _L2_)	1.3 (AL20, AL11)	48	03/79 – 01/88	3402	
TERCEL (_L1_ , _L2_)	1.3 (AL20, AL11)	48	03/79 – 01/88	3472	
TERCEL (AL2_)	1.5 4WD (AL25)	50	09/82 – 07/84	3402	
TERCEL (AL2_)	1.5 4WD (AL25)	50	09/82 – 07/84	3472	
TERCEL (AL2_)	1.5 4WD (AL25_)	52	10/82 – 01/88	3402	
TERCEL (AL2_)	1.5 4WD (AL25_)	52	10/82 – 01/88	3472	
TERCEL Estate (AL2_)	15	52	08/82 – 10/86	3402	
TERCEL Estate (AL2_)	15	52	08/82 – 10/86	3472	
TERCEL Estate (AL2_)	15	60	09/86 – 10/87	3402	
TERCEL Estate (AL2_)	15	60	09/86 – 10/87	3472	
TERCEL Estate (AL2_)	15	61	08/82 – 10/87	3402	
TERCEL Estate (AL2_)	15	61	08/82 – 10/87	3472	
TOWN ACE TRUCK	1.5		08-	4199	
TOWN ACE TRUCK	1.5		08-	4199	
TUNDRA Pickup (_K5_)	4.0 (GSK50_, GSK51_)	176	11/06 – 12/11	3996	
TUNDRA Pickup (_K5_)	4.0 (GSK50_, GSK51_)	176	11/06 – 12/11		3997
TUNDRA Pickup (_K5_)	4.0 4WD (GSK50_, GSK51_)	176	11/06 – 12/11	3996	
TUNDRA Pickup (_K5_)	4.0 4WD (GSK50_, GSK51_)	176	11/06 – 12/11		3997
TUNDRA Pickup (_K5_)	4.7 (UCK50_, UCK51_, UCK52_, UCK55_)	206	11/06 – 03/09	3996	
TUNDRA Pickup (_K5_)	4.7 (UCK50_, UCK51_, UCK52_, UCK55_)	206	11/06 – 03/09		3997
TUNDRA Pickup (_K5_)	4.7 4WD	206	11/06 – 03/09	3996	
TUNDRA Pickup (_K5_)	4.7 4WD	206	11/06 – 03/09		3997
TUNDRA Pickup (_K5_)	5.7 (USK50_, USK51, USK52_, USK56_, USK57_)	284	01/07 -	3996	
TUNDRA Pickup (_K5_)	5.7 (USK50_, USK51, USK52_, USK56_,)	284	01/07 -		3997
TUNDRA Pickup (_K5_)	5.7 4WD (USK50_, USK51_, USK52_, USK56_, USK57_)	284	01/07 -	3996	
TUNDRA Pickup (_K5_)	5.7 4WD (USK50_, USK51_, USK52_, USK56_, USK57_)	284	01/07 -		3997
TUNDRA Pickup (_K5_)	5.7 Flexfuel 4WD (USK55_, USK56_, USK57_)	280	04/09 – 07/13	3996	
TUNDRA Pickup (_K5_)	5.7 Flexfuel 4WD (USK55_, USK56_, USK57_)	280	04/09 – 07/13		3997
URBAN CRUISER (_P1_)	1.33 (NSP110_)	73	01/09 -	3953	
URBAN CRUISER (_P1_)	1.33 (NSP110_)	73	01/09 -		3954
URBAN CRUISER (_P1_)	1.33 (NSP110_)	74	04/09 -	3953	
URBAN CRUISER (_P1_)	1.33 (NSP110_)	74	04/09 -		3954
URBAN CRUISER (_P1_)	1.4 D-4D (NLP110_)	66	01/09 – 04/14	3953	
URBAN CRUISER (_P1_)	1.4 D-4D (NLP110_)	66	01/09 – 04/14		3954
URBAN CRUISER (_P1_)	1.4 D-4D 4WD (NLP115_)	66	01/09 – 04/14	3953	
URBAN CRUISER (_P1_)	1.4 D-4D 4WD (NLP115_)	66	01/09 – 04/14		3954
URBAN CRUISER (_P1_)	1.5 VVTi (NCP110_)	80	07/07 -	3953	
URBAN CRUISER (_P1_)	1.5 VVTi 4WD (NCP115_)	76	07/07 -	3953	
VEROSSA (_X11_)	2.0 VVTi	118	10/00 – 11/03		4085
VEROSSA (_X11_)	2.0 VVTi 4WD	118	10/00 – 11/03		4085
VEROSSA (_X11_)	2.5 VVTi	147	10/00 – 11/03		4085
VEROSSA (_X11_)	2.5 VVTi	206	10/00 – 11/03	3915	
VEROSSA (_X11_)	2.5 VVTi	206	10/00 – 11/03		4085
VERSO (_R2_)	1.6 (ZGR20_)	97	04/09 -	4147	
VERSO (_R2_)	1.6 D4-D (WAR20_)	82	11/13 -	4147	

MAKE & MODEL		KW	YEAR		
TOYOTA					
VERSO (_R2_)	1.8 (ZGR21_)	108	04/09 -	4147	
VERSO (_R2_)	2.0 D-4D (AUR20_)	91	11/12 -	4147	
VERSO (_R2_)	2.0 D-4D (AUR20_)	93	04/09 -	4147	
VERSO S (_P12_)	1.33 (NSP120_)	73	11/10 – 10/16	3953	
VERSO S (_P12_)	1.33 (NSP120_)	73	11/10 – 10/16		3954
VERSO S (_P12_)	1.4 D4-D (NLP121_)	66	11/10 – 10/16	3953	
VERSO S (_P12_)	1.4 D4-D (NLP121_)	66	11/10 – 10/16		3954
VIOS	13	63	10/08 – 05/13		3788
VIOS	13	64	10/05 – 02/08		3788
VIOS	13	64	11/02 – 10/05		3788
VIOS	15	68	10/05 – 02/08		3788
VIOS	15	68	11/02 – 10/05		3788
VIOS	16	87	10/08 – 05/13		3788
VIOS III / YARIS (NCP15_)	1.5 (1NZ-FE)	79	09/13 -	4205	
VIOS III / YARIS (NCP15_)	1.5 (1NZ-FE)	80	05/13 -	4205	
VIOS/YARIS Saloon (_P15_)	1.5 (NCP150_)	80	05/13 -		3954
VIOS/YARIS Saloon (_P9_)	1.0 (KSP90_)	52	08/07 -	3958	
VIOS/YARIS Saloon (_P9_)	1.3 (NCP92_)	64	08/07 -		3954
VIOS/YARIS Saloon (_P9_)	1.3 (NCP92_)	64	08/07 -	3958	
VIOS/YARIS Saloon (_P9_)	1.3 4WD (NCP92_)	64	08/07 -		3954
VIOS/YARIS Saloon (_P9_)	1.3 4WD (NCP92_)	64	08/07 -	3958	
VIOS/YARIS Saloon (_P9_)	1.5 (NCP93)	80	08/07 -	3958	
VIOS/YARIS Saloon (_P9_)	1.5 (NCP93_)	81	08/07 -	3958	
WILL CYPHA (NCP7_)	1.3 VVTi	62	05/01 – 07/05	3769	
WILL CYPHA (NCP7_)	1.5 VVTi 4WD	78	05/01 – 07/05	3769	
WILL VS (ZZE12_, NZE12_)	1.5 VVTi 4WD	81	03/01 – 04/04	3769	
WINDOM (_V2_)	25	147	10/96 – 07/01		3776
WINDOM (_V2_)	25	147	10/96 – 07/01	3822	
WINDOM (_V2_)	25	147	10/96 – 07/01		3876
WINDOM (_V2_)	30	155	10/96 – 07/01		3776
WINDOM (_V2_)	30	155	10/96 – 07/01	3822	
WINDOM (_V2_)	30	155	10/96 – 07/01		3876
WINDOM (_V3_)	3.0 VVTi G	158	08/01 – 07/04		3911
WINDOM (_V3_)	3.0 VVTi G	158	08/01 – 07/04	4003	
WISH MPV (_E1_)	1.8 Hi	97	04/03 – 03/09	3910	
WISH MPV (_E1_)	1.8 Hi	97	04/03 – 03/09		3911
WISH MPV (_E1_)	1.8 Hi 4WD	92	04/03 – 03/09	3910	
WISH MPV (_E1_)	1.8 Hi 4WD	92	04/03 – 03/09		3911
WISH MPV (_E1_)	2.0 Zi	114	04/03 – 03/09	3910	
WISH MPV (_E1_)	2.0 Zi	114	04/03 – 03/09		3911
WISH MPV (_E2_)	1.8 (ZGE20_)	106	04/09 -	3953	
WISH MPV (_E2_)	1.8 4WD (ZGE25_)	98	04/09 -	3953	
WISH MPV (_E2_)	2.0 (ZGE21_, ZGE22_)	116	04/09 -		3911
WISH MPV (_E2_)	2.0 (ZGE21_, ZGE22_)	116	04/09 -	3953	
WISH MPV (_E2_)	2.0 4WD (ZGE21_, ZGE22_)	116	04/09 -		3911
WISH MPV (_E2_)	2.0 4WD (ZGE21_, ZGE22_)	116	04/09 -	3953	
YARIS	13	63	06/08 -	3958	
YARIS (_P1_)	1.0 (SCP10_)	48	03/03 – 09/05		3788
YARIS (_P1_)	1.0 (SCP10_)	48	03/03 – 09/05	4112	
YARIS (_P1_)	1.0 (SCP10_)	50	04/99 – 09/05		3788
YARIS (_P1_)	1.0 (SCP10_)	50	04/99 – 09/05	4112	
YARIS (_P1_)	1.3 (NCP10_, SCP12_)	63	11/99 – 10/05		3788
YARIS (_P1_)	1.3 (NCP10_, SCP12_)	63	11/99 – 10/05	4112	
YARIS (_P1_)	1.3 (SCP12_)	64	08/99 – 09/05		3788
YARIS (_P1_)	1.3 (SCP12_)	64	08/99 – 09/05	4112	
YARIS (_P1_)	1.4 D-4D (NLP10_)	55	10/01 – 09/05		3788
YARIS (_P1_)	1.4 D-4D (NLP10_)	55	10/01 – 09/05	4112	
YARIS (_P1_)	1.4 D-4D (NLP10_)	66	02/03 – 10/05		3788
YARIS (_P1_)	1.4 D-4D (NLP10_)	66	02/03 – 10/05	4112	
YARIS (_P1_)	1.5 (NCP13_)	77	01/03 – 11/05		3788
YARIS (_P1_)	1.5 (NCP13_)	78	04/01 – 09/05		3788
YARIS (_P1_)	1.5 (NCP13_)	78	04/01 – 09/05	4112	
YARIS (_P1_)	1.5 (NCP13_)	110	03/00 – 07/05		3788
YARIS (_P13_)	1.0 (KSP130_)	51	12/10 -		3954
YARIS (_P13_)	1.0 (KSP130_)	51	12/10 -	3958	
YARIS (_P13_)	1.3 (NCP130_)	63	08/11 -		3954
YARIS (_P13_)	1.3 (NCP130_)	63	08/11 -	3958	
YARIS (_P13_)	1.3 (NSP130_)	70	09/11 -		3954
YARIS (_P13_)	1.3 (NSP130_)	73	09/11 -		3954
YARIS (_P13_)	1.3 4WD (NSP135_)	70	12/10 -		3954
YARIS (_P13_)	1.5 Hybrid (NHP130_)	55	03/12 -	3953	

MAKE & MODEL		KW	YEAR		
TOYOTA					
YARIS (_P15_)	1.2 (NSP152_)	63	10/13 -		3954
YARIS (_P15_)	1.5 (NCP150_)	80	03/14 -		3954
YARIS (_P9_)	1.0 GPL (KSP90_)	51	01/06 -	3958	
YARIS (_P9_)	1.0 VVT-i (KSP90_)	51	01/05 -	3958	
YARIS (_P9_)	1.3 4WD (NCP92_)	64	08/07 -	3958	
YARIS (_P9_)	1.3 VVT-i (NCP90_, SCP90_)	63	01/05 -	3958	
YARIS (_P9_)	1.3 VVT-i (SCP90_, NCP90_)	64	08/05 -	3958	
YARIS (_P9_)	1.33 VVT-i (NSP90_)	73	07/10 -	3958	
YARIS (_P9_)	1.33 VVT-i (NSP90_)	74	11/08 -	3958	
YARIS (_P9_)	1.4 D-4D (NLP90_)	66	08/05 -	3958	
YARIS (_P9_)	1.5 (NCP91_)	80	11/05 -	3958	
YARIS (_P9_)	1.8 VVTi	97	11/05 -		3954
YARIS (_P9_)	1.8 VVTi (ZSP90_)	98	01/07 -		3954
YARIS (NHP13_, NSP13_, NCP13_, KSP13_, NLP13_)	1.5 (NCP131_)	80	12/10 -	3768	
YARIS (SCP1_, NLP1_, NCP1_)	1.4 D-4D (NLP10_, NLP20_, NLP22_)	55	10/01 – 09/05	3769	
YARIS (SCP1_, NLP1_, NCP1_)	1.0 (SCP10_)	48	03/03 – 09/05	3769	
YARIS (SCP1_, NLP1_, NCP1_)	1.0 (SCP10_)	50	04/99 – 09/05	3769	
YARIS (SCP1_, NLP1_, NCP1_)	1.3 (NCP10_, NCP11_)	64	08/99 – 09/05	3769	
YARIS (SCP1_, NLP1_, NCP1_)	1.3 (NCP10_, NCP20_, NCP22_)	63	11/99 – 10/05	3769	
YARIS (SCP1_, NLP1_, NCP1_)	1.4 D-4D (NLP10_)	66	02/03 – 10/05	3769	
YARIS (SCP1_, NLP1_, NCP1_)	1.5 (NCP12_, NCP13_)	78	04/01 – 09/05	3769	
YARIS (SCP1_, NLP1_, NCP1_)	1.5 (NCP13_)	77	01/03 – 11/05	3769	
YARIS (SCP1_, NLP1_, NCP1_)	1.5 (NCP13_, NCP21_)	110	03/00 – 07/05	3769	
YARIS (SCP1_, NLP1_, NCP1_)	1.4 D-4D (NLP10_)	66	02/03 – 10/05	3768	
YARIS (SCP1_, NLP1_, NCP1_)	1.0 (SCP10_)	48	03/03 – 09/05	3768	
YARIS (SCP1_, NLP1_, NCP1_)	1.0 (SCP10_)	50	04/99 – 09/05	3768	
YARIS (SCP1_, NLP1_, NCP1_)	1.3 (NCP10_, NCP11_)	64	08/99 – 09/05	3768	
YARIS (SCP1_, NLP1_, NCP1_)	1.3 (NCP10_, NCP20_, NCP22_)	63	11/99 – 10/05	3768	
YARIS (SCP1_, NLP1_, NCP1_)	1.4 D-4D (NLP10_, NLP20_, NLP22_)	55	10/01 – 09/05	3768	
YARIS III / VITZ (NCP15_)	1.2 (3NR-FE)	63	10/13 -	4205	
YARIS III / VITZ (NCP15_)	1.5 (1NZ-FE)	80	03/14 -	4205	
YARIS VERSO (_P2_)	1.3 (NCP20_, NCP22_)	62	11/02 – 09/05		3788
YARIS VERSO (_P2_)	1.3 (NCP20_, NCP22_)	63	08/99 – 10/02		3788
YARIS VERSO (_P2_)	1.4 D-4D (NLP20_, NLP22_)	55	12/01 – 09/05		3788
YARIS VERSO (_P2_)	1.5 (NCP21_)	77	05/03 – 09/05		3788
YARIS VERSO (_P2_)	1.5 (NCP21_)	78	03/00 – 09/05		3788
YARIS VERSO (_P2_)	1.5 4WD (NCP21_)	78	03/00 – 09/05		3788
YARIS VERSO (NLP2_, NCP2_)	1.3 (NCP20_, NCP22_)	62	11/02 – 09/05	3769	
YARIS VERSO (NLP2_, NCP2_)	1.3 (NCP20_, NCP22_)	63	08/99 – 10/02	3769	
YARIS VERSO (NLP2_, NCP2_)	1.4 D-4D (NLP20_, NLP22_)	55	12/01 – 09/05	3769	
YARIS VERSO (NLP2_, NCP2_)	1.5 (NCP21_)	77	05/03 – 09/05	3769	
YARIS VERSO (NLP2_, NCP2_)	1.5 (NCP21_)	78	03/00 – 09/05	3769	
YARIS VERSO (NLP2_, NCP2_)	1.5 4WD (NCP21_)	78	03/00 – 09/05	3769	
ZELAS Coupe (AGT20_)	2.5 VVT-i (AGT20_)	131	08/10 -		3954
ZELAS Coupe (AGT20_)	2.5 VVT-i (AGT20_)	131	08/10 -	4077	
ZELAS Coupe (AGT20_)	2.5 VVT-i (AGT20_)	133	02/11 -	4077	
TRIUMPH					
2.5 PI MK I	2.5	99	01.68 - 12.75	3840	
2.5 PI MK I Estate	2.5	99	01.68 - 12.75	3840	
2000 MK I Estate	2.0	66	01.68 - 12.75	3840	
SPITFIRE	1500	51	01/75 – 01/80	3311	
SPITFIRE	1.2 MK II	49	12/65 – 12/67	3311	
SPITFIRE	1.3 MK III	55	12/67 – 12/70	3311	
SPITFIRE	1.3 MK IV	55	01/71 – 12/72	3311	
SPITFIRE	1.5 MK IV	51	12/72 – 12/75	3311	
STAG	30	107	01/70 – 12/77	3416	
TVR					
CHIMAERA	39	177	01/93 – 10/03	3417	
CHIMAERA	39	177	01/93 – 10/03	3570	
CHIMAERA	43	206	01/93 – 12/93	3570	
CHIMAERA	50	217	11/92 – 12/96	3570	
CHIMAERA	50	243	11/92 – 12/96	3570	
CHIMAERA	50	250	01/93 – 10/03	3417	
CHIMAERA	50	250	01/93 – 10/03	3570	
GRIFFITH (TCT_)	40	177	01/90 – 12/93	3570	
GRIFFITH (TCT_)	43	206	01/90 – 12/93	3570	
GRIFFITH (TCT_)	50	217	10/92 – 09/97	3570	
GRIFFITH (TCT_)	50	243	01/93 – 03/02	3417	
GRIFFITH (TCT_)	50	243	01/93 – 03/02	3570	
GRIFFITH (TCT_)	50	254	10/92 – 09/97	3570	

MAKE & MODEL		KW	YEAR		
TVR					
S	28	110	01/86 – 12/88	3429	
S	28	118	08/86 – 04/89	3429	
S	29	125	01/88 – 12/96	3429	
S	40	177	01/88 – 12/96	3429	
UMM					
ALTER	20	64	01/85 – 12/96	3641	
ALTER	2.3 D	50	01/85 – 12/96	3641	
ALTER	2.5 D	56	01/85 – 12/96	3641	
ALTER	2.5 TD	81	01/86 – 12/96	3641	
VAUXHALL					
ADAM	10	85	07/14 -	3826/2	
ADAM	10	85	07/14 -		4286
ADAM	12	51	10/12 -	3826/2	
ADAM	14	64	10/12 -	3826/2	
ADAM	14	74	10/12 -	3826/2	
ADAM	1.4 LPG	64	07/13 -	3826/2	
ADAM	1.4 S	110	11/14 -	4042	
ADAM	1.4 S	110	11/14 -		4286
AGILA Mk II (B)	1.0 12V	48	01/08 – 11/14	3983/1	
AGILA Mk II (B)	1.0 i	50	08/11 – 11/14	3983/1	
AGILA Mk II (B)	1.2 i 16V	63	01/08 – 11/14	3983/1	
AGILA Mk II (B)	1.2 i 16V	69	01/08 – 11/14	3983/1	
AGILA Mk II (B)	1.3 CDTI	55	01/08 – 11/14	3983/1	
AMPERA	EV 150 (D1JOI)	111	03/12 -	4008	
AMPERA	EV 150 (D1JOI)	111	03/12 -	4014	
ANTARA (J26, H26)	24	103	08/06 – 04/15	3976	
ANTARA (J26, H26)	24	123	12/10 – 04/15	3976	
ANTARA (J26, H26)	24	123	12/10 – 04/15	3976	
ANTARA (J26, H26)	24	126	11/10 – 04/15	3976	
ANTARA (J26, H26)	24	126	11/10 – 04/15	3976	
ANTARA (J26, H26)	30	188	11/10 – 04/15	3976	
ANTARA (J26, H26)	2.0 CDTI	110	08/06 – 04/15	3976	
ANTARA (J26, H26)	2.0 CDTi	93	08/06 – 04/15	3976	
ANTARA (J26, H26)	2.2 CDTi	120	12/10 -	3976	
ANTARA (J26, H26)	2.2 CDTi	135	12/10 -	3976	
ANTARA (J26, H26)	2.2 CDTi FWD	120	12/10 -	3976	
ANTARA (J26, H26)	3.2 V6	167	11/06 – 04/15	3976	
ARENA Combi	1.9 D	44	03/98 – 08/01	3482	
ARENA Combi	2.5 D	55	03/98 – 08/01	3482	
ARENA Van	1.9 D	44	03/98 – 08/01	3482	
ARENA Van	2.5 D	55	03/98 – 08/01	3482	
ASTRA GTC Mk VI (J)	14	74	10/11 -	4008	
ASTRA GTC Mk VI (J)	14	74	10/11 -	4149	
ASTRA GTC Mk VI (J)	14	88	10/11 -	4008	
ASTRA GTC Mk VI (J)	14	88	10/11 -	4149	
ASTRA GTC Mk VI (J)	14	88	10/11 -	4230	
ASTRA GTC Mk VI (J)	14	103	10/11 -	4008	
ASTRA GTC Mk VI (J)	14	103	10/11 -	4149	
ASTRA GTC Mk VI (J)	14	103	10/11 -	4230	
ASTRA GTC Mk VI (J)	16	132	10/11 -	4008	
ASTRA GTC Mk VI (J)	16	132	10/11 -	4149	
ASTRA GTC Mk VI (J)	16	132	10/11 -	4230	
ASTRA GTC Mk VI (J)	1.4	74	10/11 -	4014	
ASTRA GTC Mk VI (J)	1.4	88	10/11 -	4014	
ASTRA GTC Mk VI (J)	1.4	103	10/11 -	4014	
ASTRA GTC Mk VI (J)	1.6	132	10/11 -	4014	
ASTRA GTC Mk VI (J)	1.6 CDTi	81	07/14 -	4008	
ASTRA GTC Mk VI (J)	1.6 CDTi	81	07/14 -	4014	
ASTRA GTC Mk VI (J)	1.6 CDTi	81	07/14 -	4149	
ASTRA GTC Mk VI (J)	1.6 CDTi	81	07/14 -	4230	
ASTRA GTC Mk VI (J)	1.6 CDTi	100	07/14 -	4008	
ASTRA GTC Mk VI (J)	1.6 CDTi	100	07/14 -	4014	
ASTRA GTC Mk VI (J)	1.6 CDTi	100	07/14 -	4149	
ASTRA GTC Mk VI (J)	1.6 CDTi	100	07/14 -	4230	
ASTRA GTC Mk VI (J)	1.6 SIDI	125	12/12 -	4008	
ASTRA GTC Mk VI (J)	1.6 SIDI	125	12/12 -	4014	
ASTRA GTC Mk VI (J)	1.6 SIDI	125	12/12 -	4230	
ASTRA GTC Mk VI (J)	1.6 SIDI	147	09/13 -	4008	
ASTRA GTC Mk VI (J)	1.6 SIDI	147	09/13 -	4014	
ASTRA GTC Mk VI (J)	1.6 SIDI	147	09/13 -	4230	

MAKE & MODEL		KW	YEAR		
VAUXHALL					
ASTRA GTC Mk VI (J)	1.7 CDTi	81	10/11 -	4008	
ASTRA GTC Mk VI (J)	1.7 CDTi	81	10/11 -	4014	
ASTRA GTC Mk VI (J)	1.7 CDTi	81	10/11 -	4149	
ASTRA GTC Mk VI (J)	1.7 CDTi	81	10/11 -	4230	
ASTRA GTC Mk VI (J)	1.7 CDTi	96	10/11 -	4008	
ASTRA GTC Mk VI (J)	1.7 CDTi	96	10/11 -	4014	
ASTRA GTC Mk VI (J)	1.7 CDTi	96	10/11 -	4149	
ASTRA GTC Mk VI (J)	1.7 CDTi	96	10/11 -	4230	
ASTRA GTC Mk VI (J)	2.0 BiTurbo CDTI	143	12/12 -	4008	
ASTRA GTC Mk VI (J)	2.0 BiTurbo CDTI	143	12/12 -	4014	
ASTRA GTC Mk VI (J)	2.0 BiTurbo CDTI	143	12/12 -	4230	
ASTRA GTC Mk VI (J)	2.0 CDTi	121	10/11 -	4008	
ASTRA GTC Mk VI (J)	2.0 CDTi	121	10/11 -	4014	
ASTRA GTC Mk VI (J)	2.0 CDTi	121	10/11 -	4149	
ASTRA GTC Mk VI (J)	2.0 CDTi	121	10/11 -	4230	
ASTRA GTC Mk VI (J)	2.0 VXR	206	04/12 -	4008	
ASTRA GTC Mk VI (J)	2.0 VXR	206	04/12 -	4014	
ASTRA GTC Mk VI (J)	2.0 VXR	206	04/12 -	4149	
ASTRA GTC Mk VI (J)	2.0 VXR	206	04/12 -	4230	
ASTRA Hatchback	1.8 GTE	85	03/83 – 08/86	3410	
ASTRA Hatchback	1.8 GTE	85	03/83 – 08/86	3470	
ASTRA Hatchback	1.8 GTE	85	03/83 – 08/86	3505	
ASTRA Hatchback	1.8 GTE	85	03/83 – 08/86	3615	
ASTRA Mk II Belmont	13	55	09/85 – 08/91	3410	
ASTRA Mk II Belmont	16	66	09/85 – 08/91	3410	
ASTRA Mk II Belmont	18	82	01/86 – 12/90	3410	
ASTRA Mk II Belmont	18	82	01/86 – 12/90	3470	
ASTRA Mk II Belmont	18	82	01/86 – 12/90	3505	
ASTRA Mk II Belmont	18	82	01/86 – 12/90	3615	
ASTRA Mk II Belmont	1.3 i CAT	44	09/85 – 08/91	3410	
ASTRA Mk II Belmont	1.4 i	44	01/90 – 12/91	3410	
ASTRA Mk II Belmont	1.5 DT	49	01/88 – 08/90	3410	
ASTRA Mk II Belmont	1.5 DT	53	01/87 – 08/89	3410	
ASTRA Mk II Belmont	1.6 D	40	09/85 – 08/91	3410	
ASTRA Mk II Belmont	1.6 S	60	01/89 – 12/91	3410	
ASTRA Mk II Belmont	1.7 D	42	01/89 – 12/91	3410	
ASTRA Mk II Belmont	1.8 i	85	09/85 – 08/91	3410	
ASTRA Mk II Belmont	1.8 i	85	09/85 – 08/91	3470	
ASTRA Mk II Belmont	1.8 i	85	09/85 – 08/91	3505	
ASTRA Mk II Belmont	1.8 i	85	09/85 – 08/91	3615	
ASTRA Mk II Convertible	1.6 i	55	01/91 – 08/93	3410	
ASTRA Mk II Convertible	1.6 i	60	01/87 – 12/91	3410	
ASTRA Mk II Convertible	1.6 i CAT	55	10/87 – 02/93	3410	
ASTRA Mk II Convertible	2.0 i	85	01/87 – 12/91	3410	
ASTRA Mk II Convertible	2.0 i	85	01/87 – 12/91	3470	
ASTRA Mk II Convertible	2.0 i	85	01/87 – 12/91	3505	
ASTRA Mk II Convertible	2.0 i	85	01/87 – 12/91	3615	
ASTRA Mk II Convertible	2.0 i CAT	85	01/91 – 08/93	3410	
ASTRA Mk II Convertible	2.0 i CAT	85	01/91 – 08/93	3470	
ASTRA Mk II Convertible	2.0 i CAT	85	01/91 – 08/93	3505	
ASTRA Mk II Convertible	2.0 i CAT	85	01/91 – 08/93	3615	
ASTRA Mk II Estate	12	44	09/84 – 12/88	3410	
ASTRA Mk II Estate	13	51	09/84 – 08/91	3410	
ASTRA Mk II Estate	13	55	09/84 – 08/91	3410	
ASTRA Mk II Estate	16	60	09/84 – 08/91	3410	
ASTRA Mk II Estate	1.4 S	55	01/89 – 08/91	3410	
ASTRA Mk II Estate	1.5 DT	49	01/88 – 08/91	3410	
ASTRA Mk II Estate	1.6 D	40	09/84 – 12/89	3410	
ASTRA Mk II Estate	1.6 S	66	09/84 – 08/86	3410	
ASTRA Mk II Estate	1.7 D	42	02/89 – 08/91	3410	
ASTRA Mk II Estate	1.8 i	83	01/90 – 08/91	3410	
ASTRA Mk II Hatchback	12	40	09/84 – 08/91	3410	
ASTRA Mk II Hatchback	12	44	09/84 – 08/91	3410	
ASTRA Mk II Hatchback	13	44	09/84 – 08/91	3410	
ASTRA Mk II Hatchback	13	55	09/84 – 08/91	3410	
ASTRA Mk II Hatchback	16	60	09/84 – 08/91	3410	
ASTRA Mk II Hatchback	19	110	03/88 – 08/91	3410	
ASTRA Mk II Hatchback	19	110	03/88 – 08/91		3469
ASTRA Mk II Hatchback	19	110	03/88 – 08/91	3470	
ASTRA Mk II Hatchback	19	110	03/88 – 08/91	3505	
ASTRA Mk II Hatchback	19	110	03/88 – 08/91	3615	

MAKE & MODEL		KW	YEAR		
VAUXHALL					
ASTRA Mk II Hatchback	20	85	09/86 – 08/91	3410	
ASTRA Mk II Hatchback	20	85	09/86 – 08/91		3469
ASTRA Mk II Hatchback	20	85	09/86 – 08/91	3470	
ASTRA Mk II Hatchback	20	85	09/86 – 08/91	3505	
ASTRA Mk II Hatchback	20	85	09/86 – 08/91	3615	
ASTRA Mk II Hatchback	1.4 i	44	01/90 – 08/91	3410	
ASTRA Mk II Hatchback	1.4 S	55	01/90 – 08/91	3410	
ASTRA Mk II Hatchback	1.6 D	40	09/84 – 12/89	3410	
ASTRA Mk II Hatchback	1.6 S	66	09/84 – 08/86	3410	
ASTRA Mk II Hatchback	1.7 D	42	01/89 – 08/91	3410	
ASTRA Mk II Hatchback	1.8 GTE	82	09/84 – 08/91	3410	
ASTRA Mk II Hatchback	1.8 GTE	82	09/84 – 08/91	3470	
ASTRA Mk II Hatchback	1.8 GTE	82	09/84 – 08/91	3505	
ASTRA Mk II Hatchback	1.8 GTE	82	09/84 – 08/91	3615	
ASTRA Mk II Hatchback	2.0 GTE	95	09/86 – 08/91	3410	
ASTRA Mk II Hatchback	2.0 GTE	95	09/86 – 08/91		3469
ASTRA Mk II Hatchback	2.0 GTE	95	09/86 – 08/91	3470	
ASTRA Mk II Hatchback	2.0 GTE	95	09/86 – 08/91	3505	
ASTRA Mk II Hatchback	2.0 GTE	95	09/86 – 08/91	3615	
ASTRA Mk II Hatchback	2.0 GTE 16V	115	05/88 – 08/91	3410	
ASTRA Mk II Hatchback	2.0 GTE 16V	115	05/88 – 08/91		3469
ASTRA Mk II Hatchback	2.0 GTE 16V	115	05/88 – 08/91	3470	
ASTRA Mk II Hatchback	2.0 GTE 16V	115	05/88 – 08/91	3505	
ASTRA Mk II Hatchback	2.0 GTE 16V	115	05/88 – 08/91	3615	
ASTRA Mk III (F)	1.4 i	44	04/92 – 09/98	3623	
ASTRA Mk III (F)	1.4 i	60	04/92 – 09/98	3623	
ASTRA Mk III (F)	1.4 i 16V	66	02/96 – 09/98	3623	
ASTRA Mk III (F)	1.6 i	52	08/94 – 07/96	3623	
ASTRA Mk III (F)	1.6 i	55	03/92 – 09/98	3623	
ASTRA Mk III (F)	1.6 i	74	05/92 – 12/94	3623	
ASTRA Mk III (F)	1.6 i 16V	74	08/94 – 09/98	3470	
ASTRA Mk III (F)	1.6 i 16V	74	08/94 – 09/98	3505	
ASTRA Mk III (F)	1.6 i 16V	74	08/94 – 09/98	3615	
ASTRA Mk III (F)	1.7 D	42	03/92 – 09/92	3470	
ASTRA Mk III (F)	1.7 D	42	03/92 – 09/92	3505	
ASTRA Mk III (F)	1.7 D	42	03/92 – 09/92	3615	
ASTRA Mk III (F)	1.7 D	42	03/92 – 09/92	3623	
ASTRA Mk III (F)	1.7 D	44	07/92 – 09/98	3470	
ASTRA Mk III (F)	1.7 D	44	07/92 – 09/98	3505	
ASTRA Mk III (F)	1.7 D	44	07/92 – 09/98	3615	
ASTRA Mk III (F)	1.7 D	44	07/92 – 09/98	3623	
ASTRA Mk III (F)	1.7 TD	50	08/94 – 09/98	3470	
ASTRA Mk III (F)	1.7 TD	50	08/94 – 09/98	3505	
ASTRA Mk III (F)	1.7 TD	50	08/94 – 09/98	3615	
ASTRA Mk III (F)	1.7 TD	50	08/94 – 09/98	3623	
ASTRA Mk III (F)	1.7 TD	60	12/91 – 09/98	3470	
ASTRA Mk III (F)	1.7 TD	60	12/91 – 09/98	3505	
ASTRA Mk III (F)	1.7 TD	60	12/91 – 09/98	3615	
ASTRA Mk III (F)	1.7 TD	60	12/91 – 09/98	3623	
ASTRA Mk III (F)	1.8 i	66	03/92 – 09/98	3623	
ASTRA Mk III (F)	1.8 i 16V	82	09/95 – 02/98		3469
ASTRA Mk III (F)	1.8 i 16V	82	09/95 – 02/98	3470	
ASTRA Mk III (F)	1.8 i 16V	82	09/95 – 02/98	3505	
ASTRA Mk III (F)	1.8 i 16V	82	09/95 – 02/98	3615	
ASTRA Mk III (F)	1.8 i 16V	85	01/94 – 12/96		3469
ASTRA Mk III (F)	1.8 i 16V	85	01/94 – 12/96	3470	
ASTRA Mk III (F)	1.8 i 16V	85	01/94 – 12/96	3505	
ASTRA Mk III (F)	1.8 i 16V	85	01/94 – 12/96	3615	
ASTRA Mk III (F)	1.8 i 16V	92	06/93 – 10/94		3469
ASTRA Mk III (F)	1.8 i 16V	92	06/93 – 10/94	3470	
ASTRA Mk III (F)	1.8 i 16V	92	06/93 – 10/94	3505	
ASTRA Mk III (F)	1.8 i 16V	92	06/93 – 10/94	3615	
ASTRA Mk III (F)	2.0 i	85	03/92 – 09/98		3469
ASTRA Mk III (F)	2.0 i	85	03/92 – 09/98	3470	
ASTRA Mk III (F)	2.0 i	85	03/92 – 09/98	3505	
ASTRA Mk III (F)	2.0 i	85	03/92 – 09/98	3615	
ASTRA Mk III (F)	2.0 i 16V	100	02/95 – 09/98		3469
ASTRA Mk III (F)	2.0 i 16V	100	02/95 – 09/98	3470	
ASTRA Mk III (F)	2.0 i 16V	100	02/95 – 09/98	3505	
ASTRA Mk III (F)	2.0 i 16V	100	02/95 – 09/98	3615	
ASTRA Mk III (F) Convertible	14	55	09/91 – 09/93	3623	

MAKE & MODEL   		KW	YEAR		
VAUXHALL					
ASTRA Mk III (F) Convertible	16	74	03/94 – 08/95	3623	
ASTRA Mk III (F) Convertible	18	92	09/94 – 08/96		3469
ASTRA Mk III (F) Convertible	18	92	09/94 – 08/96	3470	
ASTRA Mk III (F) Convertible	18	92	09/94 – 08/96	3505	
ASTRA Mk III (F) Convertible	18	92	09/94 – 08/96	3615	
ASTRA Mk III (F) Convertible	1.4 i	44	05/93 – 02/98	3623	
ASTRA Mk III (F) Convertible	1.4 i	60	05/93 – 03/01	3623	
ASTRA Mk III (F) Convertible	1.4 i 16V	66	01/96 – 03/01	3623	
ASTRA Mk III (F) Convertible	1.6 i	52	03/93 – 08/96	3623	
ASTRA Mk III (F) Convertible	1.6 i	55	01/96 – 03/01	3623	
ASTRA Mk III (F) Convertible	1.8 16V	85	11/94 – 03/01		3469
ASTRA Mk III (F) Convertible	1.8 16V	85	11/94 – 03/01	3470	
ASTRA Mk III (F) Convertible	1.8 16V	85	11/94 – 03/01	3505	
ASTRA Mk III (F) Convertible	1.8 16V	85	11/94 – 03/01	3615	
ASTRA Mk III (F) Convertible	1.8 i	66	05/93 – 02/98	3623	
ASTRA Mk III (F) Convertible	2.0 i	85	03/93 – 10/94		3469
ASTRA Mk III (F) Convertible	2.0 i	85	03/93 – 10/94	3470	
ASTRA Mk III (F) Convertible	2.0 i	85	03/93 – 10/94	3505	
ASTRA Mk III (F) Convertible	2.0 i	85	03/93 – 10/94	3615	
ASTRA Mk III (F) Convertible	2.0 i 16V	100	01/94 – 02/98		3469
ASTRA Mk III (F) Convertible	2.0 i 16V	100	01/94 – 02/98	3470	
ASTRA Mk III (F) Convertible	2.0 i 16V	100	01/94 – 02/98	3505	
ASTRA Mk III (F) Convertible	2.0 i 16V	100	01/94 – 02/98	3615	
ASTRA Mk III (F) Estate	1.4 i	44	09/91 – 02/98	3623	
ASTRA Mk III (F) Estate	1.4 i	60	03/91 – 02/98	3623	
ASTRA Mk III (F) Estate	1.4 i 16V	66	02/96 – 01/98	3623	
ASTRA Mk III (F) Estate	1.4 S	55	09/91 – 02/98	3623	
ASTRA Mk III (F) Estate	1.6 i	52	07/94 – 02/98	3623	
ASTRA Mk III (F) Estate	1.6 i	55	09/91 – 02/98	3623	
ASTRA Mk III (F) Estate	1.6 i 16V	74	01/94 – 02/98	3470	
ASTRA Mk III (F) Estate	1.6 i 16V	74	01/94 – 02/98	3505	
ASTRA Mk III (F) Estate	1.6 i 16V	74	01/94 – 02/98	3615	
ASTRA Mk III (F) Estate	1.6 Si	74	03/91 – 12/94	3623	
ASTRA Mk III (F) Estate	1.7 D	42	12/91 – 02/98	3470	
ASTRA Mk III (F) Estate	1.7 D	42	12/91 – 02/98	3505	
ASTRA Mk III (F) Estate	1.7 D	42	12/91 – 02/98	3615	
ASTRA Mk III (F) Estate	1.7 D	42	12/91 – 02/98	3623	
ASTRA Mk III (F) Estate	1.7 D	44	03/91 – 12/94	3470	
ASTRA Mk III (F) Estate	1.7 D	44	03/91 – 12/94	3505	
ASTRA Mk III (F) Estate	1.7 D	44	03/91 – 12/94	3615	
ASTRA Mk III (F) Estate	1.7 D	44	03/91 – 12/94	3623	
ASTRA Mk III (F) Estate	1.7 TD	50	01/94 – 02/98	3470	
ASTRA Mk III (F) Estate	1.7 TD	50	01/94 – 02/98	3505	
ASTRA Mk III (F) Estate	1.7 TD	50	01/94 – 02/98	3615	
ASTRA Mk III (F) Estate	1.7 TD	50	01/94 – 02/98	3623	
ASTRA Mk III (F) Estate	1.7 TD	60	12/91 – 02/98	3470	
ASTRA Mk III (F) Estate	1.7 TD	60	12/91 – 02/98	3505	
ASTRA Mk III (F) Estate	1.7 TD	60	12/91 – 02/98	3615	
ASTRA Mk III (F) Estate	1.7 TD	60	12/91 – 02/98	3623	
ASTRA Mk III (F) Estate	1.8 i	66	09/91 – 02/98	3623	
ASTRA Mk III (F) Estate	1.8 i 16V	85	09/94 – 02/98		3469
ASTRA Mk III (F) Estate	1.8 i 16V	85	09/94 – 02/98	3470	
ASTRA Mk III (F) Estate	1.8 i 16V	85	09/94 – 02/98	3505	
ASTRA Mk III (F) Estate	1.8 i 16V	85	09/94 – 02/98	3615	
ASTRA Mk III (F) Estate	1.8 i 16V	92	09/94 – 02/98		3469
ASTRA Mk III (F) Estate	1.8 i 16V	92	09/94 – 02/98	3470	
ASTRA Mk III (F) Estate	1.8 i 16V	92	09/94 – 02/98	3505	
ASTRA Mk III (F) Estate	1.8 i 16V	92	09/94 – 02/98	3615	
ASTRA Mk III (F) Estate	2.0 i	85	09/91 – 02/98		3469
ASTRA Mk III (F) Estate	2.0 i	85	09/91 – 02/98	3470	
ASTRA Mk III (F) Estate	2.0 i	85	09/91 – 02/98	3505	
ASTRA Mk III (F) Estate	2.0 i	85	09/91 – 02/98	3615	
ASTRA Mk III (F) Estate	2.0 i 16V	100	01/94 – 02/98		3469
ASTRA Mk III (F) Estate	2.0 i 16V	100	01/94 – 02/98	3470	
ASTRA Mk III (F) Estate	2.0 i 16V	100	01/94 – 02/98	3505	
ASTRA Mk III (F) Estate	2.0 i 16V	100	01/94 – 02/98	3615	
ASTRA Mk III (F) Hatchback	1.4 i	44	09/91 – 02/98	3623	
ASTRA Mk III (F) Hatchback	1.4 i	60	03/92 – 02/98	3623	
ASTRA Mk III (F) Hatchback	1.4 i 16V	66	02/96 – 02/98	3623	
ASTRA Mk III (F) Hatchback	1.4 S	55	09/91 – 02/98	3623	
ASTRA Mk III (F) Hatchback	1.6 i	52	02/93 – 12/96	3623	

MAKE & MODEL		KW	YEAR		
VAUXHALL					
ASTRA Mk III (F) Hatchback	1.6 i	55	09/91 – 02/98	3623	
ASTRA Mk III (F) Hatchback	1.6 i	74	03/92 – 02/98	3623	
ASTRA Mk III (F) Hatchback	1.6 i 16V	74	01/94 – 02/98	3470	
ASTRA Mk III (F) Hatchback	1.6 i 16V	74	01/94 – 02/98	3505	
ASTRA Mk III (F) Hatchback	1.6 i 16V	74	01/94 – 02/98	3615	
ASTRA Mk III (F) Hatchback	1.7 D	42	12/91 – 02/98	3470	
ASTRA Mk III (F) Hatchback	1.7 D	42	12/91 – 02/98	3505	
ASTRA Mk III (F) Hatchback	1.7 D	42	12/91 – 02/98	3615	
ASTRA Mk III (F) Hatchback	1.7 D	42	12/91 – 02/98	3623	
ASTRA Mk III (F) Hatchback	1.7 D	44	09/91 – 12/94	3470	
ASTRA Mk III (F) Hatchback	1.7 D	44	09/91 – 12/94	3505	
ASTRA Mk III (F) Hatchback	1.7 D	44	09/91 – 12/94	3615	
ASTRA Mk III (F) Hatchback	1.7 D	44	09/91 – 12/94	3623	
ASTRA Mk III (F) Hatchback	1.7 TD	50	08/94 – 02/98	3470	
ASTRA Mk III (F) Hatchback	1.7 TD	50	08/94 – 02/98	3505	
ASTRA Mk III (F) Hatchback	1.7 TD	50	08/94 – 02/98	3615	
ASTRA Mk III (F) Hatchback	1.7 TD	50	08/94 – 02/98	3623	
ASTRA Mk III (F) Hatchback	1.7 TD	60	12/91 – 02/98	3470	
ASTRA Mk III (F) Hatchback	1.7 TD	60	12/91 – 02/98	3505	
ASTRA Mk III (F) Hatchback	1.7 TD	60	12/91 – 02/98	3615	
ASTRA Mk III (F) Hatchback	1.7 TD	60	12/91 – 02/98	3623	
ASTRA Mk III (F) Hatchback	1.8 i	66	09/91 – 02/98	3623	
ASTRA Mk III (F) Hatchback	1.8 i 16V	85	09/94 – 02/98		3469
ASTRA Mk III (F) Hatchback	1.8 i 16V	85	09/94 – 02/98	3470	
ASTRA Mk III (F) Hatchback	1.8 i 16V	85	09/94 – 02/98	3505	
ASTRA Mk III (F) Hatchback	1.8 i 16V	85	09/94 – 02/98	3615	
ASTRA Mk III (F) Hatchback	1.8 i 16V	92	09/94 – 02/98		3469
ASTRA Mk III (F) Hatchback	1.8 i 16V	92	09/94 – 02/98	3470	
ASTRA Mk III (F) Hatchback	1.8 i 16V	92	09/94 – 02/98	3505	
ASTRA Mk III (F) Hatchback	1.8 i 16V	92	09/94 – 02/98	3615	
ASTRA Mk III (F) Hatchback	2.0 i	85	09/91 – 02/98		3469
ASTRA Mk III (F) Hatchback	2.0 i	85	09/91 – 02/98	3470	
ASTRA Mk III (F) Hatchback	2.0 i	85	09/91 – 02/98	3505	
ASTRA Mk III (F) Hatchback	2.0 i	85	09/91 – 02/98	3615	
ASTRA Mk III (F) Hatchback	2.0 i 16V	100	01/94 – 02/98		3469
ASTRA Mk III (F) Hatchback	2.0 i 16V	100	01/94 – 02/98	3470	
ASTRA Mk III (F) Hatchback	2.0 i 16V	100	01/94 – 02/98	3505	
ASTRA Mk III (F) Hatchback	2.0 i 16V	100	01/94 – 02/98	3615	
ASTRA Mk III (F) Hatchback	2.0 i 16V	110	09/91 – 02/98		3469
ASTRA Mk III (F) Hatchback	2.0 i 16V	110	09/91 – 02/98	3470	
ASTRA Mk III (F) Hatchback	2.0 i 16V	110	09/91 – 02/98	3505	
ASTRA Mk III (F) Hatchback	2.0 i 16V	110	09/91 – 02/98	3615	
ASTRA Mk IV CC (G)	1.2 16V (X 12 XE)	48	02/98 – 09/00		3763
ASTRA Mk IV CC (G)	1.4 16V (X 14 XE)	66	02/98 – 05/05		3763
ASTRA Mk IV CC (G)	1.4 16V (Z 14 XE)	66	02/98 – 05/05		3763
ASTRA Mk IV CC (G)	1.6 (X 16 SZR)	55	02/98 – 09/00		3763
ASTRA Mk IV CC (G)	1.6 16V (X 16 XEL)	74	02/98 – 05/05		3763
ASTRA Mk IV CC (G)	1.6 16V (Z 16 XE)	74	02/98 – 05/05		3763
ASTRA Mk IV CC (G)	1.7 TD (X 17 DTL)	50	02/98 – 08/00		3763
ASTRA Mk IV CC (G)	1.8 16V (X 18 XE1)	85	02/98 – 09/00		3763
ASTRA Mk IV CC (G)	2.0 16V (X 20 XEV)	100	02/98 – 05/05		3763
ASTRA Mk IV CC (G)	2.0 DI (X 20 DTL)	60	02/98 – 05/05		3763
ASTRA Mk IV CC (G)	2.0 DI (Y 20 DTL)	60	02/98 – 05/05		3763
ASTRA Mk IV CC (G)	2.0 DTI 16V (X 20 DTH)	74	08/99 – 05/05		3763
ASTRA Mk IV CC (G)	2.0 DTI 16V (Y 20 DTH)	74	08/99 – 05/05		3763
ASTRA Mk IV (G)	1.2 16V (X 12 XE)	48	02/98 – 09/00		3763
ASTRA Mk IV (G)	1.2 16V (X 12 XE)	48	09/98 – 09/00		3763
ASTRA Mk IV (G)	1.4 16V (X 14 XE)	66	09/98 – 05/05		3763
ASTRA Mk IV (G)	1.4 16V (Z 14 XE)	66	02/98 – 05/05		3763
ASTRA Mk IV (G)	1.4 16V (Z 14 XE)	66	09/98 – 05/05		3763
ASTRA Mk IV (G)	1.4 16V (X 14 XE)	66	02/98 – 05/05		3763
ASTRA Mk IV (G)	1.6 (X 16 SZR)	55	03/98 – 04/04		3763
ASTRA Mk IV (G)	1.6 (X 16 SZR)	55	09/98 – 09/00		3763
ASTRA Mk IV (G)	1.6 16V (C 16 SEL)	74	09/98 – 05/05		3763
ASTRA Mk IV (G)	1.6 16V (X 16 XEL)	74	03/98 – 04/04		3763
ASTRA Mk IV (G)	1.6 16V (X 16 XEL)	74	09/98 – 05/05		3763
ASTRA Mk IV (G)	1.6 16V (Z 16 XE)	74	03/98 – 04/04		3763
ASTRA Mk IV (G)	1.6 16V (Z 16 XE)	74	09/98 – 05/05		3763
ASTRA Mk IV (G)	1.6 16V (Z 16 XEP)	74	09/98 – 05/05		3763
ASTRA Mk IV (G)	1.7 TD (X 17 DTL)	50	02/98 – 08/00		3763
ASTRA Mk IV (G)	1.7 TD (X 17 DTL)	50	09/98 – 08/00		3763

MAKE & MODEL		KW	YEAR		
VAUXHALL					
ASTRA Mk IV (G)	1.8 16V (X 18 XE1)	85	02/98 – 08/00		3763
ASTRA Mk IV (G)	1.8 16V (X 18 XE1)	85	02/98 – 07/04		3763
ASTRA Mk IV (G)	2.0 16V (X 20 XEV)	100	02/98 – 05/05		3763
ASTRA Mk IV (G)	2.0 16V (X 20 XEV)	100	09/98 – 05/05		3763
ASTRA Mk IV (G)	2.0 DI (X 20 DTL)	60	03/98 – 04/04		3763
ASTRA Mk IV (G)	2.0 DI (X 20 DTL)	60	02/98 – 07/04		3763
ASTRA Mk IV (G)	2.0 DI (Y 20 DTL)	60	03/98 – 04/04		3763
ASTRA Mk IV (G)	2.0 DI (Y 20 DTL)	60	02/98 – 07/04		3763
ASTRA Mk IV (G)	2.0 DTI 16V (X 20 DTH)	74	03/98 – 04/04		3763
ASTRA Mk IV (G)	2.0 DTI 16V (X 20 DTH)	74	02/98 – 07/04		3763
ASTRA Mk IV (G)	2.0 DTI 16V (Y 20 DTH)	74	03/98 – 04/04		3763
ASTRA Mk IV (G)	2.0 DTI 16V (Y 20 DTH)	74	02/98 – 07/04		3763
ASTRA Mk IV (G) Convertible	20	147	09/02 – 10/05		4040
ASTRA Mk IV (G) Convertible	1.6 16V	74	03/01 – 10/05	3762	
ASTRA Mk IV (G) Convertible	1.6 16V	74	03/01 – 10/05		4040
ASTRA Mk IV (G) Convertible	1.6 16V	76	03/03 – 10/05	3762	
ASTRA Mk IV (G) Convertible	1.6 16V	76	03/03 – 10/05		4040
ASTRA Mk IV (G) Convertible	1.8 16V	92	03/01 – 10/05		4040
ASTRA Mk IV (G) Convertible	1.8 16V	92	03/01 – 10/05	4042	
ASTRA Mk IV (G) Convertible	2.0 Turbo	141	03/02 – 10/05		4040
ASTRA Mk IV (G) Convertible	2.2 16V	108	03/01 – 10/05		4040
ASTRA Mk IV (G) Convertible	2.2 16V	108	03/01 – 10/05	4042	
ASTRA Mk IV (G) Coupe (F67)	20	147	08/02 – 05/05		4040
ASTRA Mk IV (G) Coupe (F67)	1.6 16V	76	03/00 – 08/05		4040
ASTRA Mk IV (G) Coupe (F67)	1.6 16V	76	03/00 – 08/05	4042	
ASTRA Mk IV (G) Coupe (F67)	1.8 16V	85	03/00 – 08/05		4040
ASTRA Mk IV (G) Coupe (F67)	1.8 16V	85	03/00 – 08/05	4042	
ASTRA Mk IV (G) Coupe (F67)	1.8 16V	92	09/00 – 08/05		4040
ASTRA Mk IV (G) Coupe (F67)	1.8 16V	92	09/00 – 08/05	4042	
ASTRA Mk IV (G) Coupe (F67)	1.8 16V Dualfuel	87	09/02 – 08/05		4040
ASTRA Mk IV (G) Coupe (F67)	1.8 16V Dualfuel	87	09/02 – 08/05	4042	
ASTRA Mk IV (G) Coupe (F67)	2.0 16V Turbo	140	09/00 – 08/05		4040
ASTRA Mk IV (G) Coupe (F67)	2.2 16V	108	03/00 – 08/05		4040
ASTRA Mk IV (G) Coupe (F67)	2.2 16V	108	03/00 – 08/05	4042	
ASTRA Mk IV (G) Estate	16	55	03/98 – 04/04	3762	
ASTRA Mk IV (G) Estate	16	55	03/98 – 04/04		4040
ASTRA Mk IV (G) Estate	16	62	03/98 – 04/04	3762	
ASTRA Mk IV (G) Estate	16	62	03/98 – 04/04		4040
ASTRA Mk IV (G) Estate	16	76	12/02 – 05/05	3762	
ASTRA Mk IV (G) Estate	16	76	12/02 – 05/05		4040
ASTRA Mk IV (G) Estate	1.2 16V	48	02/98 – 09/00	3762	
ASTRA Mk IV (G) Estate	1.2 16V	48	02/98 – 09/00		4040
ASTRA Mk IV (G) Estate	1.2 16V	55	09/00 – 05/05	3762	
ASTRA Mk IV (G) Estate	1.2 16V	55	09/00 – 05/05		4040
ASTRA Mk IV (G) Estate	1.4 16V	66	02/98 – 05/05	3762	
ASTRA Mk IV (G) Estate	1.4 16V	66	02/98 – 05/05		4040
ASTRA Mk IV (G) Estate	1.6 16V	74	03/98 – 04/04	3762	
ASTRA Mk IV (G) Estate	1.6 16V	74	03/98 – 04/04		4040
ASTRA Mk IV (G) Estate	1.6 Dualfuel	62	07/00 – 05/05	3762	
ASTRA Mk IV (G) Estate	1.6 Dualfuel	62	07/00 – 05/05		4040
ASTRA Mk IV (G) Estate	1.6 Dualfuel	63	03/98 – 04/04	3762	
ASTRA Mk IV (G) Estate	1.6 Dualfuel	63	03/98 – 04/04		4040
ASTRA Mk IV (G) Estate	1.7 CDTI 16V	59	04/03 – 05/05	3762	
ASTRA Mk IV (G) Estate	1.7 CDTI 16V	59	04/03 – 05/05		4040
ASTRA Mk IV (G) Estate	1.7 DTI 16V	55	02/00 – 05/05	3762	
ASTRA Mk IV (G) Estate	1.7 DTI 16V	55	02/00 – 05/05		4040
ASTRA Mk IV (G) Estate	1.7 TD	50	02/98 – 08/00	3762	
ASTRA Mk IV (G) Estate	1.7 TD	50	02/98 – 08/00		4040
ASTRA Mk IV (G) Estate	1.8 16V	85	02/98 – 08/00	3762	
ASTRA Mk IV (G) Estate	1.8 16V	85	02/98 – 08/00		4040
ASTRA Mk IV (G) Estate	1.8 16V	85	02/98 – 08/00	4042	
ASTRA Mk IV (G) Estate	1.8 16V	92	09/00 – 05/05	3762	
ASTRA Mk IV (G) Estate	1.8 16V	92	09/00 – 05/05		4040
ASTRA Mk IV (G) Estate	1.8 16V	92	09/00 – 05/05	4042	
ASTRA Mk IV (G) Estate	1.8 16V Dualfuel	87	09/02 – 05/05		4040
ASTRA Mk IV (G) Estate	1.8 16V Dualfuel	87	09/02 – 05/05	4042	
ASTRA Mk IV (G) Estate	2.0 16V	100	02/98 – 05/05		4040
ASTRA Mk IV (G) Estate	2.0 16V	100	02/98 – 05/05	4042	
ASTRA Mk IV (G) Estate	2.0 16V	118	10/99 – 05/05		4040
ASTRA Mk IV (G) Estate	2.0 16V	118	10/99 – 05/05	4042	
ASTRA Mk IV (G) Estate	2.0 DI	60	03/98 – 04/04	3762	

MAKE & MODEL		KW	YEAR		
VAUXHALL					
ASTRA Mk IV (G) Estate	2.0 DI	60	03/98 – 04/04		4040
ASTRA Mk IV (G) Estate	2.0 DI	60	03/98 – 04/04	4042	
ASTRA Mk IV (G) Estate	2.0 DTI 16V	74	03/98 – 04/04		4040
ASTRA Mk IV (G) Estate	2.0 DTI 16V	74	03/98 – 04/04	4042	
ASTRA Mk IV (G) Estate	2.2 16V	108	03/01 – 05/05		4040
ASTRA Mk IV (G) Estate	2.2 16V	108	03/01 – 05/05	4042	
ASTRA Mk IV (G) Hatchback	16	55	02/98 – 09/00	3762	
ASTRA Mk IV (G) Hatchback	16	55	02/98 – 09/00		4040
ASTRA Mk IV (G) Hatchback	16	62	09/00 – 05/05	3762	
ASTRA Mk IV (G) Hatchback	16	62	09/00 – 05/05		4040
ASTRA Mk IV (G) Hatchback	16	76	12/02 – 05/05	3762	
ASTRA Mk IV (G) Hatchback	16	76	12/02 – 05/05		4040
ASTRA Mk IV (G) Hatchback	20	118	10/99 – 08/00		4040
ASTRA Mk IV (G) Hatchback	20	118	10/99 – 08/00	4042	
ASTRA Mk IV (G) Hatchback	1.2 16V	48	02/98 – 09/00	3762	
ASTRA Mk IV (G) Hatchback	1.2 16V	48	02/98 – 09/00		4040
ASTRA Mk IV (G) Hatchback	1.2 16V	55	09/00 – 05/05	3762	
ASTRA Mk IV (G) Hatchback	1.2 16V	55	09/00 – 05/05		4040
ASTRA Mk IV (G) Hatchback	1.4 16V	66	02/98 – 05/05	3762	
ASTRA Mk IV (G) Hatchback	1.4 16V	66	02/98 – 05/05		4040
ASTRA Mk IV (G) Hatchback	1.6 16V	74	02/98 – 05/05	3762	
ASTRA Mk IV (G) Hatchback	1.6 16V	74	02/98 – 05/05		4040
ASTRA Mk IV (G) Hatchback	1.6 Dualfuel	62	07/00 – 05/05	3762	
ASTRA Mk IV (G) Hatchback	1.6 Dualfuel	62	07/00 – 05/05		4040
ASTRA Mk IV (G) Hatchback	1.6 Dualfuel	63	09/02 – 05/05	3762	
ASTRA Mk IV (G) Hatchback	1.6 Dualfuel	63	09/02 – 05/05		4040
ASTRA Mk IV (G) Hatchback	1.7 CDTI 16V	59	04/03 – 05/05	3762	
ASTRA Mk IV (G) Hatchback	1.7 CDTI 16V	59	04/03 – 05/05		4040
ASTRA Mk IV (G) Hatchback	1.7 DTI 16V	55	02/00 – 05/05	3762	
ASTRA Mk IV (G) Hatchback	1.7 DTI 16V	55	02/00 – 05/05		4040
ASTRA Mk IV (G) Hatchback	1.7 TD	50	02/98 – 08/00	3762	
ASTRA Mk IV (G) Hatchback	1.7 TD	50	02/98 – 08/00		4040
ASTRA Mk IV (G) Hatchback	1.8 16V	85	02/98 – 09/00	3762	
ASTRA Mk IV (G) Hatchback	1.8 16V	85	02/98 – 09/00		4040
ASTRA Mk IV (G) Hatchback	1.8 16V	85	02/98 – 09/00	4042	
ASTRA Mk IV (G) Hatchback	1.8 16V	92	09/00 – 05/05	3762	
ASTRA Mk IV (G) Hatchback	1.8 16V	92	09/00 – 05/05		4040
ASTRA Mk IV (G) Hatchback	1.8 16V	92	09/00 – 05/05	4042	
ASTRA Mk IV (G) Hatchback	1.8 16V Dualfuel	87	09/02 – 05/05		4040
ASTRA Mk IV (G) Hatchback	1.8 16V Dualfuel	87	09/02 – 05/05	4042	
ASTRA Mk IV (G) Hatchback	2.0 16V	100	02/98 – 05/05		4040
ASTRA Mk IV (G) Hatchback	2.0 16V	100	02/98 – 05/05	4042	
ASTRA Mk IV (G) Hatchback	2.0 DI	60	02/98 – 05/05	3762	
ASTRA Mk IV (G) Hatchback	2.0 DI	60	02/98 – 05/05		4040
ASTRA Mk IV (G) Hatchback	2.0 DI	60	02/98 – 05/05	4042	
ASTRA Mk IV (G) Hatchback	2.0 DTI 16V	74	08/99 – 05/05		4040
ASTRA Mk IV (G) Hatchback	2.0 DTI 16V	74	08/99 – 05/05	4042	
ASTRA Mk IV (G) Hatchback	2.0 SRI Turbo	141	11/01 – 05/05		4040
ASTRA Mk IV (G) Hatchback	2.2 16V	108	03/01 – 05/05		4040
ASTRA Mk IV (G) Hatchback	2.2 16V	108	03/01 – 05/05	4042	
ASTRA Mk IV (G) Saloon	16	55	09/98 – 09/00	3762	
ASTRA Mk IV (G) Saloon	16	55	09/98 – 09/00		4040
ASTRA Mk IV (G) Saloon	16	62	09/00 – 05/05	3762	
ASTRA Mk IV (G) Saloon	16	62	09/00 – 05/05		4040
ASTRA Mk IV (G) Saloon	1.2 16V	48	09/98 – 09/00	3762	
ASTRA Mk IV (G) Saloon	1.2 16V	48	09/98 – 09/00		4040
ASTRA Mk IV (G) Saloon	1.2 16V	55	09/00 – 05/05	3762	
ASTRA Mk IV (G) Saloon	1.2 16V	55	09/00 – 05/05		4040
ASTRA Mk IV (G) Saloon	1.4 16V	66	09/98 – 05/05	3762	
ASTRA Mk IV (G) Saloon	1.4 16V	66	09/98 – 05/05		4040
ASTRA Mk IV (G) Saloon	1.6 16V	74	09/98 – 05/05	3762	
ASTRA Mk IV (G) Saloon	1.6 16V	74	09/98 – 05/05		4040
ASTRA Mk IV (G) Saloon	1.6 Dualfuel	62	07/00 – 05/05	3762	
ASTRA Mk IV (G) Saloon	1.6 Dualfuel	62	07/00 – 05/05		4040
ASTRA Mk IV (G) Saloon	1.6 Dualfuel	63	09/02 – 05/05	3762	
ASTRA Mk IV (G) Saloon	1.6 Dualfuel	63	09/02 – 05/05		4040
ASTRA Mk IV (G) Saloon	1.7 CDTI 16V	59	04/03 – 05/05	3762	
ASTRA Mk IV (G) Saloon	1.7 CDTI 16V	59	04/03 – 05/05		4040
ASTRA Mk IV (G) Saloon	1.7 DTI 16V	55	02/00 – 05/05	3762	
ASTRA Mk IV (G) Saloon	1.7 DTI 16V	55	02/00 – 05/05		4040
ASTRA Mk IV (G) Saloon	1.7 TD	50	09/98 – 08/00	3762	

MAKE & MODEL		KW	YEAR		
VAUXHALL					
ASTRA Mk IV (G) Saloon	1.7 TD	50	09/98 – 08/00		4040
ASTRA Mk IV (G) Saloon	1.8 16V	85	02/98 – 07/04	3762	
ASTRA Mk IV (G) Saloon	1.8 16V	85	02/98 – 07/04		4040
ASTRA Mk IV (G) Saloon	1.8 16V	85	02/98 – 07/04	4042	
ASTRA Mk IV (G) Saloon	1.8 16V	92	02/98 – 07/04	3762	
ASTRA Mk IV (G) Saloon	1.8 16V	92	02/98 – 07/04		4040
ASTRA Mk IV (G) Saloon	1.8 16V	92	02/98 – 07/04	4042	
ASTRA Mk IV (G) Saloon	1.8 16V Dualfuel	87	02/98 – 07/04		4040
ASTRA Mk IV (G) Saloon	1.8 16V Dualfuel	87	02/98 – 07/04	4042	
ASTRA Mk IV (G) Saloon	2.0 16V	100	09/98 – 05/05		4040
ASTRA Mk IV (G) Saloon	2.0 16V	100	09/98 – 05/05	4042	
ASTRA Mk IV (G) Saloon	2.0 16V	118	10/99 – 05/05		4040
ASTRA Mk IV (G) Saloon	2.0 16V	118	10/99 – 05/05	4042	
ASTRA Mk IV (G) Saloon	2.0 DI	60	02/98 – 07/04	3762	
ASTRA Mk IV (G) Saloon	2.0 DI	60	02/98 – 07/04		4040
ASTRA Mk IV (G) Saloon	2.0 DI	60	02/98 – 07/04	4042	
ASTRA Mk IV (G) Saloon	2.0 DTI 16V	74	02/98 – 07/04		4040
ASTRA Mk IV (G) Saloon	2.0 DTI 16V	74	02/98 – 07/04	4042	
ASTRA Mk IV (G) Saloon	2.2 16V	108	03/01 – 05/05		4040
ASTRA Mk IV (G) Saloon	2.2 16V	108	03/01 – 05/05	4042	
ASTRA Mk IV (G) Saloon	2.2 DTI	92	09/02 – 05/05		4040
ASTRA Mk IV (G) Saloon	2.2 DTI	92	09/02 – 05/05	4042	
ASTRA Mk V (H) Estate	14	55	08/04 – 10/10		4040
ASTRA Mk V (H) Estate	14	55	08/04 – 10/10	4042	
ASTRA Mk V (H) Estate	14	66	08/04 – 03/09		4040
ASTRA Mk V (H) Estate	14	66	08/04 – 03/09	4042	
ASTRA Mk V (H) Estate	16	77	08/04 – 03/09		4040
ASTRA Mk V (H) Estate	16	77	08/04 – 03/09	4042	
ASTRA Mk V (H) Estate	16	85	08/04 – 03/09		4040
ASTRA Mk V (H) Estate	16	85	08/04 – 03/09	4042	
ASTRA Mk V (H) Estate	16	132	08/04 – 03/09		4040
ASTRA Mk V (H) Estate	16	132	08/04 – 03/09	4042	
ASTRA Mk V (H) Estate	18	92	10/04 – 03/09		4040
ASTRA Mk V (H) Estate	18	92	10/04 – 03/09	4042	
ASTRA Mk V (H) Estate	18	103	12/05 – 10/10		4040
ASTRA Mk V (H) Estate	18	103	12/05 – 10/10	4042	
ASTRA Mk V (H) Estate	1.3 CDTi	66	08/04 – 03/09		4040
ASTRA Mk V (H) Estate	1.3 CDTi	66	08/04 – 03/09	4042	
ASTRA Mk V (H) Estate	1.7 CDTI	59	08/04 – 05/09		4040
ASTRA Mk V (H) Estate	1.7 CDTI	59	08/04 – 05/09	4042	
ASTRA Mk V (H) Estate	1.7 CDTI	92	02/07 – 10/10		4040
ASTRA Mk V (H) Estate	1.7 CDTI	92	02/07 – 10/10	4042	
ASTRA Mk V (H) Estate	1.7 CDTi	74	08/04 – 03/09		4040
ASTRA Mk V (H) Estate	1.7 CDTi	74	08/04 – 03/09	4042	
ASTRA Mk V (H) Estate	1.7 CDTi	81	08/04 – 03/09		4040
ASTRA Mk V (H) Estate	1.7 CDTi	81	08/04 – 03/09	4042	
ASTRA Mk V (H) Estate	1.9 CDTi	74	08/04 – 03/09		4040
ASTRA Mk V (H) Estate	1.9 CDTi	74	08/04 – 03/09	4042	
ASTRA Mk V (H) Estate	1.9 CDTi	88	08/04 – 03/09		4040
ASTRA Mk V (H) Estate	1.9 CDTi	88	08/04 – 03/09	4042	
ASTRA Mk V (H) Estate	1.9 CDTi	110	08/04 – 03/09		4040
ASTRA Mk V (H) Estate	1.9 CDTi	110	08/04 – 03/09	4042	
ASTRA Mk V (H) Estate	2.0 Turbo	125	08/04 – 10/10		4040
ASTRA Mk V (H) Estate	2.0 Turbo	125	08/04 – 10/10	4042	
ASTRA Mk V (H) Estate	2.0 Turbo	147	08/04 – 10/10		4040
ASTRA Mk V (H) Estate	2.0 Turbo	147	08/04 – 10/10	4042	
ASTRA Mk V (H) Hatchback	14	55	04/04 – 12/05		4040
ASTRA Mk V (H) Hatchback	14	55	04/04 – 12/05	4042	
ASTRA Mk V (H) Hatchback	14	66	01/04 – 05/09		4040
ASTRA Mk V (H) Hatchback	14	66	01/04 – 05/09	4042	
ASTRA Mk V (H) Hatchback	16	77	01/04 – 05/09		4040
ASTRA Mk V (H) Hatchback	16	77	01/04 – 05/09	4042	
ASTRA Mk V (H) Hatchback	16	85	01/04 – 05/09		4040
ASTRA Mk V (H) Hatchback	16	85	01/04 – 05/09	4042	
ASTRA Mk V (H) Hatchback	18	92	01/04 – 05/09		4040
ASTRA Mk V (H) Hatchback	18	92	01/04 – 05/09	4042	
ASTRA Mk V (H) Hatchback	18	103	01/04 – 05/09		4040
ASTRA Mk V (H) Hatchback	18	103	01/04 – 05/09	4042	
ASTRA Mk V (H) Hatchback	1.3 CDTI	66	01/04 – 05/09		4040
ASTRA Mk V (H) Hatchback	1.3 CDTI	66	01/04 – 05/09	4042	
ASTRA Mk V (H) Hatchback	1.6 Turbo	132	09/06 – 09/09		4040

MAKE & MODEL		KW	YEAR		
VAUXHALL					
ASTRA Mk V (H) Hatchback	1.6 Turbo	132	09/06 – 09/09	4042	
ASTRA Mk V (H) Hatchback	1.7 CDTI	59	01/04 – 05/09		4040
ASTRA Mk V (H) Hatchback	1.7 CDTI	59	01/04 – 05/09	4042	
ASTRA Mk V (H) Hatchback	1.7 CDTI	74	01/04 – 05/09		4040
ASTRA Mk V (H) Hatchback	1.7 CDTI	74	01/04 – 05/09	4042	
ASTRA Mk V (H) Hatchback	1.7 CDTI	92	02/07 – 09/09		4040
ASTRA Mk V (H) Hatchback	1.7 CDTI	92	02/07 – 09/09	4042	
ASTRA Mk V (H) Hatchback	1.7 CDTi	81	01/04 – 05/09		4040
ASTRA Mk V (H) Hatchback	1.7 CDTi	81	01/04 – 05/09	4042	
ASTRA Mk V (H) Hatchback	1.9 CDTI	88	01/04 – 05/09		4040
ASTRA Mk V (H) Hatchback	1.9 CDTI	88	01/04 – 05/09	4042	
ASTRA Mk V (H) Hatchback	1.9 CDTI	110	01/04 – 05/09		4040
ASTRA Mk V (H) Hatchback	1.9 CDTI	110	01/04 – 05/09	4042	
ASTRA Mk V (H) Hatchback	1.9 CDTI 16V	88	01/04 – 05/09		4040
ASTRA Mk V (H) Hatchback	1.9 CDTI 16V	88	01/04 – 05/09	4042	
ASTRA Mk V (H) Hatchback	2.0 Turbo	125	01/04 – 05/09		4040
ASTRA Mk V (H) Hatchback	2.0 Turbo	125	01/04 – 05/09	4042	
ASTRA Mk V (H) Hatchback	2.0 Turbo	147	01/04 – 05/09		4040
ASTRA Mk V (H) Hatchback	2.0 Turbo	147	01/04 – 05/09	4042	
ASTRA Mk V (H) Hatchback	2.0 Turbo	177	01/04 – 05/09		4040
ASTRA Mk V (H) Sport Hatch	14	55	02/05 – 11/10		4040
ASTRA Mk V (H) Sport Hatch	14	55	02/05 – 11/10	4042	
ASTRA Mk V (H) Sport Hatch	16	77	02/05 – 11/10		4040
ASTRA Mk V (H) Sport Hatch	16	77	02/05 – 11/10	4042	
ASTRA Mk V (H) Sport Hatch	16	132	10/06 – 11/10		4040
ASTRA Mk V (H) Sport Hatch	16	132	10/06 – 11/10	4042	
ASTRA Mk V (H) Sport Hatch	18	92	02/05 – 11/10		4040
ASTRA Mk V (H) Sport Hatch	18	92	02/05 – 11/10	4042	
ASTRA Mk V (H) Sport Hatch	1.3 CDTi	66	04/05 – 11/10		4040
ASTRA Mk V (H) Sport Hatch	1.3 CDTi	66	04/05 – 11/10	4042	
ASTRA Mk V (H) Sport Hatch	1.4 i 16V	66	03/05 – 11/10		4040
ASTRA Mk V (H) Sport Hatch	1.4 i 16V	66	03/05 – 11/10	4042	
ASTRA Mk V (H) Sport Hatch	1.6 i 16V	85	12/06 – 11/10		4040
ASTRA Mk V (H) Sport Hatch	1.6 i 16V	85	12/06 – 11/10	4042	
ASTRA Mk V (H) Sport Hatch	1.7 CDTI	92	02/07 – 11/10		4040
ASTRA Mk V (H) Sport Hatch	1.7 CDTI	92	02/07 – 11/10	4042	
ASTRA Mk V (H) Sport Hatch	1.7 CDTi	74	02/05 – 11/10		4040
ASTRA Mk V (H) Sport Hatch	1.7 CDTi	74	02/05 – 11/10	4042	
ASTRA Mk V (H) Sport Hatch	1.7 CDTi	81	02/07 – 11/10		4040
ASTRA Mk V (H) Sport Hatch	1.7 CDTi	81	02/07 – 11/10	4042	
ASTRA Mk V (H) Sport Hatch	1.8 i 16V	103	03/07 – 11/10		4040
ASTRA Mk V (H) Sport Hatch	1.8 i 16V	103	03/07 – 11/10	4042	
ASTRA Mk V (H) Sport Hatch	1.9 CDTi	74	08/05 – 11/10		4040
ASTRA Mk V (H) Sport Hatch	1.9 CDTi	74	08/05 – 11/10	4042	
ASTRA Mk V (H) Sport Hatch	1.9 CDTi	88	02/05 – 11/10		4040
ASTRA Mk V (H) Sport Hatch	1.9 CDTi	88	02/05 – 11/10	4042	
ASTRA Mk V (H) Sport Hatch	1.9 CDTi	110	02/05 – 11/10		4040
ASTRA Mk V (H) Sport Hatch	1.9 CDTi	110	02/05 – 11/10	4042	
ASTRA Mk V (H) Sport Hatch	2.0 Turbo	125	02/05 – 11/10		4040
ASTRA Mk V (H) Sport Hatch	2.0 Turbo	125	02/05 – 11/10	4042	
ASTRA Mk V (H) Sport Hatch	2.0 VXR	176	02/09 – 11/10		4040
ASTRA Mk VI (J)	14	64	12/09 -	4008	
ASTRA Mk VI (J)	14	64	12/09 -	4230	
ASTRA Mk VI (J)	14	74	12/09 -	4008	
ASTRA Mk VI (J)	14	74	12/09 -	4230	
ASTRA Mk VI (J)	16	85	12/09 -	4008	
ASTRA Mk VI (J)	16	85	12/09 -	4230	
ASTRA Mk VI (J)	1.3 CDTI	70	12/09 -	4008	
ASTRA Mk VI (J)	1.3 CDTI	70	12/09 -	4014	
ASTRA Mk VI (J)	1.3 CDTI	70	12/09 -	4230	
ASTRA Mk VI (J)	1.4	64	12/09 -	4014	
ASTRA Mk VI (J)	1.4	74	12/09 -	4014	
ASTRA Mk VI (J)	1.4 Turbo	88	08/11 -	4008	
ASTRA Mk VI (J)	1.4 Turbo	88	08/11 -	4014	
ASTRA Mk VI (J)	1.4 Turbo	88	08/11 -	4230	
ASTRA Mk VI (J)	1.4 Turbo	103	12/09 -	4008	
ASTRA Mk VI (J)	1.4 Turbo	103	12/09 -	4014	
ASTRA Mk VI (J)	1.4 Turbo	103	12/09 -	4230	
ASTRA Mk VI (J)	1.6	85	12/09 -	4014	
ASTRA Mk VI (J)	1.6 CDTi	81	11/13 -	4008	
ASTRA Mk VI (J)	1.6 CDTi	81	11/13 -	4014	

MAKE & MODEL		KW	YEAR		
VAUXHALL					
ASTRA Mk VI (J)	1.6 CDTi	81	11/13 -	4230	
ASTRA Mk VI (J)	1.6 CDTi	100	11/13 -	4008	
ASTRA Mk VI (J)	1.6 CDTi	100	11/13 -	4014	
ASTRA Mk VI (J)	1.6 CDTi	100	11/13 -	4230	
ASTRA Mk VI (J)	1.6 SIDI	125	12/12 -	4008	
ASTRA Mk VI (J)	1.6 SIDI	125	12/12 -	4014	
ASTRA Mk VI (J)	1.6 SIDI	125	12/12 -	4230	
ASTRA Mk VI (J)	1.6 Turbo	132	12/09 -	4008	
ASTRA Mk VI (J)	1.6 Turbo	132	12/09 -	4014	
ASTRA Mk VI (J)	1.6 Turbo	132	12/09 -	4230	
ASTRA Mk VI (J)	1.7 CDTi	81	12/09 -	4008	
ASTRA Mk VI (J)	1.7 CDTi	81	12/09 -	4014	
ASTRA Mk VI (J)	1.7 CDTi	81	12/09 -	4230	
ASTRA Mk VI (J)	1.7 CDTi	92	12/09 -	4008	
ASTRA Mk VI (J)	1.7 CDTi	92	12/09 -	4014	
ASTRA Mk VI (J)	1.7 CDTi	92	12/09 -	4230	
ASTRA Mk VI (J)	1.7 CDTi	96	06/11 -	4008	
ASTRA Mk VI (J)	1.7 CDTi	96	06/11 -	4014	
ASTRA Mk VI (J)	1.7 CDTi	96	06/11 -	4230	
ASTRA Mk VI (J)	2.0 BiTurbo CDTI	143	12/12 -	4008	
ASTRA Mk VI (J)	2.0 BiTurbo CDTI	143	12/12 -	4014	
ASTRA Mk VI (J)	2.0 BiTurbo CDTI	143	12/12 -	4230	
ASTRA Mk VI (J)	2.0 CDTi	118	12/09 -	4008	
ASTRA Mk VI (J)	2.0 CDTi	118	12/09 -	4014	
ASTRA Mk VI (J)	2.0 CDTi	118	12/09 -	4230	
ASTRA Mk VI (J)	2.0 CDTi	121	08/11 -	4008	
ASTRA Mk VI (J)	2.0 CDTi	121	08/11 -	4014	
ASTRA Mk VI (J)	2.0 CDTi	121	08/11 -	4230	
ASTRA Mk VI (J) Estate	14	74	10/10 -	4008	
ASTRA Mk VI (J) Estate	14	74	10/10 -	4230	
ASTRA Mk VI (J) Estate	16	85	10/10 -	4008	
ASTRA Mk VI (J) Estate	16	85	10/10 -	4230	
ASTRA Mk VI (J) Estate	1.3 CDTi	70	10/10 -	4008	
ASTRA Mk VI (J) Estate	1.3 CDTi	70	10/10 -	4014	
ASTRA Mk VI (J) Estate	1.3 CDTi	70	10/10 -	4230	
ASTRA Mk VI (J) Estate	1.4	74	10/10 -	4014	
ASTRA Mk VI (J) Estate	1.4 Turbo	88	10/10 -	4008	
ASTRA Mk VI (J) Estate	1.4 Turbo	88	10/10 -	4014	
ASTRA Mk VI (J) Estate	1.4 Turbo	88	10/10 -	4230	
ASTRA Mk VI (J) Estate	1.4 Turbo	103	10/10 -	4008	
ASTRA Mk VI (J) Estate	1.4 Turbo	103	10/10 -	4014	
ASTRA Mk VI (J) Estate	1.4 Turbo	103	10/10 -	4230	
ASTRA Mk VI (J) Estate	1.6	85	10/10 -	4014	
ASTRA Mk VI (J) Estate	1.6 CDTi	81	01/14 -	4008	
ASTRA Mk VI (J) Estate	1.6 CDTi	81	01/14 -	4014	
ASTRA Mk VI (J) Estate	1.6 CDTi	81	01/14 -	4149	
ASTRA Mk VI (J) Estate	1.6 CDTi	100	01/14 -	4008	
ASTRA Mk VI (J) Estate	1.6 CDTi	100	01/14 -	4014	
ASTRA Mk VI (J) Estate	1.6 CDTi	100	01/14 -	4149	
ASTRA Mk VI (J) Estate	1.6 CDTi	100	01/14 -	4230	
ASTRA Mk VI (J) Estate	1.6 SIDI	125	12/12 -	4008	
ASTRA Mk VI (J) Estate	1.6 SIDI	125	12/12 -	4014	
ASTRA Mk VI (J) Estate	1.6 SIDI	125	12/12 -	4230	
ASTRA Mk VI (J) Estate	1.6 Turbo	132	10/10 -	4008	
ASTRA Mk VI (J) Estate	1.6 Turbo	132	10/10 -	4014	
ASTRA Mk VI (J) Estate	1.6 Turbo	132	10/10 -	4230	
ASTRA Mk VI (J) Estate	1.7 CDTi	81	10/10 -	4008	
ASTRA Mk VI (J) Estate	1.7 CDTi	81	10/10 -	4014	
ASTRA Mk VI (J) Estate	1.7 CDTi	81	10/10 -	4230	
ASTRA Mk VI (J) Estate	1.7 CDTi	92	10/10 -	4008	
ASTRA Mk VI (J) Estate	1.7 CDTi	92	10/10 -	4014	
ASTRA Mk VI (J) Estate	1.7 CDTi	92	10/10 -	4230	
ASTRA Mk VI (J) Estate	1.7 CDTi	96	06/11 – 05/14	4008	
ASTRA Mk VI (J) Estate	1.7 CDTi	96	06/11 – 05/14	4014	
ASTRA Mk VI (J) Estate	1.7 CDTi	96	06/11 – 05/14	4230	
ASTRA Mk VI (J) Estate	2.0 BiTurbo CDTI	143	12/12 -	4008	
ASTRA Mk VI (J) Estate	2.0 BiTurbo CDTI	143	12/12 -	4014	
ASTRA Mk VI (J) Estate	2.0 BiTurbo CDTI	143	12/12 -	4230	
ASTRA Mk VI (J) Estate	2.0 CDTi	118	10/10 -	4008	
ASTRA Mk VI (J) Estate	2.0 CDTi	118	10/10 -	4014	
ASTRA Mk VI (J) Estate	2.0 CDTi	118	10/10 -	4230	

MAKE & MODEL		KW	YEAR		
VAUXHALL					
ASTRA Mk VI (J) Estate	2.0 CDTi	121	08/11 -	4008	
ASTRA Mk VI (J) Estate	2.0 CDTi	121	08/11 -	4014	
ASTRA Mk VI (J) Estate	2.0 CDTi	121	08/11 -	4230	
ASTRA Mk VI (J) Saloon	14	74	06/12 -	4008	
ASTRA Mk VI (J) Saloon	14	74	06/12 -	4230	
ASTRA Mk VI (J) Saloon	16	85	06/12 -	4008	
ASTRA Mk VI (J) Saloon	16	85	06/12 -	4230	
ASTRA Mk VI (J) Saloon	1.3 CDTI	70	06/12 -	4008	
ASTRA Mk VI (J) Saloon	1.3 CDTI	70	06/12 -	4014	
ASTRA Mk VI (J) Saloon	1.3 CDTI	70	06/12 -	4230	
ASTRA Mk VI (J) Saloon	1.4	74	06/12 -	4014	
ASTRA Mk VI (J) Saloon	1.4 Turbo	103	06/12 -	4008	
ASTRA Mk VI (J) Saloon	1.4 Turbo	103	06/12 -	4014	
ASTRA Mk VI (J) Saloon	1.4 Turbo	103	06/12 -	4230	
ASTRA Mk VI (J) Saloon	1.6	85	06/12 -	4014	
ASTRA Mk VI (J) Saloon	1.6 SIDI	125	12/12 -	4008	
ASTRA Mk VI (J) Saloon	1.6 SIDI	125	12/12 -	4014	
ASTRA Mk VI (J) Saloon	1.6 SIDI	125	12/12 -	4230	
ASTRA Mk VI (J) Saloon	1.6 Turbo	132	06/12 -	4008	
ASTRA Mk VI (J) Saloon	1.6 Turbo	132	06/12 -	4014	
ASTRA Mk VI (J) Saloon	1.6 Turbo	132	06/12 -	4230	
ASTRA Mk VI (J) Saloon	1.7 CDTI	81	06/12 -	4008	
ASTRA Mk VI (J) Saloon	1.7 CDTI	81	06/12 -	4014	
ASTRA Mk VI (J) Saloon	1.7 CDTI	81	06/12 -	4230	
ASTRA Mk VI (J) Saloon	1.7 CDTI	96	06/12 -	4008	
ASTRA Mk VI (J) Saloon	1.7 CDTI	96	06/12 -	4014	
ASTRA Mk VI (J) Saloon	1.7 CDTI	96	06/12 -	4230	
ASTRA Mk VI (J) Saloon	2.0 BiTurbo CDTI	143	12/12 -	4008	
ASTRA Mk VI (J) Saloon	2.0 BiTurbo CDTI	143	12/12 -	4014	
ASTRA Mk VI (J) Saloon	2.0 BiTurbo CDTI	143	12/12 -	4230	
ASTRA TwinTop Mk V (H)	16	77	09/05 – 11/10		4040
ASTRA TwinTop Mk V (H)	16	77	09/05 – 11/10	4042	
ASTRA TwinTop Mk V (H)	16	132	10/06 – 11/10		4040
ASTRA TwinTop Mk V (H)	16	132	10/06 – 11/10	4042	
ASTRA TwinTop Mk V (H)	18	103	05/08 – 11/10		4040
ASTRA TwinTop Mk V (H)	18	103	05/08 – 11/10	4042	
ASTRA TwinTop Mk V (H)	20	125	02/06 – 11/10		4040
ASTRA TwinTop Mk V (H)	20	125	02/06 – 11/10	4042	
ASTRA TwinTop Mk V (H)	1.6 i 16V	85	10/06 – 11/10		4040
ASTRA TwinTop Mk V (H)	1.6 i 16V	85	10/06 – 11/10	4042	
ASTRA TwinTop Mk V (H)	1.9 CDTi	110	01/06 – 11/10		4040
ASTRA TwinTop Mk V (H)	1.9 CDTi	110	01/06 – 11/10	4042	
ASTRA TwinTop Mk V (H)	2.0 Turbo	147	01/06 – 11/10		4040
ASTRA TwinTop Mk V (H)	2.0 Turbo	147	01/06 – 11/10	4042	
ASTRAMAX	16	60	09/85 – 12/91	3410	
ASTRAMAX	1.3 N	44	08/85 – 12/89	3410	
ASTRAMAX	1.3 S	55	08/85 – 12/89	3410	
ASTRAMAX	1.4 i	44	08/91 – 07/94	3410	
ASTRAMAX	1.4 S	55	07/89 – 08/91	3410	
ASTRAMAX	1.6 D	40	05/86 – 06/90	3410	
ASTRAMAX	1.6 i	55	08/91 – 10/94	3410	
ASTRAMAX	1.7 D	42	01/89 – 07/94	3410	
ASTRAVAN Mk IV (G)	1.6 Dualfuel (Z 16 XE)	74	07/00 – 08/05		3763
ASTRAVAN Mk IV (G)	1.6 i (X 16 SZR)	55	08/98 – 09/00		3763
ASTRAVAN Mk IV (G)	1.7 TD (X 17 DTL)	50	08/98 – 08/06		3763
ASTRAVAN Mk IV (G)	2.0 DI (X 20 DTL)	60	08/98 – 08/06		3763
ASTRAVAN Mk III (F)	1.4 i	44	01/91 – 10/94	3623	
ASTRAVAN Mk III (F)	1.6 i	52	02/94 – 10/96	3623	
ASTRAVAN Mk III (F)	1.6 i	55	01/91 – 08/98	3623	
ASTRAVAN Mk III (F)	1.7 D	44	01/91 – 08/94	3470	
ASTRAVAN Mk III (F)	1.7 D	44	01/91 – 08/94	3505	
ASTRAVAN Mk III (F)	1.7 D	44	01/91 – 08/94	3615	
ASTRAVAN Mk III (F)	1.7 D	44	01/91 – 08/94	3623	
ASTRAVAN Mk III (F)	1.7 TD	50	01/94 – 08/98	3470	
ASTRAVAN Mk III (F)	1.7 TD	50	01/94 – 08/98	3505	
ASTRAVAN Mk III (F)	1.7 TD	50	01/94 – 08/98	3615	
ASTRAVAN Mk III (F)	1.7 TD	50	01/94 – 08/98	3623	
ASTRAVAN Mk IV (G)	1.6 i	55	08/98 – 09/00	3762	
ASTRAVAN Mk IV (G)	1.6 i	55	08/98 – 09/00		4040
ASTRAVAN Mk IV (G)	1.6 i	62	09/00 – 08/06	3762	
ASTRAVAN Mk IV (G)	1.6 i	62	09/00 – 08/06		4040

MAKE & MODEL		KW	YEAR		
VAUXHALL					
ASTRAVAN Mk IV (G)	1.7 CDTI	59	04/04 – 08/06	3762	
ASTRAVAN Mk IV (G)	1.7 CDTI	59	04/04 – 08/06		4040
ASTRAVAN Mk IV (G)	1.7 CDTI	59	04/04 – 08/06	4042	
ASTRAVAN Mk IV (G)	1.7 DTI 16V	55	04/01 – 08/06	3762	
ASTRAVAN Mk IV (G)	1.7 DTI 16V	55	04/01 – 08/06		4040
ASTRAVAN Mk IV (G)	1.7 DTI 16V	55	04/01 – 08/06	4042	
ASTRAVAN Mk IV (G)	1.7 TD	50	08/98 – 08/06	3762	
ASTRAVAN Mk IV (G)	1.7 TD	50	08/98 – 08/06		4040
ASTRAVAN Mk IV (G)	1.7 TD	50	08/98 – 08/06	4042	
ASTRAVAN Mk IV (G)	2.0 DI	60	08/98 – 08/06	3762	
ASTRAVAN Mk IV (G)	2.0 DI	60	08/98 – 08/06		4040
ASTRAVAN Mk IV (G)	2.0 DI	60	08/98 – 08/06	4042	
ASTRAVAN Mk IV (G)	2.0 DTI	74	04/04 – 08/06		4040
ASTRAVAN Mk IV (G)	2.0 DTI	74	04/04 – 08/06	4042	
ASTRAVAN Mk V (H)	16	76	03/05 -	4042	
ASTRAVAN Mk V (H)	1.3 CDTi	66	08/05 -	4042	
ASTRAVAN Mk V (H)	1.4 i	66	03/05 -	4042	
ASTRAVAN Mk V (H)	1.7 CDTI	74	03/05 – 11/11	4042	
ASTRAVAN Mk V (H)	1.7 CDTi	59	03/05 – 07/06	4042	
ASTRAVAN Mk V (H)	1.7 CDTi	81	06/11 – 12/13	4042	
ASTRAVAN Mk V (H)	1.7 CDTi	92	11/11 -	4042	
ASTRAVAN Mk V (H)	1.9 CDTi	88	03/05 – 11/11	4042	
ASTRAVAN Mk V (H)	1.9 CDTi	110	03/05 – 11/11	4042	
BRAVA Pickup	2.2 D	45	07/90 – 09/92	3657	
BRAVA Pickup	2.2 D	45	07/90 – 09/92	3757	
BRAVA Pickup	2.2 D	45	07/90 – 09/92	3857	
BRAVA Pickup	2.2 D (TFR52)	39	12/88 – 09/96	3657	
BRAVA Pickup	2.2 D (TFR52)	39	12/88 – 09/96	3757	
BRAVA Pickup	2.2 D (TFR52)	39	12/88 – 09/96	3857	
BRAVA Pickup	2.2 D 4x4 (TFS52)	39	12/88 – 09/96	3657	
BRAVA Pickup	2.2 D 4x4 (TFS52)	39	12/88 – 09/96	3757	
BRAVA Pickup	2.2 D 4x4 (TFS52)	39	12/88 – 09/96	3857	
BRAVA Pickup	2.3 (TFR16)	69	08/91 – 08/94	3657	
BRAVA Pickup	2.3 (TFR16)	69	08/91 – 08/94	3757	
BRAVA Pickup	2.3 (TFR16)	69	08/91 – 08/94	3857	
BRAVA Pickup	2.3 (TFR16)	72	08/94 – 09/96	3657	
BRAVA Pickup	2.3 (TFR16)	72	08/94 – 09/96	3757	
BRAVA Pickup	2.3 (TFR16)	72	08/94 – 09/96	3857	
BRAVA Pickup	2.3 4x4 (TFS16)	69	06/90 – 08/94	3657	
BRAVA Pickup	2.3 4x4 (TFS16)	69	06/90 – 08/94	3757	
BRAVA Pickup	2.3 4x4 (TFS16)	69	06/90 – 08/94	3857	
BRAVA Pickup	2.3 4x4 (TFS16)	72	08/94 – 09/96	3657	
BRAVA Pickup	2.3 4x4 (TFS16)	72	08/94 – 09/96	3757	
BRAVA Pickup	2.3 4x4 (TFS16)	72	08/94 – 09/96	3857	
BRAVA Pickup	2.5 D (TFR54)	56	08/91 – 06/94	3657	
BRAVA Pickup	2.5 D (TFR54)	56	08/91 – 06/94	3757	
BRAVA Pickup	2.5 D (TFR54)	56	08/91 – 06/94	3857	
BRAVA Pickup	2.5 D 4x4 (TFS54)	56	06/90 – 06/94	3657	
BRAVA Pickup	2.5 D 4x4 (TFS54)	56	06/90 – 06/94	3757	
BRAVA Pickup	2.5 D 4x4 (TFS54)	56	06/90 – 06/94	3857	
BRAVA Pickup	2.5 DTI	74	08/01 – 12/02	3657	
BRAVA Pickup	2.5 DTI	74	08/01 – 12/02	3757	
BRAVA Pickup	2.5 DTI	74	08/01 – 12/02	3857	
BRAVA Pickup	2.5 DTI 4x4	74	08/01 – 12/02	3657	
BRAVA Pickup	2.5 DTI 4x4	74	08/01 – 12/02	3757	
BRAVA Pickup	2.5 DTI 4x4	74	08/01 – 12/02	3857	
BRAVA Pickup	2.5 TD (TFR54)	56	07/94 – 12/02	3657	
BRAVA Pickup	2.5 TD (TFR54)	56	07/94 – 12/02	3757	
BRAVA Pickup	2.5 TD (TFR54)	56	07/94 – 12/02	3857	
BRAVA Pickup	2.5 TD 4x4 (TFS54)	56	07/94 – 12/02	3657	
BRAVA Pickup	2.5 TD 4x4 (TFS54)	56	07/94 – 12/02	3757	
BRAVA Pickup	2.5 TD 4x4 (TFS54)	56	07/94 – 12/02	3857	
BRAVA Pickup	3.1 D	80	07/91 – 07/01	3657	
BRAVA Pickup	3.1 D	80	07/91 – 07/01	3757	
BRAVA Pickup	3.1 D	80	07/91 – 07/01	3857	
CALIBRA	2.0 i	85	06/90 – 07/97		3469
CALIBRA	2.0 i	85	06/90 – 07/97	3470	
CALIBRA	2.0 i	85	06/90 – 07/97	3505	
CALIBRA	2.0 i	85	06/90 – 07/97	3615	
CALIBRA	2.0 i 16V	100	06/90 – 07/97		3469
CALIBRA	2.0 i 16V	100	06/90 – 07/97	3470	

MAKE & MODEL		KW	YEAR		
VAUXHALL					
CALIBRA	2.0 i 16V	100	06/90 – 07/97	3505	
CALIBRA	2.0 i 16V	100	06/90 – 07/97	3615	
CALIBRA	2.0 i 16V	110	06/90 – 02/94		3469
CALIBRA	2.0 i 16V	110	06/90 – 02/94	3470	
CALIBRA	2.0 i 16V	110	06/90 – 02/94	3505	
CALIBRA	2.0 i 16V	110	06/90 – 02/94	3615	
CALIBRA	2.0 i 16V 4x4	100	02/94 – 07/97		3469
CALIBRA	2.0 i 16V 4x4	100	02/94 – 07/97	3470	
CALIBRA	2.0 i 16V 4x4	100	02/94 – 07/97	3505	
CALIBRA	2.0 i 16V 4x4	100	02/94 – 07/97	3615	
CALIBRA	2.0 i 16V 4x4	110	06/90 – 02/94		3469
CALIBRA	2.0 i 16V 4x4	110	06/90 – 02/94	3470	
CALIBRA	2.0 i 16V 4x4	110	06/90 – 02/94	3505	
CALIBRA	2.0 i 16V 4x4	110	06/90 – 02/94	3615	
CALIBRA	2.0 i 4x4	85	06/90 – 07/97		3469
CALIBRA	2.0 i 4x4	85	06/90 – 07/97	3470	
CALIBRA	2.0 i 4x4	85	06/90 – 07/97	3505	
CALIBRA	2.0 i 4x4	85	06/90 – 07/97	3615	
CALIBRA	2.0 i Turbo 4x4	150	03/92 – 07/97		3469
CALIBRA	2.0 i Turbo 4x4	150	03/92 – 07/97	3665	
CALIBRA	2.0 i Turbo 4x4	150	03/92 – 07/97	3736	
CALIBRA	2.5 i V6	125	04/93 – 07/97		3469
CALIBRA	2.5 i V6	125	04/93 – 07/97	3665	
CALIBRA	2.5 i V6	125	04/93 – 07/97	3736	
CARLTON Mk III	18	65	09/87 – 03/94	3410	
CARLTON Mk III	18	65	09/87 – 03/94	3470	
CARLTON Mk III	18	65	09/87 – 03/94	3505	
CARLTON Mk III	18	65	09/87 – 03/94	3615	
CARLTON Mk III	18	65	09/87 – 03/94	3717	
CARLTON Mk III	20	73	09/90 – 03/94	3470	
CARLTON Mk III	20	73	09/90 – 03/94	3505	
CARLTON Mk III	20	73	09/90 – 03/94	3615	
CARLTON Mk III	20	73	09/90 – 03/94	3717	
CARLTON Mk III	20	74	09/90 – 03/94	3470	
CARLTON Mk III	20	74	09/90 – 03/94	3505	
CARLTON Mk III	20	74	09/90 – 03/94	3615	
CARLTON Mk III	20	74	09/90 – 03/94	3717	
CARLTON Mk III	20	85	09/86 – 03/94	3410	
CARLTON Mk III	20	85	09/86 – 03/94	3470	
CARLTON Mk III	20	85	09/86 – 03/94	3505	
CARLTON Mk III	20	85	09/86 – 03/94	3615	
CARLTON Mk III	20	85	09/86 – 03/94	3717	
CARLTON Mk III	3000	115	03/87 – 12/87	3717	
CARLTON Mk III	1.8 i	85	09/86 – 03/94	3410	
CARLTON Mk III	1.8 i	85	09/86 – 03/94	3470	
CARLTON Mk III	1.8 i	85	09/86 – 03/94	3505	
CARLTON Mk III	1.8 i	85	09/86 – 03/94	3615	
CARLTON Mk III	1.8 i	85	09/86 – 03/94	3717	
CARLTON Mk III	1.8 N	60	09/86 – 08/87	3410	
CARLTON Mk III	1.8 S	66	09/86 – 03/94	3410	
CARLTON Mk III	1.8 S	66	09/86 – 03/94	3470	
CARLTON Mk III	1.8 S	66	09/86 – 03/94	3505	
CARLTON Mk III	1.8 S	66	09/86 – 03/94	3615	
CARLTON Mk III	1.8 S	66	09/86 – 03/94	3717	
CARLTON Mk III	2.0 i	90	09/86 – 03/94	3410	
CARLTON Mk III	2.0 i	90	09/86 – 03/94	3470	
CARLTON Mk III	2.0 i	90	09/86 – 03/94	3505	
CARLTON Mk III	2.0 i	90	09/86 – 03/94	3615	
CARLTON Mk III	2.0 i	90	09/86 – 03/94	3717	
CARLTON Mk III	2.2 TD	66	10/86 – 08/88	3410	
CARLTON Mk III	2.3 D	54	09/86 – 03/94	3410	
CARLTON Mk III	2.3 D	54	09/86 – 03/94	3470	
CARLTON Mk III	2.3 D	54	09/86 – 03/94	3505	
CARLTON Mk III	2.3 D	54	09/86 – 03/94	3615	
CARLTON Mk III	2.3 D	54	09/86 – 03/94	3717	
CARLTON Mk III	2.3 TD Interc.	74	08/88 – 03/94	3410	
CARLTON Mk III	2.3 TD Interc.	74	08/88 – 03/94	3470	
CARLTON Mk III	2.3 TD Interc.	74	08/88 – 03/94	3505	
CARLTON Mk III	2.3 TD Interc.	74	08/88 – 03/94	3615	
CARLTON Mk III	2.3 TD Interc.	74	08/88 – 03/94	3717	
CARLTON Mk III	2.4 i	92	09/88 – 03/94	3470	

MAKE & MODEL		KW	YEAR		
VAUXHALL					
CARLTON Mk III	2.4 i	92	09/88 – 03/94	3505	
CARLTON Mk III	2.4 i	92	09/88 – 03/94	3615	
CARLTON Mk III	2.4 i	92	09/88 – 03/94	3717	
CARLTON Mk III	2.6 i	110	09/90 – 03/94	3717	
CARLTON Mk III	2.6 i	110	09/90 – 03/94	3733	
CARLTON Mk III	3.0 3000	130	03/87 – 09/90	3717	
CARLTON Mk III	3.0 3000	130	03/87 – 09/90	3733	
CARLTON Mk III	3.0 3000 24V	150	09/89 – 03/94	3717	
CARLTON Mk III	3.0 3000 24V	150	09/89 – 03/94	3733	
CARLTON Mk III	3.6 24V Lotus	277	08/90 – 09/92	3717	
CARLTON Mk III	3.6 24V Lotus	277	08/90 – 09/92	3733	
CARLTON Mk III	3000 24V	147	09/89 – 03/94	3717	
CARLTON Mk III	3000 24V	147	09/89 – 03/94	3733	
CARLTON Mk III	3000 CAT	130	03/88 – 03/94	3717	
CARLTON Mk III	3000 CAT	130	03/88 – 03/94	3733	
CARLTON Mk III Estate	18	65	09/87 – 03/94	3410	
CARLTON Mk III Estate	18	65	09/87 – 03/94	3470	
CARLTON Mk III Estate	18	65	09/87 – 03/94	3505	
CARLTON Mk III Estate	18	65	09/87 – 03/94	3615	
CARLTON Mk III Estate	18	65	09/87 – 03/94	3717	
CARLTON Mk III Estate	20	74	09/90 – 03/94	3470	
CARLTON Mk III Estate	20	74	09/90 – 03/94	3505	
CARLTON Mk III Estate	20	74	09/90 – 03/94	3615	
CARLTON Mk III Estate	20	74	09/90 – 03/94	3717	
CARLTON Mk III Estate	20	85	09/86 – 03/94	3410	
CARLTON Mk III Estate	20	85	09/86 – 03/94	3470	
CARLTON Mk III Estate	20	85	09/86 – 03/94	3505	
CARLTON Mk III Estate	20	85	09/86 – 03/94	3615	
CARLTON Mk III Estate	20	85	09/86 – 03/94	3717	
CARLTON Mk III Estate	30	130	03/87 – 03/94	3717	
CARLTON Mk III Estate	30	130	03/87 – 03/94	3733	
CARLTON Mk III Estate	1.8 i	85	09/86 – 03/94	3410	
CARLTON Mk III Estate	1.8 i	85	09/86 – 03/94	3470	
CARLTON Mk III Estate	1.8 i	85	09/86 – 03/94	3505	
CARLTON Mk III Estate	1.8 i	85	09/86 – 03/94	3615	
CARLTON Mk III Estate	1.8 i	85	09/86 – 03/94	3717	
CARLTON Mk III Estate	1.8 N	60	09/86 – 08/87	3410	
CARLTON Mk III Estate	1.8 N	60	09/86 – 08/87	3717	
CARLTON Mk III Estate	1.8 S	66	09/86 – 03/94	3410	
CARLTON Mk III Estate	1.8 S	66	09/86 – 03/94	3470	
CARLTON Mk III Estate	1.8 S	66	09/86 – 03/94	3505	
CARLTON Mk III Estate	1.8 S	66	09/86 – 03/94	3615	
CARLTON Mk III Estate	1.8 S	66	09/86 – 03/94	3717	
CARLTON Mk III Estate	2.0 i	73	09/90 – 03/94	3470	
CARLTON Mk III Estate	2.0 i	73	09/90 – 03/94	3505	
CARLTON Mk III Estate	2.0 i	73	09/90 – 03/94	3615	
CARLTON Mk III Estate	2.0 i	73	09/90 – 03/94	3717	
CARLTON Mk III Estate	2.0 i	90	09/86 – 03/94	3410	
CARLTON Mk III Estate	2.0 i	90	09/86 – 03/94	3470	
CARLTON Mk III Estate	2.0 i	90	09/86 – 03/94	3505	
CARLTON Mk III Estate	2.0 i	90	09/86 – 03/94	3615	
CARLTON Mk III Estate	2.0 i	90	09/86 – 03/94	3717	
CARLTON Mk III Estate	2.2 TD	66	09/86 – 08/88	3410	
CARLTON Mk III Estate	2.2 TD	66	09/86 – 08/88	3717	
CARLTON Mk III Estate	2.3 D	54	09/86 – 03/94	3410	
CARLTON Mk III Estate	2.3 D	54	09/86 – 03/94	3470	
CARLTON Mk III Estate	2.3 D	54	09/86 – 03/94	3505	
CARLTON Mk III Estate	2.3 D	54	09/86 – 03/94	3615	
CARLTON Mk III Estate	2.3 D	54	09/86 – 03/94	3717	
CARLTON Mk III Estate	2.3 TD Interc.	74	09/88 – 03/94	3410	
CARLTON Mk III Estate	2.3 TD Interc.	74	09/88 – 03/94	3470	
CARLTON Mk III Estate	2.3 TD Interc.	74	09/88 – 03/94	3505	
CARLTON Mk III Estate	2.3 TD Interc.	74	09/88 – 03/94	3615	
CARLTON Mk III Estate	2.3 TD Interc.	74	09/88 – 03/94	3717	
CARLTON Mk III Estate	2.4 i	92	09/88 – 03/94	3470	
CARLTON Mk III Estate	2.4 i	92	09/88 – 03/94	3505	
CARLTON Mk III Estate	2.4 i	92	09/88 – 03/94	3615	
CARLTON Mk III Estate	2.4 i	92	09/88 – 03/94	3717	
CARLTON Mk III Estate	2.6 i	110	09/90 – 03/94	3717	
CARLTON Mk III Estate	2.6 i	110	09/90 – 03/94	3733	
CARLTON Mk III Estate	3.0 24V	147	09/89 – 03/94	3717	

MAKE & MODEL		KW	YEAR		
VAUXHALL					
CARLTON Mk III Estate	3.0 24V	147	09/89 – 03/94	3733	
CASCADA Convertible	14	88	02/13 -	4149	
CASCADA Convertible	14	103	02/13 -	4149	
CASCADA Convertible	16	125	02/13 -	4149	
CASCADA Convertible	16	147	11/13 -	4149	
CASCADA Convertible	1.4	88	02/13 -	4014	
CASCADA Convertible	1.4	103	02/13 -	4014	
CASCADA Convertible	1.6	125	02/13 -	4014	
CASCADA Convertible	1.6	147	11/13 -	4014	
CASCADA Convertible	2.0 CDTI	121	02/13 -	4014	
CASCADA Convertible	2.0 CDTI	121	02/13 -	4149	
CASCADA Convertible	2.0 CDTI	125	07/15 -	4014	
CASCADA Convertible	2.0 CDTI	125	07/15 -	4149	
CASCADA Convertible	2.0 CDTI	143	02/13 -	4014	
CASCADA Convertible	2.0 CDTI	143	02/13 -	4149	
CAVALIER Coupe	1.9 S	66	10/75 – 03/78	3335	
CAVALIER Coupe	1.9 S	66	10/75 – 03/78	3365	
CAVALIER Coupe	2.0 S	74	03/78 – 08/81	3335	
CAVALIER Coupe	2.0 S	74	03/78 – 08/81	3365	
CAVALIER Coupe	2.0 S	74	03/78 – 08/81	3410	
CAVALIER Mk II	18	62	08/86 – 08/88	3410	
CAVALIER Mk II	1.3 N	44	09/81 – 08/88	3410	
CAVALIER Mk II	1.3 S	55	09/81 – 08/88	3410	
CAVALIER Mk II	1.6 D	40	03/82 – 08/88	3410	
CAVALIER Mk II	1.6 i	55	08/86 – 08/88	3410	
CAVALIER Mk II	1.6 i CAT	55	08/86 – 08/88	3410	
CAVALIER Mk II	1.6 N	55	09/81 – 08/88	3410	
CAVALIER Mk II	1.6 S	66	09/81 – 08/88	3410	
CAVALIER Mk II	1.8 i	82	09/81 – 08/88	3410	
CAVALIER Mk II	1.8 i	85	09/81 – 08/88	3410	
CAVALIER Mk II	1.8 i CAT	74	01/85 – 08/86	3410	
CAVALIER Mk II	2.0 4x4	95	09/87 – 08/88	3410	
CAVALIER Mk II	2.0 i	85	09/86 – 08/88	3410	
CAVALIER Mk II	2.0 i CAT	85	09/86 – 08/88	3410	
CAVALIER Mk II	2.0 SRi 130	95	03/87 – 08/88	3410	
CAVALIER Mk II	2000i	90	09/86 – 08/88	3410	
CAVALIER Mk II Convertible	1800i	82	03/85 – 10/88	3410	
CAVALIER Mk II Estate	16	66	10/83 – 08/88	3410	
CAVALIER Mk II Estate	1.3 S	55	09/81 – 08/88	3410	
CAVALIER Mk II Estate	1.6 D	40	03/82 – 08/88	3410	
CAVALIER Mk II Estate	1.8 i	82	09/81 – 08/86	3410	
CAVALIER Mk II Hatchback	1.3 S	55	09/81 – 08/88	3410	
CAVALIER Mk II Hatchback	1.6 S	66	09/81 – 08/88	3410	
CAVALIER Mk II Hatchback	1.8 i	82	09/81 – 08/88	3410	
CAVALIER Mk II Hatchback	1.8 i	85	09/81 – 08/88	3410	
CAVALIER Mk II Hatchback	1600D	40	03/82 – 08/88	3410	
CAVALIER Mk II Hatchback	2.0 4x4	95	09/87 – 08/88	3410	
CAVALIER Mk II Hatchback	2.0 i CAT	85	09/86 – 08/88	3410	
CAVALIER Mk II Hatchback	2.0 SRi 130	95	03/87 – 08/88	3410	
CAVALIER Mk II Hatchback	2000i	90	09/86 – 08/88	3410	
CAVALIER Mk III (87)	16	60	09/88 – 05/93	3410	
CAVALIER Mk III (87)	16	60	09/88 – 05/93	3623	
CAVALIER Mk III (87)	18	66	09/88 – 08/95	3410	
CAVALIER Mk III (87)	18	66	09/88 – 08/95	3470	
CAVALIER Mk III (87)	18	66	09/88 – 08/95	3505	
CAVALIER Mk III (87)	18	66	09/88 – 08/95	3615	
CAVALIER Mk III (87)	18	66	09/88 – 08/95	3623	
CAVALIER Mk III (87)	1.4 S	55	09/88 – 11/95	3410	
CAVALIER Mk III (87)	1.4 S	55	09/88 – 11/95	3623	
CAVALIER Mk III (87)	1.6 i	52	09/93 – 11/95	3410	
CAVALIER Mk III (87)	1.6 i	52	09/93 – 11/95	3623	
CAVALIER Mk III (87)	1.6 i	55	09/88 – 11/95	3410	
CAVALIER Mk III (87)	1.6 i	55	09/88 – 11/95	3623	
CAVALIER Mk III (87)	1.7 D	42	09/88 – 09/92	3410	
CAVALIER Mk III (87)	1.7 D	42	09/88 – 09/92	3470	
CAVALIER Mk III (87)	1.7 D	42	09/88 – 09/92	3505	
CAVALIER Mk III (87)	1.7 D	42	09/88 – 09/92	3615	
CAVALIER Mk III (87)	1.7 D	42	09/88 – 09/92	3623	
CAVALIER Mk III (87)	1.7 D	44	07/92 – 11/95	3410	
CAVALIER Mk III (87)	1.7 D	44	07/92 – 11/95	3470	
CAVALIER Mk III (87)	1.7 D	44	07/92 – 11/95	3505	

BESER®

MAKE & MODEL		KW	YEAR		
VAUXHALL					
CAVALIER Mk III (87)	1.7 D	44	07/92 – 11/95	3615	
CAVALIER Mk III (87)	1.7 D	44	07/92 – 11/95	3623	
CAVALIER Mk III (87)	1.7 TD	60	09/88 – 11/95	3410	
CAVALIER Mk III (87)	1.7 TD	60	09/88 – 11/95	3470	
CAVALIER Mk III (87)	1.7 TD	60	09/88 – 11/95	3505	
CAVALIER Mk III (87)	1.7 TD	60	09/88 – 11/95	3615	
CAVALIER Mk III (87)	1.7 TD	60	09/88 – 11/95	3623	
CAVALIER Mk III (87)	1.8 i CAT	66	03/90 – 11/95	3410	
CAVALIER Mk III (87)	1.8 i CAT	66	03/90 – 11/95	3470	
CAVALIER Mk III (87)	1.8 i CAT	66	03/90 – 11/95	3505	
CAVALIER Mk III (87)	1.8 i CAT	66	03/90 – 11/95	3615	
CAVALIER Mk III (87)	1.8 i CAT	66	03/90 – 11/95	3623	
CAVALIER Mk III (87)	2.0 GSi	115	09/89 – 08/92		3469
CAVALIER Mk III (87)	2.0 GSi	115	09/89 – 08/92	3470	
CAVALIER Mk III (87)	2.0 GSi	115	09/89 – 08/92	3505	
CAVALIER Mk III (87)	2.0 GSi	115	09/89 – 08/92	3615	
CAVALIER Mk III (87)	2.0 GSi 4x4	115	09/89 – 08/92		3469
CAVALIER Mk III (87)	2.0 GSi 4x4	115	09/89 – 08/92	3470	
CAVALIER Mk III (87)	2.0 GSi 4x4	115	09/89 – 08/92	3505	
CAVALIER Mk III (87)	2.0 GSi 4x4	115	09/89 – 08/92	3615	
CAVALIER Mk III (87)	2.0 i	85	09/88 – 10/90		3469
CAVALIER Mk III (87)	2.0 i	85	09/88 – 10/90	3470	
CAVALIER Mk III (87)	2.0 i	85	09/88 – 10/90	3505	
CAVALIER Mk III (87)	2.0 i	85	09/88 – 10/90	3615	
CAVALIER Mk III (87)	2.0 i 16V	110	09/88 – 11/95		3469
CAVALIER Mk III (87)	2.0 i 16V	110	09/88 – 11/95	3470	
CAVALIER Mk III (87)	2.0 i 16V	110	09/88 – 11/95	3505	
CAVALIER Mk III (87)	2.0 i 16V	110	09/88 – 11/95	3615	
CAVALIER Mk III (87)	2.0 i 16V 4x4	110	09/88 – 11/95		3469
CAVALIER Mk III (87)	2.0 i 16V 4x4	110	09/88 – 11/95	3470	
CAVALIER Mk III (87)	2.0 i 16V 4x4	110	09/88 – 11/95	3505	
CAVALIER Mk III (87)	2.0 i 16V 4x4	110	09/88 – 11/95	3615	
CAVALIER Mk III (87)	2.0 i 4x4	85	01/91 – 10/92		3469
CAVALIER Mk III (87)	2.0 i 4x4	85	01/91 – 10/92	3470	
CAVALIER Mk III (87)	2.0 i 4x4	85	01/91 – 10/92	3505	
CAVALIER Mk III (87)	2.0 i 4x4	85	01/91 – 10/92	3615	
CAVALIER Mk III (87)	2.0 i 4x4	95	09/88 – 09/92		3469
CAVALIER Mk III (87)	2.0 i 4x4	95	09/88 – 09/92	3470	
CAVALIER Mk III (87)	2.0 i 4x4	95	09/88 – 09/92	3505	
CAVALIER Mk III (87)	2.0 i 4x4	95	09/88 – 09/92	3615	
CAVALIER Mk III (87)	2.0 i CAT	85	09/90 – 11/95		3469
CAVALIER Mk III (87)	2.0 i CAT	85	09/90 – 11/95	3470	
CAVALIER Mk III (87)	2.0 i CAT	85	09/90 – 11/95	3505	
CAVALIER Mk III (87)	2.0 i CAT	85	09/90 – 11/95	3615	
CAVALIER Mk III (87)	2.0 i Turbo 4x4	150	06/92 – 11/94		3469
CAVALIER Mk III (87)	2.0 i Turbo 4x4	150	06/92 – 11/94	3736	
CAVALIER Mk III (87)	2.0 SRi	95	09/88 – 09/92		3469
CAVALIER Mk III (87)	2.0 SRi	95	09/88 – 09/92	3470	
CAVALIER Mk III (87)	2.0 SRi	95	09/88 – 09/92	3505	
CAVALIER Mk III (87)	2.0 SRi	95	09/88 – 09/92	3615	
CAVALIER Mk III (87)	2.0 SRi 16V	100	09/93 – 11/95		3469
CAVALIER Mk III (87)	2.0 SRi 16V	100	09/93 – 11/95	3470	
CAVALIER Mk III (87)	2.0 SRi 16V	100	09/93 – 11/95	3505	
CAVALIER Mk III (87)	2.0 SRi 16V	100	09/93 – 11/95	3615	
CAVALIER Mk III (87)	2.5 V6	125	08/88 – 06/94		3469
CAVALIER Mk III (87)	2.5 V6	125	08/88 – 06/94	3736	
CAVALIER Mk III Hatchback	16	60	09/88 – 05/93	3410	
CAVALIER Mk III Hatchback	16	60	09/88 – 05/93	3623	
CAVALIER Mk III Hatchback	18	66	09/88 – 10/90	3410	
CAVALIER Mk III Hatchback	18	66	09/88 – 10/90	3470	
CAVALIER Mk III Hatchback	18	66	09/88 – 10/90	3505	
CAVALIER Mk III Hatchback	18	66	09/88 – 10/90	3615	
CAVALIER Mk III Hatchback	18	66	09/88 – 10/90	3623	
CAVALIER Mk III Hatchback	1.4 S	55	09/88 – 11/95	3410	
CAVALIER Mk III Hatchback	1.4 S	55	09/88 – 11/95	3623	
CAVALIER Mk III Hatchback	1.6 i	52	09/93 – 11/95	3410	
CAVALIER Mk III Hatchback	1.6 i	52	09/93 – 11/95	3623	
CAVALIER Mk III Hatchback	1.6 i	55	09/88 – 11/95	3410	
CAVALIER Mk III Hatchback	1.6 i	55	09/88 – 11/95	3623	
CAVALIER Mk III Hatchback	1.7 D	42	09/88 – 09/92	3410	
CAVALIER Mk III Hatchback	1.7 D	42	09/88 – 09/92	3470	

MAKE & MODEL   		KW	YEAR		
VAUXHALL					
CAVALIER Mk III Hatchback	1.7 D	42	09/88 – 09/92	3505	
CAVALIER Mk III Hatchback	1.7 D	42	09/88 – 09/92	3615	
CAVALIER Mk III Hatchback	1.7 D	42	09/88 – 09/92	3623	
CAVALIER Mk III Hatchback	1.7 D	44	07/92 – 11/95	3410	
CAVALIER Mk III Hatchback	1.7 D	44	07/92 – 11/95	3470	
CAVALIER Mk III Hatchback	1.7 D	44	07/92 – 11/95	3505	
CAVALIER Mk III Hatchback	1.7 D	44	07/92 – 11/95	3615	
CAVALIER Mk III Hatchback	1.7 D	44	07/92 – 11/95	3623	
CAVALIER Mk III Hatchback	1.7 TD	60	09/88 – 11/95	3410	
CAVALIER Mk III Hatchback	1.7 TD	60	09/88 – 11/95	3470	
CAVALIER Mk III Hatchback	1.7 TD	60	09/88 – 11/95	3505	
CAVALIER Mk III Hatchback	1.7 TD	60	09/88 – 11/95	3615	
CAVALIER Mk III Hatchback	1.7 TD	60	09/88 – 11/95	3623	
CAVALIER Mk III Hatchback	1.8 i CAT	66	03/90 – 11/95	3410	
CAVALIER Mk III Hatchback	1.8 i CAT	66	03/90 – 11/95	3470	
CAVALIER Mk III Hatchback	1.8 i CAT	66	03/90 – 11/95	3505	
CAVALIER Mk III Hatchback	1.8 i CAT	66	03/90 – 11/95	3615	
CAVALIER Mk III Hatchback	1.8 i CAT	66	03/90 – 11/95	3623	
CAVALIER Mk III Hatchback	2.0 i	85	09/88 – 10/92		3469
CAVALIER Mk III Hatchback	2.0 i	85	09/88 – 10/92	3470	
CAVALIER Mk III Hatchback	2.0 i	85	09/88 – 10/92	3505	
CAVALIER Mk III Hatchback	2.0 i	85	09/88 – 10/92	3615	
CAVALIER Mk III Hatchback	2.0 i 16V	100	09/93 – 11/95		3469
CAVALIER Mk III Hatchback	2.0 i 16V	100	09/93 – 11/95	3470	
CAVALIER Mk III Hatchback	2.0 i 16V	100	09/93 – 11/95	3505	
CAVALIER Mk III Hatchback	2.0 i 16V	100	09/93 – 11/95	3615	
CAVALIER Mk III Hatchback	2.0 i 16V	110	09/88 – 11/95		3469
CAVALIER Mk III Hatchback	2.0 i 16V	110	09/88 – 11/95	3470	
CAVALIER Mk III Hatchback	2.0 i 16V	110	09/88 – 11/95	3505	
CAVALIER Mk III Hatchback	2.0 i 16V	110	09/88 – 11/95	3615	
CAVALIER Mk III Hatchback	2.0 i 16V 4x4	110	01/92 – 11/93		3469
CAVALIER Mk III Hatchback	2.0 i 16V 4x4	110	01/92 – 11/93	3470	
CAVALIER Mk III Hatchback	2.0 i 16V 4x4	110	01/92 – 11/93	3505	
CAVALIER Mk III Hatchback	2.0 i 16V 4x4	110	01/92 – 11/93	3615	
CAVALIER Mk III Hatchback	2.0 i 4x4	85	01/91 – 10/92		3469
CAVALIER Mk III Hatchback	2.0 i 4x4	85	01/91 – 10/92	3470	
CAVALIER Mk III Hatchback	2.0 i 4x4	85	01/91 – 10/92	3505	
CAVALIER Mk III Hatchback	2.0 i 4x4	85	01/91 – 10/92	3615	
CAVALIER Mk III Hatchback	2.0 i 4x4	95	09/88 – 09/92		3469
CAVALIER Mk III Hatchback	2.0 i 4x4	95	09/88 – 09/92	3470	
CAVALIER Mk III Hatchback	2.0 i 4x4	95	09/88 – 09/92	3505	
CAVALIER Mk III Hatchback	2.0 i 4x4	95	09/88 – 09/92	3615	
CAVALIER Mk III Hatchback	2.0 i CAT	85	09/90 – 11/95		3469
CAVALIER Mk III Hatchback	2.0 i CAT	85	09/90 – 11/95	3470	
CAVALIER Mk III Hatchback	2.0 i CAT	85	09/90 – 11/95	3505	
CAVALIER Mk III Hatchback	2.0 i CAT	85	09/90 – 11/95	3615	
CAVALIER Mk III Hatchback	2.0 SRi	95	09/88 – 09/92		3469
CAVALIER Mk III Hatchback	2.0 SRi	95	09/88 – 09/92	3470	
CAVALIER Mk III Hatchback	2.0 SRi	95	09/88 – 09/92	3505	
CAVALIER Mk III Hatchback	2.0 SRi	95	09/88 – 09/92	3615	
CAVALIER Mk III Hatchback	2.5 V6	125	09/88 – 06/94		3469
CAVALIER Mk III Hatchback	2.5 V6	125	09/88 – 06/94	3736	
COMBO Mk I (B)	12	33	07/94 – 10/01	3623	
COMBO Mk I (B)	14	44	07/94 – 10/01	3623	
COMBO Mk I (B)	14	60	07/94 – 10/01	3623	
COMBO Mk I (B)	1.7 D	44	07/94 – 10/01	3623	
COMBO Mk II (C) Box Body / Estate (F25)	16	62	09/01 – 10/04	3846	
COMBO Mk II (C) Box Body / Estate (F25)	16	62	09/01 – 10/04		4040
COMBO Mk II (C) Box Body / Estate (F25)	16	62	09/01 – 10/04	4042	
COMBO Mk II (C) Box Body / Estate (F25)	16	64	10/01 – 11/11	3846	
COMBO Mk II (C) Box Body / Estate (F25)	16	64	10/01 – 11/11		4040
COMBO Mk II (C) Box Body / Estate (F25)	16	64	10/01 – 11/11	4042	
COMBO Mk II (C) Box Body / Estate (F25)	1.3 CDTI 16V	51	09/04 – 02/12	3846	
COMBO Mk II (C) Box Body / Estate (F25)	1.3 CDTI 16V	51	09/04 – 02/12		4040
COMBO Mk II (C) Box Body / Estate (F25)	1.3 CDTI 16V	51	09/04 – 02/12	4042	
COMBO Mk II (C) Box Body / Estate (F25)	1.3 CDTI 16V	55	10/05 – 11/11	3846	
COMBO Mk II (C) Box Body / Estate (F25)	1.3 CDTI 16V	55	10/05 – 11/11		4040
COMBO Mk II (C) Box Body / Estate (F25)	1.3 CDTI 16V	55	10/05 – 11/11	4042	
COMBO Mk II (C) Box Body / Estate (F25)	1.4 16V	66	10/01 – 05/07	3846	
COMBO Mk II (C) Box Body / Estate (F25)	1.4 16V	66	10/01 – 05/07		4040
COMBO Mk II (C) Box Body / Estate (F25)	1.4 16V	66	10/01 – 05/07	4042	

MAKE & MODEL		KW	YEAR		
VAUXHALL					
COMBO Mk II (C) Box Body / Estate (F25)	1.4 i 16V	66	01/04 – 11/11	3846	
COMBO Mk II (C) Box Body / Estate (F25)	1.4 i 16V	66	01/04 – 11/11		4040
COMBO Mk II (C) Box Body / Estate (F25)	1.4 i 16V	66	01/04 – 11/11	4042	
COMBO Mk II (C) Box Body / Estate (F25)	1.6 CNG 16V	69	06/06 – 02/12		4040
COMBO Mk II (C) Box Body / Estate (F25)	1.6 CNG 16V	69	06/06 – 02/12	4042	
COMBO Mk II (C) Box Body / Estate (F25)	1.6 CNG 16V	71	04/05 – 02/12		4040
COMBO Mk II (C) Box Body / Estate (F25)	1.6 CNG 16V	71	04/05 – 02/12	4042	
COMBO Mk II (C) Box Body / Estate (F25)	1.7 CDTI 16V	74	12/04 – 11/11		4040
COMBO Mk II (C) Box Body / Estate (F25)	1.7 CDTI 16V	74	12/04 – 11/11	4042	
COMBO Mk II (C) Box Body / Estate (F25)	1.7 DI 16V	48	09/01 – 11/11	3846	
COMBO Mk II (C) Box Body / Estate (F25)	1.7 DI 16V	48	09/01 – 11/11		4040
COMBO Mk II (C) Box Body / Estate (F25)	1.7 DI 16V	48	09/01 – 11/11	4042	
COMBO Mk II (C) Box Body / Estate (F25)	1.7 DTI 16V	55	10/01 – 11/11	3846	
COMBO Mk II (C) Box Body / Estate (F25)	1.7 DTI 16V	55	10/01 – 11/11		4040
COMBO Mk II (C) Box Body / Estate (F25)	1.7 DTI 16V	55	10/01 – 11/11	4042	
COMBO Mk III (D) Box Body / Estate	14	70	11/11 -	4121	
COMBO Mk III (D) Box Body / Estate	1.3 CDTi	66	11/11 -	4121	
COMBO Mk III (D) Box Body / Estate	1.4 CNG	88	11/11 -	4121	
COMBO Mk III (D) Box Body / Estate	1.6 CDTi	66	11/11 -	4121	
COMBO Mk III (D) Box Body / Estate	1.6 CDTi	74	11/11 -	4121	
COMBO Mk III (D) Box Body / Estate	1.6 CDTi	77	11/11 -	4121	
COMBO Mk III (D) Box Body / Estate	2.0 CDTi	99	11/11 -	4121	
COMBO TOUR Mk II (C) (F25)	14	66	10/04 – 09/10	3846	
COMBO TOUR Mk II (C) (F25)	14	66	10/04 – 09/10		4040
COMBO TOUR Mk II (C) (F25)	14	66	10/04 – 09/10	4042	
COMBO TOUR Mk II (C) (F25)	16	64	10/01 – 06/04	3846	
COMBO TOUR Mk II (C) (F25)	16	64	10/01 – 06/04		4040
COMBO TOUR Mk II (C) (F25)	16	64	10/01 – 06/04	4042	
COMBO TOUR Mk II (C) (F25)	1.3 CDTI 16V	51	09/04 – 09/06	3846	
COMBO TOUR Mk II (C) (F25)	1.3 CDTI 16V	51	09/04 – 09/06		4040
COMBO TOUR Mk II (C) (F25)	1.3 CDTI 16V	51	09/04 – 09/06	4042	
COMBO TOUR Mk II (C) (F25)	1.3 CDTI 16V	55	07/06 – 02/12	3846	
COMBO TOUR Mk II (C) (F25)	1.3 CDTI 16V	55	07/06 – 02/12		4040
COMBO TOUR Mk II (C) (F25)	1.3 CDTI 16V	55	07/06 – 02/12	4042	
COMBO TOUR Mk II (C) (F25)	1.6 CNG	69	06/06 – 09/10	3846	
COMBO TOUR Mk II (C) (F25)	1.6 CNG	69	06/06 – 09/10		4040
COMBO TOUR Mk II (C) (F25)	1.6 CNG	69	06/06 – 09/10	4042	
COMBO TOUR Mk II (C) (F25)	1.6 CNG	71	04/05 – 02/12	3846	
COMBO TOUR Mk II (C) (F25)	1.6 CNG	71	04/05 – 02/12		4040
COMBO TOUR Mk II (C) (F25)	1.6 CNG	71	04/05 – 02/12	4042	
COMBO TOUR Mk II (C) (F25)	1.7 CDTI 16V	74	12/04 – 09/10	3846	
COMBO TOUR Mk II (C) (F25)	1.7 CDTI 16V	74	12/04 – 09/10		4040
COMBO TOUR Mk II (C) (F25)	1.7 CDTI 16V	74	12/04 – 09/10	4042	
COMBO TOUR Mk II (C) (F25)	1.7 DI 16V	48	09/01 – 06/04	3846	
COMBO TOUR Mk II (C) (F25)	1.7 DI 16V	48	09/01 – 06/04		4040
COMBO TOUR Mk II (C) (F25)	1.7 DI 16V	48	09/01 – 06/04	4042	
COMBO TOUR Mk II (C) (F25)	1.7 DTI 16V	55	10/01 – 02/12	3846	
COMBO TOUR Mk II (C) (F25)	1.7 DTI 16V	55	10/01 – 02/12		4040
COMBO TOUR Mk II (C) (F25)	1.7 DTI 16V	55	10/01 – 02/12	4042	
CORSA Mk I (B)	1.0 i 12V	40	11/96 – 09/00	3623	
CORSA Mk I (B)	1.2 i	33	03/93 – 09/00	3623	
CORSA Mk I (B)	1.2 i 16V	48	03/98 – 09/00	3623	
CORSA Mk I (B)	1.4 i	44	03/93 – 09/00	3623	
CORSA Mk I (B)	1.4 i 16V	63	08/97 – 09/00	3623	
CORSA Mk I (B)	1.4 i 16V	66	09/94 – 09/00	3623	
CORSA Mk I (B)	1.4 i S	60	03/93 – 09/00	3623	
CORSA Mk I (B)	1.5 D	37	12/92 – 12/96	3623	
CORSA Mk I (B)	1.5 TD	49	03/93 – 10/96	3623	
CORSA Mk I (B)	1.6 GSI 16V	80	03/93 – 09/00	3623	
CORSA Mk I (B)	1.6 i 16V	74	08/97 – 09/00	3623	
CORSA Mk I (B)	1.6 i 16V	78	09/94 – 09/00	3623	
CORSA Mk I (B)	1.7 D	44	02/96 – 09/00	3623	
CORSA Mk II (C) (W5L, F08)	16	62	08/01 – 10/04	3846	
CORSA Mk II (C) (W5L, F08)	1.0 12V	43	09/00 – 10/03	3846	
CORSA Mk II (C) (W5L, F08)	1.0 12V	44	11/03 – 10/06	3846	
CORSA Mk II (C) (W5L, F08)	1.2 16V	55	09/00 – 10/06	3846	
CORSA Mk II (C) (W5L, F08)	1.2 16V Dualfuel	55	08/01 – 10/06	3846	
CORSA Mk II (C) (W5L, F08)	1.2 Twinport	59	07/04 – 10/06	3846	
CORSA Mk II (C) (W5L, F08)	1.3 CDTI 16V	52	08/00 – 09/06	3846	
CORSA Mk II (C) (W5L, F08)	1.3 CDTI 16V	55	09/05 – 09/06	3846	
CORSA Mk II (C) (W5L, F08)	1.4 16V	66	09/00 – 10/06	3846	

BESER®

MAKE & MODEL   		KW	YEAR		
VAUXHALL					
CORSA Mk II (C) (W5L, F08)	1.4 Twinport	66	06/03 – 10/06	3846	
CORSA Mk II (C) (W5L, F08)	1.7 CDTI 16V	74	08/00 – 09/06		4040
CORSA Mk II (C) (W5L, F08)	1.7 CDTI 16V	74	08/00 – 09/06	4042	
CORSA Mk II (C) (W5L, F08)	1.7 DI 16V	48	08/00 – 09/06	3846	
CORSA Mk II (C) (W5L, F08)	1.7 DTI 16V	55	08/00 – 09/06	3846	
CORSA Mk II (C) (W5L, F08)	1.8 16V	92	08/00 – 09/06	3846	
CORSA Mk III (D) (L_8)	1.6 SRi	110	05/07 – 08/14	4042	
CORSA Mk IV (E)	10	66	08/14 -	4285	
CORSA Mk IV (E)	10	66	08/14 -		4286
CORSA Mk IV (E)	10	85	08/14 -	4285	
CORSA Mk IV (E)	10	85	08/14 -		4286
CORSA Mk IV (E)	12	51	08/14 -	4285	
CORSA Mk IV (E)	12	51	08/14 -		4286
CORSA Mk IV (E)	14	55	09/14 -	4285	
CORSA Mk IV (E)	14	55	09/14 -		4286
CORSA Mk IV (E)	14	66	08/14 -	4285	
CORSA Mk IV (E)	14	66	08/14 -		4286
CORSA Mk IV (E)	14	74	08/14 -	4285	
CORSA Mk IV (E)	14	74	08/14 -		4286
CORSA Mk IV (E)	14	110	07/15 -		4286
CORSA Mk IV (E)	1.3 CDTi	55	08/14 -	4285	
CORSA Mk IV (E)	1.3 CDTi	55	08/14 -		4286
CORSA Mk IV (E)	1.3 CDTi	70	08/14 -	4285	
CORSA Mk IV (E)	1.3 CDTi	70	08/14 -		4286
CORSA Mk IV (E)	1.6 VXR	151	04/15 -	4042	
CORSA Mk IV (E)	1.6 VXR	151	04/15 -		4286
CORSA Mk IV (X15)	1.0 (B 10 XFL)	66	08.14-	4284	
CORSA Mk IV (X15)	1.0 (B 10 XFL)	85	08.14-	4284	
CORSA Mk IV (X15)	1.0 (B 10 XFT)	85	08.14-	4284	
CORSA Mk IV (X15)	1.2 (B 12 XEL)	51	08.14-	4284	
CORSA Mk IV (X15)	1.2 (B 12 XEL)	51	10.14-	4284	
CORSA Mk IV (X15)	1.2 (B 12 XER)	51	08.14-	4284	
CORSA Mk IV (X15)	1.3 CDTI (B 13 DTC)	55	08.14-	4284	
CORSA Mk IV (X15)	1.3 CDTI (B 13 DTC)	55	10.14-	4284	
CORSA Mk IV (X15)	1.3 CDTI (B 13 DTE)	55	08.14-	4284	
CORSA Mk IV (X15)	1.3 CDTI (B 13 DTE)	70	10.14-	4284	
CORSA Mk IV (X15)	1.3 CDTI (B 13 DTE)	70	08.14-	4284	
CORSA Mk IV (X15)	1.3 CDTI (B 13 DTR)	70	08.14-	4284	
CORSA Mk IV (X15)	1.4 (B 14 NEJ)	74	08.14-	4284	
CORSA Mk IV (X15)	1.4 (B 14 NEL)	74	08.14-	4284	
CORSA Mk IV (X15)	1.4 (B 14 XEJ)	55	09.14-	4284	
CORSA Mk IV (X15)	1.4 (B 14 XEJ)	55	10.14-	4284	
CORSA Mk IV (X15)	1.4 (B 14 XEJ)	66	08.14-	4284	
CORSA Mk IV (X15)	1.4 (B 14 XEL)	66	08.14-	4284	
CORSA Mk IV (X15)	1.4 (B 14 XER)	55	09.14-	4284	
CORSA Mk IV (X15)	1.4 (B 14 XER)	66	08.14-	4284	
CORSA Mk IV (X15)	1.4 LPG (B 14 XEL)	66	08.14-	4284	
CORSA Mk IV (X15)	1.4 LPG (B 14 XER)	66	08.14-	4284	
CORSA Mk IV (X15)	1.6 VXR (B 16 LER)	151	04.15-	4284	
CORSA Mk IV (X15)	1.6 VXR (B 16 LES)	151	04.15-	4284	
CORSAVAN Mk I (B)	1.4 i	44	01/94 – 09/00	3623	
CORSAVAN Mk I (B)	1.5 D	37	08/94 – 12/95	3623	
CORSAVAN Mk I (B)	1.7 D	44	01/94 – 09/00	3623	
CORSAVAN Mk II (C)	14	66	11/03 – 06/06	3846	
CORSAVAN Mk II (C)	1.2 16V	55	09/00 – 06/06	3846	
CORSAVAN Mk II (C)	1.2 16V Dualfuel	55	08/01 – 06/06	3846	
CORSAVAN Mk II (C)	1.3 CDTI 16V	52	04/04 – 06/06	3846	
CORSAVAN Mk II (C)	1.7 DI 16V	48	09/00 – 06/06	3846	
CORSAVAN Mk II (C)	1.7 DTI 16V	55	09/00 – 06/06	3846	
CORSAVAN Mk IV (E)	12	51	10/14 -	4285	
CORSAVAN Mk IV (E)	12	51	10/14 -		4286
CORSAVAN Mk IV (E)	14	55	10/14 -	4285	
CORSAVAN Mk IV (E)	14	55	10/14 -		4286
CORSAVAN Mk IV (E)	1.3 CDTi	55	10/14 -	4285	
CORSAVAN Mk IV (E)	1.3 CDTi	55	10/14 -		4286
CORSAVAN Mk IV (E)	1.3 CDTi	70	10/14 -	4285	
CORSAVAN Mk IV (E)	1.3 CDTi	70	10/14 -		4286
FRONTERA Mk I (A)	20	85	04/95 – 08/98	3657	
FRONTERA Mk I (A)	20	85	04/95 – 08/98	3674	
FRONTERA Mk I (A)	20	85	04/95 – 08/98	3743	
FRONTERA Mk I (A)	20	85	04/95 – 08/98	3757	

MAKE & MODEL		KW	YEAR		
VAUXHALL					
FRONTERA Mk I (A)	20	85	04/95 – 08/98	3857	
FRONTERA Mk I (A)	20	85	04/95 – 08/98		3887
FRONTERA Mk I (A)	2.2 i	100	03/95 – 10/98	3657	
FRONTERA Mk I (A)	2.2 i	100	03/95 – 10/98	3674	
FRONTERA Mk I (A)	2.2 i	100	03/95 – 10/98	3743	
FRONTERA Mk I (A)	2.2 i	100	03/95 – 10/98	3757	
FRONTERA Mk I (A)	2.2 i	100	03/95 – 10/98	3857	
FRONTERA Mk I (A)	2.2 i	100	03/95 – 10/98		3887
FRONTERA Mk I (A)	2.3 TD	74	09/91 – 06/98	3657	
FRONTERA Mk I (A)	2.3 TD	74	09/91 – 06/98	3674	
FRONTERA Mk I (A)	2.3 TD	74	09/91 – 06/98	3743	
FRONTERA Mk I (A)	2.3 TD	74	09/91 – 06/98	3757	
FRONTERA Mk I (A)	2.3 TD	74	09/91 – 06/98	3857	
FRONTERA Mk I (A)	2.3 TD	74	09/91 – 06/98		3887
FRONTERA Mk I (A)	2.4 i	92	03/92 – 10/98	3657	
FRONTERA Mk I (A)	2.4 i	92	03/92 – 10/98	3674	
FRONTERA Mk I (A)	2.4 i	92	03/92 – 10/98	3743	
FRONTERA Mk I (A)	2.4 i	92	03/92 – 10/98	3757	
FRONTERA Mk I (A)	2.4 i	92	03/92 – 10/98	3857	
FRONTERA Mk I (A)	2.4 i	92	03/92 – 10/98		3887
FRONTERA Mk I (A)	2.5 TDS	85	11/91 – 06/98	3657	
FRONTERA Mk I (A)	2.5 TDS	85	11/91 – 06/98	3674	
FRONTERA Mk I (A)	2.5 TDS	85	11/91 – 06/98	3743	
FRONTERA Mk I (A)	2.5 TDS	85	11/91 – 06/98	3757	
FRONTERA Mk I (A)	2.5 TDS	85	11/91 – 06/98	3857	
FRONTERA Mk I (A)	2.5 TDS	85	11/91 – 06/98		3887
FRONTERA Mk I (A)	2.8 TD	83	01/95 – 12/96	3657	
FRONTERA Mk I (A)	2.8 TD	83	01/95 – 12/96	3674	
FRONTERA Mk I (A)	2.8 TD	83	01/95 – 12/96	3743	
FRONTERA Mk I (A)	2.8 TD	83	01/95 – 12/96	3757	
FRONTERA Mk I (A)	2.8 TD	83	01/95 – 12/96	3857	
FRONTERA Mk I (A)	2.8 TD	83	01/95 – 12/96		3887
FRONTERA Mk I (A) Sport	2.0 i	85	03/92 – 10/98	3657	
FRONTERA Mk I (A) Sport	2.0 i	85	03/92 – 10/98	3674	
FRONTERA Mk I (A) Sport	2.0 i	85	03/92 – 10/98	3743	
FRONTERA Mk I (A) Sport	2.0 i	85	03/92 – 10/98	3757	
FRONTERA Mk I (A) Sport	2.0 i	85	03/92 – 10/98	3857	
FRONTERA Mk I (A) Sport	2.0 i	85	03/92 – 10/98		3887
FRONTERA Mk I (A) Sport	2.5 TDS	85	09/96 – 10/98	3657	
FRONTERA Mk I (A) Sport	2.5 TDS	85	09/96 – 10/98	3674	
FRONTERA Mk I (A) Sport	2.5 TDS	85	09/96 – 10/98	3743	
FRONTERA Mk I (A) Sport	2.5 TDS	85	09/96 – 10/98	3757	
FRONTERA Mk I (A) Sport	2.5 TDS	85	09/96 – 10/98	3857	
FRONTERA Mk I (A) Sport	2.5 TDS	85	09/96 – 10/98		3887
FRONTERA Mk I (A) Sport	2.8 TD	83	01/95 – 12/96	3657	
FRONTERA Mk I (A) Sport	2.8 TD	83	01/95 – 12/96	3674	
FRONTERA Mk I (A) Sport	2.8 TD	83	01/95 – 12/96	3743	
FRONTERA Mk I (A) Sport	2.8 TD	83	01/95 – 12/96	3757	
FRONTERA Mk I (A) Sport	2.8 TD	83	01/95 – 12/96	3857	
FRONTERA Mk I (A) Sport	2.8 TD	83	01/95 – 12/96		3887
FRONTERA Mk II (B)	2.2 DTI	85	10/98 – 09/04	3674	
FRONTERA Mk II (B)	2.2 DTI	85	10/98 – 09/04	3743	
FRONTERA Mk II (B)	2.2 DTI	85	10/98 – 09/04		3887
FRONTERA Mk II (B)	2.2 i	100	10/98 – 10/04	3674	
FRONTERA Mk II (B)	2.2 i	100	10/98 – 10/04	3743	
FRONTERA Mk II (B)	2.2 i	100	10/98 – 10/04		3887
FRONTERA Mk II (B)	3.2 i	151	10/98 – 10/04	3674	
FRONTERA Mk II (B)	3.2 i	151	10/98 – 10/04	3743	
FRONTERA Mk II (B)	3.2 i	151	10/98 – 10/04		3887
INSIGNIA	14	103	04/11 -	4149	
INSIGNIA	16	85	07/08 -	4149	
INSIGNIA	18	103	07/08 -	4149	
INSIGNIA	1.4	103	04/11 -		4150
INSIGNIA	1.4 LPG	103	07/12 -	4149	
INSIGNIA	1.4 LPG	103	07/12 -		4150
INSIGNIA	1.6	85	07/08 -		4150
INSIGNIA	1.6 CDTI	100	07/15 -	4149	
INSIGNIA	1.6 CDTI	100	07/15 -		4150
INSIGNIA	1.6 Turbo	125	07/13 -	4149	
INSIGNIA	1.6 Turbo	125	07/13 -		4150
INSIGNIA	1.6 Turbo	132	01/09 -	4149	

MAKE & MODEL		KW	YEAR		
VAUXHALL					
INSIGNIA	1.6 Turbo	132	01/09 -		4150
INSIGNIA	1.8	103	07/08 -		4150
INSIGNIA	2.0 Biturbo CDTI	143	03/12 -	4149	
INSIGNIA	2.0 Biturbo CDTI	143	03/12 -		4150
INSIGNIA	2.0 Biturbo CDTI 4x4	143	03/12 -	4149	
INSIGNIA	2.0 Biturbo CDTI 4x4	143	03/12 -		4150
INSIGNIA	2.0 CDTI	81	07/08 -	4149	
INSIGNIA	2.0 CDTI	81	07/08 -		4150
INSIGNIA	2.0 CDTI	88	03/12 – 03/16	4149	
INSIGNIA	2.0 CDTI	88	03/12- 03/16		4150
INSIGNIA	2.0 CDTI	96	07/08 – 12/14	4149	
INSIGNIA	2.0 CDTI	96	07/08 – 12/14		4150
INSIGNIA	2.0 CDTI	103	07/13 -	4149	
INSIGNIA	2.0 CDTI	103	07/13 -		4150
INSIGNIA	2.0 CDTI	118	07/08 -	4149	
INSIGNIA	2.0 CDTI	118	07/08 -		4150
INSIGNIA	2.0 CDTI	120	07/13 -	4149	
INSIGNIA	2.0 CDTI	120	07/13 -		4150
INSIGNIA	2.0 CDTI	125	11/14 -	4149	
INSIGNIA	2.0 CDTI	125	11/14 -		4150
INSIGNIA	2.0 CDTI	140	10/08 -	4149	
INSIGNIA	2.0 CDTI	140	10/08 -		4150
INSIGNIA	2.0 CDTI 4x4	118	07/08 -	4149	
INSIGNIA	2.0 CDTI 4x4	118	07/08 -		4150
INSIGNIA	2.0 CDTI 4x4	120	07/13 -	4149	
INSIGNIA	2.0 CDTI 4x4	120	07/13 -		4150
INSIGNIA	2.0 CDTI 4x4	125	11/14 -	4149	
INSIGNIA	2.0 CDTI 4x4	125	11/14 -		4150
INSIGNIA	2.0 CDTI 4x4	140	05/09 -	4149	
INSIGNIA	2.0 CDTI 4x4	140	05/09 -		4150
INSIGNIA	2.0 Turbo	162	07/08 -	4149	
INSIGNIA	2.0 Turbo	162	07/08 -		4150
INSIGNIA	2.0 Turbo	184	04/14 -	4149	
INSIGNIA	2.0 Turbo	184	04/14 -		4150
INSIGNIA	2.0 Turbo 4x4	162	07/08 -	4149	
INSIGNIA	2.0 Turbo 4x4	162	07/08 -		4150
INSIGNIA	2.0 Turbo 4x4	184	09/11 -	4149	
INSIGNIA	2.0 Turbo 4x4	184	09/11 -		4150
INSIGNIA	2.8 V6 Turbo 4x4	191	07/08 -		4150
INSIGNIA	2.8 VXR	239	07/09 -		4150
INSIGNIA Estate	14	103	04/11 -	4149	
INSIGNIA Estate	16	85	07/08 -	4149	
INSIGNIA Estate	18	103	07/08 -	4149	
INSIGNIA Estate	1.4	103	04/11 -		4150
INSIGNIA Estate	1.4 LPG	103	07/12 -	4149	
INSIGNIA Estate	1.4 LPG	103	07/12 -		4150
INSIGNIA Estate	1.6	85	07/08 -		4150
INSIGNIA Estate	1.6 CDTI	100	07/15 -	4149	
INSIGNIA Estate	1.6 CDTI	100	07/15 -		4150
INSIGNIA Estate	1.6 Turbo	125	07/13 -	4149	
INSIGNIA Estate	1.6 Turbo	125	07/13 -		4150
INSIGNIA Estate	1.6 Turbo	132	01/09 -	4149	
INSIGNIA Estate	1.6 Turbo	132	01/09 -		4150
INSIGNIA Estate	1.8	103	07/08 -		4150
INSIGNIA Estate	2.0 Biturbo CDTI	143	03/12 -	4149	
INSIGNIA Estate	2.0 Biturbo CDTI	143	03/12 -		4150
INSIGNIA Estate	2.0 Biturbo CDTI 4x4	143	03/12 -	4149	
INSIGNIA Estate	2.0 Biturbo CDTI 4x4	143	03/12 -		4150
INSIGNIA Estate	2.0 CDTI	81	07/08 -	4149	
INSIGNIA Estate	2.0 CDTI	81	07/08 -		4150
INSIGNIA Estate	2.0 CDTI	88	03/12 – 03/16	4149	
INSIGNIA Estate	2.0 CDTI	88	03/12 – 03/16		4150
INSIGNIA Estate	2.0 CDTI	96	07/08 – 12/14	4149	
INSIGNIA Estate	2.0 CDTI	96	07/08 – 12/14		4150
INSIGNIA Estate	2.0 CDTI	103	07/13 -	4149	
INSIGNIA Estate	2.0 CDTI	103	07/13 -		4150
INSIGNIA Estate	2.0 CDTI	118	07/08 -	4149	
INSIGNIA Estate	2.0 CDTI	118	07/08 -		4150
INSIGNIA Estate	2.0 CDTI	120	07/13 -	4149	
INSIGNIA Estate	2.0 CDTI	120	07/13 -		4150
INSIGNIA Estate	2.0 CDTI	125	11/14 -	4149	

MAKE & MODEL		KW	YEAR		
VAUXHALL					
INSIGNIA Estate	2.0 CDTI	140	11/08 -	4149	
INSIGNIA Estate	2.0 CDTI	140	11/08 -		4150
INSIGNIA Estate	2.0 CDTI 4x4	118	07/08 -	4149	
INSIGNIA Estate	2.0 CDTI 4x4	118	07/08 -		4150
INSIGNIA Estate	2.0 CDTI 4x4	120	07/13 -	4149	
INSIGNIA Estate	2.0 CDTI 4x4	120	07/13 -		4150
INSIGNIA Estate	2.0 CDTI 4x4	125	11/14 -	4149	
INSIGNIA Estate	2.0 CDTI 4x4	125	11/14 -		4150
INSIGNIA Estate	2.0 CDTI 4x4	140	05/09 -	4149	
INSIGNIA Estate	2.0 CDTI 4x4	140	05/09 -		4150
INSIGNIA Estate	2.0 Turbo	162	07/08 -	4149	
INSIGNIA Estate	2.0 Turbo	162	07/08 -		4150
INSIGNIA Estate	2.0 Turbo	184	04/14 -	4149	
INSIGNIA Estate	2.0 Turbo	184	04/14 -		4150
INSIGNIA Estate	2.0 Turbo 4x4	162	07/08 -	4149	
INSIGNIA Estate	2.0 Turbo 4x4	162	07/08 -		4150
INSIGNIA Estate	2.0 Turbo 4x4	184	09/11 -	4149	
INSIGNIA Estate	2.0 Turbo 4x4	184	09/11 -		4150
INSIGNIA Estate	2.8 V6 Turbo	191	08/08 -		4150
INSIGNIA Estate	2.8 VXR	239	07/09 -		4150
INSIGNIA Saloon	14	103	04/11 -	4149	
INSIGNIA Saloon	16	85	07/08 -	4149	
INSIGNIA Saloon	18	103	07/08 -	4149	
INSIGNIA Saloon	1.4	103	04/11 -		4150
INSIGNIA Saloon	1.4 LPG	103	07/12 -	4149	
INSIGNIA Saloon	1.4 LPG	103	07/12 -		4150
INSIGNIA Saloon	1.6	85	07/08 -		4150
INSIGNIA Saloon	1.6 Turbo	125	07/13 -	4149	
INSIGNIA Saloon	1.6 Turbo	125	07/13 -		4150
INSIGNIA Saloon	1.6 Turbo	132	01/09 -	4149	
INSIGNIA Saloon	1.6 Turbo	132	01/09 -		4150
INSIGNIA Saloon	1.8	103	07/08 -		4150
INSIGNIA Saloon	2.0 Biturbo CDTI	143	03/12 -	4149	
INSIGNIA Saloon	2.0 Biturbo CDTI	143	03/12 -		4150
INSIGNIA Saloon	2.0 Biturbo CDTI 4x4	143	03/12 -	4149	
INSIGNIA Saloon	2.0 Biturbo CDTI 4x4	143	03/12 -		4150
INSIGNIA Saloon	2.0 CDTI	81	07/08 -	4149	
INSIGNIA Saloon	2.0 CDTI	81	07/08 -		4150
INSIGNIA Saloon	2.0 CDTI	88	03/12 – 12/14	4149	
INSIGNIA Saloon	2.0 CDTI	88	03/12 – 12/14		4150
INSIGNIA Saloon	2.0 CDTI	96	07/08 – 12/14	4149	
INSIGNIA Saloon	2.0 CDTI	96	07/08 – 12/14		4150
INSIGNIA Saloon	2.0 CDTI	103	07/13 -	4149	
INSIGNIA Saloon	2.0 CDTI	103	07/13 -		4150
INSIGNIA Saloon	2.0 CDTI	118	07/08 -	4149	
INSIGNIA Saloon	2.0 CDTI	118	07/08 -		4150
INSIGNIA Saloon	2.0 CDTI	120	07/13 -	4149	
INSIGNIA Saloon	2.0 CDTI	120	07/13 -		4150
INSIGNIA Saloon	2.0 CDTI	125	11/14 -	4149	
INSIGNIA Saloon	2.0 CDTI	125	11/14 -		4150
INSIGNIA Saloon	2.0 CDTI	140	11/08 -	4149	
INSIGNIA Saloon	2.0 CDTI	140	11/08 -		4150
INSIGNIA Saloon	2.0 CDTI 4x4	118	07/08 -	4149	
INSIGNIA Saloon	2.0 CDTI 4x4	118	07/08 -		4150
INSIGNIA Saloon	2.0 CDTI 4x4	120	07/13 -	4149	
INSIGNIA Saloon	2.0 CDTI 4x4	120	07/13 -		4150
INSIGNIA Saloon	2.0 CDTI 4x4	125	11/14 -	4149	
INSIGNIA Saloon	2.0 CDTI 4x4	125	11/14 -		4150
INSIGNIA Saloon	2.0 CDTI 4x4	140	05/09 -	4149	
INSIGNIA Saloon	2.0 CDTI 4x4	140	05/09 -		4150
INSIGNIA Saloon	2.0 Turbo	162	07/08 -	4149	
INSIGNIA Saloon	2.0 Turbo	162	07/08 -		4150
INSIGNIA Saloon	2.0 Turbo 4x4	162	07/08 -	4149	
INSIGNIA Saloon	2.0 Turbo 4x4	162	07/08 -		4150
INSIGNIA Saloon	2.0 Turbo 4x4	184	09/11 -	4149	
INSIGNIA Saloon	2.0 Turbo 4x4	184	09/11 -		4150
INSIGNIA Saloon	2.8 V6 Turbo 4x4	191	07/08 -		4150
INSIGNIA Saloon	2.8 VXR	239	07/09 -		4150
MERIVA Mk I (A)	1.3 CDTI	55	01/03 – 10/09		4040
MERIVA Mk I (A)	1.3 CDTI	55	01/03 – 10/09	4042	
MERIVA Mk I (A)	1.4 16V Twinport	66	01/03 – 10/09	3846	

MAKE & MODEL		KW	YEAR		
VAUXHALL					
MERIVA Mk I (A)	1.4 16V Twinport	66	01/03 – 10/09		4040
MERIVA Mk I (A)	1.4 16V Twinport	66	01/03 – 10/09	4042	
MERIVA Mk I (A)	1.6 i	64	01/03 – 06/10	3846	
MERIVA Mk I (A)	1.6 i	64	01/03 – 06/10		4040
MERIVA Mk I (A)	1.6 i	64	01/03 – 06/10	4042	
MERIVA Mk I (A)	1.6 i 16V	74	01/03 – 09/05		4040
MERIVA Mk I (A)	1.6 i 16V	74	01/03 – 09/05	4042	
MERIVA Mk I (A)	1.6 i 16V Twinport	77	05/03 – 06/10		4040
MERIVA Mk I (A)	1.6 i 16V Twinport	77	05/03 – 06/10	4042	
MERIVA Mk I (A)	1.6 Turbo	132	05/06 – 06/10		4040
MERIVA Mk I (A)	1.6 Turbo	132	05/06 – 06/10	4042	
MERIVA Mk I (A)	1.7 CDTI 16V	74	09/03 – 08/05		4040
MERIVA Mk I (A)	1.7 CDTI 16V	74	09/03 – 08/05	4042	
MERIVA Mk I (A)	1.7 DTI 16V	55	06/03 – 06/10		4040
MERIVA Mk I (A)	1.7 DTI 16V	55	06/03 – 06/10	4042	
MERIVA Mk I (A)	1.8 i 16V	92	05/03 – 08/05		4040
MERIVA Mk I (A)	1.8 i 16V	92	05/03 – 08/05	4042	
MERIVA Mk II (B)	14	74	06/10 -	4042	
MERIVA Mk II (B)	14	88	06/10 -	4042	
MERIVA Mk II (B)	14	103	06/10 -	4042	
MERIVA Mk II (B)	1.3 CDTI	55	06/10 -	4042	
MERIVA Mk II (B)	1.3 CDTi	70	06/10 -	4042	
MERIVA Mk II (B)	1.4 LPG	88	06/11 -	4042	
MERIVA Mk II (B)	1.6 CDTI	70	01/14 -	4042	
MERIVA Mk II (B)	1.6 CDTi	81	07/14 -	4042	
MERIVA Mk II (B)	1.6 CDTi	100	08/13 -	4042	
MERIVA Mk II (B)	1.7 CDTI	74	06/10 -	4042	
MERIVA Mk II (B)	1.7 CDTi	81	06/10 -	4042	
MERIVA Mk II (B)	1.7 CDTi	96	06/10 -	4042	
MIDI Bus	18	63	09/84 – 05/88	3462	
MIDI Bus	2.0 TD	50	09/84 – 05/88	3462	
MIDI II Bus	20	62	06/88 – 08/97	3462	
MIDI II Bus	2.0 TD	51	06/88 – 07/90	3462	
MIDI II Bus	2.2 D	45	06/88 – 12/94	3462	
MIDI II Bus	2.2 D All-wheel Drive	45	07/90 – 08/94	3462	
MIDI II Bus	2.4 TD	56	09/94 – 08/97	3462	
MIDI II Bus	2.4 TD	69	10/94 – 08/97	3462	
MOKKA	14	103	04/13 -	4008	
MOKKA	16	85	06/12 -	4008	
MOKKA	1.4	103	04/13 -	4014	
MOKKA	1.4 4x4	103	06/12 -	4008	
MOKKA	1.4 4x4	103	06/12 -	4014	
MOKKA	1.4 4x4	112	06/16 -	4008	
MOKKA	1.4 4x4	112	06/16 -	4014	
MOKKA	1.6	85	06/12 -	4014	
MOKKA	1.6 CDTI	81	06/15 -	4008	
MOKKA	1.6 CDTI	81	06/15 -	4014	
MOKKA	1.6 CDTi	100	01/15 -	4008	
MOKKA	1.6 CDTi	100	01/15 -	4014	
MOKKA	1.6 CDTi 4x4	100	01/15 -	4008	
MOKKA	1.6 CDTi 4x4	100	01/15 -	4014	
MOKKA	1.7 CDTI	96	06/12 -	4008	
MOKKA	1.7 CDTI	96	06/12 -	4014	
MOKKA	1.7 CDTI 4x4	96	06/12 -	4008	
MOKKA	1.7 CDTI 4x4	96	06/12 -	4014	
MONARO	57	242	03/04 – 08/05		4188
MONARO	57	257	01/05 – 04/07		4188
MONARO	57	279	04/04 – 08/05		4188
MONARO	57	285	03/04 – 07/05		4188
MONARO	60	293	01/05 – 04/07		4188
MONARO	60	362	10/06 – 04/07		4188
MONARO	5.7 (LS1)	279	04/04 – 08/05	4189	
MONARO	5.7 (Y 57 XE)	242	03/04 – 08/05	4189	
MONARO	5.7 (Y 57 XE)	257	01/05 – 04/07	4189	
MONARO	6.0 (LS2)	293	01/05 – 04/07	4189	
MONARO	6.0 (LS2)	362	10/06 – 04/07	4189	
MONTEREY	32	130	06/92 – 07/98	3674	
MONTEREY	32	130	06/92 – 07/98	3743	
MONTEREY	32	130	06/92 – 07/98		3887
MONTEREY	3.1 TD	84	09/91 – 07/98	3674	
MONTEREY	3.1 TD	84	09/91 – 07/98	3743	

MAKE & MODEL		KW	YEAR		
VAUXHALL					
MONTEREY	3.1 TD	84	09/91 – 07/98		3887
MONTEREY Mk II	3.0 DTI	117	07/98 – 08/99	3674	
MONTEREY Mk II	3.0 DTI	117	07/98 – 08/99	3743	
MONTEREY Mk II	3.0 DTI	117	07/98 – 08/99		3887
MONTEREY Mk II	3.5 V6 24V	158	07/98 – 08/99	3674	
MONTEREY Mk II	3.5 V6 24V	158	07/98 – 08/99	3743	
MONTEREY Mk II	3.5 V6 24V	158	07/98 – 08/99		3887
MOVANO Mk I (A) Chassis/Cab (ED, UD, HD)	2.2 DTI	66	09/00 – 05/10		3855
MOVANO Mk I (A) Chassis/Cab (ED, UD, HD)	2.2 DTI	66	09/00 – 05/10	3856	
MOVANO Mk I (A) Chassis/Cab (ED, UD, HD)	2.5 CDTI	74	04/04 – 05/10		3855
MOVANO Mk I (A) Chassis/Cab (ED, UD, HD)	2.5 CDTI	74	04/04 – 05/10	3856	
MOVANO Mk I (A) Chassis/Cab (ED, UD, HD)	2.5 CDTI	88	08/06 – 05/10		3855
MOVANO Mk I (A) Chassis/Cab (ED, UD, HD)	2.5 CDTI	88	08/06 – 05/10	3856	
MOVANO Mk I (A) Chassis/Cab (ED, UD, HD)	2.5 CDTI	107	08/06 – 05/10		3855
MOVANO Mk I (A) Chassis/Cab (ED, UD, HD)	2.5 CDTI	107	08/06 – 05/10	3856	
MOVANO Mk I (A) Chassis/Cab (ED, UD, HD)	2.5 D	59	10/98 – 01/01		3855
MOVANO Mk I (A) Chassis/Cab (ED, UD, HD)	2.5 D	59	10/98 – 01/01	3856	
MOVANO Mk I (A) Chassis/Cab (ED, UD, HD)	2.5 DTI	84	10/01 – 05/10		3855
MOVANO Mk I (A) Chassis/Cab (ED, UD, HD)	2.5 DTI	84	10/01 – 05/10	3856	
MOVANO Mk I (A) Chassis/Cab (ED, UD, HD)	2.8 DTI	84	10/98 – 10/01		3855
MOVANO Mk I (A) Chassis/Cab (ED, UD, HD)	2.8 DTI	84	10/98 – 10/01	3856	
MOVANO Mk I (A) Chassis/Cab (ED, UD, HD)	3.0 DTi	100	10/03 – 05/10		3855
MOVANO Mk I (A) Chassis/Cab (ED, UD, HD)	3.0 DTi	100	10/03 – 05/10	3856	
MOVANO Mk I (A) Combi (JD)	1.9 DTI	59	09/00 – 10/01		3855
MOVANO Mk I (A) Combi (JD)	1.9 DTI	59	09/00 – 10/01	3856	
MOVANO Mk I (A) Combi (JD)	1.9 DTI	60	10/01 – 05/10		3855
MOVANO Mk I (A) Combi (JD)	1.9 DTI	60	10/01 – 05/10	3856	
MOVANO Mk I (A) Combi (JD)	2.2 DTI	66	09/00 – 05/10		3855
MOVANO Mk I (A) Combi (JD)	2.2 DTI	66	09/00 – 05/10	3856	
MOVANO Mk I (A) Combi (JD)	2.5 CDTI	74	10/01 – 08/09		3855
MOVANO Mk I (A) Combi (JD)	2.5 CDTI	74	10/01 – 08/09	3856	
MOVANO Mk I (A) Combi (JD)	2.5 CDTI	88	02/03 – 08/09		3855
MOVANO Mk I (A) Combi (JD)	2.5 CDTI	88	02/03 – 08/09	3856	
MOVANO Mk I (A) Combi (JD)	2.5 CDTI	107	08/06 – 05/10		3855
MOVANO Mk I (A) Combi (JD)	2.5 CDTI	107	08/06 – 05/10	3856	
MOVANO Mk I (A) Combi (JD)	2.5 D	59	10/98 – 09/00		3855
MOVANO Mk I (A) Combi (JD)	2.5 D	59	10/98 – 09/00	3856	
MOVANO Mk I (A) Combi (JD)	2.5 DTI	84	10/01 – 08/09		3855
MOVANO Mk I (A) Combi (JD)	2.5 DTI	84	10/01 – 08/09	3856	
MOVANO Mk I (A) Combi (JD)	2.8 DTI	84	10/98 – 10/01		3855
MOVANO Mk I (A) Combi (JD)	2.8 DTI	84	10/98 – 10/01	3856	
MOVANO Mk I (A) Combi (JD)	3.0 DTi	100	10/03 – 05/10		3855
MOVANO Mk I (A) Combi (JD)	3.0 DTi	100	10/03 – 05/10	3856	
MOVANO Mk I (A) Van (FD)	1.9 DTI	59	09/00 – 10/01		3855
MOVANO Mk I (A) Van (FD)	1.9 DTI	59	09/00 – 10/01	3856	
MOVANO Mk I (A) Van (FD)	1.9 DTI	60	10/01 – 05/10		3855
MOVANO Mk I (A) Van (FD)	1.9 DTI	60	10/01 – 05/10	3856	
MOVANO Mk I (A) Van (FD)	2.2 DTI	66	09/00 – 05/10		3855
MOVANO Mk I (A) Van (FD)	2.2 DTI	66	09/00 – 05/10	3856	
MOVANO Mk I (A) Van (FD)	2.5 CDTI	74	04/04 – 05/10		3855
MOVANO Mk I (A) Van (FD)	2.5 CDTI	74	04/04 – 05/10	3856	
MOVANO Mk I (A) Van (FD)	2.5 CDTI	88	08/06 – 05/10		3855
MOVANO Mk I (A) Van (FD)	2.5 CDTI	88	08/06 – 05/10	3856	
MOVANO Mk I (A) Van (FD)	2.5 CDTI	107	08/06 – 05/10		3855
MOVANO Mk I (A) Van (FD)	2.5 CDTI	107	08/06 – 05/10	3856	
MOVANO Mk I (A) Van (FD)	2.5 D	59	10/98 – 09/00		3855
MOVANO Mk I (A) Van (FD)	2.5 D	59	10/98 – 09/00	3856	
MOVANO Mk I (A) Van (FD)	2.5 DTI	84	10/01 – 05/10		3855
MOVANO Mk I (A) Van (FD)	2.5 DTI	84	10/01 – 05/10	3856	
MOVANO Mk I (A) Van (FD)	2.8 TDI	84	10/98 – 10/01		3855
MOVANO Mk I (A) Van (FD)	2.8 TDI	84	10/98 – 10/01	3856	
MOVANO Mk I (A) Van (FD)	3.0 DTi	100	10/03 – 05/10		3855
MOVANO Mk I (A) Van (FD)	3.0 DTi	100	10/03 – 05/10	3856	
MOVANO Mk II (B) Chassis/Cab	2.3 CDTI [RWD]	74	07/10 -	4056	
MOVANO Mk II (B) Chassis/Cab	2.3 CDTI [RWD]	74	07/10 -		4057
MOVANO Mk II (B) Chassis/Cab	2.3 CDTI [RWD]	74	07/10 -		4132
MOVANO Mk II (B) Chassis/Cab	2.3 CDTI [RWD]	74	07/10 -		4172
MOVANO Mk II (B) Chassis/Cab	2.3 CDTI [RWD]	92	07/10 -	4056	
MOVANO Mk II (B) Chassis/Cab	2.3 CDTI [RWD]	92	07/10 -		4057
MOVANO Mk II (B) Chassis/Cab	2.3 CDTI [RWD]	92	07/10 -		4132
MOVANO Mk II (B) Chassis/Cab	2.3 CDTI [RWD]	92	07/10 -		4172

MAKE & MODEL   		KW	YEAR		
VAUXHALL					
MOVANO Mk II (B) Chassis/Cab	2.3 CDTI [RWD]	96	10/16 -	4056	
MOVANO Mk II (B) Chassis/Cab	2.3 CDTI [RWD]	107	07/10 -	4056	
MOVANO Mk II (B) Chassis/Cab	2.3 CDTI [RWD]	107	07/10 -		4057
MOVANO Mk II (B) Chassis/Cab	2.3 CDTI [RWD]	107	07/10 -		4132
MOVANO Mk II (B) Chassis/Cab	2.3 CDTI [RWD]	107	07/10 -		4172
MOVANO Mk II (B) Chassis/Cab	2.3 CDTI [RWD]	110	01/13 -	4056	
MOVANO Mk II (B) Chassis/Cab	2.3 CDTI [RWD]	110	01/13 -		4057
MOVANO Mk II (B) Chassis/Cab	2.3 CDTI [RWD]	110	01/13 -		4132
MOVANO Mk II (B) Chassis/Cab	2.3 CDTI [RWD]	110	01/13 -		4172
MOVANO Mk II (B) Chassis/Cab	2.3 CDTI FWD	74	05/10 -	4056	
MOVANO Mk II (B) Chassis/Cab	2.3 CDTI FWD	74	05/10 -		4057
MOVANO Mk II (B) Chassis/Cab	2.3 CDTI FWD	81	05/14 -	4056	
MOVANO Mk II (B) Chassis/Cab	2.3 CDTI FWD	92	05/10 -	4056	
MOVANO Mk II (B) Chassis/Cab	2.3 CDTI FWD	92	05/10 -		4057
MOVANO Mk II (B) Chassis/Cab	2.3 CDTI FWD	96	10/16 -	4056	
MOVANO Mk II (B) Chassis/Cab	2.3 CDTI FWD	107	05/10 -	4056	
MOVANO Mk II (B) Chassis/Cab	2.3 CDTI FWD	107	05/10 -		4057
MOVANO Mk II (B) Chassis/Cab	2.3 CDTI FWD	110	01/13 -	4056	
MOVANO Mk II (B) Chassis/Cab	2.3 CDTI FWD	110	01/13 -		4057
MOVANO Mk II (B) Chassis/Cab	2.3 CDTI FWD	110	01/13 -		4132
MOVANO Mk II (B) Chassis/Cab	2.3 CDTI FWD	110	01/13 -		4172
MOVANO Mk II (B) Chassis/Cab	2.3 CDTI FWD	120	10/16 -	4056	
MOVANO Mk II (B) Chassis/Cab	2.3 CDTI FWD	125	11/16 -	4056	
MOVANO Mk II (B) Combi	2.3 CDTI [RWD]	96	10/16 -	4056	
MOVANO Mk II (B) Combi	2.3 CDTI FWD	74	05/10 -	4056	
MOVANO Mk II (B) Combi	2.3 CDTI FWD	74	05/10 -		4057
MOVANO Mk II (B) Combi	2.3 CDTI FWD	81	05/14 -	4056	
MOVANO Mk II (B) Combi	2.3 CDTI FWD	92	05/10 -	4056	
MOVANO Mk II (B) Combi	2.3 CDTI FWD	92	05/10 -		4057
MOVANO Mk II (B) Combi	2.3 CDTI FWD	96	10/16 -	4056	
MOVANO Mk II (B) Combi	2.3 CDTI FWD	100	05/14 -	4056	
MOVANO Mk II (B) Combi	2.3 CDTI FWD	100	05/14 -		4057
MOVANO Mk II (B) Combi	2.3 CDTI FWD	107	05/10 -	4056	
MOVANO Mk II (B) Combi	2.3 CDTI FWD	107	05/10 -		4057
MOVANO Mk II (B) Combi	2.3 CDTI FWD	110	01/13 -	4056	
MOVANO Mk II (B) Combi	2.3 CDTI FWD	110	01/13 -		4057
MOVANO Mk II (B) Combi	2.3 CDTI FWD	110	01/13 -		4132
MOVANO Mk II (B) Combi	2.3 CDTI FWD	110	01/13 -		4172
MOVANO Mk II (B) Combi	2.3 CDTI FWD	120	05/14 -	4056	
MOVANO Mk II (B) Combi	2.3 CDTI FWD	120	05/14 -		4057
MOVANO Mk II (B) Combi	2.3 CDTI FWD	125	07/15 -	4056	
MOVANO Mk II (B) Combi	2.3 CDTI FWD	125	07/15 -		4057
MOVANO Mk II (B) Combi	2.3 CDTI FWD	125	07/15 -		4132
MOVANO Mk II (B) Combi	2.3 CDTI FWD	125	07/15 -		4172
MOVANO Mk II (B) VAN	2.3 CDTI [RWD]	74	05/10 -	4056	
MOVANO Mk II (B) VAN	2.3 CDTI [RWD]	74	05/10 -		4057
MOVANO Mk II (B) VAN	2.3 CDTI [RWD]	74	05/10 -		4132
MOVANO Mk II (B) VAN	2.3 CDTI [RWD]	74	05/10 -		4172
MOVANO Mk II (B) VAN	2.3 CDTI [RWD]	92	05/10 -	4056	
MOVANO Mk II (B) VAN	2.3 CDTI [RWD]	92	05/10 -		4057
MOVANO Mk II (B) VAN	2.3 CDTI [RWD]	92	05/10 -		4132
MOVANO Mk II (B) VAN	2.3 CDTI [RWD]	92	05/10 -		4172
MOVANO Mk II (B) VAN	2.3 CDTI [RWD]	96	10/16 -	4056	
MOVANO Mk II (B) VAN	2.3 CDTI [RWD]	100	05/14 -	4056	
MOVANO Mk II (B) VAN	2.3 CDTI [RWD]	100	05/14 -		4057
MOVANO Mk II (B) VAN	2.3 CDTI [RWD]	100	05/14 -		4132
MOVANO Mk II (B) VAN	2.3 CDTI [RWD]	100	05/14 -		4172
MOVANO Mk II (B) VAN	2.3 CDTI [RWD]	107	05/10 -	4056	
MOVANO Mk II (B) VAN	2.3 CDTI [RWD]	107	05/10 -		4057
MOVANO Mk II (B) VAN	2.3 CDTI [RWD]	107	05/10 -		4132
MOVANO Mk II (B) VAN	2.3 CDTI [RWD]	107	05/10 -		4172
MOVANO Mk II (B) VAN	2.3 CDTI [RWD]	110	01/13 -	4056	
MOVANO Mk II (B) VAN	2.3 CDTI [RWD]	110	01/13 -		4057
MOVANO Mk II (B) VAN	2.3 CDTI [RWD]	110	01/13 -		4132
MOVANO Mk II (B) VAN	2.3 CDTI [RWD]	110	01/13 -		4172
MOVANO Mk II (B) VAN	2.3 CDTI [RWD]	120	05/14 -	4056	
MOVANO Mk II (B) VAN	2.3 CDTI [RWD]	120	05/14 -		4057
MOVANO Mk II (B) VAN	2.3 CDTI [RWD]	120	05/14 -		4132
MOVANO Mk II (B) VAN	2.3 CDTI [RWD]	120	05/14 -		4172
MOVANO Mk II (B) VAN	2.3 CDTI FWD	74	05/10 -	4056	
MOVANO Mk II (B) VAN	2.3 CDTI FWD	74	05/10 -		4057

MAKE & MODEL		KW	YEAR		
VAUXHALL					
MOVANO Mk II (B) VAN	2.3 CDTI FWD	81	02/12 -	4056	
MOVANO Mk II (B) VAN	2.3 CDTI FWD	81	02/12 -		4057
MOVANO Mk II (B) VAN	2.3 CDTI FWD	81	02/12 -		4132
MOVANO Mk II (B) VAN	2.3 CDTI FWD	81	02/12 -		4172
MOVANO Mk II (B) VAN	2.3 CDTI FWD	92	05/10 -	4056	
MOVANO Mk II (B) VAN	2.3 CDTI FWD	92	05/10 -		4057
MOVANO Mk II (B) VAN	2.3 CDTI FWD	96	10/16 -	4056	
MOVANO Mk II (B) VAN	2.3 CDTI FWD	100	05/14 -	4056	
MOVANO Mk II (B) VAN	2.3 CDTI FWD	100	05/14 -		4057
MOVANO Mk II (B) VAN	2.3 CDTI FWD	100	05/14 -		4132
MOVANO Mk II (B) VAN	2.3 CDTI FWD	100	05/14 -		4172
MOVANO Mk II (B) VAN	2.3 CDTI FWD	107	05/10 -	4056	
MOVANO Mk II (B) VAN	2.3 CDTI FWD	107	05/10 -		4057
MOVANO Mk II (B) VAN	2.3 CDTI FWD	110	01/13 -	4056	
MOVANO Mk II (B) VAN	2.3 CDTI FWD	110	01/13 -		4057
MOVANO Mk II (B) VAN	2.3 CDTI FWD	110	01/13 -		4132
MOVANO Mk II (B) VAN	2.3 CDTI FWD	110	01/13 -		4172
MOVANO Mk II (B) VAN	2.3 CDTI FWD	120	05/14 -	4056	
MOVANO Mk II (B) VAN	2.3 CDTI FWD	120	05/14 -		4057
MOVANO Mk II (B) VAN	2.3 CDTI FWD	120	05/14 -		4132
MOVANO Mk II (B) VAN	2.3 CDTI FWD	120	05/14 -		4172
MOVANO Mk II (B) VAN	2.3 CDTI FWD	125	11/16 -	4056	
NOVA	10	33	09/82 – 10/87	3410	
NOVA	14	44	10/90 – 08/92	3410	
NOVA	14	44	10/90 – 08/92	3623	
NOVA	14	60	09/90 – 08/92	3410	
NOVA	14	60	09/90 – 08/92	3623	
NOVA	1.2 N	33	01/85 – 10/87	3410	
NOVA	1.2 S	40	09/82 – 10/87	3410	
NOVA	1.3 i	44	09/85 – 10/87	3410	
NOVA	1.3 S	51	09/82 – 10/87	3410	
NOVA	1.4 S	55	01/90 – 02/93	3410	
NOVA	1.4 S	55	01/90 – 02/93	3623	
NOVA	1.5 D	37	09/87 – 02/93	3410	
NOVA	1.5 D	37	09/87 – 02/93	3623	
NOVA	1.5 TD	49	01/90 – 02/93	3410	
NOVA	1.5 TD	49	01/90 – 02/93	3623	
NOVA Hatchback	10	33	05/83 – 03/93	3410	
NOVA Hatchback	10	33	05/83 – 03/93	3623	
NOVA Hatchback	16	60	09/88 – 08/90	3410	
NOVA Hatchback	1.2 i	33	01/85 – 10/89	3410	
NOVA Hatchback	1.2 i CAT	33	09/89 – 03/93	3410	
NOVA Hatchback	1.2 i CAT	33	09/89 – 03/93	3623	
NOVA Hatchback	1.2 N	38	01/90 – 03/93	3410	
NOVA Hatchback	1.2 N	38	01/90 – 03/93	3623	
NOVA Hatchback	1.2 S	40	05/83 – 02/90	3410	
NOVA Hatchback	1.2 S	43	01/88 – 02/90	3410	
NOVA Hatchback	1.3 i	44	09/85 – 10/89	3410	
NOVA Hatchback	1.3 i CAT	44	09/89 – 03/93	3410	
NOVA Hatchback	1.3 i CAT	44	09/89 – 03/93	3623	
NOVA Hatchback	1.3 S	51	05/83 – 10/89	3410	
NOVA Hatchback	1.4 i	44	01/90 – 03/93	3410	
NOVA Hatchback	1.4 i	44	01/90 – 03/93	3623	
NOVA Hatchback	1.4 i S	60	09/91 – 03/93	3623	
NOVA Hatchback	1.4 S	55	01/90 – 03/93	3410	
NOVA Hatchback	1.4 S	55	01/90 – 03/93	3623	
NOVA Hatchback	1.5 D	37	09/87 – 03/93	3410	
NOVA Hatchback	1.5 D	37	09/87 – 03/93	3623	
NOVA Hatchback	1.5 TD	49	01/90 – 03/93	3410	
NOVA Hatchback	1.6 GSI	72	09/89 – 03/93	3623	
NOVA Hatchback	1.6 GSI	74	05/88 – 03/92	3623	
NOVA Hatchback	1.6 GSI CAT	49	01/90 – 03/93	3623	
NOVA Hatchback	1.6 GSI CAT	74	02/92 – 03/93	3623	
NOVAVAN	12	38	01/90 – 10/94	3410	
NOVAVAN	12	38	01/90 – 10/94	3623	
NOVAVAN	14	55	11/90 – 03/93	3410	
NOVAVAN	14	55	11/90 – 03/93	3623	
NOVAVAN	1.5 D	37	01/91 – 10/94	3410	
NOVAVAN	1.5 D	37	01/91 – 10/94	3623	
OMEGA (B)	20	85	03/94 – 09/99	3717	
OMEGA (B)	20	85	09/95 – 09/96	3717	

MAKE & MODEL		KW	YEAR		
VAUXHALL					
OMEGA (B)	20	85	03/94 – 09/99	3733	
OMEGA (B)	20	85	09/95 – 09/96	3733	
OMEGA (B)	20	85	03/94 – 09/99	3736	
OMEGA (B)	20	85	09/95 – 09/96	3736	
OMEGA (B)	2.0 16V	100	03/94 – 09/99	3717	
OMEGA (B)	2.0 16V	100	03/94 – 09/99	3733	
OMEGA (B)	2.0 16V	100	03/94 – 09/99	3736	
OMEGA (B)	2.0 DTI 16V	74	01/98 – 09/00	3717	
OMEGA (B)	2.0 DTI 16V	74	01/98 – 09/00	3733	
OMEGA (B)	2.2 16V	106	01/94 – 06/03	3717	
OMEGA (B)	2.2 16V	106	01/94 – 06/03	3733	
OMEGA (B)	2.2 DTI 16V	88	08/00 – 07/03	3717	
OMEGA (B)	2.2 DTI 16V	88	08/00 – 07/03	3733	
OMEGA (B)	2.5 DTI 24V	110	09/01 – 07/03	3717	
OMEGA (B)	2.5 DTI 24V	110	09/01 – 07/03	3733	
OMEGA (B)	2.5 TD	96	04/94 – 07/01	3717	
OMEGA (B)	2.5 TD	96	04/94 – 07/01	3733	
OMEGA (B)	2.5 V6	125	03/94 – 09/00	3717	
OMEGA (B)	2.5 V6	125	03/94 – 09/00	3733	
OMEGA (B)	2.6 V6	132	08/00 – 07/03	3717	
OMEGA (B)	2.6 V6	132	08/00 – 07/03	3733	
OMEGA (B)	3.0 V6	155	04/94 – 07/00	3717	
OMEGA (B)	3.0 V6	155	04/94 – 07/00	3733	
OMEGA (B)	3.2 V6	160	02/01 – 07/03	3717	
OMEGA (B)	3.2 V6	160	02/01 – 07/03	3733	
OMEGA (B) Estate	20	85	03/94 – 09/99	3717	
OMEGA (B) Estate	20	85	03/94 – 09/99	3733	
OMEGA (B) Estate	20	85	03/94 – 09/99	3736	
OMEGA (B) Estate	2.0 16V	100	03/94 – 02/01	3717	
OMEGA (B) Estate	2.0 16V	100	03/94 – 02/01	3733	
OMEGA (B) Estate	2.0 16V	100	03/94 – 02/01	3736	
OMEGA (B) Estate	2.0 DTI 16V	74	01/98 – 09/00	3717	
OMEGA (B) Estate	2.0 DTI 16V	74	01/98 – 09/00	3733	
OMEGA (B) Estate	2.2 16V	106	02/94 – 06/03	3717	
OMEGA (B) Estate	2.2 16V	106	02/94 – 06/03	3733	
OMEGA (B) Estate	2.2 DTI 16V	88	08/00 – 06/03	3717	
OMEGA (B) Estate	2.2 DTI 16V	88	08/00 – 06/03	3733	
OMEGA (B) Estate	2.5 DTI 24V	110	09/01 – 06/03	3717	
OMEGA (B) Estate	2.5 DTI 24V	110	09/01 – 06/03	3733	
OMEGA (B) Estate	2.5 TD	96	04/94 – 07/01	3717	
OMEGA (B) Estate	2.5 TD	96	04/94 – 07/01	3733	
OMEGA (B) Estate	2.5 V6	125	03/94 – 09/00	3717	
OMEGA (B) Estate	2.5 V6	125	03/94 – 09/00	3733	
OMEGA (B) Estate	2.6 V6	132	08/00 – 06/03	3717	
OMEGA (B) Estate	2.6 V6	132	08/00 – 06/03	3733	
OMEGA (B) Estate	3.0 V6	155	07/94 – 07/00	3717	
OMEGA (B) Estate	3.0 V6	155	07/94 – 07/00	3733	
OMEGA (B) Estate	3.2 V6	160	02/01 – 06/03	3717	
OMEGA (B) Estate	3.2 V6	160	02/01 – 06/03	3733	
RASCAL Bus	10	34	07/86 – 08/93	3509	
RASCAL Pickup	10	34	07/86 – 08/93	3509	
SENATOR Mk II (B)	30	115	09/87 – 09/93	3717	
SENATOR Mk II (B)	30	115	09/87 – 09/93	3733	
SENATOR Mk II (B)	30	130	01/88 – 09/90	3717	
SENATOR Mk II (B)	30	130	01/88 – 09/90	3733	
SENATOR Mk II (B)	30	135	09/87 – 08/88	3717	
SENATOR Mk II (B)	30	135	09/87 – 08/88	3733	
SENATOR Mk II (B)	2.5 i	103	09/87 – 10/90	3717	
SENATOR Mk II (B)	2.5 i	103	09/87 – 10/90	3733	
SENATOR Mk II (B)	2.6 i	110	09/90 – 09/93	3717	
SENATOR Mk II (B)	2.6 i	110	09/90 – 09/93	3733	
SENATOR Mk II (B)	3.0 24V	150	09/89 – 09/93	3717	
SENATOR Mk II (B)	3.0 24V	150	09/89 – 09/93	3733	
SENATOR Mk II (B)	3.0 i CAT	130	01/88 – 09/93	3717	
SENATOR Mk II (B)	3.0 i CAT	130	01/88 – 09/93	3733	
SIGNUM	18	90	06/03 – 07/05		3853/1
SIGNUM	18	103	08/05 – 05/08		3853/1
SIGNUM	1.9 CDTI	88	04/04 – 03/08		3853/1
SIGNUM	1.9 CDTI 16V	110	04/04 – 03/08		3853/1
SIGNUM	1.9 Turbo	74	01/05 – 05/08		3853/1
SIGNUM	2.0 DTI	74	05/03 – 05/08		3853/1

MAKE & MODEL		KW	YEAR		
VAUXHALL					
SIGNUM	2.0 i Turbo	129	03/03 – 10/08		3853/1
SIGNUM	2.2 DTI	92	05/03 – 05/08		3853/1
SIGNUM	2.2 i	114	05/03 – 05/08		3853/1
SIGNUM	2.8 V6 Turbo	169	07/05 – 05/08		3853/1
SIGNUM	2.8 V6 Turbo	184	05/07 – 10/08		3853/1
SIGNUM	3.0 CDTi	130	05/03 – 05/08		3853/1
SIGNUM	3.0 V6 CDTI	135	07/05 – 06/08		3853/1
SIGNUM	3.2 V6	155	05/03 – 05/08		3853/1
SIGNUM	1.8 (Z 18 XER)	103	08/05 – 05/08	4211	
SIGNUM	1.8 (Z 18 XE)	90	06/03 – 07/05	4211	
SIGNUM	1.9 CDTI (Z 19 DT)	88	04/04 – 03/08	4211	
SIGNUM	1.9 CDTI 16V (Z 19 DTH)	110	04/04 – 03/08	4211	
SIGNUM	2.0 DTI (Y 20 DTH)	74	05/03 – 05/08	4211	
SIGNUM	2.0 i Turbo (Z 20 NET)	129	03/03 – 10/08	4211	
SIGNUM	2.2 DTI (Y 22 DTR)	92	05/03 – 05/08	4211	
SIGNUM	2.2 i (Z 22 YH)	114	05/03 – 05/08	4211	
SIGNUM	2.8 V6 Turbo (Z 28 NEL)	169	07/05 – 05/08	4211	
SIGNUM	3.0 CDTi (Y 30 DT)	130	05/03 – 05/08	4211	
SIGNUM	3.0 V6 CDTI (Z 30 DT)	135	07/05 – 06/08	4211	
SIGNUM	3.2 V6 (Z 32 SE)	155	05/03 – 05/08	4211	
TIGRA Mk I (F07)	1.4 16V	66	07/94 – 12/00	3623	
TIGRA Mk I (F07)	1.6 16V	78	07/94 – 12/00	3623	
TIGRA TwinTop	14	66	06/04 – 08/09	3846	
TIGRA TwinTop	18	92	06/04 – 08/09	3846	
TIGRA TwinTop	1.3 CDTI	51	06/04 – 08/09	3846	
VECTRA (B)	1.6 i	55	08/95 – 10/01	3470	
VECTRA (B)	1.6 i	55	08/95 – 10/01	3505	
VECTRA (B)	1.6 i	55	08/95 – 10/01	3615	
VECTRA (B)	1.6 i	55	08/95 – 10/01	3665	
VECTRA (B)	1.6 i 16V	74	08/95 – 10/01	3470	
VECTRA (B)	1.6 i 16V	74	08/95 – 10/01	3505	
VECTRA (B)	1.6 i 16V	74	08/95 – 10/01	3615	
VECTRA (B)	1.6 i 16V	74	08/95 – 10/01	3665	
VECTRA (B)	1.6 i 16V	74	08/95 – 10/01	3717	
VECTRA (B)	1.7 TD	60	10/95 – 11/96	3470	
VECTRA (B)	1.7 TD	60	10/95 – 11/96	3505	
VECTRA (B)	1.7 TD	60	10/95 – 11/96	3615	
VECTRA (B)	1.7 TD	60	10/95 – 11/96	3717	
VECTRA (B)	1.8 Dualfuel	92	09/00 – 03/02	3665	
VECTRA (B)	1.8 Dualfuel	92	09/00 – 03/02	3717	
VECTRA (B)	1.8 i 16V	85	10/95 – 09/00	3470	
VECTRA (B)	1.8 i 16V	85	10/95 – 09/00	3505	
VECTRA (B)	1.8 i 16V	85	10/95 – 09/00	3615	
VECTRA (B)	1.8 i 16V	85	10/95 – 09/00	3665	
VECTRA (B)	1.8 i 16V	85	10/95 – 09/00	3717	
VECTRA (B)	1.8 i 16V	92	09/00 – 03/02	3665	
VECTRA (B)	1.8 i 16V	92	09/00 – 03/02	3717	
VECTRA (B)	2.0 DI 16V	60	08/95 – 10/01	3470	
VECTRA (B)	2.0 DI 16V	60	08/95 – 10/01	3505	
VECTRA (B)	2.0 DI 16V	60	08/95 – 10/01	3615	
VECTRA (B)	2.0 DI 16V	60	08/95 – 10/01	3665	
VECTRA (B)	2.0 DI 16V	60	08/95 – 10/01	3717	
VECTRA (B)	2.0 DTI 16V	74	08/95 – 10/01	3665	
VECTRA (B)	2.0 DTI 16V	74	08/95 – 10/01	3717	
VECTRA (B)	2.0 i 16V	100	10/95 – 01/01	3665	
VECTRA (B)	2.0 i 16V	100	10/95 – 01/01	3717	
VECTRA (B)	2.2 DTI 16V	92	08/95 – 10/01	3665	
VECTRA (B)	2.2 DTI 16V	92	08/95 – 10/01	3717	
VECTRA (B)	2.2 i 16V	108	08/95 – 10/01	3665	
VECTRA (B)	2.2 i 16V	108	08/95 – 10/01	3717	
VECTRA (B)	2.5 i GSi	143	03/98 – 07/00	3665	
VECTRA (B)	2.5 i GSi	143	03/98 – 07/00	3717	
VECTRA (B)	2.5 i V6	125	09/95 – 08/00	3665	
VECTRA (B)	2.5 i V6	125	09/95 – 08/00	3717	
VECTRA (B)	2.6 i V6	125	09/00 – 03/02	3665	
VECTRA (B)	2.6 i V6	125	09/00 – 03/02	3717	
VECTRA (B) Estate	1.8 Dualfuel	92	09/00 – 03/02	3665	
VECTRA (B) Estate	1.8 Dualfuel	92	09/00 – 03/02	3717	
VECTRA (B) Estate	1.8 i 16V	85	11/96 – 09/00	3470	
VECTRA (B) Estate	1.8 i 16V	85	11/96 – 09/00	3505	
VECTRA (B) Estate	1.8 i 16V	85	11/96 – 09/00	3615	

MAKE & MODEL		KW	YEAR		
VAUXHALL					
VECTRA (B) Estate	1.8 i 16V	85	11/96 – 09/00	3665	
VECTRA (B) Estate	1.8 i 16V	85	11/96 – 09/00	3717	
VECTRA (B) Estate	1.8 i 16V	92	09/00 – 03/02	3665	
VECTRA (B) Estate	1.8 i 16V	92	09/00 – 03/02	3717	
VECTRA (B) Estate	2.0 DI 16V	60	08/95 – 10/01	3470	
VECTRA (B) Estate	2.0 DI 16V	60	08/95 – 10/01	3505	
VECTRA (B) Estate	2.0 DI 16V	60	08/95 – 10/01	3615	
VECTRA (B) Estate	2.0 DI 16V	60	08/95 – 10/01	3665	
VECTRA (B) Estate	2.0 DI 16V	60	08/95 – 10/01	3717	
VECTRA (B) Estate	2.0 DTI 16V	74	08/95 – 10/01	3470	
VECTRA (B) Estate	2.0 DTI 16V	74	08/95 – 10/01	3505	
VECTRA (B) Estate	2.0 DTI 16V	74	08/95 – 10/01	3615	
VECTRA (B) Estate	2.0 DTI 16V	74	08/95 – 10/01	3665	
VECTRA (B) Estate	2.0 DTI 16V	74	08/95 – 10/01	3717	
VECTRA (B) Estate	2.0 i 16V	100	10/95 – 01/01	3665	
VECTRA (B) Estate	2.0 i 16V	100	10/95 – 01/01	3717	
VECTRA (B) Estate	2.2 DTI 16V	92	08/95 – 10/01	3665	
VECTRA (B) Estate	2.2 DTI 16V	92	08/95 – 10/01	3717	
VECTRA (B) Estate	2.2 i 16V	108	08/95 – 10/01	3665	
VECTRA (B) Estate	2.2 i 16V	108	08/95 – 10/01	3717	
VECTRA (B) Estate	2.5 i GSi	143	05/98 – 09/99	3665	
VECTRA (B) Estate	2.5 i GSi	143	05/98 – 09/99	3717	
VECTRA (B) Estate	2.5 i V6	125	11/96 – 08/00	3665	
VECTRA (B) Estate	2.5 i V6	125	11/96 – 08/00	3717	
VECTRA (B) Estate	2.6 i V6	125	09/00 – 03/02	3665	
VECTRA (B) Estate	2.6 i V6	125	09/00 – 03/02	3717	
VECTRA (B) Hatchback	1.6 i	55	08/95 – 10/01	3470	
VECTRA (B) Hatchback	1.6 i	55	08/95 – 10/01	3505	
VECTRA (B) Hatchback	1.6 i	55	08/95 – 10/01	3615	
VECTRA (B) Hatchback	1.6 i	55	08/95 – 10/01	3665	
VECTRA (B) Hatchback	1.6 i 16V	74	08/95 – 10/01	3470	
VECTRA (B) Hatchback	1.6 i 16V	74	08/95 – 10/01	3505	
VECTRA (B) Hatchback	1.6 i 16V	74	08/95 – 10/01	3615	
VECTRA (B) Hatchback	1.6 i 16V	74	08/95 – 10/01	3665	
VECTRA (B) Hatchback	1.6 i 16V	74	08/95 – 10/01	3717	
VECTRA (B) Hatchback	1.7 TD	60	10/95 – 11/96	3470	
VECTRA (B) Hatchback	1.7 TD	60	10/95 – 11/96	3505	
VECTRA (B) Hatchback	1.7 TD	60	10/95 – 11/96	3615	
VECTRA (B) Hatchback	1.7 TD	60	10/95 – 11/96	3717	
VECTRA (B) Hatchback	1.8 Dualfuel	92	09/00 – 07/03	3665	
VECTRA (B) Hatchback	1.8 Dualfuel	92	09/00 – 07/03	3717	
VECTRA (B) Hatchback	1.8 i 16V	85	10/95 – 09/00	3470	
VECTRA (B) Hatchback	1.8 i 16V	85	10/95 – 09/00	3505	
VECTRA (B) Hatchback	1.8 i 16V	85	10/95 – 09/00	3615	
VECTRA (B) Hatchback	1.8 i 16V	85	10/95 – 09/00	3665	
VECTRA (B) Hatchback	1.8 i 16V	85	10/95 – 09/00	3717	
VECTRA (B) Hatchback	1.8 i 16V	92	09/00 – 07/03	3665	
VECTRA (B) Hatchback	1.8 i 16V	92	09/00 – 07/03	3717	
VECTRA (B) Hatchback	2.0 Di 16V	60	08/95 – 10/01	3470	
VECTRA (B) Hatchback	2.0 Di 16V	60	08/95 – 10/01	3505	
VECTRA (B) Hatchback	2.0 Di 16V	60	08/95 – 10/01	3615	
VECTRA (B) Hatchback	2.0 Di 16V	60	08/95 – 10/01	3665	
VECTRA (B) Hatchback	2.0 Di 16V	60	08/95 – 10/01	3717	
VECTRA (B) Hatchback	2.0 DTi 16V	74	06/97 – 10/01	3470	
VECTRA (B) Hatchback	2.0 DTi 16V	74	06/97 – 10/01	3505	
VECTRA (B) Hatchback	2.0 DTi 16V	74	06/97 – 10/01	3615	
VECTRA (B) Hatchback	2.0 DTi 16V	74	06/97 – 10/01	3665	
VECTRA (B) Hatchback	2.0 DTi 16V	74	06/97 – 10/01	3717	
VECTRA (B) Hatchback	2.0 i 16V	100	10/95 – 01/01	3665	
VECTRA (B) Hatchback	2.0 i 16V	100	10/95 – 01/01	3717	
VECTRA (B) Hatchback	2.2 DTI 16V	92	08/95 – 10/01	3665	
VECTRA (B) Hatchback	2.2 DTI 16V	92	08/95 – 10/01	3717	
VECTRA (B) Hatchback	2.2 i 16V	108	09/00 – 07/03	3665	
VECTRA (B) Hatchback	2.2 i 16V	108	09/00 – 07/03	3717	
VECTRA (B) Hatchback	2.5 i GSi	143	03/98 – 07/00	3665	
VECTRA (B) Hatchback	2.5 i GSi	143	03/98 – 07/00	3717	
VECTRA (B) Hatchback	2.5 i V6	125	09/95 – 08/00	3665	
VECTRA (B) Hatchback	2.5 i V6	125	09/95 – 08/00	3717	
VECTRA (B) Hatchback	2.6 i V6	125	09/00 – 07/03	3665	
VECTRA (B) Hatchback	2.6 i V6	125	09/00 – 07/03	3717	
VECTRA MK II GTS (C)	1.6 (Z 16 XEP)	77	01/06 – 07/08	4211	

MAKE & MODEL   		KW	YEAR		
VAUXHALL					
VECTRA MK II GTS (C)	1.6 16V (Z 16 XE)	74	06/04 – 07/08	4211	
VECTRA MK II GTS (C)	1.8 (Z 18 XER)	103	01/06 – 07/08	4211	
VECTRA MK II GTS (C)	1.8 16V (Z 18 XE)	90	08/02 – 07/08	4211	
VECTRA MK II GTS (C)	1.8 16V Dualfuel (Z 18 XE)	90	08/02 – 07/08	4211	
VECTRA MK II GTS (C)	1.9 CDTI (Z 19 DT)	88	08/02 – 07/08	4211	
VECTRA MK II GTS (C)	1.9 CDTI (Z 19 DTL)	74	10/05 – 07/08	4211	
VECTRA MK II GTS (C)	1.9 CDTI 16V (Z 19 DTH)	110	04/04 – 07/08	4211	
VECTRA MK II GTS (C)	2.0 16V Turbo (Z 20 NET)	129	03/03 – 07/08	4211	
VECTRA MK II GTS (C)	2.0 DTI 16V (Y 20 DTH)	74	08/02 – 07/08	4211	
VECTRA MK II GTS (C)	2.2 16V (Z 22 SE)	108	08/02 – 07/08	4211	
VECTRA MK II GTS (C)	2.2 direct (Z 22 YH)	114	10/03 – 08/05	4211	
VECTRA MK II GTS (C)	2.2 DTI 16V (Y 22 DTR)	92	08/02 – 07/08	4211	
VECTRA Mk II (C)	18	103	01/06 – 07/08		3853/1
VECTRA MK II (C)	1.6 (Z 16 XEP)	77	01/06 – 07/08	4211	
VECTRA MK II (C)	1.6 16V (Z 16 XE)	74	06/04 – 07/08	4211	
VECTRA MK II (C)	1.6 16V (Z 16 XE)	74	06/04 – 07/08	4211	
VECTRA MK II (C)	1.8 (Z 18 XEL)	81	04/02 – 07/08	4211	
VECTRA MK II (C)	1.8 (Z 18 XER)	103	01/06 – 07/08	4211	
VECTRA MK II (C)	1.8 (Z 18 XER)	103	01/06 – 07/08	4211	
VECTRA Mk II (C)	1.8 16V	90	04/02 – 07/08		3853/1
VECTRA MK II (C)	1.8 16V (Z 18 XE)	90	10/03 – 08/05	4211	
VECTRA MK II (C)	1.8 16V (Z 18 XE)	90	04/02 – 07/08	4211	
VECTRA Mk II (C)	1.8 16V Dualfuel	90	04/02 – 07/08		3853/1
VECTRA MK II (C)	1.8 16V Dualfuel (Z 18 XE)	90	04/02 – 07/08	4211	
VECTRA Mk II (C)	1.9 CDTI	88	04/02 – 09/08		3853/1
VECTRA MK II (C)	1.9 CDTI (Z 19 DT)	88	04/04 – 07/08	4211	
VECTRA MK II (C)	1.9 CDTI (Z 19 DTL)	74	10/05 – 07/08	4211	
VECTRA MK II (C)	1.9 CDTI (Z 19 DTL)	74	10/05 – 07/08	4211	
VECTRA Mk II (C)	1.9 CDTI 16V	110	04/04 – 08/08		3853/1
VECTRA MK II (C)	1.9 CDTI 16V (Z 19 DTH)	110	04/04 – 07/08	4211	
VECTRA MK II (C)	1.9 CDTI 16V (Z 19 DTH)	110	04/04 – 08/08	4211	
VECTRA Mk II (C)	2.0 16V Turbo	129	01/00 – 10/08		3853/1
VECTRA MK II (C)	2.0 16V Turbo (Z 20 NET)	129	10/03 – 07/08	4211	
VECTRA MK II (C)	2.0 16V Turbo (Z 20 NET)	129	01/00 – 10/08	4211	
VECTRA Mk II (C)	2.0 DTI 16V	74	04/02 – 10/08		3853/1
VECTRA MK II (C)	2.0 DTI 16V (Y 20 DTH)	74	10/03 – 07/08	4211	
VECTRA MK II (C)	2.0 DTI 16V (Y 20 DTH)	74	04/02 – 10/08	4211	
VECTRA Mk II (C)	2.2 16V	108	01/02 – 10/08		3853/1
VECTRA MK II (C)	2.2 16V (Z 22 SE)	108	01/02 – 10/08	4211	
VECTRA Mk II (C)	2.2 direct	114	01/02 – 10/08		3853/1
VECTRA MK II (C)	2.2 direct (Z 22 YH)	114	10/03 – 07/08	4211	
VECTRA MK II (C)	2.2 direct (Z 22 YH)	114	01/02 – 10/08	4211	
VECTRA Mk II (C)	2.2 DTI 16V	92	04/02 – 10/08		3853/1
VECTRA MK II (C)	2.2 DTI 16V (Y 22 DTR)	92	10/03 – 07/08	4211	
VECTRA MK II (C)	2.2 DTI 16V (Y 22 DTR)	92	04/02 – 10/08	4211	
VECTRA Mk II (C)	3.0 CDTi	135	08/05 – 07/08		3853/1
VECTRA Mk II (C)	3.0 V6 CDTI	130	06/03 – 08/05		3853/1
VECTRA Mk II (C)	3.2 V6	155	06/03 – 07/08		3853/1
VECTRA Mk II (C) Estate	18	103	01/06 – 07/08		3853/1
VECTRA Mk II (C) Estate	1.8 16V	90	10/03 – 08/05		3853/1
VECTRA Mk II (C) Estate	1.9 CDTI	88	04/04 – 07/08		3853/1
VECTRA Mk II (C) Estate	1.9 CDTI 16V	110	04/04 – 07/08		3853/1
VECTRA Mk II (C) Estate	2.0 16V Turbo	129	10/03 – 07/08		3853/1
VECTRA Mk II (C) Estate	2.0 DTI 16V	74	10/03 – 07/08		3853/1
VECTRA Mk II (C) Estate	2.2 direct	114	10/03 – 07/08		3853/1
VECTRA Mk II (C) Estate	2.2 DTI 16V	92	10/03 – 07/08		3853/1
VECTRA Mk II (C) Estate	2.8 V6 Turbo	169	08/05 – 07/08		3853/1
VECTRA Mk II (C) Estate	2.8 V6 Turbo	188	08/06 – 07/08		3853/1
VECTRA Mk II (C) Estate	2.8 V6 Turbo	206	10/06 – 07/08		3853/1
VECTRA Mk II (C) Estate	3.0 CDTi	135	08/05 – 07/08		3853/1
VECTRA Mk II (C) Estate	3.0 V6 CDTI	130	10/03 – 08/05		3853/1
VECTRA Mk II (C) Estate	3.2 V6	155	10/03 – 08/05		3853/1
VECTRA Mk II (C) GTS	18	103	01/06 – 07/08		3853/1
VECTRA Mk II (C) GTS	1.8 16V	90	08/02 – 07/08		3853/1
VECTRA Mk II (C) GTS	1.8 16V Dualfuel	90	08/02 – 07/08		3853/1
VECTRA Mk II (C) GTS	1.9 CDTI	88	08/02 – 07/08		3853/1
VECTRA Mk II (C) GTS	1.9 CDTI 16V	110	04/04 – 07/08		3853/1
VECTRA Mk II (C) GTS	2.0 16V Turbo	129	03/03 – 07/08		3853/1
VECTRA Mk II (C) GTS	2.0 DTI 16V	74	08/02 – 07/08		3853/1
VECTRA Mk II (C) GTS	2.2 16V	108	08/02 – 07/08		3853/1
VECTRA Mk II (C) GTS	2.2 direct	114	10/03 – 08/05		3853/1

MAKE & MODEL   		KW	YEAR		
VAUXHALL					
VECTRA Mk II (C) GTS	2.2 DTI 16V	92	08/02 – 07/08		3853/1
VECTRA Mk II (C) GTS	2.8 V6 Turbo	169	08/05 – 07/08		3853/1
VECTRA Mk II (C) GTS	2.8 V6 Turbo	184	08/06 – 07/08		3853/1
VECTRA Mk II (C) GTS	2.8 V6 Turbo	188	08/05 – 07/08		3853/1
VECTRA Mk II (C) GTS	2.8 V6 Turbo	206	08/06 – 07/08		3853/1
VECTRA Mk II (C) GTS	3.0 CDTi	135	08/05 – 07/08		3853/1
VECTRA Mk II (C) GTS	3.0 V6 CDTI	130	06/03 – 08/05		3853/1
VECTRA Mk II (C) GTS	3.2 V6	155	08/02 – 07/08		3853/1
VIVARO Box	1.6 CDTi	66	05/14 -		3795/1
VIVARO Box	1.6 CDTi	66	05/14 -	4227	
VIVARO Box	1.6 CDTi	70	08/16 -		3795/1
VIVARO Box	1.6 CDTi	70	08/16 -	4227	
VIVARO Box	1.6 CDTi	85	05/14 -		3795/1
VIVARO Box	1.6 CDTi	85	05/14 -	4227	
VIVARO Box	1.6 CDTi	88	05/14 -		3795/1
VIVARO Box	1.6 CDTi	88	05/14 -	4227	
VIVARO Box	1.6 CDTi	92	08/16 -		3795/1
VIVARO Box	1.6 CDTi	92	08/16 -	4227	
VIVARO Box	1.6 CDTi	103	05/14 -		3795/1
VIVARO Box	1.6 CDTi	103	05/14 -	4227	
VIVARO Box	1.6 CDTi	107	08/16 -		3795/1
VIVARO Box	1.6 CDTi	107	08/16 -	4227	
VIVARO Box (F7)	1.9 DI	59	08/01 – 12/06		3795/1
VIVARO Box (F7)	1.9 DI	59	08/01 – 12/06	3848	
VIVARO Box (F7)	1.9 DTI	74	08/01 – 12/06		3795/1
VIVARO Box (F7)	1.9 DTI	74	08/01 – 12/06	3848	
VIVARO Box (F7)	2.0 16V	88	08/01 – 12/06		3795/1
VIVARO Box (F7)	2.0 16V	88	08/01 – 12/06	3848	
VIVARO Box (F7)	2.0 CDTI	66	01/06 – 07/14		3795/1
VIVARO Box (F7)	2.0 CDTI	66	01/06 – 07/14	3848	
VIVARO Box (F7)	2.0 CDTI	84	08/06 – 07/14		3795/1
VIVARO Box (F7)	2.0 CDTI	84	08/06 – 07/14	3848	
VIVARO Box (F7)	2.0 ECOTEC	86	08/06 – 07/14		3795/1
VIVARO Box (F7)	2.0 ECOTEC	86	08/06 – 07/14	3848	
VIVARO Box (F7)	2.5 CDTI	107	08/06 – 07/14		3795/1
VIVARO Box (F7)	2.5 CDTI	107	08/06 – 07/14	3848	
VIVARO Box (F7)	2.5 DTI	99	07/03 – 07/14		3795/1
VIVARO Box (F7)	2.5 DTI	99	07/03 – 07/14	3848	
VIVARO Combi	1.6 CDTi	66	05/14 -		3795/1
VIVARO Combi	1.6 CDTi	66	05/14 -	4227	
VIVARO Combi	1.6 CDTi	70	08/16 -		3795/1
VIVARO Combi	1.6 CDTi	70	08/16 -	4227	
VIVARO Combi	1.6 CDTi	85	05/14 -		3795/1
VIVARO Combi	1.6 CDTi	85	05/14 -	4227	
VIVARO Combi	1.6 CDTi	88	05/14 -		3795/1
VIVARO Combi	1.6 CDTi	88	05/14 -	4227	
VIVARO Combi	1.6 CDTi	92	08/16 -		3795/1
VIVARO Combi	1.6 CDTi	92	08/16 -	4227	
VIVARO Combi	1.6 CDTi	103	06/14 -		3795/1
VIVARO Combi	1.6 CDTi	103	06/14 -	4227	
VIVARO Combi	1.6 CDTi	107	08/16 -		3795/1
VIVARO Combi	1.6 CDTi	107	08/16 -	4227	
VIVARO Combi (J7)	1.9 DI	59	08/01 – 12/06		3795/1
VIVARO Combi (J7)	1.9 DI	59	08/01 – 12/06	3848	
VIVARO Combi (J7)	1.9 DTI	74	08/01 – 12/06		3795/1
VIVARO Combi (J7)	1.9 DTI	74	08/01 – 12/06	3848	
VIVARO Combi (J7)	2.0 16V	88	08/01 – 12/06		3795/1
VIVARO Combi (J7)	2.0 16V	88	08/01 – 12/06	3848	
VIVARO Combi (J7)	2.0 CDTI	66	01/06 – 07/14		3795/1
VIVARO Combi (J7)	2.0 CDTI	66	01/06 – 07/14	3848	
VIVARO Combi (J7)	2.0 CDTI	84	08/06 – 07/14		3795/1
VIVARO Combi (J7)	2.0 CDTI	84	08/06 – 07/14	3848	
VIVARO Combi (J7)	2.0 ECOTEC	86	08/06 – 07/14		3795/1
VIVARO Combi (J7)	2.0 ECOTEC	86	08/06 – 07/14	3848	
VIVARO Combi (J7)	2.5 CDTI	107	01/06 – 07/14		3795/1
VIVARO Combi (J7)	2.5 CDTI	107	01/06 – 07/14	3848	
VIVARO Combi (J7)	2.5 DTI	99	07/03 – 07/14		3795/1
VIVARO Combi (J7)	2.5 DTI	99	07/03 – 07/14	3848	
VIVARO Platform/Chassis	1.6 CDTI	92	08/16 -		3795/1
VIVARO Platform/Chassis	1.6 CDTI	92	08/16 -	4227	
VIVARO Platform/Chassis	1.6 CDTi	85	05/14 -		3795/1

MAKE & MODEL		KW	YEAR		
VAUXHALL					
VIVARO Platform/Chassis	1.6 CDTi	85	05/14 -	4227	
VIVARO Platform/Chassis	1.6 CDTi	88	05/14 -		3795/1
VIVARO Platform/Chassis	1.6 CDTi	88	05/14 -	4227	
VIVARO Platform/Chassis	1.6 CDTi	103	05/14 -		3795/1
VIVARO Platform/Chassis	1.6 CDTi	103	05/14 -	4227	
VIVARO Platform/Chassis	1.6 CDTi	107	08/16 -		3795/1
VIVARO Platform/Chassis	1.6 CDTi	107	08/16 -	4227	
VIVARO Platform/Chassis (E7)	1.9 DI	59	04/03 – 07/14		3795/1
VIVARO Platform/Chassis (E7)	1.9 DI	59	04/03 – 07/14	3848	
VIVARO Platform/Chassis (E7)	2.0 16V	88	04/03 – 07/14		3795/1
VIVARO Platform/Chassis (E7)	2.0 16V	88	04/03 – 07/14	3848	
VIVARO Platform/Chassis (E7)	2.0 CDTI	66	01/06 – 07/14		3795/1
VIVARO Platform/Chassis (E7)	2.0 CDTI	66	01/06 – 07/14	3848	
VIVARO Platform/Chassis (E7)	2.0 CDTI	84	08/06 – 07/14		3795/1
VIVARO Platform/Chassis (E7)	2.0 CDTI	84	08/06 – 07/14	3848	
VIVARO Platform/Chassis (E7)	2.0 ECOTEC	86	08/06 – 07/14		3795/1
VIVARO Platform/Chassis (E7)	2.0 ECOTEC	86	08/06 – 07/14	3848	
VIVARO Platform/Chassis (E7)	2.5 CDTI	99	04/03 – 07/06		3795/1
VIVARO Platform/Chassis (E7)	2.5 CDTI	99	04/03 – 07/06	3848	
VIVARO Platform/Chassis (E7)	2.5 CDTI	107	08/06 – 07/14		3795/1
VIVARO Platform/Chassis (E7)	2.5 CDTI	107	08/06 – 07/14		3795/1
VIVARO Platform/Chassis (E7)	2.5 CDTI	107	08/06 – 07/14	3848	
VIVARO Platform/Chassis (E7)	2.5 CDTI	107	08/06 – 07/14	3848	
ZAFIRA Mk I (A) (F75)	20	147	06/02 – 06/05		4040
ZAFIRA Mk I (A) (F75)	1.6 16V	74	04/99 – 08/05		4040
ZAFIRA Mk I (A) (F75)	1.6 16V	74	04/99 – 08/05	4042	
ZAFIRA Mk I (A) (F75)	1.6 CNG	71	09/01 – 06/05		4040
ZAFIRA Mk I (A) (F75)	1.6 CNG	71	09/01 – 06/05	4042	
ZAFIRA Mk I (A) (F75)	1.6 Dualfuel	74	11/98 – 08/05		4040
ZAFIRA Mk I (A) (F75)	1.6 Dualfuel	74	11/98 – 08/05	4042	
ZAFIRA Mk I (A) (F75)	1.8 16V	85	05/99 – 08/00		4040
ZAFIRA Mk I (A) (F75)	1.8 16V	85	05/99 – 08/00	4042	
ZAFIRA Mk I (A) (F75)	1.8 16V	92	09/00 – 08/05		4040
ZAFIRA Mk I (A) (F75)	1.8 16V	92	09/00 – 08/05	4042	
ZAFIRA Mk I (A) (F75)	1.8 Dualfuel	92	09/00 – 08/05		4040
ZAFIRA Mk I (A) (F75)	1.8 Dualfuel	92	09/00 – 08/05	4042	
ZAFIRA Mk I (A) (F75)	2.0 DI 16V	60	10/99 – 08/05		4040
ZAFIRA Mk I (A) (F75)	2.0 DI 16V	60	10/99 – 08/05	4042	
ZAFIRA Mk I (A) (F75)	2.0 DTI 16V	74	04/99 – 08/05		4040
ZAFIRA Mk I (A) (F75)	2.0 DTI 16V	74	04/99 – 08/05	4042	
ZAFIRA Mk I (A) (F75)	2.0 GSI Turbo	141	09/01 – 06/05		4040
ZAFIRA Mk I (A) (F75)	2.2 16V	108	11/98 – 08/04		4040
ZAFIRA Mk I (A) (F75)	2.2 16V	108	11/98 – 08/04	4042	
ZAFIRA Mk I (A) (F75)	2.2 D	92	06/01 – 06/05		4040
ZAFIRA Mk I (A) (F75)	2.2 D	92	06/01 – 06/05	4042	
ZAFIRA Mk II (B) (M75)	16	77	07/05 – 11/14	4042	
ZAFIRA Mk II (B) (M75)	16	85	12/07 – 11/14	4042	
ZAFIRA Mk II (B) (M75)	18	88	04/13 – 11/14	4042	
ZAFIRA Mk II (B) (M75)	18	103	04/05 – 11/14	4042	
ZAFIRA Mk II (B) (M75)	20	147	07/05 – 11/14	4042	
ZAFIRA Mk II (B) (M75)	22	110	07/05 – 11/14	4042	
ZAFIRA Mk II (B) (M75)	1.6 CNG	69	07/05 – 11/14	4042	
ZAFIRA Mk II (B) (M75)	1.6 CNG Turbo	110	02/09 – 11/14	4042	
ZAFIRA Mk II (B) (M75)	1.7 CDTI	81	04/09 – 11/14	4042	
ZAFIRA Mk II (B) (M75)	1.7 CDTI	92	01/08 – 11/14	4042	
ZAFIRA Mk II (B) (M75)	1.9 CDTI	74	07/05 – 11/14	4042	
ZAFIRA Mk II (B) (M75)	1.9 CDTI	88	07/05 – 11/14	4042	
ZAFIRA Mk II (B) (M75)	1.9 CDTI	110	07/05 – 11/14	4042	
ZAFIRA Mk III (P12)	14	88	10/11 -	4008	
ZAFIRA Mk III (P12)	14	88	10/11 -	4149	
ZAFIRA Mk III (P12)	14	103	10/11 -	4008	
ZAFIRA Mk III (P12)	14	103	10/11 -	4149	
ZAFIRA Mk III (P12)	18	85	10/11 -	4008	
ZAFIRA Mk III (P12)	18	88	10/11 -	4008	
ZAFIRA Mk III (P12)	18	103	10/11 -	4008	
ZAFIRA Mk III (P12)	1.4	88	10/11 -	4014	
ZAFIRA Mk III (P12)	1.4	103	10/11 -	4014	
ZAFIRA Mk III (P12)	1.4 LPG	103	10/11 -	4008	
ZAFIRA Mk III (P12)	1.4 LPG	103	10/11 -	4014	
ZAFIRA Mk III (P12)	1.4 LPG	103	10/11 -	4149	
ZAFIRA Mk III (P12)	1.6 CDTi	100	03/13 -	4008	

MAKE & MODEL		KW	YEAR		
VAUXHALL					
ZAFIRA Mk III (P12)	1.6 CDTi	100	03/13 -	4014	
ZAFIRA Mk III (P12)	1.6 CDTi	100	03/13 -	4149	
ZAFIRA Mk III (P12)	1.6 CNG	110	10/11 -	4008	
ZAFIRA Mk III (P12)	1.6 CNG	110	10/11 -	4014	
ZAFIRA Mk III (P12)	1.6 CNG	110	10/11 -	4149	
ZAFIRA Mk III (P12)	1.6 SIDI	147	07/13 -	4008	
ZAFIRA Mk III (P12)	1.6 SIDI	147	07/13 -	4014	
ZAFIRA Mk III (P12)	1.6 SIDI	147	07/13 -	4149	
ZAFIRA Mk III (P12)	1.6 Turbo	125	12/12 -	4008	
ZAFIRA Mk III (P12)	1.6 Turbo	125	12/12 -	4014	
ZAFIRA Mk III (P12)	1.6 Turbo	125	12/12 -	4149	
ZAFIRA Mk III (P12)	1.8	85	10/11 -	4014	
ZAFIRA Mk III (P12)	1.8	85	10/11 -	4149	
ZAFIRA Mk III (P12)	1.8	88	10/11 -	4014	
ZAFIRA Mk III (P12)	1.8	88	10/11 -	4149	
ZAFIRA Mk III (P12)	1.8	103	10/11 -	4014	
ZAFIRA Mk III (P12)	1.8	103	10/11 -	4149	
ZAFIRA Mk III (P12)	2.0 BiTurbo CDTI	143	01/13 -	4008	
ZAFIRA Mk III (P12)	2.0 BiTurbo CDTI	143	01/13 -	4014	
ZAFIRA Mk III (P12)	2.0 BiTurbo CDTI	143	01/13 -	4149	
ZAFIRA Mk III (P12)	2.0 CDTi	81	10/11 -	4008	
ZAFIRA Mk III (P12)	2.0 CDTi	81	10/11 -	4014	
ZAFIRA Mk III (P12)	2.0 CDTi	81	10/11 -	4149	
ZAFIRA Mk III (P12)	2.0 CDTi	96	10/11 -	4008	
ZAFIRA Mk III (P12)	2.0 CDTi	96	10/11 -	4014	
ZAFIRA Mk III (P12)	2.0 CDTi	96	10/11 -	4149	
ZAFIRA Mk III (P12)	2.0 CDTi	118	10/11 -	4008	
ZAFIRA Mk III (P12)	2.0 CDTi	118	10/11 -	4014	
ZAFIRA Mk III (P12)	2.0 CDTi	118	10/11 -	4149	
ZAFIRA Mk III (P12)	2.0 CDTi	121	10/11 -	4008	
ZAFIRA Mk III (P12)	2.0 CDTi	121	10/11 -	4014	
ZAFIRA Mk III (P12)	2.0 CDTi	121	10/11 -	4149	
ZAFIRA Mk III (P12)	2.0 CDTi	125	01/15 -	4008	
ZAFIRA Mk III (P12)	2.0 CDTi	125	01/15 -	4014	
VOLKSWAGEN					
BEETLE (5C1, 5C2)	25	125	04/11 -	3904	
BEETLE (5C1, 5C2)	25	125	04/11 -		4135
BEETLE (5C1, 5C2)	1.2 TSI	77	07/11 -	3782	
BEETLE (5C1, 5C2)	1.2 TSI	77	07/11 -	3782/1	
BEETLE (5C1, 5C2)	1.2 TSI	77	07/11 -	3904	
BEETLE (5C1, 5C2)	1.2 TSI	77	07/11 -		4135
BEETLE (5C1, 5C2)	1.2 TSI 16V	77	12/14 -		3529/1
BEETLE (5C1, 5C2)	1.2 TSI 16V	77	12/14 -	3782	
BEETLE (5C1, 5C2)	1.2 TSI 16V	77	12/14 -	3782/1	
BEETLE (5C1, 5C2)	1.2 TSI 16V	77	12/14 -	3904	
BEETLE (5C1, 5C2)	1.2 TSI 16V	77	12/14 -		4135
BEETLE (5C1, 5C2)	1.4 TSI	110	12/14 -		3529/1
BEETLE (5C1, 5C2)	1.4 TSI	110	12/14 -	3782	
BEETLE (5C1, 5C2)	1.4 TSI	110	12/14 -	3904	
BEETLE (5C1, 5C2)	1.4 TSI	110	12/14 -		4135
BEETLE (5C1, 5C2)	1.4 TSI	118	10/11 -		3529/1
BEETLE (5C1, 5C2)	1.4 TSI	118	10/11 -	3782	
BEETLE (5C1, 5C2)	1.4 TSI	118	10/11 -	3904	
BEETLE (5C1, 5C2)	1.4 TSI	118	10/11 -		4135
BEETLE (5C1, 5C2)	1.6 TDI	77	10/11 -	3782	
BEETLE (5C1, 5C2)	1.6 TDI	77	10/11 -	3782/1	
BEETLE (5C1, 5C2)	1.6 TDI	77	10/11 -	3904	
BEETLE (5C1, 5C2)	1.6 TDI	77	10/11 -		4135
BEETLE (5C1, 5C2)	2.0 TDI	81	06/14 -		3529/1
BEETLE (5C1, 5C2)	2.0 TDI	81	06/14 -	3782	
BEETLE (5C1, 5C2)	2.0 TDI	81	06/14 -	3904	
BEETLE (5C1, 5C2)	2.0 TDI	81	06/14 -		4135
BEETLE (5C1, 5C2)	2.0 TDI	103	04/11 -	3782	
BEETLE (5C1, 5C2)	2.0 TDI	103	04/11 -	3782/1	
BEETLE (5C1, 5C2)	2.0 TDI	103	04/11 -	3904	
BEETLE (5C1, 5C2)	2.0 TDI	103	04/11 -		4135
BEETLE (5C1, 5C2)	2.0 TDI	110	07/14 -		3529/1
BEETLE (5C1, 5C2)	2.0 TDI	110	07/14 -	3782	
BEETLE (5C1, 5C2)	2.0 TDI	110	07/14 -	3904	
BEETLE (5C1, 5C2)	2.0 TDI	110	07/14 -		4135
BEETLE (5C1, 5C2)	2.0 TSI	147	04/11 -		3529/1

MAKE & MODEL		KW	YEAR		
VOLKSWAGEN					
BEETLE (5C1, 5C2)	2.0 TSI	147	04/11 -	3904	
BEETLE (5C1, 5C2)	2.0 TSI	147	04/11 -		4135
BEETLE (5C1, 5C2)	2.0 TSI	155	12/12 -		3529/1
BEETLE (5C1, 5C2)	2.0 TSI	155	12/12 -	3904	
BEETLE (5C1, 5C2)	2.0 TSI	155	12/12 -		4135
BEETLE (5C1, 5C2)	2.0 TSI	162	12/14 -		3529/1
BEETLE (5C1, 5C2)	2.0 TSI	162	12/14 -	3782	
BEETLE (5C1, 5C2)	2.0 TSI	162	12/14 -	3904	
BEETLE (5C1, 5C2)	2.0 TSI	162	12/14 -		4135
BEETLE (5C1, 5C2)	1.2 TSI 16V	77	12/14 -		4336
BEETLE (5C7)	2.0 TSI (CPLA)	155	12/12 -	4228	
BEETLE (5C7)	2.0 TSI (CPPA)	155	12/12 -	4228	
BEETLE Convertible (5C7, 5C8)	25	125	12/11 -	3782	
BEETLE Convertible (5C7, 5C8)	25	125	12/11 -	3782/1	
BEETLE Convertible (5C7, 5C8)	25	125	12/11 -	3904	
BEETLE Convertible (5C7, 5C8)	25	125	12/11 -		4135
BEETLE Convertible (5C7, 5C8)	1.2 TSI	77	12/11 -	3782	
BEETLE Convertible (5C7, 5C8)	1.2 TSI	77	12/11 -	3904	
BEETLE Convertible (5C7, 5C8)	1.2 TSI	77	12/11 -		4135
BEETLE Convertible (5C7, 5C8)	1.2 TSI 16V	77	12/14 -		3529/1
BEETLE Convertible (5C7, 5C8)	1.2 TSI 16V	77	12/14 -	3782	
BEETLE Convertible (5C7, 5C8)	1.2 TSI 16V	77	12/14 -	3782/1	
BEETLE Convertible (5C7, 5C8)	1.2 TSI 16V	77	12/14 -	3904	
BEETLE Convertible (5C7, 5C8)	1.2 TSI 16V	77	12/14 -		4135
BEETLE Convertible (5C7, 5C8)	1.4 TSI	110	12/14 -		3529/1
BEETLE Convertible (5C7, 5C8)	1.4 TSI	110	12/14 -	3782	
BEETLE Convertible (5C7, 5C8)	1.4 TSI	110	12/14 -	3904	
BEETLE Convertible (5C7, 5C8)	1.4 TSI	110	12/14 -		4135
BEETLE Convertible (5C7, 5C8)	1.4 TSI	118	12/11 -		3529/1
BEETLE Convertible (5C7, 5C8)	1.4 TSI	118	12/11 -	3904	
BEETLE Convertible (5C7, 5C8)	1.4 TSI	118	12/11 -		4135
BEETLE Convertible (5C7, 5C8)	1.6 TDI	77	12/11 -	3782	
BEETLE Convertible (5C7, 5C8)	1.6 TDI	77	12/11 -	3904	
BEETLE Convertible (5C7, 5C8)	1.6 TDI	77	12/11 -		4135
BEETLE Convertible (5C7, 5C8)	1.8 TSI	125	12/13 -		3529/1
BEETLE Convertible (5C7, 5C8)	1.8 TSI	125	12/13 -	3782	
BEETLE Convertible (5C7, 5C8)	1.8 TSI	125	12/13 -	3904	
BEETLE Convertible (5C7, 5C8)	1.8 TSI	125	12/13 -		4135
BEETLE Convertible (5C7, 5C8)	2.0 TDI	81	06/14 -		3529/1
BEETLE Convertible (5C7, 5C8)	2.0 TDI	81	06/14 -	3782	
BEETLE Convertible (5C7, 5C8)	2.0 TDI	81	06/14 -	3904	
BEETLE Convertible (5C7, 5C8)	2.0 TDI	81	06/14 -		4135
BEETLE Convertible (5C7, 5C8)	2.0 TDI	103	04/12 -		3529/1
BEETLE Convertible (5C7, 5C8)	2.0 TDI	103	04/12 -	3782	
BEETLE Convertible (5C7, 5C8)	2.0 TDI	103	04/12 -	3904	
BEETLE Convertible (5C7, 5C8)	2.0 TDI	103	04/12 -		4135
BEETLE Convertible (5C7, 5C8)	2.0 TDI	110	09/14 -	3782	
BEETLE Convertible (5C7, 5C8)	2.0 TDI	110	09/14 -	3904	
BEETLE Convertible (5C7, 5C8)	2.0 TDI	110	09/14 -		4135
BEETLE Convertible (5C7, 5C8)	2.0 TSI	147	12/11 -		3529/1
BEETLE Convertible (5C7, 5C8)	2.0 TSI	147	12/11 -	3904	
BEETLE Convertible (5C7, 5C8)	2.0 TSI	147	12/11 -		4135
BEETLE Convertible (5C7, 5C8)	2.0 TSI	155	12/12 -		3529/1
BEETLE Convertible (5C7, 5C8)	2.0 TSI	155	12/12 -	3782	
BEETLE Convertible (5C7, 5C8)	2.0 TSI	155	12/12 -	3904	
BEETLE Convertible (5C7, 5C8)	2.0 TSI	155	12/12 -		4135
BEETLE Convertible (5C7, 5C8)	2.0 TSI	162	12/14 -		3529/1
BEETLE Convertible (5C7, 5C8)	2.0 TSI	162	12/14 -	3782	
BEETLE Convertible (5C7, 5C8)	2.0 TSI	162	12/14 -	3904	
BEETLE Convertible (5C7, 5C8)	2.0 TSI	162	12/14 -		4135
BEETLE Convertible (5C7, 5C8)	1.2 TSI 16V	77	12/14 -		4336
BORA IV / JETTA IV (1J2)	1.6 (AEH)	74	10/98 – 05/05	3682	
BORA IV / JETTA IV (1J2)	1.6 (AKL)	74	10/98 – 05/05	3682	
BORA IV / JETTA IV (1J2)	1.6 (APF)	74	10/98 – 05/05	3682	
BORA IV / JETTA IV (1J2)	1.9 SDI (AGP)	50	10/98 – 05/05	3682	
BORA IV / JETTA IV (1J2)	1.9 SDI (AQM)	50	10/98 – 05/05	3682	
BORA (1J2)	16	74	10/98 – 05/05		3529/1
BORA (1J2)	16	74	10/98 – 05/05	3782	
BORA (1J2)	16	74	10/98 – 05/05	3782/1	
BORA (1J2)	16	75	08/00 – 05/05		3529/1
BORA (1J2)	16	75	08/00 – 05/05	3782	

MAKE & MODEL		KW	YEAR		
VOLKSWAGEN					
BORA (1J2)	16	78	06/02 – 10/04		3529/1
BORA (1J2)	16	78	06/02 – 10/04	3782	
BORA (1J2)	18	92	10/98 – 05/05		3529/1
BORA (1J2)	18	92	10/98 – 05/05	3782	
BORA (1J2)	18	92	10/98 – 05/05	3782/1	
BORA (1J2)	20	85	10/98 – 05/05		3529/1
BORA (1J2)	20	85	10/98 – 05/05	3782	
BORA (1J2)	20	85	10/98 – 05/05	3782/1	
BORA (1J2)	1.4 16V	55	03/00 – 05/05		3529/1
BORA (1J2)	1.4 16V	55	03/00 – 05/05	3782	
BORA (1J2)	1.6 16V	77	05/00 – 05/05		3529/1
BORA (1J2)	1.6 16V	77	05/00 – 05/05	3782	
BORA (1J2)	1.6 FSI	81	01/02 – 05/05		3529/1
BORA (1J2)	1.6 FSI	81	01/02 – 05/05	3782	
BORA (1J2)	1.8 4motion	92	02/99 – 05/05		3529/1
BORA (1J2)	1.8 4motion	92	02/99 – 05/05	3782	
BORA (1J2)	1.8 T	110	05/00 – 05/05		3529/1
BORA (1J2)	1.8 T	110	05/00 – 05/05	3590/1	
BORA (1J2)	1.8 T	132	03/02 – 05/05		3529/1
BORA (1J2)	1.8 T	132	03/02 – 05/05	3590/1	
BORA (1J2)	1.8 T 4motion	110	10/00 – 05/01		3529/1
BORA (1J2)	1.8 T 4motion	110	10/00 – 05/01	3590/1	
BORA (1J2)	1.9 SDI	50	10/98 – 05/05		3529/1
BORA (1J2)	1.9 SDI	50	10/98 – 05/05	3782	
BORA (1J2)	1.9 SDI	50	10/98 – 05/05	3782/1	
BORA (1J2)	1.9 TDI	66	10/98 – 05/05		3529/1
BORA (1J2)	1.9 TDI	66	10/98 – 05/05	3782	
BORA (1J2)	1.9 TDI	66	10/98 – 05/05	3782/1	
BORA (1J2)	1.9 TDI	74	09/00 – 05/05		3529/1
BORA (1J2)	1.9 TDI	74	09/00 – 05/05	3782	
BORA (1J2)	1.9 TDI	81	10/98 – 06/01		3529/1
BORA (1J2)	1.9 TDI	81	10/98 – 06/01	3782	
BORA (1J2)	1.9 TDI	81	10/98 – 06/01	3782/1	
BORA (1J2)	1.9 TDI	85	12/98 – 01/02		3529/1
BORA (1J2)	1.9 TDI	85	12/98 – 01/02	3782	
BORA (1J2)	1.9 TDI	85	12/98 – 01/02	3782/1	
BORA (1J2)	1.9 TDI	96	11/00 – 05/05		3529/1
BORA (1J2)	1.9 TDI	96	11/00 – 05/05	3590/1	
BORA (1J2)	1.9 TDI	110	05/00 – 05/05		3529/1
BORA (1J2)	1.9 TDI	110	05/00 – 05/05	3590/1	
BORA (1J2)	1.9 TDI 4motion	66	11/98 – 04/02		3529/1
BORA (1J2)	1.9 TDI 4motion	66	11/98 – 04/02	3782	
BORA (1J2)	1.9 TDI 4motion	74	09/00 – 05/05		3529/1
BORA (1J2)	1.9 TDI 4motion	74	09/00 – 05/05	3782	
BORA (1J2)	1.9 TDI 4motion	85	02/99 – 06/01		3529/1
BORA (1J2)	1.9 TDI 4motion	85	02/99 – 06/01	3782	
BORA (1J2)	1.9 TDI 4motion	96	11/00 – 05/05		3529/1
BORA (1J2)	1.9 TDI 4motion	96	11/00 – 05/05	3590/1	
BORA (1J2)	1.9 TDI 4motion	110	05/00 – 05/05		3529/1
BORA (1J2)	1.9 TDI 4motion	110	05/00 – 05/05	3590/1	
BORA (1J2)	2.0 4motion	85	04/00 – 05/05		3529/1
BORA (1J2)	2.0 4motion	85	04/00 – 05/05	3782	
BORA (1J2)	2.3 V5	110	10/98 – 10/00		3529/1
BORA (1J2)	2.3 V5	110	10/98 – 10/00	3590/1	
BORA (1J2)	2.3 V5	125	10/00 – 05/05		3529/1
BORA (1J2)	2.3 V5	125	10/00 – 05/05	3590/1	
BORA (1J2)	2.3 V5 4motion	110	12/98 – 10/00		3529/1
BORA (1J2)	2.3 V5 4motion	110	12/98 – 10/00	3590/1	
BORA (1J2)	2.3 V5 4motion	125	10/00 – 05/05		3529/1
BORA (1J2)	2.3 V5 4motion	125	10/00 – 05/05	3590/1	
BORA (1J2)	2.8 V6 4motion	150	03/99 – 05/05		3529/1
BORA (1J2)	2.8 V6 4motion	150	03/99 – 05/05	3590/1	
BORA Estate (1J6)	16	74	05/99 – 05/05		3529/1
BORA Estate (1J6)	16	74	05/99 – 05/05	3782	
BORA Estate (1J6)	16	75	08/00 – 05/05		3529/1
BORA Estate (1J6)	16	75	08/00 – 05/05	3782	
BORA Estate (1J6)	20	85	05/99 – 05/05		3529/1
BORA Estate (1J6)	20	85	05/99 – 05/05	3782	
BORA Estate (1J6)	1.4 16V	55	09/01 – 05/05		3529/1
BORA Estate (1J6)	1.4 16V	55	09/01 – 05/05	3782	
BORA Estate (1J6)	1.6 16V	77	02/00 – 05/05		3529/1

MAKE & MODEL   		KW	YEAR		
VOLKSWAGEN					
BORA Estate (1J6)	1.6 16V	77	02/00 – 05/05	3782	
BORA Estate (1J6)	1.6 FSI	81	01/02 – 05/05		3529/1
BORA Estate (1J6)	1.6 FSI	81	01/02 – 05/05	3782	
BORA Estate (1J6)	1.8 4motion	92	05/99 – 05/05		3529/1
BORA Estate (1J6)	1.8 4motion	92	05/99 – 05/05	3782	
BORA Estate (1J6)	1.8 T	110	05/00 – 05/05		3529/1
BORA Estate (1J6)	1.8 T	110	05/00 – 05/05	3590/1	
BORA Estate (1J6)	1.8 T	132	05/02 – 05/05		3529/1
BORA Estate (1J6)	1.8 T	132	05/02 – 05/05	3590/1	
BORA Estate (1J6)	1.9 TDI	66	07/04 – 05/05		3529/1
BORA Estate (1J6)	1.9 TDI	66	07/04 – 05/05	3782	
BORA Estate (1J6)	1.9 TDI	74	09/00 – 05/05		3529/1
BORA Estate (1J6)	1.9 TDI	74	09/00 – 05/05	3782	
BORA Estate (1J6)	1.9 TDI	81	05/99 – 06/01		3529/1
BORA Estate (1J6)	1.9 TDI	81	05/99 – 06/01	3782	
BORA Estate (1J6)	1.9 TDI	85	05/99 – 06/01		3529/1
BORA Estate (1J6)	1.9 TDI	85	05/99 – 06/01	3782	
BORA Estate (1J6)	1.9 TDI	96	11/00 – 05/05		3529/1
BORA Estate (1J6)	1.9 TDI	96	11/00 – 05/05	3590/1	
BORA Estate (1J6)	1.9 TDI	110	05/01 – 05/05		3529/1
BORA Estate (1J6)	1.9 TDI	110	05/01 – 05/05	3590/1	
BORA Estate (1J6)	1.9 TDI 4motion	74	09/00 – 05/05		3529/1
BORA Estate (1J6)	1.9 TDI 4motion	74	09/00 – 05/05	3782	
BORA Estate (1J6)	1.9 TDI 4motion	85	05/99 – 06/01		3529/1
BORA Estate (1J6)	1.9 TDI 4motion	85	05/99 – 06/01	3782	
BORA Estate (1J6)	1.9 TDI 4motion	96	11/00 – 05/05		3529/1
BORA Estate (1J6)	1.9 TDI 4motion	96	11/00 – 05/05	3590/1	
BORA Estate (1J6)	1.9 TDI 4motion	110	05/01 – 05/05		3529/1
BORA Estate (1J6)	1.9 TDI 4motion	110	05/01 – 05/05	3590/1	
BORA Estate (1J6)	2.0 4motion	85	04/00 – 05/05		3529/1
BORA Estate (1J6)	2.0 4motion	85	04/00 – 05/05	3782	
BORA Estate (1J6)	2.0 4motion	88	12/99 – 05/03		3529/1
BORA Estate (1J6)	2.0 4motion	88	12/99 – 05/03	3782	
BORA Estate (1J6)	2.3 V5	110	05/99 – 10/00		3529/1
BORA Estate (1J6)	2.3 V5	110	05/99 – 10/00	3590/1	
BORA Estate (1J6)	2.3 V5	125	10/00 – 05/05		3529/1
BORA Estate (1J6)	2.3 V5	125	10/00 – 05/05	3590/1	
BORA Estate (1J6)	2.3 V5 4motion	110	05/99 – 10/00		3529/1
BORA Estate (1J6)	2.3 V5 4motion	110	05/99 – 10/00	3590/1	
BORA Estate (1J6)	2.3 V5 4motion	125	10/00 – 05/05		3529/1
BORA Estate (1J6)	2.3 V5 4motion	125	10/00 – 05/05	3590/1	
BORA Estate (1J6)	2.8 V6 4motion	150	05/99 – 05/05		3529/1
BORA Estate (1J6)	2.8 V6 4motion	150	05/99 – 05/05	3590/1	
BORA Estate (1J6)	2.8 VR6	150	03/00 – 05/00		3529/1
BORA Estate (1J6)	2.8 VR6	150	03/00 – 05/00	3590/1	
BORA IV / JETTA IV (1J6)	1.6 (AEH)	74	05/99 – 05/05	3682	
BORA IV / JETTA IV (1J6)	1.6 (AKL)	74	05/99 – 05/05	3682	
BORA IV / JETTA IV (1J6)	1.6 (APF)	74	05/99 – 05/05	3682	
CADDY ALLTRACK Box (SAA)	1.0 TSI	75	11/15 -		4336
CADDY ALLTRACK Box (SAA)	1.2 TSI	62	06/15 -		4336
CADDY ALLTRACK Box (SAA)	1.4 TGI CNG	81	06/15 -		4336
CADDY ALLTRACK Box (SAA)	1.4 TSI	92	05/15 -		4336
CADDY ALLTRACK Box (SAA)	2.0 TDI	55	05/15 -		4336
CADDY ALLTRACK Box (SAA)	2.0 TDI	75	05/15 -		4336
CADDY ALLTRACK Box (SAA)	2.0 TDI	110	05/15 -		4336
CADDY ALLTRACK Box (SAA)	2.0 TDI 4motion	90	05/15 -		4336
CADDY ALLTRACK Box (SAA)	2.0 TDI 4motion	110	11/15 -		4336
CADDY ALLTRACK Estate (SAB)	1.0 TSI	75	11/15 -		4336
CADDY ALLTRACK Estate (SAB)	1.2 TSI	62	06/15 -		4336
CADDY ALLTRACK Estate (SAB)	1.4 TGI CNG	81	06/15 -		4336
CADDY ALLTRACK Estate (SAB)	1.4 TSI	92	05/15 -		4336
CADDY ALLTRACK Estate (SAB)	2.0 TDI	55	05/15 -		4336
CADDY ALLTRACK Estate (SAB)	2.0 TDI	75	05/15 -		4336
CADDY ALLTRACK Estate (SAB)	2.0 TDI	110	05/15 -		4336
CADDY ALLTRACK Estate (SAB)	2.0 TDI 4motion	90	05/15 -		4336
CADDY ALLTRACK Estate (SAB)	2.0 TDI 4motion	110	11/15 -		4336
CADDY I (14)	15	51	08/82 – 07/83	3585	
CADDY I (14)	16	55	01/83 – 07/92	3585	
CADDY I (14)	16	55	10/82 – 10/83	3585	
CADDY I (14)	18	70	08/85 – 07/92	3585	
CADDY I (14)	1.5	51	08/82 – 07/83	3444	

MAKE & MODEL		KW	YEAR		
VOLKSWAGEN					
CADDY I (14)	1.6	55	01/83 – 07/92	3444	
CADDY I (14)	1.6	55	10/82 – 10/83	3444	
CADDY I (14)	1.6 D	40	08/82 – 07/92	3444	
CADDY I (14)	1.6 D	40	08/82 – 07/92	3585	
CADDY I (14)	1.8	70	08/85 – 07/92	3444	
CADDY II Box (9K9A)	1.9 D	47	11/95 – 01/04	3551	
CADDY II Box (9K9A)	1.9 SDI	47	11/95 – 01/04	3551	
CADDY II Box (9K9A)	60 1.4	44	11/95 – 01/04	3551	
CADDY II Box (9K9A)	75 1.6	55	11/95 – 05/97	3551	
CADDY II Box (9K9A)	75 1.6	55	11/95 – 09/00	3551	
CADDY II Estate (9K9B)	14	44	11/95 – 01/04	3551	
CADDY II Estate (9K9B)	16	55	11/95 – 05/97	3551	
CADDY II Estate (9K9B)	1.9 D	47	11/95 – 01/04	3551	
CADDY II Estate (9K9B)	1.9 SDI	47	11/95 – 01/04	3551	
CADDY II Pickup (9U7)	16	55	06/96 – 12/00	3731	
CADDY II Pickup (9U7)	1.9 D	47	06/96 – 12/00	3731	
CADDY III Box (2KA, 2KH, 2CA, 2CH)	14	55	03/04 – 05/06		3529/1
CADDY III Box (2KA, 2KH, 2CA, 2CH)	14	55	03/04 – 05/06	3782	
CADDY III Box (2KA, 2KH, 2CA, 2CH)	14	55	03/04 – 05/06	3904	
CADDY III Box (2KA, 2KH, 2CA, 2CH)	14	55	03/04 – 05/06		3905
CADDY III Box (2KA, 2KH, 2CA, 2CH)	14	59	05/06 – 08/10		3529/1
CADDY III Box (2KA, 2KH, 2CA, 2CH)	14	59	05/06 – 08/10	3782	
CADDY III Box (2KA, 2KH, 2CA, 2CH)	14	59	05/06 – 08/10	3904	
CADDY III Box (2KA, 2KH, 2CA, 2CH)	14	59	05/06 – 08/10		3905
CADDY III Box (2KA, 2KH, 2CA, 2CH)	16	75	04/04 -		3529/1
CADDY III Box (2KA, 2KH, 2CA, 2CH)	16	75	04/04 – 05/15	3782	
CADDY III Box (2KA, 2KH, 2CA, 2CH)	16	75	04/04 – 05/15	3904	
CADDY III Box (2KA, 2KH, 2CA, 2CH)	16	75	04/04 – 05/15		3905
CADDY III Box (2KA, 2KH, 2CA, 2CH)	1.2 TSI	63	09/10 -		3529/1
CADDY III Box (2KA, 2KH, 2CA, 2CH)	1.2 TSI	63	09/10 – 05/15	3782	
CADDY III Box (2KA, 2KH, 2CA, 2CH)	1.2 TSI	63	09/10 – 05/15	3904	
CADDY III Box (2KA, 2KH, 2CA, 2CH)	1.2 TSI	63	09/10 – 05/15		4135
CADDY III Box (2KA, 2KH, 2CA, 2CH)	1.2 TSI	77	09/10 -		3529/1
CADDY III Box (2KA, 2KH, 2CA, 2CH)	1.2 TSI	77	09/10 – 05/15	3782	
CADDY III Box (2KA, 2KH, 2CA, 2CH)	1.2 TSI	77	09/10 – 05/15	3904	
CADDY III Box (2KA, 2KH, 2CA, 2CH)	1.2 TSI	77	09/10 – 05/15		4135
CADDY III Box (2KA, 2KH, 2CA, 2CH)	1.6 BiFuel	75	05/11 -		3529/1
CADDY III Box (2KA, 2KH, 2CA, 2CH)	1.6 BiFuel	75	05/11 – 05/15	3782	
CADDY III Box (2KA, 2KH, 2CA, 2CH)	1.6 BiFuel	75	05/11 – 05/15	3904	
CADDY III Box (2KA, 2KH, 2CA, 2CH)	1.6 BiFuel	75	05/11 – 05/15		4135
CADDY III Box (2KA, 2KH, 2CA, 2CH)	1.6 TDI	55	08/10 -		3529/1
CADDY III Box (2KA, 2KH, 2CA, 2CH)	1.6 TDI	55	08/10 – 05/15	3782	
CADDY III Box (2KA, 2KH, 2CA, 2CH)	1.6 TDI	55	08/10 – 05/15	3904	
CADDY III Box (2KA, 2KH, 2CA, 2CH)	1.6 TDI	55	08/10 – 05/15		4135
CADDY III Box (2KA, 2KH, 2CA, 2CH)	1.6 TDI	75	08/10 -		3529/1
CADDY III Box (2KA, 2KH, 2CA, 2CH)	1.6 TDI	75	08/10 – 05/15	3782	
CADDY III Box (2KA, 2KH, 2CA, 2CH)	1.6 TDI	75	08/10 – 05/15	3904	
CADDY III Box (2KA, 2KH, 2CA, 2CH)	1.6 TDI	75	08/10 – 05/15		4135
CADDY III Box (2KA, 2KH, 2CA, 2CH)	1.9 TDI	55	09/05 – 08/10		3529/1
CADDY III Box (2KA, 2KH, 2CA, 2CH)	1.9 TDI	55	09/05 – 08/10	3782	
CADDY III Box (2KA, 2KH, 2CA, 2CH)	1.9 TDI	55	09/05 – 08/10	3904	
CADDY III Box (2KA, 2KH, 2CA, 2CH)	1.9 TDI	55	09/05 – 08/10		3905
CADDY III Box (2KA, 2KH, 2CA, 2CH)	1.9 TDI	77	04/04 – 08/10		3529/1
CADDY III Box (2KA, 2KH, 2CA, 2CH)	1.9 TDI	77	04/04 – 08/10	3782	
CADDY III Box (2KA, 2KH, 2CA, 2CH)	1.9 TDI	77	04/04 – 08/10	3904	
CADDY III Box (2KA, 2KH, 2CA, 2CH)	1.9 TDI	77	04/04 – 08/10		3905
CADDY III Box (2KA, 2KH, 2CA, 2CH)	1.9 TDI 4motion	77	11/08 – 08/10		3529/1
CADDY III Box (2KA, 2KH, 2CA, 2CH)	1.9 TDI 4motion	77	11/08 – 08/10	3782	
CADDY III Box (2KA, 2KH, 2CA, 2CH)	1.9 TDI 4motion	77	11/08 – 08/10	3904	
CADDY III Box (2KA, 2KH, 2CA, 2CH)	1.9 TDI 4motion	77	11/08 – 08/10		3905
CADDY III Box (2KA, 2KH, 2CA, 2CH)	2.0 EcoFuel	80	04/06 -		3529/1
CADDY III Box (2KA, 2KH, 2CA, 2CH)	2.0 EcoFuel	80	04/06 – 05/15	3782	
CADDY III Box (2KA, 2KH, 2CA, 2CH)	2.0 EcoFuel	80	04/06 – 05/15	3904	
CADDY III Box (2KA, 2KH, 2CA, 2CH)	2.0 EcoFuel	80	04/06 – 05/15		3905
CADDY III Box (2KA, 2KH, 2CA, 2CH)	2.0 SDI	51	03/04 – 08/10		3529/1
CADDY III Box (2KA, 2KH, 2CA, 2CH)	2.0 SDI	51	03/04 – 08/10	3782	
CADDY III Box (2KA, 2KH, 2CA, 2CH)	2.0 SDI	51	03/04 – 08/10	3904	
CADDY III Box (2KA, 2KH, 2CA, 2CH)	2.0 SDI	51	03/04 – 08/10		3905
CADDY III Box (2KA, 2KH, 2CA, 2CH)	2.0 TDI	62	11/10 -		3529/1
CADDY III Box (2KA, 2KH, 2CA, 2CH)	2.0 TDI	62	11/10 – 05/15	3782	
CADDY III Box (2KA, 2KH, 2CA, 2CH)	2.0 TDI	62	11/10 – 05/15	3904	

BESER

MAKE & MODEL		KW	YEAR		
VOLKSWAGEN					
CADDY III Box (2KA, 2KH, 2CA, 2CH)	2.0 TDI	62	11/10 – 05/15		4135
CADDY III Box (2KA, 2KH, 2CA, 2CH)	2.0 TDI	81	08/10 -		3529/1
CADDY III Box (2KA, 2KH, 2CA, 2CH)	2.0 TDI	81	08/10 – 05/15	3782	
CADDY III Box (2KA, 2KH, 2CA, 2CH)	2.0 TDI	81	08/10 – 05/15	3904	
CADDY III Box (2KA, 2KH, 2CA, 2CH)	2.0 TDI	81	08/10 – 05/15		4135
CADDY III Box (2KA, 2KH, 2CA, 2CH)	2.0 TDI	103	09/07 – 08/10		3529/1
CADDY III Box (2KA, 2KH, 2CA, 2CH)	2.0 TDI	103	09/07 – 08/10	3782	
CADDY III Box (2KA, 2KH, 2CA, 2CH)	2.0 TDI	103	09/07 – 08/10	3904	
CADDY III Box (2KA, 2KH, 2CA, 2CH)	2.0 TDI	103	09/07 – 08/10		3905
CADDY III Box (2KA, 2KH, 2CA, 2CH)	2.0 TDI	125	05/12 -		3529/1
CADDY III Box (2KA, 2KH, 2CA, 2CH)	2.0 TDI	125	05/12 – 05/15	3782	
CADDY III Box (2KA, 2KH, 2CA, 2CH)	2.0 TDI	125	05/12 – 05/15	3904	
CADDY III Box (2KA, 2KH, 2CA, 2CH)	2.0 TDI	125	05/12 – 05/15		4135
CADDY III Box (2KA, 2KH, 2CA, 2CH)	2.0 TDI 16V	103	11/10 -		3529/1
CADDY III Box (2KA, 2KH, 2CA, 2CH)	2.0 TDI 16V	103	11/10 – 05/15	3782	
CADDY III Box (2KA, 2KH, 2CA, 2CH)	2.0 TDI 16V	103	11/10 – 05/15	3904	
CADDY III Box (2KA, 2KH, 2CA, 2CH)	2.0 TDI 16V	103	11/10 – 05/15		4135
CADDY III Box (2KA, 2KH, 2CA, 2CH)	2.0 TDI 16V 4motion	103	11/10 -		3529/1
CADDY III Box (2KA, 2KH, 2CA, 2CH)	2.0 TDI 16V 4motion	103	11/10 – 05/15	3904	
CADDY III Box (2KA, 2KH, 2CA, 2CH)	2.0 TDI 16V 4motion	103	11/10 – 05/15		4135
CADDY III Box (2KA, 2KH, 2CA, 2CH)	2.0 TDI 4motion	62	12/10 -		3529/1
CADDY III Box (2KA, 2KH, 2CA, 2CH)	2.0 TDI 4motion	62	12/10 – 05/15	3782	
CADDY III Box (2KA, 2KH, 2CA, 2CH)	2.0 TDI 4motion	62	12/10 – 05/15	3904	
CADDY III Box (2KA, 2KH, 2CA, 2CH)	2.0 TDI 4motion	62	12/10 – 05/15		4135
CADDY III Box (2KA, 2KH, 2CA, 2CH)	2.0 TDI 4motion	81	08/10 -		3529/1
CADDY III Box (2KA, 2KH, 2CA, 2CH)	2.0 TDI 4motion	81	08/10 – 05/15	3782	
CADDY III Box (2KA, 2KH, 2CA, 2CH)	2.0 TDI 4motion	81	08/10 – 05/15	3904	
CADDY III Box (2KA, 2KH, 2CA, 2CH)	2.0 TDI 4motion	81	08/10 – 05/15		4135
CADDY III Estate (2KB, 2KJ, 2CB, 2CJ)	14	55	03/04 – 05/06		3529/1
CADDY III Estate (2KB, 2KJ, 2CB, 2CJ)	14	55	03/04 – 05/06	3782	
CADDY III Estate (2KB, 2KJ, 2CB, 2CJ)	14	55	03/04 – 05/06	3904	
CADDY III Estate (2KB, 2KJ, 2CB, 2CJ)	14	55	03/04 – 05/06		3905
CADDY III Estate (2KB, 2KJ, 2CB, 2CJ)	14	59	05/06 – 08/10		3529/1
CADDY III Estate (2KB, 2KJ, 2CB, 2CJ)	14	59	05/06 – 08/10	3782	
CADDY III Estate (2KB, 2KJ, 2CB, 2CJ)	14	59	05/06 – 08/10	3904	
CADDY III Estate (2KB, 2KJ, 2CB, 2CJ)	14	59	05/06 – 08/10		3905
CADDY III Estate (2KB, 2KJ, 2CB, 2CJ)	16	74	03/05 -		3529/1
CADDY III Estate (2KB, 2KJ, 2CB, 2CJ)	16	74	03/05 – 05/15	3782	
CADDY III Estate (2KB, 2KJ, 2CB, 2CJ)	16	74	03/05 – 05/15	3904	
CADDY III Estate (2KB, 2KJ, 2CB, 2CJ)	16	74	03/05 – 05/15		3905
CADDY III Estate (2KB, 2KJ, 2CB, 2CJ)	16	75	04/04 -		3529/1
CADDY III Estate (2KB, 2KJ, 2CB, 2CJ)	16	75	04/04 – 05/15	3782	
CADDY III Estate (2KB, 2KJ, 2CB, 2CJ)	16	75	04/04 – 05/15	3904	
CADDY III Estate (2KB, 2KJ, 2CB, 2CJ)	16	75	04/04 – 05/15		3905
CADDY III Estate (2KB, 2KJ, 2CB, 2CJ)	1.2 TSI	63	09/10 -		3529/1
CADDY III Estate (2KB, 2KJ, 2CB, 2CJ)	1.2 TSI	63	09/10 – 05/15	3782	
CADDY III Estate (2KB, 2KJ, 2CB, 2CJ)	1.2 TSI	63	09/10 – 05/15	3904	
CADDY III Estate (2KB, 2KJ, 2CB, 2CJ)	1.2 TSI	63	09/10 – 05/15		4135
CADDY III Estate (2KB, 2KJ, 2CB, 2CJ)	1.2 TSI	77	09/10 -		3529/1
CADDY III Estate (2KB, 2KJ, 2CB, 2CJ)	1.2 TSI	77	09/10 – 05/15	3782	
CADDY III Estate (2KB, 2KJ, 2CB, 2CJ)	1.2 TSI	77	09/10 – 05/15	3904	
CADDY III Estate (2KB, 2KJ, 2CB, 2CJ)	1.2 TSI	77	09/10 – 05/15		4135
CADDY III Estate (2KB, 2KJ, 2CB, 2CJ)	1.6 BiFuel	75	05/11 -		3529/1
CADDY III Estate (2KB, 2KJ, 2CB, 2CJ)	1.6 BiFuel	75	05/11 – 05/15	3782	
CADDY III Estate (2KB, 2KJ, 2CB, 2CJ)	1.6 BiFuel	75	05/11 – 05/15	3904	
CADDY III Estate (2KB, 2KJ, 2CB, 2CJ)	1.6 BiFuel	75	05/11 – 05/15		4135
CADDY III Estate (2KB, 2KJ, 2CB, 2CJ)	1.6 TDI	55	08/10 -		3529/1
CADDY III Estate (2KB, 2KJ, 2CB, 2CJ)	1.6 TDI	55	08/10 – 05/15	3782	
CADDY III Estate (2KB, 2KJ, 2CB, 2CJ)	1.6 TDI	55	08/10 – 05/15	3904	
CADDY III Estate (2KB, 2KJ, 2CB, 2CJ)	1.6 TDI	55	08/10 – 05/15		4135
CADDY III Estate (2KB, 2KJ, 2CB, 2CJ)	1.6 TDI	75	08/10 -		3529/1
CADDY III Estate (2KB, 2KJ, 2CB, 2CJ)	1.6 TDI	75	08/10 – 05/15	3782	
CADDY III Estate (2KB, 2KJ, 2CB, 2CJ)	1.6 TDI	75	08/10 – 05/15	3904	
CADDY III Estate (2KB, 2KJ, 2CB, 2CJ)	1.6 TDI	75	08/10 – 05/15		4135
CADDY III Estate (2KB, 2KJ, 2CB, 2CJ)	1.9 TDI	55	09/05 – 08/10		3529/1
CADDY III Estate (2KB, 2KJ, 2CB, 2CJ)	1.9 TDI	55	09/05 – 08/10	3782	
CADDY III Estate (2KB, 2KJ, 2CB, 2CJ)	1.9 TDI	55	09/05 – 08/10	3904	
CADDY III Estate (2KB, 2KJ, 2CB, 2CJ)	1.9 TDI	55	09/05 – 08/10		3905
CADDY III Estate (2KB, 2KJ, 2CB, 2CJ)	1.9 TDI	77	04/04 – 08/10		3529/1
CADDY III Estate (2KB, 2KJ, 2CB, 2CJ)	1.9 TDI	77	04/04 – 08/10	3782	
CADDY III Estate (2KB, 2KJ, 2CB, 2CJ)	1.9 TDI	77	04/04 – 08/10	3904	

MAKE & MODEL		KW	YEAR		
VOLKSWAGEN					
CADDY III Estate (2KB, 2KJ, 2CB, 2CJ)	1.9 TDI	77	04/04 – 08/10		3905
CADDY III Estate (2KB, 2KJ, 2CB, 2CJ)	1.9 TDI 4motion	77	05/08 – 08/10		3529/1
CADDY III Estate (2KB, 2KJ, 2CB, 2CJ)	1.9 TDI 4motion	77	05/08 – 08/10	3782	
CADDY III Estate (2KB, 2KJ, 2CB, 2CJ)	1.9 TDI 4motion	77	05/08 – 08/10	3904	
CADDY III Estate (2KB, 2KJ, 2CB, 2CJ)	1.9 TDI 4motion	77	05/08 – 08/10		3905
CADDY III Estate (2KB, 2KJ, 2CB, 2CJ)	2.0 EcoFuel	80	04/06 -		3529/1
CADDY III Estate (2KB, 2KJ, 2CB, 2CJ)	2.0 EcoFuel	80	04/06 – 05/15	3782	
CADDY III Estate (2KB, 2KJ, 2CB, 2CJ)	2.0 EcoFuel	80	04/06 – 05/15	3904	
CADDY III Estate (2KB, 2KJ, 2CB, 2CJ)	2.0 EcoFuel	80	04/06 – 05/15		3905
CADDY III Estate (2KB, 2KJ, 2CB, 2CJ)	2.0 SDI	51	03/04 – 08/10		3529/1
CADDY III Estate (2KB, 2KJ, 2CB, 2CJ)	2.0 SDI	51	03/04 – 08/10	3782	
CADDY III Estate (2KB, 2KJ, 2CB, 2CJ)	2.0 SDI	51	03/04 – 08/10	3904	
CADDY III Estate (2KB, 2KJ, 2CB, 2CJ)	2.0 SDI	51	03/04 – 08/10		3905
CADDY III Estate (2KB, 2KJ, 2CB, 2CJ)	2.0 TDI	81	08/10 -		3529/1
CADDY III Estate (2KB, 2KJ, 2CB, 2CJ)	2.0 TDI	81	08/10 – 05/15	3782	
CADDY III Estate (2KB, 2KJ, 2CB, 2CJ)	2.0 TDI	81	08/10 – 05/15	3904	
CADDY III Estate (2KB, 2KJ, 2CB, 2CJ)	2.0 TDI	81	08/10 – 05/15		4135
CADDY III Estate (2KB, 2KJ, 2CB, 2CJ)	2.0 TDI	103	09/07 – 08/10		3529/1
CADDY III Estate (2KB, 2KJ, 2CB, 2CJ)	2.0 TDI	103	09/07 – 08/10	3782	
CADDY III Estate (2KB, 2KJ, 2CB, 2CJ)	2.0 TDI	103	09/07 – 08/10	3904	
CADDY III Estate (2KB, 2KJ, 2CB, 2CJ)	2.0 TDI	103	09/07 – 08/10		3905
CADDY III Estate (2KB, 2KJ, 2CB, 2CJ)	2.0 TDI	125	05/12 -		3529/1
CADDY III Estate (2KB, 2KJ, 2CB, 2CJ)	2.0 TDI	125	05/12 – 05/15	3782	
CADDY III Estate (2KB, 2KJ, 2CB, 2CJ)	2.0 TDI	125	05/12 – 05/15	3904	
CADDY III Estate (2KB, 2KJ, 2CB, 2CJ)	2.0 TDI	125	05/12 – 05/15		4135
CADDY III Estate (2KB, 2KJ, 2CB, 2CJ)	2.0 TDI 16V	103	11/10 -		3529/1
CADDY III Estate (2KB, 2KJ, 2CB, 2CJ)	2.0 TDI 16V	103	11/10 – 05/15	3782	
CADDY III Estate (2KB, 2KJ, 2CB, 2CJ)	2.0 TDI 16V	103	11/10 – 05/15	3904	
CADDY III Estate (2KB, 2KJ, 2CB, 2CJ)	2.0 TDI 16V	103	11/10 – 05/15		4135
CADDY III Estate (2KB, 2KJ, 2CB, 2CJ)	2.0 TDI 16V 4motion	103	11/10 -		3529/1
CADDY III Estate (2KB, 2KJ, 2CB, 2CJ)	2.0 TDI 16V 4motion	103	11/10 – 05/15	3782	
CADDY III Estate (2KB, 2KJ, 2CB, 2CJ)	2.0 TDI 16V 4motion	103	11/10 – 05/15	3904	
CADDY III Estate (2KB, 2KJ, 2CB, 2CJ)	2.0 TDI 16V 4motion	103	11/10 – 05/15		4135
CADDY III Estate (2KB, 2KJ, 2CB, 2CJ)	2.0 TDI 4motion	81	08/10 -		3529/1
CADDY III Estate (2KB, 2KJ, 2CB, 2CJ)	2.0 TDI 4motion	81	08/10 – 05/15	3782	
CADDY III Estate (2KB, 2KJ, 2CB, 2CJ)	2.0 TDI 4motion	81	08/10 – 05/15	3904	
CADDY III Estate (2KB, 2KJ, 2CB, 2CJ)	2.0 TDI 4motion	81	08/10 – 05/15		4135
CADDY IV Box (SAA, SAH)	1.0 TSI	75	11/15 -		4336
CADDY IV Box (SAA, SAH)	1.4 TGI CNG	81	06/15 -		4336
CADDY IV Box (SAA, SAH)	2.0 TDI	75	05/15 -		4336
CADDY IV Box (SAA, SAH)	1.6	81	11/15 -		4336
CADDY IV Box (SAA, SAH)	1.4 TSI	92	05/15 -		4336
CADDY IV Box (SAA, SAH)	1.6 TDI	55	05/15 -		4336
CADDY IV Box (SAA, SAH)	1.6 TDI	75	05/15 -		4336
CADDY IV Box (SAA, SAH)	2.0 TDI	55	05/15 -		4336
CADDY IV Box (SAA, SAH)	2.0 TDI	103	05/15 -		4336
CADDY IV Box (SAA, SAH)	2.0 TDI	110	05/15 -		4336
CADDY IV Box (SAA, SAH)	2.0 TDI 4motion	55	11/15 -		4336
CADDY IV Box (SAA, SAH)	2.0 TDI 4motion	81	05/15 -		4336
CADDY IV Box (SAA, SAH)	2.0 TDI 4motion	90	05/15 -		4336
CADDY IV Box (SAA, SAH)	2.0 TDI 4motion	103	05/15 -		4336
CADDY IV Box (SAA, SAH)	2.0 TDI 4motion	110	11/15 -		4336
CADDY IV Box (SAA, SAH) -	1.2 TSI	62	06/15		4336
CADDY IV Estate (SAB, SAJ)	2.0 TDI	103	05/15 -		4336
CADDY IV Estate (SAB, SAJ)	1.6	81	11/15 -		4336
CADDY IV Estate (SAB, SAJ)	1.0 TSI	75	11/15 -		4336
CADDY IV Estate (SAB, SAJ)	1.2 TSI	62	06/15 -		4336
CADDY IV Estate (SAB, SAJ)	1.4 TGI CNG	81	06/15 -		4336
CADDY IV Estate (SAB, SAJ)	1.4 TSI	92	05/15 -		4336
CADDY IV Estate (SAB, SAJ)	1.6 TDI	55	05/15 -		4336
CADDY IV Estate (SAB, SAJ)	1.6 TDI	75	05/15 -		4336
CADDY IV Estate (SAB, SAJ)	2.0 TDI	55	05/15 -		4336
CADDY IV Estate (SAB, SAJ)	2.0 TDI	75	05/15 -		4336
CADDY IV Estate (SAB, SAJ)	2.0 TDI	110	05/15 -		4336
CADDY IV Estate (SAB, SAJ)	2.0 TDI 4motion	81	05/15 -		4336
CADDY IV Estate (SAB, SAJ)	2.0 TDI 4motion	110	11/15		4336
CADDY IV Estate (SAB, SAJ)	2.0 TDI 4motion	90	05/15 -		4336
CADDY IV Estate (SAB, SAJ)	2.0 TDI 4motion	103	05/15 -		4336
CC	18	118	07/10 -	3904	
CC	20	147	07/10 -	3904	
CORRADO (53I)	1.8 16V	100	04/89 – 07/92		3529

MAKE & MODEL   		KW	YEAR		
VOLKSWAGEN					
CORRADO (53I)	1.8 16V	100	04/89 – 07/92	3531	
CORRADO (53I)	1.8 G60	118	09/88 – 09/93		3529
CORRADO (53I)	1.8 G60	118	09/88 – 09/93		3529/1
CORRADO (53I)	1.8 G60	118	09/88 – 09/93	3551	
CORRADO (53I)	2.0 i	85	04/93 – 12/95		3529
CORRADO (53I)	2.0 i	85	04/93 – 12/95	3531	
CORRADO (53I)	2.0 i 16V	100	08/91 – 12/95		3529
CORRADO (53I)	2.0 i 16V	100	08/91 – 12/95	3531	
CORRADO (53I)	2.9 VR6	140	08/91 – 12/95		3529
CORRADO (53I)	2.9 VR6	140	08/91 – 12/95		3529/1
CORRADO (53I)	2.9 VR6	140	08/91 – 12/95	3551	
CORRADO (53I)	1.8 G60	118	09.88 - 09.93	3650	
CRAFTER 30-35 Bus (2E_)	2.0 TDI	80	05/11 -	3925	
CRAFTER 30-35 Bus (2E_)	2.0 TDI	80	05/11 -		3926
CRAFTER 30-35 Bus (2E_)	2.0 TDI	84	11/13 -	3925	
CRAFTER 30-35 Bus (2E_)	2.0 TDI	84	11/13 -		3926
CRAFTER 30-35 Bus (2E_)	2.0 TDI	84	11/13 -	3962	
CRAFTER 30-35 Bus (2E_)	2.0 TDI	100	05/11 -	3925	
CRAFTER 30-35 Bus (2E_)	2.0 TDI	100	05/11 -		3926
CRAFTER 30-35 Bus (2E_)	2.0 TDI	105	10/11 -	3925	
CRAFTER 30-35 Bus (2E_)	2.0 TDI	105	10/11 -		3926
CRAFTER 30-35 Bus (2E_)	2.0 TDI	120	07/11 -	3925	
CRAFTER 30-35 Bus (2E_)	2.0 TDI	120	07/11 -		3926
CRAFTER 30-35 Bus (2E_)	2.0 TDI 4motion	120	11/11 -	3925	
CRAFTER 30-35 Bus (2E_)	2.0 TDI 4motion	120	11/11 -		3926
CRAFTER 30-35 Bus (2E_)	2.5 TDI	65	04/06 – 07/11	3925	
CRAFTER 30-35 Bus (2E_)	2.5 TDI	65	04/06 – 07/11		3926
CRAFTER 30-35 Bus (2E_)	2.5 TDI	80	04/06 -	3925	
CRAFTER 30-35 Bus (2E_)	2.5 TDI	80	04/06 -		3926
CRAFTER 30-35 Bus (2E_)	2.5 TDI	100	04/06 -	3925	
CRAFTER 30-35 Bus (2E_)	2.5 TDI	100	04/06 -		3926
CRAFTER 30-35 Bus (2E_)	2.5 TDI	120	04/06 – 07/11	3925	
CRAFTER 30-35 Bus (2E_)	2.5 TDI	120	04/06 – 07/11		3926
CRAFTER 30-50 Box (2E_)	2.0 TDI	80	05/11 -	3925	
CRAFTER 30-50 Box (2E_)	2.0 TDI	80	05/11 -		3926
CRAFTER 30-50 Box (2E_)	2.0 TDI	80	05/11 -	3962	
CRAFTER 30-50 Box (2E_)	2.0 TDI	80	05/11 -		3963
CRAFTER 30-50 Box (2E_)	2.0 TDI	84	11/13 -	3925	
CRAFTER 30-50 Box (2E_)	2.0 TDI	84	11/13 -		3926
CRAFTER 30-50 Box (2E_)	2.0 TDI	84	11/13 -	3962	
CRAFTER 30-50 Box (2E_)	2.0 TDI	100	05/11 -	3925	
CRAFTER 30-50 Box (2E_)	2.0 TDI	100	05/11 -		3926
CRAFTER 30-50 Box (2E_)	2.0 TDI	100	05/11 -	3962	
CRAFTER 30-50 Box (2E_)	2.0 TDI	100	05/11 -		3963
CRAFTER 30-50 Box (2E_)	2.0 TDI	103	11/15 -		3926
CRAFTER 30-50 Box (2E_)	2.0 TDI	103	11/15 -		3963
CRAFTER 30-50 Box (2E_)	2.0 TDI	105	10/11 -	3925	
CRAFTER 30-50 Box (2E_)	2.0 TDI	105	10/11 -		3926
CRAFTER 30-50 Box (2E_)	2.0 TDI	105	10/11 -	3962	
CRAFTER 30-50 Box (2E_)	2.0 TDI	105	10/11 -		3963
CRAFTER 30-50 Box (2E_)	2.0 TDI	120	07/11 -	3925	
CRAFTER 30-50 Box (2E_)	2.0 TDI	120	07/11 -		3926
CRAFTER 30-50 Box (2E_)	2.0 TDI	120	07/11 -	3962	
CRAFTER 30-50 Box (2E_)	2.0 TDI	120	07/11 -		3963
CRAFTER 30-50 Box (2E_)	2.0 TDI 4motion	120	11/11 -	3925	
CRAFTER 30-50 Box (2E_)	2.0 TDI 4motion	120	11/11 -		3926
CRAFTER 30-50 Box (2E_)	2.0 TDI 4motion	120	11/11 -	3962	
CRAFTER 30-50 Box (2E_)	2.0 TDI 4motion	120	11/11 -		3963
CRAFTER 30-50 Box (2E_)	2.5 TDI	65	04/06 – 07/11	3925	
CRAFTER 30-50 Box (2E_)	2.5 TDI	65	04/06 – 07/11		3926
CRAFTER 30-50 Box (2E_)	2.5 TDI	65	04/06 – 07/11	3962	
CRAFTER 30-50 Box (2E_)	2.5 TDI	65	04/06 – 07/11		3963
CRAFTER 30-50 Box (2E_)	2.5 TDI	80	04/06 -	3925	
CRAFTER 30-50 Box (2E_)	2.5 TDI	80	04/06 -		3926
CRAFTER 30-50 Box (2E_)	2.5 TDI	80	04/06 -	3962	
CRAFTER 30-50 Box (2E_)	2.5 TDI	80	04/06 -		3963
CRAFTER 30-50 Box (2E_)	2.5 TDI	100	04/06 -	3925	
CRAFTER 30-50 Box (2E_)	2.5 TDI	100	04/06 -		3926
CRAFTER 30-50 Box (2E_)	2.5 TDI	100	04/06 -	3962	
CRAFTER 30-50 Box (2E_)	2.5 TDI	100	04/06 -		3963
CRAFTER 30-50 Box (2E_)	2.5 TDI	120	04/06 – 07/11	3925	

MAKE & MODEL		KW	YEAR		
VOLKSWAGEN					
CRAFTER 30-50 Box (2E_)	2.5 TDI	120	04/06 – 07/11		3926
CRAFTER 30-50 Box (2E_)	2.5 TDI	120	04/06 – 07/11	3962	
CRAFTER 30-50 Box (2E_)	2.5 TDI	120	04/06 – 07/11		3963
CRAFTER 30-50 Platform/Chassis (2F_)	2.0 TDI	80	05/11 -	3925	
CRAFTER 30-50 Platform/Chassis (2F_)	2.0 TDI	80	05/11 -		3926
CRAFTER 30-50 Platform/Chassis (2F_)	2.0 TDI	80	05/11 -	3962	
CRAFTER 30-50 Platform/Chassis (2F_)	2.0 TDI	80	05/11 -		3963
CRAFTER 30-50 Platform/Chassis (2F_)	2.0 TDI	84	11/13 -	3925	
CRAFTER 30-50 Platform/Chassis (2F_)	2.0 TDI	84	11/13 -		3926
CRAFTER 30-50 Platform/Chassis (2F_)	2.0 TDI	84	11/13 -	3962	
CRAFTER 30-50 Platform/Chassis (2F_)	2.0 TDI	100	05/11 -	3925	
CRAFTER 30-50 Platform/Chassis (2F_)	2.0 TDI	100	05/11 -		3926
CRAFTER 30-50 Platform/Chassis (2F_)	2.0 TDI	100	05/11 -	3962	
CRAFTER 30-50 Platform/Chassis (2F_)	2.0 TDI	100	05/11 -		3963
CRAFTER 30-50 Platform/Chassis (2F_)	2.0 TDI	103	11/15 -		3926
CRAFTER 30-50 Platform/Chassis (2F_)	2.0 TDI	103	11/15 -		3963
CRAFTER 30-50 Platform/Chassis (2F_)	2.0 TDI	105	10/11 -	3925	
CRAFTER 30-50 Platform/Chassis (2F_)	2.0 TDI	105	10/11 -		3926
CRAFTER 30-50 Platform/Chassis (2F_)	2.0 TDI	105	10/11 -	3962	
CRAFTER 30-50 Platform/Chassis (2F_)	2.0 TDI	105	10/11 -		3963
CRAFTER 30-50 Platform/Chassis (2F_)	2.0 TDI	120	07/11 -	3925	
CRAFTER 30-50 Platform/Chassis (2F_)	2.0 TDI	120	07/11 -		3926
CRAFTER 30-50 Platform/Chassis (2F_)	2.0 TDI	120	07/11 -	3962	
CRAFTER 30-50 Platform/Chassis (2F_)	2.0 TDI	120	07/11 -		3963
CRAFTER 30-50 Platform/Chassis (2F_)	2.0 TDI 4motion	120	11/11 -	3925	
CRAFTER 30-50 Platform/Chassis (2F_)	2.0 TDI 4motion	120	11/11 -		3926
CRAFTER 30-50 Platform/Chassis (2F_)	2.0 TDI 4motion	120	11/11 -	3962	
CRAFTER 30-50 Platform/Chassis (2F_)	2.0 TDI 4motion	120	11/11 -		3963
CRAFTER 30-50 Platform/Chassis (2F_)	2.5 TDI	65	04/06 – 07/11	3925	
CRAFTER 30-50 Platform/Chassis (2F_)	2.5 TDI	65	04/06 – 07/11		3926
CRAFTER 30-50 Platform/Chassis (2F_)	2.5 TDI	65	04/06 – 07/11	3962	
CRAFTER 30-50 Platform/Chassis (2F_)	2.5 TDI	65	04/06 – 07/11		3963
CRAFTER 30-50 Platform/Chassis (2F_)	2.5 TDI	80	04/06 -	3925	
CRAFTER 30-50 Platform/Chassis (2F_)	2.5 TDI	80	04/06 -		3926
CRAFTER 30-50 Platform/Chassis (2F_)	2.5 TDI	80	04/06 -	3962	
CRAFTER 30-50 Platform/Chassis (2F_)	2.5 TDI	80	04/06 -		3963
CRAFTER 30-50 Platform/Chassis (2F_)	2.5 TDI	100	04/06 -	3925	
CRAFTER 30-50 Platform/Chassis (2F_)	2.5 TDI	100	04/06 -		3926
CRAFTER 30-50 Platform/Chassis (2F_)	2.5 TDI	100	04/06 -	3962	
CRAFTER 30-50 Platform/Chassis (2F_)	2.5 TDI	100	04/06 -		3963
CRAFTER 30-50 Platform/Chassis (2F_)	2.5 TDI	120	04/06 – 07/11	3925	
CRAFTER 30-50 Platform/Chassis (2F_)	2.5 TDI	120	04/06 – 07/11		3926
CRAFTER 30-50 Platform/Chassis (2F_)	2.5 TDI	120	04/06 – 07/11	3962	
CRAFTER 30-50 Platform/Chassis (2F_)	2.5 TDI	120	04/06 – 07/11		3963
DERBY (86)	09	29	02/77 – 09/81	3327	
DERBY (86)	09	29	02/77 – 09/81	3343	
DERBY (86)	09	29	02/77 – 09/81	3483	
DERBY (86)	11	37	02/77 – 09/81	3327	
DERBY (86)	11	37	02/77 – 09/81	3343	
DERBY (86)	11	37	02/77 – 09/81	3483	
DERBY (86)	13	43	02/77 – 09/81	3327	
DERBY (86)	13	43	02/77 – 09/81	3343	
DERBY (86)	13	43	02/77 – 09/81	3483	
DERBY (86)	13	44	02/77 – 09/81	3327	
DERBY (86)	13	44	02/77 – 09/81	3343	
DERBY (86)	13	44	02/77 – 09/81	3483	
DERBY (86C, 80)	10	29	10/81 – 12/84	3327	
DERBY (86C, 80)	10	29	10/81 – 12/84	3343	
DERBY (86C, 80)	10	29	10/81 – 12/84	3483	
DERBY (86C, 80)	11	37	10/81 – 07/83	3327	
DERBY (86C, 80)	11	37	10/81 – 07/83	3343	
DERBY (86C, 80)	11	37	10/81 – 07/83	3483	
DERBY (86C, 80)	13	37	08/83 – 12/84	3327	
DERBY (86C, 80)	13	37	08/83 – 12/84	3343	
DERBY (86C, 80)	13	37	08/83 – 12/84	3483	
DERBY (86C, 80)	13	40	08/83 – 12/84	3327	
DERBY (86C, 80)	13	40	08/83 – 12/84	3343	
DERBY (86C, 80)	13	40	08/83 – 12/84	3483	
DERBY (86C, 80)	13	44	08/81 – 07/83	3327	
DERBY (86C, 80)	13	44	08/81 – 07/83	3343	
DERBY (86C, 80)	13	44	08/81 – 07/83	3483	

MAKE & MODEL   		KW	YEAR		
VOLKSWAGEN					
DERBY (86C, 80)	13	55	09/82 – 12/84	3327	
DERBY (86C, 80)	13	55	09/82 – 12/84	3343	
DERBY (86C, 80)	13	55	09/82 – 12/84	3483	
EOS (1F7, 1F8)	1.4 TSI	90	11/07 – 08/15		3529/1
EOS (1F7, 1F8)	1.4 TSI	90	11/07 – 08/15	3904	
EOS (1F7, 1F8)	1.4 TSI	90	11/07 – 08/15		3905
EOS (1F7, 1F8)	1.4 TSI	90	11/07 – 08/15		4135
EOS (1F7, 1F8)	1.4 TSI	92	11/13 -		3529/1
EOS (1F7, 1F8)	1.4 TSI	110	11/13 -		3529/1
EOS (1F7, 1F8)	1.4 TSI	118	05/08 – 08/15		3529/1
EOS (1F7, 1F8)	1.4 TSI	118	05/08 – 08/15	3904	
EOS (1F7, 1F8)	1.4 TSI	118	05/08 – 08/15		3905
EOS (1F7, 1F8)	1.4 TSI	118	05/08 – 08/15		4135
EOS (1F7, 1F8)	1.6 FSI	85	06/06 – 05/08		3529/1
EOS (1F7, 1F8)	1.6 FSI	85	06/06 – 05/08	3904	
EOS (1F7, 1F8)	1.6 FSI	85	06/06 – 05/08		3905
EOS (1F7, 1F8)	1.6 FSI	85	06/06 – 05/08		4135
EOS (1F7, 1F8)	2.0 FSI	110	03/06 – 05/08		3529/1
EOS (1F7, 1F8)	2.0 FSI	110	03/06 – 05/08	3904	
EOS (1F7, 1F8)	2.0 FSI	110	03/06 – 05/08		3905
EOS (1F7, 1F8)	2.0 FSI	110	03/06 – 05/08		4135
EOS (1F7, 1F8)	2.0 TDI	100	11/10 – 08/15		3529/1
EOS (1F7, 1F8)	2.0 TDI	100	11/10 – 08/15	3904	
EOS (1F7, 1F8)	2.0 TDI	100	11/10 – 08/15		3905
EOS (1F7, 1F8)	2.0 TDI	100	11/10 – 08/15		4135
EOS (1F7, 1F8)	2.0 TDI	103	06/06 – 05/08		3529/1
EOS (1F7, 1F8)	2.0 TDI	103	06/06 – 05/08	3904	
EOS (1F7, 1F8)	2.0 TDI	103	06/06 – 05/08		3905
EOS (1F7, 1F8)	2.0 TDI	103	06/06 – 05/08		4135
EOS (1F7, 1F8)	2.0 TDI 16V	103	05/08 – 08/15		3529/1
EOS (1F7, 1F8)	2.0 TDI 16V	103	05/08 – 08/15	3904	
EOS (1F7, 1F8)	2.0 TDI 16V	103	05/08 – 08/15		3905
EOS (1F7, 1F8)	2.0 TDI 16V	103	05/08 – 08/15		4135
EOS (1F7, 1F8)	2.0 TFSI	147	03/06 – 08/15		3529/1
EOS (1F7, 1F8)	2.0 TFSI	147	03/06 – 08/15	3904	
EOS (1F7, 1F8)	2.0 TFSI	147	03/06 – 08/15		3905
EOS (1F7, 1F8)	2.0 TFSI	147	03/06 – 08/15		4135
EOS (1F7, 1F8)	2.0 TFSI	162	11/13 – 08/15		3529/1
EOS (1F7, 1F8)	2.0 TSI	155	11/09 – 08/15		3529/1
EOS (1F7, 1F8)	2.0 TSI	155	11/09 – 08/15	3904	
EOS (1F7, 1F8)	2.0 TSI	155	11/09 – 08/15		3905
EOS (1F7, 1F8)	2.0 TSI	155	11/09 – 08/15		4135
FOX (5Z1, 5Z3)	12	40	04/05 -	3566	
FOX (5Z1, 5Z3)	12	40	04/05 -	3782/1	
FOX (5Z1, 5Z3)	12	44	09/10 -	3566	
FOX (5Z1, 5Z3)	12	44	09/10 -	3782/1	
FOX (5Z1, 5Z3)	14	55	04/05 -	3566	
FOX (5Z1, 5Z3)	14	55	04/05 -	3782/1	
FOX (5Z1, 5Z3)	16	74	10/03 -	3566	
FOX (5Z1, 5Z3)	16	74	10/03 -	3782/1	
FOX (5Z1, 5Z3)	1.4 TDI	51	04/05 -	3566	
FOX (5Z1, 5Z3)	1.4 TDI	51	04/05 -	3782/1	
FOX (5Z1, 5Z3)	1.6 Total Flex	74	10/03 -	3566	
FOX (5Z1, 5Z3)	1.6 Total Flex	74	10/03 -	3782/1	
GOL II	2.0	85	10/96-05/02	3561	
GOL II	2.0 Gti	82	10/94-09/96	3561	
GOL III	1.6	68	01/02-08/06	3561	
GOL III	1.6	73	03/99-09/05	3561	
GOL IV	1.6 TotalFlex	68	09/05-05/08	3561	
GOL IV	1.6	68	10/05-12/13	3561	
GOL V	1.6	74	07/09 -	3561	
GOLF	ONLY SOUTH AMERICA 1.6		95-	3533	
GOLF ALLTRACK (BA5)	1.6 TDI 4motion	81	12/14 -	4295	
GOLF ALLTRACK (BA5)	1.8 TSI 4motion	132	12/14 -	4295	
GOLF ALLTRACK (BA5)	2.0 TDI 4motion	110	12/14 -	4295	
GOLF ALLTRACK (BA5)	2.0 TDI 4motion	135	12/14 -	4295	
GOLF I (17)	11	37	04/74 – 07/83	3327	
GOLF I (17)	11	37	04/74 – 07/83	3343	
GOLF I (17)	11	37	04/74 – 07/83	3483	
GOLF I (17)	11	38	08/76 – 07/80	3327	
GOLF I (17)	11	38	08/76 – 07/80	3343	

MAKE & MODEL		KW	YEAR		
VOLKSWAGEN					
GOLF I (17)	11	38	08/76 – 07/80	3483	
GOLF I (17)	13	44	08/79 – 07/83	3327	
GOLF I (17)	13	44	08/79 – 07/83	3343	
GOLF I (17)	13	44	08/79 – 07/83	3483	
GOLF I (17)	15	51	04/74 – 12/75	3585	
GOLF I (17)	15	51	08/77 – 07/83	3585	
GOLF I (17)	16	55	08/75 – 02/84	3585	
GOLF I (17)	1.5	51	04/74 – 12/75	3444	
GOLF I (17)	1.5	51	08/77 – 07/83	3444	
GOLF I (17)	1.5 D	37	08/76 – 07/80	3327	
GOLF I (17)	1.5 D	37	08/76 – 07/80	3343	
GOLF I (17)	1.5 D	37	08/76 – 07/80	3483	
GOLF I (17)	1.6	55	08/75 – 02/84	3444	
GOLF I (17)	1.6 D	40	08/80 – 07/83	3327	
GOLF I (17)	1.6 D	40	08/80 – 07/83	3343	
GOLF I (17)	1.6 D	40	08/80 – 07/83	3483	
GOLF I (17)	1.6 GTI	81	08/76 – 07/82	3327	
GOLF I (17)	1.6 GTI	81	08/76 – 07/82	3343	
GOLF I (17)	1.6 GTI	81	08/76 – 07/82	3483	
GOLF I (17)	1.6 GTI	81	08/76 – 07/82	3486	
GOLF I (17)	1.6 TD	51	03/82 – 07/83	3444	
GOLF I (17)	1.6 TD	51	03/82 – 07/83	3585	
GOLF I (17)	1.8 GTI	82	08/82 – 12/83	3486	
GOLF I Cabriolet (155)	13	40	08/83 – 07/86	3444	
GOLF I Cabriolet (155)	13	40	08/83 – 07/86	3585	
GOLF I Cabriolet (155)	15	51	01/79 – 11/83	3585	
GOLF I Cabriolet (155)	16	53	04/86 – 02/90	3585	
GOLF I Cabriolet (155)	16	55	08/83 – 04/92	3585	
GOLF I Cabriolet (155)	16	81	08/79 – 07/82	3327	
GOLF I Cabriolet (155)	16	81	08/79 – 07/82	3343	
GOLF I Cabriolet (155)	16	81	08/79 – 07/82	3483	
GOLF I Cabriolet (155)	16	81	08/79 – 07/82	3486	
GOLF I Cabriolet (155)	18	66	08/83 – 09/92	3486	
GOLF I Cabriolet (155)	18	70	08/83 – 04/93	3486	
GOLF I Cabriolet (155)	18	72	08/89 – 03/93	3486	
GOLF I Cabriolet (155)	18	82	08/82 – 12/89	3486	
GOLF I Cabriolet (155)	18	82	08/83 – 12/92	3486	
GOLF I Cabriolet (155)	1.5	51	01/79 – 11/83	3444	
GOLF I Cabriolet (155)	1.6	53	04/86 – 02/90	3444	
GOLF I Cabriolet (155)	1.6	55	08/83 – 04/92	3444	
GOLF II (19E, 1G1)	10	37	08/85 – 10/91	3585	
GOLF II (19E, 1G1)	13	40	08/83 – 06/87	3441	
GOLF II (19E, 1G1)	13	43	08/83 – 10/86	3441	
GOLF II (19E, 1G1)	16	51	10/86 – 12/92	3585	
GOLF II (19E, 1G1)	16	53	02/86 – 10/91	3585	
GOLF II (19E, 1G1)	16	55	08/83 – 07/92	3585	
GOLF II (19E, 1G1)	18	62	08/86 – 01/90	3486	
GOLF II (19E, 1G1)	18	62	08/86 – 01/90		3529
GOLF II (19E, 1G1)	18	62	08/86 – 01/90	3585	
GOLF II (19E, 1G1)	18	66	08/84 – 10/91	3486	
GOLF II (19E, 1G1)	18	66	08/84 – 10/91		3529
GOLF II (19E, 1G1)	18	66	08/84 – 10/91	3585	
GOLF II (19E, 1G1)	20	57	08/85 – 07/92	3585	
GOLF II (19E, 1G1)	1.0	33	11/83 – 08/85	3441	
GOLF II (19E, 1G1)	1.0	37	08/85 – 10/91	3441	
GOLF II (19E, 1G1)	1.0	37	08/85 – 10/91	3444	
GOLF II (19E, 1G1)	1.3	37	08/85 – 12/87	3441	
GOLF II (19E, 1G1)	1.3 CAT	40	06/86 – 12/92	3441	
GOLF II (19E, 1G1)	1.3 CAT	40	06/86 – 12/92	3444	
GOLF II (19E, 1G1)	1.3 CAT	40	06/86 – 12/92	3585	
GOLF II (19E, 1G1)	1.6	51	10/86 – 12/92	3444	
GOLF II (19E, 1G1)	1.6	53	02/86 – 10/91	3441	
GOLF II (19E, 1G1)	1.6	53	02/86 – 10/91	3444	
GOLF II (19E, 1G1)	1.6	55	08/83 – 07/92	3444	
GOLF II (19E, 1G1)	1.6 D	37	08/83 – 10/91	3441	
GOLF II (19E, 1G1)	1.6 D	37	08/83 – 10/91	3444	
GOLF II (19E, 1G1)	1.6 D	37	08/83 – 10/91	3585	
GOLF II (19E, 1G1)	1.6 D	40	08/83 – 10/91	3441	
GOLF II (19E, 1G1)	1.6 D	40	08/83 – 10/91	3444	
GOLF II (19E, 1G1)	1.6 D	40	08/83 – 10/91	3585	
GOLF II (19E, 1G1)	1.6 TD	44	08/89 – 10/91	3444	

BESER®

MAKE & MODEL   		KW	YEAR		
VOLKSWAGEN					
GOLF II (19E, 1G1)	1.6 TD	44	08/89 – 10/91	3585	
GOLF II (19E, 1G1)	1.6 TD	51	08/83 – 10/91	3444	
GOLF II (19E, 1G1)	1.6 TD	51	08/83 – 10/91	3585	
GOLF II (19E, 1G1)	1.6 TD	55	08/83 – 07/85	3444	
GOLF II (19E, 1G1)	1.6 TD	55	08/83 – 07/85	3585	
GOLF II (19E, 1G1)	1.6 TD	59	04/89 – 10/91	3444	
GOLF II (19E, 1G1)	1.6 TD	59	04/89 – 10/91	3585	
GOLF II (19E, 1G1)	1.8	62	08/86 – 01/90	3444	
GOLF II (19E, 1G1)	1.8	66	08/84 – 10/91	3444	
GOLF II (19E, 1G1)	1.8 GTI	77	01/85 – 07/85	3486	
GOLF II (19E, 1G1)	1.8 GTI	77	01/85 – 07/85		3529
GOLF II (19E, 1G1)	1.8 GTI	79	08/85 – 10/87	3486	
GOLF II (19E, 1G1)	1.8 GTI	79	08/85 – 10/87		3529
GOLF II (19E, 1G1)	1.8 GTI	82	08/83 – 10/91	3486	
GOLF II (19E, 1G1)	1.8 GTI	82	08/83 – 10/91		3529
GOLF II (19E, 1G1)	1.8 GTI 16V	95	02/86 – 10/91	3486	
GOLF II (19E, 1G1)	1.8 GTI 16V	95	02/86 – 10/91		3529
GOLF II (19E, 1G1)	1.8 GTI 16V	95	02/86 – 10/91	3531	
GOLF II (19E, 1G1)	1.8 GTI 16V	102	02/86 – 06/90	3486	
GOLF II (19E, 1G1)	1.8 GTI 16V	102	02/86 – 06/90		3529
GOLF II (19E, 1G1)	1.8 GTI 16V	102	02/86 – 06/90	3531	
GOLF II (19E, 1G1)	1.8 GTI CAT	79	01/87 – 10/91	3486	
GOLF II (19E, 1G1)	1.8 GTI CAT	79	01/87 – 10/91		3529
GOLF II (19E, 1G1)	1.8 GTI G60	118	04/90 – 07/91		3529
GOLF II (19E, 1G1)	1.8 GTI G60	118	04/90 – 07/91	3551	
GOLF II (19E, 1G1)	1.8 GTI G60 Syncro	118	08/88 – 12/91		3529
GOLF II (19E, 1G1)	1.8 GTI G60 Syncro	118	08/88 – 12/91	3551	
GOLF II (19E, 1G1)	1.8 i CAT	66	08/87 – 10/91	3444	
GOLF II (19E, 1G1)	1.8 i CAT	66	08/87 – 10/91	3486	
GOLF II (19E, 1G1)	1.8 i CAT	66	08/87 – 10/91		3529
GOLF II (19E, 1G1)	1.8 i CAT	66	08/87 – 10/91	3585	
GOLF II (19E, 1G1)	1.8 i Syncro CAT	66	08/87 – 10/91	3444	
GOLF II (19E, 1G1)	1.8 i Syncro CAT	66	08/87 – 10/91	3585	
GOLF II (19E, 1G1)	1.8 Syncro	66	02/86 – 07/91	3444	
GOLF II (19E, 1G1)	1.8 Syncro	66	02/86 – 07/91	3585	
GOLF II (19E, 1G1)	1.8 Syncro	72	08/88 – 07/91	3444	
GOLF II (19E, 1G1)	1.8 Syncro	72	08/88 – 07/91	3585	
GOLF II (19E, 1G1)	2.0	57	08/85 – 07/92	3444	
GOLF III (1H1)	13	40	08/91 07/92	3538	
GOLF III (1H1)	13	40	08/91 – 07/92	3585	
GOLF III (1H1)	14	40	11/91 – 08/97	3538	
GOLF III (1H1)	14	40	11/91 – 08/97	3585	
GOLF III (1H1)	14	40	11/91 – 08/97	3637	
GOLF III (1H1)	14	44	10/91 – 08/97	3538	
GOLF III (1H1)	14	44	10/91 – 08/97	3585	
GOLF III (1H1)	14	44	10/91 – 08/97	3637	
GOLF III (1H1)	16	55	09/92 – 08/97	3538	
GOLF III (1H1)	16	55	09/92 – 08/97	3585	
GOLF III (1H1)	16	55	09/92 – 08/97	3637	
GOLF III (1H1)	16	74	07/95 – 08/97		3529/1
GOLF III (1H1)	16	74	07/95 – 08/97	3531	
GOLF III (1H1)	16	74	07/95 – 08/97	3551	
GOLF III (1H1)	18	55	11/91 – 08/97		3529
GOLF III (1H1)	18	55	11/91 – 08/97	3538	
GOLF III (1H1)	18	55	11/91 – 08/97	3551	
GOLF III (1H1)	18	55	11/91 – 08/97	3585	
GOLF III (1H1)	18	66	11/91 – 08/97		3529
GOLF III (1H1)	18	66	11/91 – 08/97	3538	
GOLF III (1H1)	18	66	11/91 – 08/97	3551	
GOLF III (1H1)	18	66	11/91 – 08/97	3585	
GOLF III (1H1)	20	85	11/91 – 08/97		3529
GOLF III (1H1)	20	85	11/91 – 08/97	3531	
GOLF III (1H1)	1.3	40	08/91 – 07/92	3444	
GOLF III (1H1)	1.4	40	11/91 – 08/97	3444	
GOLF III (1H1)	1.4	44	10/91 – 08/97	3444	
GOLF III (1H1)	1.6	55	09/92 – 08/97	3444	
GOLF III (1H1)	1.8	55	11/91 – 08/97	3444	
GOLF III (1H1)	1.8	66	11/91 – 08/97	3444	
GOLF III (1H1)	1.8 Syncro (1HX1)	66	01/93 – 08/97	3444	
GOLF III (1H1)	1.8 Syncro (1HX1)	66	01/93 – 08/97	3551	
GOLF III (1H1)	1.8 Syncro (1HX1)	66	01/93 – 08/97	3585	

MAKE & MODEL		KW	YEAR		
VOLKSWAGEN					
GOLF III (1H1)	1.9 D	48	11/91 – 08/97	3444	
GOLF III (1H1)	1.9 D	48	11/91 – 08/97	3538	
GOLF III (1H1)	1.9 D	48	11/91 – 08/97	3585	
GOLF III (1H1)	1.9 D	48	11/91 – 08/97	3637	
GOLF III (1H1)	1.9 SDI	47	07/95 – 08/97	3444	
GOLF III (1H1)	1.9 SDI	47	07/95 – 08/97	3538	
GOLF III (1H1)	1.9 SDI	47	07/95 – 08/97	3585	
GOLF III (1H1)	1.9 SDI	47	07/95 – 08/97	3637	
GOLF III (1H1)	1.9 TD,GTD	55	11/91 – 08/97	3444	
GOLF III (1H1)	1.9 TD,GTD	55	11/91 – 08/97	3538	
GOLF III (1H1)	1.9 TD,GTD	55	11/91 – 08/97	3585	
GOLF III (1H1)	1.9 TD,GTD	55	11/91 – 08/97	3637	
GOLF III (1H1)	1.9 TDI	66	09/93 – 08/97		3529
GOLF III (1H1)	1.9 TDI	66	09/93 – 08/97	3551	
GOLF III (1H1)	1.9 TDI	81	04/96 – 08/97		3529
GOLF III (1H1)	1.9 TDI	81	04/96 – 08/97		3529/1
GOLF III (1H1)	1.9 TDI	81	04/96 – 08/97	3531	
GOLF III (1H1)	1.9 TDI Syncro (1HX1)	66	08/95 – 08/97	3551	
GOLF III (1H1)	2.0 GL	79	08/95 – 09/97		3529
GOLF III (1H1)	2.0 GL	79	08/95 – 09/97	3531	
GOLF III (1H1)	2.0 GTI 16V	110	08/92 – 08/97		3529
GOLF III (1H1)	2.0 GTI 16V	110	08/92 – 08/97		3529/1
GOLF III (1H1)	2.0 GTI 16V	110	08/92 – 08/97	3551	
GOLF III (1H1)	2.0 Syncro (1HX1)	85	08/95 – 08/97	3531	
GOLF III (1H1)	2.8 VR6	120	08/95 – 09/97		3529
GOLF III (1H1)	2.8 VR6	128	01/92 – 08/97		3529
GOLF III (1H1)	2.9 VR6 Syncro (1HX1)	140	10/94 – 08/97		3529/1
GOLF III Cabriolet (1E7)	16	74	10/94 – 05/98		3529
GOLF III Cabriolet (1E7)	16	74	10/94 – 05/98		3529/1
GOLF III Cabriolet (1E7)	16	74	10/94 – 05/98	3531	
GOLF III Cabriolet (1E7)	16	74	10/94 – 05/98	3551	
GOLF III Cabriolet (1E7)	18	55	07/93 – 05/98		3529
GOLF III Cabriolet (1E7)	18	55	07/93 – 05/98		3529/1
GOLF III Cabriolet (1E7)	18	55	07/93 – 05/98	3531	
GOLF III Cabriolet (1E7)	18	55	07/93 – 05/98	3551	
GOLF III Cabriolet (1E7)	18	66	07/93 – 05/98		3529
GOLF III Cabriolet (1E7)	18	66	07/93 – 05/98		3529/1
GOLF III Cabriolet (1E7)	18	66	07/93 – 05/98	3531	
GOLF III Cabriolet (1E7)	18	66	07/93 – 05/98	3551	
GOLF III Cabriolet (1E7)	20	85	07/93 – 05/98		3529
GOLF III Cabriolet (1E7)	20	85	07/93 – 05/98		3529/1
GOLF III Cabriolet (1E7)	20	85	07/93 – 05/98	3531	
GOLF III Cabriolet (1E7)	20	85	07/93 – 05/98	3551	
GOLF III Cabriolet (1E7)	1.9 TDI	66	08/95 – 05/98		3529
GOLF III Cabriolet (1E7)	1.9 TDI	66	08/95 – 05/98		3529/1
GOLF III Cabriolet (1E7)	1.9 TDI	66	08/95 – 05/98	3531	
GOLF III Cabriolet (1E7)	1.9 TDI	66	08/95 – 05/98	3551	
GOLF III Cabriolet (1E7)	1.9 TDI	81	07/96 – 05/98		3529
GOLF III Cabriolet (1E7)	1.9 TDI	81	07/96 – 05/98		3529/1
GOLF III Cabriolet (1E7)	1.9 TDI	81	07/96 – 05/98	3531	
GOLF III Cabriolet (1E7)	1.9 TDI	81	07/96 – 05/98	3551	
GOLF III Variant (1H5)	14	40	07/93 – 04/99	3538	
GOLF III Variant (1H5)	14	40	07/93 – 04/99	3585	
GOLF III Variant (1H5)	14	40	07/93 – 04/99	3637	
GOLF III Variant (1H5)	14	44	07/93 – 04/99	3538	
GOLF III Variant (1H5)	14	44	07/93 – 04/99	3585	
GOLF III Variant (1H5)	14	44	07/93 – 04/99	3637	
GOLF III Variant (1H5)	16	74	07/94 – 04/99		3529
GOLF III Variant (1H5)	16	74	07/94 – 04/99		3529/1
GOLF III Variant (1H5)	16	74	07/94 – 04/99	3531	
GOLF III Variant (1H5)	18	55	07/93 – 04/99		3529
GOLF III Variant (1H5)	18	55	07/93 – 04/99		3529/1
GOLF III Variant (1H5)	18	55	07/93 – 04/99	3551	
GOLF III Variant (1H5)	18	66	07/93 – 04/99		3529
GOLF III Variant (1H5)	18	66	07/93 – 04/99		3529/1
GOLF III Variant (1H5)	18	66	07/93 – 04/99	3551	
GOLF III Variant (1H5)	20	79	08/95 – 04/96		3529/1
GOLF III Variant (1H5)	20	79	08/95 – 04/96	3531	
GOLF III Variant (1H5)	20	85	07/93 – 04/99		3529
GOLF III Variant (1H5)	20	85	07/93 – 04/99		3529/1
GOLF III Variant (1H5)	20	85	07/93 – 04/99	3531	

MAKE & MODEL		KW	YEAR		
VOLKSWAGEN					
GOLF III Variant (1H5)	1.4	40	07/93 – 04/99	3444	
GOLF III Variant (1H5)	1.4	44	07/93 – 04/99	3444	
GOLF III Variant (1H5)	1.8 Syncro	66	10/94 – 04/99	3444	
GOLF III Variant (1H5)	1.8 Syncro	66	10/94 – 04/99	3551	
GOLF III Variant (1H5)	1.8 Syncro	66	10/94 – 04/99	3585	
GOLF III Variant (1H5)	1.9 D	48	07/93 – 04/99	3551	
GOLF III Variant (1H5)	1.9 D	48	07/93 – 04/99	3637	
GOLF III Variant (1H5)	1.9 SDI	47	07/95 – 04/99	3551	
GOLF III Variant (1H5)	1.9 SDI	47	07/95 – 04/99	3637	
GOLF III Variant (1H5)	1.9 TD	55	07/93 – 04/99	3551	
GOLF III Variant (1H5)	1.9 TD	55	07/93 – 04/99	3637	
GOLF III Variant (1H5)	1.9 TDI	66	03/94 – 04/99		3529
GOLF III Variant (1H5)	1.9 TDI	66	03/94 – 04/99		3529/1
GOLF III Variant (1H5)	1.9 TDI	66	03/94 – 04/99	3551	
GOLF III Variant (1H5)	1.9 TDI	81	04/96 – 04/99		3529/1
GOLF III Variant (1H5)	1.9 TDI	81	04/96 – 04/99	3531	
GOLF III Variant (1H5)	1.9 TDI Syncro	66	07/95 – 04/99		3529/1
GOLF III Variant (1H5)	1.9 TDI Syncro	66	07/95 – 04/99	3551	
GOLF III Variant (1H5)	2.0 Syncro	85	08/95 – 04/99		3529/1
GOLF III Variant (1H5)	2.0 Syncro	85	08/95 – 04/99	3531	
GOLF III Variant (1H5)	2.0 Syncro	85	08/95 – 04/99	3551	
GOLF III Variant (1H5)	2.9 VR6 Syncro	140	10/94 – 04/99		3529/1
GOLF IV (1J1)	10	43	08/98 – 05/02		3529/1
GOLF IV (1J1)	10	43	08/98 – 05/02	3782	
GOLF IV (1J1)	10	43	08/98 – 05/02	3782/1	
GOLF IV (1J1)	16	68	12/98 – 05/02		3529/1
GOLF IV (1J1)	16	68	12/98 – 05/02	3782	
GOLF IV (1J1)	16	68	12/98 – 05/02	3782/1	
GOLF IV (1J1)	16	74	02/01 – 06/01		3529/1
GOLF IV (1J1)	16	74	08/97 – 05/04		3529/1
GOLF IV (1J1)	16	74	02/01 – 06/01	3782	
GOLF IV (1J1)	16	74	08/97 – 05/04	3782	
GOLF IV (1J1)	16	74	08/97 – 05/04	3782/1	
GOLF IV (1J1)	16	75	08/00 – 06/05		3529/1
GOLF IV (1J1)	16	75	08/00 – 06/05	3782	
GOLF IV (1J1)	16	78	08/03 – 06/05		3529/1
GOLF IV (1J1)	16	78	08/03 – 06/05	3782	
GOLF IV (1J1)	18	77	04/98 – 05/02		3529/1
GOLF IV (1J1)	18	77	04/98 – 05/02	3782	
GOLF IV (1J1)	18	77	04/98 – 05/02	3782/1	
GOLF IV (1J1)	18	92	08/97 – 06/05		3529/1
GOLF IV (1J1)	18	92	08/97 – 06/05	3782	
GOLF IV (1J1)	18	92	08/97 – 06/05	3782/1	
GOLF IV (1J1)	20	85	07/98 – 05/04		3529/1
GOLF IV (1J1)	20	85	07/98 – 05/04	3782	
GOLF IV (1J1)	20	85	07/98 – 05/04	3782/1	
GOLF IV (1J1)	1.0	43	08/98 – 05/02	3682	
GOLF IV (1J1)	1.0	51	08/97 – 05/02	3682	
GOLF IV (1J1)	1.0 Turbo	82	08/97 – 05/02	3682	
GOLF IV (1J1)	1.4 16V	55	08/97 – 06/05		3529/1
GOLF IV (1J1)	1.4 16V	55	08/97 – 06/05	3782	
GOLF IV (1J1)	1.4 16V	55	08/97 – 06/05	3782/1	
GOLF IV (1J1)	1.4 16V (AHW)	55	08/97 – 06/05	3682	
GOLF IV (1J1)	1.4 16V (AKQ)	55	08/97 – 06/05	3682	
GOLF IV (1J1)	1.4 16V (APE)	55	08/97 – 06/05	3682	
GOLF IV (1J1)	1.4 16V (AXP)	55	08/97 – 06/05	3682	
GOLF IV (1J1)	1.4 16V (BCA)	55	08/97 – 06/05	3682	
GOLF IV (1J1)	1.6 (AEH)	74	08/97 – 05/04	3682	
GOLF IV (1J1)	1.6 (AKL)	74	08/97 – 05/04	3682	
GOLF IV (1J1)	1.6 (APF)	74	08/97 – 05/04	3682	
GOLF IV (1J1)	1.6 16V	77	02/00 – 06/05		3529/1
GOLF IV (1J1)	1.6 16V	77	02/00 – 06/05	3782	
GOLF IV (1J1)	1.6 D	40	08/97 – 07/98	3682	
GOLF IV (1J1)	1.6 FSI	81	01/02 – 06/05		3529/1
GOLF IV (1J1)	1.6 FSI	81	01/02 – 06/05	3782	
GOLF IV (1J1)	1.8 4motion	92	05/98 – 06/05		3529/1
GOLF IV (1J1)	1.8 4motion	92	05/98 – 06/05	3782	
GOLF IV (1J1)	1.8 4motion	92	05/98 – 06/05	3782/1	
GOLF IV (1J1)	1.8 T	110	08/97 – 06/05		3529/1
GOLF IV (1J1)	1.8 T	110	08/97 – 06/05	3590/1	
GOLF IV (1J1)	1.8 T GTI	132	08/01 – 06/05		3529/1

MAKE & MODEL		KW	YEAR		
VOLKSWAGEN					
GOLF IV (1J1)	1.8 T GTI	132	08/01 – 06/05	3590/1	
GOLF IV (1J1)	1.9 SDI	50	08/97 – 06/05		3529/1
GOLF IV (1J1)	1.9 SDI	50	08/97 – 06/05	3782	
GOLF IV (1J1)	1.9 SDI	50	08/97 – 06/05	3782/1	
GOLF IV (1J1)	1.9 SDI (AGP)	50	08/97 – 06/05	3682	
GOLF IV (1J1)	1.9 SDI (AQM)	50	08/97 – 06/05	3682	
GOLF IV (1J1)	1.9 TDI	66	10/97 – 05/04		3529/1
GOLF IV (1J1)	1.9 TDI	66	10/97 – 05/04	3782	
GOLF IV (1J1)	1.9 TDI	66	10/97 – 05/04	3782/1	
GOLF IV (1J1)	1.9 TDI	74	09/00 – 06/05		3529/1
GOLF IV (1J1)	1.9 TDI	74	09/00 – 06/05	3782	
GOLF IV (1J1)	1.9 TDI	81	08/97 – 05/04		3529/1
GOLF IV (1J1)	1.9 TDI	81	08/97 – 05/04	3782	
GOLF IV (1J1)	1.9 TDI	81	08/97 – 05/04	3782/1	
GOLF IV (1J1)	1.9 TDI	85	12/98 – 06/01		3529/1
GOLF IV (1J1)	1.9 TDI	85	12/98 – 06/01	3782	
GOLF IV (1J1)	1.9 TDI	85	12/98 – 06/01	3782/1	
GOLF IV (1J1)	1.9 TDI	96	11/00 – 06/05		3529/1
GOLF IV (1J1)	1.9 TDI	96	11/00 – 06/05	3590/1	
GOLF IV (1J1)	1.9 TDI	110	05/00 – 06/05		3529/1
GOLF IV (1J1)	1.9 TDI	110	05/00 – 06/05	3590/1	
GOLF IV (1J1)	1.9 TDI 4motion	66	07/98 – 04/02		3529/1
GOLF IV (1J1)	1.9 TDI 4motion	66	07/98 – 04/02	3782	
GOLF IV (1J1)	1.9 TDI 4motion	66	07/98 – 04/02	3782/1	
GOLF IV (1J1)	1.9 TDI 4motion	74	09/00 – 06/05		3529/1
GOLF IV (1J1)	1.9 TDI 4motion	74	09/00 – 06/05	3782	
GOLF IV (1J1)	1.9 TDI 4motion	85	09/99 – 06/01		3529/1
GOLF IV (1J1)	1.9 TDI 4motion	85	09/99 – 06/01	3782	
GOLF IV (1J1)	1.9 TDI 4motion	96	11/00 – 06/05		3529/1
GOLF IV (1J1)	1.9 TDI 4motion	96	11/00 – 06/05	3590/1	
GOLF IV (1J1)	1.9 TDI 4motion	110	02/00 – 06/05		3529/1
GOLF IV (1J1)	1.9 TDI 4motion	110	02/00 – 06/05	3590/1	
GOLF IV (1J1)	2.0 4motion	85	10/00 – 06/05		3529/1
GOLF IV (1J1)	2.0 4motion	85	10/00 – 06/05	3782	
GOLF IV (1J1)	2.3 V5	110	08/97 – 10/00		3529/1
GOLF IV (1J1)	2.3 V5	110	08/97 – 10/00	3590/1	
GOLF IV (1J1)	2.3 V5	125	10/00 – 06/05		3529/1
GOLF IV (1J1)	2.3 V5	125	10/00 – 06/05	3590/1	
GOLF IV (1J1)	2.3 V5 4motion	110	12/98 – 10/00		3529/1
GOLF IV (1J1)	2.3 V5 4motion	110	12/98 – 10/00	3590/1	
GOLF IV (1J1)	2.3 V5 4motion	125	10/00 – 06/05		3529/1
GOLF IV (1J1)	2.3 V5 4motion	125	10/00 – 06/05	3590/1	
GOLF IV (1J1)	2.8 V6 4motion	150	03/99 – 06/05		3529/1
GOLF IV (1J1)	2.8 V6 4motion	150	03/99 – 06/05	3590/1	
GOLF IV (1J1)	3.2 R32 4motion	177	09/02 – 06/05		3529/1
GOLF IV Cabriolet (1E7)	16	74	06/98 – 06/02		3529
GOLF IV Cabriolet (1E7)	16	74	06/98 – 06/02		3529/1
GOLF IV Cabriolet (1E7)	16	74	06/98 – 06/02	3531	
GOLF IV Cabriolet (1E7)	16	74	06/98 – 06/02	3551	
GOLF IV Cabriolet (1E7)	18	55	06/98 – 06/02		3529
GOLF IV Cabriolet (1E7)	18	55	06/98 – 06/02		3529/1
GOLF IV Cabriolet (1E7)	18	55	06/98 – 06/02	3531	
GOLF IV Cabriolet (1E7)	18	55	06/98 – 06/02	3551	
GOLF IV Cabriolet (1E7)	18	66	06/98 – 06/02		3529
GOLF IV Cabriolet (1E7)	18	66	06/98 – 06/02		3529/1
GOLF IV Cabriolet (1E7)	18	66	06/98 – 06/02	3531	
GOLF IV Cabriolet (1E7)	18	66	06/98 – 06/02	3551	
GOLF IV Cabriolet (1E7)	20	85	06/98 – 06/02		3529
GOLF IV Cabriolet (1E7)	20	85	06/98 – 06/02		3529/1
GOLF IV Cabriolet (1E7)	20	85	06/98 – 06/02	3531	
GOLF IV Cabriolet (1E7)	20	85	06/98 – 06/02	3551	
GOLF IV Cabriolet (1E7)	1.9 TDI	66	06/98 – 06/02		3529
GOLF IV Cabriolet (1E7)	1.9 TDI	66	06/98 – 06/02		3529/1
GOLF IV Cabriolet (1E7)	1.9 TDI	66	06/98 – 06/02	3531	
GOLF IV Cabriolet (1E7)	1.9 TDI	66	06/98 – 06/02	3551	
GOLF IV Cabriolet (1E7)	1.9 TDI	81	06/98 – 06/02		3529
GOLF IV Cabriolet (1E7)	1.9 TDI	81	06/98 – 06/02		3529/1
GOLF IV Cabriolet (1E7)	1.9 TDI	81	06/98 – 06/02	3531	
GOLF IV Cabriolet (1E7)	1.9 TDI	81	06/98 – 06/02	3551	
GOLF IV Variant (1J5)	16	74	05/99 – 04/02		3529/1
GOLF IV Variant (1J5)	16	74	05/99 – 04/02	3782	

MAKE & MODEL		KW	YEAR		
VOLKSWAGEN					
GOLF IV Variant (1J5)	16	75	08/00 – 06/06		3529/1
GOLF IV Variant (1J5)	16	75	08/00 – 06/06	3782	
GOLF IV Variant (1J5)	20	85	05/99 – 06/06		3529/1
GOLF IV Variant (1J5)	20	85	05/99 – 06/06	3782	
GOLF IV Variant (1J5)	1.4 16V	55	05/99 – 06/06		3529/1
GOLF IV Variant (1J5)	1.4 16V	55	05/99 – 06/06	3782	
GOLF IV Variant (1J5)	1.6 16V	77	02/00 – 06/06		3529/1
GOLF IV Variant (1J5)	1.6 16V	77	02/00 – 06/06	3782	
GOLF IV Variant (1J5)	1.6 FSI	81	01/02 – 06/06		3529/1
GOLF IV Variant (1J5)	1.6 FSI	81	01/02 – 06/06	3782	
GOLF IV Variant (1J5)	1.8 4motion	92	05/99 – 06/06		3529/1
GOLF IV Variant (1J5)	1.8 4motion	92	05/99 – 06/06	3782	
GOLF IV Variant (1J5)	1.8 T	110	05/00 – 06/06		3529/1
GOLF IV Variant (1J5)	1.8 T	110	05/00 – 06/06	3590/1	
GOLF IV Variant (1J5)	1.9 SDI	50	05/99 – 06/06		3529/1
GOLF IV Variant (1J5)	1.9 SDI	50	05/99 – 06/06	3782	
GOLF IV Variant (1J5)	1.9 TDI	66	05/99 – 05/06		3529/1
GOLF IV Variant (1J5)	1.9 TDI	66	05/99 – 05/06	3782	
GOLF IV Variant (1J5)	1.9 TDI	74	09/00 – 06/06		3529/1
GOLF IV Variant (1J5)	1.9 TDI	74	09/00 – 06/06	3782	
GOLF IV Variant (1J5)	1.9 TDI	81	05/99 – 06/01		3529/1
GOLF IV Variant (1J5)	1.9 TDI	81	05/99 – 06/01	3782	
GOLF IV Variant (1J5)	1.9 TDI	85	08/99 – 06/01		3529/1
GOLF IV Variant (1J5)	1.9 TDI	85	08/99 – 06/01	3782	
GOLF IV Variant (1J5)	1.9 TDI	96	11/00 – 06/06		3529/1
GOLF IV Variant (1J5)	1.9 TDI	96	11/00 – 06/06	3590/1	
GOLF IV Variant (1J5)	1.9 TDI 4motion	66	05/99 – 04/02		3529/1
GOLF IV Variant (1J5)	1.9 TDI 4motion	66	05/99 – 04/02	3782	
GOLF IV Variant (1J5)	1.9 TDI 4motion	74	09/00 – 06/06		3529/1
GOLF IV Variant (1J5)	1.9 TDI 4motion	74	09/00 – 06/06	3782	
GOLF IV Variant (1J5)	1.9 TDI 4motion	85	05/99 – 06/01		3529/1
GOLF IV Variant (1J5)	1.9 TDI 4motion	85	05/99 – 06/01	3782	
GOLF IV Variant (1J5)	1.9 TDI 4motion	96	11/00 – 06/06		3529/1
GOLF IV Variant (1J5)	1.9 TDI 4motion	96	11/00 – 06/06	3590/1	
GOLF IV Variant (1J5)	1.9 TDI 4motion	110	05/02 – 06/05		3529/1
GOLF IV Variant (1J5)	1.9 TDI 4motion	110	05/02 – 06/05	3590/1	
GOLF IV Variant (1J5)	1.9 TDI 4motion	110	05/02 – 06/05	3782	
GOLF IV Variant (1J5)	2.0 4motion	85	10/00 – 06/06		3529/1
GOLF IV Variant (1J5)	2.0 4motion	85	10/00 – 06/06	3782	
GOLF IV Variant (1J5)	2.0 4motion	88	12/99 – 06/06		3529/1
GOLF IV Variant (1J5)	2.0 4motion	88	12/99 – 06/06	3782	
GOLF IV Variant (1J5)	2.0 Bi-Fuel	85	02/02 – 06/06		3529/1
GOLF IV Variant (1J5)	2.0 Bi-Fuel	85	02/02 – 06/06	3782	
GOLF IV Variant (1J5)	2.3 V5	110	05/99 – 06/06		3529/1
GOLF IV Variant (1J5)	2.3 V5	110	05/99 – 06/06	3590/1	
GOLF IV Variant (1J5)	2.3 V5	125	10/00 – 06/06		3529/1
GOLF IV Variant (1J5)	2.3 V5	125	10/00 – 06/06	3590/1	
GOLF IV Variant (1J5)	2.3 V5 4motion	110	05/99 – 06/06		3529/1
GOLF IV Variant (1J5)	2.3 V5 4motion	110	05/99 – 06/06	3590/1	
GOLF IV Variant (1J5)	2.3 V5 4motion	125	10/00 – 06/06		3529/1
GOLF IV Variant (1J5)	2.3 V5 4motion	125	10/00 – 06/06	3590/1	
GOLF IV Variant (1J5)	2.8 V6 4motion	150	05/99 – 06/06		3529/1
GOLF IV Variant (1J5)	2.8 V6 4motion	150	05/99 – 06/06	3590/1	
GOLF PLUS (5M1, 521)	16	67	08/05 – 12/13		3529/1
GOLF PLUS (5M1, 521)	16	67	08/05 – 12/13	3782	
GOLF PLUS (5M1, 521)	16	67	08/05 – 12/13	3782/1	
GOLF PLUS (5M1, 521)	16	75	05/05 – 12/13		3529/1
GOLF PLUS (5M1, 521)	16	75	05/05 – 12/13	3782	
GOLF PLUS (5M1, 521)	16	75	05/05 – 12/13	3782/1	
GOLF PLUS (5M1, 521)	16	75	05/05 – 12/13	3904	
GOLF PLUS (5M1, 521)	16	75	05/05 – 12/13		3905
GOLF PLUS (5M1, 521)	18	73	08/05 – 12/13		3529/1
GOLF PLUS (5M1, 521)	18	73	08/05 – 12/13	3782	
GOLF PLUS (5M1, 521)	18	73	08/05 – 12/13	3782/1	
GOLF PLUS (5M1, 521)	18	73	08/05 – 12/13	3904	
GOLF PLUS (5M1, 521)	18	73	08/05 – 12/13		3905
GOLF PLUS (5M1, 521)	1.2 TSI	63	05/10 – 12/13		3529/1
GOLF PLUS (5M1, 521)	1.2 TSI	63	05/10 – 12/13	3782	
GOLF PLUS (5M1, 521)	1.2 TSI	63	05/10 – 12/13	3782/1	
GOLF PLUS (5M1, 521)	1.2 TSI	63	05/10 – 12/13		3905
GOLF PLUS (5M1, 521)	1.2 TSI	77	11/09 – 12/13		3529/1

MAKE & MODEL		KW	YEAR		
VOLKSWAGEN					
GOLF PLUS (5M1, 521)	1.2 TSI	77	11/09 – 12/13	3782	
GOLF PLUS (5M1, 521)	1.2 TSI	77	11/09 – 12/13	3782/1	
GOLF PLUS (5M1, 521)	1.2 TSI	77	11/09 – 12/13		3905
GOLF PLUS (5M1, 521)	1.4 16V	55	01/05 – 11/06		3529/1
GOLF PLUS (5M1, 521)	1.4 16V	55	01/05 – 11/06	3782	
GOLF PLUS (5M1, 521)	1.4 16V	55	01/05 – 11/06	3782/1	
GOLF PLUS (5M1, 521)	1.4 16V	55	01/05 – 11/06	3904	
GOLF PLUS (5M1, 521)	1.4 16V	55	01/05 – 11/06		3905
GOLF PLUS (5M1, 521)	1.4 16V	59	05/06 – 12/13		3529/1
GOLF PLUS (5M1, 521)	1.4 16V	59	05/06 – 12/13	3782	
GOLF PLUS (5M1, 521)	1.4 16V	59	05/06 – 12/13	3782/1	
GOLF PLUS (5M1, 521)	1.4 16V	59	05/06 – 12/13	3904	
GOLF PLUS (5M1, 521)	1.4 16V	59	05/06 – 12/13		3905
GOLF PLUS (5M1, 521)	1.4 FSI	66	07/05 – 11/06		3529/1
GOLF PLUS (5M1, 521)	1.4 FSI	66	07/05 – 11/06	3782	
GOLF PLUS (5M1, 521)	1.4 FSI	66	07/05 – 11/06	3782/1	
GOLF PLUS (5M1, 521)	1.4 FSI	66	07/05 – 11/06	3904	
GOLF PLUS (5M1, 521)	1.4 FSI	66	07/05 – 11/06		3905
GOLF PLUS (5M1, 521)	1.4 TSI	90	06/07 – 12/13		3529/1
GOLF PLUS (5M1, 521)	1.4 TSI	90	06/07 – 12/13	3904	
GOLF PLUS (5M1, 521)	1.4 TSI	90	06/07 – 12/13		3905
GOLF PLUS (5M1, 521)	1.4 TSI	103	05/06 – 06/08		3529/1
GOLF PLUS (5M1, 521)	1.4 TSI	103	05/06 – 06/08	3904	
GOLF PLUS (5M1, 521)	1.4 TSI	103	05/06 – 06/08		3905
GOLF PLUS (5M1, 521)	1.4 TSI	118	06/08 – 12/13		3529/1
GOLF PLUS (5M1, 521)	1.4 TSI	118	06/08 – 12/13	3904	
GOLF PLUS (5M1, 521)	1.4 TSI	118	06/08 – 12/13		3905
GOLF PLUS (5M1, 521)	1.4 TSI	125	05/06 – 06/08		3529/1
GOLF PLUS (5M1, 521)	1.4 TSI	125	05/06 – 06/08	3904	
GOLF PLUS (5M1, 521)	1.4 TSI	125	05/06 – 06/08		3905
GOLF PLUS (5M1, 521)	1.6 BiFuel	75	05/09 – 12/13		3529/1
GOLF PLUS (5M1, 521)	1.6 BiFuel	75	05/09 – 12/13	3782	
GOLF PLUS (5M1, 521)	1.6 BiFuel	75	05/09 – 12/13	3782/1	
GOLF PLUS (5M1, 521)	1.6 BiFuel	75	05/09 – 12/13		3905
GOLF PLUS (5M1, 521)	1.6 FSI	85	01/05 – 05/08		3529/1
GOLF PLUS (5M1, 521)	1.6 FSI	85	01/05 – 05/08	3782	
GOLF PLUS (5M1, 521)	1.6 FSI	85	01/05 – 05/08	3782/1	
GOLF PLUS (5M1, 521)	1.6 FSI	85	01/05 – 05/08	3904	
GOLF PLUS (5M1, 521)	1.6 FSI	85	01/05 – 05/08		3905
GOLF PLUS (5M1, 521)	1.6 MultiFuel	75	11/07 – 12/13		3529/1
GOLF PLUS (5M1, 521)	1.6 MultiFuel	75	11/07 – 12/13	3782	
GOLF PLUS (5M1, 521)	1.6 MultiFuel	75	11/07 – 12/13	3782/1	
GOLF PLUS (5M1, 521)	1.6 MultiFuel	75	11/07 – 12/13	3904	
GOLF PLUS (5M1, 521)	1.6 MultiFuel	75	11/07 – 12/13		3905
GOLF PLUS (5M1, 521)	1.6 TDI	66	02/09 – 12/13		3529/1
GOLF PLUS (5M1, 521)	1.6 TDI	66	02/09 – 12/13	3782	
GOLF PLUS (5M1, 521)	1.6 TDI	66	02/09 – 12/13	3782/1	
GOLF PLUS (5M1, 521)	1.6 TDI	66	02/09 – 12/13		3905
GOLF PLUS (5M1, 521)	1.6 TDI	77	03/09 – 12/13		3529/1
GOLF PLUS (5M1, 521)	1.6 TDI	77	03/09 – 12/13	3782	
GOLF PLUS (5M1, 521)	1.6 TDI	77	03/09 – 12/13	3782/1	
GOLF PLUS (5M1, 521)	1.6 TDI	77	03/09 – 12/13	3904	
GOLF PLUS (5M1, 521)	1.6 TDI	77	03/09 – 12/13		3905
GOLF PLUS (5M1, 521)	1.8 Hybrid	73	08/05 – 12/13		3529/1
GOLF PLUS (5M1, 521)	1.8 Hybrid	73	08/05 – 12/13	3782	
GOLF PLUS (5M1, 521)	1.8 Hybrid	73	08/05 – 12/13	3782/1	
GOLF PLUS (5M1, 521)	1.8 Hybrid	73	08/05 – 12/13	3904	
GOLF PLUS (5M1, 521)	1.8 Hybrid	73	08/05 – 12/13		3905
GOLF PLUS (5M1, 521)	1.9 D	47	12/05 – 12/13	3782	
GOLF PLUS (5M1, 521)	1.9 D	47	12/05 – 12/13	3782/1	
GOLF PLUS (5M1, 521)	1.9 SDI	47	12/05 – 12/13		3529/1
GOLF PLUS (5M1, 521)	1.9 TDI	66	05/05 – 12/08		3529/1
GOLF PLUS (5M1, 521)	1.9 TDI	66	05/05 – 12/08	3782	
GOLF PLUS (5M1, 521)	1.9 TDI	66	05/05 – 12/08	3782/1	
GOLF PLUS (5M1, 521)	1.9 TDI	66	05/05 – 12/08	3904	
GOLF PLUS (5M1, 521)	1.9 TDI	66	05/05 – 12/08		3905
GOLF PLUS (5M1, 521)	1.9 TDI	77	01/05 – 01/09		3529/1
GOLF PLUS (5M1, 521)	1.9 TDI	77	01/05 – 01/09	3782	
GOLF PLUS (5M1, 521)	1.9 TDI	77	01/05 – 01/09	3782/1	
GOLF PLUS (5M1, 521)	1.9 TDI	77	01/05 – 01/09	3904	
GOLF PLUS (5M1, 521)	1.9 TDI	77	01/05 – 01/09		3905

MAKE & MODEL		KW	YEAR		
VOLKSWAGEN					
GOLF PLUS (5M1, 521)	2.0 FSI	110	05/05 – 06/08		3529/1
GOLF PLUS (5M1, 521)	2.0 FSI	110	05/05 – 06/08	3904	
GOLF PLUS (5M1, 521)	2.0 FSI	110	05/05 – 06/08		3905
GOLF PLUS (5M1, 521)	2.0 TDI	81	01/09 – 12/13		3529/1
GOLF PLUS (5M1, 521)	2.0 TDI	81	01/09 – 12/13	3904	
GOLF PLUS (5M1, 521)	2.0 TDI	81	01/09 – 12/13		3905
GOLF PLUS (5M1, 521)	2.0 TDI	96	05/05 – 05/07		3529/1
GOLF PLUS (5M1, 521)	2.0 TDI	96	05/05 – 05/07	3904	
GOLF PLUS (5M1, 521)	2.0 TDI	96	05/05 – 05/07		3905
GOLF PLUS (5M1, 521)	2.0 TDI	100	05/05 – 12/13		3529/1
GOLF PLUS (5M1, 521)	2.0 TDI	100	05/05 – 12/13	3904	
GOLF PLUS (5M1, 521)	2.0 TDI	100	05/05 – 12/13		3905
GOLF PLUS (5M1, 521)	2.0 TDI	103	12/05 – 05/11		3529/1
GOLF PLUS (5M1, 521)	2.0 TDI	103	12/05 – 05/11	3904	
GOLF PLUS (5M1, 521)	2.0 TDI	103	12/05 – 05/11		3905
GOLF PLUS (5M1, 521)	2.0 TDI 16V	103	01/05 – 12/13		3529/1
GOLF PLUS (5M1, 521)	2.0 TDI 16V	103	01/05 – 12/13	3904	
GOLF PLUS (5M1, 521)	2.0 TDI 16V	103	01/05 – 12/13		3905
GOLF SPORTSVAN (AM1)	1.0 TSI	85	05/15 -	4295	
GOLF SPORTSVAN (AM1)	1.2 TSI	63	05/14 -	4295	
GOLF SPORTSVAN (AM1)	1.2 TSI	81	04/14 -	4295	
GOLF SPORTSVAN (AM1)	1.4 TSI	92	04/14 -	4295	
GOLF SPORTSVAN (AM1)	1.4 TSI	110	02/14 -	4295	
GOLF SPORTSVAN (AM1)	1.4 TSI MultiFuel	92	04/14 -	4295	
GOLF SPORTSVAN (AM1)	1.6	81	05/14 -	4295	
GOLF SPORTSVAN (AM1)	1.6 TDI	66	02/14 -	4295	
GOLF SPORTSVAN (AM1)	1.6 TDI	81	02/14 -	4295	
GOLF SPORTSVAN (AM1)	1.6 TDI	85	11/16 -	4295	
GOLF SPORTSVAN (AM1)	2.0 TDI	81	05/14 -	4295	
GOLF SPORTSVAN (AM1)	2.0 TDI	110	02/14 -	4295	
GOLF V (1K1)	16	67	08/05 – 11/08		3529/1
GOLF V (1K1)	16	67	08/05 – 11/08	3782	
GOLF V (1K1)	16	75	01/04 – 11/08		3529/1
GOLF V (1K1)	16	75	01/04 – 11/08	3782	
GOLF V (1K1)	16	75	01/04 – 11/08	3904	
GOLF V (1K1)	16	75	01/04 – 11/08		3905
GOLF V (1K1)	16	77	08/09 -	3904	
GOLF V (1K1)	18	73	08/05 – 11/08		3529/1
GOLF V (1K1)	18	73	08/05 – 11/08	3782	
GOLF V (1K1)	20	85	08/06 – 11/08		3529/1
GOLF V (1K1)	20	85	08/06 – 11/08	3782	
GOLF V (1K1)	20	85	08/06 – 11/08	3904	
GOLF V (1K1)	20	85	08/06 – 11/08		3905
GOLF V (1K1)	1.4 16V	55	10/03 – 05/06		3529/1
GOLF V (1K1)	1.4 16V	55	10/03 – 05/06	3782	
GOLF V (1K1)	1.4 16V	59	05/06 – 11/08		3529/1
GOLF V (1K1)	1.4 16V	59	05/06 – 11/08	3782	
GOLF V (1K1)	1.4 FSI	66	10/03 – 07/06		3529/1
GOLF V (1K1)	1.4 FSI	66	10/03 – 07/06	3782	
GOLF V (1K1)	1.4 TSI	90	05/07 – 11/08		3529/1
GOLF V (1K1)	1.4 TSI	90	05/07 – 11/08	3782	
GOLF V (1K1)	1.4 TSI	90	05/07 – 11/08	3904	
GOLF V (1K1)	1.4 TSI	90	05/07 – 11/08		3905
GOLF V (1K1)	1.4 TSI	96	08/09 – 12/14	3904	
GOLF V (1K1)	1.4 TSI	103	05/06 – 11/08		3529/1
GOLF V (1K1)	1.4 TSI	103	05/06 – 11/08	3782	
GOLF V (1K1)	1.4 TSI	103	05/06 – 11/08	3904	
GOLF V (1K1)	1.4 TSI	103	05/06 – 11/08		3905
GOLF V (1K1)	1.4 TSI	125	11/05 – 11/08	3904	
GOLF V (1K1)	1.4 TSI	125	11/05 – 11/08		3905
GOLF V (1K1)	1.6 FSI	85	10/03 – 07/08		3529/1
GOLF V (1K1)	1.6 FSI	85	10/03 – 07/08	3782	
GOLF V (1K1)	1.6 FSI	85	10/03 – 07/08	3904	
GOLF V (1K1)	1.6 FSI	85	10/03 – 07/08		3905
GOLF V (1K1)	1.6 MultiFuel	75	10/07 – 11/08		3529/1
GOLF V (1K1)	1.6 MultiFuel	75	10/07 – 11/08	3782	
GOLF V (1K1)	1.6 MultiFuel	75	10/07 – 11/08	3904	
GOLF V (1K1)	1.6 MultiFuel	75	10/07 – 11/08		3905
GOLF V (1K1)	1.8 GTI	132	08/06 – 11/08	3904	
GOLF V (1K1)	1.8 GTI	132	08/06 – 11/08		3905
GOLF V (1K1)	1.8 Hybrid	73	08/05 – 11/08		3529/1

MAKE & MODEL		KW	YEAR		
VOLKSWAGEN					
GOLF V (1K1)	1.8 Hybrid	73	08/05 – 11/08	3782	
GOLF V (1K1)	1.9 D	47	12/05 – 11/08	3782	
GOLF V (1K1)	1.9 SDI	47	12/05 – 11/08		3529/1
GOLF V (1K1)	1.9 TDI	66	05/04 – 11/08		3529/1
GOLF V (1K1)	1.9 TDI	66	05/04 – 11/08	3782	
GOLF V (1K1)	1.9 TDI	77	10/03 – 11/08		3529/1
GOLF V (1K1)	1.9 TDI	77	10/03 – 11/08	3782	
GOLF V (1K1)	1.9 TDI	77	10/03 – 11/08	3904	
GOLF V (1K1)	1.9 TDI	77	10/03 – 11/08		3905
GOLF V (1K1)	1.9 TDI 4motion	77	08/04 – 11/08		3529/1
GOLF V (1K1)	1.9 TDI 4motion	77	08/04 – 11/08	3782	
GOLF V (1K1)	1.9 TDI 4motion	77	08/04 – 11/08	3904	
GOLF V (1K1)	1.9 TDI 4motion	77	08/04 – 11/08		3905
GOLF V (1K1)	2.0 FSI	110	01/04 – 11/08		3529/1
GOLF V (1K1)	2.0 FSI	110	01/04 – 11/08	3904	
GOLF V (1K1)	2.0 FSI	110	01/04 – 11/08		3905
GOLF V (1K1)	2.0 FSI 4motion	110	08/04 – 11/08		3529/1
GOLF V (1K1)	2.0 FSI 4motion	110	08/04 – 11/08	3904	
GOLF V (1K1)	2.0 FSI 4motion	110	08/04 – 11/08		3905
GOLF V (1K1)	2.0 GTI	147	10/04 – 02/09	3904	
GOLF V (1K1)	2.0 GTI	147	10/04 – 02/09		3905
GOLF V (1K1)	2.0 GTI	169	09/06 – 12/08		3529/1
GOLF V (1K1)	2.0 GTI	169	09/06 – 12/08		3905
GOLF V (1K1)	2.0 SDI	55	01/04 – 11/08		3529/1
GOLF V (1K1)	2.0 SDI	55	01/04 – 11/08	3782	
GOLF V (1K1)	2.0 SDI	55	01/04 – 11/08		3905
GOLF V (1K1)	2.0 TDI	100	10/03 – 11/08		3529/1
GOLF V (1K1)	2.0 TDI	100	10/03 – 11/08	3904	
GOLF V (1K1)	2.0 TDI	100	10/03 – 11/08		3905
GOLF V (1K1)	2.0 TDI	103	12/04 – 11/08		3529/1
GOLF V (1K1)	2.0 TDI	103	12/04 – 11/08	3904	
GOLF V (1K1)	2.0 TDI	103	12/04 – 11/08		3905
GOLF V (1K1)	2.0 TDI	125	11/05 – 11/08		3529/1
GOLF V (1K1)	2.0 TDI	125	11/05 – 11/08	3904	
GOLF V (1K1)	2.0 TDI	125	11/05 – 11/08		3905
GOLF V (1K1)	2.0 TDI 16V	103	10/03 – 11/08		3529/1
GOLF V (1K1)	2.0 TDI 16V	103	10/03 – 11/08	3904	
GOLF V (1K1)	2.0 TDI 16V	103	10/03 – 11/08		3905
GOLF V (1K1)	2.0 TDI 16V 4motion	103	08/04 – 11/08		3529/1
GOLF V (1K1)	2.0 TDI 16V 4motion	103	08/04 – 11/08	3904	
GOLF V (1K1)	2.0 TDI 16V 4motion	103	08/04 – 11/08		3905
GOLF V (1K1)	2.0 TDI 4motion	103	08/04 – 11/08		3529/1
GOLF V (1K1)	2.0 TDI 4motion	103	08/04 – 11/08	3904	
GOLF V (1K1)	2.0 TDI 4motion	103	08/04 – 11/08		3905
GOLF V (1K1)	2.0 TSI	147	03/10 -	3904	
GOLF V Variant (1K5)	14	59	06/07 – 07/09		3529/1
GOLF V Variant (1K5)	14	59	06/07 – 07/09	3782	
GOLF V Variant (1K5)	14	59	06/07 – 07/09		3905
GOLF V Variant (1K5)	16	75	06/07 – 07/09		3529/1
GOLF V Variant (1K5)	16	75	06/07 – 07/09	3782	
GOLF V Variant (1K5)	16	75	06/07 – 07/09		3905
GOLF V Variant (1K5)	20	147	06/07 – 07/09	3904	
GOLF V Variant (1K5)	20	147	06/07 – 07/09		3905
GOLF V Variant (1K5)	1.4 TSI	90	06/07 – 07/09		3529/1
GOLF V Variant (1K5)	1.4 TSI	90	06/07 – 07/09	3904	
GOLF V Variant (1K5)	1.4 TSI	90	06/07 – 07/09		3905
GOLF V Variant (1K5)	1.4 TSI	103	06/07 – 07/09		3529/1
GOLF V Variant (1K5)	1.4 TSI	103	06/07 – 07/09	3904	
GOLF V Variant (1K5)	1.4 TSI	103	06/07 – 07/09		3905
GOLF V Variant (1K5)	1.4 TSI	118	07/08 – 07/09	3904	
GOLF V Variant (1K5)	1.4 TSI	118	07/08 – 07/09		3905
GOLF V Variant (1K5)	1.4 TSI	125	06/07 – 07/09	3904	
GOLF V Variant (1K5)	1.4 TSI	125	06/07 – 07/09		3905
GOLF V Variant (1K5)	1.6 MultiFuel	75	11/07 – 07/09		3529/1
GOLF V Variant (1K5)	1.6 MultiFuel	75	11/07 – 07/09	3782	
GOLF V Variant (1K5)	1.6 MultiFuel	75	11/07 – 07/09	3904	
GOLF V Variant (1K5)	1.6 MultiFuel	75	11/07 – 07/09		3905
GOLF V Variant (1K5)	1.9 TDI	77	06/07 – 07/09		3529/1
GOLF V Variant (1K5)	1.9 TDI	77	06/07 – 07/09	3782	
GOLF V Variant (1K5)	1.9 TDI	77	06/07 – 07/09		3905
GOLF V Variant (1K5)	1.9 TDI 4motion	77	01/08 – 07/09		3529/1

MAKE & MODEL		KW	YEAR		
VOLKSWAGEN					
GOLF V Variant (1K5)	1.9 TDI 4motion	77	01/08 – 07/09	3904	
GOLF V Variant (1K5)	1.9 TDI 4motion	77	01/08 – 07/09		3905
GOLF V Variant (1K5)	2.0 TDI	100	06/07 – 07/09		3529/1
GOLF V Variant (1K5)	2.0 TDI	100	06/07 – 07/09	3904	
GOLF V Variant (1K5)	2.0 TDI	100	06/07 – 07/09		3905
GOLF V Variant (1K5)	2.0 TDI	103	06/07 – 07/09		3529/1
GOLF V Variant (1K5)	2.0 TDI	103	06/07 – 07/09	3904	
GOLF V Variant (1K5)	2.0 TDI	103	06/07 – 07/09		3905
GOLF V Variant (1K5)	2.0 TDI 16V	103	06/07 – 07/09		3529/1
GOLF V Variant (1K5)	2.0 TDI 16V	103	06/07 – 07/09	3904	
GOLF V Variant (1K5)	2.0 TDI 16V	103	06/07 – 07/09		3905
GOLF V Variant (1K5)	2.0 TDI 4motion	100	06/07 – 07/09		3529/1
GOLF VI (517)	1.2 TSI 16V (CJZA)	105	11/13 -	4228	
GOLF VI (5K1)	14	59	10/08 – 11/12		3529/1
GOLF VI (5K1)	14	59	10/08 – 11/12	3782	
GOLF VI (5K1)	14	59	10/08 – 11/12	3904	
GOLF VI (5K1)	14	59	10/08 – 11/12		3905
GOLF VI (5K1)	14	59	10/08 – 11/12		4135
GOLF VI (5K1)	16	75	10/08 – 11/12		3529/1
GOLF VI (5K1)	16	75	10/08 – 11/12	3782	
GOLF VI (5K1)	16	75	10/08 – 11/12	3904	
GOLF VI (5K1)	16	75	10/08 – 11/12		3905
GOLF VI (5K1)	16	75	10/08 – 11/12		4135
GOLF VI (5K1)	1.2 TSI	63	05/10 – 11/12		3529/1
GOLF VI (5K1)	1.2 TSI	63	05/10 – 11/12	3782	
GOLF VI (5K1)	1.2 TSI	63	05/10 – 11/12	3904	
GOLF VI (5K1)	1.2 TSI	63	05/10 – 11/12		4135
GOLF VI (5K1)	1.2 TSI	77	11/08 – 11/12		3529/1
GOLF VI (5K1)	1.2 TSI	77	11/08 – 11/12	3782	
GOLF VI (5K1)	1.2 TSI	77	11/08 – 11/12	3904	
GOLF VI (5K1)	1.2 TSI	77	11/08 – 11/12		3905
GOLF VI (5K1)	1.2 TSI	77	11/08 – 11/12		4135
GOLF VI (5K1)	1.4 TSI	90	10/08 – 11/12		3529/1
GOLF VI (5K1)	1.4 TSI	90	10/08 – 11/12	3782	
GOLF VI (5K1)	1.4 TSI	90	10/08 – 11/12	3904	
GOLF VI (5K1)	1.4 TSI	90	10/08 – 11/12		3905
GOLF VI (5K1)	1.4 TSI	90	10/08 – 11/12		4135
GOLF VI (5K1)	1.4 TSI	118	10/08 – 11/12	3904	
GOLF VI (5K1)	1.4 TSI	118	10/08 – 11/12		3905
GOLF VI (5K1)	1.6 BiFuel	75	03/09 – 11/12		3529/1
GOLF VI (5K1)	1.6 BiFuel	75	03/09 – 11/12	3782	
GOLF VI (5K1)	1.6 BiFuel	75	03/09 – 11/12	3904	
GOLF VI (5K1)	1.6 BiFuel	75	03/09 – 11/12		3905
GOLF VI (5K1)	1.6 BiFuel	75	03/09 – 11/12		4135
GOLF VI (5K1)	1.6 MultiFuel	75	10/08 – 11/12		3529/1
GOLF VI (5K1)	1.6 MultiFuel	75	10/08 – 11/12	3782	
GOLF VI (5K1)	1.6 MultiFuel	75	10/08 – 11/12	3904	
GOLF VI (5K1)	1.6 MultiFuel	75	10/08 – 11/12		4135
GOLF VI (5K1)	1.6 TDI	66	02/09 – 11/12		3529/1
GOLF VI (5K1)	1.6 TDI	66	02/09 – 11/12	3782	
GOLF VI (5K1)	1.6 TDI	66	02/09 – 11/12	3904	
GOLF VI (5K1)	1.6 TDI	66	02/09 – 11/12		3905
GOLF VI (5K1)	1.6 TDI	66	02/09 – 11/12		4135
GOLF VI (5K1)	1.6 TDI	77	02/09 – 11/12		3529/1
GOLF VI (5K1)	1.6 TDI	77	02/09 – 11/12	3782	
GOLF VI (5K1)	1.6 TDI	77	02/09 – 11/12	3904	
GOLF VI (5K1)	1.6 TDI	77	02/09 – 11/12		3905
GOLF VI (5K1)	1.6 TDI	77	02/09 – 11/12		4135
GOLF VI (5K1)	1.8 TSI	118	06/09 – 01/11	3904	
GOLF VI (5K1)	1.8 TSI	118	06/09 – 01/11		3905
GOLF VI (5K1)	2.0 GTi	147	06/09 – 11/13	3904	
GOLF VI (5K1)	2.0 GTi	147	06/09 – 11/13		3905
GOLF VI (5K1)	2.0 GTi	147	06/09 – 11/13		4135
GOLF VI (5K1)	2.0 GTi	155	04/09 – 11/12	3904	
GOLF VI (5K1)	2.0 GTi	155	04/09 – 11/12		3905
GOLF VI (5K1)	2.0 GTi	173	05/11 – 11/12		3905
GOLF VI (5K1)	2.0 TDI	81	10/08 – 11/12		3529/1
GOLF VI (5K1)	2.0 TDI	81	10/08 – 11/12	3782	
GOLF VI (5K1)	2.0 TDI	81	10/08 – 11/12	3904	
GOLF VI (5K1)	2.0 TDI	81	10/08 – 11/12		3905
GOLF VI (5K1)	2.0 TDI	81	10/08 – 11/12		4135

BESER®

MAKE & MODEL		KW	YEAR		
VOLKSWAGEN					
GOLF VI (5K1)	2.0 TDI	100	10/08 – 11/12		3529/1
GOLF VI (5K1)	2.0 TDI	100	10/08 – 11/12	3782	
GOLF VI (5K1)	2.0 TDI	100	10/08 – 11/12	3904	
GOLF VI (5K1)	2.0 TDI	100	10/08 – 11/12		3905
GOLF VI (5K1)	2.0 TDI	100	10/08 – 11/12		4135
GOLF VI (5K1)	2.0 TDI	103	10/08 – 05/13		3529/1
GOLF VI (5K1)	2.0 TDI	103	10/08 – 05/13	3782	
GOLF VI (5K1)	2.0 TDI	103	10/08 – 05/13	3904	
GOLF VI (5K1)	2.0 TDI	103	10/08 – 05/13		3905
GOLF VI (5K1)	2.0 TDI	103	10/08 – 05/13		4135
GOLF VI (5K1)	2.0 TDI	125	04/09 – 11/12	3904	
GOLF VI (5K1)	2.0 TDI	125	04/09 – 11/12		3905
GOLF VI (5K1)	2.0 TDI 4motion	103	05/09 – 11/12	3904	
GOLF VI (5K1)	2.0 TDI 4motion	103	05/09 – 11/12		3905
GOLF VI (5K1)	2.0 TDI 4motion	103	05/09 – 11/12		4135
GOLF VI (5K1)	Blue E-Motion	65	12/10 – 11/13		3529/1
GOLF VI (5K1)	Blue E-Motion	65	12/10 – 11/13	3782	
GOLF VI (5K1)	Blue E-Motion	65	12/10 – 11/13	3904	
GOLF VI (5K1)	Blue E-Motion	65	12/10 – 11/13		4135
GOLF VI Convertible (517)	1.2 TSI	77	03/11 -		3529/1
GOLF VI Convertible (517)	1.2 TSI	77	03/11 -	3904	
GOLF VI Convertible (517)	1.2 TSI	77	03/11 -		4135
GOLF VI Convertible (517)	1.2 TSI 16V	77	11/13 -		3529/1
GOLF VI Convertible (517)	1.2 TSI 16V	77	11/13 -	3904	
GOLF VI Convertible (517)	1.2 TSI 16V	77	11/13 -		4135
GOLF VI Convertible (517)	1.4 TSI	90	11/11 -		3529/1
GOLF VI Convertible (517)	1.4 TSI	90	11/11 -	3904	
GOLF VI Convertible (517)	1.4 TSI	90	11/11 -		4135
GOLF VI Convertible (517)	1.4 TSI	118	03/11 -		3529/1
GOLF VI Convertible (517)	1.4 TSI	118	03/11 -	3904	
GOLF VI Convertible (517)	1.4 TSI	118	03/11 -		4135
GOLF VI Convertible (517)	1.6 TDI	77	03/11 -		3529/1
GOLF VI Convertible (517)	1.6 TDI	77	03/11 -	3904	
GOLF VI Convertible (517)	1.6 TDI	77	03/11 -		4135
GOLF VI Convertible (517)	2.0 GTI	155	11/11 -		3529/1
GOLF VI Convertible (517)	2.0 GTI	155	11/11 -	3904	
GOLF VI Convertible (517)	2.0 GTI	155	11/11 -		4135
GOLF VI Convertible (517)	2.0 R	195	01/13 -		3529/1
GOLF VI Convertible (517)	2.0 R	195	01/13 -	3904	
GOLF VI Convertible (517)	2.0 R	195	01/13 -		3905
GOLF VI Convertible (517)	2.0 R	195	01/13 -		4135
GOLF VI Convertible (517)	2.0 TDI	103	11/11 -		3529/1
GOLF VI Convertible (517)	2.0 TDI	103	11/11 -	3904	
GOLF VI Convertible (517)	2.0 TDI	103	11/11 -		4135
GOLF VI Convertible (517)	2.0 TDI	110	11/13 -		3529/1
GOLF VI Convertible (517)	2.0 TDI	110	11/13 -	3904	
GOLF VI Convertible (517)	2.0 TDI	110	11/13 -		4135
GOLF VI Convertible (517)	2.0 TSI	162	11/13 -	3904	
GOLF VI Convertible (517)	2.0 TSI	162	11/13 -		3905
GOLF VI Convertible (517)	2.0 TSI	162	11/13 -		4135
GOLF VI Variant (AJ5)	14	59	07/09 – 07/13	3782	
GOLF VI Variant (AJ5)	14	59	07/09 – 07/13	3904	
GOLF VI Variant (AJ5)	14	59	07/09 – 07/13		3905
GOLF VI Variant (AJ5)	14	59	07/09 – 07/13		4135
GOLF VI Variant (AJ5)	16	75	07/09 – 07/13	3782	
GOLF VI Variant (AJ5)	16	75	07/09 – 07/13	3904	
GOLF VI Variant (AJ5)	16	75	07/09 – 07/13		3905
GOLF VI Variant (AJ5)	16	75	07/09 – 07/13		4135
GOLF VI Variant (AJ5)	1.2 TSI	63	07/10 – 07/13	3782	
GOLF VI Variant (AJ5)	1.2 TSI	63	07/10 – 07/13		4135
GOLF VI Variant (AJ5)	1.2 TSI	77	07/09 – 07/13	3782	
GOLF VI Variant (AJ5)	1.2 TSI	77	07/09 – 07/13	3904	
GOLF VI Variant (AJ5)	1.2 TSI	77	07/09 – 07/13		3905
GOLF VI Variant (AJ5)	1.2 TSI	77	07/09 – 07/13		4135
GOLF VI Variant (AJ5)	1.4 TSI	90	07/09 – 07/13	3782	
GOLF VI Variant (AJ5)	1.4 TSI	90	07/09 – 07/13	3904	
GOLF VI Variant (AJ5)	1.4 TSI	90	07/09 – 07/13		3905
GOLF VI Variant (AJ5)	1.4 TSI	90	07/09 – 07/13		4135
GOLF VI Variant (AJ5)	1.4 TSI	118	07/09 – 07/13	3904	
GOLF VI Variant (AJ5)	1.4 TSI	118	07/09 – 07/13		3905
GOLF VI Variant (AJ5)	1.4 TSI	118	07/09 – 07/13		4135

BESER

MAKE & MODEL		KW	YEAR		
VOLKSWAGEN					
GOLF VI Variant (AJ5)	1.6 MultiFuel	75	07/10 – 07/13	3782	
GOLF VI Variant (AJ5)	1.6 MultiFuel	75	07/10 – 07/13		4135
GOLF VI Variant (AJ5)	1.6 TDI	66	12/09 – 07/13	3782	
GOLF VI Variant (AJ5)	1.6 TDI	66	12/09 – 07/13	3904	
GOLF VI Variant (AJ5)	1.6 TDI	66	12/09 – 07/13		3905
GOLF VI Variant (AJ5)	1.6 TDI	66	12/09 – 07/13		4135
GOLF VI Variant (AJ5)	1.6 TDI	77	07/09 – 07/13	3782	
GOLF VI Variant (AJ5)	1.6 TDI	77	07/09 – 07/13	3904	
GOLF VI Variant (AJ5)	1.6 TDI	77	07/09 – 07/13		3905
GOLF VI Variant (AJ5)	1.6 TDI	77	07/09 – 07/13		4135
GOLF VI Variant (AJ5)	1.6 TDI 4motion	77	07/09 – 07/13	3782	
GOLF VI Variant (AJ5)	1.6 TDI 4motion	77	07/09 – 07/13	3904	
GOLF VI Variant (AJ5)	1.6 TDI 4motion	77	07/09 – 07/13		3905
GOLF VI Variant (AJ5)	1.6 TDI 4motion	77	07/09 – 07/13		4135
GOLF VI Variant (AJ5)	2.0 TDI	81	01/10 – 07/13	3904	
GOLF VI Variant (AJ5)	2.0 TDI	81	01/10 – 07/13		3905
GOLF VI Variant (AJ5)	2.0 TDI	81	01/10 – 07/13		4135
GOLF VI Variant (AJ5)	2.0 TDI	100	07/09 – 07/13	3904	
GOLF VI Variant (AJ5)	2.0 TDI	100	07/09 – 07/13		3905
GOLF VI Variant (AJ5)	2.0 TDI	100	07/09 – 07/13		4135
GOLF VI Variant (AJ5)	2.0 TDI 16V	103	07/09 – 07/13	3904	
GOLF VI Variant (AJ5)	2.0 TDI 16V	103	07/09 – 07/13		3905
GOLF VI Variant (AJ5)	2.0 TDI 16V	103	07/09 – 07/13		4135
GOLF VI Variant (AJ5)	2.0 TSI	147	07/09 – 07/13	3904	
GOLF VI Variant (AJ5)	2.0 TSI	147	07/09 – 07/13		3905
GOLF VII / JETTA VII (BA5)	1.0 TS I (CHZD)	85	05/15 -		4241
GOLF VII / JETTA VII (BA5)	1.2 TS I (CJZA)	77	05/13 -		4241
GOLF VII / JETTA VII (BA5)	1.2 TS I (CJZB)	63	05/13 -		4241
GOLF VII / JETTA VII (BA5)	1.2 TSI (CJZA)	77	05/13 -	4228	
GOLF VII / JETTA VII (BA5)	1.2 TSI (CYVB)	81	04/14 -	4228	
GOLF VII / JETTA VII (BA5)	1.2 TSI (CYVB)	81	04/14 -		4241
GOLF VII / JETTA VII (BA5)	1.2 TSI (CJZB)	63	05/13 -	4228	
GOLF VII / JETTA VII (BA5)	1.2 TSI MultiFuel (CJZA)	77	04/13 -	4228	
GOLF VII / JETTA VII (BA5)	1.2 TSI MultiFuel (CJZA)	77	04/13 -		4241
GOLF VII / JETTA VII (BA5)	1.4 TSI (CHPA)	103	05/13 -	4228	
GOLF VII / JETTA VII (BA5)	1.4 TSI (CHPA)	103	05/13 -		4241
GOLF VII / JETTA VII (BA5)	1.4 TSI (CHPB)	110	05/14 -	4228	
GOLF VII / JETTA VII (BA5)	1.4 TSI (CHPB)	110	05/14 -		4241
GOLF VII / JETTA VII (BA5)	1.4 TSI (CPVB)	92	05/14 -	4228	
GOLF VII / JETTA VII (BA5)	1.4 TSI (CPVB)	92	05/14 -		4241
GOLF VII / JETTA VII (BA5)	1.4 TSI (CXSA)	90	05/13 -	4228	
GOLF VII / JETTA VII (BA5)	1.4 TSI (CXSA)	90	05/13 -		4241
GOLF VII / JETTA VII (BA5)	1.4 TSI (CZCA)	92	05/14 -	4228	
GOLF VII / JETTA VII (BA5)	1.4 TSI (CZCA)	92	05/14 -		4241
GOLF VII / JETTA VII (BA5)	1.4 TSI (CZDA)	110	05/14 -	4228	
GOLF VII / JETTA VII (BA5)	1.4 TSI (CZDA)	110	05/14 -		4241
GOLF VII / JETTA VII (BA5)	1.4 TSI BiFuel (CPWA)	81	09/13 -	4228	
GOLF VII / JETTA VII (BA5)	1.4 TSI BiFuel (CPWA)	81	09/13 -		4241
GOLF VII / JETTA VII (BA5)	1.4 TSI CNG (CPWA)	81	09/13 -	4228	
GOLF VII / JETTA VII (BA5)	1.4 TSI CNG (CPWA)	81	09/13 -		4241
GOLF VII / JETTA VII (BA5)	1.4 TSI MultiFuel (CPVA)	90	04/13 -	4228	
GOLF VII / JETTA VII (BA5)	1.4 TSI MultiFuel (CPVA)	90	04/13 -		4241
GOLF VII / JETTA VII (BA5)	1.4 TSI MultiFuel (CPVB)	92	05/14 -	4228	
GOLF VII / JETTA VII (BA5)	1.4 TSI MultiFuel (CPVB)	92	05/14 -		4241
GOLF VII / JETTA VII (BA5)	1.6 (CWVA)	81	05/14 -	4228	
GOLF VII / JETTA VII (BA5)	1.6 (CWVA)	81	05/14 -		4241
GOLF VII / JETTA VII (BA5)	1.6 TDI (CLHA)	77	05/13 -	4228	
GOLF VII / JETTA VII (BA5)	1.6 TDI (CLHA)	77	05/13 -	4228	
GOLF VII / JETTA VII (BA5)	1.6 TDI (CLHA)	77	05/13 -		4241
GOLF VII / JETTA VII (BA5)	1.6 TDI (CLHA)	77	05/13 -		4241
GOLF VII / JETTA VII (BA5)	1.6 TDI (CLHB)	66	05/13 -	4228	
GOLF VII / JETTA VII (BA5)	1.6 TDI (CLHB)	66	05/13 -		4241
GOLF VII / JETTA VII (BA5)	1.6 TDI (CRKA)	66	05/13 -	4228	
GOLF VII / JETTA VII (BA5)	1.6 TDI (CRKA)	66	05/13 -		4241
GOLF VII / JETTA VII (BA5)	1.6 TDI (CRKB)	81	05/13 -	4228	
GOLF VII / JETTA VII (BA5)	1.6 TDI (CRKB)	81	05/13 -	4228	
GOLF VII / JETTA VII (BA5)	1.6 TDI (CRKB)	81	05/13 -		4241
GOLF VII / JETTA VII (BA5)	1.6 TDI (CRKB)	81	05/13 -		4241
GOLF VII / JETTA VII (BA5)	1.6 TDI (CXXA)	66	05/13 -	4228	
GOLF VII / JETTA VII (BA5)	1.6 TDI (CXXA)	66	05/13 -		4241
GOLF VII / JETTA VII (BA5)	1.6 TDI (CXXB)	81	05/13 -	4228	

MAKE & MODEL		KW	YEAR		
VOLKSWAGEN					
GOLF VII / JETTA VII (BA5)	1.6 TDI (CXXB)	81	05/13 -	4228	
GOLF VII / JETTA VII (BA5)	1.6 TDI (CXXB)	81	05/13 -		4241
GOLF VII / JETTA VII (BA5)	1.6 TDI (CXXB)	81	05/13 -		4241
GOLF VII / JETTA VII (BA5)	2.0 GTD (CUNA)	135	01/15 -	4228	
GOLF VII / JETTA VII (BA5)	2.0 GTD (CUNA)	135	01/15 -		4241
GOLF VII / JETTA VII (BA5)	2.0 R (CJXB)	206	03/15 -	4228	
GOLF VII / JETTA VII (BA5)	2.0 R (CJXB)	206	03/15 -		4241
GOLF VII / JETTA VII (BA5)	2.0 R (CJXC)	221	03/15 -	4228	
GOLF VII / JETTA VII (BA5)	2.0 R (CJXC)	221	03/15 -		4241
GOLF VII / JETTA VII (BA5)	2.0 R 360S	265	09/16 -	4228	
GOLF VII / JETTA VII (BA5)	2.0 R 360S	265	09/16 -		4241
GOLF VII / JETTA VII (BA5)	2.0 TDI (CRBC)	110	04/13 -	4228	
GOLF VII / JETTA VII (BA5)	2.0 TDI (CRBC)	110	04/13 -	4228	
GOLF VII / JETTA VII (BA5)	2.0 TDI (CRBC)	110	04/13 -		4241
GOLF VII / JETTA VII (BA5)	2.0 TDI (CRBC)	110	04/13 -		4241
GOLF VII / JETTA VII (BA5)	2.0 TDI (CKFC)	110	04/13 -	4228	
GOLF VII / JETTA VII (BA5)	2.0 TDI (CKFC)	110	04/13 -	4228	
GOLF VII / JETTA VII (BA5)	2.0 TDI (CKFC)	110	04/13 -		4241
GOLF VII / JETTA VII (BA5)	2.0 TDI (CKFC)	110	04/13 -		4241
GOLF VII / JETTA VII (BA5)	2.0 TDI (CRLB)	110	04/13 -	4228	
GOLF VII / JETTA VII (BA5)	2.0 TDI (CRLB)	110	04/13 -		4241
GOLF VII / JETTA VII (BA5)	2.0 TDI (CRLB)	110	04/13 -		4241
GOLF VII / JETTA VII (BA5)	2.0 TDI (CRMB)	110	04/13 -	4228	
GOLF VII / JETTA VII (BA5)	2.0 TDI (CRMB)	110	04/13 -	4228	
GOLF VII / JETTA VII (BA5)	2.0 TDI (CRMB)	110	04/13 -		4241
GOLF VII / JETTA VII (BA5)	2.0 TDI (CRMB)	110	04/13 -		4241
GOLF VII / JETTA VII (BA5)	2.0 TDI (CRVA)	81	05/13 -	4228	
GOLF VII / JETTA VII (BA5)	2.0 TDI (CRLB)	110	04/13 -	4228	
GOLF VII / JETTA VII (BA5)	2.0 TDI (CRVA)	81	05/13 -		4241
GOLF VII (5G1, BE1)	1.0 TSI	81	11/16 -	4295	
GOLF VII (5G1, BE1)	1.0 TSI	85	05/15 -	4295	
GOLF VII (5G1, BE1)	1.0 TSI (CHZD)	85	05/15 -		4241
GOLF VII (5G1, BE1)	1.2 TSI	63	08/12 -	4295	
GOLF VII (5G1, BE1)	1.2 TSI (CJZA)	77	11/12 -	4228	
GOLF VII (5G1, BE1)	1.2 TSI (CJZA)	77	11/12 -		4241
GOLF VII (5G1, BE1)	1.2 TSI (CJZB)	63	08/12 -	4228	
GOLF VII (5G1, BE1)	1.2 TSI (CJZB)	63	08/12 -		4241
GOLF VII (5G1, BE1)	1.2 TSI (CYVB)	81	04/14 -	4228	
GOLF VII (5G1, BE1)	1.2 TSI (CYVB)	81	04/14 -		4241
GOLF VII (5G1, BE1)	1.4 GTE Hybrid (CUKB)	110	05/14 -	4228	
GOLF VII (5G1, BE1)	1.4 GTE Hybrid (CUKB)	110	05/14 -		4241
GOLF VII (5G1, BE1)	1.4 TGI (CPWA)	81	06/13 -	4228	
GOLF VII (5G1, BE1)	1.4 TGI (CPWA)	81	06/13 -		4241
GOLF VII (5G1, BE1)	1.4 TGI (CZBA)	81	06/13 -	4228	
GOLF VII (5G1, BE1)	1.4 TGI (CZBA)	81	06/13 -		4241
GOLF VII (5G1, BE1)	1.4 TGI CNG	81	06/13 -	4295	
GOLF VII (5G1, BE1)	1.4 TSI (CHPA)	103	11/12 -	4228	
GOLF VII (5G1, BE1)	1.4 TSI (CHPA)	103	11/12 -		4241
GOLF VII (5G1, BE1)	1.4 TSI (CHPB)	110	05/14 -	4228	
GOLF VII (5G1, BE1)	1.4 TSI (CHPB)	110	05/14 -		4241
GOLF VII (5G1, BE1)	1.4 TSI (CMBA)	90	11/12 -	4228	
GOLF VII (5G1, BE1)	1.4 TSI (CMBA)	90	11/12 -		4241
GOLF VII (5G1, BE1)	1.4 TSI (CPTA)	103	11/12 -	4228	
GOLF VII (5G1, BE1)	1.4 TSI (CPTA)	103	11/12 -		4241
GOLF VII (5G1, BE1)	1.4 TSI (CPVB)	92	05/14 -	4228	
GOLF VII (5G1, BE1)	1.4 TSI (CPVB)	92	05/14 -		4241
GOLF VII (5G1, BE1)	1.4 TSI (CUKA)	90	11/12 -	4228	
GOLF VII (5G1, BE1)	1.4 TSI (CUKA)	90	11/12 -		4241
GOLF VII (5G1, BE1)	1.4 TSI (CXSA)	90	11/12 -	4228	
GOLF VII (5G1, BE1)	1.4 TSI (CXSA)	90	11/12 -		4241
GOLF VII (5G1, BE1)	1.4 TSI (CZCA)	92	05/14 -	4228	
GOLF VII (5G1, BE1)	1.4 TSI (CZCA)	92	05/14 -		4241
GOLF VII (5G1, BE1)	1.4 TSI (CZDA)	110	05/14 -	4228	
GOLF VII (5G1, BE1)	1.4 TSI (CZDA)	110	05/14 -		4241
GOLF VII (5G1, BE1)	1.4 TSI (CZEA)	110	05/14 -	4228	
GOLF VII (5G1, BE1)	1.4 TSI (CZEA)	110	05/14 -		4241
GOLF VII (5G1, BE1)	1.4 TSI MultiFuel (CPVA)	90	04/13 -	4228	
GOLF VII (5G1, BE1)	1.4 TSI MultiFuel (CPVB)	92	12/13 -	4228	
GOLF VII (5G1, BE1)	1.4 TSI MultiFuel (CPVA)	90	04/13 -		4241
GOLF VII (5G1, BE1)	1.4 TSI MultiFuel (CPVB)	92	12/13 -		4241
GOLF VII (5G1, BE1)	1.6 (CWVA)	81	05/14 -	4228	

MAKE & MODEL   		KW	YEAR		
VOLKSWAGEN					
GOLF VII (5G1, BE1)	1.6 (CWVA)	81	05/14 -		4241
GOLF VII (5G1, BE1)	1.6 TDI	77	08/12 -	4295	
GOLF VII (5G1, BE1)	1.6 TDI	85	11/16 -	4295	
GOLF VII (5G1, BE1)	1.6 TDI (CLHA)	77	08/12 -	4228	
GOLF VII (5G1, BE1)	1.6 TDI (CLHA)	77	11/12 -	4228	
GOLF VII (5G1, BE1)	1.6 TDI (CLHA)	77	08/12 -		4241
GOLF VII (5G1, BE1)	1.6 TDI (CLHA)	77	11/12 -		4241
GOLF VII (5G1, BE1)	1.6 TDI (CLHB)	66	04/13 -	4228	
GOLF VII (5G1, BE1)	1.6 TDI (CLHB)	66	04/13 -		4241
GOLF VII (5G1, BE1)	1.6 TDI (CRKA)	66	04/13 -	4228	
GOLF VII (5G1, BE1)	1.6 TDI (CRKA)	66	04/13 -		4241
GOLF VII (5G1, BE1)	1.6 TDI (CRKB)	81	01/13 -	4228	
GOLF VII (5G1, BE1)	1.6 TDI (CRKB)	81	01/13 -	4228	
GOLF VII (5G1, BE1)	1.6 TDI (CRKB)	81	01/13 -		4241
GOLF VII (5G1, BE1)	1.6 TDI (CRKB)	81	01/13 -		4241
GOLF VII (5G1, BE1)	1.6 TDI (CXXA)	66	04/13 -	4228	
GOLF VII (5G1, BE1)	1.6 TDI (CXXA)	66	04/13 -		4241
GOLF VII (5G1, BE1)	1.6 TDI (CXXB)	81	01/13 -	4228	
GOLF VII (5G1, BE1)	1.6 TDI (CXXB)	81	01/13 -		4241
GOLF VII (5G1, BE1)	2.0 GTD (CUNA)	135	04/13 -	4228	
GOLF VII (5G1, BE1)	2.0 GTD (CUNA)	135	04/13 -		4241
GOLF VII (5G1, BE1)	2.0 GTI (CHHA)	169	04/13 -	4228	
GOLF VII (5G1, BE1)	2.0 GTI (CHHA)	169	04/13 -		4241
GOLF VII (5G1, BE1)	2.0 GTI (CHHB)	162	04/13 -	4228	
GOLF VII (5G1, BE1)	2.0 GTI (CHHB)	162	04/13 -		4241
GOLF VII (5G1, BE1)	2.0 GTI Clubsport	195	02/16 -	4295	
GOLF VII (5G1, BE1)	2.0 GTI Clubsport (CJXE)	195	02/16 -	4228	
GOLF VII (5G1, BE1)	2.0 GTI Clubsport (CJXE)	195	02/16 -		4241
GOLF VII (5G1, BE1)	2.0 GTI Clubsport S (CJXG)	228	09/16 -	4228	
GOLF VII (5G1, BE1)	2.0 GTI Clubsport S (CJXG)	228	09/16 -		4241
GOLF VII (5G1, BE1)	2.0 R (CJXB)	206	11/13 -	4228	
GOLF VII (5G1, BE1)	2.0 R (CJXB)	206	11/13 -		4241
GOLF VII (5G1, BE1)	2.0 R (CJXC)	221	11/13 -	4228	
GOLF VII (5G1, BE1)	2.0 R (CJXD)	213	11/13 -	4228	
GOLF VII (5G1, BE1)	2.0 R (CJXD)	213	11/13 -		4241
GOLF VII (5G1, BE1)	2.0 R (CJXC)	221	11/13 -		4241
GOLF VII (5G1, BE1)	2.0 TDI	105	08/12 -	4295	
GOLF VII (5G1, BE1)	2.0 TDI (CRBC)	110	11/12 -	4228	
GOLF VII (5G1, BE1)	2.0 TDI (CRBC)	110	11/12 -		4241
GOLF VII (5G1, BE1)	2.0 TDI (CKFC)	110	11/12 -	4228	
GOLF VII (5G1, BE1)	2.0 TDI (CKFC)	110	11/12 -		4241
GOLF VII (5G1, BE1)	2.0 TDI (CKFC)	110	11/12 -		4241
GOLF VII (5G1, BE1)	2.0 TDI (CRBB)	105	08/12 -	4228	
GOLF VII (5G1, BE1)	2.0 TDI (CRBB)	105	08/12 -		4241
GOLF VII (5G1, BE1)	2.0 TDI (CRLB)	110	11/12 -	4228	
GOLF VII (5G1, BE1)	2.0 TDI (CRLB)	110	11/12 -	4228	
GOLF VII (5G1, BE1)	2.0 TDI (CRLB)	110	11/12 -		4241
GOLF VII (5G1, BE1)	2.0 TDI (CRLB)	110	11/12 -		4241
GOLF VII (5G1, BE1)	2.0 TDI (CRMB)	110	11/12 -	4228	
GOLF VII (5G1, BE1)	2.0 TDI (CRMB)	110	11/12 -	4228	
GOLF VII (5G1, BE1)	2.0 TDI (CRMB)	110	11/12 -		4241
GOLF VII (5G1, BE1)	2.0 TDI (CRMB)	110	11/12 -		4241
GOLF VII (5G1, BE1)	2.0 TDI (CRVA)	81	11/12 -	4228	
GOLF VII (5G1, BE1)	2.0 TDI (CRVA)	81	11/12 -		4241
GOLF VII (5G1, BE1)	2.0 TDI (CKFC)	110	11/12 -	4228	
GOLF VII (5G1, BE1)	2.0 TSI (CNTA)	155	11/13 -	4228	
GOLF VII (5G1, BE1)	2.0 TSI (CNTA)	155	11/13 -		4241
GOLF VII (5G1, BE1)	2.0 TSI (CXCA)	155	11/13 -	4228	
GOLF VII (5G1, BE1)	2.0 TSI (CXCA)	155	11/13 -		4241
GOLF VII (5G1, BE1)	e-Golf (EAGA)	85	03/14 – 02/17	4228	
GOLF VII (5G1, BE1)	e-Golf (EAGA)	85	03/14 – 02/17		4241
GOLF VII ALLTRACK (BA5)	1.6 TDI (CRKB)	81	12/14 -		4241
GOLF VII ALLTRACK (BA5)	1.6 TDI (CXXB)	81	12/14 -		4241
GOLF VII ALLTRACK (BA5)	1.8 TSI (CJSB)	132	12/14 -		4241
GOLF VII ALLTRACK (BA5)	2.0 TDI (CRBC)	110	12/14 -		4241
GOLF VII ALLTRACK (BA5)	2.0 TDI (CRLB)	110	12/14 -		4241
GOLF VII ALLTRACK (BA5)	2.0 TDI (CUNA)	135	12/14 -		4241
GOLF VII ALLTRACK (BA5)	1.6 TDI (CRKB)	81	12/14 -	4228	
GOLF VII ALLTRACK (BA5)	1.6 TDI (CXXB)	81	12/14 -	4228	
GOLF VII ALLTRACK (BA5)	1.8 TSI (CJSB)	132	12/14 -	4228	
GOLF VII ALLTRACK (BA5)	2.0 TDI (CRBC)	110	12/14 -	4228	

MAKE & MODEL		KW	YEAR		
VOLKSWAGEN					
GOLF VII ALLTRACK (BA5)	2.0 TDI (CRLB)	110	12/14 -	4228	
GOLF VII ALLTRACK (BA5)	2.0 TDI (CUNA)	135	12/14 -	4228	
GOLF VII Estate (BA5)	1.0 TSI	81	11/16 -	4295	
GOLF VII Estate (BA5)	1.0 TSI	85	05/15 -	4295	
GOLF VII Estate (BA5)	1.2 TSI	63	05/13 -	4295	
GOLF VII Estate (BA5)	1.2 TSI	77	05/13 -	4295	
GOLF VII Estate (BA5)	1.4 TGI CNG	81	09/13 -	4295	
GOLF VII Estate (BA5)	1.4 TSI	90	05/13 -	4295	
GOLF VII Estate (BA5)	1.6 TDI	77	05/13 -	4295	
GOLF VII Estate (BA5)	1.6 TDI	85	11/16 -	4295	
GOLF VII Estate (BA5)	2.0 GTD	135	01/15 -	4295	
GOLF VII SPORTSVAN (AM1)	1.0 TSI (CHZD)	85	05/15 -		4241
GOLF VII SPORTSVAN (AM1)	1.2 TSI (CYVA)	63	05/14 -		4241
GOLF VII SPORTSVAN (AM1)	1.2 TSI (CYVB)	81	04/14 -	4228	
GOLF VII SPORTSVAN (AM1)	1.2 TSI (CYVB)	81	04/14 -		4241
GOLF VII SPORTSVAN (AM1)	1.2 TSI (CYVA)	63	05/14 -	4228	
GOLF VII SPORTSVAN (AM1)	1.4 TSI (CPVB)	92	04/14 -	4228	
GOLF VII SPORTSVAN (AM1)	1.4 TSI (CPVB)	92	04/14 -		4241
GOLF VII SPORTSVAN (AM1)	1.4 TSI (CZCA)	92	04/14 -	4228	
GOLF VII SPORTSVAN (AM1)	1.4 TSI (CZCA)	92	04/14 -		4241
GOLF VII SPORTSVAN (AM1)	1.4 TSI (CZDA)	110	02/14 -	4228	
GOLF VII SPORTSVAN (AM1)	1.4 TSI (CZDA)	110	02/14 -		4241
GOLF VII SPORTSVAN (AM1)	1.4 TSI MultiFuel (CPVB)	92	04/14 -	4228	
GOLF VII SPORTSVAN (AM1)	1.4 TSI MultiFuel (CPVB)	92	04/14 -		4241
GOLF VII SPORTSVAN (AM1)	1.6 (CWVA)	81	05/14 -	4228	
GOLF VII SPORTSVAN (AM1)	1.6 (CWVA)	81	05/14 -		4241
GOLF VII SPORTSVAN (AM1)	1.6 TDI (CRKA)	66	02/14 -	4228	
GOLF VII SPORTSVAN (AM1)	1.6 TDI (CRKA)	66	05/14 -		4241
GOLF VII SPORTSVAN (AM1)	1.6 TDI (CRKB)	81	02/14 -	4228	
GOLF VII SPORTSVAN (AM1)	1.6 TDI (CRKB)	81	05/14 -		4241
GOLF VII SPORTSVAN (AM1)	1.6 TDI (CXXA)	66	02/14 -	4228	
GOLF VII SPORTSVAN (AM1)	1.6 TDI (CXXA)	66	05/14 -		4241
GOLF VII SPORTSVAN (AM1)	1.6 TDI (CXXB)	81	05/14 -		4241
GOLF VII SPORTSVAN (AM1)	1.6 TDI (DBKA)	81	05/14 -		4241
GOLF VII SPORTSVAN (AM1)	1.6 TDI (CXXB)	81	02/14 -	4228	
GOLF VII SPORTSVAN (AM1)	1.6 TDI (DBKA)	81	02/14 -	4228	
GOLF VII SPORTSVAN (AM1)	2.0 TDI (CRLB)	110	02/14 -	4228	
GOLF VII SPORTSVAN (AM1)	2.0 TDI (CRLB)	110	05/14 -		4241
GOLF VII SPORTSVAN (AM1)	2.0 TDI (CRLD)	81	05/14 -	4228	
GOLF VII SPORTSVAN (AM1)	2.0 TDI (CRLD)	81	05/14 -		4241
GOLF VII SPORTSVAN (AM1)	2.0 TDI (CRVA)	81	05/14 -	4228	
GOLF VII SPORTSVAN (AM1)	2.0 TDI (CRVA)	81	05/14 -		4241
GOLF VII SPORTSVAN (AM1)	2.0 TDI (DCYA)	110	02/14 -	4228	
GOLF VII SPORTSVAN (AM1)	2.0 TDI (DCYA)	110	05/14 -		4241
JETTA I (16)	11	37	08/78 – 02/84	3327	
JETTA I (16)	11	37	08/78 – 02/84	3343	
JETTA I (16)	11	37	08/78 – 02/84	3483	
JETTA I (16)	13	44	08/79 – 02/84	3327	
JETTA I (16)	13	44	08/79 – 02/84	3343	
JETTA I (16)	13	44	08/79 – 02/84	3483	
JETTA I (16)	15	51	08/78 – 02/84	3444	
JETTA I (16)	15	51	08/78 – 02/84	3585	
JETTA I (16)	16	63	08/78 – 02/84	3585	
JETTA I (16)	18	82	08/82 – 02/84	3486	
JETTA I (16)	1.5 D	37	08/78 – 07/80	3327	
JETTA I (16)	1.5 D	37	08/78 – 07/80	3343	
JETTA I (16)	1.5 D	37	08/78 – 07/80	3483	
JETTA I (16)	1.6	63	08/78 – 02/84	3444	
JETTA I (16)	1.6 D	40	08/80 – 02/84	3327	
JETTA I (16)	1.6 D	40	08/80 – 02/84	3343	
JETTA I (16)	1.6 D	40	08/80 – 02/84	3483	
JETTA I (16)	1.6 GLI	81	08/78 – 07/82	3486	
JETTA I (16)	1.6 TD	51	03/82 – 02/84	3444	
JETTA I (16)	1.6 TD	51	03/82 – 02/84	3585	
JETTA II (19E, 1G2, 165)	16	51	10/86 – 10/91	3585	
JETTA II (19E, 1G2, 165)	16	53	03/86 – 10/91	3585	
JETTA II (19E, 1G2, 165)	16	55	01/84 – 07/92	3585	
JETTA II (19E, 1G2, 165)	18	62	08/86 – 01/90	3486	
JETTA II (19E, 1G2, 165)	18	62	08/86 – 01/90		3529
JETTA II (19E, 1G2, 165)	18	62	08/86 – 01/90	3585	
JETTA II (19E, 1G2, 165)	18	66	08/84 – 10/91	3486	

MAKE & MODEL   		KW	YEAR		
VOLKSWAGEN					
JETTA II (19E, 1G2, 165)	18	66	08/84 – 10/91		3529
JETTA II (19E, 1G2, 165)	18	66	08/84 – 10/91	3585	
JETTA II (19E, 1G2, 165)	18	79	08/85 – 10/87	3486	
JETTA II (19E, 1G2, 165)	18	79	08/85 – 10/87		3529
JETTA II (19E, 1G2, 165)	18	82	01/84 – 10/91	3486	
JETTA II (19E, 1G2, 165)	18	82	01/84 – 10/91		3529
JETTA II (19E, 1G2, 165)	1.3	40	01/84 – 06/87	3441	
JETTA II (19E, 1G2, 165)	1.3	43	01/84 – 10/86	3441	
JETTA II (19E, 1G2, 165)	1.3 CAT	40	06/87 – 12/91	3441	
JETTA II (19E, 1G2, 165)	1.3 CAT	40	06/87 – 12/91	3444	
JETTA II (19E, 1G2, 165)	1.3 CAT	40	06/87 – 12/91	3585	
JETTA II (19E, 1G2, 165)	1.6	51	10/86 – 10/91	3444	
JETTA II (19E, 1G2, 165)	1.6	53	03/86 – 10/91	3441	
JETTA II (19E, 1G2, 165)	1.6	53	03/86 – 10/91	3444	
JETTA II (19E, 1G2, 165)	1.6	55	01/84 – 07/92	3444	
JETTA II (19E, 1G2, 165)	1.6 D	40	01/84 – 10/91	3441	
JETTA II (19E, 1G2, 165)	1.6 D	40	01/84 – 10/91	3444	
JETTA II (19E, 1G2, 165)	1.6 D	40	01/84 – 10/91	3585	
JETTA II (19E, 1G2, 165)	1.6 TD	44	01/90 – 10/91	3441	
JETTA II (19E, 1G2, 165)	1.6 TD	51	01/84 – 10/91	3444	
JETTA II (19E, 1G2, 165)	1.6 TD	51	01/84 – 10/91	3585	
JETTA II (19E, 1G2, 165)	1.6 TD	59	04/89 – 10/91	3444	
JETTA II (19E, 1G2, 165)	1.6 TD	59	04/89 – 10/91	3585	
JETTA II (19E, 1G2, 165)	1.8	62	08/86 – 01/90	3444	
JETTA II (19E, 1G2, 165)	1.8	66	08/84 – 10/91	3444	
JETTA II (19E, 1G2, 165)	1.8 16V	95	08/86 – 10/91	3486	
JETTA II (19E, 1G2, 165)	1.8 16V	95	08/86 – 10/91		3529
JETTA II (19E, 1G2, 165)	1.8 16V	95	08/86 – 10/91	3531	
JETTA II (19E, 1G2, 165)	1.8 16V	102	06/87 – 12/89	3486	
JETTA II (19E, 1G2, 165)	1.8 16V	102	06/87 – 12/89		3529
JETTA II (19E, 1G2, 165)	1.8 16V	102	06/87 – 12/89	3531	
JETTA II (19E, 1G2, 165)	1.8 CAT	66	08/87 – 10/91	3444	
JETTA II (19E, 1G2, 165)	1.8 CAT	66	08/87 – 10/91	3486	
JETTA II (19E, 1G2, 165)	1.8 CAT	66	08/87 – 10/91		3529
JETTA II (19E, 1G2, 165)	1.8 CAT	66	08/87 – 10/91	3585	
JETTA II (19E, 1G2, 165)	1.8 CAT	79	01/87 – 10/91	3486	
JETTA II (19E, 1G2, 165)	1.8 CAT	79	01/87 – 10/91		3529
JETTA II (19E, 1G2, 165)	1.8 Syncro	62	08/87 – 07/88	3444	
JETTA II (19E, 1G2, 165)	1.8 Syncro	62	08/87 – 07/88	3585	
JETTA II (19E, 1G2, 165)	1.8 Syncro	66	08/87 – 12/88	3444	
JETTA II (19E, 1G2, 165)	1.8 Syncro	66	08/87 – 12/88	3585	
JETTA II (19E, 1G2, 165)	1.8 Syncro	72	08/88 – 07/91	3444	
JETTA II (19E, 1G2, 165)	1.8 Syncro	72	08/88 – 07/91	3585	
JETTA III (1K2)	16	75	10/05 – 10/10	3782	
JETTA III (1K2)	16	75	10/05 – 10/10		3905
JETTA III (1K2)	25	110	01/06 – 10/10	3782	
JETTA III (1K2)	25	110	01/06 – 10/10		3905
JETTA III (1K2)	25	125	07/08 – 10/10	3904	
JETTA III (1K2)	25	125	07/08 – 10/10		3905
JETTA III (1K2)	1.4 TSI	90	05/07 – 10/10	3782	
JETTA III (1K2)	1.4 TSI	90	05/07 – 10/10		3905
JETTA III (1K2)	1.4 TSI	103	07/06 – 10/10	3782	
JETTA III (1K2)	1.4 TSI	103	07/06 – 10/10		3905
JETTA III (1K2)	1.4 TSI	118	07/08 – 10/10	3782	
JETTA III (1K2)	1.4 TSI	118	07/08 – 10/10	3904	
JETTA III (1K2)	1.4 TSI	118	07/08 – 10/10		3905
JETTA III (1K2)	1.4 TSI	125	07/06 – 10/10	3782	
JETTA III (1K2)	1.4 TSI	125	07/06 – 10/10	3904	
JETTA III (1K2)	1.4 TSI	125	07/06 – 10/10		3905
JETTA III (1K2)	1.6 FSI	85	09/05 – 10/10	3782	
JETTA III (1K2)	1.6 FSI	85	09/05 – 10/10	3904	
JETTA III (1K2)	1.6 FSI	85	09/05 – 10/10		3905
JETTA III (1K2)	1.6 MultiFuel	75	01/08 – 10/10	3782	
JETTA III (1K2)	1.6 MultiFuel	75	01/08 – 10/10	3904	
JETTA III (1K2)	1.6 MultiFuel	75	01/08 – 10/10		3905
JETTA III (1K2)	1.6 TDI	66	12/09 – 10/10	3782	
JETTA III (1K2)	1.6 TDI	66	12/09 – 10/10		3905
JETTA III (1K2)	1.6 TDI	77	06/09 – 10/10	3782	
JETTA III (1K2)	1.6 TDI	77	06/09 – 10/10		3905
JETTA III (1K2)	1.9 TDI	77	08/05 – 10/10	3782	
JETTA III (1K2)	1.9 TDI	77	08/05 – 10/10		3905

MAKE & MODEL		KW	YEAR		
VOLKSWAGEN					
JETTA III (1K2)	2.0 FSI	110	08/05 – 10/10	3782	
JETTA III (1K2)	2.0 FSI	110	08/05 – 10/10		3905
JETTA III (1K2)	2.0 TDI	100	09/05 – 10/10	3782	
JETTA III (1K2)	2.0 TDI	100	09/05 – 10/10		3905
JETTA III (1K2)	2.0 TDI	103	10/05 – 10/10	3782	
JETTA III (1K2)	2.0 TDI	103	10/05 – 10/10		3905
JETTA III (1K2)	2.0 TDI	125	10/06 – 10/10	3904	
JETTA III (1K2)	2.0 TDI	125	10/06 – 10/10		3905
JETTA III (1K2)	2.0 TDI 16V	103	08/05 – 10/10	3782	
JETTA III (1K2)	2.0 TDI 16V	103	08/05 – 10/10		3905
JETTA III (1K2)	2.0 TFSI	125	03/08 – 10/10	3904	
JETTA III (1K2)	2.0 TFSI	125	03/08 – 10/10		3905
JETTA III (1K2)	2.0 TFSI	147	10/05 – 10/10	3904	
JETTA III (1K2)	2.0 TFSI	147	10/05 – 10/10		3905
JETTA IV (162, 163)	16	63	03/13 -		3529/1
JETTA IV (162, 163)	16	63	03/13 -	3782	
JETTA IV (162, 163)	16	77	12/11 -	3782	
JETTA IV (162, 163)	16	77	12/11 -		4135
JETTA IV (162, 163)	20	85	06/10 -	3904	
JETTA IV (162, 163)	20	85	06/10 -		4135
JETTA IV (162, 163)	25	125	04/10 -	3904	
JETTA IV (162, 163)	25	125	04/10 -		4135
JETTA IV (162, 163)	1.2 TSI	77	02/11 -	3782	
JETTA IV (162, 163)	1.2 TSI	77	02/11 -		3905
JETTA IV (162, 163)	1.2 TSI	77	02/11 -		4135
JETTA IV (162, 163)	1.4 TSI	90	05/11 -	3904	
JETTA IV (162, 163)	1.4 TSI	90	05/11 -		4135
JETTA IV (162, 163)	1.4 TSI	92	08/14 -		3529/1
JETTA IV (162, 163)	1.4 TSI	92	08/14 -	3782	
JETTA IV (162, 163)	1.4 TSI	92	08/14 -	3904	
JETTA IV (162, 163)	1.4 TSI	110	08/14 -		3529/1
JETTA IV (162, 163)	1.4 TSI	110	08/14 -	3782	
JETTA IV (162, 163)	1.4 TSI	110	04/11 – 07/14	3904	
JETTA IV (162, 163)	1.4 TSI	110	08/14 -	3904	
JETTA IV (162, 163)	1.4 TSI	110	04/11 – 07/14		4135
JETTA IV (162, 163)	1.4 TSI	118	04/11 -	3904	
JETTA IV (162, 163)	1.4 TSI	118	04/11 -		4135
JETTA IV (162, 163)	1.4 TSI Hybrid	110	04/11 -		3529/1
JETTA IV (162, 163)	1.4 TSI Hybrid	110	04/11 -	3904	
JETTA IV (162, 163)	1.6 TDI	77	02/11 -	3782	
JETTA IV (162, 163)	1.6 TDI	77	02/11 -		3905
JETTA IV (162, 163)	1.6 TDI	77	02/11 -		4135
JETTA IV (162, 163)	1.8 TSI	125	07/14 -		3529/1
JETTA IV (162, 163)	1.8 TSI	125	07/14 -	3782	
JETTA IV (162, 163)	1.8 TSI	125	07/14 -	3782/1	
JETTA IV (162, 163)	1.8 TSI	125	07/14 -	3904	
JETTA IV (162, 163)	2.0 TDI	81	10/10 -	3904	
JETTA IV (162, 163)	2.0 TDI	81	10/10 -		4135
JETTA IV (162, 163)	2.0 TDI	103	02/11 -	3904	
JETTA IV (162, 163)	2.0 TDI	103	02/11 -		4135
JETTA IV (162, 163)	2.0 TDI	110	08/14 -		3529/1
JETTA IV (162, 163)	2.0 TDI	110	08/14 -	3782	
JETTA IV (162, 163)	2.0 TDI	110	08/14 -	3904	
JETTA IV (162, 163)	2.0 TSI	147	12/10 -	3904	
JETTA IV (162, 163)	2.0 TSI	147	12/10 -		4135
JETTA IV (162, 163)	2.0 TSI	155	12/12 -	3904	
JETTA IV (162, 163)	2.0 TSI	155	12/12 -		4135
KAEFER	1200 1.2 (11)	25	01/60 – 12/85		3326
KAEFER	1200 1.2 (11)	25	01/60 – 12/85	3360	
KAEFER	1200 1.2 (11)	25	01/60 – 12/85	3361	
KAEFER	1300 1.3 (11)	32	01/70 – 01/73		3326
KAEFER	1300 1.3 (11)	32	01/70 - 01/73	3360	
KAEFER	1300 1.3 (11)	32	01/70 – 01/73	3361	
KAEFER	1302 1.2 (11)	25	08/69 – 08/72		3326
KAEFER	1302 1.2 (11)	25	08/69 – 08/72	3360	
KAEFER	1302 1.2 (11)	25	08/69 – 08/72	3361	
KAEFER	1302 1.3 (11)	32	08/70 – 08/72		3326
KAEFER	1302 1.3 (11)	32	08/70 – 08/72	3360	
KAEFER	1302 1.3 (11)	32	08/70 – 08/72	3361	
KAEFER	1302 1.6	35	07/71 - 07/74		3326
KAEFER	1302 1.6	35	07/71 – 07/74	3360	

MAKE & MODEL   		KW	YEAR		
VOLKSWAGEN					
KAEFER	1302 1.6	35	07/71 – 07/74	3361	
KAEFER	1302 1.6 (11)	37	01/70 – 08/72		3326
KAEFER	1302 1.6 (11)	37	01/70 – 08/72	3360	
KAEFER	1302 1.6 (11)	37	01/70 – 08/72	3361	
KAEFER	1500 1.5 (11)	32	08/66 – 11/73		3326
KAEFER	1500 1.5 (11)	32	08/66 – 11/73	3360	
KAEFER	1500 1.5 (11)	32	08/66 – 11/73	3361	
KAEFER	1500 1.6	37	07/70 – 01/73		3326
KAEFER	1500 1.6	37	07/70 – 01/73	3360	
KAEFER	1500 1.6	37	07/70 – 01/73	3361	
KAEFER	1600 (Mexico)	34	05/73 – 09/92		3326
KAEFER	1600 (Mexico)	34	05/73 – 09/92	3360	
KAEFER	1600 (Mexico)	34	05/73 – 09/92	3361	
KAEFER	1600 i (Mexico)	34	10/92 – 07/03		3326
KAEFER	1600 i (Mexico)	34	10/92 – 07/03	3360	
KAEFER	1600 i (Mexico)	34	10/92 – 07/03	3361	
KAEFER / BEETLE / CAROCHA / COCCINELLE / FUSCA / KEVER	1.2 1303 (D)	25	04/75 – 12/79	3328	
KAEFER / BEETLE / CAROCHA / COCCINELLE / FUSCA / KEVER	1.3 1302 (AC)	29	08/70 – 07/74	3325	
KAEFER / BEETLE / CAROCHA / COCCINELLE / FUSCA / KEVER	1.3 1303 (AB)	32	07/70 – 03/81	3328	
KAEFER / BEETLE / CAROCHA / COCCINELLE / FUSCA / KEVER	1.5 1500 (H)	32	01/66 – 12/70	3325	
KAEFER / BEETLE / CAROCHA / COCCINELLE / FUSCA / KEVER	1.6 1302 (AF)	34	08/70 – 07/74	3325	
KAEFER / BEETLE / CAROCHA / COCCINELLE / FUSCA / KEVER	1.6 1302,1303 (AD)	37	07/70 – 06/79	3328	
KAEFER / BEETLE / CAROCHA / COCCINELLE / FUSCA / KEVER	1.6 1303 (AE)	35	08/70 – 07/74	3328	
KAEFER / BEETLE / CAROCHA / COCCINELLE / FUSCA / KEVER	1.6 1303 (AH)	35	08/70 – 07/74	3328	
KAEFER / BEETLE / CAROCHA / COCCINELLE / FUSCA / KEVER	1.6 1303 (AK)	35	08/70 – 07/74	3328	
KAEFER / BEETLE / CAROCHA / COCCINELLE / FUSCA / KEVER	1.6 1500 (B)	35	07/69 – 07/70	3325	
KAEFER / BEETLE / CAROCHA / COCCINELLE / FUSCA / KEVER / SUPER BEETLE	1.2 1200 (D)	25	01/60 – 12/85	3325	
KAEFER / BEETLE / CAROCHA / COCCINELLE / FUSCA / KEVER	1.2 1200 (D)	25	01/60 – 12/85	3328	
KAEFER / BEETLE / CAROCHA / COCCINELLE / FUSCA / KEVER	1.2 1303 (D)	25	07/72 – 02/76	3328	
KAEFER / BEETLE / CAROCHA / COCCINELLE / FUSCA / KEVER / SUPER BEETLE	1.3 1300	32	01/70 – 01/73	3325	
KAEFER / BEETLE / CAROCHA / COCCINELLE / FUSCA / KEVER	1.3 1300 (AB)	32	01/70 – 01/73	3328	
KAEFER / BEETLE / CAROCHA / COCCINELLE / FUSCA / KEVER / SUPER BEETLE	1.3 1302	32	08/70 – 08/72	3325	
KAEFER / BEETLE / CAROCHA / COCCINELLE / FUSCA / KEVER / SUPER BEETLE	1.3 1302 (AC)	29	08/70 – 07/75	3325	
KAEFER / BEETLE / CAROCHA / COCCINELLE / FUSCA / KEVER	1.3 1303 (AB)	32	08/72 – 07/75	3328	
KAEFER / BEETLE / CAROCHA / COCCINELLE / FUSCA / KEVER	1.3 1303 (AR)	32	08/72 – 07/75	3328	
KAEFER / BEETLE / CAROCHA / COCCINELLE / FUSCA / KEVER / SUPER BEETLE	1.5 1500	32	08/66 – 11/73	3325	
KAEFER / BEETLE / CAROCHA / COCCINELLE / FUSCA / KEVER	1.5 1500 (H)	32	08/66 – 11/73	3328	
KAEFER / BEETLE / CAROCHA / COCCINELLE / FUSCA / KEVER / SUPER BEETLE	1.6 1302	35	07/71 – 07/74	3325	
KAEFER / BEETLE / CAROCHA / COCCINELLE / FUSCA / KEVER / SUPER BEETLE	1.6 1302	35	07/71 – 07/74	3325	
KAEFER / BEETLE / CAROCHA / COCCINELLE / FUSCA / KEVER / SUPER BEETLE	1.6 1302	35	07/71 – 07/74	3325	
KAEFER / BEETLE / CAROCHA / COCCINELLE / FUSCA / KEVER / SUPER BEETLE	1.6 1302	37	01/70 – 08/72	3325	
KAEFER / BEETLE / CAROCHA / COCCINELLE / FUSCA / KEVER	1.6 1303 (AD)	35	08/72 – 12/79	3328	
KAEFER / BEETLE / CAROCHA / COCCINELLE / FUSCA / KEVER	1.6 1303 LS,S	37	08/72 – 12/79	3328	
KAEFER / BEETLE / CAROCHA / COCCINELLE / FUSCA / KEVER	1.6 1303 LS,S	37	08/72 – 12/79	3328	
KAEFER / BEETLE / CAROCHA / COCCINELLE / FUSCA / KEVER	1.6 1303 LS,S (AD)	37	08/72 – 12/79	3328	
KAEFER / BEETLE / CAROCHA / COCCINELLE / FUSCA / KEVER / SUPER BEETLE	1.6 1500	37	07/70 – 01/73	3325	
KAEFER / BEETLE / CAROCHA / COCCINELLE / FUSCA / KEVER	1.6 1500 (AD)	37	07/70 – 01/73	3328	
KAEFER / BEETLE / CAROCHA / COCCINELLE / FUSCA / KEVER	1.6 1600 (AF)	34	05/73 – 09/92	3328	
KAEFER Convertible (15)	1302 1.3	29	08/70 – 07/74		3326
KAEFER Convertible (15)	1302 1.3	29	08/70 – 07/74	3360	
KAEFER Convertible (15)	1302 1.3	29	08/70 – 07/74	3361	
KAEFER Convertible (15)	1302 1.6	34	08/70 – 07/74		3326
KAEFER Convertible (15)	1302 1.6	34	08/70 - 07/74	3360	
KAEFER Convertible (15)	1302 1.6	34	08/70 – 07/74	3361	
KAEFER Convertible (15)	1302,1303 1.6	37	07/70 – 06/79		3326
KAEFER Convertible (15)	1302,1303 1.6	37	07/70 – 06/79	3360	
KAEFER Convertible (15)	1302,1303 1.6	37	07/70 – 06/79	3361	
KAEFER Convertible (15)	1303 1.3	32	07/70 – 03/81		3326
KAEFER Convertible (15)	1303 1.3	32	07/70 – 03/81	3360	
KAEFER Convertible (15)	1303 1.3	32	07/70 – 03/81	3361	
KAEFER Convertible (15)	1303 1.6	35	08/70 – 07/74		3326
KAEFER Convertible (15)	1303 1.6	35	08/70 – 07/74	3360	
KAEFER Convertible (15)	1303 1.6	35	08/70 – 07/74	3361	
KOMBI / COMBI (T2) Furgón (LCVs-N1 Segment)	1.6	62	08.92-07.99		4345
L 80	4.3	103	07/95 – 12/00	3440	
L 80	4.3	103	07/95 – 12/00	3440	
LT 28-35 (2DB, 2DE, 2DK)	2.3 (AGL)	105	05/96 – 07/06	3614	3614
LT 28-35 (2DB, 2DE, 2DK)	2.5 SDI (AGX)	55	07/96 – 07/06	3614	3614
LT 28-35 (2DB, 2DE, 2DK)	2.5 Tdi (AHD)	75	05/96 – 08/99	3614	3614
LT 28-35 (2DB, 2DE, 2DK)	2.5 Tdi (ANJ)	80	05/99 – 07/06	3614	3614
LT 28-35 (2DB, 2DE, 2DK)	2.5 Tdi (APA)	66	05/99 – 07/06	3614	3614

BESER

MAKE & MODEL		KW	YEAR		
VOLKSWAGEN					
LT 28-35 (2DB, 2DE, 2DK)	2.5 Tdi (AVR)	80	05/99 – 07/06	3614	3614
LT 28-35 (2DB, 2DE, 2DK)	2.5 Tdi (BBE)	61	05/01 – 07/06	3614	3614
LT 28-35 (2DB, 2DE, 2DK)	2.5 Tdi (BBF)	70	05/01 – 07/06	3614	3614
LT 28-35 (2DB, 2DE, 2DK)	2.8 TDI (AGK)	92	07/97 – 05/03	3614	3614
LT 28-35 (2DB, 2DE, 2DK)	2.8 TDI (ATA)	96	01/99 – 01/02	3614	3614
LT 28-35 (2DB, 2DE, 2DK)	2.8 TDI (BCQ)	116	05/01 – 06/06	3614	3614
LT 28-35 I Box (281-363)	20	55	04/75 – 09/83	3315/1	
LT 28-35 I Box (281-363)	24	66	12/82 – 07/92	3315/1	
LT 28-35 I Box (281-363)	2.4 D	51	07/90 – 05/96	3315/1	
LT 28-35 I Box (281-363)	2.4 D	55	01/79 – 07/92	3315/1	
LT 28-35 I Box (281-363)	2.4 i	69	03/94 – 06/96	3315/1	
LT 28-35 I Box (281-363)	2.4 TD	68	08/88 – 08/92	3315/1	
LT 28-35 I Box (281-363)	2.4 TD	70	06/92 – 05/96	3315/1	
LT 28-35 I Box (281-363)	2.4 TD	75	02/86 – 08/92	3315/1	
LT 28-35 I Box (281-363)	2.4 TD Syncro	70	08/92 – 04/96	3315/1	
LT 28-35 I Box (281-363)	2.7 D	48	11/75 – 01/80	3315/1	
LT 28-35 I Bus (281-363)	20	55	04/75 – 09/83	3315/1	
LT 28-35 I Bus (281-363)	24	66	12/82 – 07/92	3315/1	
LT 28-35 I Bus (281-363)	2.4 D	51	08/89 – 06/96	3315/1	
LT 28-35 I Bus (281-363)	2.4 D	55	01/79 – 07/92	3315/1	
LT 28-35 I Bus (281-363)	2.4 i	69	08/89 – 06/96	3315/1	
LT 28-35 I Bus (281-363)	2.4 TD	68	08/89 – 08/92	3315/1	
LT 28-35 I Bus (281-363)	2.4 TD	70	09/92 – 06/96	3315/1	
LT 28-35 I Bus (281-363)	2.4 TD	75	12/82 – 07/89	3315/1	
LT 28-35 I Platform/Chassis (281-363)	20	55	04/75 – 09/83	3315/1	
LT 28-35 I Platform/Chassis (281-363)	24	66	12/82 – 07/92	3315/1	
LT 28-35 I Platform/Chassis (281-363)	2.4 D	51	08/90 – 06/96	3315/1	
LT 28-35 I Platform/Chassis (281-363)	2.4 D	55	12/78 – 02/91	3315/1	
LT 28-35 I Platform/Chassis (281-363)	2.4 D Syncro	51	08/91 – 07/92	3513	
LT 28-35 I Platform/Chassis (281-363)	2.4 D Syncro	55	08/91 – 07/92	3513	
LT 28-35 I Platform/Chassis (281-363)	2.4 i	69	03/94 – 06/96	3315/1	
LT 28-35 I Platform/Chassis (281-363)	2.4 Syncro	66	08/91 – 07/92	3513	
LT 28-35 I Platform/Chassis (281-363)	2.4 Syncro	70	08/92 – 07/94	3513	
LT 28-35 I Platform/Chassis (281-363)	2.4 TD	68	08/90 – 08/92	3315/1	
LT 28-35 I Platform/Chassis (281-363)	2.4 TD	70	08/92 – 06/96	3315/1	
LT 28-35 I Platform/Chassis (281-363)	2.4 TD	75	12/82 – 09/93	3315/1	
LT 28-35 I Platform/Chassis (281-363)	2.4 TD Syncro	68	08/91 – 07/92	3513	
LT 28-35 I Platform/Chassis (281-363)	2.4 TD Syncro	70	08/92 – 04/96	3513	
LT 28-35 I Platform/Chassis (281-363)	2.4 TD Syncro	75	08/91 – 07/92	3513	
LT 28-35 I Platform/Chassis (281-363)	2.7 D	48	11/75 – 01/80	3315/1	
LT 28-35 II Bus (2DB, 2DE, 2DK)	23	105	05/96 – 07/06		3804
LT 28-35 II Bus (2DB, 2DE, 2DK)	2.5 SDI	55	07/96 – 07/06		3804
LT 28-35 II Bus (2DB, 2DE, 2DK)	2.5 TDI	61	05/01 – 07/06		3804
LT 28-35 II Bus (2DB, 2DE, 2DK)	2.5 TDI	66	05/99 – 07/06		3804
LT 28-35 II Bus (2DB, 2DE, 2DK)	2.5 TDI	70	05/01 – 07/06		3804
LT 28-35 II Bus (2DB, 2DE, 2DK)	2.5 TDI	75	05/96 – 08/99		3804
LT 28-35 II Bus (2DB, 2DE, 2DK)	2.5 TDI	80	05/99 – 07/06		3804
LT 28-35 II Bus (2DB, 2DE, 2DK)	2.8 TDI	92	07/97 – 05/03		3804
LT 28-35 II Bus (2DB, 2DE, 2DK)	2.8 TDI	96	01/99 – 01/02		3804
LT 28-35 II Bus (2DB, 2DE, 2DK)	2.8 TDI	116	05/01 – 06/06		3804
LT 28-46 (2DA, 2DD, 2DH)	2.3 (AGL)	105	05/96 – 07/06	3614	3614
LT 28-46 (2DA, 2DD, 2DH)	2.5 SDI (AGX)	55	09/96 – 07/06	3614	3614
LT 28-46 (2DA, 2DD, 2DH)	2.5 Tdi (AHD)	75	05/96 – 08/99	3614	3614
LT 28-46 (2DA, 2DD, 2DH)	2.5 Tdi (ANJ)	80	05/99 – 07/06	3614	3614
LT 28-46 (2DA, 2DD, 2DH)	2.5 Tdi (APA)	66	05/99 – 07/06	3614	3614
LT 28-46 (2DA, 2DD, 2DH)	2.5 Tdi (AVR)	80	05/99 – 07/06	3614	3614
LT 28-46 (2DA, 2DD, 2DH)	2.5 Tdi (BBE)	61	05/01 – 07/06	3614	3614
LT 28-46 (2DA, 2DD, 2DH)	2.5 Tdi (BBF)	70	05/01 – 07/06	3614	3614
LT 28-46 (2DA, 2DD, 2DH)	2.8 TDI (AGK)	92	07/97 – 01/02	3614	3614
LT 28-46 (2DA, 2DD, 2DH)	2.8 TDI (ATA)	96	01/99 – 07/06	3614	3614
LT 28-46 (2DA, 2DD, 2DH)	2.8 TDI (AUH)	116	04/02 – 07/06	3614	3614
LT 28-46 (2DA, 2DD, 2DH)	2.8 TDI (BCQ)	116	04/02 – 07/06	3614	3614
LT 28-46 (2DC, 2DF, 2DG, 2DL, 2DM)	2.3 (AGL)	105	06/96 – 07/06	3614	3614
LT 28-46 (2DC, 2DF, 2DG, 2DL, 2DM)	2.5 SDI (AGX)	55	09/96 – 07/06	3614	3614
LT 28-46 (2DC, 2DF, 2DG, 2DL, 2DM)	2.5 Tdi (AHD)	75	06/96 – 08/99	3614	3614
LT 28-46 (2DC, 2DF, 2DG, 2DL, 2DM)	2.5 Tdi (ANJ)	80	05/99 – 07/06	3614	3614
LT 28-46 (2DC, 2DF, 2DG, 2DL, 2DM)	2.5 Tdi (APA)	66	05/99 – 07/06	3614	3614
LT 28-46 (2DC, 2DF, 2DG, 2DL, 2DM)	2.5 Tdi (AVR)	80	05/99 – 07/06	3614	3614
LT 28-46 (2DC, 2DF, 2DG, 2DL, 2DM)	2.5 Tdi (BBE)	61	05/01 – 07/06	3614	3614
LT 28-46 (2DC, 2DF, 2DG, 2DL, 2DM)	2.5 Tdi (BBF)	70	05/01 – 07/06	3614	3614
LT 28-46 (2DC, 2DF, 2DG, 2DL, 2DM)	2.8 TDI (AGK)	92	07/97 – 01/02	3614	3614

MAKE & MODEL		KW	YEAR		
VOLKSWAGEN					
LT 28-46 (2DC, 2DF, 2DG, 2DL, 2DM)	2.8 TDI (ATA)	96	01/99 – 07/06	3614	3614
LT 28-46 (2DC, 2DF, 2DG, 2DL, 2DM)	2.8 TDI (AUH)	116	04/02 – 07/06	3614	3614
LT 28-46 (2DC, 2DF, 2DG, 2DL, 2DM)	2.8 TDI (BCQ)	116	04/02 – 07/06	3614	3614
LT 28-46 II Box (2DA, 2DD, 2DH)	2.3	105	05/96 – 07/06		3804
LT 28-46 II Box (2DA, 2DD, 2DH)	2.5 SDI	55	09/96 – 07/06		3804
LT 28-46 II Box (2DA, 2DD, 2DH)	2.5 TDI	61	05/01 – 07/06		3804
LT 28-46 II Box (2DA, 2DD, 2DH)	2.5 TDI	66	05/99 – 07/06		3804
LT 28-46 II Box (2DA, 2DD, 2DH)	2.5 TDI	70	05/01 – 07/06		3804
LT 28-46 II Box (2DA, 2DD, 2DH)	2.5 TDI	75	05/96 – 08/99		3804
LT 28-46 II Box (2DA, 2DD, 2DH)	2.5 TDI	80	05/99 – 07/06		3804
LT 28-46 II Box (2DA, 2DD, 2DH)	2.8 TDI	92	07/97 – 01/02		3804
LT 28-46 II Box (2DA, 2DD, 2DH)	2.8 TDI	96	01/99 – 07/06		3804
LT 28-46 II Box (2DA, 2DD, 2DH)	2.8 TDI	116	04/02 – 07/06		3804
LT 28-46 II Platform/Chassis (2DC, 2DF, 2DG, 2DL,2DM)	2.5 SDI	55	09/96 – 07/06		3804
LT 28-46 II Platform/Chassis (2DC, 2DF, 2DG, 2DL,2DM)	2.3	105	06/96 – 07/06		3804
LT 28-46 II Platform/Chassis (2DC, 2DF, 2DG, 2DL,2DM)	2.5 TDI	61	05/01 – 07/06		3804
LT 28-46 II Platform/Chassis (2DC, 2DF, 2DG, 2DL,2DM)	2.5 TDI	66	05/99 – 07/06		3804
LT 28-46 II Platform/Chassis (2DC, 2DF, 2DG, 2DL,2DM)	2.5 TDI	70	05/01 – 07/06		3804
LT 28-46 II Platform/Chassis (2DC, 2DF, 2DG, 2DL,2DM)	2.5 TDI	75	06/96 – 08/99		3804
LT 28-46 II Platform/Chassis (2DC, 2DF, 2DG, 2DL,2DM)	2.5 TDI	80	05/99 – 07/06		3804
LT 28-46 II Platform/Chassis (2DC, 2DF, 2DG, 2DL,2DM)	2.8 TDI	92	07/97 – 01/02		3804
LT 28-46 II Platform/Chassis (2DC, 2DF, 2DG, 2DL,2DM)	2.8 TDI	96	01/99 – 07/06		3804
LT 28-46 II Platform/Chassis (2DC, 2DF, 2DG, 2DL,2DM)	2.8 TDI	116	04/02 – 07/06		3804
LT 40-55 I Box (291-512)	20	55	04/75 – 09/83	3315/1	
LT 40-55 I Box (291-512)	24	66	12/82 – 07/92	3315/1	
LT 40-55 I Box (291-512)	2.4 4WD	66	12/82 – 07/92	3513	
LT 40-55 I Box (291-512)	2.4 D	51	07/90 – 05/96	3315/1	
LT 40-55 I Box (291-512)	2.4 D	55	01/79 – 07/92	3315/1	
LT 40-55 I Box (291-512)	2.4 D 4WD	55	01/79 – 03/86	3513	
LT 40-55 I Box (291-512)	2.4 i	69	01/93 – 06/96	3315/1	
LT 40-55 I Box (291-512)	2.4 TD	68	08/88 – 08/92	3315/1	
LT 40-55 I Box (291-512)	2.4 TD	70	06/92 – 05/96	3315/1	
LT 40-55 I Box (291-512)	2.4 TD	75	02/86 – 08/92	3315/1	
LT 40-55 I Box (291-512)	2.4 TD 4WD	75	08/78 – 07/92	3513	
LT 40-55 I Box (291-512)	2.4 TD Syncro	70	08/92 – 04/96	3513	
LT 40-55 I Platform/Chassis (293-909)	20	55	04/75 – 09/83	3315/1	
LT 40-55 I Platform/Chassis (293-909)	24	66	08/85 – 07/89	3315/1	
LT 40-55 I Platform/Chassis (293-909)	24	70	08/88 – 07/89	3315/1	
LT 40-55 I Platform/Chassis (293-909)	2.4 D	51	08/90 – 06/96	3315/1	
LT 40-55 I Platform/Chassis (293-909)	2.4 D	55	12/78 – 02/91	3315/1	
LT 40-55 I Platform/Chassis (293-909)	2.4 i	69	03/94 – 06/96	3315/1	
LT 40-55 I Platform/Chassis (293-909)	2.4 Syncro	66	12/82 – 07/89	3513	
LT 40-55 I Platform/Chassis (293-909)	2.4 TD	68	08/88 – 07/91	3315/1	
LT 40-55 I Platform/Chassis (293-909)	2.4 TD	70	08/92 – 06/96	3315/1	
LT 40-55 I Platform/Chassis (293-909)	2.4 TD	75	12/82 – 09/93	3315/1	
LT 40-55 I Platform/Chassis (293-909)	2.4 TD Syncro	68	08/91 – 07/92	3513	
LT 40-55 I Platform/Chassis (293-909)	2.4 TD Syncro	70	08/92 – 04/96	3513	
LT 40-55 I Platform/Chassis (293-909)	2.4 TD Syncro	75	08/91 – 07/92	3513	
LUPO (6X1, 6E1)	10	37	09/98 – 07/05	3566	
LUPO (6X1, 6E1)	10	37	10/98 – 05/00	3566	
LUPO (6X1, 6E1)	14	44	10/00 – 07/05	3566	
LUPO (6X1, 6E1)	1.4 16V	55	09/98 – 07/05	3566	
LUPO (6X1, 6E1)	1.4 16V	74	08/99 – 07/05		3529/1
LUPO (6X1, 6E1)	1.4 FSI	77	02/01 – 07/05		3529/1
LUPO (6X1, 6E1)	1.4 TDI	55	01/99 – 07/05		3529/1
LUPO (6X1, 6E1)	1.4 TDI	55	01/99 – 07/05	3566	
LUPO (6X1, 6E1)	1.6 GTI	92	09/00 – 07/05		3529/1
LUPO (6X1, 6E1)	1.7 SDI	44	09/98 – 07/05	3566	
MAGOTAN (B6)	20	85	06/07 – 04/08	3904	
MAGOTAN (B6)	1.4 TSI	96	01/10 – 07/11	3904	
MAGOTAN (B6)	1.8 TSI	118	06/07 – 07/11	3904	
MAGOTAN (B6)	2.0 TSi	147	04/08 – 07/11	3904	
MULTIVAN V (7HM, 7HN, 7HF, 7EF, 7EM, 7EN)	20	85	11/03 -	3841	
MULTIVAN V (7HM, 7HN, 7HF, 7EF, 7EM, 7EN)	20	85	11/03 -	3841/1	
MULTIVAN V (7HM, 7HN, 7HF, 7EF, 7EM, 7EN)	20	85	11/03 -		3842
MULTIVAN V (7HM, 7HN, 7HF, 7EF, 7EM, 7EN)	1.9 TDI	62	01/06 – 11/09	3841	
MULTIVAN V (7HM, 7HN, 7HF, 7EF, 7EM, 7EN)	1.9 TDI	62	01/06 – 11/09	3841/1	
MULTIVAN V (7HM, 7HN, 7HF, 7EF, 7EM, 7EN)	1.9 TDI	62	01/06 – 11/09		3842
MULTIVAN V (7HM, 7HN, 7HF, 7EF, 7EM, 7EN)	1.9 TDI	63	04/03 – 11/09	3841	
MULTIVAN V (7HM, 7HN, 7HF, 7EF, 7EM, 7EN)	1.9 TDI	63	04/03 – 11/09	3841/1	
MULTIVAN V (7HM, 7HN, 7HF, 7EF, 7EM, 7EN)	1.9 TDI	63	04/03 – 11/09		3842

MAKE & MODEL   		KW	YEAR		
VOLKSWAGEN					
MULTIVAN V (7HM, 7HN, 7HF, 7EF, 7EM, 7EN)	1.9 TDI	63	04/03 – 11/09	4162	
MULTIVAN V (7HM, 7HN, 7HF, 7EF, 7EM, 7EN)	1.9 TDI	75	06/06 – 11/09	3841	
MULTIVAN V (7HM, 7HN, 7HF, 7EF, 7EM, 7EN)	1.9 TDI	75	06/06 – 11/09	3841/1	
MULTIVAN V (7HM, 7HN, 7HF, 7EF, 7EM, 7EN)	1.9 TDI	75	06/06 – 11/09		3842
MULTIVAN V (7HM, 7HN, 7HF, 7EF, 7EM, 7EN)	1.9 TDI	77	04/03 – 11/09	3841	
MULTIVAN V (7HM, 7HN, 7HF, 7EF, 7EM, 7EN)	1.9 TDI	77	04/03 – 11/09	3841/1	
MULTIVAN V (7HM, 7HN, 7HF, 7EF, 7EM, 7EN)	1.9 TDI	77	04/03 – 11/09		3842
MULTIVAN V (7HM, 7HN, 7HF, 7EF, 7EM, 7EN)	2.0 BiTDI	132	09/09 -	3841	
MULTIVAN V (7HM, 7HN, 7HF, 7EF, 7EM, 7EN)	2.0 BiTDI	132	09/09 -	3841/1	
MULTIVAN V (7HM, 7HN, 7HF, 7EF, 7EM, 7EN)	2.0 BiTDI	132	09/09 -		3842
MULTIVAN V (7HM, 7HN, 7HF, 7EF, 7EM, 7EN)	2.0 BiTDI	132	09/09 -	4162	
MULTIVAN V (7HM, 7HN, 7HF, 7EF, 7EM, 7EN)	2.0 BiTDI 4motion	132	09/09 -	3841	
MULTIVAN V (7HM, 7HN, 7HF, 7EF, 7EM, 7EN)	2.0 BiTDI 4motion	132	09/09 -	3841/1	
MULTIVAN V (7HM, 7HN, 7HF, 7EF, 7EM, 7EN)	2.0 BiTDI 4motion	132	09/09 -		3842
MULTIVAN V (7HM, 7HN, 7HF, 7EF, 7EM, 7EN)	2.0 BiTDI 4motion	132	09/09 -	4162	
MULTIVAN V (7HM, 7HN, 7HF, 7EF, 7EM, 7EN)	2.0 TDI	62	09/09 -	3841	
MULTIVAN V (7HM, 7HN, 7HF, 7EF, 7EM, 7EN)	2.0 TDI	62	09/09 -	3841/1	
MULTIVAN V (7HM, 7HN, 7HF, 7EF, 7EM, 7EN)	2.0 TDI	62	09/09 -		3842
MULTIVAN V (7HM, 7HN, 7HF, 7EF, 7EM, 7EN)	2.0 TDI	75	09/09 -	3841	
MULTIVAN V (7HM, 7HN, 7HF, 7EF, 7EM, 7EN)	2.0 TDI	75	09/09 -	3841/1	
MULTIVAN V (7HM, 7HN, 7HF, 7EF, 7EM, 7EN)	2.0 TDI	75	09/09 -		3842
MULTIVAN V (7HM, 7HN, 7HF, 7EF, 7EM, 7EN)	2.0 TDI	84	05/11 -	3841	
MULTIVAN V (7HM, 7HN, 7HF, 7EF, 7EM, 7EN)	2.0 TDI	84	05/11 -		3842
MULTIVAN V (7HM, 7HN, 7HF, 7EF, 7EM, 7EN)	2.0 TDI	100	05/10 -	3841	
MULTIVAN V (7HM, 7HN, 7HF, 7EF, 7EM, 7EN)	2.0 TDI	100	05/10 -	3841/1	
MULTIVAN V (7HM, 7HN, 7HF, 7EF, 7EM, 7EN)	2.0 TDI	100	05/10 -		3842
MULTIVAN V (7HM, 7HN, 7HF, 7EF, 7EM, 7EN)	2.0 TDI	103	09/09 -	3841	
MULTIVAN V (7HM, 7HN, 7HF, 7EF, 7EM, 7EN)	2.0 TDI	103	09/09 -	3841/1	
MULTIVAN V (7HM, 7HN, 7HF, 7EF, 7EM, 7EN)	2.0 TDI	103	09/09 -		3842
MULTIVAN V (7HM, 7HN, 7HF, 7EF, 7EM, 7EN)	2.0 TDI	103	09/09 -	4162	
MULTIVAN V (7HM, 7HN, 7HF, 7EF, 7EM, 7EN)	2.0 TDI 4motion	100	05/10 -	3841	
MULTIVAN V (7HM, 7HN, 7HF, 7EF, 7EM, 7EN)	2.0 TDI 4motion	100	05/10 -	3841/1	
MULTIVAN V (7HM, 7HN, 7HF, 7EF, 7EM, 7EN)	2.0 TDI 4motion	100	05/10 -		3842
MULTIVAN V (7HM, 7HN, 7HF, 7EF, 7EM, 7EN)	2.0 TDI 4motion	103	09/09 -	3841	
MULTIVAN V (7HM, 7HN, 7HF, 7EF, 7EM, 7EN)	2.0 TDI 4motion	103	09/09 -	3841/1	
MULTIVAN V (7HM, 7HN, 7HF, 7EF, 7EM, 7EN)	2.0 TDI 4motion	103	09/09 -		3842
MULTIVAN V (7HM, 7HN, 7HF, 7EF, 7EM, 7EN)	2.0 TDI 4motion	103	09/09 -	4162	
MULTIVAN V (7HM, 7HN, 7HF, 7EF, 7EM, 7EN)	2.0 TSI	110	07/12 -	3841	
MULTIVAN V (7HM, 7HN, 7HF, 7EF, 7EM, 7EN)	2.0 TSI	110	07/12 -		3842
MULTIVAN V (7HM, 7HN, 7HF, 7EF, 7EM, 7EN)	2.0 TSI	110	07/12 -	4162	
MULTIVAN V (7HM, 7HN, 7HF, 7EF, 7EM, 7EN)	2.0 TSI	150	05/11 -	3841	
MULTIVAN V (7HM, 7HN, 7HF, 7EF, 7EM, 7EN)	2.0 TSI	150	05/11 -		3842
MULTIVAN V (7HM, 7HN, 7HF, 7EF, 7EM, 7EN)	2.0 TSI	150	05/11 -	4162	
MULTIVAN V (7HM, 7HN, 7HF, 7EF, 7EM, 7EN)	2.0 TSI 4motion	150	07/11 -	3841	
MULTIVAN V (7HM, 7HN, 7HF, 7EF, 7EM, 7EN)	2.0 TSI 4motion	150	07/11 -		3842
MULTIVAN V (7HM, 7HN, 7HF, 7EF, 7EM, 7EN)	2.0 TSI 4motion	150	07/11 -	4162	
MULTIVAN V (7HM, 7HN, 7HF, 7EF, 7EM, 7EN)	2.5 TDI	96	04/03 – 11/09	3841	
MULTIVAN V (7HM, 7HN, 7HF, 7EF, 7EM, 7EN)	2.5 TDI	96	04/03 – 11/09	3841/1	
MULTIVAN V (7HM, 7HN, 7HF, 7EF, 7EM, 7EN)	2.5 TDI	96	04/03 – 11/09		3842
MULTIVAN V (7HM, 7HN, 7HF, 7EF, 7EM, 7EN)	2.5 TDI	120	11/03 – 11/09	3841	
MULTIVAN V (7HM, 7HN, 7HF, 7EF, 7EM, 7EN)	2.5 TDI	120	11/03 – 11/09	3841/1	
MULTIVAN V (7HM, 7HN, 7HF, 7EF, 7EM, 7EN)	2.5 TDI	120	11/03 – 11/09		3842
MULTIVAN V (7HM, 7HN, 7HF, 7EF, 7EM, 7EN)	2.5 TDI	128	04/03 – 11/09	3841	
MULTIVAN V (7HM, 7HN, 7HF, 7EF, 7EM, 7EN)	2.5 TDI	128	04/03 – 11/09	3841/1	
MULTIVAN V (7HM, 7HN, 7HF, 7EF, 7EM, 7EN)	2.5 TDI	128	04/03 – 11/09		3842
MULTIVAN V (7HM, 7HN, 7HF, 7EF, 7EM, 7EN)	2.5 TDI 4motion	96	07/04 – 11/09	3841	
MULTIVAN V (7HM, 7HN, 7HF, 7EF, 7EM, 7EN)	2.5 TDI 4motion	96	07/04 – 11/09	3841/1	
MULTIVAN V (7HM, 7HN, 7HF, 7EF, 7EM, 7EN)	2.5 TDI 4motion	96	07/04 – 11/09		3842
MULTIVAN V (7HM, 7HN, 7HF, 7EF, 7EM, 7EN)	2.5 TDI 4motion	128	07/04 – 11/09	3841	
MULTIVAN V (7HM, 7HN, 7HF, 7EF, 7EM, 7EN)	2.5 TDI 4motion	128	07/04 – 11/09	3841/1	
MULTIVAN V (7HM, 7HN, 7HF, 7EF, 7EM, 7EN)	2.5 TDI 4motion	128	07/04 – 11/09		3842
MULTIVAN V (7HM, 7HN, 7HF, 7EF, 7EM, 7EN)	3.2 4motion	170	11/03 – 06/06	3841/1	
MULTIVAN V (7HM, 7HN, 7HF, 7EF, 7EM, 7EN)	3.2 4motion	170	11/03 – 06/06		3842
MULTIVAN V (7HM, 7HN, 7HF, 7EF, 7EM, 7EN)	3.2 V6	170	02/04 – 06/04	3841	
MULTIVAN V (7HM, 7HN, 7HF, 7EF, 7EM, 7EN)	3.2 V6	170	02/04 – 06/04	3841/1	
MULTIVAN V (7HM, 7HN, 7HF, 7EF, 7EM, 7EN)	3.2 V6	170	02/04 – 06/04		3842
MULTIVAN V (7HM, 7HN, 7HF, 7EF, 7EM, 7EN)	3.2 V6	173	02/04 – 11/09	3841	
MULTIVAN V (7HM, 7HN, 7HF, 7EF, 7EM, 7EN)	3.2 V6	173	02/04 – 11/09	3841/1	
MULTIVAN V (7HM, 7HN, 7HF, 7EF, 7EM, 7EN)	3.2 V6	173	02/04 – 11/09		3842
MULTIVAN V (7HM, 7HN, 7HF, 7EF, 7EM, 7EN)	3.2 V6 4motion	173	07/04 – 11/09	3841	
MULTIVAN V (7HM, 7HN, 7HF, 7EF, 7EM, 7EN)	3.2 V6 4motion	173	07/04 – 11/09	3841/1	

MAKE & MODEL		KW	YEAR		
VOLKSWAGEN					
MULTIVAN V (7HM, 7HN, 7HF, 7EF, 7EM, 7EN)	3.2 V6 4motion	173	07/04 – 11/09		3842
MULTIVAN VI (SGF, SGM, SGN)	2.0 TDI	62	04/15 -	3841	
MULTIVAN VI (SGF, SGM, SGN)	2.0 TDI	62	04/15 -		3842
MULTIVAN VI (SGF, SGM, SGN)	2.0 TDI	62	04/15 -	4162	
MULTIVAN VI (SGF, SGM, SGN)	2.0 TDI	75	04/15 -	3841	
MULTIVAN VI (SGF, SGM, SGN)	2.0 TDI	75	04/15 -		3842
MULTIVAN VI (SGF, SGM, SGN)	2.0 TDI	75	04/15 -	4162	
MULTIVAN VI (SGF, SGM, SGN)	2.0 TDI	103	04/15 -	3841	
MULTIVAN VI (SGF, SGM, SGN)	2.0 TDI	103	04/15 -		3842
MULTIVAN VI (SGF, SGM, SGN)	2.0 TDI	103	04/15 -	4162	
MULTIVAN VI (SGF, SGM, SGN)	2.0 TDI	110	04/15 -	3841	
MULTIVAN VI (SGF, SGM, SGN)	2.0 TDI	110	04/15 -		3842
MULTIVAN VI (SGF, SGM, SGN)	2.0 TDI	110	04/15 -	4162	
MULTIVAN VI (SGF, SGM, SGN)	2.0 TDI	132	04/15 -	3841	
MULTIVAN VI (SGF, SGM, SGN)	2.0 TDI	132	04/15 -		3842
MULTIVAN VI (SGF, SGM, SGN)	2.0 TDI	132	04/15 -	4162	
MULTIVAN VI (SGF, SGM, SGN)	2.0 TDI	150	06/15 -	3841	
MULTIVAN VI (SGF, SGM, SGN)	2.0 TDI	150	06/15 -		3842
MULTIVAN VI (SGF, SGM, SGN)	2.0 TDI	150	06/15 -	4162	
MULTIVAN VI (SGF, SGM, SGN)	2.0 TDI 4motion	103	06/15 -	3841	
MULTIVAN VI (SGF, SGM, SGN)	2.0 TDI 4motion	103	06/15 -		3842
MULTIVAN VI (SGF, SGM, SGN)	2.0 TDI 4motion	103	06/15 -	4162	
MULTIVAN VI (SGF, SGM, SGN)	2.0 TDI 4motion	110	08/15 -	3841	
MULTIVAN VI (SGF, SGM, SGN)	2.0 TDI 4motion	110	08/15 -		3842
MULTIVAN VI (SGF, SGM, SGN)	2.0 TDI 4motion	110	08/15 -	4162	
MULTIVAN VI (SGF, SGM, SGN)	2.0 TDI 4motion	132	06/15 -	3841	
MULTIVAN VI (SGF, SGM, SGN)	2.0 TDI 4motion	132	06/15 -		3842
MULTIVAN VI (SGF, SGM, SGN)	2.0 TDI 4motion	132	06/15 -	4162	
MULTIVAN VI (SGF, SGM, SGN)	2.0 TDI 4motion	150	06/15 -	3841	
MULTIVAN VI (SGF, SGM, SGN)	2.0 TDI 4motion	150	06/15 -		3842
MULTIVAN VI (SGF, SGM, SGN)	2.0 TDI 4motion	150	06/15 -	4162	
MULTIVAN VI (SGF, SGM, SGN)	2.0 TSI	110	04/15 -	3841	
MULTIVAN VI (SGF, SGM, SGN)	2.0 TSI	110	04/15 -		3842
MULTIVAN VI (SGF, SGM, SGN)	2.0 TSI	110	04/15 -	4162	
MULTIVAN VI (SGF, SGM, SGN)	2.0 TSI	150	04/15 -	3841	
MULTIVAN VI (SGF, SGM, SGN)	2.0 TSI	150	04/15 -		3842
MULTIVAN VI (SGF, SGM, SGN)	2.0 TSI	150	04/15 -	4162	
MULTIVAN VI (SGF, SGM, SGN)	2.0 TSI 4motion	150	06/15 -	3841	
MULTIVAN VI (SGF, SGM, SGN)	2.0 TSI 4motion	150	06/15 -		3842
MULTIVAN VI (SGF, SGM, SGN)	2.0 TSI 4motion	150	06/15 -	4162	
NEW BEETLE (9C1, 1C1)	14	55	11/01 – 09/10		3529/1
NEW BEETLE (9C1, 1C1)	14	55	11/01 – 09/10	3782	
NEW BEETLE (9C1, 1C1)	16	74	10/99 – 09/00		3529/1
NEW BEETLE (9C1, 1C1)	16	74	10/99 – 09/00	3782	
NEW BEETLE (9C1, 1C1)	16	75	06/00 – 09/10		3529/1
NEW BEETLE (9C1, 1C1)	16	75	06/00 – 09/10	3782	
NEW BEETLE (9C1, 1C1)	20	85	01/98 – 09/10		3529/1
NEW BEETLE (9C1, 1C1)	20	85	01/98 – 09/10	3782	
NEW BEETLE (9C1, 1C1)	20	85	01/98 - 09/10	3782/1	
NEW BEETLE (9C1, 1C1)	25	110	07/05 – 09/10		3529/1
NEW BEETLE (9C1, 1C1)	25	110	07/05 - 09/10	3590/1	
NEW BEETLE (9C1, 1C1)	25	110	07/05 – 09/10	3782	
NEW BEETLE (9C1, 1C1)	1.8 T	110	10/99 – 09/10		3529/1
NEW BEETLE (9C1, 1C1)	1.8 T	110	10/99 – 09/10	3590/1	
NEW BEETLE (9C1, 1C1)	1.8 T	132	11/01 – 06/05		3529/1
NEW BEETLE (9C1, 1C1)	1.8 T	132	11/01 – 06/05	3590/1	
NEW BEETLE (9C1, 1C1)	1.9 TDI	66	01/98 – 06/04		3529/1
NEW BEETLE (9C1, 1C1)	1.9 TDI	66	01/98 – 06/04	3782	
NEW BEETLE (9C1, 1C1)	1.9 TDI	66	01/98 – 06/04	3782/1	
NEW BEETLE (9C1, 1C1)	1.9 TDI	74	02/01 – 09/10		3529/1
NEW BEETLE (9C1, 1C1)	1.9 TDI	74	02/01 – 09/10	3782	
NEW BEETLE (9C1, 1C1)	1.9 TDI	77	07/05 – 09/10		3529/1
NEW BEETLE (9C1, 1C1)	1.9 TDI	77	07/05 – 09/10	3782	
NEW BEETLE (9C1, 1C1)	2.3 V5	125	10/00 – 09/10		3529/1
NEW BEETLE (9C1, 1C1)	2.3 V5	125	10/00 – 09/10	3590/1	
NEW BEETLE (9C1, 1C1)	RSI 3.2 4motion (1C9)	165	04/00 – 05/01		3529/1
NEW BEETLE (9C1, 1C1)	RSI 3.2 4motion (1C9)	165	04/00 – 05/01	3590/1	
NEW BEETLE Convertible (1Y7)	14	55	01/03 – 09/10		3529/1
NEW BEETLE Convertible (1Y7)	14	55	01/03 – 09/10	3590/1	
NEW BEETLE Convertible (1Y7)	14	55	01/03 – 09/10	3782	
NEW BEETLE Convertible (1Y7)	16	75	01/03 – 09/10		3529/1

MAKE & MODEL			KW	YEAR		
VOLKSWAGEN						
NEW BEETLE Convertible (1Y7)	16		75	01/03 – 09/10	3590/1	
NEW BEETLE Convertible (1Y7)	16		75	01/03 – 09/10	3782	
NEW BEETLE Convertible (1Y7)	20		85	09/02 – 10/10		3529/1
NEW BEETLE Convertible (1Y7)	20		85	09/02 – 10/10	3590/1	
NEW BEETLE Convertible (1Y7)	20		85	09/02 – 10/10	3782	
NEW BEETLE Convertible (1Y7)	25		110	07/05 – 09/10		3529/1
NEW BEETLE Convertible (1Y7)	25		110	07/05 – 09/10	3590/1	
NEW BEETLE Convertible (1Y7)	25		110	07/05 – 09/10	3782	
NEW BEETLE Convertible (1Y7)	1.8 T		110	01/03 – 09/10		3529/1
NEW BEETLE Convertible (1Y7)	1.8 T		110	01/03 – 09/10	3590/1	
NEW BEETLE Convertible (1Y7)	1.8 T		110	01/03 – 09/10	3782	
NEW BEETLE Convertible (1Y7)	1.9 TDI		74	06/03 – 09/10		3529/1
NEW BEETLE Convertible (1Y7)	1.9 TDI		74	06/03 – 09/10	3590/1	
NEW BEETLE Convertible (1Y7)	1.9 TDI		74	06/03 – 09/10	3782	
NEW BEETLE Convertible (1Y7)	1.9 TDI		77	07/05 – 09/10		3529/1
NEW BEETLE Convertible (1Y7)	1.9 TDI		77	07/05 – 09/10	3590/1	
NEW BEETLE Convertible (1Y7)	1.9 TDI		77	07/05 – 09/10	3782	
Only South America					3761	
PASSAT VIII (3G5_B8)	1.4 TSI (CZCA)		92	11/14 -	4228	
PASSAT VIII (3G5_B8)	1.4 TSI (CZDA)		110	11/14 -	4228	
PASSAT VIII (3G5_B8)	1.4 TSI (CZEA)		110	11/14 -	4228	
PASSAT VIII (3G5_B8)	1.4 TSI (CZEA)		110	02/15 -	4228	
PASSAT VIII (3G5_B8)	1.6 TDI (DCXA)		88	08/14 -	4228	
PASSAT VIII (3G5_B8)	1.6 TDI (DCZA)		88	08/14 -	4228	
PASSAT VIII (3G5_B8)	1.8 TSI (CJSA)		132	02/15 -	4228	
PASSAT VIII (3G5_B8)	1.8 TSI (CJSC)		132	02/15 -	4228	
PASSAT VIII (3G5_B8)	2.0 TDI (CUAA)		176	08/14 -	4228	
PASSAT VIII (3G5_B8)	2.0 TDI (CRLB)		110	11/14 -	4228	
PASSAT VIII (3G5_B8)	2.0 TDI (CRLB)		110	02/15 -	4228	
PASSAT VIII (3G5_B8)	2.0 TDI (CUPA)		135	07/15 -	4228	
PASSAT VIII (3G5_B8)	2.0 TDI (DBGA)		110	11/14 -	4228	
PASSAT VIII (3G5_B8)	2.0 TDI (DDAA)		140	11/14 -	4228	
PASSAT VIII (3G5_B8)	2.0 TDI (DDAA)		140	11/14 -	4228	
PASSAT VIII (3G5_B8)	2.0 TDI (DFCA)		140	11/14 -	4228	
PASSAT VIII (3G5_B8)	2.0 TDI (DFCA)		140	11/14 -	4228	
PASSAT VIII (3G5_B8)	2.0 TDI (DFEA)		110	02/15 -	4228	
PASSAT VIII (3G5_B8)	2.0 TDI (DFGA)		110	11/14 -	4228	
PASSAT VIII (3G5_B8)	2.0 TSI (CHHB)		162	02/15 -	4228	
PASSAT VIII (3G5_B8)	2.0 TSI (CJXA)		206	05/15 -	4228	
PASSAT VIII (3G5_B8)	2.0 TSI (CXDA)		162	02/15 -	4228	
PASSAT VIII ALLTRACK (3G5)	1.4 TSI (CZEA)		110	05/15 -	4228	
PASSAT VIII ALLTRACK (3G5)	2.0 TDI (CRLB)		110	05/15 -	4228	
PASSAT VIII ALLTRACK (3G5)	2.0 TDI (CUAA)		176	05/15 -	4228	
PASSAT VIII ALLTRACK (3G5)	2.0 TDI (CUPA)		135	07/15 -	4228	
PASSAT VIII ALLTRACK (3G5)	2.0 TDI (DDAA)		140	05/15 -	4228	
PASSAT VIII ALLTRACK (3G5)	2.0 TDI (DFCA)		140	05/15 -	4228	
PASSAT VIII ALLTRACK (3G5)	2.0 TDI (DFEA)		110	05/15 -	4228	
PASSAT VIII ALLTRACK (3G5)	2.0 TSI (CHHB)		162	07/15 -	4228	
PASSAT (32B)	13		40	08/80 – 07/83	3327	
PASSAT (32B)	13		40	08/80 – 07/83	3343	
PASSAT (32B)	13		40	08/80 – 07/83	3483	
PASSAT (32B)	13		40	08/80 – 07/83	3585	
PASSAT (32B)	13		44	08/80 – 07/86	3327	
PASSAT (32B)	13		44	08/80 – 07/86	3327	
PASSAT (32B)	13		44	08/80 – 07/86	3343	
PASSAT (32B)	13		44	08/80 – 07/86	3343	
PASSAT (32B)	13		44	08/80 – 07/86	3483	
PASSAT (32B)	13		44	08/80 – 07/86	3483	
PASSAT (32B)	13		44	08/80 – 07/86	3585	
PASSAT (32B)	13		44	08/80 – 07/86	3585	
PASSAT (32B)	16		51	08/87 – 03/88	3585	
PASSAT (32B)	16		53	02/86 – 03/88	3585	
PASSAT (32B)	16		55	08/80 – 03/88	3585	
PASSAT (32B)	16		55	08/80 – 03/88	3585	
PASSAT (32B)	16		63	01/81 – 02/83	3585	
PASSAT (32B)	18		64	05/86 – 03/88	3585	
PASSAT (32B)	18		66	01/83 – 03/88	3585	
PASSAT (32B)	18		82	12/83 – 03/88	3486	
PASSAT (32B)	18		82	12/83 – 03/88	3585	
PASSAT (32B)	19		85	01/81 – 07/83	3486	
PASSAT (32B)	20		85	08/83 – 03/88	3486	

MAKE & MODEL   		KW	YEAR		
VOLKSWAGEN					
PASSAT (32B)	21	85	01/81 – 07/83	3486	
PASSAT (32B)	22	85	08/85 – 03/88	3486	
PASSAT (32B)	22	100	01/85 – 03/88		3529
PASSAT (32B)	22	100	01/85 – 03/88	3531	
PASSAT (32B)	1.3	40	08/80 – 07/83	3444	
PASSAT (32B)	1.3	44	08/80 – 07/86	3444	
PASSAT (32B)	1.3	44	08/80 – 07/86	3444	
PASSAT (32B)	1.6	51	08/87 – 03/88	3444	
PASSAT (32B)	1.6	53	02/86 – 03/88	3444	
PASSAT (32B)	1.6	55	08/80 – 03/88	3444	
PASSAT (32B)	1.6	55	08/80 – 03/88	3444	
PASSAT (32B)	1.6	63	01/81 – 02/83	3444	
PASSAT (32B)	1.6 D	40	08/80 – 03/88	3327	
PASSAT (32B)	1.6 D	40	08/80 – 03/88	3343	
PASSAT (32B)	1.6 D	40	08/80 – 03/88	3444	
PASSAT (32B)	1.6 D	40	08/80 – 03/88	3483	
PASSAT (32B)	1.6 D	40	08/80 – 03/88	3585	
PASSAT (32B)	1.6 TD	51	04/82 – 03/88	3444	
PASSAT (32B)	1.6 TD	51	04/82 – 03/88	3585	
PASSAT (32B)	1.6 TD	59	05/86 – 03/88	3444	
PASSAT (32B)	1.6 TD	59	05/86 – 03/88	3585	
PASSAT (32B)	1.8	64	05/86 – 03/88	3444	
PASSAT (32B)	1.8	66	01/83 – 03/88	3444	
PASSAT (32B)	1.8	82	12/83 – 03/88	3444	
PASSAT (3A2, 35I)	16	53	02/88 – 09/91	3551	
PASSAT (3A2, 35I)	16	53	02/88 – 09/91	3585	
PASSAT (3A2, 35I)	16	55	02/88 – 12/88	3551	
PASSAT (3A2, 35I)	16	55	02/88 – 12/88	3585	
PASSAT (3A2, 35I)	16	74	10/94 – 08/96		3529/1
PASSAT (3A2, 35I)	16	74	10/94 – 08/96	3531	
PASSAT (3A2, 35I)	16	74	10/94 – 08/96	3551	
PASSAT (3A2, 35I)	18	55	08/90 – 08/96	3551	
PASSAT (3A2, 35I)	18	66	02/88 – 08/96	3551	
PASSAT (3A2, 35I)	18	79	04/88 – 07/93		3529
PASSAT (3A2, 35I)	18	79	04/88 – 07/93	3531	
PASSAT (3A2, 35I)	18	82	04/88 – 07/92		3529
PASSAT (3A2, 35I)	18	82	04/88 – 07/92	3531	
PASSAT (3A2, 35I)	20	79	03/95 – 08/96		3529
PASSAT (3A2, 35I)	20	79	03/95 – 08/96	3531	
PASSAT (3A2, 35I)	20	85	02/90 – 08/96		3529
PASSAT (3A2, 35I)	20	85	02/90 – 08/96		3529/1
PASSAT (3A2, 35I)	20	85	02/90 – 08/96	3531	
PASSAT (3A2, 35I)	20	125	04/88 – 07/91		3529/1
PASSAT (3A2, 35I)	1.6	53	02/88 – 09/91	3444	
PASSAT (3A2, 35I)	1.6	55	02/88 – 12/88	3444	
PASSAT (3A2, 35I)	1.6 TD	59	08/88 – 09/93	3551	
PASSAT (3A2, 35I)	1.8 16V	100	04/88 – 12/89		3529
PASSAT (3A2, 35I)	1.8 16V	100	04/88 – 12/89	3531	
PASSAT (3A2, 35I)	1.8 G60 Syncro	118	08/88 – 08/96		3529
PASSAT (3A2, 35I)	1.8 G60 Syncro	118	08/88 – 08/96		3529/1
PASSAT (3A2, 35I)	1.8 G60 Syncro	118	08/88 – 08/96	3551	
PASSAT (3A2, 35I)	1.8 GL	102	08/91 – 09/93		3529
PASSAT (3A2, 35I)	1.8 GL	102	08/91 – 09/93	3531	
PASSAT (3A2, 35I)	1.9 D	50	05/89 – 10/93	3551	
PASSAT (3A2, 35I)	1.9 TD	55	03/91 – 08/96	3551	
PASSAT (3A2, 35I)	1.9 TDI	66	10/93 – 08/96		3529/1
PASSAT (3A2, 35I)	1.9 TDI	66	10/93 – 08/96	3531	
PASSAT (3A2, 35I)	1.9 TDI	66	10/93 – 08/96	3551	
PASSAT (3A2, 35I)	1.9 TDI	81	03/96 – 08/96		3529/1
PASSAT (3A2, 35I)	1.9 TDI	81	03/96 – 08/96	3551	
PASSAT (3A2, 35I)	2.0 16V	100	08/88 – 09/93		3529
PASSAT (3A2, 35I)	2.0 16V	100	08/88 – 09/93		3529/1
PASSAT (3A2, 35I)	2.0 16V	100	08/88 – 09/93	3531	
PASSAT (3A2, 35I)	2.0 16V	110	01/94 – 08/96		3529/1
PASSAT (3A2, 35I)	2.0 Syncro	81	09/89 – 07/92		3529
PASSAT (3A2, 35I)	2.0 Syncro	81	09/89 – 07/92		3529/1
PASSAT (3A2, 35I)	2.0 Syncro	81	09/89 – 07/92	3531	
PASSAT (3A2, 35I)	2.0 Syncro	85	10/90 – 08/96		3529
PASSAT (3A2, 35I)	2.0 Syncro	85	10/90 – 08/96		3529/1
PASSAT (3A2, 35I)	2.0 Syncro	85	10/90 - 08/96	3531	
PASSAT (3A2, 35I)	2.8 VR6	128	06/91 – 08/96		3529

BESER®

MAKE & MODEL		KW	YEAR		
VOLKSWAGEN					
PASSAT (3A2, 35I)	2.8 VR6	128	06/91 – 08/96		3529/1
PASSAT (3A2, 35I)	2.8 VR6	128	06/91 – 08/96	3551	
PASSAT (3A2, 35I)	1.6 TD	59	08.88 - 09.93	3650	
PASSAT (3A2, 35I)	1.8	66	02.88 - 08.96	3650	
PASSAT (3A2, 35I)	1.9 D	50	05.89 - 10.93	3650	
PASSAT (3A2, 35I)	1.9 TD	55	03.91 - 08.96	3650	
PASSAT (3A2, 35I)	1.9 TDI	66	10.93 - 08.96	3650	
PASSAT (3A2, 35I)	2.0 16V	100	08.88 - 09.93	3650	
PASSAT (3B2)	16	74	10/96 – 11/00		3529/1
PASSAT (3B2)	16	74	10/96 – 11/00	3590/2	
PASSAT (3B2)	16	74	10/96 – 11/00	3896	
PASSAT (3B2)	18	85	01/97 – 11/00		3529/1
PASSAT (3B2)	18	85	01/97 – 11/00	3590/2	
PASSAT (3B2)	18	85	01/97 – 11/00	3896	
PASSAT (3B2)	18	92	10/96 – 11/00		3529/1
PASSAT (3B2)	18	92	10/96 – 11/00	3590/2	
PASSAT (3B2)	18	92	10/96 – 11/00	3896	
PASSAT (3B2)	18	112	01/00 – 12/01		3529/1
PASSAT (3B2)	18	112	01/00 – 12/01	3590	
PASSAT (3B2)	20	88	04/00 – 11/00		3529/1
PASSAT (3B2)	20	88	04/00 – 11/00	3590	
PASSAT (3B2)	20	88	04/00 – 11/00	3590/2	
PASSAT (3B2)	1.8 Syncro/4motion	92	10/96 – 11/00		3529/1
PASSAT (3B2)	1.8 Syncro/4motion	92	10/96 – 11/00	3896	
PASSAT (3B2)	1.8 T	110	10/96 – 11/00		3529/1
PASSAT (3B2)	1.8 T	110	10/96 – 11/00	3590	
PASSAT (3B2)	1.8 T	110	10/96 – 11/00	3590/2	
PASSAT (3B2)	1.8 T Syncro	110	11/96 – 08/00		3529/1
PASSAT (3B2)	1.8 T Syncro	110	11/96 – 08/00	3896	
PASSAT (3B2)	1.9 TDI	66	10/96 – 11/00		3529/1
PASSAT (3B2)	1.9 TDI	66	10/96 – 11/00	3590/2	
PASSAT (3B2)	1.9 TDI	66	10/96 – 11/00	3896	
PASSAT (3B2)	1.9 TDI	74	02/00 – 11/00		3529/1
PASSAT (3B2)	1.9 TDI	74	02/00 – 11/00	3590/2	
PASSAT (3B2)	1.9 TDI	74	02/00 – 11/00	3896	
PASSAT (3B2)	1.9 TDI	81	10/96 – 11/00		3529/1
PASSAT (3B2)	1.9 TDI	81	10/96 – 11/00	3590	
PASSAT (3B2)	1.9 TDI	81	10/96 – 11/00	3590/2	
PASSAT (3B2)	1.9 TDI	85	08/98 – 11/00		3529/1
PASSAT (3B2)	1.9 TDI	85	08/98 – 11/00	3590	
PASSAT (3B2)	1.9 TDI	85	08/98 – 11/00	3590/2	
PASSAT (3B2)	1.9 TDI 4motion	85	08/99 – 11/00		3529/1
PASSAT (3B2)	1.9 TDI 4motion	85	08/99 – 11/00	3590	
PASSAT (3B2)	1.9 TDI 4motion	85	08/99 – 11/00	3590/2	
PASSAT (3B2)	1.9 TDI Syncro/4motion	81	10/96 – 11/00		3529/1
PASSAT (3B2)	1.9 TDI Syncro/4motion	81	10/96 – 11/00	3590	
PASSAT (3B2)	1.9 TDI Syncro/4motion	81	10/96 – 11/00	3590/2	
PASSAT (3B2)	2.0 4motion	88	04/00 – 11/00		3529/1
PASSAT (3B2)	2.0 4motion	88	04/00 – 11/00	3590	
PASSAT (3B2)	2.0 4motion	88	04/00 – 11/00	3590/2	
PASSAT (3B2)	2.3 VR5	110	10/96 – 11/00		3529/1
PASSAT (3B2)	2.3 VR5	110	10/96 – 11/00	3590	
PASSAT (3B2)	2.3 VR5	110	10/96 – 11/00	3590/2	
PASSAT (3B2)	2.3 VR5 Syncro/4motion	110	10/97 – 11/00		3529/1
PASSAT (3B2)	2.3 VR5 Syncro/4motion	110	10/97 – 11/00	3590	
PASSAT (3B2)	2.3 VR5 Syncro/4motion	110	10/97 – 11/00	3590/2	
PASSAT (3B2)	2.5 TDI	110	07/98 – 11/00		3529/1
PASSAT (3B2)	2.5 TDI	110	07/98 – 11/00	3590	
PASSAT (3B2)	2.5 TDI	110	07/98 – 11/00	3590/2	
PASSAT (3B2)	2.5 TDI Syncro/4motion	110	12/98 – 11/00		3529/1
PASSAT (3B2)	2.5 TDI Syncro/4motion	110	12/98 – 11/00	3590	
PASSAT (3B2)	2.5 TDI Syncro/4motion	110	12/98 – 11/00	3590/2	
PASSAT (3B2)	2.8 Syncro	132	05/97 – 09/99		3529/1
PASSAT (3B2)	2.8 Syncro	132	05/97 – 09/99	3590	
PASSAT (3B2)	2.8 Syncro	132	05/97 – 09/99	3590/2	
PASSAT (3B2)	2.8 V6	132	05/97 – 09/99		3529/1
PASSAT (3B2)	2.8 V6	132	05/97 – 09/99	3590	
PASSAT (3B2)	2.8 V6	132	05/97 – 09/99	3590/2	
PASSAT (3B2)	2.8 V6	140	09/99 – 11/00		3529/1
PASSAT (3B2)	2.8 V6	140	09/99 – 11/00	3590	
PASSAT (3B2)	2.8 V6	140	09/99 – 11/00	3590/2	

MAKE & MODEL   		KW	YEAR		
VOLKSWAGEN					
PASSAT (3B2)	2.8 V6	142	08/96 – 11/00		3529/1
PASSAT (3B2)	2.8 V6	142	08/96 – 11/00	3590	
PASSAT (3B2)	2.8 V6	142	08/96 – 11/00	3590/2	
PASSAT (3B2)	2.8 V6 Syncro/4motion	142	10/96 – 11/00		3529/1
PASSAT (3B2)	2.8 V6 Syncro/4motion	142	10/96 – 11/00	3590	
PASSAT (3B2)	2.8 V6 Syncro/4motion	142	10/96 – 11/00	3590/2	
PASSAT (3B3)	16	75	11/00 – 05/05		3529/1
PASSAT (3B3)	16	75	11/00 – 05/05	3590/2	
PASSAT (3B3)	18	92	03/03 – 03/05		3529/1
PASSAT (3B3)	18	92	03/03 – 03/05	3590/2	
PASSAT (3B3)	20	85	11/00 – 05/05		3529/1
PASSAT (3B3)	20	85	11/00 – 05/05	3590/2	
PASSAT (3B3)	20	96	11/01 – 05/05		3529/1
PASSAT (3B3)	20	96	11/01 – 05/05	3590/2	
PASSAT (3B3)	1.8 T	125	02/01 – 05/05		3529/1
PASSAT (3B3)	1.8 T	125	02/01 – 05/05	3590/2	
PASSAT (3B3)	1.8 T 20V	110	11/00 – 05/05		3529/1
PASSAT (3B3)	1.8 T 20V	110	11/00 – 05/05	3590/2	
PASSAT (3B3)	1.8 T 4motion	125	03/01 – 05/05		3529/1
PASSAT (3B3)	1.8 T 4motion	125	03/01 – 05/05	3590/2	
PASSAT (3B3)	1.9 TDI	74	11/00 – 05/05		3529/1
PASSAT (3B3)	1.9 TDI	74	11/00 – 05/05	3590/2	
PASSAT (3B3)	1.9 TDI	96	11/00 – 05/05		3529/1
PASSAT (3B3)	1.9 TDI	96	11/00 – 05/05	3590/2	
PASSAT (3B3)	1.9 TDI 4motion	96	11/00 – 05/05		3529/1
PASSAT (3B3)	1.9 TDI 4motion	96	11/00 – 05/05	3590/2	
PASSAT (3B3)	2.0 4motion	85	11/00 – 05/05		3529/1
PASSAT (3B3)	2.0 4motion	85	11/00 – 05/05	3590/2	
PASSAT (3B3)	2.0 TDI	100	12/03 – 05/05		3529/1
PASSAT (3B3)	2.0 TDI	100	12/03 – 05/05	3590/2	
PASSAT (3B3)	2.3 V5	125	11/00 – 05/05		3529/1
PASSAT (3B3)	2.3 V5 4motion	125	11/00 – 05/05		3529/1
PASSAT (3B3)	2.5 TDI	110	11/00 – 05/05		3529/1
PASSAT (3B3)	2.5 TDI	120	05/03 – 05/05		3529/1
PASSAT (3B3)	2.5 TDI 4motion	110	11/00 – 05/05		3529/1
PASSAT (3B3)	2.5 TDI 4motion	132	01/03 – 05/05		3529/1
PASSAT (3B3)	2.8 4motion	142	11/00 – 05/05		3529/1
PASSAT (3B3)	4.0 W8 4motion	202	09/01 – 09/04		3529/1
PASSAT (3C2)	16	75	05/05 – 07/10	3904	
PASSAT (3C2)	16	75	05/05 – 07/10		3905
PASSAT (3C2)	1.4 TSI	90	05/07 – 07/10	3904	
PASSAT (3C2)	1.4 TSI EcoFuel	110	01/09 – 07/10	3904	
PASSAT (3C2)	1.6 FSI	85	03/05 – 06/08	3904	
PASSAT (3C2)	1.6 FSI	85	03/05 – 06/08		3905
PASSAT (3C2)	1.6 TDI	77	08/09 – 07/10	3904	
PASSAT (3C2)	1.8 TSI	112	11/09 – 07/10	3904	
PASSAT (3C2)	1.8 TSI	118	05/07 – 07/10	3904	
PASSAT (3C2)	1.9 TDI	77	03/05 – 11/08	3904	
PASSAT (3C2)	1.9 TDI	77	03/05 – 11/08		3905
PASSAT (3C2)	2.0 BlueTDI	105	01/09 – 11/10	3904	
PASSAT (3C2)	2.0 FSI	110	03/05 – 07/10	3904	
PASSAT (3C2)	2.0 FSI	110	03/05 – 07/10		3905
PASSAT (3C2)	2.0 FSI	125	08/07 – 07/10	3904	
PASSAT (3C2)	2.0 FSI	147	07/05 – 07/10	3904	
PASSAT (3C2)	2.0 FSI	147	07/05 – 07/10		3905
PASSAT (3C2)	2.0 FSI 4motion	110	09/05 – 07/10	3904	
PASSAT (3C2)	2.0 FSI 4motion	110	09/05 – 07/10		3905
PASSAT (3C2)	2.0 TDI	81	11/08 – 07/10	3904	
PASSAT (3C2)	2.0 TDI	88	11/05 – 05/07	3904	
PASSAT (3C2)	2.0 TDI	88	11/05 – 05/07		3905
PASSAT (3C2)	2.0 TDI	90	08/05 – 07/06	3904	
PASSAT (3C2)	2.0 TDI	90	08/05 – 07/06		3905
PASSAT (3C2)	2.0 TDI	100	03/05 – 11/10	3904	
PASSAT (3C2)	2.0 TDI	100	03/05 – 11/10		3905
PASSAT (3C2)	2.0 TDI	103	03/05 – 05/09	3904	
PASSAT (3C2)	2.0 TDI	103	03/05 – 05/09		3905
PASSAT (3C2)	2.0 TDI	120	08/05 – 05/09	3904	
PASSAT (3C2)	2.0 TDI	120	08/05 – 05/09		3905
PASSAT (3C2)	2.0 TDI	125	08/05 – 07/10	3904	
PASSAT (3C2)	2.0 TDI	125	08/05 – 07/10		3905
PASSAT (3C2)	2.0 TDI 16V	103	03/05 – 07/10	3904	

MAKE & MODEL		KW	YEAR		
VOLKSWAGEN					
PASSAT (3C2)	2.0 TDI 16V	103	03/05 – 07/10		3905
PASSAT (3C2)	2.0 TDI 16V 4motion	103	03/05 – 08/10	3904	
PASSAT (3C2)	2.0 TDI 16V 4motion	103	03/05 – 08/10		3905
PASSAT (3C2)	2.0 TDI 4motion	103	03/05 – 05/09	3904	
PASSAT (3C2)	2.0 TDI 4motion	103	03/05 – 05/09		3905
PASSAT (3C2)	2.0 TDI 4motion	125	05/09 – 07/10	3904	
PASSAT CC (357)	1.4 TSI MultiFuel	118	01/11 – 01/12	3904	
PASSAT CC (357)	1.8 TSI	112	11/08 – 05/10	3904	
PASSAT CC (357)	1.8 TSI	118	06/08 – 01/12	3904	
PASSAT CC (357)	2.0 BlueTDI	105	05/09 – 11/10	3904	
PASSAT CC (357)	2.0 TDI	100	06/08 – 05/11	3904	
PASSAT CC (357)	2.0 TDI	103	06/08 – 01/12	3904	
PASSAT CC (357)	2.0 TDI	120	05/08 – 05/11	3904	
PASSAT CC (357)	2.0 TDI	125	06/08 – 01/12	3904	
PASSAT CC (357)	2.0 TDI 4motion	103	08/09 – 01/12	3904	
PASSAT CC (357)	2.0 TDI 4motion	125	11/09 – 01/12	3904	
PASSAT CC (357)	2.0 TSI	147	06/08 – 01/12	3904	
PASSAT CC (357)	2.0 TSI	155	11/10 – 01/12	3904	
PASSAT Estate (3B5)	16	74	06/97 – 11/00		3529/1
PASSAT Estate (3B5)	16	74	06/97 – 11/00	3590/2	
PASSAT Estate (3B5)	16	74	06/97 – 11/00	3896	
PASSAT Estate (3B5)	18	85	06/97 – 11/00		3529/1
PASSAT Estate (3B5)	18	85	06/97 – 11/00	3590/2	
PASSAT Estate (3B5)	18	85	06/97 – 11/00	3896	
PASSAT Estate (3B5)	18	92	06/97 – 11/00		3529/1
PASSAT Estate (3B5)	18	92	06/97 – 11/00	3590/2	
PASSAT Estate (3B5)	18	92	06/97 – 11/00	3896	
PASSAT Estate (3B5)	20	88	04/00 – 11/00		3529/1
PASSAT Estate (3B5)	20	88	04/00 – 11/00	3590	
PASSAT Estate (3B5)	20	88	04/00 – 11/00	3590/2	
PASSAT Estate (3B5)	1.8 Syncro/4motion	92	06/97 – 11/00		3529/1
PASSAT Estate (3B5)	1.8 Syncro/4motion	92	06/97 – 11/00	3590/2	
PASSAT Estate (3B5)	1.8 Syncro/4motion	92	06/97 – 11/00	3896	
PASSAT Estate (3B5)	1.8 T	110	06/97 – 11/00		3529/1
PASSAT Estate (3B5)	1.8 T	110	06/97 – 11/00	3590	
PASSAT Estate (3B5)	1.8 T	110	06/97 – 11/00	3590/2	
PASSAT Estate (3B5)	1.9 TDI	66	06/97 – 11/00		3529/1
PASSAT Estate (3B5)	1.9 TDI	66	06/97 – 11/00	3590/2	
PASSAT Estate (3B5)	1.9 TDI	66	06/97 – 11/00	3896	
PASSAT Estate (3B5)	1.9 TDI	74	02/00 – 11/00		3529/1
PASSAT Estate (3B5)	1.9 TDI	74	02/00 – 11/00	3590/2	
PASSAT Estate (3B5)	1.9 TDI	74	02/00 – 11/00	3896	
PASSAT Estate (3B5)	1.9 TDI	81	06/97 – 11/00		3529/1
PASSAT Estate (3B5)	1.9 TDI	81	06/97 – 11/00	3590	
PASSAT Estate (3B5)	1.9 TDI	81	06/97 – 11/00	3590/2	
PASSAT Estate (3B5)	1.9 TDI	85	08/98 – 11/00		3529/1
PASSAT Estate (3B5)	1.9 TDI	85	08/98 – 11/00	3590	
PASSAT Estate (3B5)	1.9 TDI	85	08/98 – 11/00	3590/2	
PASSAT Estate (3B5)	1.9 TDI 4motion	85	08/99 – 11/00		3529/1
PASSAT Estate (3B5)	1.9 TDI 4motion	85	08/99 – 11/00	3590	
PASSAT Estate (3B5)	1.9 TDI 4motion	85	08/99 – 11/00	3590/2	
PASSAT Estate (3B5)	1.9 TDI Syncro/4motion	81	06/97 – 11/00		3529/1
PASSAT Estate (3B5)	1.9 TDI Syncro/4motion	81	06/97 – 11/00	3590	
PASSAT Estate (3B5)	1.9 TDI Syncro/4motion	81	06/97 – 11/00	3590/2	
PASSAT Estate (3B5)	2.0 4motion	88	04/00 – 11/00		3529/1
PASSAT Estate (3B5)	2.0 4motion	88	04/00 – 11/00	3590	
PASSAT Estate (3B5)	2.0 4motion	88	04/00 – 11/00	3590/2	
PASSAT Estate (3B5)	2.3 VR5	110	06/97 – 11/00		3529/1
PASSAT Estate (3B5)	2.3 VR5	110	06/97 – 11/00	3590	
PASSAT Estate (3B5)	2.3 VR5	110	06/97 – 11/00	3590/2	
PASSAT Estate (3B5)	2.3 VR5 Syncro/4motion	110	10/97 – 11/00		3529/1
PASSAT Estate (3B5)	2.3 VR5 Syncro/4motion	110	10/97 – 11/00	3590	
PASSAT Estate (3B5)	2.3 VR5 Syncro/4motion	110	10/97 – 11/00	3590/2	
PASSAT Estate (3B5)	2.5 TDI	110	07/98 – 11/00		3529/1
PASSAT Estate (3B5)	2.5 TDI	110	07/98 – 11/00	3590	
PASSAT Estate (3B5)	2.5 TDI	110	07/98 – 11/00	3590/2	
PASSAT Estate (3B5)	2.5 TDI Syncro/4motion	110	12/98 – 11/00		3529/1
PASSAT Estate (3B5)	2.5 TDI Syncro/4motion	110	12/98 – 11/00	3590	
PASSAT Estate (3B5)	2.5 TDI Syncro/4motion	110	12/98 – 11/00	3590/2	
PASSAT Estate (3B5)	2.8 Syncro	132	05/97 – 09/99		3529/1
PASSAT Estate (3B5)	2.8 Syncro	132	05/97 – 09/99	3590	

MAKE & MODEL		KW	YEAR		
VOLKSWAGEN					
PASSAT Estate (3B5)	2.8 Syncro	132	05/97 – 09/99	3590/2	
PASSAT Estate (3B5)	2.8 V6	132	09/97 – 09/99		3529/1
PASSAT Estate (3B5)	2.8 V6	132	09/97 – 09/99	3590	
PASSAT Estate (3B5)	2.8 V6	132	09/97 – 09/99	3590/2	
PASSAT Estate (3B5)	2.8 V6	140	09/99 – 11/00		3529/1
PASSAT Estate (3B5)	2.8 V6	140	09/99 – 11/00	3590	
PASSAT Estate (3B5)	2.8 V6	140	09/99 – 11/00	3590/2	
PASSAT Estate (3B5)	2.8 V6	142	06/97 11/00		3529/1
PASSAT Estate (3B5)	2.8 V6	142	06/97 – 11/00	3590	
PASSAT Estate (3B5)	2.8 V6	142	06/97 – 11/00	3590/2	
PASSAT Estate (3B5)	2.8 V6 Syncro/4motion	142	06/97 – 11/00		3529/1
PASSAT Estate (3B5)	2.8 V6 Syncro/4motion	142	06/97 – 11/00	3590	
PASSAT Estate (3B5)	2.8 V6 Syncro/4motion	142	06/97 – 11/00	3590/2	
PASSAT LINGYU Saloon (B5)	18	120	01/09 – 04/09		3529/1
PASSAT LINGYU Saloon (B5)	20	85	04/06 – 04/09		3529/1
PASSAT LINGYU Saloon (B5)	28	140	11/05 – 04/09		3529/1
PASSAT LINGYU Saloon (B5)	1.8 T	110	11/05 – 04/09		3529/1
PASSAT Saloon (32B)	16	51	08/87 – 03/88	3585	
PASSAT Saloon (32B)	16	53	01/85 – 03/88	3585	
PASSAT Saloon (32B)	16	55	01/85 – 03/88	3585	
PASSAT Saloon (32B)	18	64	05/86 – 03/88	3585	
PASSAT Saloon (32B)	18	66	01/85 – 03/88	3585	
PASSAT Saloon (32B)	20	85	08/84 – 07/85	3486	
PASSAT Saloon (32B)	22	85	01/85 – 03/88	3486	
PASSAT Saloon (32B)	1.6	51	08/87 – 03/88	3444	
PASSAT Saloon (32B)	1.6	53	01/85 – 03/88	3444	
PASSAT Saloon (32B)	1.6	55	01/85 – 03/88	3444	
PASSAT Saloon (32B)	1.6 TD	51	01/85 – 03/88	3444	
PASSAT Saloon (32B)	1.6 TD	51	01/85 – 03/88	3585	
PASSAT Saloon (32B)	1.8	64	05/86 – 03/88	3444	
PASSAT Saloon (32B)	1.8	66	01/85 – 03/88	3444	
PASSAT Variant (32B)	13	40	08/80 – 07/83	3585	
PASSAT Variant (32B)	13	44	08/80 – 07/86	3327	
PASSAT Variant (32B)	13	44	08/80 – 07/86	3343	
PASSAT Variant (32B)	13	44	08/80 – 07/86	3483	
PASSAT Variant (32B)	13	44	08/80 – 07/86	3585	
PASSAT Variant (32B)	13	44	08/80 – 07/86	3585	
PASSAT Variant (32B)	16	51	08/87 – 03/88	3585	
PASSAT Variant (32B)	16	53	02/86 – 03/88	3585	
PASSAT Variant (32B)	16	55	08/80 – 03/88	3585	
PASSAT Variant (32B)	16	55	08/80 – 03/88	3585	
PASSAT Variant (32B)	16	63	01/81 – 02/83	3585	
PASSAT Variant (32B)	18	64	05/86 – 03/88	3585	
PASSAT Variant (32B)	18	66	01/83 – 03/88	3486	
PASSAT Variant (32B)	18	66	01/83 – 03/88	3585	
PASSAT Variant (32B)	18	82	12/83 – 03/88	3486	
PASSAT Variant (32B)	18	82	12/83 – 03/88	3585	
PASSAT Variant (32B)	19	85	01/81 – 07/83	3486	
PASSAT Variant (32B)	20	85	08/83 – 03/88	3486	
PASSAT Variant (32B)	21	85	01/81 – 07/83	3486	
PASSAT Variant (32B)	22	85	08/85 – 03/88	3486	
PASSAT Variant (32B)	22	85	08/85 – 03/88	3585	
PASSAT Variant (32B)	22	100	01/85 – 03/88		3529
PASSAT Variant (32B)	22	100	01/85 – 03/88	3531	
PASSAT Variant (32B)	1.3	40	08/80 – 07/83	3444	
PASSAT Variant (32B)	1.3	44	08/80 – 07/86	3444	
PASSAT Variant (32B)	1.3	44	08/80 – 07/86	3444	
PASSAT Variant (32B)	1.6	51	08/87 – 03/88	3444	
PASSAT Variant (32B)	1.6	53	02/86 – 03/88	3444	
PASSAT Variant (32B)	1.6	55	08/80 – 03/88	3444	
PASSAT Variant (32B)	1.6	55	08/80 – 03/88	3444	
PASSAT Variant (32B)	1.6	63	01/81 – 02/83	3444	
PASSAT Variant (32B)	1.6 D	40	08/80 – 03/88	3444	
PASSAT Variant (32B)	1.6 D	40	08/80 – 03/88	3585	
PASSAT Variant (32B)	1.6 TD	51	04/82 – 03/88	3444	
PASSAT Variant (32B)	1.6 TD	51	04/82 – 03/88	3585	
PASSAT Variant (32B)	1.8	64	05/86 – 03/88	3444	
PASSAT Variant (32B)	1.8	66	01/83 – 03/88	3444	
PASSAT Variant (32B)	1.8	82	12/83 – 03/88	3444	
PASSAT Variant (32B)	1.8 Syncro	66	01/86 – 03/88		3529
PASSAT Variant (32B)	1.8 Syncro	66	01/86 – 03/88	3531	

MAKE & MODEL		KW	YEAR		
VOLKSWAGEN					
PASSAT Variant (32B)	2.0 Syncro	85	05/84 – 03/88		3529
PASSAT Variant (32B)	2.0 Syncro	85	05/84 – 03/88	3531	
PASSAT Variant (32B)	2.2	85	08/85 – 03/88	3444	
PASSAT Variant (32B)	2.2 Syncro	88	08/85 – 03/88		3529
PASSAT Variant (32B)	2.2 Syncro	88	08/85 – 03/88	3531	
PASSAT Variant (3A5, 35I)	16	53	04/88 – 09/91	3551	
PASSAT Variant (3A5, 35I)	16	55	04/88 – 12/88	3551	
PASSAT Variant (3A5, 35I)	16	74	07/94 – 12/95		3529/1
PASSAT Variant (3A5, 35I)	16	74	07/94 – 12/95	3531	
PASSAT Variant (3A5, 35I)	16	74	07/94 – 12/95	3551	
PASSAT Variant (3A5, 35I)	18	55	08/90 – 05/97	3551	
PASSAT Variant (3A5, 35I)	18	66	02/88 – 05/97	3551	
PASSAT Variant (3A5, 35I)	18	79	04/88 – 07/90		3529
PASSAT Variant (3A5, 35I)	18	79	04/88 – 07/90	3531	
PASSAT Variant (3A5, 35I)	18	82	04/88 – 07/92		3529
PASSAT Variant (3A5, 35I)	18	82	04/88 – 07/92	3531	
PASSAT Variant (3A5, 35I)	18	102	08/91 – 09/93		3529
PASSAT Variant (3A5, 35I)	18	102	08/91 – 09/93		3529/1
PASSAT Variant (3A5, 35I)	18	102	08/91 – 09/93	3531	
PASSAT Variant (3A5, 35I)	20	79	03/95 – 08/96		3529
PASSAT Variant (3A5, 35I)	20	79	03/95 – 08/96	3531	
PASSAT Variant (3A5, 35I)	20	85	02/90 – 05/97		3529
PASSAT Variant (3A5, 35I)	20	85	10/93 – 10/96		3529
PASSAT Variant (3A5, 35I)	20	85	02/90 – 05/97		3529/1
PASSAT Variant (3A5, 35I)	20	85	10/93 – 10/96		3529/1
PASSAT Variant (3A5, 35I)	20	85	02/90 – 05/97	3531	
PASSAT Variant (3A5, 35I)	20	85	10/93 – 10/96	3531	
PASSAT Variant (3A5, 35I)	1.6 TD	59	08/88 – 09/93	3551	
PASSAT Variant (3A5, 35I)	1.8 16V	100	04/88 – 12/89		3529
PASSAT Variant (3A5, 35I)	1.8 16V	100	04/88 – 12/89		3529/1
PASSAT Variant (3A5, 35I)	1.8 16V	100	04/88 – 12/89	3531	
PASSAT Variant (3A5, 35I)	1.8 G60 Syncro	118	08/88 – 05/97		3529
PASSAT Variant (3A5, 35I)	1.8 G60 Syncro	118	08/88 – 05/97		3529/1
PASSAT Variant (3A5, 35I)	1.8 G60 Syncro	118	08/88 – 05/97	3551	
PASSAT Variant (3A5, 35I)	1.9 D	50	05/89 – 10/93	3551	
PASSAT Variant (3A5, 35I)	1.9 TD	55	03/91 – 05/97	3551	
PASSAT Variant (3A5, 35I)	1.9 TDI	66	10/93 – 05/97		3529/1
PASSAT Variant (3A5, 35I)	1.9 TDI	66	10/93 – 05/97	3531	
PASSAT Variant (3A5, 35I)	1.9 TDI	66	10/93 – 05/97	3551	
PASSAT Variant (3A5, 35I)	1.9 TDI	81	03/96 – 05/97		3529/1
PASSAT Variant (3A5, 35I)	1.9 TDI	81	03/96 – 05/97	3551	
PASSAT Variant (3A5, 35I)	2.0 16V	100	08/88 – 09/93		3529
PASSAT Variant (3A5, 35I)	2.0 16V	100	08/88 – 09/93		3529/1
PASSAT Variant (3A5, 35I)	2.0 16V	100	08/88 – 09/93	3531	
PASSAT Variant (3A5, 35I)	2.0 16V	110	01/94 – 05/97		3529/1
PASSAT Variant (3A5, 35I)	2.0 Syncro	85	10/90 – 05/97		3529
PASSAT Variant (3A5, 35I)	2.0 Syncro	85	10/90 – 05/97		3529/1
PASSAT Variant (3A5, 35I)	2.0 Syncro	85	10/90 – 05/97	3531	
PASSAT Variant (3A5, 35I)	2.8 VR6	128	06/91 – 05/97		3529
PASSAT Variant (3A5, 35I)	2.8 VR6	128	06/91 – 05/97		3529/1
PASSAT Variant (3A5, 35I)	2.8 VR6	128	06/91 – 05/97	3551	
PASSAT Variant (3A5, 35I)	2.9 VR6 Syncro	135	01/94 – 05/97		3529/1
PASSAT Variant (3A5, 35I)	1.6 TD	59	08.88 - 09.93	3650	
PASSAT Variant (3A5, 35I)	1.8	66	02.88 - 05.97	3650	
PASSAT Variant (3A5, 35I)	1.8	79	04.88 - 07.90	3650	
PASSAT Variant (3A5, 35I)	1.9 D	50	05.89 - 10.93	3650	
PASSAT Variant (3A5, 35I)	1.9 TD	55	03.91 - 05.97	3650	
PASSAT Variant (3A5, 35I)	1.9 TDI	66	10.93 - 05.97	3650	
PASSAT Variant (3B6)	16	75	11/00 – 05/05		3529/1
PASSAT Variant (3B6)	16	75	11/00 – 05/05	3590/2	
PASSAT Variant (3B6)	20	85	11/00 – 05/05		3529/1
PASSAT Variant (3B6)	20	85	11/00 – 05/05	3590/2	
PASSAT Variant (3B6)	20	96	11/01 – 05/05		3529/1
PASSAT Variant (3B6)	20	96	11/01 – 05/05	3590/2	
PASSAT Variant (3B6)	1.8 4motion	125	03/01 – 05/05		3529/1
PASSAT Variant (3B6)	1.8 4motion	125	03/01 – 05/05	3590/2	
PASSAT Variant (3B6)	1.8 T	125	05/02 – 08/05		3529/1
PASSAT Variant (3B6)	1.8 T	125	05/02 – 08/05	3590/2	
PASSAT Variant (3B6)	1.8 T 20V	110	11/00 – 05/05		3529/1
PASSAT Variant (3B6)	1.8 T 20V	110	11/00 – 05/05	3590/2	
PASSAT Variant (3B6)	1.9 TDI	74	11/00 – 05/05		3529/1

MAKE & MODEL   		KW	YEAR		
VOLKSWAGEN					
PASSAT Variant (3B6)	1.9 TDI	74	11/00 – 05/05	3590/2	
PASSAT Variant (3B6)	1.9 TDI	96	11/00 – 05/05		3529/1
PASSAT Variant (3B6)	1.9 TDI	96	11/00 – 05/05	3590/2	
PASSAT Variant (3B6)	1.9 TDI 4motion	96	11/00 – 05/05		3529/1
PASSAT Variant (3B6)	1.9 TDI 4motion	96	11/00 – 05/05	3590/2	
PASSAT Variant (3B6)	2.0 4motion	85	11/00 – 05/05		3529/1
PASSAT Variant (3B6)	2.0 4motion	85	11/00 – 05/05	3590/2	
PASSAT Variant (3B6)	2.0 TDI	100	12/03 – 05/05		3529/1
PASSAT Variant (3B6)	2.0 TDI	100	12/03 – 05/05	3590/2	
PASSAT Variant (3B6)	2.3 VR5	125	11/00 – 05/05		3529/1
PASSAT Variant (3B6)	2.3 VR5 4motion	125	11/00 – 05/05		3529/1
PASSAT Variant (3B6)	2.5 TDI	110	11/00 – 05/05		3529/1
PASSAT Variant (3B6)	2.5 TDI	120	05/03 – 05/05		3529/1
PASSAT Variant (3B6)	2.5 TDI 4motion	110	11/00 – 05/05		3529/1
PASSAT Variant (3B6)	2.5 TDI 4motion	132	01/03 – 05/05		3529/1
PASSAT Variant (3B6)	2.8 4motion	142	11/00 – 05/05		3529/1
PASSAT Variant (3B6)	4.0 W8 4motion	202	09/01 – 09/04		3529/1
PASSAT Variant (3C5)	16	75	08/05 – 11/10	3904	
PASSAT Variant (3C5)	16	75	08/05 – 11/10		3905
PASSAT Variant (3C5)	1.4 TSI	90	05/07 – 11/10	3904	
PASSAT Variant (3C5)	1.4 TSI EcoFuel	110	01/09 – 11/10	3904	
PASSAT Variant (3C5)	1.6 FSI	85	08/05 – 06/08	3904	
PASSAT Variant (3C5)	1.6 FSI	85	08/05 – 06/08		3905
PASSAT Variant (3C5)	1.6 TDI	77	08/09 – 11/10	3904	
PASSAT Variant (3C5)	1.8 TSI	112	11/09 – 11/10	3904	
PASSAT Variant (3C5)	1.8 TSI	118	05/07 – 10/11	3904	
PASSAT Variant (3C5)	1.9 TDI	77	08/05 – 11/08	3904	
PASSAT Variant (3C5)	1.9 TDI	77	08/05 – 11/08		3905
PASSAT Variant (3C5)	2.0 BlueTDI	105	01/09 – 11/10	3904	
PASSAT Variant (3C5)	2.0 FSI	110	08/05 – 11/10	3904	
PASSAT Variant (3C5)	2.0 FSI	110	08/05 – 11/10		3905
PASSAT Variant (3C5)	2.0 FSI	125	08/07 – 11/10	3904	
PASSAT Variant (3C5)	2.0 FSI	147	08/05 – 11/10	3904	
PASSAT Variant (3C5)	2.0 FSI	147	08/05 – 11/10		3905
PASSAT Variant (3C5)	2.0 FSI 4motion	110	09/05 – 11/10	3904	
PASSAT Variant (3C5)	2.0 FSI 4motion	110	09/05 – 11/10		3905
PASSAT Variant (3C5)	2.0 TDI	81	11/08 – 11/10	3904	
PASSAT Variant (3C5)	2.0 TDI	88	11/05 – 05/07	3904	
PASSAT Variant (3C5)	2.0 TDI	88	11/05 – 05/07		3905
PASSAT Variant (3C5)	2.0 TDI	90	08/05 – 02/06	3904	
PASSAT Variant (3C5)	2.0 TDI	90	08/05 – 02/06		3905
PASSAT Variant (3C5)	2.0 TDI	100	08/05 – 11/10	3904	
PASSAT Variant (3C5)	2.0 TDI	100	08/05 – 11/10		3905
PASSAT Variant (3C5)	2.0 TDI	103	08/05 – 05/09	3904	
PASSAT Variant (3C5)	2.0 TDI	103	08/05 – 05/09		3905
PASSAT Variant (3C5)	2.0 TDI	120	08/05 – 05/09	3904	
PASSAT Variant (3C5)	2.0 TDI	120	08/05 – 05/09		3905
PASSAT Variant (3C5)	2.0 TDI	125	08/05 – 11/10	3904	
PASSAT Variant (3C5)	2.0 TDI	125	08/05 – 11/10		3905
PASSAT Variant (3C5)	2.0 TDI 16V	103	08/05 – 11/10	3904	
PASSAT Variant (3C5)	2.0 TDI 16V	103	08/05 – 11/10		3905
PASSAT Variant (3C5)	2.0 TDI 16V 4motion	103	08/05 – 11/10	3904	
PASSAT Variant (3C5)	2.0 TDI 16V 4motion	103	08/05 – 11/10		3905
PASSAT Variant (3C5)	2.0 TDI 4motion	103	08/05 – 05/09	3904	
PASSAT Variant (3C5)	2.0 TDI 4motion	103	08/05 – 05/09		3905
PASSAT Variant (3C5)	2.0 TDI 4motion	125	05/09 – 11/10	3904	
POINTER	1.8	66	09/02-08/05	3561	
POINTER	1.8	73	08/05 -	3561	
POINTER	1.8	73	06/02-07/05	3561	
POINTER	2.0	85	09/02-12/03	3561	
POINTER Pickup	1.6	73	05/98-05/02	3561	
POINTER Variant	1.8	73	06/02-03/06	3561	
POLO (6N1)	1.7 SDI	42	04/97 – 10/99	3566	
POLO (6N1)	100 1.4 16V	74	04/96 – 10/99		3529/1
POLO (6N1)	120 1.6 16V GTI	88	09/98 – 10/99		3529/1
POLO (6N1)	45 1.0	33	10/94 – 09/96	3566	
POLO (6N1)	50 1.0	37	09/96 – 10/99	3566	
POLO (6N1)	55 1.3	40	10/94 – 07/95	3566	
POLO (6N1)	55 1.4	40	08/95 – 10/99	3566	
POLO (6N1)	60 1.4	44	07/95 – 10/99	3566	
POLO (6N1)	60 1.7 SDI	44	08/97 – 10/99	3566	

MAKE & MODEL		KW	YEAR		
VOLKSWAGEN					
POLO (6N1)	64 1.9 D	47	10/94 – 10/99	3566	
POLO (6N1)	64 1.9 SDI	47	07/96 – 10/99	3566	
POLO (6N1)	75 1.6	55	10/94 – 10/99	3566	
POLO (6N2)	10	37	10/99 – 09/01		3529/1
POLO (6N2)	10	37	10/99 – 09/01	3566	
POLO (6N2)	14	40	10/99 – 09/01		3529/1
POLO (6N2)	14	40	10/99 – 09/01	3566	
POLO (6N2)	14	44	10/99 – 09/01		3529/1
POLO (6N2)	14	44	10/99 – 09/01	3566	
POLO (6N2)	1.4 16V	55	10/99 – 09/01		3529/1
POLO (6N2)	1.4 16V	55	10/99 – 09/01	3566	
POLO (6N2)	1.4 16V	74	10/99 – 09/01		3529/1
POLO (6N2)	1.4 TDI	55	10/99 – 09/01		3529/1
POLO (6N2)	1.4 TDi	66	01/00 – 10/00		3529/1
POLO (6N2)	1.6 16V GTI	92	10/99 – 09/01		3529/1
POLO (6N2)	1.7 SDI	44	10/99 – 09/01		3529/1
POLO (6N2)	1.7 SDI	44	10/99 – 09/01	3566	
POLO (6N2)	1.9 D	47	10/99 – 09/01		3529/1
POLO (6N2)	1.9 D	47	10/99 – 09/01	3566	
POLO (6N2)	1.9 SDI	47	10/99 – 09/01		3529/1
POLO (6N2)	1.9 SDI	47	10/99 – 09/01	3566	
POLO (6R, 6C)	10	44	01/14 -		3529/1
POLO (6R, 6C)	10	44	01/14 -	3782/1	
POLO (6R, 6C)	10	44	01/14 -	3904	
POLO (6R, 6C)	10	55	01/14 -		3529/1
POLO (6R, 6C)	10	55	01/14 -	3782/1	
POLO (6R, 6C)	10	55	01/14 -	3904	
POLO (6R, 6C)	12	44	06/09 -		3529/1
POLO (6R, 6C)	12	44	06/09 -	3782/1	
POLO (6R, 6C)	12	44	06/09 -	3904	
POLO (6R, 6C)	12	51	06/09 -		3529/1
POLO (6R, 6C)	12	51	06/09 -	3782/1	
POLO (6R, 6C)	12	51	06/09 -	3904	
POLO (6R, 6C)	14	63	06/09 -		3529/1
POLO (6R, 6C)	14	63	06/09 -	3782/1	
POLO (6R, 6C)	14	63	06/09 -	3904	
POLO (6R, 6C)	16	63	05/10 -	3782/1	
POLO (6R, 6C)	16	63	05/10 -	4200	
POLO (6R, 6C)	16	66	07/14 -		3529/1
POLO (6R, 6C)	16	66	07/14 -	3782/1	
POLO (6R, 6C)	16	81	07/14 -		3529/1
POLO (6R, 6C)	16	81	07/14 -	3782/1	
POLO (6R, 6C)	16	81	07/14 -	3904	
POLO (6R, 6C)	1.0 TSI	70	11/14 -		3529/1
POLO (6R, 6C)	1.0 TSI	70	11/14 -	3782/1	
POLO (6R, 6C)	1.0 TSI	70	11/14 -	3904	
POLO (6R, 6C)	1.0 TSI	81	11/14 -		3529/1
POLO (6R, 6C)	1.0 TSI	81	11/14 -	3782/1	
POLO (6R, 6C)	1.0 TSI	81	11/14 -	3904	
POLO (6R, 6C)	1.2 TDI	55	10/09 -		3529/1
POLO (6R, 6C)	1.2 TDI	55	10/09 -	3782/1	
POLO (6R, 6C)	1.2 TDI	55	10/09 -	3904	
POLO (6R, 6C)	1.2 TSI	66	05/11 – 05/14		3529/1
POLO (6R, 6C)	1.2 TSI	66	05/11 – 05/14	3782/1	
POLO (6R, 6C)	1.2 TSI	66	05/11 – 05/14	3904	
POLO (6R, 6C)	1.2 TSI	77	11/09 -		3529/1
POLO (6R, 6C)	1.2 TSI	77	11/09 -	3782/1	
POLO (6R, 6C)	1.2 TSI	77	11/09 -	3904	
POLO (6R, 6C)	1.2 TSI	81	01/14 -		3529/1
POLO (6R, 6C)	1.2 TSI	81	01/14 -	3782/1	
POLO (6R, 6C)	1.2 TSI	81	01/14 -	3904	
POLO (6R, 6C)	1.2 TSI 16V	66	02/14 -		3529/1
POLO (6R, 6C)	1.2 TSI 16V	66	02/14 -	3782/1	
POLO (6R, 6C)	1.2 TSI 16V	66	02/14 -	3904	
POLO (6R, 6C)	1.4 BiFuel	60	03/10 – 01/11		3529/1
POLO (6R, 6C)	1.4 BiFuel	60	03/10 – 01/11	3782/1	
POLO (6R, 6C)	1.4 BiFuel	60	03/10 – 01/11	3904	
POLO (6R, 6C)	1.4 GTI	132	05/10 -		3529/1
POLO (6R, 6C)	1.4 GTI	132	05/10 -	3904	
POLO (6R, 6C)	1.4 TDI	55	03/14 -		3529/1
POLO (6R, 6C)	1.4 TDI	55	03/14 -	3782/1	

MAKE & MODEL		KW	YEAR		
VOLKSWAGEN					
POLO (6R, 6C)	1.4 TDI	55	03/14 -	3904	
POLO (6R, 6C)	1.4 TDI	66	02/14 -		3529/1
POLO (6R, 6C)	1.4 TDI	66	02/14 -	3782/1	
POLO (6R, 6C)	1.4 TDI	66	02/14 -	3904	
POLO (6R, 6C)	1.4 TDI	77	05/14 -		3529/1
POLO (6R, 6C)	1.4 TDI	77	05/14 -	3782/1	
POLO (6R, 6C)	1.4 TDI	77	05/14 -	3904	
POLO (6R, 6C)	1.4 TSI	103	10/12 -		3529/1
POLO (6R, 6C)	1.4 TSI	103	10/12 -	3782/1	
POLO (6R, 6C)	1.4 TSI	103	10/12 -	3904	
POLO (6R, 6C)	1.4 TSI	110	05/14 -		3529/1
POLO (6R, 6C)	1.4 TSI	110	05/14 -	3782/1	
POLO (6R, 6C)	1.4 TSI	110	05/14 -	3904	
POLO (6R, 6C)	1.6 BiFuel	60	01/11 -		3529/1
POLO (6R, 6C)	1.6 BiFuel	60	01/11 -	3782/1	
POLO (6R, 6C)	1.6 BiFuel	60	01/11 -	3904	
POLO (6R, 6C)	1.6 TDI	55	06/09 -		3529/1
POLO (6R, 6C)	1.6 TDI	55	06/09 -	3782/1	
POLO (6R, 6C)	1.6 TDI	55	06/09 -	3904	
POLO (6R, 6C)	1.6 TDI	66	06/09 -		3529/1
POLO (6R, 6C)	1.6 TDI	66	06/09 -	3782/1	
POLO (6R, 6C)	1.6 TDI	66	06/09 -	3904	
POLO (6R, 6C)	1.6 TDI	77	06/09 -		3529/1
POLO (6R, 6C)	1.6 TDI	77	06/09 -	3782/1	
POLO (6R, 6C)	1.6 TDI	77	06/09 -	3904	
POLO (6R, 6C)	1.8 GTI	136	11/14 -		3529/1
POLO (6R, 6C)	1.8 GTI	141	11/14 -		3529/1
POLO (6R, 6C)	1.8 GTI	141	11/14 -	3782/1	
POLO (6R, 6C)	1.8 GTI	141	11/14 -	3904	
POLO (6R, 6C)	2.0 R WRC	162	08/13 -		3529/1
POLO (6R, 6C)	2.0 R WRC	162	08/13 -	3904	
POLO (86)	08	25	09/75 – 09/81	3327	
POLO (86)	08	25	09/75 – 09/81	3343	
POLO (86)	08	25	09/75 – 09/81	3483	
POLO (86)	09	29	09/75 – 09/81	3327	
POLO (86)	09	29	09/75 – 09/81	3343	
POLO (86)	09	29	09/75 – 09/81	3483	
POLO (86)	11	37	03/75 – 09/81	3327	
POLO (86)	11	37	03/75 – 09/81	3343	
POLO (86)	11	37	03/75 – 09/81	3483	
POLO (86)	11	44	03/75 – 09/81	3327	
POLO (86)	11	44	03/75 – 09/81	3343	
POLO (86)	11	44	03/75 – 09/81	3483	
POLO (86)	13	44	12/76 – 09/81	3327	
POLO (86)	13	44	12/76 – 09/81	3343	
POLO (86)	13	44	12/76 – 09/81	3483	
POLO (86C, 80)	09	29	10/81 – 12/81	3327	
POLO (86C, 80)	09	29	10/81 – 12/81	3343	
POLO (86C, 80)	09	29	10/81 – 12/81	3483	
POLO (86C, 80)	10	29	10/81 – 10/86	3327	
POLO (86C, 80)	10	29	10/81 – 10/86	3343	
POLO (86C, 80)	10	29	10/81 – 10/86	3483	
POLO (86C, 80)	11	37	10/81 – 09/89	3327	
POLO (86C, 80)	11	37	10/81 – 09/89	3343	
POLO (86C, 80)	11	37	10/81 – 09/89	3483	
POLO (86C, 80)	13	37	08/83 – 07/85	3327	
POLO (86C, 80)	13	37	08/83 – 07/85	3343	
POLO (86C, 80)	13	37	08/83 – 07/85	3483	
POLO (86C, 80)	13	40	08/83 – 07/88	3327	
POLO (86C, 80)	13	40	08/83 – 07/88	3343	
POLO (86C, 80)	13	40	08/83 – 07/88	3483	
POLO (86C, 80)	13	43	08/82 – 07/88	3327	
POLO (86C, 80)	13	43	08/82 – 07/88	3343	
POLO (86C, 80)	13	43	08/82 – 07/88	3483	
POLO (86C, 80)	13	44	10/81 – 07/83	3327	
POLO (86C, 80)	13	44	10/81 – 07/83	3343	
POLO (86C, 80)	13	44	10/81 – 07/83	3483	
POLO (86C, 80)	13	55	09/82 – 09/89	3327	
POLO (86C, 80)	13	55	09/82 – 09/89	3343	
POLO (86C, 80)	13	55	09/82 – 09/89	3483	
POLO (86C, 80)	1.0	29	10/81 – 10/86	3441	

MAKE & MODEL		KW	YEAR		
VOLKSWAGEN					
POLO (86C, 80)	1.0	33	08/85 – 01/92	3441	
POLO (86C, 80)	1.0 CAT	33	08/89 – 09/94	3441	
POLO (86C, 80)	1.1	37	10/81 – 09/89	3441	
POLO (86C, 80)	1.3	37	08/83 – 07/85	3441	
POLO (86C, 80)	1.3	40	08/83 – 07/88	3441	
POLO (86C, 80)	1.3	55	09/82 – 09/89	3441	
POLO (86C, 80)	1.3 CAT	40	07/87 – 09/94	3441	
POLO (86C, 80)	1.3 CAT	55	10/89 – 03/91	3441	
POLO (86C, 80)	1.3 D	33	08/86 – 07/90	3441	
POLO (9N_)	12	40	01/02 – 05/07	3566	
POLO (9N_)	12	40	01/02 – 05/07	3782	
POLO (9N_)	12	40	01/02 – 05/07	3782/1	
POLO (9N_)	12	44	05/07 – 11/09		3529/1
POLO (9N_)	12	44	05/07 – 11/09	3782	
POLO (9N_)	12	44	05/07 – 11/09	3782/1	
POLO (9N_)	14	63	06/05 – 11/09		3529/1
POLO (9N_)	14	63	08/02 – 11/09	3782	
POLO (9N_)	14	63	08/02 – 11/09	3782/1	
POLO (9N_)	14	63	08/02 – 11/09		4152
POLO (9N_)	16	74	08/02 – 05/05		3529/1
POLO (9N_)	16	74	08/02 – 05/05	3782	
POLO (9N_)	16	74	08/02 – 05/05	3782/1	
POLO (9N_)	16	74	08/02 – 05/05		4152
POLO (9N_)	1.2 12V	47	10/01 – 07/07		3529/1
POLO (9N_)	1.2 12V	47	10/01 – 07/07	3782	
POLO (9N_)	1.2 12V	47	10/01 – 07/07	3782/1	
POLO (9N_)	1.2 12V	47	10/01 – 07/07		4152
POLO (9N_)	1.2 12V	51	05/07 – 11/09		3529/1
POLO (9N_)	1.2 12V	51	05/07 – 11/09	3782	
POLO (9N_)	1.2 12V	51	05/07 – 11/09	3782/1	
POLO (9N_)	1.2 12V	51	05/07 – 11/09		4152
POLO (9N_)	1.4 16V	55	10/01 – 05/08		3529/1
POLO (9N_)	1.4 16V	55	10/01 – 05/08	3782	
POLO (9N_)	1.4 16V	55	10/01 – 05/08	3782/1	
POLO (9N_)	1.4 16V	55	10/01 – 05/08		4152
POLO (9N_)	1.4 16V	59	05/06 – 11/09		3529/1
POLO (9N_)	1.4 16V	59	05/06 – 11/09	3782	
POLO (9N_)	1.4 16V	59	05/06 – 11/09	3782/1	
POLO (9N_)	1.4 16V	59	05/06 – 11/09		4152
POLO (9N_)	1.4 16V	74	10/01 – 05/08		3529/1
POLO (9N_)	1.4 16V	74	10/01 – 05/08	3782	
POLO (9N_)	1.4 16V	74	10/01 – 05/08	3782/1	
POLO (9N_)	1.4 16V	74	10/01 – 05/08		4152
POLO (9N_)	1.4 FSI	63	02/02 – 07/06		3529/1
POLO (9N_)	1.4 FSI	63	02/02 – 07/06	3782	
POLO (9N_)	1.4 FSI	63	02/02 – 07/06	3782/1	
POLO (9N_)	1.4 FSI	63	02/02 – 07/06		4152
POLO (9N_)	1.4 TDI	51	04/05 – 11/09		3529/1
POLO (9N_)	1.4 TDI	51	04/05 – 11/09	3782	
POLO (9N_)	1.4 TDI	51	04/05 – 11/09	3782/1	
POLO (9N_)	1.4 TDI	51	04/05 – 11/09		4152
POLO (9N_)	1.4 TDI	55	10/01 – 06/05		3529/1
POLO (9N_)	1.4 TDI	55	10/01 – 06/05	3782	
POLO (9N_)	1.4 TDI	55	10/01 – 06/05	3782/1	
POLO (9N_)	1.4 TDI	55	10/01 – 06/05		4152
POLO (9N_)	1.4 TDI	59	04/05 – 11/09		3529/1
POLO (9N_)	1.4 TDI	59	04/05 – 11/09	3782	
POLO (9N_)	1.4 TDI	59	04/05 – 11/09	3782/1	
POLO (9N_)	1.4 TDI	59	04/05 – 11/09		4152
POLO (9N_)	1.6 16V	77	05/06 – 11/09		3529/1
POLO (9N_)	1.6 16V	77	05/06 – 11/09	3782	
POLO (9N_)	1.6 16V	77	05/06 – 11/09	3782/1	
POLO (9N_)	1.6 16V	77	05/06 – 11/09		4152
POLO (9N_)	1.6 Flex	74	06/08 – 04/09		3529/1
POLO (9N_)	1.6 Flex	74	06/08 – 04/09	3782	
POLO (9N_)	1.6 Flex	74	06/08 – 04/09	3782/1	
POLO (9N_)	1.6 Flex	74	06/08 – 04/09		4152
POLO (9N_)	1.8 GTI	110	09/05 – 11/09		3529/1
POLO (9N_)	1.8 GTI	110	09/05 – 11/09	4138	
POLO (9N_)	1.8 GTI	110	09/05 – 11/09		4152
POLO (9N_)	1.8 GTi Cup Edition	132	05/06 – 11/09		3529/1

MAKE & MODEL		KW	YEAR		
VOLKSWAGEN					
POLO (9N_)	1.8 GTi Cup Edition	132	05/06 – 11/09	3590/1	
POLO (9N_)	1.8 GTi Cup Edition	132	05/06 – 11/09		4152
POLO (9N_)	1.9 SDI	47	10/01 – 11/09		3529/1
POLO (9N_)	1.9 SDI	47	10/01 – 11/09	3782	
POLO (9N_)	1.9 SDI	47	10/01 – 11/09	3782/1	
POLO (9N_)	1.9 SDI	47	10/01 – 11/09		4152
POLO (9N_)	1.9 TDI	74	10/01 – 11/09		3529/1
POLO (9N_)	1.9 TDI	74	10/01 – 11/09	3782	
POLO (9N_)	1.9 TDI	74	10/01 – 11/09	3782/1	
POLO (9N_)	1.9 TDI	74	10/01 – 11/09		4152
POLO (9N_)	1.9 TDI	96	11/03 – 11/09		3529/1
POLO (9N_)	1.9 TDI	96	11/03 – 11/09	4138	
POLO (9N_)	1.9 TDI	96	11/03 – 11/09		4152
POLO Box (6NF)	10	33	10/94 – 12/99	3566	
POLO Box (6NF)	14	44	05/98 – 12/99	3566	
POLO Box (6NF)	1.7 SDI	44	08/97 – 12/99	3566	
POLO Box (6NF)	1.9 D	47	10/94 – 12/99	3566	
POLO Box (6NF)	1.9 SDI	47	07/96 – 12/99	3566	
POLO Box (86CF)	10	33	08/92 – 07/94	3566	
POLO Box (86CF)	13	40	08/92 – 07/94	3566	
POLO Box (86CF)	1.4 D	35	08/92 – 07/94	3566	
POLO CLASSIC (6KV2)	14	62	05/96 – 07/02		3529
POLO CLASSIC (6KV2)	14	62	05/96 – 07/02		3529/1
POLO CLASSIC (6KV2)	14	62	05/96 – 07/02	3538	
POLO CLASSIC (6KV2)	14	62	05/96 – 07/02	3637	
POLO CLASSIC (6KV2)	1.8 Hybrid	74	05/96 – 09/01		3529
POLO CLASSIC (6KV2)	1.8 Hybrid	74	05/96 – 09/01		3529/1
POLO CLASSIC (6KV2)	1.8 Hybrid	74	05/96 – 09/01	3538	
POLO CLASSIC (6KV2)	1.8 Hybrid	74	05/96 – 09/01	3637	
POLO CLASSIC (6KV2)	1.9 SDI	48	06/96 – 09/01		3529
POLO CLASSIC (6KV2)	1.9 SDI	48	06/96 – 09/01		3529/1
POLO CLASSIC (6KV2)	1.9 SDI	48	06/96 – 09/01	3538	
POLO CLASSIC (6KV2)	1.9 SDI	48	06/96 – 09/01	3637	
POLO CLASSIC (6KV2)	1.9 TDI	67	01/97 – 08/99		3529
POLO CLASSIC (6KV2)	1.9 TDI	67	01/97 – 08/99		3529/1
POLO CLASSIC (6KV2)	1.9 TDI	67	01/97 – 08/99	3637	
POLO CLASSIC (6KV2)	100 1.6	74	12/95 – 09/01		3529
POLO CLASSIC (6KV2)	100 1.6	74	12/95 – 09/01		3529/1
POLO CLASSIC (6KV2)	100 1.6	74	12/95 – 09/01	3637	
POLO CLASSIC (6KV2)	110 1.9 TDI	81	06/98 – 01/02		3529
POLO CLASSIC (6KV2)	110 1.9 TDI	81	06/98 – 01/02		3529/1
POLO CLASSIC (6KV2)	110 1.9 TDI	81	06/98 – 01/02	3637	
POLO CLASSIC (6KV2)	54 1.4	40	01/98 – 08/99		3529
POLO CLASSIC (6KV2)	54 1.4	40	01/98 – 08/99		3529/1
POLO CLASSIC (6KV2)	54 1.4	40	01/98 – 08/99	3538	
POLO CLASSIC (6KV2)	54 1.4	40	01/98 – 08/99	3637	
POLO CLASSIC (6KV2)	57 1.7 SDI	42	07/97 – 09/01		3529
POLO CLASSIC (6KV2)	57 1.7 SDI	42	07/97 – 09/01		3529/1
POLO CLASSIC (6KV2)	57 1.7 SDI	42	07/97 – 09/01	3538	
POLO CLASSIC (6KV2)	57 1.7 SDI	42	07/97 – 09/01	3637	
POLO CLASSIC (6KV2)	60 1.4	44	12/95 – 09/01		3529
POLO CLASSIC (6KV2)	60 1.4	44	12/95 – 09/01		3529/1
POLO CLASSIC (6KV2)	60 1.4	44	12/95 – 09/01	3538	
POLO CLASSIC (6KV2)	60 1.4	44	12/95 – 09/01	3637	
POLO CLASSIC (6KV2)	64 1,9 D	47	01/96 – 10/96		3529
POLO CLASSIC (6KV2)	64 1,9 D	47	01/96 – 10/96		3529/1
POLO CLASSIC (6KV2)	64 1,9 D	47	01/96 – 10/96	3538	
POLO CLASSIC (6KV2)	64 1,9 D	47	01/96 – 10/96	3637	
POLO CLASSIC (6KV2)	64 1.9 SDI	47	12/95 – 08/99		3529
POLO CLASSIC (6KV2)	64 1.9 SDI	47	12/95 – 08/99		3529/1
POLO CLASSIC (6KV2)	64 1.9 SDI	47	12/95 – 08/99	3538	
POLO CLASSIC (6KV2)	64 1.9 SDI	47	12/95 – 08/99	3637	
POLO CLASSIC (6KV2)	68 1.9 SDI	50	08/99 – 01/02		3529
POLO CLASSIC (6KV2)	68 1.9 SDI	50	08/99 – 01/02		3529/1
POLO CLASSIC (6KV2)	68 1.9 SDI	50	08/99 – 01/02	3538	
POLO CLASSIC (6KV2)	68 1.9 SDI	50	08/99 – 01/02	3637	
POLO CLASSIC (6KV2)	75 1.4 16V	55	10/99 – 09/01		3529
POLO CLASSIC (6KV2)	75 1.4 16V	55	10/99 – 09/01		3529/1
POLO CLASSIC (6KV2)	75 1.4 16V	55	10/99 – 09/01	3538	
POLO CLASSIC (6KV2)	75 1.4 16V	55	10/99 – 09/01	3637	
POLO CLASSIC (6KV2)	75 1.6	55	11/95 – 09/01		3529

MAKE & MODEL		KW	YEAR		
VOLKSWAGEN					
POLO CLASSIC (6KV2)	75 1.6	55	11/95 – 09/97		3529
POLO CLASSIC (6KV2)	75 1.6	55	11/95 – 09/01		3529/1
POLO CLASSIC (6KV2)	75 1.6	55	11/95 – 09/97		3529/1
POLO CLASSIC (6KV2)	75 1.6	55	11/95 – 09/01	3538	
POLO CLASSIC (6KV2)	75 1.6	55	11/95 – 09/97	3538	
POLO CLASSIC (6KV2)	75 1.6	55	11/95 – 09/01	3637	
POLO CLASSIC (6KV2)	75 1.6	55	11/95 – 09/97	3637	
POLO CLASSIC (6KV2)	90 1.8	66	01/97 – 09/01		3529
POLO CLASSIC (6KV2)	90 1.8	66	01/97 – 09/01		3529/1
POLO CLASSIC (6KV2)	90 1.8	66	01/97 – 09/01	3637	
POLO CLASSIC (6KV2)	90 1.9 TDI	66	09/96 – 09/01		3529
POLO CLASSIC (6KV2)	90 1.9 TDI	66	09/96 – 09/01		3529/1
POLO CLASSIC (6KV2)	90 1.9 TDI	66	09/96 – 09/01	3637	
POLO CLASSIC (86C, 80)	10	29	01/85 – 10/86	3327	
POLO CLASSIC (86C, 80)	10	29	01/85 – 10/86	3343	
POLO CLASSIC (86C, 80)	10	29	01/85 – 10/86	3483	
POLO CLASSIC (86C, 80)	10	33	01/85 – 09/94	3327	
POLO CLASSIC (86C, 80)	10	33	01/85 – 09/94	3343	
POLO CLASSIC (86C, 80)	10	33	01/85 – 09/94	3483	
POLO CLASSIC (86C, 80)	13	40	01/85 – 07/87	3327	
POLO CLASSIC (86C, 80)	13	40	01/85 – 07/87	3343	
POLO CLASSIC (86C, 80)	13	40	01/85 – 07/87	3483	
POLO CLASSIC (86C, 80)	1.0	29	01/85 – 10/86	3441	
POLO CLASSIC (86C, 80)	1.0	33	01/85 – 09/94	3441	
POLO CLASSIC (86C, 80)	1.3	40	01/85 – 07/87	3441	
POLO CLASSIC (86C, 80)	1.3 CAT	40	07/87 – 09/94	3441	
POLO CLASSIC (86C, 80)	1.3 D	33	08/86 – 12/88	3441	
POLO Coupe (86C, 80)	10	29	05/82 – 10/86	3327	
POLO Coupe (86C, 80)	10	29	05/82 – 10/86	3343	
POLO Coupe (86C, 80)	10	29	05/82 – 10/86	3483	
POLO Coupe (86C, 80)	11	37	10/81 – 07/83	3327	
POLO Coupe (86C, 80)	11	37	10/81 – 07/83	3343	
POLO Coupe (86C, 80)	11	37	10/81 – 07/83	3483	
POLO Coupe (86C, 80)	13	40	08/83 – 06/87	3327	
POLO Coupe (86C, 80)	13	40	08/83 – 06/87	3343	
POLO Coupe (86C, 80)	13	40	08/83 – 06/87	3483	
POLO Coupe (86C, 80)	13	44	10/81 – 07/83	3327	
POLO Coupe (86C, 80)	13	44	10/81 – 07/83	3343	
POLO Coupe (86C, 80)	13	44	10/81 – 07/83	3483	
POLO Coupe (86C, 80)	13	55	09/82 – 09/89	3327	
POLO Coupe (86C, 80)	13	55	09/82 – 09/89	3343	
POLO Coupe (86C, 80)	13	55	09/82 – 09/89	3483	
POLO Coupe (86C, 80)	1.0	29	05/82 – 10/86	3441	
POLO Coupe (86C, 80)	1.0	33	08/85 – 01/92	3441	
POLO Coupe (86C, 80)	1.0 CAT	33	08/89 – 09/94	3441	
POLO Coupe (86C, 80)	1.3	40	08/83 – 06/87	3441	
POLO Coupe (86C, 80)	1.3	55	09/82 – 09/89	3441	
POLO Coupe (86C, 80)	1.3 CAT	40	07/87 – 08/94	3441	
POLO Coupe (86C, 80)	1.3 CAT	55	10/89 – 09/94	3441	
POLO Coupe (86C, 80)	1.3 D	33	08/86 – 08/90	3441	
POLO Coupe (86C, 80)	1.3 G40	83	08/90 – 09/94	3486	
POLO Coupe (86C, 80)	1.3 G40	85	01/87 – 08/90	3486	
POLO Coupe (86C, 80)	1.4 D	35	08/90 – 09/94	3441	
POLO Saloon (60_, 61_)	16	63	11/10 -		3529/1
POLO Saloon (60_, 61_)	16	63	11/10 -	3782/1	
POLO Saloon (60_, 61_)	16	63	11/10 -	4200	
POLO Saloon (60_, 61_)	16	77	05/10 -		3529/1
POLO Saloon (60_, 61_)	16	77	05/10 -	3782/1	
POLO Saloon (60_, 61_)	16	77	05/10 -	4200	
POLO Saloon (9A4)	14	55	07/03 -		3529/1
POLO Saloon (9A4)	14	55	07/03 -	3782	
POLO Saloon (9A4)	14	55	07/03 -	3782/1	
POLO Saloon (9A4)	14	55	07/03 -	4138	
POLO Saloon (9A4)	14	74	11/03 -		3529/1
POLO Saloon (9A4)	14	74	11/03 -	3782	
POLO Saloon (9A4)	14	74	11/03 -	3782/1	
POLO Saloon (9A4)	14	74	11/03 -	4138	
POLO Saloon (9A4)	16	74	09/02 -		3529/1
POLO Saloon (9A4)	16	74	09/02 -	3782	
POLO Saloon (9A4)	16	74	09/02 -	3782/1	
POLO Saloon (9A4)	16	74	09/02 -	4138	

MAKE & MODEL		KW	YEAR		
VOLKSWAGEN					
POLO Saloon (9A4)	1.4 TDI	55	07/03 -		3529/1
POLO Saloon (9A4)	1.4 TDI	55	07/03 -	3782	
POLO Saloon (9A4)	1.4 TDI	55	07/03 -	3782/1	
POLO Saloon (9A4)	1.4 TDI	55	07/03 -	4138	
POLO Saloon (9A4)	1.9 SDI	47	09/02 -		3529/1
POLO Saloon (9A4)	1.9 SDI	47	09/02 -	3782	
POLO Saloon (9A4)	1.9 SDI	47	09/02 -	3782/1	
POLO Saloon (9A4)	1.9 SDI	47	09/02 -	4138	
POLO Saloon (9A4)	1.9 TDi	74	09/02 -		3529/1
POLO Saloon (9A4)	1.9 TDi	74	09/02 -	3782	
POLO Saloon (9A4)	1.9 TDi	74	09/02 -	3782/1	
POLO Saloon (9A4)	1.9 TDi	74	09/02 -	4138	
POLO V (6R, 6C)	1.8 GTI 230	169	04/16 -		4241
POLO V (6R, 6C)	1.8 GTI 230	169	04/16 -	4228	
POLO Variant (6KV5)	14	40	12/98 – 09/01		3529
POLO Variant (6KV5)	14	40	12/98 – 09/01		3529/1
POLO Variant (6KV5)	14	40	12/98 – 09/01	3538	
POLO Variant (6KV5)	14	40	12/98 – 09/01	3637	
POLO Variant (6KV5)	14	44	05/97 – 09/01		3529
POLO Variant (6KV5)	14	44	05/97 – 09/01		3529/1
POLO Variant (6KV5)	14	44	05/97 – 09/01	3538	
POLO Variant (6KV5)	14	44	05/97 – 09/01	3637	
POLO Variant (6KV5)	16	55	05/97 – 09/01		3529
POLO Variant (6KV5)	16	55	05/97 – 09/01		3529/1
POLO Variant (6KV5)	16	55	05/97 – 09/01	3538	
POLO Variant (6KV5)	16	55	05/97 – 09/01	3637	
POLO Variant (6KV5)	16	74	05/97 – 09/01		3529
POLO Variant (6KV5)	16	74	05/97 – 09/01		3529/1
POLO Variant (6KV5)	16	74	05/97 – 09/01	3538	
POLO Variant (6KV5)	16	74	05/97 – 09/01	3637	
POLO Variant (6KV5)	18	66	05/97 – 09/01		3529
POLO Variant (6KV5)	18	66	05/97 – 09/01		3529/1
POLO Variant (6KV5)	18	66	05/97 – 09/01	3538	
POLO Variant (6KV5)	18	66	05/97 – 09/01	3637	
POLO Variant (6KV5)	1.4 16V	55	10/99 – 09/01		3529
POLO Variant (6KV5)	1.4 16V	55	10/99 – 09/01		3529/1
POLO Variant (6KV5)	1.4 16V	55	10/99 – 09/01	3538	
POLO Variant (6KV5)	1.4 16V	55	10/99 – 09/01	3637	
POLO Variant (6KV5)	1.7 SDI	42	08/97 – 09/01		3529
POLO Variant (6KV5)	1.7 SDI	42	08/97 – 09/01		3529/1
POLO Variant (6KV5)	1.7 SDI	42	08/97 – 09/01	3538	
POLO Variant (6KV5)	1.7 SDI	42	08/97 – 09/01	3637	
POLO Variant (6KV5)	1.9 SDI	47	06/97 – 09/01		3529
POLO Variant (6KV5)	1.9 SDI	47	06/97 – 09/01		3529/1
POLO Variant (6KV5)	1.9 SDI	47	06/97 – 09/01	3538	
POLO Variant (6KV5)	1.9 SDI	47	06/97 – 09/01	3637	
POLO Variant (6KV5)	1.9 SDI	50	08/99 – 09/01		3529
POLO Variant (6KV5)	1.9 SDI	50	08/99 – 09/01		3529/1
POLO Variant (6KV5)	1.9 SDI	50	08/99 – 09/01	3538	
POLO Variant (6KV5)	1.9 SDI	50	08/99 – 09/01	3637	
POLO Variant (6KV5)	1.9 TDI	66	05/97 – 09/01		3529
POLO Variant (6KV5)	1.9 TDI	66	05/97 – 09/01		3529/1
POLO Variant (6KV5)	1.9 TDI	66	05/97 – 09/01	3538	
POLO Variant (6KV5)	1.9 TDI	66	05/97 – 09/01	3637	
POLO Variant (6KV5)	1.9 TDI	81	06/98 – 09/01		3529
POLO Variant (6KV5)	1.9 TDI	81	06/98 – 09/01		3529/1
POLO Variant (6KV5)	1.9 TDI	81	06/98 – 09/01	3538	
POLO Variant (6KV5)	1.9 TDI	81	06/98 – 09/01	3637	
SAGITAR	16	74	02/06 – 12/12	3904	
SAGITAR	20	85	04/06 – 06/09	3904	
SAGITAR	1.4 TSI	96	09/09 -	3904	
SAGITAR	1.8 TSI	118	07/08 -	3904	
SAGITAR	1.8 TURBO	110	04/06 – 04/08	3904	
SANTANA (32B)	13	44	08/81 – 07/83	3327	
SANTANA (32B)	13	44	08/81 – 07/83	3343	
SANTANA (32B)	13	44	08/81 – 07/83	3483	
SANTANA (32B)	13	44	08/81 – 07/83	3585	
SANTANA (32B)	16	55	08/81 – 12/84	3585	
SANTANA (32B)	16	55	08/81 – 12/84	3585	
SANTANA (32B)	16	63	08/81 – 12/82	3585	
SANTANA (32B)	18	66	01/83 – 12/84	3585	

MAKE & MODEL		KW	YEAR		
VOLKSWAGEN					
SANTANA (32B)	19	85	08/81 – 07/83	3486	
SANTANA (32B)	20	85	08/83 – 12/84	3486	
SANTANA (32B)	21	85	08/82 – 12/83	3486	
SANTANA (32B)	1.3	44	08/81 – 07/83	3444	
SANTANA (32B)	1.6	55	08/81 – 12/84	3444	
SANTANA (32B)	1.6	55	08/81 – 12/84	3444	
SANTANA (32B)	1.6	63	08/81 – 12/82	3444	
SANTANA (32B)	1.6 D	40	08/81 – 12/84	3327	
SANTANA (32B)	1.6 D	40	08/81 – 12/84	3343	
SANTANA (32B)	1.6 D	40	08/81 – 12/84	3444	
SANTANA (32B)	1.6 D	40	08/81 – 12/84	3483	
SANTANA (32B)	1.6 D	40	08/81 – 12/84	3585	
SANTANA (32B)	1.6 TD	51	12/81 – 12/84	3444	
SANTANA (32B)	1.6 TD	51	12/81 – 12/84	3585	
SANTANA (32B)	1.8	66	01/83 – 12/84	3444	
SAVEIRO I	1.6	55	08/90-07/96	3561	
SAVEIRO II	1.6	55	07/97-02/02	3561	
SAVEIRO II	1.8	73	08/96-02/02	3561	
SAVEIRO III	1.6	68	03/02-09/05	3561	
SAVEIRO III	1.8	73	03/02-09/05	3561	
SAVEIRO IV	2.0	82	03/05-08/09	3561	
SCIROCCO (137, 138)	1.4 TSI	90	08/08 -		3529/1
SCIROCCO (137, 138)	1.4 TSI	90	08/08 -	3904	
SCIROCCO (137, 138)	1.4 TSI	90	08/08 -		3905
SCIROCCO (137, 138)	1.4 TSI	92	11/13 -		3529/1
SCIROCCO (137, 138)	1.4 TSI	92	11/13 -	3904	
SCIROCCO (137, 138)	1.4 TSI	110	07/15 -		3529/1
SCIROCCO (137, 138)	1.4 TSI	110	07/15 -	3904	
SCIROCCO (137, 138)	1.4 TSI	110	07/15 -		4135
SCIROCCO (137, 138)	1.4 TSI	118	05/08 -	3904	
SCIROCCO (137, 138)	1.4 TSI	118	05/08 -		3905
SCIROCCO (137, 138)	2.0 R	188	11/09 -	3904	
SCIROCCO (137, 138)	2.0 R	206	05/14 -		3905
SCIROCCO (137, 138)	2.0 R	206	05/14 -		4135
SCIROCCO (137, 138)	2.0 TDI	100	11/10 -		3529/1
SCIROCCO (137, 138)	2.0 TDI	100	11/10 -	3904	
SCIROCCO (137, 138)	2.0 TDI	103	08/08 -		3529/1
SCIROCCO (137, 138)	2.0 TDI	103	08/08 -	3904	
SCIROCCO (137, 138)	2.0 TDI	103	08/08 -		3905
SCIROCCO (137, 138)	2.0 TDI	110	11/13 -		3529/1
SCIROCCO (137, 138)	2.0 TDI	110	11/13 -	3904	
SCIROCCO (137, 138)	2.0 TDI	110	11/13 -		3905
SCIROCCO (137, 138)	2.0 TDI	125	05/09 -	3904	
SCIROCCO (137, 138)	2.0 TDI	125	05/09 -		3905
SCIROCCO (137, 138)	2.0 TDI	125	05/09 -		4135
SCIROCCO (137, 138)	2.0 TDI	130	01/13 -	3904	
SCIROCCO (137, 138)	2.0 TDI	130	01/13 -		3905
SCIROCCO (137, 138)	2.0 TDI	130	01/13 -		4135
SCIROCCO (137, 138)	2.0 TDI	135	05/14 -		3529/1
SCIROCCO (137, 138)	2.0 TDI	135	05/14 -	3904	
SCIROCCO (137, 138)	2.0 TDI	135	05/14 -		3905
SCIROCCO (137, 138)	2.0 TDI	135	05/14 -		4135
SCIROCCO (137, 138)	2.0 TSI	132	11/13 -	3904	
SCIROCCO (137, 138)	2.0 TSI	132	11/13 -		3905
SCIROCCO (137, 138)	2.0 TSI	132	11/13 -		4135
SCIROCCO (137, 138)	2.0 TSI	147	05/08 – 11/09	3904	
SCIROCCO (137, 138)	2.0 TSI	147	05/08 – 11/09		3905
SCIROCCO (137, 138)	2.0 TSI	147	05/08 – 11/09		4135
SCIROCCO (137, 138)	2.0 TSI	155	11/09 -	3904	
SCIROCCO (137, 138)	2.0 TSI	155	11/09 -		3905
SCIROCCO (137, 138)	2.0 TSI	155	11/09 -		4135
SCIROCCO (137, 138)	2.0 TSI	162	11/13 -	3904	
SCIROCCO (137, 138)	2.0 TSI	162	11/13 -		4135
SCIROCCO (53)	11	37	04/74 – 07/79	3585	
SCIROCCO (53)	13	44	08/79 - 07/80	3585	
SCIROCCO (53)	15	51	02/74 – 12/75	3585	
SCIROCCO (53)	15	51	08/77 – 07/80	3585	
SCIROCCO (53)	15	55	02/74 – 08/75	3585	
SCIROCCO (53)	15	63	02/74 – 12/77	3585	
SCIROCCO (53)	16	51	08/75 – 07/77	3585	
SCIROCCO (53)	16	55	08/75 – 07/79	3585	

MAKE & MODEL		KW	YEAR		
VOLKSWAGEN					
SCIROCCO (53)	16	63	08/75 – 07/80	3585	
SCIROCCO (53)	16	81	06/76 – 07/80	3585	
SCIROCCO (53)	1.1	37	04/74 – 07/79	3444	
SCIROCCO (53)	1.3	44	08/79 – 07/80	3444	
SCIROCCO (53)	1.5	51	02/74 – 12/75	3444	
SCIROCCO (53)	1.5	51	08/77 – 07/80	3444	
SCIROCCO (53)	1.5	55	02/74 – 08/75	3444	
SCIROCCO (53)	1.5	63	02/74 – 12/77	3444	
SCIROCCO (53)	1.6	51	08/75 – 07/77	3444	
SCIROCCO (53)	1.6	55	08/75 – 07/79	3444	
SCIROCCO (53)	1.6	63	08/75 – 07/80	3444	
SCIROCCO (53)	1.6	81	06/76 – 07/80	3444	
SCIROCCO (53B)	13	44	08/80 – 12/83	3585	
SCIROCCO (53B)	15	51	08/80 – 12/83	3585	
SCIROCCO (53B)	16	51	08/83 – 07/84		3529
SCIROCCO (53B)	16	51	08/83 – 07/84	3531	
SCIROCCO (53B)	16	53	04/86 – 07/90	3585	
SCIROCCO (53B)	16	55	01/83 – 12/89	3585	
SCIROCCO (53B)	16	63	08/80 – 04/84	3585	
SCIROCCO (53B)	16	81	08/80 – 07/82	3486	
SCIROCCO (53B)	18	66	08/83 – 07/92	3486	
SCIROCCO (53B)	18	70	11/85 – 07/92	3486	
SCIROCCO (53B)	18	82	08/82 – 12/89	3486	
SCIROCCO (53B)	1.3	44	08/80 – 12/83	3444	
SCIROCCO (53B)	1.5	51	08/80 – 12/83	3444	
SCIROCCO (53B)	1.6	53	04/86 – 07/90	3444	
SCIROCCO (53B)	1.6	55	01/83 – 12/89	3444	
SCIROCCO (53B)	1.6	63	08/80 – 04/84	3444	
SCIROCCO (53B)	1.8 16V	95	03/86 – 07/92		3529
SCIROCCO (53B)	1.8 16V	95	03/86 – 07/92	3531	
SCIROCCO (53B)	1.8 16V	102	10/85 – 07/89		3529
SCIROCCO (53B)	1.8 16V	102	10/85 – 07/89	3531	
SHARAN (7M8, 7M9, 7M6)	20	85	09/95 – 03/10	3506	
SHARAN (7M8, 7M9, 7M6)	20	85	09/95 – 03/10		3529/1
SHARAN (7M8, 7M9, 7M6)	1.8 T 20V	110	09/97 – 03/10	3506	
SHARAN (7M8, 7M9, 7M6)	1.8 T 20V	110	09/97 – 03/10		3529/1
SHARAN (7M8, 7M9, 7M6)	1.8 T 20V	110	09/97 – 03/10	4095	
SHARAN (7M8, 7M9, 7M6)	1.9 TDI	66	09/95 – 03/10	3506	
SHARAN (7M8, 7M9, 7M6)	1.9 TDI	66	09/95 – 03/10		3529/1
SHARAN (7M8, 7M9, 7M6)	1.9 TDI	81	09/96 – 04/00	3506	
SHARAN (7M8, 7M9, 7M6)	1.9 TDI	81	09/96 – 04/00		3529/1
SHARAN (7M8, 7M9, 7M6)	1.9 TDI	96	11/02 – 03/10	4095	
SHARAN (7M8, 7M9, 7M6)	1.9 TDI	110	06/05 – 03/10	4095	
SHARAN (7M8, 7M9, 7M6)	1.9 TDI 4motion	85	04/00 – 03/10	3506	
SHARAN (7M8, 7M9, 7M6)	1.9 TDI 4motion	85	04/00 – 03/10		3529/1
SHARAN (7M8, 7M9, 7M6)	1.9 TDI 4motion	85	04/00 – 03/10	4095	
SHARAN (7M8, 7M9, 7M6)	2.0 16V	110	09/95 – 02/00	3506	
SHARAN (7M8, 7M9, 7M6)	2.0 16V	110	09/95 – 02/00		3529/1
SHARAN (7M8, 7M9, 7M6)	2.0 LPG	85	04/06 – 03/10	4095	
SHARAN (7M8, 7M9, 7M6)	2.0 TDI	100	11/05 – 03/10	4095	
SHARAN (7M8, 7M9, 7M6)	2.0 TDI	103	11/05 – 03/10	4095	
SHARAN (7M8, 7M9, 7M6)	2.8 V6 24V	150	04/00 – 03/10	4095	
SHARAN (7M8, 7M9, 7M6)	2.8 V6 24V 4motion	150	04/00 – 03/10	4095	
SHARAN (7M8, 7M9, 7M6)	2.8 VR6	128	09/95 – 04/00	3506	
SHARAN (7M8, 7M9, 7M6)	2.8 VR6	128	09/95 – 04/00		3529/1
SHARAN (7M8, 7M9, 7M6)	2.8 VR6 Syncro	128	11/96 – 04/00	3506	
SHARAN (7M8, 7M9, 7M6)	2.8 VR6 Syncro	128	11/96 – 04/00		3529/1
SHARAN (7N1, 7N2)	1.8 TSI	118	11/11 -		3905
TARO	18	61	04/89 – 09/94	3414	
TARO	22	69	06/89 – 07/94	3414	
TARO	2.2 4x4	69	06/89 – 07/94	3414	
TARO	2.4 D	58	07/94 – 03/97	3414	
TARO	2.4 D	59	09/91 – 07/94	3414	
TARO	2.4 D	61	06/89 – 3/97	3414	
TARO	2.4 D 4x4	58	07/94 – 03/97	3560	
TARO	2.4 D 4x4	61	04/89 – 03/97	3560	
TARO	2.4 i 4x4	84	06/89 – 03/97	3560	
TIGUAN II (AD1)	1.4 TSI (CZCA)	92	01/16 -	4228	
TIGUAN II (AD1)	1.4 TSI (CZDA)	110	05/16 -	4228	
TIGUAN II (AD1)	1.4 TSI (CZDA)	110	05/16 -	4228	
TIGUAN II (AD1)	1.4 TSI (CZEA)	110	05/16 -	4228	

MAKE & MODEL		KW	YEAR		
VOLKSWAGEN					
TIGUAN II (AD1)	1.4 TSI (CZEA)	110	05/16 -	4228	
TIGUAN II (AD1)	1.6 TDI (DGDB)	85	05/16 -	4228	
TIGUAN II (AD1)	2.0 TDI (DFGC)	85	05/16 -	4228	
TIGUAN II (AD1)	2.0 TDI (CUAA)	176	05/16 -	4228	
TIGUAN II (AD1)	2.0 TDI (DFGA)	110	01/16 -	4228	
TIGUAN II (AD1)	2.0 TDI (DFGA)	110	01/16 -	4228	
TIGUAN II (AD1)	2.0 TDI (DFHA)	140	04/16 -	4228	
TIGUAN II (AD1)	2.0 TSI (CHHB)	162	06/16 -	4228	
TIGUAN II (AD1)	2.0 TSI (CZPA)	132	01/16 -	4228	
TOUAREG (7LA, 7L6, 7L7)	2.5 R5 TDI	120	08/03 – 05/10	3945	
TOUAREG (7LA, 7L6, 7L7)	2.5 R5 TDI	120	08/03 – 05/10	4075	
TOUAREG (7LA, 7L6, 7L7)	2.5 R5 TDI	128	01/03 – 05/10	3945	
TOUAREG (7LA, 7L6, 7L7)	2.5 R5 TDI	128	01/03 – 05/10	4075	
TOUAREG (7LA, 7L6, 7L7)	3.0 TDI	155	04/06 – 05/10	3945	
TOUAREG (7LA, 7L6, 7L7)	3.0 TDI	155	04/06 – 05/10		4076
TOUAREG (7LA, 7L6, 7L7)	3.0 V6 TDI	165	11/04 – 05/10	3945	
TOUAREG (7LA, 7L6, 7L7)	3.0 V6 TDI	165	11/04 – 05/10	4075	
TOUAREG (7LA, 7L6, 7L7)	3.0 V6 TDI	165	11/04 – 05/10		4076
TOUAREG (7LA, 7L6, 7L7)	3.0 V6 TDI	176	11/07 – 05/10	3945	
TOUAREG (7LA, 7L6, 7L7)	3.0 V6 TDI	176	11/07 – 05/10	4075	
TOUAREG (7LA, 7L6, 7L7)	3.0 V6 TDI	176	11/07 – 05/10		4076
TOUAREG (7LA, 7L6, 7L7)	3.2 V6	162	10/02 – 11/06	3945	
TOUAREG (7LA, 7L6, 7L7)	3.2 V6	162	10/02 – 11/06	4075	
TOUAREG (7LA, 7L6, 7L7)	3.2 V6	162	10/02 – 11/06		4076
TOUAREG (7LA, 7L6, 7L7)	3.2 V6	177	11/04 – 11/06	4075	
TOUAREG (7LA, 7L6, 7L7)	3.2 V6	177	11/04 – 11/06		4076
TOUAREG (7LA, 7L6, 7L7)	3.6 V6 FSI	206	10/05 – 05/10	3945	
TOUAREG (7LA, 7L6, 7L7)	3.6 V6 FSI	206	10/05 – 05/10		4076
TOUAREG (7LA, 7L6, 7L7)	4.2 V8	228	12/02 – 11/06	3945	
TOUAREG (7LA, 7L6, 7L7)	4.2 V8	228	12/02 – 11/06	4075	
TOUAREG (7LA, 7L6, 7L7)	4.2 V8	228	12/02 – 11/06		4076
TOUAREG (7LA, 7L6, 7L7)	4.2 V8 FSI	257	06/06 – 05/10	4075	
TOUAREG (7LA, 7L6, 7L7)	4.2 V8 FSI	257	06/06 – 05/10		4076
TOUAREG (7LA, 7L6, 7L7)	5.0 R50 TDI	257	08/07 – 05/10	4075	
TOUAREG (7LA, 7L6, 7L7)	5.0 R50 TDI	257	08/07 – 05/10		4076
TOUAREG (7LA, 7L6, 7L7)	5.0 V10 TDI	230	10/02 – 05/10	4075	
TOUAREG (7LA, 7L6, 7L7)	5.0 V10 TDI	230	10/02 – 05/10		4076
TOUAREG (7LA, 7L6, 7L7)	6.0 W12	331	08/04 – 05/10	4075	
TOUAREG (7LA, 7L6, 7L7)	6.0 W12	331	08/04 – 05/10		4076
TOUAREG (7P5)	3.0 V6 TDI	150	01/10 -	3945	
TOUAREG (7P5)	3.0 V6 TDI	165	06/10 -	3945	
TOUAREG (7P5)	3.0 V6 TDI	176	01/10 -	3945	
TOUAREG (7P5)	3.0 V6 TDI	180	05/11 -	3945	
TOUAREG (7P5)	3.0 V6 TDI	193	09/14 -	3945	
TOUAREG (7P5)	3.0 V6 TSI	213	08/10 -	3945	
TOUAREG (7P5)	3.0 V6 TSI Hybrid	245	04/10 -	3945	
TOUAREG (7P5)	3.6 V6 FSI	183	08/10 -	3945	
TOUAREG (7P5)	3.6 V6 FSI	206	04/10 -	3945	
TOUAREG (7P5)	4.2 V8 FSI	265	01/11 -	3945	
TOUAREG (7P5)	4.2 V8 TDI	250	01/10 -	3945	
TOURAN III (5T1)	1.2 TSI (CYVB)	81	05/16 -	4228	
TOURAN III (5T1)	1.2 TSI (CYVB)	81	05/15 -		4241
TOURAN III (5T1)	1.4 TSI (CZDA)	110	05/16 -	4228	
TOURAN III (5T1)	1.4 TSI (CZDA)	110	05/15 -		4241
TOURAN III (5T1)	1.6 TDI (CRKB)	81	05/15 – 05/16	4228	
TOURAN III (5T1)	1.6 TDI (DGDA)	85	05/16 -	4228	
TOURAN III (5T1)	1.6 TDI (CRKB)	81	05/15 – 05/16		4241
TOURAN III (5T1)	1.6 TDI (DGDA)	85	05/16 -		4241
TOURAN III (5T1)	1.8 TSI (CJSA)	132	11/15 -	4228	
TOURAN III (5T1)	1.8 TSI (CJSA)	132	11/15 -		4241
TOURAN III (5T1)	2.0 TDI (CRVA)	81	11/15 -	4228	
TOURAN III (5T1)	2.0 TDI (CRVA)	81	11/15 -		4241
TOURAN III (5T1)	2.0 TDI (CYKB)	81	11/15 -	4228	
TOURAN III (5T1)	2.0 TDI (CYKB)	81	11/15 -		4241
TOURAN III (5T1)	2.0 TDI (DFEA)	110	05/15 -	4228	
TOURAN III (5T1)	2.0 TDI (DFEA)	110	05/15 -		4241
TOURAN III (5T1)	2.0 TDI (DFEB)	81	11/15 -	4228	
TOURAN III (5T1)	2.0 TDI (DFEB)	81	11/15 -		4241
TOURAN III (5T1)	2.0 TDI (DFGA)	110	05/15 -	4228	
TOURAN III (5T1)	2.0 TDI (DFGA)	110	05/15 -		4241
TOURAN III (5T1)	2.0 TDI (DFGB)	81	11/15 -	4228	

MAKE & MODEL		KW	YEAR		
VOLKSWAGEN					
TOURAN III (5T1)	2.0 TDI (DFGB)	81	11/15 -		4241
TOURAN III (5T1)	2.0 TDI (DFHA)	140	11/15 -	4228	
TOURAN III (5T1)	2.0 TDI (DFHA)	140	11/15 -		4241
TOURAN (1T1, 1T2)	16	75	07/03 – 05/10	3904	
TOURAN (1T1, 1T2)	16	75	07/03 – 05/10		3905
TOURAN (1T1, 1T2)	16	75	07/03 – 05/10		4135
TOURAN (1T1, 1T2)	1.4 FSI	125	11/06 – 05/10	3904	
TOURAN (1T1, 1T2)	1.4 FSI	125	11/06 – 05/10		3905
TOURAN (1T1, 1T2)	1.4 TSI	103	02/06 – 05/10	3904	
TOURAN (1T1, 1T2)	1.4 TSI	103	02/06 – 05/10		3905
TOURAN (1T1, 1T2)	1.4 TSI	103	02/06 – 05/10		4135
TOURAN (1T1, 1T2)	1.4 TSI EcoFuel	110	05/09 – 05/10	3904	
TOURAN (1T1, 1T2)	1.4 TSI EcoFuel	110	05/09 – 05/10		3905
TOURAN (1T1, 1T2)	1.4 TSI EcoFuel	110	05/09 – 05/10		4135
TOURAN (1T1, 1T2)	1.6 FSI	85	02/03 – 01/07	3904	
TOURAN (1T1, 1T2)	1.6 FSI	85	02/03 – 01/07		3905
TOURAN (1T1, 1T2)	1.9 TDI	66	11/04 – 05/10	3904	
TOURAN (1T1, 1T2)	1.9 TDI	66	11/04 – 05/10		3905
TOURAN (1T1, 1T2)	1.9 TDI	66	11/04 – 05/10		4135
TOURAN (1T1, 1T2)	1.9 TDI	74	02/03 – 05/04	3904	
TOURAN (1T1, 1T2)	1.9 TDI	74	02/03 – 05/04		3905
TOURAN (1T1, 1T2)	1.9 TDI	74	02/03 – 05/04		4135
TOURAN (1T1, 1T2)	1.9 TDI	77	08/03 – 05/10	3904	
TOURAN (1T1, 1T2)	1.9 TDI	77	08/03 – 05/10		3905
TOURAN (1T1, 1T2)	1.9 TDI	77	08/03 – 05/10		4135
TOURAN (1T1, 1T2)	2.0 EcoFuel	80	02/06 – 05/09	3904	
TOURAN (1T1, 1T2)	2.0 EcoFuel	80	02/06 – 05/09		3905
TOURAN (1T1, 1T2)	2.0 EcoFuel	80	02/06 – 05/09		4135
TOURAN (1T1, 1T2)	2.0 FSI	85	10/04 – 05/10	3904	
TOURAN (1T1, 1T2)	2.0 FSI	85	10/04 – 05/10		3905
TOURAN (1T1, 1T2)	2.0 FSI	85	10/04 – 05/10		4135
TOURAN (1T1, 1T2)	2.0 FSI	110	10/03 – 01/07	3904	
TOURAN (1T1, 1T2)	2.0 FSI	110	10/03 – 01/07		3905
TOURAN (1T1, 1T2)	2.0 FSI	110	10/03 – 01/07		4135
TOURAN (1T1, 1T2)	2.0 TDI	100	02/03 – 05/10	3904	
TOURAN (1T1, 1T2)	2.0 TDI	100	02/03 – 05/10		3905
TOURAN (1T1, 1T2)	2.0 TDI	100	02/03 – 05/10		4135
TOURAN (1T1, 1T2)	2.0 TDI	103	12/05 – 05/10	3904	
TOURAN (1T1, 1T2)	2.0 TDI	103	12/05 – 05/10		3905
TOURAN (1T1, 1T2)	2.0 TDI	103	12/05 – 05/10		4135
TOURAN (1T1, 1T2)	2.0 TDI	125	12/05 – 05/10	3904	
TOURAN (1T1, 1T2)	2.0 TDI	125	12/05 – 05/10		3905
TOURAN (1T1, 1T2)	2.0 TDI	125	12/05 – 05/10		4135
TOURAN (1T1, 1T2)	2.0 TDI 16V	103	08/03 – 05/10	3904	
TOURAN (1T1, 1T2)	2.0 TDI 16V	103	08/03 – 05/10		3905
TOURAN (1T1, 1T2)	2.0 TDI 16V	103	08/03 – 05/10		4135
TOURAN (1T3)	1.2 TSI	77	05/10 – 05/15	3904	
TOURAN (1T3)	1.2 TSI	77	05/10 – 05/15		4135
TOURAN (1T3)	1.4 TSI	103	05/10 – 05/15	3904	
TOURAN (1T3)	1.4 TSI	103	05/10 – 05/15		4135
TOURAN (1T3)	1.4 TSI	125	05/10 – 05/15	3904	
TOURAN (1T3)	1.4 TSI	125	05/10 – 05/15		4135
TOURAN (1T3)	1.4 TSI EcoFuel	110	05/10 – 05/15	3904	
TOURAN (1T3)	1.4 TSI EcoFuel	110	05/10 – 05/15		4135
TOURAN (1T3)	1.6 TDI	66	05/10 – 05/15	3904	
TOURAN (1T3)	1.6 TDI	66	05/10 – 05/15		4135
TOURAN (1T3)	1.6 TDI	77	05/10 – 05/15	3904	
TOURAN (1T3)	1.6 TDI	77	05/10 – 05/15		4135
TOURAN (1T3)	2.0 TDI	81	11/10 – 05/15	3904	
TOURAN (1T3)	2.0 TDI	81	11/10 – 05/15		4135
TOURAN (1T3)	2.0 TDI	103	05/10 – 05/15	3904	
TOURAN (1T3)	2.0 TDI	103	05/10 – 05/15		4135
TOURAN (1T3)	2.0 TDI	125	05/10 – 01/13	3904	
TOURAN (1T3)	2.0 TDI	125	05/10 – 01/13		4135
TOURAN (1T3)	2.0 TDI	130	01/13 – 05/15	3904	
TOURAN (1T3)	2.0 TDI	130	01/13 – 05/15		4135
TRANSPORTER T4	1.8 (PD)	49	12/90 – 07/92		3671
TRANSPORTER T4	2.0 (AAC)	62	07/90 – 04/03		3671
TRANSPORTER T4	2.5 (AAF)	81	11/90 – 04/03		3671
TRANSPORTER T4	2.5 (AAF)	81	10/92 – 04/03		3671
TRANSPORTER T4	2.5 (ACU)	81	11/90 – 04/03		3671

BESER

MAKE & MODEL		KW	YEAR		
VOLKSWAGEN					
TRANSPORTER T4	2.5 (ACU)	81	10/92 – 04/03		3671
TRANSPORTER T4	2.5 (AEN)	81	11/90 – 04/03		3671
TRANSPORTER T4	2.5 (AEN)	81	10/92 – 04/03		3671
TRANSPORTER T4	2.5 (AET)	85	08/96 – 04/03		3671
TRANSPORTER T4	2.5 (AET)	85	08/96 – 04/03		3671
TRANSPORTER T4	2.5 (AEU)	81	11/90 – 04/03		3671
TRANSPORTER T4	2.5 (AEU)	81	10/92 – 04/03		3671
TRANSPORTER T4	2.5 (APL)	85	08/96 – 04/03		3671
TRANSPORTER T4	2.5 (AVT)	85	08/96 – 04/03		3671
TRANSPORTER II Box	16	37	08/70 – 04/79	3350	
TRANSPORTER II Box	17	49	08/71 – 12/73	3350	
TRANSPORTER II Box	18	50	11/73 – 07/75	3350	
TRANSPORTER II Box	20	51	08/75 – 07/79	3350	
TRANSPORTER II Bus	16	34	08/67 – 07/70	3350	
TRANSPORTER II Bus	16	37	08/70 – 04/79	3350	
TRANSPORTER II Bus	17	49	08/71 – 10/73	3350	
TRANSPORTER II Bus	18	50	11/73 – 07/75	3350	
TRANSPORTER II Bus	20	51	08/75 – 04/79	3350	
TRANSPORTER II Platform/Chassis	16	37	08/68 – 07/79	3350	
TRANSPORTER III Box	16	37	05/79 – 12/82	3350	
TRANSPORTER III Box	19	44	10/82 – 07/92	3350	
TRANSPORTER III Box	19	57	10/82 – 07/92	3350	
TRANSPORTER III Box	19	61	10/84 - 02/89	3350	
TRANSPORTER III Box	19	66	08/83 – 02/89	3350	
TRANSPORTER III Box	20	51	05/79 – 04/86	3350	
TRANSPORTER III Box	21	70	08/85 – 07/92	3350	
TRANSPORTER III Box	21	82	03/86 – 07/92	3350	
TRANSPORTER III Box	1.6 D	37	01/81 – 07/87	3350	
TRANSPORTER III Box	1.6 TD	51	10/84 – 07/92	3350	
TRANSPORTER III Box	1.6 TD Syncro	51	03/86 – 07/92	3350	
TRANSPORTER III Box	1.9 Syncro	57	11/84 – 07/92	3350	
TRANSPORTER III Box	2.1 Syncro	70	08/85 – 07/92	3350	
TRANSPORTER III Box	2.1 Syncro	82	03/86 – 07/92	3350	
TRANSPORTER III Bus	16	37	05/79 – 12/82	3350	
TRANSPORTER III Bus	19	44	08/82 – 07/92	3350	
TRANSPORTER III Bus	19	57	08/82 – 07/92	3350	
TRANSPORTER III Bus	19	61	01/83 – 07/85	3350	
TRANSPORTER III Bus	19	66	08/83 – 07/85	3350	
TRANSPORTER III Bus	20	51	05/79 – 12/82	3350	
TRANSPORTER III Bus	21	70	08/85 – 07/92	3350	
TRANSPORTER III Bus	21	82	08/84 – 07/92	3350	
TRANSPORTER III Bus	1.6 D	37	01/81 – 07/87	3350	
TRANSPORTER III Bus	1.6 TD	51	08/84 – 07/92	3350	
TRANSPORTER III Bus	1.6 TD Syncro	51	03/86 – 07/92	3350	
TRANSPORTER III Bus	1.9 Syncro	57	02/85 – 07/92	3350	
TRANSPORTER III Bus	2.1 Syncro	70	08/85 – 07/92	3350	
TRANSPORTER III Bus	2.1 Syncro	82	01/86 – 07/92	3350	
TRANSPORTER III Platform/Chassis	19	44	09/82 – 07/92	3350	
TRANSPORTER III Platform/Chassis	19	57	08/82 – 07/92	3350	
TRANSPORTER III Platform/Chassis	19	61	10/84 – 02/89	3350	
TRANSPORTER III Platform/Chassis	20	51	05/79 – 04/86	3350	
TRANSPORTER III Platform/Chassis	21	70	08/85 – 07/92	3350	
TRANSPORTER III Platform/Chassis	21	82	03/86 – 07/92	3350	
TRANSPORTER III Platform/Chassis	1.6 D	37	01/81 – 07/87	3350	
TRANSPORTER III Platform/Chassis	1.6 TD	51	08/85 – 07/87	3350	
TRANSPORTER III Platform/Chassis	1.6 TD	51	10/84 – 07/92	3350	
TRANSPORTER III Platform/Chassis	1.6 TD Syncro	51	03/86 – 07/92	3350	
TRANSPORTER III Platform/Chassis	1.9 Syncro	57	12/84 – 07/92	3350	
TRANSPORTER III Platform/Chassis	2.1 Syncro	70	08/85 – 07/92	3350	
TRANSPORTER III Platform/Chassis	2.1 Syncro	82	03/86 – 07/92	3350	
TRANSPORTER IV Box (70XA)	20	62	07/90 – 04/03	3553	
TRANSPORTER IV Box (70XA)	20	62	07/90 – 04/03	3553/1	
TRANSPORTER IV Box (70XA)	20	62	07/90 – 04/03	3606	
TRANSPORTER IV Box (70XA)	20	62	07/90 – 04/03	3794	
TRANSPORTER IV Box (70XA)	20	62	07/90 – 04/03	4020	
TRANSPORTER IV Box (70XA)	20	62	07/90 – 04/03	4095	
TRANSPORTER IV Box (70XA)	25	81	11/90 – 04/03	3553	
TRANSPORTER IV Box (70XA)	25	81	11/90 – 04/03	3553/1	
TRANSPORTER IV Box (70XA)	25	81	11/90 – 04/03	3606	
TRANSPORTER IV Box (70XA)	25	81	11/90 – 04/03	3794	
TRANSPORTER IV Box (70XA)	25	81	11/90 – 04/03	4020	

MAKE & MODEL		KW	YEAR		
VOLKSWAGEN					
TRANSPORTER IV Box (70XA)	25	81	11/90 – 04/03	4095	
TRANSPORTER IV Box (70XA)	25	85	08/96 – 04/03	3553	
TRANSPORTER IV Box (70XA)	25	85	08/96 – 04/03	3553/1	
TRANSPORTER IV Box (70XA)	25	85	08/96 – 04/03	3606	
TRANSPORTER IV Box (70XA)	25	85	08/96 - 04/03	3794	
TRANSPORTER IV Box (70XA)	25	85	08/96 – 04/03	4020	
TRANSPORTER IV Box (70XA)	25	85	08/96 – 04/03	4095	
TRANSPORTER IV Box (70XA)	1.9 D	44	09/90 – 12/95	3553	
TRANSPORTER IV Box (70XA)	1.9 D	44	09/90 – 12/95	3553/1	
TRANSPORTER IV Box (70XA)	1.9 D	44	09/90 – 12/95	3606	
TRANSPORTER IV Box (70XA)	1.9 D	44	09/90 – 12/95	3794	
TRANSPORTER IV Box (70XA)	1.9 D	44	09/90 – 12/95	4020	
TRANSPORTER IV Box (70XA)	1.9 D	45	07/90 – 12/95	3553	
TRANSPORTER IV Box (70XA)	1.9 D	45	07/90 – 12/95	3553/1	
TRANSPORTER IV Box (70XA)	1.9 D	45	07/90 – 12/95	3606	
TRANSPORTER IV Box (70XA)	1.9 D	45	07/90 – 12/95	3794	
TRANSPORTER IV Box (70XA)	1.9 D	45	07/90 – 12/95	4020	
TRANSPORTER IV Box (70XA)	1.9 TD	50	10/92 – 04/03	3553	
TRANSPORTER IV Box (70XA)	1.9 TD	50	10/92 – 04/03	3553/1	
TRANSPORTER IV Box (70XA)	1.9 TD	50	10/92 – 04/03	3606	
TRANSPORTER IV Box (70XA)	1.9 TD	50	10/92 – 04/03	3794	
TRANSPORTER IV Box (70XA)	1.9 TD	50	10/92 – 04/03	4020	
TRANSPORTER IV Box (70XA)	1.9 TD	50	10/92 – 04/03	4095	
TRANSPORTER IV Box (70XA)	2.4 D	55	08/97 – 04/03	3553	
TRANSPORTER IV Box (70XA)	2.4 D	55	08/97 – 04/03	3553/1	
TRANSPORTER IV Box (70XA)	2.4 D	55	08/97 – 04/03	3606	
TRANSPORTER IV Box (70XA)	2.4 D	55	08/97 – 04/03	3794	
TRANSPORTER IV Box (70XA)	2.4 D	55	08/97 – 04/03	4020	
TRANSPORTER IV Box (70XA)	2.4 D	55	08/97 – 04/03	4095	
TRANSPORTER IV Box (70XA)	2.4 D	57	07/90 – 04/98	3553	
TRANSPORTER IV Box (70XA)	2.4 D	57	07/90 – 04/98	3553/1	
TRANSPORTER IV Box (70XA)	2.4 D	57	07/90 – 04/98	3606	
TRANSPORTER IV Box (70XA)	2.4 D	57	07/90 – 04/98	3794	
TRANSPORTER IV Box (70XA)	2.4 D	57	07/90 – 04/98	4020	
TRANSPORTER IV Box (70XA)	2.4 D	57	07/90 – 04/98	4095	
TRANSPORTER IV Box (70XA)	2.4 D Syncro	57	10/92 – 09/98	3553	
TRANSPORTER IV Box (70XA)	2.4 D Syncro	57	10/92 – 09/98	3553/1	
TRANSPORTER IV Box (70XA)	2.4 D Syncro	57	10/92 – 09/98	3606	
TRANSPORTER IV Box (70XA)	2.4 D Syncro	57	10/92 – 09/98	3794	
TRANSPORTER IV Box (70XA)	2.4 D Syncro	57	10/92 – 09/98	4020	
TRANSPORTER IV Box (70XA)	2.4 D Syncro	57	10/92 – 09/98	4095	
TRANSPORTER IV Box (70XA)	2.5 Syncro	81	10/92 – 04/03	3553	
TRANSPORTER IV Box (70XA)	2.5 Syncro	81	10/92 – 04/03	3553/1	
TRANSPORTER IV Box (70XA)	2.5 Syncro	81	10/92 – 04/03	3606	
TRANSPORTER IV Box (70XA)	2.5 Syncro	81	10/92 – 04/03	3794	
TRANSPORTER IV Box (70XA)	2.5 Syncro	81	10/92 – 04/03	4020	
TRANSPORTER IV Box (70XA)	2.5 Syncro	81	10/92 – 04/03	4095	
TRANSPORTER IV Box (70XA)	2.5 Syncro	85	08/96 – 04/03	3553	
TRANSPORTER IV Box (70XA)	2.5 Syncro	85	08/96 – 04/03	3553/1	
TRANSPORTER IV Box (70XA)	2.5 Syncro	85	08/96 – 04/03	3606	
TRANSPORTER IV Box (70XA)	2.5 Syncro	85	08/96 – 04/03	3794	
TRANSPORTER IV Box (70XA)	2.5 Syncro	85	08/96 – 04/03	4020	
TRANSPORTER IV Box (70XA)	2.5 Syncro	85	08/96 – 04/03	4095	
TRANSPORTER IV Box (70XA)	2.5 TDI	65	12/98 – 04/03	3553	
TRANSPORTER IV Box (70XA)	2.5 TDI	65	12/98 – 04/03	3553/1	
TRANSPORTER IV Box (70XA)	2.5 TDI	65	12/98 – 04/03	3606	
TRANSPORTER IV Box (70XA)	2.5 TDI	65	12/98 – 04/03	3794	
TRANSPORTER IV Box (70XA)	2.5 TDI	65	12/98 – 04/03	4020	
TRANSPORTER IV Box (70XA)	2.5 TDI	65	12/98 – 04/03	4095	
TRANSPORTER IV Box (70XA)	2.5 TDI	75	09/95 – 04/03	3553	
TRANSPORTER IV Box (70XA)	2.5 TDI	75	09/95 – 04/03	3553/1	
TRANSPORTER IV Box (70XA)	2.5 TDI	75	09/95 – 04/03	3606	
TRANSPORTER IV Box (70XA)	2.5 TDI	75	09/95 – 04/03	3794	
TRANSPORTER IV Box (70XA)	2.5 TDI	75	09/95 – 04/03	4020	
TRANSPORTER IV Box (70XA)	2.5 TDI	75	09/95 – 04/03	4095	
TRANSPORTER IV Box (70XA)	2.5 TDI	111	09/00 – 04/03	3553	
TRANSPORTER IV Box (70XA)	2.5 TDI	111	09/00 – 04/03	3553/1	
TRANSPORTER IV Box (70XA)	2.5 TDI	111	09/00 – 04/03	3606	
TRANSPORTER IV Box (70XA)	2.5 TDI	111	09/00 – 04/03	3794	
TRANSPORTER IV Box (70XA)	2.5 TDI	111	09/00 – 04/03	4020	
TRANSPORTER IV Box (70XA)	2.5 TDI	111	09/00 – 04/03	4095	

MAKE & MODEL		KW	YEAR	
VOLKSWAGEN				
TRANSPORTER IV Box (70XA)	2.5 TDI Syncro	75	09/95 – 04/03	3553
TRANSPORTER IV Box (70XA)	2.5 TDI Syncro	75	09/95 – 04/03	3553/1
TRANSPORTER IV Box (70XA)	2.5 TDI Syncro	75	09/95 – 04/03	3606
TRANSPORTER IV Box (70XA)	2.5 TDI Syncro	75	09/95 – 04/03	3794
TRANSPORTER IV Box (70XA)	2.5 TDI Syncro	75	09/95 – 04/03	4020
TRANSPORTER IV Box (70XA)	2.5 TDI Syncro	75	09/95 – 04/03	4095
TRANSPORTER IV Box (70XA)	2.8 VR6	103	05/96 – 05/00	3553
TRANSPORTER IV Box (70XA)	2.8 VR6	103	05/96 – 05/00	3553/1
TRANSPORTER IV Box (70XA)	2.8 VR6	103	05/96 – 05/00	3606
TRANSPORTER IV Box (70XA)	2.8 VR6	103	05/96 – 05/00	3794
TRANSPORTER IV Box (70XA)	2.8 VR6	103	05/96 – 05/00	4020
TRANSPORTER IV Box (70XA)	2.8 VR6	103	05/96 – 05/00	4095
TRANSPORTER IV Box (70XA)	2.8 VR6	150	06/00 – 04/03	4095
TRANSPORTER IV Bus (70XB, 70XC, 7DB, 7DW, 7DK)	18	49	12/90 – 07/92	3553
TRANSPORTER IV Bus (70XB, 70XC, 7DB, 7DW, 7DK)	18	49	12/90 – 07/92	3553/1
TRANSPORTER IV Bus (70XB, 70XC, 7DB, 7DW, 7DK)	18	49	12/90 – 07/92	3606
TRANSPORTER IV Bus (70XB, 70XC, 7DB, 7DW, 7DK)	18	49	12/90 – 07/92	3794
TRANSPORTER IV Bus (70XB, 70XC, 7DB, 7DW, 7DK)	18	49	12/90 – 07/92	4020
TRANSPORTER IV Bus (70XB, 70XC, 7DB, 7DW, 7DK)	20	62	09/90 – 04/03	3553
TRANSPORTER IV Bus (70XB, 70XC, 7DB, 7DW, 7DK)	20	62	09/90 – 04/03	3553/1
TRANSPORTER IV Bus (70XB, 70XC, 7DB, 7DW, 7DK)	20	62	09/90 – 04/03	3606
TRANSPORTER IV Bus (70XB, 70XC, 7DB, 7DW, 7DK)	20	62	09/90 – 04/03	3794
TRANSPORTER IV Bus (70XB, 70XC, 7DB, 7DW, 7DK)	20	62	09/90 – 04/03	4020
TRANSPORTER IV Bus (70XB, 70XC, 7DB, 7DW, 7DK)	20	62	09/90 – 04/03	4095
TRANSPORTER IV Bus (70XB, 70XC, 7DB, 7DW, 7DK)	25	81	11/90 – 04/03	3553
TRANSPORTER IV Bus (70XB, 70XC, 7DB, 7DW, 7DK)	25	81	11/90 – 04/03	3553/1
TRANSPORTER IV Bus (70XB, 70XC, 7DB, 7DW, 7DK)	25	81	11/90 – 04/03	3606
TRANSPORTER IV Bus (70XB, 70XC, 7DB, 7DW, 7DK)	25	81	11/90 – 04/03	3794
TRANSPORTER IV Bus (70XB, 70XC, 7DB, 7DW, 7DK)	25	81	11/90 – 04/03	4020
TRANSPORTER IV Bus (70XB, 70XC, 7DB, 7DW, 7DK)	25	81	11/90 – 04/03	4095
TRANSPORTER IV Bus (70XB, 70XC, 7DB, 7DW, 7DK)	25	85	08/96 – 04/03	3553
TRANSPORTER IV Bus (70XB, 70XC, 7DB, 7DW, 7DK)	25	85	08/96 – 04/03	3553/1
TRANSPORTER IV Bus (70XB, 70XC, 7DB, 7DW, 7DK)	25	85	08/96 – 04/03	3606
TRANSPORTER IV Bus (70XB, 70XC, 7DB, 7DW, 7DK)	25	85	08/96 – 04/03	3794
TRANSPORTER IV Bus (70XB, 70XC, 7DB, 7DW, 7DK)	25	85	08/96 – 04/03	4020
TRANSPORTER IV Bus (70XB, 70XC, 7DB, 7DW, 7DK)	25	85	08/96 – 04/03	4095
TRANSPORTER IV Bus (70XB, 70XC, 7DB, 7DW, 7DK)	1.9 D	44	09/90 – 12/95	3553
TRANSPORTER IV Bus (70XB, 70XC, 7DB, 7DW, 7DK)	1.9 D	44	09/90 – 12/95	3553/1
TRANSPORTER IV Bus (70XB, 70XC, 7DB, 7DW, 7DK)	1.9 D	44	09/90 – 12/95	3606
TRANSPORTER IV Bus (70XB, 70XC, 7DB, 7DW, 7DK)	1.9 D	44	09/90 – 12/95	3794
TRANSPORTER IV Bus (70XB, 70XC, 7DB, 7DW, 7DK)	1.9 D	44	09/90 – 12/95	4020
TRANSPORTER IV Bus (70XB, 70XC, 7DB, 7DW, 7DK)	1.9 D	45	09/90 – 12/95	3553
TRANSPORTER IV Bus (70XB, 70XC, 7DB, 7DW, 7DK)	1.9 D	45	09/90 – 12/95	3553/1
TRANSPORTER IV Bus (70XB, 70XC, 7DB, 7DW, 7DK)	1.9 D	45	09/90 – 12/95	3606
TRANSPORTER IV Bus (70XB, 70XC, 7DB, 7DW, 7DK)	1.9 D	45	09/90 – 12/95	3794
TRANSPORTER IV Bus (70XB, 70XC, 7DB, 7DW, 7DK)	1.9 D	45	09/90 – 12/95	4020
TRANSPORTER IV Bus (70XB, 70XC, 7DB, 7DW, 7DK)	1.9 TD	50	10/92 – 04/03	3553
TRANSPORTER IV Bus (70XB, 70XC, 7DB, 7DW, 7DK)	1.9 TD	50	10/92 – 04/03	3553/1
TRANSPORTER IV Bus (70XB, 70XC, 7DB, 7DW, 7DK)	1.9 TD	50	10/92 – 04/03	3606
TRANSPORTER IV Bus (70XB, 70XC, 7DB, 7DW, 7DK)	1.9 TD	50	10/92 – 04/03	3794
TRANSPORTER IV Bus (70XB, 70XC, 7DB, 7DW, 7DK)	1.9 TD	50	10/92 – 04/03	4020
TRANSPORTER IV Bus (70XB, 70XC, 7DB, 7DW, 7DK)	1.9 TD	50	10/92 – 04/03	4095
TRANSPORTER IV Bus (70XB, 70XC, 7DB, 7DW, 7DK)	2.4 D	55	08/97 – 04/03	3553
TRANSPORTER IV Bus (70XB, 70XC, 7DB, 7DW, 7DK)	2.4 D	55	08/97 – 04/03	3553/1
TRANSPORTER IV Bus (70XB, 70XC, 7DB, 7DW, 7DK)	2.4 D	55	08/97 – 04/03	3606
TRANSPORTER IV Bus (70XB, 70XC, 7DB, 7DW, 7DK)	2.4 D	55	08/97 – 04/03	3794
TRANSPORTER IV Bus (70XB, 70XC, 7DB, 7DW, 7DK)	2.4 D	55	08/97 – 04/03	4020
TRANSPORTER IV Bus (70XB, 70XC, 7DB, 7DW, 7DK)	2.4 D	55	08/97 – 04/03	4095
TRANSPORTER IV Bus (70XB, 70XC, 7DB, 7DW, 7DK)	2.4 D	57	09/90 – 04/98	3553
TRANSPORTER IV Bus (70XB, 70XC, 7DB, 7DW, 7DK)	2.4 D	57	09/90 – 04/98	3553/1
TRANSPORTER IV Bus (70XB, 70XC, 7DB, 7DW, 7DK)	2.4 D	57	09/90 – 04/98	3606
TRANSPORTER IV Bus (70XB, 70XC, 7DB, 7DW, 7DK)	2.4 D	57	09/90 – 04/98	3794
TRANSPORTER IV Bus (70XB, 70XC, 7DB, 7DW, 7DK)	2.4 D	57	09/90 – 04/98	4020
TRANSPORTER IV Bus (70XB, 70XC, 7DB, 7DW, 7DK)	2.4 D	57	09/90 – 04/98	4095
TRANSPORTER IV Bus (70XB, 70XC, 7DB, 7DW, 7DK)	2.4 D Syncro	57	10/92 – 09/98	3553
TRANSPORTER IV Bus (70XB, 70XC, 7DB, 7DW, 7DK)	2.4 D Syncro	57	10/92 – 09/98	3553/1
TRANSPORTER IV Bus (70XB, 70XC, 7DB, 7DW, 7DK)	2.4 D Syncro	57	10/92 – 09/98	3606
TRANSPORTER IV Bus (70XB, 70XC, 7DB, 7DW, 7DK)	2.4 D Syncro	57	10/92 – 09/98	3794
TRANSPORTER IV Bus (70XB, 70XC, 7DB, 7DW, 7DK)	2.4 D Syncro	57	10/92 – 09/98	4020
TRANSPORTER IV Bus (70XB, 70XC, 7DB, 7DW, 7DK)	2.4 D Syncro	57	10/92 – 09/98	4095
TRANSPORTER IV Bus (70XB, 70XC, 7DB, 7DW, 7DK)	2.5 Syncro	81	11/92 – 04/03	3553

MAKE & MODEL		KW	YEAR		
VOLKSWAGEN					
TRANSPORTER IV Bus (70XB, 70XC, 7DB, 7DW, 7DK)	2.5 Syncro	81	11/92 – 04/03	3553/1	
TRANSPORTER IV Bus (70XB, 70XC, 7DB, 7DW, 7DK)	2.5 Syncro	81	11/92 – 04/03	3606	
TRANSPORTER IV Bus (70XB, 70XC, 7DB, 7DW, 7DK)	2.5 Syncro	81	11/92 – 04/03	3794	
TRANSPORTER IV Bus (70XB, 70XC, 7DB, 7DW, 7DK)	2.5 Syncro	81	11/92 – 04/03	4020	
TRANSPORTER IV Bus (70XB, 70XC, 7DB, 7DW, 7DK)	2.5 Syncro	81	11/92 – 04/03	4095	
TRANSPORTER IV Bus (70XB, 70XC, 7DB, 7DW, 7DK)	2.5 Syncro	85	07/96 – 04/03	3553	
TRANSPORTER IV Bus (70XB, 70XC, 7DB, 7DW, 7DK)	2.5 Syncro	85	07/96 – 04/03	3553/1	
TRANSPORTER IV Bus (70XB, 70XC, 7DB, 7DW, 7DK)	2.5 Syncro	85	07/96 – 04/03	3606	
TRANSPORTER IV Bus (70XB, 70XC, 7DB, 7DW, 7DK)	2.5 Syncro	85	07/96 – 04/03	3794	
TRANSPORTER IV Bus (70XB, 70XC, 7DB, 7DW, 7DK)	2.5 Syncro	85	07/96 – 04/03	4020	
TRANSPORTER IV Bus (70XB, 70XC, 7DB, 7DW, 7DK)	2.5 Syncro	85	07/96 – 04/03	4095	
TRANSPORTER IV Bus (70XB, 70XC, 7DB, 7DW, 7DK)	2.5 TDI	65	05/98 – 04/03	3553	
TRANSPORTER IV Bus (70XB, 70XC, 7DB, 7DW, 7DK)	2.5 TDI	65	05/98 – 04/03	3553/1	
TRANSPORTER IV Bus (70XB, 70XC, 7DB, 7DW, 7DK)	2.5 TDI	65	05/98 – 04/03	3606	
TRANSPORTER IV Bus (70XB, 70XC, 7DB, 7DW, 7DK)	2.5 TDI	65	05/98 – 04/03	3794	
TRANSPORTER IV Bus (70XB, 70XC, 7DB, 7DW, 7DK)	2.5 TDI	65	05/98 – 04/03	4020	
TRANSPORTER IV Bus (70XB, 70XC, 7DB, 7DW, 7DK)	2.5 TDI	65	05/98 – 04/03	4095	
TRANSPORTER IV Bus (70XB, 70XC, 7DB, 7DW, 7DK)	2.5 TDI	75	09/95 – 04/03	3553	
TRANSPORTER IV Bus (70XB, 70XC, 7DB, 7DW, 7DK)	2.5 TDI	75	09/95 – 04/03	3553/1	
TRANSPORTER IV Bus (70XB, 70XC, 7DB, 7DW, 7DK)	2.5 TDI	75	09/95 – 04/03	3606	
TRANSPORTER IV Bus (70XB, 70XC, 7DB, 7DW, 7DK)	2.5 TDI	75	09/95 – 04/ 03	3794	
TRANSPORTER IV Bus (70XB, 70XC, 7DB, 7DW, 7DK)	2.5 TDI	75	09/95 – 04/03	4020	
TRANSPORTER IV Bus (70XB, 70XC, 7DB, 7DW, 7DK)	2.5 TDI	75	09/95 – 04/03	4095	
TRANSPORTER IV Bus (70XB, 70XC, 7DB, 7DW, 7DK)	2.5 TDI	111	05/98 – 04/03	3553	
TRANSPORTER IV Bus (70XB, 70XC, 7DB, 7DW, 7DK)	2.5 TDI	111	05/98 – 04/03	3553/1	
TRANSPORTER IV Bus (70XB, 70XC, 7DB, 7DW, 7DK)	2.5 TDI	111	05/98 – 04/03	3606	
TRANSPORTER IV Bus (70XB, 70XC, 7DB, 7DW, 7DK)	2.5 TDI	111	05/98 – 04/03	3794	
TRANSPORTER IV Bus (70XB, 70XC, 7DB, 7DW, 7DK)	2.5 TDI	111	05/98 – 04/03	4020	
TRANSPORTER IV Bus (70XB, 70XC, 7DB, 7DW, 7DK)	2.5 TDI	111	05/98 – 04/03	4095	
TRANSPORTER IV Bus (70XB, 70XC, 7DB, 7DW, 7DK)	2.5 TDI Syncro	75	01/96 – 04/03	3553	
TRANSPORTER IV Bus (70XB, 70XC, 7DB, 7DW, 7DK)	2.5 TDI Syncro	75	01/96 – 04/03	3553/1	
TRANSPORTER IV Bus (70XB, 70XC, 7DB, 7DW, 7DK)	2.5 TDI Syncro	75	01/96 – 04/03	3606	
TRANSPORTER IV Bus (70XB, 70XC, 7DB, 7DW, 7DK)	2.5 TDI Syncro	75	01/96 – 04/03	3794	
TRANSPORTER IV Bus (70XB, 70XC, 7DB, 7DW, 7DK)	2.5 TDI Syncro	75	01/96 – 04/03	4020	
TRANSPORTER IV Bus (70XB, 70XC, 7DB, 7DW, 7DK)	2.5 TDI Syncro	75	01/96 – 04/03	4095	
TRANSPORTER IV Bus (70XB, 70XC, 7DB, 7DW, 7DK)	2.8 VR 6	103	11/95 – 04/00	3553	
TRANSPORTER IV Bus (70XB, 70XC, 7DB, 7DW, 7DK)	2.8 VR 6	103	11/95 – 04/00	3553/1	
TRANSPORTER IV Bus (70XB, 70XC, 7DB, 7DW, 7DK)	2.8 VR 6	103	11/95 – 04/00	3606	
TRANSPORTER IV Bus (70XB, 70XC, 7DB, 7DW, 7DK)	2.8 VR 6	103	11/95 – 04/00	3794	
TRANSPORTER IV Bus (70XB, 70XC, 7DB, 7DW, 7DK)	2.8 VR 6	103	11/95 – 04/00	4020	
TRANSPORTER IV Bus (70XB, 70XC, 7DB, 7DW, 7DK)	2.8 VR 6	103	11/95 – 04/00	4095	
TRANSPORTER IV Bus (70XB, 70XC, 7DB, 7DW, 7DK)	2.8 VR6	150	04/00 – 04/03	4095	
TRANSPORTER IV Bus (70XB, 70XC, 7DB, 7DW, 7DK)	2.8 VR6 Syncro	103	01/96 – 04/96	3553	
TRANSPORTER IV Bus (70XB, 70XC, 7DB, 7DW, 7DK)	2.8 VR6 Syncro	103	01/96 – 04/96	3553/1	
TRANSPORTER IV Bus (70XB, 70XC, 7DB, 7DW, 7DK)	2.8 VR6 Syncro	103	01/96 – 04/96	3606	
TRANSPORTER IV Bus (70XB, 70XC, 7DB, 7DW, 7DK)	2.8 VR6 Syncro	103	01/96 – 04/96	3794	
TRANSPORTER IV Bus (70XB, 70XC, 7DB, 7DW, 7DK)	2.8 VR6 Syncro	103	01/96 – 04/96	4020	
TRANSPORTER IV Bus (70XB, 70XC, 7DB, 7DW, 7DK)	2.8 VR6 Syncro	103	01/96 – 04/96	4095	
TRANSPORTER IV Platform/Chassis (70XD)	18	49	12/90 – 07/92	3553	
TRANSPORTER IV Platform/Chassis (70XD)	18	49	12/90 – 07/92	3553/1	
TRANSPORTER IV Platform/Chassis (70XD)	18	49	12/90 – 07/92	3606	
TRANSPORTER IV Platform/Chassis (70XD)	18	49	12/90 – 07/92	3794	
TRANSPORTER IV Platform/Chassis (70XD)	18	49	12/90 – 07/92	4020	
TRANSPORTER IV Platform/Chassis (70XD)	20	62	07/90 – 04/03	3553	
TRANSPORTER IV Platform/Chassis (70XD)	20	62	07/90 – 04/03	3553/1	
TRANSPORTER IV Platform/Chassis (70XD)	20	62	07/90 – 04/03	3606	
TRANSPORTER IV Platform/Chassis (70XD)	20	62	07/90 – 04/03	3794	
TRANSPORTER IV Platform/Chassis (70XD)	20	62	07/90 – 04/03	4020	
TRANSPORTER IV Platform/Chassis (70XD)	20	62	07/90 – 04/03	4095	
TRANSPORTER IV Platform/Chassis (70XD)	25	81	11/90 – 04/03	3553	
TRANSPORTER IV Platform/Chassis (70XD)	25	81	11/90 – 04/03	3553/1	
TRANSPORTER IV Platform/Chassis (70XD)	25	81	11/90 – 04/03	3606	
TRANSPORTER IV Platform/Chassis (70XD)	25	81	11/90 – 04/03	3794	
TRANSPORTER IV Platform/Chassis (70XD)	25	81	11/90 – 04/03	4020	
TRANSPORTER IV Platform/Chassis (70XD)	25	81	11/90 – 04/03	4095	
TRANSPORTER IV Platform/Chassis (70XD)	25	85	08/96 – 04/03	3553	
TRANSPORTER IV Platform/Chassis (70XD)	25	85	08/96 – 04/03	3553/1	
TRANSPORTER IV Platform/Chassis (70XD)	25	85	08/96 – 04/03	3606	
TRANSPORTER IV Platform/Chassis (70XD)	25	85	08/96 – 04/03	3794	
TRANSPORTER IV Platform/Chassis (70XD)	25	85	08/96 – 04/03	4020	
TRANSPORTER IV Platform/Chassis (70XD)	25	85	08/96 – 04/03	4095	

MAKE & MODEL		KW	YEAR		
VOLKSWAGEN					
TRANSPORTER IV Platform/Chassis (70XD)	28	103	05/96 – 05/00	3553	
TRANSPORTER IV Platform/Chassis (70XD)	28	103	05/96 – 05/00	3553/1	
TRANSPORTER IV Platform/Chassis (70XD)	28	103	05/96 – 05/00	3606	
TRANSPORTER IV Platform/Chassis (70XD)	28	103	05/96 – 05/00	3794	
TRANSPORTER IV Platform/Chassis (70XD)	28	103	05/96 – 05/00	4020	
TRANSPORTER IV Platform/Chassis (70XD)	28	103	05/96 – 05/00	4095	
TRANSPORTER IV Platform/Chassis (70XD)	1.9 D	44	09/90 – 12/95	3553	
TRANSPORTER IV Platform/Chassis (70XD)	1.9 D	44	09/90 – 12/95	3553/1	
TRANSPORTER IV Platform/Chassis (70XD)	1.9 D	44	09/90 – 12/95	3606	
TRANSPORTER IV Platform/Chassis (70XD)	1.9 D	44	09/90 – 12/95	3794	
TRANSPORTER IV Platform/Chassis (70XD)	1.9 D	44	09/90 – 12/95	4020	
TRANSPORTER IV Platform/Chassis (70XD)	1.9 D	45	07/90 – 12/95	3553	
TRANSPORTER IV Platform/Chassis (70XD)	1.9 D	45	07/90 – 12/95	3553/1	
TRANSPORTER IV Platform/Chassis (70XD)	1.9 D	45	07/90 – 12/95	3606	
TRANSPORTER IV Platform/Chassis (70XD)	1.9 D	45	07/90 – 12/95	3794	
TRANSPORTER IV Platform/Chassis (70XD)	1.9 D	45	07/90 – 12/95	4020	
TRANSPORTER IV Platform/Chassis (70XD)	1.9 TD	50	10/92 – 04/03	3553	
TRANSPORTER IV Platform/Chassis (70XD)	1.9 TD	50	10/92 – 04/03	3553/1	
TRANSPORTER IV Platform/Chassis (70XD)	1.9 TD	50	10/92 – 04/03	3606	
TRANSPORTER IV Platform/Chassis (70XD)	1.9 TD	50	10/92 – 04/03	3794	
TRANSPORTER IV Platform/Chassis (70XD)	1.9 TD	50	10/92 – 04/03	4020	
TRANSPORTER IV Platform/Chassis (70XD)	1.9 TD	50	10/92 – 04/03	4095	
TRANSPORTER IV Platform/Chassis (70XD)	2.4 D	55	08/97 – 04/03	3553	
TRANSPORTER IV Platform/Chassis (70XD)	2.4 D	55	08/97 – 04/03	3553/1	
TRANSPORTER IV Platform/Chassis (70XD)	2.4 D	55	08/97 – 04/03	3606	
TRANSPORTER IV Platform/Chassis (70XD)	2.4 D	55	08/97 – 04/03	3794	
TRANSPORTER IV Platform/Chassis (70XD)	2.4 D	55	08/97 – 04/03	4020	
TRANSPORTER IV Platform/Chassis (70XD)	2.4 D	55	08/97 – 04/03	4095	
TRANSPORTER IV Platform/Chassis (70XD)	2.4 D	57	09/90 – 04/98	3553	
TRANSPORTER IV Platform/Chassis (70XD)	2.4 D	57	09/90 – 04/98	3553/1	
TRANSPORTER IV Platform/Chassis (70XD)	2.4 D	57	09/90 – 04/98	3606	
TRANSPORTER IV Platform/Chassis (70XD)	2.4 D	57	09/90 – 04/98	3794	
TRANSPORTER IV Platform/Chassis (70XD)	2.4 D	57	09/90 – 04/98	4020	
TRANSPORTER IV Platform/Chassis (70XD)	2.4 D	57	09/90 – 04/98	4095	
TRANSPORTER IV Platform/Chassis (70XD)	2.4 D Syncro	57	10/92 – 09/98	3553	
TRANSPORTER IV Platform/Chassis (70XD)	2.4 D Syncro	57	10/92 – 09/98	3553/1	
TRANSPORTER IV Platform/Chassis (70XD)	2.4 D Syncro	57	10/92 – 09/98	3606	
TRANSPORTER IV Platform/Chassis (70XD)	2.4 D Syncro	57	10/92 – 09/98	3794	
TRANSPORTER IV Platform/Chassis (70XD)	2.4 D Syncro	57	10/92 – 09/98	4020	
TRANSPORTER IV Platform/Chassis (70XD)	2.4 D Syncro	57	10/92 – 09/98	4095	
TRANSPORTER IV Platform/Chassis (70XD)	2.5 Syncro	81	10/92 – 04/03	3553	
TRANSPORTER IV Platform/Chassis (70XD)	2.5 Syncro	81	10/92 – 04/03	3553/1	
TRANSPORTER IV Platform/Chassis (70XD)	2.5 Syncro	81	10/92 – 04/03	3606	
TRANSPORTER IV Platform/Chassis (70XD)	2.5 Syncro	81	10/92 – 04/03	3794	
TRANSPORTER IV Platform/Chassis (70XD)	2.5 Syncro	81	10/92 – 04/03	4020	
TRANSPORTER IV Platform/Chassis (70XD)	2.5 Syncro	81	10/92 – 04/03	4095	
TRANSPORTER IV Platform/Chassis (70XD)	2.5 Syncro	85	08/96 – 04/03	3553	
TRANSPORTER IV Platform/Chassis (70XD)	2.5 Syncro	85	08/96 – 04/03	3553/1	
TRANSPORTER IV Platform/Chassis (70XD)	2.5 Syncro	85	08/96 – 04/03	3606	
TRANSPORTER IV Platform/Chassis (70XD)	2.5 Syncro	85	08/96 – 04/03	3794	
TRANSPORTER IV Platform/Chassis (70XD)	2.5 Syncro	85	08/96 – 04/03	4020	
TRANSPORTER IV Platform/Chassis (70XD)	2.5 Syncro	85	08/96 – 04/03	4095	
TRANSPORTER IV Platform/Chassis (70XD)	2.5 TDI	65	05/98 – 04/03	3553	
TRANSPORTER IV Platform/Chassis (70XD)	2.5 TDI	65	05/98 – 04/03	3553/1	
TRANSPORTER IV Platform/Chassis (70XD)	2.5 TDI	65	05/98 – 04/03	3606	
TRANSPORTER IV Platform/Chassis (70XD)	2.5 TDI	65	05/98 – 04/03	3794	
TRANSPORTER IV Platform/Chassis (70XD)	2.5 TDI	65	05/98 – 04/03	4020	
TRANSPORTER IV Platform/Chassis (70XD)	2.5 TDI	65	05/98 – 04/03	4095	
TRANSPORTER IV Platform/Chassis (70XD)	2.5 TDI	75	09/95 – 04/03	3553	
TRANSPORTER IV Platform/Chassis (70XD)	2.5 TDI	75	09/95 – 04/03	3553/1	
TRANSPORTER IV Platform/Chassis (70XD)	2.5 TDI	75	09/95 – 04/03	3606	
TRANSPORTER IV Platform/Chassis (70XD)	2.5 TDI	75	09/95 – 04/03	3794	
TRANSPORTER IV Platform/Chassis (70XD)	2.5 TDI	75	09/95 – 04/03	4020	
TRANSPORTER IV Platform/Chassis (70XD)	2.5 TDI	75	09/95 – 04/03	4095	
TRANSPORTER IV Platform/Chassis (70XD)	2.5 TDI Syncro	75	05/98 – 04/03	3553	
TRANSPORTER IV Platform/Chassis (70XD)	2.5 TDI Syncro	75	05/98 – 04/03	3553/1	
TRANSPORTER IV Platform/Chassis (70XD)	2.5 TDI Syncro	75	05/98 – 04/03	3606	
TRANSPORTER IV Platform/Chassis (70XD)	2.5 TDI Syncro	75	05/98 – 04/03	3794	
TRANSPORTER IV Platform/Chassis (70XD)	2.5 TDI Syncro	75	05/98 – 04/03	4020	
TRANSPORTER IV Platform/Chassis (70XD)	2.5 TDI Syncro	75	05/98 – 04/03	4095	
TRANSPORTER IV Platform/Chassis (70XD)	2.8 VR6	150	06/00 – 04/03	4095	

MAKE & MODEL		KW	YEAR		
VOLKSWAGEN					
TRANSPORTER T3	1.6	50	04/83 – 09/90	3605	
TRANSPORTER T3	1.6 D (CS)	37	01/81 – 07/87	3605	
TRANSPORTER T3	1.6 TD (JX)	51	10/84 – 07/92	3605	
TRANSPORTER T3	1.6 TD (JX)	51	03/86 – 07/92	3605	
TRANSPORTER T3	1.7 D (KY)	42	07/89 – 07/92	3605	
TRANSPORTER T3	1.9 (DG)	57	12/84 – 07/92	3605	
TRANSPORTER T3	1.9 (DG)	57	08/82 – 07/92	3605	
TRANSPORTER T3	1.9 (DH)	61	10/84 – 02/89	3605	
TRANSPORTER T3	1.9 (DF)	44	09/82 – 07/92	3605	
TRANSPORTER T3	2.0 (CU)	51	05/79 – 04/86	3605	
TRANSPORTER T3	2.1 (DJ)	82	03/86 – 07/92	3605	
TRANSPORTER T3	2.1 (DJ)	82	03/86 – 07/92	3605	
TRANSPORTER T3	2.1 (MV)	70	08/85 – 07/92	3605	
TRANSPORTER T3	2.1 (MV)	70	08/85 – 07/92	3605	
TRANSPORTER T3	2.1 i (SS)	68	07/89 – 07/92	3605	
TRANSPORTER T4 / EUROVAN (70A, 70H, 7DA, 7DH) Furgón	1.9 D (1X)	45	07.90-12.95		4345
TRANSPORTER T4 / EUROVAN (70A, 70H, 7DA, 7DH) Furgón	1.9 TD (ABL)	50	10.92-04.03		4345
TRANSPORTER T4 / EUROVAN (70A, 70H, 7DA, 7DH) Furgón	2.0 (AAC)	62	07.90-04.03		4345
TRANSPORTER T4 / EUROVAN (70A, 70H, 7DA, 7DH) Furgón	2.4 D (AAB)	57	07.90-04.98		4345
TRANSPORTER T4 / EUROVAN (70A, 70H, 7DA, 7DH) Furgón	2.4 D (AJA)	55	08.97-04.03		4345
TRANSPORTER T4 / EUROVAN (70A, 70H, 7DA, 7DH) Furgón	2.4 D Syncro (AAB)	57	10.92-09.98		4345
TRANSPORTER T4 / EUROVAN (70A, 70H, 7DA, 7DH) Furgón	2.5 (AAF)	81	11.90-04.03		4345
TRANSPORTER T4 / EUROVAN (70A, 70H, 7DA, 7DH) Furgón	2.5 (ACU)	81	11.90-04.03		4345
TRANSPORTER T4 / EUROVAN (70A, 70H, 7DA, 7DH) Furgón	2.5 (AEN)	81	11.90-04.03		4345
TRANSPORTER T4 / EUROVAN (70A, 70H, 7DA, 7DH) Furgón	2.5 (AET)	85	08.96-04.03		4345
TRANSPORTER T4 / EUROVAN (70A, 70H, 7DA, 7DH) Furgón	2.5 (AEU)	81	11.90-04.03		4345
TRANSPORTER T4 / EUROVAN (70A, 70H, 7DA, 7DH) Furgón	2.5 (APL)	85	08.96-04.03		4345
TRANSPORTER T4 / EUROVAN (70A, 70H, 7DA, 7DH) Furgón	2.5 (AVT)	85	08.96-04.03		4345
TRANSPORTER T4 / EUROVAN (70A, 70H, 7DA, 7DH) Furgón	2.5 Syncro (AAF)	81	10.92-04.03		4345
TRANSPORTER T4 / EUROVAN (70A, 70H, 7DA, 7DH) Furgón	2.5 Syncro (ACU)	81	10.92-04.03		4345
TRANSPORTER T4 / EUROVAN (70A, 70H, 7DA, 7DH) Furgón	2.5 Syncro (AEN)	81	10.92-04.03		4345
TRANSPORTER T4 / EUROVAN (70A, 70H, 7DA, 7DH) Furgón	2.5 Syncro (AET)	85	08.96-04.03		4345
TRANSPORTER T4 / EUROVAN (70A, 70H, 7DA, 7DH) Furgón	2.5 Syncro (AEU)	81	10.92-04.03		4345
TRANSPORTER T4 / EUROVAN (70A, 70H, 7DA, 7DH) Furgón	2.5 Syncro (APL)	85	08.96-04.03		4345
TRANSPORTER T4 / EUROVAN (70A, 70H, 7DA, 7DH) Furgón	2.5 Syncro (AVT)	85	08.96-04.03		4345
TRANSPORTER T4 / EUROVAN (70A, 70H, 7DA, 7DH) Furgón	2.5 TDI (ACV)	75	09.95-04.03		4345
TRANSPORTER T4 / EUROVAN (70A, 70H, 7DA, 7DH) Furgón	2.5 TDI (AJT)	65	12.98-04.03		4345
TRANSPORTER T4 / EUROVAN (70A, 70H, 7DA, 7DH) Furgón	2.5 TDI (AUF)	75	09.95-04.03		4345
TRANSPORTER T4 / EUROVAN (70A, 70H, 7DA, 7DH) Furgón	2.5 TDI (AXG)	111	09.00-04.03		4345
TRANSPORTER T4 / EUROVAN (70A, 70H, 7DA, 7DH) Furgón	2.5 TDI (AYC)	75	09.95-04.03		4345
TRANSPORTER T4 / EUROVAN (70A, 70H, 7DA, 7DH) Furgón	2.5 TDI (AYY)	65	12.98-04.03		4345
TRANSPORTER T4 / EUROVAN (70A, 70H, 7DA, 7DH) Furgón	2.5 TDI Syncro (ACV)	75	09.95-04.03		4345
TRANSPORTER T4 / EUROVAN (70A, 70H, 7DA, 7DH) Furgón	2.5 TDI Syncro (AXL)	75	09.95-04.03		4345
TRANSPORTER T4 / EUROVAN (70A, 70H, 7DA, 7DH) Furgón	2.8 VR6 (AES)	103	05.96-05.00		4345
TRANSPORTER T4 / EUROVAN (70A, 70H, 7DA, 7DH) Furgón	2.8 VR6 (AMV)	150	06.00-04.03		4345
TRANSPORTER T4 / EUROVAN (70B, 70C, 7DB, 7DK, 70J, 70K,	1.8 (PD)	49	12.90-07.92		4345
TRANSPORTER T4 / EUROVAN (70B, 70C, 7DB, 7DK, 70J, 70K,	1.9 D (1X)	44	09.90-12.95		4345
TRANSPORTER T4 / EUROVAN (70B, 70C, 7DB, 7DK, 70J, 70K,	1.9 TD (ABL)	50	10.92-04.03		4345
TRANSPORTER T4 / EUROVAN (70B, 70C, 7DB, 7DK, 70J, 70K,	2.0 (AAC)	62	09.90-04.03		4345
TRANSPORTER T4 / EUROVAN (70B, 70C, 7DB, 7DK, 70J, 70K,	2.4 D (AAB)	57	09.90-04.98		4345
TRANSPORTER T4 / EUROVAN (70B, 70C, 7DB, 7DK, 70J, 70K,	2.4 D (AJA)	55	08.97-04.03		4345
TRANSPORTER T4 / EUROVAN (70B, 70C, 7DB, 7DK, 70J, 70K,	2.4 D Syncro (AAB)	57	10.92-09.98		4345
TRANSPORTER T4 / EUROVAN (70B, 70C, 7DB, 7DK, 70J, 70K,	2.5 (AAF)	81	11.90-06.03		4345
TRANSPORTER T4 / EUROVAN (70B, 70C, 7DB, 7DK, 70J, 70K,	2.5 (ACU)	81	11.90-06.03		4345
TRANSPORTER T4 / EUROVAN (70B, 70C, 7DB, 7DK, 70J, 70K,	2.5 (AEN)	81	11.90-06.03		4345
TRANSPORTER T4 / EUROVAN (70B, 70C, 7DB, 7DK, 70J, 70K,	2.5 (AET)	85	08.96-04.03		4345
TRANSPORTER T4 / EUROVAN (70B, 70C, 7DB, 7DK, 70J, 70K,	2.5 (AEU)	81	11.90-06.03		4345
TRANSPORTER T4 / EUROVAN (70B, 70C, 7DB, 7DK, 70J, 70K,	2.5 (APL)	85	08.96-04.03		4345
TRANSPORTER T4 / EUROVAN (70B, 70C, 7DB, 7DK, 70J, 70K,	2.5 (AVT)	85	08.96-04.03		4345
TRANSPORTER T4 / EUROVAN (70B, 70C, 7DB, 7DK, 70J, 70K,	2.5 Syncro (AAF)	81	11.92-04.03		4345
TRANSPORTER T4 / EUROVAN (70B, 70C, 7DB, 7DK, 70J, 70K,	2.5 Syncro (ACU)	81	11.92-04.03		4345
TRANSPORTER T4 / EUROVAN (70B, 70C, 7DB, 7DK, 70J, 70K,	2.5 Syncro (AEN)	81	11.92-04.03		4345
TRANSPORTER T4 / EUROVAN (70B, 70C, 7DB, 7DK, 70J, 70K,	2.5 Syncro (AET)	85	07.96-04.03		4345
TRANSPORTER T4 / EUROVAN (70B, 70C, 7DB, 7DK, 70J, 70K,	2.5 Syncro (AEU)	81	11.92-04.03		4345
TRANSPORTER T4 / EUROVAN (70B, 70C, 7DB, 7DK, 70J, 70K,	2.5 Syncro (APL)	85	07.96-04.03		4345
TRANSPORTER T4 / EUROVAN (70B, 70C, 7DB, 7DK, 70J, 70K,	2.5 Syncro (AVT)	85	07.96-04.03		4345
TRANSPORTER T4 / EUROVAN (70B, 70C, 7DB, 7DK, 70J, 70K,	2.5 TDI (ACV)	75	09.95-04.03		4345
TRANSPORTER T4 / EUROVAN (70B, 70C, 7DB, 7DK, 70J, 70K,	2.5 TDI (AHY)	111	05.98-04.03		4345
TRANSPORTER T4 / EUROVAN (70B, 70C, 7DB, 7DK, 70J, 70K,	2.5 TDI (AJT)	65	05.98-04.03		4345
TRANSPORTER T4 / EUROVAN (70B, 70C, 7DB, 7DK, 70J, 70K,	2.5 TDI (AUF)	75	09.95-04.03		4345
TRANSPORTER T4 / EUROVAN (70B, 70C, 7DB, 7DK, 70J, 70K,	2.5 TDI (AXG)	111	05.98-04.03		4345

BESER

MAKE & MODEL		KW	YEAR		
VOLKSWAGEN					
TRANSPORTER T4 / EUROVAN (70B, 70C, 7DB, 7DK, 70J, 70K,	2.5 TDI (AYC)	75	09.95-04.03		4345
TRANSPORTER T4 / EUROVAN (70B, 70C, 7DB, 7DK, 70J, 70K,	2.5 TDI (AYY)	65	05.98-04.03		4345
TRANSPORTER T4 / EUROVAN (70B, 70C, 7DB, 7DK, 70J, 70K,	2.5 TDI Syncro (ACV)	75	01.96-04.03		4345
TRANSPORTER T4 / EUROVAN (70B, 70C, 7DB, 7DK, 70J, 70K,	2.5 TDI Syncro (AXL)	75	01.96-04.03		4345
TRANSPORTER T4 / EUROVAN (70B, 70C, 7DB, 7DK, 70J, 70K,	2.8 VR6 (AES)	103	11.95-04.00		4345
TRANSPORTER T4 / EUROVAN (70B, 70C, 7DB, 7DK, 70J, 70K,	2.8 VR6 (AMV)	150	04.00-04.03		4345
TRANSPORTER T4 / EUROVAN (70E, 70L, 70M, 7DE, 7DL, 7DM)	1.9 D (1X)	45	07.90-12.95		4345
TRANSPORTER T4 / EUROVAN (70E, 70L, 70M, 7DE, 7DL, 7DM)	1.9 TD (ABL)	50	10.92-04.03		4345
TRANSPORTER T4 / EUROVAN (70E, 70L, 70M, 7DE, 7DL, 7DM)	2.0 (AAC)	62	07.90-04.03		4345
TRANSPORTER T4 / EUROVAN (70E, 70L, 70M, 7DE, 7DL, 7DM)	2.4 D (AAB)	57	09.90-04.98		4345
TRANSPORTER T4 / EUROVAN (70E, 70L, 70M, 7DE, 7DL, 7DM)	2.4 D (AJA)	55	08.97-04.03		4345
TRANSPORTER T4 / EUROVAN (70E, 70L, 70M, 7DE, 7DL, 7DM)	2.4 D Syncro (AAB)	57	10.92-09.98		4345
TRANSPORTER T4 / EUROVAN (70E, 70L, 70M, 7DE, 7DL, 7DM)	2.5 (AAF)	81	11.90-04.03		4345
TRANSPORTER T4 / EUROVAN (70E, 70L, 70M, 7DE, 7DL, 7DM)	2.5 (ACU)	81	11.90-04.03		4345
TRANSPORTER T4 / EUROVAN (70E, 70L, 70M, 7DE, 7DL, 7DM)	2.5 (AEN)	81	11.90-04.03		4345
TRANSPORTER T4 / EUROVAN (70E, 70L, 70M, 7DE, 7DL, 7DM)	2.5 (AET)	85	08.96-04.03		4345
TRANSPORTER T4 / EUROVAN (70E, 70L, 70M, 7DE, 7DL, 7DM)	2.5 (AEU)	81	11.90-04.03		4345
TRANSPORTER T4 / EUROVAN (70E, 70L, 70M, 7DE, 7DL, 7DM)	2.5 (APL)	85	08.96-04.03		4345
TRANSPORTER T4 / EUROVAN (70E, 70L, 70M, 7DE, 7DL, 7DM)	2.5 (AVT)	85	08.96-04.03		4345
TRANSPORTER T4 / EUROVAN (70E, 70L, 70M, 7DE, 7DL, 7DM)	2.5 Syncro (AAF)	81	10.92-04.03		4345
TRANSPORTER T4 / EUROVAN (70E, 70L, 70M, 7DE, 7DL, 7DM)	2.5 Syncro (ACU)	81	10.92-04.03		4345
TRANSPORTER T4 / EUROVAN (70E, 70L, 70M, 7DE, 7DL, 7DM)	2.5 Syncro (AEN)	81	10.92-04.03		4345
TRANSPORTER T4 / EUROVAN (70E, 70L, 70M, 7DE, 7DL, 7DM)	2.5 Syncro (AET)	85	08.96-04.03		4345
TRANSPORTER T4 / EUROVAN (70E, 70L, 70M, 7DE, 7DL, 7DM)	2.5 Syncro (AEU)	81	10.92-04.03		4345
TRANSPORTER T4 / EUROVAN (70E, 70L, 70M, 7DE, 7DL, 7DM)	2.5 Syncro (APL)	85	08.96-04.03		4345
TRANSPORTER T4 / EUROVAN (70E, 70L, 70M, 7DE, 7DL, 7DM)	2.5 Syncro (AVT)	85	08.96-04.03		4345
TRANSPORTER T4 / EUROVAN (70E, 70L, 70M, 7DE, 7DL, 7DM)	2.5 TDI (ACV)	75	09.95-04.03		4345
TRANSPORTER T4 / EUROVAN (70E, 70L, 70M, 7DE, 7DL, 7DM)	2.5 TDI (AJT)	65	05.98-04.03		4345
TRANSPORTER T4 / EUROVAN (70E, 70L, 70M, 7DE, 7DL, 7DM)	2.5 TDI (AUF)	75	09.95-04.03		4345
TRANSPORTER T4 / EUROVAN (70E, 70L, 70M, 7DE, 7DL, 7DM)	2.5 TDI (AYC)	75	09.95-04.03		4345
TRANSPORTER T4 / EUROVAN (70E, 70L, 70M, 7DE, 7DL, 7DM)	2.5 TDI (AYY)	65	05.98-04.03		4345
TRANSPORTER T4 / EUROVAN (70E, 70L, 70M, 7DE, 7DL, 7DM)	2.5 TDI Syncro (ACV)	75	05.98-04.03		4345
TRANSPORTER T4 / EUROVAN (70E, 70L, 70M, 7DE, 7DL, 7DM)	2.5 TDI Syncro (AXL)	75	05.98-04.03		4345
TRANSPORTER T4 / EUROVAN (70E, 70L, 70M, 7DE, 7DL, 7DM)	2.8 (AES)	103	05.96-05.00		4345
TRANSPORTER T4 / EUROVAN (70E, 70L, 70M, 7DE, 7DL, 7DM)	2.8 VR6 (AMV)	150	06.00-04.03		4345
TRANSPORTER V Box (7HA, 7HH, 7EA, 7EH)	20	85	11/03 -	3841	
TRANSPORTER V Box (7HA, 7HH, 7EA, 7EH)	20	85	11/03 -	3841/1	
TRANSPORTER V Box (7HA, 7HH, 7EA, 7EH)	20	85	11/03 -		3842
TRANSPORTER V Box (7HA, 7HH, 7EA, 7EH)	1.9 TDI	62	01/06 – 11/09	3841	
TRANSPORTER V Box (7HA, 7HH, 7EA, 7EH)	1.9 TDI	62	01/06 – 11/09	3841/1	
TRANSPORTER V Box (7HA, 7HH, 7EA, 7EH)	1.9 TDI	62	01/06 – 11/09		3842
TRANSPORTER V Box (7HA, 7HH, 7EA, 7EH)	1.9 TDI	63	04/03 – 11/09	3841	
TRANSPORTER V Box (7HA, 7HH, 7EA, 7EH)	1.9 TDI	63	04/03 – 11/09	3841/1	
TRANSPORTER V Box (7HA, 7HH, 7EA, 7EH)	1.9 TDI	63	04/03 – 11/09		3842
TRANSPORTER V Box (7HA, 7HH, 7EA, 7EH)	1.9 TDI	75	06/06 – 11/09	3841	
TRANSPORTER V Box (7HA, 7HH, 7EA, 7EH)	1.9 TDI	75	06/06 – 11/09	3841/1	
TRANSPORTER V Box (7HA, 7HH, 7EA, 7EH)	1.9 TDI	75	06/06 – 11/09		3842
TRANSPORTER V Box (7HA, 7HH, 7EA, 7EH)	1.9 TDI	77	04/03 – 11/09	3841	
TRANSPORTER V Box (7HA, 7HH, 7EA, 7EH)	1.9 TDI	77	04/03 – 11/09	3841/1	
TRANSPORTER V Box (7HA, 7HH, 7EA, 7EH)	1.9 TDI	77	04/03 – 11/09		3842
TRANSPORTER V Box (7HA, 7HH, 7EA, 7EH)	2.0 BiTDI	132	09/09 -	3841	
TRANSPORTER V Box (7HA, 7HH, 7EA, 7EH)	2.0 BiTDI	132	09/09 -		3842
TRANSPORTER V Box (7HA, 7HH, 7EA, 7EH)	2.0 BiTDI	132	09/09 -	4162	
TRANSPORTER V Box (7HA, 7HH, 7EA, 7EH)	2.0 BiTDI 4motion	132	09/09 -	3841	
TRANSPORTER V Box (7HA, 7HH, 7EA, 7EH)	2.0 BiTDI 4motion	132	09/09 -		3842
TRANSPORTER V Box (7HA, 7HH, 7EA, 7EH)	2.0 BiTDI 4motion	132	09/09 -	4162	
TRANSPORTER V Box (7HA, 7HH, 7EA, 7EH)	2.0 TDI	62	09/09 -	3841	
TRANSPORTER V Box (7HA, 7HH, 7EA, 7EH)	2.0 TDI	62	09/09 -		3842
TRANSPORTER V Box (7HA, 7HH, 7EA, 7EH)	2.0 TDI	75	09/09 -	3841	
TRANSPORTER V Box (7HA, 7HH, 7EA, 7EH)	2.0 TDI	75	09/09 -		3842
TRANSPORTER V Box (7HA, 7HH, 7EA, 7EH)	2.0 TDI	84	05/11 -	3841	
TRANSPORTER V Box (7HA, 7HH, 7EA, 7EH)	2.0 TDI	84	05/11 -		3842
TRANSPORTER V Box (7HA, 7HH, 7EA, 7EH)	2.0 TDI	100	05/10 -	3841	
TRANSPORTER V Box (7HA, 7HH, 7EA, 7EH)	2.0 TDI	100	05/10 -		3842
TRANSPORTER V Box (7HA, 7HH, 7EA, 7EH)	2.0 TDI	103	09/09 -	3841	
TRANSPORTER V Box (7HA, 7HH, 7EA, 7EH)	2.0 TDI	103	09/09 -		3842
TRANSPORTER V Box (7HA, 7HH, 7EA, 7EH)	2.0 TDI 4motion	100	05/10 -	3841	
TRANSPORTER V Box (7HA, 7HH, 7EA, 7EH)	2.0 TDI 4motion	100	05/10 -		3842
TRANSPORTER V Box (7HA, 7HH, 7EA, 7EH)	2.0 TDI 4motion	103	09/09 -	3841	
TRANSPORTER V Box (7HA, 7HH, 7EA, 7EH)	2.0 TDI 4motion	103	09/09 -		3842
TRANSPORTER V Box (7HA, 7HH, 7EA, 7EH)	2.0 TSI	110	07/12 -	3841	

MAKE & MODEL		KW	YEAR		
VOLKSWAGEN					
TRANSPORTER V Box (7HA, 7HH, 7EA, 7EH)	2.0 TSI	110	07/12 -		3842
TRANSPORTER V Box (7HA, 7HH, 7EA, 7EH)	2.0 TSI	110	07/12 -	4162	
TRANSPORTER V Box (7HA, 7HH, 7EA, 7EH)	2.0 TSI	150	05/11 -	3841	
TRANSPORTER V Box (7HA, 7HH, 7EA, 7EH)	2.0 TSI	150	05/11 -		3842
TRANSPORTER V Box (7HA, 7HH, 7EA, 7EH)	2.0 TSI	150	05/11 -	4162	
TRANSPORTER V Box (7HA, 7HH, 7EA, 7EH)	2.0 TSI 4motion	150	07/11 -	3841	
TRANSPORTER V Box (7HA, 7HH, 7EA, 7EH)	2.0 TSI 4motion	150	07/11 -		3842
TRANSPORTER V Box (7HA, 7HH, 7EA, 7EH)	2.0 TSI 4motion	150	07/11 -	4162	
TRANSPORTER V Box (7HA, 7HH, 7EA, 7EH)	2.5 TDI	96	04/03 – 11/09	3841	
TRANSPORTER V Box (7HA, 7HH, 7EA, 7EH)	2.5 TDI	96	04/03 – 11/09	3841/1	
TRANSPORTER V Box (7HA, 7HH, 7EA, 7EH)	2.5 TDI	96	04/03 – 11/09		3842
TRANSPORTER V Box (7HA, 7HH, 7EA, 7EH)	2.5 TDI	128	04/03 – 11/09	3841	
TRANSPORTER V Box (7HA, 7HH, 7EA, 7EH)	2.5 TDI	128	04/03 – 11/09	3841/1	
TRANSPORTER V Box (7HA, 7HH, 7EA, 7EH)	2.5 TDI	128	04/03 – 11/09		3842
TRANSPORTER V Box (7HA, 7HH, 7EA, 7EH)	2.5 TDI 4motion	96	07/04 – 11/09	3841	
TRANSPORTER V Box (7HA, 7HH, 7EA, 7EH)	2.5 TDI 4motion	96	07/04 – 11/09	3841/1	
TRANSPORTER V Box (7HA, 7HH, 7EA, 7EH)	2.5 TDI 4motion	96	07/04 – 11/09		3842
TRANSPORTER V Box (7HA, 7HH, 7EA, 7EH)	2.5 TDI 4motion	128	07/04 – 11/09	3841	
TRANSPORTER V Box (7HA, 7HH, 7EA, 7EH)	2.5 TDI 4motion	128	07/04 – 11/09	3841/1	
TRANSPORTER V Box (7HA, 7HH, 7EA, 7EH)	2.5 TDI 4motion	128	07/04 – 11/09		3842
TRANSPORTER V Box (7HA, 7HH, 7EA, 7EH)	3.2 4motion	170	11/03 – 06/06	3841/1	
TRANSPORTER V Box (7HA, 7HH, 7EA, 7EH)	3.2 4motion	173	11/03 – 11/09	3841	
TRANSPORTER V Box (7HA, 7HH, 7EA, 7EH)	3.2 4motion	173	11/03 – 11/09	3841/1	
TRANSPORTER V Box (7HA, 7HH, 7EA, 7EH)	3.2 4motion	173	11/03 – 11/09		3842
TRANSPORTER V Box (7HA, 7HH, 7EA, 7EH)	3.2 V6	170	04/03 – 06/04	3841	
TRANSPORTER V Box (7HA, 7HH, 7EA, 7EH)	3.2 V6	170	04/03 – 06/04	3841/1	
TRANSPORTER V Box (7HA, 7HH, 7EA, 7EH)	3.2 V6	170	04/03 – 06/04		3842
TRANSPORTER V Box (7HA, 7HH, 7EA, 7EH)	3.2 V6	173	02/04 – 11/09	3841	
TRANSPORTER V Box (7HA, 7HH, 7EA, 7EH)	3.2 V6	173	02/04 – 11/09	3841/1	
TRANSPORTER V Box (7HA, 7HH, 7EA, 7EH)	3.2 V6	173	02/04 – 11/09		3842
TRANSPORTER V Bus (7HB, 7HJ, 7EB, 7EJ, 7EF, 7EG,7HF, 7EC)	1.9 TDI	62	01/06 – 11/09	3841/1	
TRANSPORTER V Bus (7HB, 7HJ, 7EB, 7EJ, 7EF, 7EG,7HF, 7EC)	1.9 TDI	63	04/03 – 11/09	3841/1	
TRANSPORTER V Bus (7HB, 7HJ, 7EB, 7EJ, 7EF, 7EG,7HF, 7EC)	1.9 TDI	75	06/06 – 11/09	3841/1	
TRANSPORTER V Bus (7HB, 7HJ, 7EB, 7EJ, 7EF, 7EG,7HF, 7EC)	1.9 TDI	77	04/03 – 11/09	3841/1	
TRANSPORTER V Bus (7HB, 7HJ, 7EB, 7EJ, 7EF, 7EG,7HF, 7EC)	2.0 BiTDI	132	09/09 -		3842
TRANSPORTER V Bus (7HB, 7HJ, 7EB, 7EJ, 7EF, 7EG,7HF, 7EC)	2.5 TDI	96	04/03 – 11/09	3841/1	
TRANSPORTER V Bus (7HB, 7HJ, 7EB, 7EJ, 7EF, 7EG,7HF, 7EC)	2.5 TDI	120	11/03 – 11/09	3841/1	
TRANSPORTER V Bus (7HB, 7HJ, 7EB, 7EJ, 7EF, 7EG,7HF, 7EC)	2.5 TDI	128	04/03 – 11/09	3841/1	
TRANSPORTER V Bus (7HB, 7HJ, 7EB, 7EJ, 7EF, 7EG,7HF, 7EC)	2.0	85	11/03 -		3842
TRANSPORTER V Bus (7HB, 7HJ, 7EB, 7EJ, 7EF, 7EG,7HF, 7EC)	2.0 TDI 4motion	100	05/10 -		3842
TRANSPORTER V Bus (7HB, 7HJ, 7EB, 7EJ, 7EF, 7EG,7HF, 7EC)	2.0 TDI 4motion	103	09/09 -		3842
TRANSPORTER V Bus (7HB, 7HJ, 7EB, 7EJ, 7EF, 7EG,7HF, 7EC)	2.0 TSI	110	07/12 -		3842
TRANSPORTER V Bus (7HB, 7HJ, 7EB, 7EJ, 7EF, 7EG,7HF, 7EC)	2.0 TSI	150	05/11 -		3842
TRANSPORTER V Bus (7HB, 7HJ, 7EB, 7EJ, 7EF, 7EG,7HF, 7EC)	2.0 TSI 4motion	150	07/11 -		3842
TRANSPORTER V Bus (7HB, 7HJ, 7EB, 7EJ, 7EF, 7EG,7HF, 7EC)	2.5 TDI	96	04/03 – 11/09		3842
TRANSPORTER V Bus (7HB, 7HJ, 7EB, 7EJ, 7EF, 7EG,7HF, 7EC)	2.5 TDI	120	11/03 – 11/09		3842
TRANSPORTER V Bus (7HB, 7HJ, 7EB, 7EJ, 7EF, 7EG,7HF, 7EC)	2.5 TDI	128	04/03 – 11/09		3842
TRANSPORTER V Bus (7HB, 7HJ, 7EB, 7EJ, 7EF, 7EG,7HF, 7EC)	2.5 TDI 4motion	96	07/04 – 11/09		3842
TRANSPORTER V Bus (7HB, 7HJ, 7EB, 7EJ, 7EF, 7EG,7HF, 7EC)	2.5 TDI 4motion	128	07/04 – 11/09		3842
TRANSPORTER V Bus (7HB, 7HJ, 7EB, 7EJ, 7EF, 7EG,7HF, 7EC)	3.2 4motion	170	11/03 – 06/06	3841/1	
TRANSPORTER V Bus (7HB, 7HJ, 7EB, 7EJ, 7EF, 7EG,7HF, 7EC)	3.2 V6	170	02/04 – 06/04		3842
TRANSPORTER V Bus (7HB, 7HJ, 7EB, 7EJ, 7EF, 7EG,7HF, 7EC)	3.2 V6	173	02/04 – 06/04		3842
TRANSPORTER V Bus (7HB, 7HJ, 7EB, 7EJ, 7EF, 7EG,7HF, 7EC)	3.2 V6 4motion	173	11/03 – 11/09		3842
TRANSPORTER V Bus (7HB, 7HJ, 7EB, 7EJ, 7EF, 7EG,7HF, 7EC)	1.9 TDI	62	01/06 – 11/09		3842
TRANSPORTER V Bus (7HB, 7HJ, 7EB, 7EJ, 7EF, 7EG,7HF, 7EC)	1.9 TDI	63	04/03 – 11/09		3842
TRANSPORTER V Bus (7HB, 7HJ, 7EB, 7EJ, 7EF, 7EG,7HF, 7EC)	1.9 TDI	75	06/06 – 11/09		3842
TRANSPORTER V Bus (7HB, 7HJ, 7EB, 7EJ, 7EF, 7EG,7HF, 7EC)	1.9 TDI	77	04/03 – 11/09		3842
TRANSPORTER V Bus (7HB, 7HJ, 7EB, 7EJ, 7EF, 7EG,7HF, 7EC)	2.0	85	11/03 -	3841/1	
TRANSPORTER V Bus (7HB, 7HJ, 7EB, 7EJ, 7EF, 7EG,7HF, 7EC)	2.0 BiTDI 4motion	132	09/09 -		3842
TRANSPORTER V Bus (7HB, 7HJ, 7EB, 7EJ, 7EF, 7EG,7HF, 7EC)	2.0 TDI	62	09/09 -		3842
TRANSPORTER V Bus (7HB, 7HJ, 7EB, 7EJ, 7EF, 7EG,7HF, 7EC)	2.0 TDI	75	09/09 -		3842
TRANSPORTER V Bus (7HB, 7HJ, 7EB, 7EJ, 7EF, 7EG,7HF, 7EC)	2.0 TDI	84	05/11 -		3842
TRANSPORTER V Bus (7HB, 7HJ, 7EB, 7EJ, 7EF, 7EG,7HF, 7EC)	2.0 TDI	100	05/10 -		3842
TRANSPORTER V Bus (7HB, 7HJ, 7EB, 7EJ, 7EF, 7EG,7HF, 7EC)	2.0 TDI	103	09/09 -		3842
TRANSPORTER V Bus (7HB, 7HJ, 7EB, 7EJ, 7EF, 7EG,7HF, 7EC)	2.5 TDI 4motion	96	07/04 – 11/09	3841/1	
TRANSPORTER V Bus (7HB, 7HJ, 7EB, 7EJ, 7EF, 7EG,7HF, 7EC)	2.5 TDI 4motion	128	07/04 – 11/09	3841/1	
TRANSPORTER V Bus (7HB, 7HJ, 7EB, 7EJ, 7EF, 7EG,7HF, 7EC)	3.2 V6	170	02/04 – 06/04	3841/1	
TRANSPORTER V Bus (7HB, 7HJ, 7EB, 7EJ, 7EF, 7EG,7HF, 7EC)	3.2 V6	173	02/04 – 11/09	3841/1	
TRANSPORTER V Bus (7HB, 7HJ, 7EB, 7EJ, 7EF, 7EG,7HF, 7EC)	3.2 V6 4motion	173	11/03 – 11/09	3841/1	
TRANSPORTER V Bus (7HB, 7HJ, 7EB, 7EJ, 7EF, 7EG,7HF, 7EC)	2.0 BiTDI	132	09/09 -	4162	
TRANSPORTER V Bus (7HB, 7HJ, 7EB, 7EJ, 7EF, 7EG,7HF, 7EC)	1.9 TDI	62	01/06 – 11/09	3841	

BESER

MAKE & MODEL		KW	YEAR		
VOLKSWAGEN					
TRANSPORTER V Bus (7HB, 7HJ, 7EB, 7EJ, 7EF, 7EG,7HF, 7EC)	1.9 TDI	63	04/03 – 11/09	3841	
TRANSPORTER V Bus (7HB, 7HJ, 7EB, 7EJ, 7EF, 7EG,7HF, 7EC)	1.9 TDI	75	06/06 – 11/09	3841	
TRANSPORTER V Bus (7HB, 7HJ, 7EB, 7EJ, 7EF, 7EG,7HF, 7EC)	1.9 TDI	77	04/03 – 11/09	3841	
TRANSPORTER V Bus (7HB, 7HJ, 7EB, 7EJ, 7EF, 7EG,7HF, 7EC)	2.0 BiTDI	132	09/09 -	3841	
TRANSPORTER V Bus (7HB, 7HJ, 7EB, 7EJ, 7EF, 7EG,7HF, 7EC)	2.0 TDI 4motion	100	05/10 -	3841	
TRANSPORTER V Bus (7HB, 7HJ, 7EB, 7EJ, 7EF, 7EG,7HF, 7EC)	2.0 TDI 4motion	103	09/09 -	3841	
TRANSPORTER V Bus (7HB, 7HJ, 7EB, 7EJ, 7EF, 7EG,7HF, 7EC)	3.2 V6	173	02/04 – 11/09	3841	
TRANSPORTER V Bus (7HB, 7HJ, 7EB, 7EJ, 7EF, 7EG,7HF, 7EC)	2.0	85	11/03 -	3841	
TRANSPORTER V Bus (7HB, 7HJ, 7EB, 7EJ, 7EF, 7EG,7HF, 7EC)	2.0 BiTDI 4motion	132	09/09 -	4162	
TRANSPORTER V Bus (7HB, 7HJ, 7EB, 7EJ, 7EF, 7EG,7HF, 7EC)	2.0 BiTDI 4motion	132	09/09 -	3841	
TRANSPORTER V Bus (7HB, 7HJ, 7EB, 7EJ, 7EF, 7EG,7HF, 7EC)	2.0 TDI	75	09/09 -	4162	
TRANSPORTER V Bus (7HB, 7HJ, 7EB, 7EJ, 7EF, 7EG,7HF, 7EC)	2.0 TDI	100	05/10 -	3841	
TRANSPORTER V Bus (7HB, 7HJ, 7EB, 7EJ, 7EF, 7EG,7HF, 7EC)	2.0 TDI	62	09/09 -	3841	
TRANSPORTER V Bus (7HB, 7HJ, 7EB, 7EJ, 7EF, 7EG,7HF, 7EC)	2.0 TDI	75	09/09 -	3841	
TRANSPORTER V Bus (7HB, 7HJ, 7EB, 7EJ, 7EF, 7EG,7HF, 7EC)	2.0 TDI	84	05/11 -	3841	
TRANSPORTER V Bus (7HB, 7HJ, 7EB, 7EJ, 7EF, 7EG,7HF, 7EC)	2.0 TDI	103	09/09 -	3841	
TRANSPORTER V Bus (7HB, 7HJ, 7EB, 7EJ, 7EF, 7EG,7HF, 7EC)	2.0 TSI	110	07/12 -	4162	
TRANSPORTER V Bus (7HB, 7HJ, 7EB, 7EJ, 7EF, 7EG,7HF, 7EC)	2.0 TSI	150	05/11 -	4162	
TRANSPORTER V Bus (7HB, 7HJ, 7EB, 7EJ, 7EF, 7EG,7HF, 7EC)	2.0 TSI	110	07/12 -	3841	
TRANSPORTER V Bus (7HB, 7HJ, 7EB, 7EJ, 7EF, 7EG,7HF, 7EC)	2.0 TSI	150	05/11 -	3841	
TRANSPORTER V Bus (7HB, 7HJ, 7EB, 7EJ, 7EF, 7EG,7HF, 7EC)	2.0 TSI 4motion	150	07/11 -	3841	
TRANSPORTER V Bus (7HB, 7HJ, 7EB, 7EJ, 7EF, 7EG,7HF, 7EC)	2.0 TSI 4motion	150	07/11 -	4162	
TRANSPORTER V Bus (7HB, 7HJ, 7EB, 7EJ, 7EF, 7EG,7HF, 7EC)	2.5 TDI	96	04/03 – 11/09	3841	
TRANSPORTER V Bus (7HB, 7HJ, 7EB, 7EJ, 7EF, 7EG,7HF, 7EC)	2.5 TDI	120	11/03 – 11/09	3841	
TRANSPORTER V Bus (7HB, 7HJ, 7EB, 7EJ, 7EF, 7EG,7HF, 7EC)	2.5 TDI	128	04/03 – 11/09	3841	
TRANSPORTER V Bus (7HB, 7HJ, 7EB, 7EJ, 7EF, 7EG,7HF, 7EC)	2.5 TDI 4motion	96	07/04 – 11/09	3841	
TRANSPORTER V Bus (7HB, 7HJ, 7EB, 7EJ, 7EF, 7EG,7HF, 7EC)	2.5 TDI 4motion	128	07/04 – 11/09	3841	
TRANSPORTER V Bus (7HB, 7HJ, 7EB, 7EJ, 7EF, 7EG,7HF, 7EC)	3.2 V6	170	02/04 – 06/04	3841	
TRANSPORTER V Bus (7HB, 7HJ, 7EB, 7EJ, 7EF, 7EG,7HF, 7EC)	3.2 V6 4motion	173	11/03 – 11/09	3841	
TRANSPORTER V Platform/Chassis (7JD, 7JE, 7JL,7JY, 7JZ, 7FD	2.0 TDI 4motion	100	05/10 -	3841	
TRANSPORTER V Platform/Chassis (7JD, 7JE, 7JL,7JY, 7JZ, 7FD	2.0 TDI 4motion	103	09/09 -	3841	
TRANSPORTER V Platform/Chassis (7JD, 7JE, 7JL,7JY, 7JZ, 7FD	2.5 TDI	96	04/03 – 11/09	3841	
TRANSPORTER V Platform/Chassis (7JD, 7JE, 7JL,7JY, 7JZ, 7FD	2.5 TDI	128	04/03 – 11/09	3841	
TRANSPORTER V Platform/Chassis (7JD, 7JE, 7JL,7JY, 7JZ, 7FD	2.5 TDI 4motion	96	07/04 – 11/09	3841	
TRANSPORTER V Platform/Chassis (7JD, 7JE, 7JL,7JY, 7JZ, 7FD	2.5 TDI 4motion	128	04/04 – 11/09	3841	
TRANSPORTER V Platform/Chassis (7JD, 7JE, 7JL,7JY, 7JZ, 7FD	3.2 V6	170	02/04 – 11/09	3841	
TRANSPORTER V Platform/Chassis (7JD, 7JE, 7JL,7JY, 7JZ, 7FD	3.2 V6	173	08/03 – 05/06	3841	
TRANSPORTER V Platform/Chassis (7JD, 7JE, 7JL,7JY, 7JZ, 7FD	1.9 TDI	62	01/06 – 11/09	3841	
TRANSPORTER V Platform/Chassis (7JD, 7JE, 7JL,7JY, 7JZ, 7FD	1.9 TDI	63	04/03 – 11/09	3841	
TRANSPORTER V Platform/Chassis (7JD, 7JE, 7JL,7JY, 7JZ, 7FD	1.9 TDI	75	06/06 – 11/09	3841	
TRANSPORTER V Platform/Chassis (7JD, 7JE, 7JL,7JY, 7JZ, 7FD	1.9 TDI	77	04/03 – 11/09	3841	
TRANSPORTER V Platform/Chassis (7JD, 7JE, 7JL,7JY, 7JZ, 7FD	2.0	85	11/03 -	3841	
TRANSPORTER V Platform/Chassis (7JD, 7JE, 7JL,7JY, 7JZ, 7FD	2.0 BiTDI	132	09/09 -	4162	
TRANSPORTER V Platform/Chassis (7JD, 7JE, 7JL,7JY, 7JZ, 7FD	2.0 BiTDI	132	09/09 -	3841	
TRANSPORTER V Platform/Chassis (7JD, 7JE, 7JL,7JY, 7JZ, 7FD	2.0 BiTDI 4motion	132	09/09 -	3841	
TRANSPORTER V Platform/Chassis (7JD, 7JE, 7JL,7JY, 7JZ, 7FD	2.0 BiTDI 4motion	132	09/09 -	4162	
TRANSPORTER V Platform/Chassis (7JD, 7JE, 7JL,7JY, 7JZ, 7FD	2.0 TDI	62	09/09 -	3841	
TRANSPORTER V Platform/Chassis (7JD, 7JE, 7JL,7JY, 7JZ, 7FD	2.0 TDI	75	09/09 -	3841	
TRANSPORTER V Platform/Chassis (7JD, 7JE, 7JL,7JY, 7JZ, 7FD	2.0 TDI	84	05/11 -	3841	
TRANSPORTER V Platform/Chassis (7JD, 7JE, 7JL,7JY, 7JZ, 7FD	2.0 TDI	100	05/10 -	3841	
TRANSPORTER V Platform/Chassis (7JD, 7JE, 7JL,7JY, 7JZ, 7FD	2.0 TDI	103	09/09 -	3841	
TRANSPORTER V Platform/Chassis (7JD, 7JE, 7JL,7JY, 7JZ, 7FD	2.0 TSI	110	07/12 -	3841	
TRANSPORTER V Platform/Chassis (7JD, 7JE, 7JL,7JY, 7JZ, 7FD	2.0 TSI	110	07/12 -	4162	
TRANSPORTER V Platform/Chassis (7JD, 7JE, 7JL,7JY, 7JZ, 7FD	2.0 TDI	62	09/09 -		3842
TRANSPORTER V Platform/Chassis (7JD, 7JE, 7JL,7JY, 7JZ, 7FD	2.0 TDI	75	09/09 -		3842
TRANSPORTER V Platform/Chassis (7JD, 7JE, 7JL,7JY, 7JZ, 7FD	2.0 TDI	84	05/11 -		3842
TRANSPORTER V Platform/Chassis (7JD, 7JE, 7JL,7JY, 7JZ, 7FD	2.0 TDI	100	05/10 -		3842
TRANSPORTER V Platform/Chassis (7JD, 7JE, 7JL,7JY, 7JZ, 7FD	2.0 TDI	103	09/09 -		3842
TRANSPORTER V Platform/Chassis (7JD, 7JE, 7JL,7JY, 7JZ, 7FD	1.9 TDI	62	01/06 – 11/09	3841/1	
TRANSPORTER V Platform/Chassis (7JD, 7JE, 7JL,7JY, 7JZ, 7FD	1.9 TDI	63	04/03 – 11/09	3841/1	
TRANSPORTER V Platform/Chassis (7JD, 7JE, 7JL,7JY, 7JZ, 7FD	1.9 TDI	75	06/06 – 11/09	3841/1	
TRANSPORTER V Platform/Chassis (7JD, 7JE, 7JL,7JY, 7JZ, 7FD	1.9 TDI	77	04/03 – 11/09	3841/1	
TRANSPORTER V Platform/Chassis (7JD, 7JE, 7JL,7JY, 7JZ, 7FD	1.9 TDI	62	01/06 – 11/09		3842
TRANSPORTER V Platform/Chassis (7JD, 7JE, 7JL,7JY, 7JZ, 7FD	1.9 TDI	63	04/03 – 11/09		3842
TRANSPORTER V Platform/Chassis (7JD, 7JE, 7JL,7JY, 7JZ, 7FD	1.9 TDI	75	06/06 – 11/09		3842
TRANSPORTER V Platform/Chassis (7JD, 7JE, 7JL,7JY, 7JZ, 7FD	1.9 TDI	77	04/03 – 11/09		3842
TRANSPORTER V Platform/Chassis (7JD, 7JE, 7JL,7JY, 7JZ, 7FD	2.0	85	11/03 -	3841/1	
TRANSPORTER V Platform/Chassis (7JD, 7JE, 7JL,7JY, 7JZ, 7FD	2.0 BiTDI	132	09/09 -		3842
TRANSPORTER V Platform/Chassis (7JD, 7JE, 7JL,7JY, 7JZ, 7FD	2.0 TSI	110	07/12 -		3842
TRANSPORTER V Platform/Chassis (7JD, 7JE, 7JL,7JY, 7JZ, 7FD	2.5 TDI	128	04/03 – 11/09	3841/1	
TRANSPORTER V Platform/Chassis (7JD, 7JE, 7JL,7JY, 7JZ, 7FD	2.5 TDI	96	04/03 – 11/09		3842

MAKE & MODEL		KW	YEAR		
VOLKSWAGEN					
TRANSPORTER V Platform/Chassis (7JD, 7JE, 7JL,7JY, 7JZ, 7FD	2.5 TDI	128	04/03 – 11/09		3842
TRANSPORTER V Platform/Chassis (7JD, 7JE, 7JL,7JY, 7JZ, 7FD	2.5 TDI 4motion	96	07/04 – 11/09		3842
TRANSPORTER V Platform/Chassis (7JD, 7JE, 7JL,7JY, 7JZ, 7FD	2.5 TDI 4motion	128	04/04 – 11/09		3842
TRANSPORTER V Platform/Chassis (7JD, 7JE, 7JL,7JY, 7JZ, 7FD	2.0	85	11/03 -		3842
TRANSPORTER V Platform/Chassis (7JD, 7JE, 7JL,7JY, 7JZ, 7FD	2.0 BiTDI 4motion	132	09/09 -		3842
TRANSPORTER V Platform/Chassis (7JD, 7JE, 7JL,7JY, 7JZ, 7FD	2.0 TDI 4motion	100	05/10 -		3842
TRANSPORTER V Platform/Chassis (7JD, 7JE, 7JL,7JY, 7JZ, 7FD	2.0 TDI 4motion	103	09/09 -		3842
TRANSPORTER V Platform/Chassis (7JD, 7JE, 7JL,7JY, 7JZ, 7FD	2.5 TDI	96	04/03 – 11/09	3841/1	
TRANSPORTER V Platform/Chassis (7JD, 7JE, 7JL,7JY, 7JZ, 7FD	2.5 TDI 4motion	128	04/04 – 11/09	3841/1	
TRANSPORTER V Platform/Chassis (7JD, 7JE, 7JL,7JY, 7JZ, 7FD	2.5 TDI 4motion	96	07/04 – 11/09	3841/1	
TRANSPORTER V Platform/Chassis (7JD, 7JE, 7JL,7JY, 7JZ, 7FD	3.2 V6	170	02/04 – 11/09		3842
TRANSPORTER V Platform/Chassis (7JD, 7JE, 7JL,7JY, 7JZ, 7FD	3.2 V6	173	08/03 – 05/06		3842
TRANSPORTER V Platform/Chassis (7JD, 7JE, 7JL,7JY, 7JZ, 7FD	3.2 V6	170	02/04 – 11/09	3841/1	
TRANSPORTER V Platform/Chassis (7JD, 7JE, 7JL,7JY, 7JZ, 7FD	3.2 V6	173	08/03 – 05/06	3841/1	
TRANSPORTER VI Box (SGA, SGH)	2.0 TDI	62	04/15 -	3841	
TRANSPORTER VI Box (SGA, SGH)	2.0 TDI	62	04/15 -		3842
TRANSPORTER VI Box (SGA, SGH)	2.0 TDI	62	04/15 -	4162	
TRANSPORTER VI Box (SGA, SGH)	2.0 TDI	75	04/15 -	3841	
TRANSPORTER VI Box (SGA, SGH)	2.0 TDI	75	04/15 -		3842
TRANSPORTER VI Box (SGA, SGH)	2.0 TDI	75	04/15 -	4162	
TRANSPORTER VI Box (SGA, SGH)	2.0 TDI	84	05/16 -	3841	
TRANSPORTER VI Box (SGA, SGH)	2.0 TDI	84	05/16 -		3842
TRANSPORTER VI Box (SGA, SGH)	2.0 TDI	84	05/16 -	4162	
TRANSPORTER VI Box (SGA, SGH)	2.0 TDI	103	04/15 -	3841	
TRANSPORTER VI Box (SGA, SGH)	2.0 TDI	103	04/15 -		3842
TRANSPORTER VI Box (SGA, SGH)	2.0 TDI	103	04/15 -	4162	
TRANSPORTER VI Box (SGA, SGH)	2.0 TDI	110	04/15 -	3841	
TRANSPORTER VI Box (SGA, SGH)	2.0 TDI	110	04/15 -		3842
TRANSPORTER VI Box (SGA, SGH)	2.0 TDI	110	04/15 -	4162	
TRANSPORTER VI Box (SGA, SGH)	2.0 TDI	132	04/15 -	3841	
TRANSPORTER VI Box (SGA, SGH)	2.0 TDI	132	04/15 -		3842
TRANSPORTER VI Box (SGA, SGH)	2.0 TDI	132	04/15 -	4162	
TRANSPORTER VI Box (SGA, SGH)	2.0 TDI	150	06/15 -	3841	
TRANSPORTER VI Box (SGA, SGH)	2.0 TDI	150	06/15 -		3842
TRANSPORTER VI Box (SGA, SGH)	2.0 TDI	150	06/15 -	4162	
TRANSPORTER VI Box (SGA, SGH)	2.0 TDI 4motion	103	06/15 -	3841	
TRANSPORTER VI Box (SGA, SGH)	2.0 TDI 4motion	103	06/15 -		3842
TRANSPORTER VI Box (SGA, SGH)	2.0 TDI 4motion	103	06/15 -	4162	
TRANSPORTER VI Box (SGA, SGH)	2.0 TDI 4motion	110	08/15 -	3841	
TRANSPORTER VI Box (SGA, SGH)	2.0 TDI 4motion	110	08/15 -		3842
TRANSPORTER VI Box (SGA, SGH)	2.0 TDI 4motion	110	08/15 -	4162	
TRANSPORTER VI Box (SGA, SGH)	2.0 TDI 4motion	132	06/15 -	3841	
TRANSPORTER VI Box (SGA, SGH)	2.0 TDI 4motion	132	06/15 -		3842
TRANSPORTER VI Box (SGA, SGH)	2.0 TDI 4motion	132	06/15 -	4162	
TRANSPORTER VI Box (SGA, SGH)	2.0 TDI 4motion	150	06/15 -	3841	
TRANSPORTER VI Box (SGA, SGH)	2.0 TDI 4motion	150	06/15 -		3842
TRANSPORTER VI Box (SGA, SGH)	2.0 TDI 4motion	150	06/15 -	4162	
TRANSPORTER VI Box (SGA, SGH)	2.0 TSI	110	04/15 -	3841	
TRANSPORTER VI Box (SGA, SGH)	2.0 TSI	110	04/15 -		3842
TRANSPORTER VI Box (SGA, SGH)	2.0 TSI	110	04/15 -	4162	
TRANSPORTER VI Box (SGA, SGH)	2.0 TSI	150	04/15 -	3841	
TRANSPORTER VI Box (SGA, SGH)	2.0 TSI	150	04/15 -		3842
TRANSPORTER VI Box (SGA, SGH)	2.0 TSI	150	04/15 -	4162	
TRANSPORTER VI Box (SGA, SGH)	2.0 TSI 4motion	150	06/15 -	3841	
TRANSPORTER VI Box (SGA, SGH)	2.0 TSI 4motion	150	06/15 -		3842
TRANSPORTER VI Box (SGA, SGH)	2.0 TSI 4motion	150	06/15 -	4162	
TRANSPORTER VI Bus (SGB, SGG, SGJ)	2.0 TDI	62	04/15 -	3841	
TRANSPORTER VI Bus (SGB, SGG, SGJ)	2.0 TDI	62	04/15 -		3842
TRANSPORTER VI Bus (SGB, SGG, SGJ)	2.0 TDI	62	04/15 -	4162	
TRANSPORTER VI Bus (SGB, SGG, SGJ)	2.0 TDI	75	04/15 -	3841	
TRANSPORTER VI Bus (SGB, SGG, SGJ)	2.0 TDI	75	04/15 -		3842
TRANSPORTER VI Bus (SGB, SGG, SGJ)	2.0 TDI	75	04/15 -	4162	
TRANSPORTER VI Bus (SGB, SGG, SGJ)	2.0 TDI	84	05/16 -	3841	
TRANSPORTER VI Bus (SGB, SGG, SGJ)	2.0 TDI	84	05/16 -		3842
TRANSPORTER VI Bus (SGB, SGG, SGJ)	2.0 TDI	84	05/16 -	4162	
TRANSPORTER VI Bus (SGB, SGG, SGJ)	2.0 TDI	103	04/15 -	3841	
TRANSPORTER VI Bus (SGB, SGG, SGJ)	2.0 TDI	103	04/15 -		3842
TRANSPORTER VI Bus (SGB, SGG, SGJ)	2.0 TDI	103	04/15 -	4162	
TRANSPORTER VI Bus (SGB, SGG, SGJ)	2.0 TDI	110	04/15 -	3841	
TRANSPORTER VI Bus (SGB, SGG, SGJ)	2.0 TDI	110	04/15 -		3842
TRANSPORTER VI Bus (SGB, SGG, SGJ)	2.0 TDI	110	04/15 -	4162	

MAKE & MODEL		KW	YEAR		
VOLKSWAGEN					
TRANSPORTER VI Bus (SGB, SGG, SGJ)	2.0 TDI	132	04/15 -	3841	
TRANSPORTER VI Bus (SGB, SGG, SGJ)	2.0 TDI	132	04/15 -		3842
TRANSPORTER VI Bus (SGB, SGG, SGJ)	2.0 TDI	132	04/15 -	4162	
TRANSPORTER VI Bus (SGB, SGG, SGJ)	2.0 TDI	150	06/15 -	3841	
TRANSPORTER VI Bus (SGB, SGG, SGJ)	2.0 TDI	150	06/15 -		3842
TRANSPORTER VI Bus (SGB, SGG, SGJ)	2.0 TDI	150	06/15 -	4162	
TRANSPORTER VI Bus (SGB, SGG, SGJ)	2.0 TDI 4motion	103	06/15 -	3841	
TRANSPORTER VI Bus (SGB, SGG, SGJ)	2.0 TDI 4motion	103	06/15 -		3842
TRANSPORTER VI Bus (SGB, SGG, SGJ)	2.0 TDI 4motion	103	06/15 -	4162	
TRANSPORTER VI Bus (SGB, SGG, SGJ)	2.0 TDI 4motion	110	08/15 -	3841	
TRANSPORTER VI Bus (SGB, SGG, SGJ)	2.0 TDI 4motion	110	08/15 -		3842
TRANSPORTER VI Bus (SGB, SGG, SGJ)	2.0 TDI 4motion	110	08/15 -	4162	
TRANSPORTER VI Bus (SGB, SGG, SGJ)	2.0 TDI 4motion	132	06/15 -	3841	
TRANSPORTER VI Bus (SGB, SGG, SGJ)	2.0 TDI 4motion	132	06/15 -		3842
TRANSPORTER VI Bus (SGB, SGG, SGJ)	2.0 TDI 4motion	132	06/15 -	4162	
TRANSPORTER VI Bus (SGB, SGG, SGJ)	2.0 TDI 4motion	150	06/15 -	3841	
TRANSPORTER VI Bus (SGB, SGG, SGJ)	2.0 TDI 4motion	150	06/15 -		3842
TRANSPORTER VI Bus (SGB, SGG, SGJ)	2.0 TDI 4motion	150	06/15 -	4162	
TRANSPORTER VI Bus (SGB, SGG, SGJ)	2.0 TSI	110	04/15 -	3841	
TRANSPORTER VI Bus (SGB, SGG, SGJ)	2.0 TSI	110	04/15 -		3842
TRANSPORTER VI Bus (SGB, SGG, SGJ)	2.0 TSI	110	04/15 -	4162	
TRANSPORTER VI Bus (SGB, SGG, SGJ)	2.0 TSI	150	04/15 -	3841	
TRANSPORTER VI Bus (SGB, SGG, SGJ)	2.0 TSI	150	04/15 -		3842
TRANSPORTER VI Bus (SGB, SGG, SGJ)	2.0 TSI	150	04/15 -	4162	
TRANSPORTER VI Bus (SGB, SGG, SGJ)	2.0 TSI 4motion	150	06/15 -	3841	
TRANSPORTER VI Bus (SGB, SGG, SGJ)	2.0 TSI 4motion	150	06/15 -		3842
TRANSPORTER VI Bus (SGB, SGG, SGJ)	2.0 TSI 4motion	150	06/15 -	4162	
TRANSPORTER VI Platform/Chassis (SFD, SFE, SFL,SFZ)	2.0 TDI	62	04/15 -	4162	
TRANSPORTER VI Platform/Chassis (SFD, SFE, SFL,SFZ)	2.0 TDI	75	04/15 -	4162	
TRANSPORTER VI Platform/Chassis (SFD, SFE, SFL,SFZ)	2.0 TDI	84	05/16 -	4162	
TRANSPORTER VI Platform/Chassis (SFD, SFE, SFL,SFZ)	2.0 TDI	103	04/15 -	4162	
TRANSPORTER VI Platform/Chassis (SFD, SFE, SFL,SFZ)	2.0 TDI	110	08/15 -	4162	
TRANSPORTER VI Platform/Chassis (SFD, SFE, SFL,SFZ)	2.0 TDI	132	04/15 -	4162	
TRANSPORTER VI Platform/Chassis (SFD, SFE, SFL,SFZ)	2.0 TDI	150	05/16 -	4162	
TRANSPORTER VI Platform/Chassis (SFD, SFE, SFL,SFZ)	2.0 TDI 4motion	103	06/15 -	4162	
TRANSPORTER VI Platform/Chassis (SFD, SFE, SFL,SFZ)	2.0 TDI 4motion	110	05/16 -	4162	
TRANSPORTER VI Platform/Chassis (SFD, SFE, SFL,SFZ)	2.0 TDI 4motion	132	06/15 -	4162	
TRANSPORTER VI Platform/Chassis (SFD, SFE, SFL,SFZ)	2.0 TSI	110	04/15 -	4162	
TRANSPORTER VI Platform/Chassis (SFD, SFE, SFL,SFZ)	2.0 TDI	62	04/15 -	3841	
TRANSPORTER VI Platform/Chassis (SFD, SFE, SFL,SFZ)	2.0 TDI	75	04/15 -	3841	
TRANSPORTER VI Platform/Chassis (SFD, SFE, SFL,SFZ)	2.0 TDI	84	05/16 -	3841	
TRANSPORTER VI Platform/Chassis (SFD, SFE, SFL,SFZ)	2.0 TDI	103	04/15 -	3841	
TRANSPORTER VI Platform/Chassis (SFD, SFE, SFL,SFZ)	2.0 TDI	110	08/15 -	3841	
TRANSPORTER VI Platform/Chassis (SFD, SFE, SFL,SFZ)	2.0 TDI	132	04/15 -	3841	
TRANSPORTER VI Platform/Chassis (SFD, SFE, SFL,SFZ)	2.0 TDI	150	05/16 -	3841	
TRANSPORTER VI Platform/Chassis (SFD, SFE, SFL,SFZ)	2.0 TDI 4motion	103	06/15 -	3841	
TRANSPORTER VI Platform/Chassis (SFD, SFE, SFL,SFZ)	2.0 TDI 4motion	110	05/16 -	3841	
TRANSPORTER VI Platform/Chassis (SFD, SFE, SFL,SFZ)	2.0 TDI 4motion	132	06/15 -	3841	
TRANSPORTER VI Platform/Chassis (SFD, SFE, SFL,SFZ)	2.0 TSI	110	04/15 -	3841	
TRANSPORTER VI Platform/Chassis (SFD, SFE, SFL,SFZ)	2.0 TDI	62	04/15 -		3842
TRANSPORTER VI Platform/Chassis (SFD, SFE, SFL,SFZ)	2.0 TDI	75	04/15 -		3842
TRANSPORTER VI Platform/Chassis (SFD, SFE, SFL,SFZ)	2.0 TDI	84	05/16 -		3842
TRANSPORTER VI Platform/Chassis (SFD, SFE, SFL,SFZ)	2.0 TDI	103	04/15 -		3842
TRANSPORTER VI Platform/Chassis (SFD, SFE, SFL,SFZ)	2.0 TDI	110	08/15 -		3842
TRANSPORTER VI Platform/Chassis (SFD, SFE, SFL,SFZ)	2.0 TDI	132	04/15 -		3842
TRANSPORTER VI Platform/Chassis (SFD, SFE, SFL,SFZ)	2.0 TDI	150	05/16 -		3842
TRANSPORTER VI Platform/Chassis (SFD, SFE, SFL,SFZ)	2.0 TSI	110	04/15 -		3842
TRANSPORTER VI Platform/Chassis (SFD, SFE, SFL,SFZ)	2.0 TDI 4motion	103	06/15 -		3842
TRANSPORTER VI Platform/Chassis (SFD, SFE, SFL,SFZ)	2.0 TDI 4motion	110	05/16 -		3842
TRANSPORTER VI Platform/Chassis (SFD, SFE, SFL,SFZ)	2.0 TDI 4motion	132	06/15 -		3842
UP	10	44	08/11 -	3782/1	
UP	10	55	08/11 -	3782/1	
UP	1.0 EcoFuel	50	11/12 -	3782/1	
UP	e-Up	60	07/13 -	3782	
VENTO (1H2)	14	40	11/91 – 09/98	3538	
VENTO (1H2)	14	40	11/91 – 09/98	3585	
VENTO (1H2)	14	44	11/91 – 09/98	3538	
VENTO (1H2)	14	44	11/91 – 09/98	3585	
VENTO (1H2)	16	55	09/92 – 09/98	3538	
VENTO (1H2)	16	55	09/92 – 09/98	3551	
VENTO (1H2)	16	55	09/92 – 09/98	3585	

MAKE & MODEL   		KW	YEAR		
VOLKSWAGEN					
VENTO (1H2)	16	74	10/94 – 09/98		3529
VENTO (1H2)	16	74	10/94 – 09/98	3531	
VENTO (1H2)	16	74	10/94 – 09/98	3551	
VENTO (1H2)	18	55	11/91 – 09/98	3538	
VENTO (1H2)	18	55	11/91 – 09/98	3551	
VENTO (1H2)	18	55	11/91 – 09/98	3585	
VENTO (1H2)	18	66	11/91 – 09/98		3529
VENTO (1H2)	18	66	11/91 – 09/98	3531	
VENTO (1H2)	18	66	11/91 – 09/98	3551	
VENTO (1H2)	18	66	11/91 – 09/98	3585	
VENTO (1H2)	20	85	11/91 – 09/98		3529
VENTO (1H2)	20	85	11/91 – 09/98		3529/1
VENTO (1H2)	20	85	11/91 – 09/98	3531	
VENTO (1H2)	20	85	11/91 – 09/98	3551	
VENTO (1H2)	1.4	40	11/91 – 09/98	3444	
VENTO (1H2)	1.4	44	11/91 – 09/98	3444	
VENTO (1H2)	1.6	55	09/92 – 09/98	3444	
VENTO (1H2)	1.8	55	11/91 – 09/98	3444	
VENTO (1H2)	1.8	66	11/91 – 09/98	3444	
VENTO (1H2)	1.9 D	48	11/91 – 09/98	3444	
VENTO (1H2)	1.9 D	48	11/91 – 09/98	3538	
VENTO (1H2)	1.9 D	48	11/91 – 09/98	3585	
VENTO (1H2)	1.9 D	48	11/91 – 09/98	3637	
VENTO (1H2)	1.9 SDI	47	04/97 – 09/98	3538	
VENTO (1H2)	1.9 SDI	47	04/97 – 09/98	3637	
VENTO (1H2)	1.9 TD	55	11/91 – 09/98	3444	
VENTO (1H2)	1.9 TD	55	11/91 – 09/98	3551	
VENTO (1H2)	1.9 TD	55	11/91 – 09/98	3585	
VENTO (1H2)	1.9 TDI	66	09/93 – 09/98		3529
VENTO (1H2)	1.9 TDI	66	09/93 – 09/98	3531	
VENTO (1H2)	1.9 TDI	66	09/93 – 09/98	3551	
VENTO (1H2)	1.9 TDI	81	04/96 – 09/98		3529/1
VENTO (1H2)	1.9 TDI	81	04/96 – 09/98	3531	
VENTO (1H2)	2.0 GL	62	11/91 – 07/98		3529
VENTO (1H2)	2.0 GL	62	11/91 – 07/98		3529/1
VENTO (1H2)	2.0 GL	62	11/91 – 07/98	3531	
VENTO (1H2)	2.0 GL	62	11/91 – 07/98	3551	
VENTO (1H2)	2.0 GL	79	05/96 – 12/97		3529
VENTO (1H2)	2.0 GL	79	05/96 – 12/97		3529/1
VENTO (1H2)	2.8 VR6	120	08/95 – 04/96		3529
VENTO (1H2)	2.8 VR6	120	08/95 – 04/96		3529/1
VENTO (1H2)	2.8 VR6	128	01/92 – 09/98		3529
VENTO (1H2)	2.8 VR6	128	01/92 – 09/98		3529/1
VOYAGE	1.0 Flex	56	07/08 -	3566	
VOYAGE	1.6 Flex	74	07/08 -	3566	
VOLVO					
66	DL 1.1	33	08/75 – 08/78		3326
66	DL 1.1	33	08/75 – 08/78	3360	
66	DL 1.1	33	08/75 – 08/78	3361	
66	GL 1.3	42	08/75 – 08/78		3326
66	GL 1.3	42	08/75 – 08/78	3360	
66	GL 1.3	42	08/75 – 08/78	3361	
780	29	108	08/87 – 07/90	3641	
780	29	108	08/87 – 07/90		3642
780	29	115	08/86 – 07/87	3641	
780	29	115	08/86 – 07/87		3642
780	2.4 D	90	04/86 – 07/90	3641	
780	2.4 D	90	04/86 – 07/90		3642
240 (P242, P244)	2.0	60	08/74 – 07/76	3373	
240 (P242, P244)	2.0	66	08/76 – 07/79	3373	
240 (P242, P244)	2.0	71	09/78 – 08/83	3373	
240 (P242, P244)	2.0	76	08/84 – 07/85	3373	
240 (P242, P244)	2.0	82	09/88 – 12/93	3373	
240 (P242, P244)	2.0	89	09/84 – 12/93	3373	
240 (P242, P244)	2.0	100	10/82 – 08/84	3373	
240 (P242, P244)	2.1	71	08/74 – 07/75	3373	
240 (P242, P244)	2.1	74	08/75 – 07/80	3373	
240 (P242, P244)	2.1	79	08/80 – 07/84	3373	
240 (P242, P244)	2.1	90	08/74 – 07/80	3373	
240 (P242, P244)	2.1 Turbo	114	08/80 – 07/84	3373	
240 (P242, P244)	2.3	81	08/84 – 07/86	3373	

MAKE & MODEL		KW	YEAR		
VOLVO					
240 (P242, P244)	2.3	82	08/80 – 07/84	3373	
240 (P242, P244)	2.3	83	08/86 – 07/87	3373	
240 (P242, P244)	2.3	85	08/86 – 12/88	3373	
240 (P242, P244)	2.3	96	08/83 – 07/85	3373	
240 (P242, P244)	2.3	98	08/84 – 12/89	3373	
240 (P242, P244)	2.3	100	08/80 – 07/83	3373	
240 (P242, P244)	2.3	103	08/78 – 07/80	3373	
240 (P242, P244)	2.3 i CAT	85	08/86 – 07/93	3373	
240 (P242, P244)	2.4 Diesel	58	08/87 – 08/93	3373	
240 (P242, P244)	2.4 Diesel	60	08/78 – 07/85	3373	
240 (P242, P244)	2.7 GLT6	104	08/79 – 07/80	3373	
240 (P242, P244)	2.8	114	10/82 – 09/84	3373	
240 Kombi (P245)	2.0	60	08/74 – 07/75	3373	
240 Kombi (P245)	2.0	66	08/76 – 01/82	3373	
240 Kombi (P245)	2.0	71	08/80 – 12/84	3373	
240 Kombi (P245)	2.0	76	08/84 – 07/85	3373	
240 Kombi (P245)	2.0	82	09/88 – 12/93	3373	
240 Kombi (P245)	2.0	86	08/83 – 07/93	3373	
240 Kombi (P245)	2.0	100	10/82 – 08/84	3373	
240 Kombi (P245)	2.0 D	50	09/78 – 10/80	3373	
240 Kombi (P245)	2.1	71	08/74 – 07/75	3373	
240 Kombi (P245)	2.1	74	08/75 – 07/80	3373	
240 Kombi (P245)	2.1	79	08/80 – 07/84	3373	
240 Kombi (P245)	2.1	80	08/80 – 07/84	3373	
240 Kombi (P245)	2.1	86	01/77 – 08/78	3373	
240 Kombi (P245)	2.1	90	08/74 – 07/79	3373	
240 Kombi (P245)	2.1 Turbo	114	08/80 – 07/85	3373	
240 Kombi (P245)	2.3	81	08/84 – 07/86	3373	
240 Kombi (P245)	2.3	82	08/80 – 07/84	3373	
240 Kombi (P245)	2.3	83	08/86 – 07/87	3373	
240 Kombi (P245)	2.3	85	08/86 – 12/88	3373	
240 Kombi (P245)	2.3	96	08/84 – 07/85	3373	
240 Kombi (P245)	2.3	98	08/84 – 12/88	3373	
240 Kombi (P245)	2.3	100	01/83 – 12/84	3373	
240 Kombi (P245)	2.3 CAT	100	08/91 – 07/92	3373	
240 Kombi (P245)	2.3 i CAT	85	08/86 – 07/93	3373	
240 Kombi (P245)	2.4 Diesel	58	08/88 – 08/93	3373	
240 Kombi (P245)	2.4 Diesel	60	04/79 – 08/93	3373	
240 Kombi (P245)	2.7 GLT6	104	08/79 – 07/80	3373	
240 Kombi (P245)	2.8	95	10/81 – 09/82	3373	
240 Kombi (P245)	2.8	114	10/80 – 09/82	3373	
260 (P262, P264)	2.7	92	08/76 – 07/82	3373	
260 (P262, P264)	2.7	103	08/74 – 07/80	3373	
260 (P262, P264)	2.7	109	08/78 – 07/82	3373	
260 (P262, P264)	2.8	95	08/80 – 07/82	3373	
260 (P262, P264)	2.8	114	08/80 – 07/82	3373	
260 Coupe (P262)	2.7	103	08/77 – 07/78	3373	
260 Estate (P265)	2.7	92	08/75 – 07/77	3373	
260 Estate (P265)	2.7	103	07/75 – 07/82	3373	
260 Estate (P265)	2.7	109	10/78 – 07/82	3373	
260 Estate (P265)	2.8	114	08/80 – 07/82	3373	
340-360 (343, 345)	13	49	01/89 – 12/90	3378	
340-360 (343, 345)	13	49	01/89 – 12/90	3490	
340-360 (343, 345)	14	46	08/82 – 08/85	3378	
340-360 (343, 345)	14	46	08/82 – 08/85	3490	
340-360 (343, 345)	14	47	08/79 – 07/83	3378	
340-360 (343, 345)	14	47	08/79 – 07/83	3490	
340-360 (343, 345)	14	50	08/86 – 12/88	3378	
340-360 (343, 345)	14	50	08/86 – 12/88	3490	
340-360 (343, 345)	14	51	08/75 – 07/83	3378	
340-360 (343, 345)	14	51	08/87 – 07/88	3378	
340-360 (343, 345)	14	51	08/75 – 07/83	3490	
340-360 (343, 345)	14	51	08/87 – 07/88	3490	
340-360 (343, 345)	14	52	08/83 – 07/86	3378	
340-360 (343, 345)	14	52	08/83 – 07/86	3490	
340-360 (343, 345)	17	59	08/85 – 07/91	3378	
340-360 (343, 345)	17	59	08/85 – 07/91	3490	
340-360 (343, 345)	20	65	08/80 – 07/84	3378	
340-360 (343, 345)	20	65	08/80 – 07/84	3490	
340-360 (343, 345)	20	68	08/83 – 07/84	3378	
340-360 (343, 345)	20	68	08/83 – 07/84	3490	

BESER®

MAKE & MODEL		KW	YEAR		
VOLVO					
340-360 (343, 345)	20	70	08/80 – 07/83	3378	
340-360 (343, 345)	20	70	08/80 – 07/83	3490	
340-360 (343, 345)	20	77	08/84 – 07/87	3378	
340-360 (343, 345)	20	77	08/84 – 07/87	3490	
340-360 (343, 345)	20	80	08/88 – 07/89	3378	
340-360 (343, 345)	20	80	08/88 – 07/89	3490	
340-360 (343, 345)	20	81	08/87 – 07/88	3378	
340-360 (343, 345)	20	81	08/87 – 07/88	3490	
340-360 (343, 345)	20	82	08/86 – 07/88	3378	
340-360 (343, 345)	20	82	08/86 – 07/88	3490	
340-360 (343, 345)	20	83	08/82 – 07/84	3378	
340-360 (343, 345)	20	83	08/82 – 07/84	3490	
340-360 (343, 345)	20	85	08/82 – 07/84	3378	
340-360 (343, 345)	20	85	08/82 – 07/84	3490	
340-360 (343, 345)	20	87	08/84 – 07/86	3378	
340-360 (343, 345)	20	87	08/84 – 07/86	3490	
340-360 (343, 345)	21	90	08/81 – 07/82	3378	
340-360 (343, 345)	21	90	08/81 – 07/82	3490	
340-360 (343, 345)	1.6 Diesel	40	08/84 – 07/91	3378	
340-360 (343, 345)	1.6 Diesel	40	08/84 – 07/91	3490	
340-360 Saloon (344)	13	49	01/89 – 12/90	3378	
340-360 Saloon (344)	13	49	01/89 – 12/90	3490	
340-360 Saloon (344)	14	46	01/83 – 12/86	3378	
340-360 Saloon (344)	14	46	01/83 – 12/86	3490	
340-360 Saloon (344)	14	50	08/86 – 12/88	3378	
340-360 Saloon (344)	14	50	08/86 – 12/88	3490	
340-360 Saloon (344)	14	51	08/87 – 07/88	3378	
340-360 Saloon (344)	14	51	08/87 – 07/88	3490	
340-360 Saloon (344)	14	53	08/83 – 07/86	3378	
340-360 Saloon (344)	14	53	08/83 – 07/86	3490	
340-360 Saloon (344)	17	59	08/85 – 07/91	3378	
340-360 Saloon (344)	17	59	08/85 – 07/91	3490	
340-360 Saloon (344)	20	66	08/82 – 07/84	3378	
340-360 Saloon (344)	20	66	08/82 – 07/84	3490	
340-360 Saloon (344)	20	68	08/83 – 07/84	3378	
340-360 Saloon (344)	20	68	08/83 – 07/84	3490	
340-360 Saloon (344)	20	75	08/84 – 07/90	3378	
340-360 Saloon (344)	20	75	08/84 – 07/90	3490	
340-360 Saloon (344)	20	77	08/84 – 07/87	3378	
340-360 Saloon (344)	20	77	08/84 – 07/87	3490	
340-360 Saloon (344)	20	80	08/88 – 07/89	3378	
340-360 Saloon (344)	20	80	08/88 – 07/89	3490	
340-360 Saloon (344)	20	81	08/87 – 07/88	3378	
340-360 Saloon (344)	20	81	08/87 – 07/88	3490	
340-360 Saloon (344)	20	82	08/86 – 07/88	3378	
340-360 Saloon (344)	20	82	08/86 – 07/88	3490	
340-360 Saloon (344)	20	83	08/83 – 07/84	3378	
340-360 Saloon (344)	20	83	08/83 – 07/84	3490	
340-360 Saloon (344)	20	85	08/84 – 07/86	3378	
340-360 Saloon (344)	20	85	08/84 – 07/86	3490	
340-360 Saloon (344)	20	87	08/84 – 07/86	3378	
340-360 Saloon (344)	20	87	08/84 – 07/86	3490	
340-360 Saloon (344)	1.6 Diesel	40	08/84 – 07/91	3378	
340-360 Saloon (344)	1.6 Diesel	40	08/84 – 07/91	3490	
440 K (445)	16	61	09/88 – 12/96		3583
440 K (445)	16	69	09/91 – 08/93		3583
440 K (445)	17	58	09/88 – 08/92		3583
440 K (445)	17	60	09/88 – 08/89		3583
440 K (445)	17	64	09/88 – 12/96		3583
440 K (445)	17	70	08/88 – 07/89		3583
440 K (445)	17	75	08/89 – 12/96		3583
440 K (445)	17	78	09/88 – 12/96		3583
440 K (445)	18	66	08/91 – 07/96		3583
440 K (445)	18	66	09/95 – 12/96		3583
440 K (445)	20	80	08/93 – 07/96		3583
440 K (445)	20	81	08/92 – 07/95		3583
440 K (445)	1.7 Turbo	88	08/88 – 07/96		3583
440 K (445)	1.7 Turbo	90	01/91 – 12/96		3583
440 K (445)	1.9 Turbo-Diesel	66	07/94 – 12/96		3583
460 L (464)	16	61	07/92 – 07/96		3583
460 L (464)	17	58	09/89 – 08/91		3583

MAKE & MODEL   		KW	YEAR		
VOLVO					
460 L (464)	17	64	09/88 – 07/96		3583
460 L (464)	17	66	09/90 – 07/96		3583
460 L (464)	17	75	08/89 – 07/92		3583
460 L (464)	17	80	08/89 – 07/92		3583
460 L (464)	18	66	08/91 – 07/96		3583
460 L (464)	20	80	08/93 – 07/96		3583
460 L (464)	20	81	08/92 – 07/95		3583
460 L (464)	1.7 Turbo	88	08/89 – 07/96		3583
460 L (464)	1.7 Turbo	90	01/91 – 07/96		3583
460 L (464)	1.9 Turbo-Diesel	66	07/94 – 07/96		3583
480 E	17	70	08/87 – 07/89		3583
480 E	17	75	08/89 – 07/96		3583
480 E	17	78	04/86 – 07/89		3583
480 E	17	80	08/86 – 07/88		3583
480 E	20	81	08/92 – 09/95		3583
480 E	1.7 Turbo	88	08/87 – 07/96		3583
480 E	1.7 Turbo	90	01/91 – 07/96		3583
66 Estate	DL 1.1	33	10/75 – 11/79		3326
66 Estate	DL 1.1	33	10/75 – 11/79	3360	
66 Estate	DL 1.1	33	10/75 – 11/79	3361	
66 Estate	GL 1.3	42	10/75 – 11/79		3326
66 Estate	GL 1.3	42	10/75 – 11/79	3360	
66 Estate	GL 1.3	42	10/75 – 11/79	3361	
740 (744)	20	76	09/88 – 08/90	3641	
740 (744)	20	76	09/88 – 08/90		3642
740 (744)	20	82	09/90 – 08/92	3641	
740 (744)	20	82	09/90 – 08/92		3642
740 (744)	20	86	01/87 – 08/88	3641	
740 (744)	20	86	01/87 – 08/88		3642
740 (744)	20	89	08/85 – 07/92	3641	
740 (744)	20	89	08/85 – 07/92		3642
740 (744)	20	110	12/83 – 07/84	3641	
740 (744)	20	110	12/83 – 07/84		3642
740 (744)	20	118	01/86 – 08/90	3641	
740 (744)	20	118	01/86 – 08/90		3642
740 (744)	20	120	01/85 – 12/85	3641	
740 (744)	20	120	01/85 – 12/85		3642
740 (744)	20	147	09/90 – 08/92	3641	
740 (744)	20	147	09/90 – 08/92		3642
740 (744)	23	82	08/84 – 07/86	3641	
740 (744)	23	82	08/84 – 07/86		3642
740 (744)	23	83	09/85 – 12/89	3641	
740 (744)	23	83	09/85 – 12/89		3642
740 (744)	23	84	08/84 – 07/90	3641	
740 (744)	23	84	08/84 – 07/90		3642
740 (744)	23	85	08/87 – 07/92	3641	
740 (744)	23	85	08/87 – 07/92		3642
740 (744)	23	86	08/86 – 07/88	3641	
740 (744)	23	86	08/86 – 07/88		3642
740 (744)	23	95	08/83 – 07/84	3641	
740 (744)	23	95	08/83 – 07/84		3642
740 (744)	23	96	08/84 – 07/88	3641	
740 (744)	23	96	08/84 – 07/88		3642
740 (744)	23	100	08/88 07/90	3641	
740 (744)	23	100	08/88 – 07/90		3642
740 (744)	23	111	08/88 – 08/92	3641	
740 (744)	23	111	08/88 – 08/92		3642
740 (744)	23	114	08/88 – 07/91	3641	
740 (744)	23	114	08/88 – 07/91		3642
740 (744)	23	117	08/87 – 07/89	3641	
740 (744)	23	117	08/87 – 07/89		3642
740 (744)	2.0 GLE	85	04/83 – 07/84	3641	
740 (744)	2.0 GLE	85	04/83 – 07/84		3642
740 (744)	2.0 GLE	103	09/87 – 08/90	3641	
740 (744)	2.0 GLE	103	09/87 – 08/90		3642
740 (744)	2.0 Turbo	114	09/90 – 08/91	3641	
740 (744)	2.0 Turbo	114	09/90 – 08/91		3642
740 (744)	2.3 GLE	103	08/84 – 12/85	3641	
740 (744)	2.3 GLE	103	08/84 – 12/85		3642
740 (744)	2.3 Turbo	115	08/86 – 07/89	3641	
740 (744)	2.3 Turbo	115	08/86 – 07/89		3642

BESER®

MAKE & MODEL   		KW	YEAR		
VOLVO					
740 (744)	2.3 Turbo	121	08/89 – 07/90	3641	
740 (744)	2.3 Turbo	121	08/89 – 07/90		3642
740 (744)	2.3 Turbo	125	09/89 – 08/91	3641	
740 (744)	2.3 Turbo	125	09/89 – 08/91		3642
740 (744)	2.3 Turbo	134	08/85 – 12/88	3641	
740 (744)	2.3 Turbo	134	08/85 – 12/88		3642
740 (744)	2.3 Turbo	140	08/89 – 07/90	3641	
740 (744)	2.3 Turbo	140	08/89 – 07/90		3642
740 (744)	2.4 Diesel	60	08/84 – 07/92	3641	
740 (744)	2.4 Diesel	60	08/84 – 07/92		3642
740 (744)	2.4 TD	80	08/85 – 12/90	3641	
740 (744)	2.4 TD	80	08/85 – 12/90		3642
740 (744)	2.4 TD	83	08/84 – 07/90	3641	
740 (744)	2.4 TD	83	08/84 – 07/90		3642
740 (744)	2.4 TD	90	08/86 – 10/88	3641	
740 (744)	2.4 TD	90	08/86 – 10/88		3642
740 Kombi (745)	20	76	09/88 – 08/90	3641	
740 Kombi (745)	20	76	09/88 – 08/90		3642
740 Kombi (745)	20	82	08/89 – 07/91	3641	
740 Kombi (745)	20	82	08/89 – 07/91		3642
740 Kombi (745)	20	86	01/87 – 08/88	3641	
740 Kombi (745)	20	86	01/87 – 08/88		3642
740 Kombi (745)	20	89	08/85 – 07/92	3641	
740 Kombi (745)	20	89	08/85 – 07/92		3642
740 Kombi (745)	20	147	09/90 – 08/92	3641	
740 Kombi (745)	20	147	09/90 – 08/92		3642
740 Kombi (745)	23	82	08/85 – 07/86	3641	
740 Kombi (745)	23	82	08/85 – 07/86		3642
740 Kombi (745)	23	83	08/85 – 12/89	3641	
740 Kombi (745)	23	83	08/85 – 12/89		3642
740 Kombi (745)	23	84	09/85 – 07/90	3641	
740 Kombi (745)	23	84	09/85 – 07/90		3642
740 Kombi (745)	23	85	08/87 – 07/92	3641	
740 Kombi (745)	23	85	08/87 – 07/92		3642
740 Kombi (745)	23	87	01/88 – 10/90	3641	
740 Kombi (745)	23	87	01/88 – 10/90		3642
740 Kombi (745)	23	96	08/85 – 07/88	3641	
740 Kombi (745)	23	96	08/85 – 07/88		3642
740 Kombi (745)	23	100	08/89 – 07/90	3641	
740 Kombi (745)	23	100	08/89 – 07/90		3642
740 Kombi (745)	23	111	07/89 – 08/92	3641	
740 Kombi (745)	23	111	07/89 – 08/92		3642
740 Kombi (745)	23	114	08/88 – 07/90	3641	
740 Kombi (745)	23	114	08/88 – 07/90		3642
740 Kombi (745)	23	117	08/87 – 07/89	3641	
740 Kombi (745)	23	117	08/87 – 07/89		3642
740 Kombi (745)	2.0 16V	100	09/87 – 08/90	3641	
740 Kombi (745)	2.0 16V	100	09/87 – 08/90		3642
740 Kombi (745)	2.0 GLE	103	09/87 – 08/90	3641	
740 Kombi (745)	2.0 GLE	103	09/87 – 08/90		3642
740 Kombi (745)	2.0 Turbo	114	09/90 – 08/91	3641	
740 Kombi (745)	2.0 Turbo	114	09/90 – 08/91		3642
740 Kombi (745)	2.0 Turbo	115	09/87 – 8/90	3641	
740 Kombi (745)	2.0 Turbo	115	09/87 – 08/90		3642
740 Kombi (745)	2.0 Turbo	118	05/85 – 08/87	3641	
740 Kombi (745)	2.0 Turbo	118	05/85 – 08/87		3642
740 Kombi (745)	2.0 Turbo	121	05/85 – 08/87	3641	
740 Kombi (745)	2.0 Turbo	121	05/85 – 08/87		3642
740 Kombi (745)	2.3 GL	89	08/84 – 08/87	3641	
740 Kombi (745)	2.3 GL	89	08/84 – 08/87		3642
740 Kombi (745)	2.3 GLE	103	08/84 – 08/87	3641	
740 Kombi (745)	2.3 GLE	103	08/84 – 08/87		3642
740 Kombi (745)	2.3 Turbo	115	08/86 – 07/89	3641	
740 Kombi (745)	2.3 Turbo	115	08/86 – 07/89		3642
740 Kombi (745)	2.3 Turbo	121	08/89 – 07/90	3641	
740 Kombi (745)	2.3 Turbo	121	08/89 – 07/90		3642
740 Kombi (745)	2.3 Turbo	125	09/89 – 08/91	3641	
740 Kombi (745)	2.3 Turbo	125	09/89 – 08/91		3642
740 Kombi (745)	2.3 Turbo	134	08/85 – 07/88	3641	
740 Kombi (745)	2.3 Turbo	134	08/85 – 07/88		3642
740 Kombi (745)	2.3 Turbo	140	08/89 – 07/90	3641	

MAKE & MODEL		KW	YEAR		
VOLVO					
740 Kombi (745)	2.3 Turbo	140	08/89 – 07/90		3642
740 Kombi (745)	2.4 Diesel	60	08/85 – 07/88	3641	
740 Kombi (745)	2.4 Diesel	60	08/85 – 07/88		3642
740 Kombi (745)	2.4 TD Interc.	90	08/86 – 07/88	3641	
740 Kombi (745)	2.4 TD Interc.	90	08/86 – 07/88		3642
740 Kombi (745)	2.4 Turbo-Diesel	80	09/85 – 07/92	3641	
740 Kombi (745)	2.4 Turbo-Diesel	80	09/85 – 07/92		3642
760 (704, 764)	23	84	08/84 – 08/87	3641	
760 (704, 764)	23	84	08/84 – 08/87		3642
760 (704, 764)	23	121	01/88 – 07/92	3641	
760 (704, 764)	23	121	01/88 – 07/92		3642
760 (704, 764)	23	127	01/84 – 03/86	3641	
760 (704, 764)	23	127	01/84 – 03/86		3642
760 (704, 764)	23	130	08/84 – 08/87	3641	
760 (704, 764)	23	130	08/84 – 08/87		3642
760 (704, 764)	28	95	01/82 – 12/87	3641	
760 (704, 764)	28	95	01/82 – 12/87		3642
760 (704, 764)	28	125	09/87 – 08/90	3641	
760 (704, 764)	28	125	09/87 – 08/90		3642
760 (704, 764)	2.3 Turbo	115	09/87 – 08/90	3641	
760 (704, 764)	2.3 Turbo	115	09/87 – 08/90		3642
760 (704, 764)	2.3 Turbo (704)	127	08/82 – 07/84	3641	
760 (704, 764)	2.3 Turbo (704)	127	08/82 – 07/84		3642
760 (704, 764)	2.3 Turbo (704)	134	08/84 – 10/88	3641	
760 (704, 764)	2.3 Turbo (704)	134	08/84 – 10/88		3642
760 (704, 764)	2.4 D	60	01/82 – 07/92	3641	
760 (704, 764)	2.4 D	60	01/82 – 07/92		3642
760 (704, 764)	2.4 TD Interc. (704)	85	08/87 – 07/92	3641	
760 (704, 764)	2.4 TD Interc. (704)	85	08/87 – 07/92		3642
760 (704, 764)	2.4 Turbo Diesel (704)	80	04/87 – 07/92	3641	
760 (704, 764)	2.4 Turbo Diesel (704)	80	04/87 – 07/92		3642
760 (704, 764)	2.4 Turbo Diesel (704)	82	08/82 – 07/87	3641	
760 (704, 764)	2.4 Turbo Diesel (704)	82	08/82 – 07/87		3642
760 (704, 764)	2.8 (704)	105	05/86 – 08/91	3641	
760 (704, 764)	2.8 (704)	105	05/86 – 08/91		3642
760 (704, 764)	2.8 (704, 764)	115	08/81 – 07/88	3641	
760 (704, 764)	2.8 (704, 764)	115	08/81 – 07/88		3642
760 (704, 764)	2.8 (764)	108	08/86 – 07/90	3641	
760 (704, 764)	2.8 (764)	108	08/86 – 07/90		3642
760 Kombi (704, 765)	23	84	08/84 – 08/87	3641	
760 Kombi (704, 765)	23	84	08/84 – 08/87		3642
760 Kombi (704, 765)	28	125	08/84 – 08/90	3641	
760 Kombi (704, 765)	28	125	08/84 – 08/90		3642
760 Kombi (704, 765)	2.3 Turbo	115	09/87 – 08/90	3641	
760 Kombi (704, 765)	2.3 Turbo	115	09/87 – 08/90		3642
760 Kombi (704, 765)	2.3 Turbo	134	08/84 – 08/90	3641	
760 Kombi (704, 765)	2.3 Turbo	134	08/84 – 08/90		3642
760 Kombi (704, 765)	2.4 D	60	01/82 – 07/92	3641	
760 Kombi (704, 765)	2.4 D	60	01/82 – 07/92		3642
760 Kombi (704, 765)	2.4 TD Interc. (765)	85	08/87 – 07/92	3641	
760 Kombi (704, 765)	2.4 TD Interc. (765)	85	08/87 – 07/92		3642
760 Kombi (704, 765)	2.8 (765)	95	05/86 – 12/87	3641	
760 Kombi (704, 765)	2.8 (765)	95	05/86 – 12/87		3642
760 Kombi (704, 765)	2.8 (765)	105	05/86 – 08/91	3641	
760 Kombi (704, 765)	2.8 (765)	105	05/86 – 08/91		3642
760 Kombi (704, 765)	2.8 (765)	115	08/86 – 08/90	3641	
760 Kombi (704, 765)	2.8 (765)	115	08/86 – 08/90		3642
850 Estate (LW)	2.5 AWD	142	04/96 – 12/96		3642
940 (944)	20	82	01/92 – 07/94	3641	
940 (944)	20	82	01/92 – 07/94		3642
940 (944)	20	89	09/90 – 09/93	3641	
940 (944)	20	89	09/90 – 09/93		3642
940 (944)	20	102	09/90 – 09/93	3641	
940 (944)	20	102	09/90 – 09/93		3642
940 (944)	23	85	08/92 – 07/94	3641	
940 (944)	23	85	08/92 – 07/94		3642
940 (944)	23	96	08/90 – 12/94	3641	
940 (944)	23	96	08/90 – 12/94		3642
940 (944)	23	114	08/90 – 07/91	3641	
940 (944)	23	114	08/90 – 07/91		3642
940 (944)	23	118	09/90 – 09/93	3641	

MAKE & MODEL		KW	YEAR		
VOLVO					
940 (944)	23	118	09/90 – 09/93		3642
940 (944)	2.0 Turbo	114	08/90 – 12/94	3641	
940 (944)	2.0 Turbo	114	08/90 – 12/94		3642
940 (944)	2.3 Turbo	121	08/90 – 07/94	3641	
940 (944)	2.3 Turbo	121	08/90 – 07/94		3642
940 (944)	2.3 Turbo	140	08/91 – 07/93	3641	
940 (944)	2.3 Turbo	140	08/91 – 07/93		3642
940 (944)	2.4 D	60	08/90 – 12/94	3641	
940 (944)	2.4 D	60	08/90 – 12/94		3642
940 (944)	2.4 TD Intercooler	90	08/90 – 12/94	3641	
940 (944)	2.4 TD Intercooler	90	08/90 – 12/94		3642
940 (944)	2.4 Turbo Diesel	80	08/90 – 12/94	3641	
940 (944)	2.4 Turbo Diesel	80	08/90 – 12/94		3642
940 II (944)	20	89	11/94 – 12/95		3642
940 II (944)	20	102	10/94 – 05/97		3642
940 II (944)	23	85	08/94 – 07/95		3642
940 II (944)	23	96	08/94 – 10/98		3642
940 II (944)	23	113	10/94 – 05/97		3642
940 II (944)	2.0 GLT	139	10/94 – 05/97		3642
940 II (944)	2.0 Turbo	114	04/96 – 10/98		3642
940 II (944)	2.3 ti	99	01/95 – 10/98		3642
940 II (944)	2.3 Turbo	121	08/94 – 10/98		3642
940 II (944)	2.3 Turbo	126	01/95 – 12/98		3642
940 II (944)	2.4 TD Interc.	90	08/94 – 10/98		3642
940 II Estate (945)	20	89	11/94 – 12/95		3642
940 II Estate (945)	20	102	10/94 – 05/97		3642
940 II Estate (945)	23	85	08/94 – 07/95		3642
940 II Estate (945)	23	96	08/94 – 10/98		3642
940 II Estate (945)	23	113	10/94 – 05/97		3642
940 II Estate (945)	2.0 GLT	139	10/94 – 05/97		3642
940 II Estate (945)	2.0 Turbo	114	04/96 – 10/98		3642
940 II Estate (945)	2.3 ti	99	01/95 – 10/98		3642
940 II Estate (945)	2.3 Turbo	121	08/94 – 10/98		3642
940 II Estate (945)	2.3 Turbo	126	08/95 – 10/98		3642
940 II Estate (945)	2.4 TD Interc.	90	08/94 – 10/98		3642
940 Kombi (945)	20	82	01/92 – 07/94	3641	
940 Kombi (945)	20	82	01/92 – 07/94		3642
940 Kombi (945)	20	89	09/90 – 09/93	3641	
940 Kombi (945)	20	89	09/90 – 09/93		3642
940 Kombi (945)	23	85	08/92 – 07/94	3641	
940 Kombi (945)	23	85	08/92 – 07/94		3642
940 Kombi (945)	23	96	08/90 – 12/94	3641	
940 Kombi (945)	23	96	08/90 – 12/94		3642
940 Kombi (945)	23	114	08/90 – 07/91	3641	
940 Kombi (945)	23	114	08/90 – 07/91		3642
940 Kombi (945)	2.0 Turbo	114	01/91 – 07/95	3641	
940 Kombi (945)	2.0 Turbo	114	01/91 – 07/95		3642
940 Kombi (945)	2.3 Turbo	121	08/90 – 07/94	3641	
940 Kombi (945)	2.3 Turbo	121	08/90 – 07/94		3642
940 Kombi (945)	2.3 Turbo	140	08/91 – 07/93	3641	
940 Kombi (945)	2.3 Turbo	140	08/91 – 07/93		3642
940 Kombi (945)	2.4 D	60	08/90 – 07/95	3641	
940 Kombi (945)	2.4 D	60	08/90 – 07/95		3642
940 Kombi (945)	2.4 TD Intercooler	90	08/90 – 08/94	3641	
940 Kombi (945)	2.4 TD Intercooler	90	08/90 – 08/94		3642
940 Kombi (945)	2.4 Turbo Diesel	80	08/90 – 07/94	3641	
940 Kombi (945)	2.4 Turbo Diesel	80	08/90 – 07/94		3642
960 (964)	20	103	09/90 – 08/93	3641	
960 (964)	20	103	09/90 – 08/93		3642
960 (964)	20	140	08/90 – 09/93	3641	
960 (964)	20	140	08/90 – 09/93		3642
960 (964)	29	150	08/90 – 07/94	3641	
960 (964)	29	150	08/90 – 07/94		3642
960 (964)	2.3 Turbo	121	09/90 – 08/93	3641	
960 (964)	2.3 Turbo	121	09/90 – 08/93		3642
960 (964)	2.4 TD Interc.	85	09/91 – 07/94	3641	
960 (964)	2.4 TD Interc.	85	09/91 – 07/94		3642
960 (964)	2.8 GL	108	09/90 – 05/92	3641	
960 (964)	2.8 GL	108	09/90 – 05/92		3642
960 II (964)	25	125	07/94 – 12/96		3642
960 II (964)	29	150	07/94 – 12/96		3642

MAKE & MODEL		KW	YEAR		
VOLVO					
960 II Estate (965)	25	125	08/94 – 12/96		3642
960 II Estate (965)	29	150	09/94 – 12/96		3642
960 Kombi (965)	20	103	09/90 – 08/93	3641	
960 Kombi (965)	20	103	09/90 – 08/93		3642
960 Kombi (965)	20	140	08/90 – 09/93	3641	
960 Kombi (965)	20	140	08/90 – 09/93		3642
960 Kombi (965)	28	108	09/90 – 05/92	3641	
960 Kombi (965)	28	108	09/90 – 05/92		3642
960 Kombi (965)	29	150	08/90 – 07/94	3641	
960 Kombi (965)	29	150	08/90 – 07/94		3642
960 Kombi (965)	2.3 Turbo	121	09/90 – 08/93	3641	
960 Kombi (965)	2.3 Turbo	121	09/90 – 08/93		3642
960 Kombi (965)	2.4 TD Interc.	85	09/91 – 07/94	3641	
960 Kombi (965)	2.4 TD Interc.	85	09/91 – 07/94		3642
960 Kombi (965)	2.4 Tdi	90	09/90 – 08/93	3641	
960 Kombi (965)	2.4 Tdi	90	09/90 – 08/93		3642
C30	16	74	10/06 – 12/12	3885	
C30	18	92	10/06 – 12/12	3885	
C30	20	107	10/06 – 12/12	3885	
C30	1.6 D	80	10/06 – 12/12	3885	
C30	1.6 D2	84	10/10 – 12/12	3885	
C30	1.8 FlexFuel	92	01/07 – 12/12	3885	
C30	2.0 D	100	10/06 – 12/12	3885	
C30	2.0 FlexFuel	107	01/10 – 12/12	3885	
C30	2.4 i	125	10/06 – 12/12	3885	
C30	D3	110	10/10 – 12/12	3885	
C30	D4	130	10/10 – 12/12	3885	
C30	D5	120	10/06 – 12/12	3885	
C30	D5	132	10/06 – 12/12	3885	
C30	Electric	82	12/10 – 12/12	3885	
C30	T5	162	10/06 – 12/12	3885	
C30	T5	169	03/07 – 12/12	3885	
C70 II Convertible	24	103	03/06 – 10/09	3885	
C70 II Convertible	2.0 D	100	01/08 – 10/09	3885	
C70 II Convertible	2.4 D	120	03/07 – 06/13	3885	
C70 II Convertible	2.4 i	125	03/06 – 10/09	3885	
C70 II Convertible	D3	110	10/10 – 06/13	3885	
C70 II Convertible	D4	130	10/10 – 06/13	3885	
C70 II Convertible	D5	132	03/06 – 06/13	3885	
C70 II Convertible	T5	162	03/06 – 02/07	3885	
C70 II Convertible	T5	169	03/07 – 10/09	3885	
S40 (MS)	24	125	06/06 -		3853/1
S40 (MS)	24	125	06/06 -	3885	
S40 (MS)	25	162	06/06 -		3853/1
S40 (MS)	25	162	06/06 -	3885	
S40 I (VS)	16	77	09/95 – 08/99		4062
S40 I (VS)	16	80	03/99 – 12/03		4062
S40 I (VS)	18	85	06/01 – 08/03		4062
S40 I (VS)	18	85	07/95 – 08/99		4062
S40 I (VS)	18	90	03/99 – 12/03		4062
S40 I (VS)	20	100	07/95 – 12/03		4062
S40 I (VS)	20	103	07/95 – 08/99		4062
S40 I (VS)	1.8 i	90	06/01 – 12/03		4062
S40 I (VS)	1.8 i	92	03/98 – 12/03		4062
S40 I (VS)	1.9 DI	70	03/99 – 07/00		4062
S40 I (VS)	1.9 DI	75	07/00 – 12/03		4062
S40 I (VS)	1.9 DI	85	07/00 – 12/03		4062
S40 I (VS)	1.9 T4	147	05/97 – 07/00		4062
S40 I (VS)	1.9 TD	66	07/95 – 08/99		4062
S40 I (VS)	2.0 T	118	10/97 – 12/03		4062
S40 I (VS)	2.0 T	120	06/01 – 12/03		4062
S40 I (VS)	2.0 T	121	07/00 – 06/01		4062
S40 I (VS)	2.0 T4	147	07/00 – 12/03		4062
S40 II (MS)	16	74	01/05 – 12/12	3885	
S40 II (MS)	18	92	04/04 – 12/06	3885	
S40 II (MS)	20	107	10/06 – 12/12	3885	
S40 II (MS)	24	103	01/04 – 12/10	3885	
S40 II (MS)	24	125	01/04 – 12/10	3885	
S40 II (MS)	1.6 D	81	01/05 – 12/12	3885	
S40 II (MS)	1.6 D2	84	10/10 – 12/12	3885	
S40 II (MS)	1.8 FlexFuel	92	01/06 – 12/10	3885	

MAKE & MODEL		KW	YEAR		
VOLVO					
S40 II (MS)	2.0 D	100	01/04 – 12/10	3885	
S40 II (MS)	2.0 D4	96	07/05 – 12/12	3885	
S40 II (MS)	2.0 F	107	10/09 – 12/12	3885	
S40 II (MS)	2.4 AWD	125	08/06 – 12/12	3885	
S40 II (MS)	2.4 D5	132	03/06 – 12/10	3885	
S40 II (MS)	D3	110	10/10 – 12/12	3885	
S40 II (MS)	D4	130	10/10 – 12/12	3885	
S40 II (MS)	T5	162	01/04 – 12/07	3885	
S40 II (MS)	T5	169	03/07 – 12/12	3885	
S40 II (MS)	T5 AWD	162	04/04 – 12/07	3885	
S40 II (MS)	T5 AWD	169	03/07 – 12/10	3885	
S60 I	24	103	11/00 – 04/10		3918
S60 I	24	103	11/00 – 04/10	3919	
S60 I	24	125	11/00 – 04/10		3918
S60 I	24	125	11/00 – 04/10	3919	
S60 I	2.0 T	132	07/00 – 04/10		3918
S60 I	2.0 T	132	07/00 – 04/10	3919	
S60 I	2.3 T5	195	07/00 – 09/02		3918
S60 I	2.3 T5	195	07/00 – 09/02	3919	
S60 I	2.4 AWD	191	02/04 – 04/10		3918
S60 I	2.4 AWD	191	02/04 – 04/10	3919	
S60 I	2.4 Bifuel (CNG)	103	06/02 – 04/10		3918
S60 I	2.4 Bifuel (CNG)	103	06/02 – 04/10	3919	
S60 I	2.4 Bifuel (LPG)	103	06/02 – 04/10		3918
S60 I	2.4 Bifuel (LPG)	103	06/02 – 04/10	3919	
S60 I	2.4 D	93	09/05 – 04/10		3918
S60 I	2.4 D	93	09/05 – 04/10	3919	
S60 I	2.4 D	96	12/01 – 04/10		3918
S60 I	2.4 D	96	12/01 – 04/10	3919	
S60 I	2.4 D	120	09/05 – 01/09		3918
S60 I	2.4 D	120	09/05 – 01/09	3919	
S60 I	2.4 D5	120	07/01 – 04/10		3918
S60 I	2.4 D5	120	07/01 – 04/10	3919	
S60 I	2.4 D5	136	09/05 – 04/10		3918
S60 I	2.4 D5	136	09/05 – 04/10	3919	
S60 I	2.4 T	147	11/00 – 04/10		3918
S60 I	2.4 T	147	11/00 – 04/10	3919	
S60 I	2.4 T AWD	147	11/01 – 04/10		3918
S60 I	2.4 T AWD	147	11/01 – 04/10	3919	
S60 I	2.4 T5	191	04/04 – 04/10		3918
S60 I	2.4 T5	191	04/04 – 04/10	3919	
S60 I	2.5 T	154	02/04 – 04/10		3918
S60 I	2.5 T	154	02/04 – 04/10	3919	
S60 I	2.5 T AWD	154	04/04 – 04/10		3918
S60 I	2.5 T AWD	154	04/04 – 04/10	3919	
S60 I	T5	184	11/00 – 04/10		3918
S60 I	T5	184	11/00 – 04/10	3919	
S60 II	1.5 T2	90	10/15 -	4161	
S60 II	1.5 T3	112	03/15 -	4161	
S60 II	2.0 D2	88	03/15 -	4161	
S60 II	2.0 D3	110	03/15 -	4161	
S60 II	2.0 D4	140	03/15 -	4161	
S60 II	2.0 D4 AWD	140	03/15 -	4161	
S60 II	2.0 D5	165	03/15 -	4161	
S60 II	2.0 T	132	05/12 – 12/15	4161	
S60 II	2.0 T	149	04/10 – 12/11	4161	
S60 II	2.0 T3	112	03/15 -	4161	
S60 II	2.0 T4	140	05/15 -	4161	
S60 II	2.4 D4 AWD	140	03/15 -	4161	
S60 II	2.5 T5	186	09/11 -	4161	
S60 II	2.5 T5 AWD	186	09/12 -	4161	
S60 II	3.0 T AWD	258	05/14 -	4161	
S60 II	D3	100	05/12 – 12/15	4161	
S60 II	D3	120	04/10 – 04/12	4161	
S60 II	D4	120	05/12 – 12/14	4161	
S60 II	D4	133	09/13 – 12/15	4161	
S60 II	D5	151	04/10 – 12/11	4161	
S60 II	D5	158	04/11 – 12/15	4161	
S60 II	D5	169	04/14 -	4161	
S60 II	D5 AWD	151	04/10 – 12/11	4161	
S60 II	D5 AWD	158	04/11 – 12/15	4161	

MAKE & MODEL		KW	YEAR		
VOLVO					
S60 II	D5 AWD	169	04/14 -	4161	
S60 II	DRIVe / D2	84	01/11 – 12/15	4161	
S60 II	T3	110	04/10 – 12/15	4161	
S60 II	T4	132	04/10 – 12/15	4161	
S60 II	T4F	132	04/11 – 12/15	4161	
S60 II	T5	157	11/13 – 03/15	4161	
S60 II	T5	177	04/10 – 12/14	4161	
S60 II	T5	180	09/13 -	4161	
S60 II	T5	225	08/13 -	4161	
S60 II	T5 AWD	180	07/14 -	4161	
S60 II	T5 AWD	187	08/15 -	4161	
S60 II	T6	225	09/13 -	4161	
S60 II	T6 AWD	224	04/10 – 12/15	4161	
S60 II	T6 AWD	225	09/15 -	4161	
S60 II	T6 AWD	242	04/14 -	4161	
S60L	1.5 T3	112	06/15 -	4161	
S60L	2.0 T	132	06/14 -	4161	
S60L	2.0 T4	140	06/15 -	4161	
S60L	2.0 T5	180	06/15 -	4161	
S70 (LS)	2.3 AWD	195	04/99 – 09/00		3642
S70 (LS)	2.3 T5 AWD	177	11/96 – 09/98		3642
S70 (LS)	2.3 T5 AWD	184	07/97 – 09/00		3642
S70 (LS)	2.3 T5 R AWD	176	11/96 – 09/98		3642
S70 (LS)	2.4 AWD	103	04/99 – 09/00		3642
S70 (LS)	2.4 AWD	106	11/96 – 05/99		3642
S70 (LS)	2.4 AWD	121	10/98 – 05/99		3642
S70 (LS)	2.4 AWD	125	04/99 – 09/00		3642
S70 (LS)	2.4 T5 AWD	142	11/96 – 04/99		3642
S70 (LS)	2.5 TDi AWD	103	10/99 – 09/00		3642
S80 I (TS, XY)	20	120	06/98 – 07/06		3918
S80 I (TS, XY)	20	120	06/98 – 07/06	3919	
S80 I (TS, XY)	24	103	01/99 – 07/06		3918
S80 I (TS, XY)	24	103	01/99 – 07/06	3919	
S80 I (TS, XY)	24	125	01/99 – 07/06		3918
S80 I (TS, XY)	24	125	01/99 – 07/06	3919	
S80 I (TS, XY)	29	147	03/99 – 07/06		3918
S80 I (TS, XY)	29	147	03/99 – 07/06	3919	
S80 I (TS, XY)	29	150	05/98 – 07/06		3918
S80 I (TS, XY)	29	150	05/98 – 07/06	3919	
S80 I (TS, XY)	30	144	06/01 – 07/06		3918
S80 I (TS, XY)	30	144	06/01 – 07/06	3919	
S80 I (TS, XY)	2.0 T	132	12/99 – 07/06		3918
S80 I (TS, XY)	2.0 T	132	12/99 – 07/06	3919	
S80 I (TS, XY)	2.0 T	166	06/98 – 07/06		3918
S80 I (TS, XY)	2.0 T	166	06/98 – 07/06	3919	
S80 I (TS, XY)	2.3 R	195	04/00 – 08/05		3918
S80 I (TS, XY)	2.3 R	195	04/00 – 08/05	3919	
S80 I (TS, XY)	2.4 Bifuel (CNG)	103	09/01 – 07/06		3918
S80 I (TS, XY)	2.4 Bifuel (CNG)	103	09/01 – 07/06	3919	
S80 I (TS, XY)	2.4 Bifuel (LPG)	103	09/01 – 07/06		3918
S80 I (TS, XY)	2.4 Bifuel (LPG)	103	09/01 – 07/06	3919	
S80 I (TS, XY)	2.4 D	96	10/01 – 07/06		3918
S80 I (TS, XY)	2.4 D	96	10/01 – 07/06	3919	
S80 I (TS, XY)	2.4 D5	120	08/01 – 07/06		3918
S80 I (TS, XY)	2.4 D5	120	08/01 – 07/06	3919	
S80 I (TS, XY)	2.4 LTP	132	06/04 – 07/06		3918
S80 I (TS, XY)	2.4 LTP	132	06/04 – 07/06	3919	
S80 I (TS, XY)	2.4 T	147	06/00 – 07/06		3918
S80 I (TS, XY)	2.4 T	147	06/00 – 07/06	3919	
S80 I (TS, XY)	2.4 T5 AWD	147	04/00 – 09/03		3918
S80 I (TS, XY)	2.4 T5 AWD	147	04/00 – 09/03	3919	
S80 I (TS, XY)	2.5 T	154	03/03 – 07/06		3918
S80 I (TS, XY)	2.5 T	154	03/03 – 07/06	3919	
S80 I (TS, XY)	2.5 T AWD	154	07/03 – 07/06		3918
S80 I (TS, XY)	2.5 T AWD	154	07/03 – 07/06	3919	
S80 I (TS, XY)	2.5 TDI	103	01/99 – 07/06		3918
S80 I (TS, XY)	2.5 TDI	103	01/99 – 07/06	3919	
S80 I (TS, XY)	2.8 T6	200	05/98 – 07/06		3918
S80 I (TS, XY)	2.8 T6	200	05/98 – 07/06	3919	
S80 I (TS, XY)	3.0 T6	200	06/01 – 07/06		3918
S80 I (TS, XY)	3.0 T6	200	06/01 – 07/06	3919	

MAKE & MODEL		KW	YEAR		
VOLVO					
S80 II (AS)	20	107	01/08 -	4161	
S80 II (AS)	32	175	03/06 -	4161	
S80 II (AS)	32	179	01/10 -	4161	
S80 II (AS)	1.6 D DRIVe	80	01/10 -	4161	
S80 II (AS)	1.6 DRIVe	84	06/11 -	4161	
S80 II (AS)	2.0 Drive- E	180	12/14 -	4161	
S80 II (AS)	2.0 FlexFuel	107	01/08 -	4161	
S80 II (AS)	2.0 T	149	01/10 -	4161	
S80 II (AS)	2.0 T5	162	01/15 -	4161	
S80 II (AS)	2.0 TDi	100	02/08 -	4161	
S80 II (AS)	2.4 D	120	03/06 -	4161	
S80 II (AS)	2.4 D	129	01/10 -	4161	
S80 II (AS)	2.5 T	147	03/06 -	4161	
S80 II (AS)	2.5 T	170	01/10 -	4161	
S80 II (AS)	2.5 T	183	09/12 -	4161	
S80 II (AS)	2.5 T	187	01/12 -	4161	
S80 II (AS)	2.5 T AWD	147	10/06 -	4161	
S80 II (AS)	2.5 T FlexFuel	147	05/08 -	4161	
S80 II (AS)	2.5 T FlexFuel	170	01/10 -	4161	
S80 II (AS)	3.2 AWD	175	01/07 -	4161	
S80 II (AS)	3.2 AWD	179	01/10 -	4161	
S80 II (AS)	D3	100	05/12 -	4161	
S80 II (AS)	D3 / D4	120	01/10 -	4161	
S80 II (AS)	D4	133	09/13 -	4161	
S80 II (AS)	D5	136	03/06 -	4161	
S80 II (AS)	D5	151	01/10 -	4161	
S80 II (AS)	D5	158	06/11 -	4161	
S80 II (AS)	D5 AWD	136	01/07 -	4161	
S80 II (AS)	D5 AWD	151	01/10 -	4161	
S80 II (AS)	D5 AWD	158	06/11 -	4161	
S80 II (AS)	T4	132	10/10 -	4161	
S80 II (AS)	T4F	132	05/11 -	4161	
S80 II (AS)	T5	177	10/10 -	4161	
S80 II (AS)	T5	180	09/13 -	4161	
S80 II (AS)	T6 AWD	210	01/07 -	4161	
S80 II (AS)	T6 AWD	224	10/10 -	4161	
S80L	25	147	03/09 -	4161	
S80L	2.0 T	149	12/10 -	4161	
S80L	2.0 T	157	08/13 -	4161	
S80L	3.0 AWD	210	03/09 -	4161	
S80L	3.0 AWD	224	08/13 -	4161	
S90	25	125	11/96 – 10/98		3642
S90	25	132	11/96 – 10/97		3642
S90	29	132	01/97 – 05/98		3642
S90	29	150	01/97 – 05/98		3642
V40 Estate (VW)	16	77	12/95 – 08/99		4062
V40 Estate (VW)	16	80	03/99 – 06/04		4062
V40 Estate (VW)	18	85	07/95 – 08/99		4062
V40 Estate (VW)	18	90	03/99 – 06/04		4062
V40 Estate (VW)	20	100	07/95 – 06/04		4062
V40 Estate (VW)	20	103	07/95 – 08/99		4062
V40 Estate (VW)	1.8 i	90	06/01 – 06/04		4062
V40 Estate (VW)	1.8 i	92	03/98 – 06/04		4062
V40 Estate (VW)	1.9 DI	70	03/99 – 07/00		4062
V40 Estate (VW)	1.9 DI	75	07/00 – 06/04		4062
V40 Estate (VW)	1.9 DI	85	07/00 – 06/04		4062
V40 Estate (VW)	1.9 T4	147	05/97 – 07/00		4062
V40 Estate (VW)	1.9 TD	66	07/95 – 08/99		4062
V40 Estate (VW)	2.0 T	118	10/97 – 07/00		4062
V40 Estate (VW)	2.0 T	120	06/01 – 06/04		4062
V40 Estate (VW)	2.0 T	121	07/99 – 06/04		4062
V40 Estate (VW)	2.0 T4	147	07/00 – 06/04		4062
V40 Hatchback	D2	84	03/12 -	3885	
V40 Hatchback	D2	88	02/15 -	3885	
V40 Hatchback	D3	110	03/12 – 03/15	3885	
V40 Hatchback	D3	110	04/15 -	3885	
V40 Hatchback	D4	130	03/12 -	3885	
V40 Hatchback	D4	140	05/14 -	3885	
V40 Hatchback	T2	90	02/15 -	3885	
V40 Hatchback	T2	90	02/15 -	3885	
V40 Hatchback	T2 GTDi	88	03/13 – 12/15	3885	

MAKE & MODEL		KW	YEAR		
VOLVO					
V40 Hatchback	T3	112	02/15 -	3885	
V40 Hatchback	T3	112	02/15 -	3885	
V40 Hatchback	T3 GTDi	110	03/12 -	3885	
V40 Hatchback	T4	132	07/13 -	3885	
V40 Hatchback	T4	140	08/15 -	3885	
V40 Hatchback	T4	147	04/14 -	3885	
V40 Hatchback	T4 AWD	132	07/13 -	3885	
V40 Hatchback	T4 AWD	140	05/14 -	3885	
V40 Hatchback	T4 GTDi	132	03/12 -	3885	
V40 Hatchback	T4 GTDi AWD	132	03/12 -	3885	
V40 Hatchback	T5	157	03/13 -	3885	
V40 Hatchback	T5	180	05/14 -	3885	
V40 Hatchback	T5	183	01/14 -	3885	
V40 Hatchback	T5	187	12/12 -	3885	
V40 Hatchback	T5 AWD	157	03/13 -	3885	
V40 Hatchback	T5 AWD	180	05/14 -	3885	
V40 Hatchback	T5 AWD	187	01/13 -	3885	
V50 (MW)	16	74	01/05 – 12/12	3885	
V50 (MW)	18	92	04/04 – 12/10	3885	
V50 (MW)	20	107	10/06 – 12/12	3885	
V50 (MW)	24	103	04/04 – 12/10	3885	
V50 (MW)	24	125	04/04 – 12/10	3885	
V50 (MW)	1.6 D	81	01/05 – 12/11	3885	
V50 (MW)	1.6 D2	84	01/10 – 12/12	3885	
V50 (MW)	1.8 FlexFuel	92	01/05 – 12/10	3885	
V50 (MW)	2.0 D	100	04/04 – 12/10	3885	
V50 (MW)	2.0 FlexFuel	107	01/10 – 12/12	3885	
V50 (MW)	2.4 AWD	125	08/06 – 12/09	3885	
V50 (MW)	2.4 D5	132	03/06 – 12/10	3885	
V50 (MW)	2.4 Tdi	120	05/07 – 12/10	3885	
V50 (MW)	D3	110	10/10 – 12/12	3885	
V50 (MW)	D4	130	10/10 – 12/12	3885	
V50 (MW)	T5	162	04/04 – 12/07	3885	
V50 (MW)	T5	169	03/07 – 12/12	3885	
V50 (MW)	T5 AWD	162	04/04 – 12/07	3885	
V50 (MW)	T5 AWD	169	03/07 – 12/10	3885	
V60	1.5 T2	90	01/16 -	4161	
V60	1.6 DRIVe	84	06/11 -	4161	
V60	2.0 AWD	270	06/15 -	4161	
V60	2.0 D2	88	03/15 -	4161	
V60	2.0 D3	110	03/15 -	4161	
V60	2.0 D4	140	03/15 -	4161	
V60	2.0 T	149	09/10 -	4161	
V60	2.0 T4	140	05/15 -	4161	
V60	2.4 D5	158	06/11 -	4161	
V60	2.4 D5 AWD	158	06/11 -	4161	
V60	2.4 D5 Hybrid AWD	120	03/15 -	4161	
V60	2.4 Hybrid D6 AWD	158	06/12 -	4161	
V60	3.0 T AWD	258	05/14 -	4161	
V60	D3	100	12/12 -	4161	
V60	D3 / D4	120	09/10 -	4161	
V60	D4	133	10/13 -	4161	
V60	D4 AWD	120	12/12 -	4161	
V60	D4 AWD	133	10/13 -	4161	
V60	D4 AWD	140	03/15 -	4161	
V60	D5	151	09/10 -	4161	
V60	D5	165	03/15 -	4161	
V60	D5	169	04/14 -	4161	
V60	D5 AWD	151	09/10 -	4161	
V60	D5 AWD	169	04/14 -	4161	
V60	D6 Hybrid AWD	162	03/15 -	4161	
V60	T3	110	09/10 – 12/15	4161	
V60	T3	112	03/15 -	4161	
V60	T3	112	03/15 -	4161	
V60	T4	132	09/10 – 12/15	4161	
V60	T4F	132	04/11 – 12/15	4161	
V60	T5	157	04/14 -	4161	
V60	T5	176	08/12 -	4161	
V60	T5	177	09/10 -	4161	
V60	T5	180	10/13 -	4161	
V60	T5 AWD	180	07/14 -	4161	

MAKE & MODEL		KW	YEAR		
VOLVO					
V60	T5 AWD	187	08/15 -	4161	
V60	T6	225	10/13 -	4161	
V60	T6 AWD	224	09/10 -	4161	
V60	T6 AWD	225	10/13 -	4161	
V60	T6 AWD	242	04/14 -	4161	
V70 I (LV)	2.0 Turbo AWD	166	01/97 – 03/00		3642
V70 I (LV)	2.3 AWD	177	04/97 – 09/98		3642
V70 I (LV)	2.3 AWD	195	12/98 – 02/00		3642
V70 I (LV)	2.3 T AWD	184	04/97 – 03/00		3642
V70 I (LV)	2.3 T-5 AWD	176	01/97 – 03/00		3642
V70 I (LV)	2.4 AWD	121	10/98 – 05/99		3642
V70 I (LV)	2.4 Turbo AWD	195	03/99 – 03/00		3642
V70 I (LV)	2.4 Turbo AWD	195	05/99 – 02/00		3642
V70 I (LV)	2.5 TDi AWD	103	11/96 – 02/00		3642
V70 I (LV)	2.5 Turbo AWD	142	01/97 – 05/00		3642
V70 II (SW)	23	195	10/00 – 09/04		3918
V70 II (SW)	23	195	10/00 – 09/04	3919	
V70 II (SW)	24	103	03/00 – 08/07		3918
V70 II (SW)	24	103	03/00 – 08/07	3919	
V70 II (SW)	24	121	03/00 – 09/03		3918
V70 II (SW)	24	121	03/00 – 09/03	3919	
V70 II (SW)	24	125	03/00 – 08/07		3918
V70 II (SW)	24	125	03/00 – 08/07	3919	
V70 II (SW)	2.0 T	132	07/01 – 08/07		3918
V70 II (SW)	2.0 T	132	07/01 – 08/07	3919	
V70 II (SW)	2.3 AWD	195	10/00 – 09/04		3918
V70 II (SW)	2.3 AWD	195	10/00 – 09/04	3919	
V70 II (SW)	2.3 T5	184	03/00 – 08/04		3918
V70 II (SW)	2.3 T5	184	03/00 – 08/04	3919	
V70 II (SW)	2.4 AWD	121	03/00 – 09/03		3918
V70 II (SW)	2.4 AWD	121	03/00 – 09/03	3919	
V70 II (SW)	2.4 Bifuel (CNG)	103	09/01 – 08/07		3918
V70 II (SW)	2.4 Bifuel (CNG)	103	09/01 – 08/07	3919	
V70 II (SW)	2.4 Bifuel (LPG)	103	09/01 – 08/07		3918
V70 II (SW)	2.4 Bifuel (LPG)	103	09/01 – 08/07	3919	
V70 II (SW)	2.4 D	93	05/05 – 08/07		3918
V70 II (SW)	2.4 D	93	05/05 – 08/07	3919	
V70 II (SW)	2.4 D	96	12/01 – 08/07		3918
V70 II (SW)	2.4 D	96	12/01 – 08/07	3919	
V70 II (SW)	2.4 D5	120	08/01 – 08/06		3918
V70 II (SW)	2.4 D5	120	08/01 – 08/06	3919	
V70 II (SW)	2.4 D5	136	12/05 – 08/07		3918
V70 II (SW)	2.4 D5	136	12/05 – 08/07	3919	
V70 II (SW)	2.4 D5 AWD	120	03/03 – 08/07		3918
V70 II (SW)	2.4 D5 AWD	120	03/03 – 08/07	3919	
V70 II (SW)	2.4 D5 AWD	136	12/05 – 08/07		3918
V70 II (SW)	2.4 D5 AWD	136	12/05 – 08/07	3919	
V70 II (SW)	2.4 T	147	03/00 – 08/03		3918
V70 II (SW)	2.4 T	147	03/00 – 08/03	3919	
V70 II (SW)	2.4 T AWD	147	09/01 – 08/02		3918
V70 II (SW)	2.4 T AWD	147	09/01 – 08/02	3919	
V70 II (SW)	2.4 T5	191	04/04 – 08/07		3918
V70 II (SW)	2.4 T5	191	04/04 – 08/07	3919	
V70 II (SW)	2.5 AWD	155	09/02 – 12/04		3918
V70 II (SW)	2.5 AWD	155	09/02 – 12/04	3919	
V70 II (SW)	2.5 T	154	04/04 – 08/07		3918
V70 II (SW)	2.5 T	154	04/04 – 08/07	3919	
V70 II (SW)	2.5 T AWD	154	09/02 – 08/07		3918
V70 II (SW)	2.5 T AWD	154	09/02 – 08/07	3919	
V70 II (SW)	2.5 TDI	103	03/00 – 08/07		3918
V70 II (SW)	2.5 TDI	103	03/00 – 08/07	3919	
V70 III (BW)	20	107	10/07 – 12/11	4161	
V70 III (BW)	32	175	08/07 – 12/10	4161	
V70 III (BW)	32	179	05/11 – 12/14	4161	
V70 III (BW)	1.6 D	80	01/10 – 12/11	4161	
V70 III (BW)	1.6 DRIVe / D2	84	06/11 – 12/15	4161	
V70 III (BW)	1.6 T4F	132	01/11 – 12/15	4161	
V70 III (BW)	2.0 BiFuel	157	03/13 – 12/15	4161	
V70 III (BW)	2.0 D	100	10/07 – 12/15	4161	
V70 III (BW)	2.0 FlexiFuel	107	01/08 – 12/11	4161	
V70 III (BW)	2.0 GDI	157	03/13 – 12/15	4161	

MAKE & MODEL		KW	YEAR		
VOLVO					
V70 III (BW)	2.0 T	149	01/10 – 12/11	4161	
V70 III (BW)	2.4 D	120	08/07 – 12/10	4161	
V70 III (BW)	2.4 D	129	10/09 – 12/10	4161	
V70 III (BW)	2.5 T	147	08/07 – 12/09	4161	
V70 III (BW)	2.5 T	170	01/10 – 12/12	4161	
V70 III (BW)	2.5 T FlexiFuel	147	05/08 – 12/09	4161	
V70 III (BW)	2.5 T FlexiFuel	170	10/09 – 12/11	4161	
V70 III (BW)	3.2 AWD	175	08/07 – 12/10	4161	
V70 III (BW)	3.2 AWD	179	05/11 – 12/15	4161	
V70 III (BW)	D2	88	03/15 -	4161	
V70 III (BW)	D3	100	03/10 – 12/15	4161	
V70 III (BW)	D3	110	03/15 -	4161	
V70 III (BW)	D3 / D4	120	03/10 – 12/15	4161	
V70 III (BW)	D4	133	10/13 -	4161	
V70 III (BW)	D4 AWD	120	01/13 – 12/15	4161	
V70 III (BW)	D4 AWD	133	10/13 -	4161	
V70 III (BW)	D5	136	08/07 – 12/09	4161	
V70 III (BW)	D5	151	12/09 – 12/11	4161	
V70 III (BW)	D5	158	06/11 – 12/15	4161	
V70 III (BW)	D5 AWD	136	10/07 – 12/09	4161	
V70 III (BW)	D5 AWD	151	12/09 – 12/11	4161	
V70 III (BW)	D5 AWD	158	06/11 – 12/15	4161	
V70 III (BW)	T4	132	10/10 – 12/15	4161	
V70 III (BW)	T4	140	03/15 -	4161	
V70 III (BW)	T5	177	01/10 – 12/14	4161	
V70 III (BW)	T5	180	10/13 -	4161	
V70 III (BW)	T6 AWD	210	08/07 – 12/10	4161	
V70 III (BW)	T6 AWD	224	04/11 – 12/15	4161	
V90 Estate	25	125	11/96 – 10/98		3642
V90 Estate	25	132	11/96 – 10/97		3642
V90 Estate	29	132	01/97 – 12/98		3642
V90 Estate	29	150	01/97 – 12/98		3642
XC70 CROSS COUNTRY	2.4 D5 AWD	136	12/05 – 08/07		3918
XC70 CROSS COUNTRY	2.4 D5 AWD	136	12/05 – 08/07	3919	
XC70 CROSS COUNTRY	2.4 D5 XC AWD	120	09/02 – 08/07		3918
XC70 CROSS COUNTRY	2.4 D5 XC AWD	120	09/02 – 08/07	3919	
XC70 CROSS COUNTRY	2.4 T XC AWD	142	11/97 – 09/02		3642
XC70 CROSS COUNTRY	2.4 T XC AWD	142	11/97 – 09/02		3918
XC70 CROSS COUNTRY	2.4 T XC AWD	142	11/97 – 09/02	3919	
XC70 CROSS COUNTRY	2.4 T XC AWD	147	03/00 – 09/02		3918
XC70 CROSS COUNTRY	2.4 T XC AWD	147	03/00 – 09/02	3919	
XC70 CROSS COUNTRY	2.5 T XC AWD	154	09/02 – 08/07		3918
XC70 CROSS COUNTRY	2.5 T XC AWD	154	09/02 – 08/07	3919	
XC70 II	2.4 D	129	06/09 – 12/10	4161	
XC70 II	2.4 D / D4 AWD	120	08/07 -	4161	
XC70 II	3.2 AWD	175	08/07 -	4161	
XC70 II	3.2 AWD	179	08/07 -	4161	
XC70 II	D3	120	04/10 – 12/15	4161	
XC70 II	D4	133	10/13 -	4161	
XC70 II	D4 AWD	133	10/13 -	4161	
XC70 II	D5 AWD	136	04/07 – 12/09	4161	
XC70 II	D5 AWD	151	04/09 – 12/11	4161	
XC70 II	D5 AWD	158	04/11 – 12/15	4161	
XC70 II	D5 AWD	162	03/15 -	4161	
XC70 II	T5	180	10/13 -	4161	
XC70 II	T5 AWD	187	08/15 -	4161	
XC70 II	T6 AWD	210	01/08 -	4161	
XC70 II	T6 AWD	224	01/10 -	4161	
WARTBURG					
353	10	33	06/66 – 04/69	3404	
353	10	37	04/69 – 02/75	3404	
353	13	43	09/88 – 05/91	3404	
353	1.0 (353 W 000)	37	02/75 – 08/88	3404	
353 Tourist	10	33	10/67 – 04/69	3404	
353 Tourist	10	37	02/75 – 01/89	3404	
353 Tourist	10	37	04/69 – 02/75	3404	
353 Tourist	13	43	02/89 – 05/91	3404	
WIESMAN					
MF3 Roadster	32	236	01/96 -	3564/1	
MF3 Roadster	32	236	01/96 -		3578

MAKE & MODEL   		KW	YEAR		
WIESMAN					
MF3 Roadster	32	252	07/03 -	3564/1	
MF3 Roadster	32	252	07/03 -		3578
WULING					
DRAGON LZ Pickup	08	29	08/98 – 07/05	3380	
DRAGON LZ Pickup	08	29	08/98 – 07/05	3381	
DRAGON LZ Pickup	08	29	08/98 – 07/05	3474	
DRAGON LZ Pickup	08	29	08/98 – 07/05	3580	
YUGO					
311 / 411	11	41	04/83 – 04/91	3316	
511 / 513	11	41	04/83 – 04/91	3316	
SANA	14	52	10/89 – 10/93	3491	
SANA	1.4	52	10/89 – 10/93	3432	
TEMPO	09	33	05/91 – 12/93	3316	
TEMPO	11	41	06/85 – 07/93	3316	
ZASTAVA					
10 (188)	1.2 60	44	10/05 -	3608	
10 (188)	1.2 60	44	10/05 -	3643	
101 (1100) Fastback (Compact car-C Segment)	1.1 (128 A.000)		75-80	3357	
101 (1100) Fastback (Compact car-C Segment)	1.1 (128 A.000)		73-90	3357	
101 (1100) Fastback (Compact car-C Segment)	1.1 (128 A.064)		75-93	3357	
101 (1100) Fastback (Compact car-C Segment)	1.1 Super (128 AC5.000)		79-81	3357	
101 (1100) Fastback (Compact car-C Segment)	1.3 (128 AR.000)		81-83	3357	
101 (1100) Fastback (Compact car-C Segment)	1.3 1300		72-	3357	
GTL Fastback (Compact car-C Segment)	1.1		82-	3357	
GTL Fastback (Compact car-C Segment)	1.3		82-	3357	
YUGO	09	33	04/80 – 06/92	3432	
YUGO	09	33	04/80 – 06/92	3491	
YUGO	60 EFI (145 A)	44	08/91 – 06/95	3432	
YUGO	60 EFI (145 A)	44	08/91 – 06/95	3491	
YUGO	65 EFI (145 A)	48	08/91 – 06/95	3432	
YUGO	65 EFI (145 A)	48	08/91 – 06/95	3491	
YUGO Fastback (Compact car-C Segment)	0.9		80-	3357	
YUGO Fastback (Compact car-C Segment)	0.9 (9A)		80-92	3357	
YUGO Fastback (Compact car-C Segment)	1.1 311		80-	3357	
YUGO Fastback (Compact car-C Segment)	1.1 411		80-	3357	
YUGO Fastback (Compact car-C Segment)	1.1 511		80-	3357	
YUGO Fastback (Compact car-C Segment)	1.1 Base, L		80-	3357	
YUGO Fastback (Compact car-C Segment)	1.3 313		80-	3357	
YUGO Fastback (Compact car-C Segment)	1.3 413		80-	3357	
YUGO Fastback (Compact car-C Segment)	1.3 513		80-	3357	
YUGO Fastback (Compact car-C Segment)	1.3 65 EFI (13 E 1.064)		91-95	3357	
YUGO Fastback (Compact car-C Segment)	1.3 Base, GL		80-	3357	
YUGO FLORIDA	11	44	08/89 -	3491	
YUGO FLORIDA	14	52	10/88 – 06/95	3491	
YUGO FLORIDA	16	62	08/89 – 06/95	3432	
YUGO FLORIDA	16	62	08/89 – 06/95	3491	
YUGO FLORIDA	1.1	44	08/89 -	3432	
YUGO FLORIDA	1.3 (103 A)	50	03/91 -	3432	
YUGO FLORIDA	1.3 (103 A)	50	03/91 -	3491	
YUGO FLORIDA	1.4	52	10/88 – 06/95	3432	
YUGO FLORIDA	1.4 CAT	52	10/88 -	3432	
YUGO FLORIDA	1.4 CAT	52	10/88 -	3491	
ZAZ					
LANOS Hatchback	14	55	10/04 -	3623	
LANOS Hatchback	15	63	10/04 -	3623	
LANOS Hatchback	1.6 16V	78	10/04 -	3470	
LANOS Hatchback	1.6 16V	78	10/04 -	3505	
LANOS Hatchback	1.6 16V	78	10/04 -	3615	
LANOS PICK-UP	14	55	10/04 -	3623	
LANOS PICK-UP	15	63	10/04 -	3623	
LANOS Saloon	14	55	10/04 -	3623	
LANOS Saloon	15	63	10/04 -	3623	
LANOS Saloon	1.6 16V	78	10/04 -	3470	
LANOS Saloon	1.6 16V	78	10/04 -	3505	
LANOS Saloon	1.6 16V	78	10/04 -	3615	
TAVRIA (1102)	11	37	01/89 -	3422	
TAVRIA (1102)	11	37	01/89 -	3552	
TAVRIA (1102)	12	42	01/98 -	3422	
TAVRIA (1102)	12	42	01/98 -	3552	
TAVRIA (1102)	13	44	01/89 -	3422	
TAVRIA (1102)	13	44	01/89 -	3552	

BRAKE PAD ILLUSTRATIONS

ABARTH

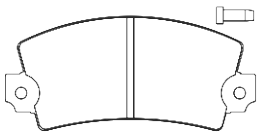
3329/1

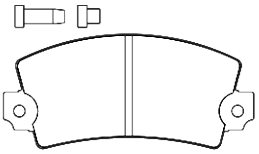
3348

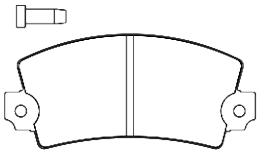
3349

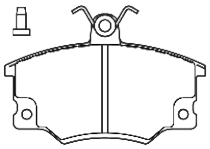
3466

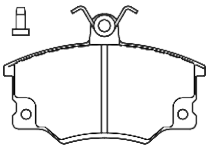
3468

ACURA

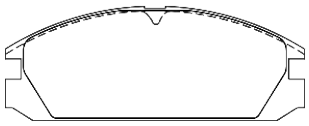
3582

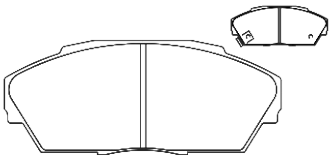
3631

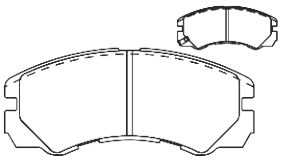
3674

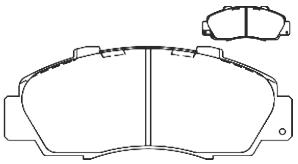
3704

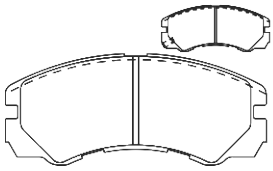
3743

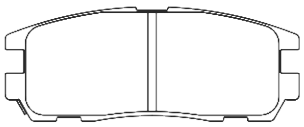
3887

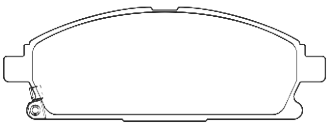
3932

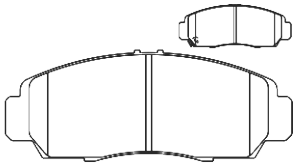
4109

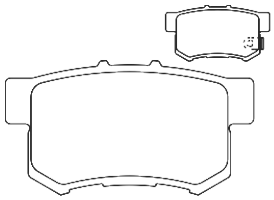
4148

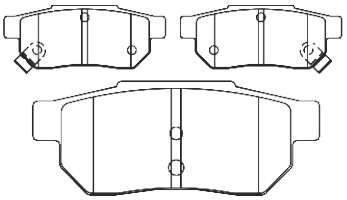
4212

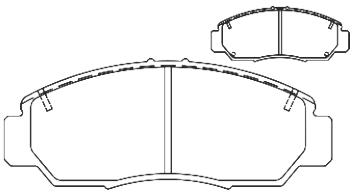
4232

AIXAM


3747

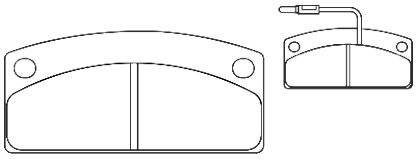
3748

ALFA ROMEO

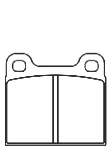
3318

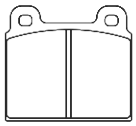
3320

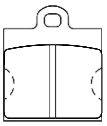
3325

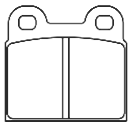
3326

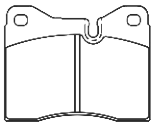
3331/1

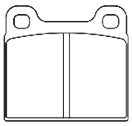
3338

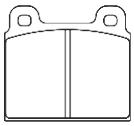
3350

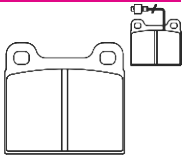
3353

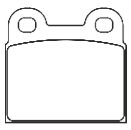
3360

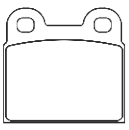
3361

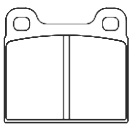
3362

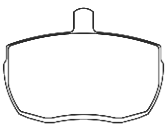
3423

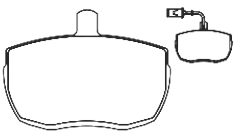
3423/1

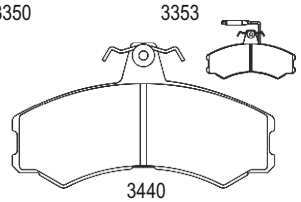
3440

ALFA ROMEO

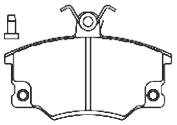
3466

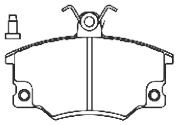
3468

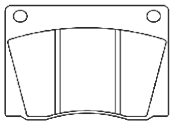
3471

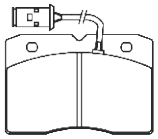
3523

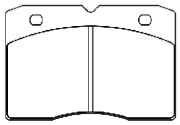
3524

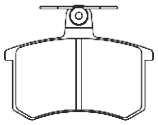
3536

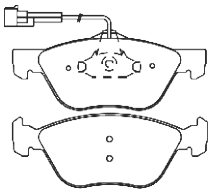
3617

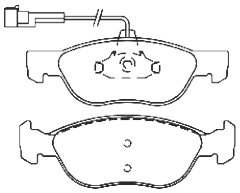
3618

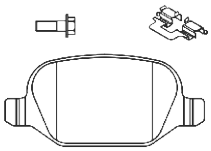
4123

ALPINA

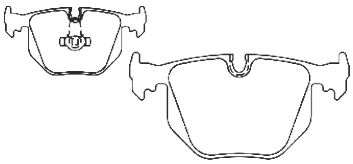
3879

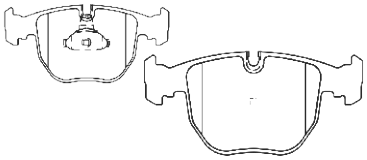
3881

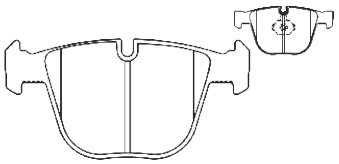
4179

ALPINE

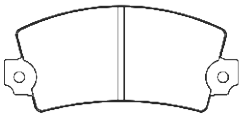
3342

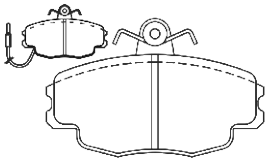
3431

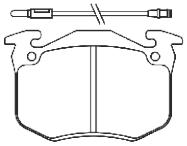
3442

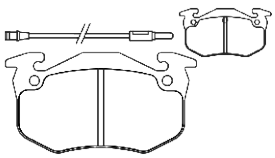
3492

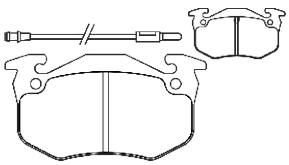
3493

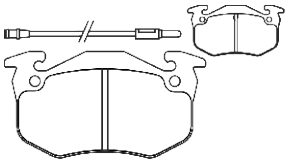
3494

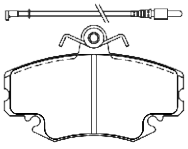
3503

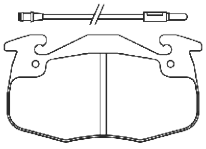
3587

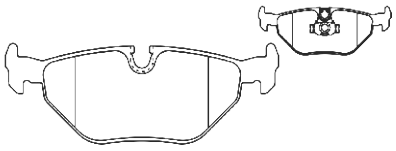
3656

ASIA MOTORS

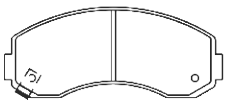
3574

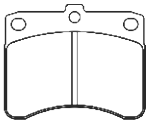
3746

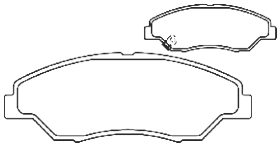
4009

ASTON MARTIN

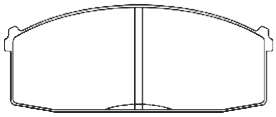
3370

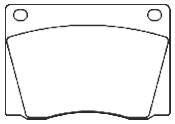
3455

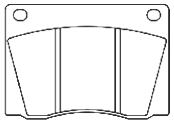
3471

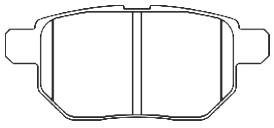
3954

AUDI

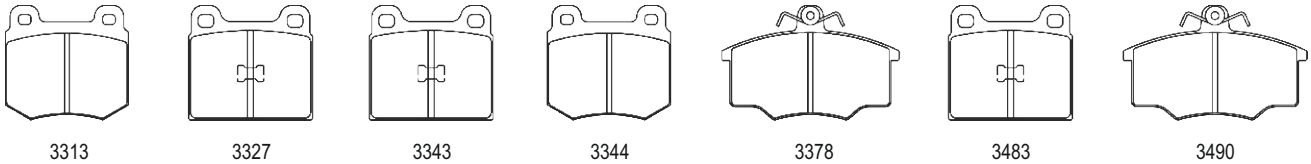

AUSTIN

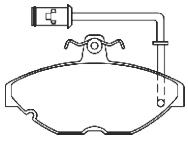

AUTO UNION

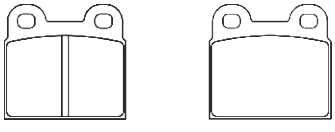

AUTOBIANCHI

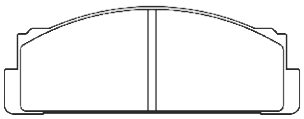
3316

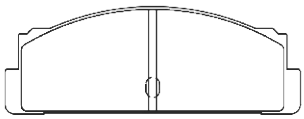
3357

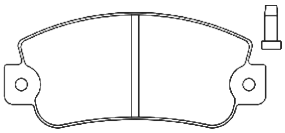
3424 - 3424/1

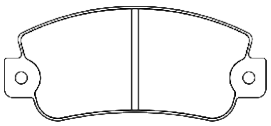
3439

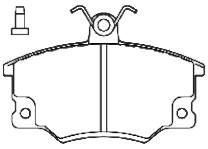
3468

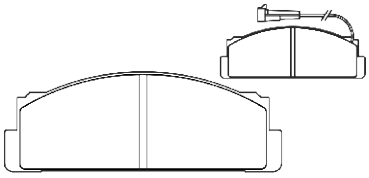
3485

BEDFORD

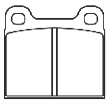
3318

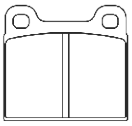
3338

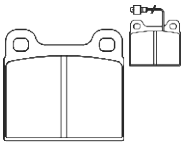
3353

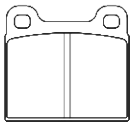
3362

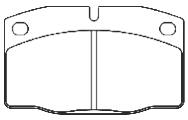
3410

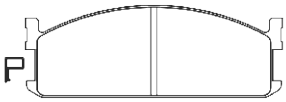
3462

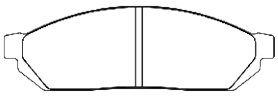
3509

BENTLEY

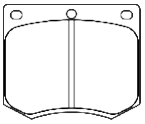
3312

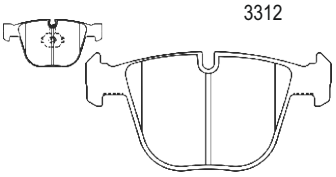
4179

BERTONE

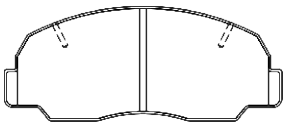
3436

BMC

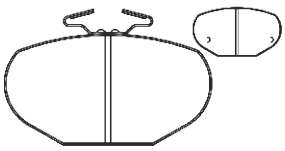
3443

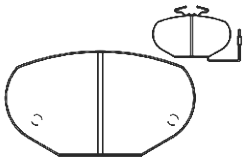
3456

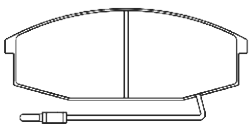
3708

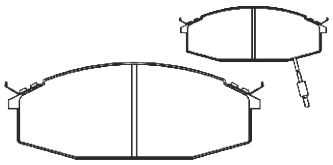
3708/1

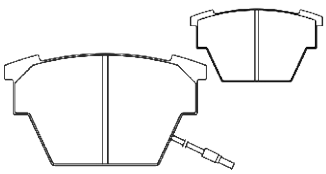
3871

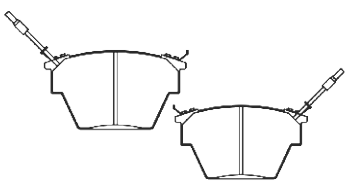
3871/1

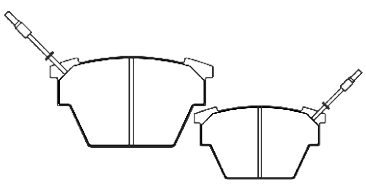
3871/2

BMW

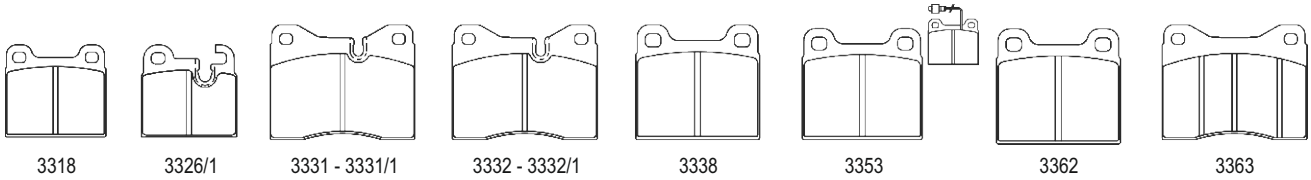

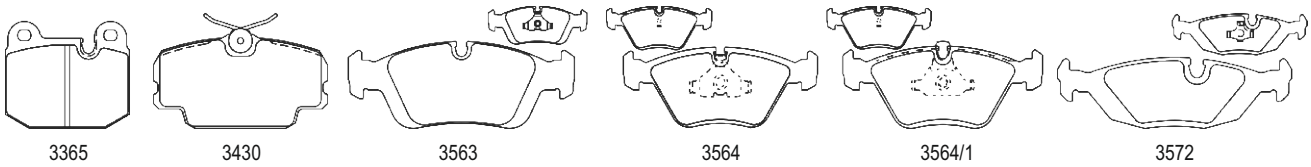

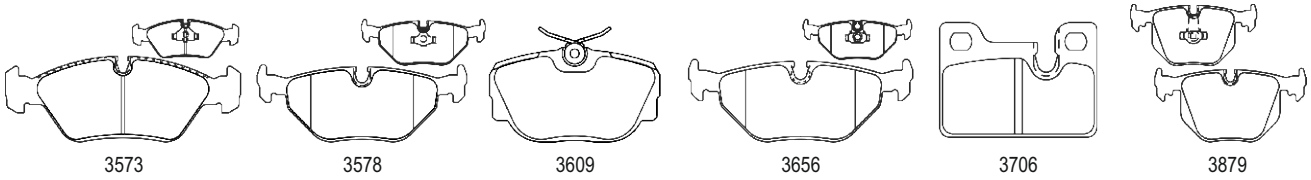

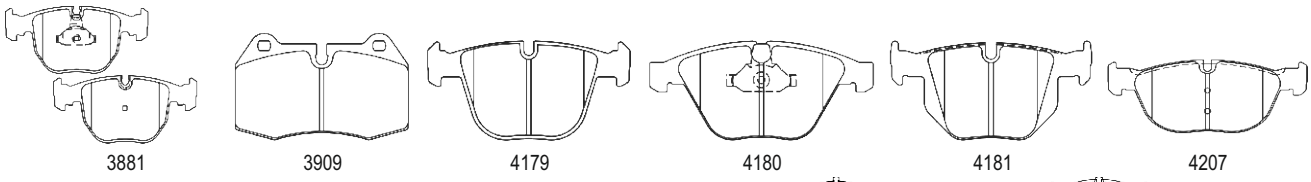

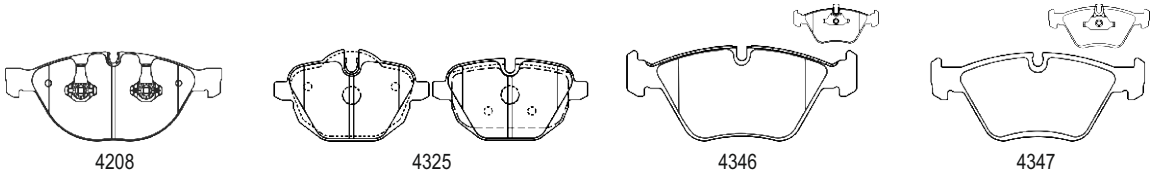

BUICK

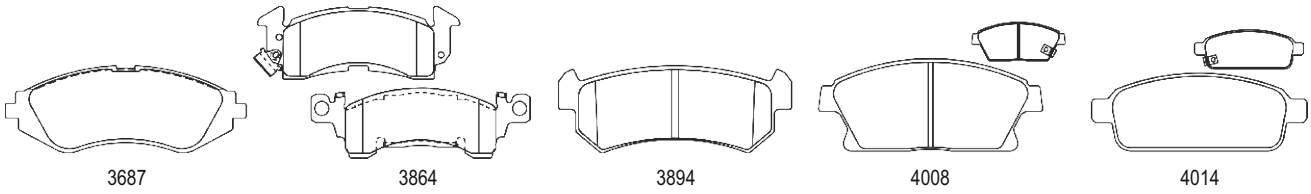

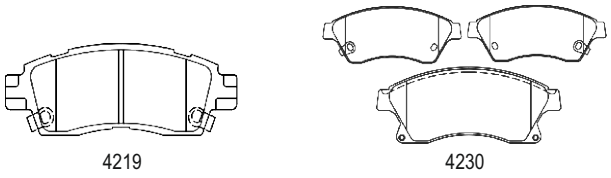

BYD

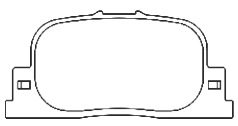

CADILLAC

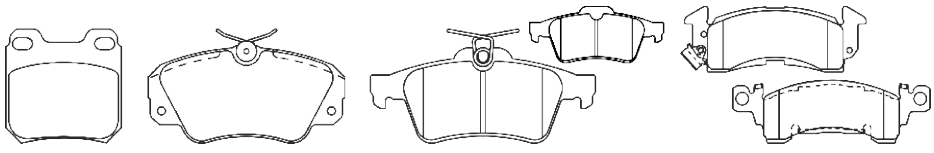

CADILLAC

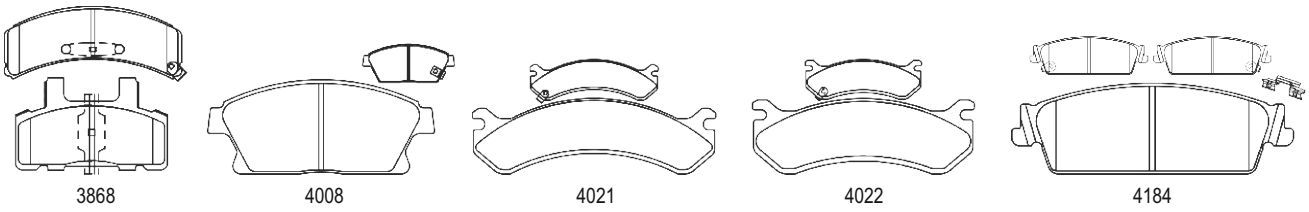

CARBODIES / CHANGFENG / CHERY

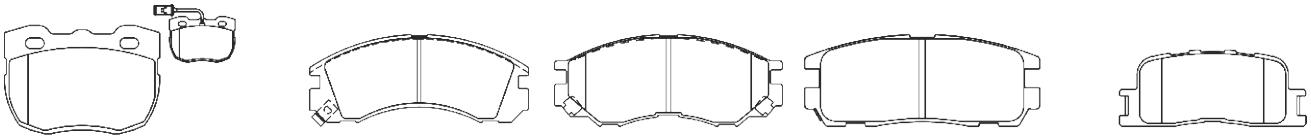

CHEVROLET

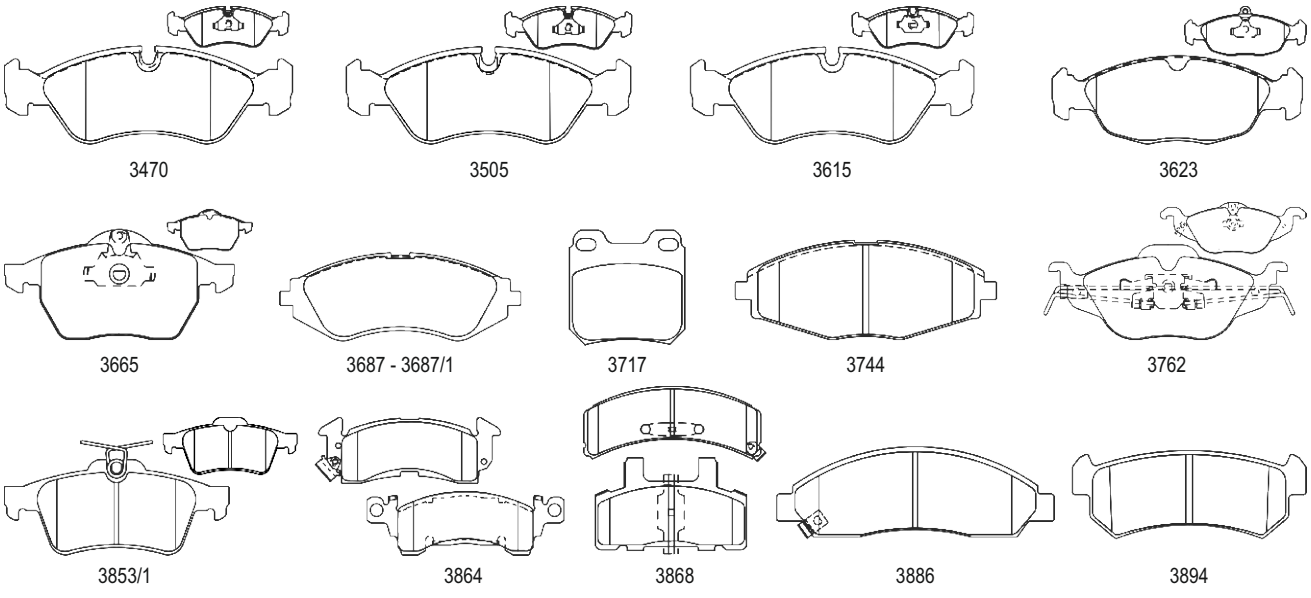

CHEVROLET

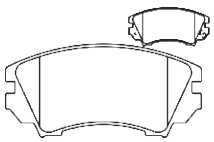
4149

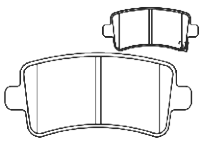
4150

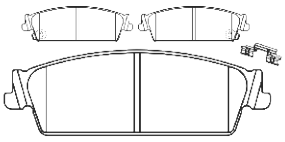
4184

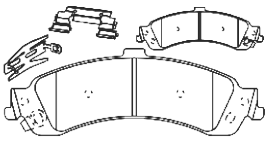
4187

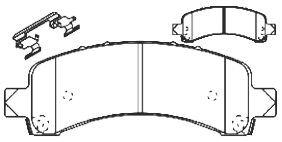
4191

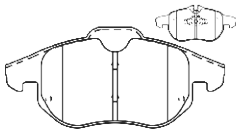
4211

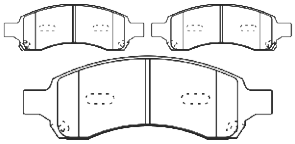
4218

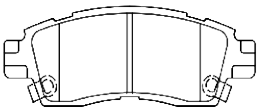
4219

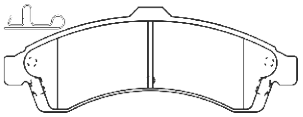
4221

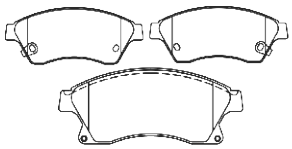
4230

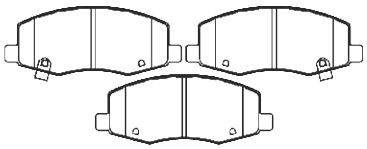
4252

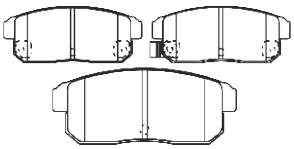
4303

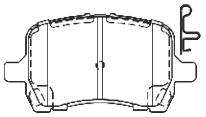
4330

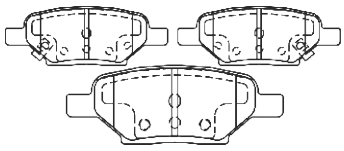
4331

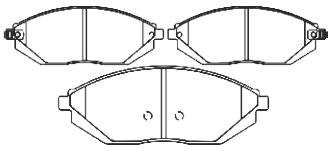
4337

CHRYSLER

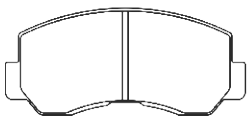
3376

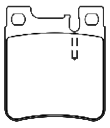
3581

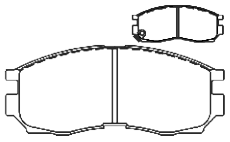
3622

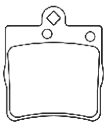
3676

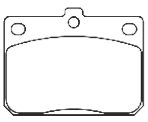
3709

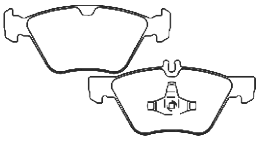
3863

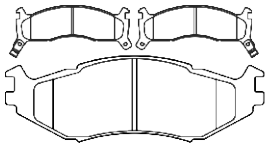
3867

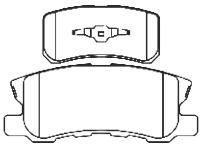
3893

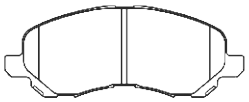
3955

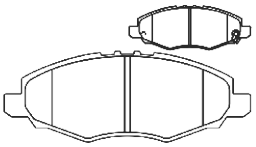
3982

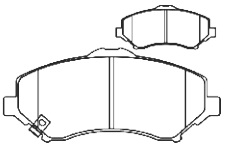
4005

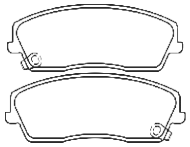
4006

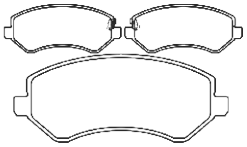
4012

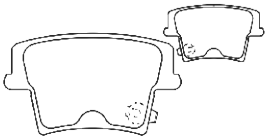
4018

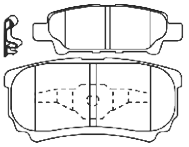
4106

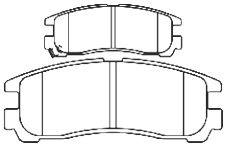
4108

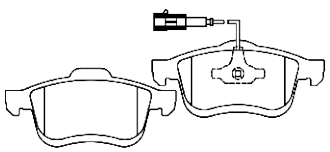
4121 - 4121/1

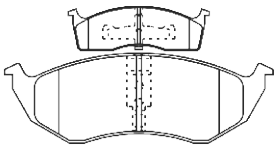
4197

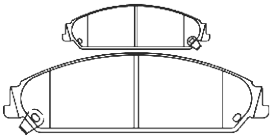
4198

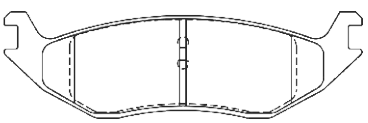
4329

CITROËN

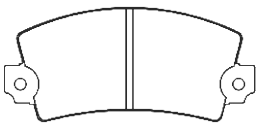
3329

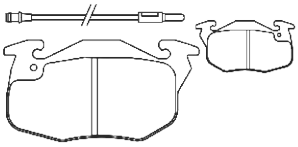
3380

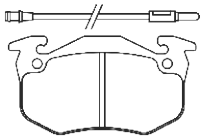
3381

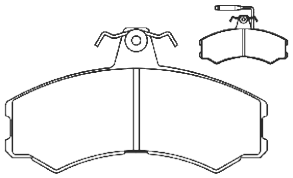
3440

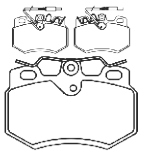
3474

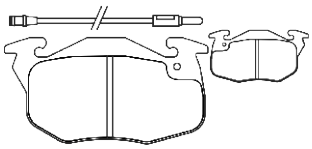
3487

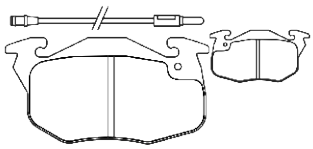
3488

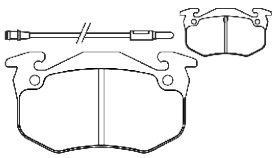
3492

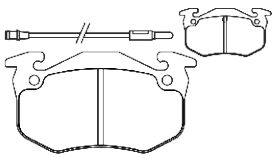
3493

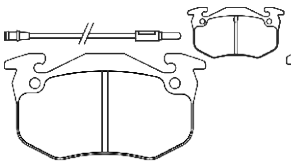
3494

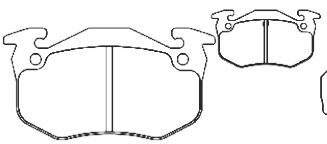
3496

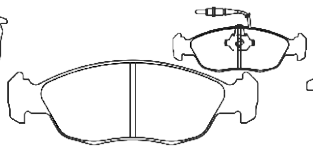
3528

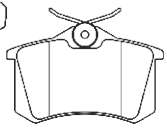
3529/1

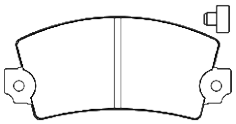
3542

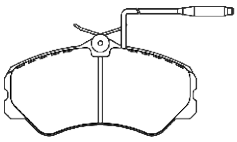
3543

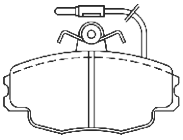
3555

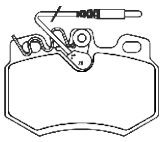
3556

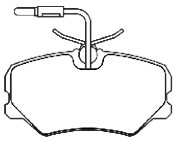
3557

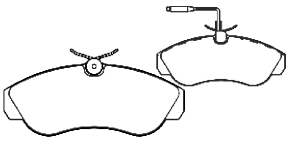
3559

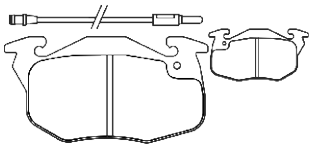
3580

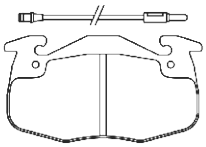
3587

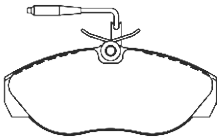
3595

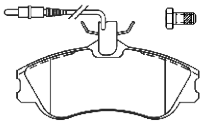
3636

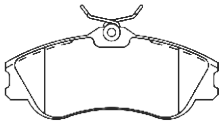
3644

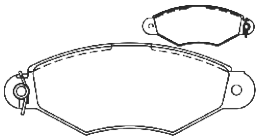
3659

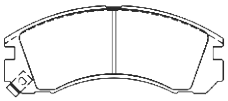
3685

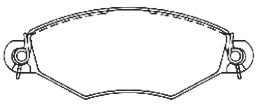
3759

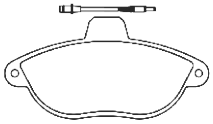
3799


3800 - 3800/1
3800/2 - 3800/3

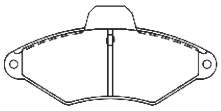
3819


3820 - 3820/1 - 3820/2 - 3820/3

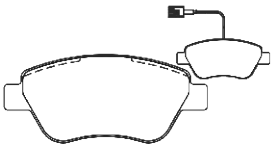
3826/3

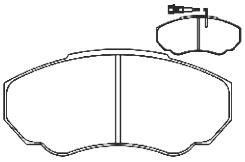
3834

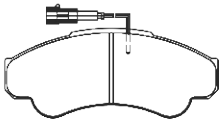
3835

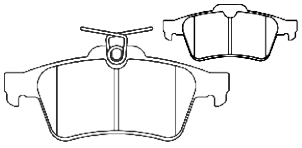
3853/1


3854

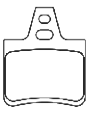
3873

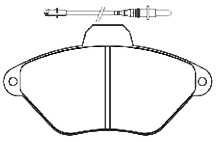
3878

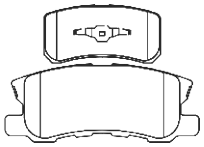
3893

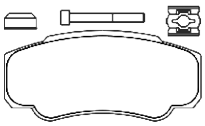
3914

3922 - 3922/1
3922/2 - 3922/3

3931

3934

3935

CITROËN

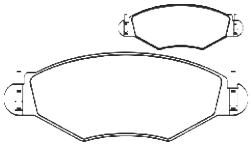
3938

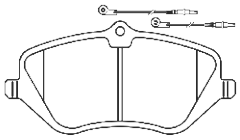
3940

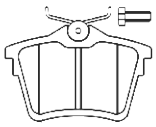
3946

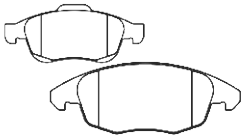
3964

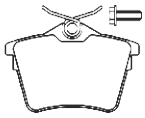
3971

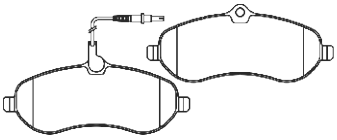
3972

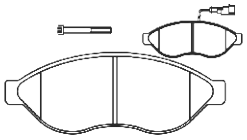
3981


3984 - 3984/1

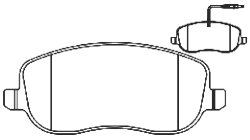
3986

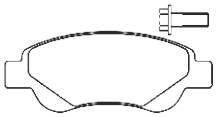
3987

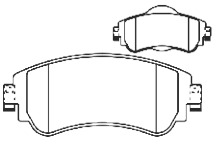
4145

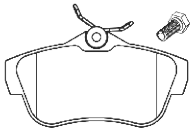
4151

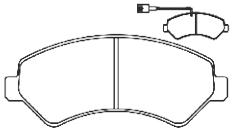
4171 - 4171/1

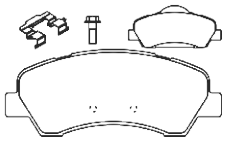
4201 - 4201/1

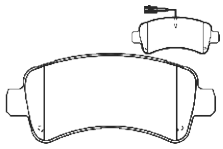
4224

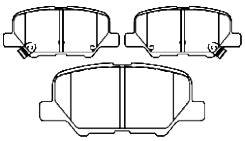
4316

DACIA

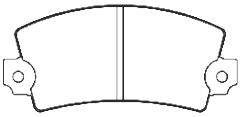
3329

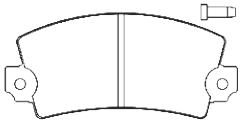
3329/1

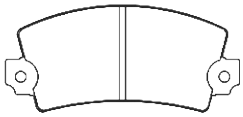
3341

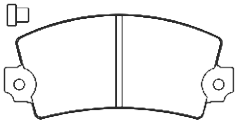
3345

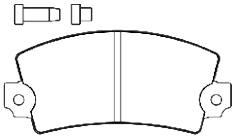
3348

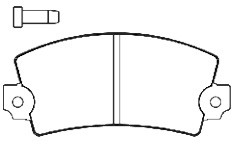
3349

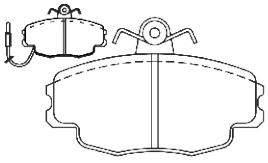
3431

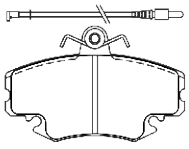
3503 - 3503/1

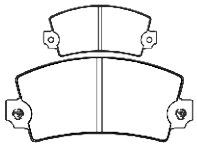
3518

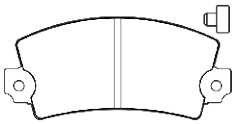
3542

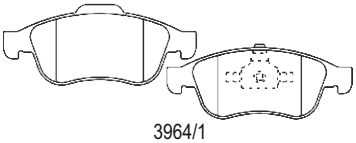
3964/1

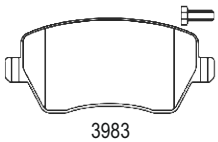
3983

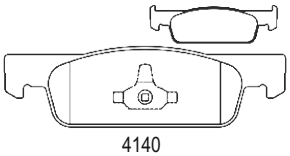
4140

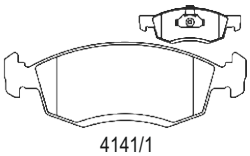
4141/1

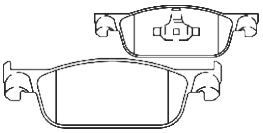
4253

DAEWOO

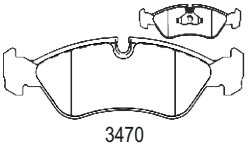
3470

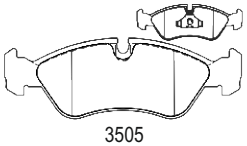
3505

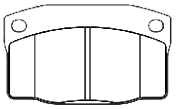
3510

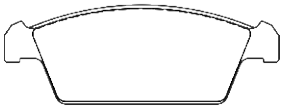
3511

DAEWOO

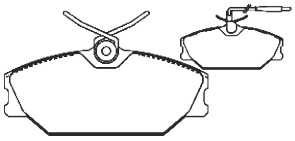
3539 - 3539/1

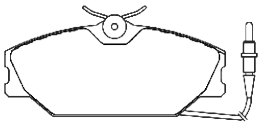
3546

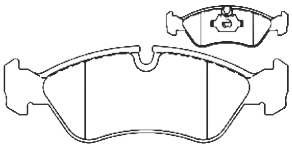
3615

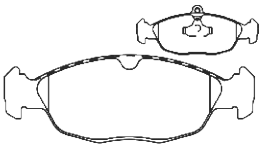
3623


3687

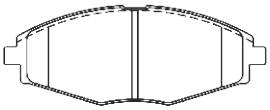
3744

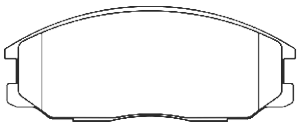
3843

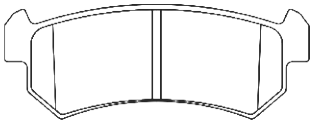
3894

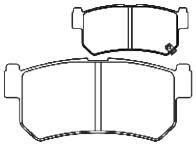
3895

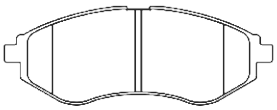
3951

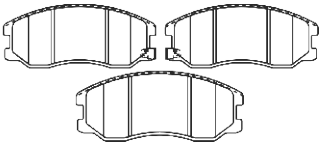
3976

DAF

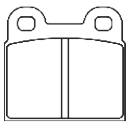
3326

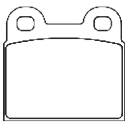
3360

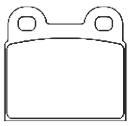
3361

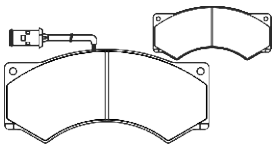
3433

DAIHATSU

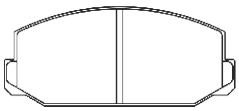
3314

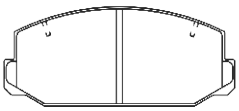
3336

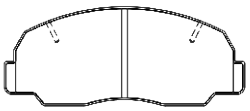
3436

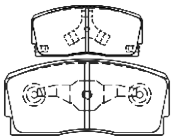
3600

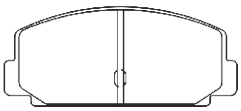
3601

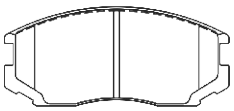
3604

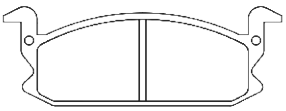
3620

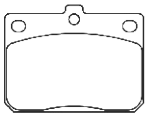
3709

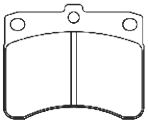
3746

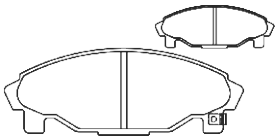
3898

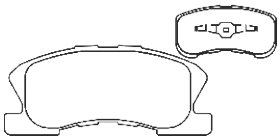
3901

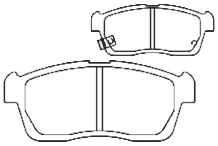
3928

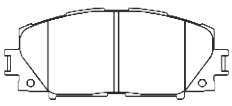
3958

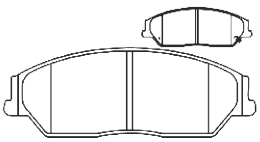
4019

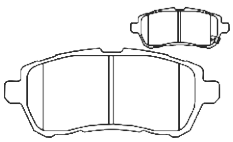
4122

DAIMLER

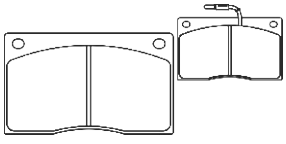
3526

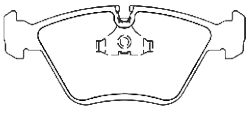
3584

DALLAS

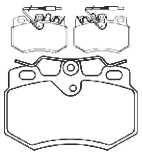
3474

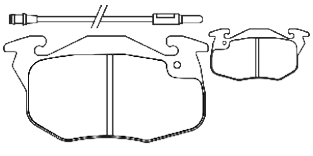
3580

DODGE

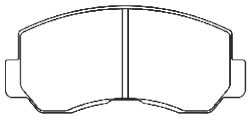
3376

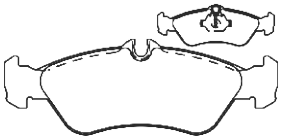
3670

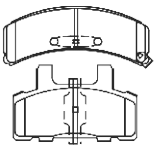
3868

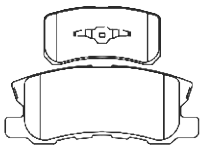
3893

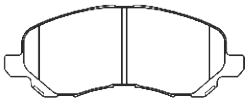
3955

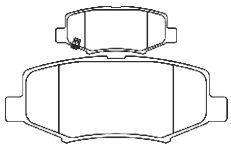
4004

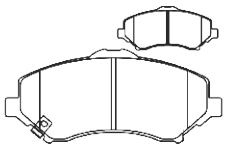
4005

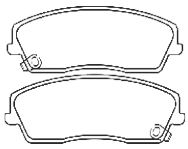
4006

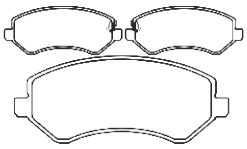
4012

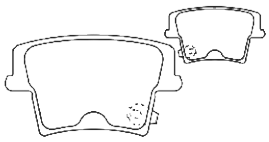
4018

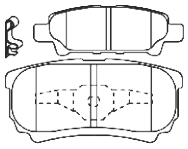
4106

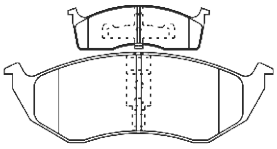
4197

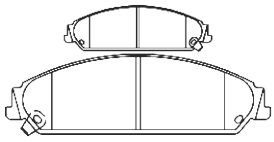
4198

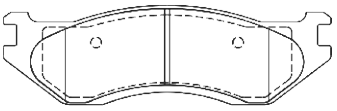
4327

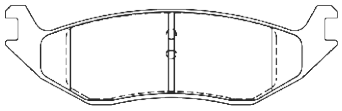
4329

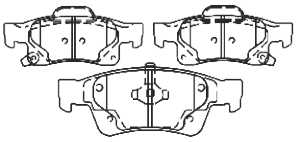
4339

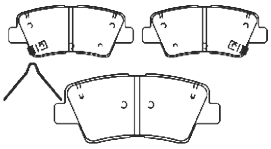
4343

DONGNAN (SOUEAST) / DR / DS

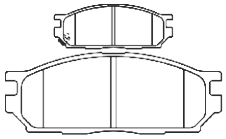
4033

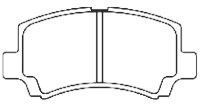
4027

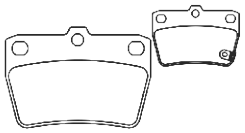
4153

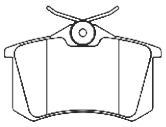
3529/1

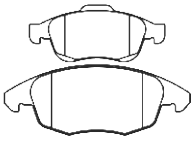
3964

EUNOS / FENGXING (DONGFENG)

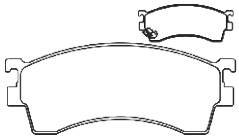
3832


3833

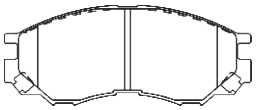
3809

FERRARI

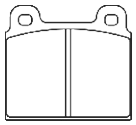
3320

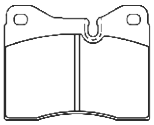
3331/1

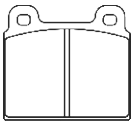
3350

FIAT

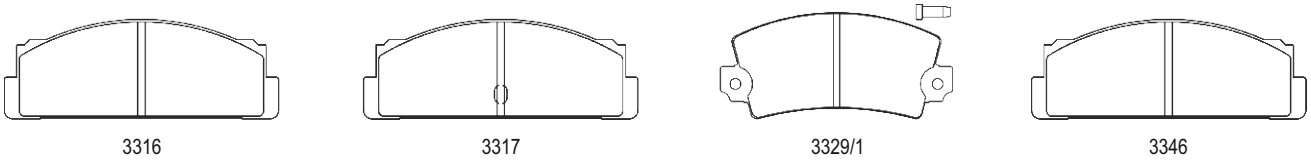
3316
3317
3329/1
3346

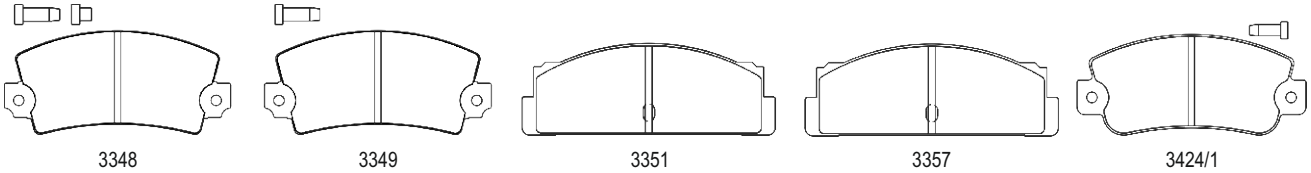
3348
3349
3351
3357
3424/1

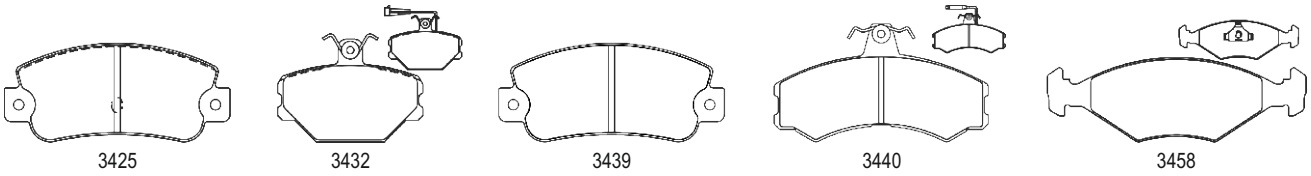
3425
3432
3439
3440
3458

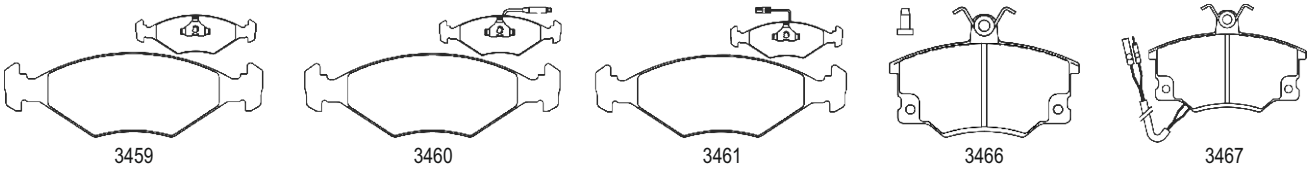
3459
3460
3461
3466
3467

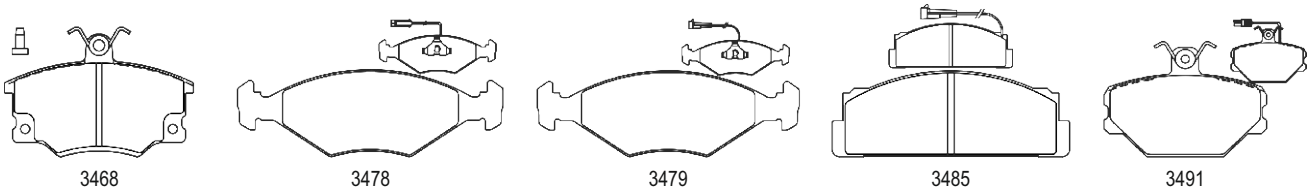
3468
3478
3479
3485
3491

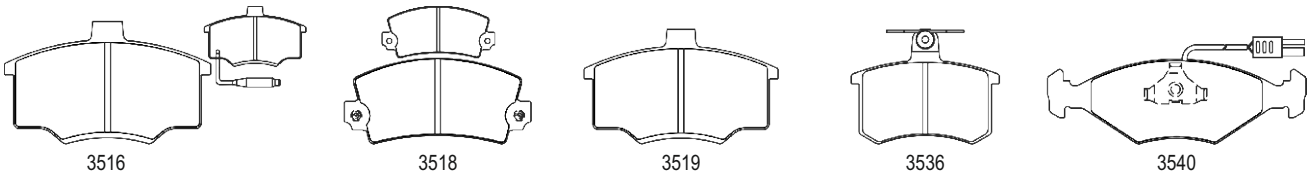
3516
3518
3519
3536
3540

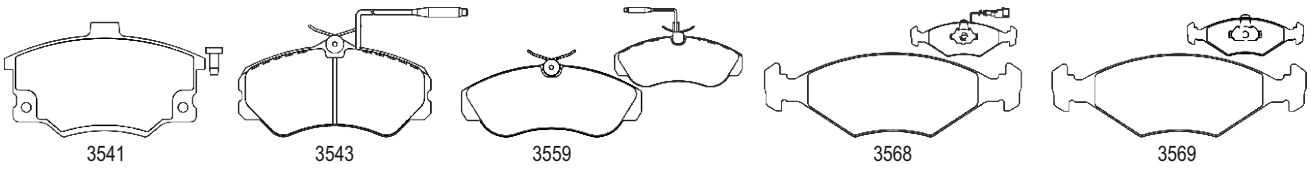
3541
3543
3559
3568
3569

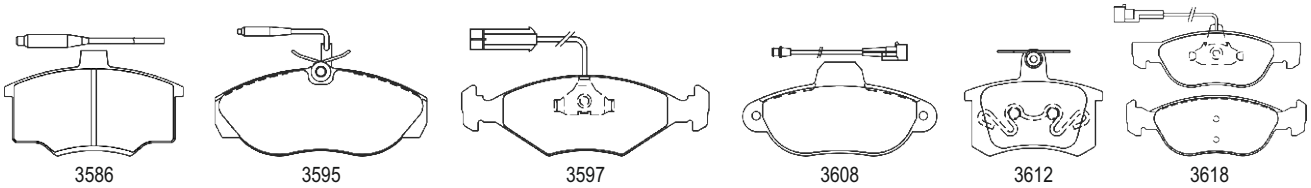
3586
3595
3597
3608
3612
3618

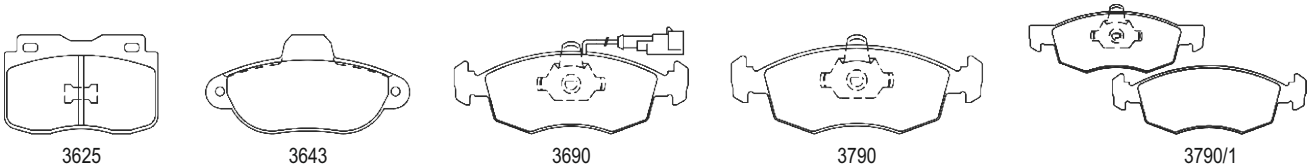
3625
3643
3690
3790
3790/1

FIAT

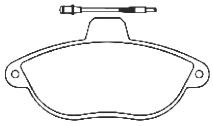
3799


3826

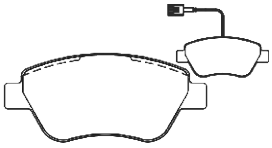
3826/1

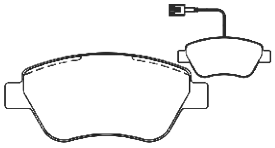
3826/3


3827

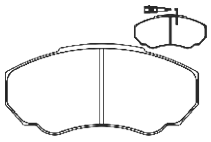
3834

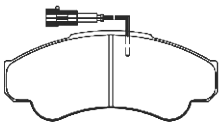
3835

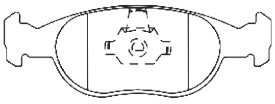
3897

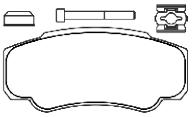
3914 - 3914/1

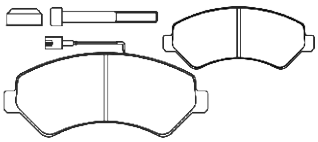
3922

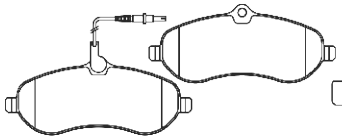
3972

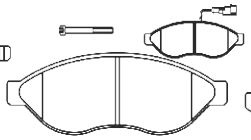
3981

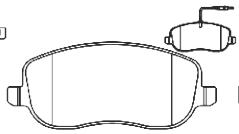
3986

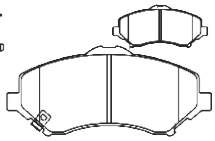
4005

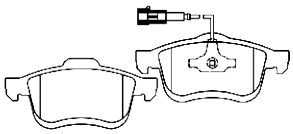
4121

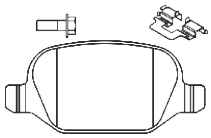
4123

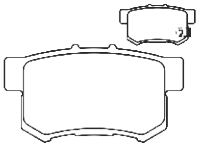
4148

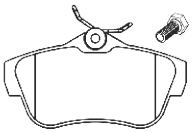
4151

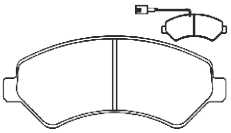
4171

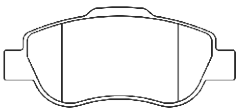
4173 - 4173/1 - 4173/2

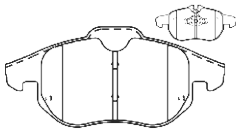
4211

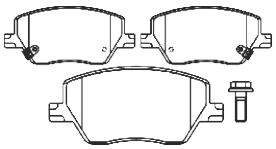
4234

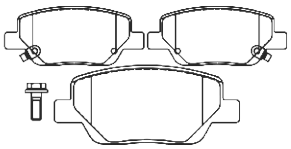
4246

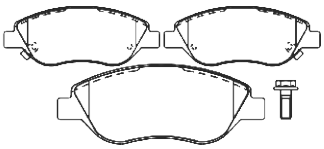
4301

FORD

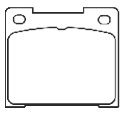
3311

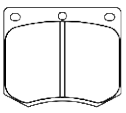
3312

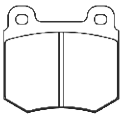
3313

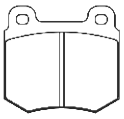
3344

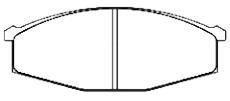
3415

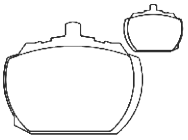
3416

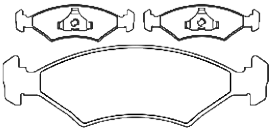
3417/1

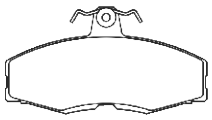
3419

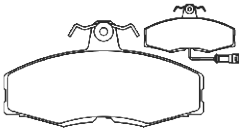
3429

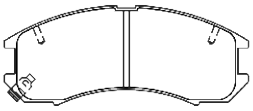
3437


3445

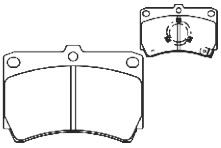
3449

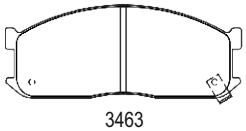
3463

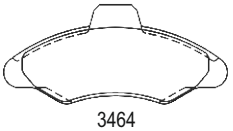
3464

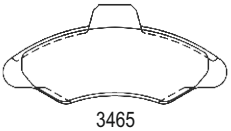
3465

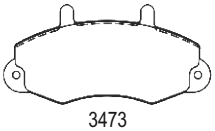
3473

3480

3484

3499

3506

3509

3522

FORD

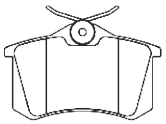
3529/1

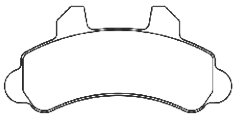
3534

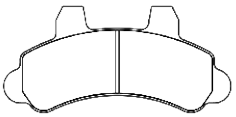
3535

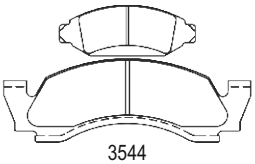
3544

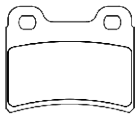
3545

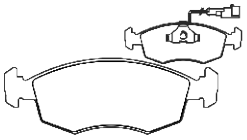
3548

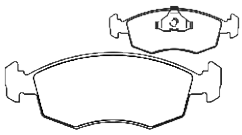
3549

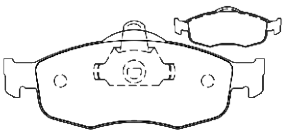
3558

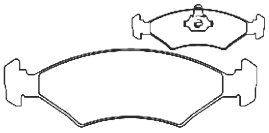
3570

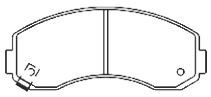
3574

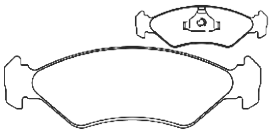
3589

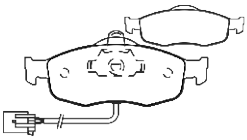
3593

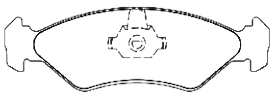
3594

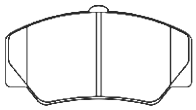
3603

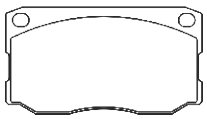
3613

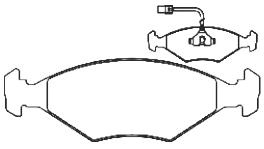
3616

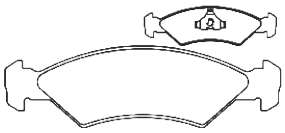
3621

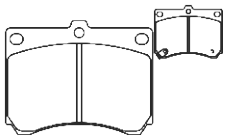
3640

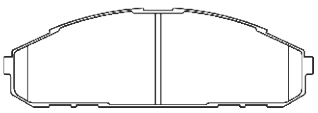
3667

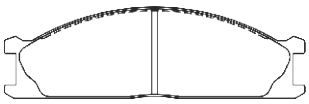
3692

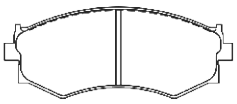
3700

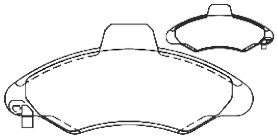
3722

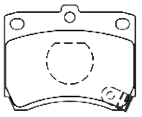
3723

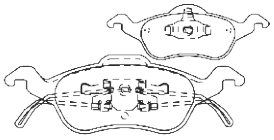
3754

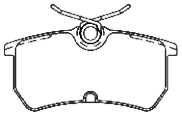
3755

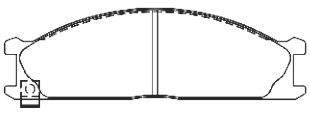
3760

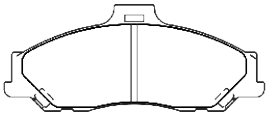
3767

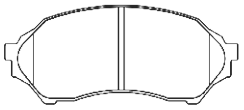
3780

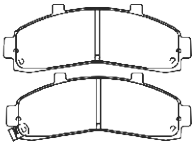
3781

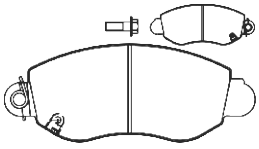
3784

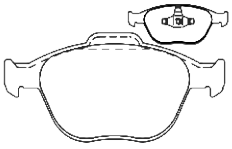
3801

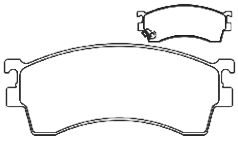
3832


3833

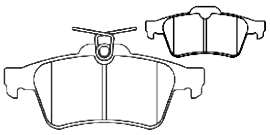
3853/1

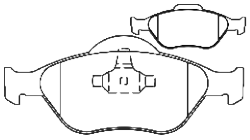
3877

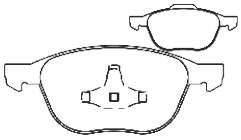
3885

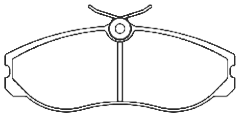
3888

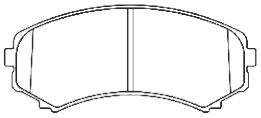
3892

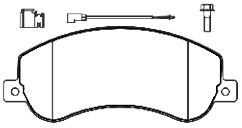
3906 - 3906/1
3906/2 - 3906/1A

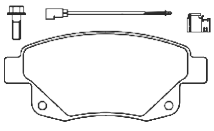
3907 - 3907/1
3907/2 - 3907/1A

3920 - 3920/1

3921

3988

4034

FORD

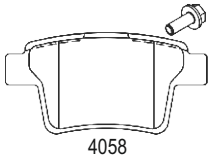
4058

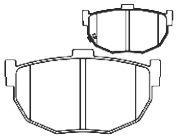
4087


4093

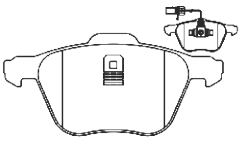
4095

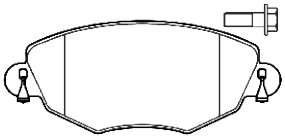
4100

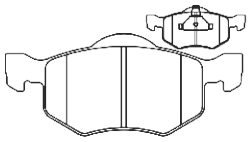
4119

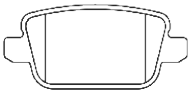
4157

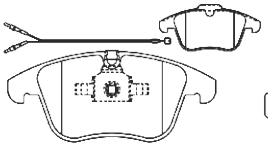
4161

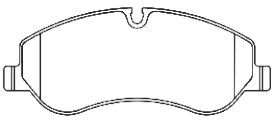
4174

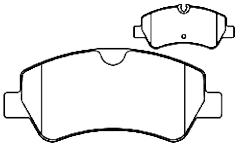
4175

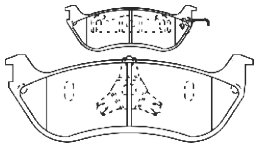
4186

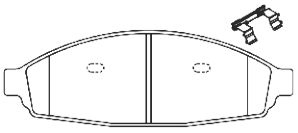
4192

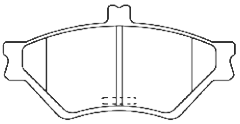
4193

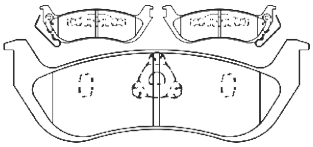
4195

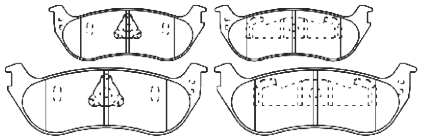
4196

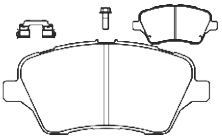
4204

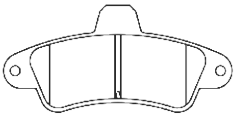
4214

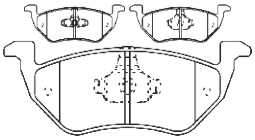
4215

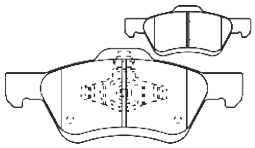
4220

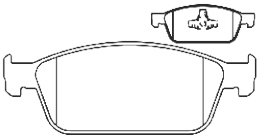
4226

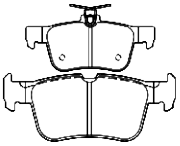
4270

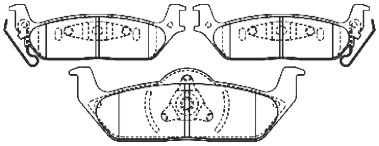
4320

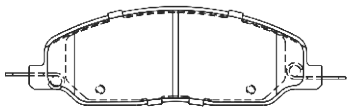
4332

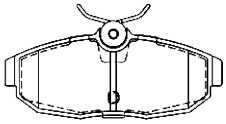
4333

FSO

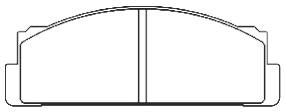
3316

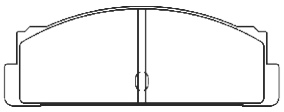
3317

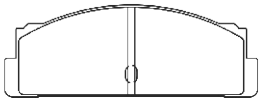
3351

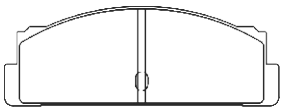
3357

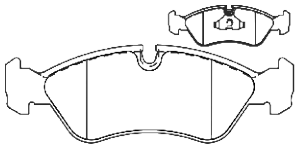
3470

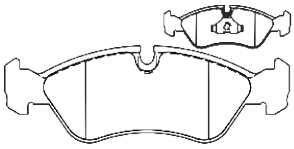
3505

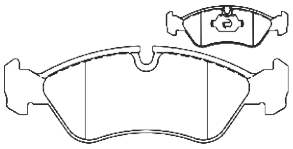
3615

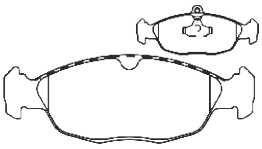
3623

GAZ

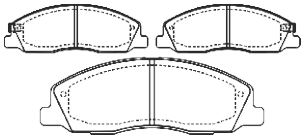
4344

GEELY

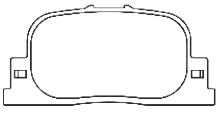
3876

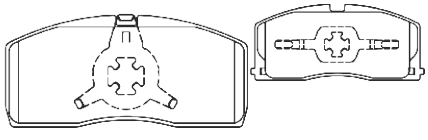
3974

GM

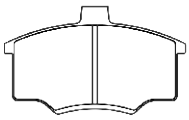
3476

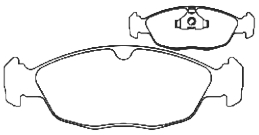
3530

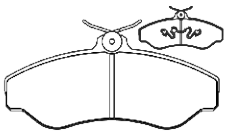
3547

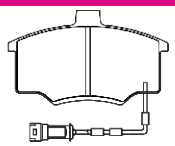
3588

GMC

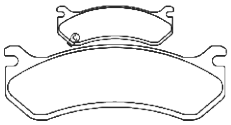
4022

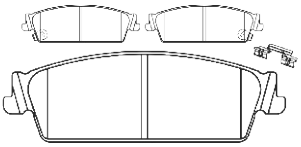
4184

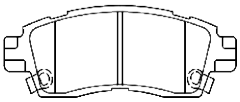
4219

GO KART

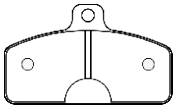
4304

GREAT WALL

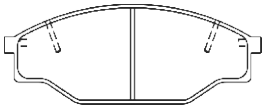
3714

HAFEI

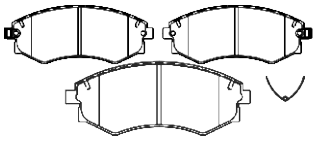
3632

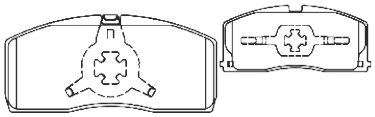
3974

HAIMA (FAW)

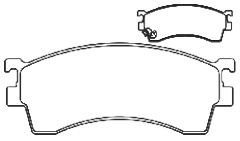
3832

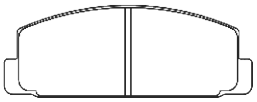
3875

HAWTAI

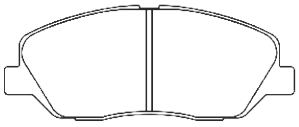
3960

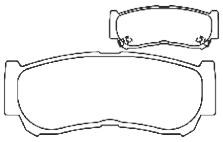
3989

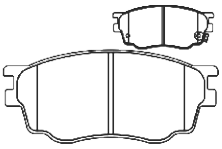
4118

HOLDEN

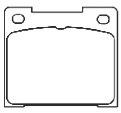
3311

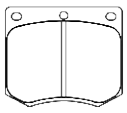
3312

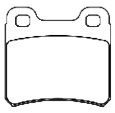
3469

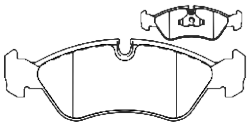
3470

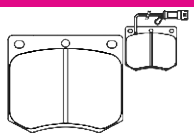
3484

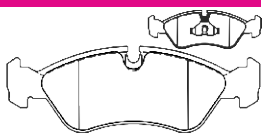
3505

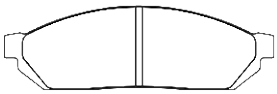
3509

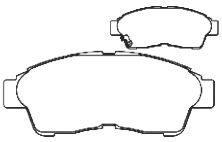
3554

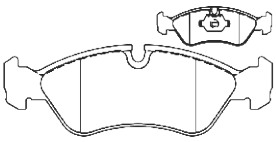
3615

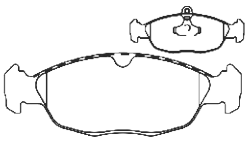
3623

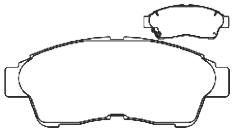
3651

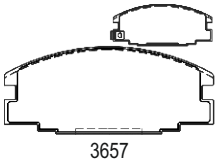
3657

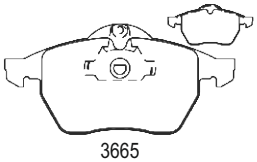
3665

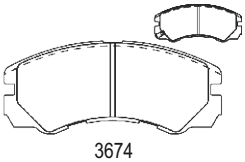
3674


3687


3717

HOLDEN

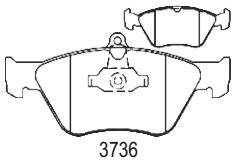
3736

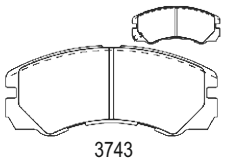
3743

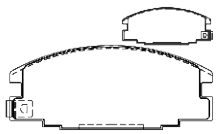
3757

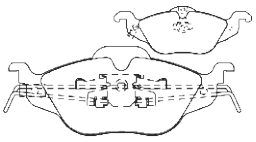
3762

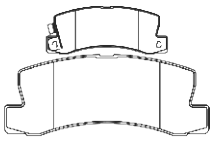
3776

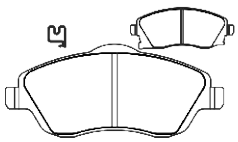
3846

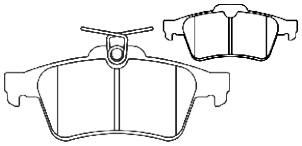
3853/1

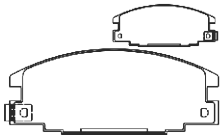
3857

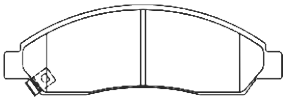
3886

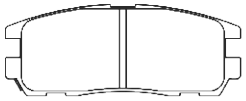
3887

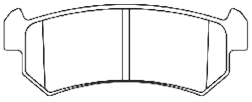
3894

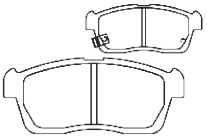
3928

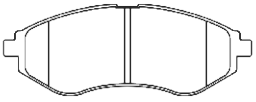
3951

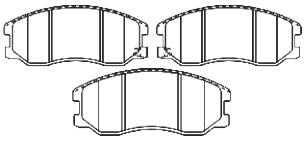
3976

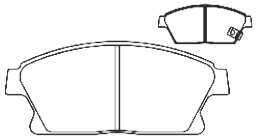
4008

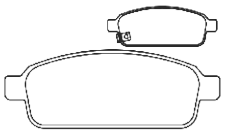
4014

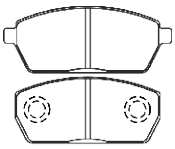
4034

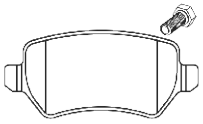
4040

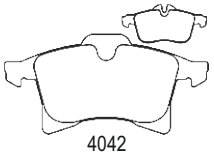
4042

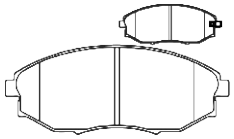
4073

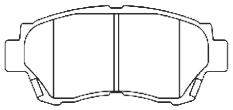
4086

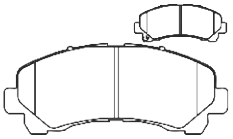
4124

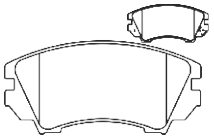
4149

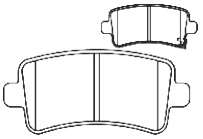
4150

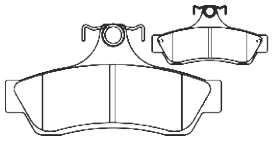
4188

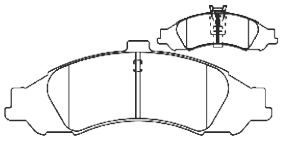
4189

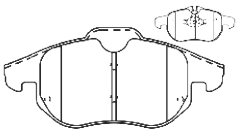
4211

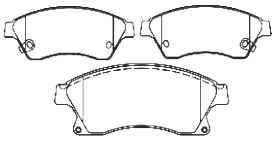
4230

HONDA

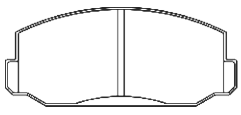
3324

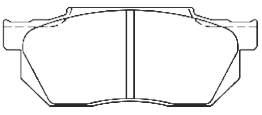
3501

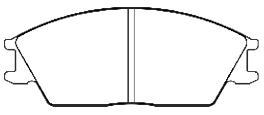
3504

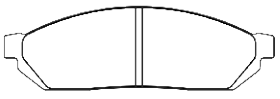
3509

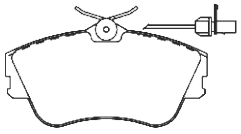
3553/1

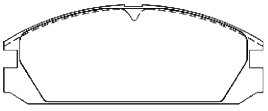
3582

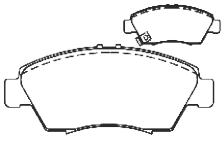
3607

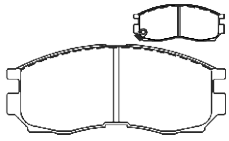
3622

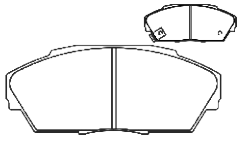
3631

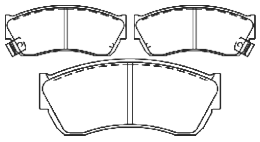
3633

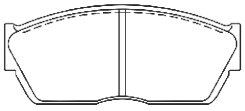
3646

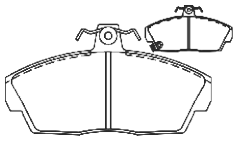
3683

3686

3691

HONDA

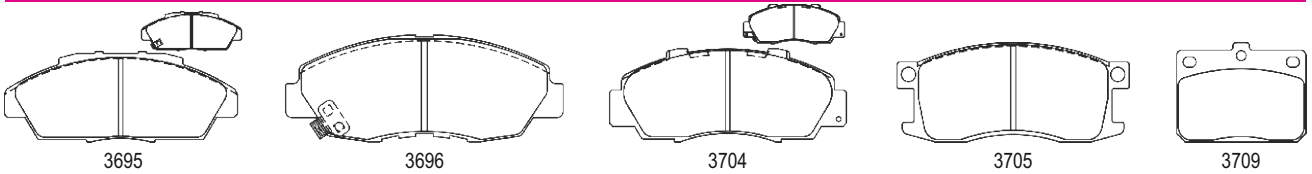

HONGQI

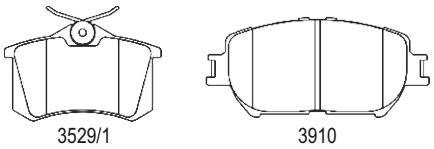

HSV

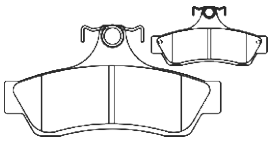

HUALI

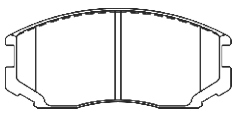

HUMMER

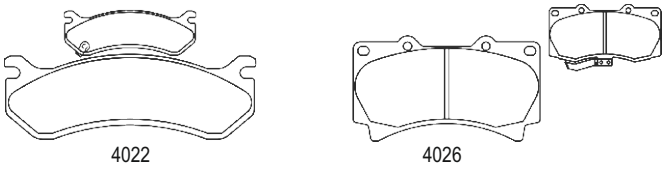

HYUNDAI

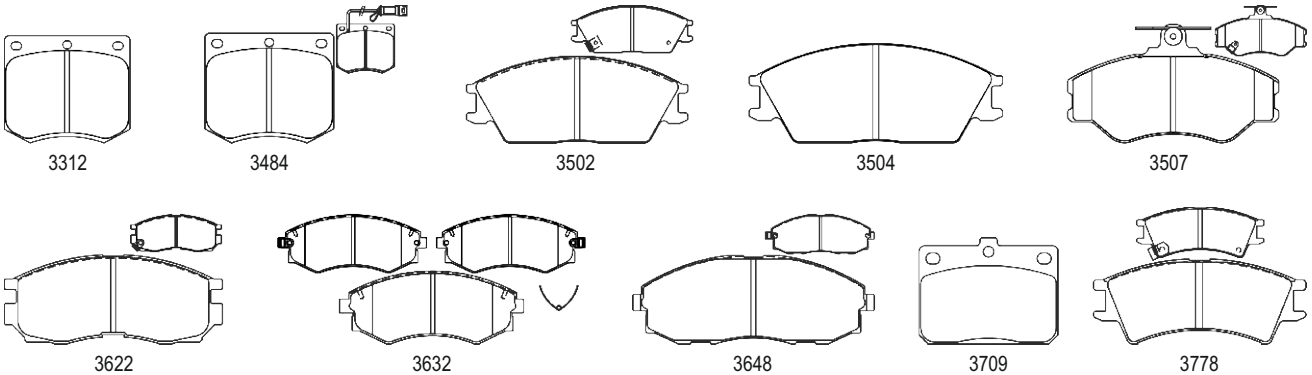

HYUNDAI

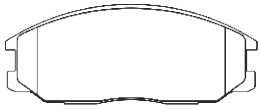
3843

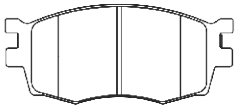
3880

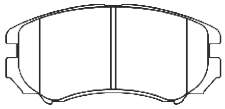
3959

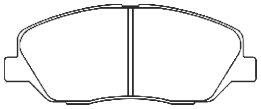
3960

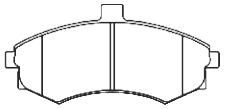
3961

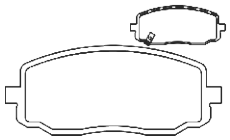
3968

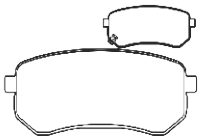
3969

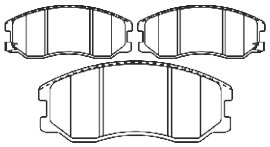
3976/1

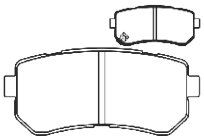
3980

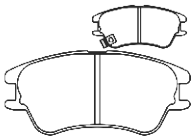
3985

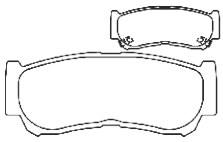
3989

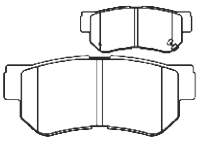
3993

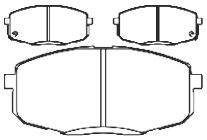
4028

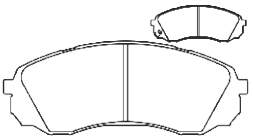
4035

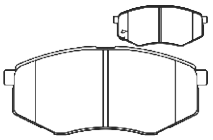
4049

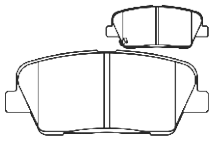
4060

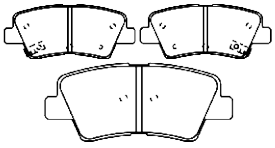
4061

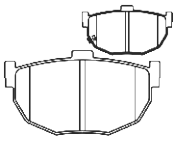
4087

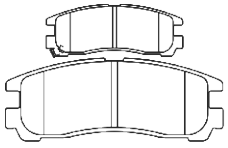
4108

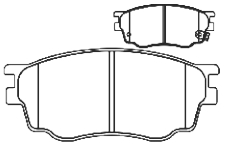
4118

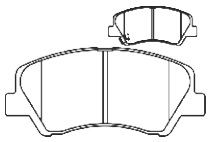
4136

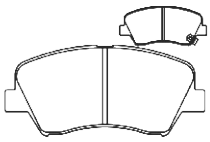
4166

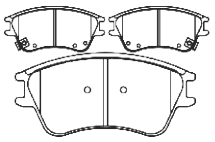
4217

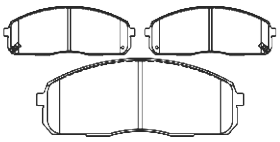
4231

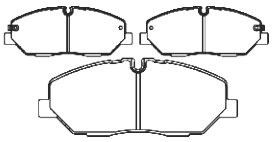
4251

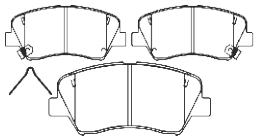
4342

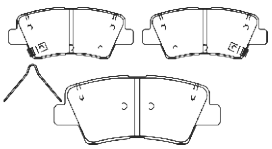
4343

INFINITI

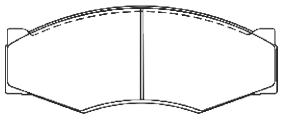
3397

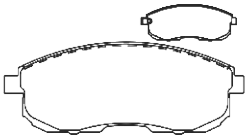
3699

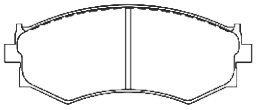
3700

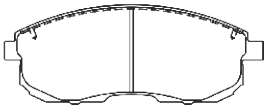
3779

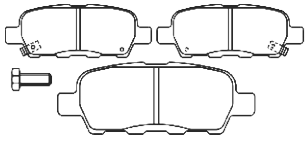
3933

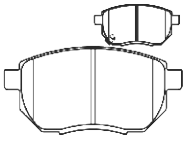
4074

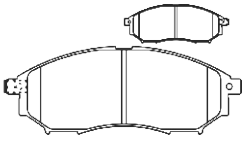
4143

INNOCENTI

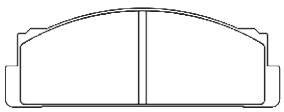
3316

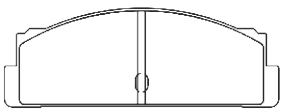
3357

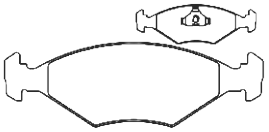
3459

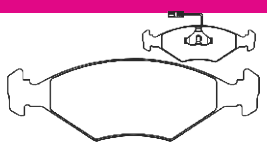
3461

INOKOM

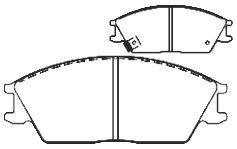
3502

IRISBUS

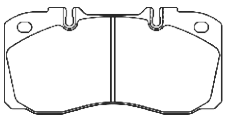
3994

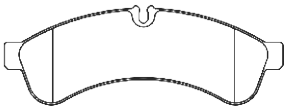
3995

ISUZU

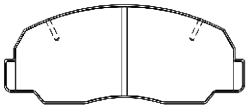
3436

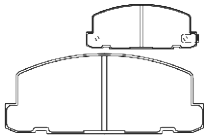
3446

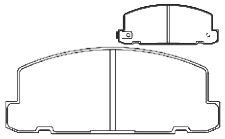
3450

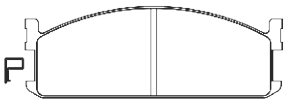
3462

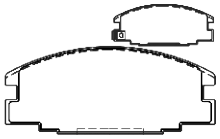
3657

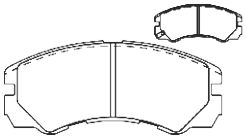
3674

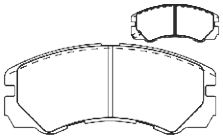
3743

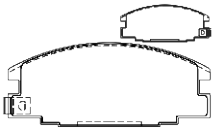
3757

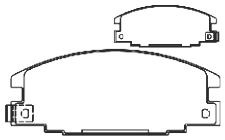
3857

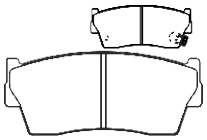
3882

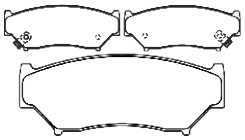
3883


3884

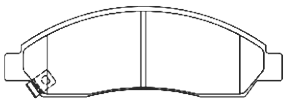
3886

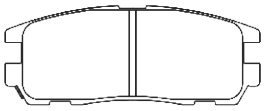
3887

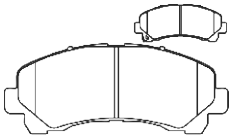
4124

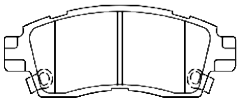
4219

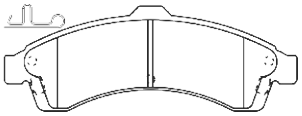
4221

IVECO

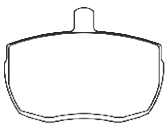
3423

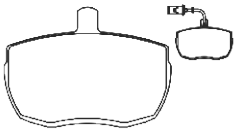
3423/1

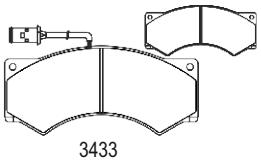
3433

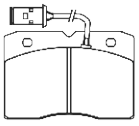
3523

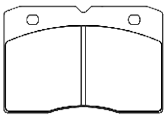
3524

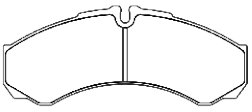
3575 - 3575/1

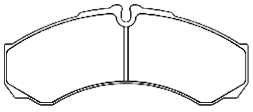
3575/2

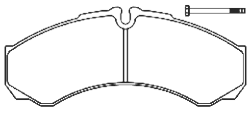
3645

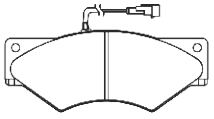
3749

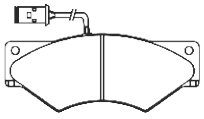
3749/1

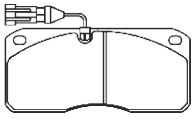
3773

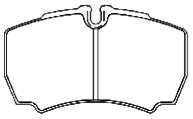
3823

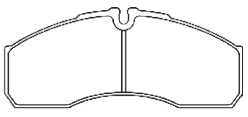
3942/A

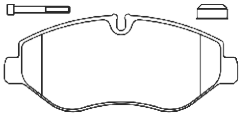
3965

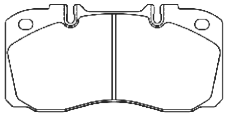
3994

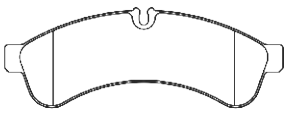
3995

JAC

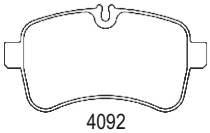
4092

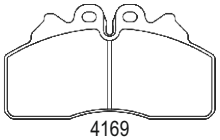
4169

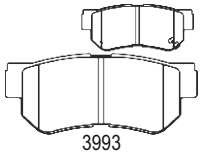
3993

JAGUAR

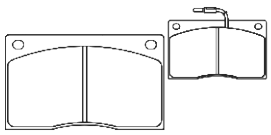
3526

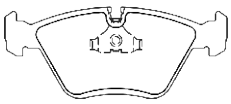
3584

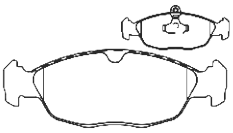
3623

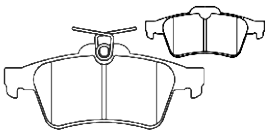
3853/1

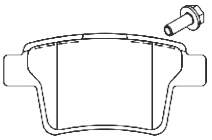
4058


4093


4100

JEEP

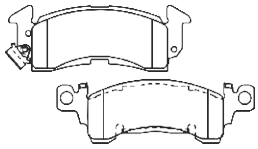
3864

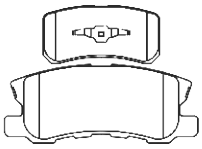
3893

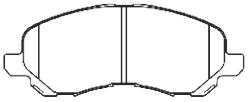
3955

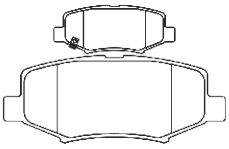
4004

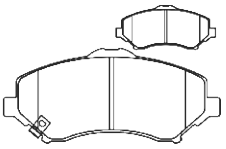
4005

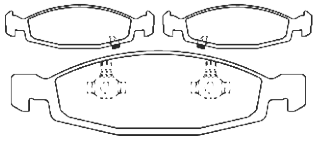
4011

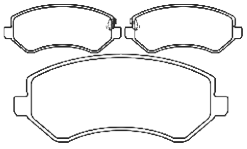
4012

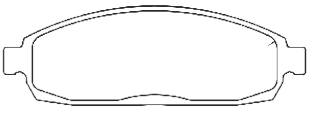
4016

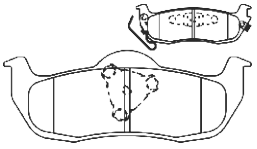
4030

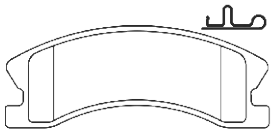
4031

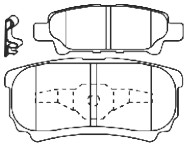
4106

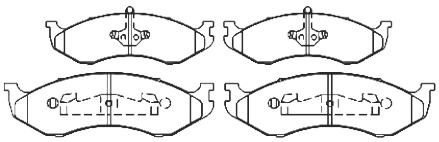
4182

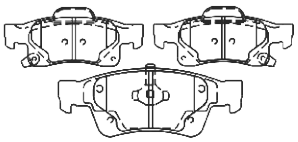
4339

KARSAN

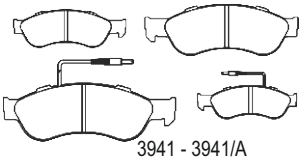
3941 - 3941/A

KIA

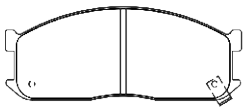
3463

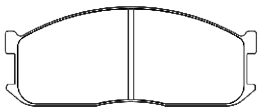
3499

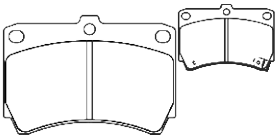
3522

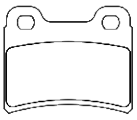
3545

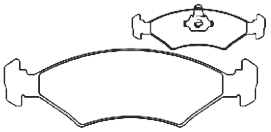
3570

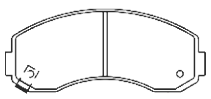
3574

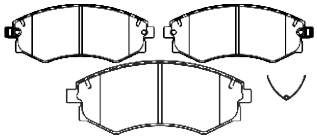
3632

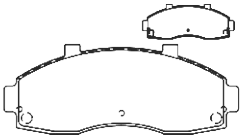
3653

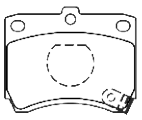
3723

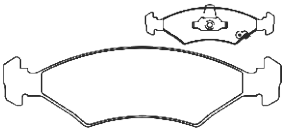
3740

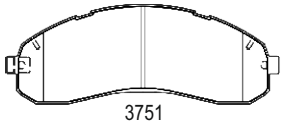
3751

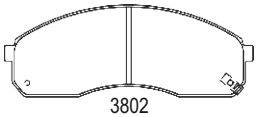
3802

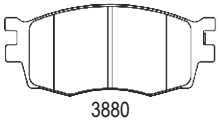
3880

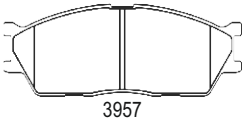
3957

KIA

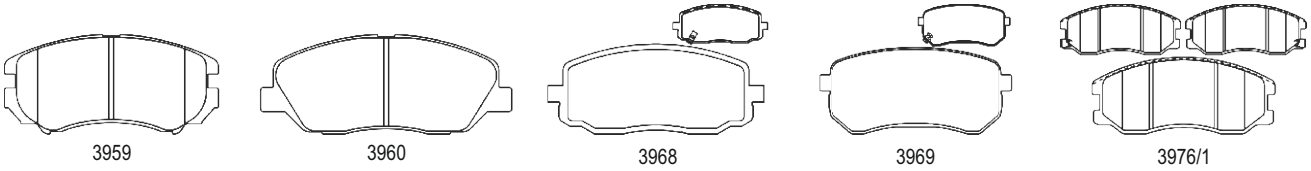

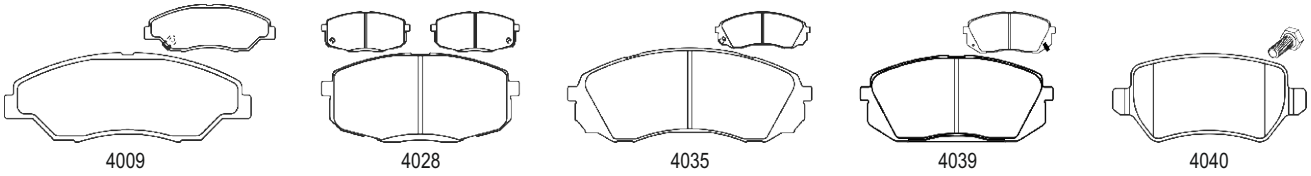

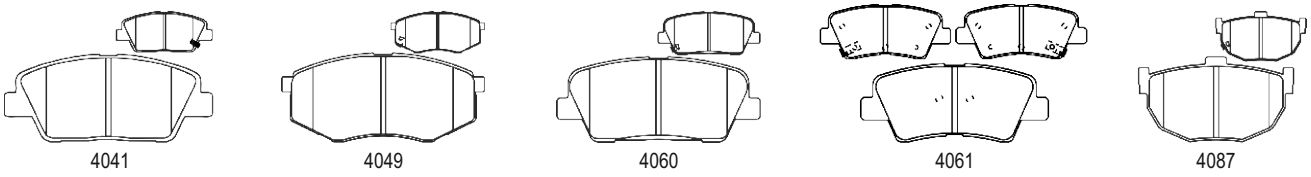

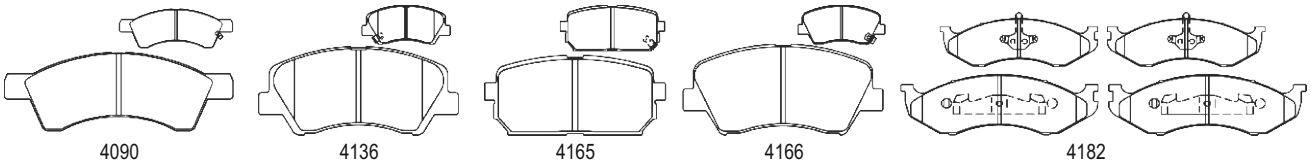

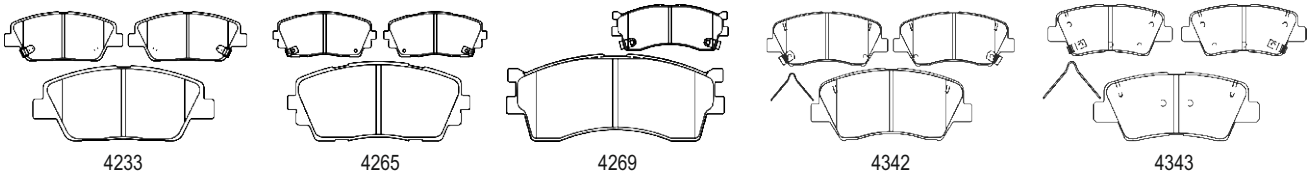

LADA

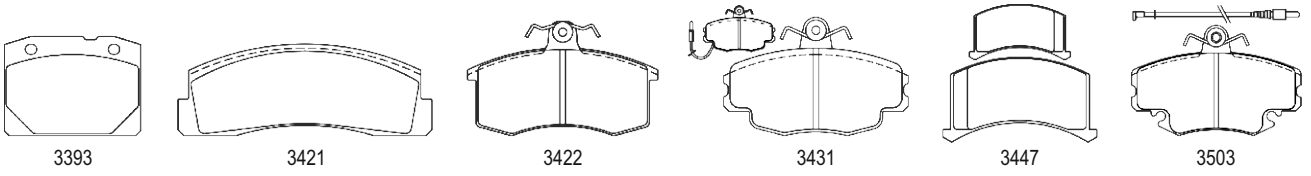

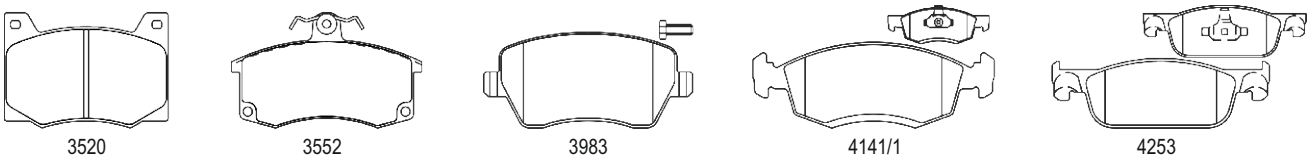

LANCIA

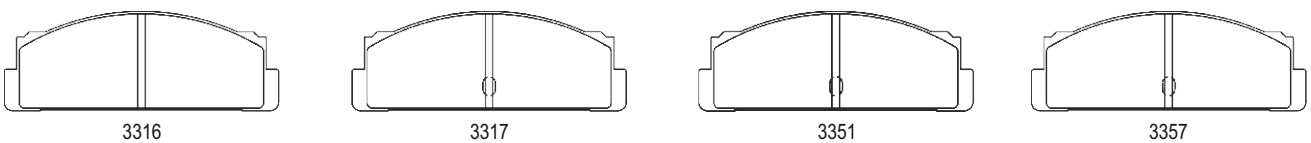

LANCIA

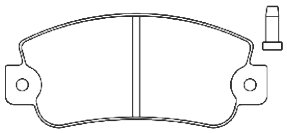
3424/1

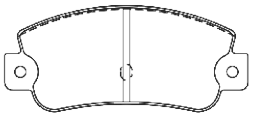
3425

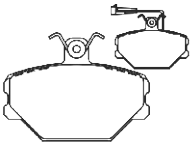
3432

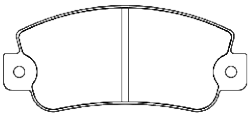
3439

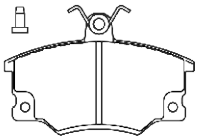
3466

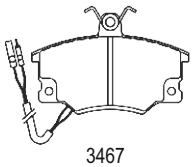
3467

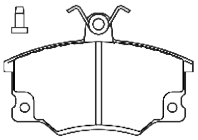
3468

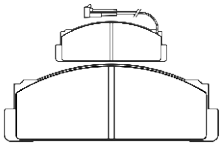
3485

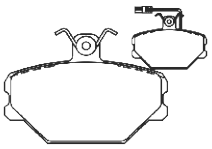
3491

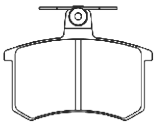
3536

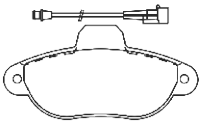
3608

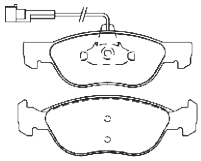
3618


3643

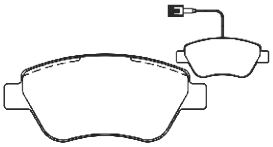
3826/1

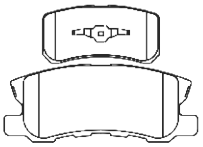
3893

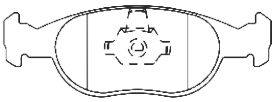
3897

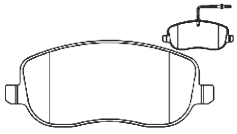
3986

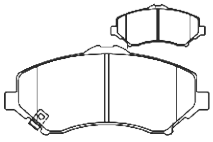
4005

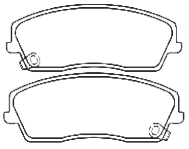
4006

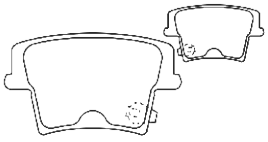
4018

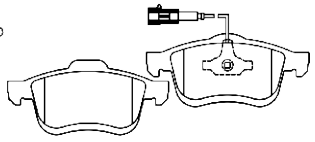
4121

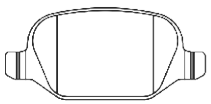
4123

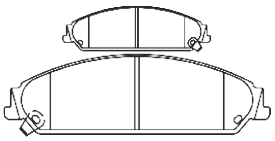
4198

LAND ROVER

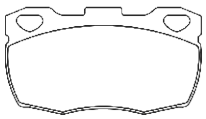
3412

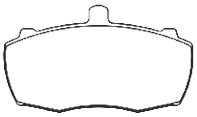
3413

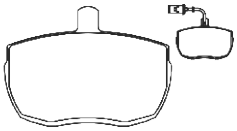
3423/1

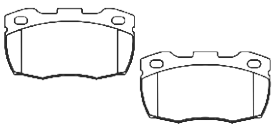
3453 - 3453/1

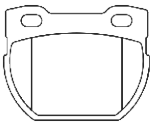
3512

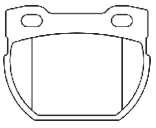
3512/2

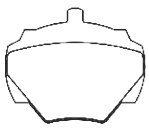
3661

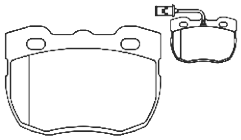
3662

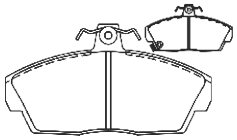
3683

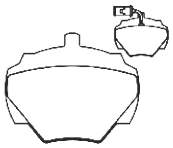
3771

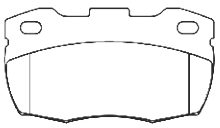
3816

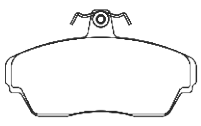
3872

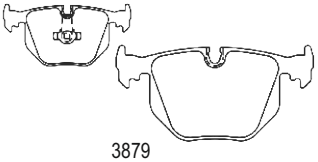
3879

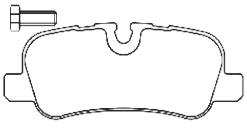
3944

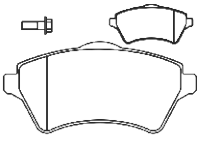
4094

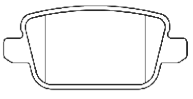
4157

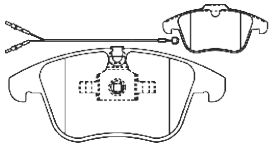
4161

4291

4293

4314

LANDWIND (JMC)

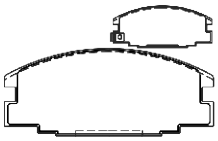
3657

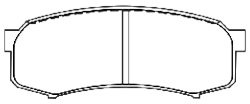
3693

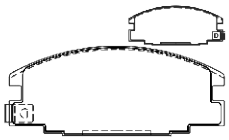
3757

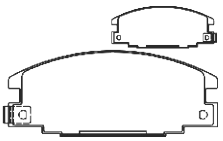
3857

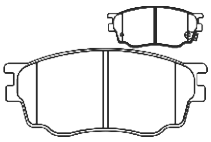
4118

LDV

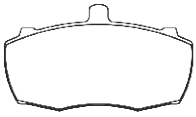
3413

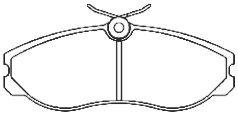
3888

LEXUS

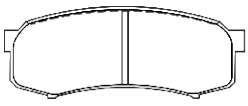
3693

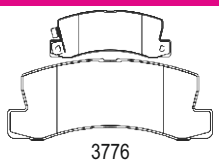
3776

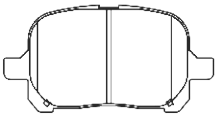
3822

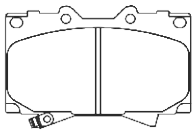
3829

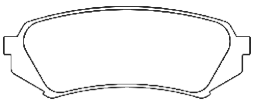
3830

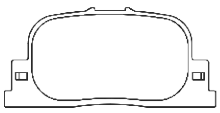
3876

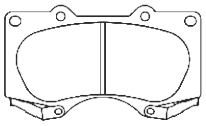
3891


3911

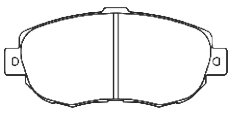
3915

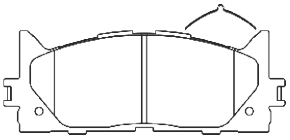
3948

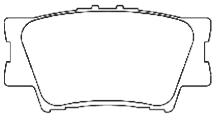
3949

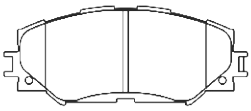
3953

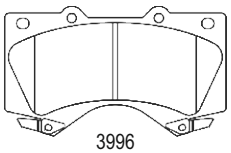
3996

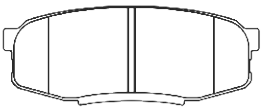
3997

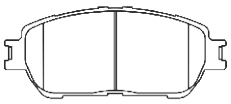
4003

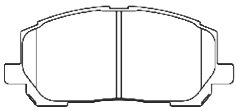
4082

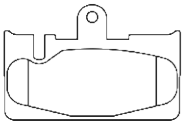
4083

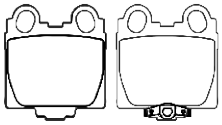
4085

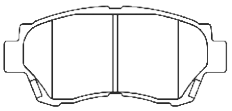
4086

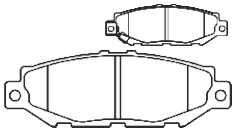
4099

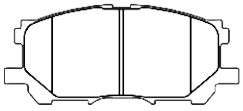
4105

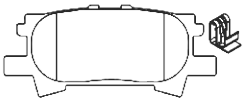
4111

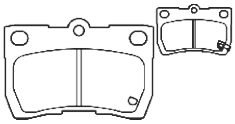
4113

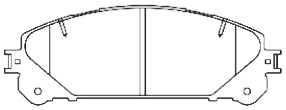
4255

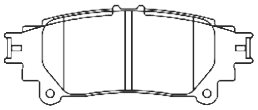
4256

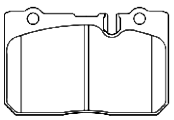
4274

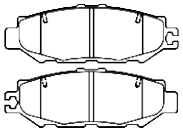
4275

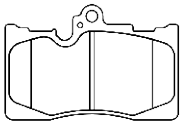
4276

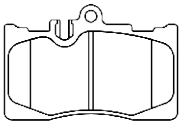
4276/1

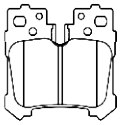
4277

LEYLAND

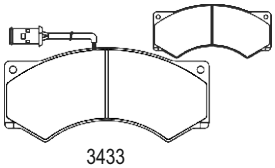
3433

LIFAN

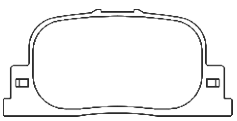
3876

LIGIER


3747

LINCOLN

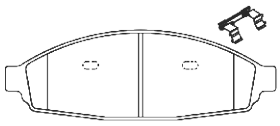
4192

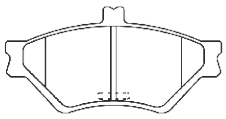
4193

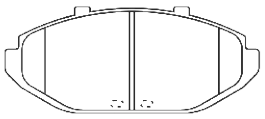
4194

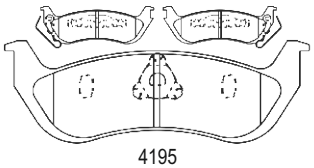
4195

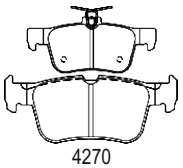
4270

LOTUS

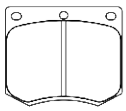
3312

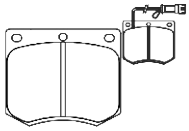
3484

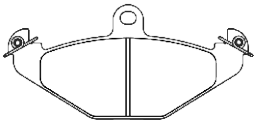
3596

LTI

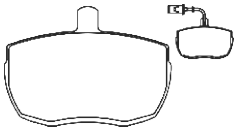
3423/1

MAHINDRA

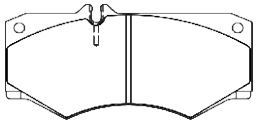
3513

MARUTI

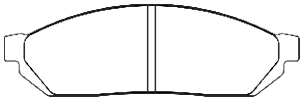
3509

MASERATI

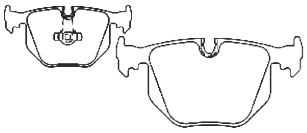
3879

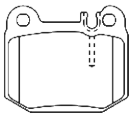
4103

MAZDA

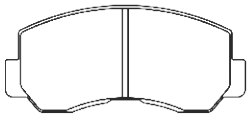
3376

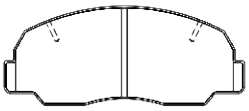
3436

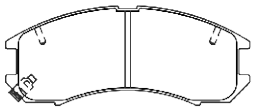
3437

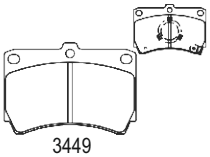
3449

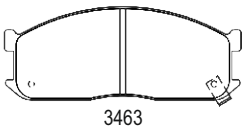
3463

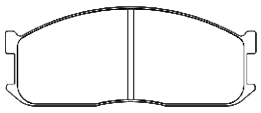
3499

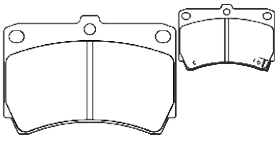
3522

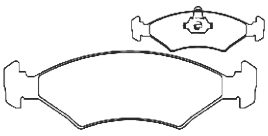
3570

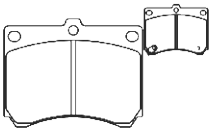
3640


3666


3672

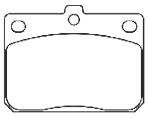
3709

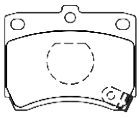
3723

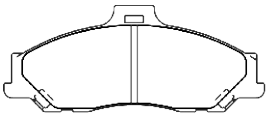
3767

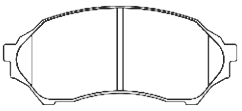
3780

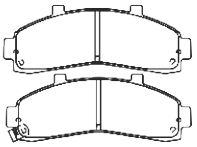
3781 - 3781/1

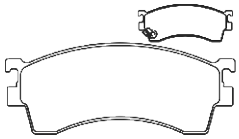
3832


3833

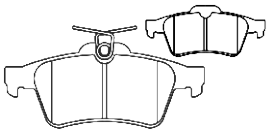
3853/1

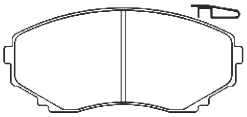
3874

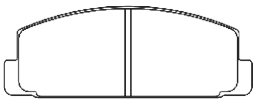
3875

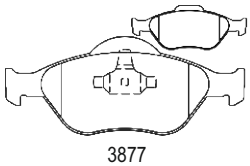
3877

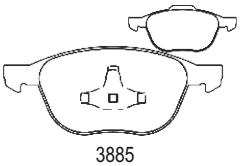
3885

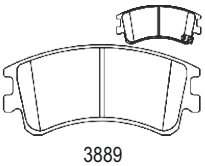
3889

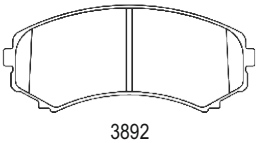
3892

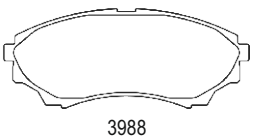
3988

MAZDA

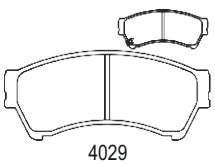
4029

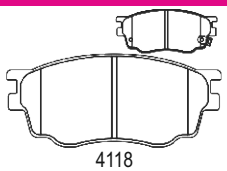
4118

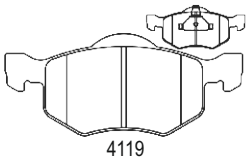
4119

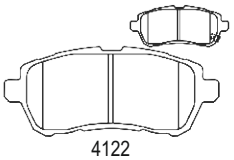
4122

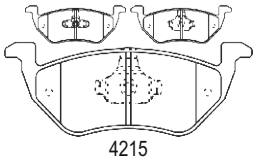
4215

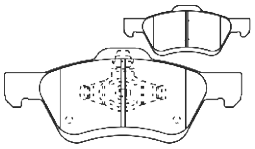
4220

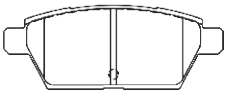
4242

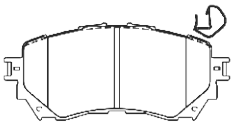
4315

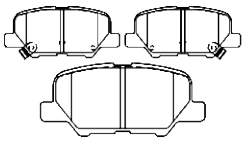
4316

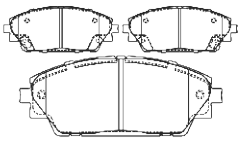
4317

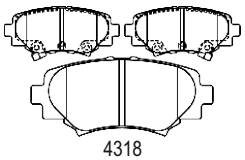
4318

MEGA

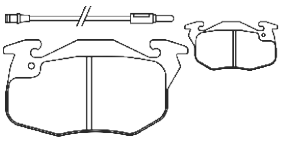
3380

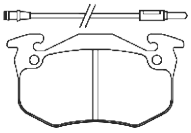
3381

MERCEDES BENZ

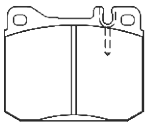
3315

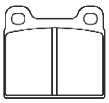
3318

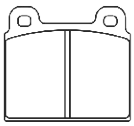
3320

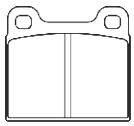
3338

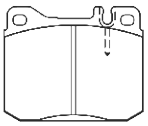
3339

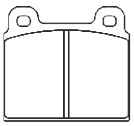
3350

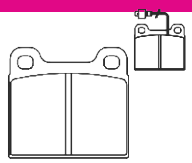
3353

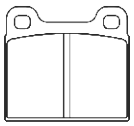
3362

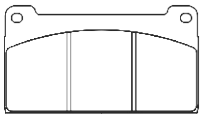
3390

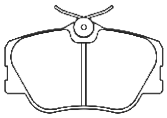
3408

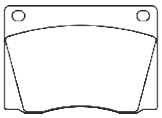
3455

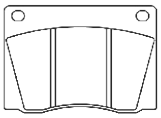
3471

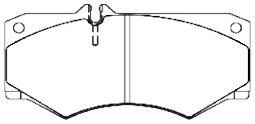
3513

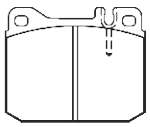
3514

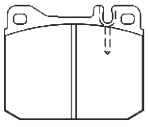
3515

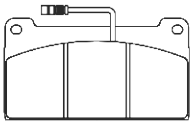
3521


3550

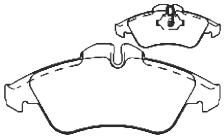
3567

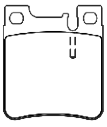
3581


3611

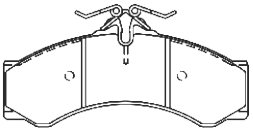
3614

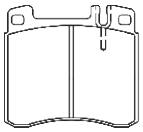
3626

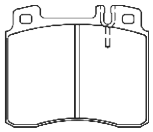
3627

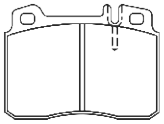
3628

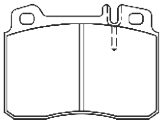
3629

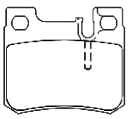
3630

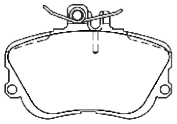
3658

3663

3670

3676

3677

3678

3679

3680

3681

3689

3804

3821

MERCEDES BENZ

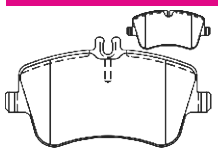
3836

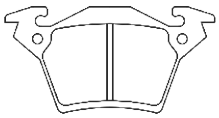
3861

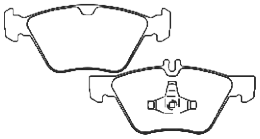
3863

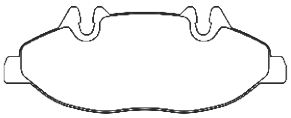
3923 - 3923/1

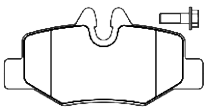
3924 - 3924/1

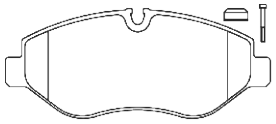
3925 - 3925/2

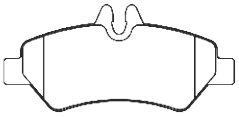
3926 - 3926/1

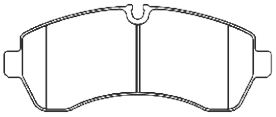
3962 - 3962/1

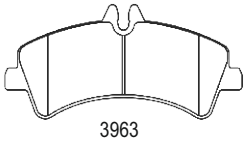
3963


3966 - 3966/1


3983

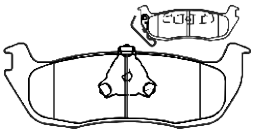
4069

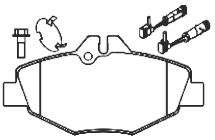
4097

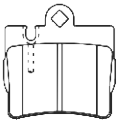
4101

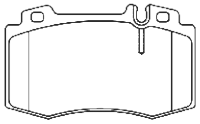
4102

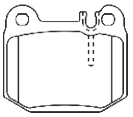
4103

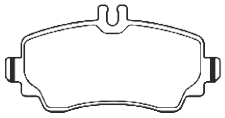
4125

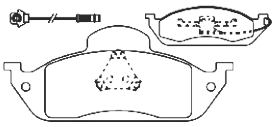
4126 - 4126/1

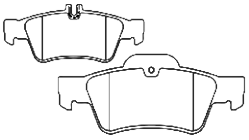
4127

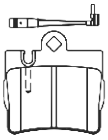
4209

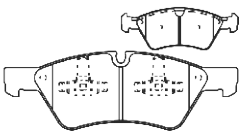
4210

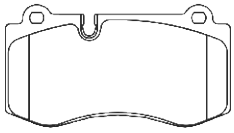
4240

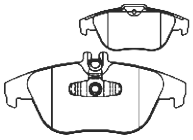
4247

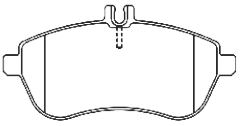
4248

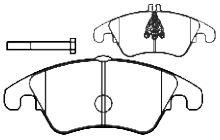
4249

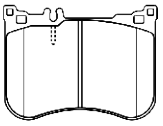
4313

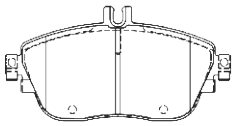
4326

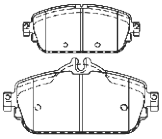
4334

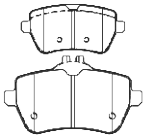
4335

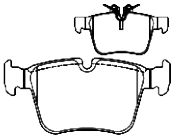
4349

MERCURY

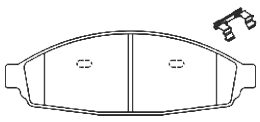
4192

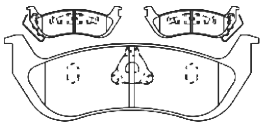
4195

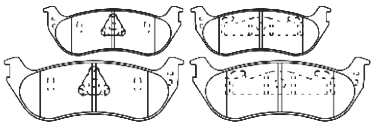
4196

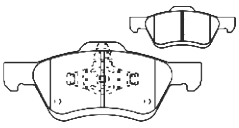
4220

MG

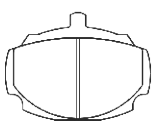
3319

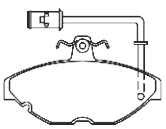
3624

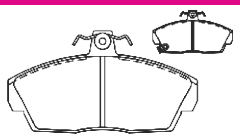
3683

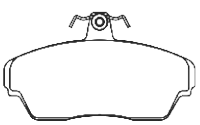
3872 - 3872/1

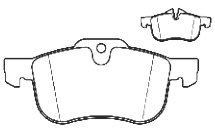
3943

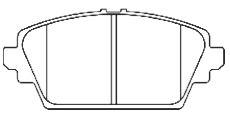
4115

4148

4212

4347

MITSUBISHI

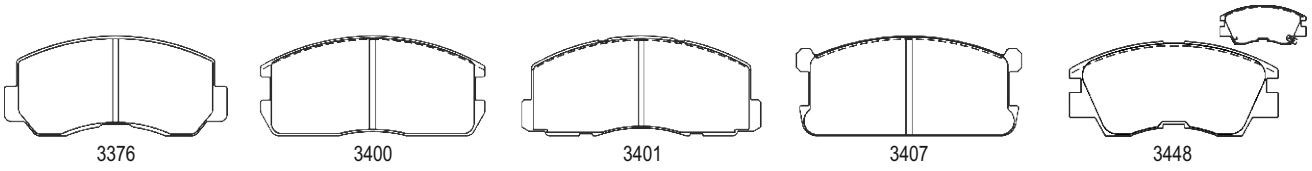
3376 3400 3401 3407 3448

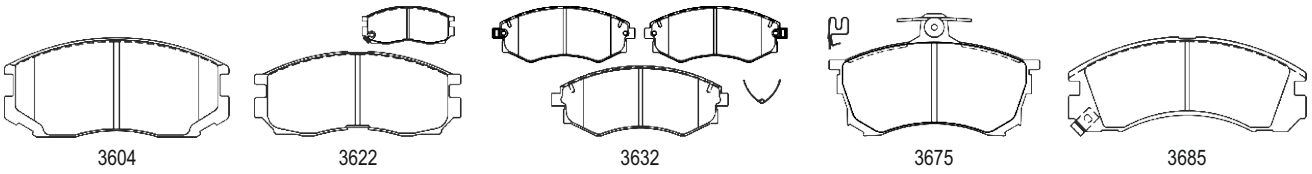
3604 3622 3632 3675 3685

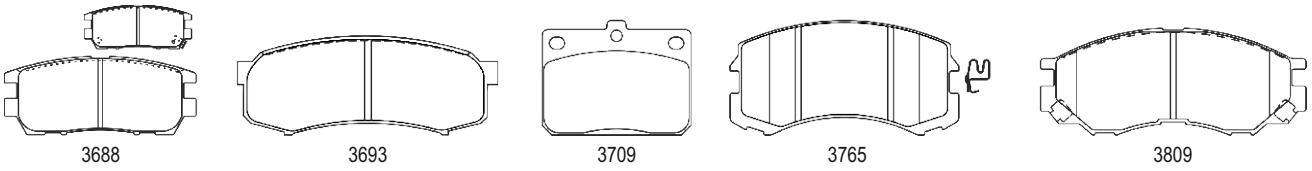
3688 3693 3709 3765 3809

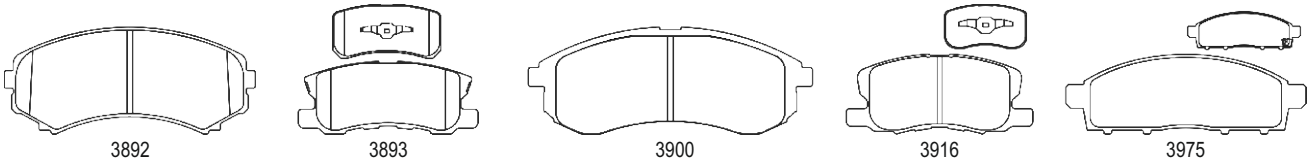
3892 3893 3900 3916 3975

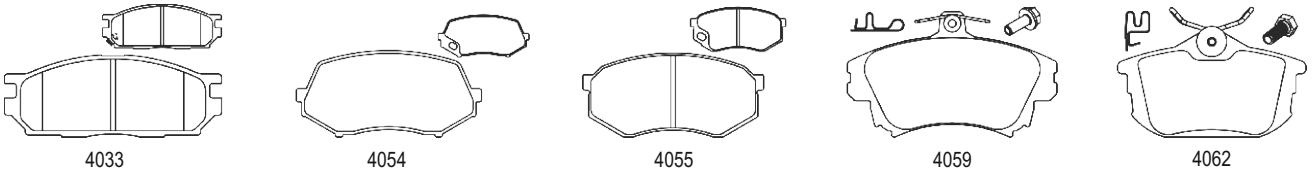
4033 4054 4055 4059 4062

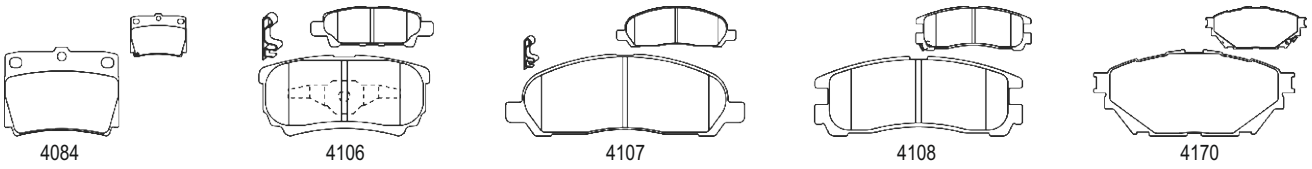
4084 4106 4107 4108 4170

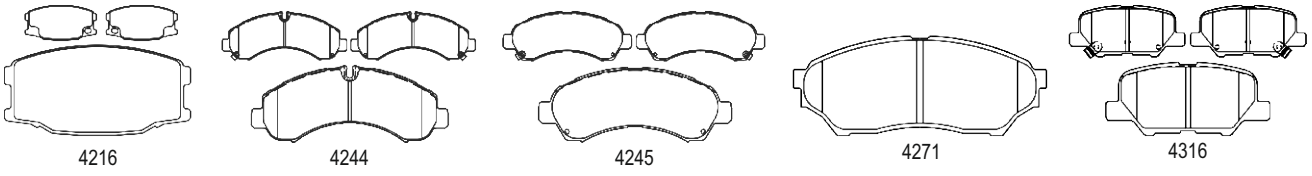
4216 4244 4245 4271 4316

MULTICAR

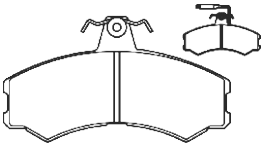
3440

NAZA

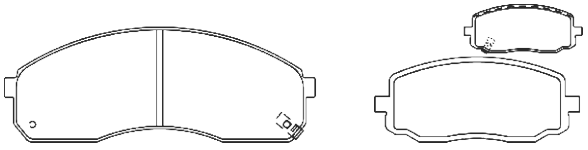
3802 3968

NISSAN

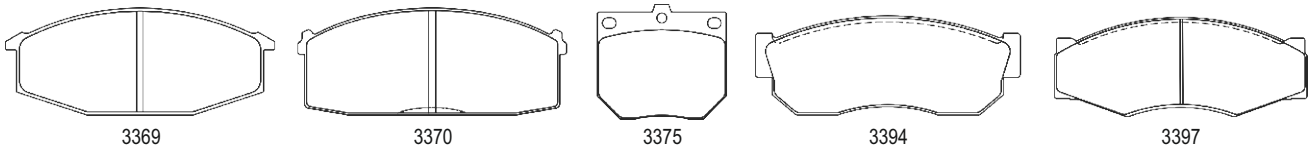
3369 3370 3375 3394 3397

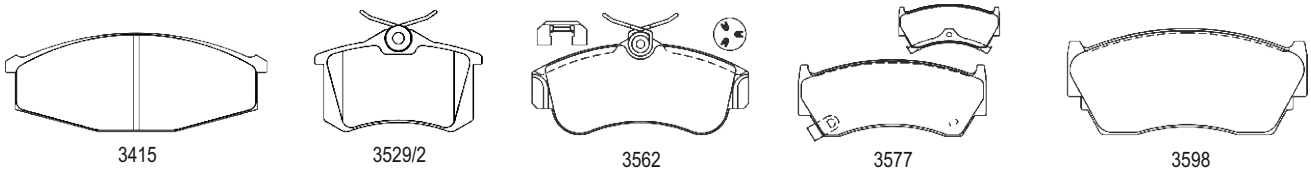
3415 3529/2 3562 3577 3598

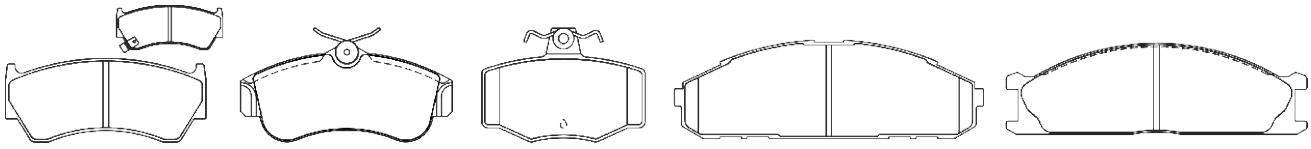
3647 3652 3660 3667 3692


3699 3700 3758 3760 3766

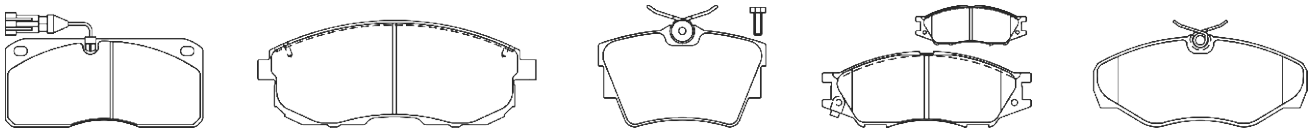
3773 3779 3795/1 3797 3848

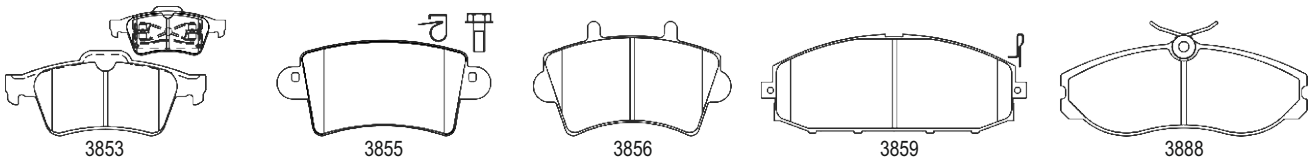
3853 3855 3856 3859 3888

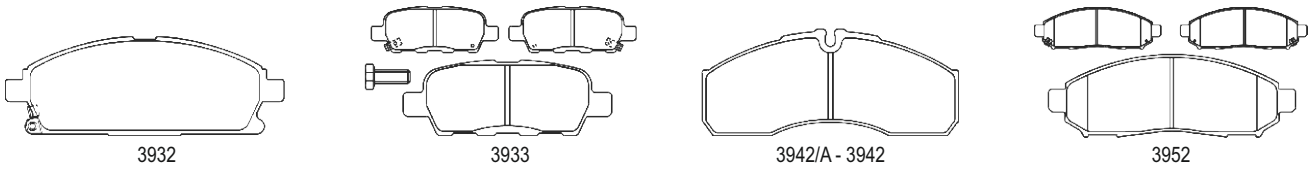
3932 3933 3942/A - 3942 3952

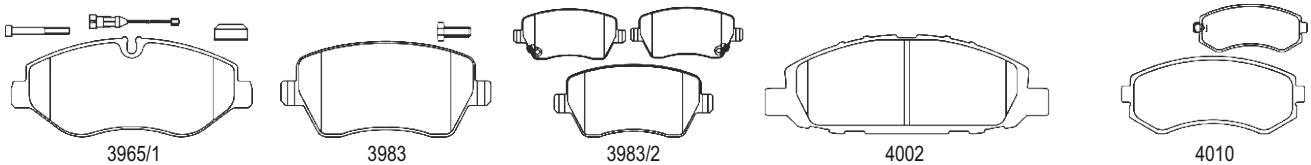
3965/1 3983 3983/2 4002 4010

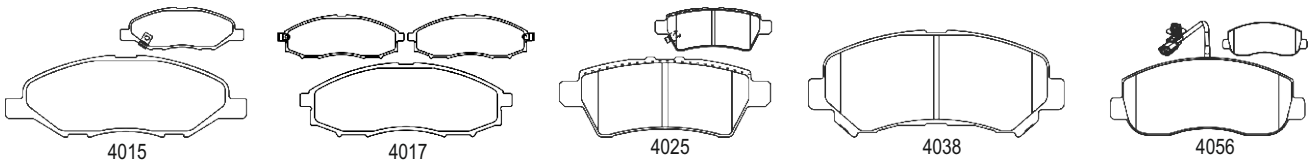
4015 4017 4025 4038 4056

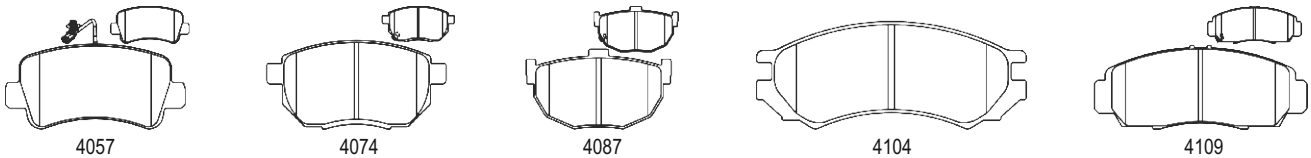
4057 4074 4087 4104 4109

NISSAN

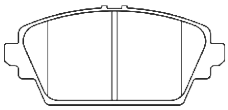
4115

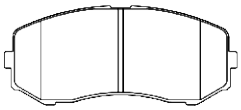
4116

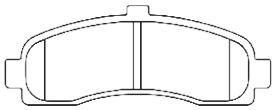
4128

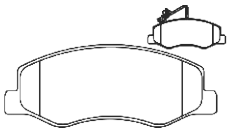
4132

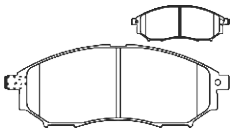
4143

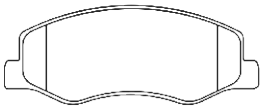
4172

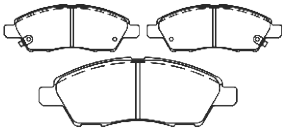
4229

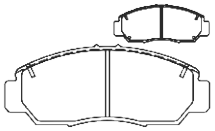
4232

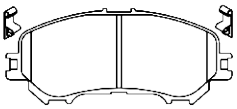
4282 - 4282/1

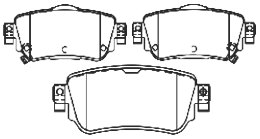
4283 - 4283/1

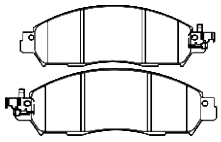
4307

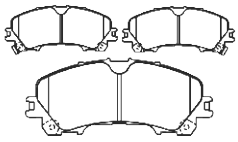
4308

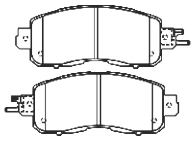
4319

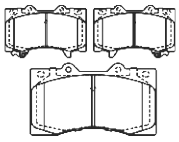
4324

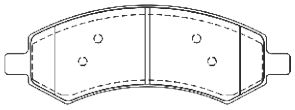
4328

OLCIT

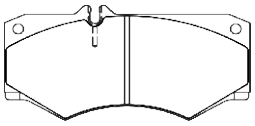
3513

OPEL

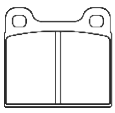
3318

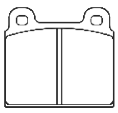
3334

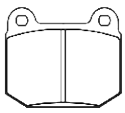
3335

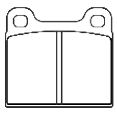
3337

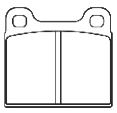
3338

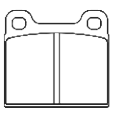
3353



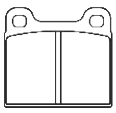
3362

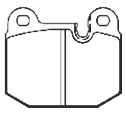
3365

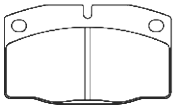
3410


3469

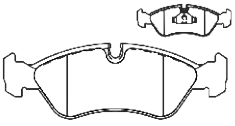
3470

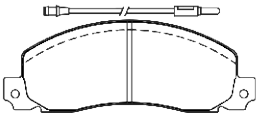
3482

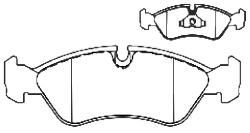
3505

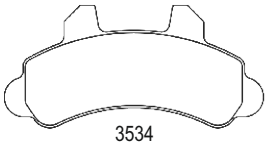
3534

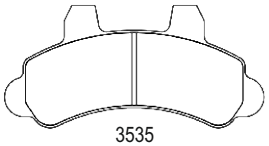
3535

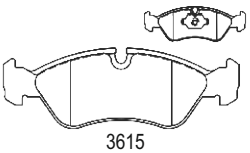
3615

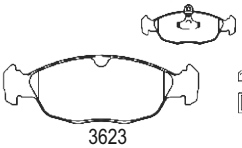
3623

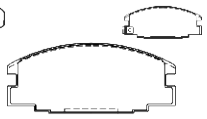
3657

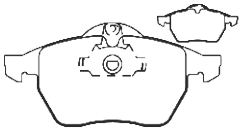
3665

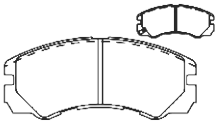
3674


3717

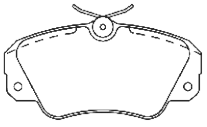
3733

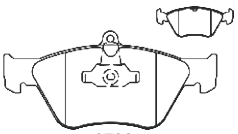
3736

3743

3757

3762

3763

3795/1

OPEL

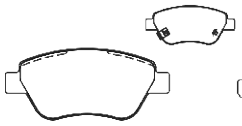
3826/2

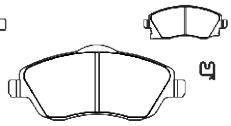
3846


3848

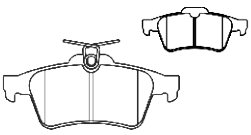
3853/1

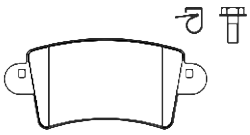
3855

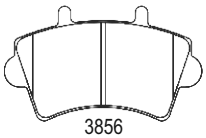
3856

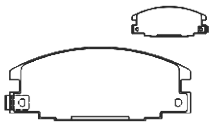
3857

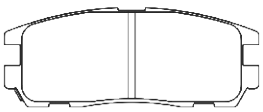
3887

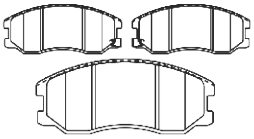
3976

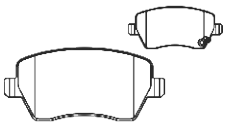
3983/1

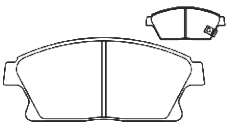
4008

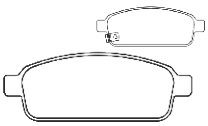
4014

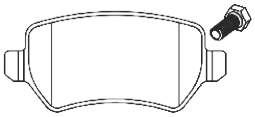
4040

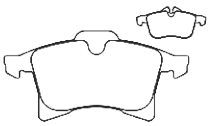
4042

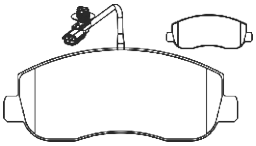
4056

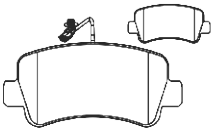
4057

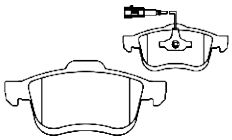
4121

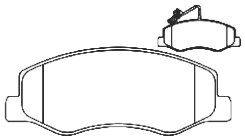
4132

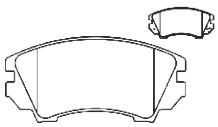
4149

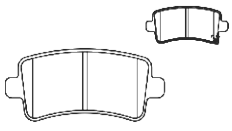
4150


4172

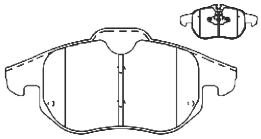
4211

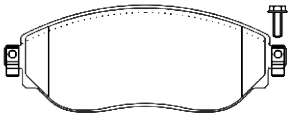
4227

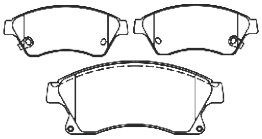
4230

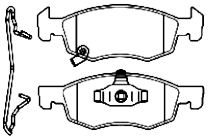
4284

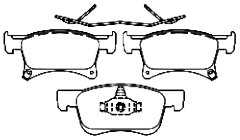
4285

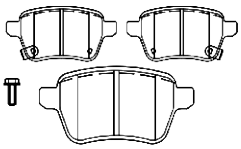
4286

OPTARE / PERODUA

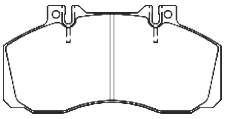
3679

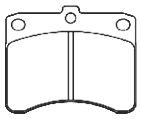
3746

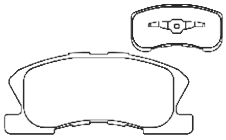
3901

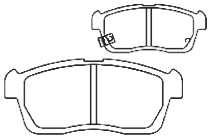
3928

PEUGEOT

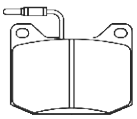
3321

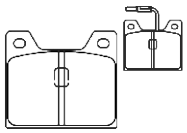
3322

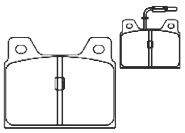
3323

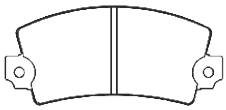
3329

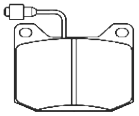
3340

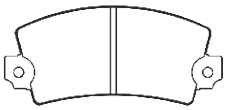
3342

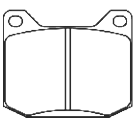
3358

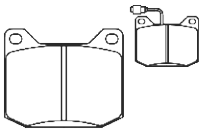
3364

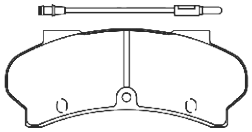
3366

3366/1

3377

PEUGEOT

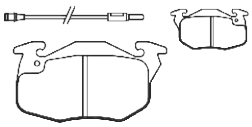
3380

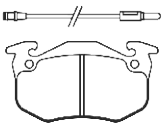
3381

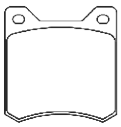
3403

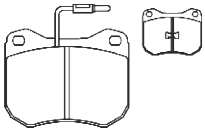
3405

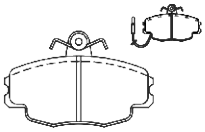
3431

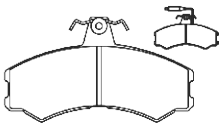
3440

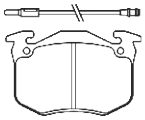
3442

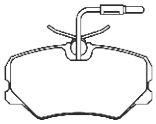
3457

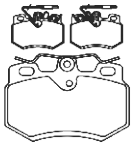
3474

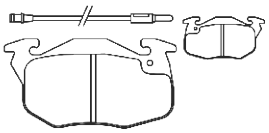
3488

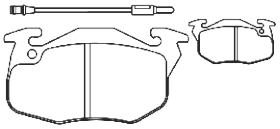
3489

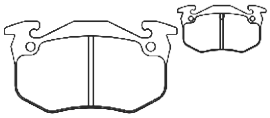
3496

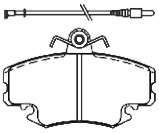
3503

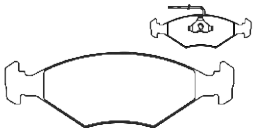
3517

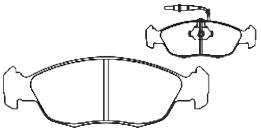
3528

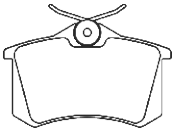
3529

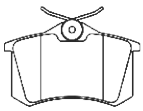
3529/1

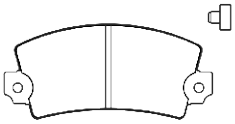
3542

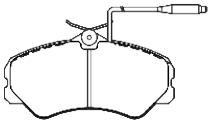
3543

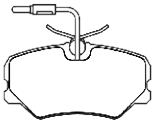
3557

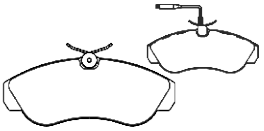
3559

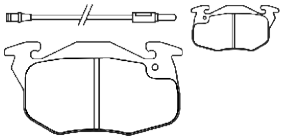
3580

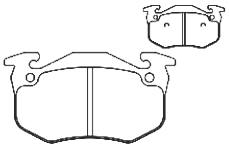
3592

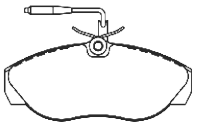
3595

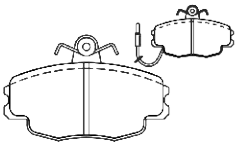
3599

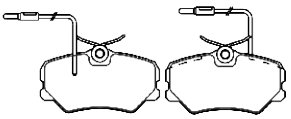
3610

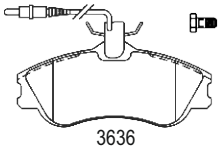
3636

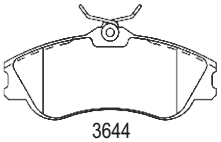
3644

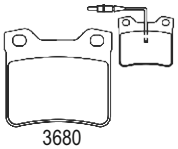
3680

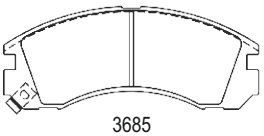
3685

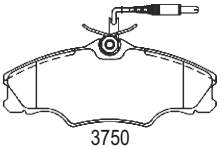
3750

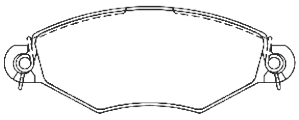
3759

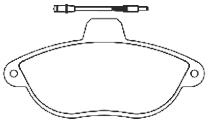
3799


3800 - 3800/1
3800/2 - 3800/3

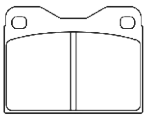
3806 - 3806/1


3820 - 3820/1
3820/2 - 3820/3

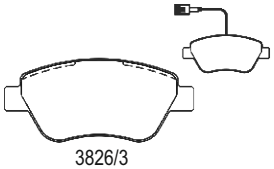
3826/3

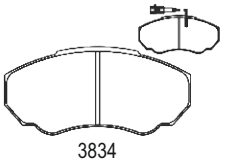
3834

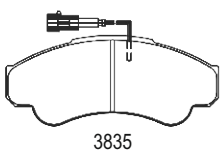
3835

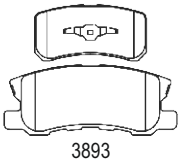
3893

3914 - 3914/1

3922

3938

3939

3940

3946

3964

3970

3971

3972

3981

PEUGEOT


3984

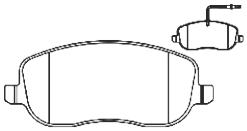
3986

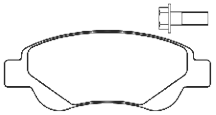
3987

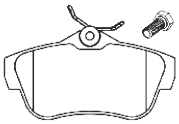
4151

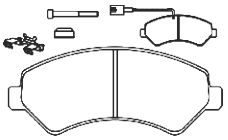
4171 - 4171/1

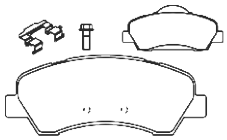
4201 - 4201/1

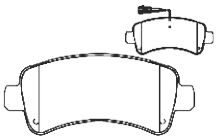
4224

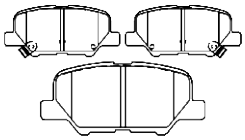
4316

PIAGGIO

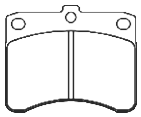
3746


3747

PININFARINA

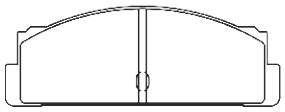
3317

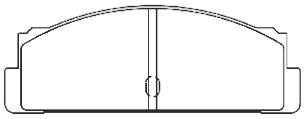
3351

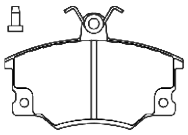
3466

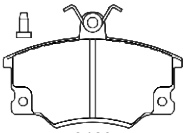
3468

PLYMOUTH / POLSKI

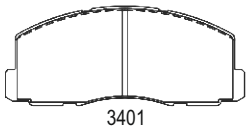
3401

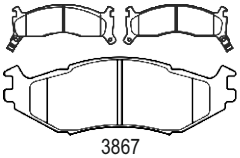
3867

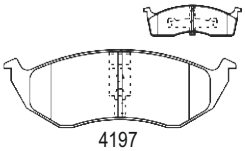
4197

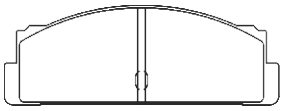
3357

PONTIAC

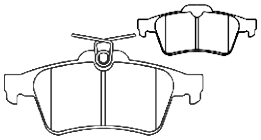
3853/1

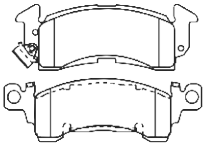
3864

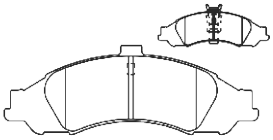
4189

PORSCHE

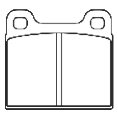
3318

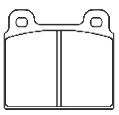
3320

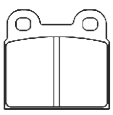
3326

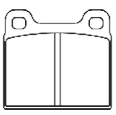
3338

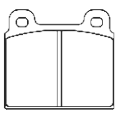
3350

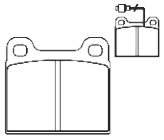
3353

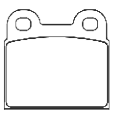
3360

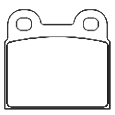
3361

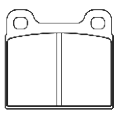
3362

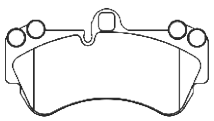
4075 - 4075/1

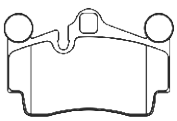
4076

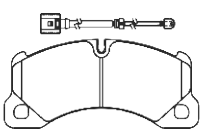
4309

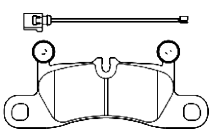
4310

PROTON

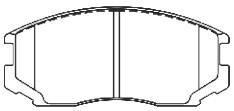
3604

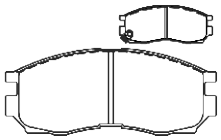
3622

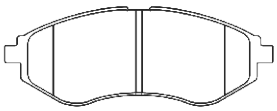
3951

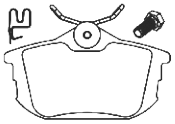
4062

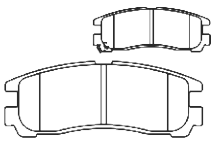
4108

PUCH / RELIANT / RELY

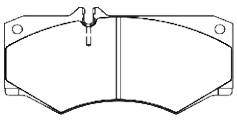
3513

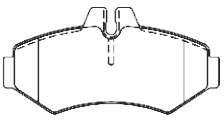
3804

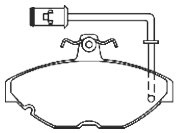
3624

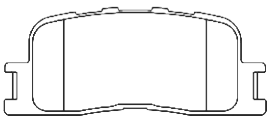
3911

RENAULT

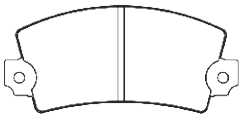
3329

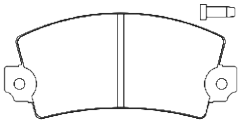
3329/1

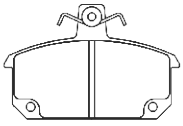
3330

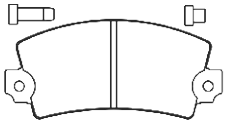
3333

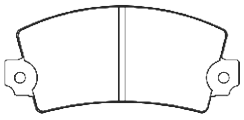
3341

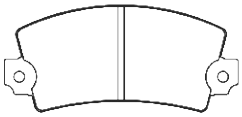
3342

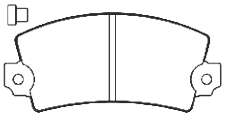
3345

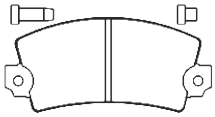
3348

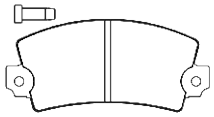
3349

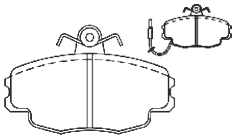
3372

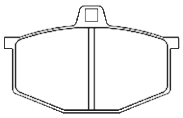
3374

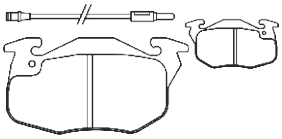
3380

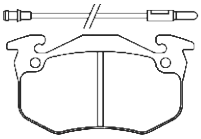
3381

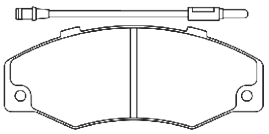
3428

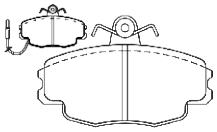
3431

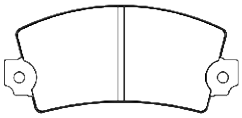
3454

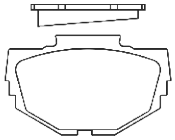
3481

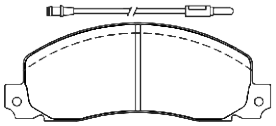
3482

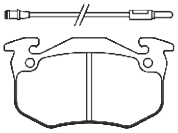
3495

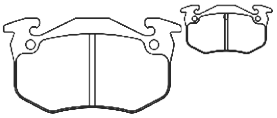
3496

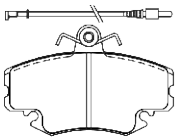
3503

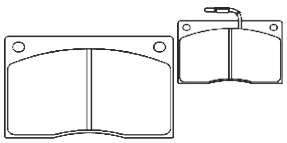
3526

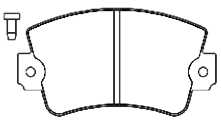
3527

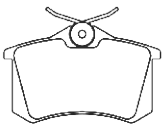
3529

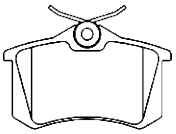
3529/2

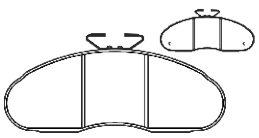
3537

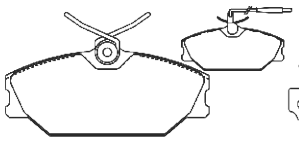
3539

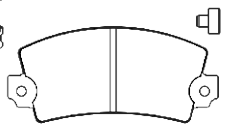
3542

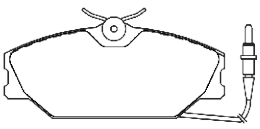
3546

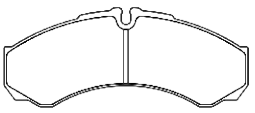
3575

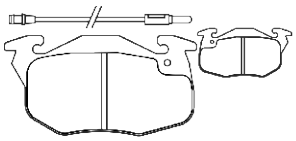
3580

3592

3596

3599

RENAULT

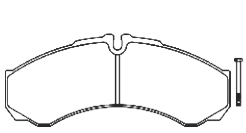
3645

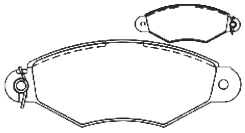
3659

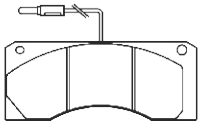
3707

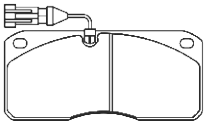
3773

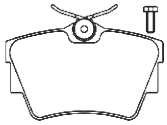
3795/1

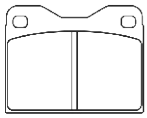
3806/1

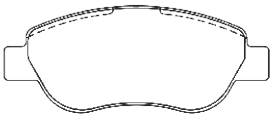
3827

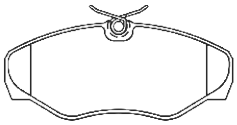
3848

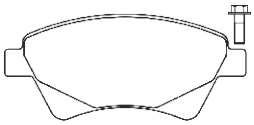
3849


3850

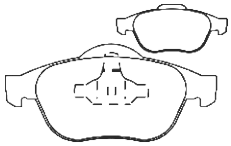
3852

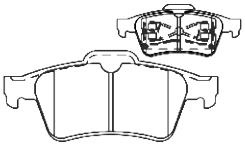
3853

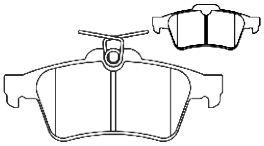
3853/1

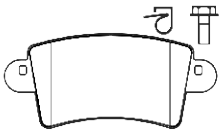
3855

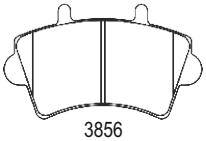
3856

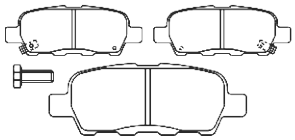
3933

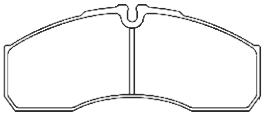
3942/A

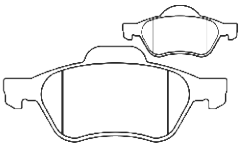
3950

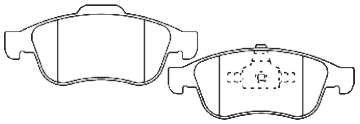
3964/1

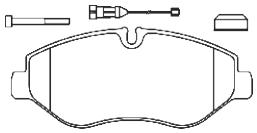
3965/1


3966


3967


3983

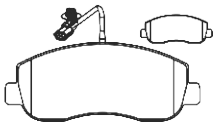
4056

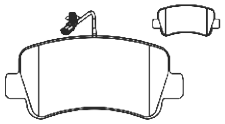
4057

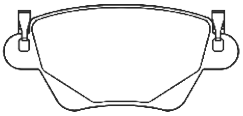
4093

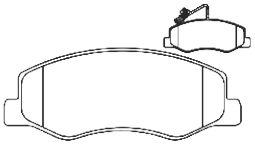
4132

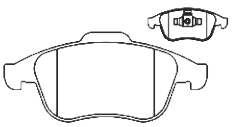
4134

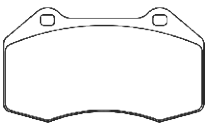
4137

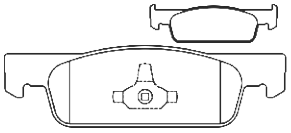
4140

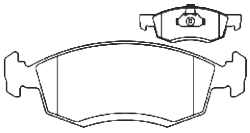
4141/1


4142

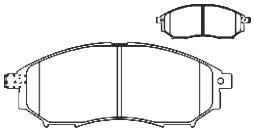
4143

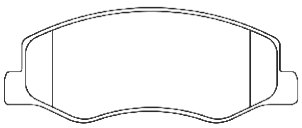
4172

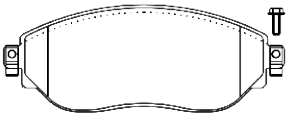
4227

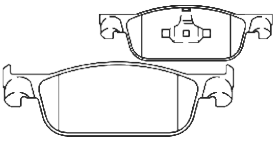
4253

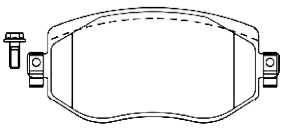
4280

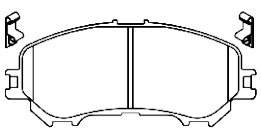
4282

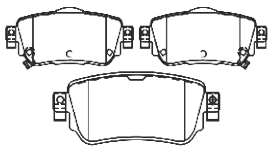
4283

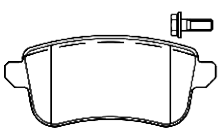
4287

4307

REX MOTORCYCLES / ROEWE (SAIC) / ROLLS-ROYCE

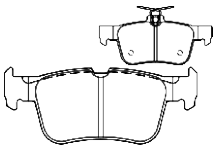
4270

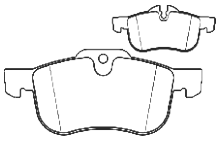
3943

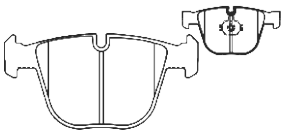
4179

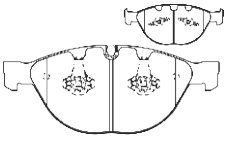
4208

ROVER

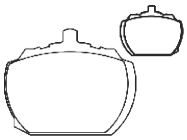
3416

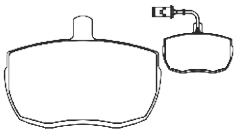
3423/1

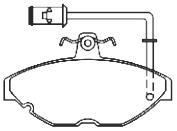
3624

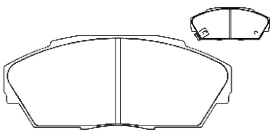
3631

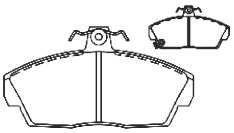
3683

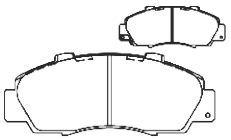
3704

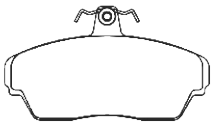
3872 - 3872/1

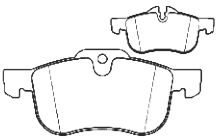
3943

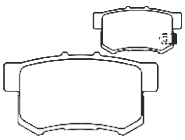
4148

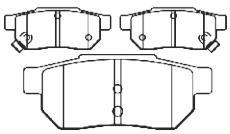
4212

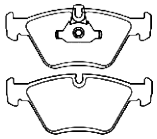
4347

SAAB

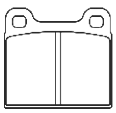
3318

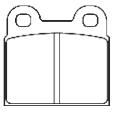
3326

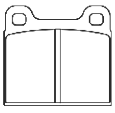
3338

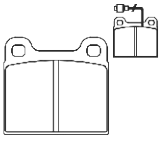
3353

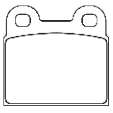
3360

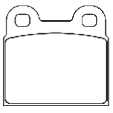
3361

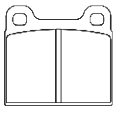
3362


3469

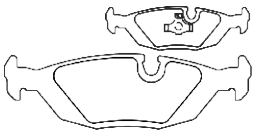
3583

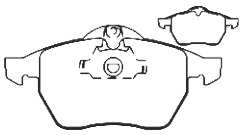
3665

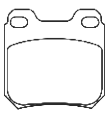
3717

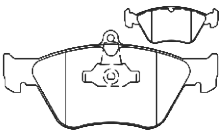
3736

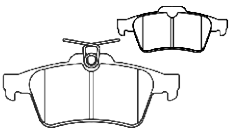
3853/1

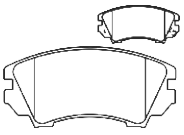
4149

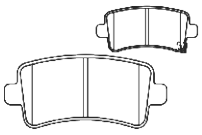
4150

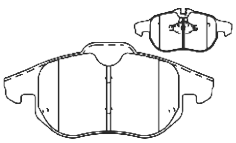
4211

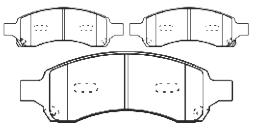
4218

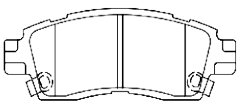
4219

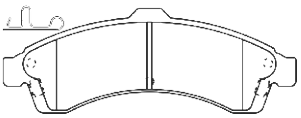
4221

SAMSUNG / SCION

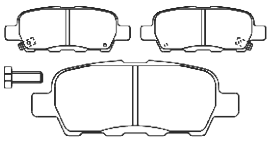
3933

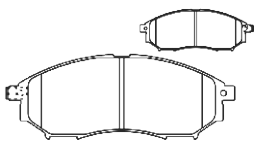
4143

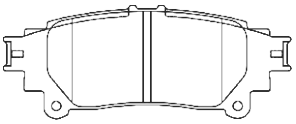
4256

SEAT

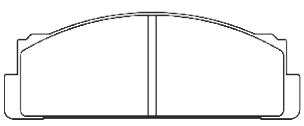
3316

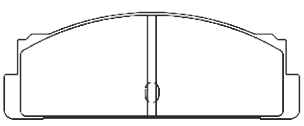
3357

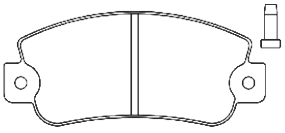
3424 - 3424/1

3441

SEAT

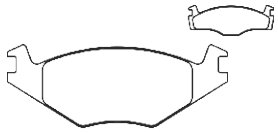
3444

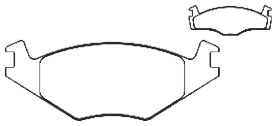
3486

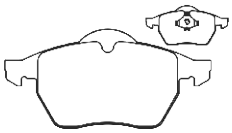
3506

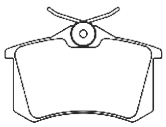
3529

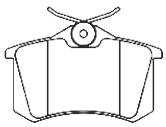
3529/1

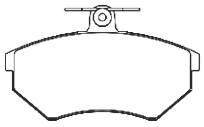
3531

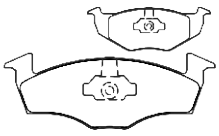
3538

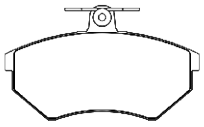
3551

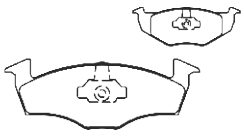
3566

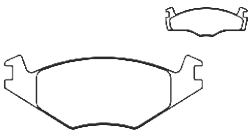
3585

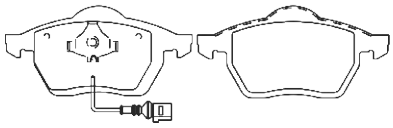
3590/1

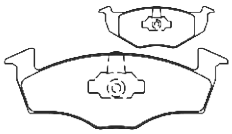
3637

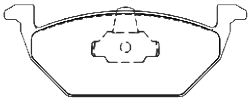
3682

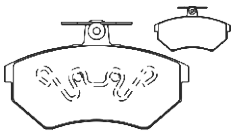
3761

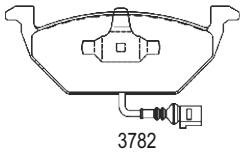
3782

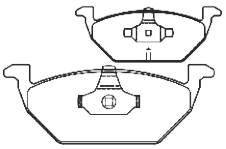
3782/1

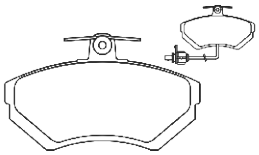
3896

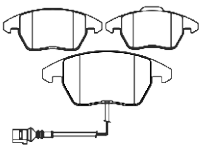
3904

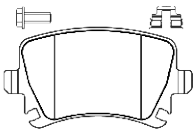
3905

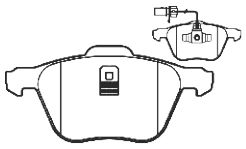
4095

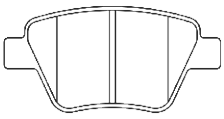
4135

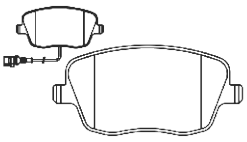
4138 - 4138/1

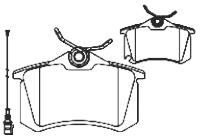
4152

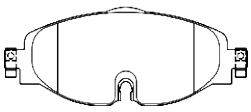
4228

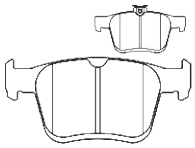
4241

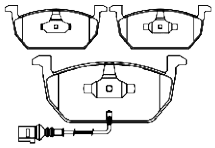
4295

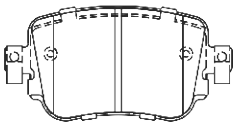
4336

SKODA

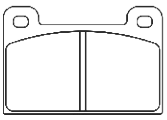
3404

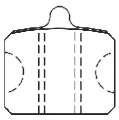
3406

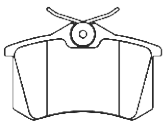
3529/1

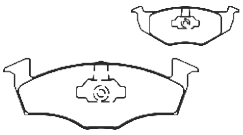
3566

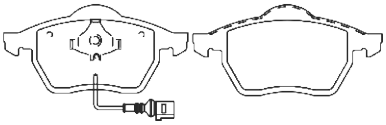
3590/1

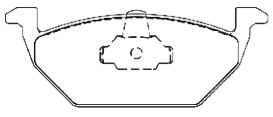
3682

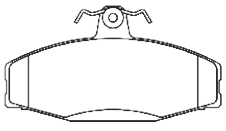
3731

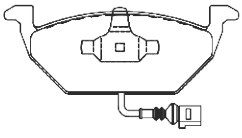
3782

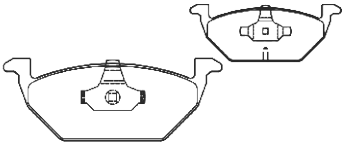
3782/1

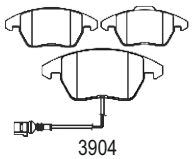
3904

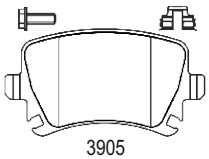
3905

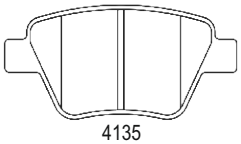
4135

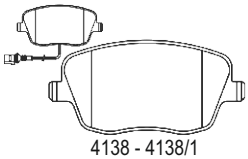
4138 - 4138/1

4152

SKODA

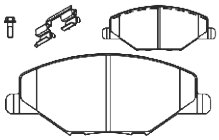
4200

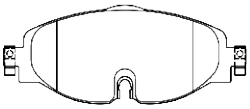
4228

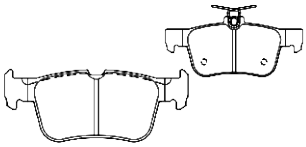
4270

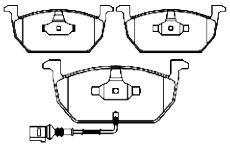
4295

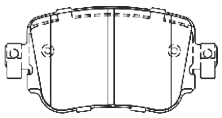
4336

SMART

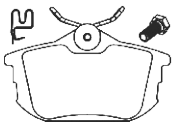
4062

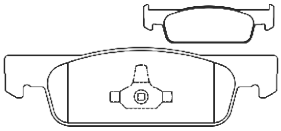
4140

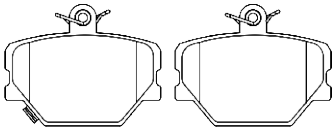
4281

SSANGYONG

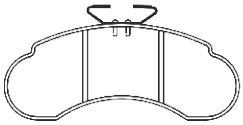
3689

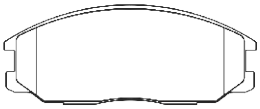
3843

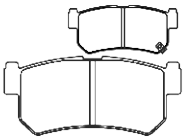
3895

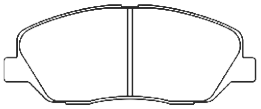
3960

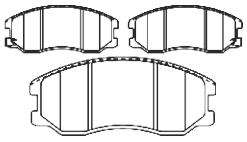
3976/1

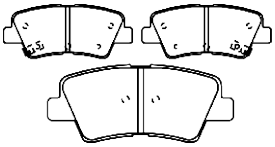
4061

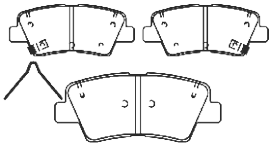
4343

SUBARU

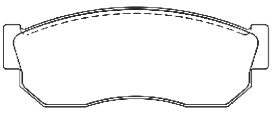
3394

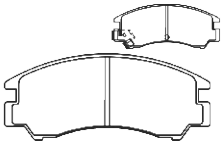
3395

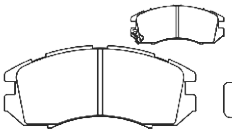
3426

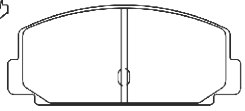
3601

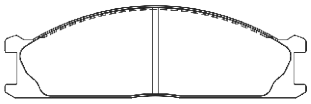
3692

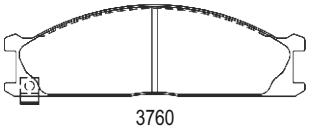
3760

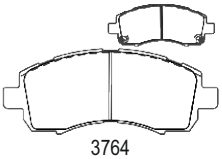
3764

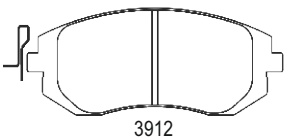
3912

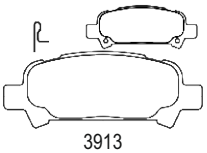
3913

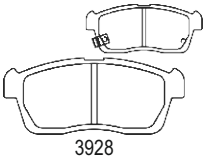
3928

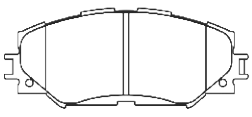
3953

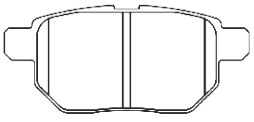
3954

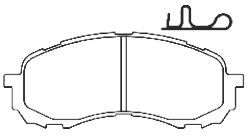
4036

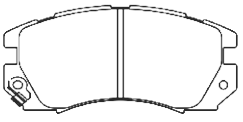
4078

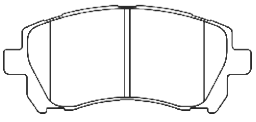
4079

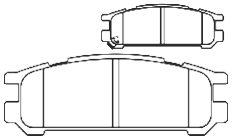
4080

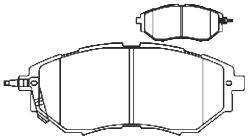
4081

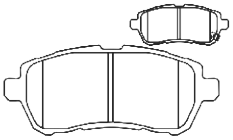
4122

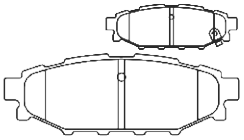
4213

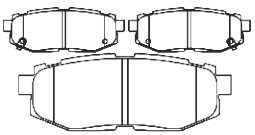
4258

SUZUKI

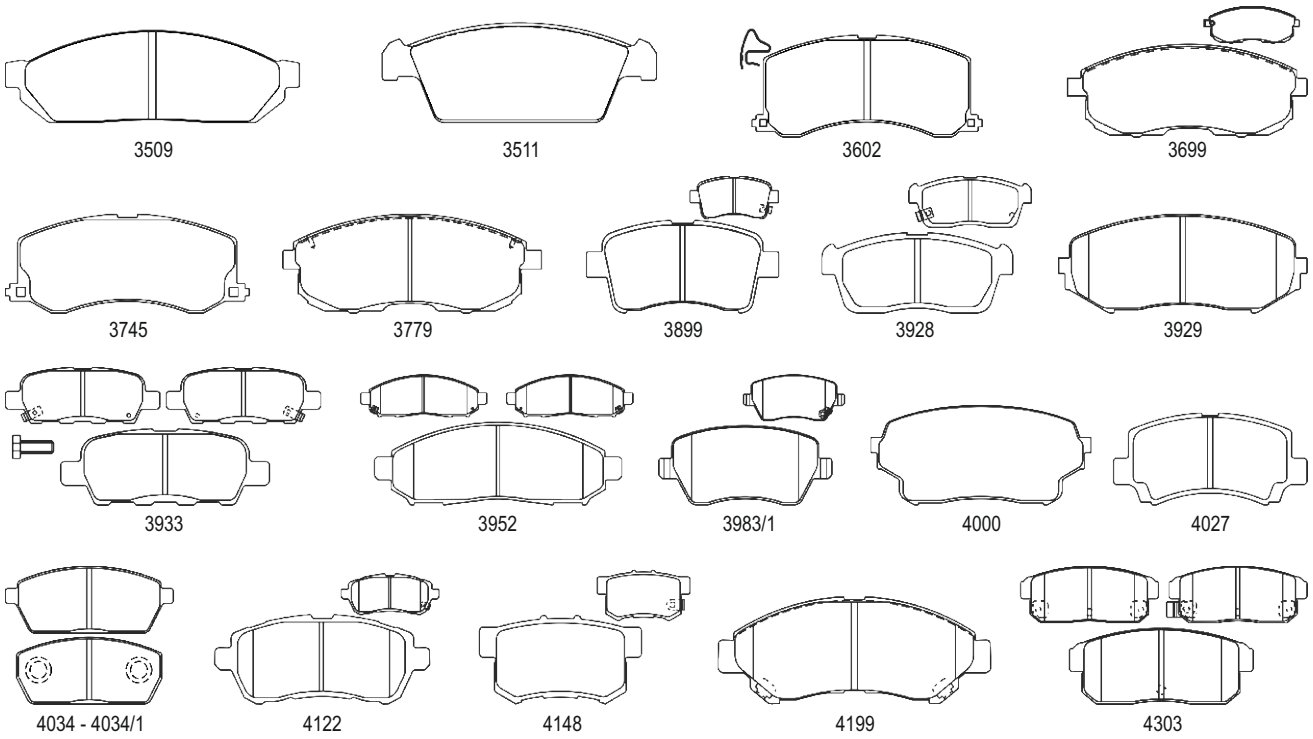

TALBOT

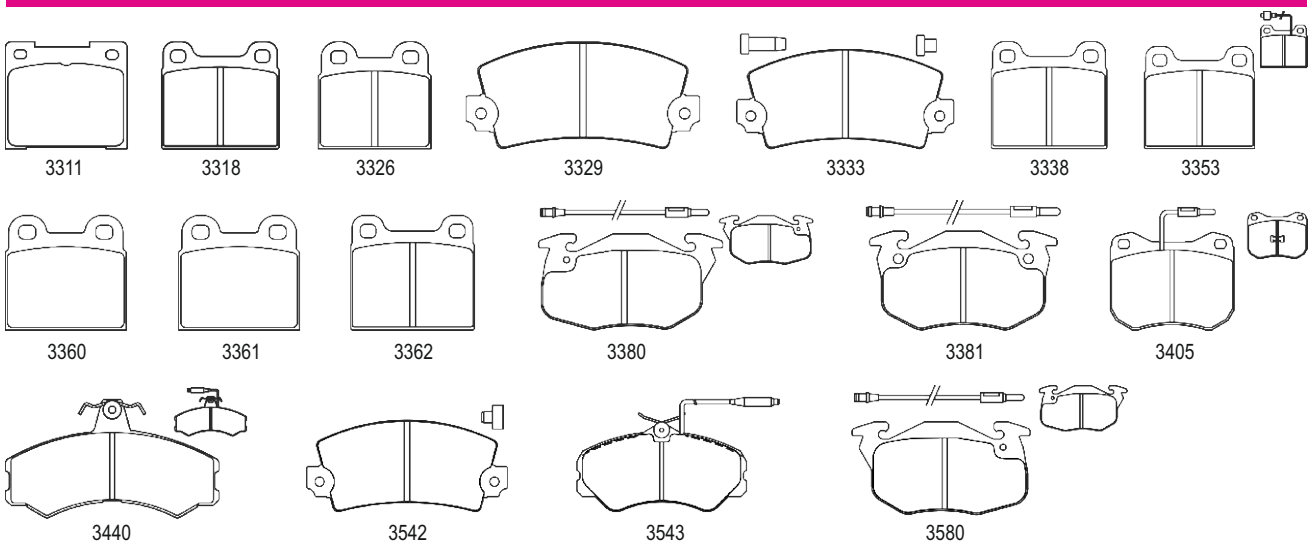

TOYOTA

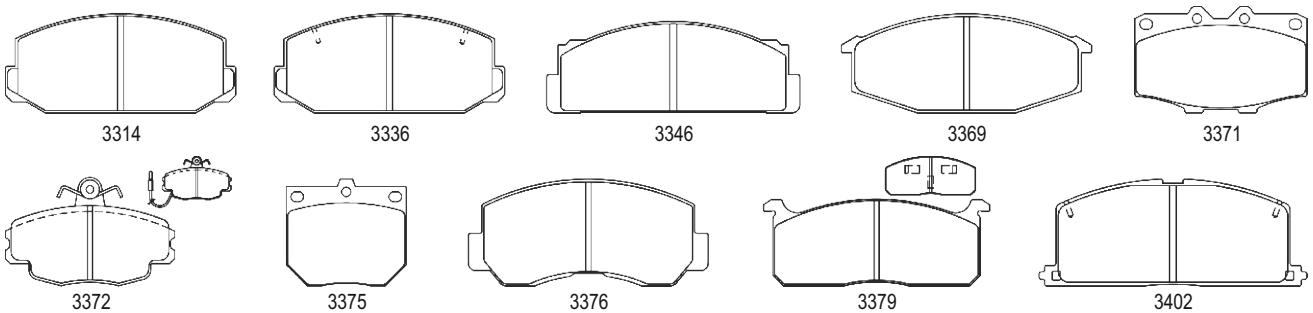

TOYOTA

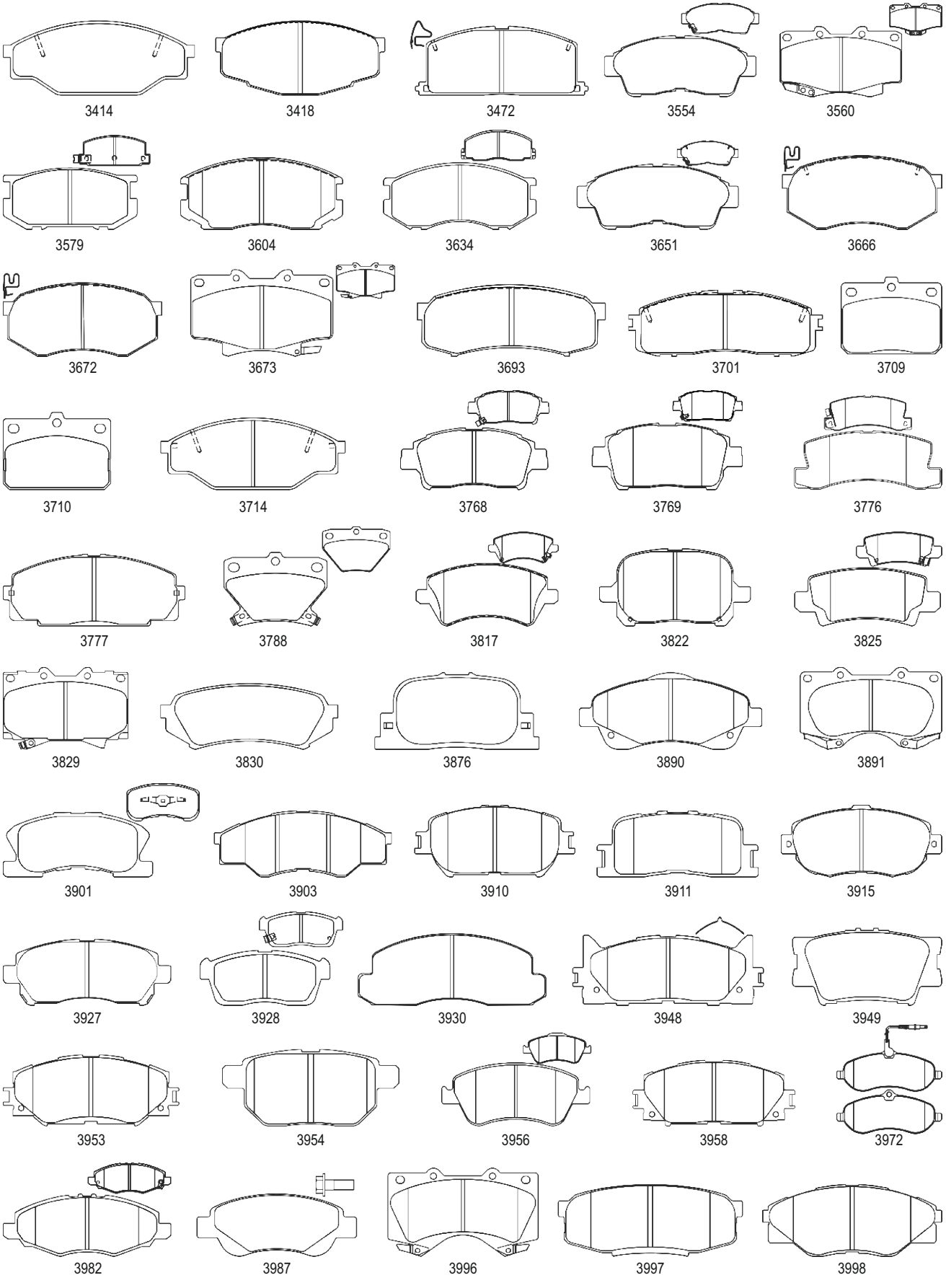
3414
3418
3472
3554
3560
3579
3604
3634
3651
3666
3672
3673
3693
3701
3709
3710
3714
3768
3769
3776
3777
3788
3817
3822
3825
3829
3830
3876
3890
3891
3901
3903
3910
3911
3915
3927
3928
3930
3948
3949
3953
3954
3956
3958
3972
3982
3987
3996
3997
3998

TOYOTA

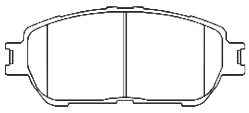
4003

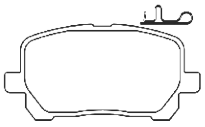
4013

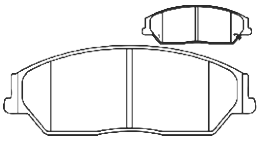
4019

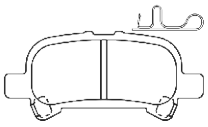
4032

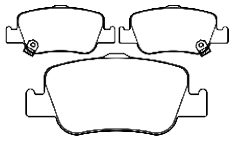
4037

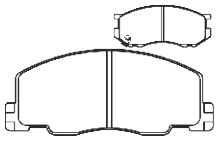
4071

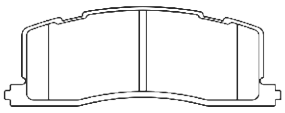
4072

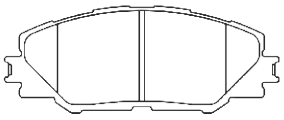
4077

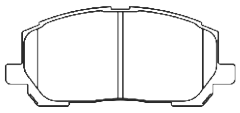
4082

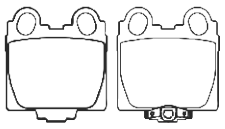
4085

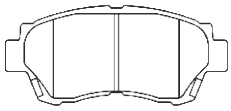
4086

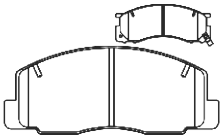
4088

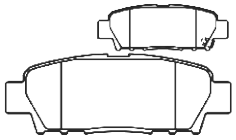
4098

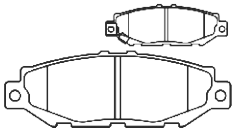
4099

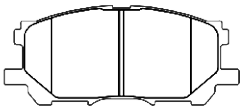
4105

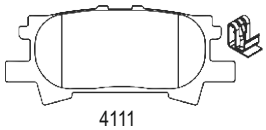
4111

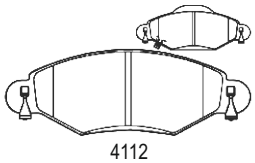
4112

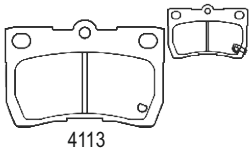
4113

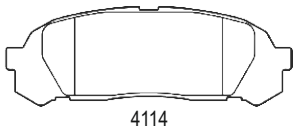
4114

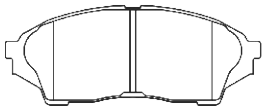
4117

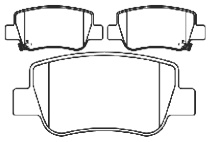
4146

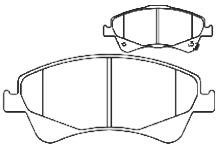
4147

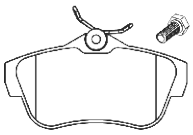
4151

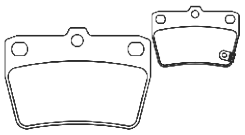
4153

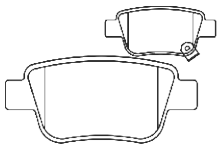
4154

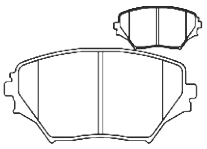
4158

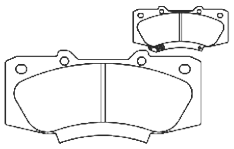
4167

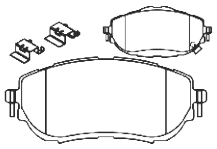
4176

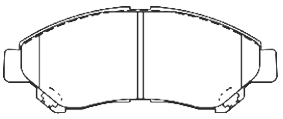
4199

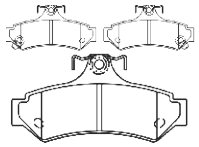
4202

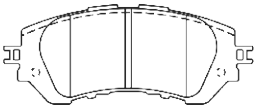
4205

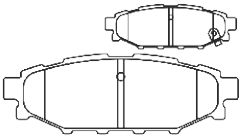
4213

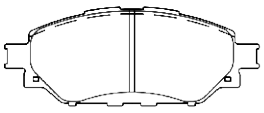
4239

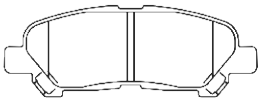
4254

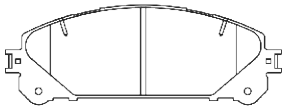
4255

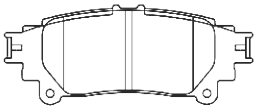
4256

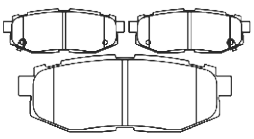
4258

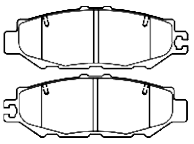
4275

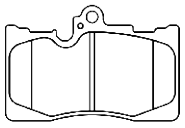
4276

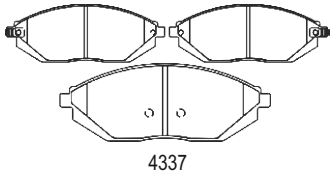
4337

TRIUMPH

3311

3416

3840

TVR / UMM

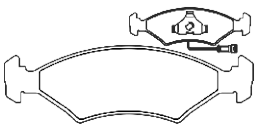
3417

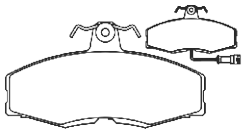
3429

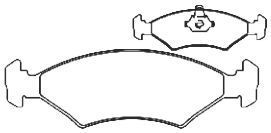
3570

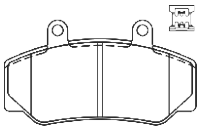
3641

VAUXHALL

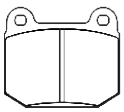
3335

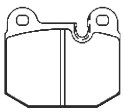
3365

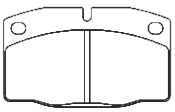
3410

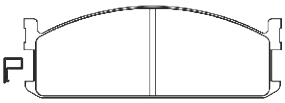
3462


3469

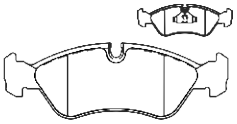
3470

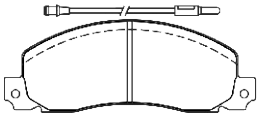
3482

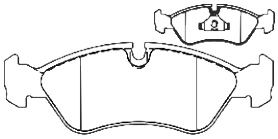
3505

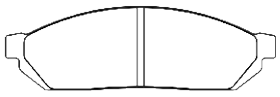
3509

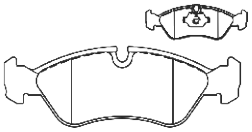
3615

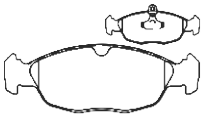
3623


3657

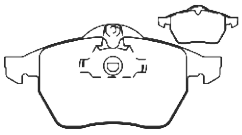
3665

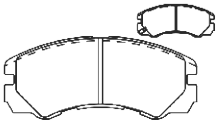
3674


3717

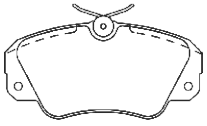
3733

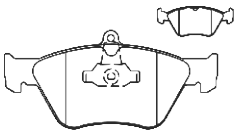
3736

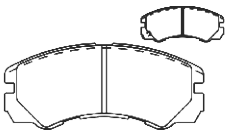
3743

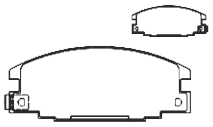
3757

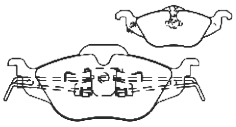
3762

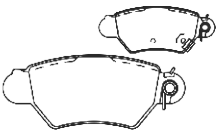
3763

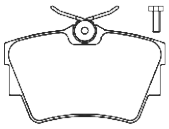
3795/1

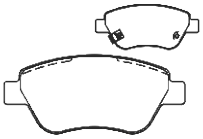
3826/2

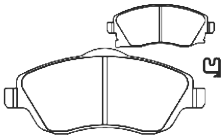
3846

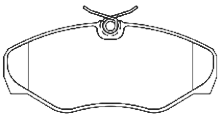
3848

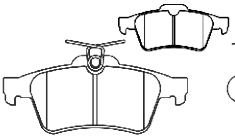
3853/1

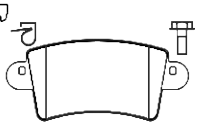
3855

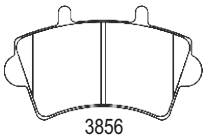
3856

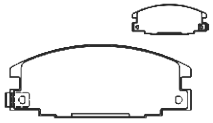
3857

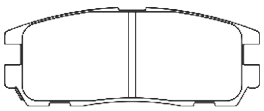
3887

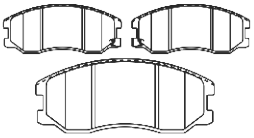
3976

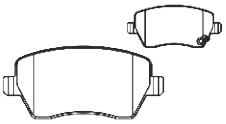
3983/1

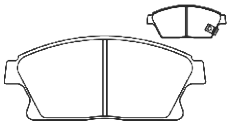
4008

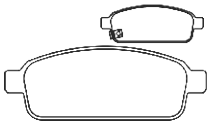
4014

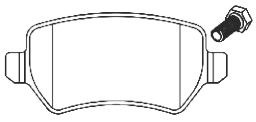
4040

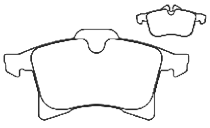
4042

4056

4057

4121

4149

4150

4172

VAUXHALL

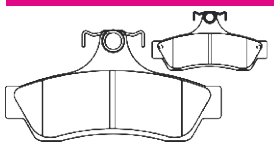
4188

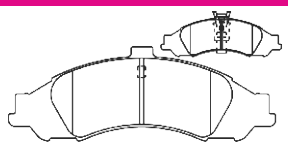
4189

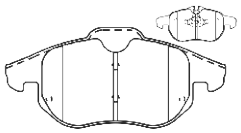
4211

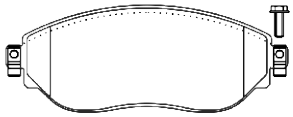
4227

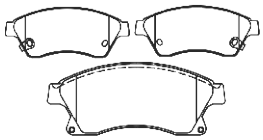
4230

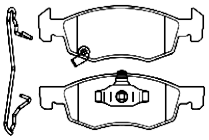
4284

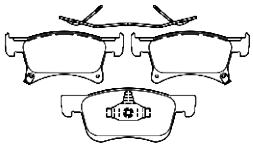
4285

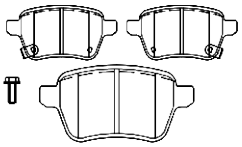
4286

VOLVO

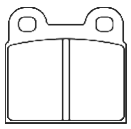
3326

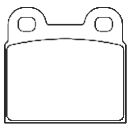
3360

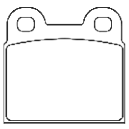
3361

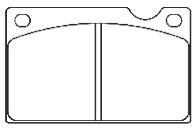
3373

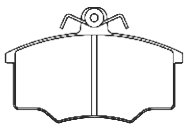
3378

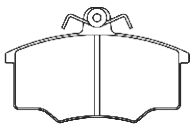
3490

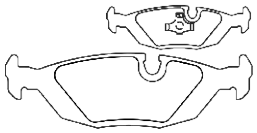
3583

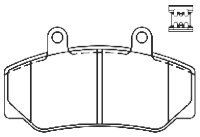
3641

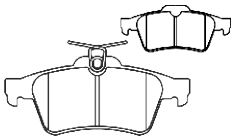
3853/1

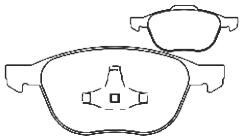
3885

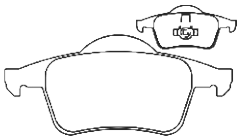
3918

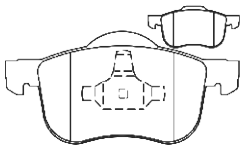
3919

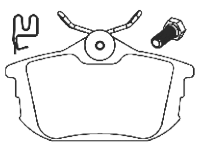
4062

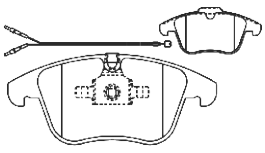
4161

VW

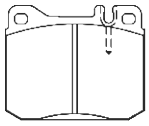
3315/1

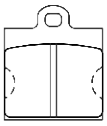
3325

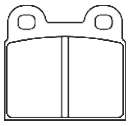
3326

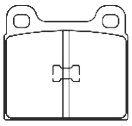
3327

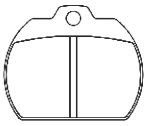
3328

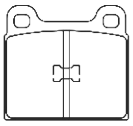
3343

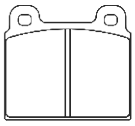
3350

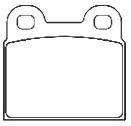
3360

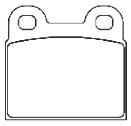
3361

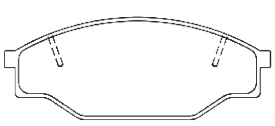
3414

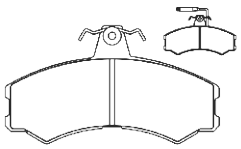
3440


3441

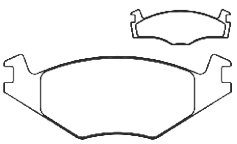
3444

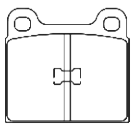
3483

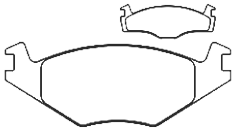
3486

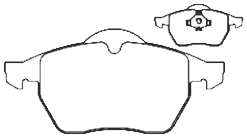
3506

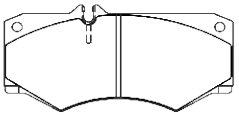
3513

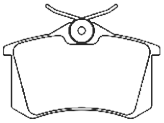
3529

3529/1

3531

3533

3538

3551

3553

3553/1

VW

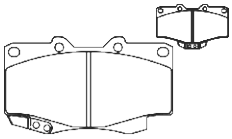
3560

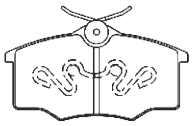
3561

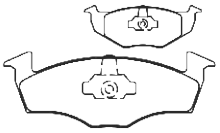
3566

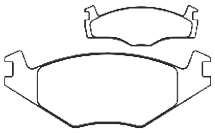
3585

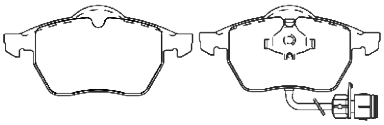
3590

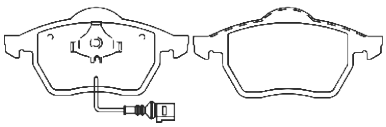
3590/1

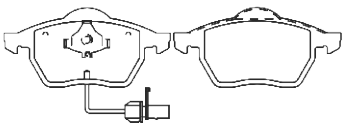
3590/2

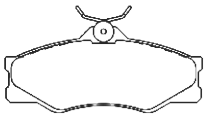
3605

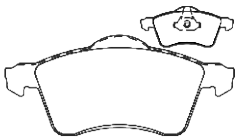
3606

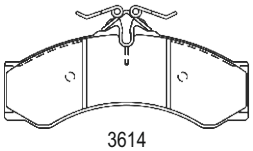
3614

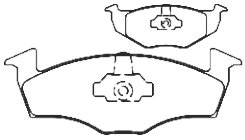
3637

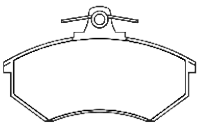
3650

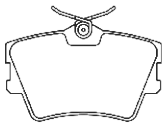
3671

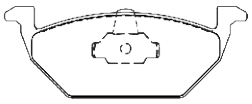
3682

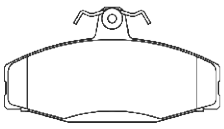
3731

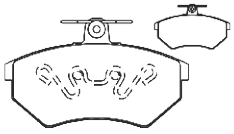
3761

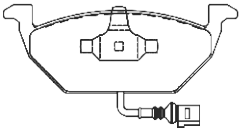
3782

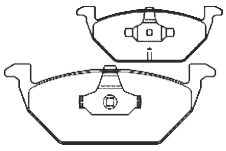
3782/1

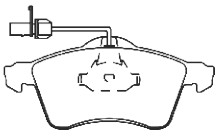
3794


3804

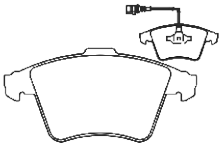
3841

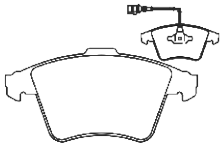
3841/1

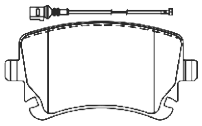
3842

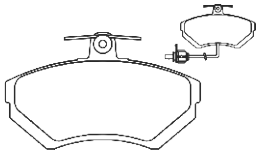
3896

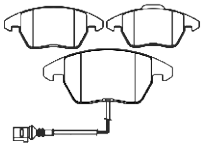
3904

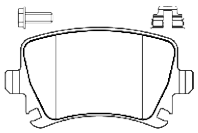
3905

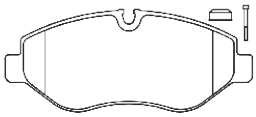
3925 - 3925/2


3926

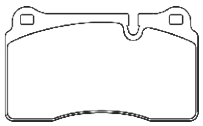
3945

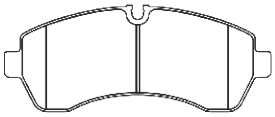
3962

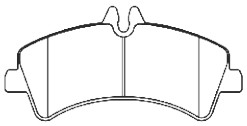
3963

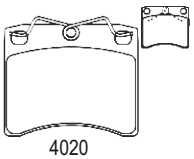
4020

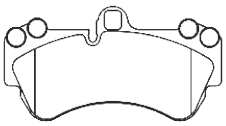
4075 - 4075/1

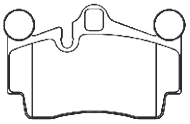
4076

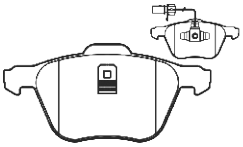
4095

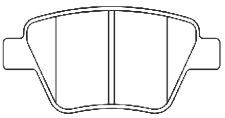
4135

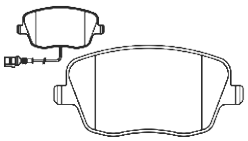
4138

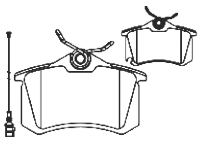
4152

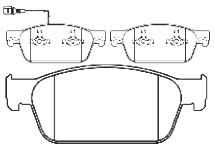
4162

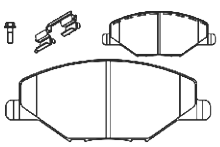
4200

4228

4241

4295

4336

4345

WARTBURG / WIESMANN

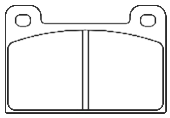
3404

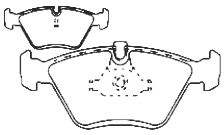
3564/1

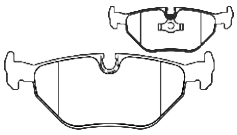
3578

WULING

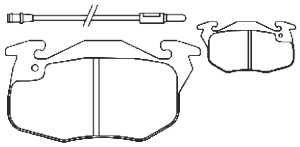
3380

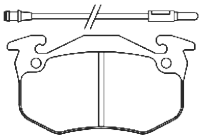
3381

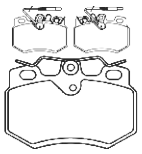
3474

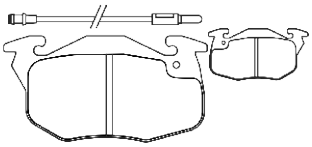
3580

YUGO

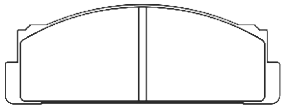
3316

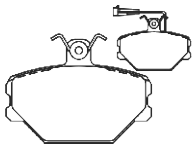
3432

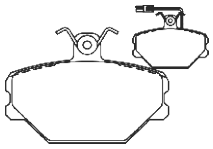
3491

ZASTAVA

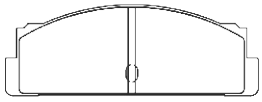
3357

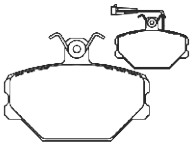
3432

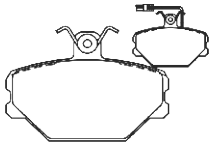
3491

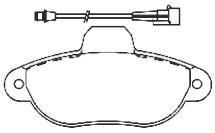
3608

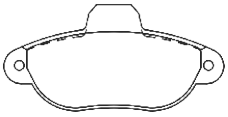
3643

ZAZ

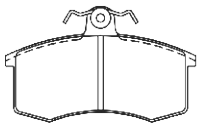
3422

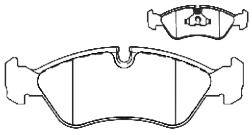
3470

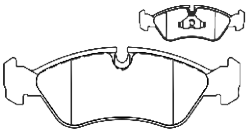
3505

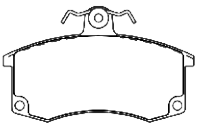
3552

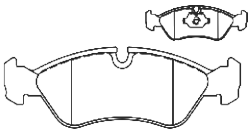
3615

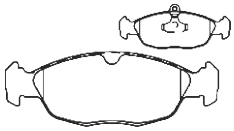
3623

MANUFACTURERS CROSS REFERENCE TABLE

REFERENCE	T(mm)	REMARKS	MAKE	F/R	WVA No
3311	14.25	4 PADS PLAIN	FORD - HOLDEN TALBOT - TRIUMPH	F	20088 20093 20398

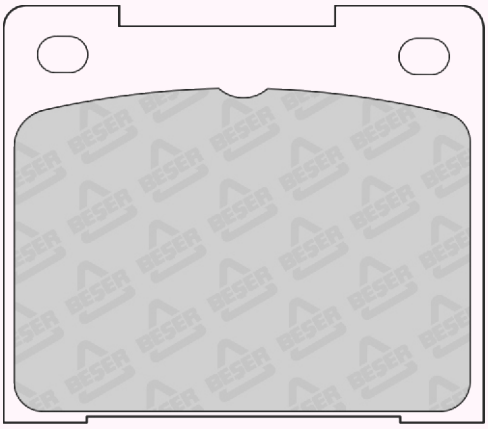

63,2 x 55

REFERENCE	T(mm)	REMARKS	MAKE	F/R	WVA No
3312	15	4 PADS PLAIN	BENTLEY - FORD - HOLDEN, HYUNDAI - LOTUS	F	20230 20406 20459 20460 20491

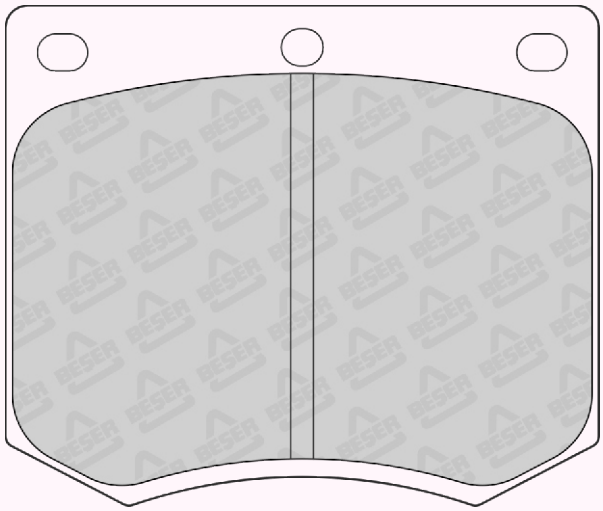

78,3 x 65,9

REFERENCE	T(mm)	REMARKS	MAKE	F/R	WVA No
3313	17	4 PADS PLAIN	AUDİ - FORD	F	20252 20407

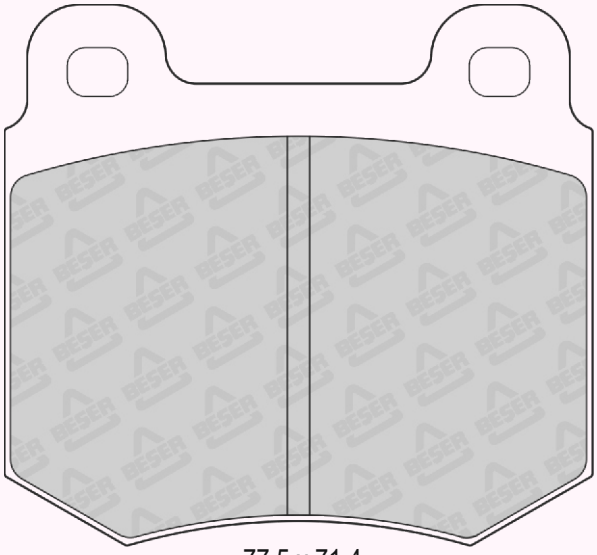

77,5 x 71,4

REFERENCE	T(mm)	REMARKS	MAKE	F/R	WVA No
3314	13,8	4 PADS PLAIN	DAIHATSU - TOYOTA	F	20599

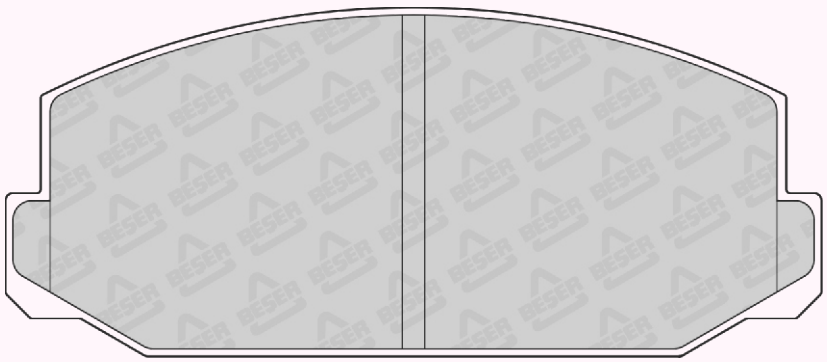

107,8 x 46

REFERENCE	T(mm)	REMARKS	MAKE	F/R	WVA No
3315	15	4 PADS PLAIN	MERCEDES BENZ VW	F	20392

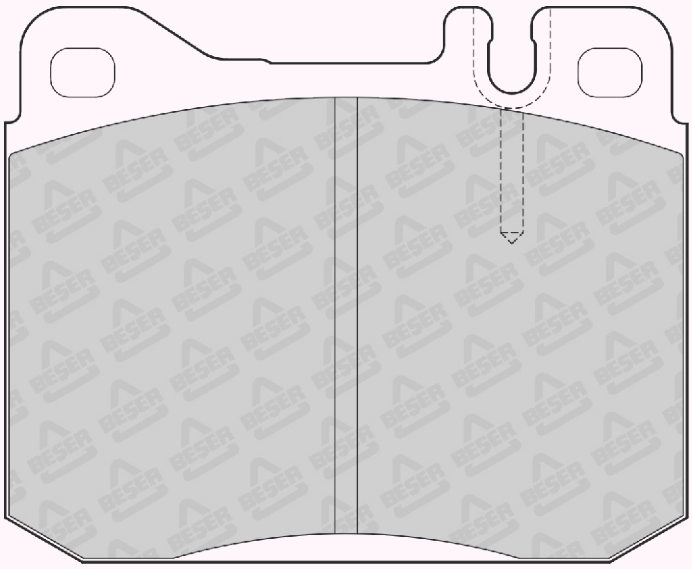

90 x 73,4

REFERENCE	T(mm)	REMARKS	MAKE	F/R	WVA No
3315/1	19	4 PADS PLAIN	VW	F	20392 29581

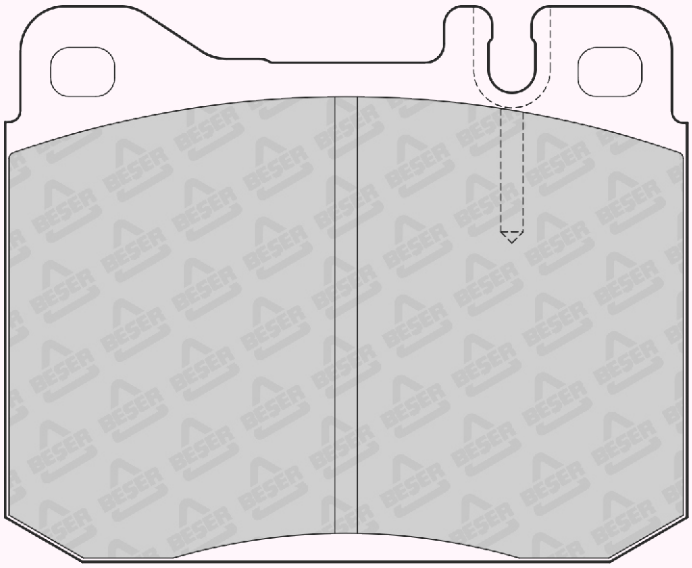

90 x 73,4

REFERENCE	T(mm)	REMARKS	MAKE	F/R	WVA No
3316	17,3	4 PADS PLAIN	AUTOBIANCHI FIAT - FSO - INNOCENTI LANCIA - SEAT - YUGO	F	20073

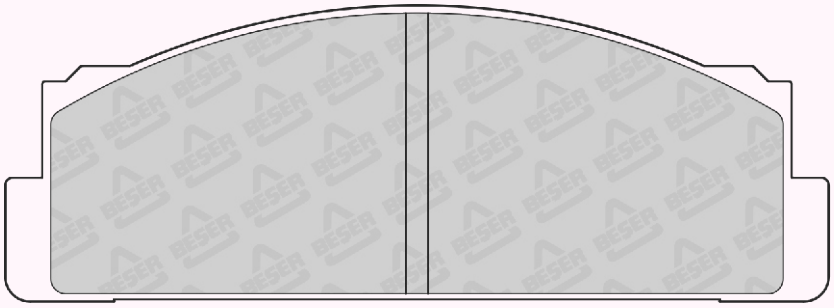

108,8 x 39

REFERENCE	T(mm)	REMARKS	MAKE	F/R	WVA No
3317	10	4 PADS WITH CENTRAL LUG.	FIAT - FSO LANCIA - PININFARINA	R	20074

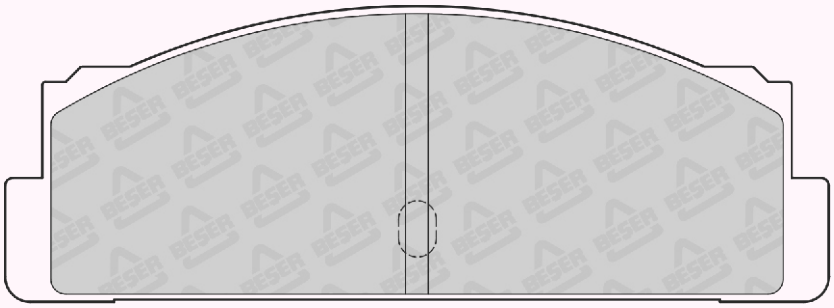

108,8 x 39

REFERENCE	T(mm)	REMARKS	MAKE	F/R	WVA No
3318	15	4 PADS PLAIN	ALFA ROMEO - BEDFORD - BMW MERCEDES BENZ - OPEL PORSCHE - SAAB - TALBOT	F	20034 20343 20107 20357 20173 20397 20340 20630 21035

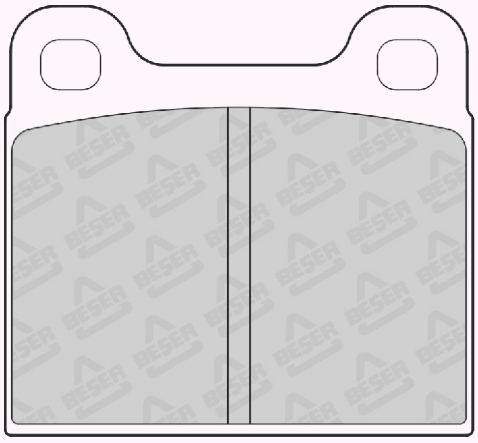

61,6 x 56,5

REFERENCE	T(mm)	REMARKS	MAKE	F/R	WVA No
3319	15	4 PADS PLAIN	MG	F	20037

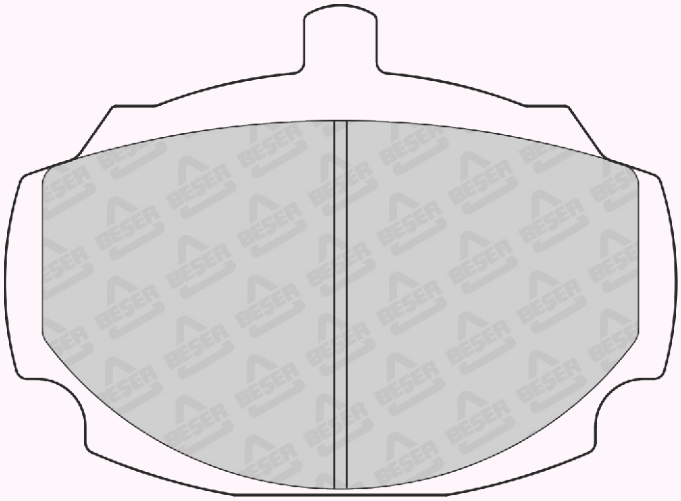

88,6 x 64,6

REFERENCE	T(mm)	REMARKS	MAKE	F/R	WVA No
3320	15	4 PADS PLAIN	ALFA ROMEO FERRARI MERCEDES BENZ PORSCHE	F	20011 20342 20420 20468

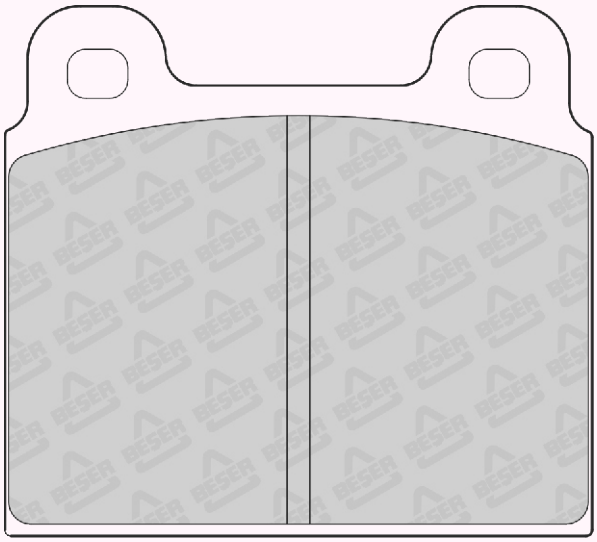

77,5 x 70

REFERENCE	T(mm)	REMARKS	MAKE	F/R	WVA No
3321	17	2 PADS WITH WEAR SENSOR (80mm)	PEUGEOT 504	F	20145 20146

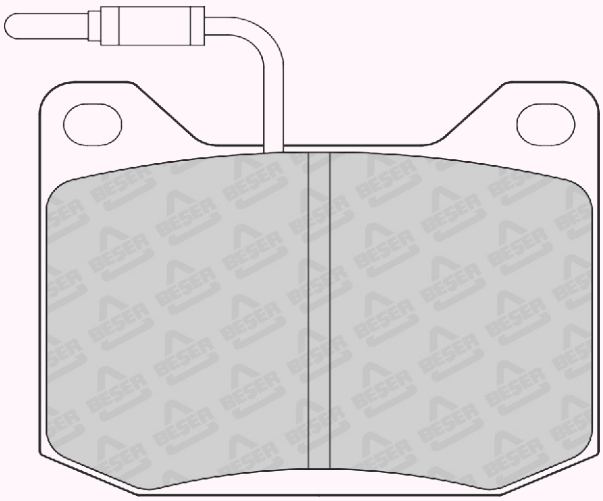

78,4 x 64,5

REFERENCE	T(mm)	REMARKS	MAKE	F/R	WVA No
3322	14,4	2 PADS WITH WEAR SENSOR (80mm)	PEUGEOT 504	R	20143 20144 20417

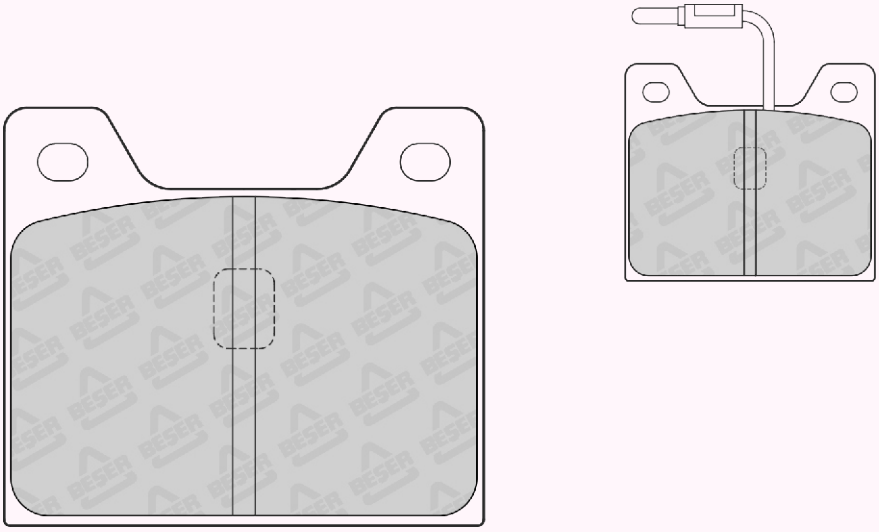

63,4 x 55,2

REFERENCE	T(mm)	REMARKS	MAKE	F/R	WVA No
3323	16,4	2 PADS WITH WEAR SENSOR (80mm)	PEUGEOT 504,505,604	R	20053 20271

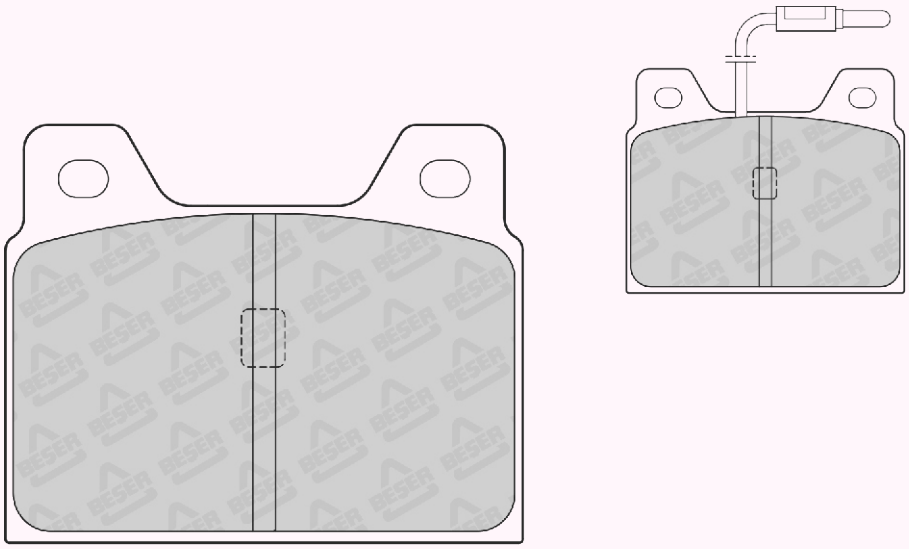

68,3 x 55,2

REFERENCE	T(mm)	REMARKS	MAKE	F/R	WVA No
3324	14	4 PADS PLAIN	HONDA	F	20535

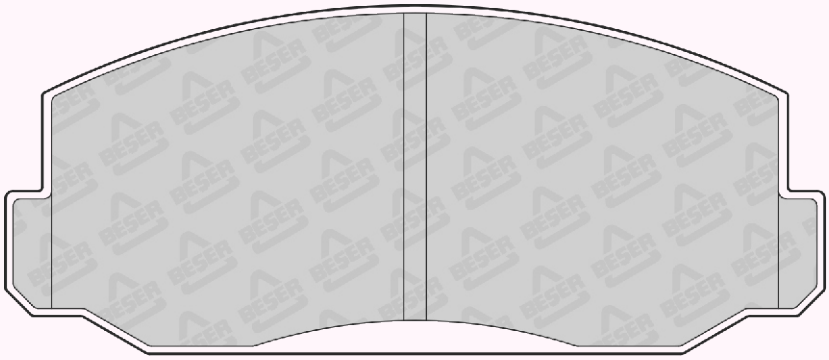

108,2 x 46

REFERENCE	T(mm)	REMARKS	MAKE	F/R	WVA No
3325	15	4 PADS PLAIN	ALFA ROMEO - VW	F	20070 20075

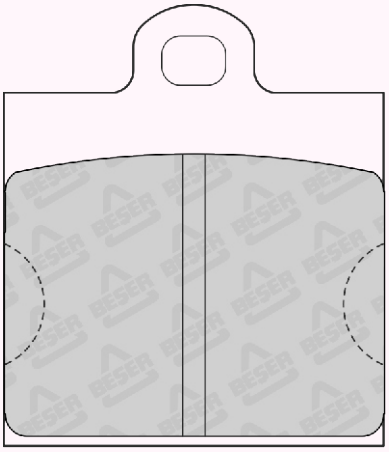

50,3 x 58,1

REFERENCE	T(mm)	REMARKS	MAKE	F/R	WVA No
3326	15	4 PADS PLAIN	ALFA ROMEO - AUTO UNION DAF - PORSCHE - SAAB TALBOT - VOLVO - VW	R	20009 20010

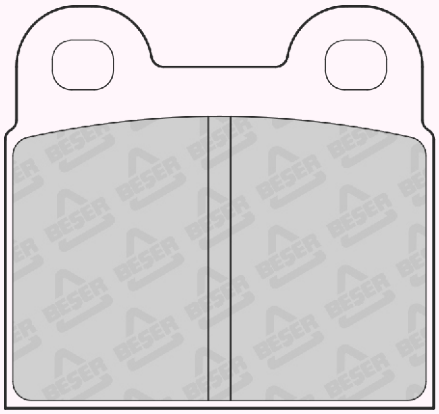

56,5 x 53

REFERENCE	T(mm)	REMARKS	MAKE	F/R	WVA No
3326/1	15	4 PADS PLAIN	BMW	R	20436

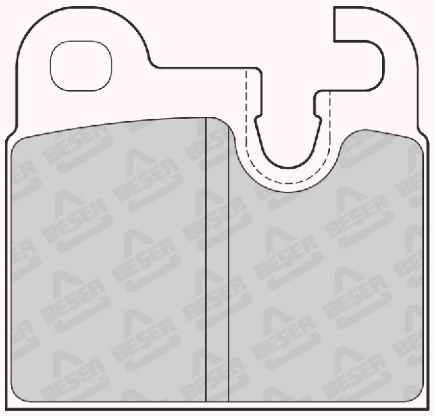

55,7 x 53

REFERENCE	T(mm)	REMARKS	MAKE	F/R	WVA No
3327	15 ,3	4 PADS PLAIN	AUDI VW	F	20228

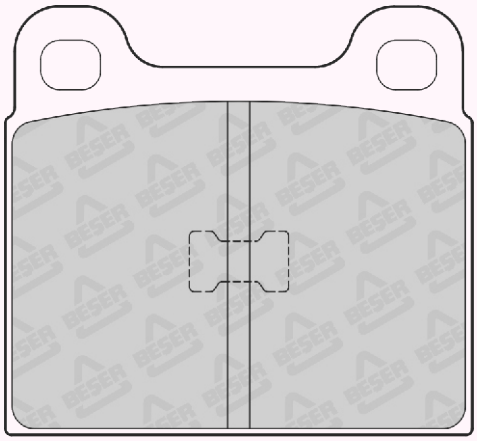

61,6 x 56,5

REFERENCE	T(mm)	REMARKS	MAKE	F/R	WVA No
3328	16	4 PADS PLAIN	VW	F	20286 20296 20317

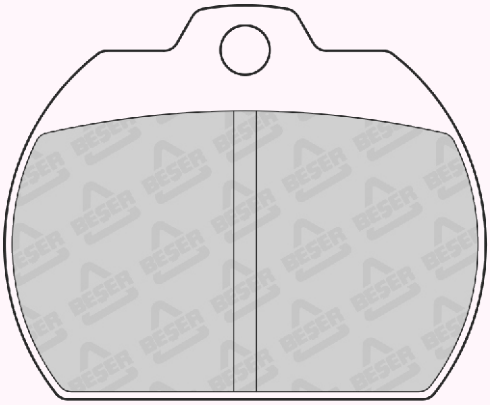

63,5 x 51,9

REFERENCE	T(mm)	REMARKS	MAKE	F/R	WVA No
3329	14	4 PADS PLAIN	CITROEN - DACIA PEUGEOT - RENAULT TALBOT	F	20139 20335 20140 20347 20141 20348 20334

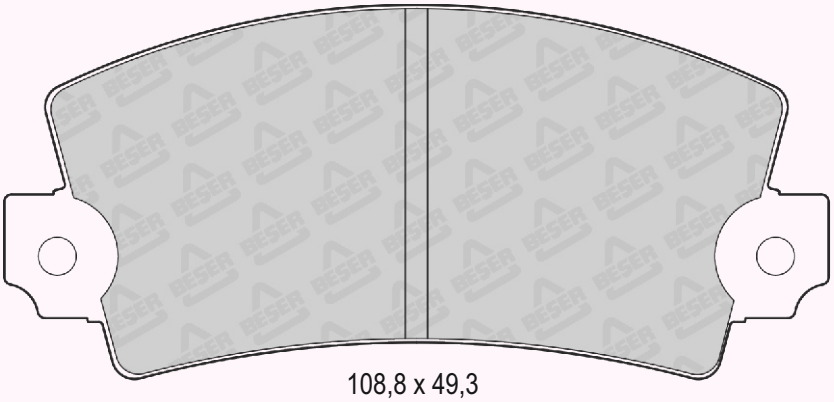

108,8 x 49,3

REFERENCE	T(mm)	REMARKS	MAKE	F/R	WVA No
3329/1	14	2 PADS WITH WEAR SENSOR	ABARTH DACIA - FIAT - RENAULT -	F	20494

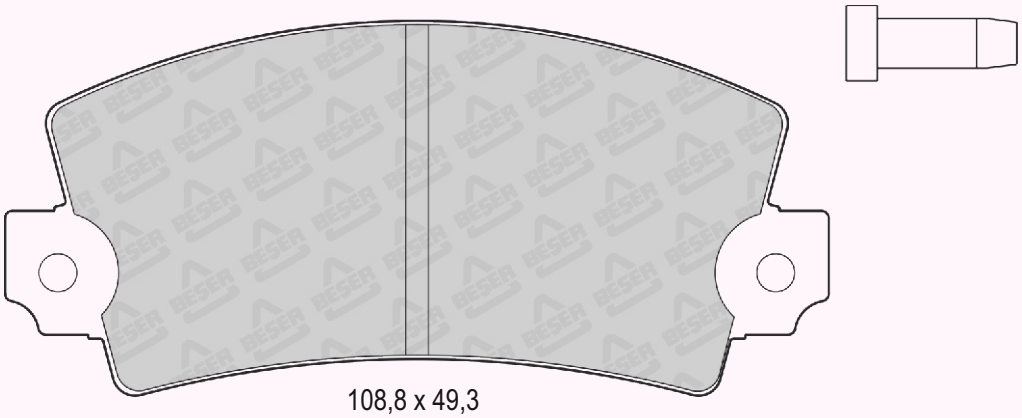

108,8 x 49,3

REFERENCE	T(mm)	REMARKS	MAKE	F/R	WVA No
3330	16,3	4 PADS PLAIN	RENAULT	F	20487 20670 20671 20672 20673

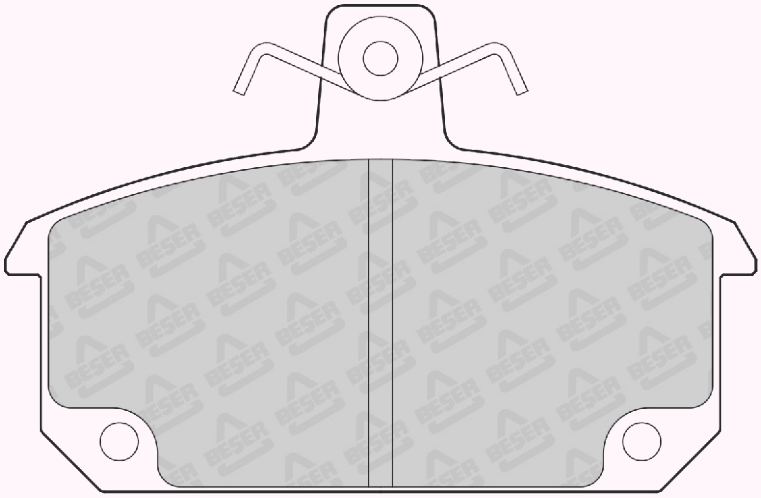

99,1 x 64,1

REFERENCE	T(mm)	REMARKS	MAKE	F/R	WVA No
3330/1	16,3	2 PADS WHIT WEAR SENSOR	RENAULT	F	20487

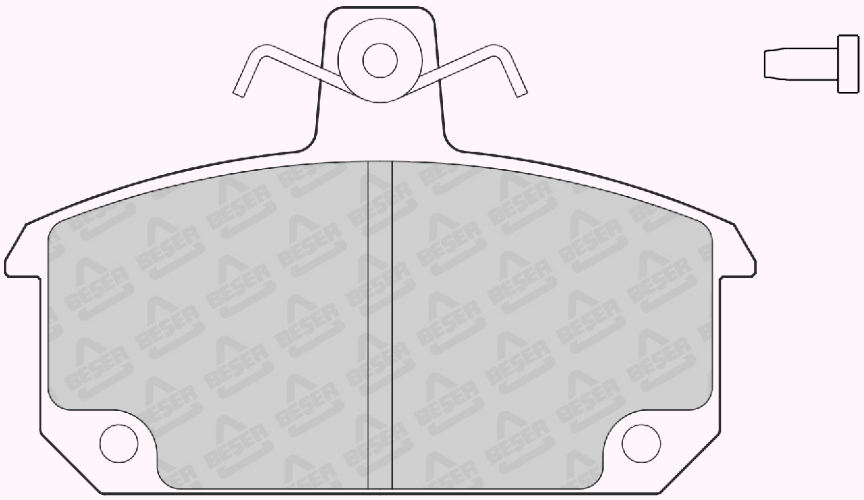

99,1 x 64,1

REFERENCE	T(mm)	REMARKS	MAKE	F/R	WVA No
3331	15	4 PADS PLAIN	ALFA ROMEO - BMW FERRARİ	F	20092

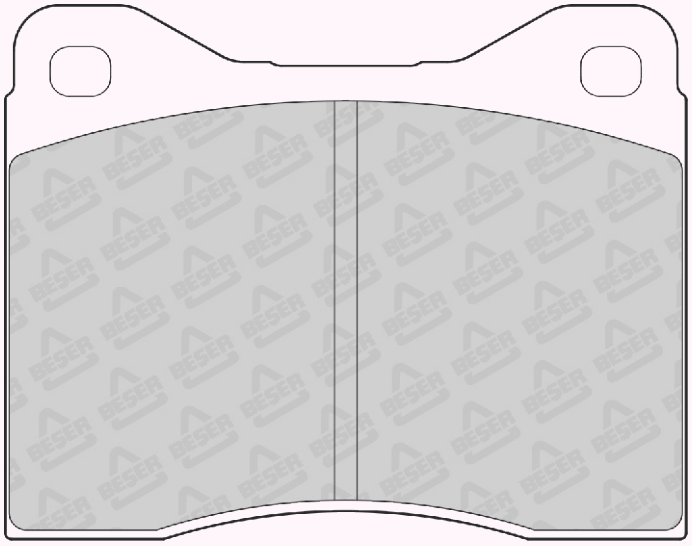

89,8 x 70,5

REFERENCE	T(mm)	REMARKS	MAKE	F/R	WVA No
3331/1	15	4 PADS PLAIN	ALFA ROMEO - BMW FERRARİ	F	20092 20437

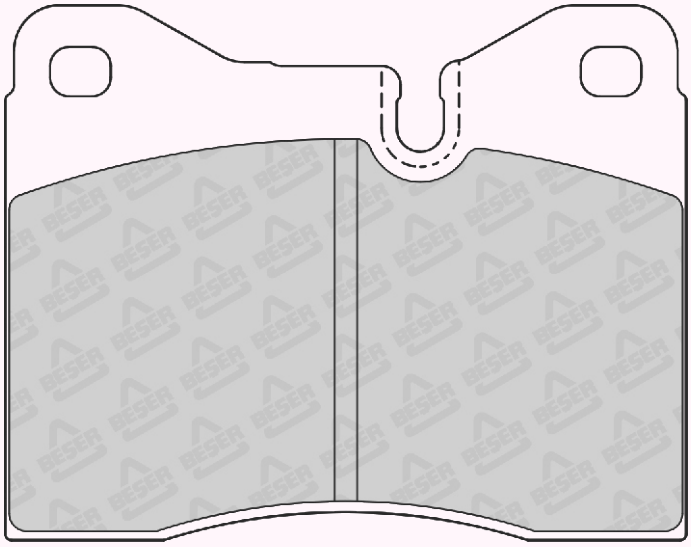

89,8 x 70,5

REFERENCE	T(mm)	REMARKS	MAKE	F/R	WVA No
3332	18,5	4 PADS PLAIN	BMW	F	20092 20437

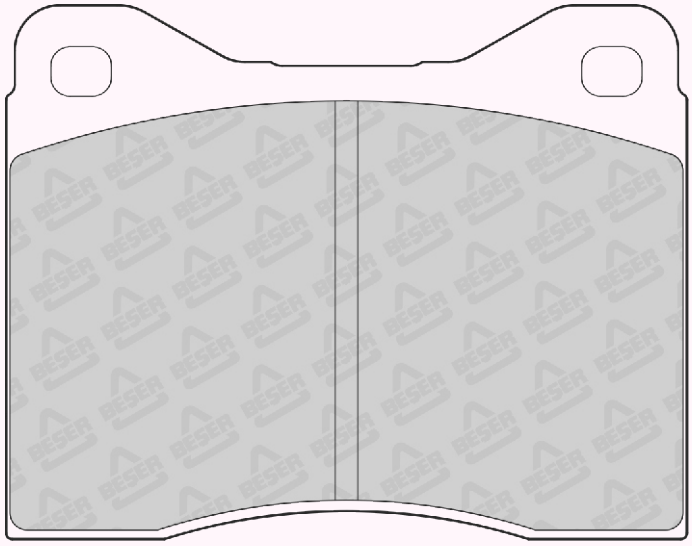

89,8 x 70,5

REFERENCE	T(mm)	REMARKS	MAKE	F/R	WVA No
3332/1	19	4 PADS PLAIN	BMW	F	20092 20437

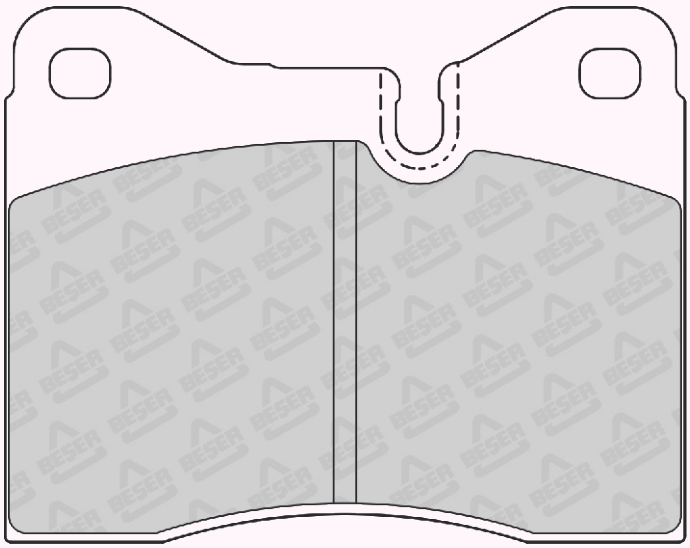

89,8 x 70,5

REFERENCE	T(mm)	REMARKS	MAKE	F/R	WVA No
3333	14	4 PADS WITH CENTRAL LUG 4 PLUGS 2 WEAR SENSOR	RENAULT - TALBOT	R	20336 - 20337 20338 - 20339 20415 - 20416 20347 - 20348 20494 - 20495

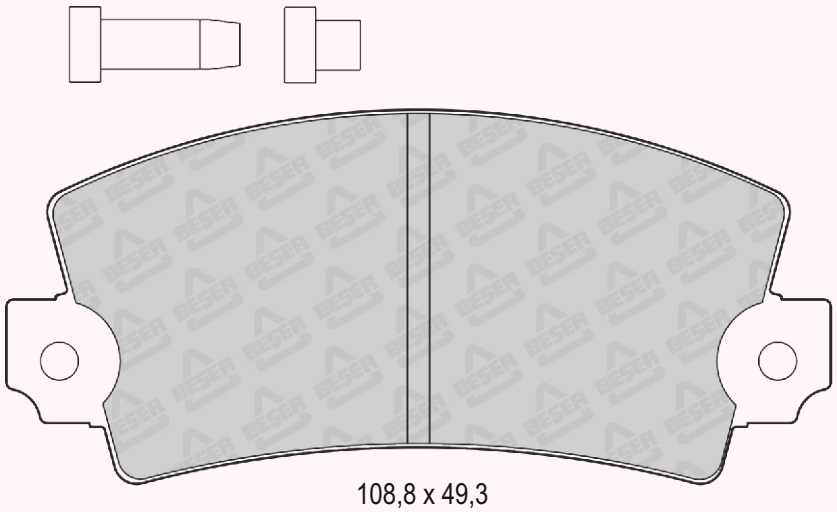

108,8 x 49,3

REFERENCE	T(mm)	REMARKS	MAKE	F/R	WVA No
3334	16	4 PADS PLAIN	OPEL	F	20068 20468

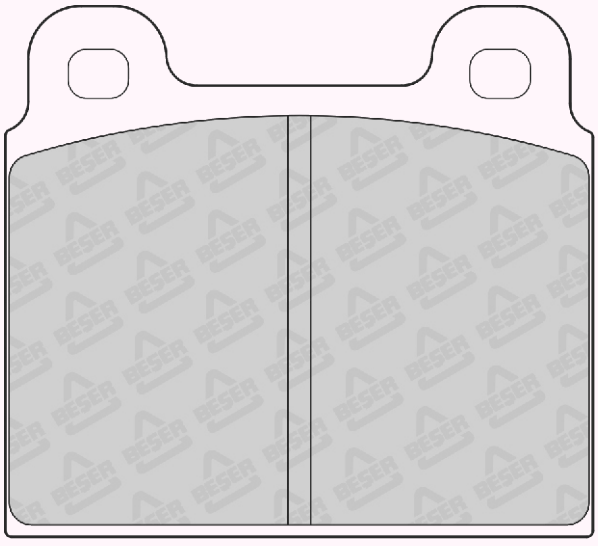

77,5 x 70

REFERENCE	T(mm)	REMARKS	MAKE	F/R	WVA No
3335	16,5	4 PADS PLAIN	OPEL - VAUXHALL	F	20323

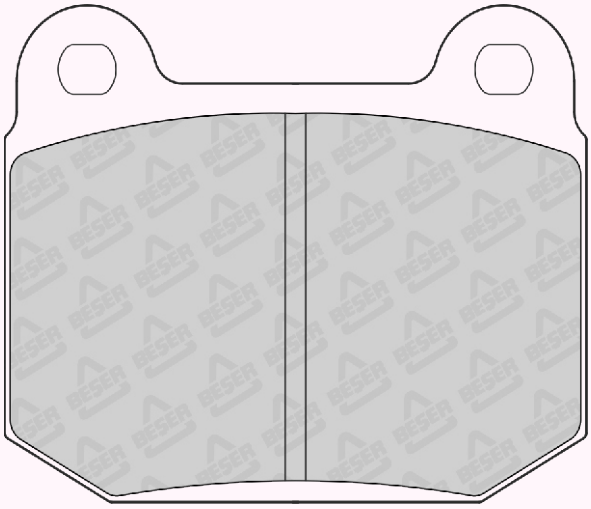

76,7 x 65,5

REFERENCE	T(mm)	REMARKS	MAKE	F/R	WVA No
3336	13,8	4 PADS PLAIN	DAIHATSU - TOYOTA	F	20599 20697

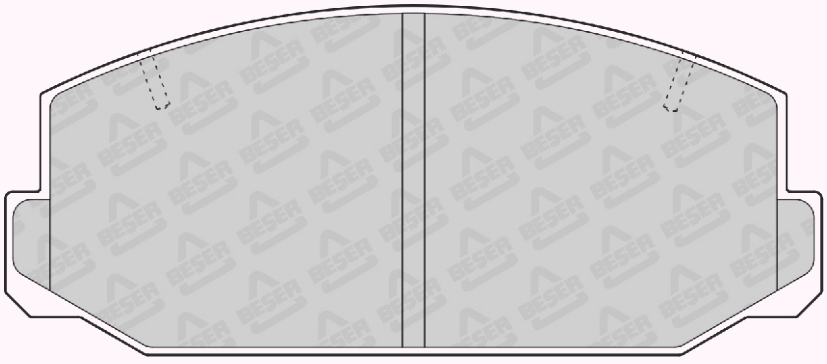

107,8 x 46

REFERENCE	T(mm)	REMARKS	MAKE	F/R	WVA No
3337	14,5	4 PADS PLAIN	OPEL	F	20173 20397

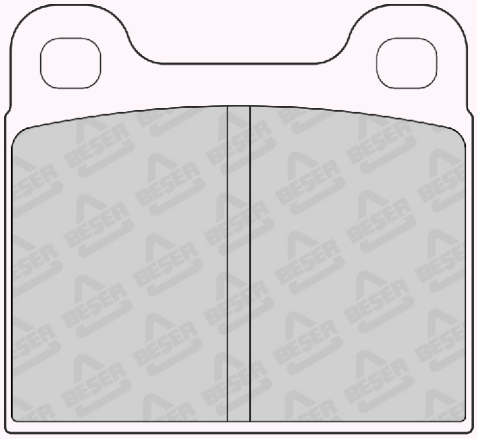

61,6 x 56,5

REFERENCE	T(mm)	REMARKS	MAKE	F/R	WVA No
3338	19	4 PADS PLAIN	ALFA ROMEO - BEDFORD BMW - MERCEDES BENZOPEL PORSHE - SAAB - TALBOT	F	20034 20107

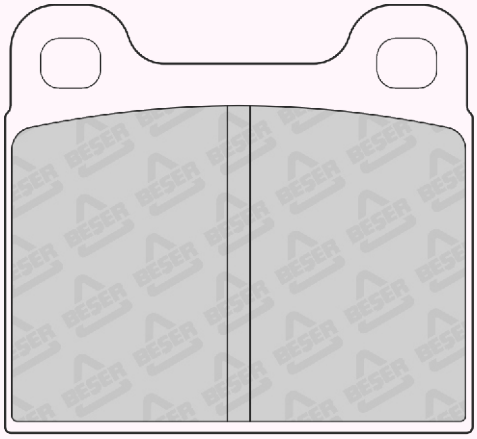

61,6 x 56,5

REFERENCE	T(mm)	REMARKS	MAKE	F/R	WVA No
3339	17,5	4 PADS PLAIN	MERCEDES BENZ	F	20341

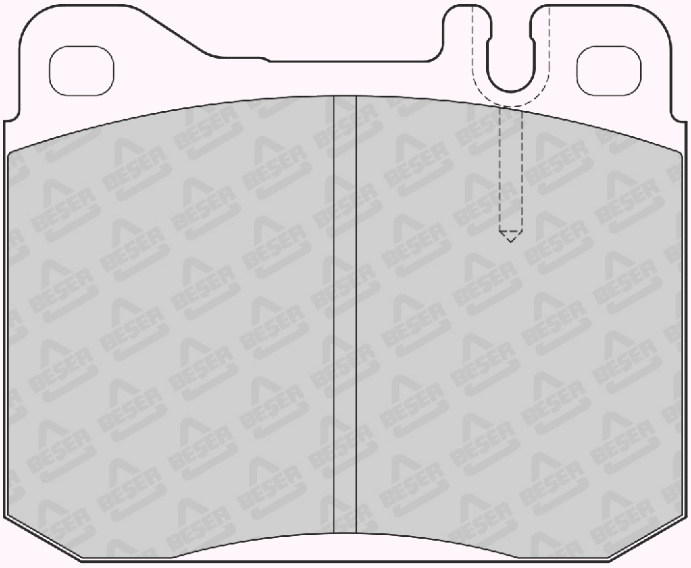

90 x 73,4

REFERENCE	T(mm)	REMARKS	MAKE	F/R	WVA No
3340	15	2 PADS WITH WEAR SENSOR (245mm)	PEUGEOT	F	20145 20592

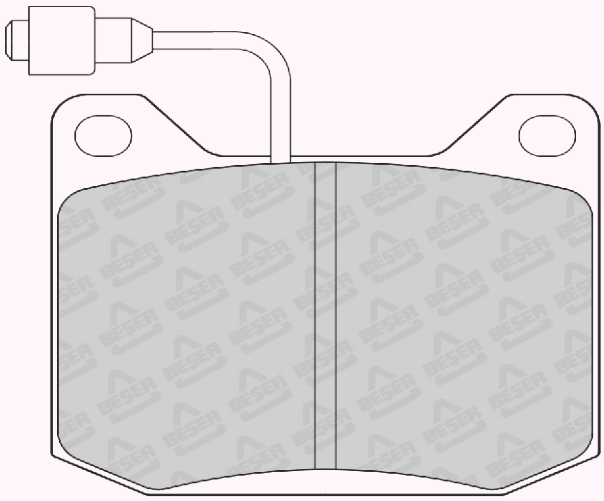

78,4 x 64,5

REFERENCE	T(mm)	REMARKS	MAKE	F/R	WVA No
3341	16	4 PADS PLAIN	DACIA - RENAULT	F	20139

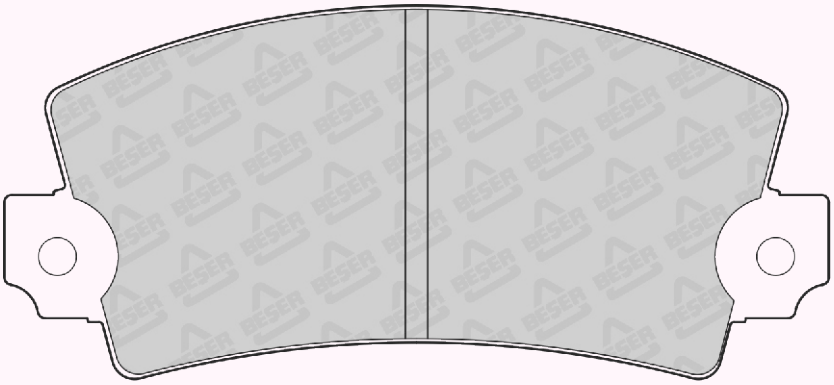

108,8 x 49,3

REFERENCE	T(mm)	REMARKS	MAKE	F/R	WVA No
3342	15	4 PADS PLAIN	ALPINE - PEUGEOT RENAULT	F	20139 20347 20348

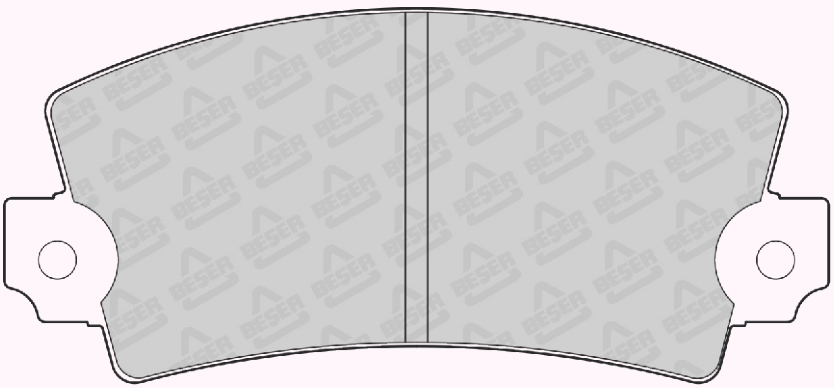

108,8 x 49,3

REFERENCE	T(mm)	REMARKS	MAKE	F/R	WVA No
3343	18,5	4 PADS PLAIN	AUDI - VW	F	20228

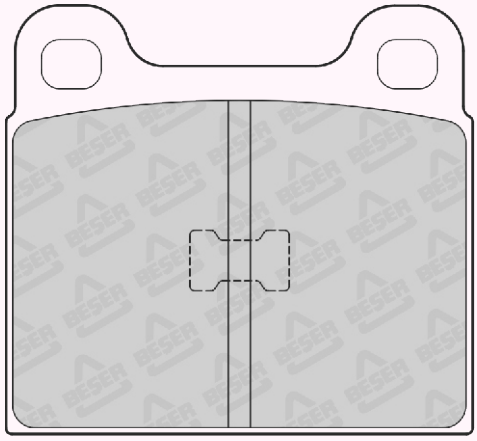

61,6 x 56,5

REFERENCE	T(mm)	REMARKS	MAKE	F/R	WVA No
3344	15	4 PADS PLAIN	AUDI - FORD	F	20245 20252

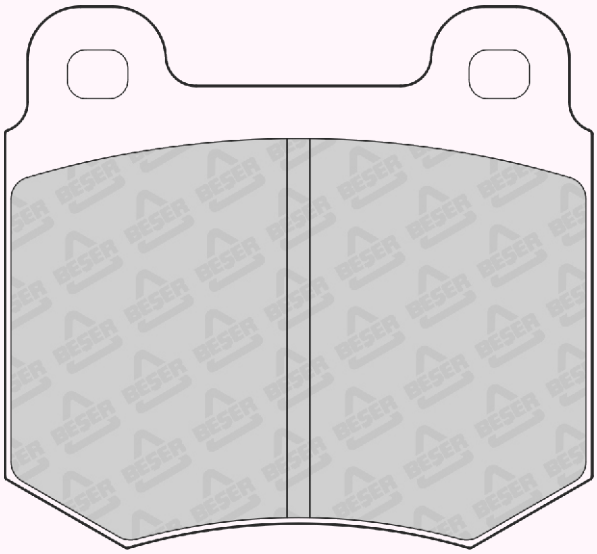

77,5 x 71,4

REFERENCE	T(mm)	REMARKS	MAKE	F/R	WVA No
3345	16	4 PADS WITH PLUGS	DACIA - RENAULT	F	20139

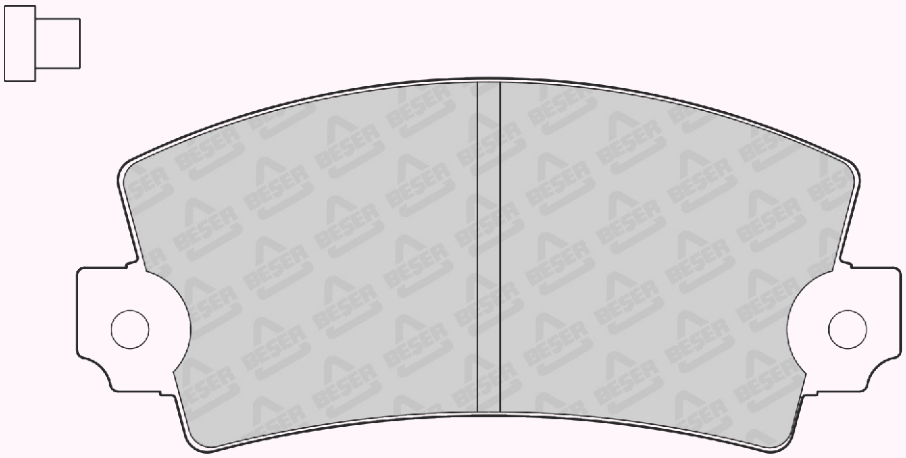

108,8 x 49,3

REFERENCE	T(mm)	REMARKS	MAKE	F/R	WVA No
3346	12,5	4 PADS PLAIN	FIAT - TOYOTA	F	20073

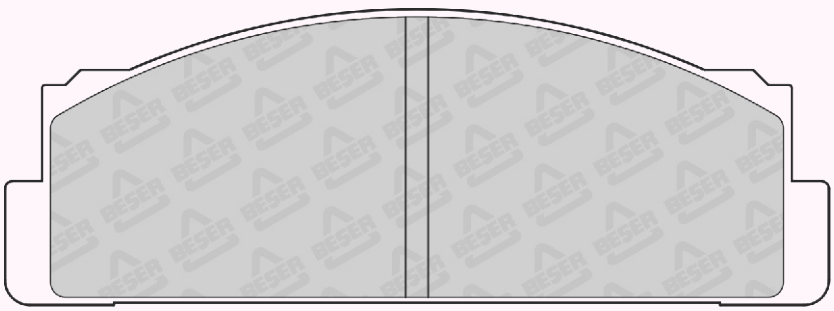

108,8 x 39

REFERENCE	T(mm)	REMARKS	MAKE	F/R	WVA No
3348	15	4 PADS WITH PLUGS 2 SENSOR	ABARTH - DACIA FIAT - RENAULT	F	20140 20334 20335

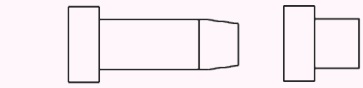

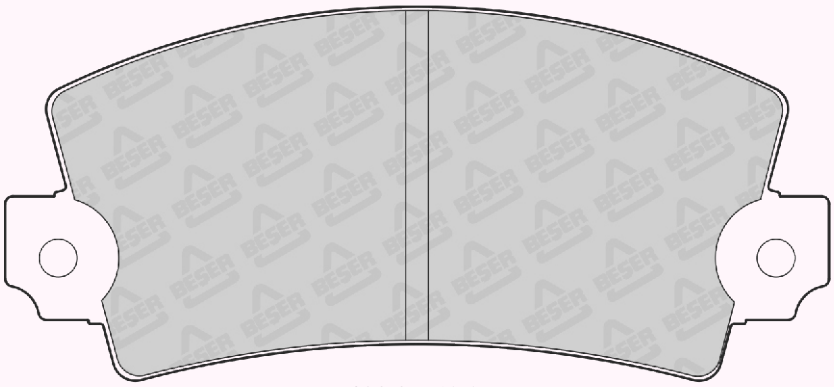

108,8 x 49,3

REFERENCE	T(mm)	REMARKS	MAKE	F/R	WVA No
3349	16	2 PADS WITH WEAR SENSOR	ABARTH - DACIA FIAT - RENAULT	F	20140

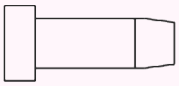

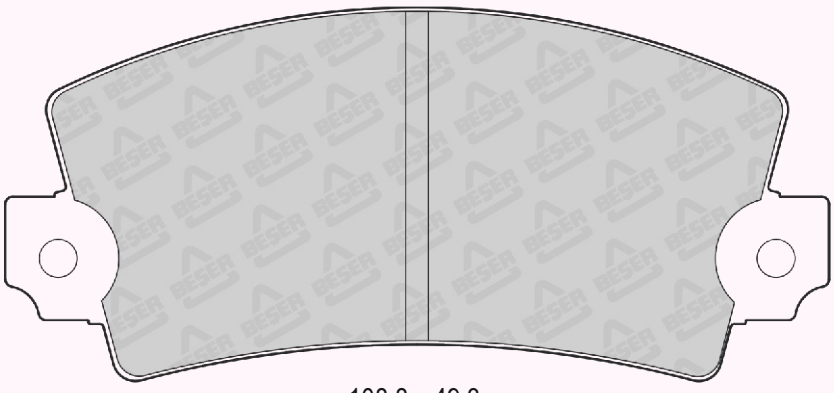

108,8 x 49,3

REFERENCE	T(mm)	REMARKS	MAKE	F/R	WVA No
3350	18,5	4 PADS PLAIN	ALFA ROMEO - FERRARI MERCEDES BENZ - PORSCHE VW	F	20011 20068 20386 20420

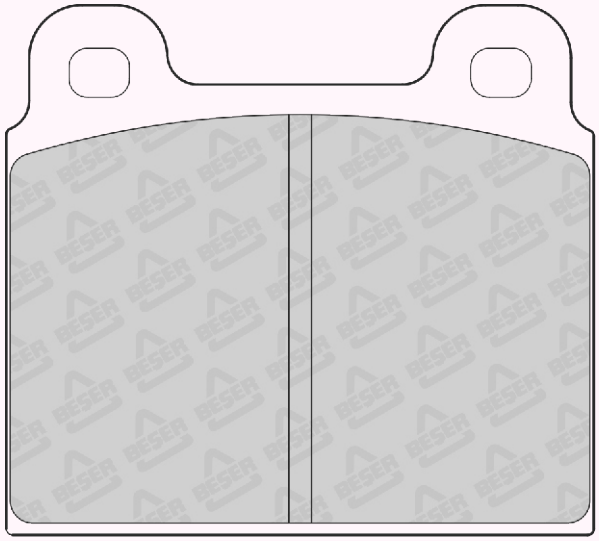

77,5 x 70

REFERENCE	T(mm)	REMARKS	MAKE	F/R	WVA No
3351	13	4 PADS PLAIN	FIAT - FSO - LANCIA PININFARINA	F	20074

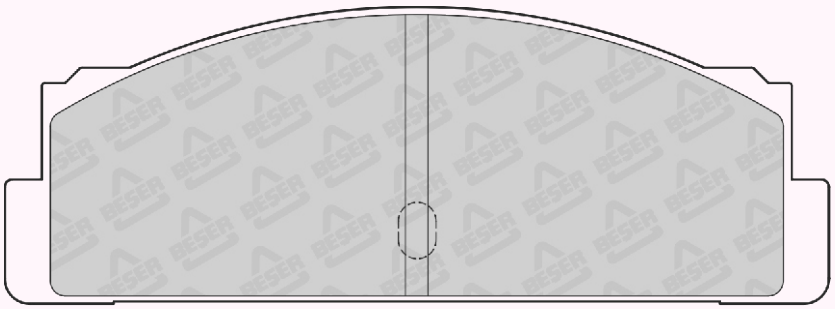

108,8 x 39

REFERENCE	T(mm)	REMARKS	MAKE	F/R	WVA No
3353	15	2 PADS WITH WEAR SENSOR (187mm)	ALFA ROMEO - BEDFORD - BMW MERCEDES BENZ - OPEL - PORSCHE - SAAB - TALBOT -	F	20034 20327 20548

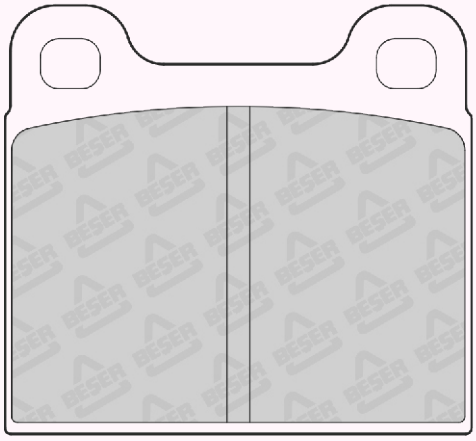

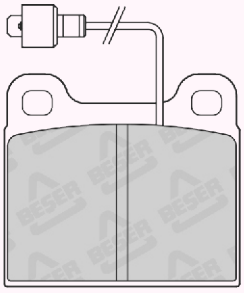

61,6 x 56,5

REFERENCE	T(mm)	REMARKS	MAKE	F/R	WVA No
3357	16,7	4 PADS PLAIN	AUTOBIANCHI - FIAT - FSO -INNOCENTI LANCIA - POLSKI - SEAT ZASTAVA -	F-R	---

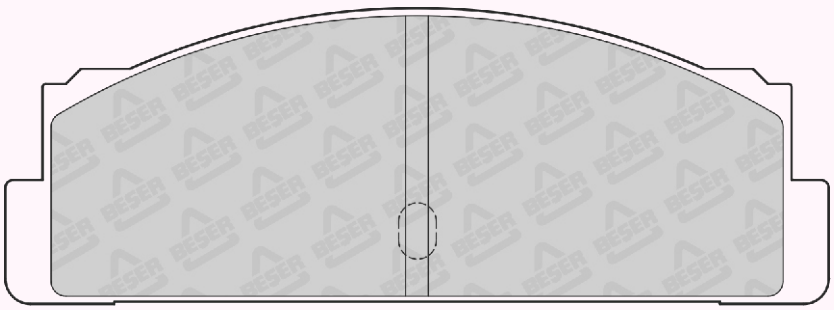

108,8 x 39

REFERENCE	T(mm)	REMARKS	MAKE	F/R	WVA No
3358	15	4 PADS PLAIN	PEUGEOT	F	20145

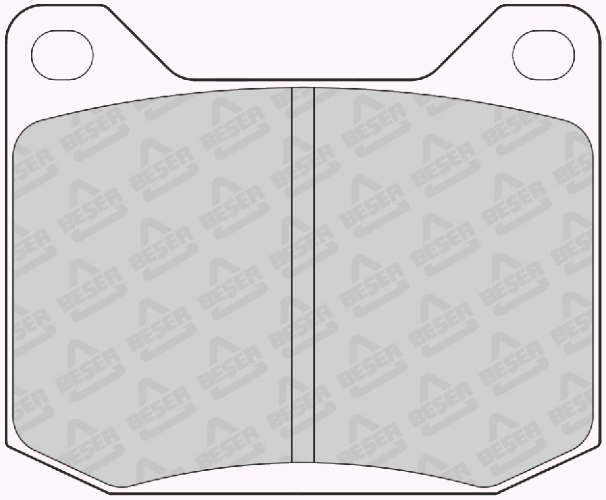

78,4 x 64,5

REFERENCE	T(mm)	REMARKS	MAKE	F/R	WVA No
3360	16	4 PADS PLAIN	ALFA ROMEO AUTO UNION -DAFPORSCHE SAAB - TALBOT - VOLVO - VW	F	20009

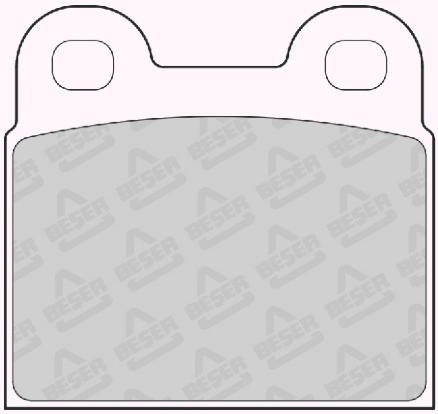

56,5 x 53

REFERENCE	T(mm)	REMARKS	MAKE	F/R	WVA No
3361	14	4 PADS PLAIN	ALFA ROMEO - DAF -SAAB - PORSCHE TALBOT - VOLVO -VW	F	20009

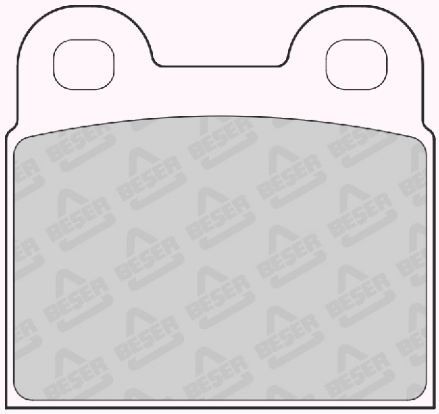

56,5 x 53

REFERENCE	T(mm)	REMARKS	MAKE	F/R	WVA No
3362	14	4 PADS PLAIN	ALFA ROMEO -BEDFORD BMW - MERCEDES BENZ - OPEL PORSCHE - SAAB - TALBOT	F	20034 20173 20397

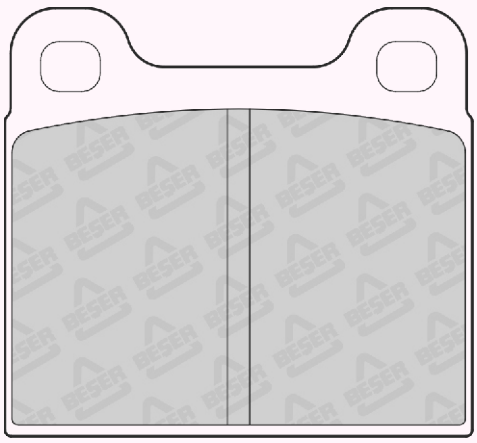

61,6 x 56,5

REFERENCE	T(mm)	REMARKS	MAKE	F/R	WVA No
3363	15	4 PADS WITH 3 SLOT	BMW	F	- - -

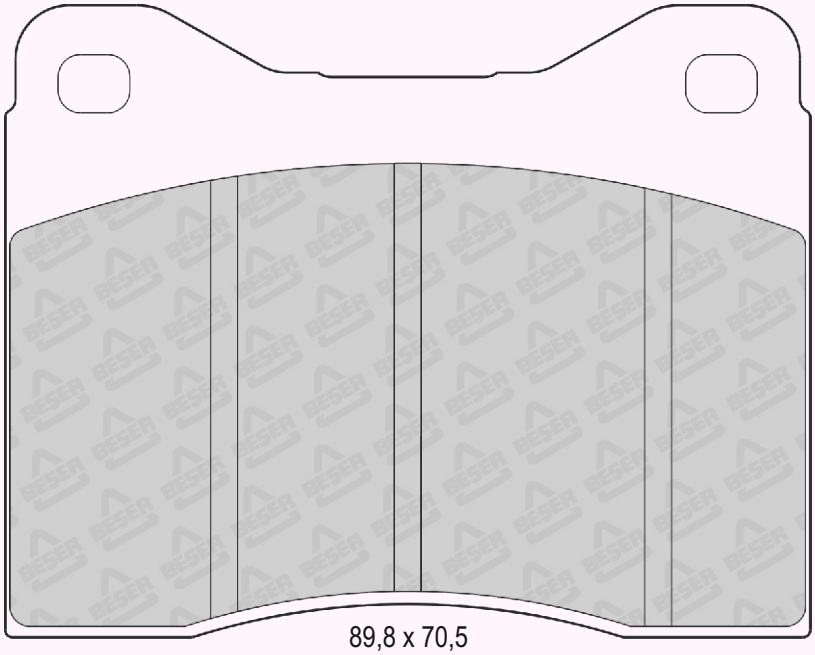

89,8 x 70,5

REFERENCE	T(mm)	REMARKS	MAKE	F/R	WVA No
3364	16	2 PADS WITH WEAR SENSOR (215mm)	PEUGEOT	F	20145 20592

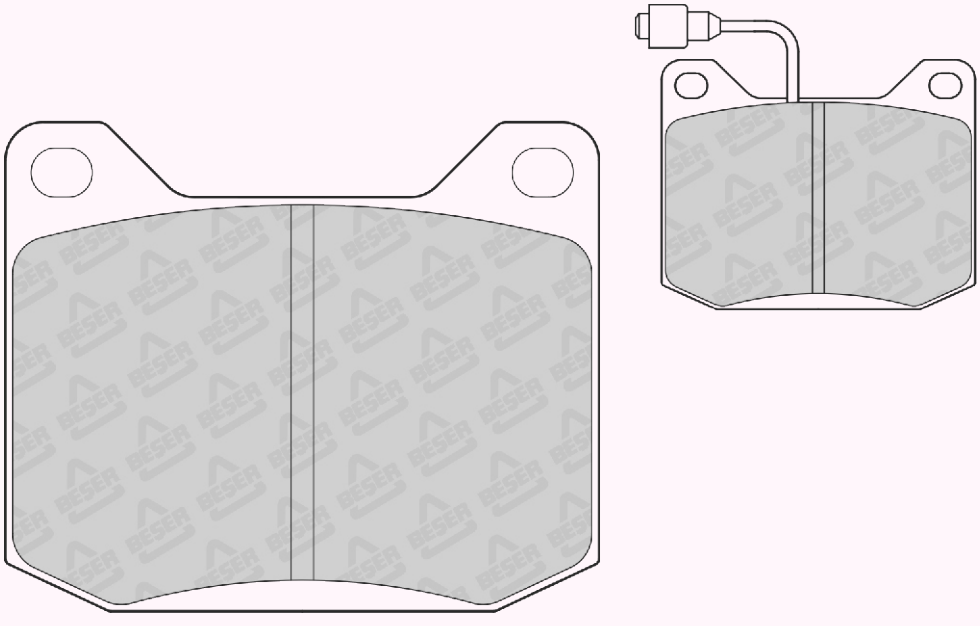

78,4 x 64,5

REFERENCE	T(mm)	REMARKS	MAKE	F/R	WVA No
3365	16,5	4 PADS PLAIN	BMW - VAUXHALL OPEL	F	20323 20588

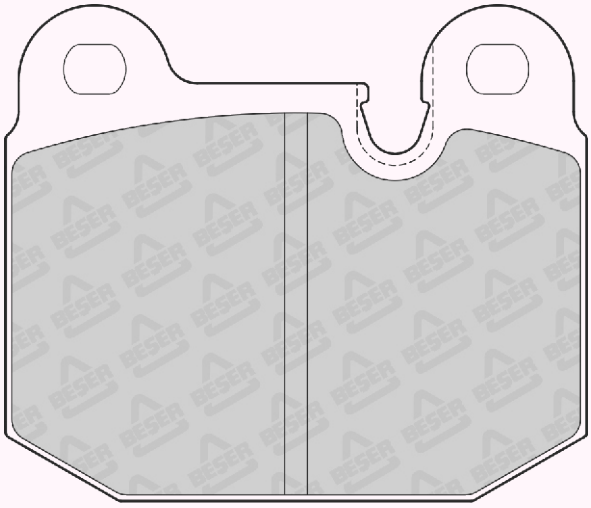

76,7 x 65,4

REFERENCE	T(mm)	REMARKS	MAKE	F/R	WVA No
3366	18	2 PADS WITH WEAR SENSOR (160mm)	PEUGEOT	F	20196 20366 20367

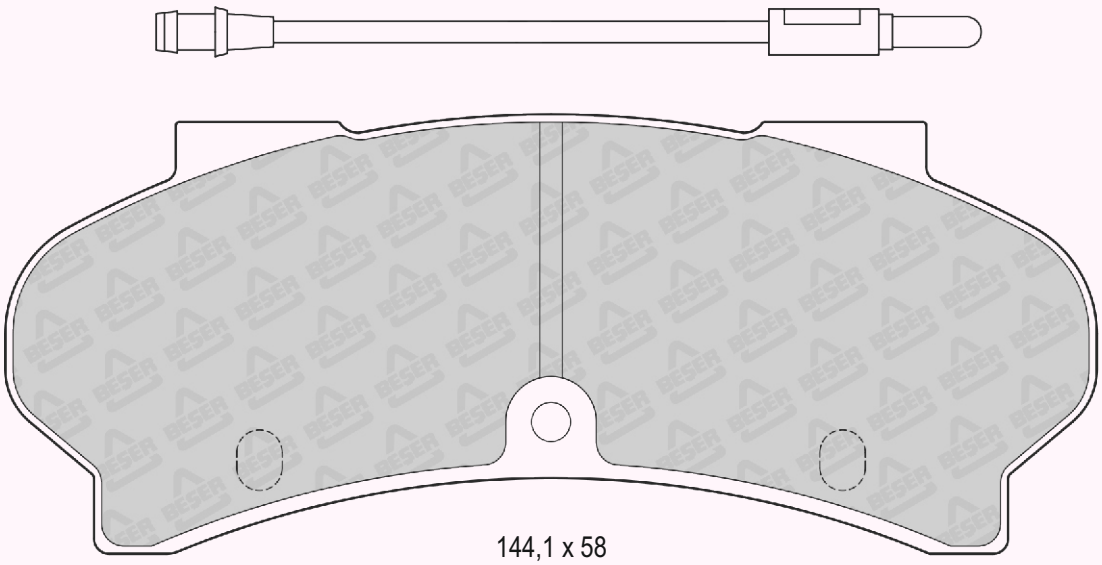

144,1 x 58

REFERENCE	T(mm)	REMARKS	MAKE	F/R	WVA No
3366/1	15	2 PADS WITH WEAR SENSOR	PEUGEOT	F	20366 20367

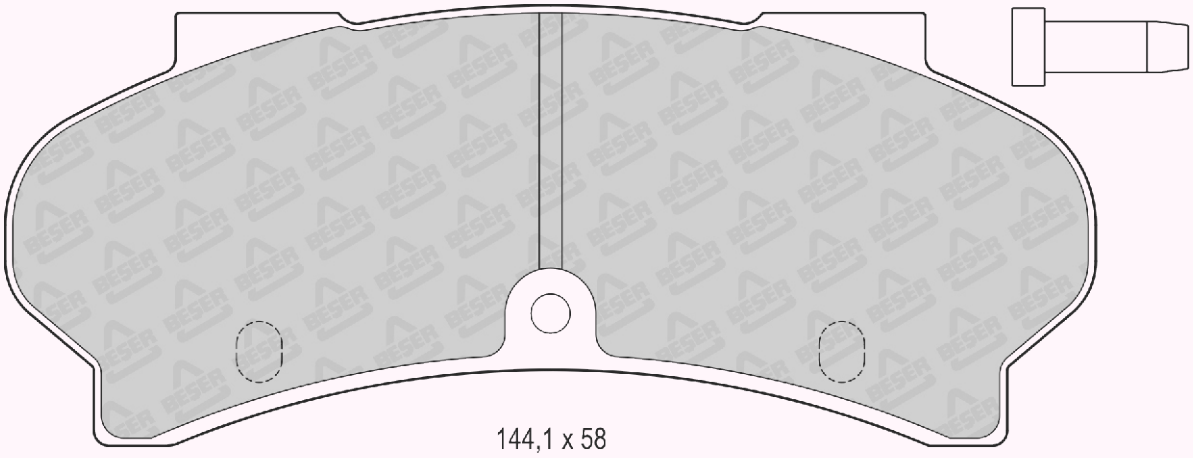

144,1 x 58

REFERENCE	T(mm)	REMARKS	MAKE	F/R	WVA No
3369	16,3	4 PADS PLAIN	NISSAN - TOYOTA	F	20628 20716

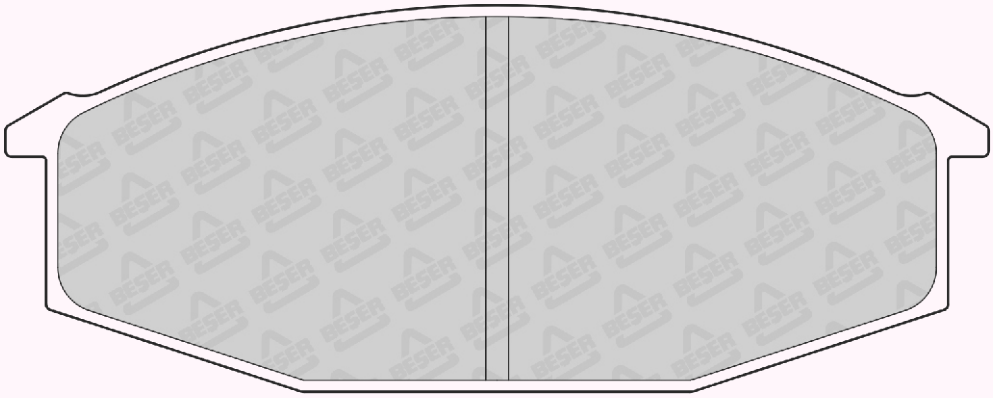

129,8 x 51

REFERENCE	T(mm)	REMARKS	MAKE	F/R	WVA No
3370	14,5	4 PADS PLAIN	ASTON MARTIN NISSAN	F	20718

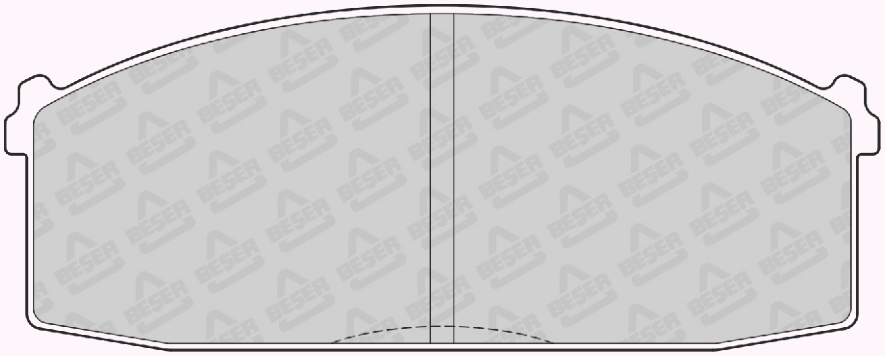

111,5 x 44

REFERENCE	T(mm)	REMARKS	MAKE	F/R	WVA No
3371	15	4 PADS PLAIN	TOYOTA	F	20566 20852

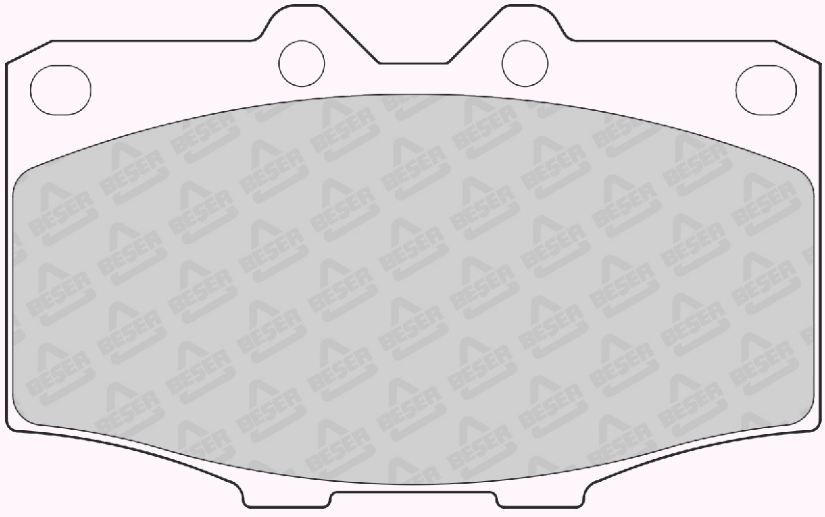

107,5 x 66,2

REFERENCE	T(mm)	REMARKS	MAKE	F/R	WVA No
3372	18	2 PADS WITH WEAR SENSOR (130mm)	RENAULT - TOYOTA	F	20441 20774 20770 20935 20771 20936 20772 20937 20773 20938

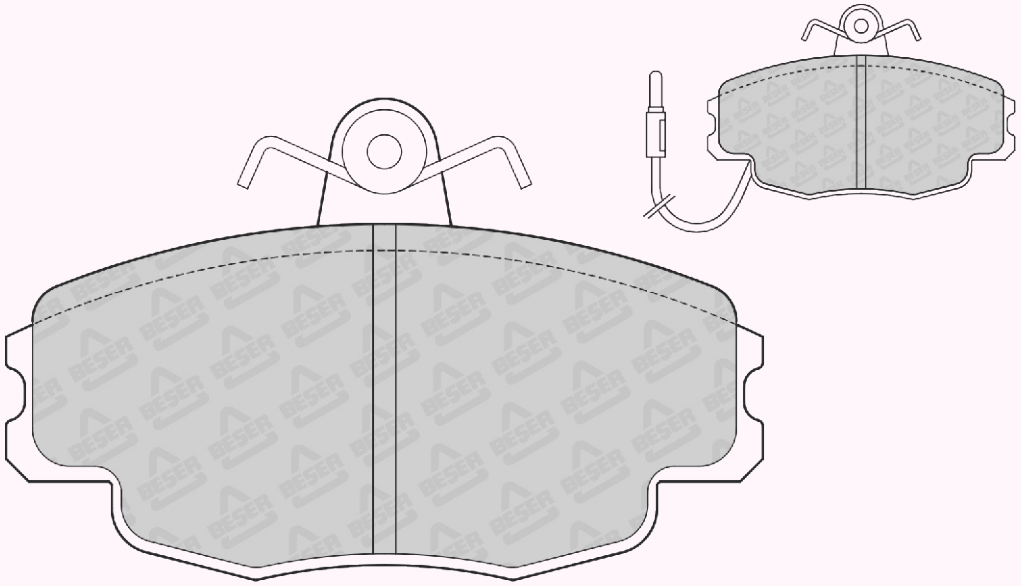

100 x 63,5

REFERENCE	T(mm)	REMARKS	MAKE	F/R	WVA No
3373	16	4 PADS PLAIN	VOLVO	F	20153 20200 20314 20404

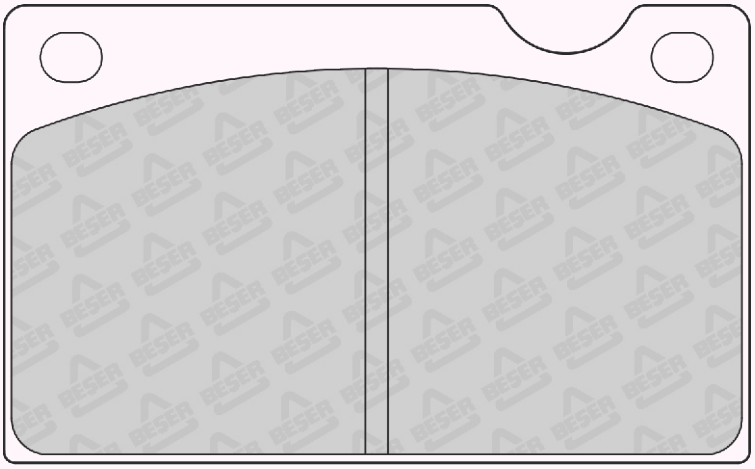

98,1 x 60,4

REFERENCE	T(mm)	REMARKS	MAKE	F/R	WVA No
3374	15,5	4 PADS PLAIN	RENAULT	F	20480

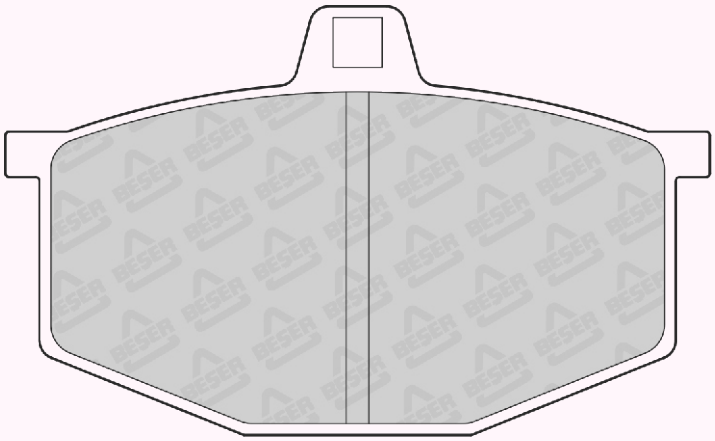

93 x 56,5

REFERENCE	T(mm)	REMARKS	MAKE	F/R	WVA No
3375	15,3	4 PADS PLAIN	NISSAN - TOYOTA	F	20289 20316 20448

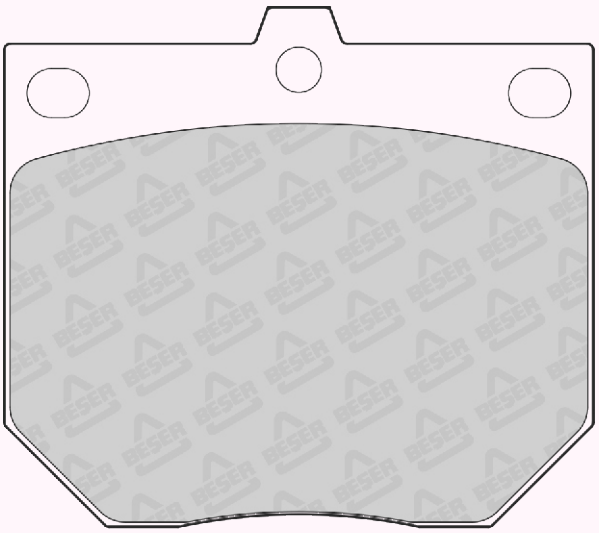

77,7 x 68,6

REFERENCE	T(mm)	REMARKS	MAKE	F/R	WVA No
3376	15	4 PADS PLAIN	CHRYSLER - DODGE MAZDA - MITSUBISHI TOYOTA	F	20476 20699

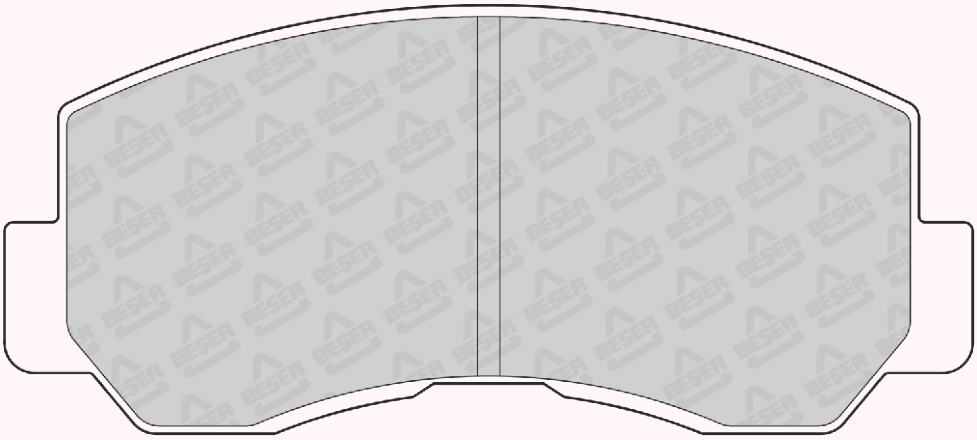

128 x 56,5

REFERENCE	T(mm)	REMARKS	MAKE	F/R	WVA No
3377	15,4	4 PADS PLAIN	PEUGEOT	F	20151 20289 20316

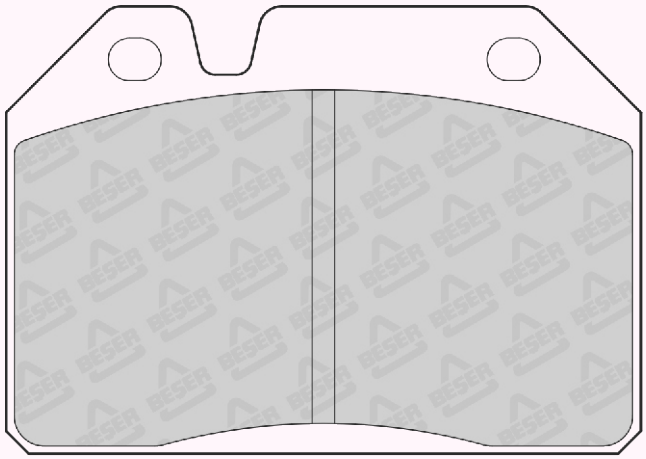

83,8 x 59

REFERENCE	T(mm)	REMARKS	MAKE	F/R	WVA No
3378	19,4	4 PADS PLAIN	AUDI VOLVO	F	20466 20574

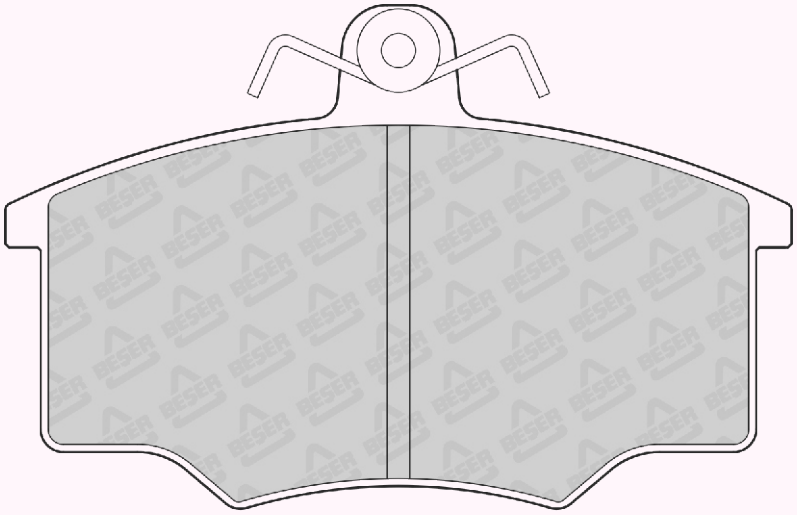

103,8 x 66,5

REFERENCE	T(mm)	REMARKS	MAKE	F/R	WVA No
3379	15	2 PADS INNER & 2 PADS OUTER	TOYOTA	F	20729 20730

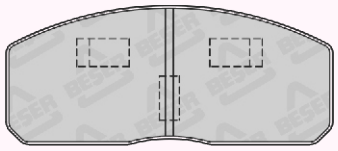

120,3 x 51,2

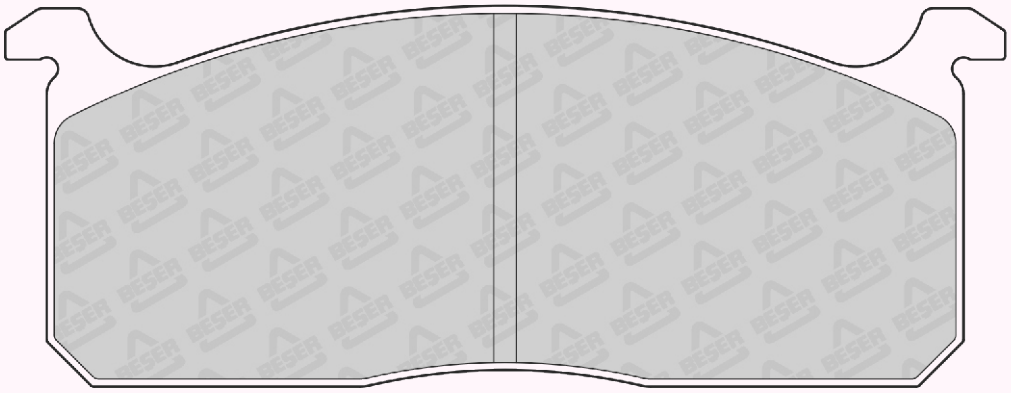

132 x 50,3

REFERENCE	T(mm)	REMARKS	MAKE	F/R	WVA No
3380	18	2 PADS WITH WEAR SENSOR (100mm)	CITROEN - MEGA - PEUGEOT RENAULT - TALBOT	F	20905 21061 20906 21062 20986 20987

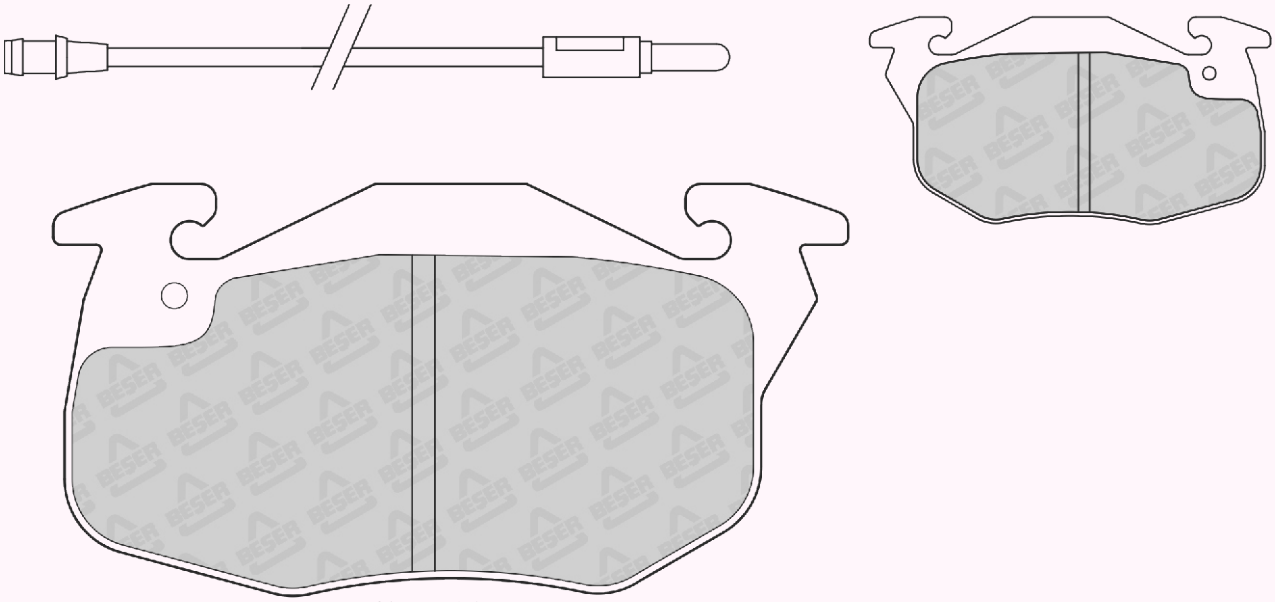

105 x 54,3

REFERENCE	T(mm)	REMARKS	MAKE	F/R	WVA No
3381	18	2 PADS WITH WEAR SENSOR (100mm)	CITROEN - MEGA PEUGEOT - RENAULT TALBOT - WULING	F	20634 20635 20905 20906

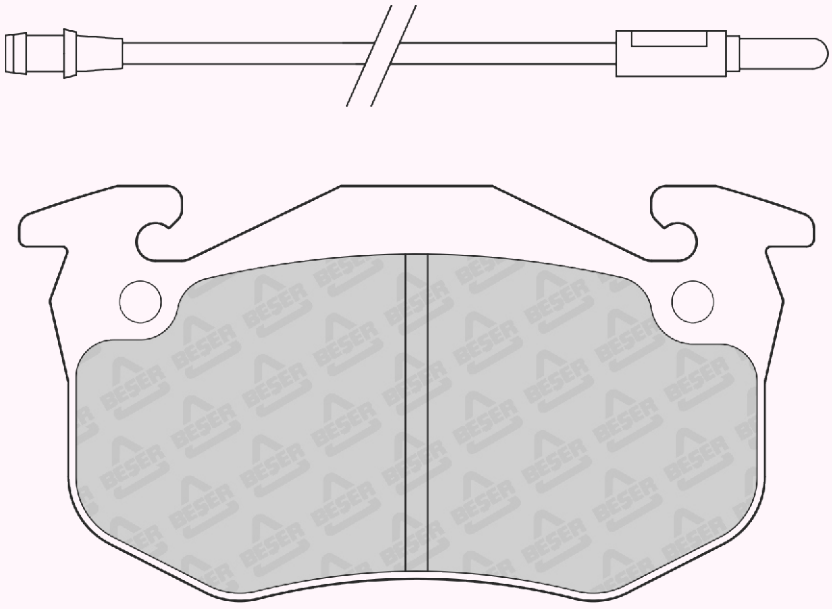

105 x 55

REFERENCE	T(mm)	REMARKS	MAKE	F/R	WVA No
3390	20	4 PADS PLAIN	MERCEDES BENZ	F	29324 29325 29764

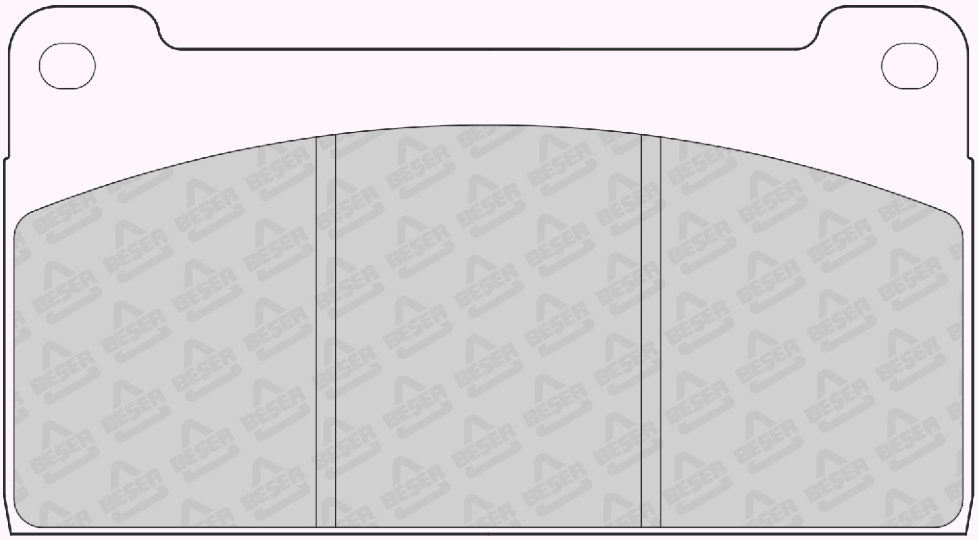

149.7 x 81.5
(NOT SCALE)

REFERENCE	T(mm)	REMARKS	MAKE	F/R	WVA No
3393	15,9	4 PADS PLAIN	LADA	F	20166

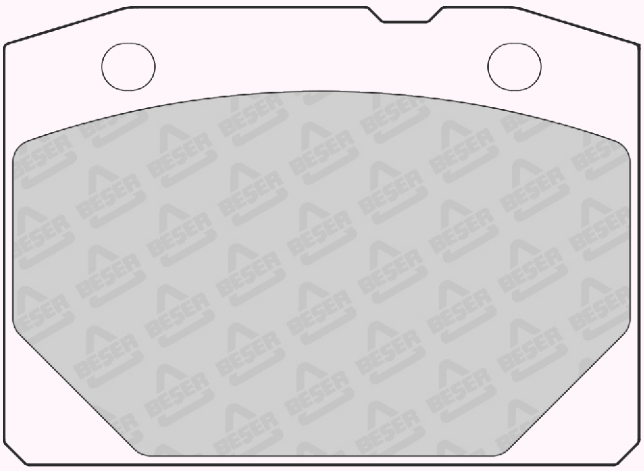

83,9 x 60,5

REFERENCE	T(mm)	REMARKS	MAKE	F/R	WVA No
3394	16	4 PADS PLAIN	NISSAN SUBARU	F	20958

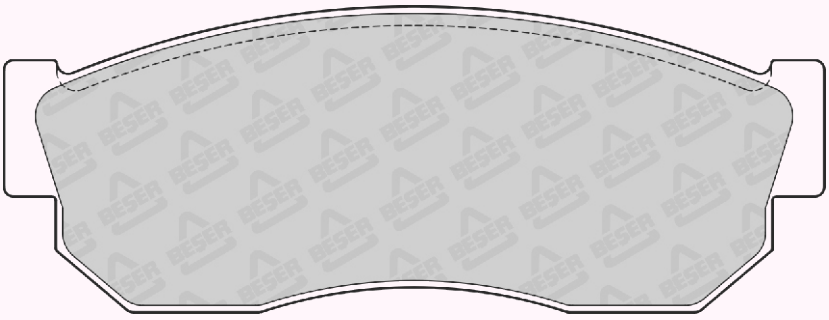

108,5 x 40,3

REFERENCE	T(mm)	REMARKS	MAKE	F/R	WVA No
3395	18	2 PADS WITH WEAR SENSOR	SUBARU	F	20112 20113

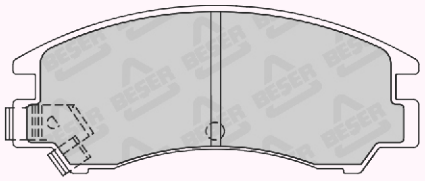

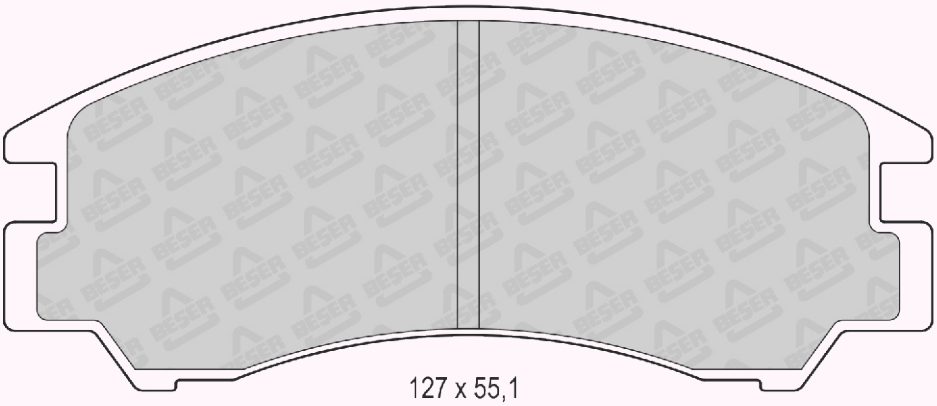

127 x 55,1

REFERENCE	T(mm)	REMARKS	MAKE	F/R	WVA No
3397	17	4 PADS PLAIN	INFINITI - NISSAN	F	21099 21229 52251

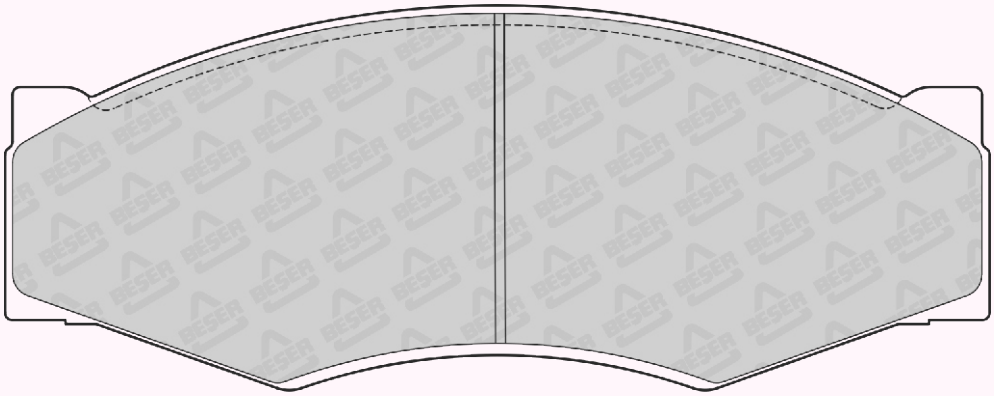

130 x 49,5

REFERENCE	T(mm)	REMARKS	MAKE	F/R	WVA No
3400	15	4 PADS PLAIN	MITSUBISHI	F	21126

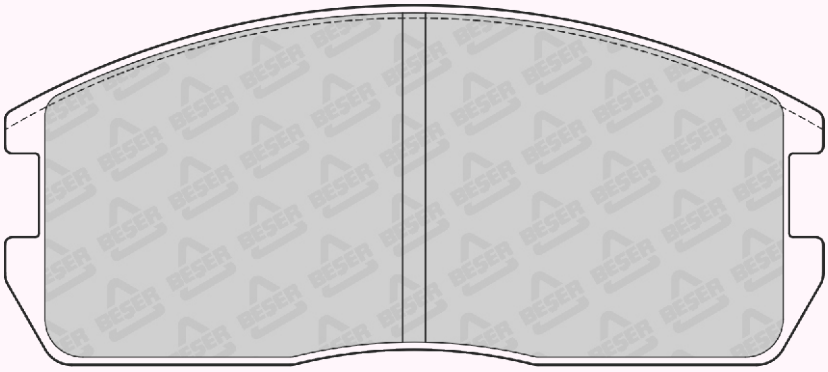

108 x 47,3

REFERENCE	T(mm)	REMARKS	MAKE	F/R	WVA No
3401	15,5	4 PADS PLAIN	MITSUBISHI PLYMOUNTH	F	20995

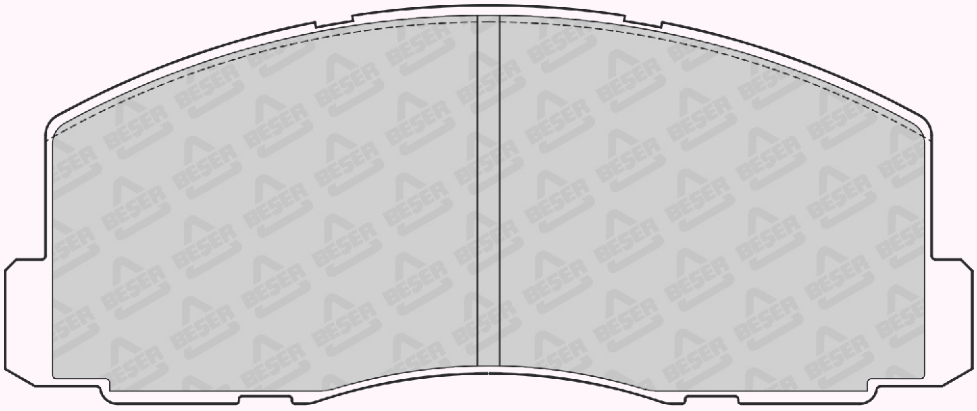

127,7 x 52,5

REFERENCE	T(mm)	REMARKS	MAKE	F/R	WVA No
3402	15	4 PADS PLAIN	TOYOTA	F	20870

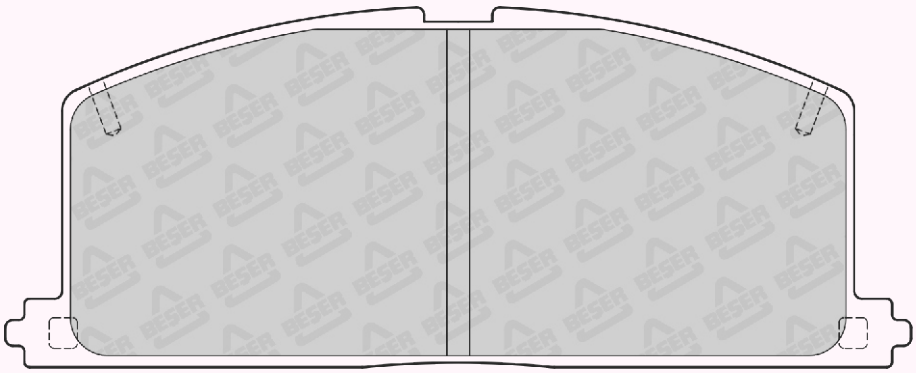

119,7 x 47,5

REFERENCE	T(mm)	REMARKS	MAKE	F/R	WVA No
3403	16,3	4 PADS PLAIN	PEUGEOT	F	20161

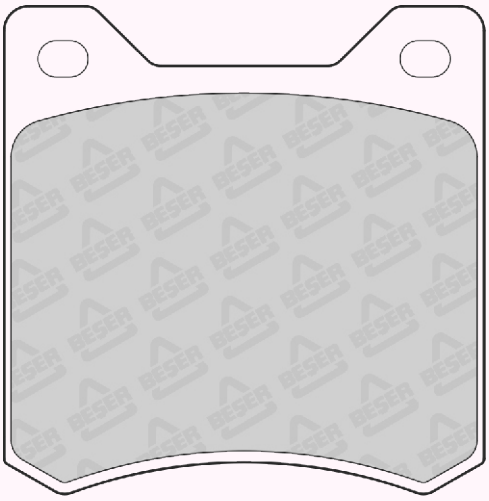

63,4 x 64,4

REFERENCE	T(mm)	REMARKS	MAKE	F/R	WVA No
3404	15	4 PADS PLAIN	SKODA WARTBURG	F	20561 21390

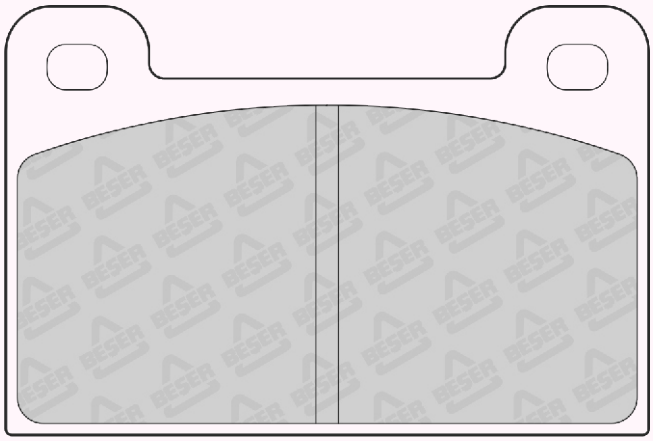

84,8 x 56,5

REFERENCE	T(mm)	REMARKS	MAKE	F/R	WVA No
3405	19	2 PADS WITH WEAR SENSOR (100 mm)	PEUGEOT - TALBOT	F	20453 20454 20455 20518

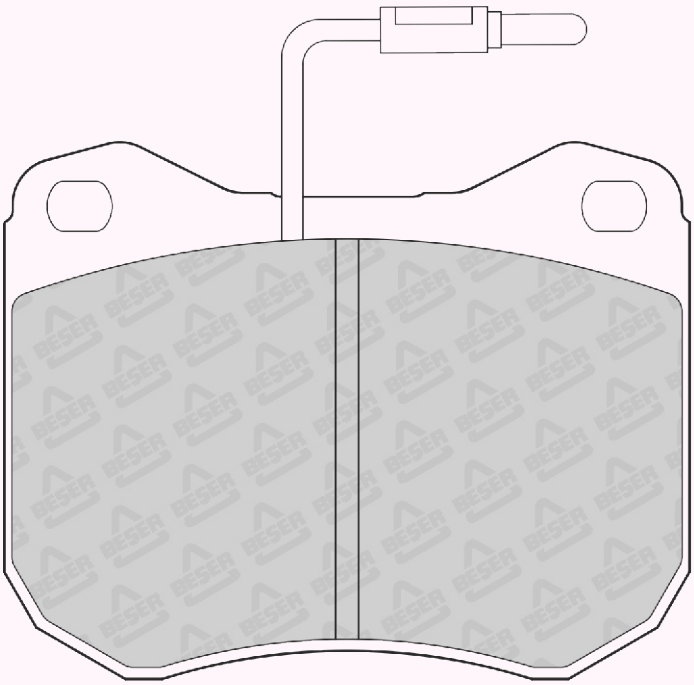

89,5 x 70,8

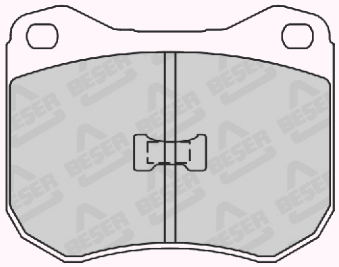

89,5 x 70,8

REFERENCE	T(mm)	REMARKS	MAKE	F/R	WVA No
3406	15,4	4 PADS PLAIN	SKODA	F	20576

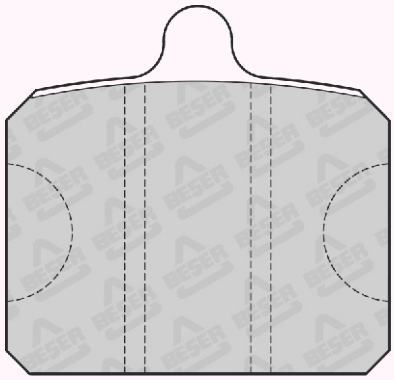

50,7 x 48,5

REFERENCE	T(mm)	REMARKS	MAKE	F/R	WVA No
3407	15,2	4 PADS PLAIN	MITSUBISHI	F	20724

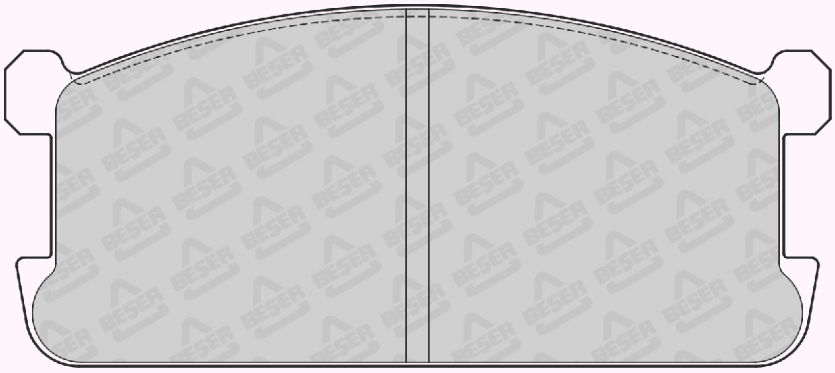

109 x 47,6

REFERENCE	T(mm)	REMARKS	MAKE	F/R	WVA No
3408	19,4	4 PADS PLAIN	MERCEDES BENZ	F	20940 20941 21028 21029

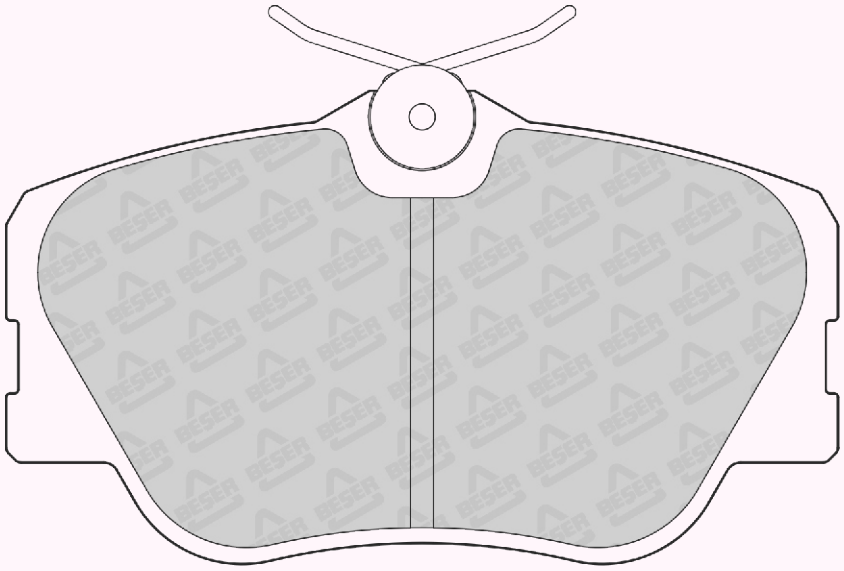

109,8 x 59,6

REFERENCE	T(mm)	REMARKS	MAKE	F/R	WVA No
3410	15,3	4 PADS PLAIN	BEDFORD - OPEL - VAUXHALL	F	20514 20939 21025

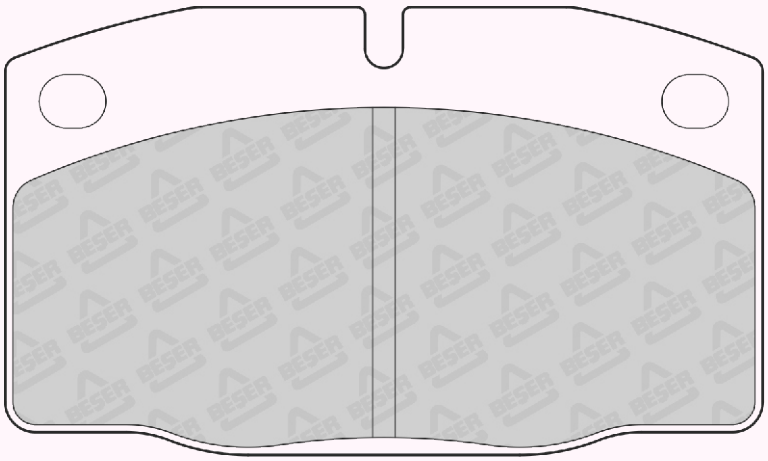

100 x 59

REFERENCE	T(mm)	REMARKS	MAKE	F/R	WVA No
3412	18	4 PADS PLAIN	LANDROVER	F	21519

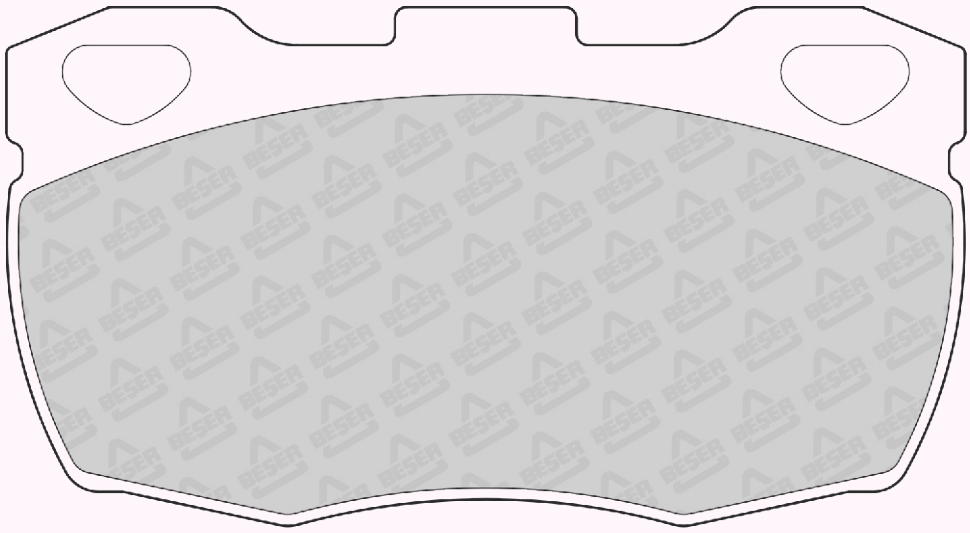

126,7 x 68,4

REFERENCE	T(mm)	REMARKS	MAKE	F/R	WVA No
3413	18	4 PADS PLAIN	LANDROVER - LDV	F	20904



126,7 x 71,1

REFERENCE	T(mm)	REMARKS	MAKE	F/R	WVA No
3414	15	4 PADS WITH OUTER RADIUS DRILLED HOLES	TOYOTA - VW	F	21158

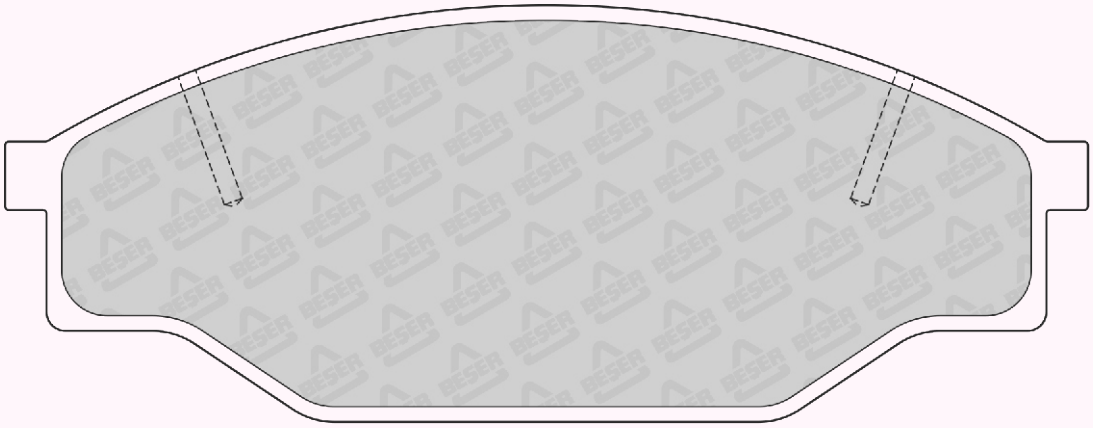

143 x 55

REFERENCE	T(mm)	REMARKS	MAKE	F/R	WVA No
3415	16,7	4 PADS PLAIN	NISSAN - FORD	F	20863

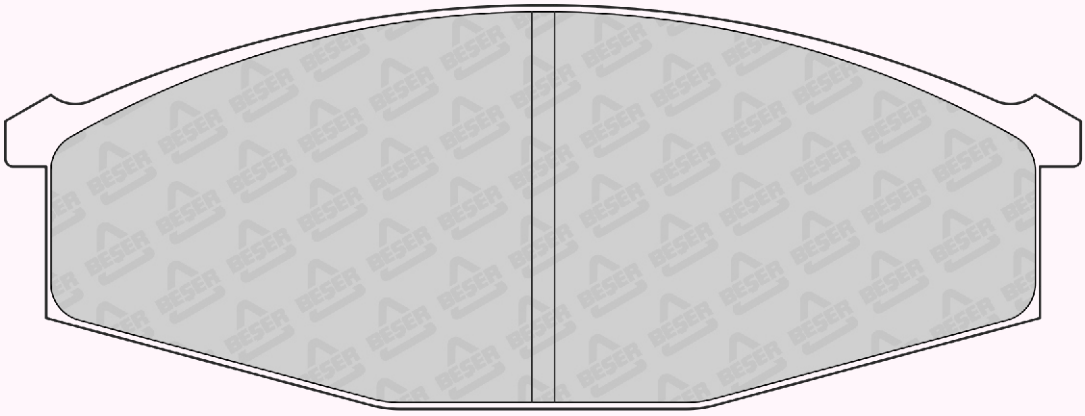

142 x 53,3

REFERENCE	T(mm)	REMARKS	MAKE	F/R	WVA No
3416	15	2 RIGHT & 2 LEFT PADS	FORD-ROVER-TRIUMPH	F	20364 20365

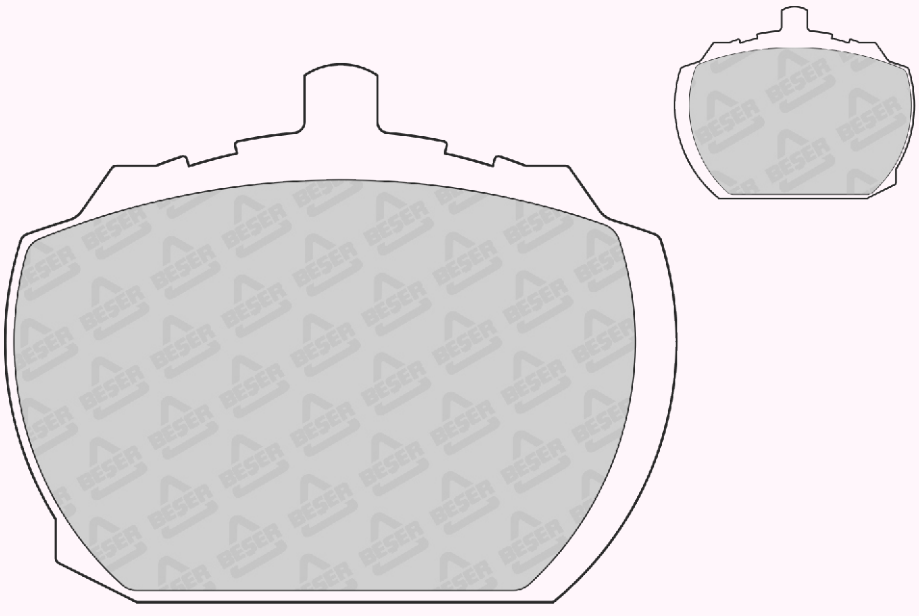

88,7 x 70,9

REFERENCE	T(mm)	REMARKS	MAKE	F/R	WVA No
3417	18	4 PADS PLAIN	TVR	F	20640 20753

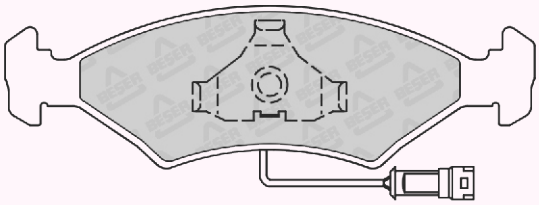

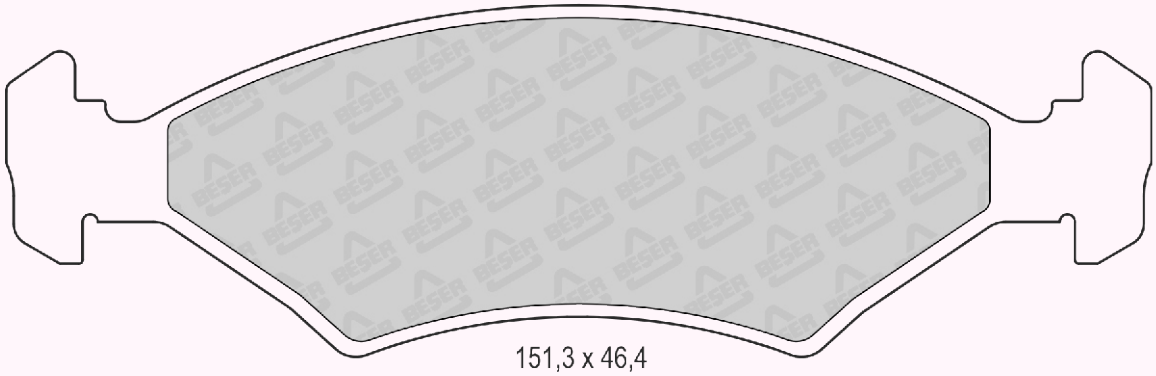

151,3 x 46,4

REFERENCE	T(mm)	REMARKS	MAKE	F/R	WVA No
3417/1	18	2 PADS WITH WEAR SENSOR (264mm)	FORD	F	20640 20752 20783

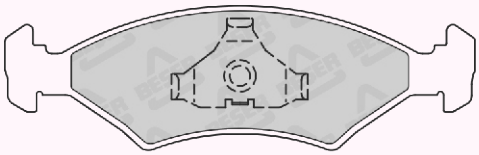

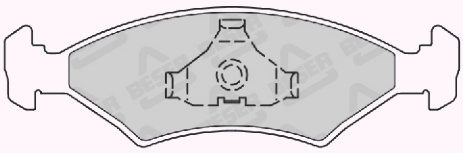

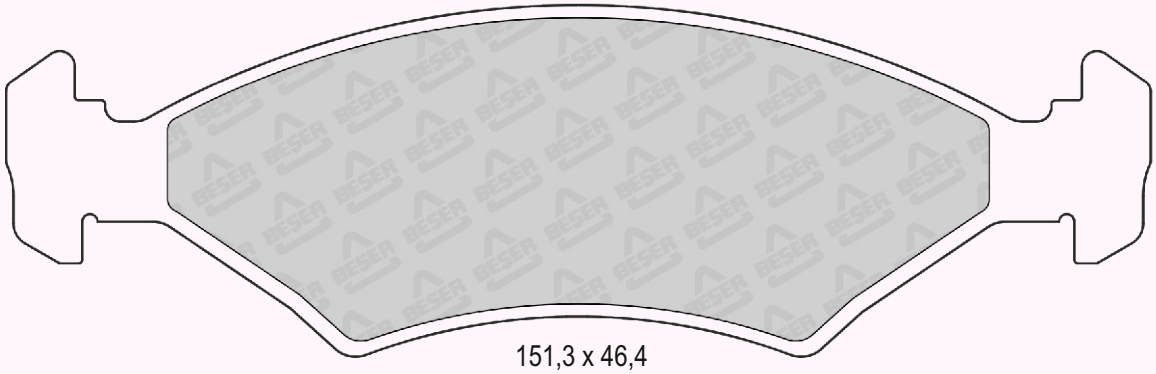

151,3 x 46,4

REFERENCE	T(mm)	REMARKS	MAKE	F/R	WVA No
3418	15,5	4 PADS PLAIN	TOYOTA	F	21042

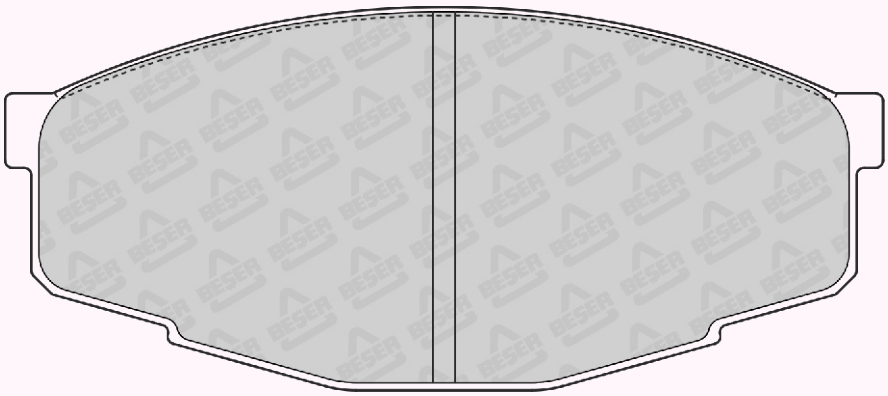

116 x 50,5

REFERENCE	T(mm)	REMARKS	MAKE	F/R	WVA No
3419	17,5	4 PADS PLAIN	FORD	F	20849 20861 20862 21192

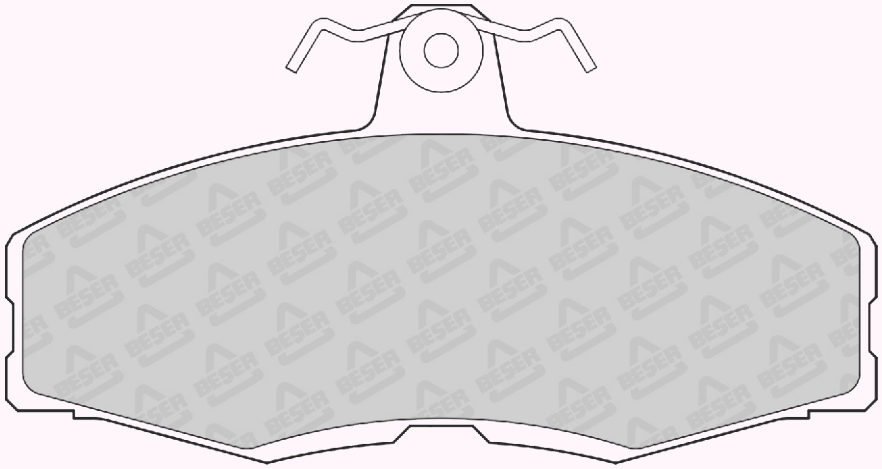

114,9 x 60,3

REFERENCE	T(mm)	REMARKS	MAKE	F/R	WVA No
3421	16	4 PADS PLAIN	LADA	F	20660

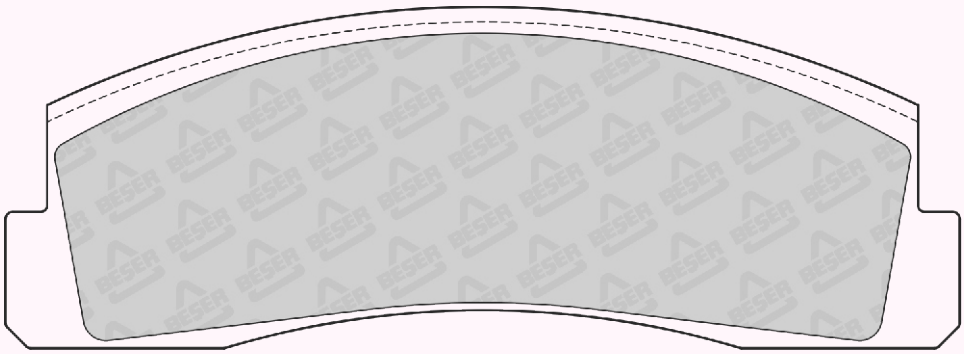

126 x 45

REFERENCE	T(mm)	REMARKS	MAKE	F/R	WVA No
3422	17,4	4 PADS PLAIN	LADA - ZAZ	F	20789 21170 22069

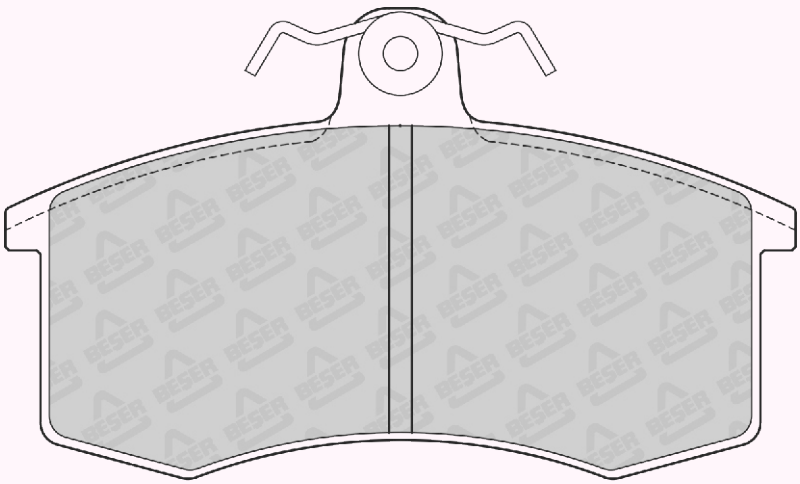

104,3 x 62,1

REFERENCE	T(mm)	REMARKS	MAKE	F/R	WVA No
3423	18	4 PADS PLAIN	ALFA ROMEO , IVECO	F	20359 20608 20653 21160 21480

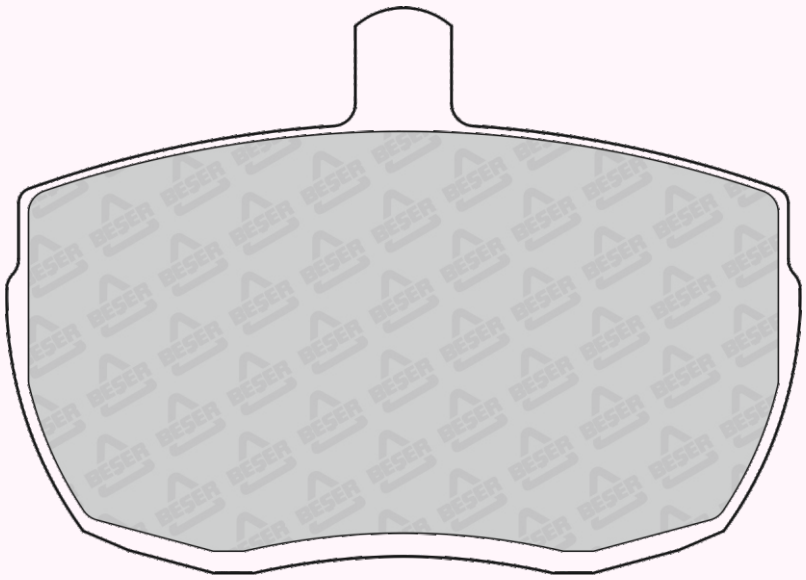

104,8 x 74,6

REFERENCE	T(mm)	REMARKS	MAKE	F/R	WVA No
3423/1	18	1 PAD WITH WEAR SENSOR	ALFA ROMEO - LTI - IVECO LAND ROVER - ROVER	F	20359 21160 21480

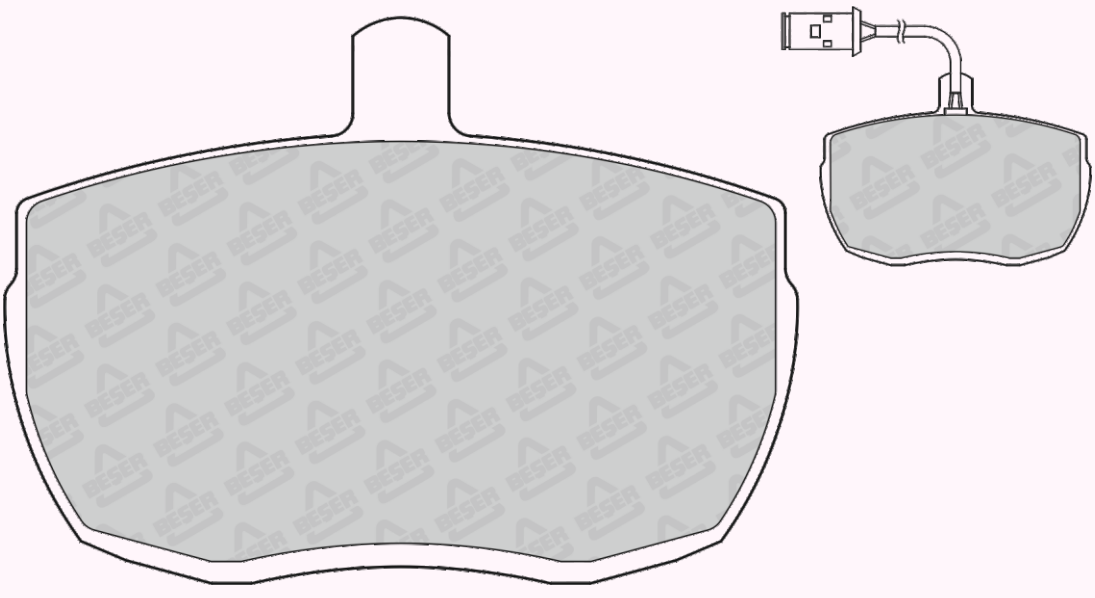

104,8 x 74,6

REFERENCE	T(mm)	REMARKS	MAKE	F/R	WVA No
3424	18	4 PADS PLAIN	AUTO BIANCHI FIAT LANCIA ,SEAT	F	20775 20950 20951 20952

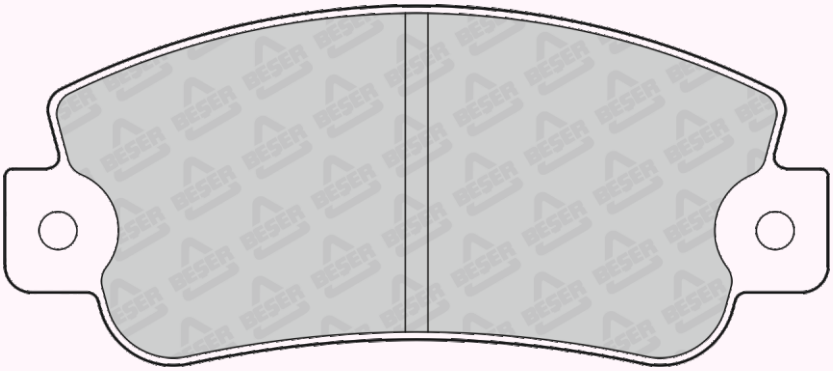

108,8 x 47,4

REFERENCE	T(mm)	REMARKS	MAKE	F/R	WVA No
3424/1	18	2 PADS WITH WEAR SENSOR	AUTO BIANCHI FIAT LANCIA ,SEAT	F	20950

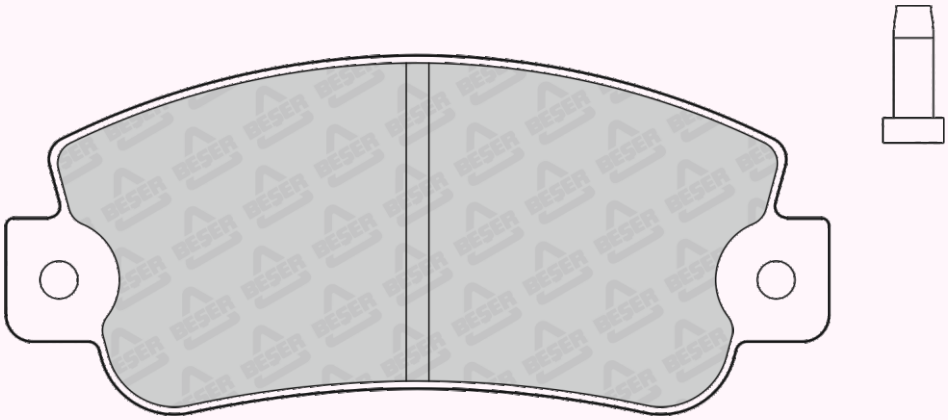

108,8 x 47,4

REFERENCE	T(mm)	REMARKS	MAKE	F/R	WVA No
3425	12	4 PADS PLAIN	FIAT - LANCIA	F-R	21107

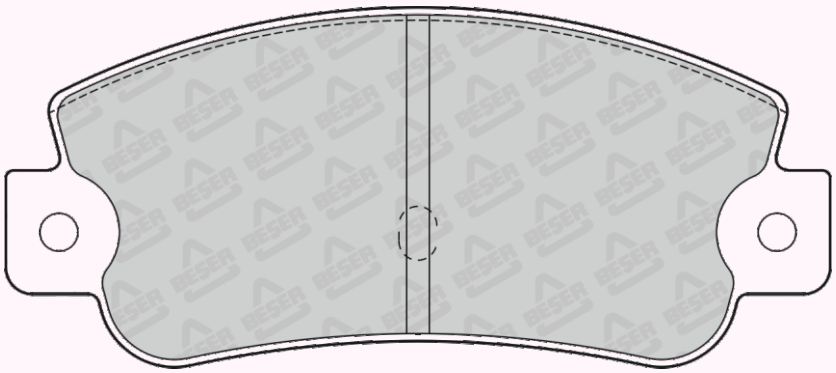

108,8 x 47,4

REFERENCE	T(mm)	REMARKS	MAKE	F/R	WVA No
3426	16,8	2 PADS WITH WEAR SENSOR	SUBARU	F	21495 21496 21503

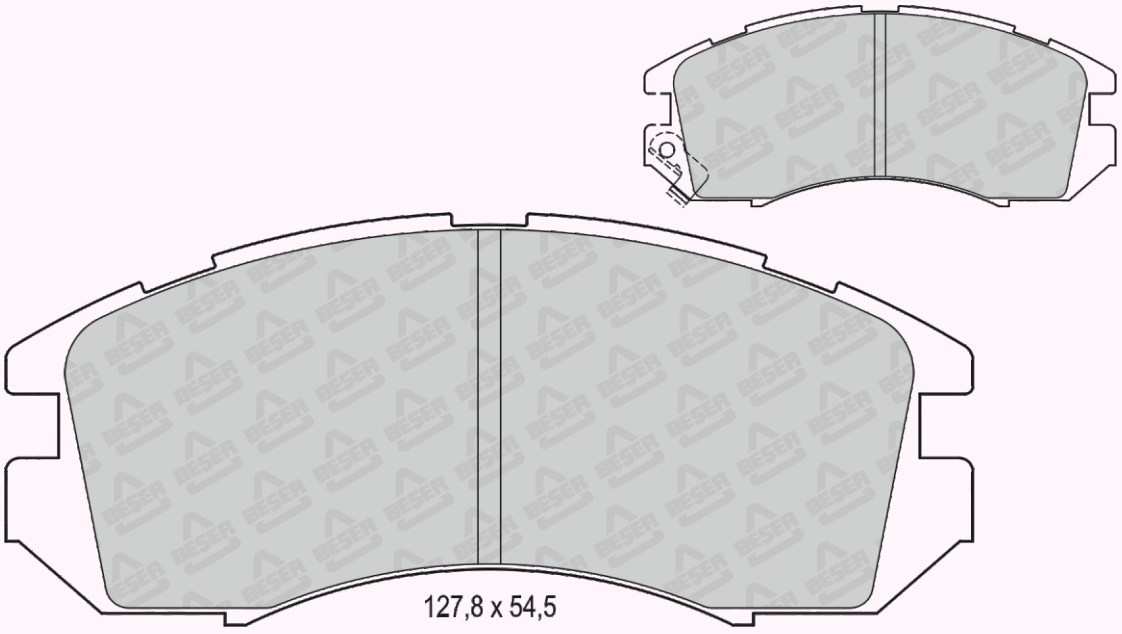

127,8 x 54,5

REFERENCE	T(mm)	REMARKS	MAKE	F/R	WVA No
3428	16,5	2 PADS WITH WEAR SENSOR (390mm)	RENAULT	F	21016 21086 21087 21449 21450

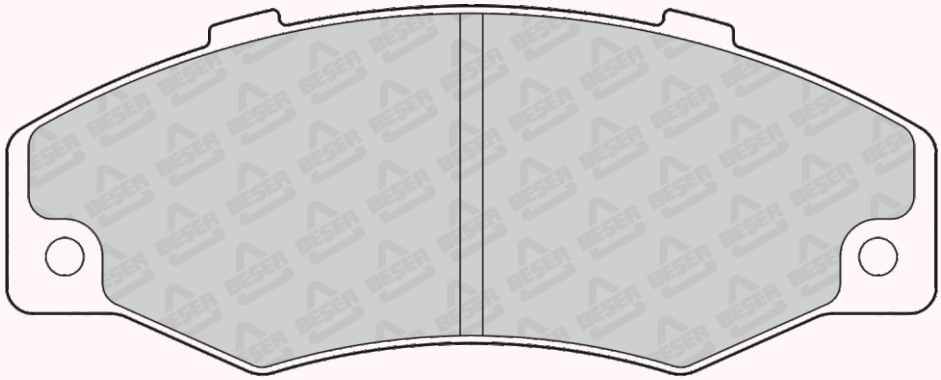

122,9 x 48,6

REFERENCE	T(mm)	REMARKS	MAKE	F/R	WVA No
3429	17,5	2 PADS WITH WEAR SENSOR (264mm)	FORD - TVR	F	20861 20862 21192 21662

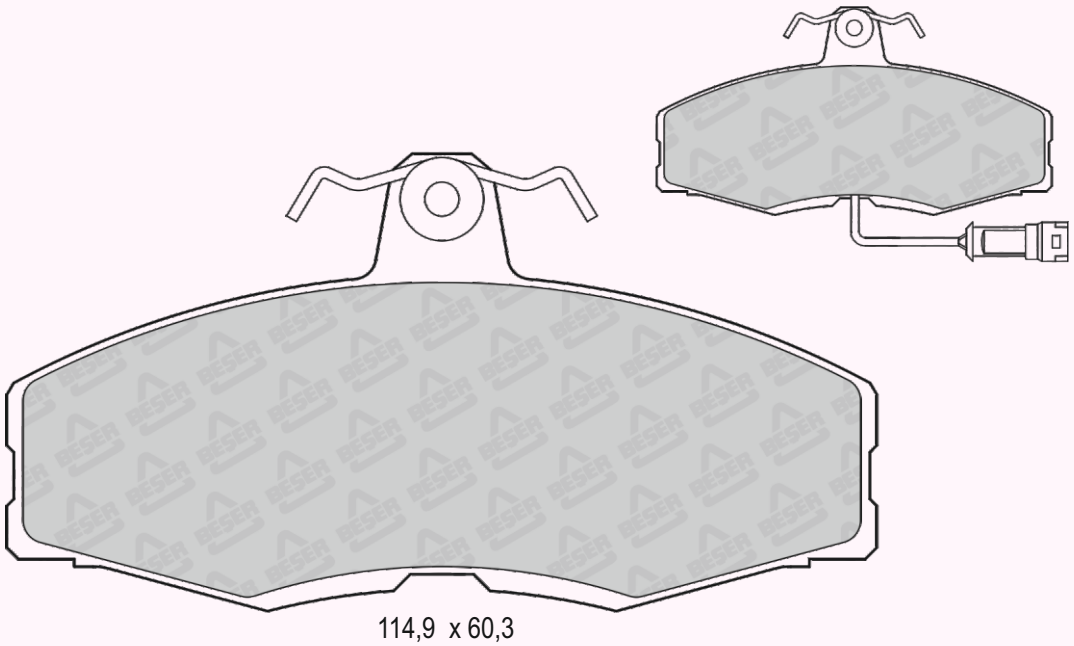

114,9 x 60,3

REFERENCE	T(mm)	REMARKS	MAKE	F/R	WVA No
3430	17,5	4 PADS PLAIN	BMW	F	20748 20891 20749 21055 20890

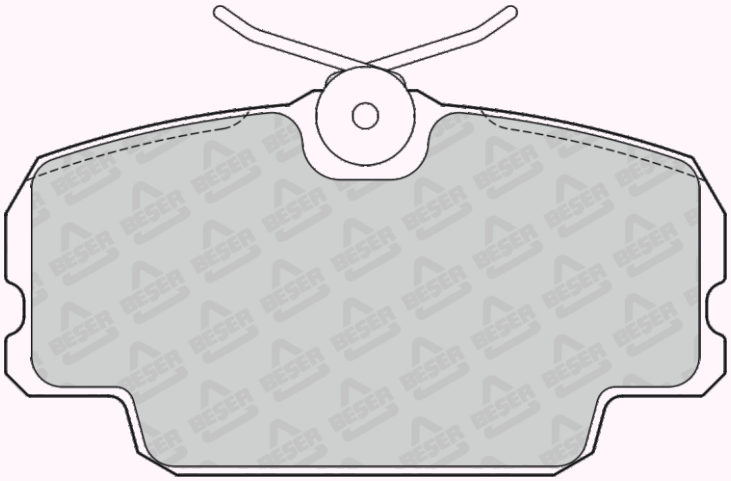

95 x 50,8

REFERENCE	T(mm)	REMARKS	MAKE	F/R	WVA No
3431	18	2 PADS WITH WEAR SENSOR (200mm)	ALPINE - DACIA - LADA PEUGEOT - RENAULT	F	21441 21463 20478 20479

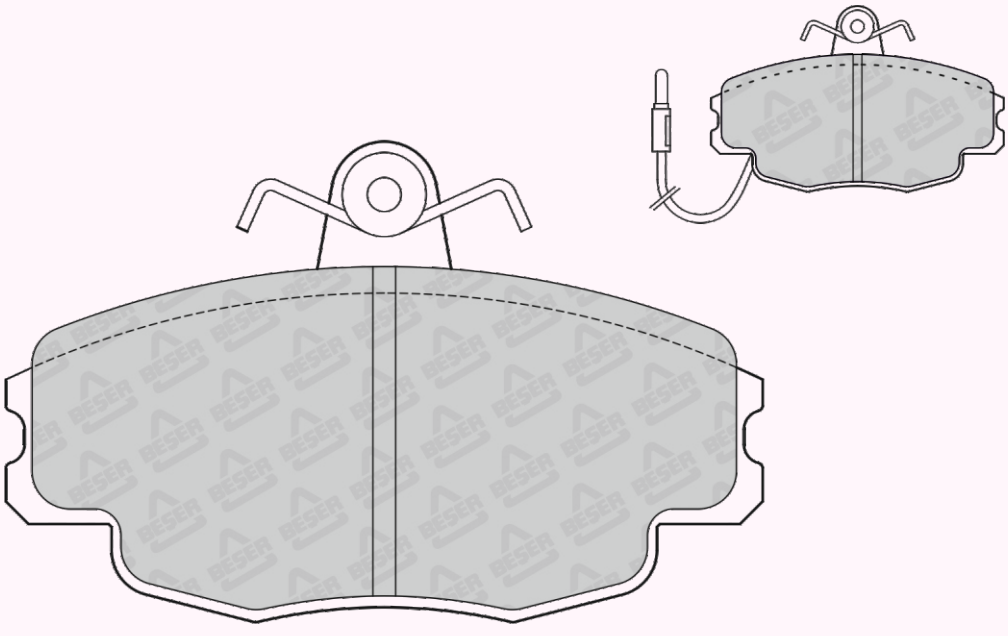

100 x 63,5

REFERENCE	T(mm)	REMARKS	MAKE	F/R	WVA No
3432	17	1 PAD WITH WEAR SENSOR (285mm)	FIAT - LANCIA - YUGO ZASTAVA	F	21100 21101 21104 21105

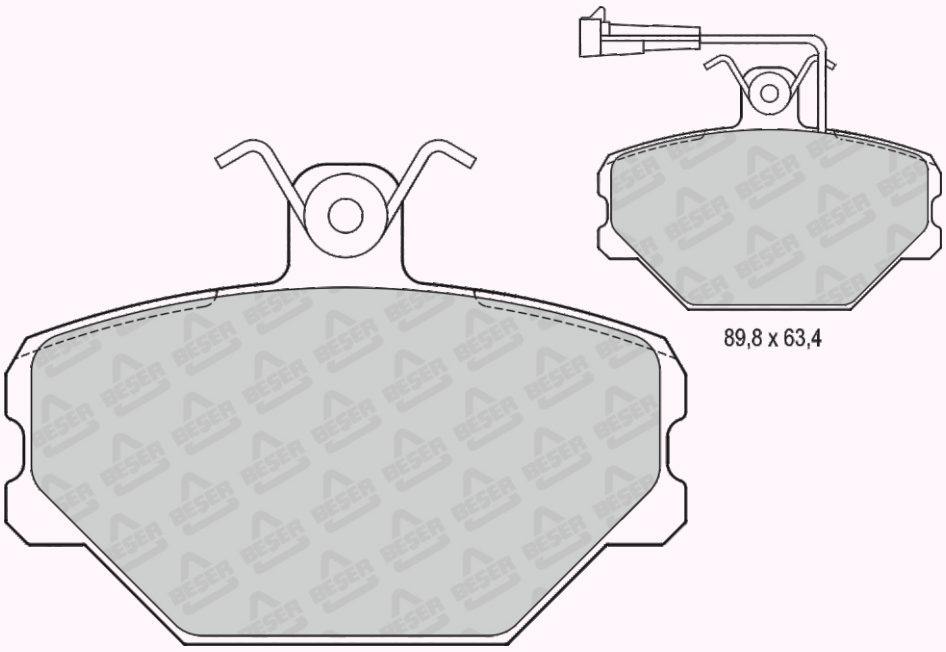

REFERENCE	T(mm)	REMARKS	MAKE	F/R	WVA No
3433	23	2 PADS WITH WEAR SENSOR (450mm)	DAF - IVECO - LEYLAND	F	29017 29024 29026 29028 29029

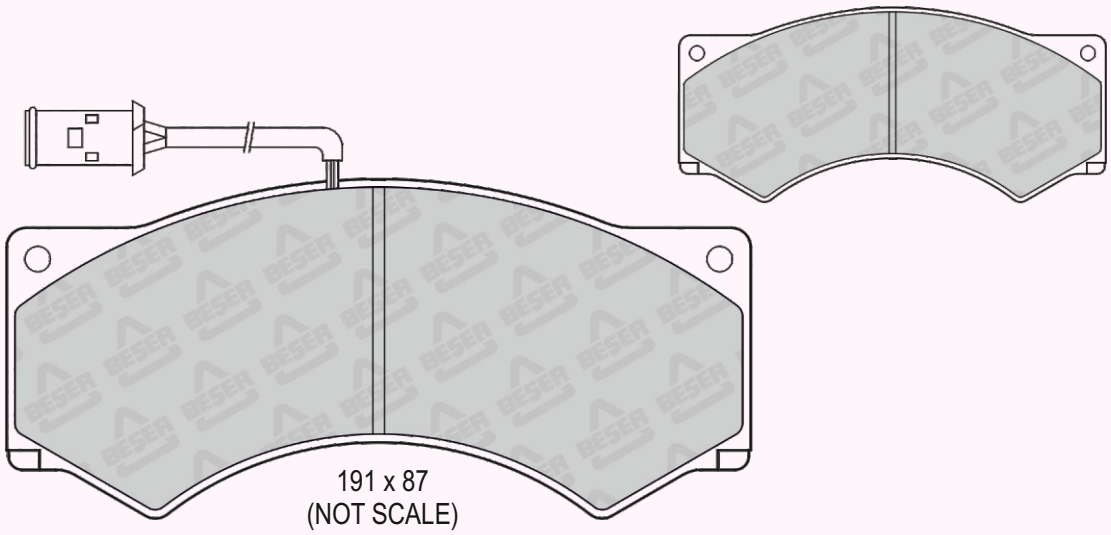

REFERENCE	T(mm)	REMARKS	MAKE	F/R	WVA No
3433/1	23	4 PADS PLAIN	DAF - LEYLAND IVECO	F	29017 29024 29026 29028 29029

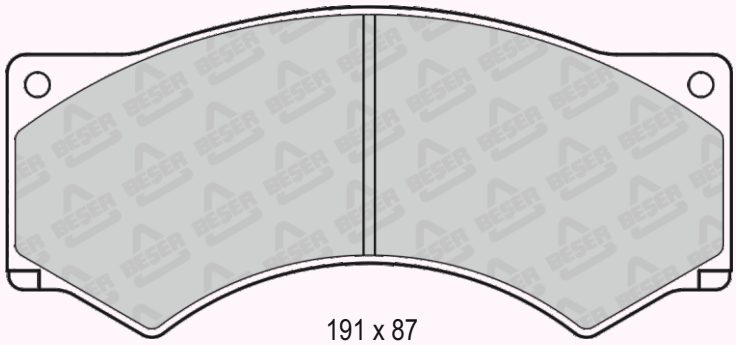

191 x 87
(NOT SCALE)

REFERENCE	T(mm)	REMARKS	MAKE	F/R	WVA No
3436	14	4 PADS WITH OUTER RADIUS DRILLED HOLES	BERTONE - DAIHATSU ISUZU - MAZDA	F	21243 21712 60099

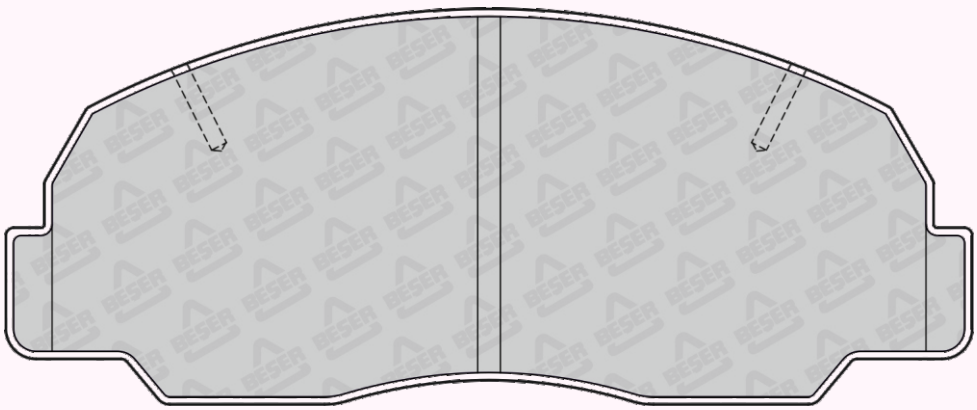

127,7 x 52,2

REFERENCE	T(mm)	REMARKS	MAKE	F/R	WVA No
3437	15,4	2 PADS WITH WEAR SENSOR	FORD - MAZDA	F	21378 21379 21380

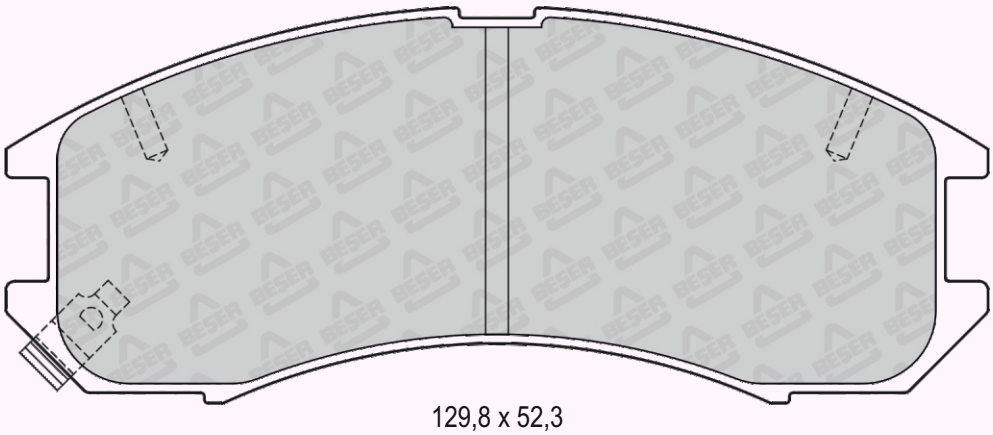

129,8 x 52,3

REFERENCE	T(mm)	REMARKS	MAKE	F/R	WVA No
3437/1	16	2 PADS WITH WEAR SENSOR	FORD - MAZDA	F	21378

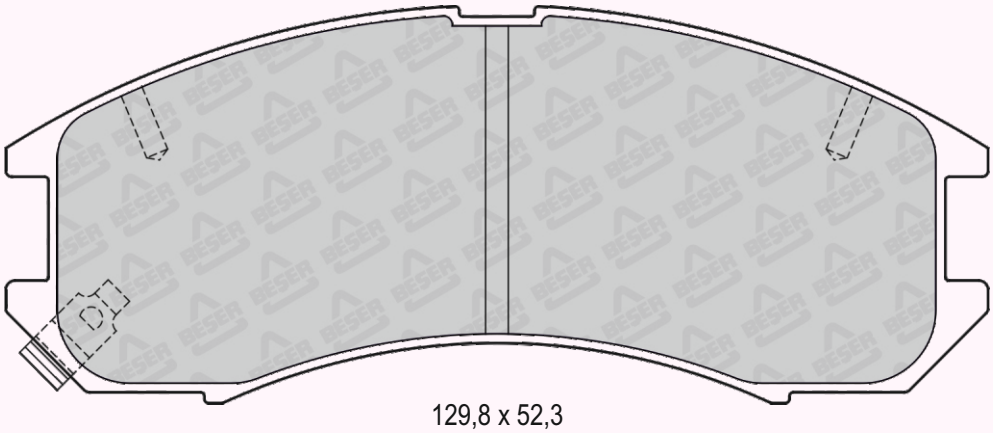

129,8 x 52,3

REFERENCE	T(mm)	REMARKS	MAKE	F/R	WVA No
3439	15	4 PADS PLAIN	AUTOBIANCHI FIAT - LANCIA	F	20775

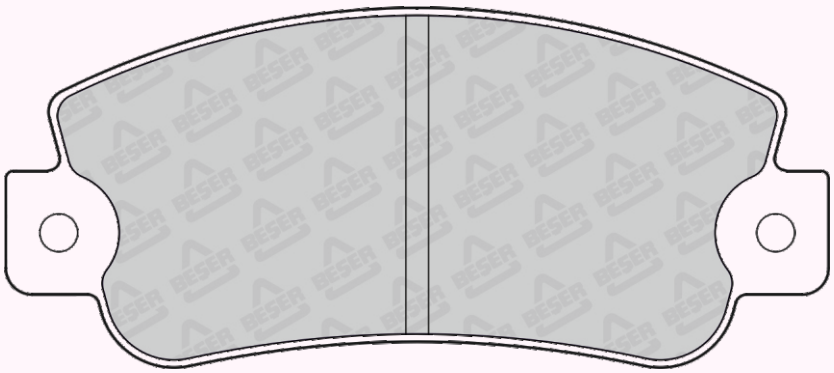

108,8 x 47,4

REFERENCE	T(mm)	REMARKS	MAKE	F/R	WVA No
3440	19	2 PADS WITH WEAR SENSOR (130mm)	ALFA ROMEO - CITROEN - FIAT MULTICAR PEUGEOT - TALBOT - VW	F	20035 20036 20732 20741 20787 20925

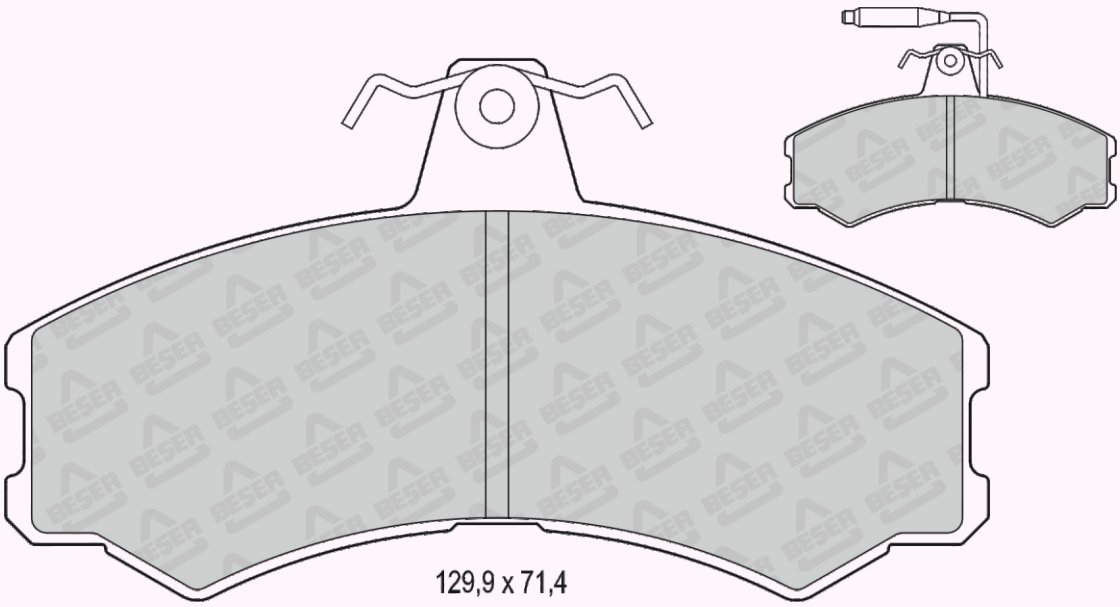

129,9 x 71,4

REFERENCE	T(mm)	REMARKS	MAKE	F/R	WVA No
3441	17,3	4 PADS PLAIN	SEAT - VW	F	20889

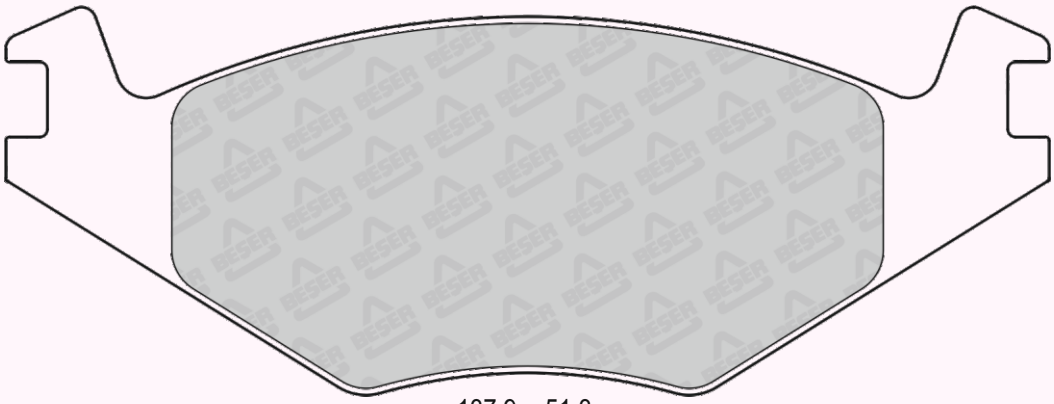

137,9 x 51,3

REFERENCE	T(mm)	REMARKS	MAKE	F/R	WVA No
3441/1	17,3	4 PADS PLAIN & 4 SPINGS	SEAT - VW	F	20889

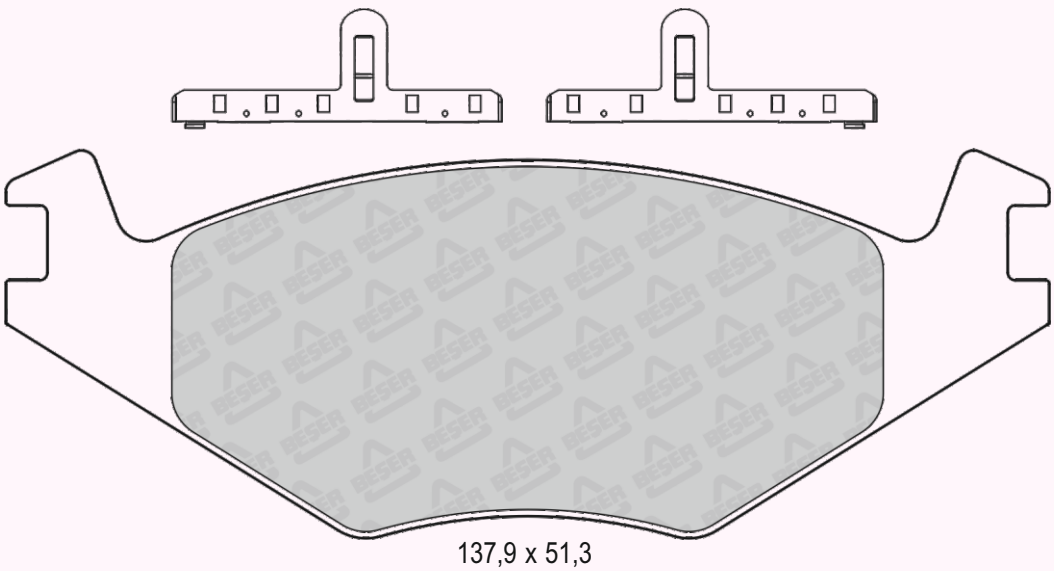

137,9 x 51,3

REFERENCE	T(mm)	REMARKS	MAKE	F/R	WVA No
3442	17,7	2 PADS WITH WEAR SENSOR (110mm)	ALPINE - PEUGEOT	F	20631 20632 20633

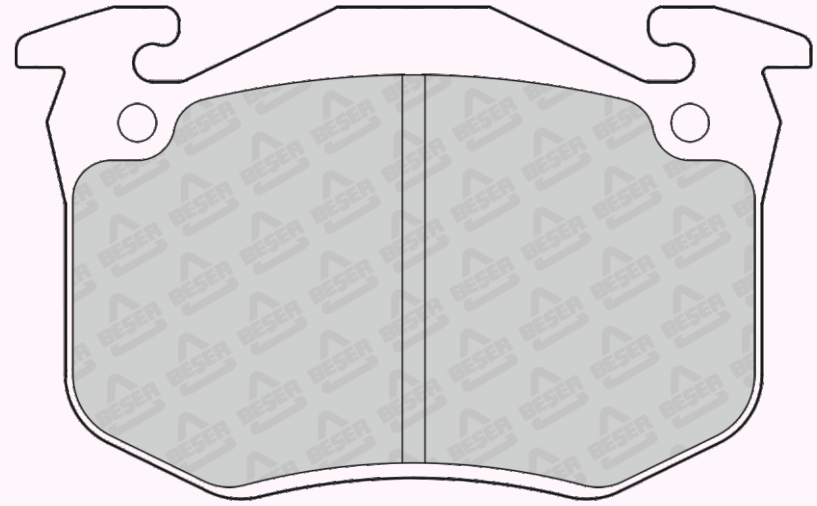

105 x 65

REFERENCE	T(mm)	REMARKS	MAKE	F/R	WVA No
3443	18	2 PADS INNER & 2 PADS OUTER	BMC	F	---

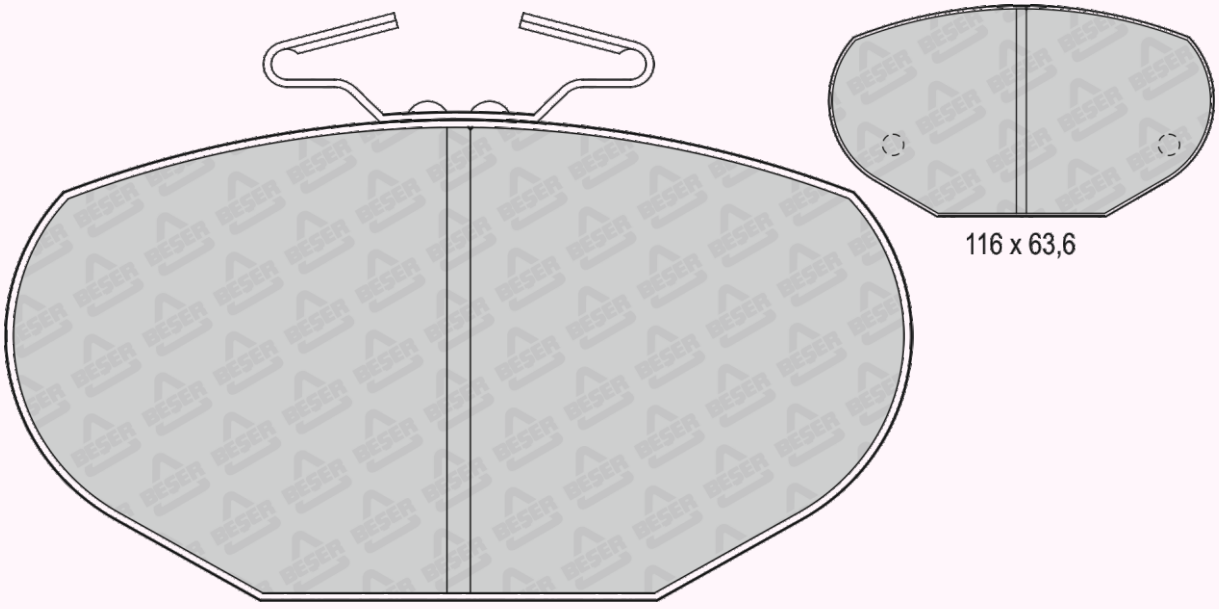

116 x 63,6

116 x 63,6

REFERENCE	T(mm)	REMARKS	MAKE	F/R	WVA No
3444	19,7	2 PADS INNER & 2 PADS OUTER	SEAT - VW	F	20887 20888

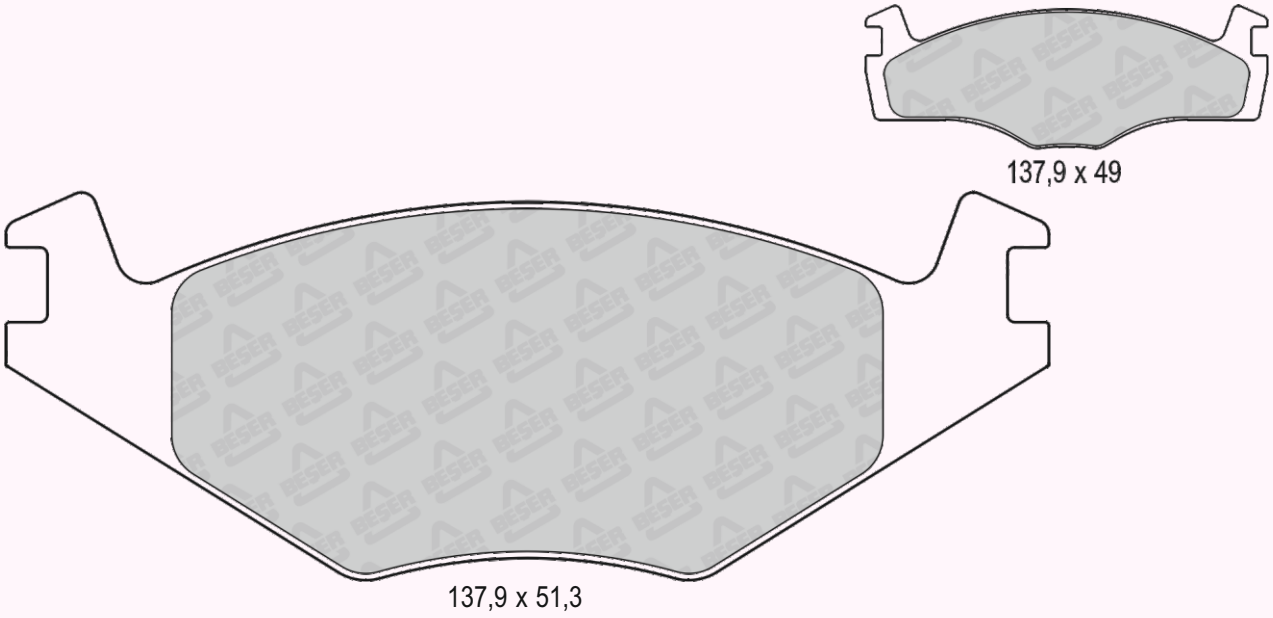

REFERENCE	T(mm)	REMARKS	MAKE	F/R	WVA No
3444/1	19,7	2 PADS INNER & 2 PADS OUTER WITH 4 SPRING	SEAT - VW	F	20887 20888

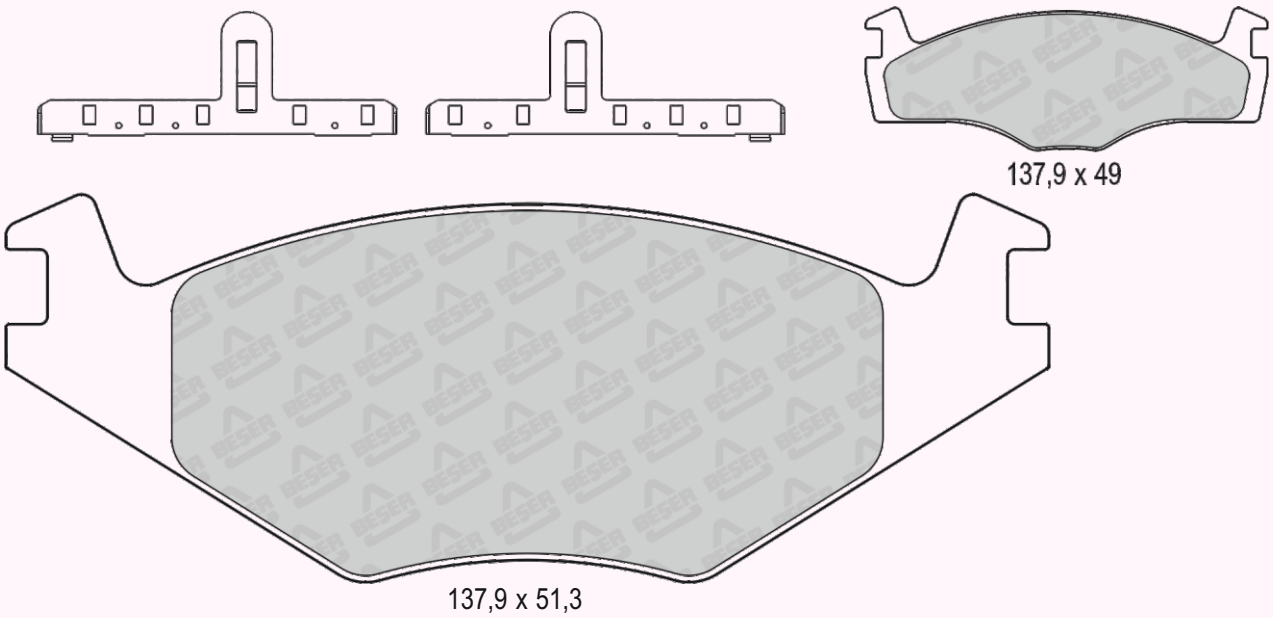

REFERENCE	T(mm)	REMARKS	MAKE	F/R	WVA No
3445	18	4 PADS WITH ANTINOISE COAT GLUED	FORD	F	21469

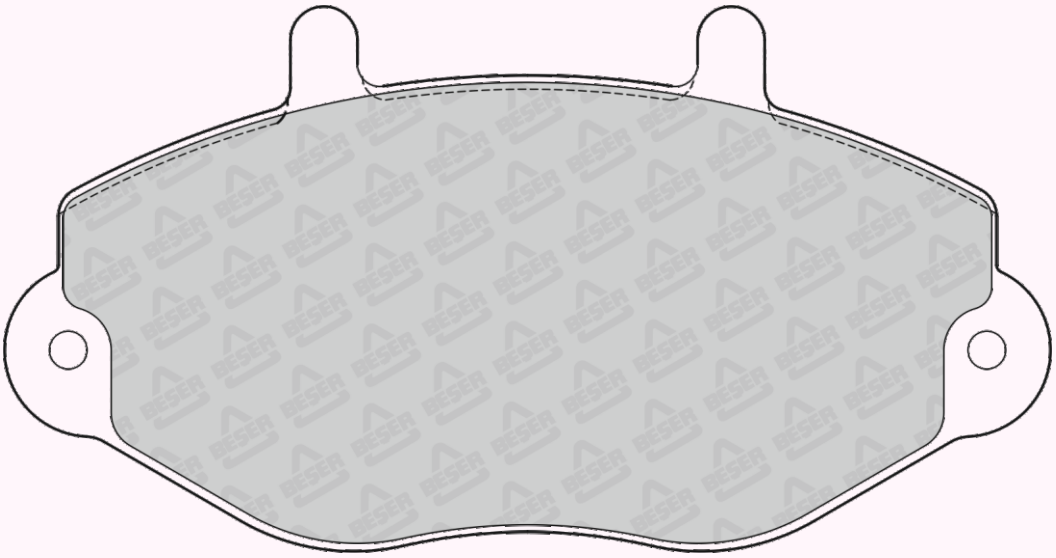

138,7 x 71,8

REFERENCE	T(mm)	REMARKS	MAKE	F/R	WVA No
3446	15,5	4 PADS WITH WEAR SENSOR	ISUZU	F	20880 20881 20882

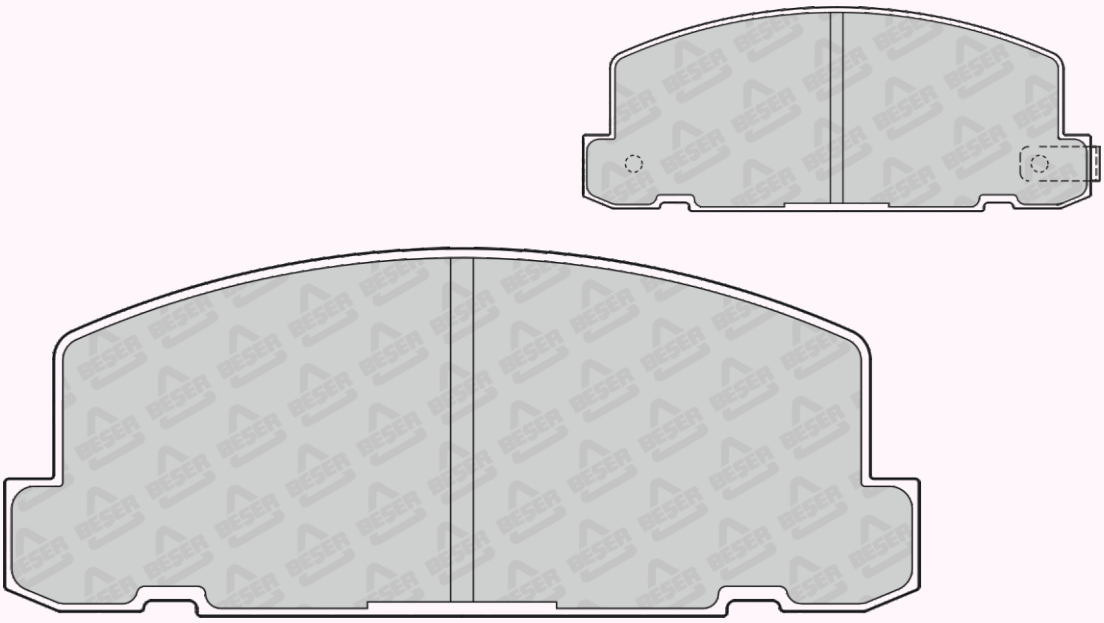

120,8 x 48,5

REFERENCE	T(mm)	REMARKS	MAKE	F/R	WVA No
3447	15,7	4 PADS WITH WEAR SENSOR	LADA	F	- - -

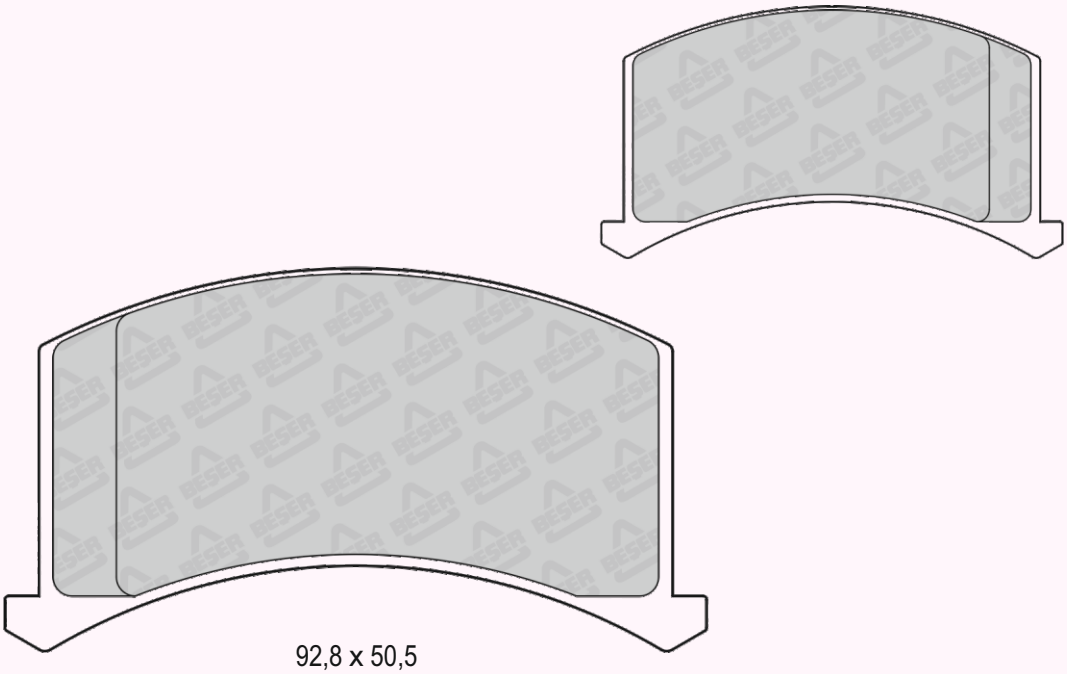

92,8 x 50,5

REFERENCE	T(mm)	REMARKS	MAKE	F/R	WVA No
3448	16,8	2 PADS WITH WEAR SENSOR	MITSUBISHI	F	21373 21374 21375

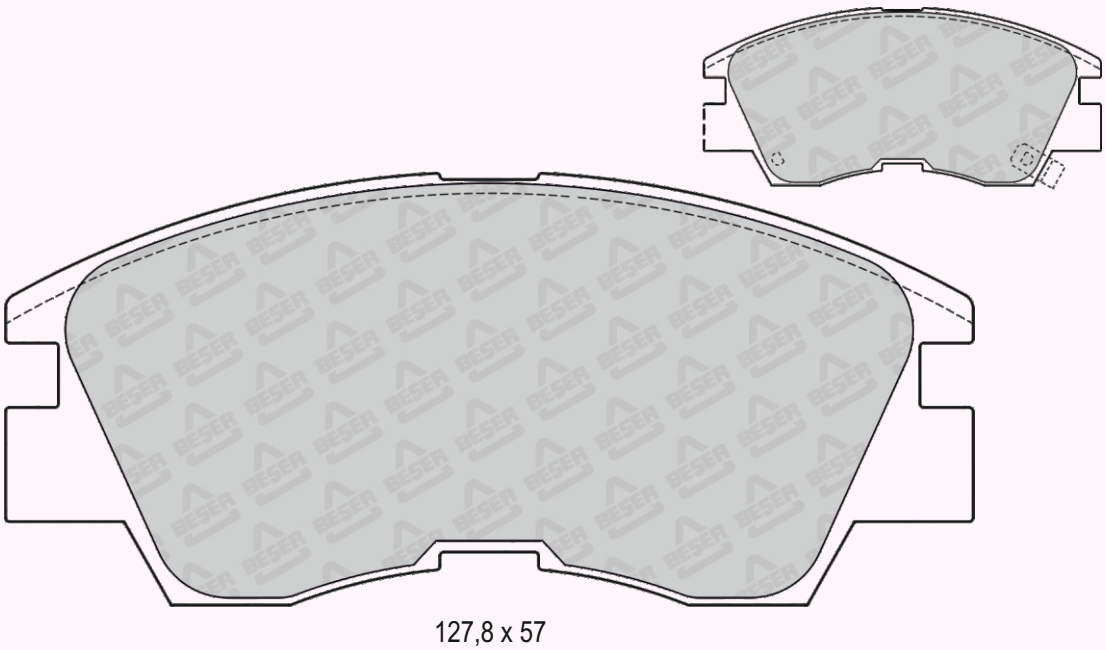

127,8 x 57

REFERENCE	T(mm)	REMARKS	MAKE	F/R	WVA No
3449	14,9	2 PADS WITH WEAR SENSOR	MAZDA - FORD	F	20039 20041 21277 21281

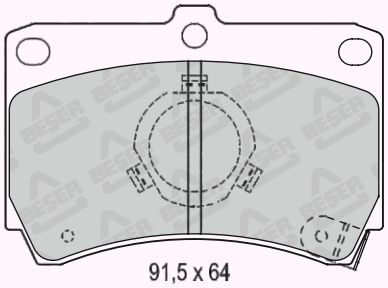

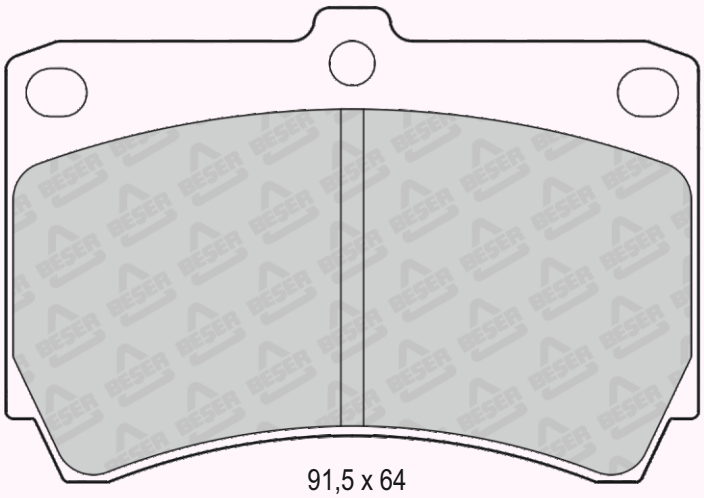

REFERENCE	T(mm)	REMARKS	MAKE	F/R	WVA No
3450	15	2 PADS WITH WEAR SENSOR	ISUZU	F	20880 20881 20882

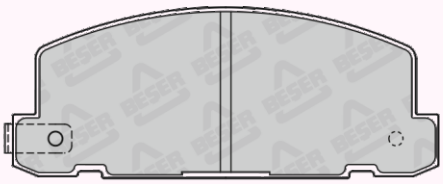

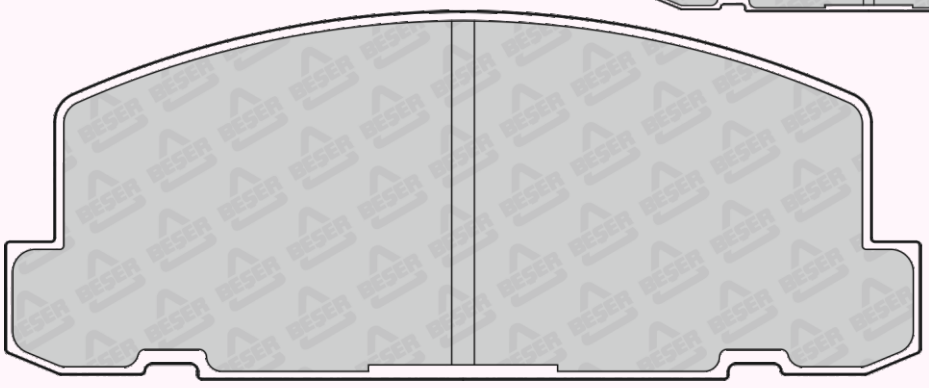

120,8 x 48,5

REFERENCE	T(mm)	REMARKS	MAKE	F/R	WVA No
3453	18	4 PADS PLAIN	LANDROVER	F	21519

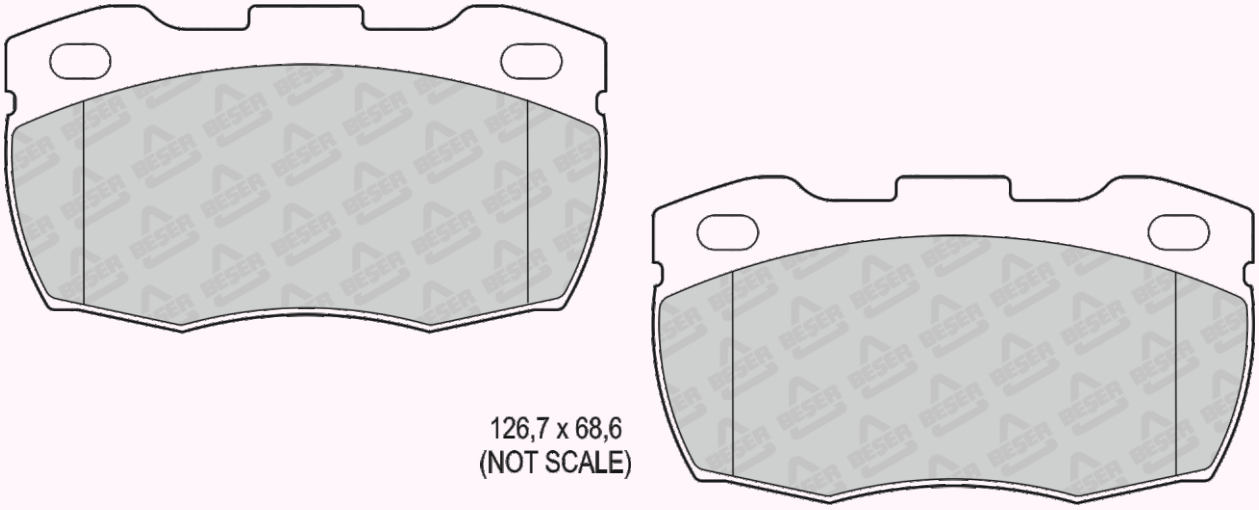

REFERENCE	T(mm)	REMARKS	MAKE	F/R	WVA No
3453/1	18	4 PADS PLAIN	LANDROVER	F	21519

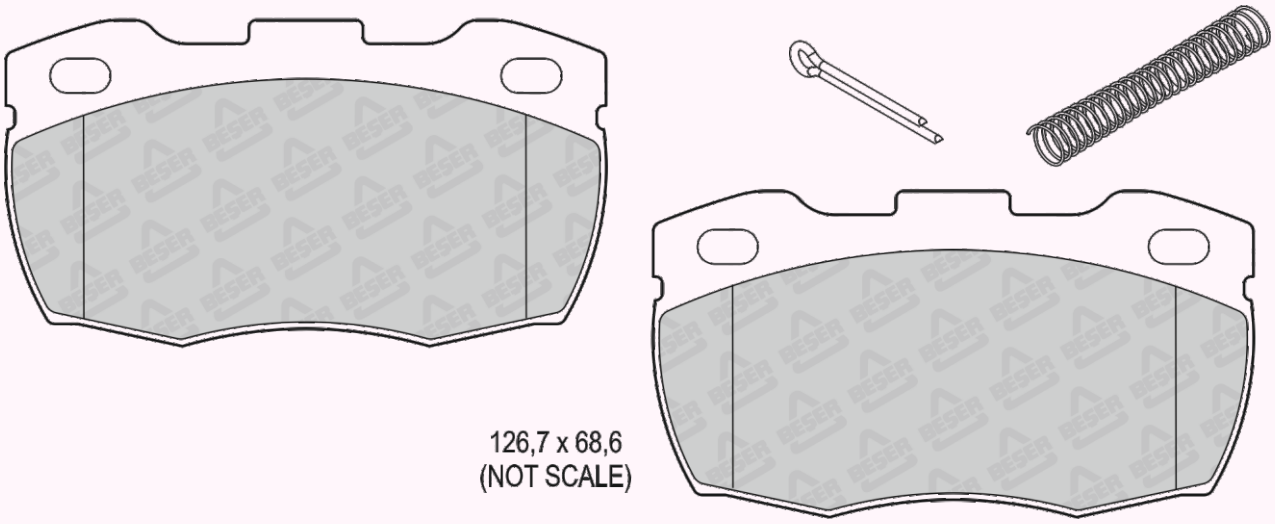

REFERENCE	T(mm)	REMARKS	MAKE	F/R	WVA No
3454	14	4 PADS WITH CENTRAL LUG	RENAULT	R	20169 20248

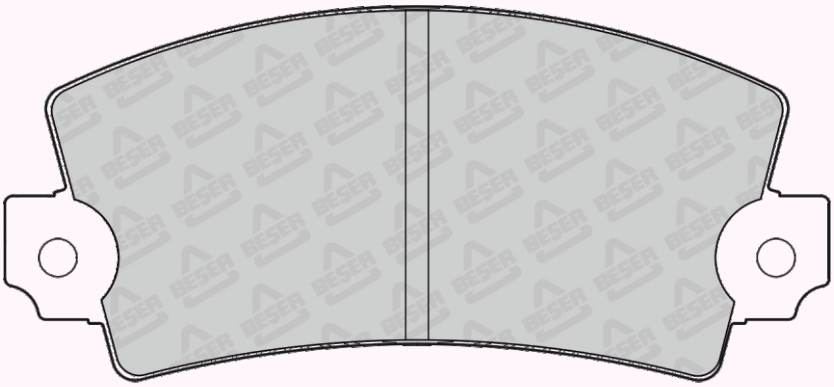

108,8 x 49,3

REFERENCE	T(mm)	REMARKS	MAKE	F/R	WVA No
3455	16	4 PADS PLAIN	ASTON MARTIN MERCEDES BENZ	F	20027

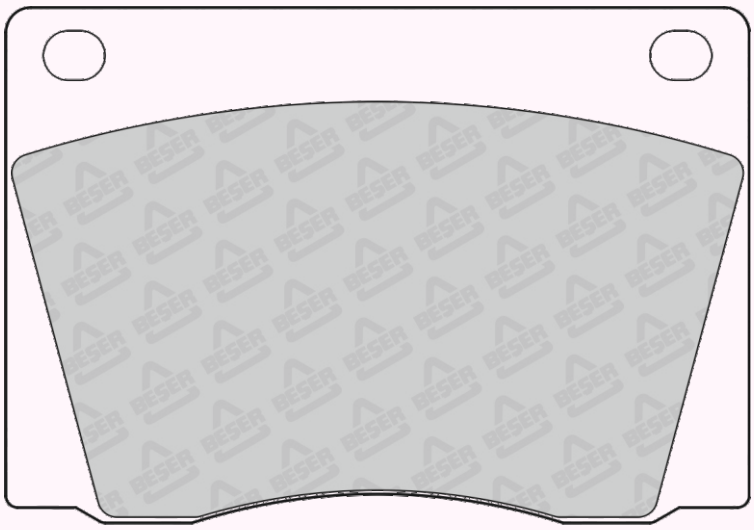

98,2 x 68,1

REFERENCE	T(mm)	REMARKS	MAKE	F/R	WVA No
3456	18	2 PADS INNER & 2 PADS OUTER 2 WEAR INDICATOR (190mm)	BMC	F	---

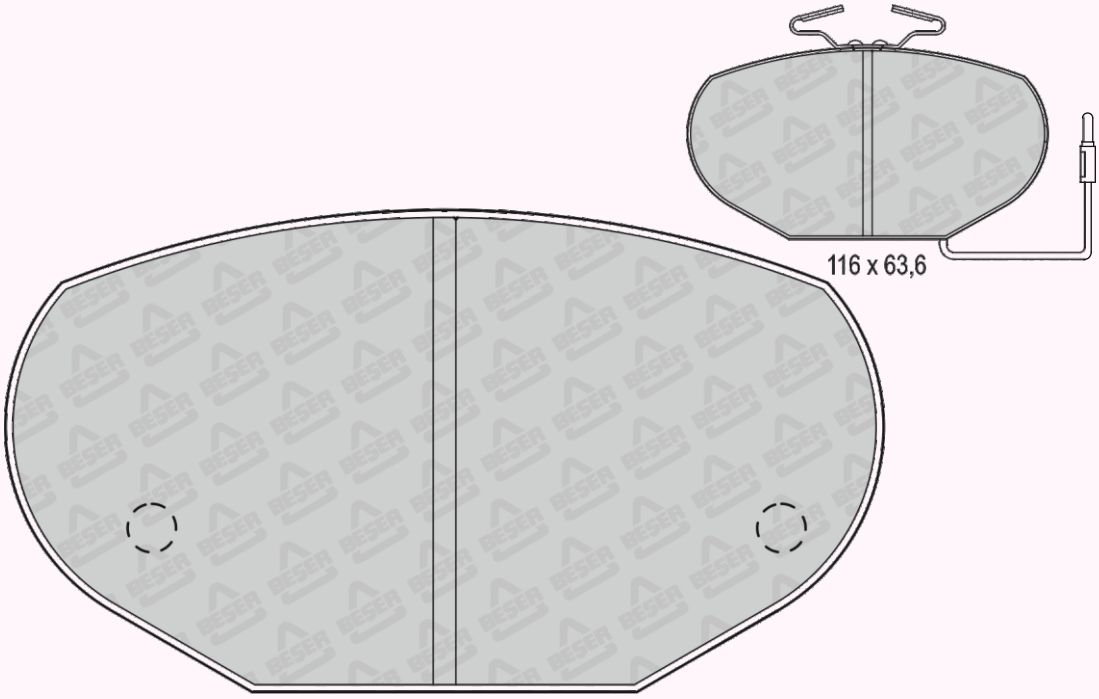

116 x 63,6

REFERENCE	T(mm)	REMARKS	MAKE	F/R	WVA No
3457	19	2 PADS WITH WEAR SENSOR (220mm)	PEUGEOT	F	21208 21209 21210

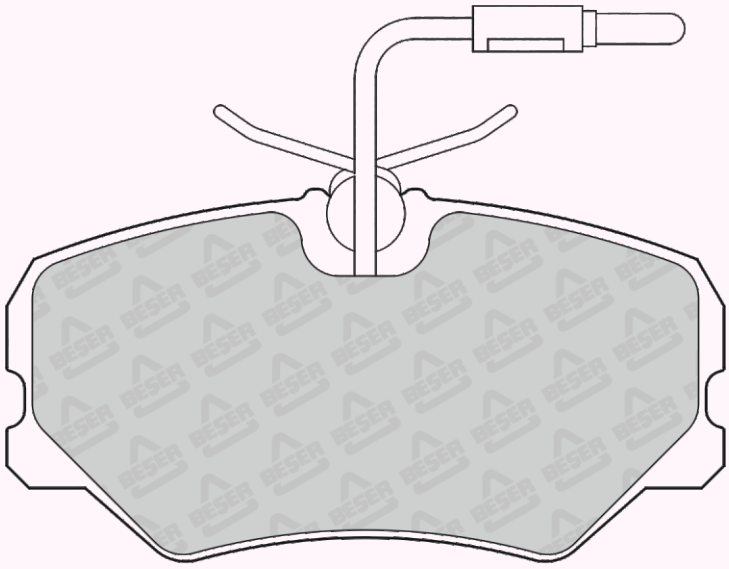

94,8 x 49,2

REFERENCE	T(mm)	REMARKS	MAKE	F/R	WVA No
3458	15	4 PADS PLAIN	FIAT	F	21193 21962 21194

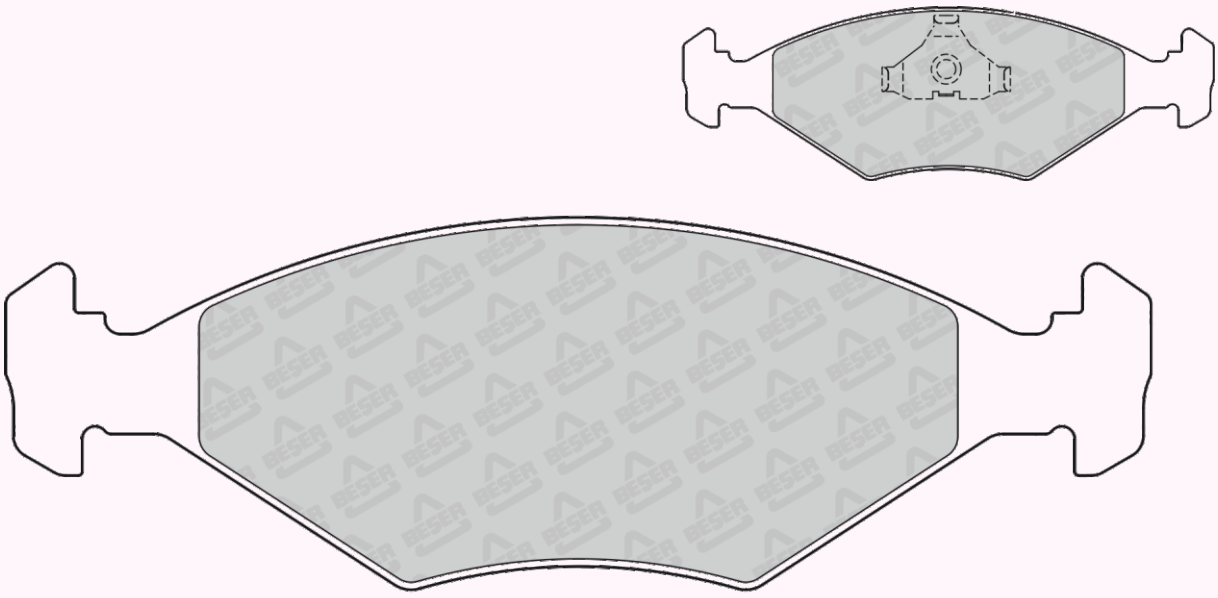

151,3 x 49,2

REFERENCE	T(mm)	REMARKS	MAKE	F/R	WVA No
3459	17,5	4 PADS PLAIN	FIAT - INNOCENTI	F	21193 21195 21194

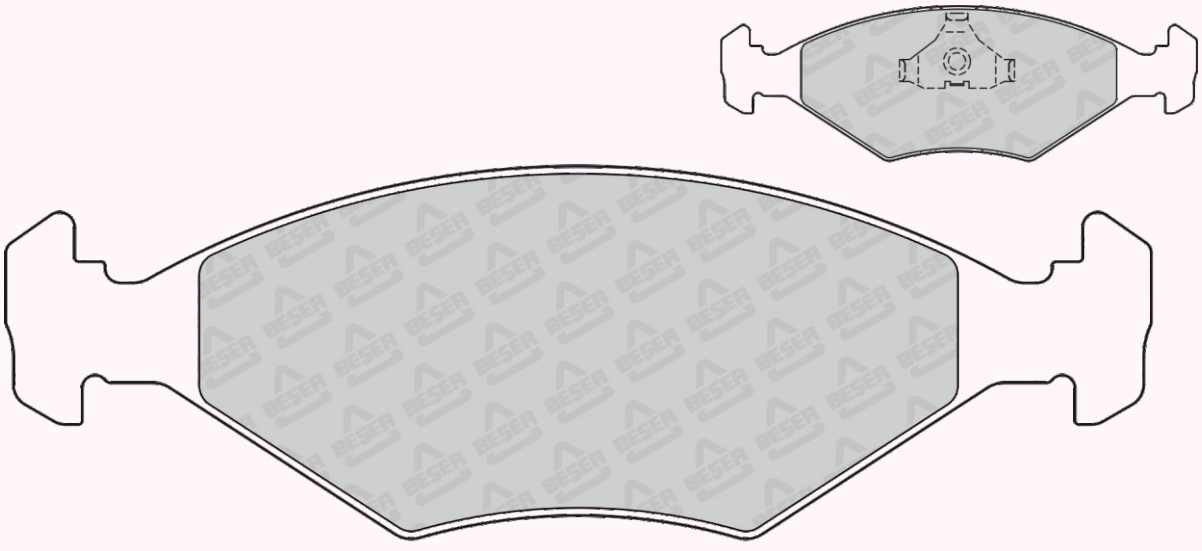

151,3 x 49,2

REFERENCE	T(mm)	REMARKS	MAKE	F/R	WVA No
3460	17,5	2 PADS WITH WEAR SENSOR (130mm)	FIAT	F	---

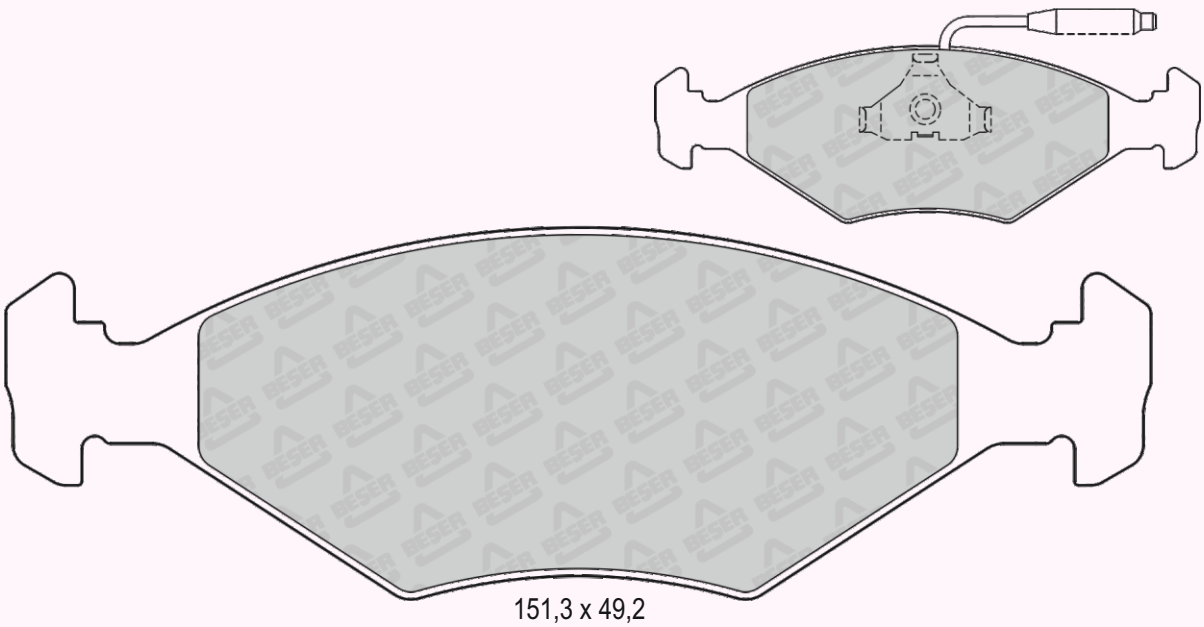

151,3 x 49,2

REFERENCE	T(mm)	REMARKS	MAKE	F/R	WVA No
3461	17,5	2 PADS WITH WEAR SENSOR (230mm)	FIAT - INNOCENTI	F	21193 21194 21195

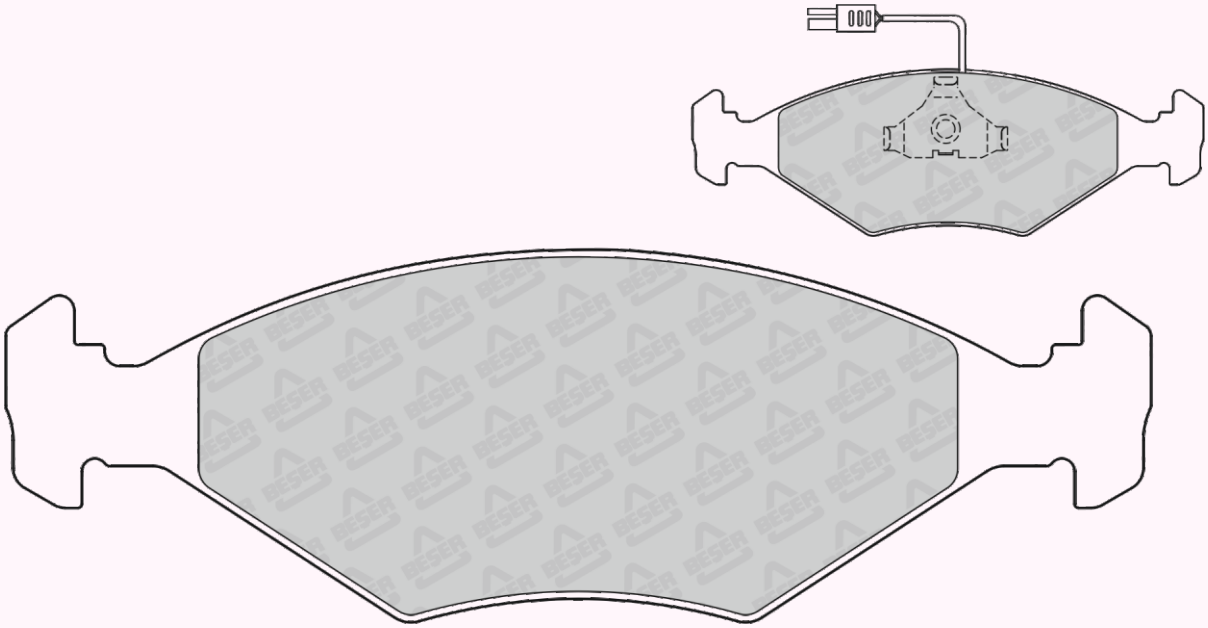

151,3 x 49,2

REFERENCE	T(mm)	REMARKS	MAKE	F/R	WVA No
3462	15,4	2 PADS WITH WEAR SENSOR	BEDFORD ISUZU - VAUXHALL	F	21115

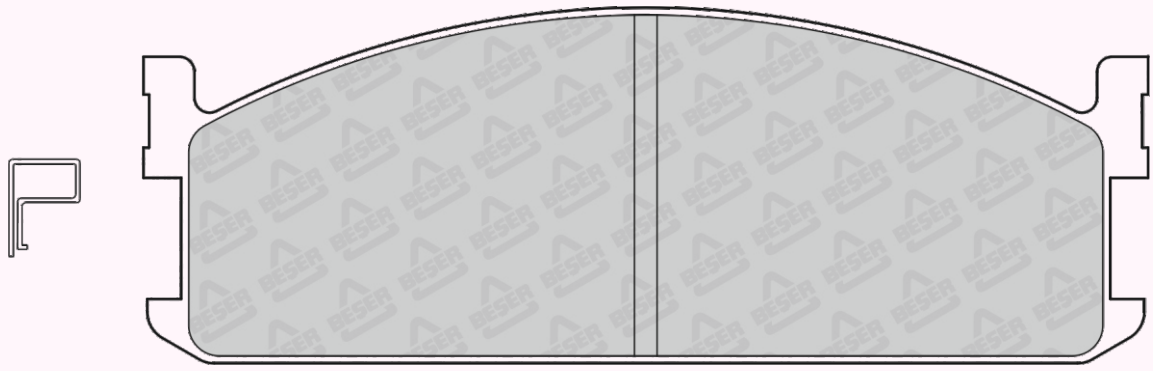

133 x 47

REFERENCE	T(mm)	REMARKS	MAKE	F/R	WVA No
3463	15,5	2 PADS WITH WEAR SENSOR	FORD - KIA MAZDA	F	20002 20191 20192

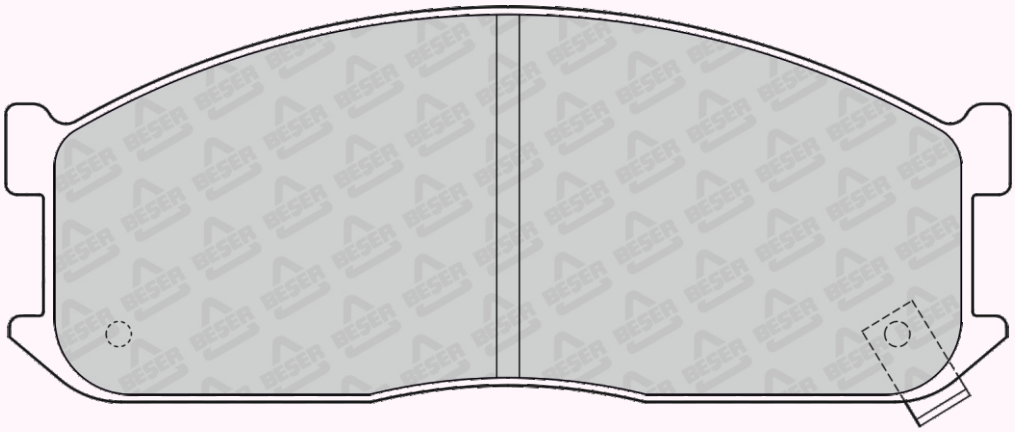

133 x 52,2

REFERENCE	T(mm)	REMARKS	MAKE	F/R	WVA No
3464	19	4 PADS PLAIN	FORD	F	21171

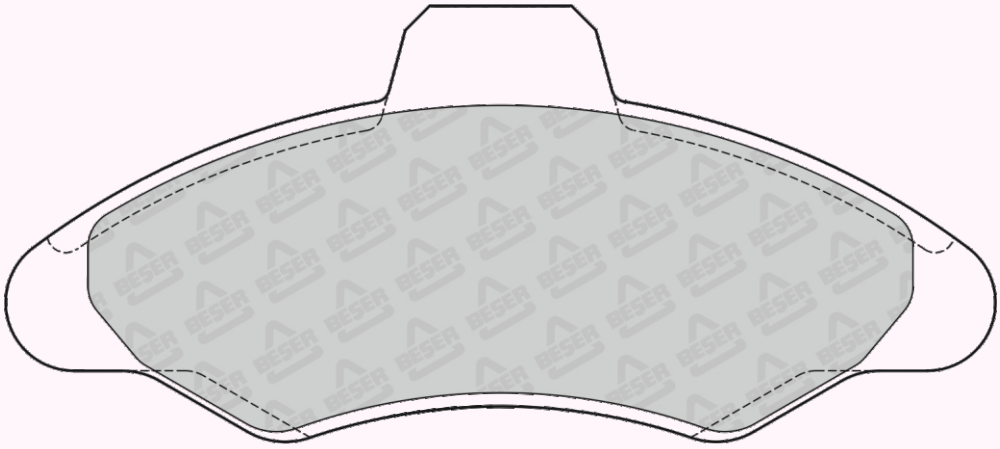

130,8 x 57,5

REFERENCE	T(mm)	REMARKS	MAKE	F/R	WVA No
3465	18	4 PADS PLAIN	FORD	F	21171

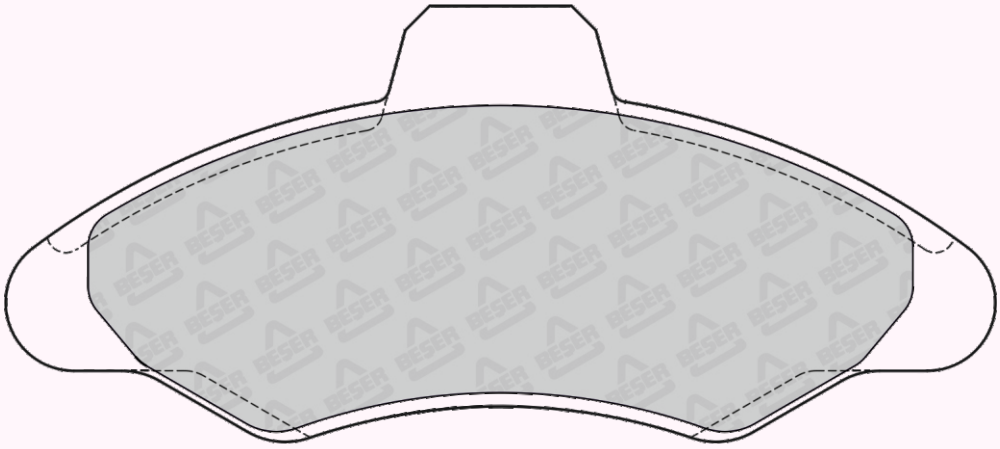

130,8 x 57,5

REFERENCE	T(mm)	REMARKS	MAKE	F/R	WVA No
3466	17	2 PADS WITH WEAR SENSOR	ABARTH -ALFA ROMEO FIAT-LANCIA - PININFARINA	F	20833 21134 20834 21135 20838 21136 20839 21149 20840

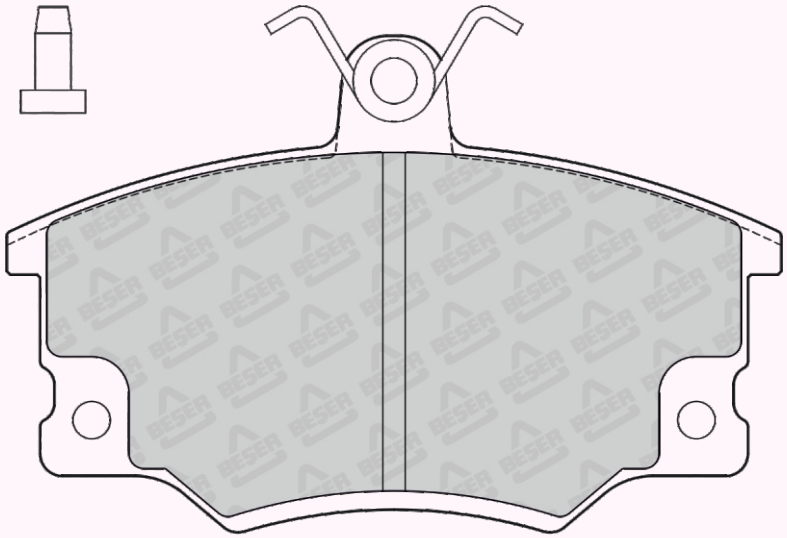

REFERENCE	T(mm)	REMARKS	MAKE	F/R	WVA No
3467	17	2 PADS WITH WEAR SENSOR	FIAT - LANCIA	F	20836 20837 20838 21093 21094 21095

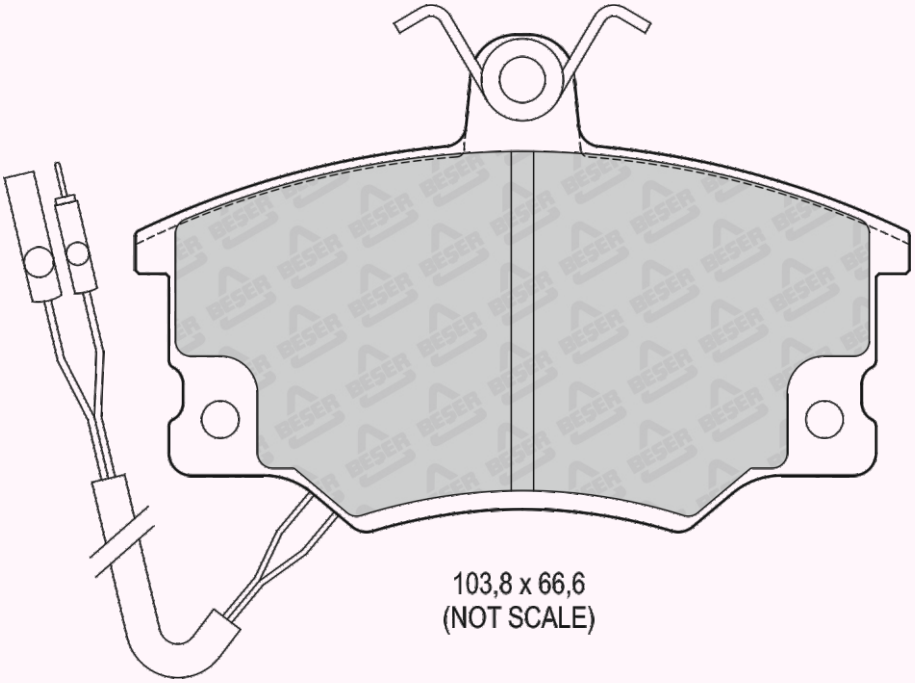

REFERENCE	T(mm)	REMARKS	MAKE	F/R	WVA No
3468	19,35	2 PADS WITH WEAR SENSOR	ABARTH-ALFA ROMEOFIAT AUTOBIANCHI LANCIA-PININFARINA	F	20719 20720 20833 20834 20840 21149

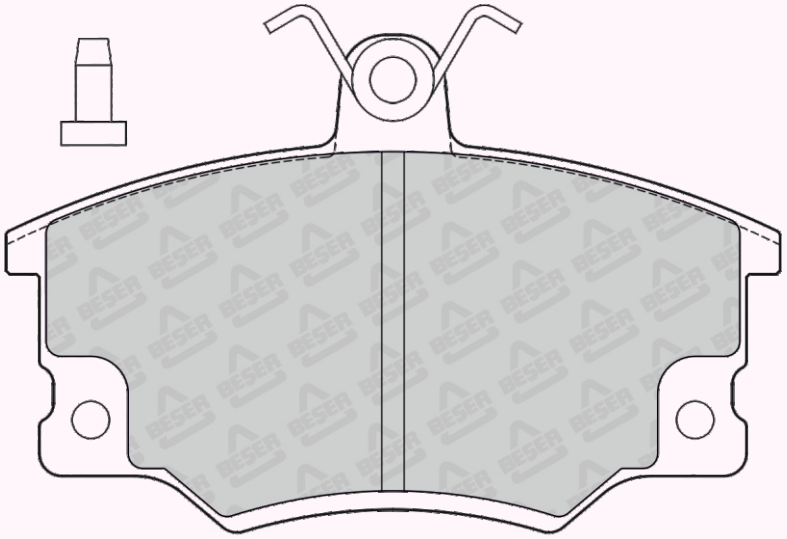

103,8 x 66,6

REFERENCE	T(mm)	REMARKS	MAKE	F/R	WVA No
3469	15,5	4 PADS PLAIN	HOLDEN - OPEL - SAAB VAUXHALL	R	21026 21140 21213

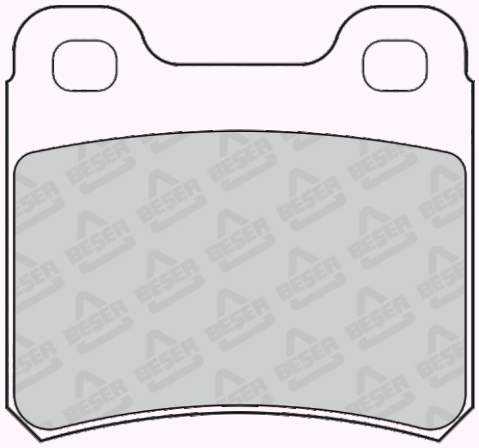

61,6 x 57,5

REFERENCE	T(mm)	REMARKS	MAKE	F/R	WVA No
3470	17	4 PADS WITH CHAMFERS	CHEVROLET -DAEWOO - FUSO HOLDEN - OPEL - ZAZ	F	21190 21201

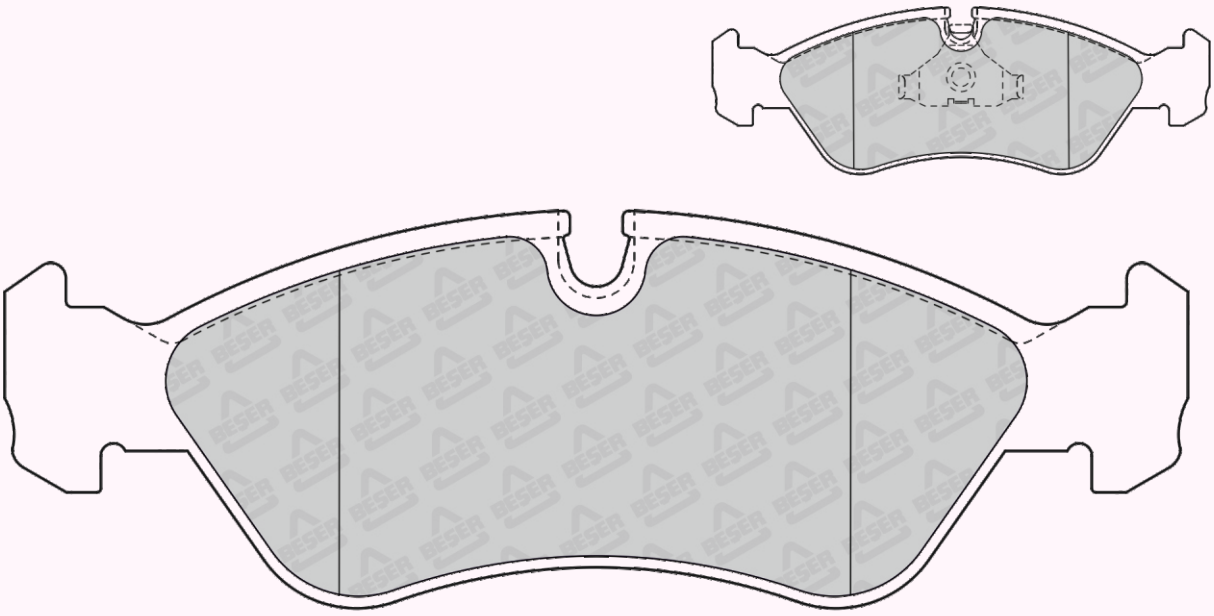

156,3 x 52,8

REFERENCE	T(mm)	REMARKS	MAKE	F/R	WVA No
3471	16	4 PADS PLAIN & 2 SLOT	ALFA ROMEO ASTON MARTIN MERCEDES BENZ	F	20027

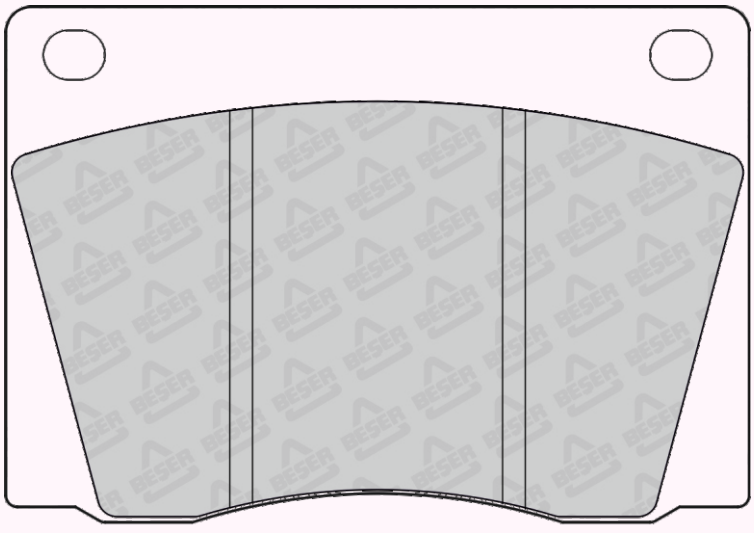

98,2 x 68,1

REFERENCE	T(mm)	REMARKS	MAKE	F/R	WVA No
3472	15	4 PADS WITH WEAR SENSOR	TOYOTA	F	20870 21294

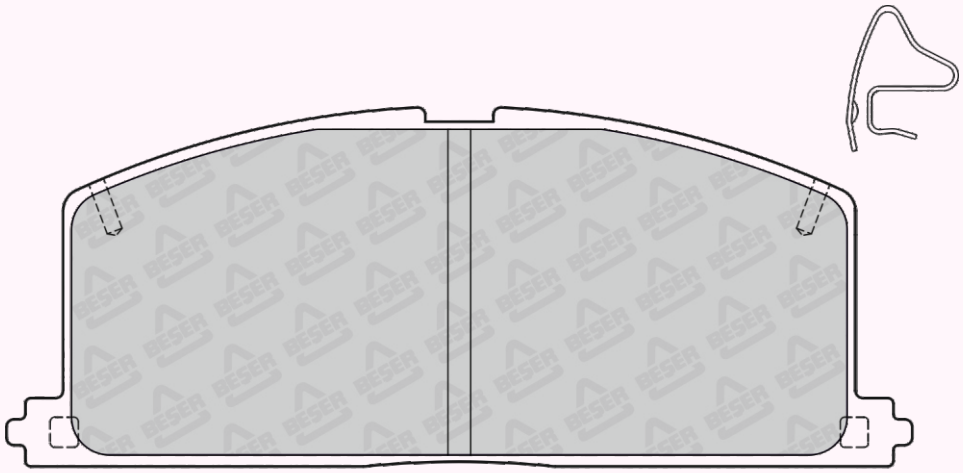

119,7 x 47,5

REFERENCE	T(mm)	REMARKS	MAKE	F/R	WVA No
3473	18	4 PADS WITH ANTINOISE COAT GLUED	FORD	F	21470

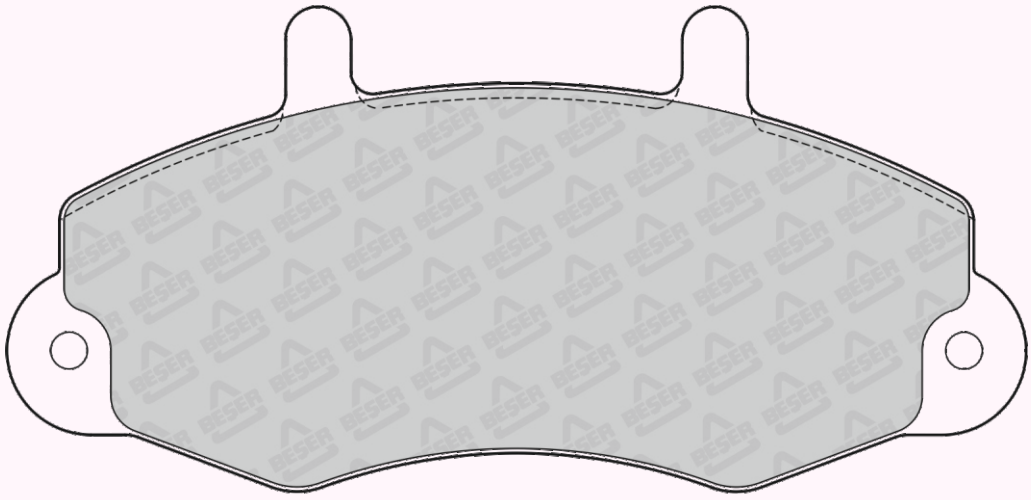

138,7 x 64

REFERENCE	T(mm)	REMARKS	MAKE	F/R	WVA No
3474	17,5	2 PADS WITH WEAR SENSOR (230mm)	CITROEN-DALLAS PEUGEOT-WULING	F	20923 20989 20924 21080 21022 21081 21023 21082

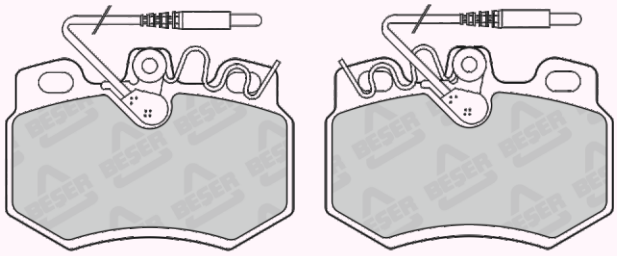

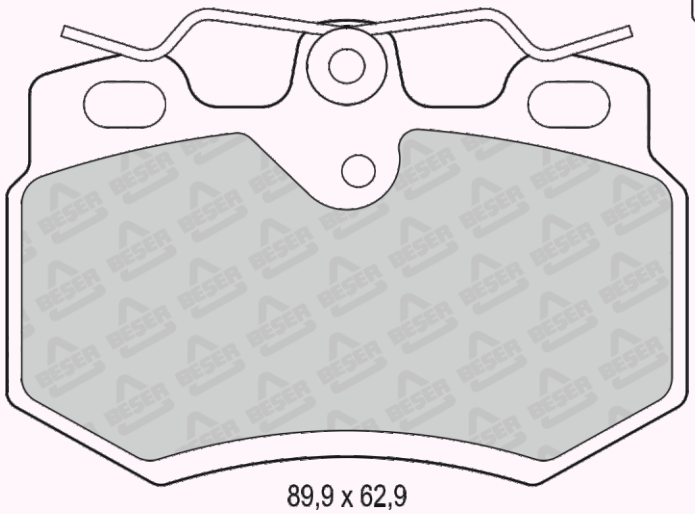

89,9 x 62,9

REFERENCE	T(mm)	REMARKS	MAKE	F/R	WVA No
3476	15	4 PADS PLAIN	GM	F	---

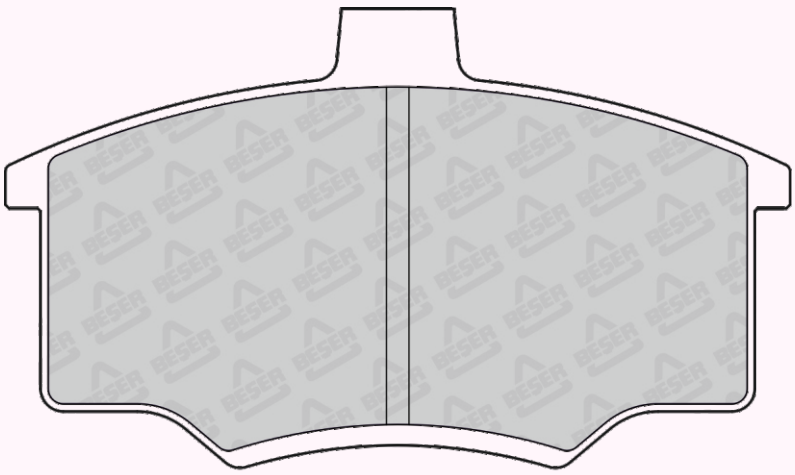

103,8 x 58,4

REFERENCE	T(mm)	REMARKS	MAKE	F/R	WVA No
3478	17,5	2 PADS WITH WEAR SENSOR (285mm)	FIAT	F	23228

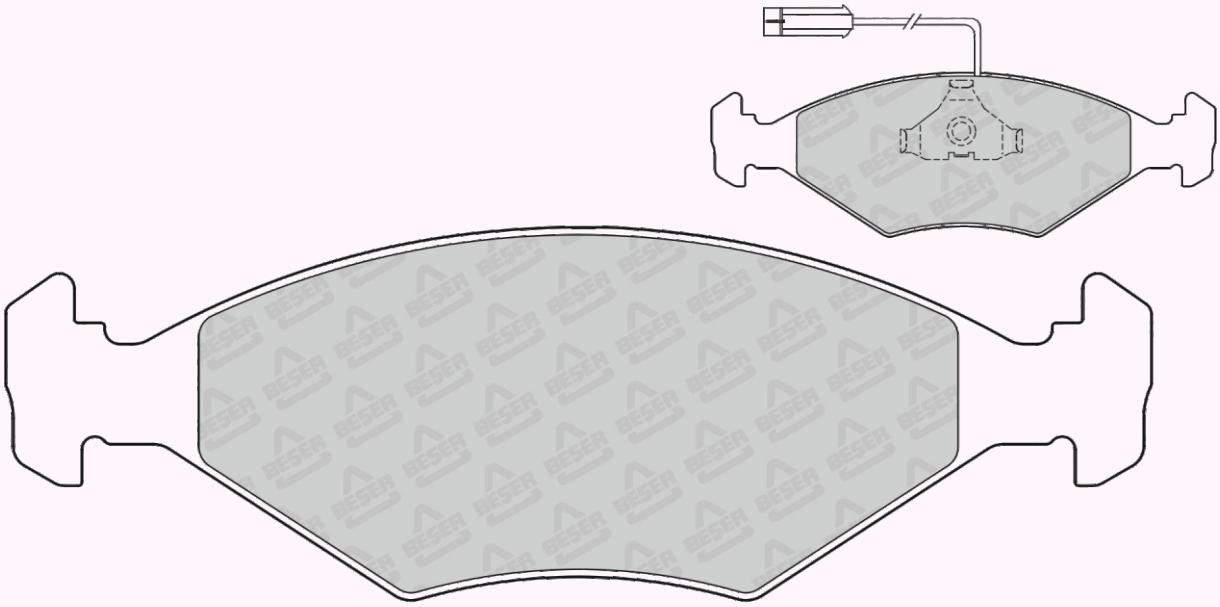

151,3 x 49,2

REFERENCE	T(mm)	REMARKS	MAKE	F/R	WVA No
3479	17,5	2 PADS WITH WEAR SENSOR (285mm)	FIAT	F	23228

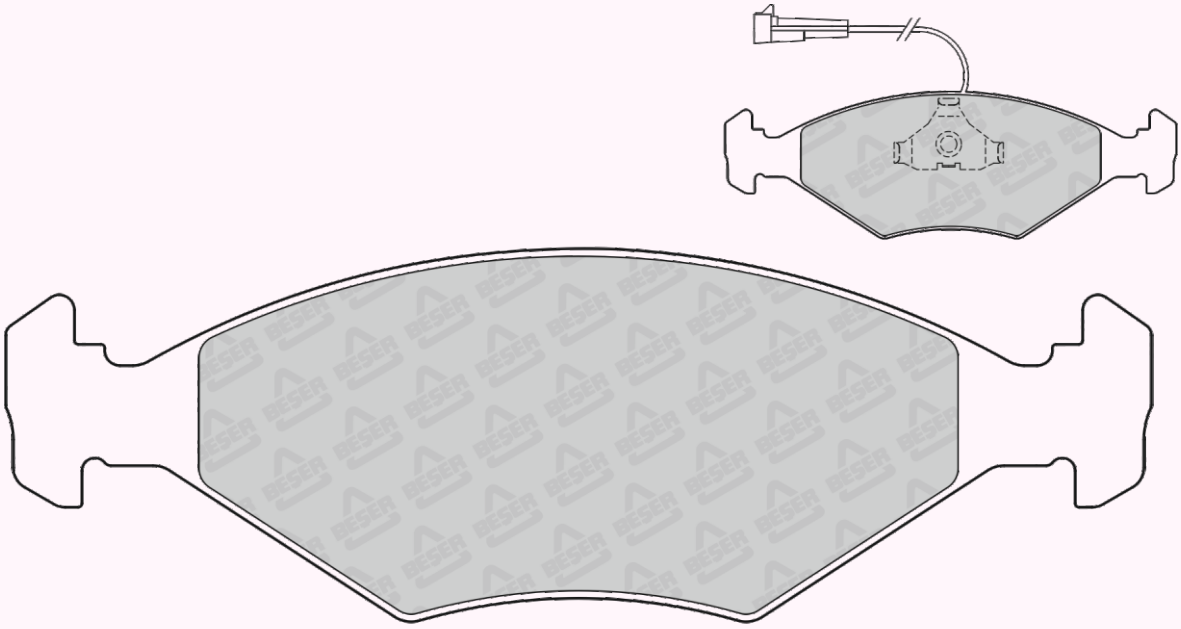

151,3 x 49,2

REFERENCE	T(mm)	REMARKS	MAKE	F/R	WVA No
3480	15	4 PADS PLAIN	FORD	F	20272 20578 20914 20970

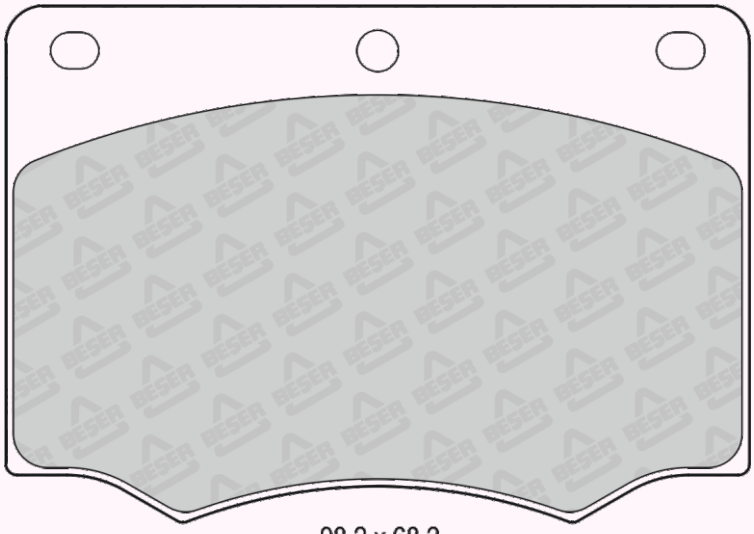

REFERENCE	T(mm)	REMARKS	MAKE	F/R	WVA No
3481	12,3 19,3	2 PADS RIGHT & 2 PADS LEFT	RENAULT	F	20171 20172

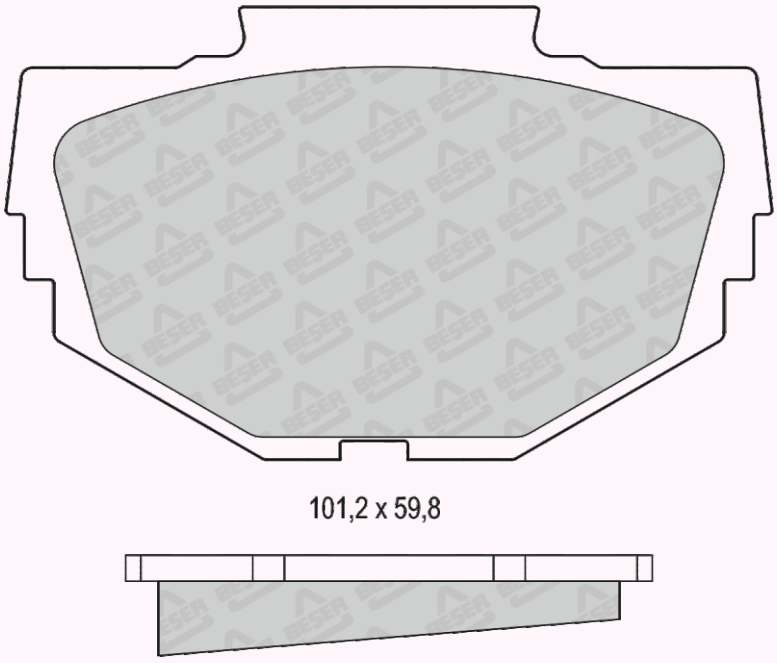

REFERENCE	T(mm)	REMARKS	MAKE	F/R	WVA No
3482	18,5	2 PADS WITH WEAR SENSOR (350mm)	OPEL - RENAULT VAUXHALL	F	20926 20927 20928 20929

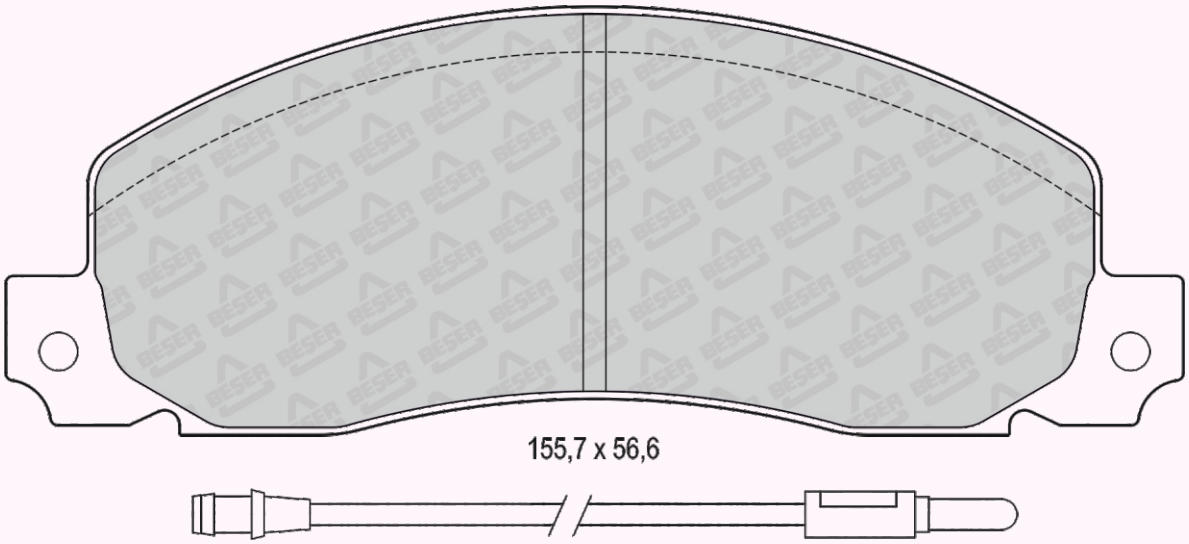

REFERENCE	T(mm)	REMARKS	MAKE	F/R	WVA No
3483	18	4 PADS PLAIN	AUDI - VW	F	20228

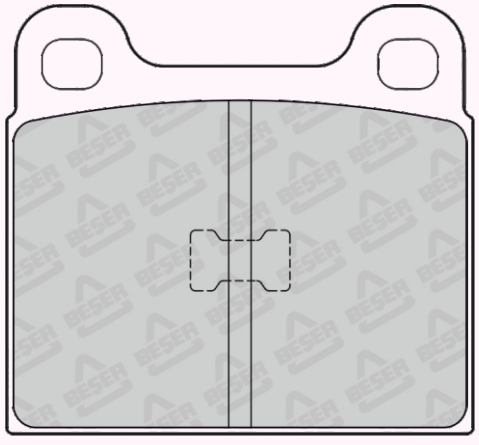

REFERENCE	T(mm)	REMARKS	MAKE	F/R	WVA No
3484	15	2 PADS WITH WEAR SENSOR (264mm)	FORD-HOLDEN HYUNDAI-LOTUS	F	20491 20793 20930 20931

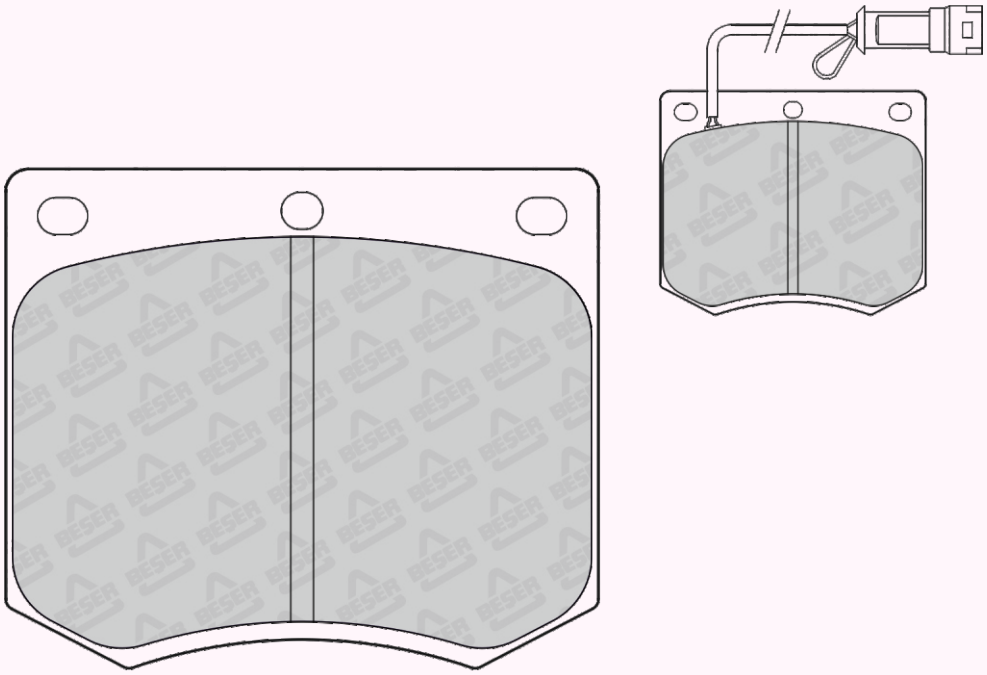

78,3 x 65,9

REFERENCE	T(mm)	REMARKS	MAKE	F/R	WVA No
3485	17,3	1 PAD WITH WEAR SENSOR (150mm)	LANCIA-AUTO BIANCHI FIAT	F	20073

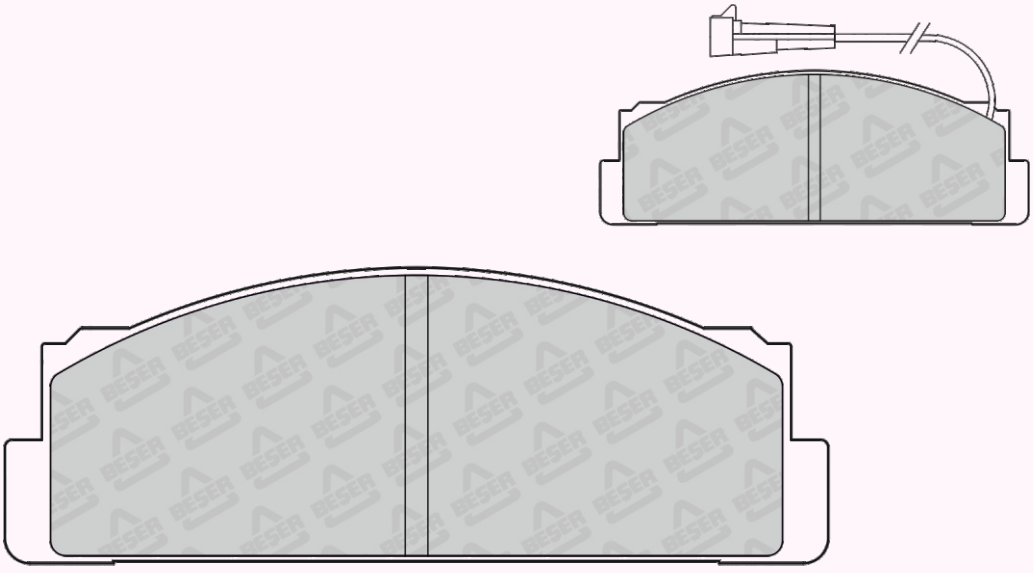

108,8 x 39

REFERENCE	T(mm)	REMARKS	MAKE	F/R	WVA No
3486	15,3	2 PADS INNER & 2 PADS OUTER	SEAT-VW	F	20887 20888

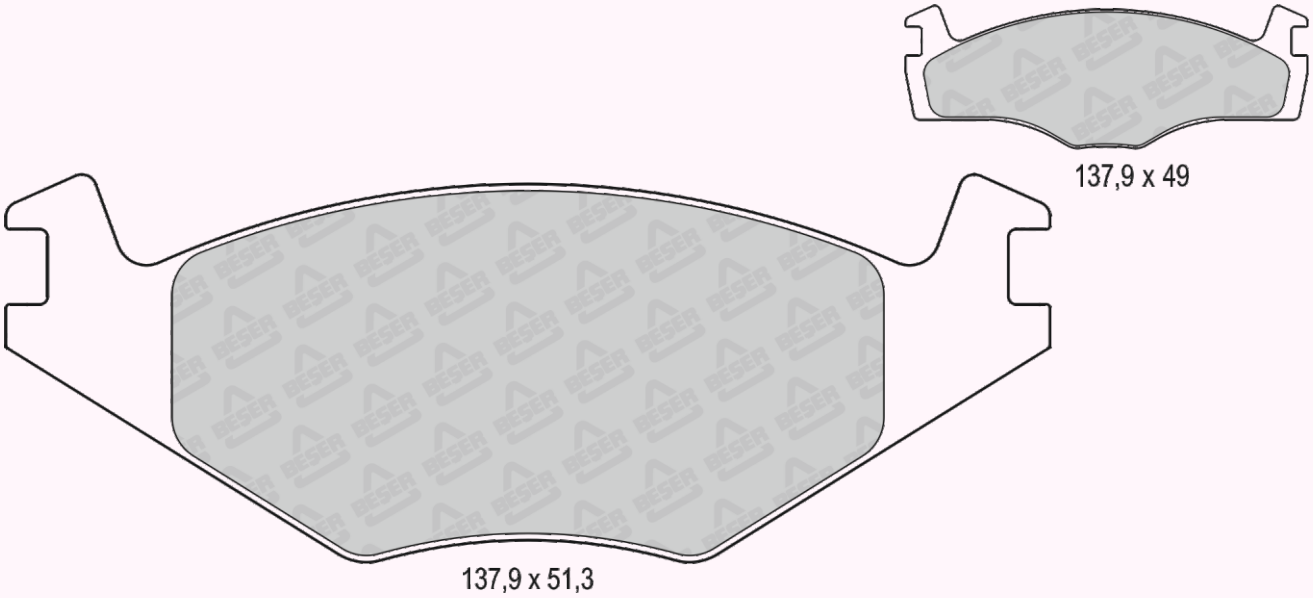

REFERENCE	T(mm)	REMARKS	MAKE	F/R	WVA No
3486/1	15,3	2 PADS INNER & 2 PADS OUTER	SEAT-VW	F	20887 20888

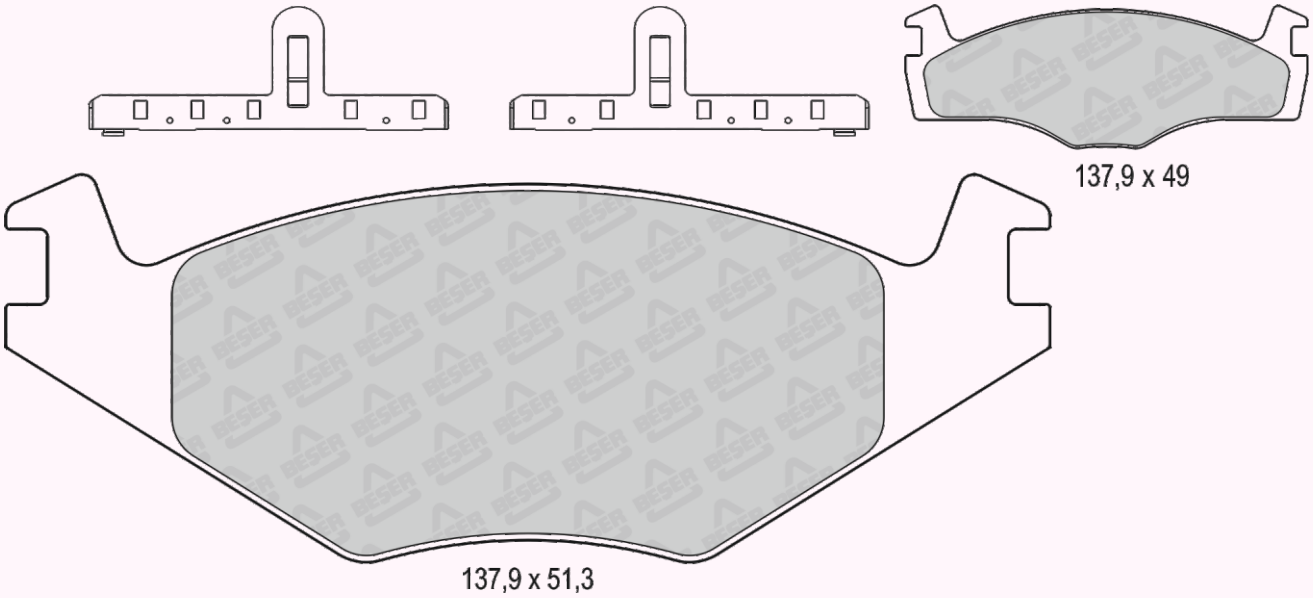

REFERENCE	T(mm)	REMARKS	MAKE	F/R	WVA No
3487	18	4 PADS WITH WEAR SENSOR (285mm) & (368mm)	CITROEN	F	20610 21417 20611 21609 20612 21611 21415 21612 21416



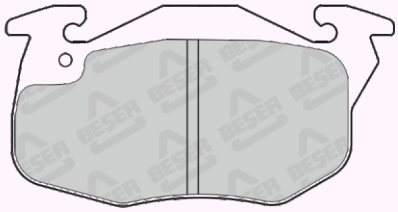

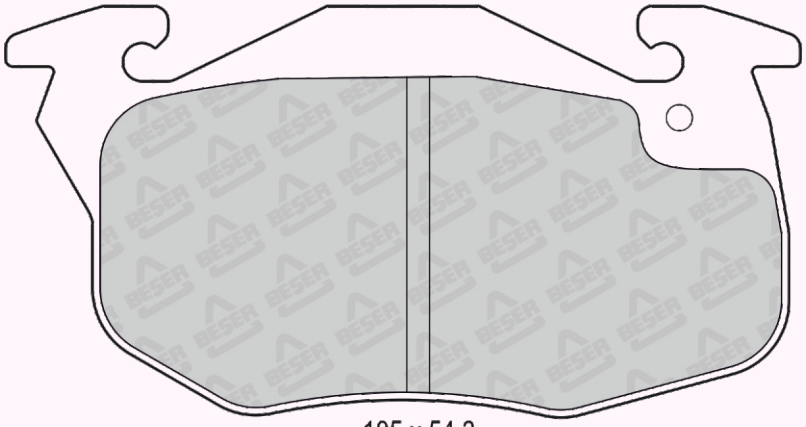

105 x 54,3

REFERENCE	T(mm)	REMARKS	MAKE	F/R	WVA No
3488	18	4 PADS WITH WEAR SENSOR (110mm) & (245mm)	CITROEN-PEUGEOT	F	21061



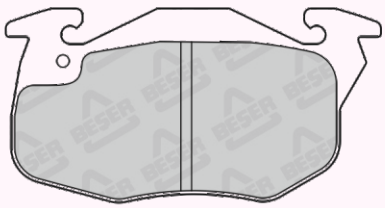

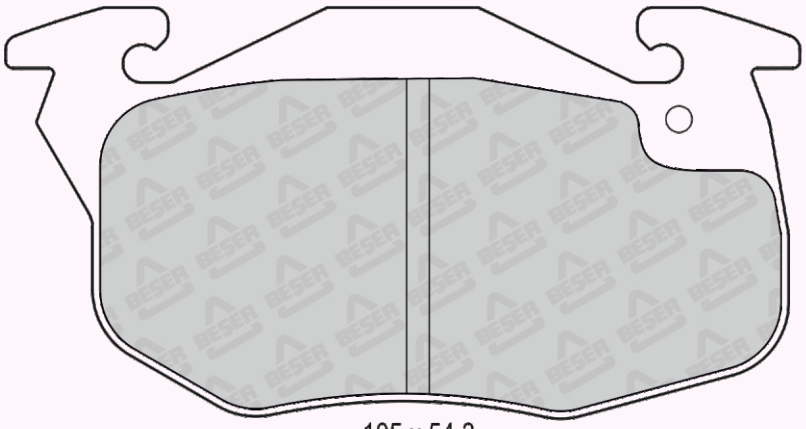

105 x 54,3

REFERENCE	T(mm)	REMARKS	MAKE	F/R	WVA No
3489	18	4 PADS WITH WEAR SENSOR (170mm) & (285mm)	PEUGEOT	F	21414

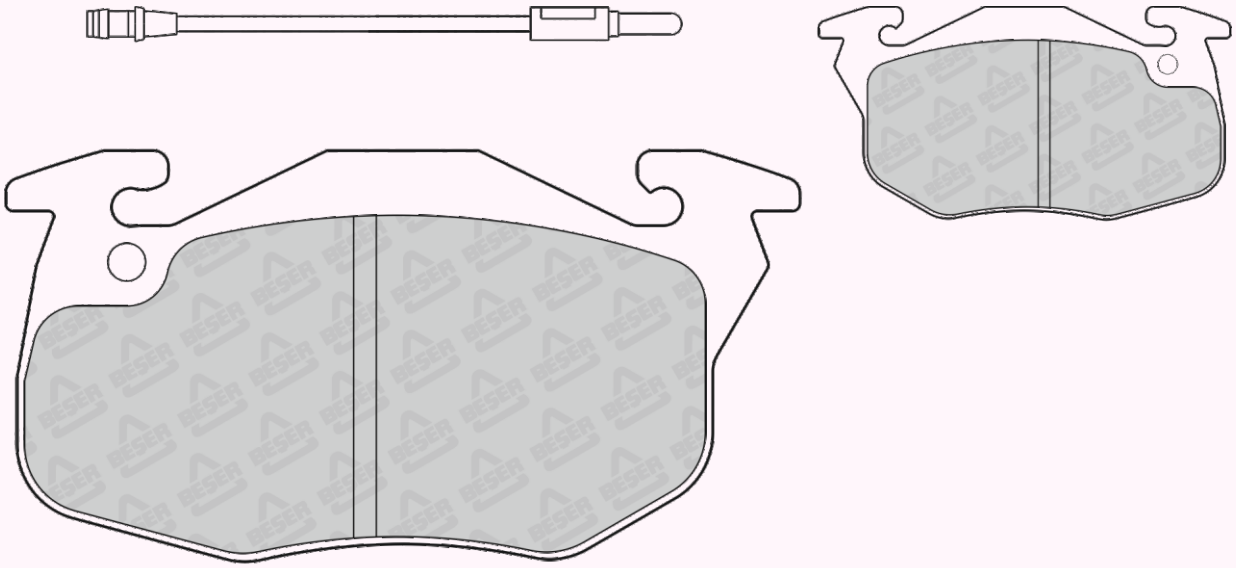

105 x 54,3

REFERENCE	T(mm)	REMARKS	MAKE	F/R	WVA No
3490	15	4 PADS PLAIN	AUDI-VOLVO	F	20574

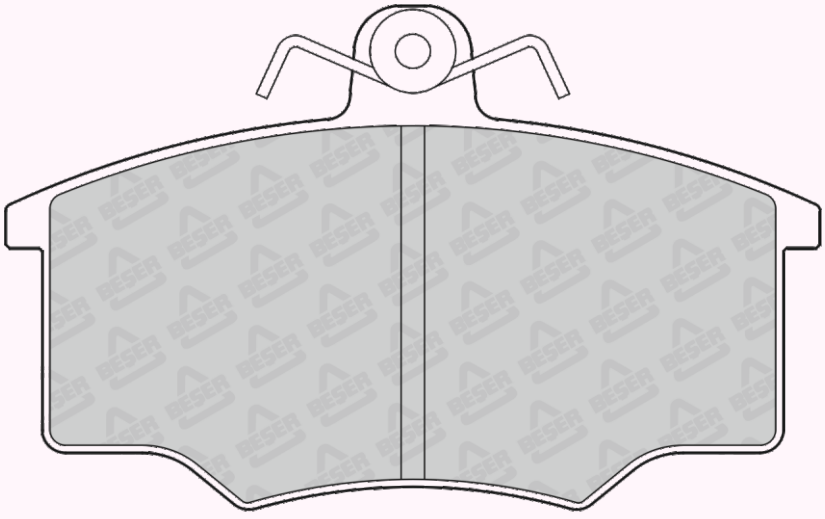

103,8 x 66,5

REFERENCE	T(mm)	REMARKS	MAKE	F/R	WVA No
3491	17	2 PADS WITH WEAR SENSOR (265mm)	FIAT - LANCIA YUGO - ZASTAVA	F	21100 21533

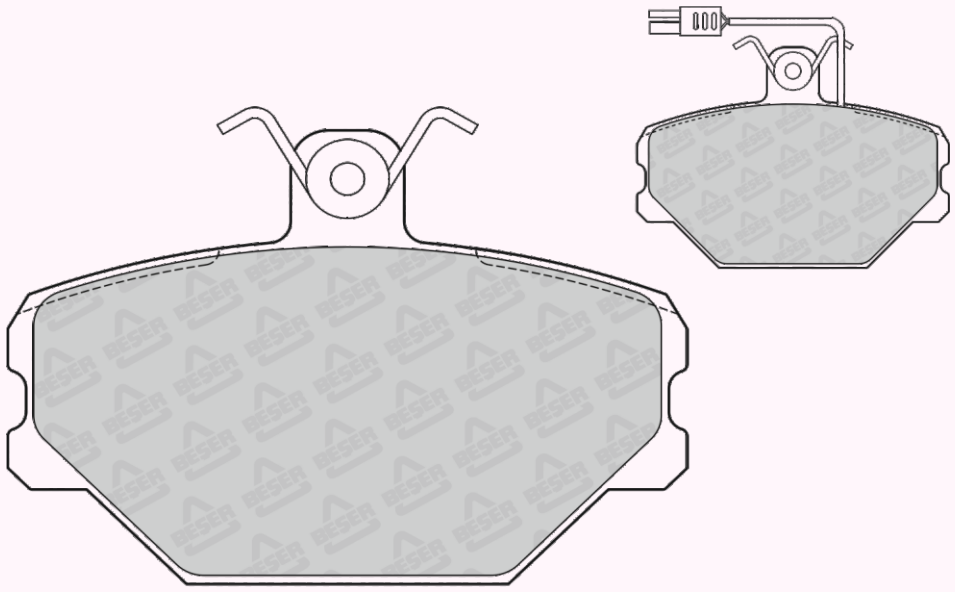

89,8 x 63,4

REFERENCE	T(mm)	REMARKS	MAKE	F/R	WVA No
3492	17,7	2 PADS WITH WEAR SENSOR 2 PADS WITH LUG (100mm)	ALPINE - CITROEN	F	20636

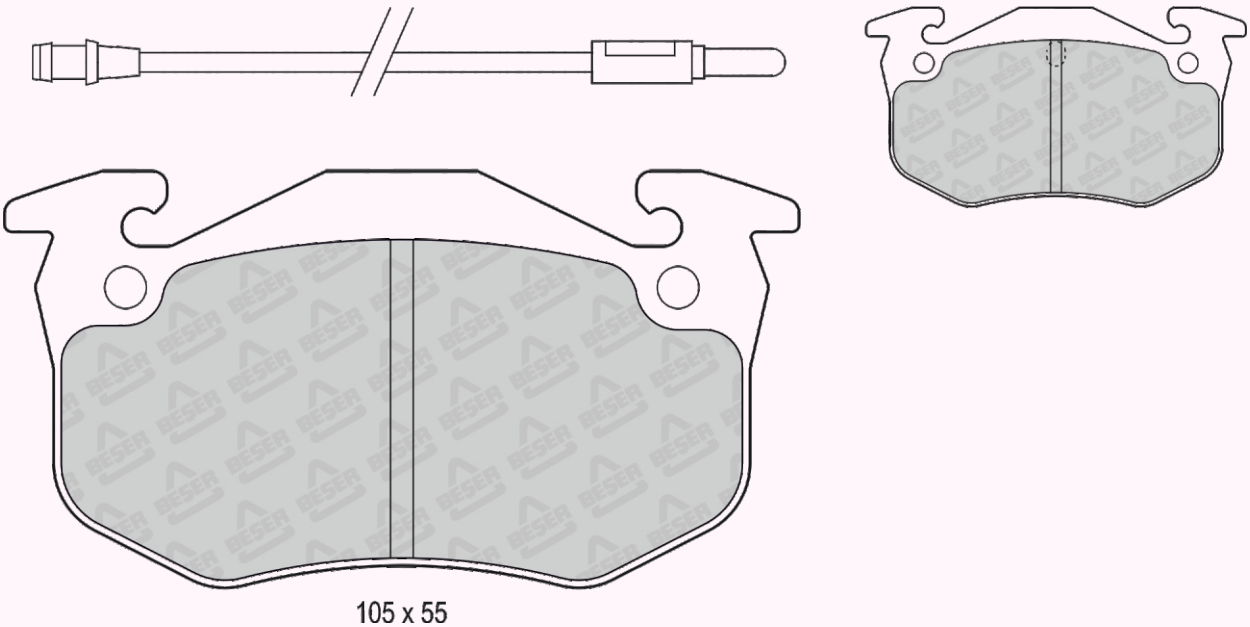

105 x 55

REFERENCE	T(mm)	REMARKS	MAKE	F/R	WVA No
3493	17,7	4 PADS WITH WEAR SENSOR (130mm) & (245mm)	ALPINE - CITROEN	F	20635 20636 20790 20859 20860

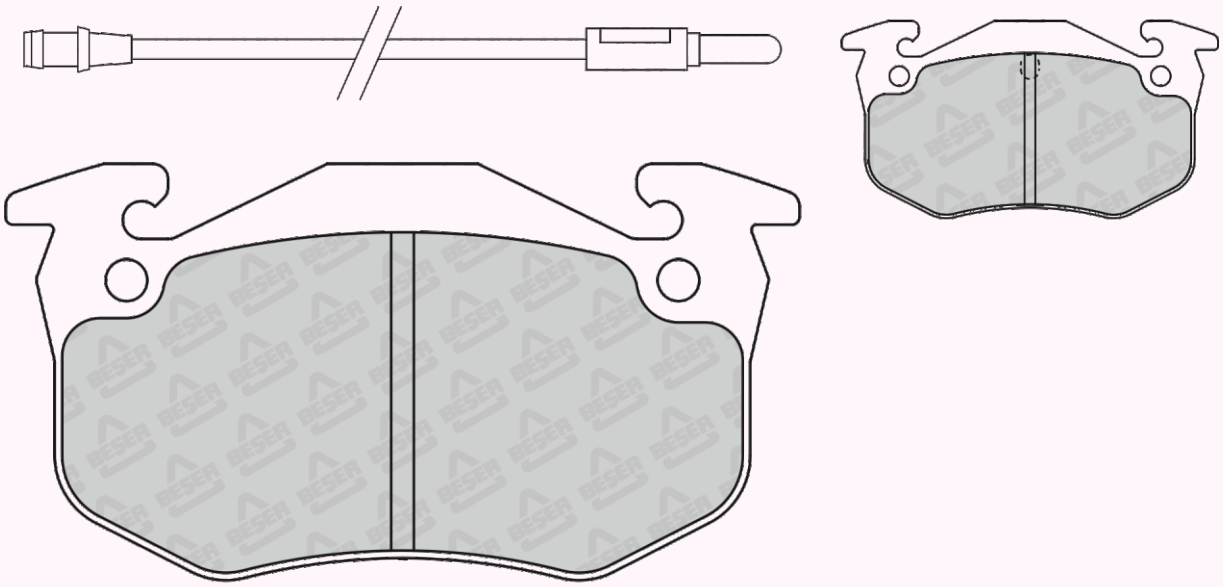

105 x 55

REFERENCE	T(mm)	REMARKS	MAKE	F/R	WVA No
3494	11	2 PADS WITH LUG-2 PADS W/O LUG 2 PADS WITH WEAR SENSOR (100mm)	ALPINE - CITROEN	F	20635

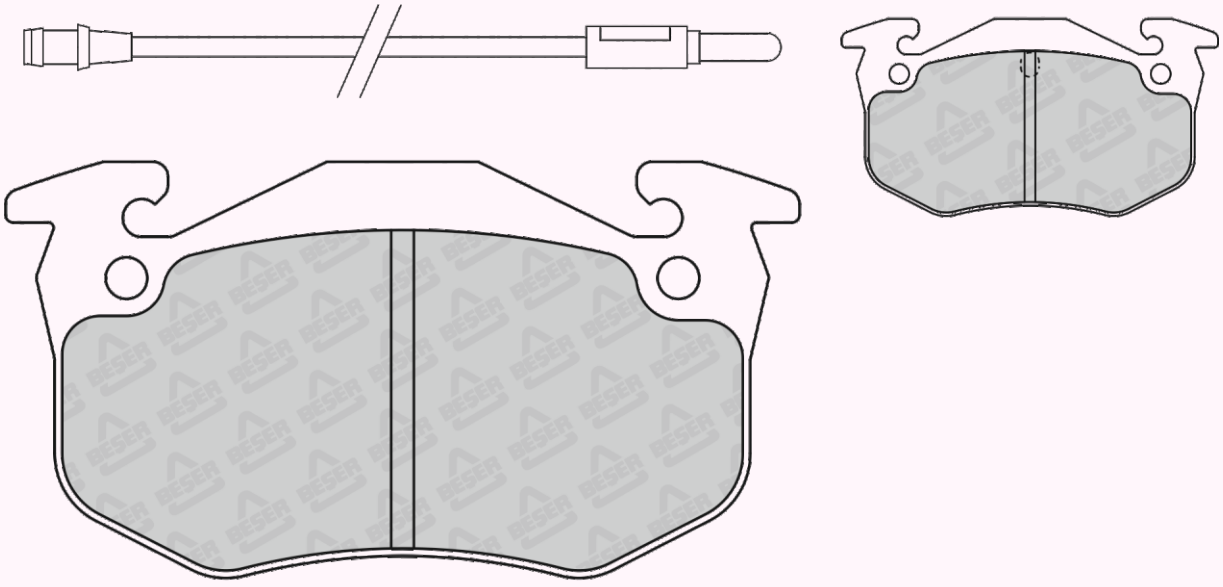

105 x 55

REFERENCE	T(mm)	REMARKS	MAKE	F/R	WVA No
3495	15	2 PADS WITH WEAR SENSOR (200mm)	RENAULT	F	20634 20635 20636 21096 21097

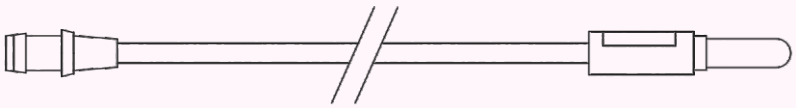

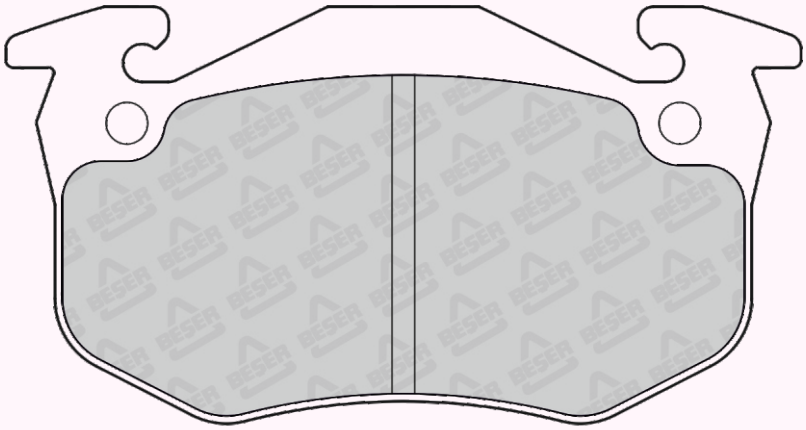

105 x 55

REFERENCE	T(mm)	REMARKS	MAKE	F/R	WVA No
3496	11	4 PADS W/O SENSOR 2 PADS WITH LUG	CITROEN-PEUGEOT RENAULT	R	20973 20974

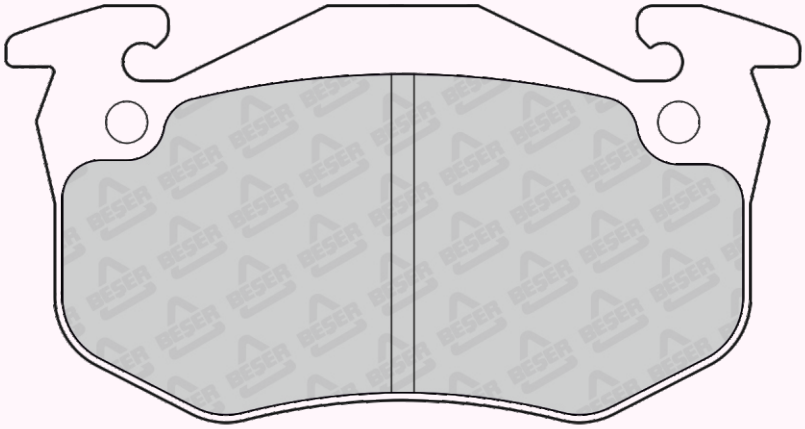

105 x 55

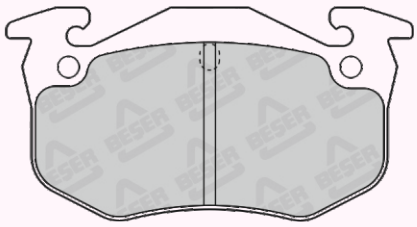

105 x 55
(NOT SCALE)

REFERENCE	T(mm)	REMARKS	MAKE	F/R	WVA No
3496/1	11	4 PADS PLAIN	CITROEN - PEUGEOT RENAULT	R	20974

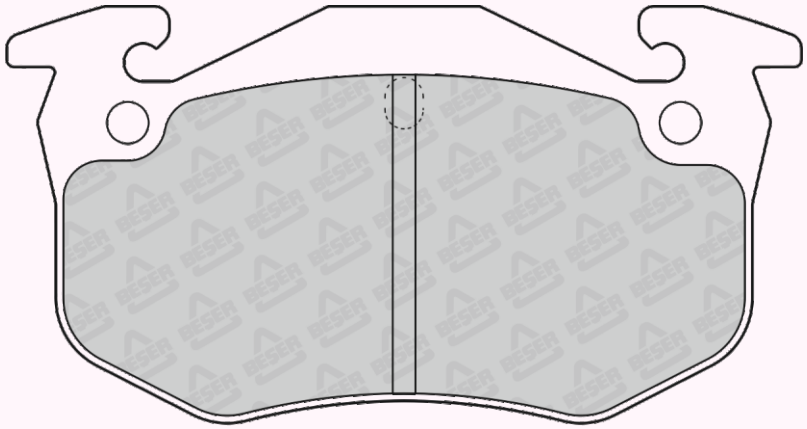

105 x 55

REFERENCE	T(mm)	REMARKS	MAKE	F/R	WVA No
3499	14,5	4 PADS PLAIN	FORD - KIA MAZDA	F	20002

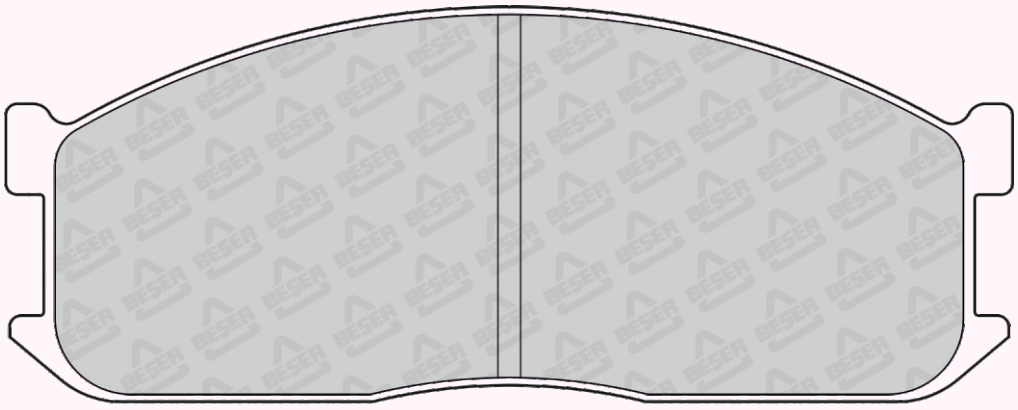

133 x 52,2

REFERENCE	T(mm)	REMARKS	MAKE	F/R	WVA No
3501	15	4 PADS PLAIN	HONDA	F	20959

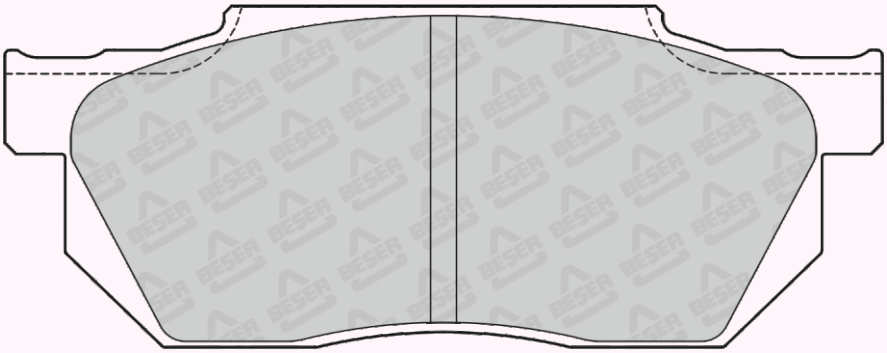

116 x 45

REFERENCE	T(mm)	REMARKS	MAKE	F/R	WVA No
3502	15	2 PADS WITH WEAR SENSOR	HYUNDAI-INOKOM	F	21012 21773 21774

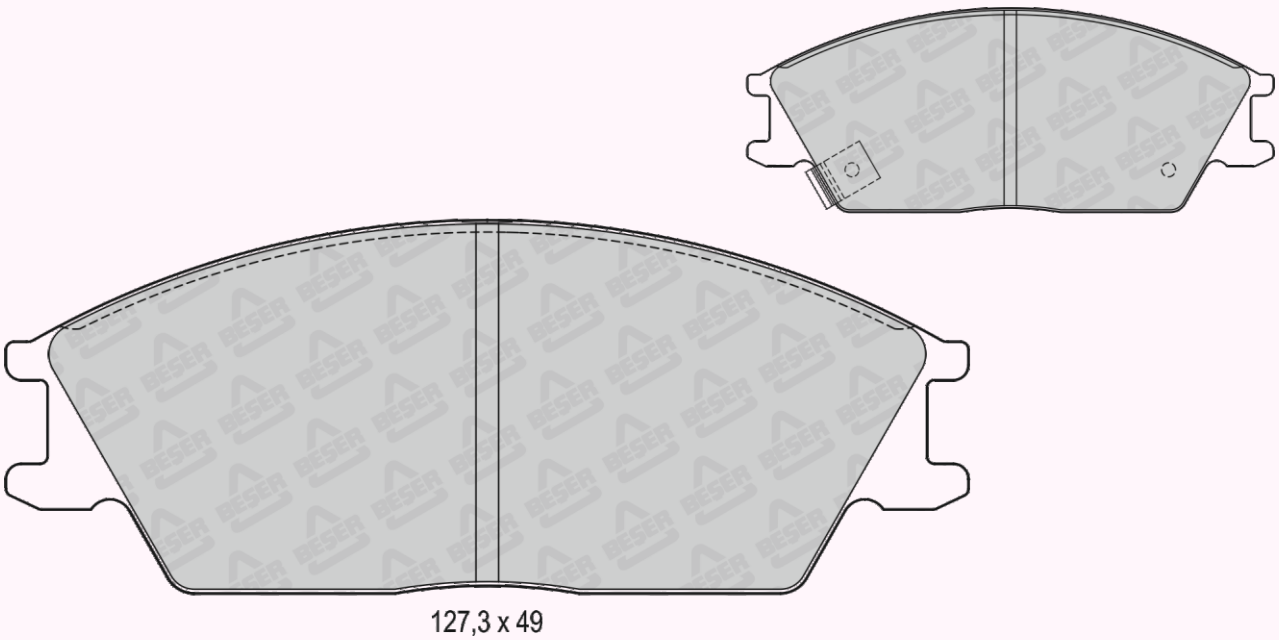

127,3 x 49

REFERENCE	T(mm)	REMARKS	MAKE	F/R	WVA No
3503	18	2 PADS WITH WEAR SENSOR (220mm)	ALPINE - DACIA - LADA PEUGEOT - RENAULT	F	20772 20937 20938 21404 21463

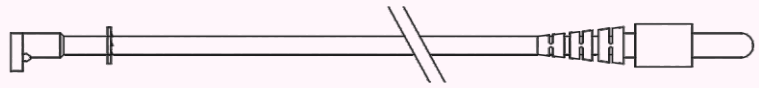

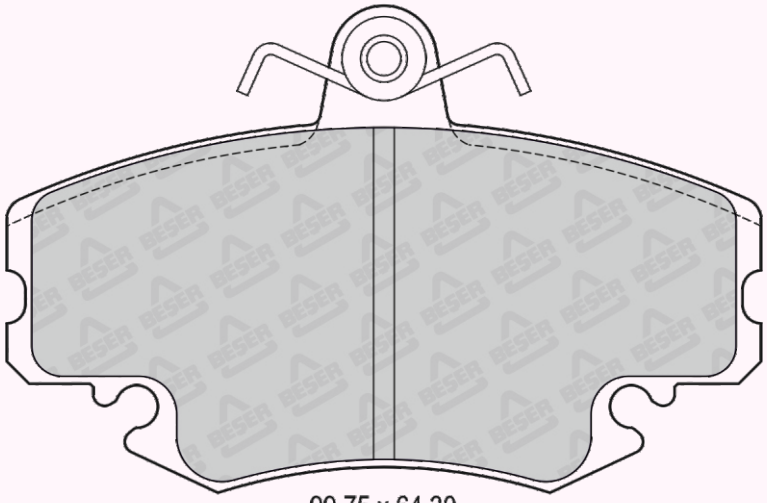

99,75 x 64,30

REFERENCE	T(mm)	REMARKS	MAKE	F/R	WVA No
3503/1	18	4 PADS PLAIN	PEUGEOT-LADA-RENAULT ALPINE-DACIA	F	21404

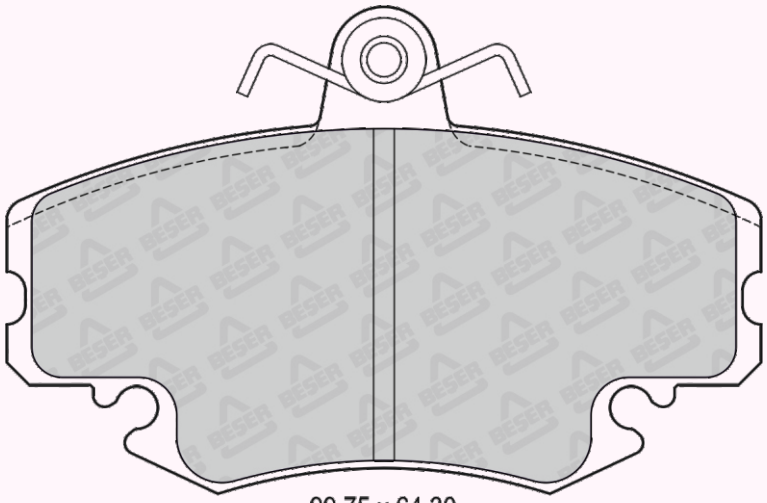

99,75 x 64,30

REFERENCE	T(mm)	REMARKS	MAKE	F/R	WVA No
3504	15	4 PADS PLAIN	HONDA-HYUNDAI	F	21012

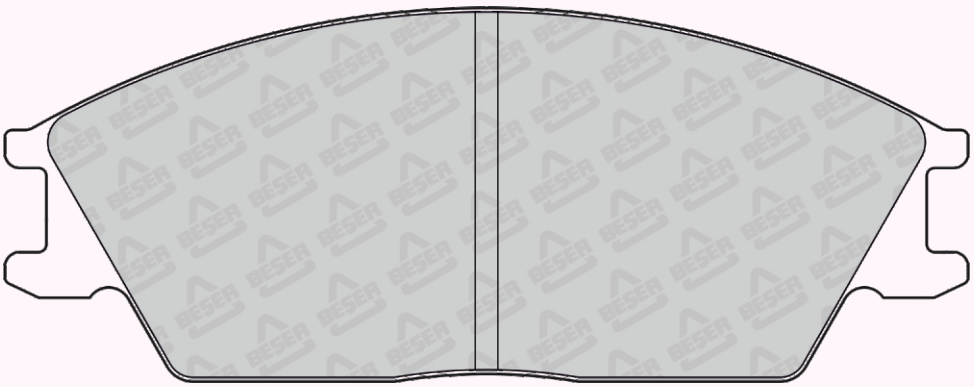

127,3 x 49

REFERENCE	T(mm)	REMARKS	MAKE	F/R	WVA No
3505	17,5	4 PADS PLAIN	CHEVROLET - DAEWOO - FSO HOLDEN OPEL - VAUXHALL - ZAZ	F	21190 21862

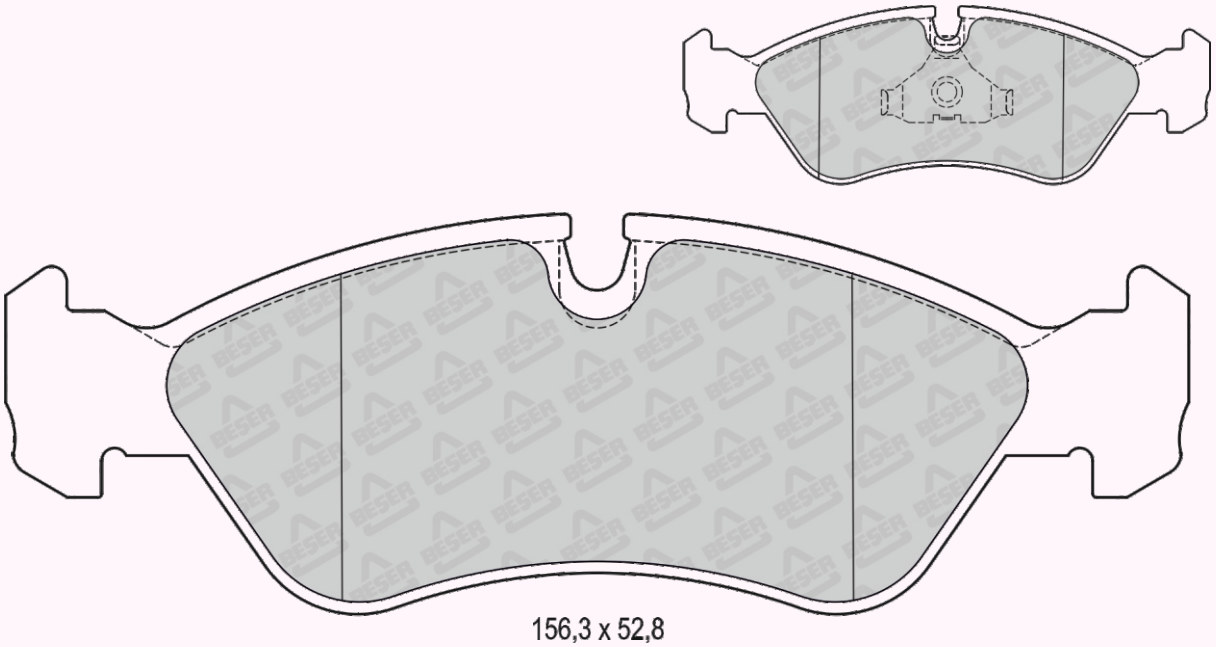

156,3 x 52,8

REFERENCE	T(mm)	REMARKS	MAKE	F/R	WVA No
3506	19,5	2 PADS INNER & 2 PADS OUTER	FORD - SEAT VW	F	21848 21849 21850

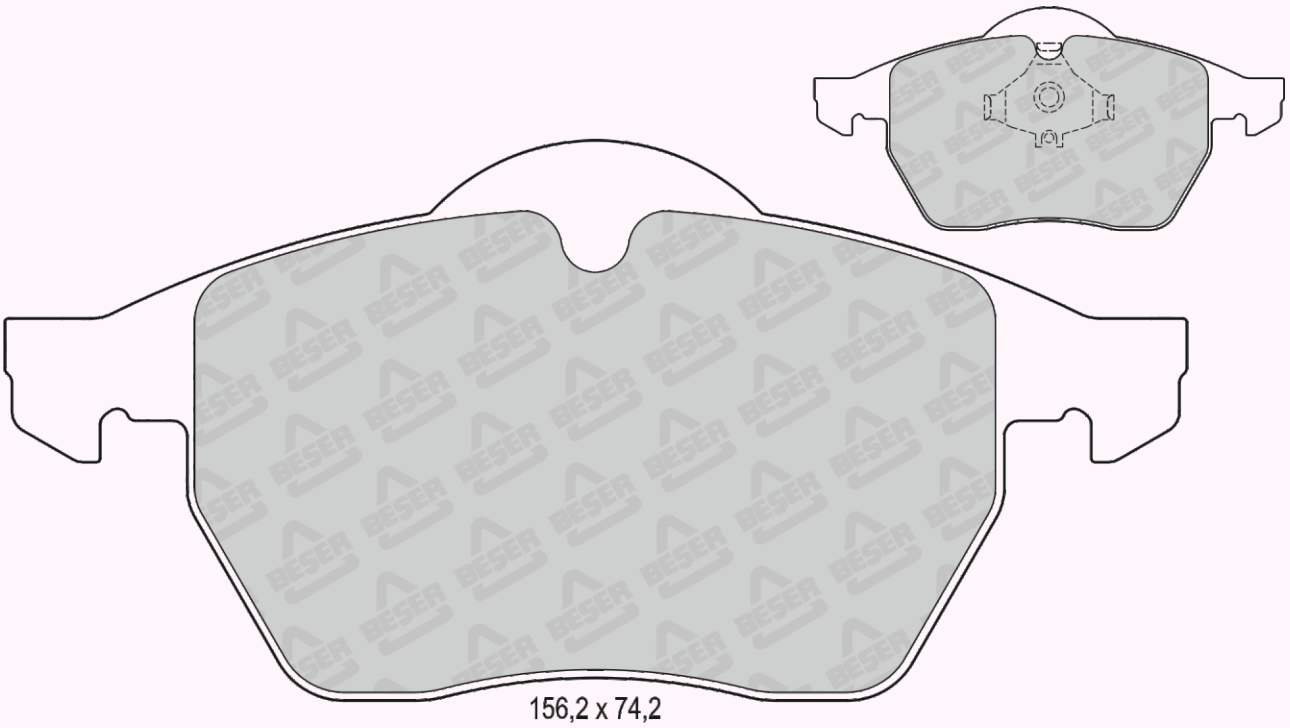

REFERENCE	T(mm)	REMARKS	MAKE	F/R	WVA No
3507	18	2 PADS WITH WEAR SENSOR	HYUNDAI	F	23081 23082 23083

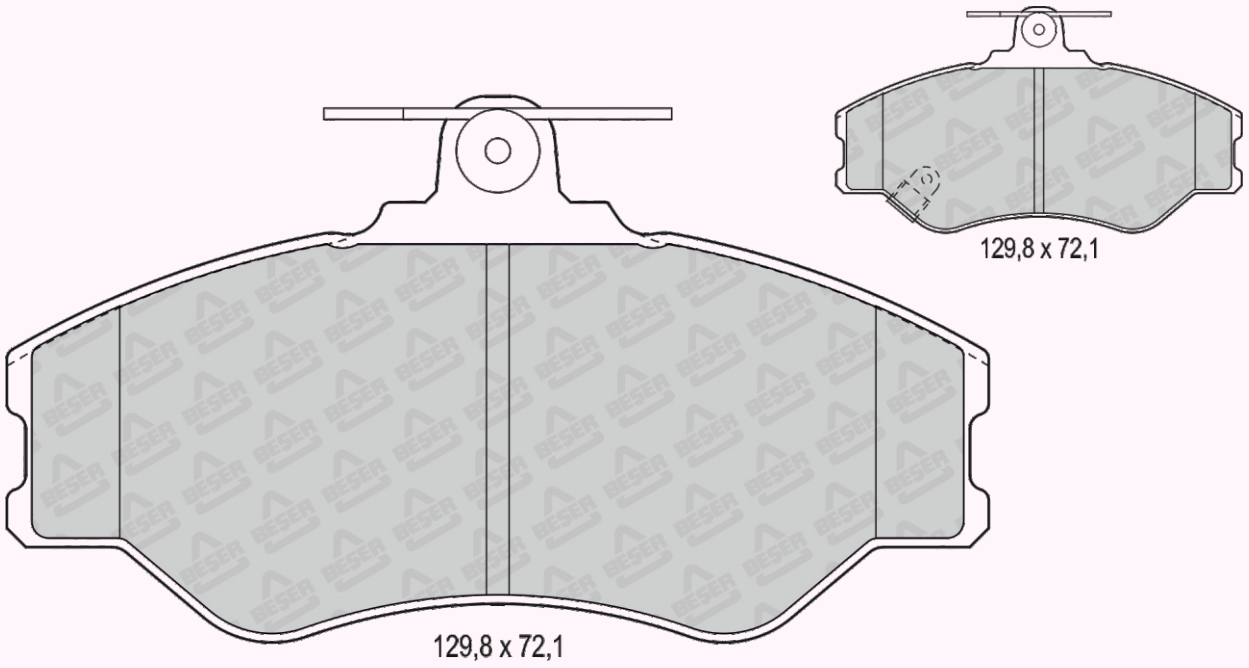

REFERENCE	T(mm)	REMARKS	MAKE	F/R	WVA No
3509	15	4 PADS PLAIN	BEDFORD - FORD HOLDEN - HONDA MARUTI - SUZUKI - VAUXHALL	F	20731

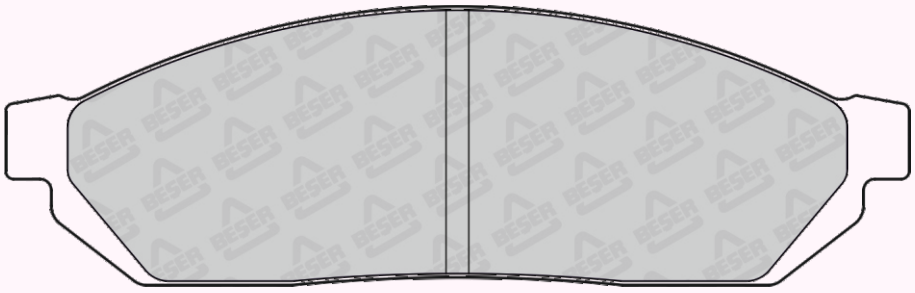

119,3 x 36,8

REFERENCE	T(mm)	REMARKS	MAKE	F/R	WVA No
3510	15,4	4 PADS PLAIN	DAEWOO	F	21057

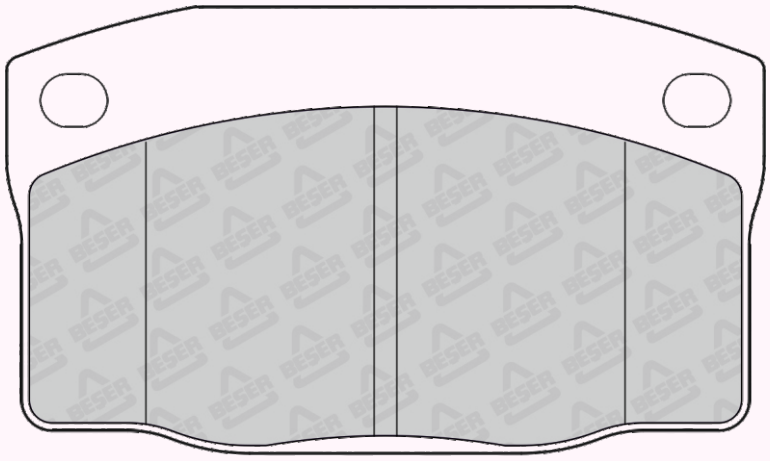

100 x 59

REFERENCE	T(mm)	REMARKS	MAKE	F/R	WVA No
3511	14	4 PADS PLAIN	DAEWOO - SUZUKI	F	23061

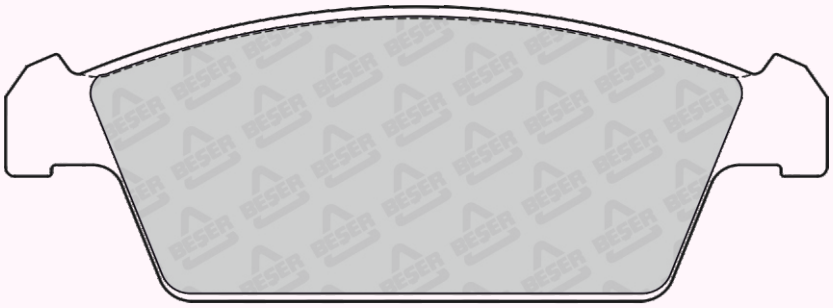

108,6 x 39

REFERENCE	T(mm)	REMARKS	MAKE	F/R	WVA No
3512	14,4	4 PADS PLAIN	LAND ROVER	R	23471

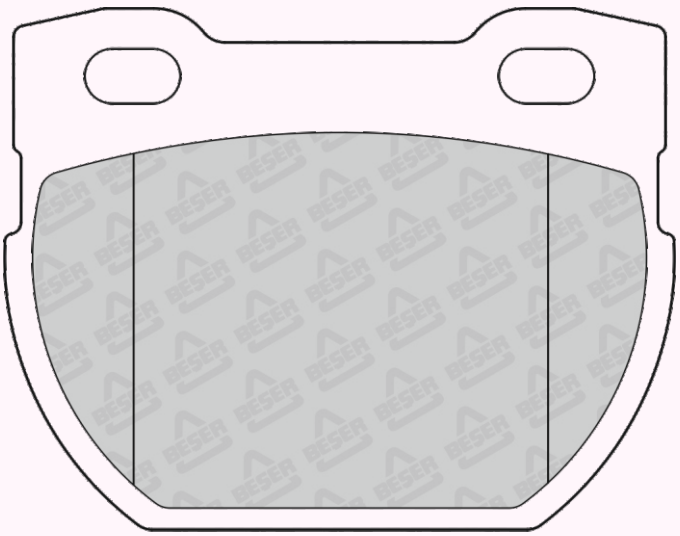

88,4 x 68,8

REFERENCE	T(mm)	REMARKS	MAKE	F/R	WVA No
3512/1	17,5	4 PADS PLAIN (**A**)	LAND ROVER	R	23471

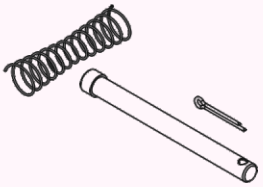

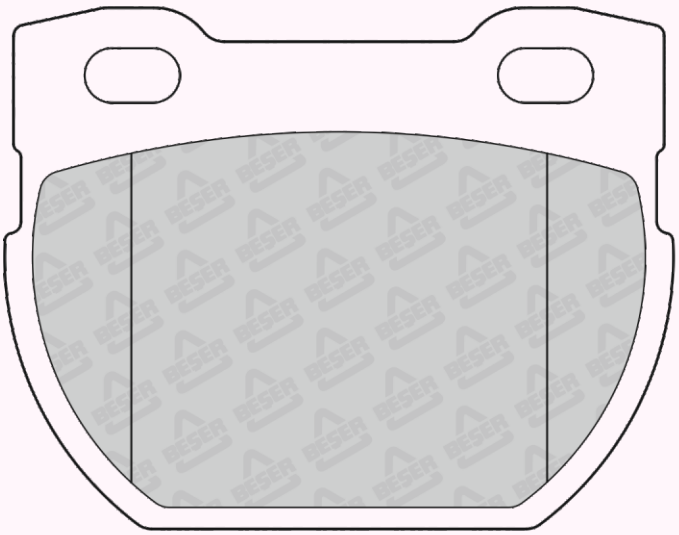

88,4 x 68,8

REFERENCE	T(mm)	REMARKS	MAKE	F/R	WVA No
3512/2	17,5	4 PADS PLAIN	LAND ROVER	R	23471

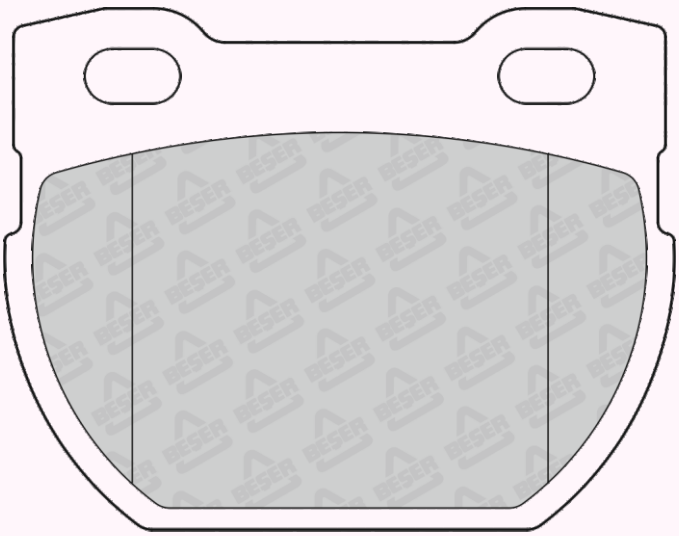

88,4 x 68,8

REFERENCE	T(mm)	REMARKS	MAKE	F/R	WVA No
3513	18	4 PADS PLAIN	MAHINDRA - MERCEDES BENZ OLCIT - PUCH - VW	F	20784 21056 29764 29765 29784

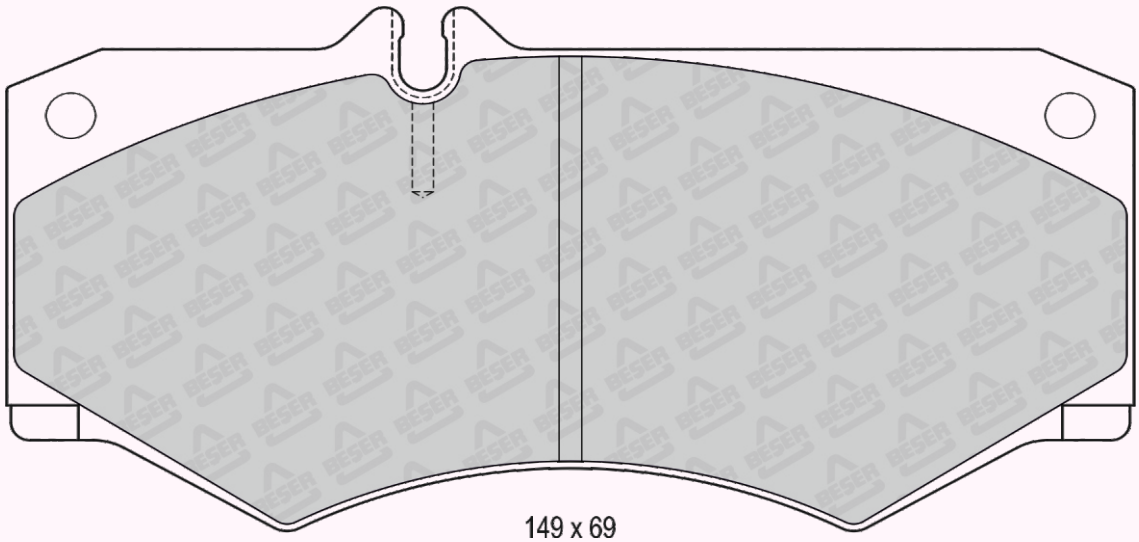

149 x 69

REFERENCE	T(mm)	REMARKS	MAKE	F/R	WVA No
3514	17,5	4 PADS PLAIN	MERCEDES BENZ	F	20341

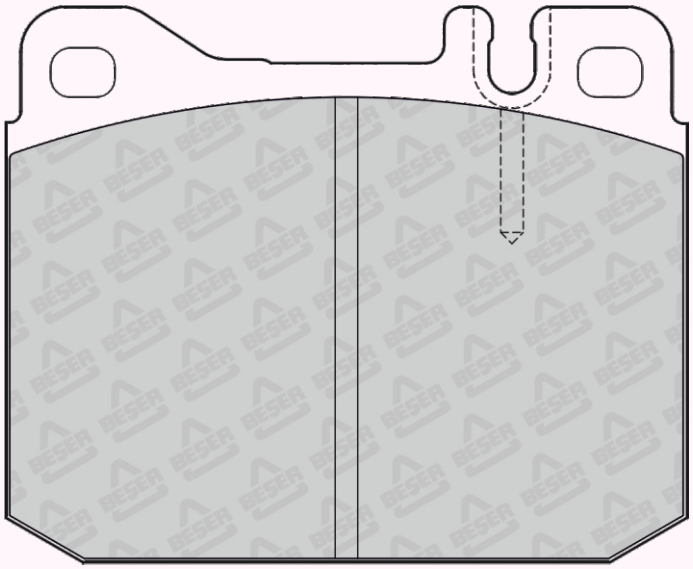

90 x 73,4

REFERENCE	T(mm)	REMARKS	MAKE	F/R	WVA No
3515	15	4 PADS PLAIN	MERCEDES BENZ	F	20392 20581

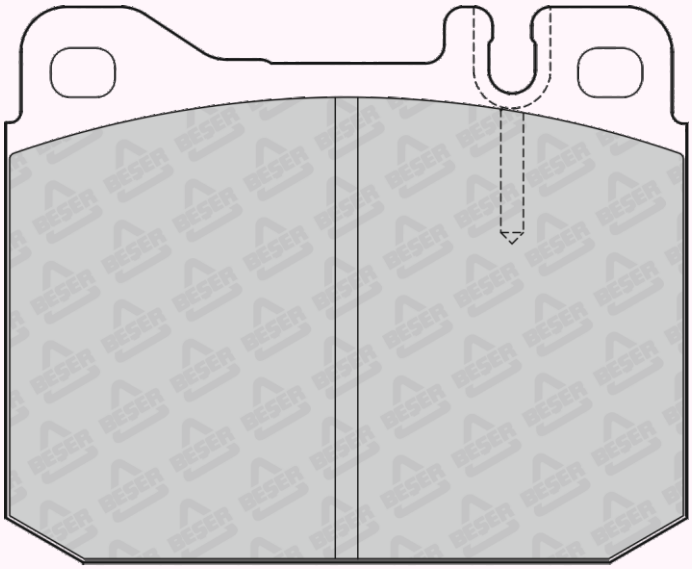

90 x 73,4

REFERENCE	T(mm)	REMARKS	MAKE	F/R	WVA No
3516	18,8	2 PADS WITH WEAR SENSOR (165mm)	FIAT	F	---

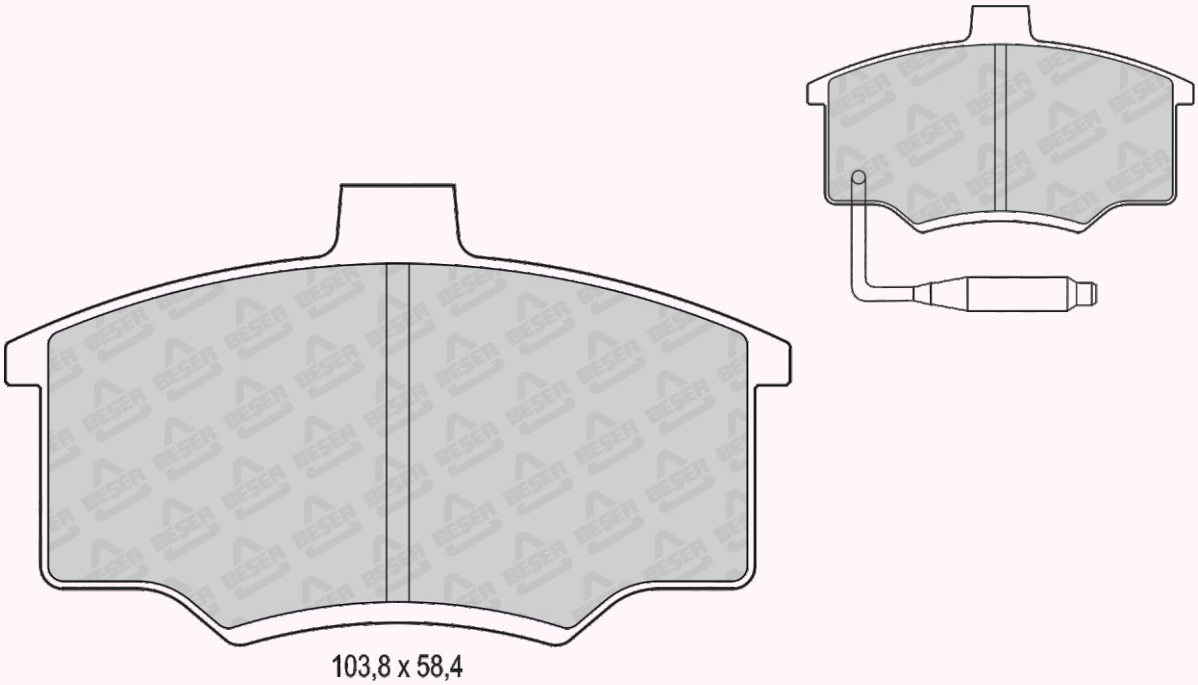

103,8 x 58,4

REFERENCE	T(mm)	REMARKS	MAKE	F/R	WVA No
3517	17,5	2 PADS WITH WEAR SENSOR (140mm)	PEUGEOT 504,504	F	---

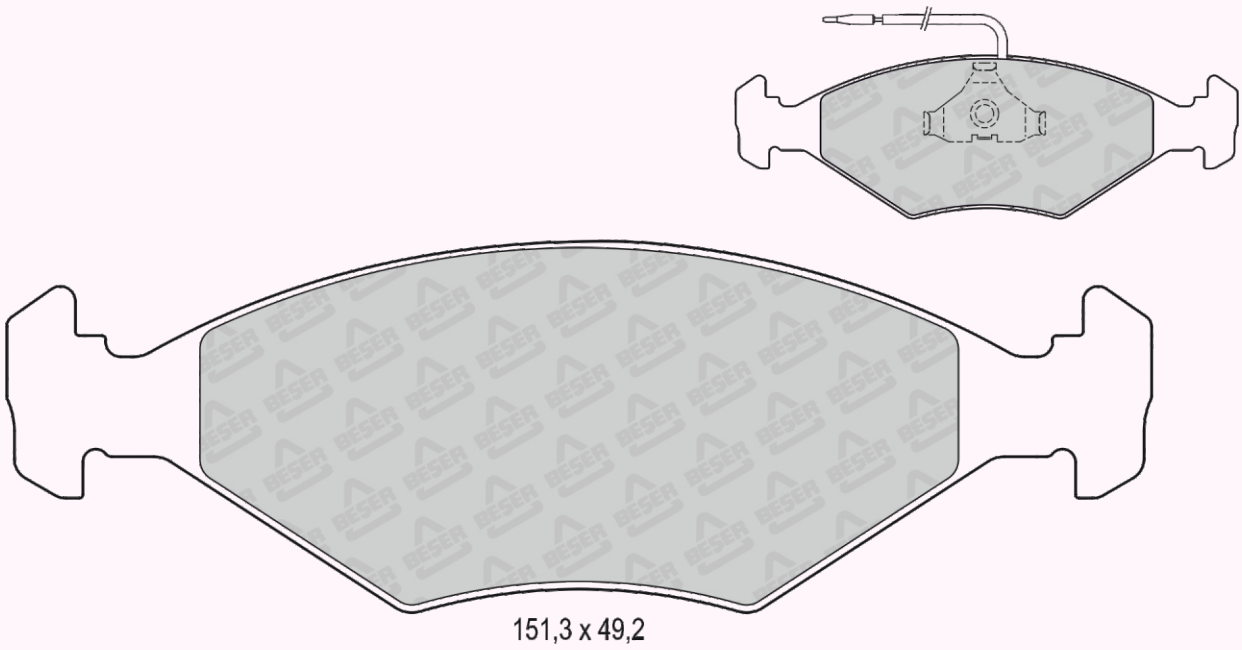

REFERENCE	T(mm)	REMARKS	MAKE	F/R	WVA No
3518	14	2 PADS WITH WEAR SENSOR	DACIA-FIAT	F	---

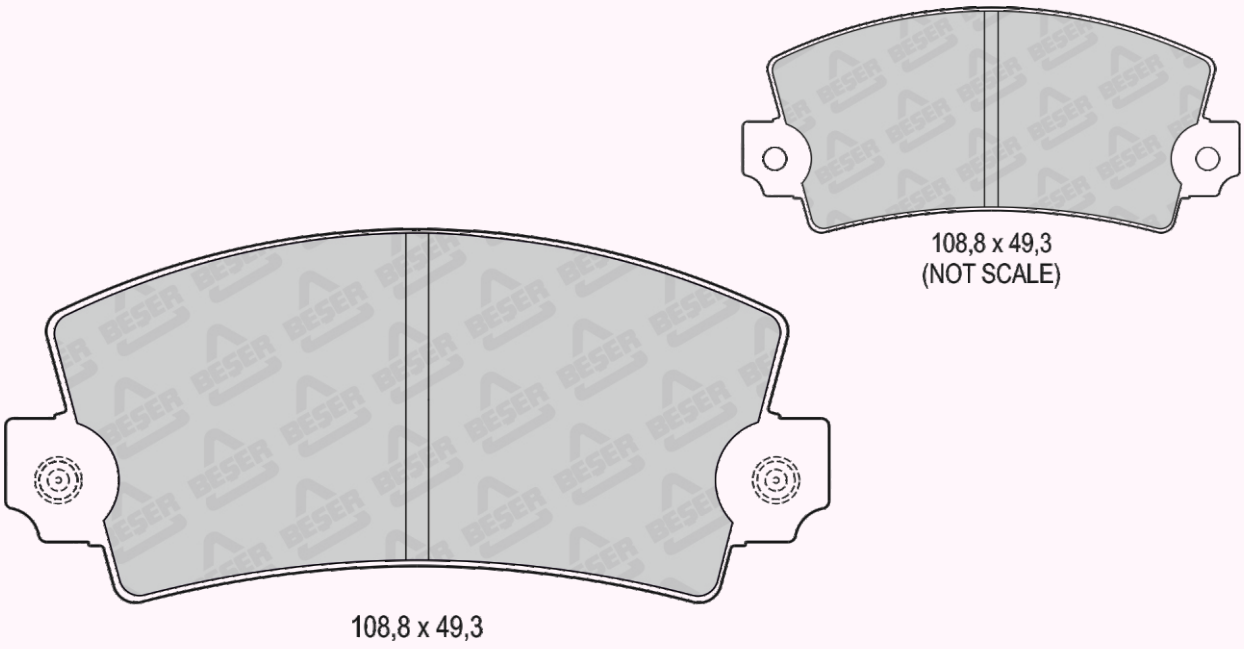

REFERENCE	T(mm)	REMARKS	MAKE	F/R	WVA No
3519	19	4 PADS PLAIN	FIAT	F	---

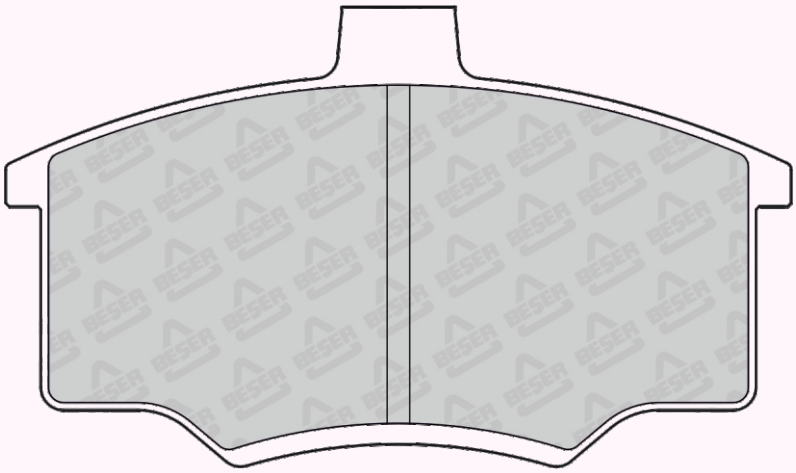

103,8 x 58,4

REFERENCE	T(mm)	REMARKS	MAKE	F/R	WVA No
3520	14,8	4 PADS PLAIN	LADA	F	---

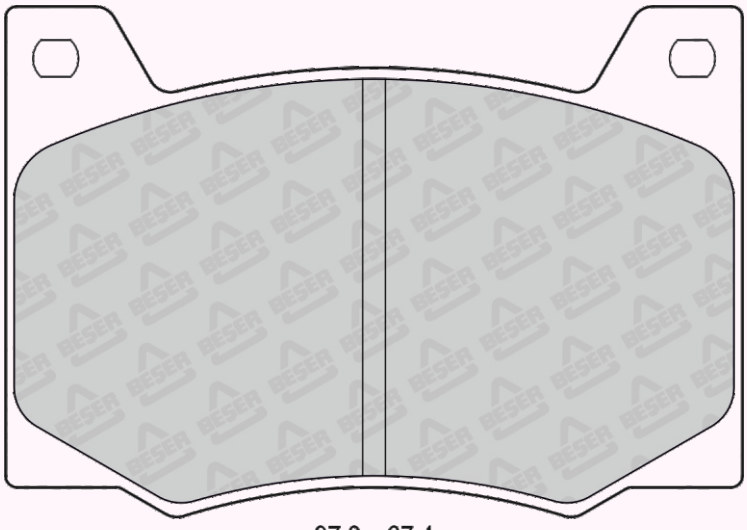

97,3 x 67,4

REFERENCE	T(mm)	REMARKS	MAKE	F/R	WVA No
3521	20	X(mm) 6 8 1 PAD WITH WEAR SENSOR (480mm)	MERCEDES BENZ	F,R	29764 29324

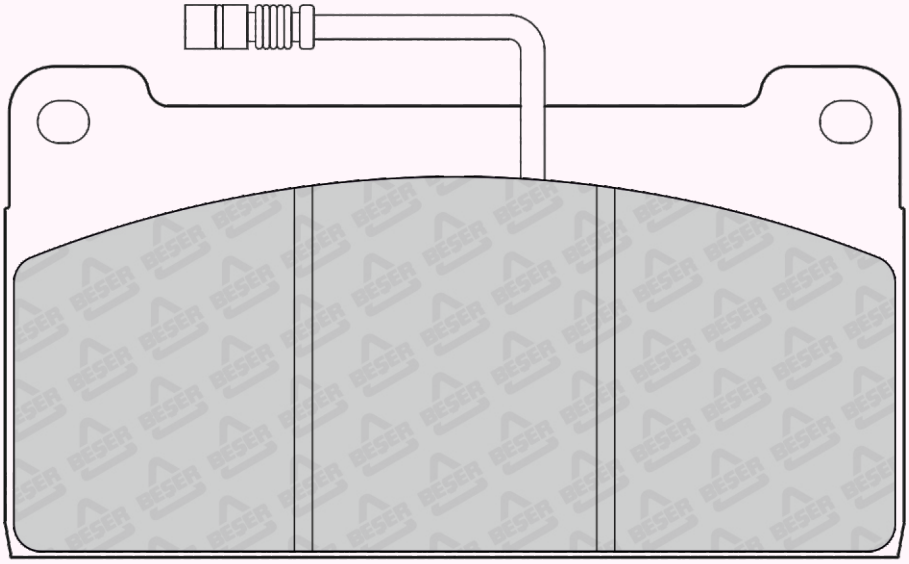

149,7 x 81,5
(NOT SCALE)

REFERENCE	T(mm)	REMARKS	MAKE	F/R	WVA No
3522	14,9	2 PADS WITH WEAR SENSOR	FORD - KIA - MAZDA	F	21654 21655 21656

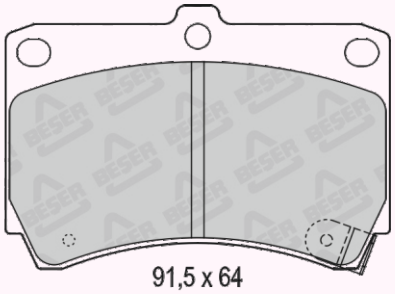

91,5 x 64
(NOT SCALE)

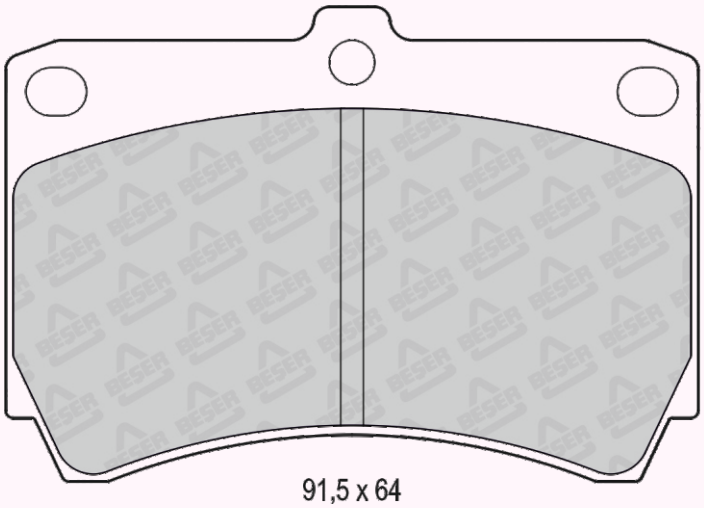

91,5 x 64

REFERENCE	T(mm)	REMARKS	MAKE	F/R	WVA No
3523	18,3	2 PADS WITH WEAR SENSOR (160 mm)	ALFA ROMEO - IVECO	F	21048 21049 21620 29041

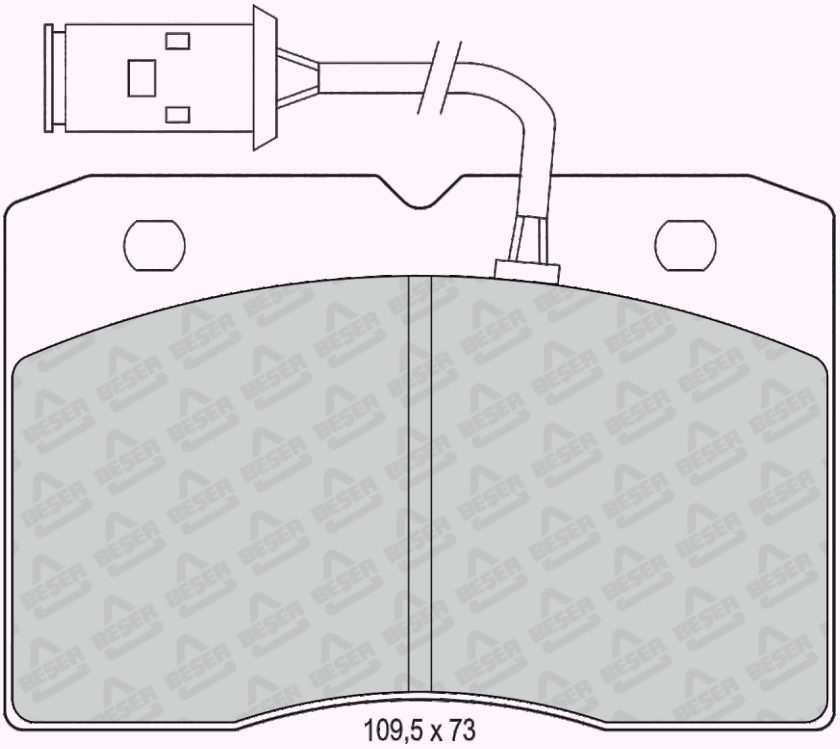

REFERENCE	T(mm)	REMARKS	MAKE	F/R	WVA No
3524	18,3	4 PADS PLAIN	ALFA ROMEO - IVECO	F	21048

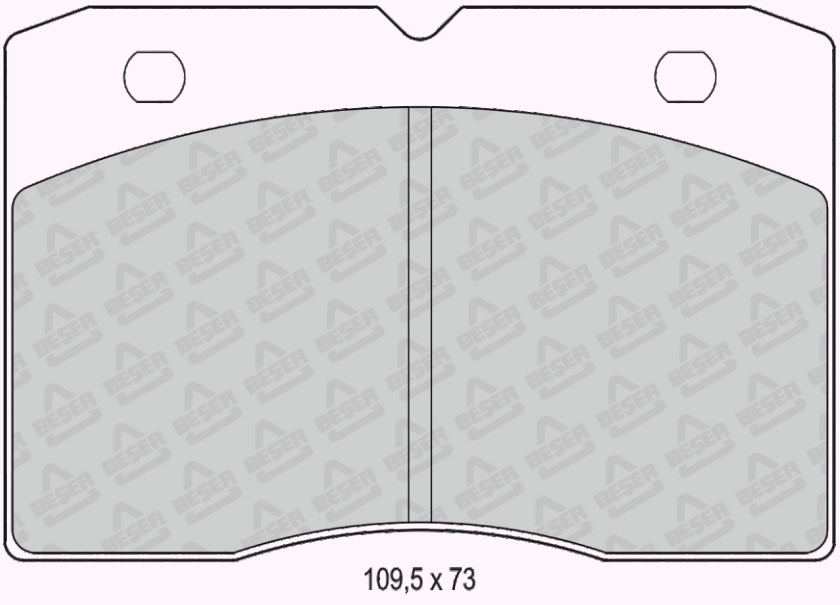

REFERENCE	T(mm)	REMARKS	MAKE	F/R	WVA No
3526	15,5	2 PADS WITH WEAR SENSOR (160 mm)	DAIMLER - JAGUAR - RENAULT	F	21110 20380

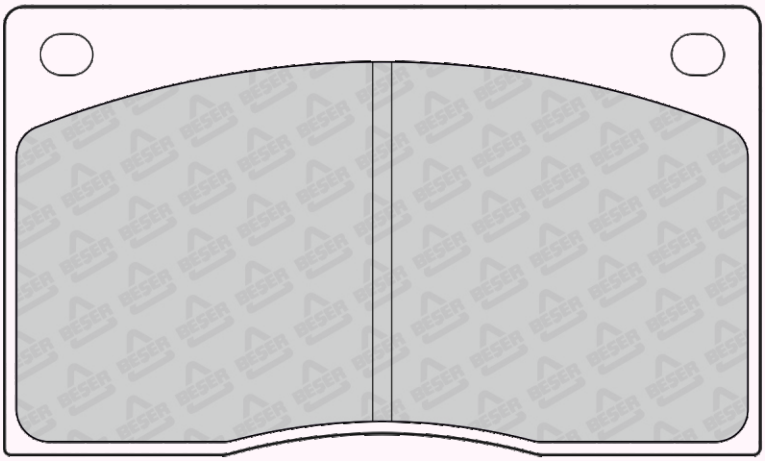

119,7 x 71
(NOT SCALE)

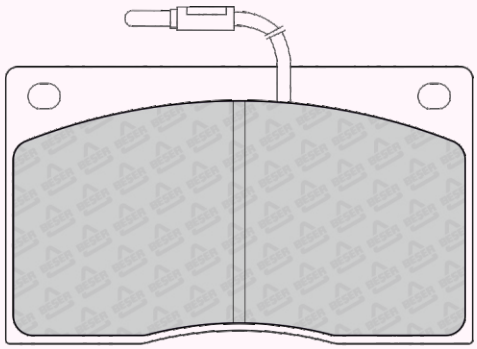

119,7 x 71
(NOT SCALE)

REFERENCE	T(mm)	REMARKS	MAKE	F/R	WVA No
3527	18,5	2 PADS WITH WEAR SENSOR	RENAULT	F	20488 20489 20570 20571

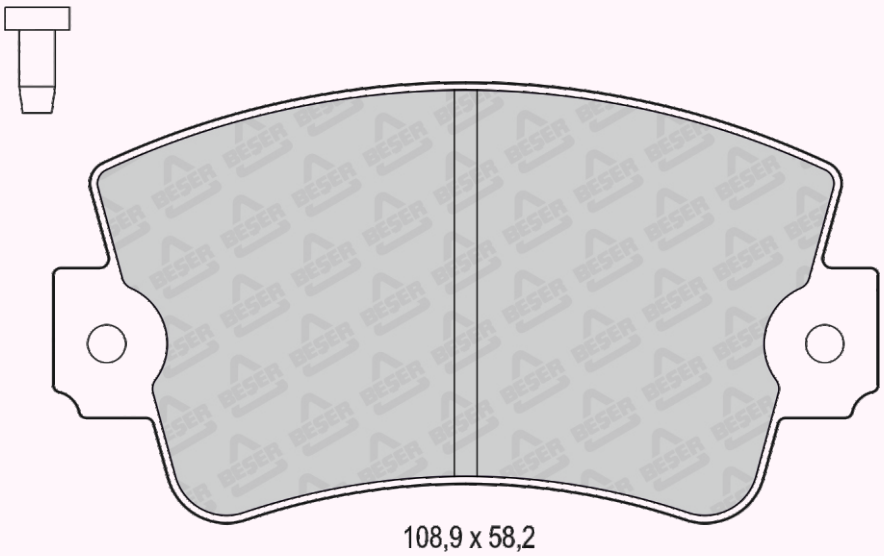

108,9 x 58,2

REFERENCE	T(mm)	REMARKS	MAKE	F/R	WVA No
3528	16,5	2 PADS WITH WEAR SENSOR (270 mm)	CITROEN - PEUGEOT	F	21430 21432

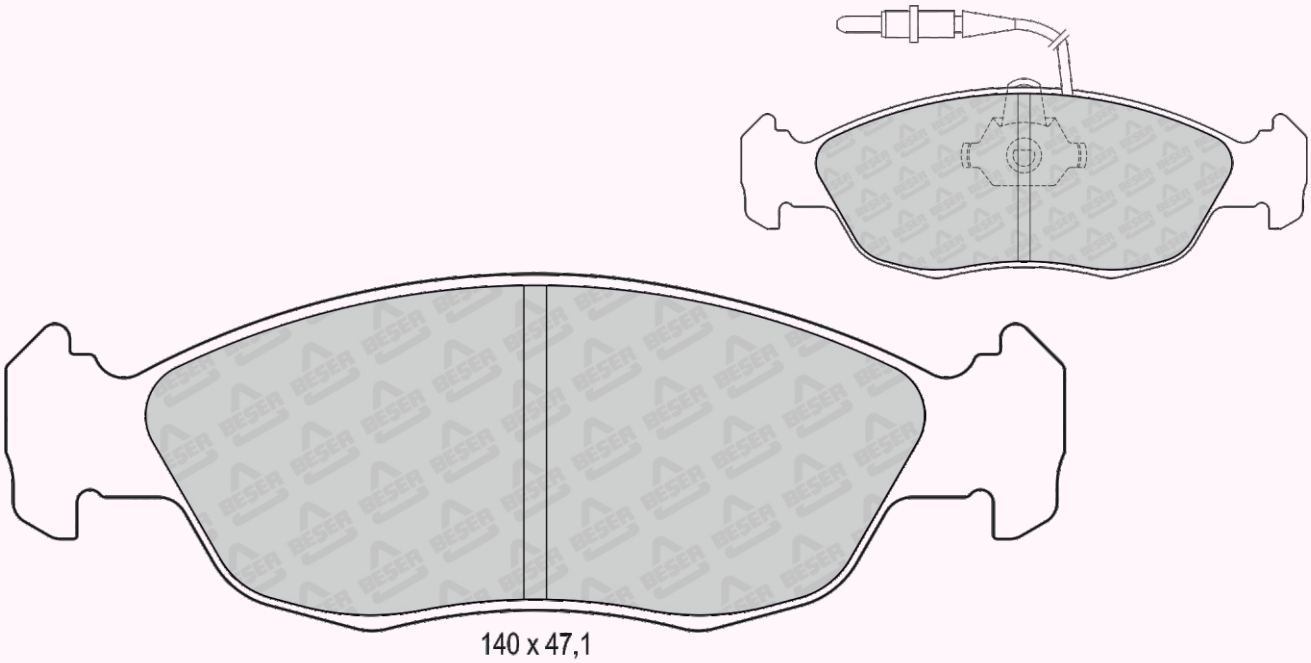

140 x 47,1
(NOT SCALE)

REFERENCE	T(mm)	REMARKS	MAKE	F/R	WVA No
3529	15	4 PADS PLAIN	AUDI - PEUGEOT - RENAULT SEAT - VW	R	20960 20961 23554

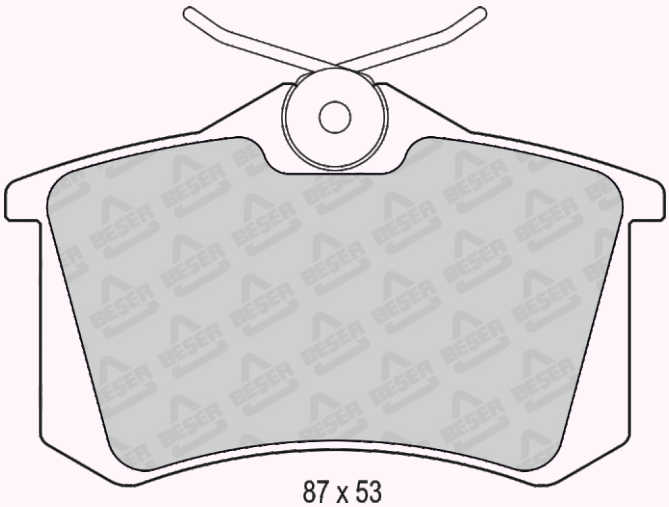

87 x 53

REFERENCE	T(mm)	REMARKS	MAKE	F/R	WVA No
3529/1	17	4 PADS WITH CHAMFERS	AUDI - CITROEN - DS FORD - HONGQI - PEUGEOT SEAT - SKODA - VW	R	23554

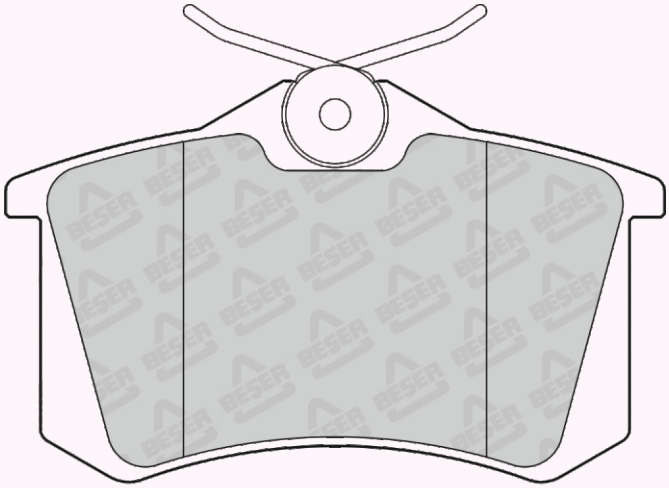

87 x 53

REFERENCE	T(mm)	REMARKS	MAKE	F/R	WVA No
3529/2	16	4 PADS WITH CHAMFERS	NISSAN-RENAULT	R	20960

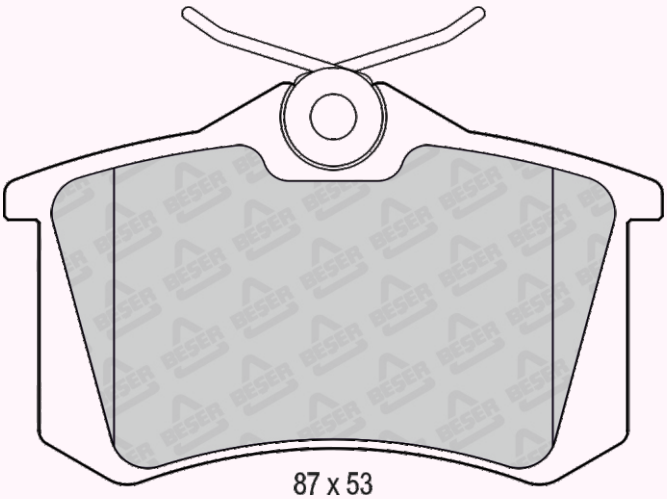

87 x 53

REFERENCE	T(mm)	REMARKS	MAKE	F/R	WVA No
3530	16,5	4 PADS PLAIN	GM	F	---

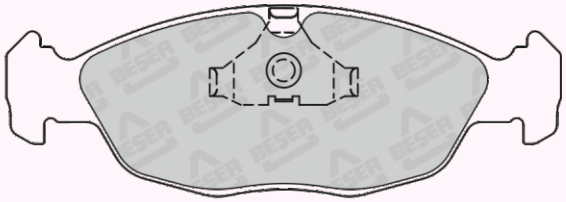

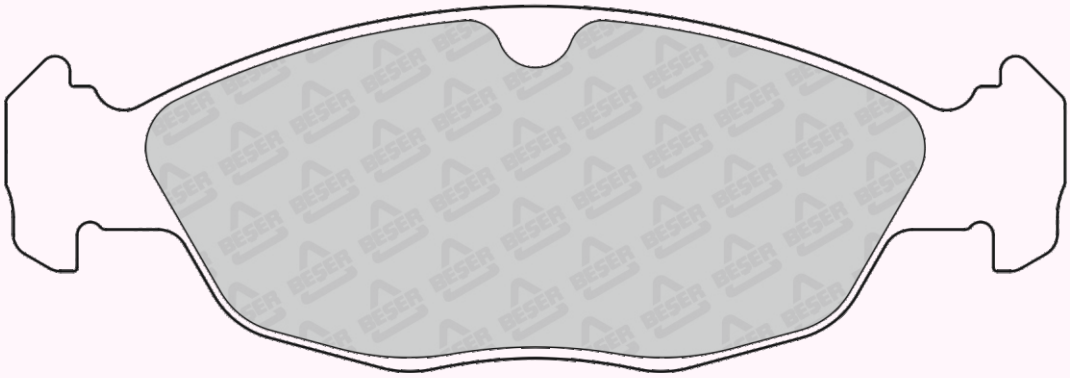

140 x 48,2

REFERENCE	T(mm)	REMARKS	MAKE	F/R	WVA No
3531	16	4 PADS PLAIN	AUDI - SEAT - VW	F	20168 20778

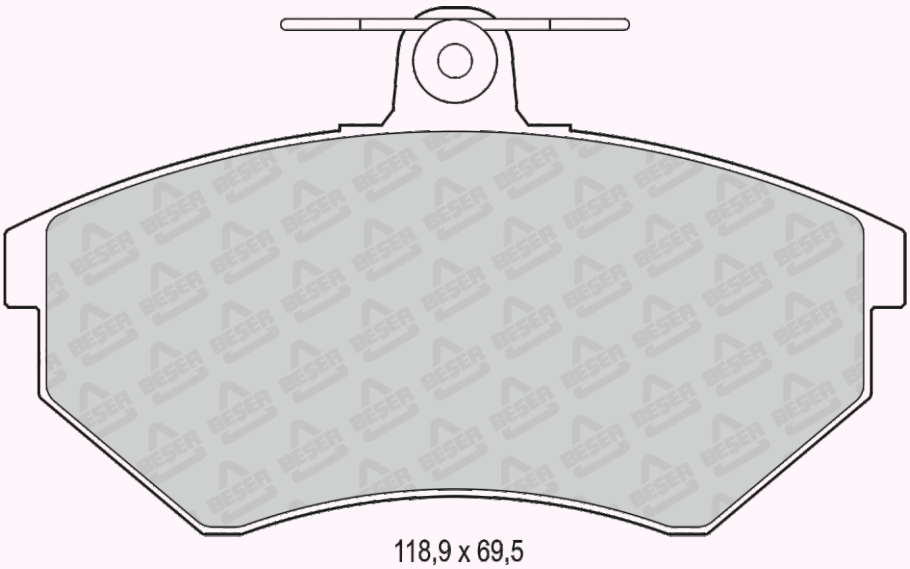

118,9 x 69,5

REFERENCE	T(mm)	REMARKS	MAKE	F/R	WVA No
3533	18,3	4 PADS PLAIN	VW	F	---

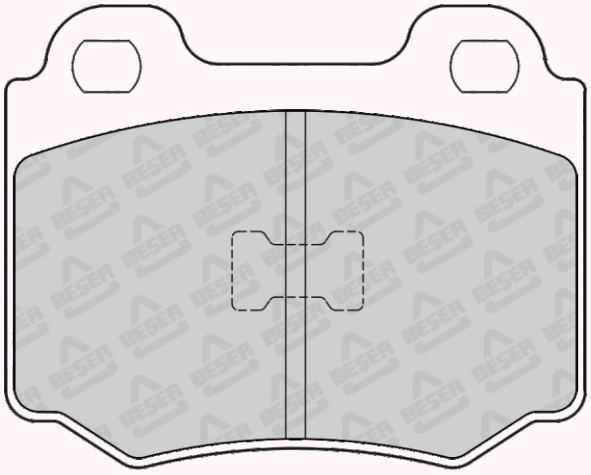

76,6 x 61

REFERENCE	T(mm)	REMARKS	MAKE	F/R	WVA No
3534	16,8	4 PADS PLAIN	FORD-OPEL	F	---

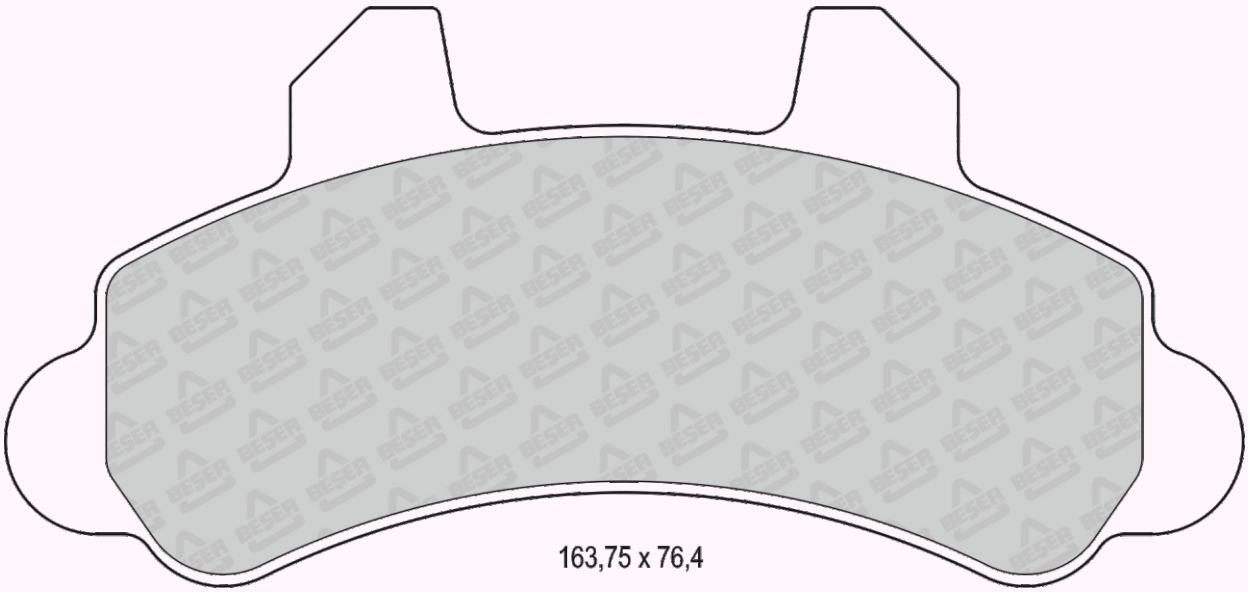

163,75 x 76,4

REFERENCE	T(mm)	REMARKS	MAKE	F/R	WVA No
3535	16	4 PADS PLAIN	FORD-OPEL	F	---

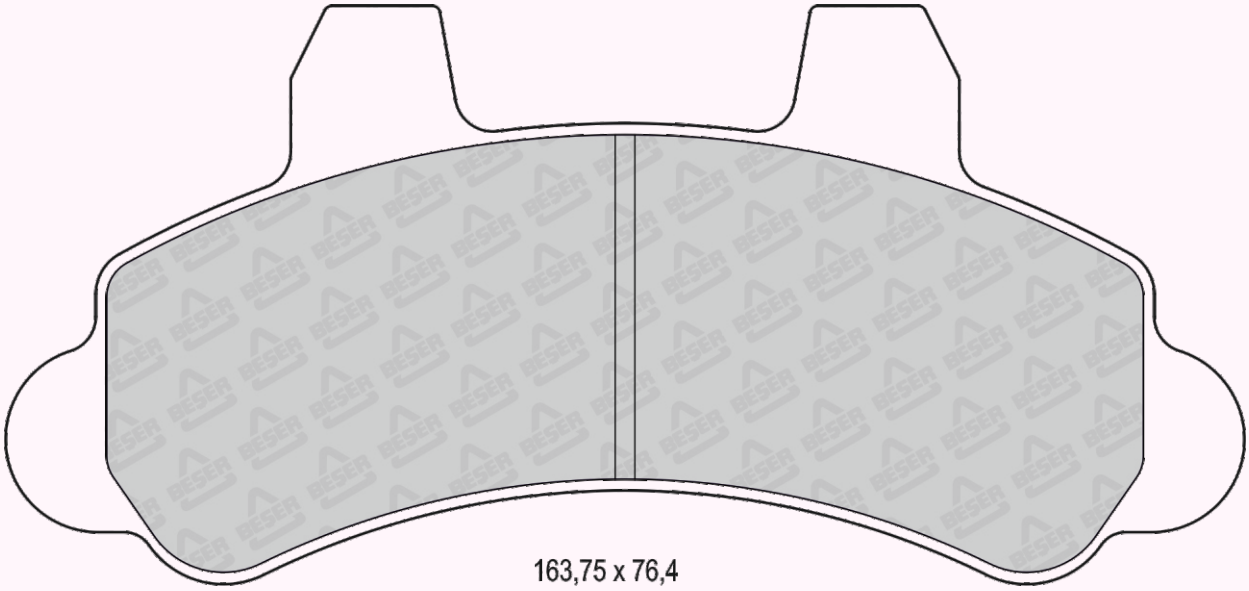

REFERENCE	T(mm)	REMARKS	MAKE	F/R	WVA No
3536	16,4	4 PADS PLAIN	ALFA ROMEO - AUDI FIAT - LANCIA	R	20598 21143 20638 21144 20668 21150 21030 21151

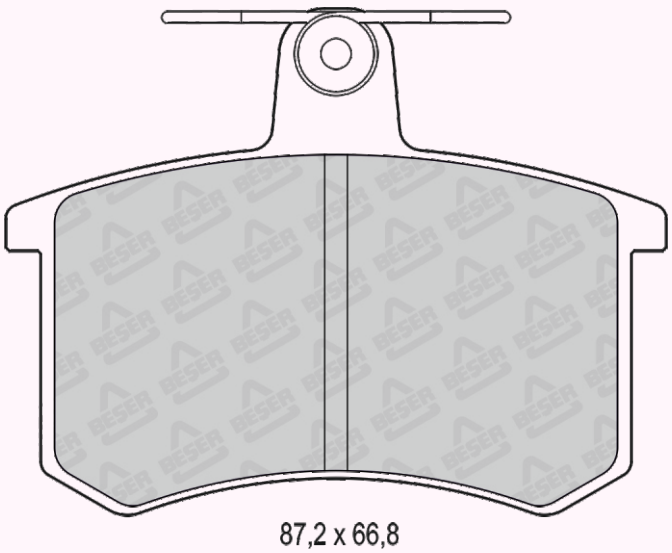

REFERENCE	T(mm)	REMARKS	MAKE	F/R	WVA No
3537	17	4 PADS PLAIN	RENAULT	F	20706 20947 29947

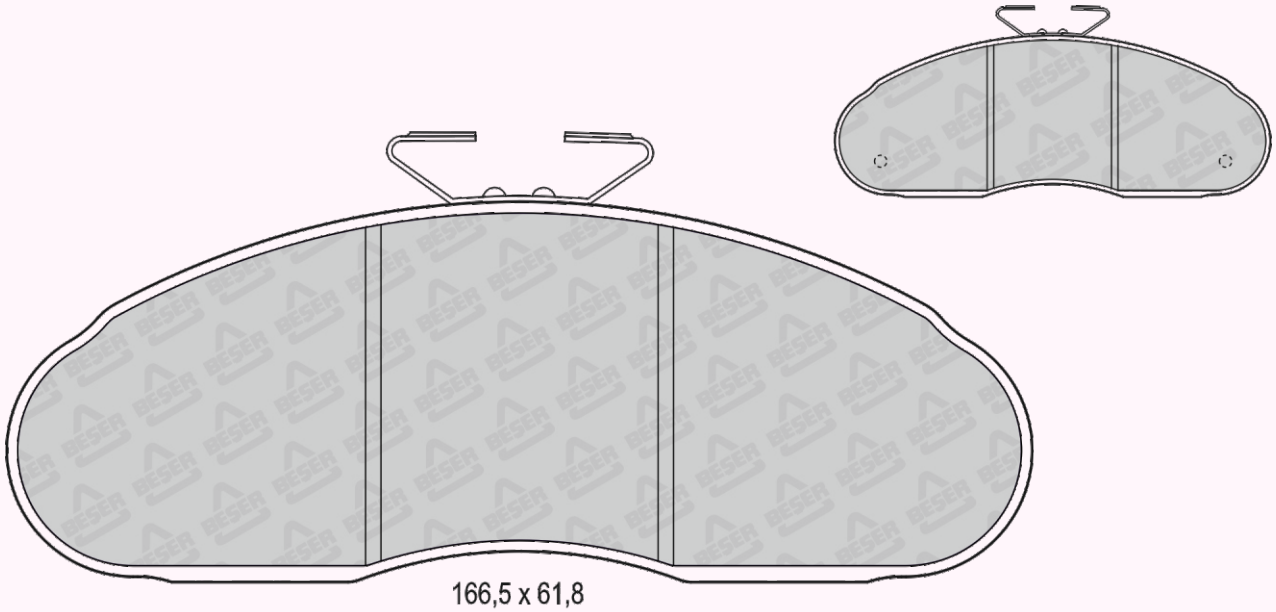

166,5 x 61,8
(NOT SCALE)

REFERENCE	T(mm)	REMARKS	MAKE	F/R	WVA No
3538	19,5	4 PADS PLAIN	SEAT - VW	F	21865 21866 21867 21868

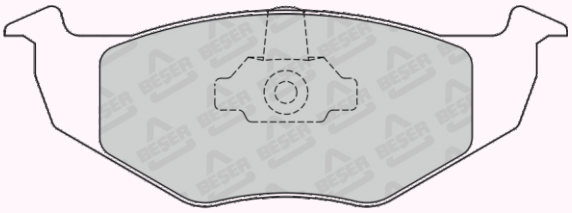

141,6 x 51,1
(NOT SCALE)

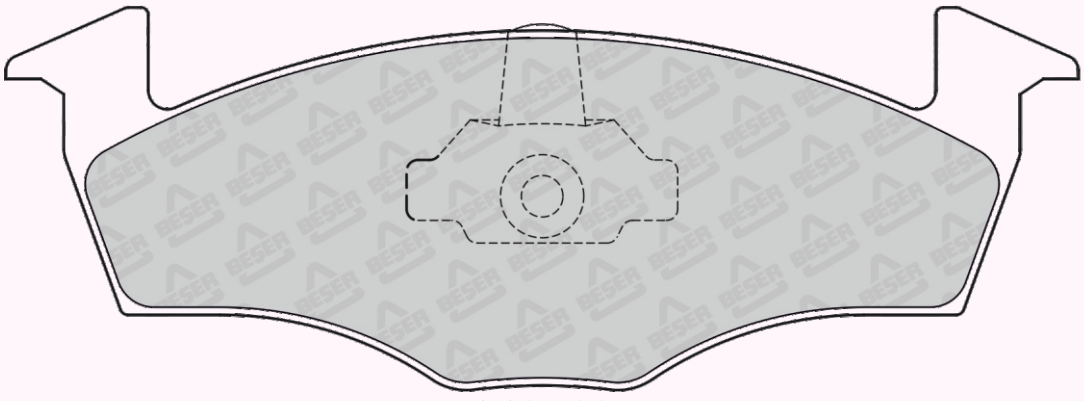

141,6 x 50,6

REFERENCE	T(mm)	REMARKS	MAKE	F/R	WVA No
3539	18	2 PADS WITH WEAR SENSOR (280mm)	DAEWOO - RENAULT	F	20916 21388 20917 21869 20919 21888

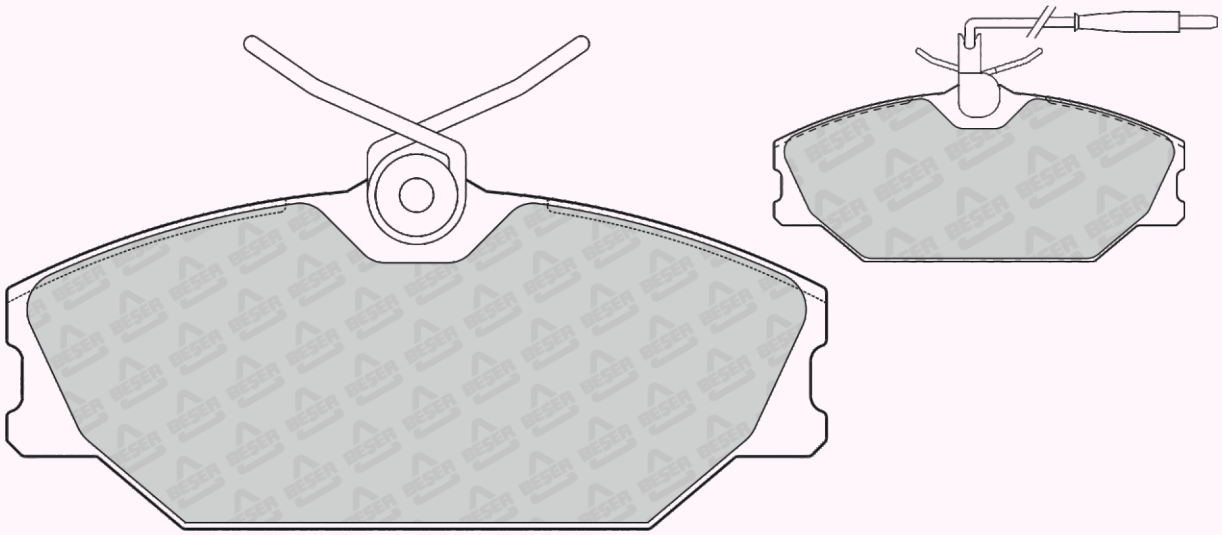

128,75 x 55,8
(NOT SCALE)

REFERENCE	T(mm)	REMARKS	MAKE	F/R	WVA No
3539/1	18,5	4 PADS PLAIN	DAEWOO - RENAULT	F	23172

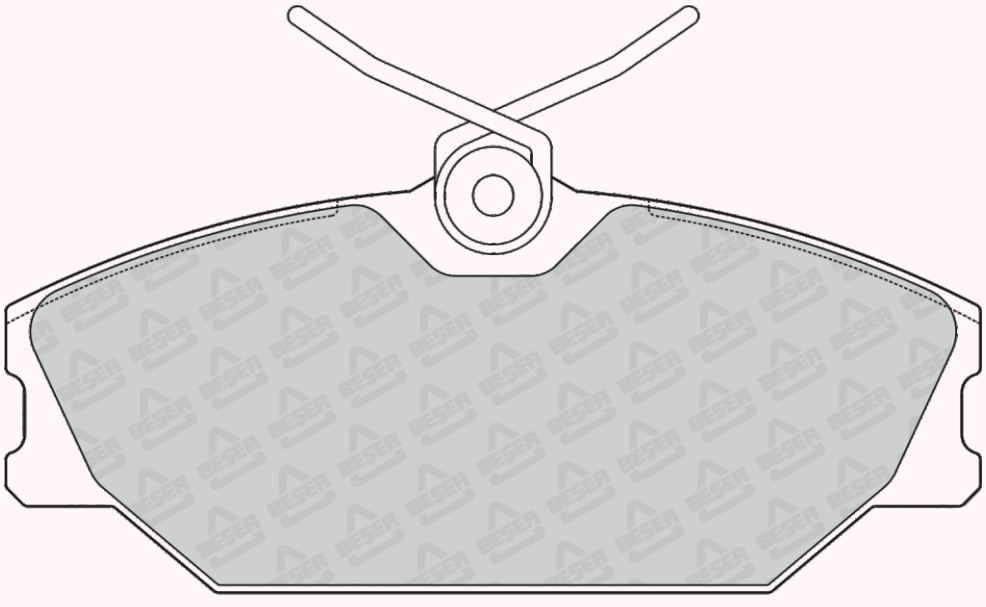

128,75 x 55,8

REFERENCE	T(mm)	REMARKS	MAKE	F/R	WVA No
3540	16,5	2 PADS WITH WEAR SENSOR (280mm)	FIAT	F	21193

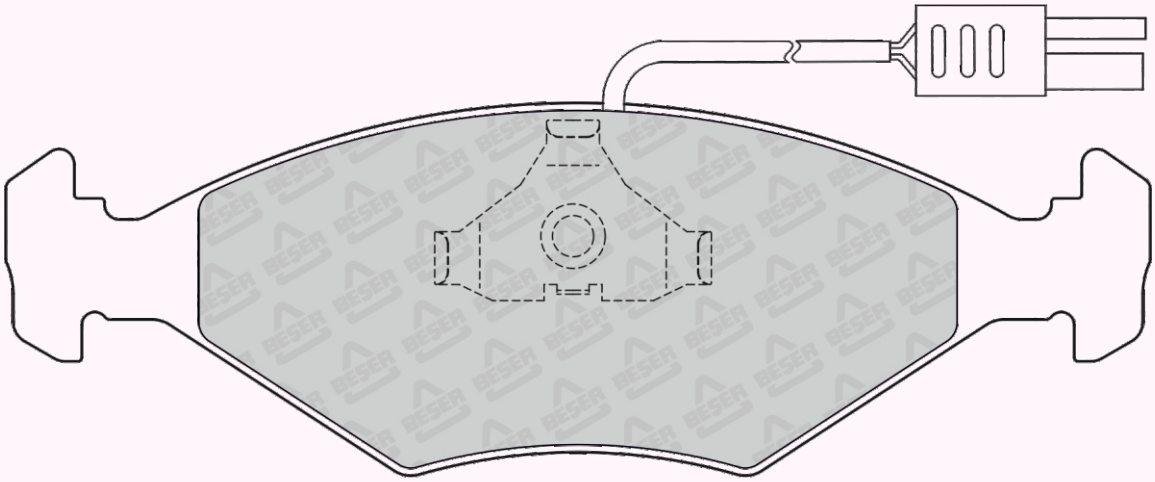

151,3 x 49,2

REFERENCE	T(mm)	REMARKS	MAKE	F/R	WVA No
3541	16,8	2 PADS WITH WEAR SENSOR	FIAT	F	---

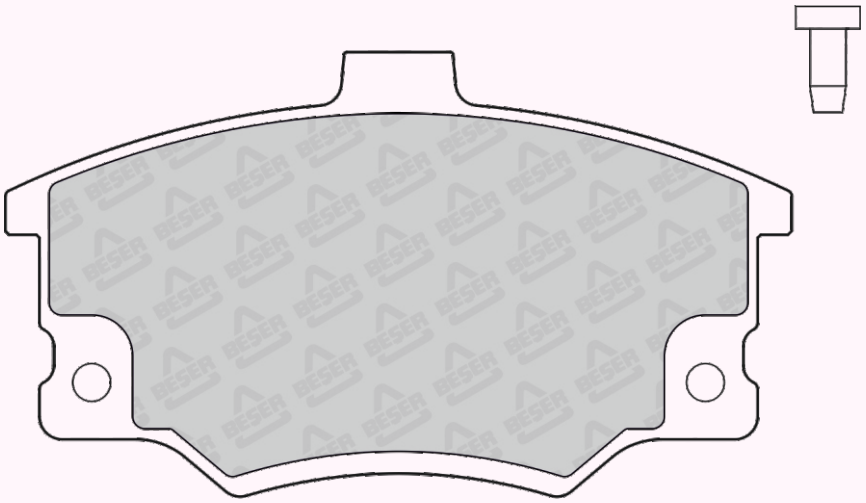

103,8 x 61,6

REFERENCE	T(mm)	REMARKS	MAKE	F/R	WVA No
3542	15	4 PADS WITH PLUGS	CITROEN - DACIA PEUGEOT - RENAULT TALBOT	F	20140

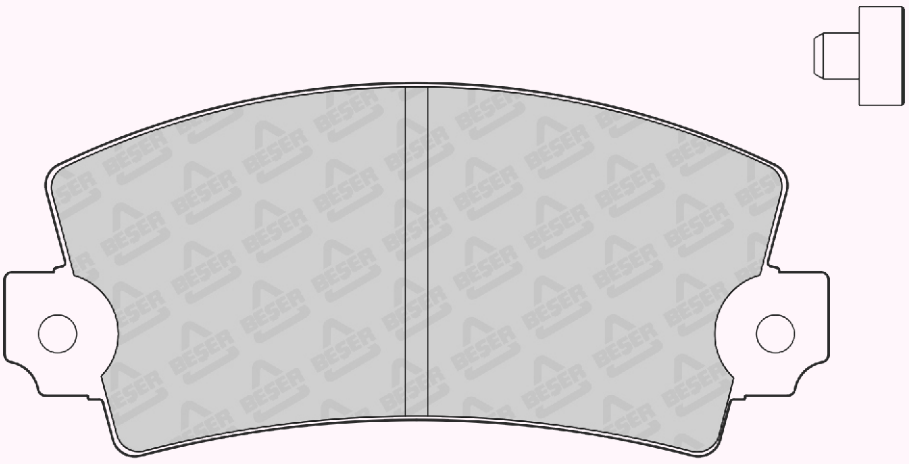

108,8 x 49,3

REFERENCE	T(mm)	REMARKS	MAKE	F/R	WVA No
3543	19,8	2 PADS WITH WEAR SENSOR (210mm)	CITROEN-FIAT PEUGEOT-TALBOT	F	21066 21205 21206

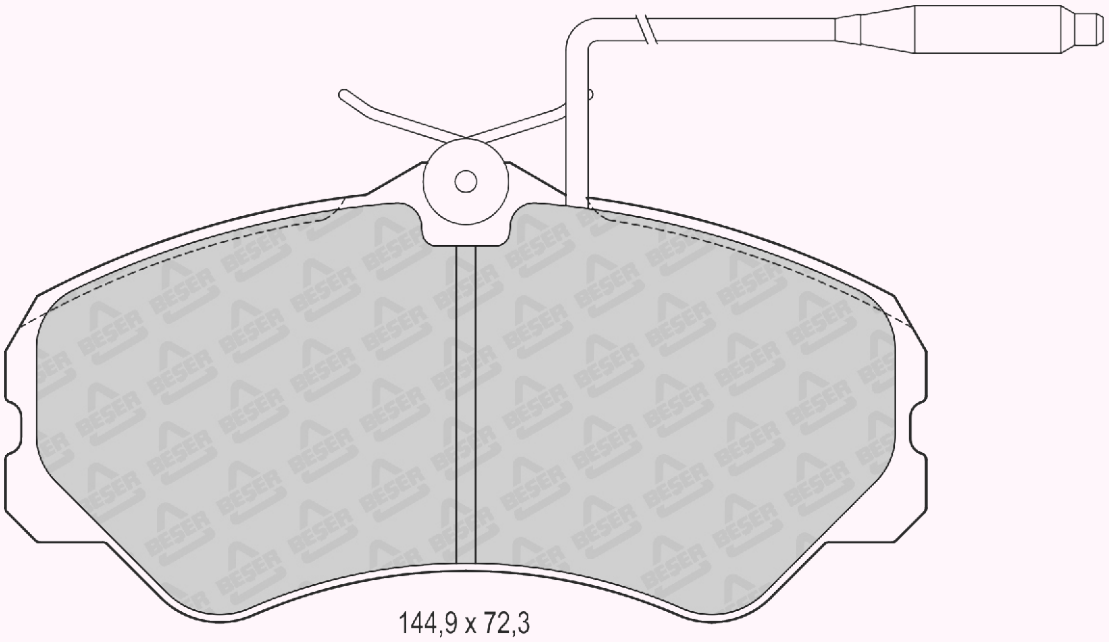

144,9 x 72,3

REFERENCE	T(mm)	REMARKS	MAKE	F/R	WVA No
3544	17 12,5	2 PADS INNER & 2 PADS OUTER	FORD	F	---

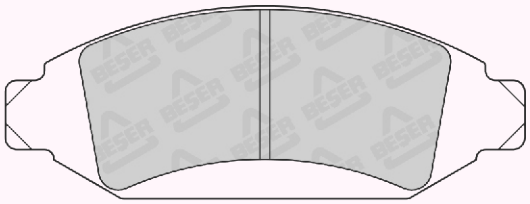

157,5 x 58,5
(NOT SCALE)

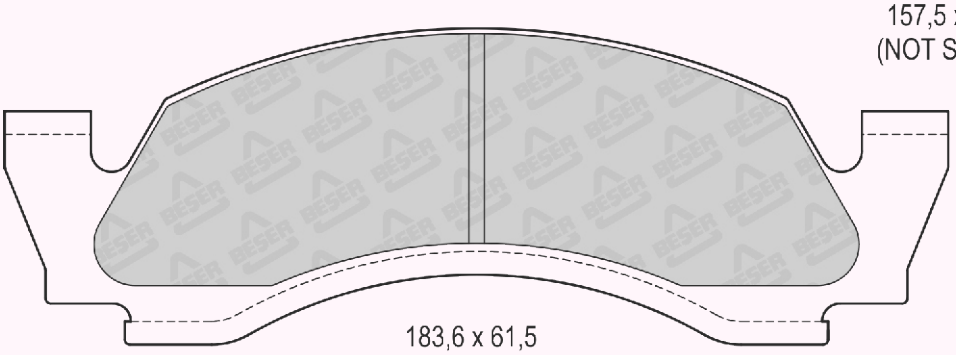

183,6 x 61,5
(NOT SCALE)

REFERENCE	T(mm)	REMARKS	MAKE	F/R	WVA No
3545	14,7	4 PADS PLAIN	FORD-KIA	R	21832

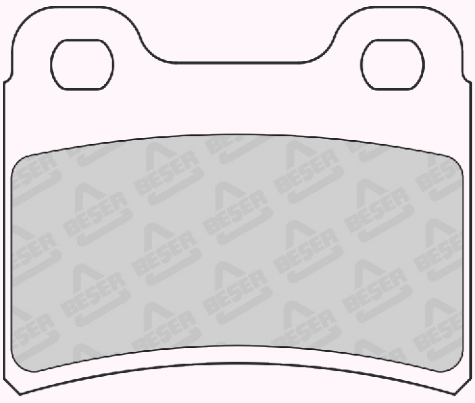

61,7 x 51,1

REFERENCE	T(mm)	REMARKS	MAKE	F/R	WVA No
3546	18,5	2 PADS WITH WEAR SENSOR (195mm)	DAEWOO - RENAULT	F	20916 20921 20917 21920 20918 21921 20919 21265 20920 21388

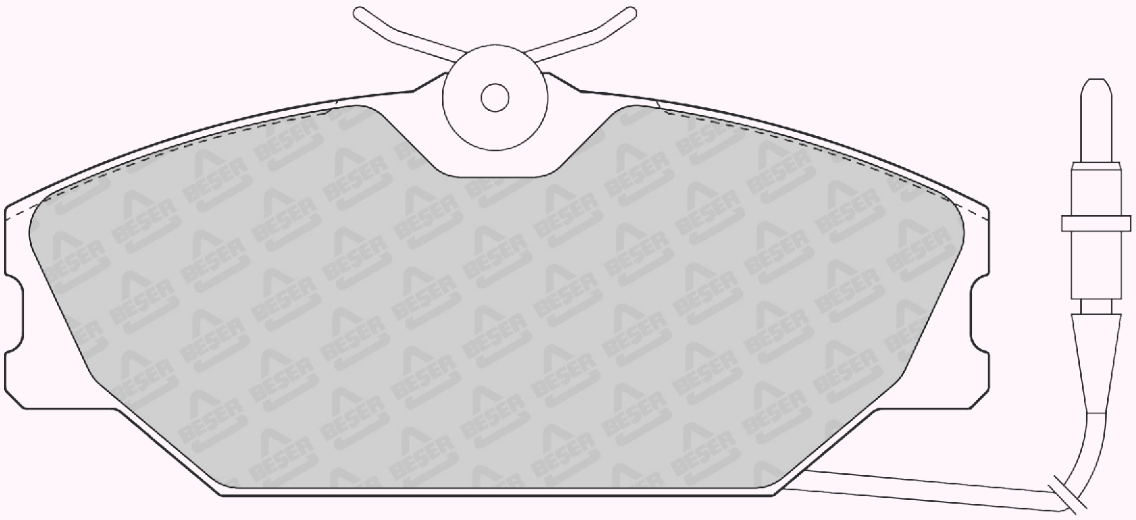

130 x 55,8

REFERENCE	T(mm)	REMARKS	MAKE	F/R	WVA No
3547	17,5	4 PADS PLAIN, 2 SPRING	GM	F	---

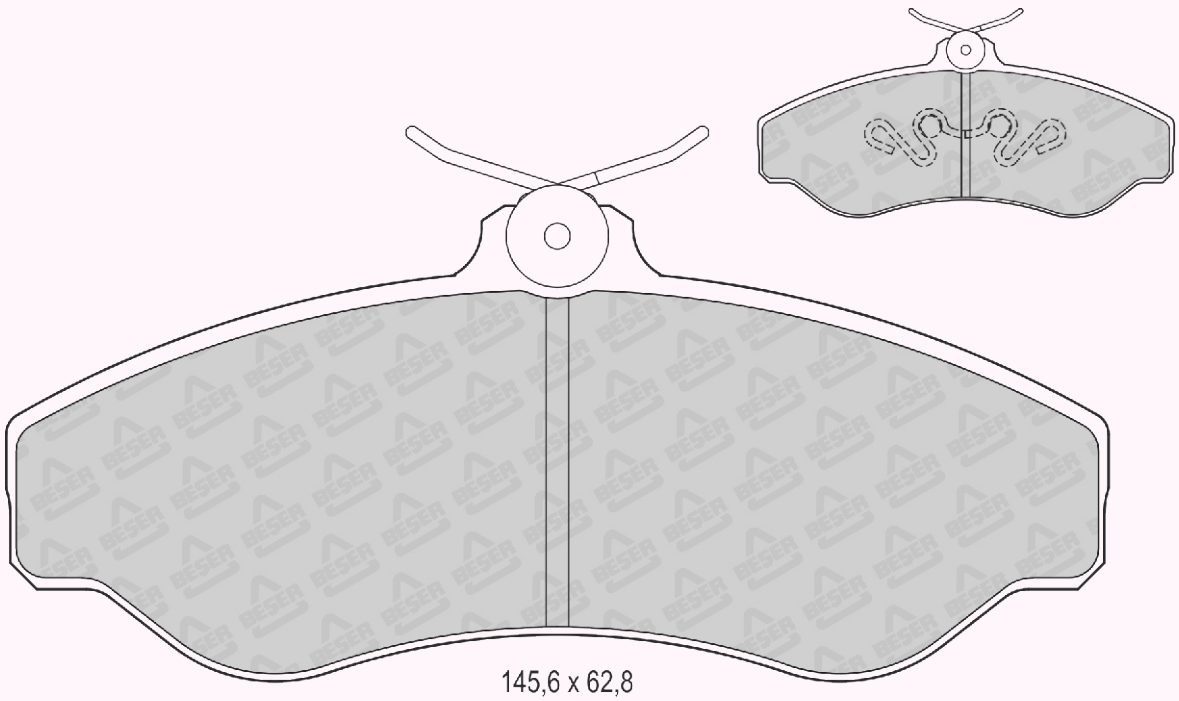

145,6 x 62,8

REFERENCE	T(mm)	REMARKS	MAKE	F/R	WVA No
3548	18	2 PADS WITH WEAR SENSOR (280mm)	FORD	F	20907 21625 20908 23227 20909 23228

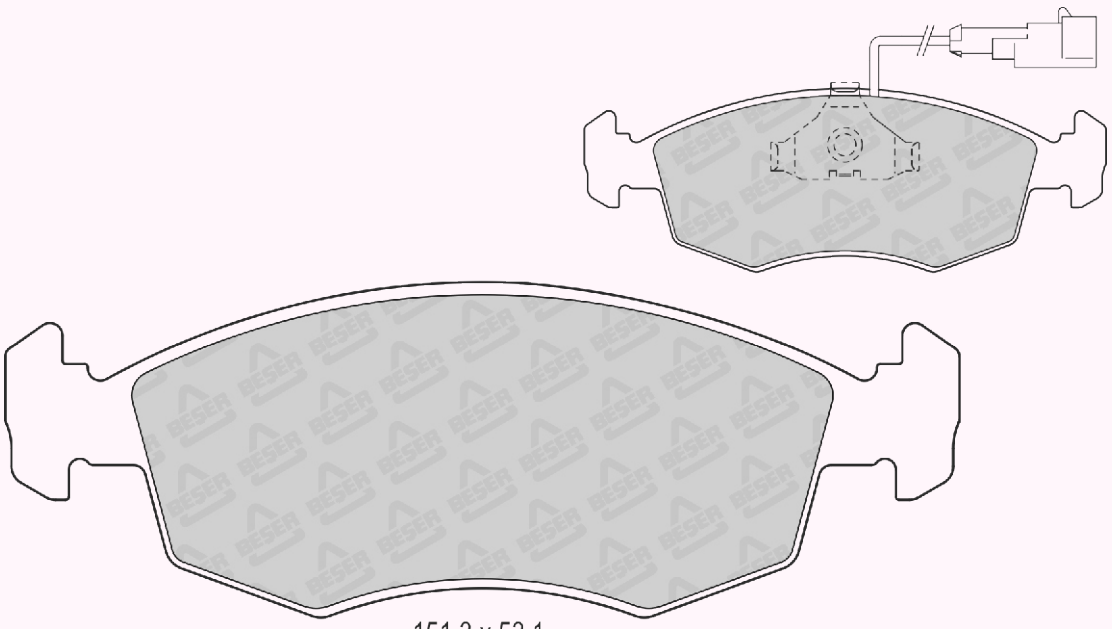

151,3 x 53,1
(NOT SCALE)

REFERENCE	T(mm)	REMARKS	MAKE	F/R	WVA No
3549	18	4 PADS W/O WEAR SENSOR	FORD	F	20907 20908 20909 21257

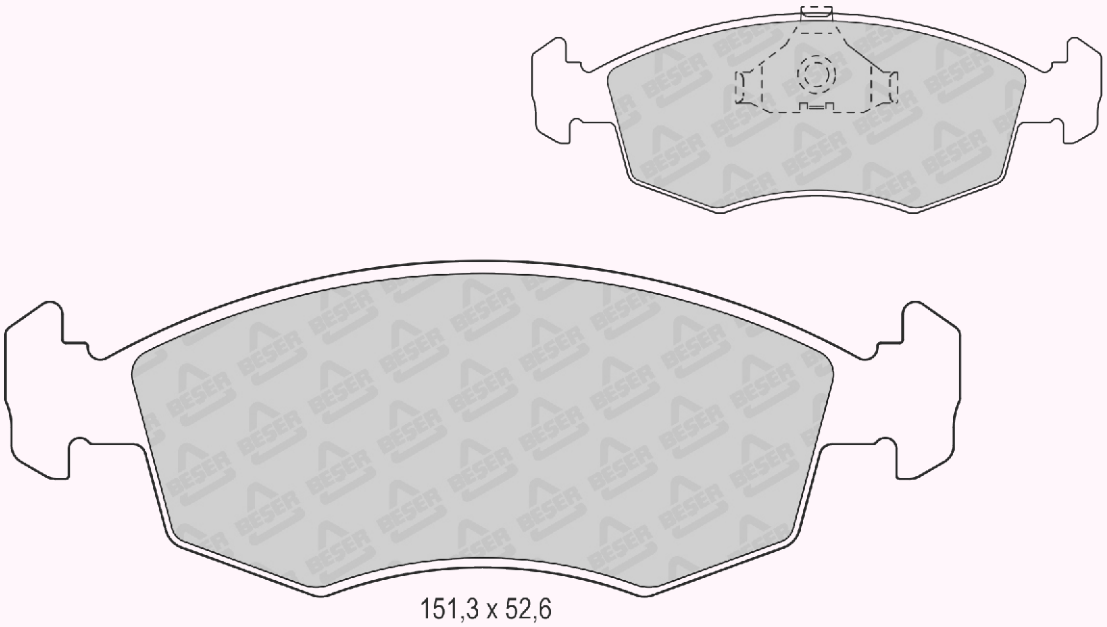

151,3 x 52,6
(NOT SCALE)

REFERENCE	T(mm)	REMARKS	MAKE	F/R	WVA No
3550	15,5	4 PADS PLAIN	MERCEDES BENZ	R	20687 20758

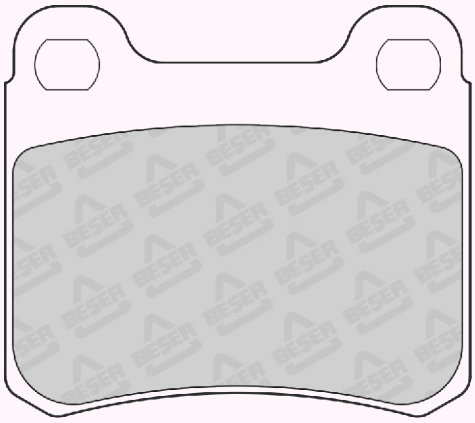

61,3 x 54,2

REFERENCE	T(mm)	REMARKS	MAKE	F/R	WVA No
3551	19,4	4 PADS PLAIN	SEAT - VW	F	20168

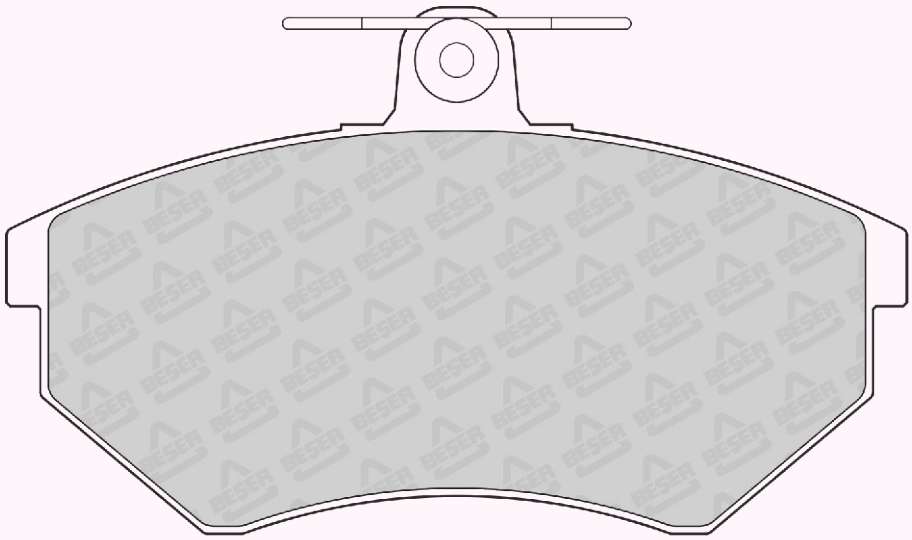

118,9 x 69,5

REFERENCE	T(mm)	REMARKS	MAKE	F/R	WVA No
3552	17,4	4 PADS PLAIN	LADA-ZAZ	F	23671

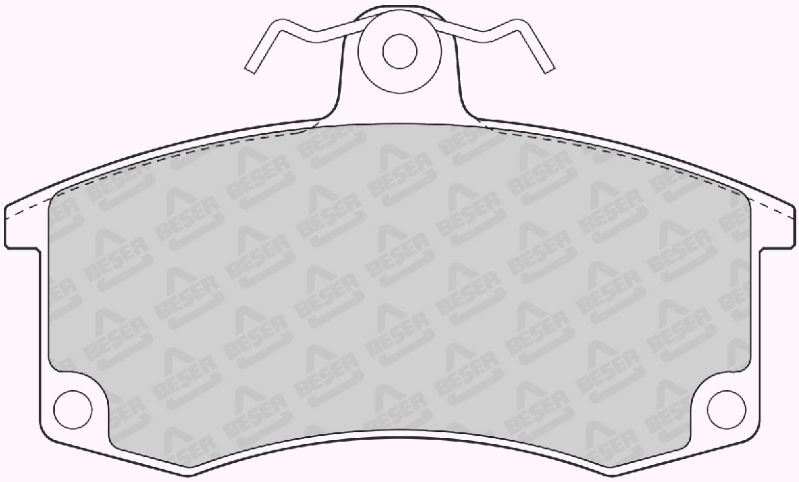

104,3 x 62,1

REFERENCE	T(mm)	REMARKS	MAKE	F/R	WVA No
3553	19	4 PADS PLAIN	VW	F	21479 23445

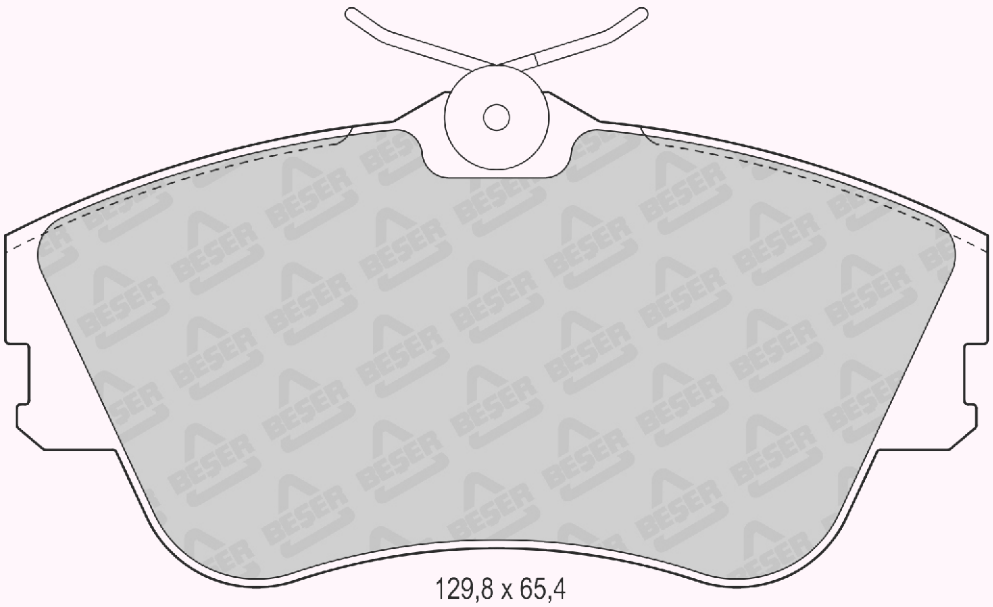

129,8 x 65,4

REFERENCE	T(mm)	REMARKS	MAKE	F/R	WVA No
3553/1	19	1 PAD WITH WEAR SENSOR	HONDA - VW	F	21479

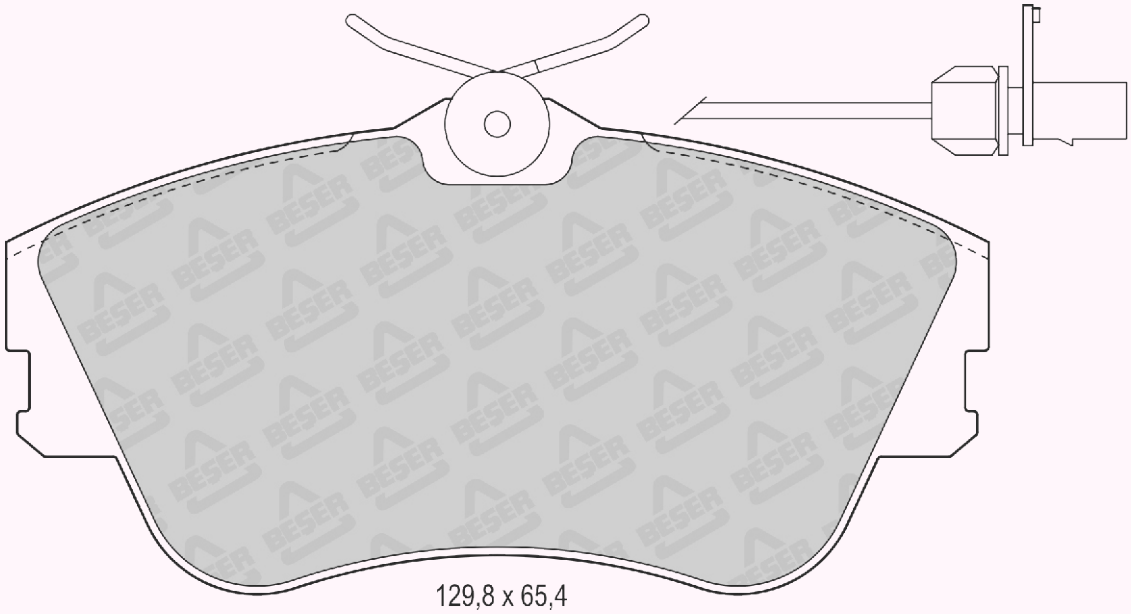

129,8 x 65,4

REFERENCE	T(mm)	REMARKS	MAKE	F/R	WVA No
3554	17,5	2 PADS WITH WEAR SENSOR	HOLDEN - TOYOTA	F	21601 21602 21603

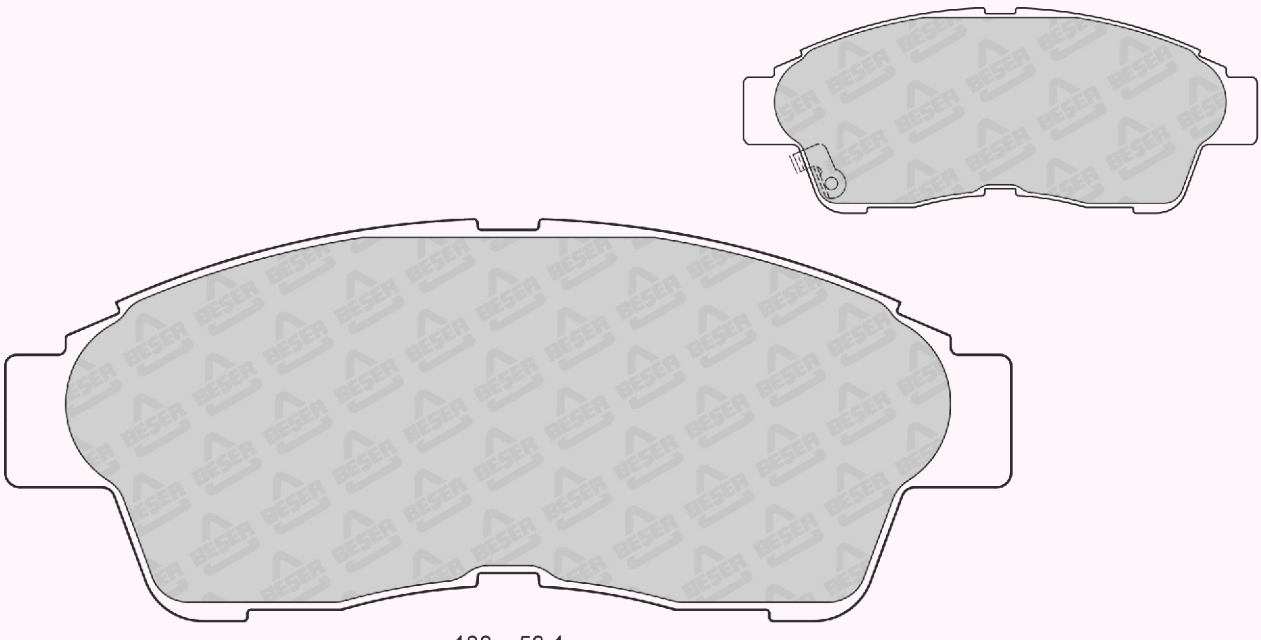

133 x 53,1

REFERENCE	T(mm)	REMARKS	MAKE	F/R	WVA No
3555	18	4 PADS WITH WEAR SENOR (320mm) & (360mm)	CITROEN	F	21400 21460 21613

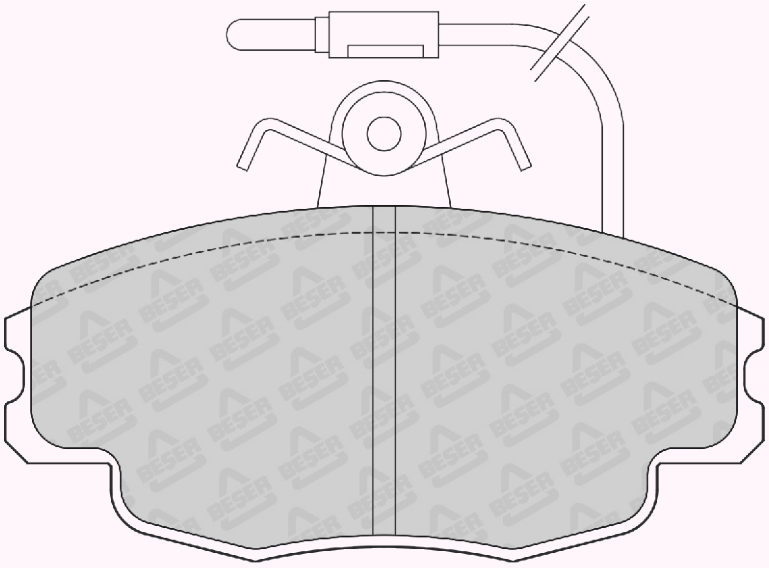

100 x 63,5

REFERENCE	T(mm)	REMARKS	MAKE	F/R	WVA No
3556	17,75	4 PADS WITH WEAR SENSOR (350mm)	CITROEN	F	21614 21615 21616

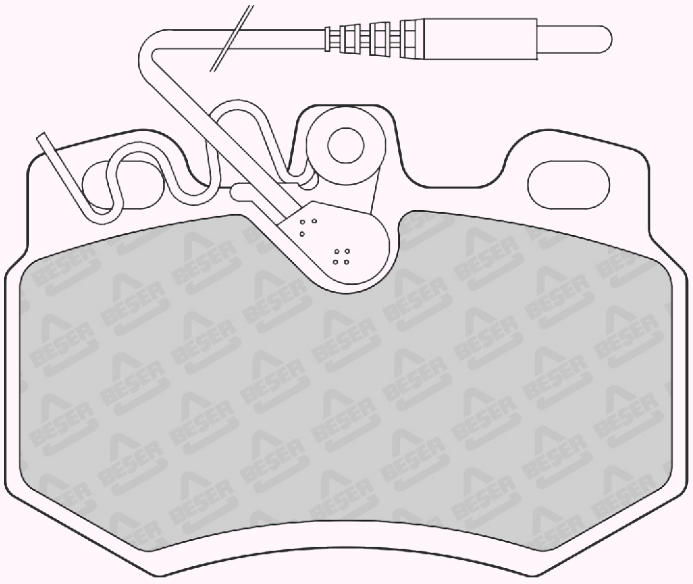

89,9 x 62,9

REFERENCE	T(mm)	REMARKS	MAKE	F/R	WVA No
3557	19	4 PADS WITH WEAR SENSOR (280/380mm)	CITROEN - PEUGEOT	F	21369

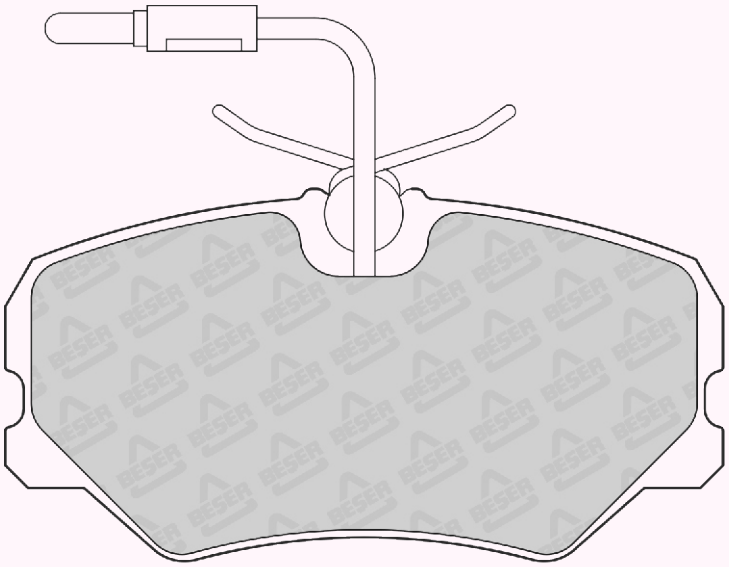

94,8 x 49

REFERENCE	T(mm)	REMARKS	MAKE	F/R	WVA No
3558	18	2 PADS INNER & 2 PADS OUTER	FORD	F	21394 21395 21396

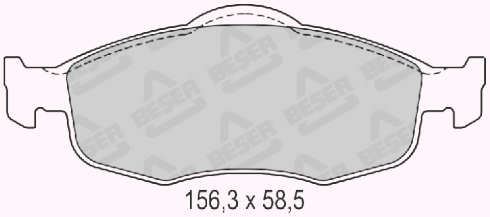

156,3 x 58,5
(NOT SCALE)

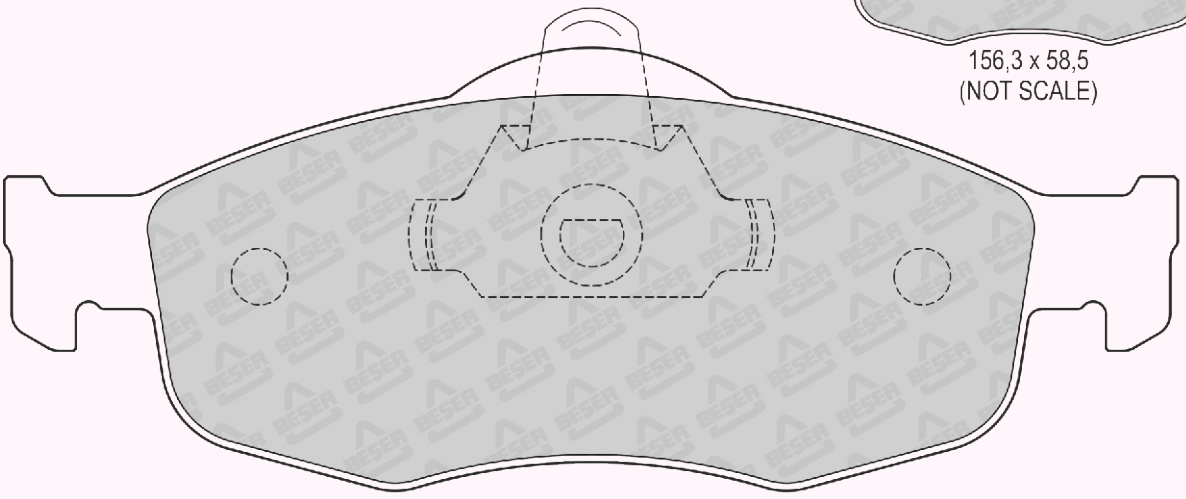

155,1 x 58,5

REFERENCE	T(mm)	REMARKS	MAKE	F/R	WVA No
3559	19,7	2 PADS WITH WEAR SENSOR (200mm)	CITROEN-FIAT PEUGEOT	F	21629 21630 21799 21800

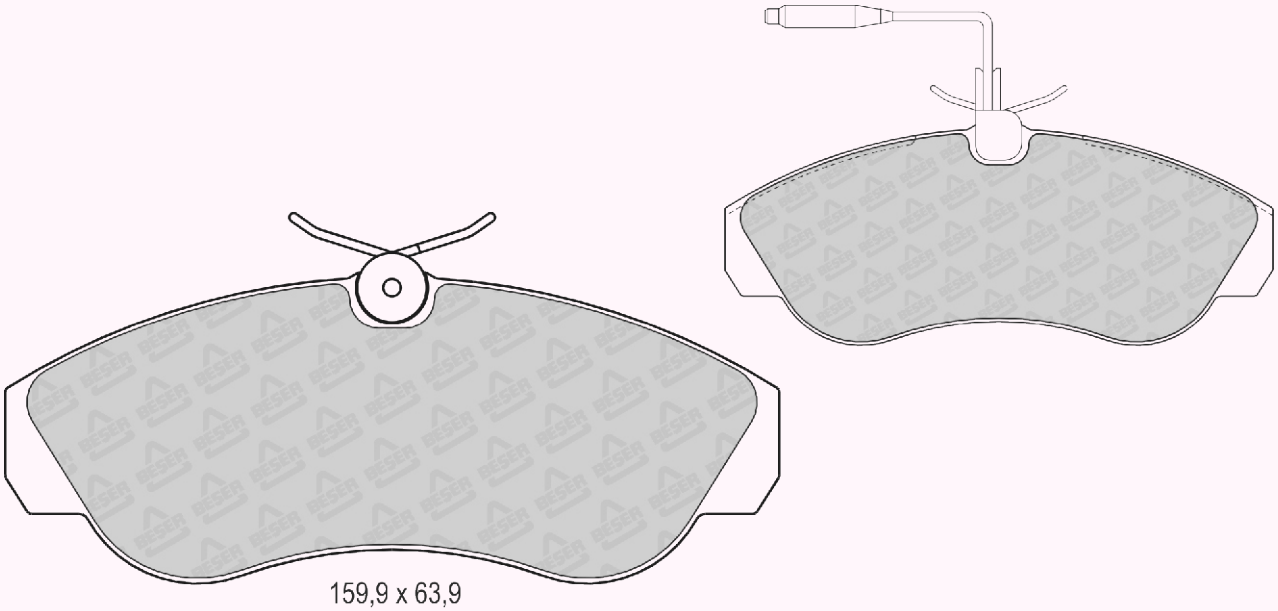

159,9 x 63,9
(NOT SCALE)

REFERENCE	T(mm)	REMARKS	MAKE	F/R	WVA No
3560	15	4 PADS WITH WEAR SENSOR	TOYOTA-VW	F	21679 21680 21681

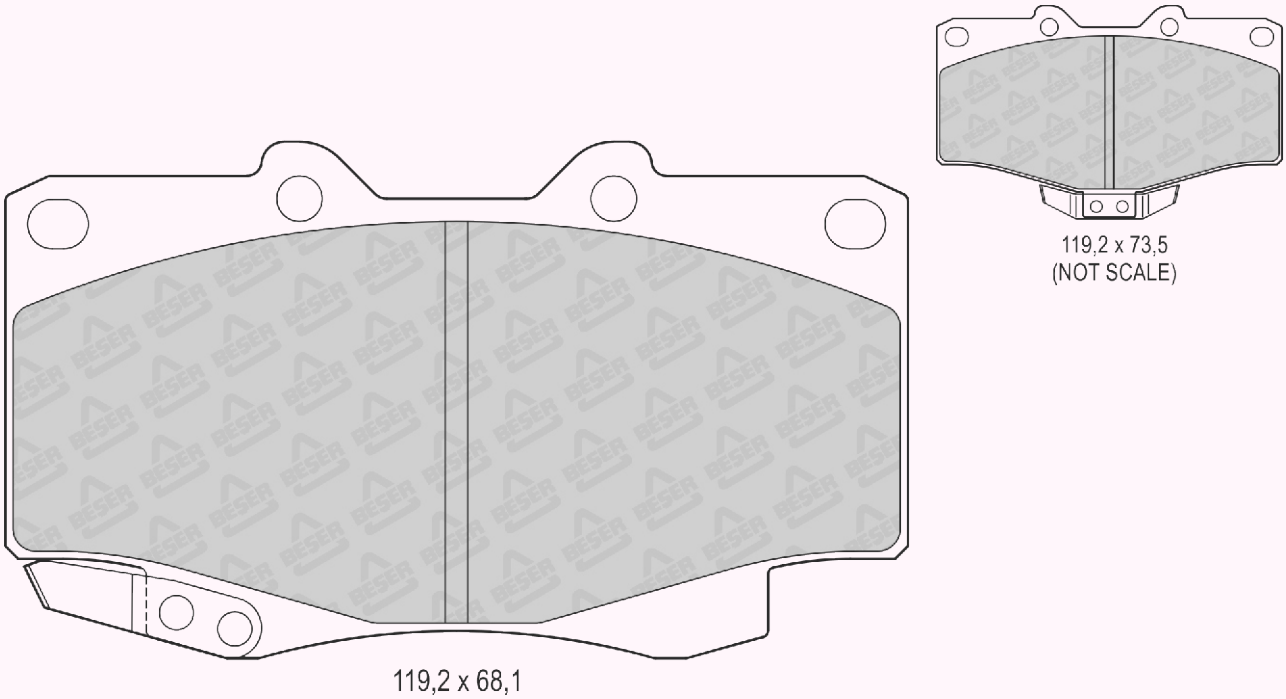

119,2 x 73,5
(NOT SCALE)

119,2 x 68,1

REFERENCE	T(mm)	REMARKS	MAKE	F/R	WVA No
3561	15,5	4 PADS PLAIN	VW	F	---

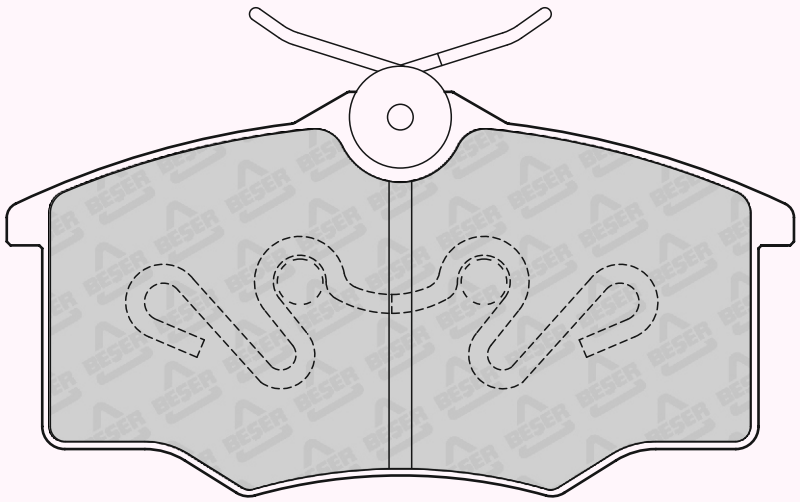

104,1 x 53,6

REFERENCE	T(mm)	REMARKS	MAKE	F/R	WVA No
3562	17,5	4 PADS WITH (S1 - 4 Pcs. S2 - 2 Pcs.)	NISSAN	F	21546

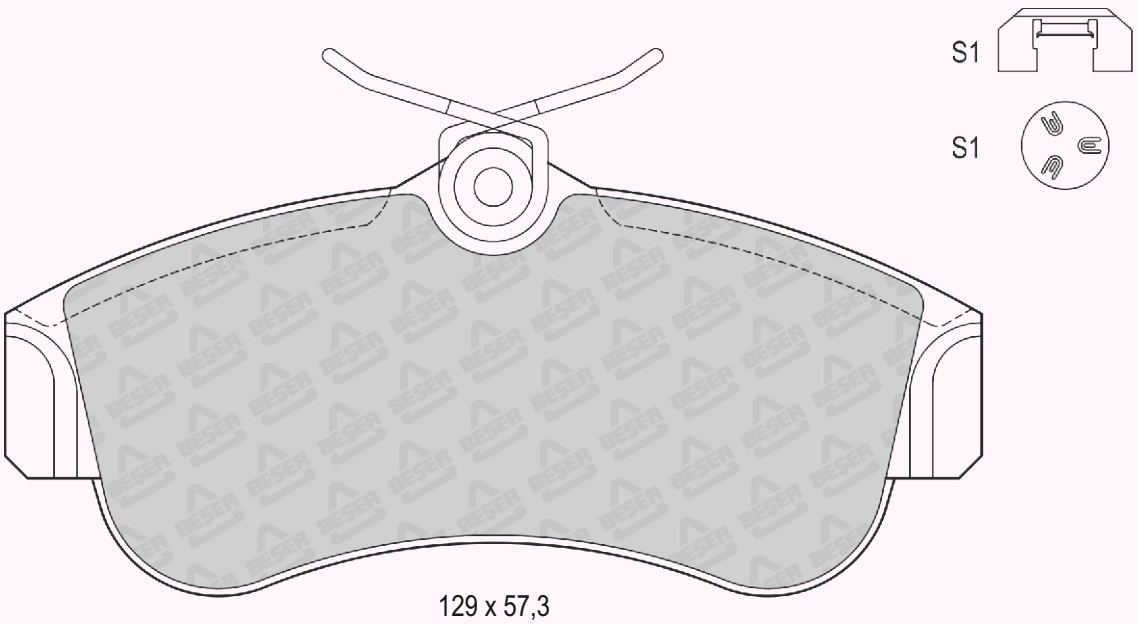

129 x 57,3

REFERENCE	T(mm)	REMARKS	MAKE	F/R	WVA No
3563	17	4 PADS PLAIN	BMW	F	21292 21924 21293 21925 21643 21926 21644

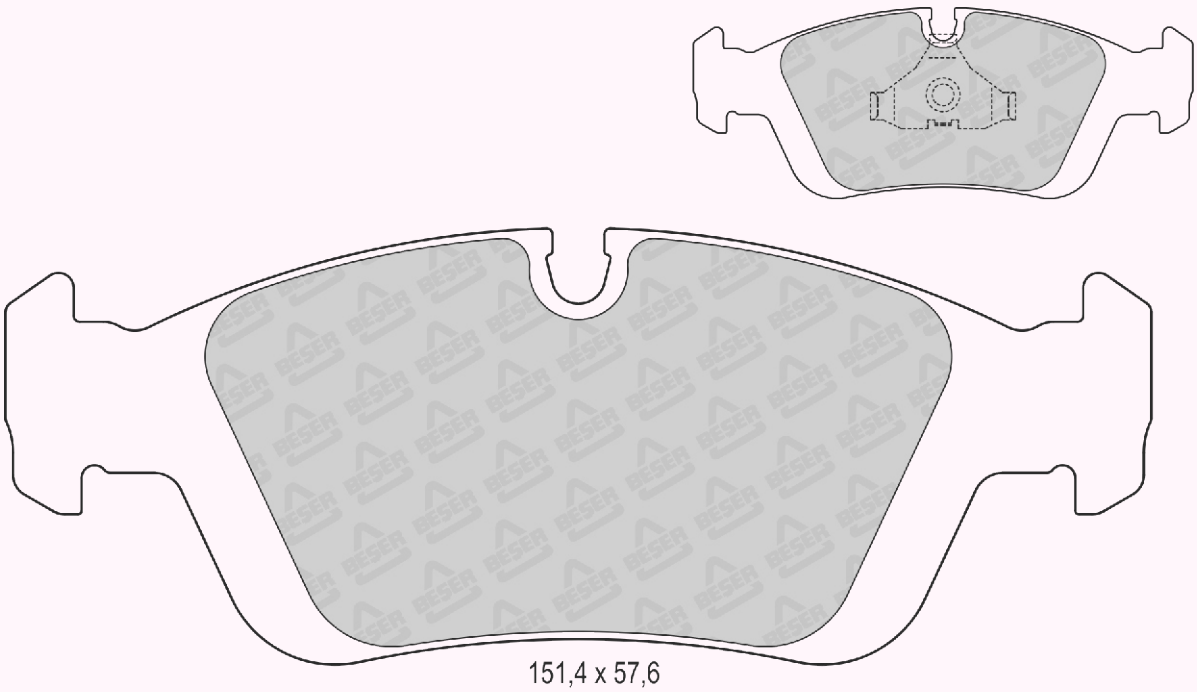

REFERENCE	T(mm)	REMARKS	MAKE	F/R	WVA No
3564	20,3	4 PADS PLAIN	BMW	F	20968 21064 21685

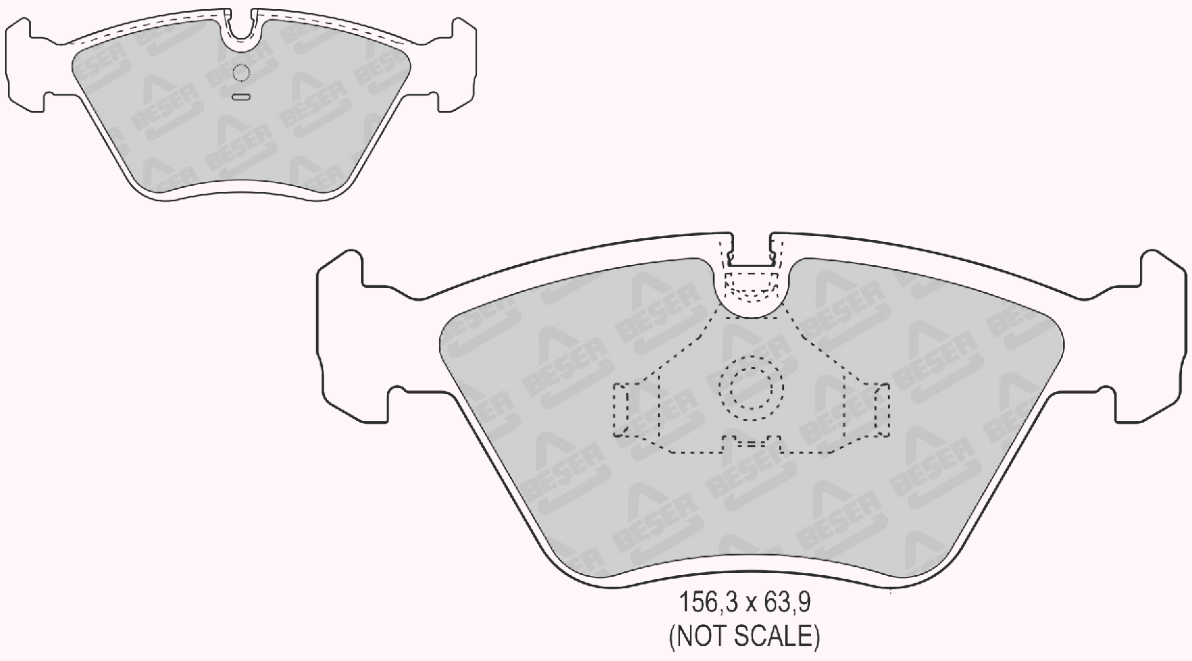

REFERENCE	T(mm)	REMARKS	MAKE	F/R	WVA No
3564/1	20,3	4 PADS PLAIN	BMW-WIESMANN	F	21676 21677

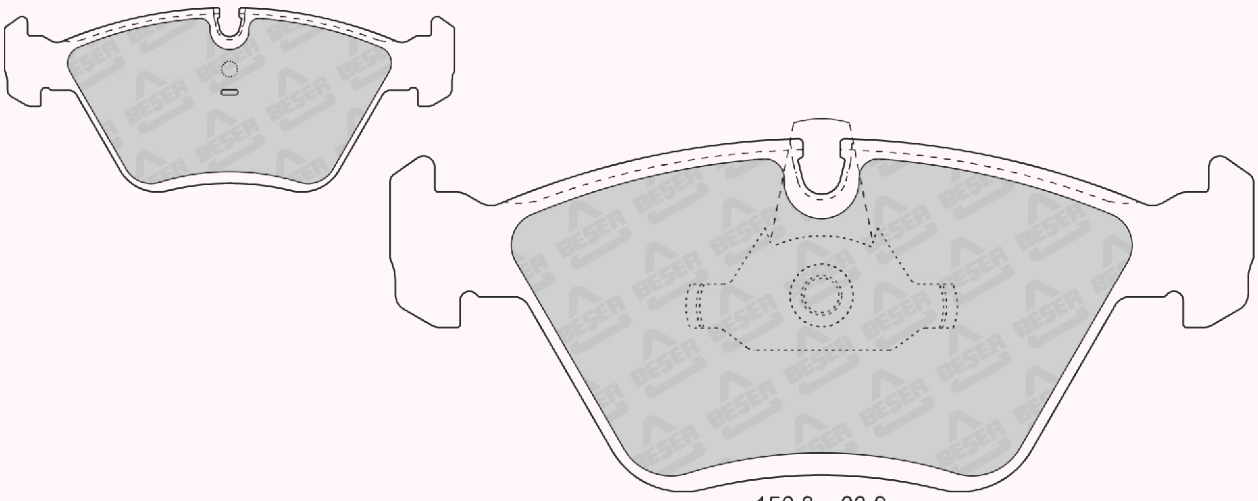

REFERENCE	T(mm)	REMARKS	MAKE	F/R	WVA No
3566	17	4 PADS PLAIN	SEAT-SKODA VW	F	21866 21868

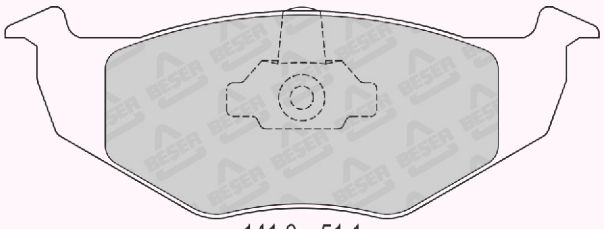

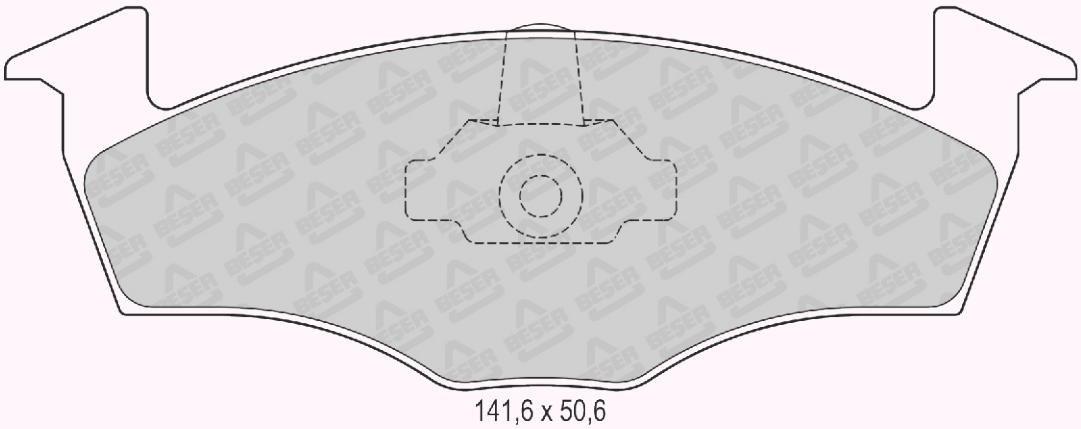

REFERENCE	T(mm)	REMARKS	MAKE	F/R	WVA No
3567	20,5	4 PADS PLAIN	MERCEDES BENZ	F	21576 21577

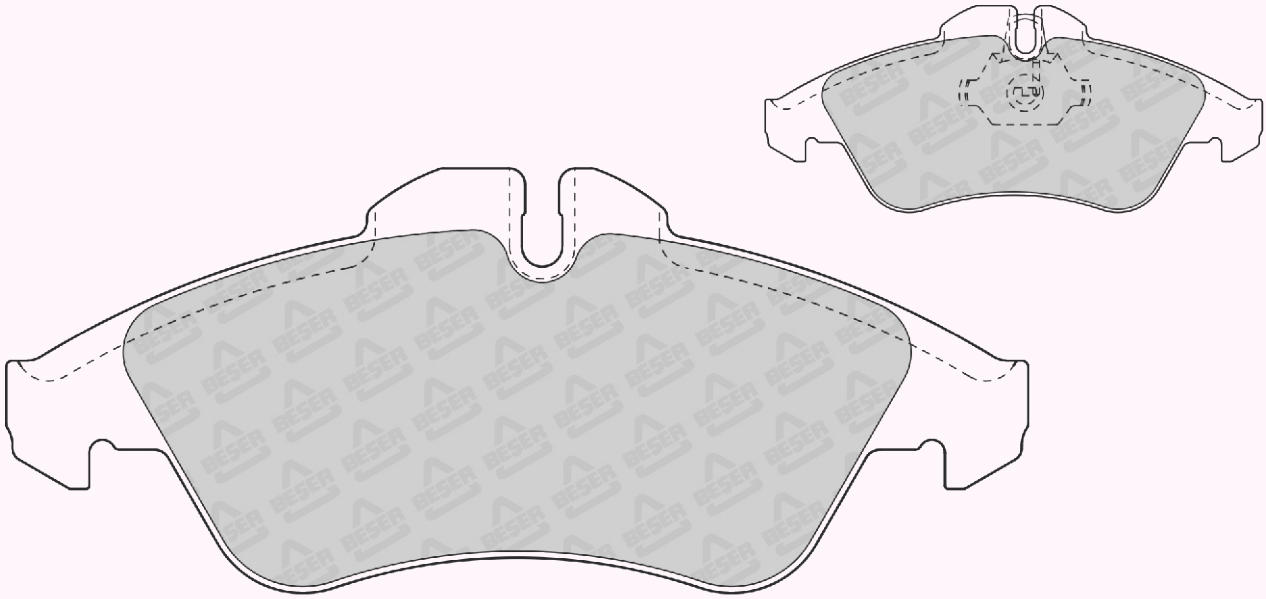

156,5 x 64,9
(NOT SCALE)

REFERENCE	T(mm)	REMARKS	MAKE	F/R	WVA No
3568	18	2 PADS WITH WEAR SENSOR (150mm)	FIAT	F	23218 23220 23776

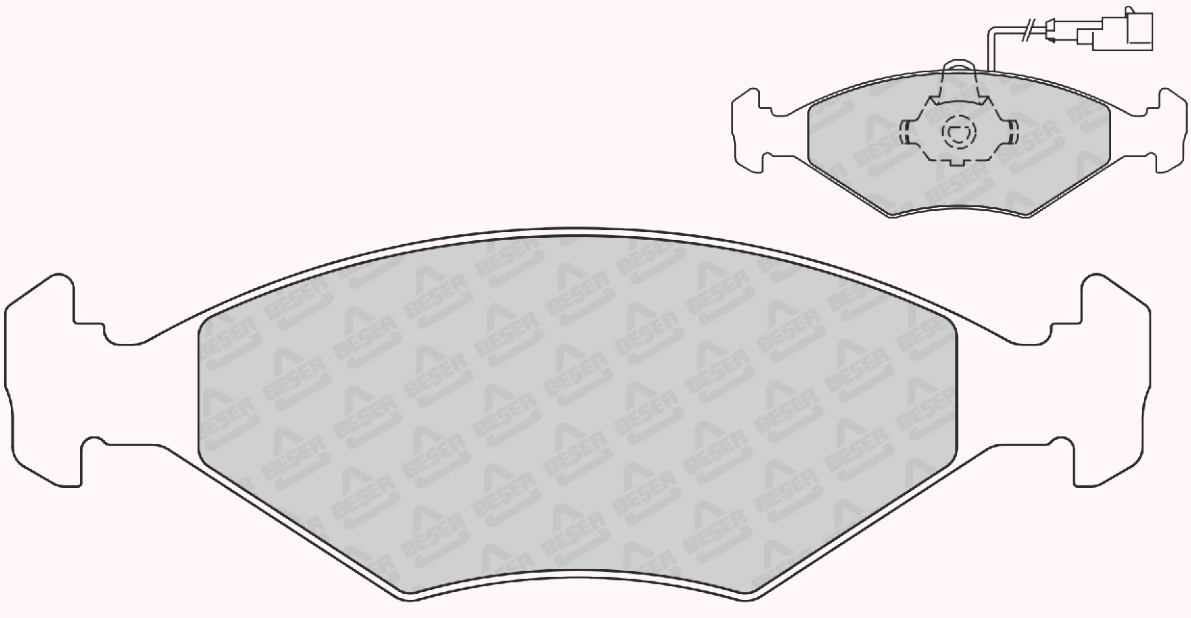

151,3 x 49,2

REFERENCE	T(mm)	REMARKS	MAKE	F/R	WVA No
3569	18	4 PADS PLAIN	FIAT	F	23218 23219

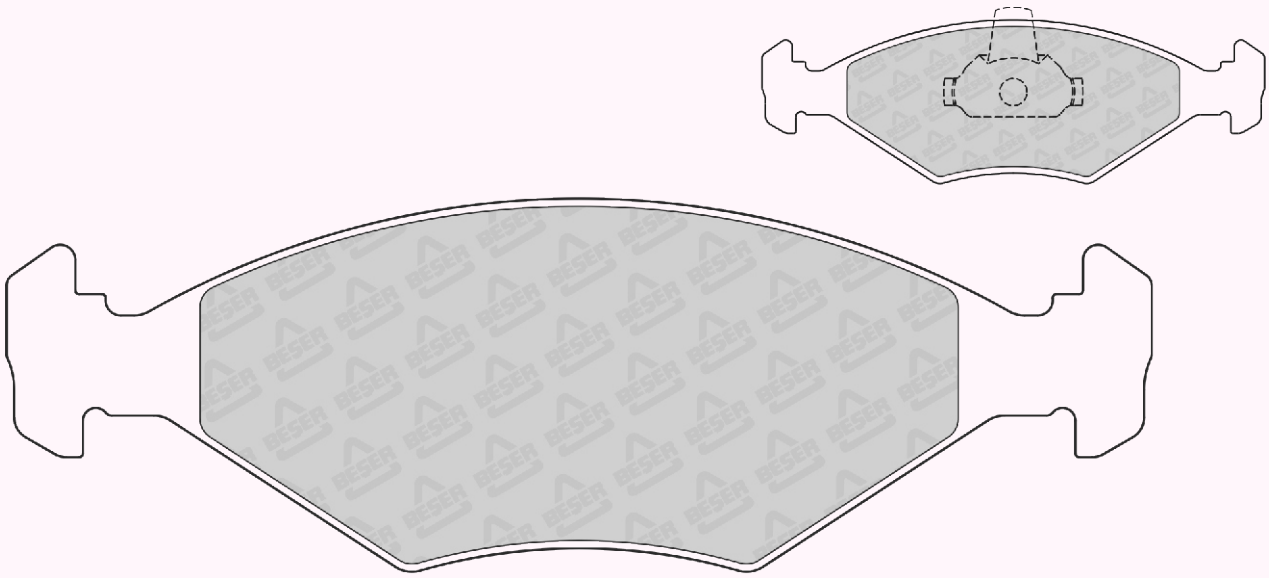

151,3 x 49,2

REFERENCE	T(mm)	REMARKS	MAKE	F/R	WVA No
3570	18	4 PADS PLAIN	FORD-KIA-MAZDA-TUR	F	23103 23104

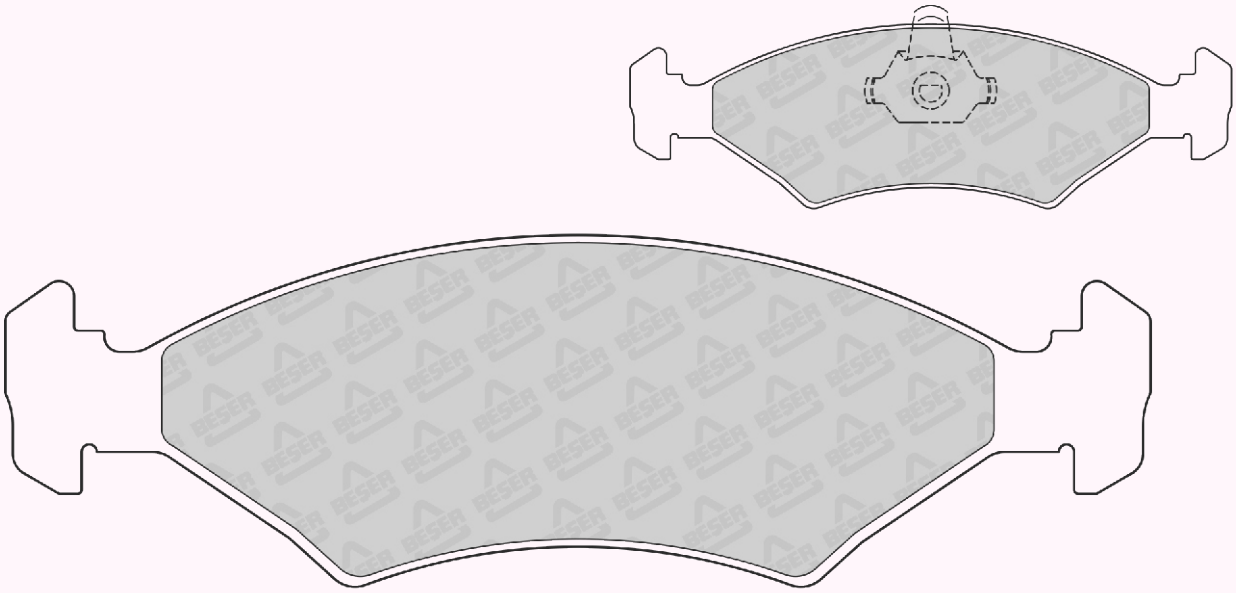

151,3 x 46,4

REFERENCE	T(mm)	REMARKS	MAKE	F/R	WVA No
3572	16	4 PADS PLAIN	BMW	R	20675 20756 20830

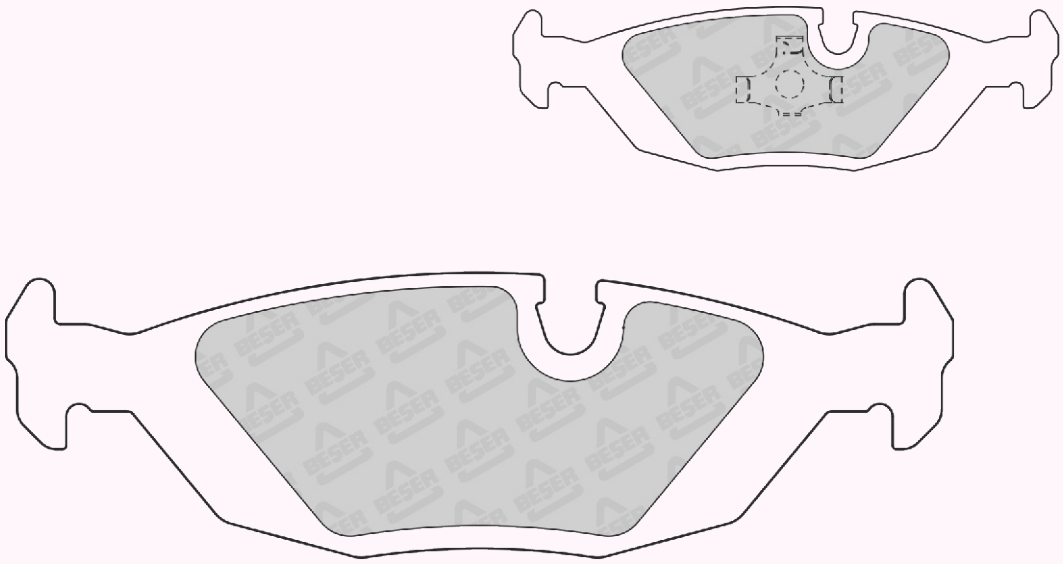

125,1 x 37,6

REFERENCE	T(mm)	REMARKS	MAKE	F/R	WVA No
3573	19,5	4 PADS PLAIN	BMW	F	20629 20659 20757

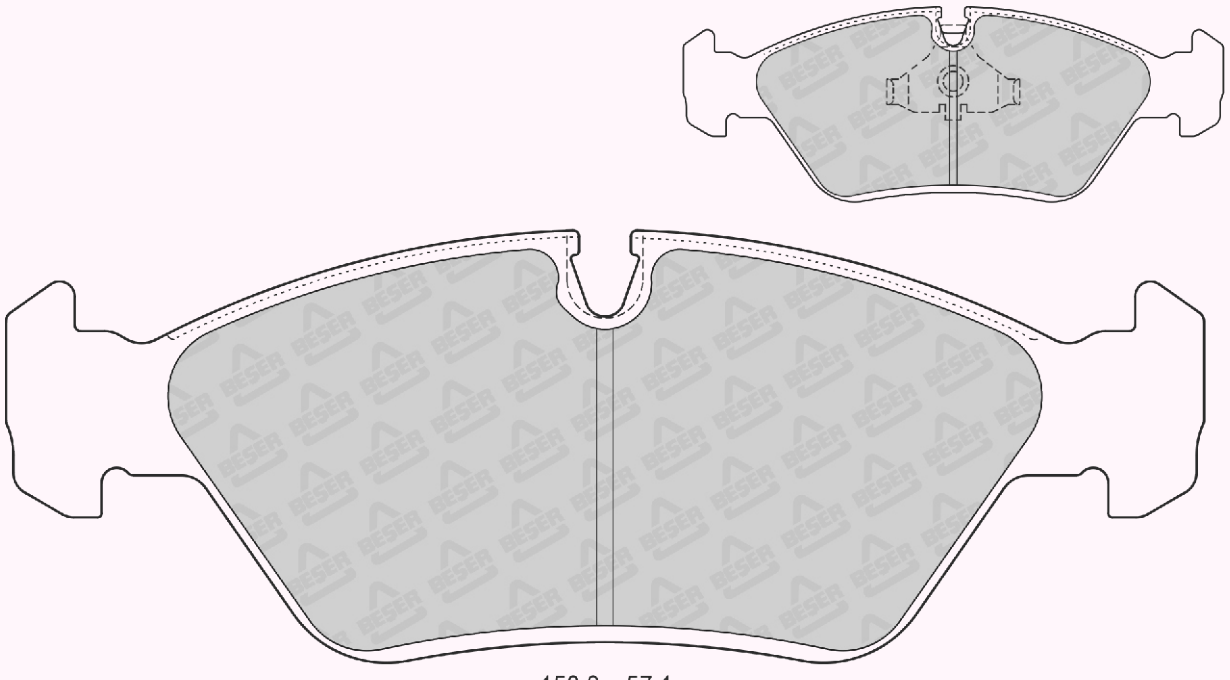

158,3 x 57,1

REFERENCE	T(mm)	REMARKS	MAKE	F/R	WVA No
3574	15,5	2 PADS WITH WEAR SENSOR	KIA-FORD-ASIA MOTORS	F	23784 23785 23786

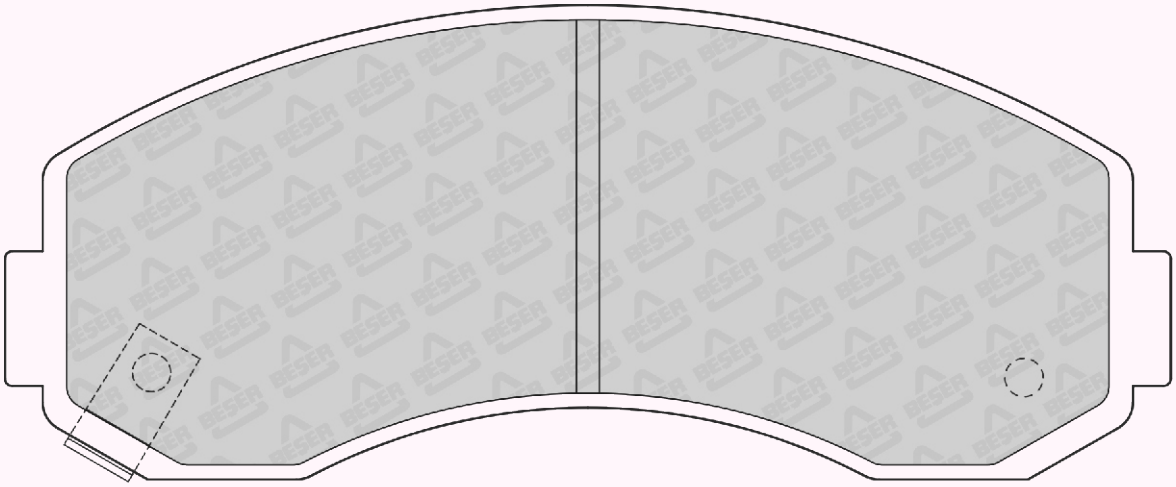

154 x 63,4

REFERENCE	T(mm)	REMARKS	MAKE	F/R	WVA No
3575	20	4 PADS PLAIN	IVECO-RENAULT	F	29121

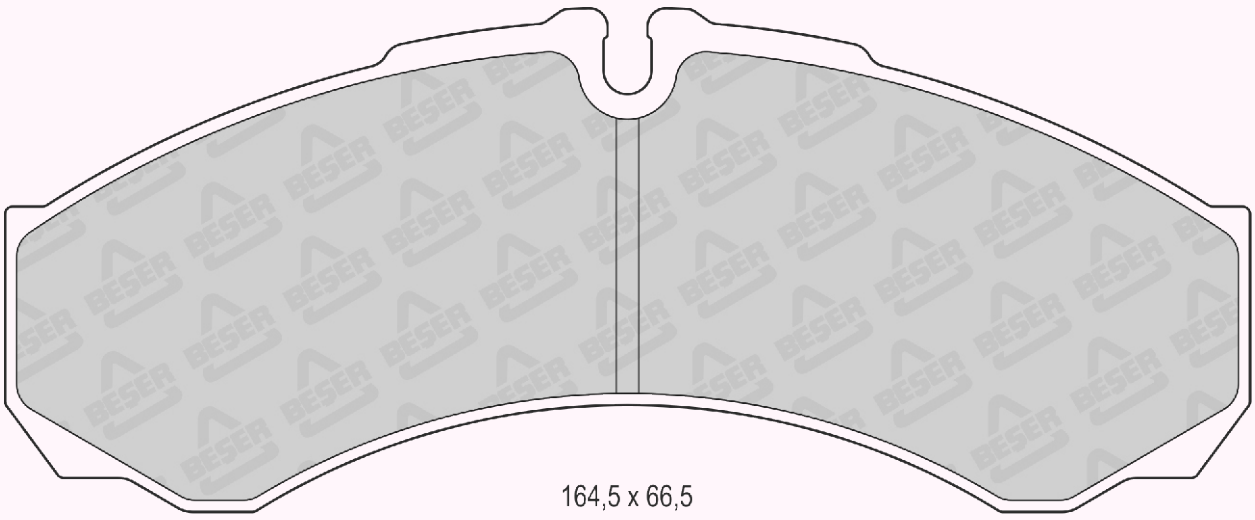

164,5 x 66,5

REFERENCE	T(mm)	REMARKS	MAKE	F/R	WVA No
3575/1	20	4 PADS PLAIN	IVECO-RENAULT	F	29121

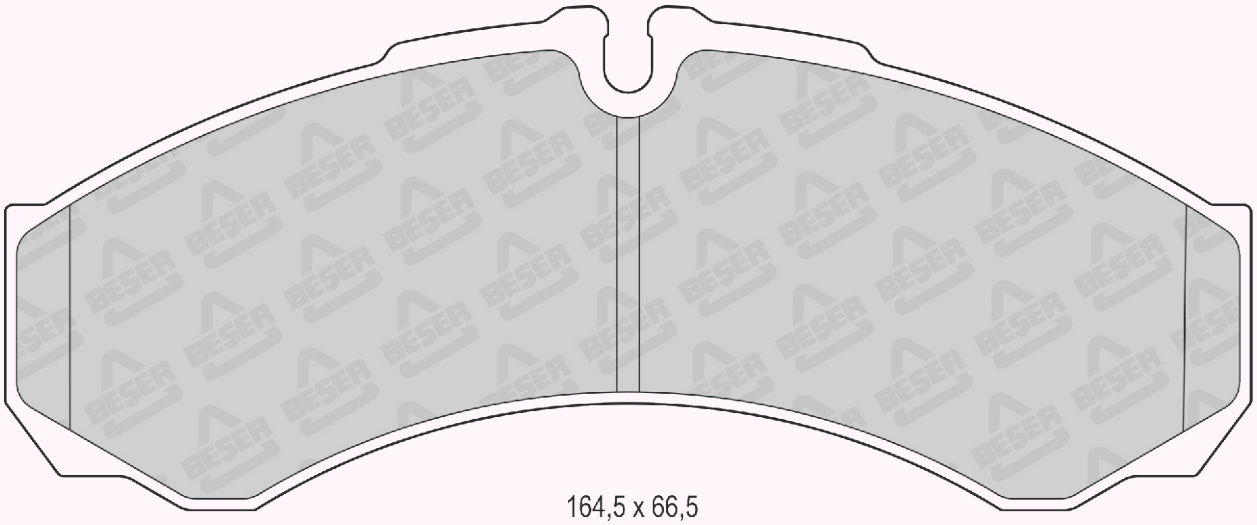

164,5 x 66,5

REFERENCE	T(mm)	REMARKS	MAKE	F/R	WVA No
3575/2	17	4 PADS PLAIN	IVECO	F	29121

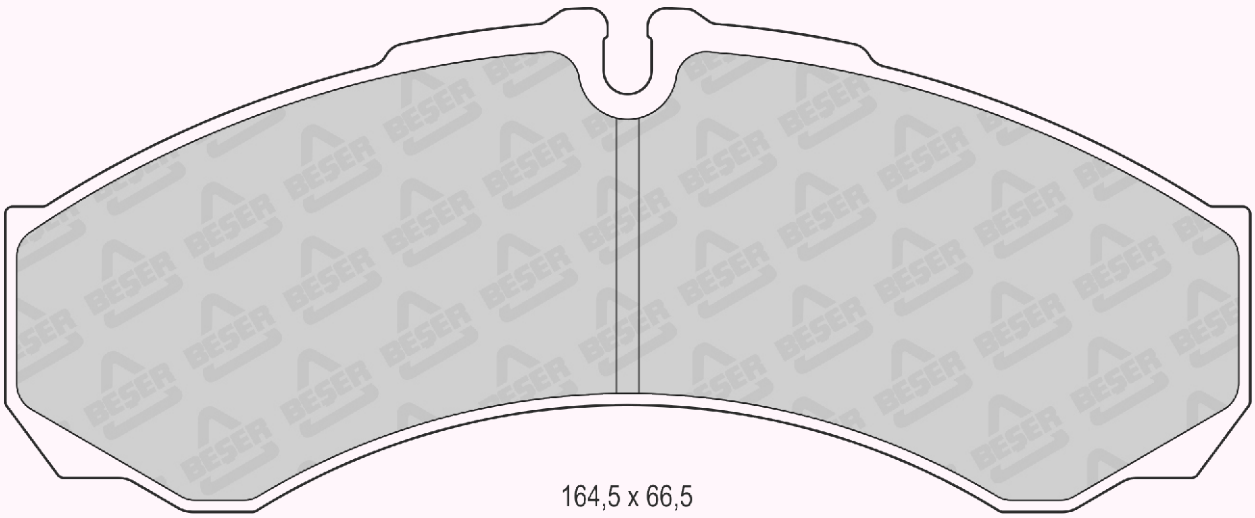

164,5 x 66,5

REFERENCE	T(mm)	REMARKS	MAKE	F/R	WVA No
3577	16	2 PADS WITH WEAR SENSOR	NISSAN	F	23004 23005 23006

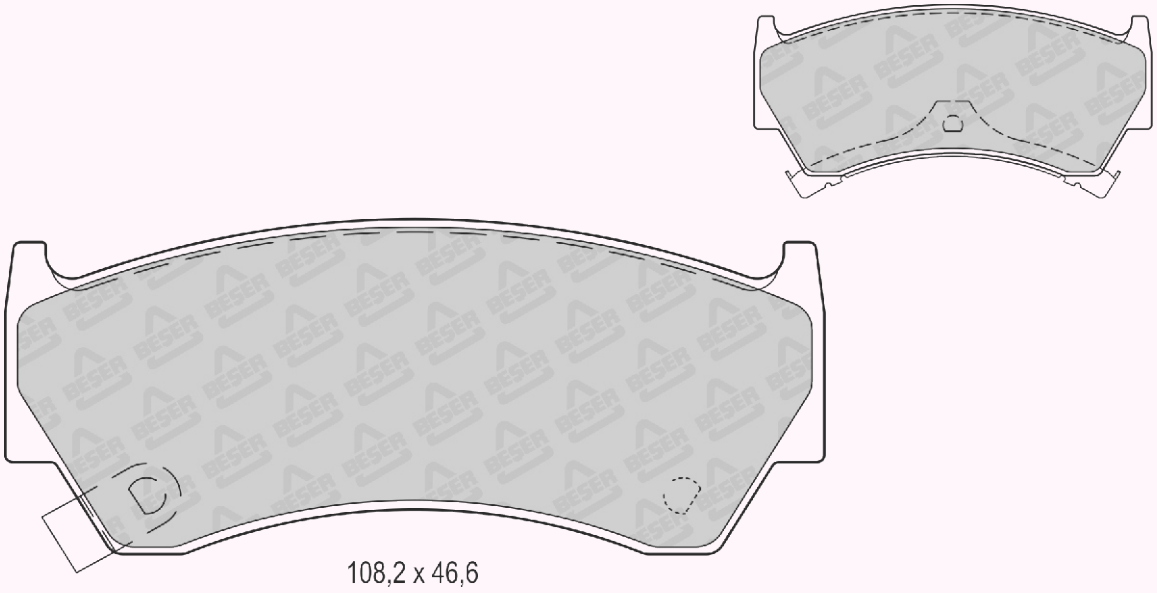

108,2 x 46,6

REFERENCE	T(mm)	REMARKS	MAKE	F/R	WVA No
3578	17	4 PADS PLAIN	BMW-WIESMANN	R	20180 20996 20181 21607 20995 21608

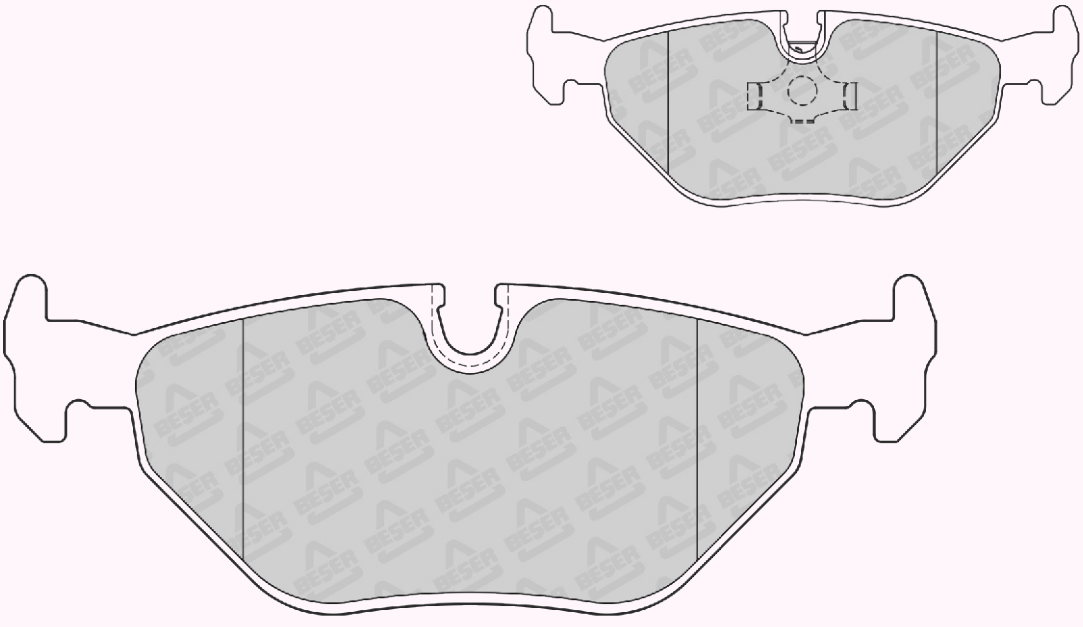

123 x 44,8

REFERENCE	T(mm)	REMARKS	MAKE	F/R	WVA No
3579	14,7	2 PADS WITH WEAR SENSOR	TOYOTA	F	20766 20767 20768 20854 20855

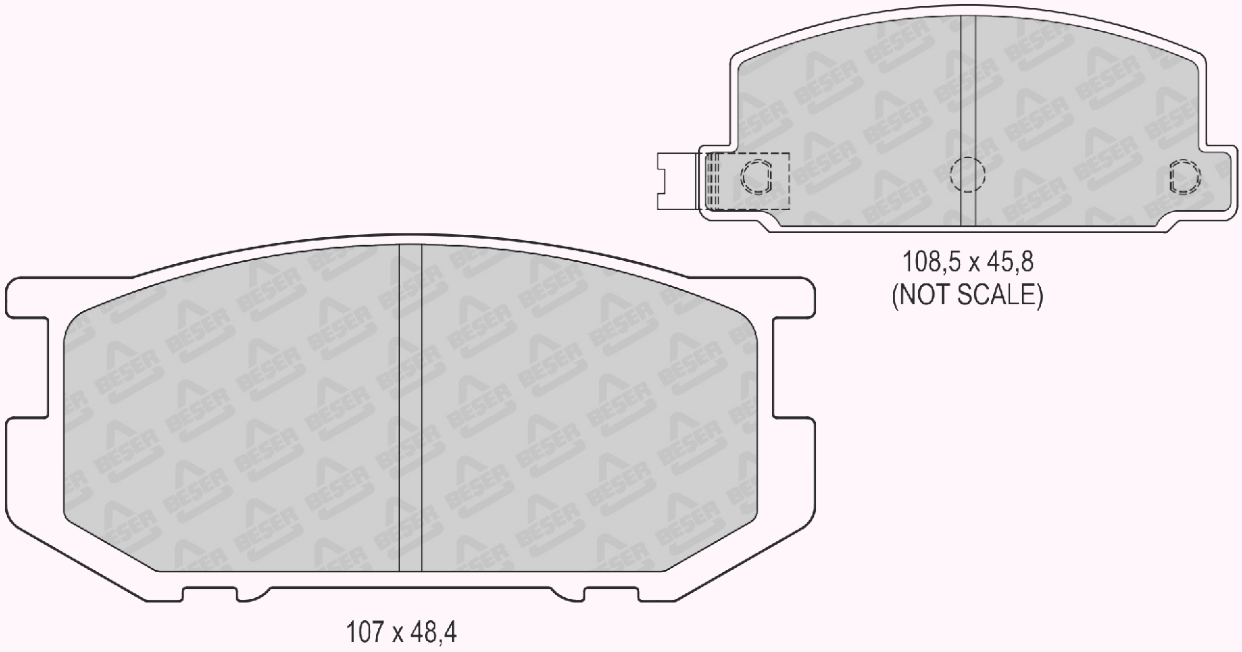

REFERENCE	T(mm)	REMARKS	MAKE	F/R	WVA No
3580	18	2 PADS WITH WEAR SENSOR (205mm)	CITROEN - DALLAS - PEUGEOT RENAULT - TALBOT - WUUNG	F	20905 21062 20906 21803 20987 21804 21061 21805

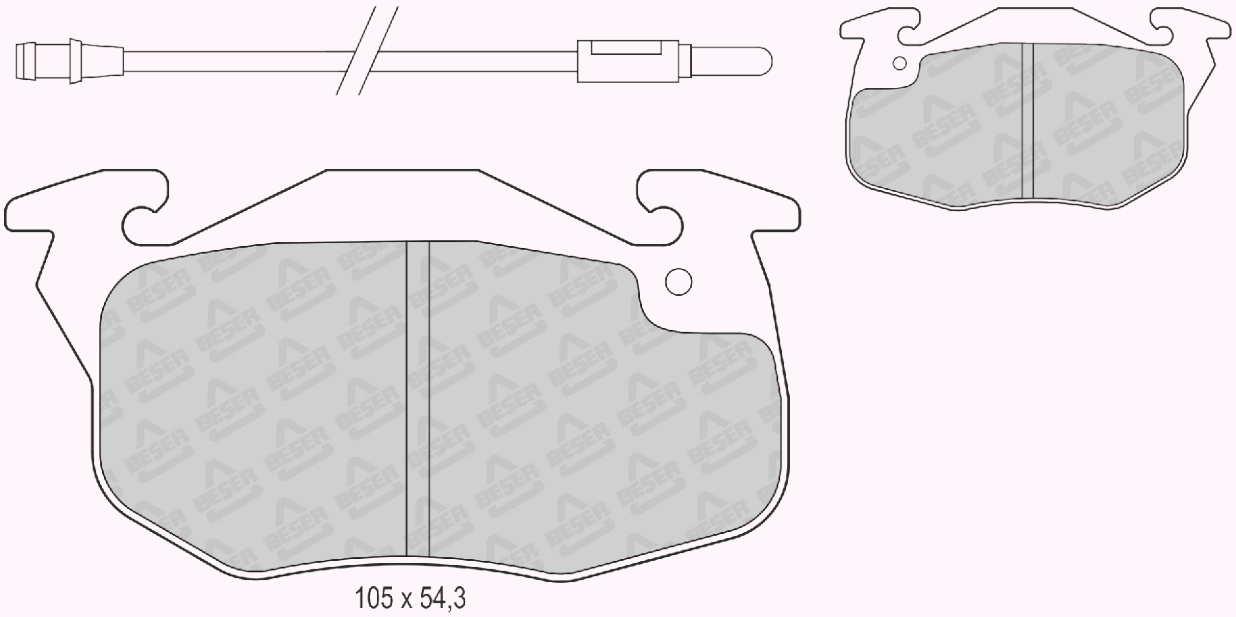

REFERENCE	T(mm)	REMARKS	MAKE	F/R	WVA No
3581	16	4 PADS PLAIN	CHRYSLER MERCEDES BENZ	R	21305

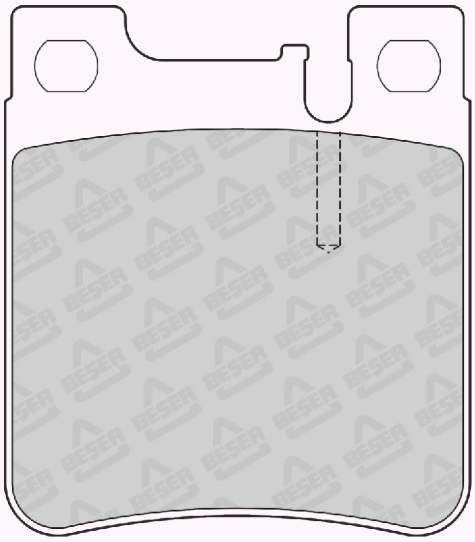

61,3 x 69,7

REFERENCE	T(mm)	REMARKS	MAKE	F/R	WVA No
3582	15	2 PADS WITH WEAR SENSOR	ACURA - HONDA	F	20099 20104 20108 22064

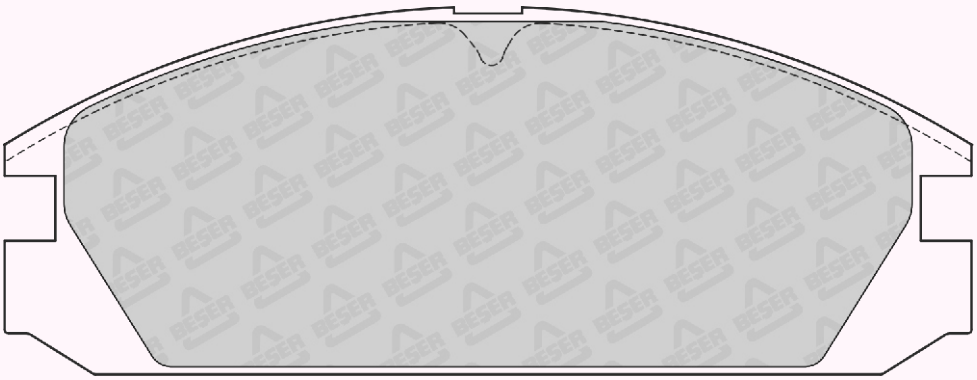

127,8 x 48,5

REFERENCE	T(mm)	REMARKS	MAKE	F/R	WVA No
3583	14,7	4 PADS PLAIN	SAAB-VOLVO	R	21089 21090

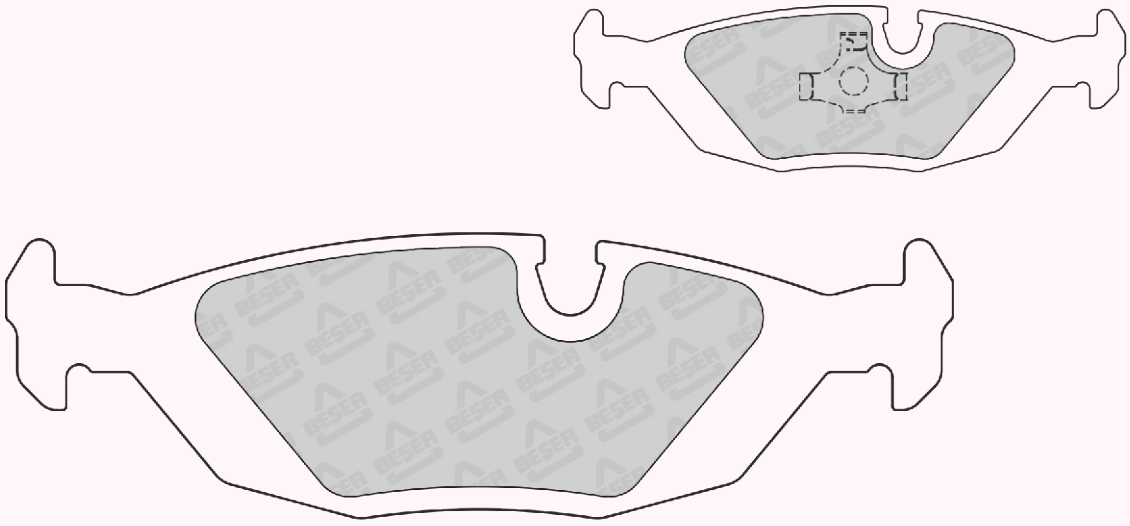

125,1 x 37,6

REFERENCE	T(mm)	REMARKS	MAKE	F/R	WVA No
3584	17,5	4 PADS PLAIN	DAIMLER - JAGUAR	F	20968 21064 23126

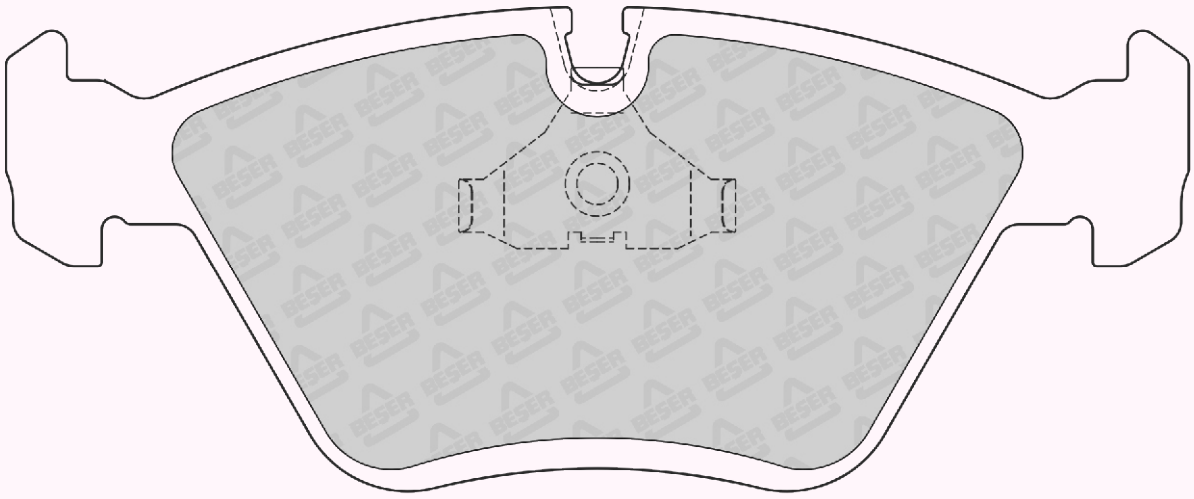

156,3 x 63,9

REFERENCE	T(mm)	REMARKS	MAKE	F/R	WVA No
3585	17	2 PADS INNER & 2 PADS OUTER WITH 4 SPINGS	SEAT - VW	F	20887 20888

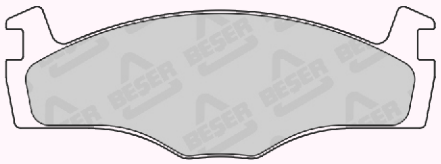

137,9 x 49
(NOT SCALE)

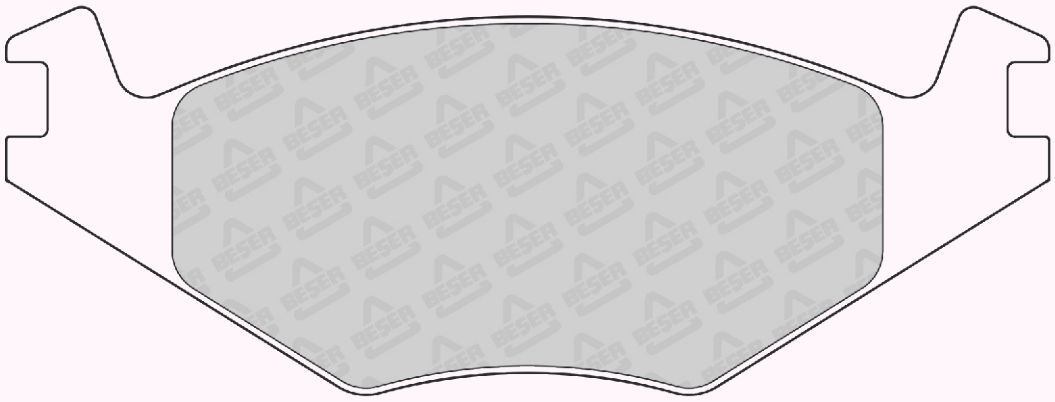

137,9 x 51,3

REFERENCE	T(mm)	REMARKS	MAKE	F/R	WVA No
3585/1	17	2 PADS INNER & 2 PADS OUTER WITH 4 SPINGS	SEAT - VW	F	20887

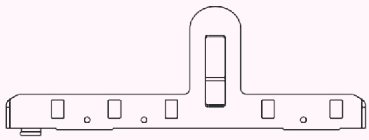

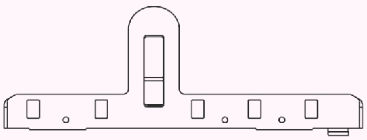

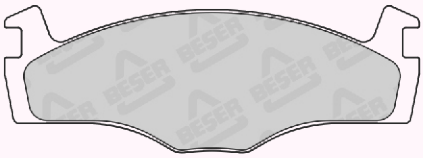

137,9 x 49
(NOT SCALE)

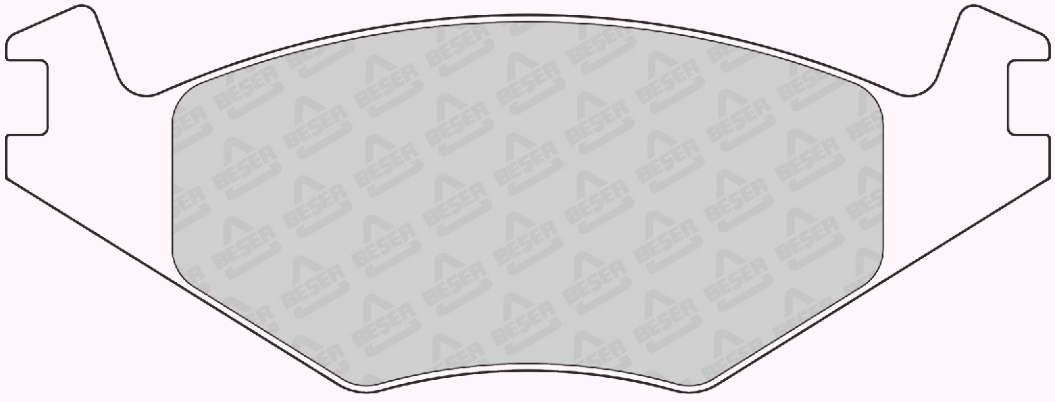

137,9 x 51,3

REFERENCE	T(mm)	REMARKS	MAKE	F/R	WVA No
3586	19	1 PAD WITH WEAR SENSOR (820mm)	FIAT	F	---

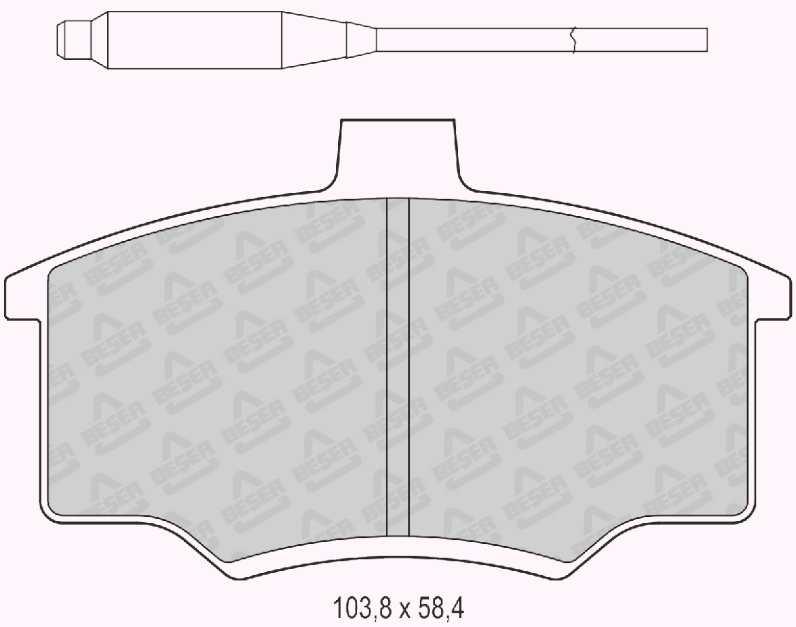

103,8 x 58,4

REFERENCE	T(mm)	REMARKS	MAKE	F/R	WVA No
3587	14,5	2 PADS WITH WEAR SENSOR (130mm)	ALPINA - CITROEN	F	20635

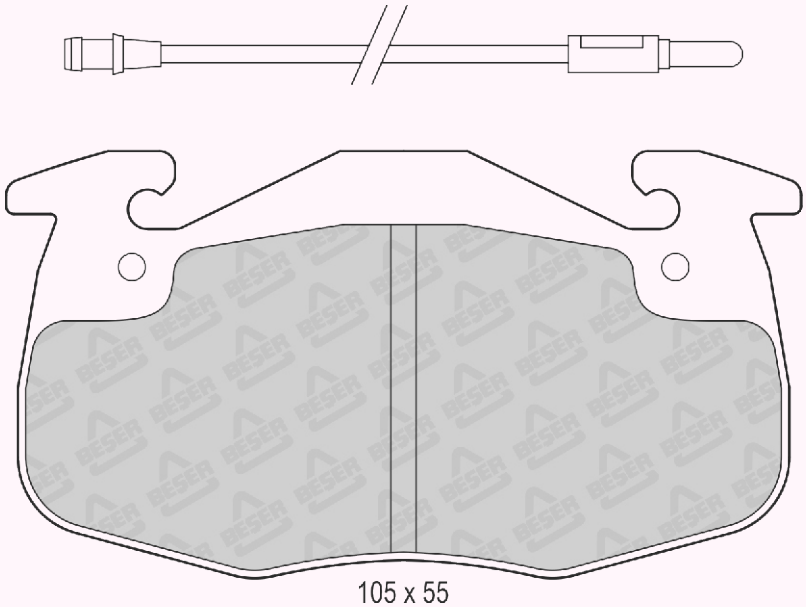

105 x 55

REFERENCE	T(mm)	REMARKS	MAKE	F/R	WVA No
3588	15	1 PAD WITH WEAR SENSOR (1100mm)	GM	F	---

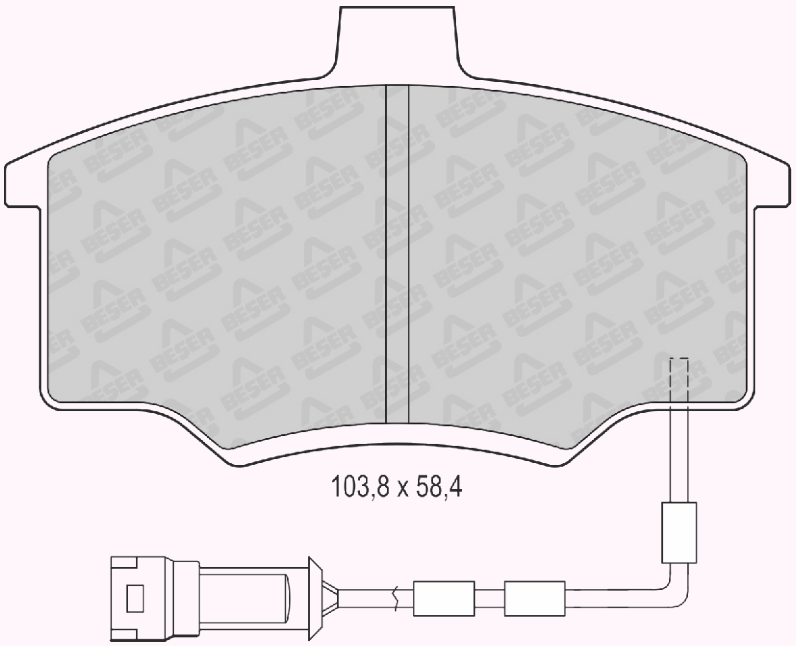

REFERENCE	T(mm)	REMARKS	MAKE	F/R	WVA No
3589	17,5	4 PADS PLAIN	FORD	F	21202 21203 21634

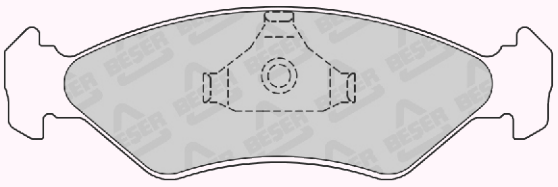

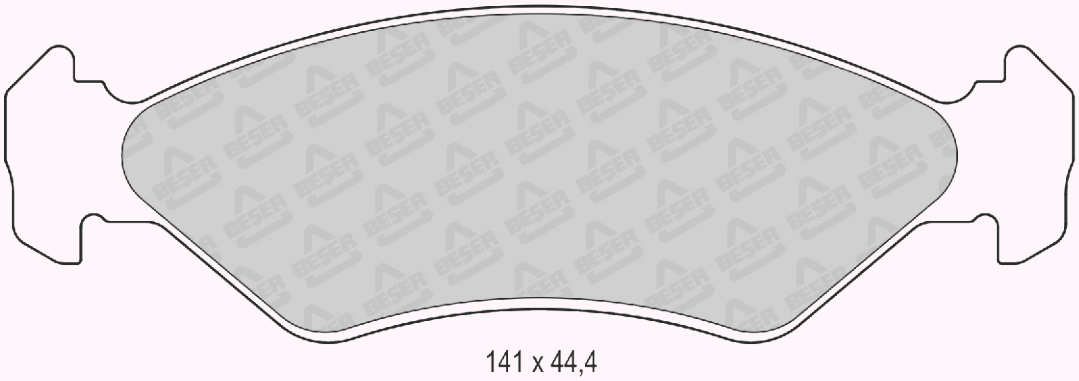

REFERENCE	T(mm)	REMARKS	MAKE	F/R	WVA No
3590	19,5	2 PADS WITH WEAR SENSOR (210mm)	AUDI - VW	F	20676 21640 20678 21848 21359 21849 21624 21911 21639 23324

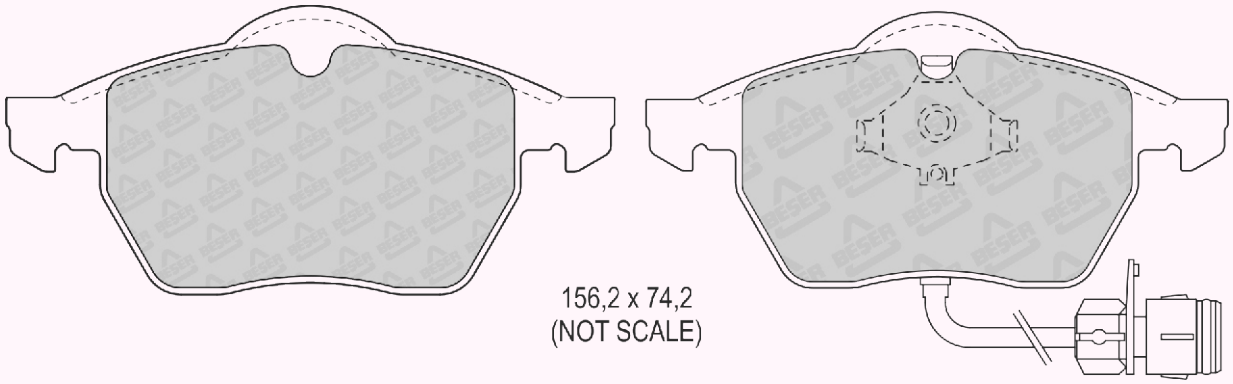

REFERENCE	T(mm)	REMARKS	MAKE	F/R	WVA No
3590/1	19.5	2 PADS WITH WEAR SENSOR	AUDI - SEAT - SKODA - VW	F	23392

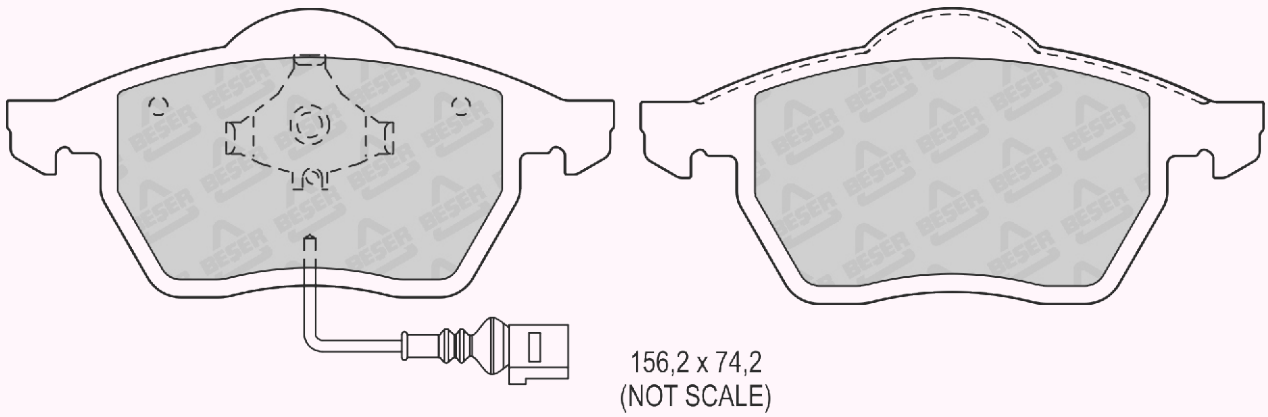

REFERENCE	T(mm)	REMARKS	MAKE	F/R	WVA No
3590/2	19.5	2 PADS WITH WEAR SENSOR	AUDI - VW	F	21938

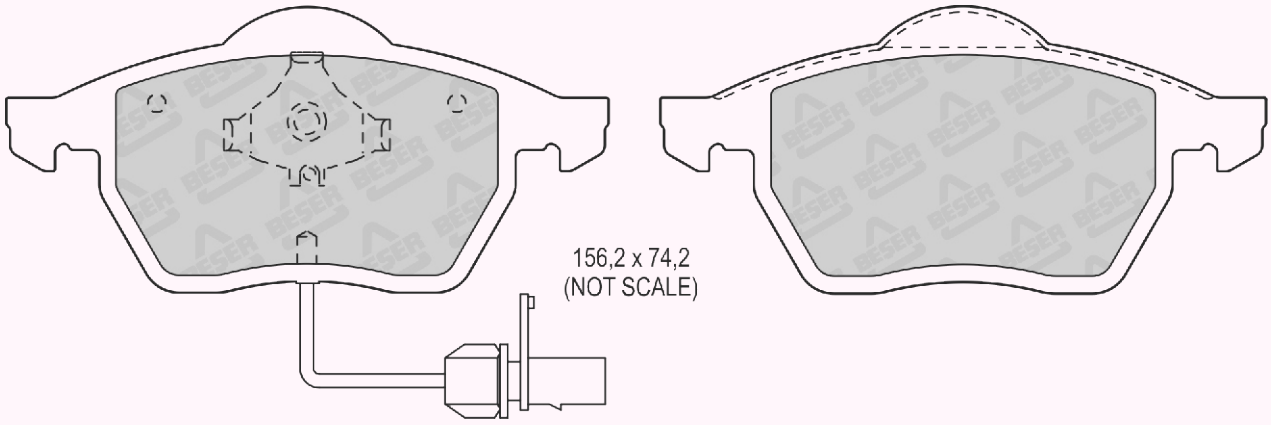

REFERENCE	T(mm)	REMARKS	MAKE	F/R	WVA No
3592	11	2 PADS WITH LUG 2 PADS W/O LUG	PEUGEOT - RENAULT	R	20315 20636

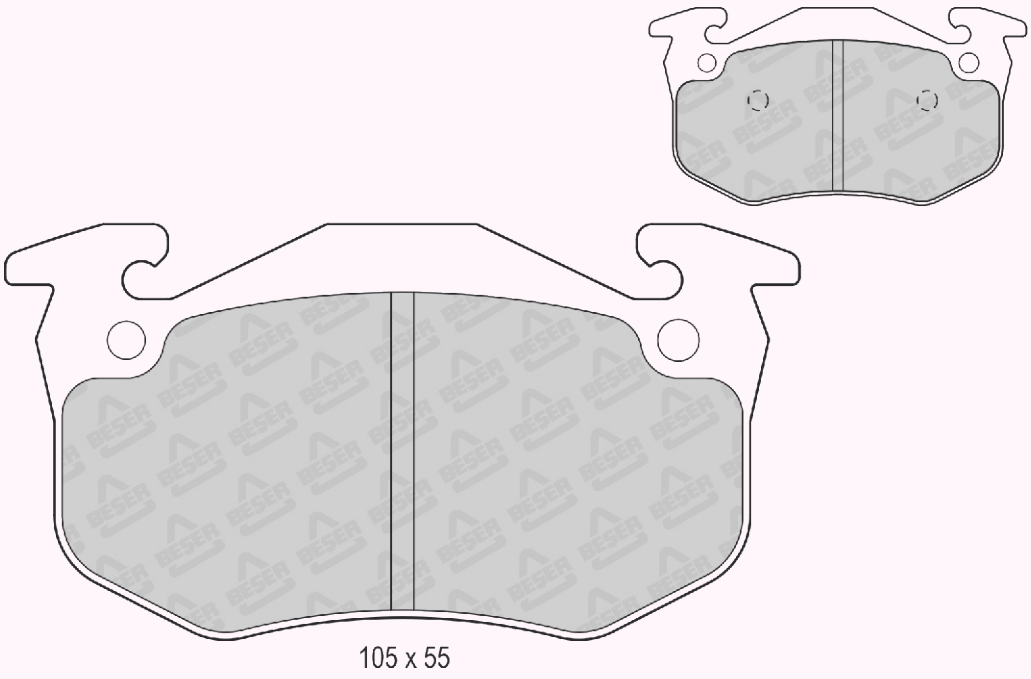

REFERENCE	T(mm)	REMARKS	MAKE	F/R	WVA No
3593	18	2 PADS WITH WEAR SENSOR	FORD	F	21358 21579 21393 21581 21394 21582 21395 21583 21396

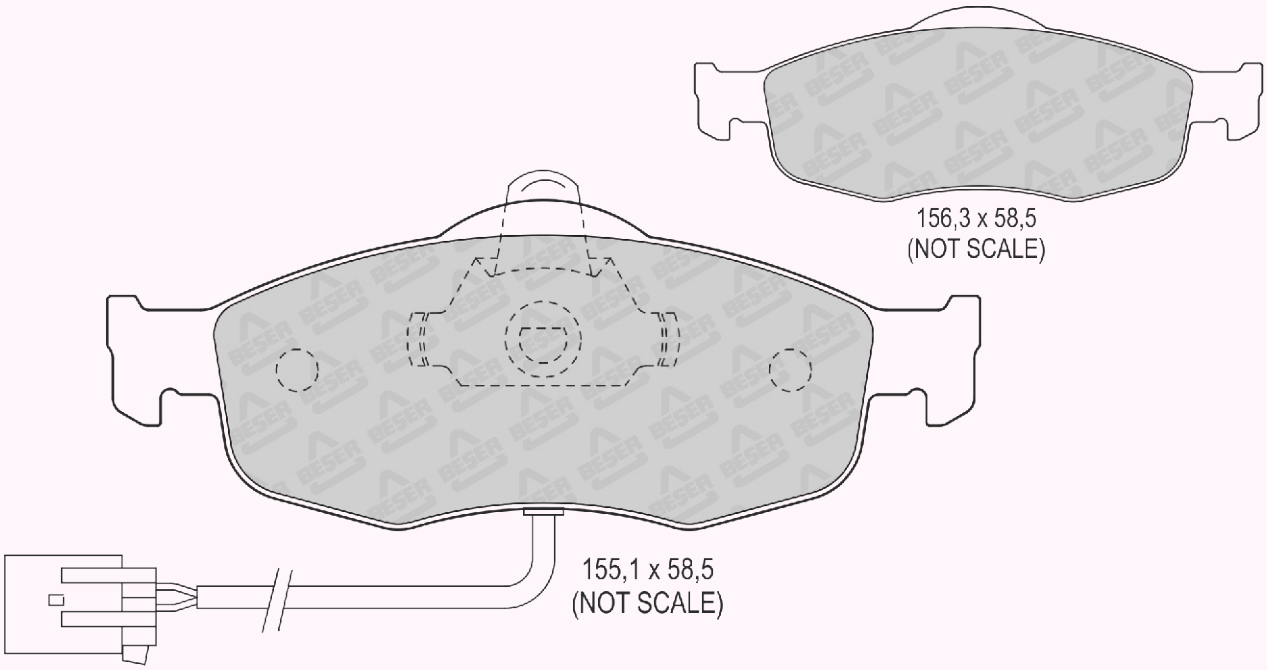

REFERENCE	T(mm)	REMARKS	MAKE	F/R	WVA No
3594	17,5	4 PADS PLAIN	FORD	F	23103 23104

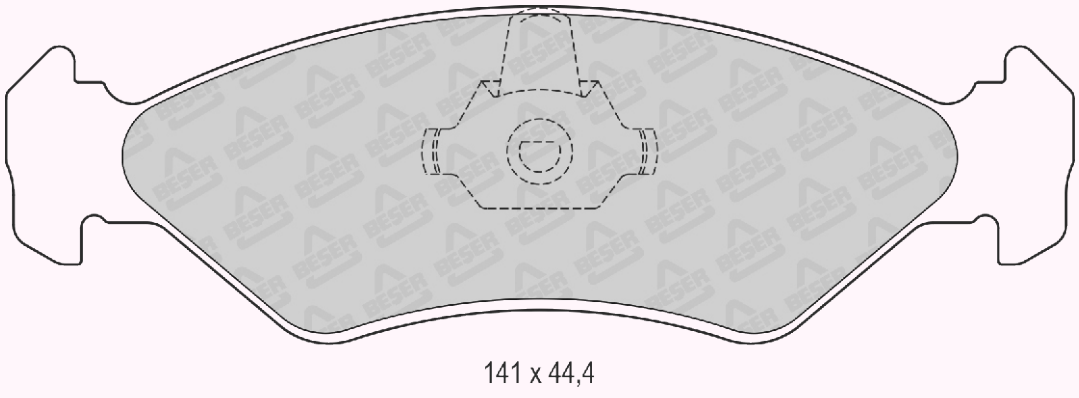

REFERENCE	T(mm)	REMARKS	MAKE	F/R	WVA No
3595	18,7	2 PADS WITH WEAR SENSOR (200mm)	CITROEN - FIAT PEUGEOT	F	21627 21628 21797 21798

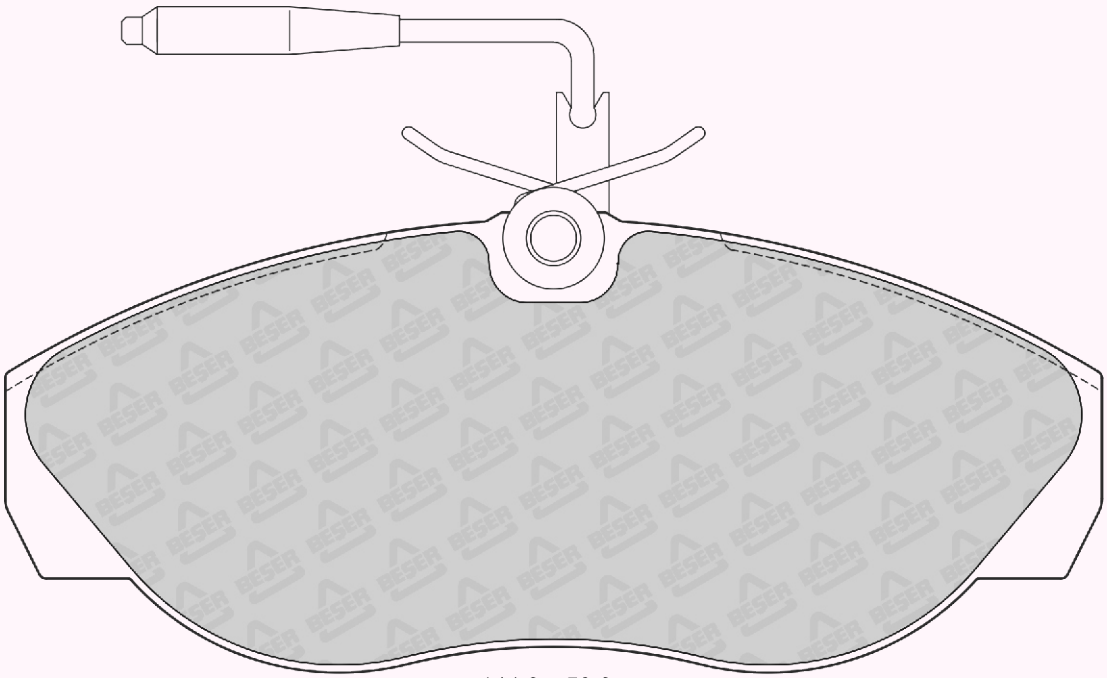

144,9 x 59,9

REFERENCE	T(mm)	REMARKS	MAKE	F/R	WVA No
3596	14,8	4 PADS WITH WIRE SPRINGS	LOTUS - RENAULT	R	20358 20410 20423

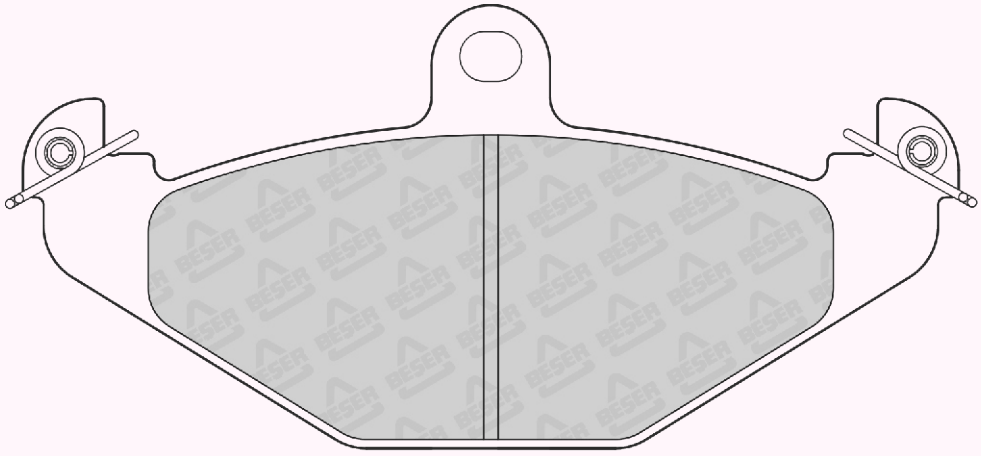

126 x 58,6

REFERENCE	T(mm)	REMARKS	MAKE	F/R	WVA No
3597	17,5	2 PADS WITH WEAR SENSOR (180mm)	FIAT	F	---

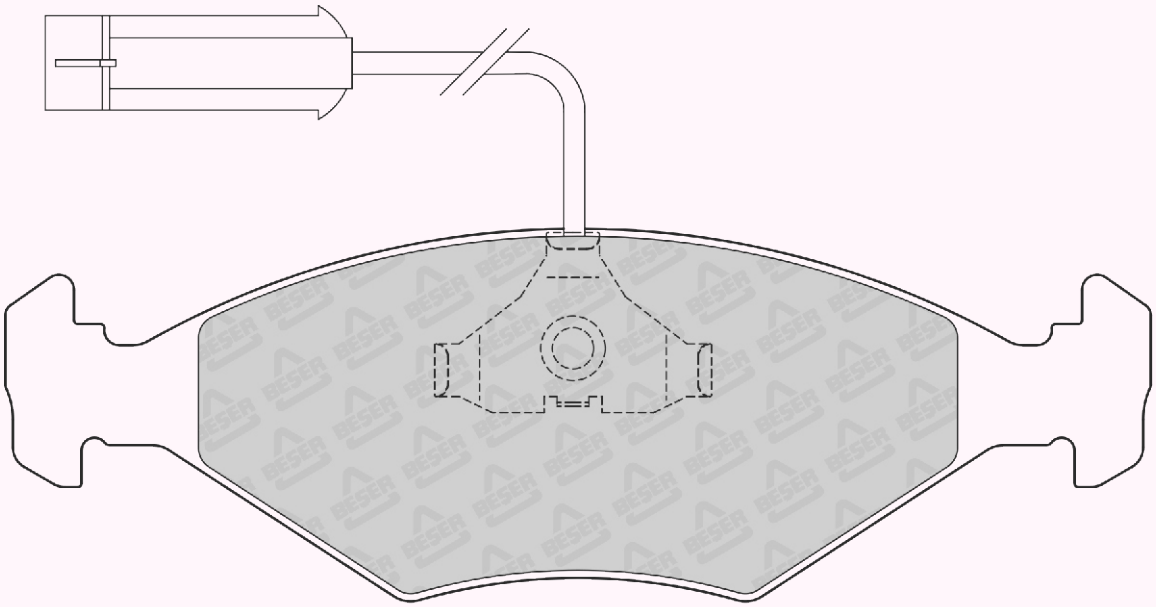

151,3 x 49,2

REFERENCE	T(mm)	REMARKS	MAKE	F/R	WVA No
3598	16,3	4 PADS PLAIN	NISSAN	F	21657 21658 21659 24089

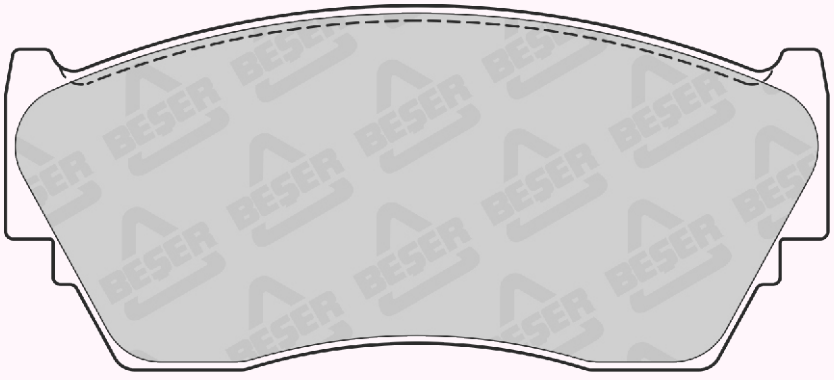

108,5 x 48

REFERENCE	T(mm)	REMARKS	MAKE	F/R	WVA No
3598/1	16,3	2 PADS WITH WEAR SENSOR (1B + 1C + 2D)	NISSAN	F	21657

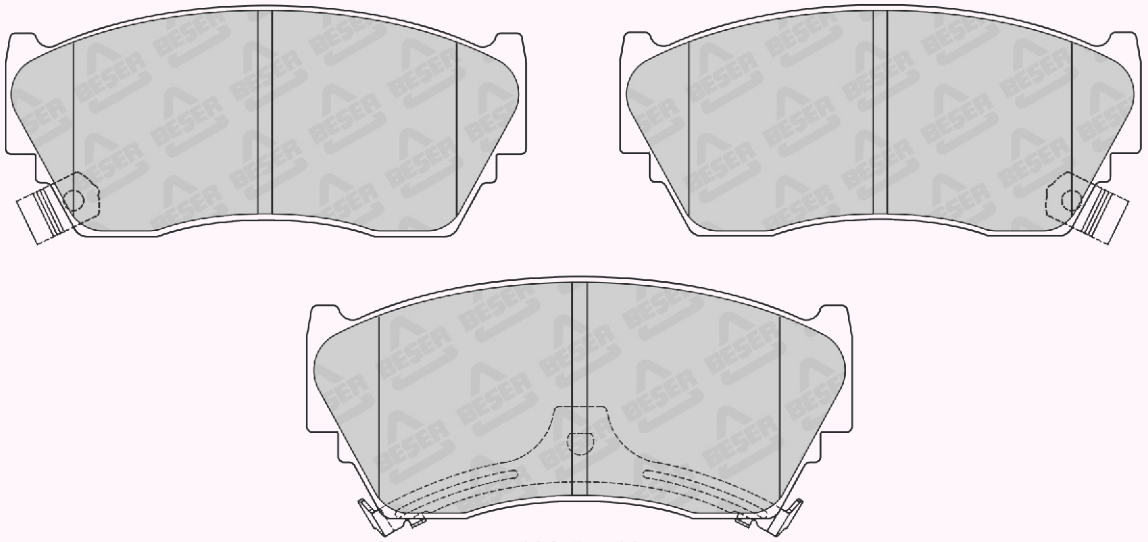

108,5 x 48
(NOT SCALE)

REFERENCE	T(mm)	REMARKS	MAKE	F/R	WVA No
3599	18	2 PADS WITH WEAR SENSOR (240mm)	RENAULT - PEUGEOT	F	20441 20770 20772

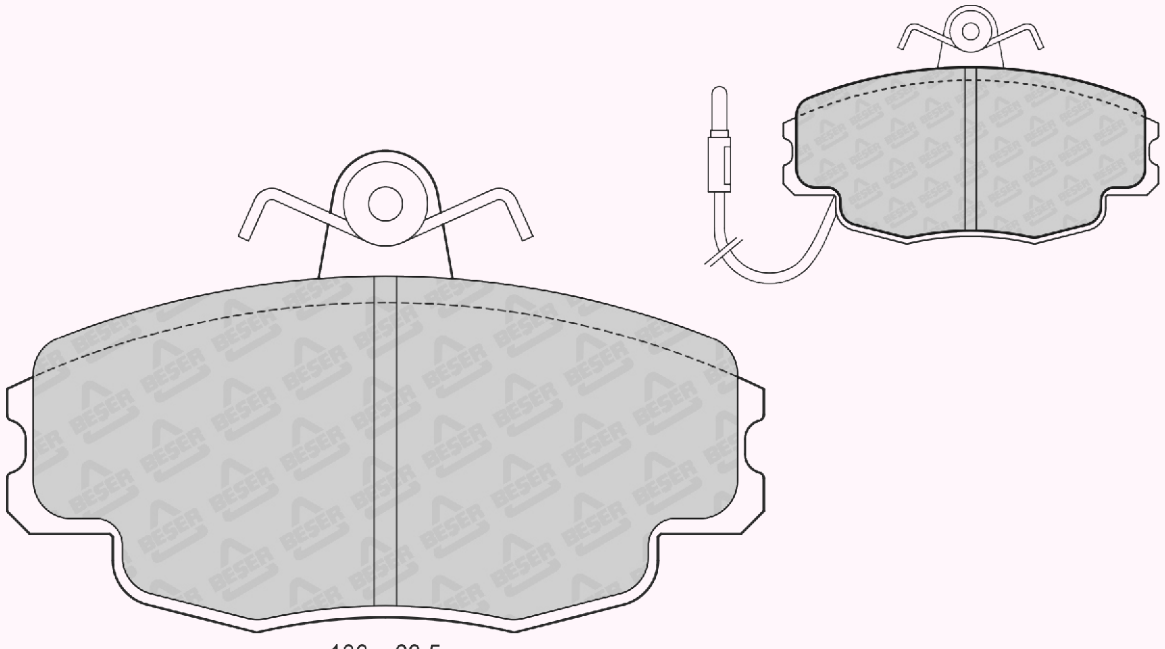

100 x 63,5

REFERENCE	T(mm)	REMARKS	MAKE	F/R	WVA No
3600	13,5	2 PADS WITH WEAR SENSOR	DAIHATSU	F	21338 21339 21340

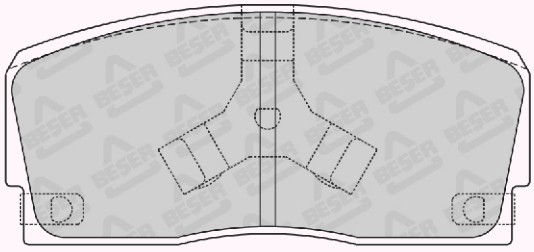

102,7 x 47
(NOT SCALE)

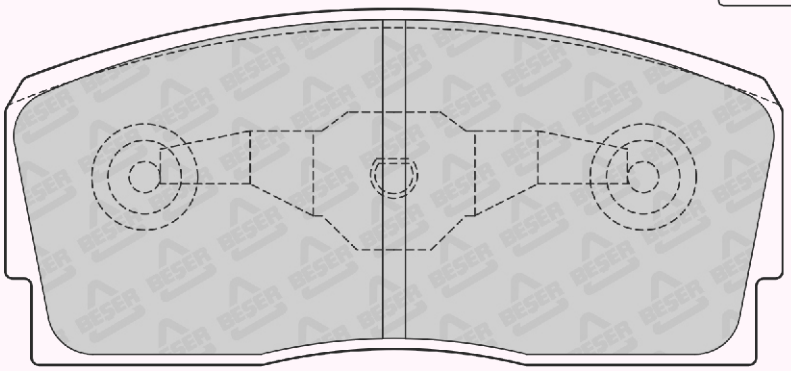

102,7 x 47

REFERENCE	T(mm)	REMARKS	MAKE	F/R	WVA No
3601	13,8	4 PADS WITH LUGS.	DAIHATSU - SUBARU	F	20328 20563

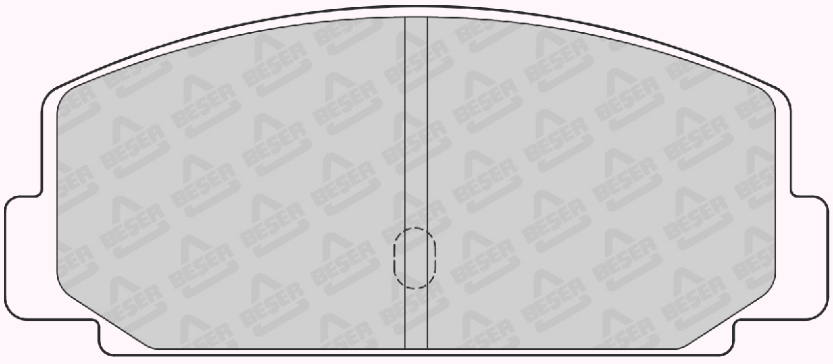

108,8 x 46

REFERENCE	T(mm)	REMARKS	MAKE	F/R	WVA No
3602	15,5	2 PADS WITH WEAR SENSOR	SUZUKI	F	23400

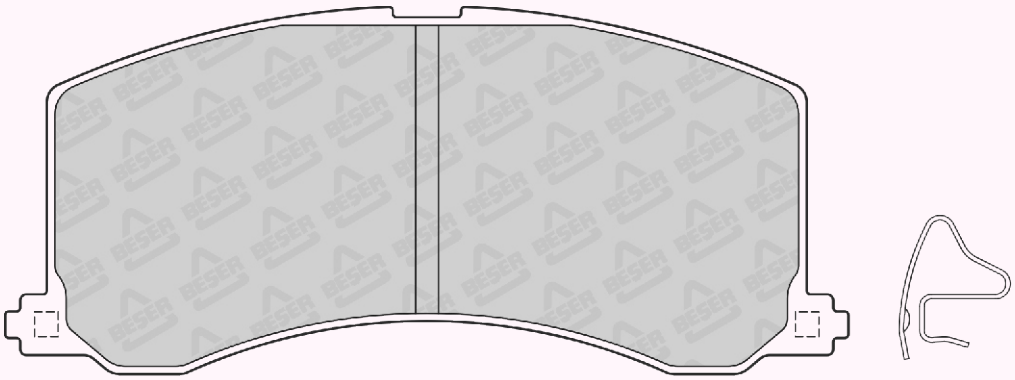

111,4 x 48,5

REFERENCE	T(mm)	REMARKS	MAKE	F/R	WVA No
3603	18	4 PADS PLAIN	FORD	F	21141

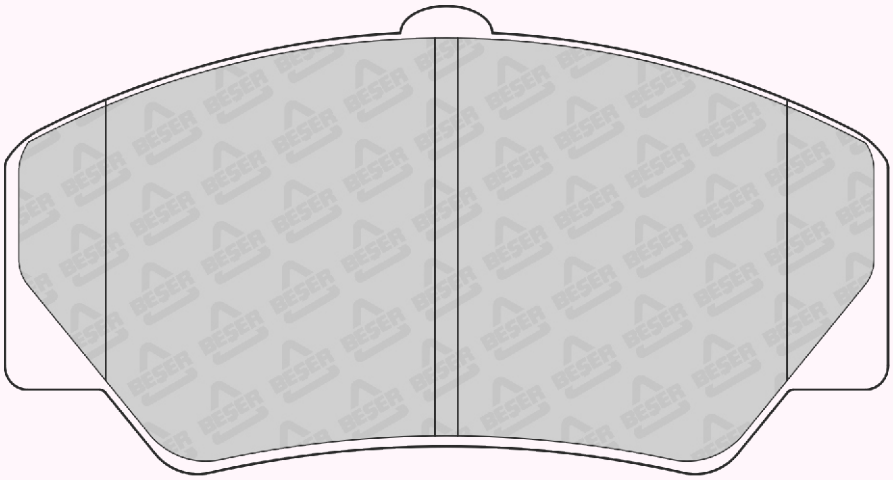

116,7 x 58,3

REFERENCE	T(mm)	REMARKS	MAKE	F/R	WVA No
3604	15	4 PADS WITH CHAMFERS	DAIHATSU - HUALI MITSUBISHI - PROTON - TOYOTA	F	21650

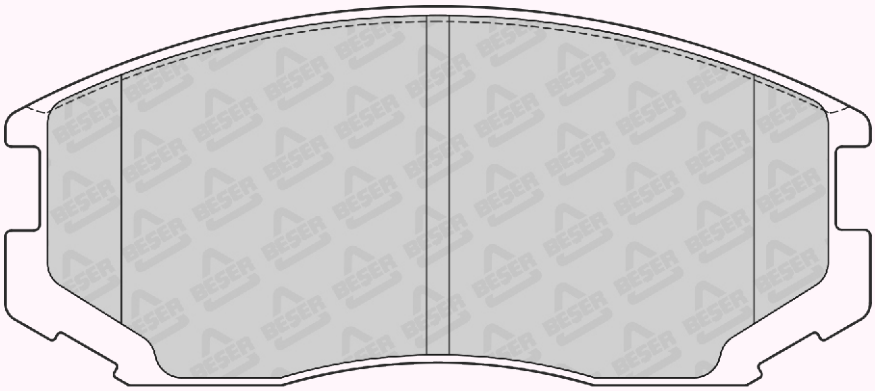

114,2 x 50

REFERENCE	T(mm)	REMARKS	MAKE	F/R	WVA No
3605	19,5	4 PADS PLAIN	VW	F	20978 20979

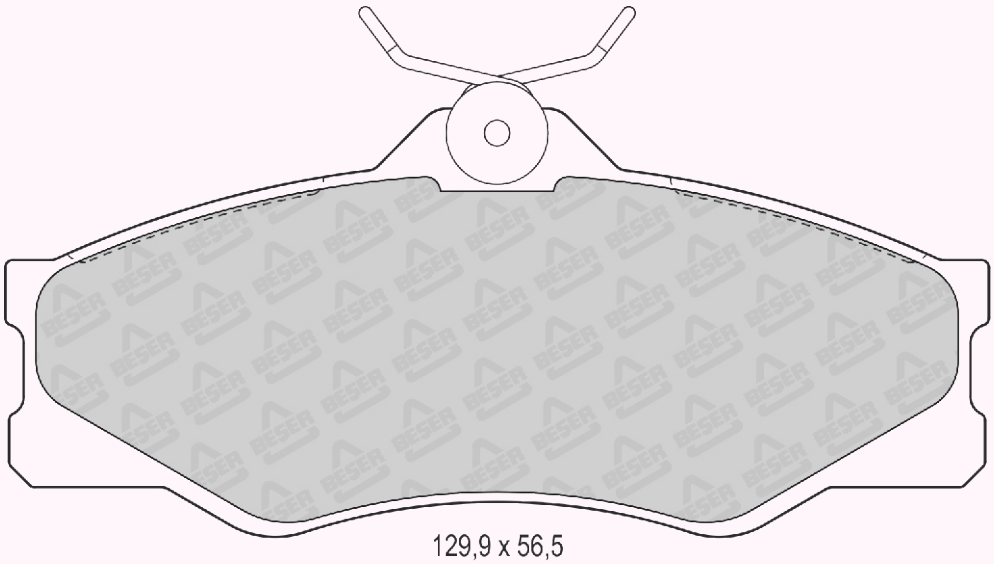

129,9 x 56,5

REFERENCE	T(mm)	REMARKS	MAKE	F/R	WVA No
3606	19,5	4 PADS PLAIN	VW	F	21883 21884 21885

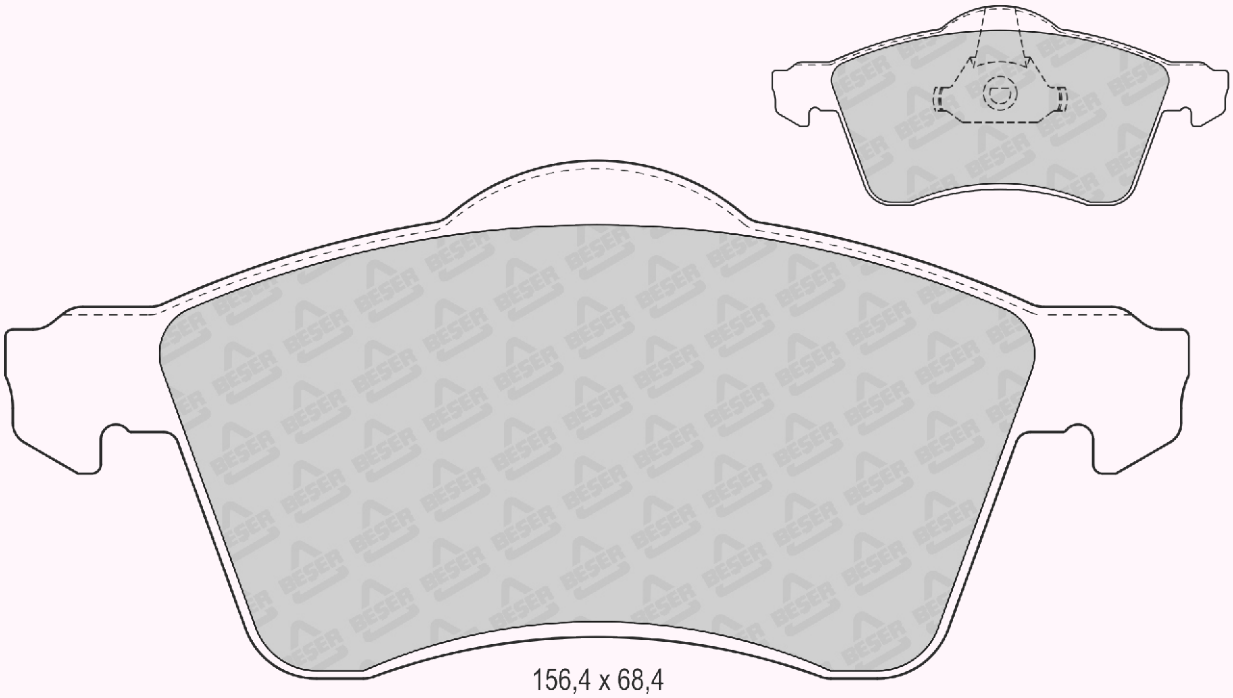

REFERENCE	T(mm)	REMARKS	MAKE	F/R	WVA No
3607	17,3	2 PADS WITH WEAR SENSOR	HONDA	F	21694 21695 21696 21970 21971 21972

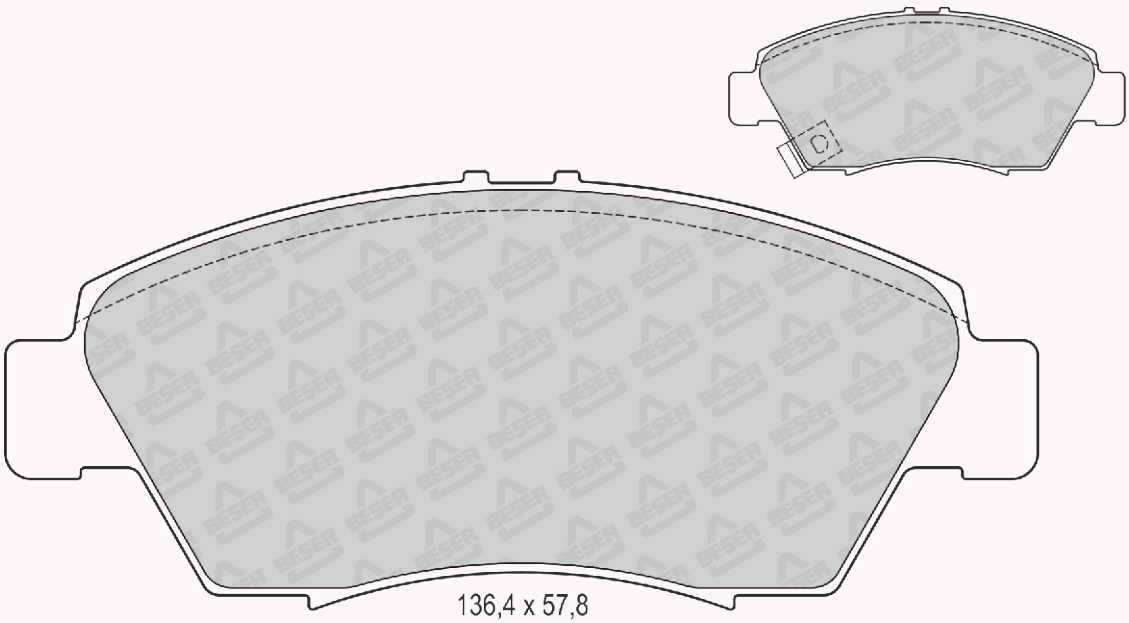

REFERENCE	T(mm)	REMARKS	MAKE	F/R	WVA No
3608	17	1 PAD WITH WEAR SENSOR (475mm)	FIAT - LANCIA ZASTAVA	F	21436 21437

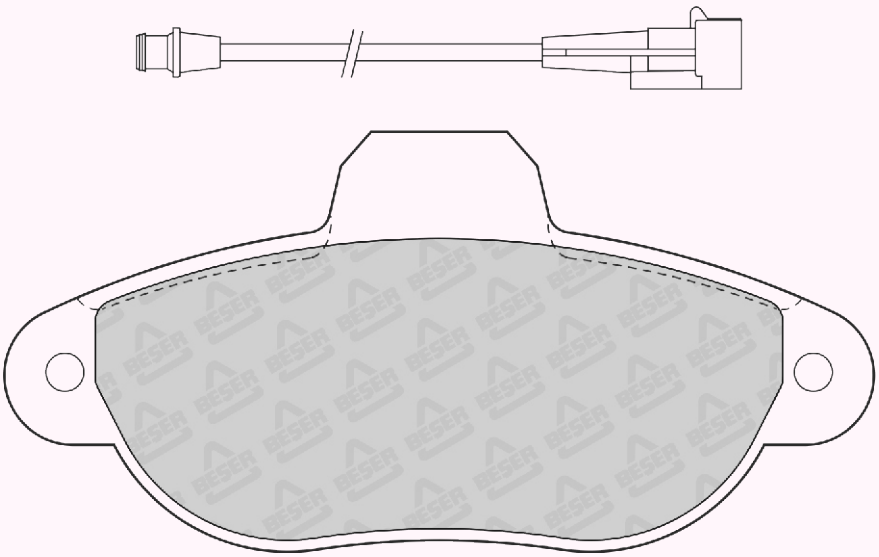

114,9 x 55,4

REFERENCE	T(mm)	REMARKS	MAKE	F/R	WVA No
3609	17	4 PADS PLAIN	BMW	F	21172 21173

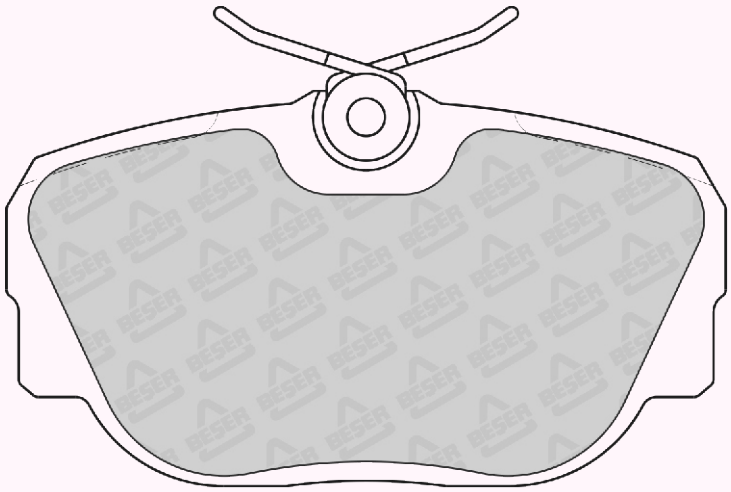

95 x 52

REFERENCE	T(mm)	REMARKS	MAKE	F/R	WVA No
3610	19	4 PADS WITH WEAR SENSOR (290-320mm)	PEUGEOT	F	20202 21210 23169 23170 23202

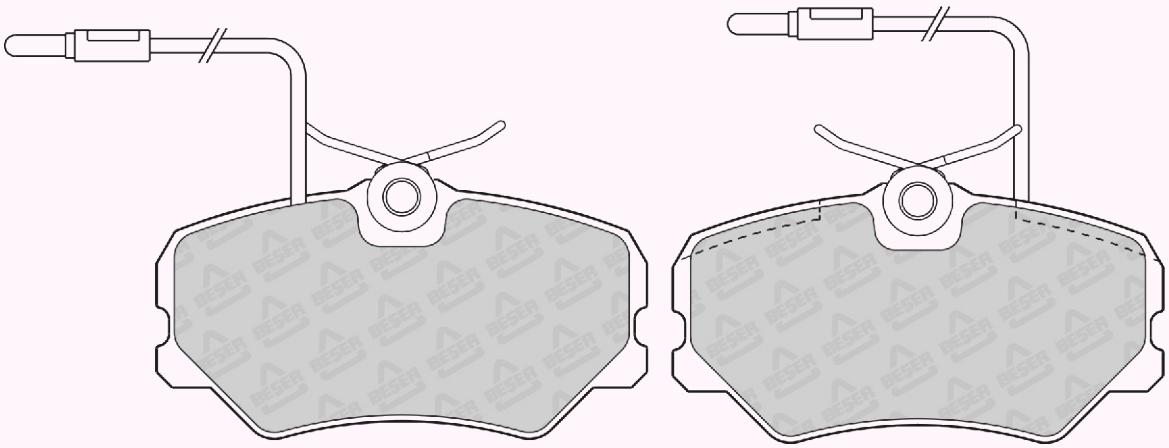

94,8 x 49
(NOT SCALE)

REFERENCE	T(mm)	REMARKS	MAKE	F/R	WVA No
3611	13,5	4 PADS PLAIN	MERCEDES BENZ	R	20687 20758

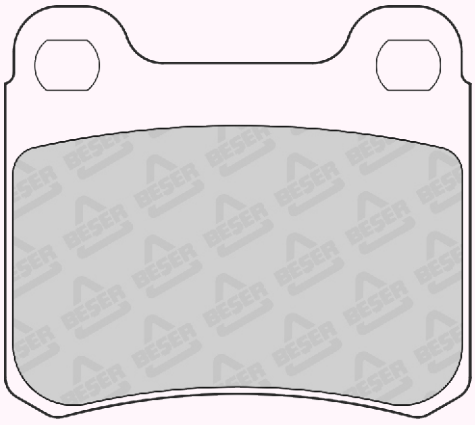

61,3 x 54,2

REFERENCE	T(mm)	REMARKS	MAKE	F/R	WVA No
3612	16,4	2 PADS WITH SRING	FIAT	R	---

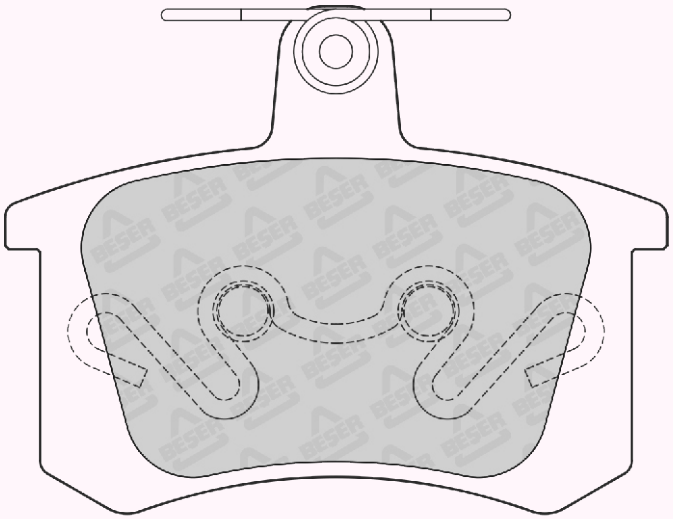

87,3 x 66,9

REFERENCE	T(mm)	REMARKS	MAKE	F/R	WVA No
3613	18,6	4 PADS PLAIN	FORD	F	---

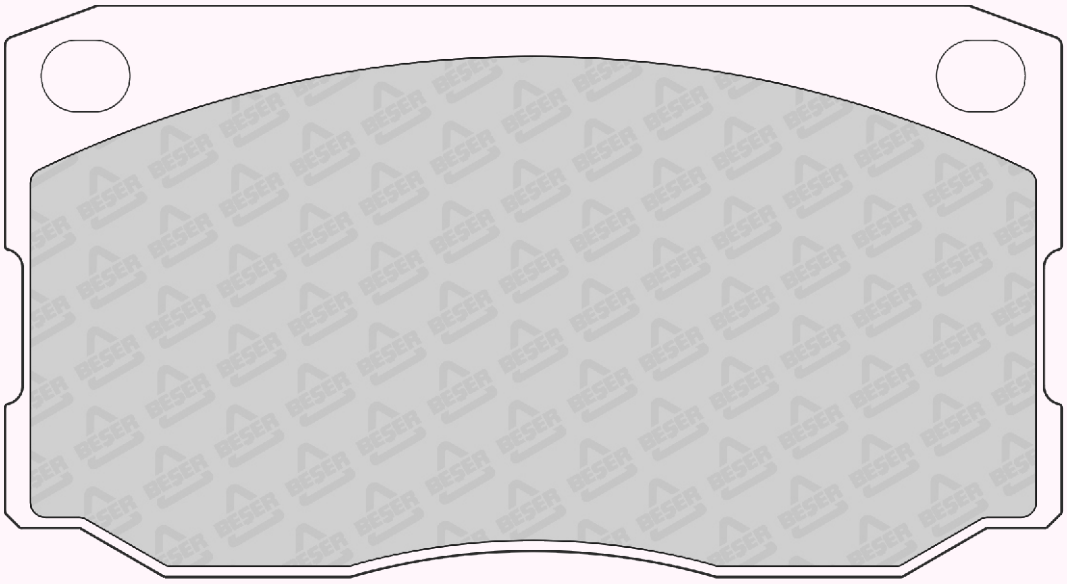

139,5 x 75,4

REFERENCE	T(mm)	REMARKS	MAKE	F/R	WVA No
3614	20	4 PADS WITH 2 SLOT	MERCEDES BENZ - VW	F,R	29076

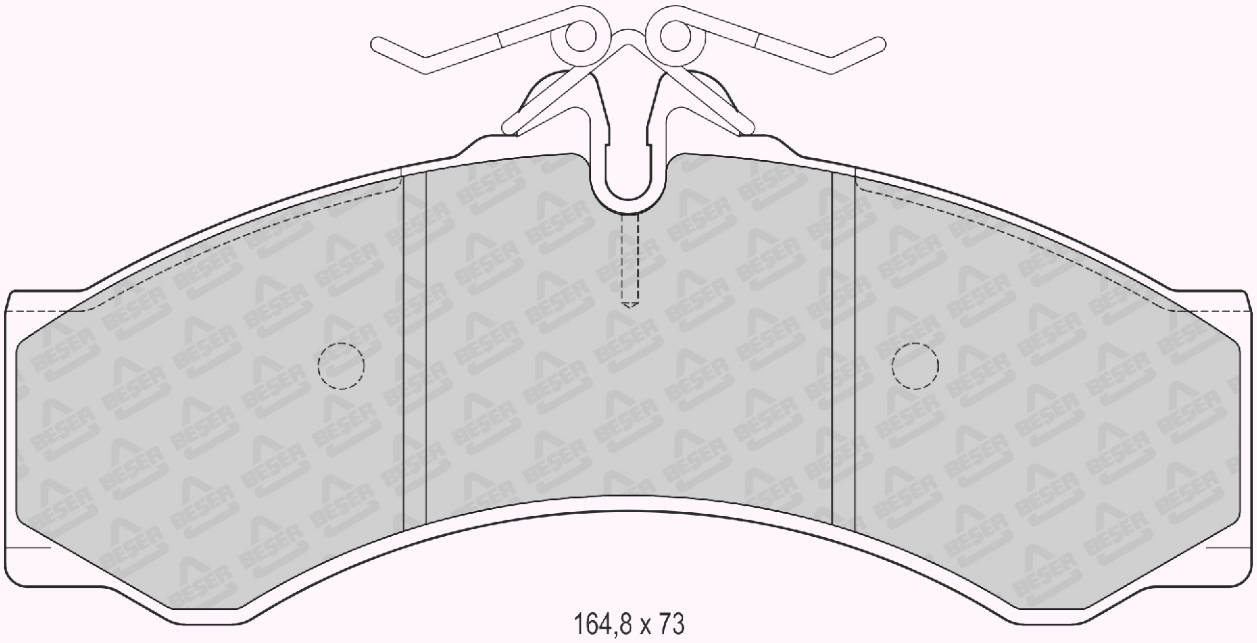

164,8 x 73

REFERENCE	T(mm)	REMARKS	MAKE	F/R	WVA No
3615	18	2 PADS WITH CLIP	CHEVROLET - DAEWOO - FSO HOLDEN - OPEL ZAZ - VAUXHALL	F	21190 21862

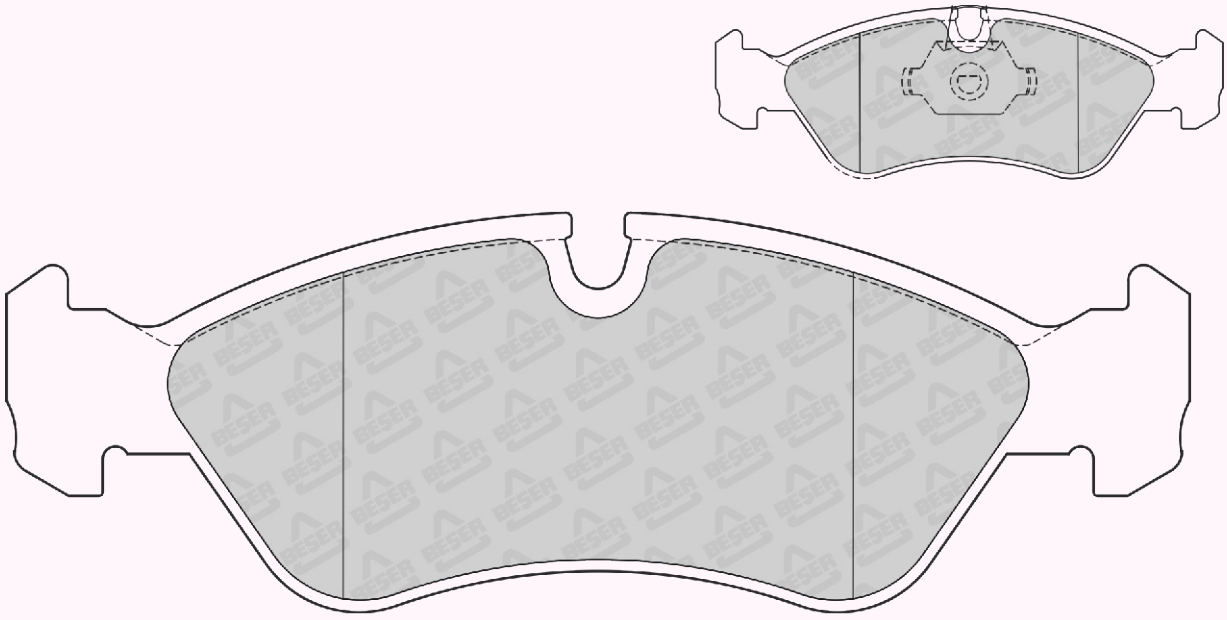

156,3 x 52,8

REFERENCE	T(mm)	REMARKS	MAKE	F/R	WVA No
3616	16,5	1 PAD WITH WEAR SENSOR (850mm)	FORD	F	---

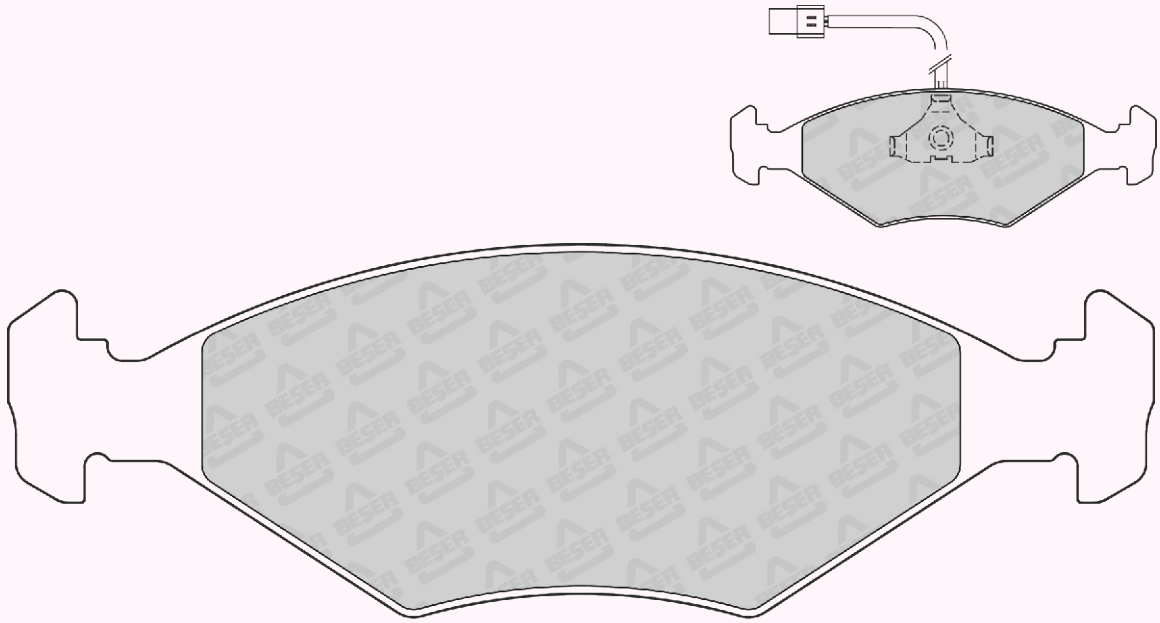

REFERENCE	T(mm)	REMARKS	MAKE	F/R	WVA No
3617	19	1 PAD WITH WEAR SENSOR (200mm)	ALFA ROMEO	F	21636 21637 21641 21941

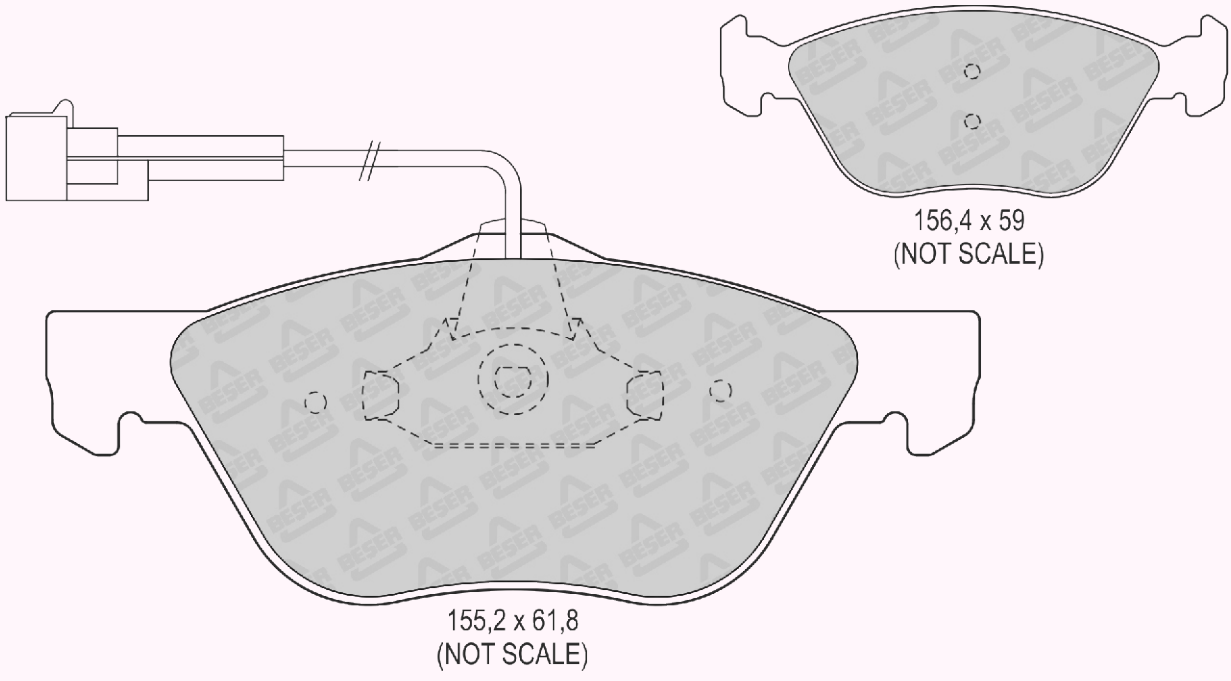

REFERENCE	T(mm)	REMARKS	MAKE	F/R	WVA No
3618	17,5	1 PAD WITH WEAR SENSOR (225mm)	ALFA ROMEO,FIAT LANCIA	F	21927 21928 21929

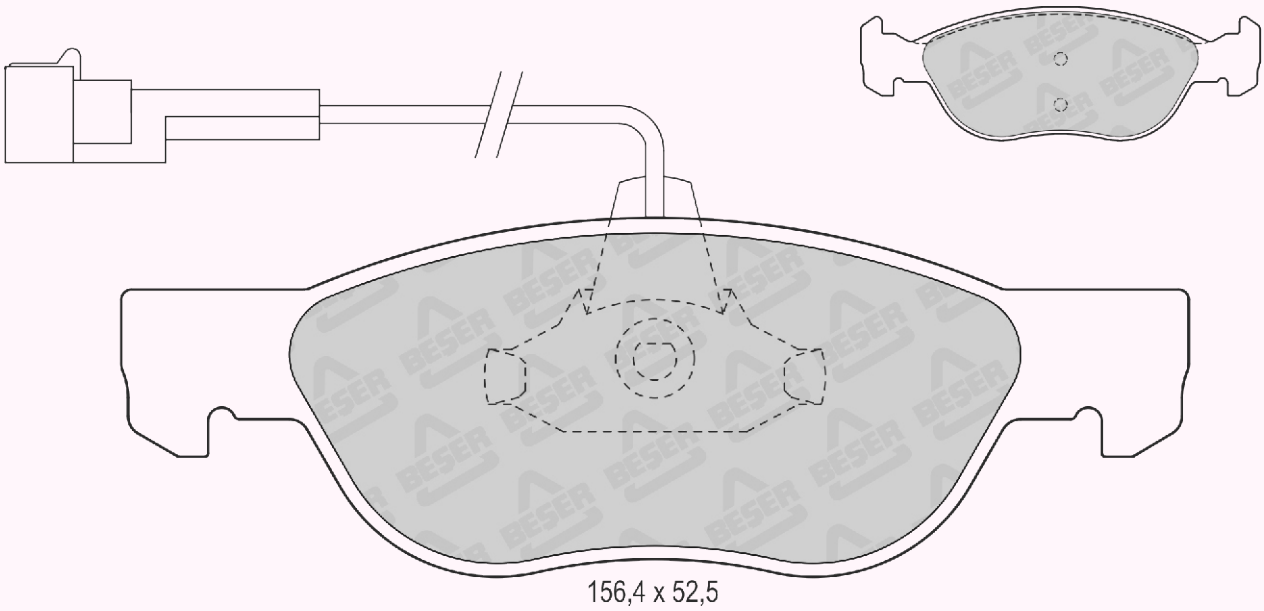

REFERENCE	T(mm)	REMARKS	MAKE	F/R	WVA No
3618/1	17,5	4 PADS PLAIN	ALFA ROMEO,FIAT LANCIA	F	21927 21928 21929

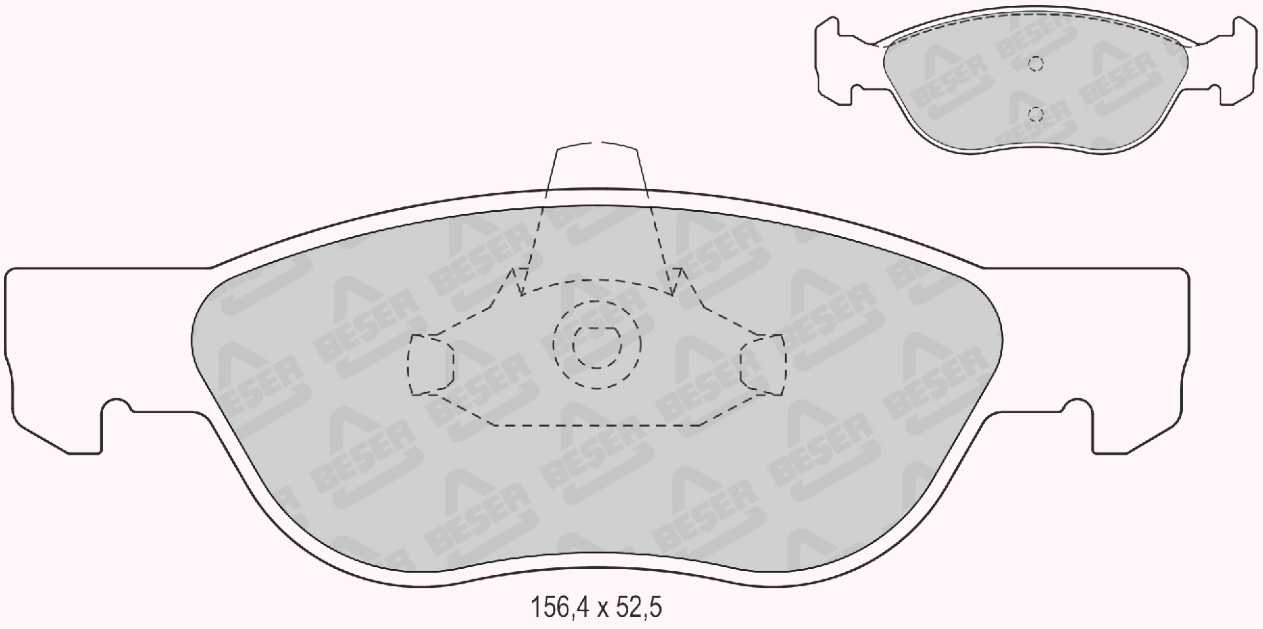

REFERENCE	T(mm)	REMARKS	MAKE	F/R	WVA No
3621	18	4 PADS PLAIN	FORD	F	20857 20858

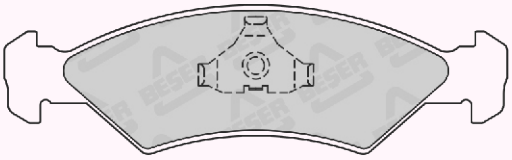

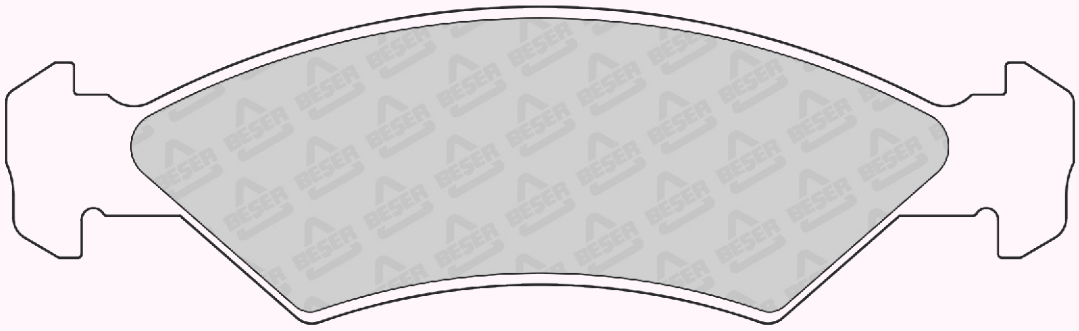

141,1 x 41,8

REFERENCE	T(mm)	REMARKS	MAKE	F/R	WVA No
3622	16	2 PADS WITH WEAR SENSOR	CHRYSLER - HONDA HYUNDAI - MITSUBISHI - PROTON	F	21647 21648 21649

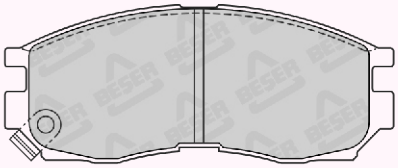

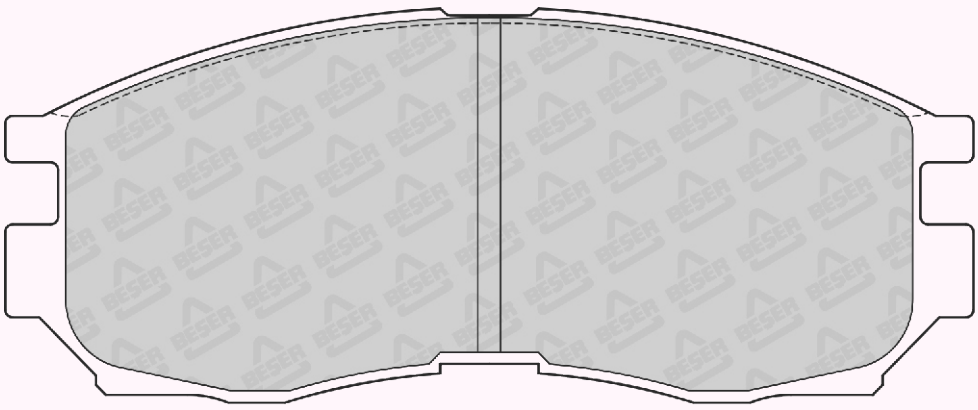

127,8 x 52

REFERENCE	T(mm)	REMARKS	MAKE	F/R	WVA No
3619	19,4	2 PADS WITH WEAR SENSOR	AUDI	F	20669 20901

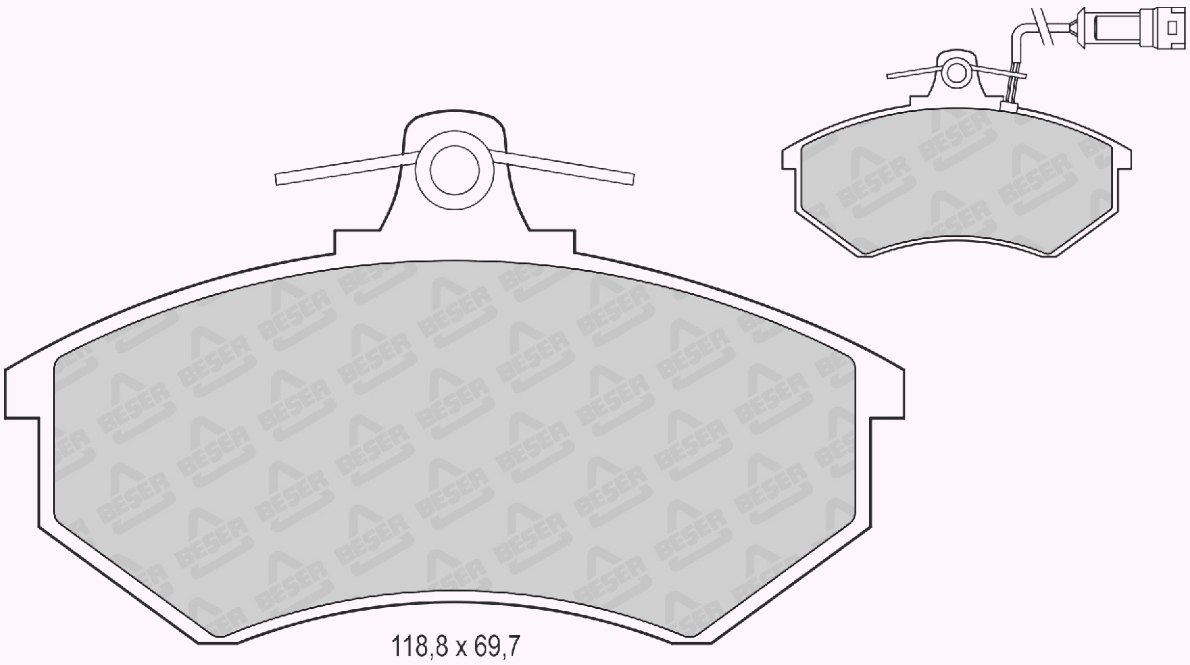

118,8 x 69,7

REFERENCE	T(mm)	REMARKS	MAKE	F/R	WVA No
3620	14	4 PADS PLAIN	DAIHATSU	F	21159

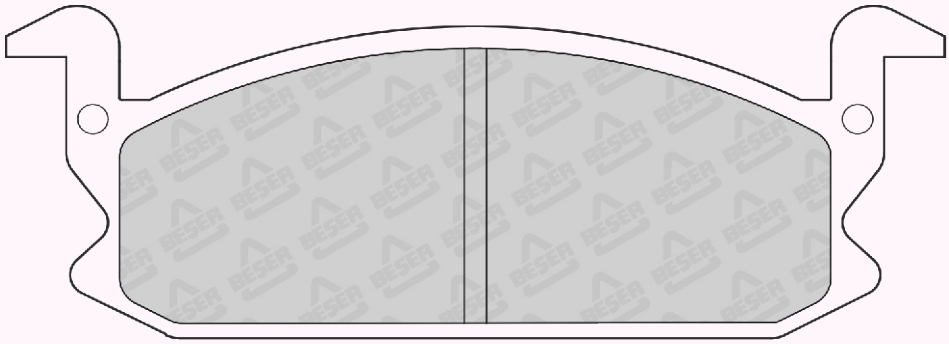

124,1 x 43,8

REFERENCE	T(mm)	REMARKS	MAKE	F/R	WVA No
3623	16,5	2 PADS INNER & 2 PADS OUTER	CHEVROLET - DAEWOO - FSO HOLDEN - JAGUAR - OPEL VAUXHALL - ZAZ	F	20353 20547 21311

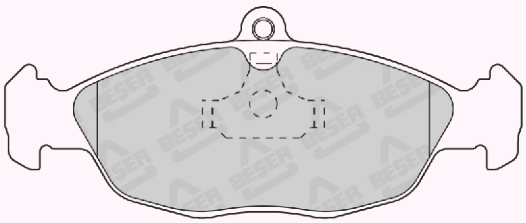

140,2 x 58,3
(NOT SCALE)

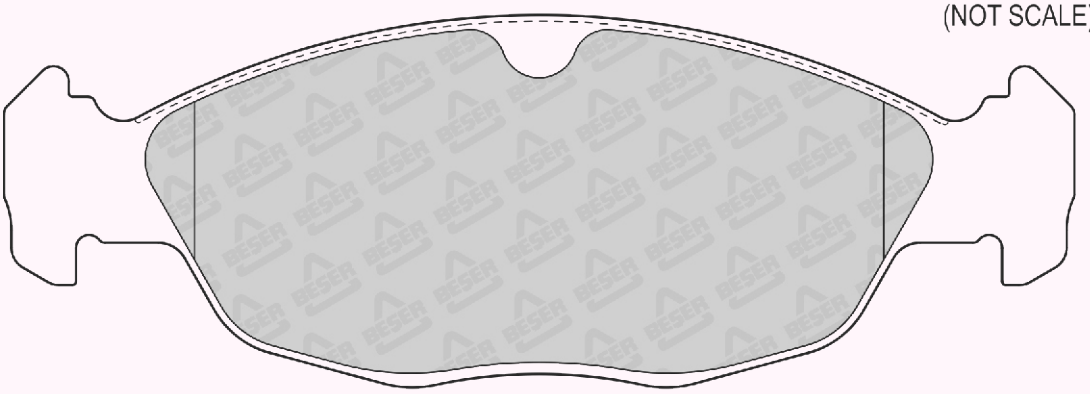

141,4 x 48,3

REFERENCE	T(mm)	REMARKS	MAKE	F/R	WVA No
3624	18,3	1 PAD WITH WEAR SENSOR (200mm)	AUSTIN - MG RELIANT - ROVER	F	21084 21085

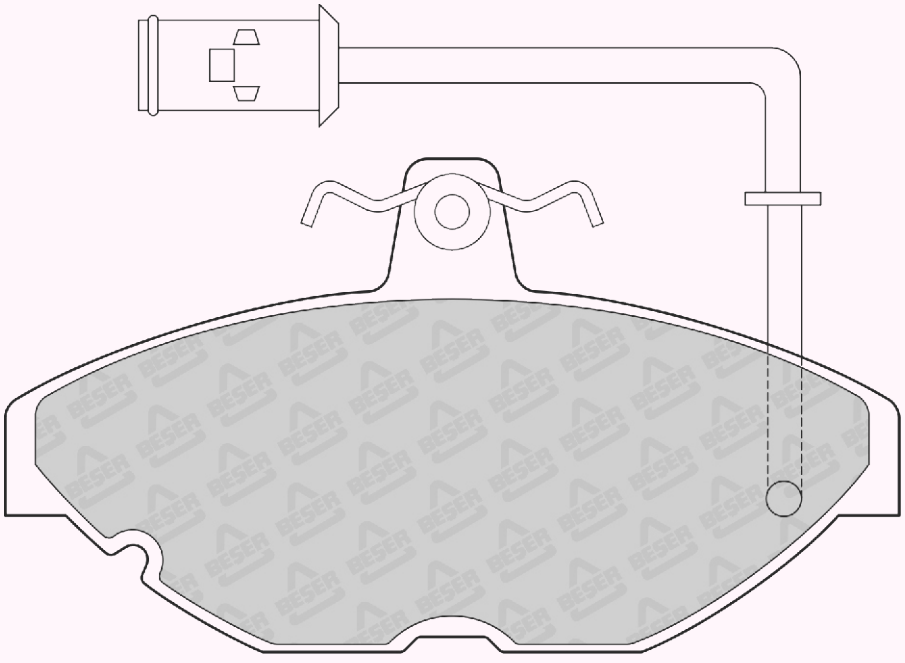

118,1 x 64,2

REFERENCE	T(mm)	REMARKS	MAKE	F/R	WVA No
3625	16	4 PADS PLAIN	FIAT	F	20375 20677

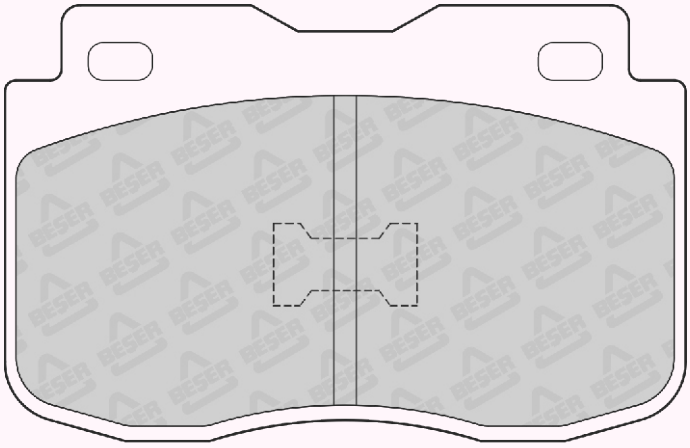

89,8 x 57,5

REFERENCE	T(mm)	REMARKS	MAKE	F/R	WVA No
3626	17,4	4 PADS PLAIN	MERCEDES BENZ	F	20375 21304

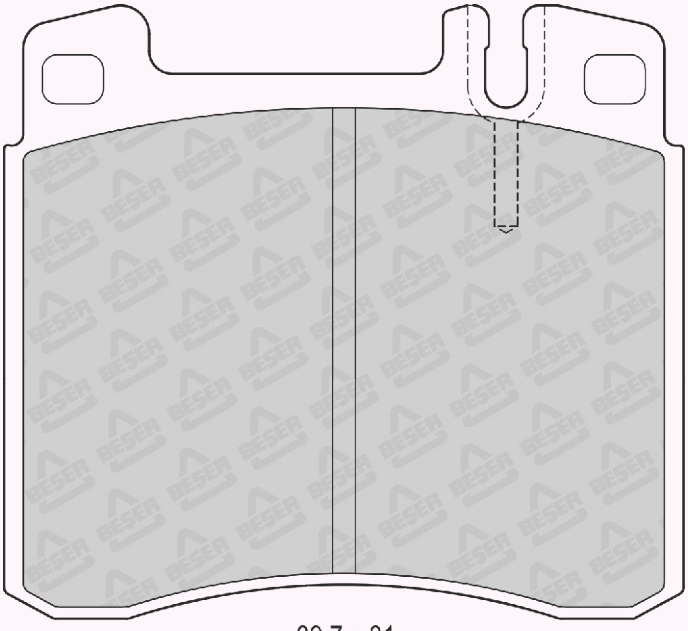

89,7 x 81

REFERENCE	T(mm)	REMARKS	MAKE	F/R	WVA No
3627	18,3	4 PADS PLAIN	MERCEDES BENZ	F	21303

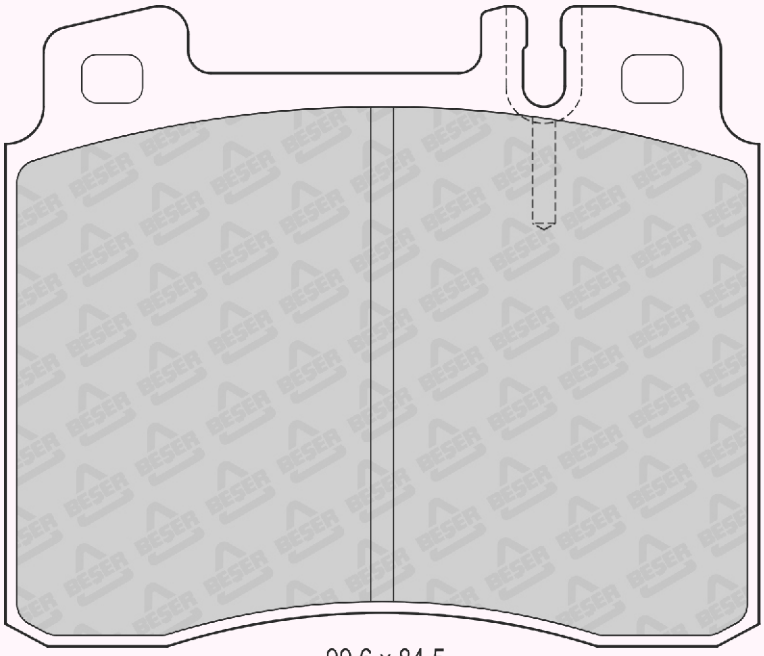

99,6 x 84,5

REFERENCE	T(mm)	REMARKS	MAKE	F/R	WVA No
3628	16	4 PADS PLAIN	MERCEDES BENZ	F	21153

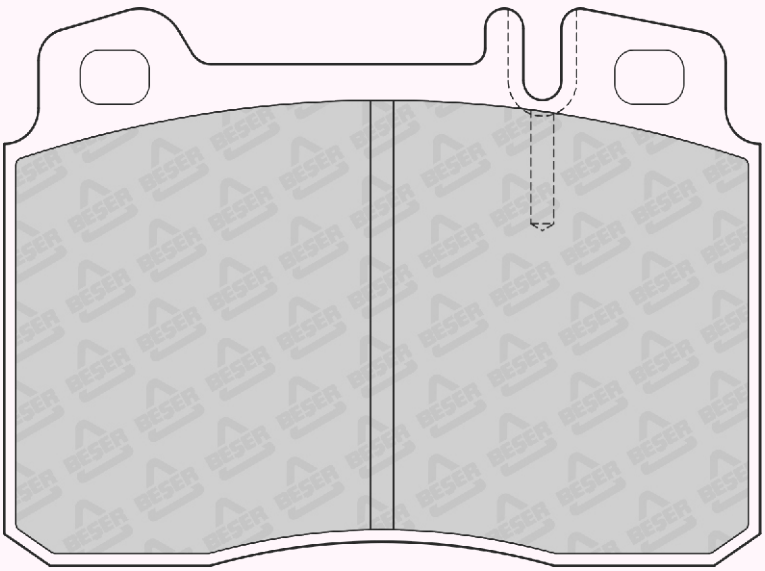

99,8 x 73,5

REFERENCE	T(mm)	REMARKS	MAKE	F/R	WVA No
3629	17,5	4 PADS PLAIN	MERCEDES BENZ	F	21153

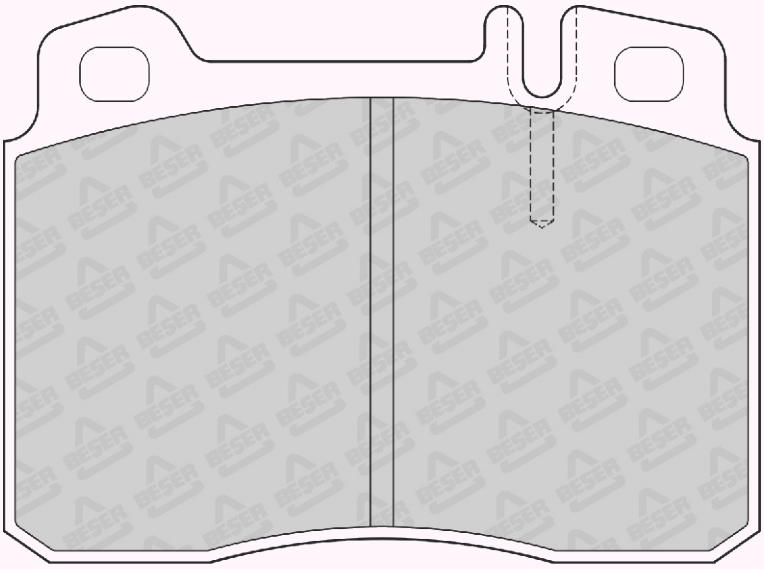

99,8 x 73,5

REFERENCE	T(mm)	REMARKS	MAKE	F/R	WVA No
3630	15	4 PADS PLAIN	MERCEDES BENZ	R	21301

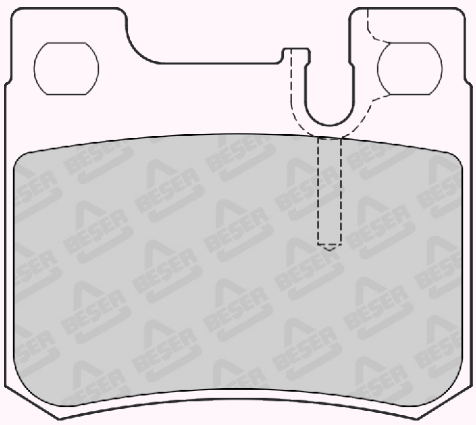

61,5 x 54,3

REFERENCE	T(mm)	REMARKS	MAKE	F/R	WVA No
3631	17,5	2 PADS WITH WEAR SENSOR	ACURA - HONDA ROVER	F	21446 21447 21448 21523

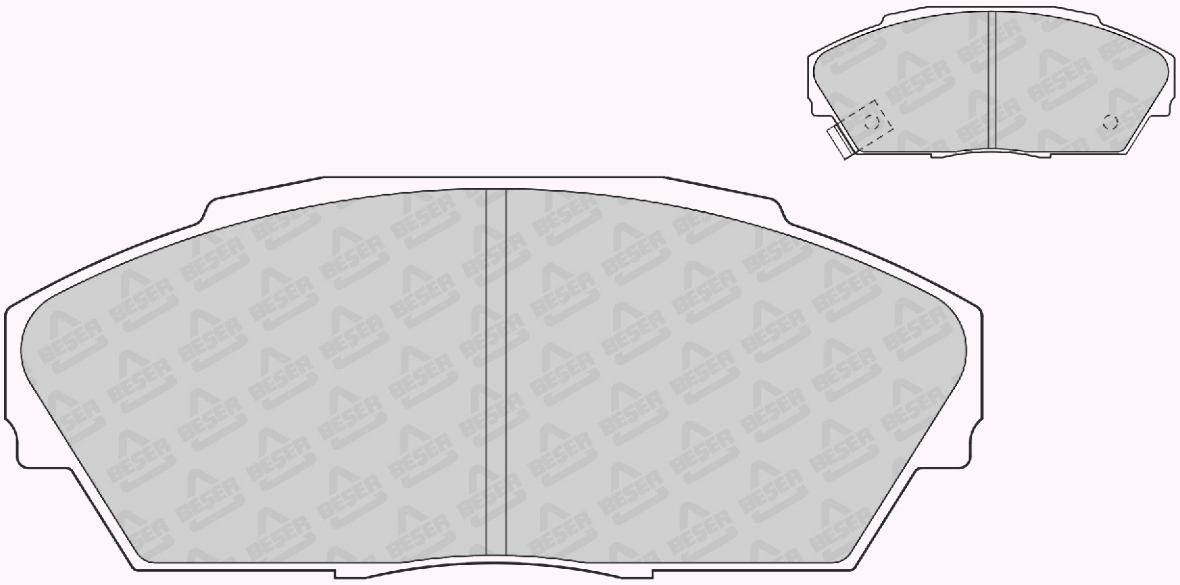

129,1 x 52,9

REFERENCE	T(mm)	REMARKS	MAKE	F/R	WVA No
3632	17	2 PADS WITH WEAR SENSOR 4 PADS WITH SPRING	HAFEI - HYUNDAI KIA - MITSUBISHI	F	21725 21726 21727

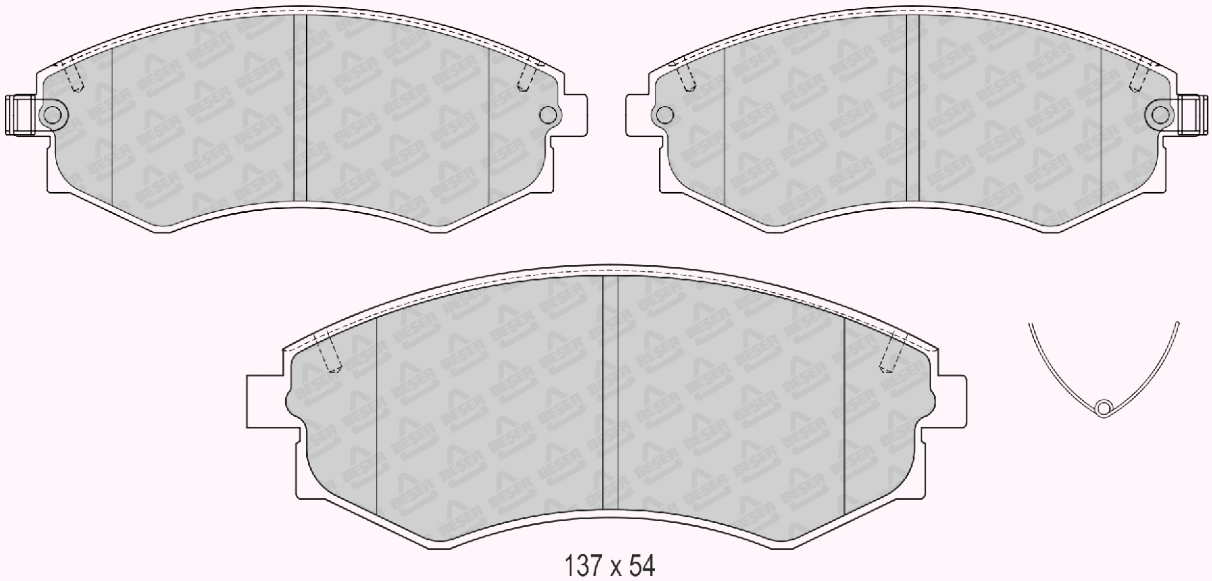

137 x 54

REFERENCE	T(mm)	REMARKS	MAKE	F/R	WVA No
3633	14,9	2 PADS WITH WEAR SENSOR	HONDA	F	20895 21326 21327

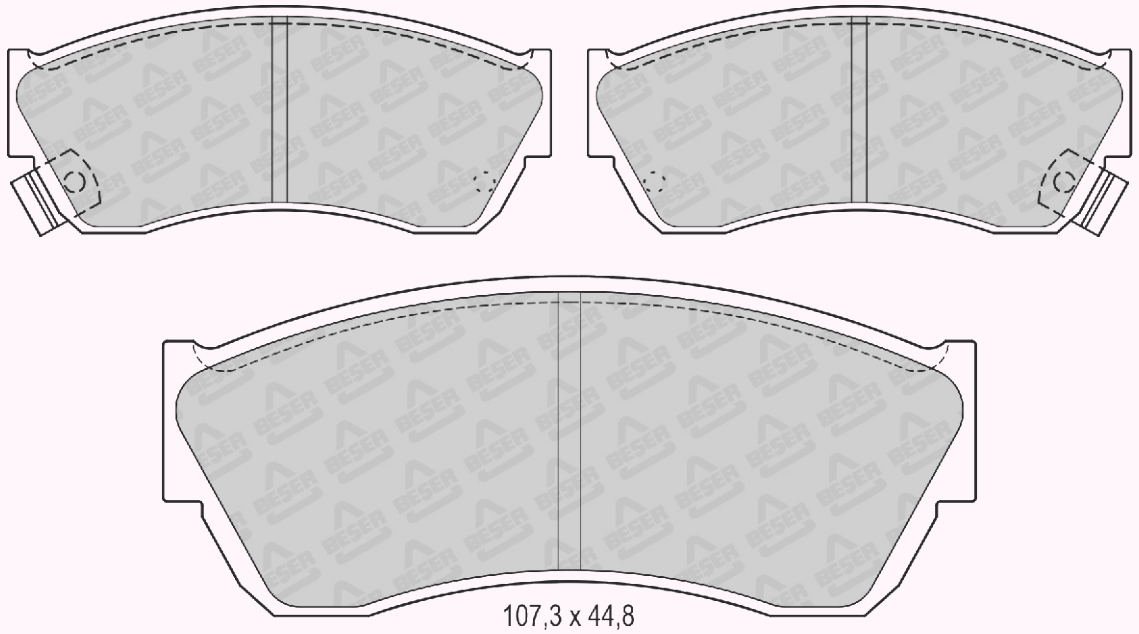

REFERENCE	T(mm)	REMARKS	MAKE	F/R	WVA No
3634	15,5	2 PADS INNER & 2 PADS OUTER	TOYOTA	F	20182 21248 20186 21249 21011 21369

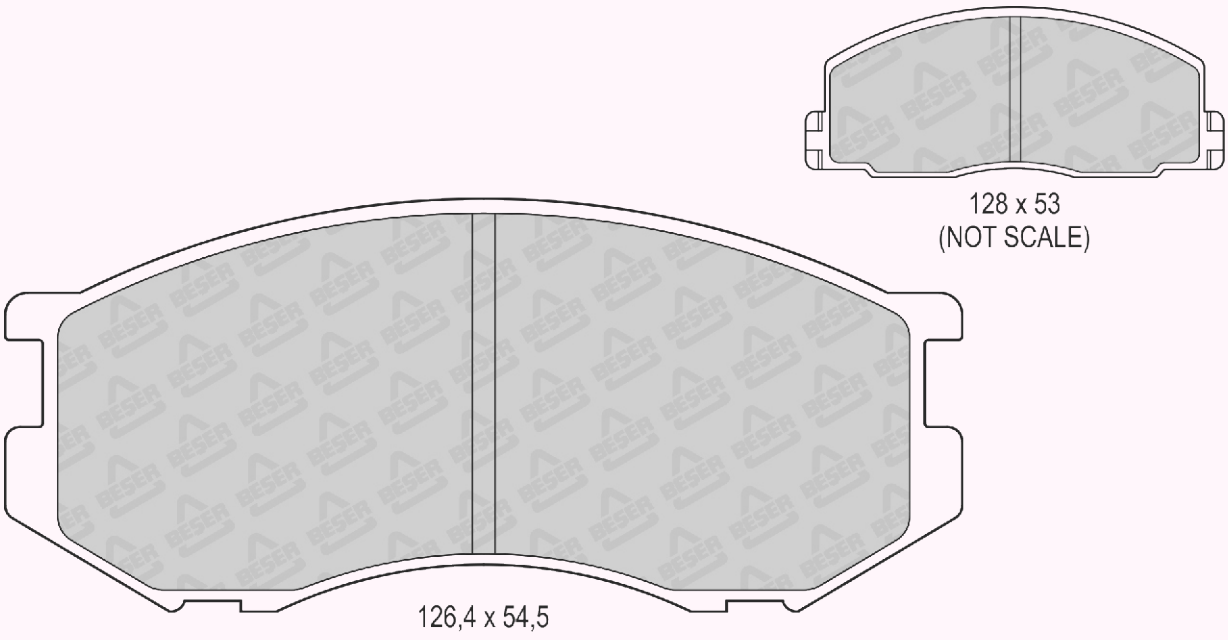

REFERENCE	T(mm)	REMARKS	MAKE	F/R	WVA No
3635	16	2 PADS WITH WEAR SENSOR (240mm)	AUDI	F	20669 20901

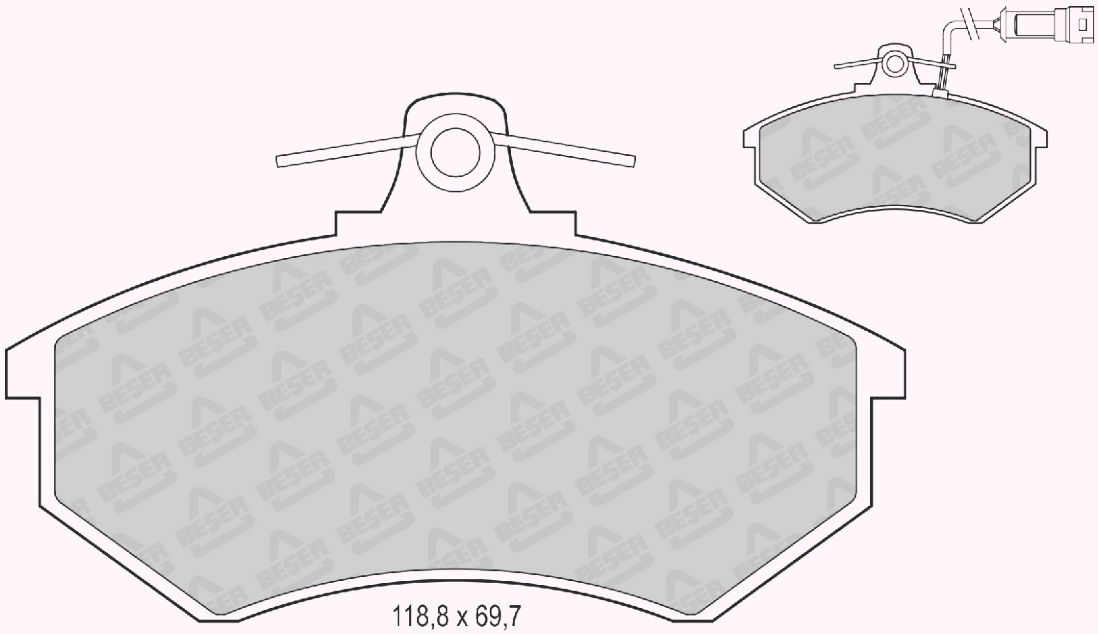

REFERENCE	T(mm)	REMARKS	MAKE	F/R	WVA No
3636	19	4 PADS WEAR SENSOR (310-280mm) 4 BOLTS	CITROEN - PEUGEOT	F	23124 23125

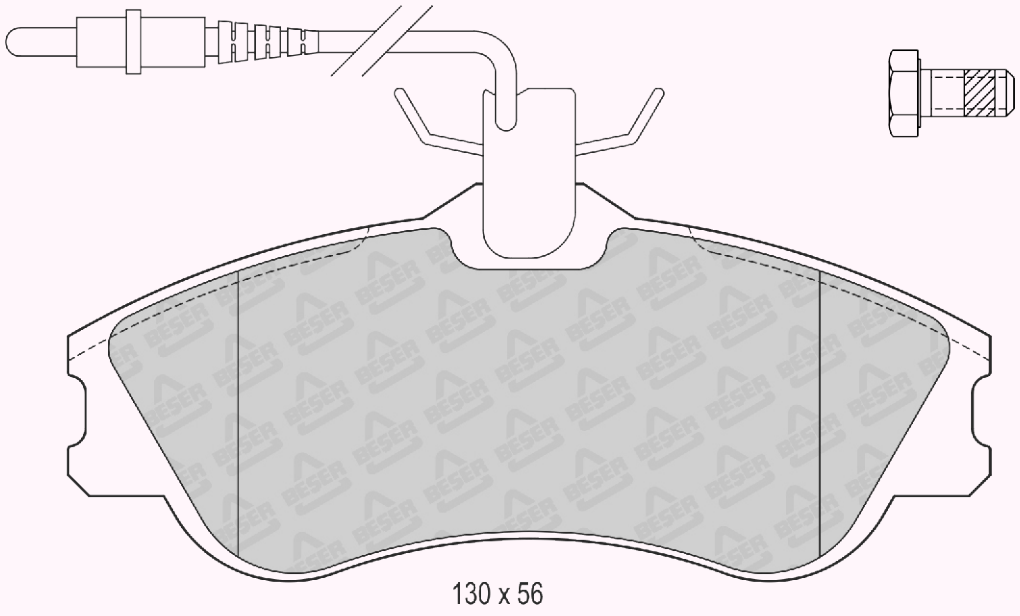

REFERENCE	T(mm)	REMARKS	MAKE	F/R	WVA No
3637	15	4 PADS PLAIN	SEAT - VW	F	21866 21868

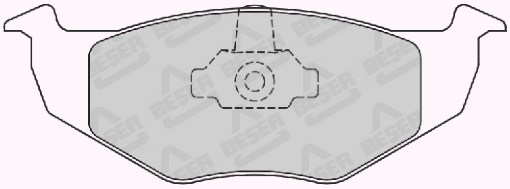

141,6 x 51,1
(NOT SCALE)

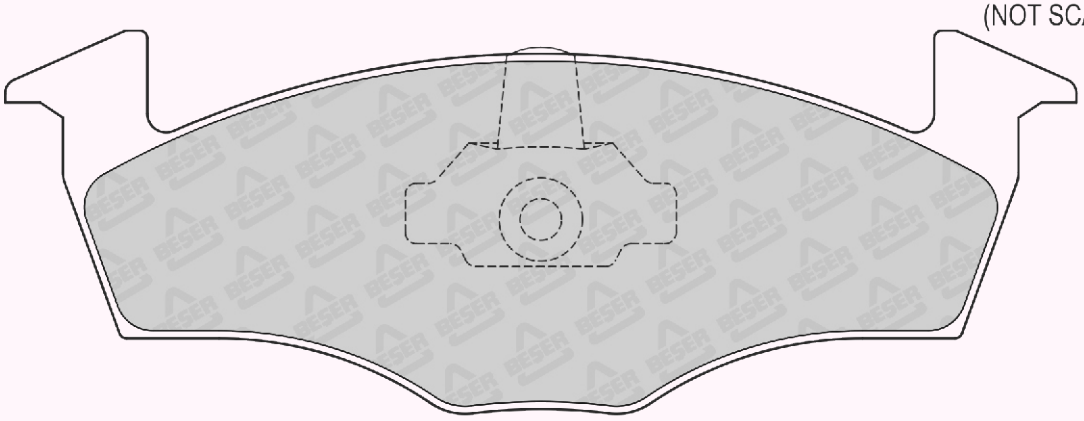

141,6 x 50,6

REFERENCE	T(mm)	REMARKS	MAKE	F/R	WVA No
3637/1	15,5	4 PADS PLAIN	SEAT - VW	F	21866 21868

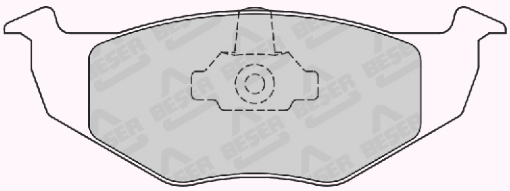

141,6 x 51,1
(NOT SCALE)

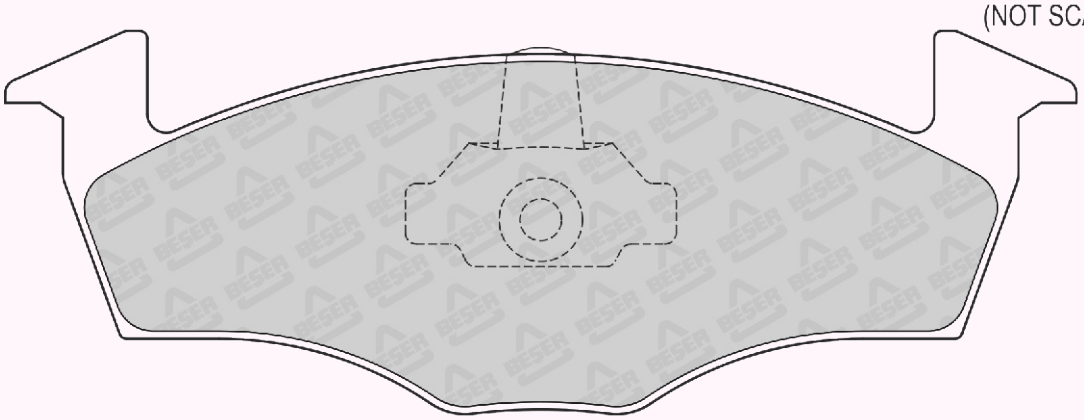

141,6 x 50,6

REFERENCE	T(mm)	REMARKS	MAKE	F/R	WVA No
3640	15	2 PADS WITH WEAR SENSOR	FORD - MAZDA	F	21539 21540 21541

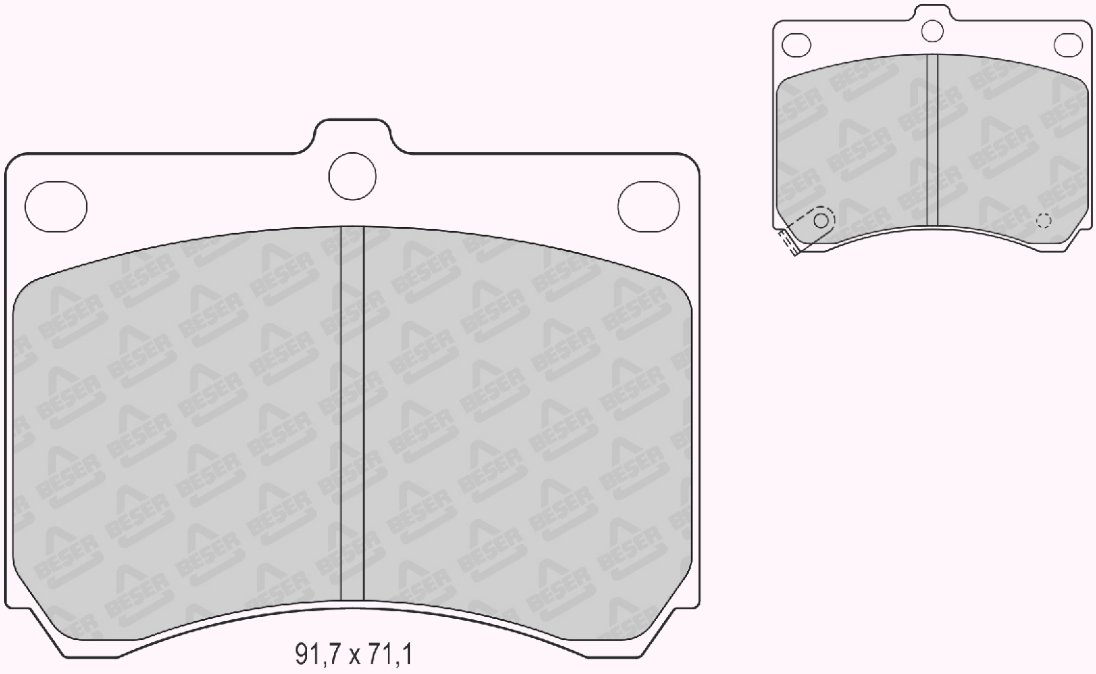

REFERENCE	T(mm)	REMARKS	MAKE	F/R	WVA No
3641	16,4	4 PADS WITH 8 PLUGS. WITH 2 SPRINGS	UMM - VOLVO	F	20788 21178 21232 21233

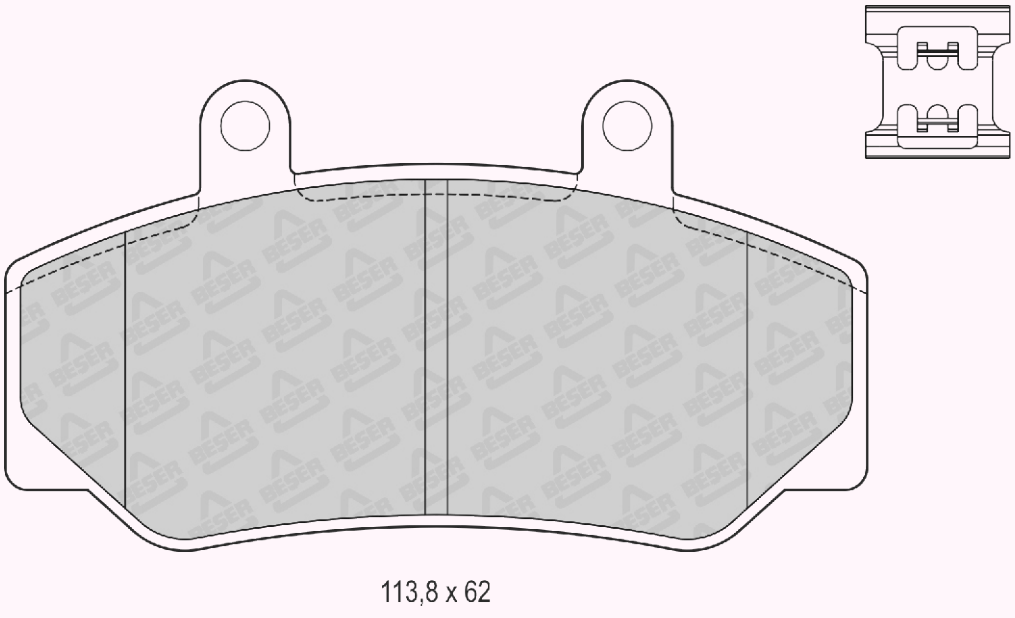

REFERENCE	T(mm)	REMARKS	MAKE	F/R	WVA No
3642	13	4 PADS PLAIN	VOLVO	R	21385

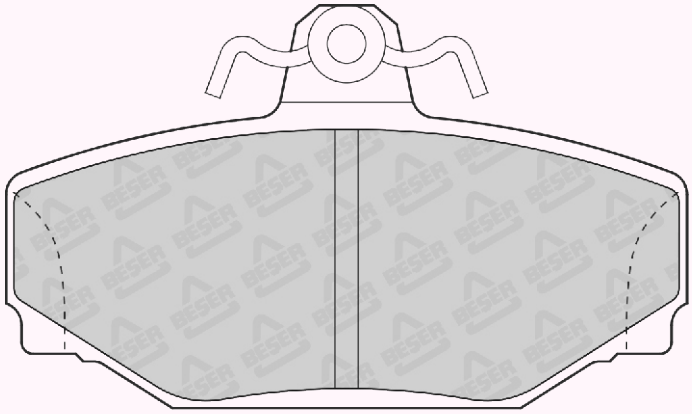

89,9 x 53,5

REFERENCE	T(mm)	REMARKS	MAKE	F/R	WVA No
3643	17	4 PADS PLAIN	FIAT LANCIA - ZASTAVA	F	21436

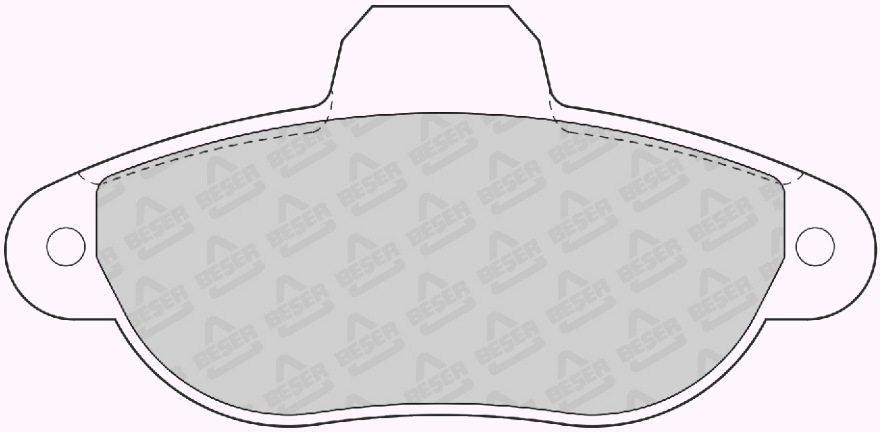

114,9 x 55,4

REFERENCE	T(mm)	REMARKS	MAKE	F/R	WVA No
3644	19	4 PADS PLAIN	CITROEN - PEUGEOT	F	23124 23125 23346

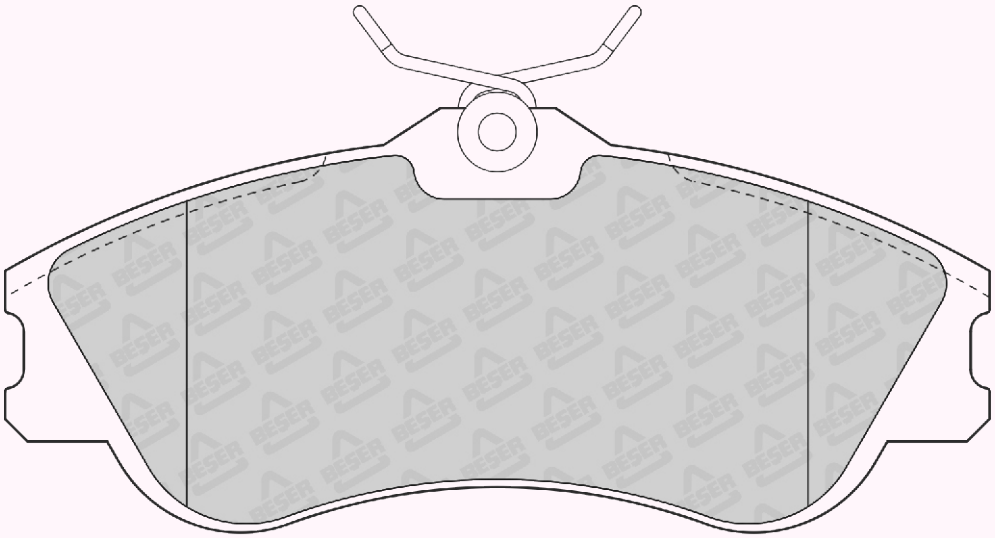

130 x 56

REFERENCE	T(mm)	REMARKS	MAKE	F/R	WVA No
3645	20	4 PADS PLAIN & 4 BOLTS.	IVECO - RENAULT	F	29121

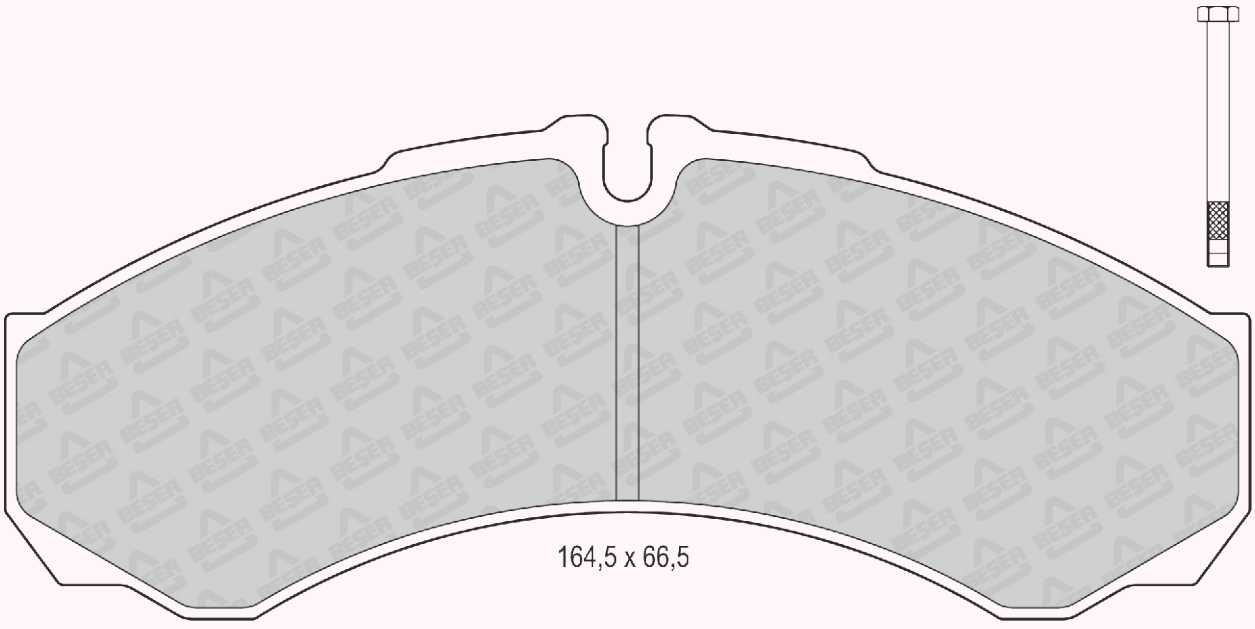

164,5 x 66,5

REFERENCE	T(mm)	REMARKS	MAKE	F/R	WVA No
3646	14,9	4 PADS PLAIN	HONDA	F	20895 21018

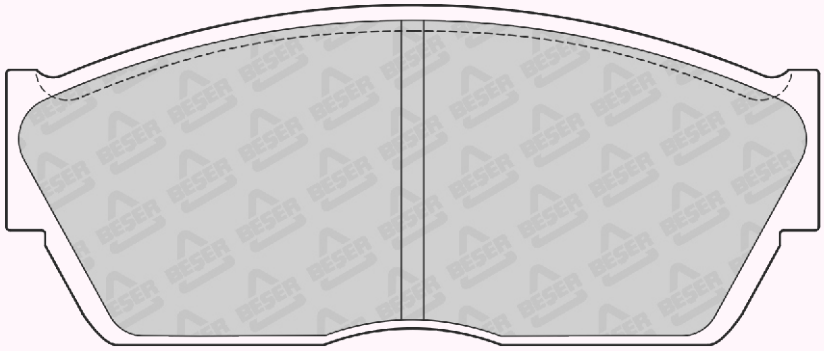

107,3 x 44,8

REFERENCE	T(mm)	REMARKS	MAKE	F/R	WVA No
3647	16	2 PADS WITH WEAR SENSOR	NISSAN	F	---

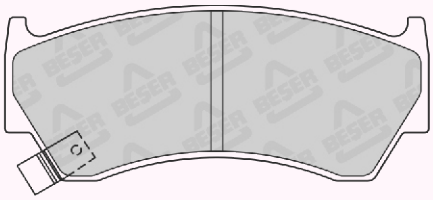

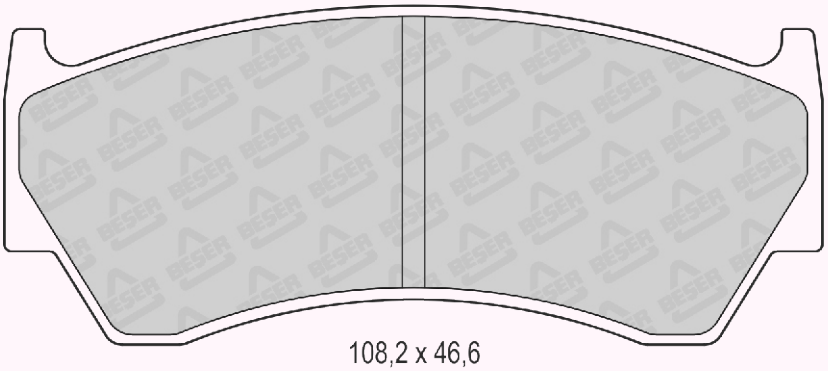

108,2 x 46,6

REFERENCE	T(mm)	REMARKS	MAKE	F/R	WVA No
3648	16	2 PADS WITH WEAR SENSOR	HYUNDAI	F	23536 23537 23538

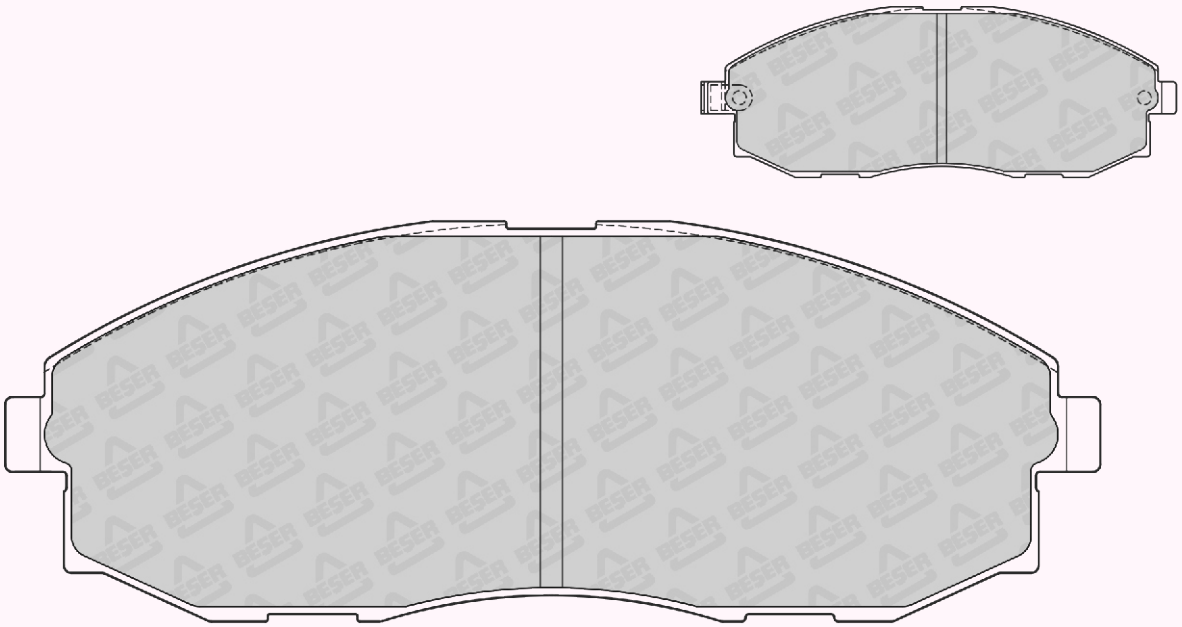

147 x 53,5

REFERENCE	T(mm)	REMARKS	MAKE	F/R	WVA No
3649	16	4 PADS PLAIN	AUDI	F	20669

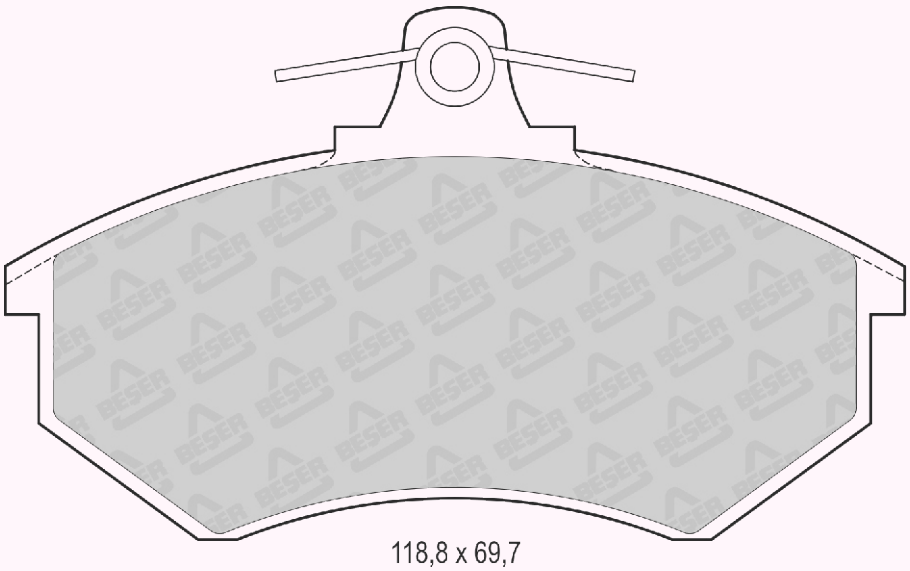

118,8 x 69,7

REFERENCE	T(mm)	REMARKS	MAKE	F/R	WVA No
3650	19,4	4 PADS PLAIN	AUDI - VW	F	20562 20669 20778

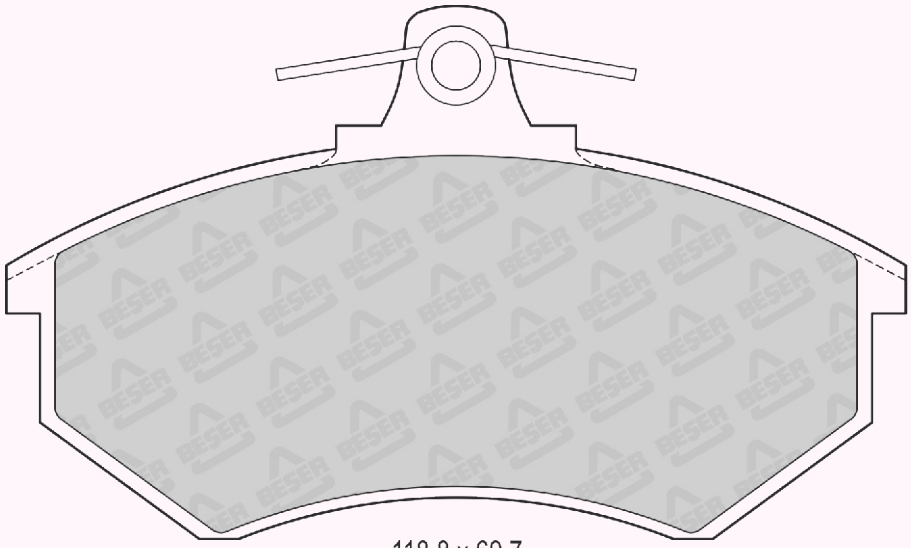

118,8 x 69,7

REFERENCE	T(mm)	REMARKS	MAKE	F/R	WVA No
3651	17,5	2 PADS WITH WEAR SENSOR 4 PAD WITH DRILLED HOLES	HOLDEN - TOYOTA	F	21601 21602 21603

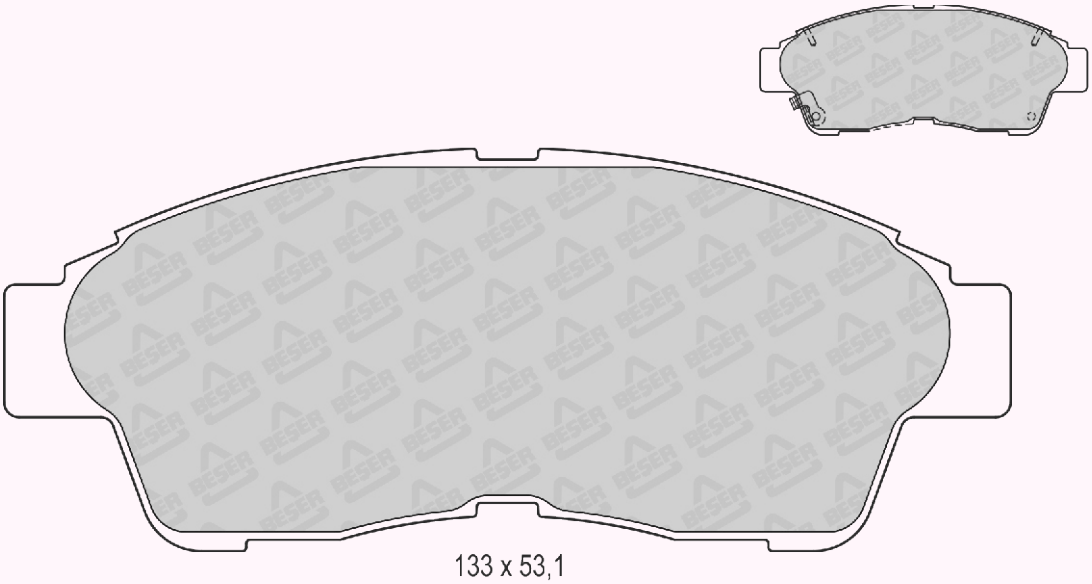

133 x 53,1

REFERENCE	T(mm)	REMARKS	MAKE	F/R	WVA No
3652	17,5	4 PADS PLAIN	NISSAN	F	21546

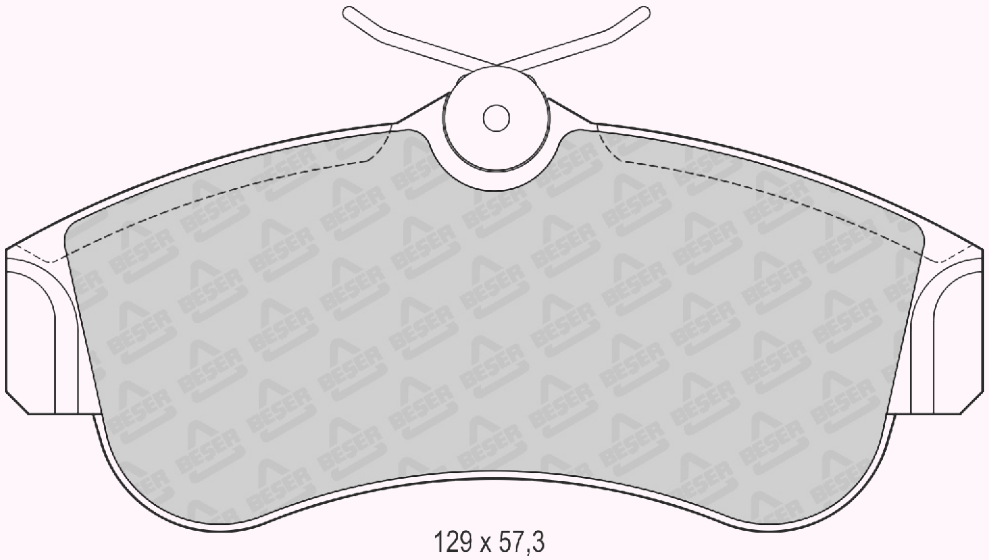

129 x 57,3

REFERENCE	T(mm)	REMARKS	MAKE	F/R	WVA No
3653	17,2	2 PADS WITH WEAR SENSOR	KIA	F	23484 23485 23486

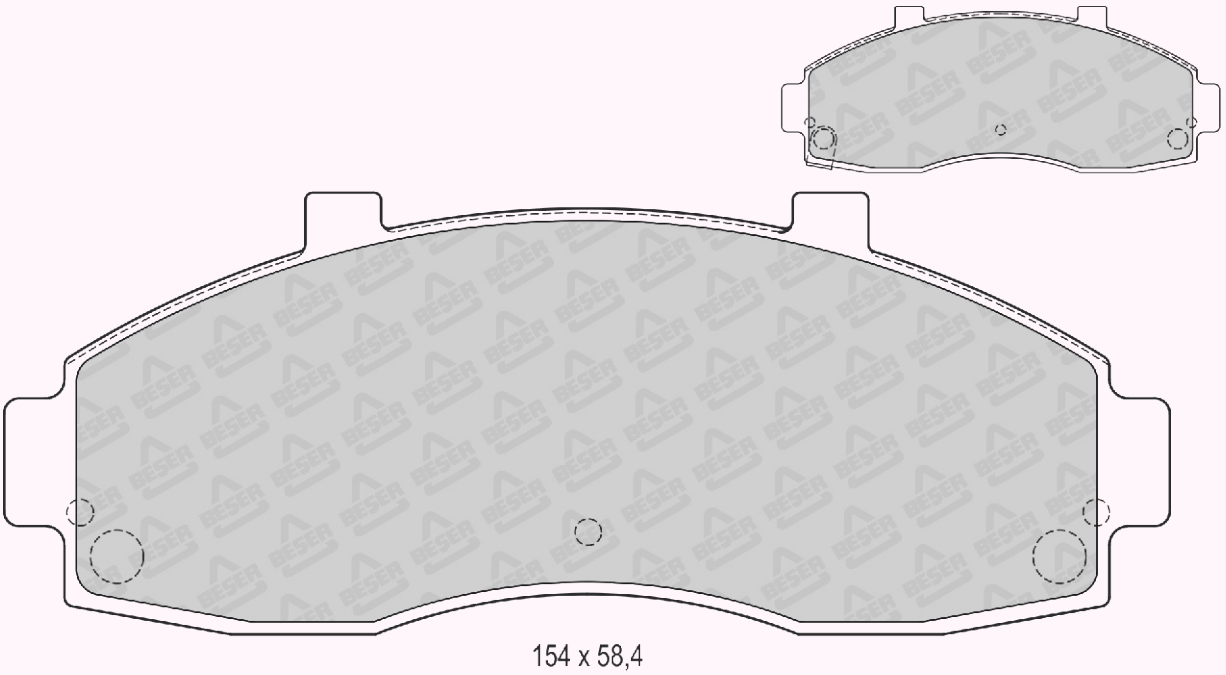

154 x 58,4

REFERENCE	T(mm)	REMARKS	MAKE	F/R	WVA No
3656	17	4 PADS PLAIN	ALPINE - BMW	R	21891 21690 21691

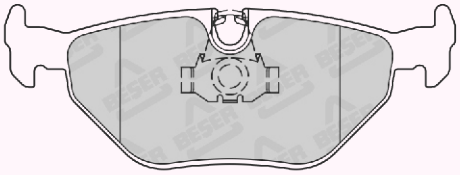

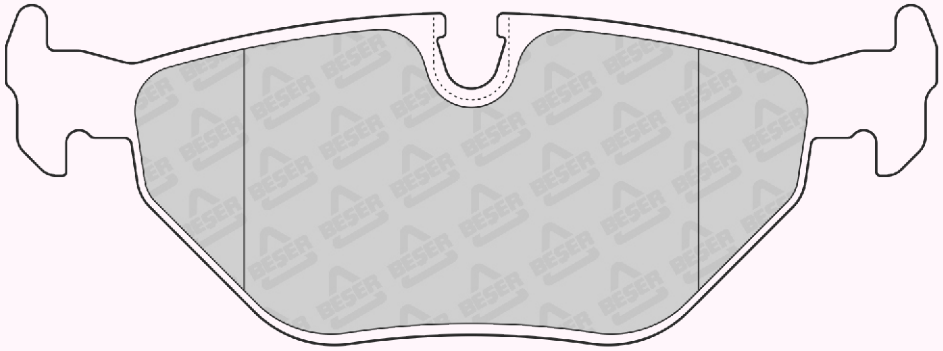

123 x 44,8

REFERENCE	T(mm)	REMARKS	MAKE	F/R	WVA No
3657	16,5	2 PADS WITH WEAR SENSOR	HOLDEN - ISUZU - LANDWIND(JMC) OPEL - VAUXHALL	F	21467 21543 21544

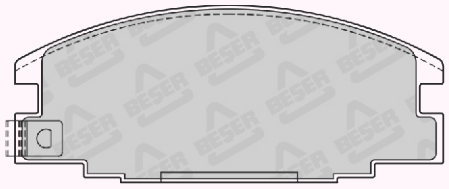

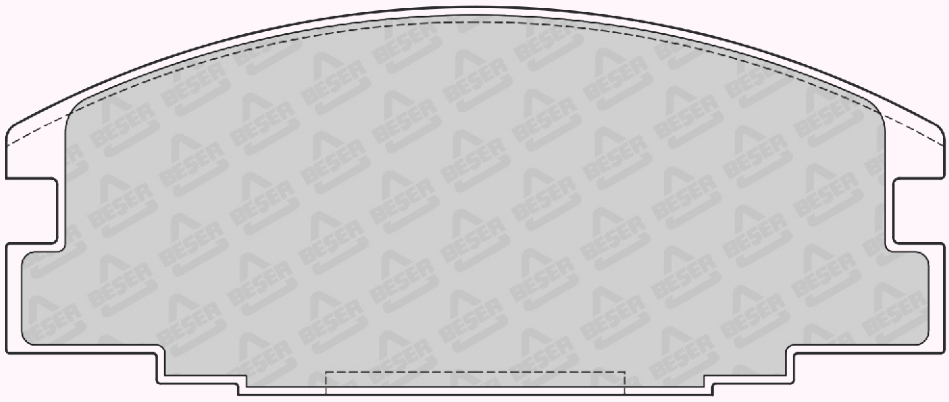

126,5 x 51,3

REFERENCE	T(mm)	REMARKS	MAKE	F/R	WVA No
3658	20	4 PADS PLAIN	MERCEDES BENZ	F	21438 21439 21567 21568

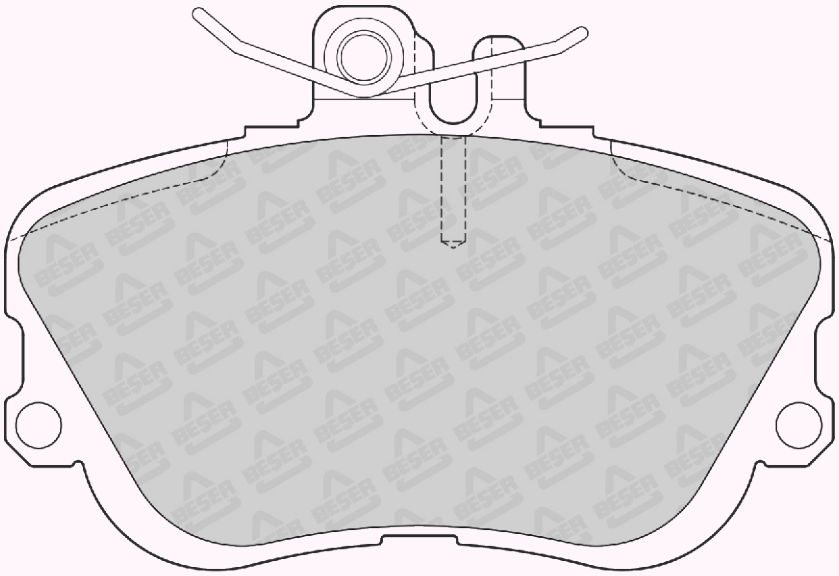

109,4 x 74,6

REFERENCE	T(mm)	REMARKS	MAKE	F/R	WVA No
3659	18	4 PADS PLAIN	CITROEN - RENAULT	R	21978 21979 21980 21981

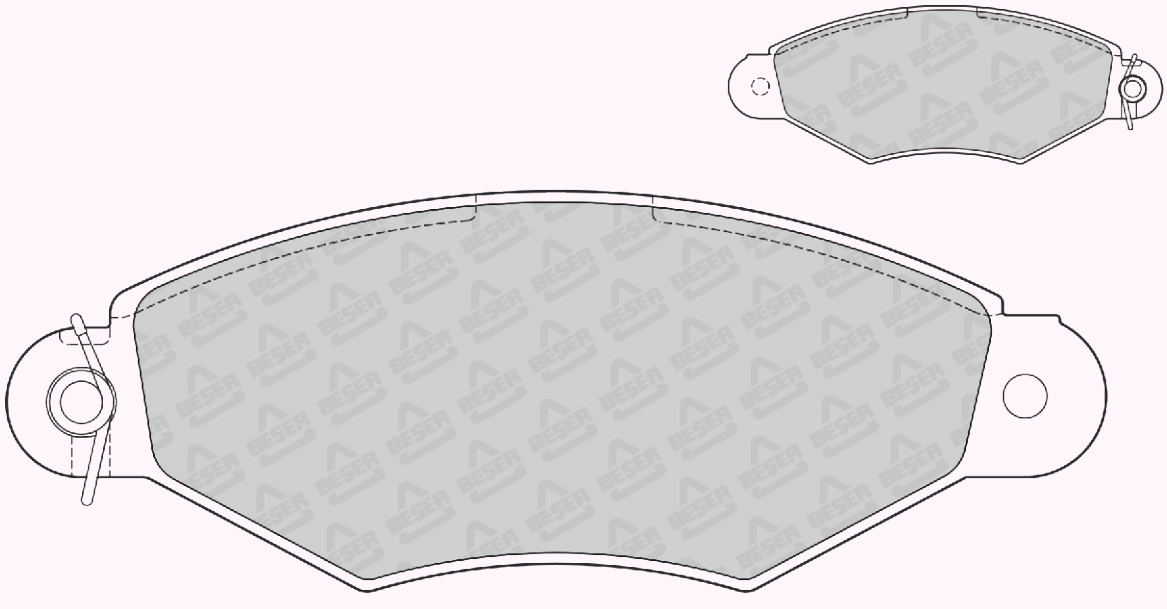

130,7 x 47,6

REFERENCE	T(mm)	REMARKS	MAKE	F/R	WVA No
3660	15,6	4 PADS PLAIN	NISSAN	R	21545

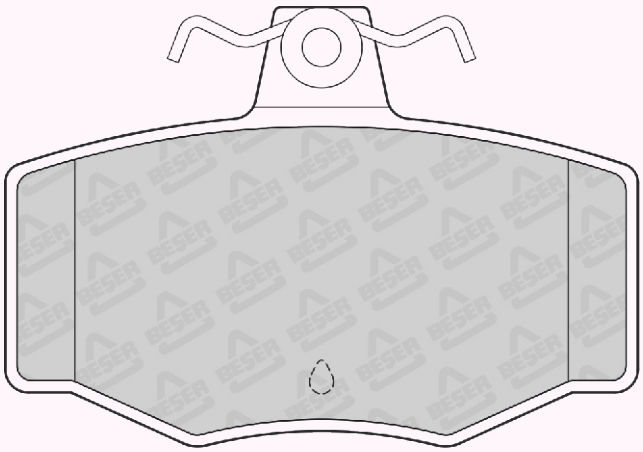

83,5 x 57

REFERENCE	T(mm)	REMARKS	MAKE	F/R	WVA No
3661	15,5	4 PADS PLAIN	LAND ROVER	R	20344 21237 21238

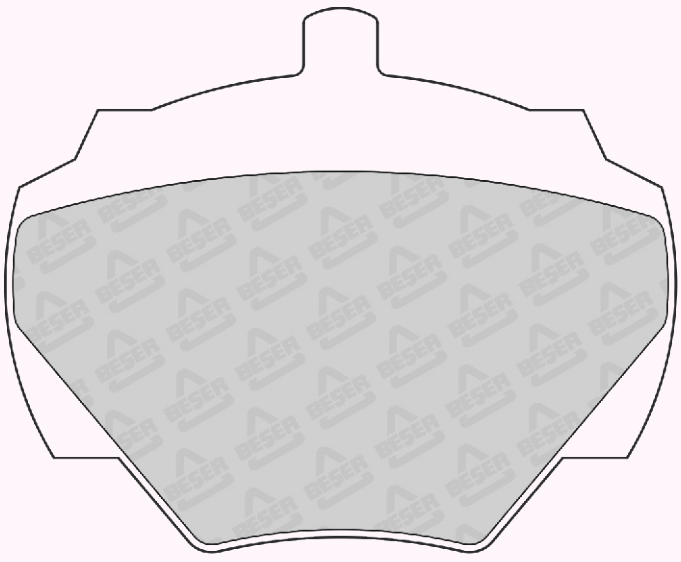

88,6 x 72

REFERENCE	T(mm)	REMARKS	MAKE	F/R	WVA No
3662	18,5	1 PAD WEAR SENSOR & WITH CHOMFERS (210mm)	CAR BODIES LAND ROVER	F	21459 21897

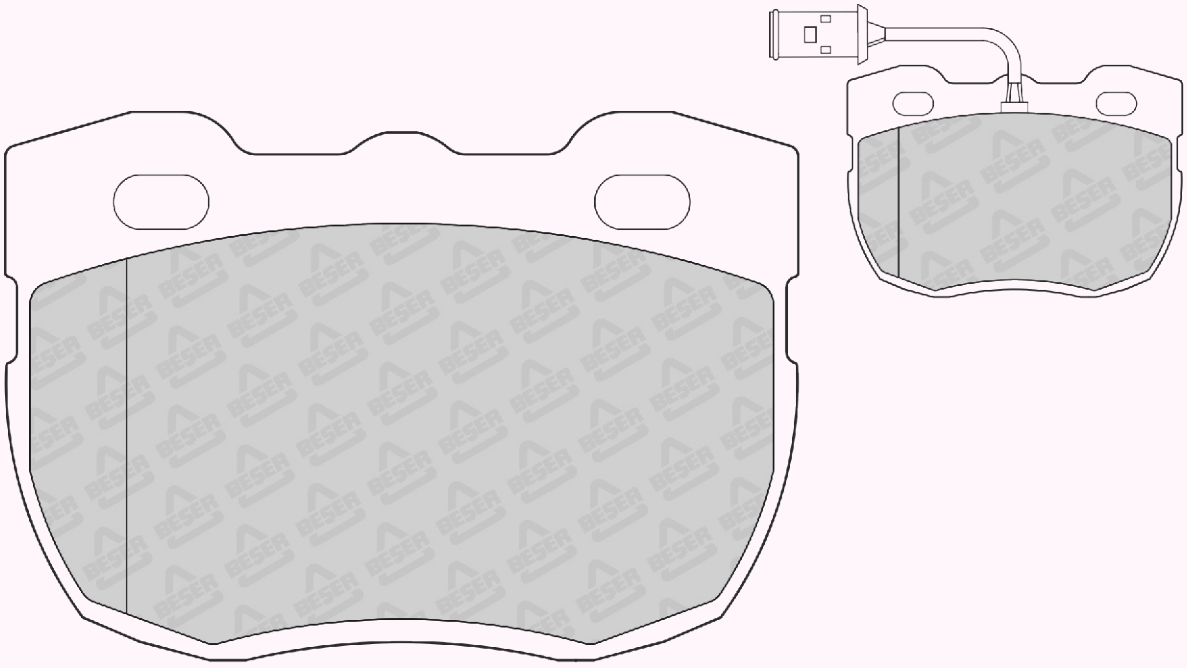

104,8 x 72,4

REFERENCE	T(mm)	REMARKS	MAKE	F/R	WVA No
3663	15,5	4 PADS PLAIN	MERCEDES BENZ	R	21900

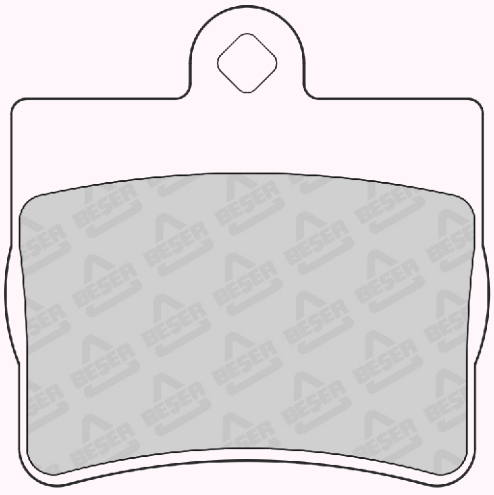

63,7 x 63,4

REFERENCE	T(mm)	REMARKS	MAKE	F/R	WVA No
3665	19,5	2 PADS INNER & 2 PADS OUTER	CHEVROLET - HOLDEN OPEL - SAAB - VAUXHALL	F	20676 21828 21829

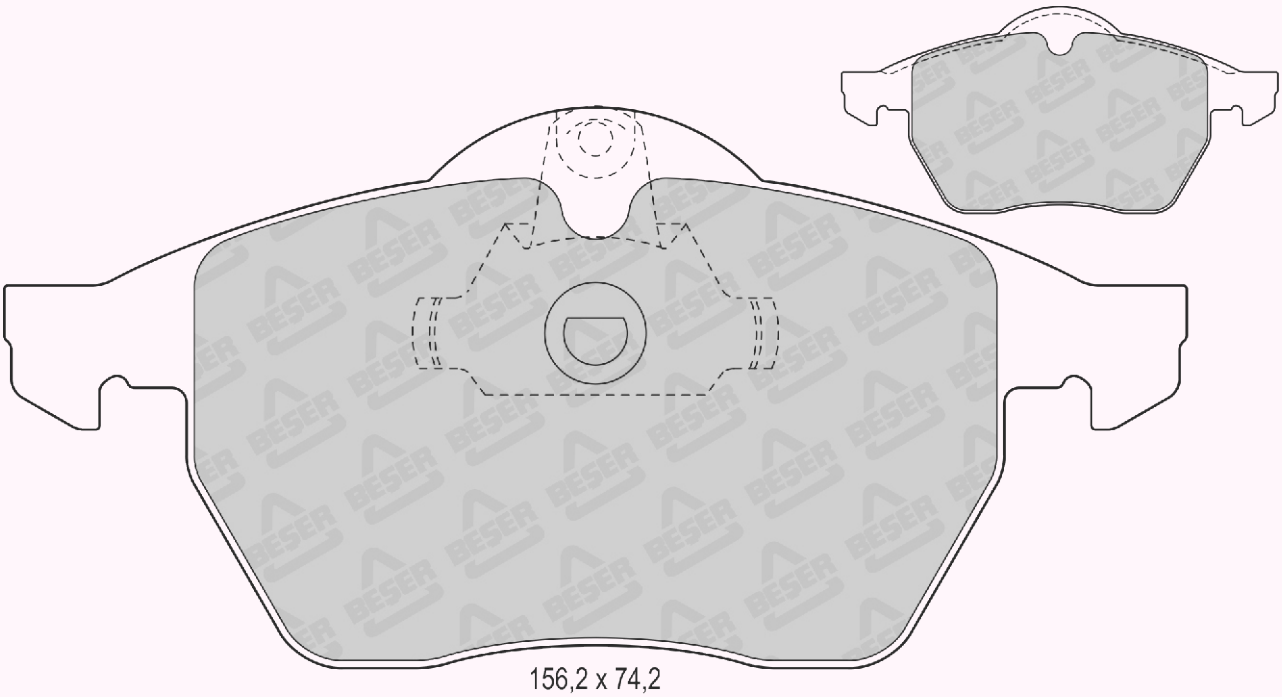

156,2 x 74,2

REFERENCE	T(mm)	REMARKS	MAKE	F/R	WVA No
3666	15,3	4 PADS WITH WEAR SENSOR 4 PADS WITH 2 DRILLED HOLES	MAZDA - TOYOTA	F	21318 21537 21538

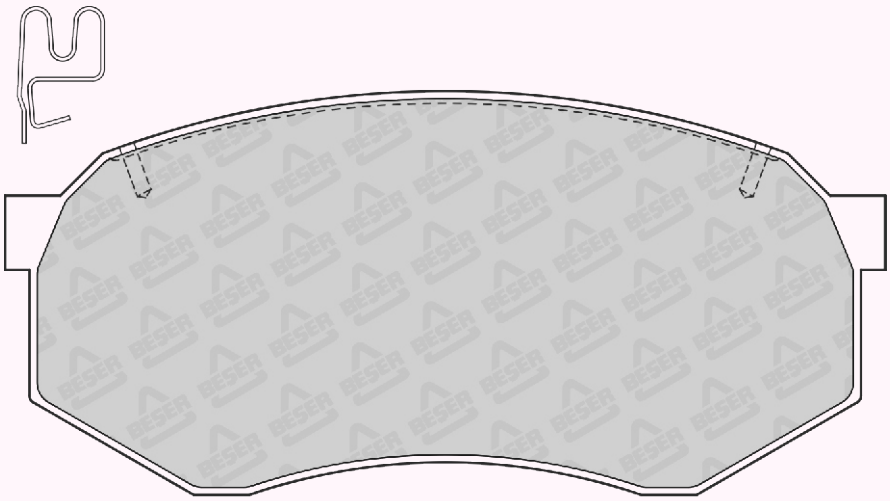

116,3 x 53,3

REFERENCE	T(mm)	REMARKS	MAKE	F/R	WVA No
3667	18	4 PADS PLAIN	FORD - NISSAN	F	23565

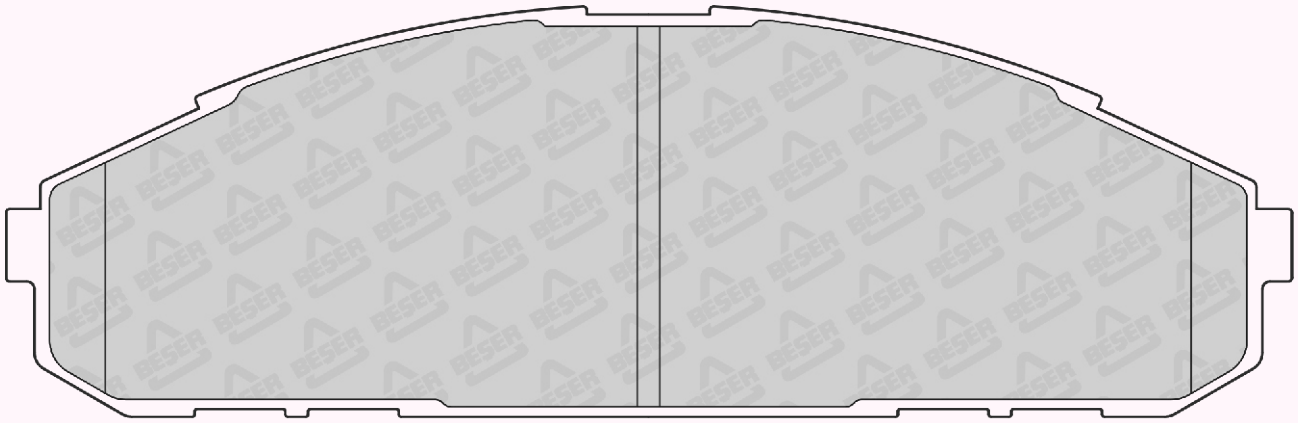

169,9 x 54,4

REFERENCE	T(mm)	REMARKS	MAKE	F/R	WVA No
3670	18,5	2 PADS PLAIN 2 PADS WITH SPRIND CLIPS	DODGE MERCEDES BENZ	F	21592 21593 21662

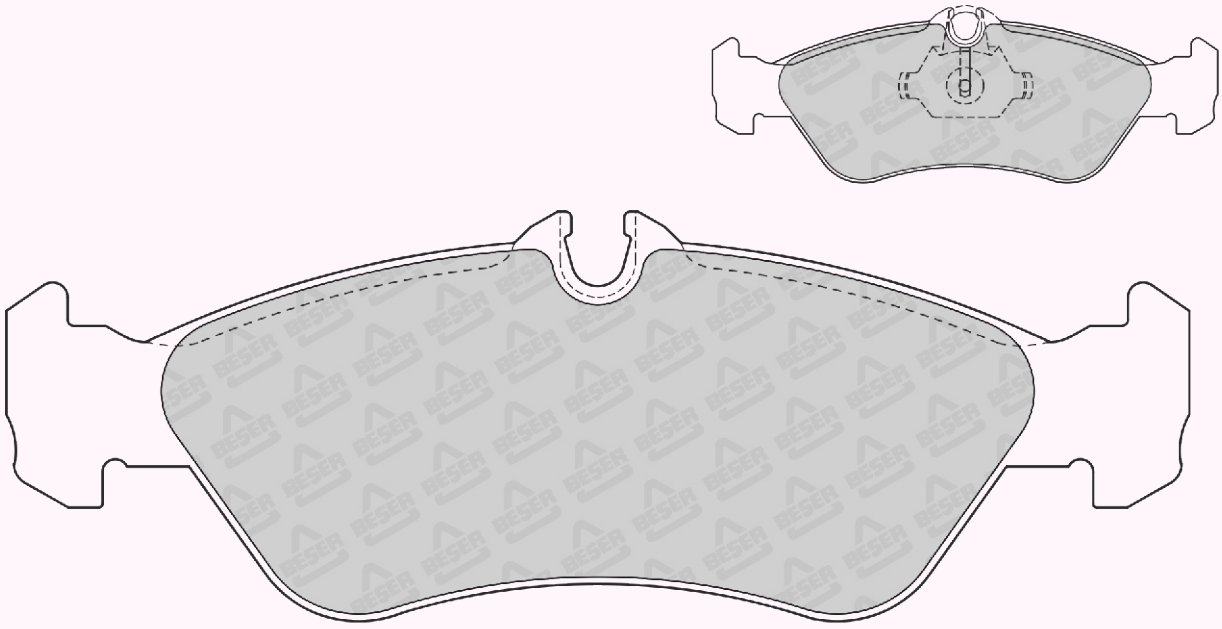

156,3 x 54,8

REFERENCE	T(mm)	REMARKS	MAKE	F/R	WVA No
3671	17	4 PADS PLAIN	VW	R	21748

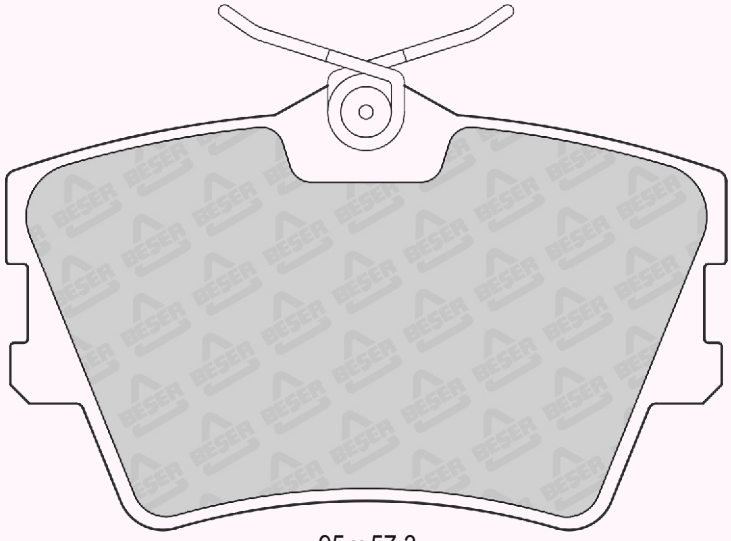

95 x 57,3

REFERENCE	T(mm)	REMARKS	MAKE	F/R	WVA No
3672	17,2	4 PADS PLAIN	MAZDA - TOYOTA	F	21318

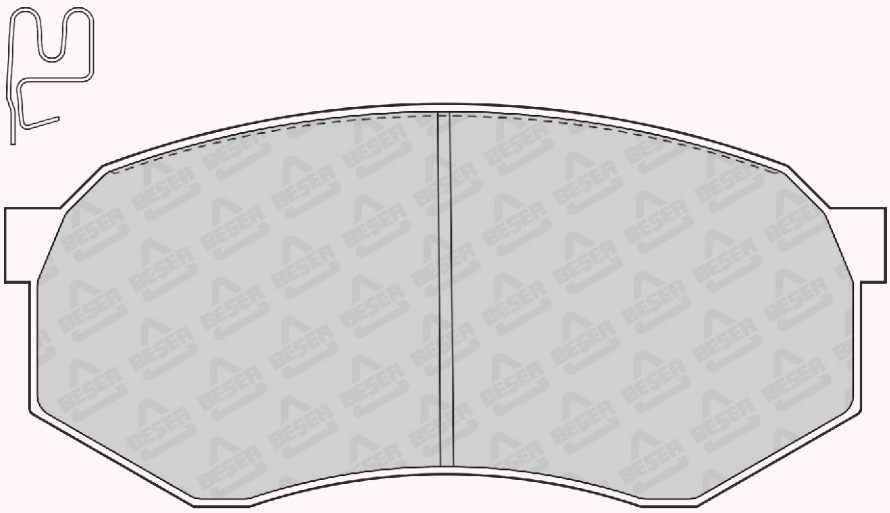

116,3 x 53,3

REFERENCE	T(mm)	REMARKS	MAKE	F/R	WVA No
3673	15	4 PADS WITH WEAR SENSOR	TOYOTA	F	21775 21776

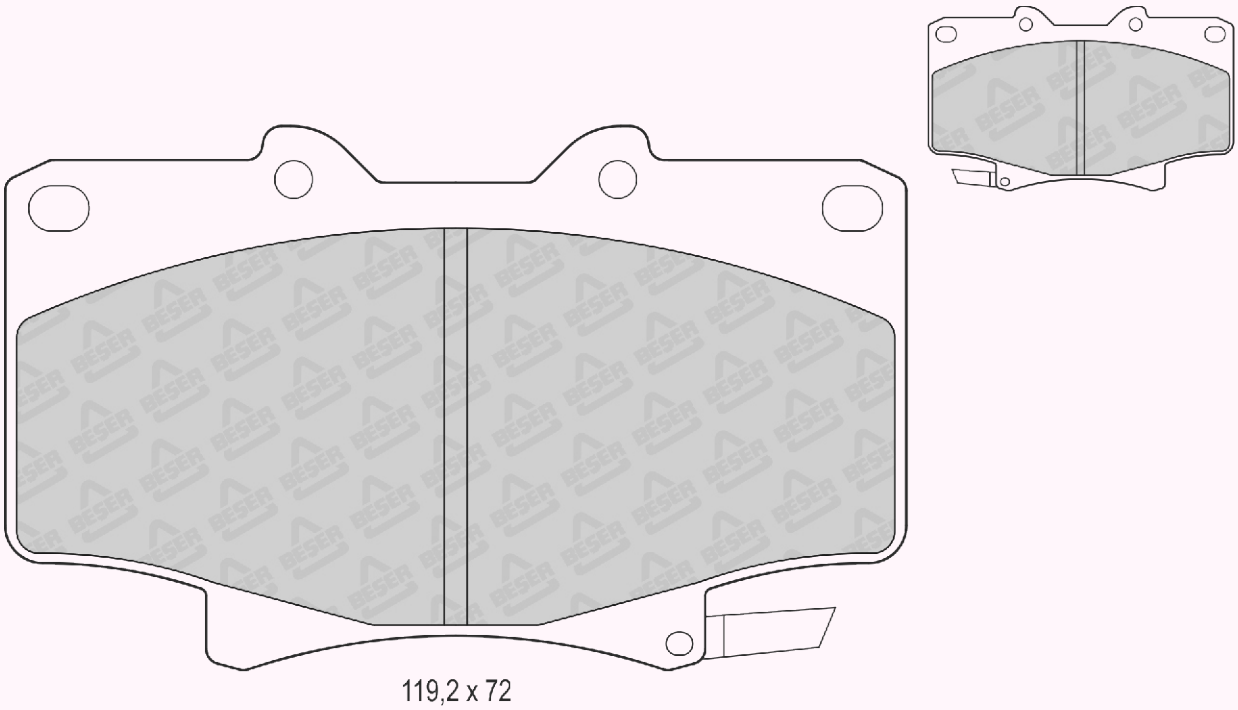

119,2 x 72

REFERENCE	T(mm)	REMARKS	MAKE	F/R	WVA No
3674	16,5	2 PADS WITH WEAR SENSOR	ACURA - HOLDEN ISUZU - OPEL - VAUXHALL	F	21845 21846 21847 21869 21870 21871

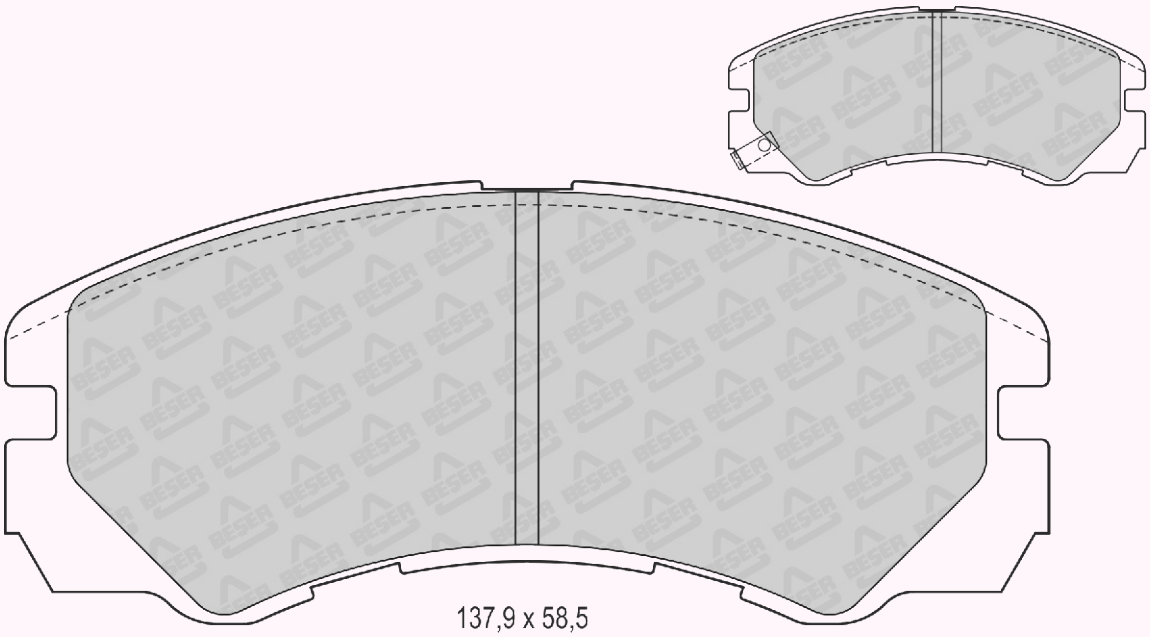

137,9 x 58,5

REFERENCE	T(mm)	REMARKS	MAKE	F/R	WVA No
3675	15,8	4 PADS WITH WEAR SENSOR	MITSUBISHI	F	23080 23127

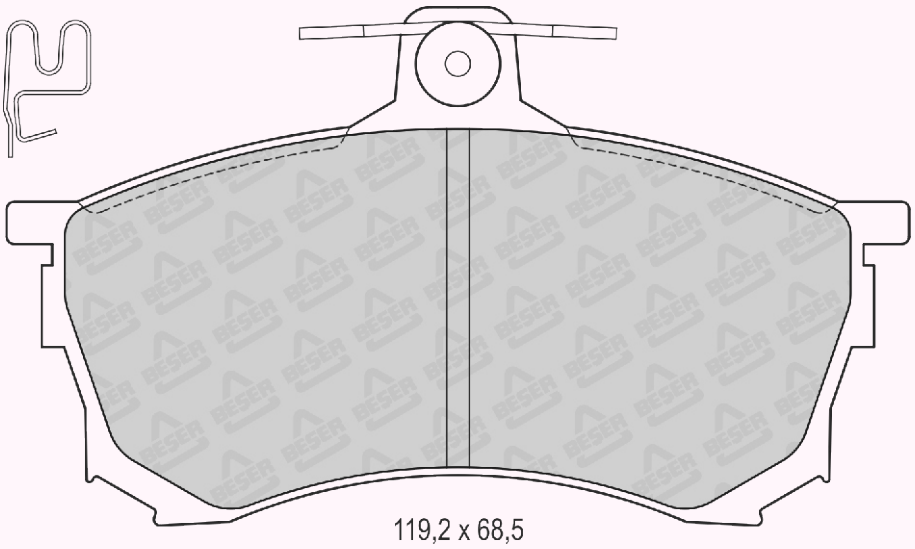

REFERENCE	T(mm)	REMARKS	MAKE	F/R	WVA No
3676	15.5	4 PADS PLAIN	CHRYSLER MERCEDES-BENZ	R	21919

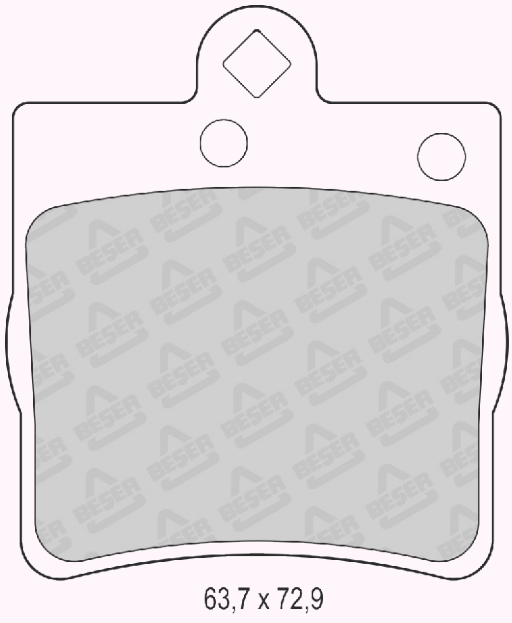

REFERENCE	T(mm)	REMARKS	MAKE	F/R	WVA No
3677	19,5	2 PADS INNER & 2 PADS OUTER	MERCEDES BENZ	F	21664 21665 21795

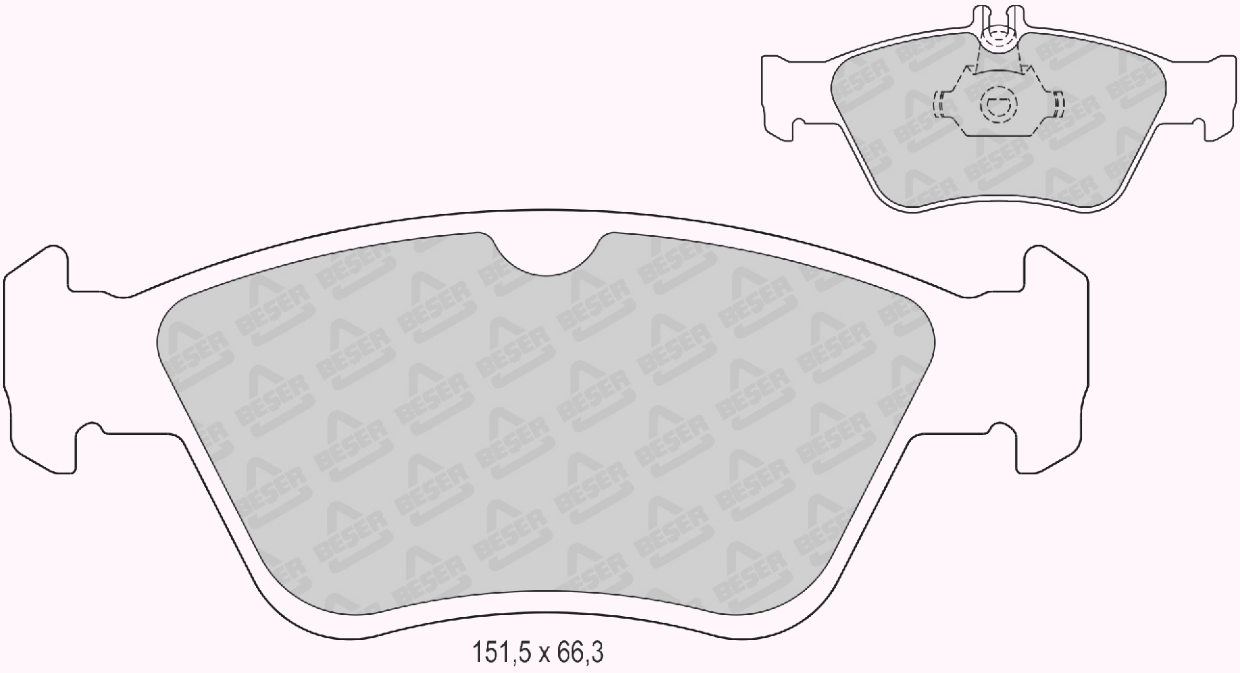

REFERENCE	T(mm)	REMARKS	MAKE	F/R	WVA No
3678	17	4 PADS PLAIN	MERCEDES BENZ	R	21621 21622 21895 21896

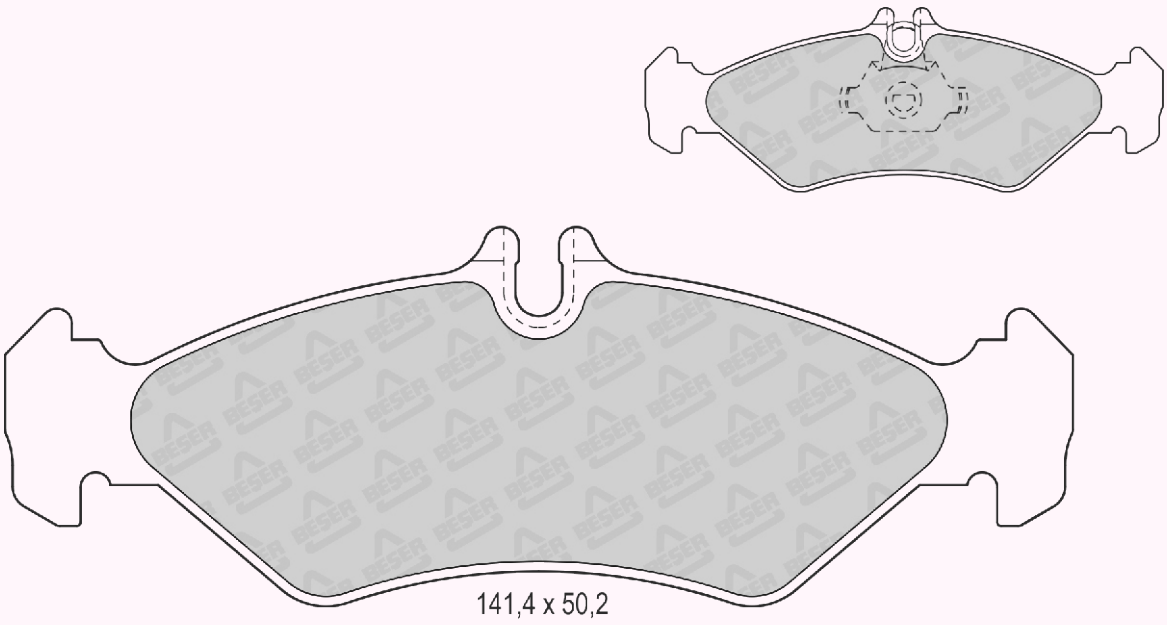

REFERENCE	T(mm)	REMARKS	MAKE	F/R	WVA No
3679	21,7	4 PADS PLAIN	MERCEDES BENZ OPTARE	F	29835

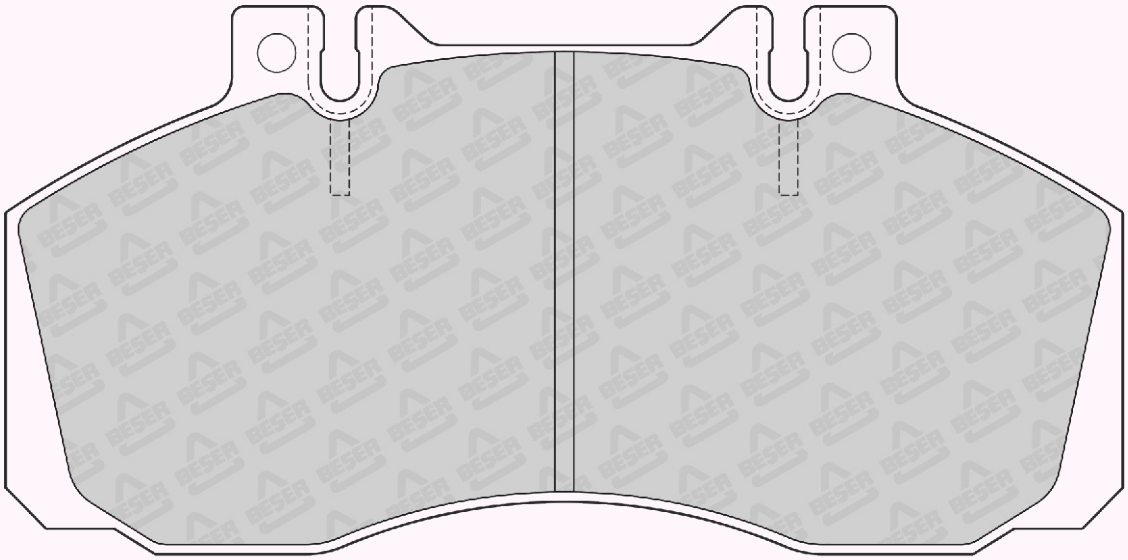

174,9 x 85,6
(NOT SCALE)

REFERENCE	T(mm)	REMARKS	MAKE	F/R	WVA No
3680	17	2 PADS WEAR SENSOR (115mm)	MERCEDES BENZ PEUGEOT	R	21278 21572 21279 21675 21286 21904

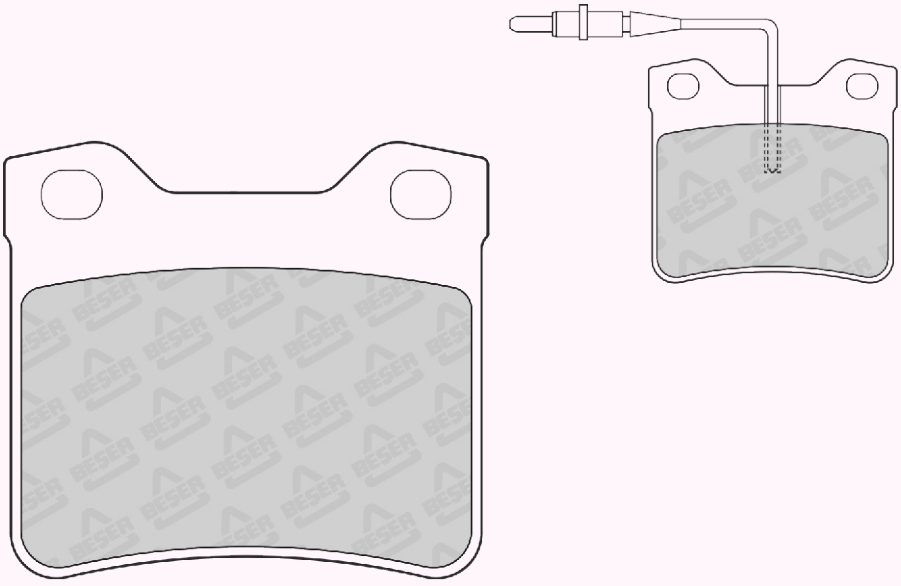

63,8 x 57,55

REFERENCE	T(mm)	REMARKS	MAKE	F/R	WVA No
3681	20,6	4 PADS PLAIN	MERCEDES BENZ	F	23022

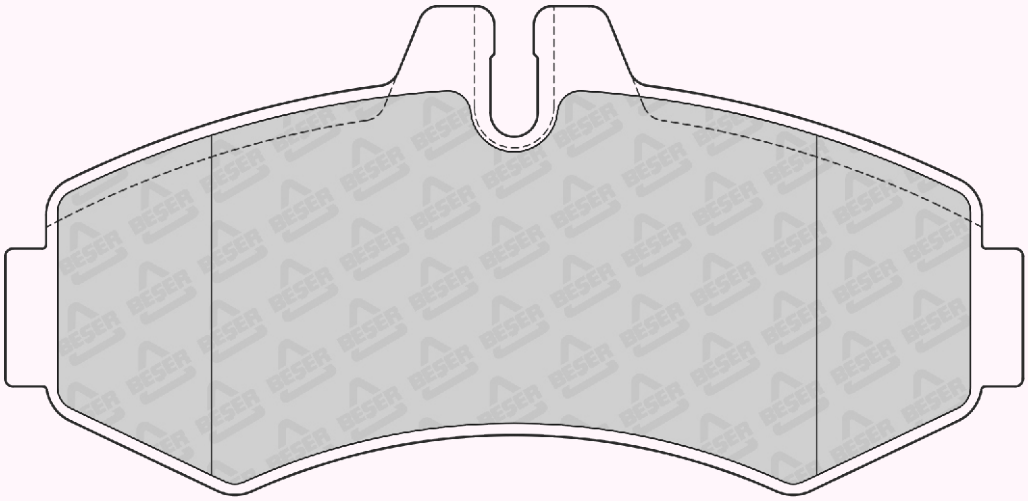

134,4 x 64,5

REFERENCE	T(mm)	REMARKS	MAKE	F/R	WVA No
3682	19,8	4 PADS PLAIN	AUDI - SEAT SKODA - VW	F	21974 23130

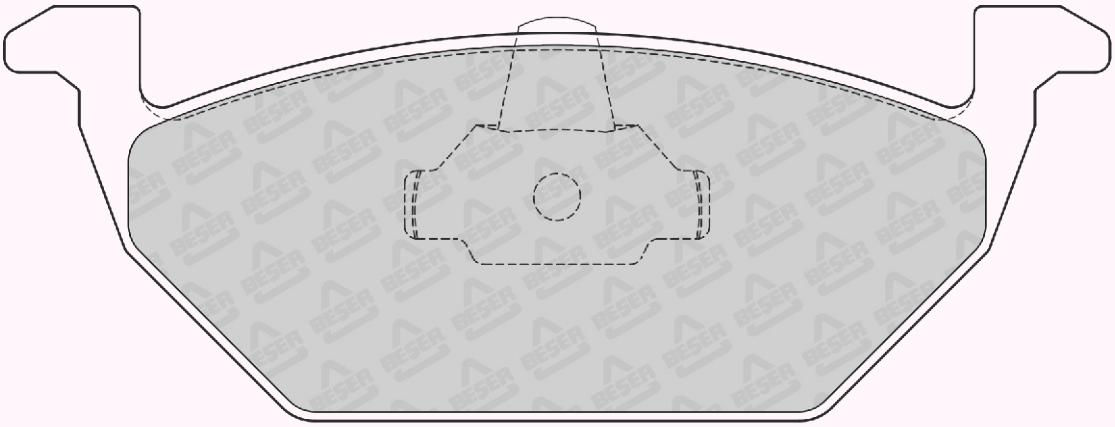

146 x 54,7

REFERENCE	T(mm)	REMARKS	MAKE	F/R	WVA No
3683	18	2 PADS WITH WEAR SENSOR	HONDA - LAND ROVER MG - ROVER	F	21515 21516 21517

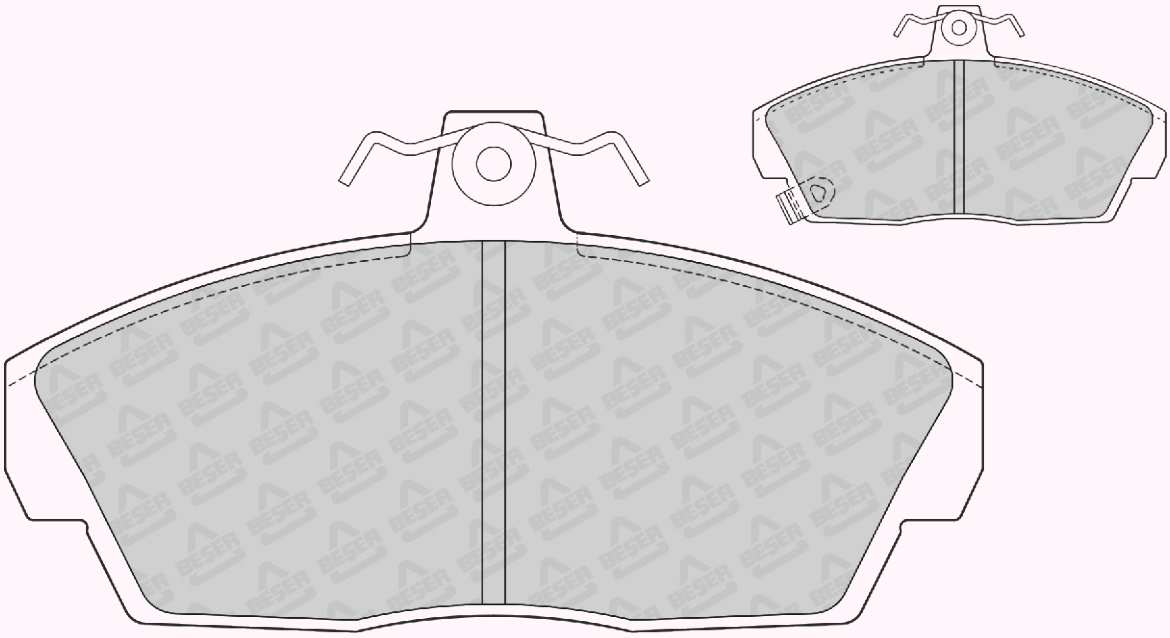

REFERENCE	T(mm)	REMARKS	MAKE	F/R	WVA No
3685	15,7	2 PADS WITH WEAR SENSOR	CHANG FENG - CITROEN MITSUBISHI - PEUGEOT	F	21363 21768 21769

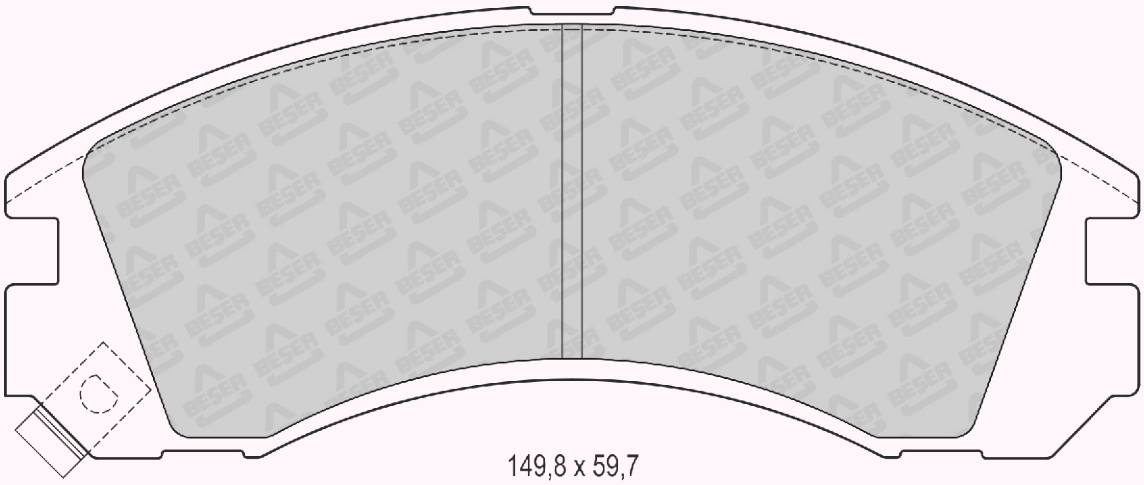

REFERENCE	T(mm)	REMARKS	MAKE	F/R	WVA No
3686	15	2 PADS WITH WEAR SENSOR	HONDA	F	21697 21698 21699

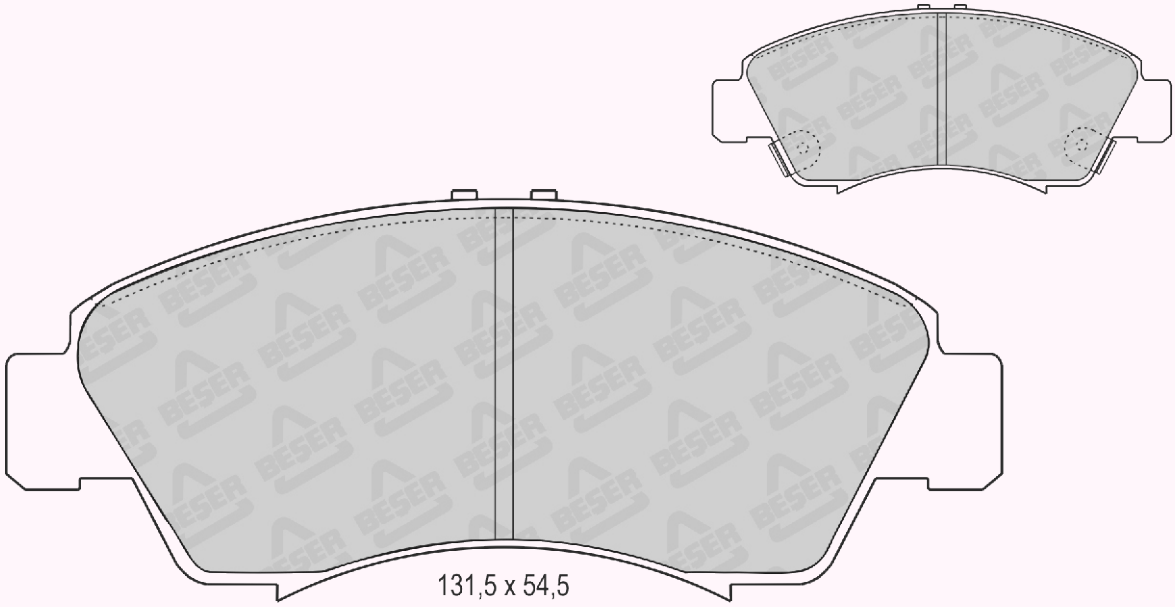

REFERENCE	T(mm)	REMARKS	MAKE	F/R	WVA No
3687	17,6	4 PADS PLAIN	BUICK - CHEVROLET DAEWOO - HOLDEN	F	23234 23235 23236

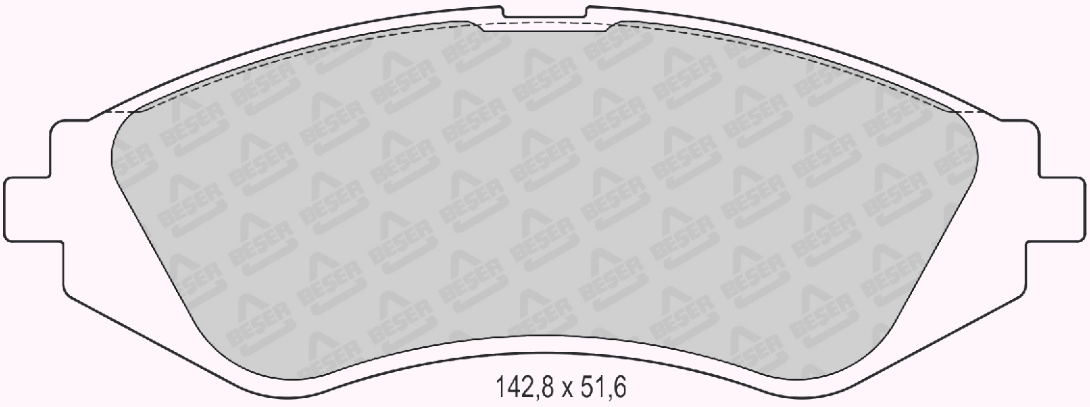

REFERENCE	T(mm)	REMARKS	MAKE	F/R	WVA No
3687/1	17,6	2 PADS WITH WEAR SENSOR	BUICK - CHEVROLET DAEWOO - HOLDEN	F	25065 25066

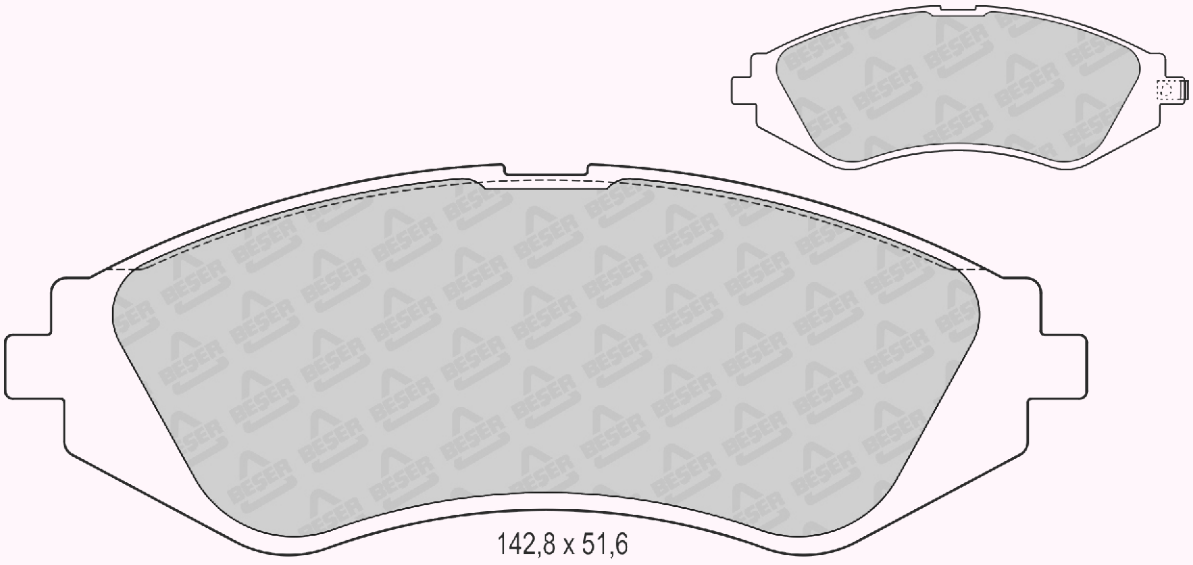

REFERENCE	T(mm)	REMARKS	MAKE	F/R	WVA No
3688	14	2 PADS WITH WEAR SENSOR	MITSUBISHI	R	21840 21841 21842

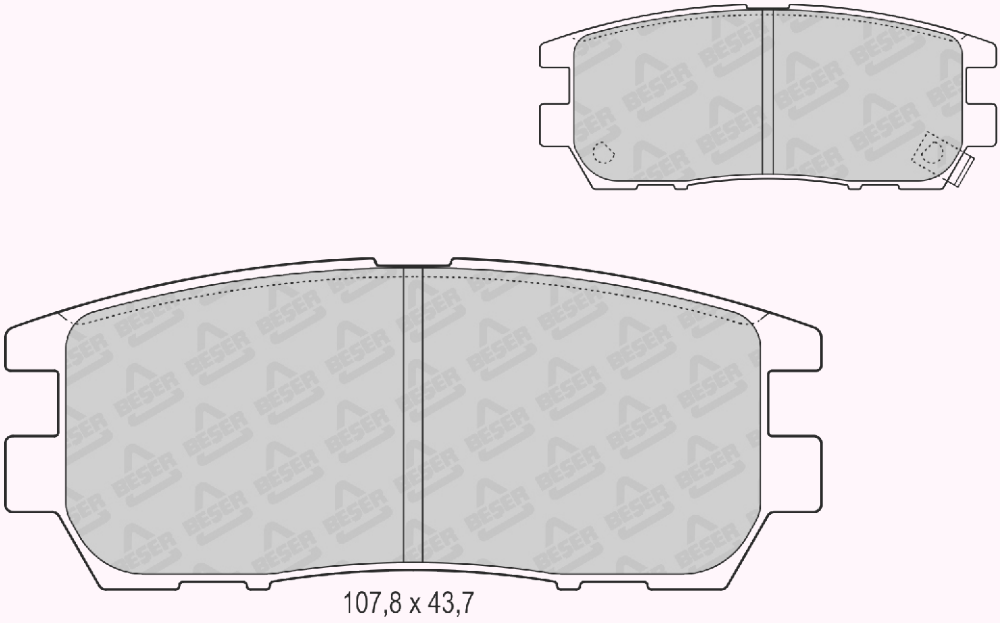

REFERENCE	T(mm)	REMARKS	MAKE	F/R	WVA No
3689	14	2 PADS WITH 2 HOLES (14mm) DIAMETER ON BACKING PLATE	MERCEDES BENZ SSANGYONG	F	21230 21752 21573 21753 21750 20934 21751

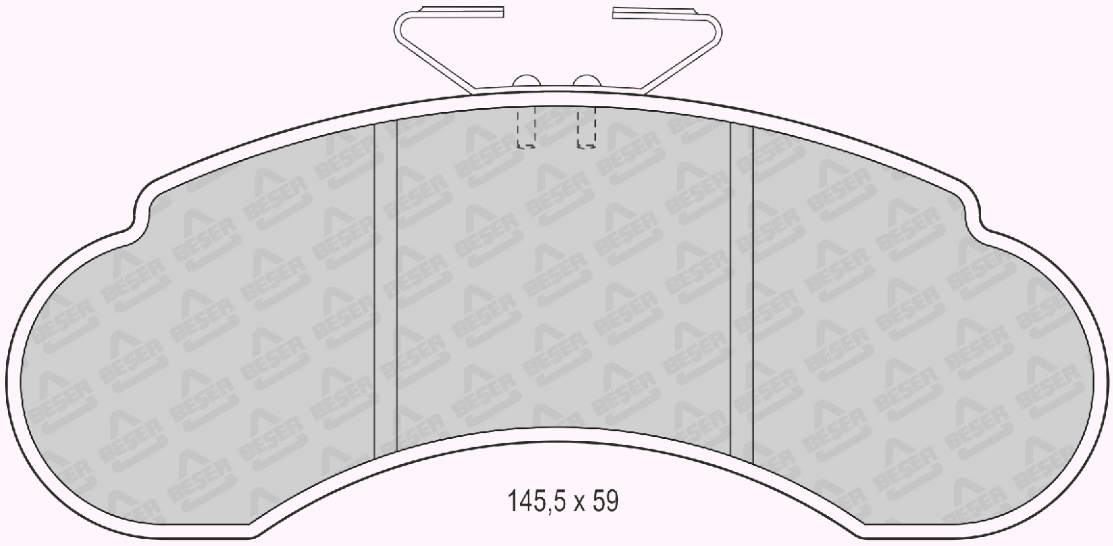

REFERENCE	T(mm)	REMARKS	MAKE	F/R	WVA No
3690	18	2 PADS WITH WEAR SENSOR	FIAT	F	20907 23227 23229 25228

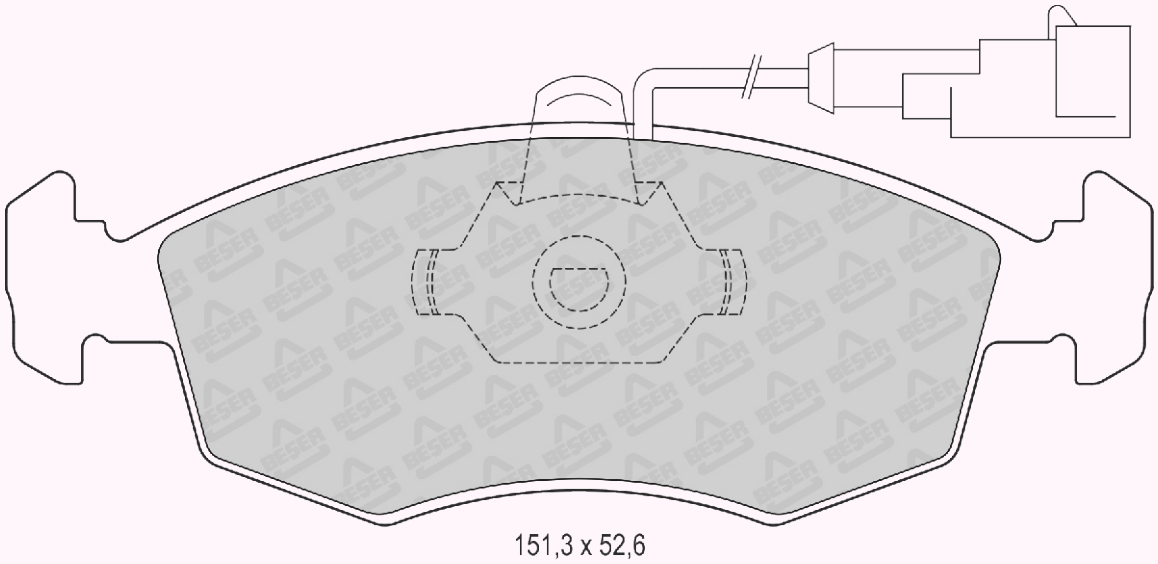

REFERENCE	T(mm)	REMARKS	MAKE	F/R	WVA No
3691	15	2 PADS WITH WEAR SENSOR	HONDA	F	21330 21331 21332

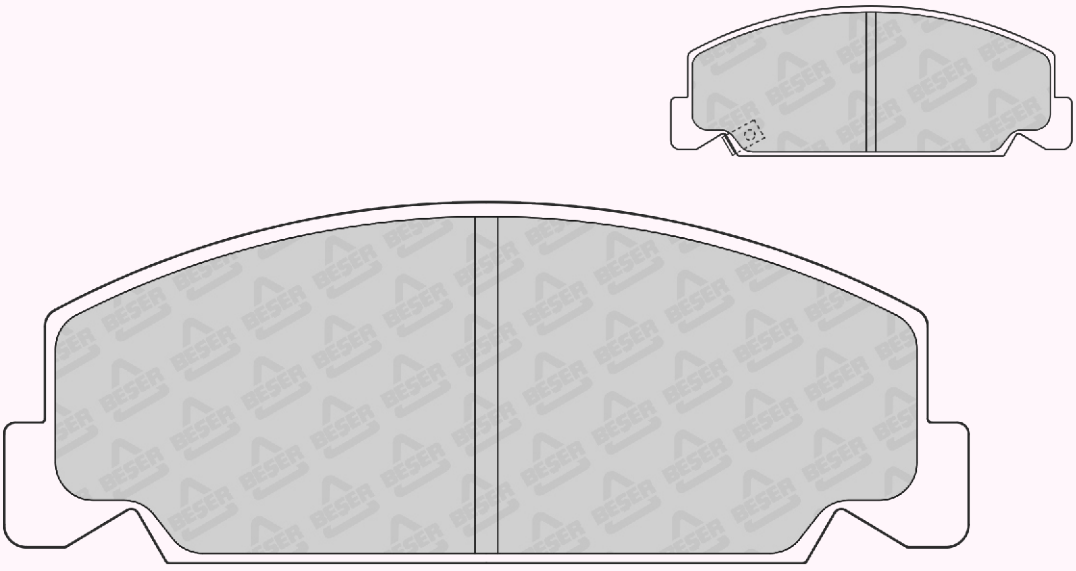

127,6 x 47,8

REFERENCE	T(mm)	REMARKS	MAKE	F/R	WVA No
3692	17	4 PADS PLAIN	FORD - NISSAN SUBARU	F	21347 21348 21349

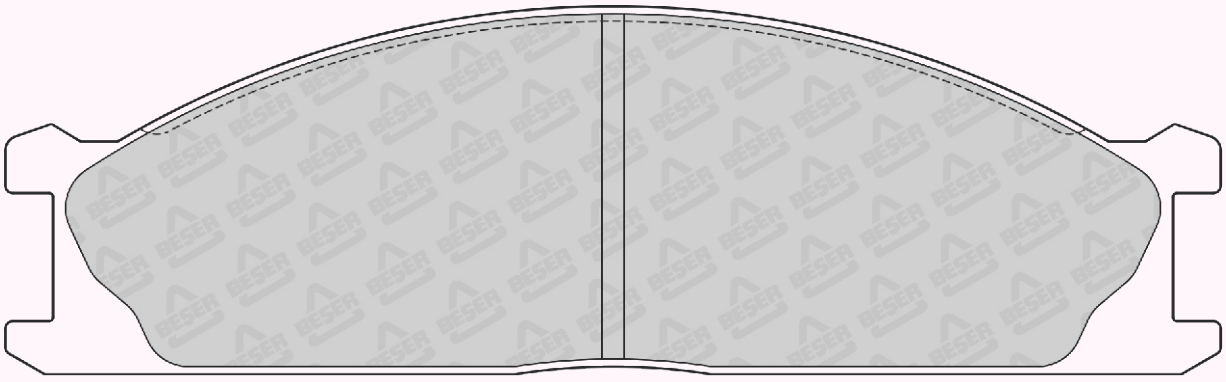

160,6 x 48,5

REFERENCE	T(mm)	REMARKS	MAKE	F/R	WVA No
3693	15,5	4 PADS PLAIN	LANDWIND(JMC) - LEXUS MITSUBISHI - TOYOTA	F	21947

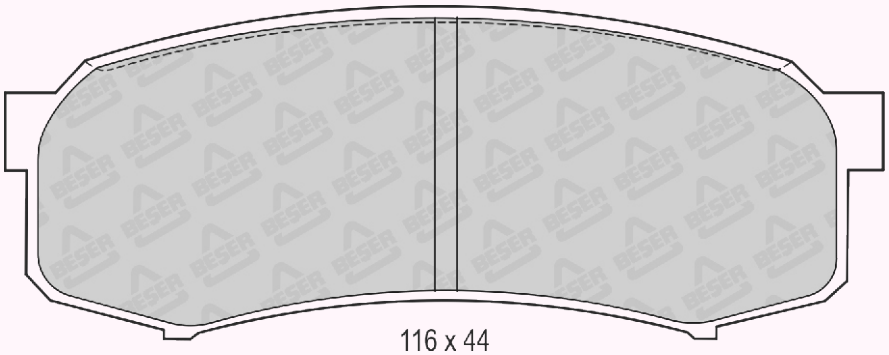

116 x 44

REFERENCE	T(mm)	REMARKS	MAKE	F/R	WVA No
3695	19,3	2 PADS WITH WEAR SENSOR	HONDA	F	21700 21701 21702

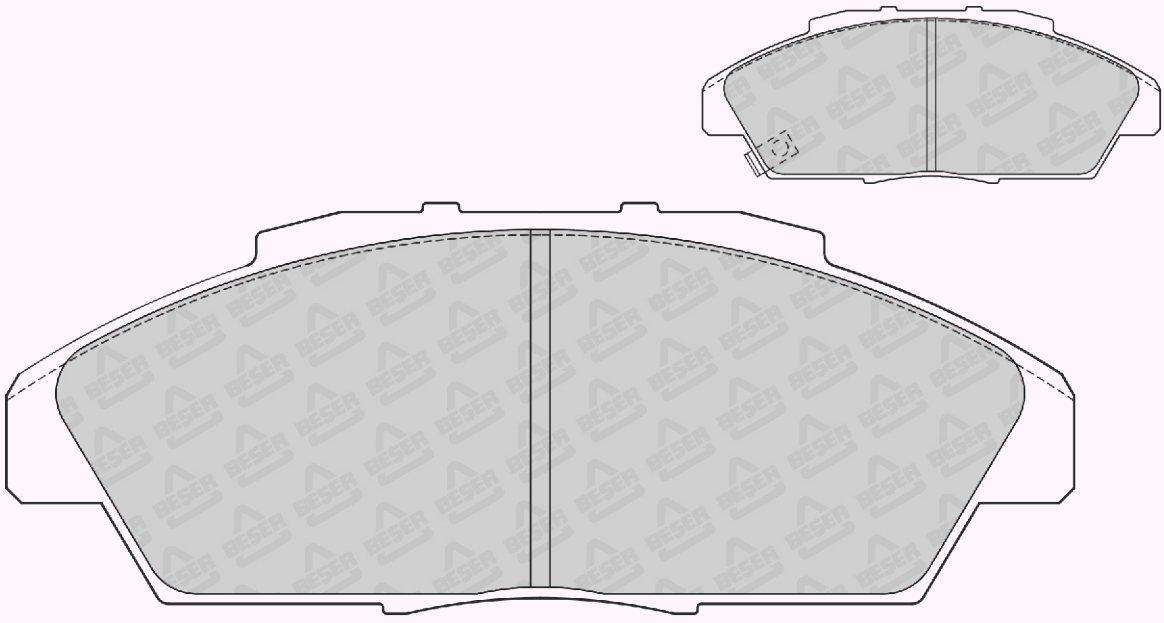

141,1 x 54,3

REFERENCE	T(mm)	REMARKS	MAKE	F/R	WVA No
3696	16	2 PADS WITH WEAR SENSOR	HONDA	F	21497 21498 21499

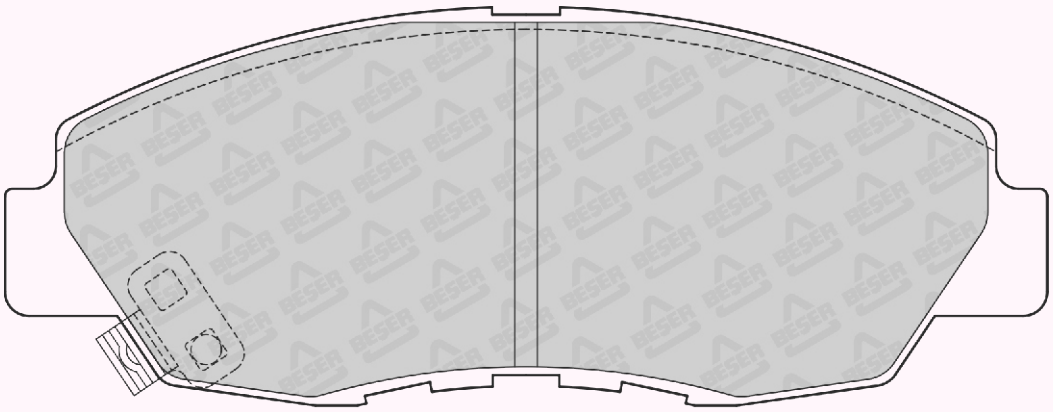

137,7 x 52,55

REFERENCE	T(mm)	REMARKS	MAKE	F/R	WVA No
3697	17	2 PADS WITH WEAR SENSOR	NISSAN	F	23086 23316 23317

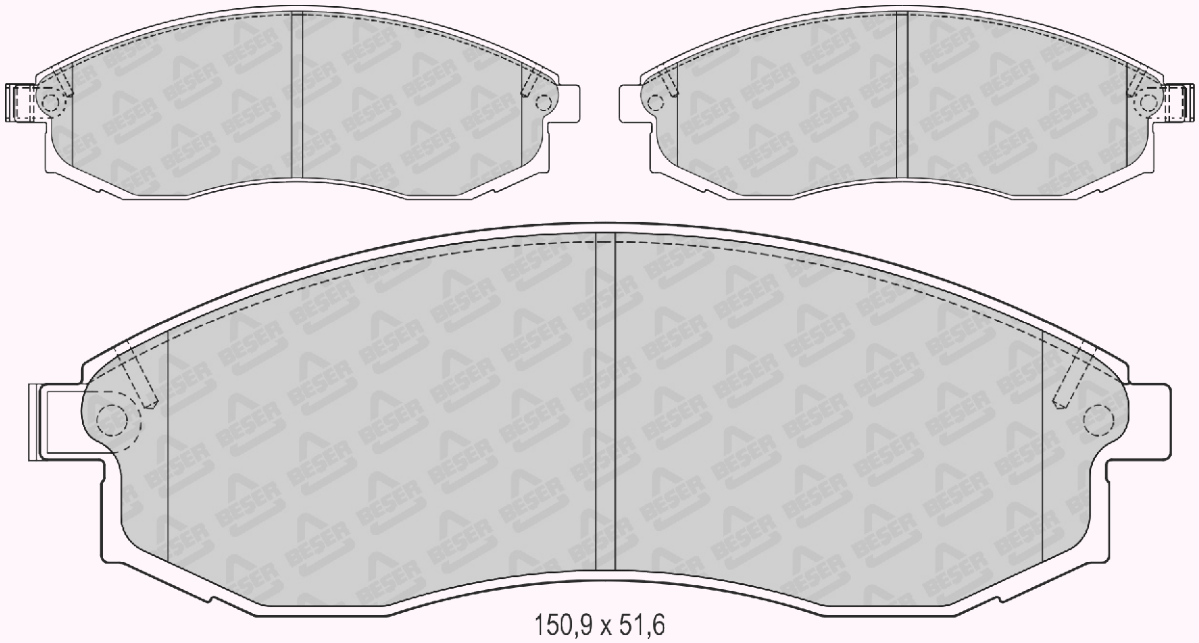

150,9 x 51,6

REFERENCE	T(mm)	REMARKS	MAKE	F/R	WVA No
3699	17	4 PADS PLAIN	NISSAN - INFINITI SUZUKI	F	21561

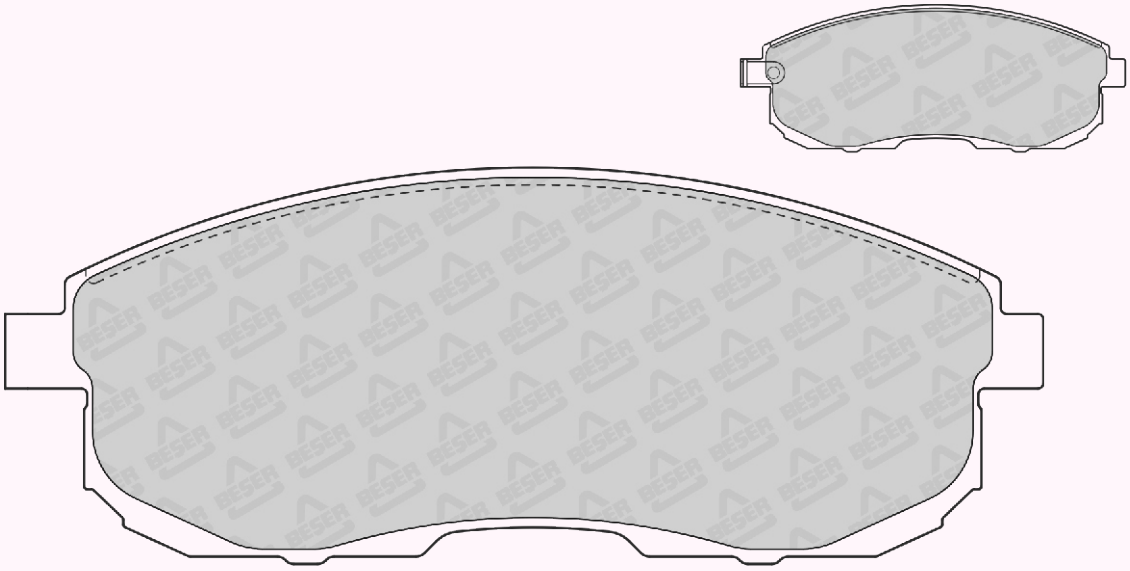

137,1 x 53,1

REFERENCE	T(mm)	REMARKS	MAKE	F/R	WVA No
3700	16,8	4 PADS PLAIN	FORD - INFINITI	F	21526

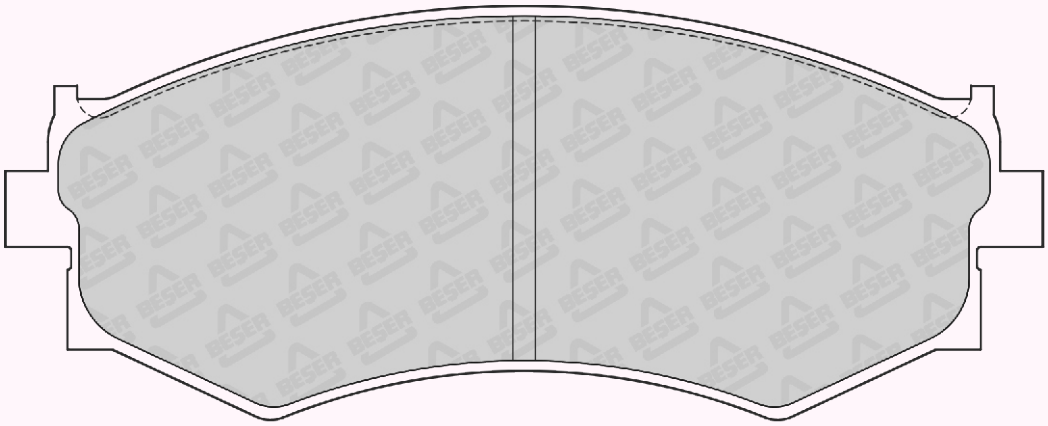

137 x 54,6

REFERENCE	T(mm)	REMARKS	MAKE	F/R	WVA No
3701	15	4 PADS PLAIN	TOYOTA	F	20004

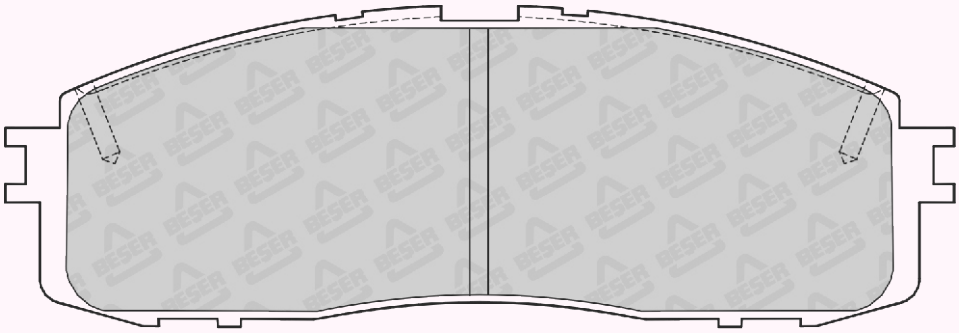

125,3 x 42,3

REFERENCE	T(mm)	REMARKS	MAKE	F/R	WVA No
3704	18	2 PADS WITH WEAR SENSOR	ACURA - HONDA ROVER	F	21651 21652 21653

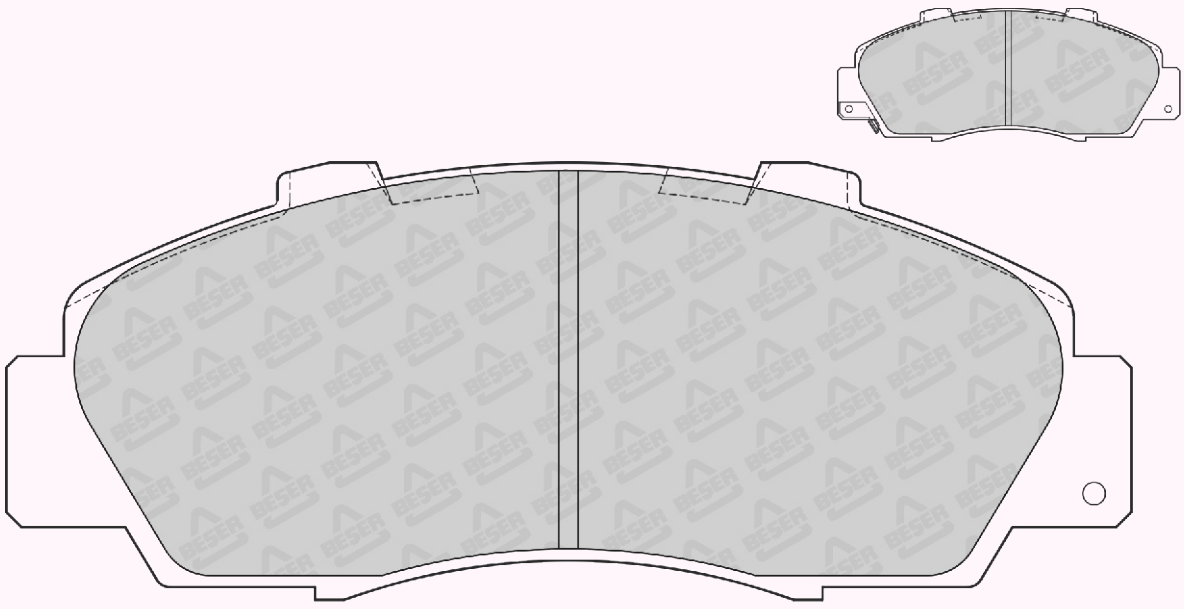

148,6 x 57,7

REFERENCE	T(mm)	REMARKS	MAKE	F/R	WVA No
3705	15,4	4 PADS PLAIN	HONDA	F	20735

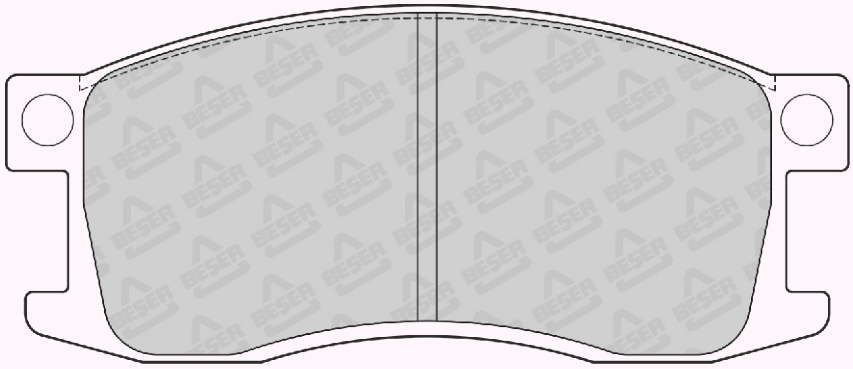

111,4 x 47,2

REFERENCE	T(mm)	REMARKS	MAKE	F/R	WVA No
3706	15	2 PADS "U" SHAPE TO FIT THE WEAR SENSOR	BMW	R	20587

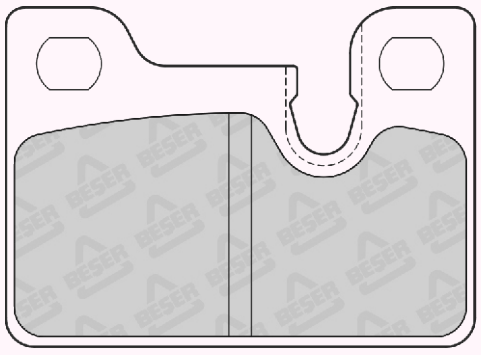

61,8 x 44,7

REFERENCE	T(mm)	REMARKS	MAKE	F/R	WVA No
3707	20,5	4 PADS WITH WEAR SENSOR (320mm)	RENAULT	F	29044

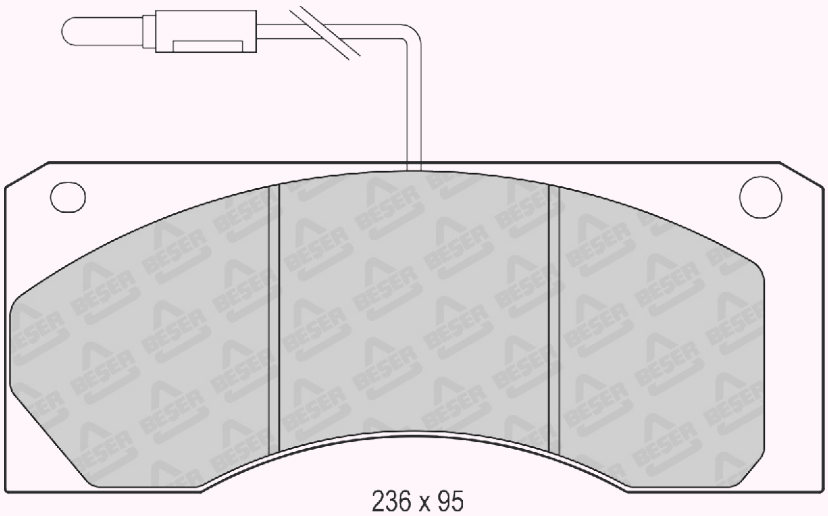

236 x 95
(NOT SCALE)

REFERENCE	T(mm)	REMARKS	MAKE	F/R	WVA No
3708	18	2 PADS WITH WEAR SENSOR (195mm)	BMC	F	---

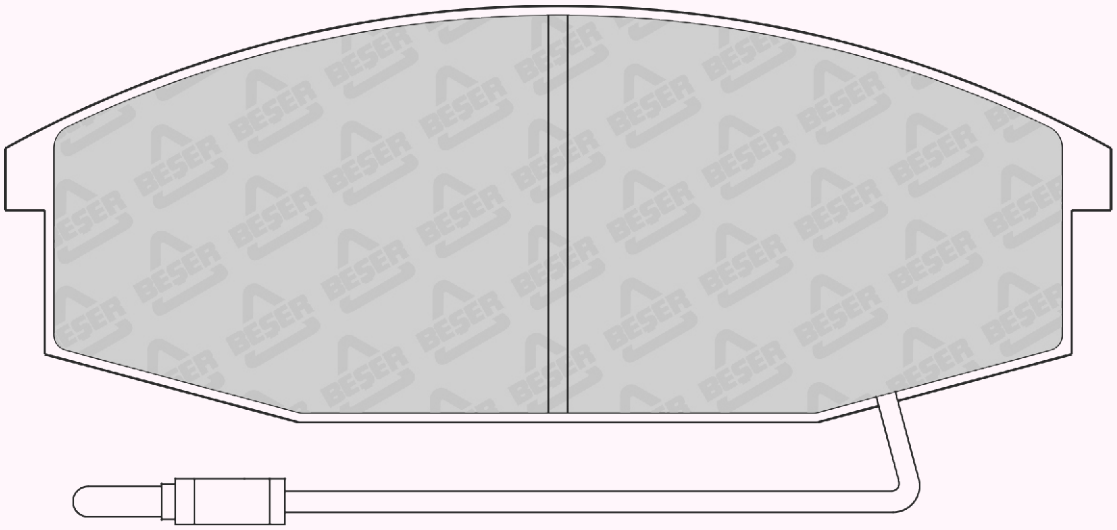

146 x 55

REFERENCE	T(mm)	REMARKS	MAKE	F/R	WVA No
3708/1	18	4 PADS PLAIN	BMC	F	---

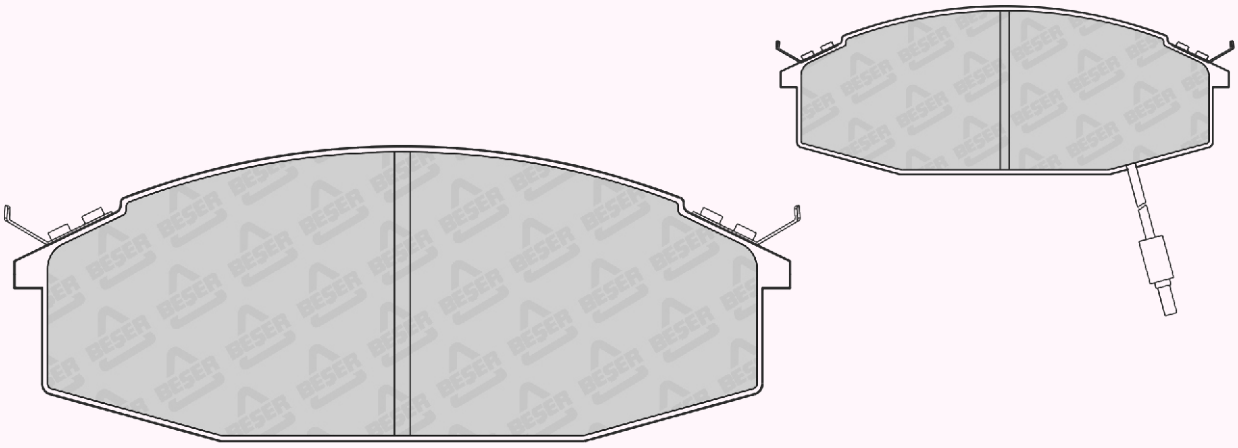

146 x 54
(NOT SCALE)

REFERENCE	T(mm)	REMARKS	MAKE	F/R	WVA No
3709	14,5	4 PADS PLAIN	CHRYSLER-DAIHATSU-HONDA HYUNDAI-MAZDA-MITSUBISHI-TOYOTA	F	20703

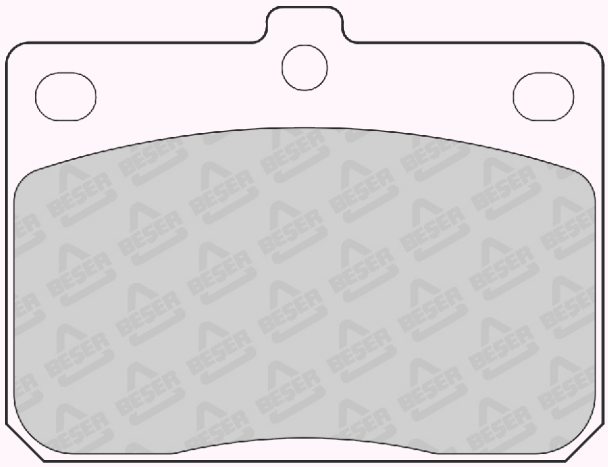

78,7 x 60

REFERENCE	T(mm)	REMARKS	MAKE	F/R	WVA No
3710	14,5	4 PADS PLAIN	TOYOTA	F	20302

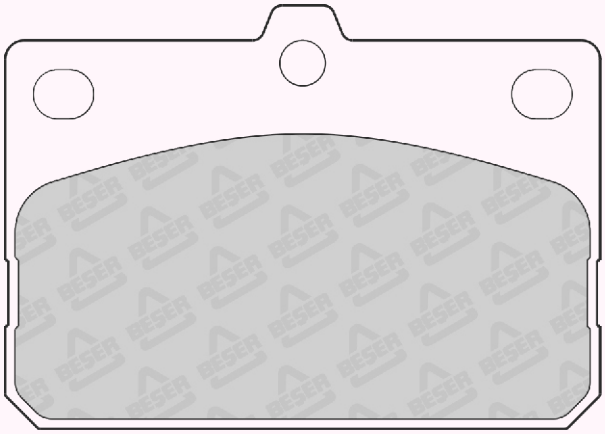

78,6 x 55,8

REFERENCE	T(mm)	REMARKS	MAKE	F/R	WVA No
3714	15,6	4 PADS WITH DIRILLED HOLES ON RADIUS PLATE	GREAT WALL - TOYOTA	F	21158 21689

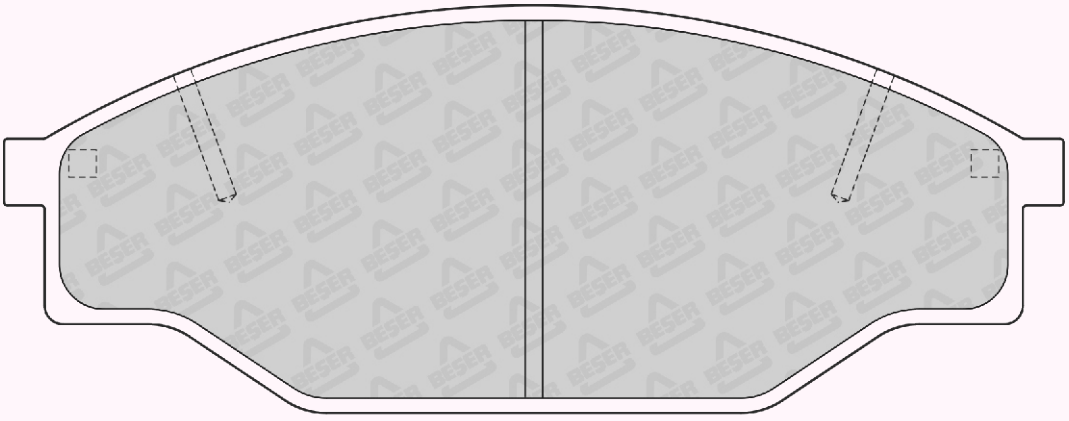

140 x 55

REFERENCE	T(mm)	REMARKS	MAKE	F/R	WVA No
3717	15,6	4 PADS PLAIN	CADILLAC CHEVROLET - HOLDEN OPEL - SAAB - VAUXHALL	F	21050 23091

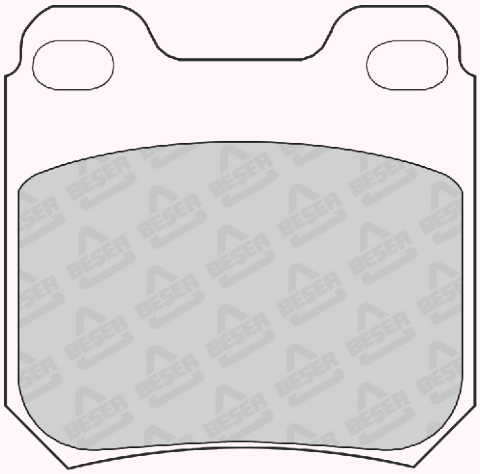

62 x 61

REFERENCE	T(mm)	REMARKS	MAKE	F/R	WVA No
3717/1	17,5	4 PADS PLAIN	CADILLAC CHEVROLET - HOLDEN OPEL - SAAB - VAUXHALL	F	21050

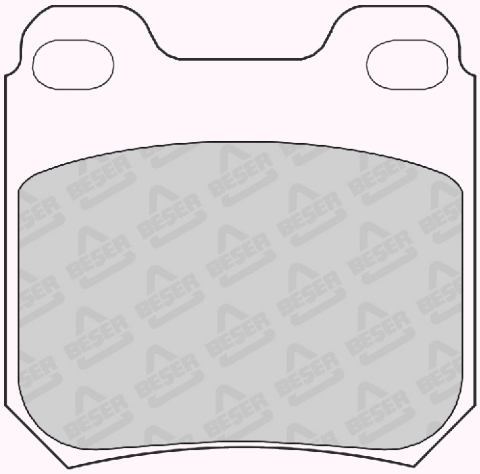

62 x 61

REFERENCE	T(mm)	REMARKS	MAKE	F/R	WVA No
3721	14,9	2 PADS WITH WEAR SENSOR	CHEVROLET - SUZUKI - TATA	F	21333 21334 21335

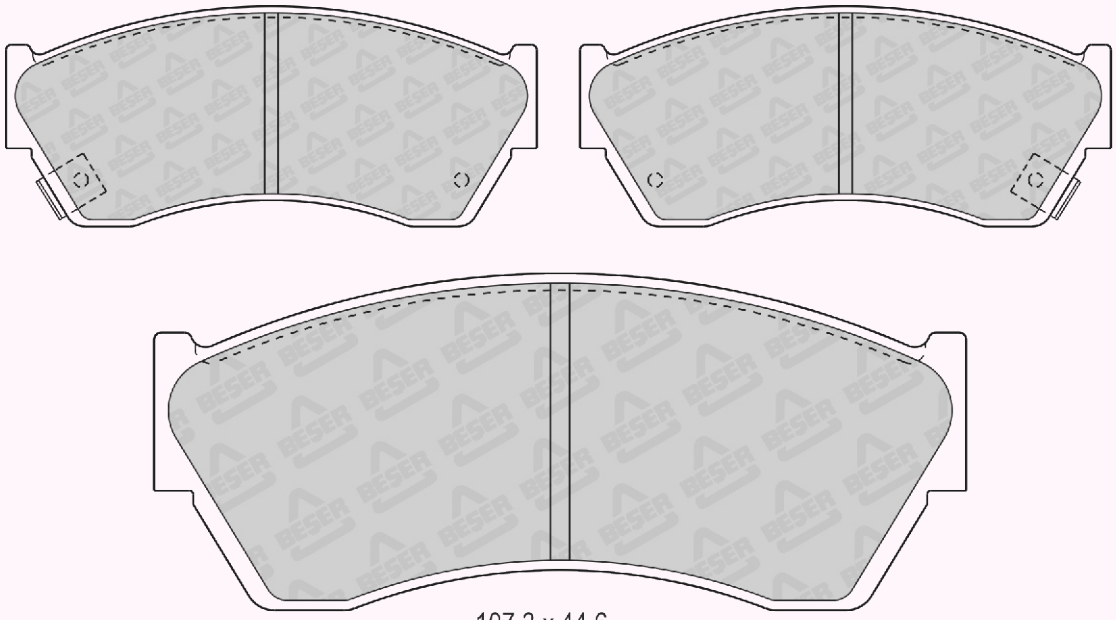

107,3 x 44,6

REFERENCE	T(mm)	REMARKS	MAKE	F/R	WVA No
3722	18	4 PADS WITH WEAR SENSOR	FORD	F	23300 23301

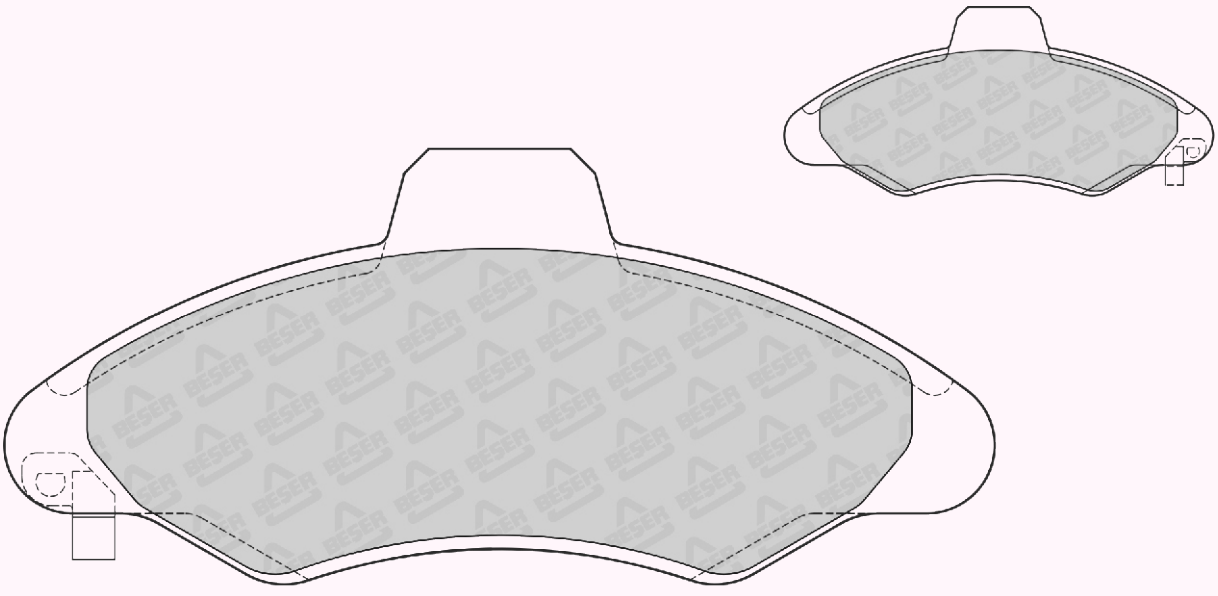

130,8 x 57,5

REFERENCE	T(mm)	REMARKS	MAKE	F/R	WVA No
3723	14	2 PADS WITH WEAR SENSOR	FORD - KIA MAZDA	F	21355 21356 21357

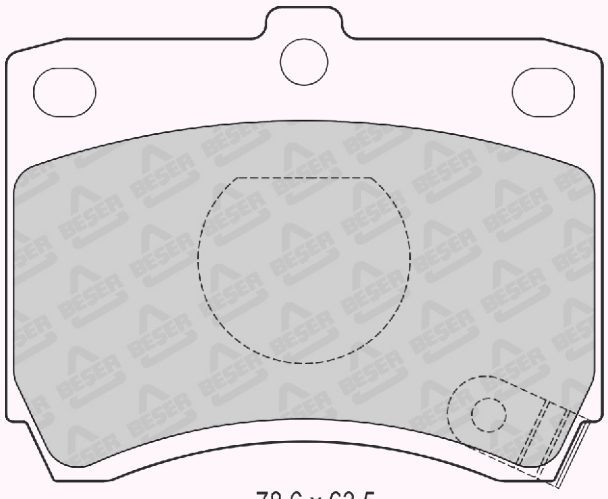

78,6 x 63,5

REFERENCE	T(mm)	REMARKS	MAKE	F/R	WVA No
3731	17,5	4 PADS WITH WEAR SENSOR	SKODA VW	F	21662

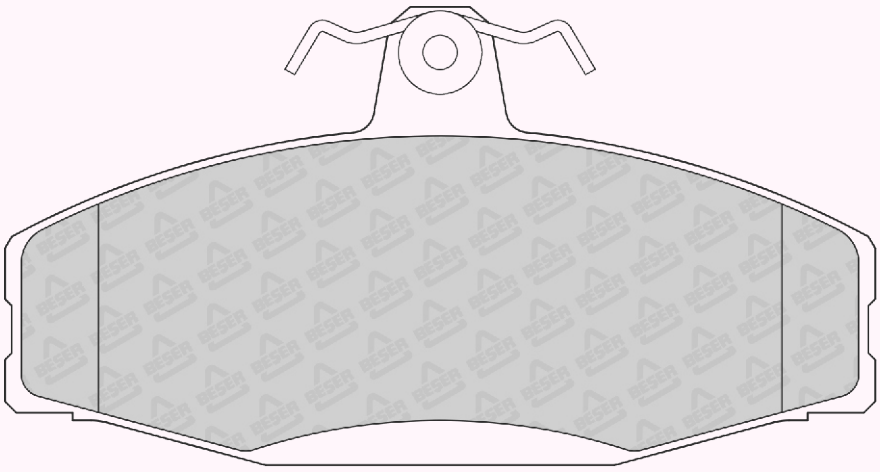

114,9 x 60,3

REFERENCE	T(mm)	REMARKS	MAKE	F/R	WVA No
3733	19	4 PADS WITH CHAMFERS.	CADILLAC - OPEL VAUXHALL	F	20197 21368

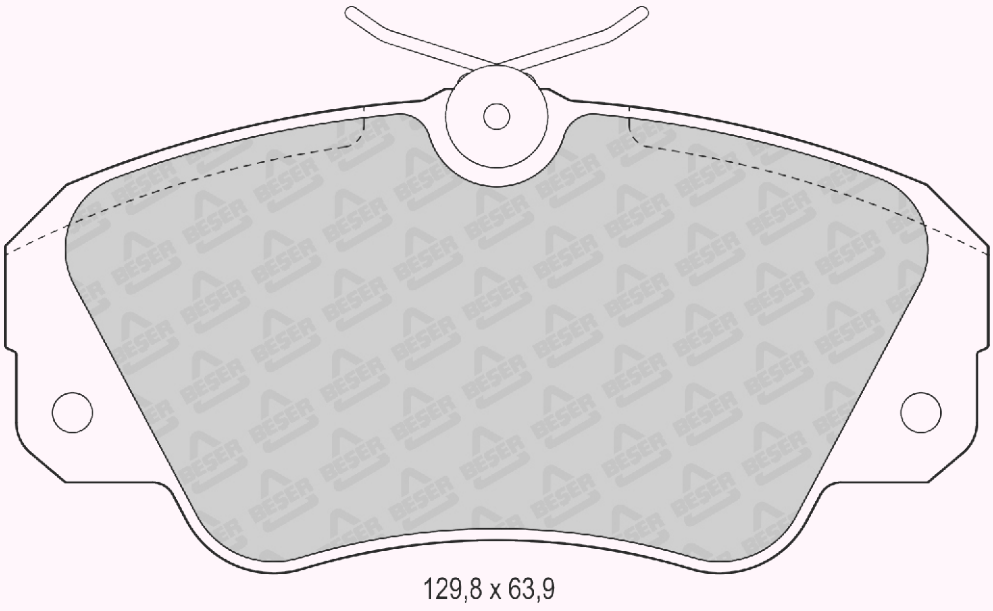

REFERENCE	T(mm)	REMARKS	MAKE	F/R	WVA No
3736	17,5	2 PADS INNER & 2 PADS OUTER	HOLDEN - OPEL SAAB - VAUXHALL	F	21411 21413

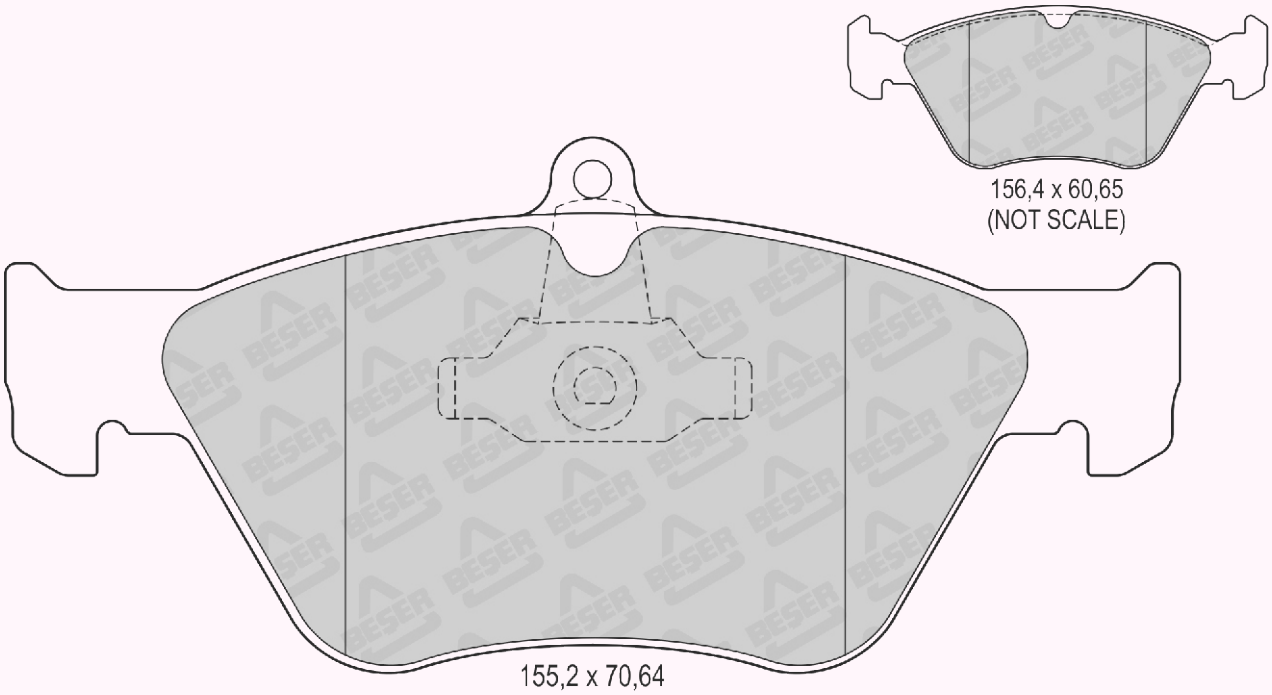

REFERENCE	T(mm)	REMARKS	MAKE	F/R	WVA No
3740	18	2 PADS WITH WEAR SENSOR	KIA	F	23384 23385 23386

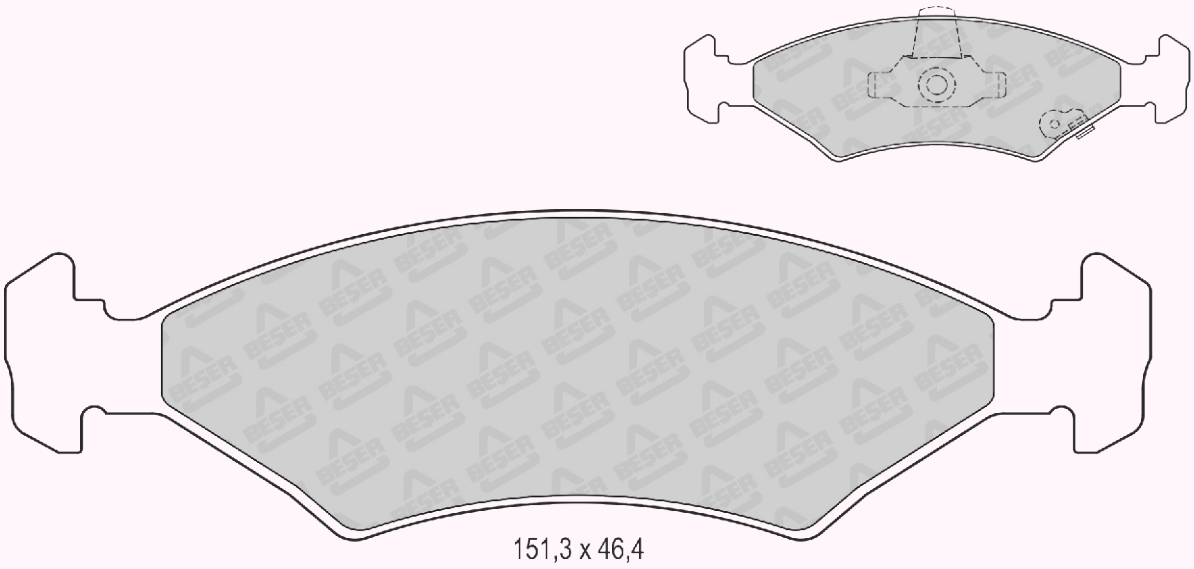

REFERENCE	T(mm)	REMARKS	MAKE	F/R	WVA No
3743	15,5	2 PADS WITH WEAR SENSOR	ACURA - HOLDEN - ISUZU - OPEL VAUXHALL	F	21845

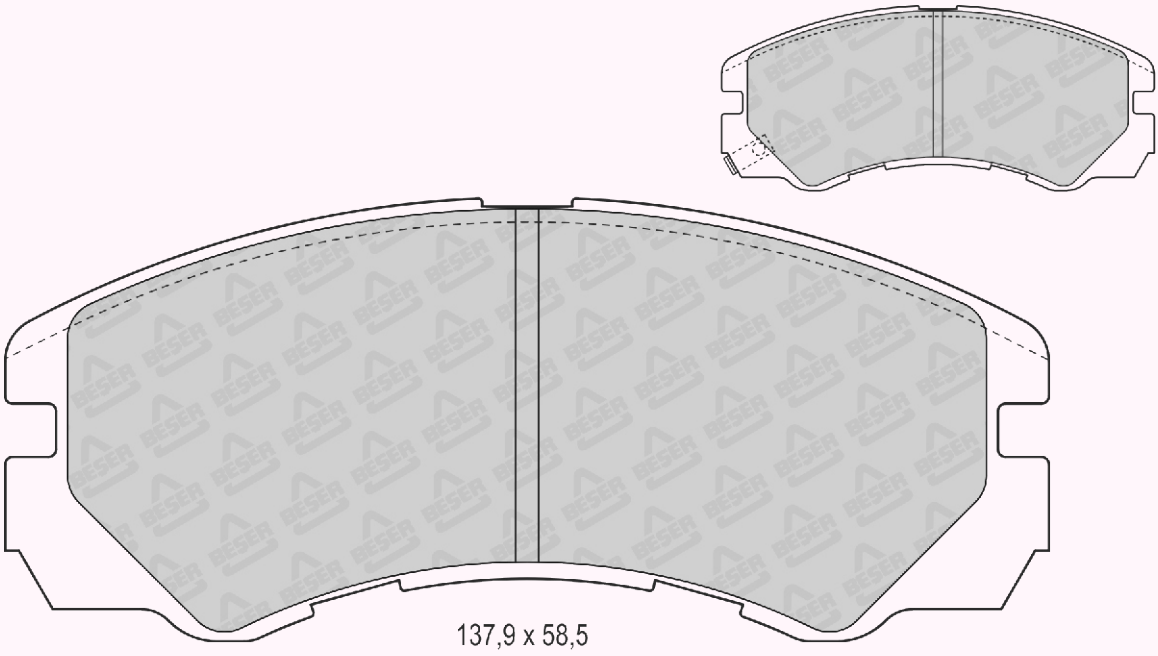

REFERENCE	T(mm)	REMARKS	MAKE	F/R	WVA No
3744	16	4 PADS PLAIN	DAEWOO - CHEVROLET	R	23241

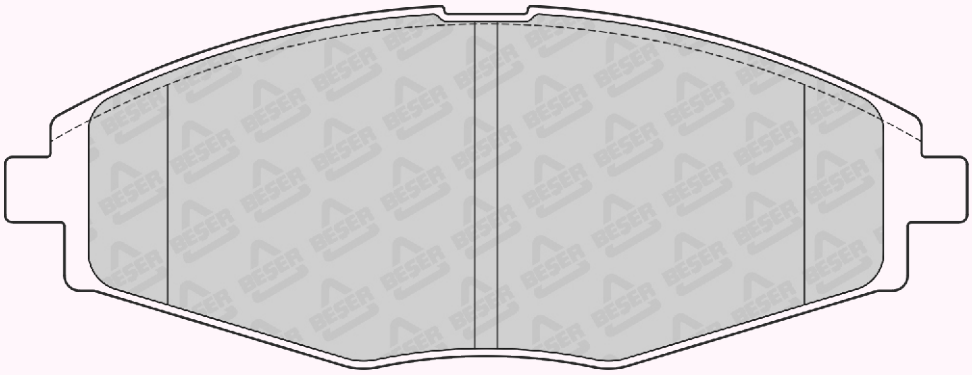

127 x 47,8

REFERENCE	T(mm)	REMARKS	MAKE	F/R	WVA No
3745	14	4 PADS PLAIN	SUZUKI	F	21730

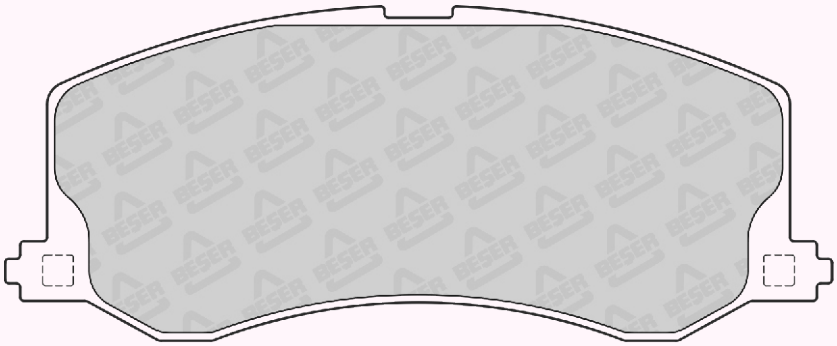

109,2 x 44

REFERENCE	T(mm)	REMARKS	MAKE	F/R	WVA No
3746	13,5	4 PADS PLAIN	ASIA MOTORS - DAIHATSU PERODUA	F	20780

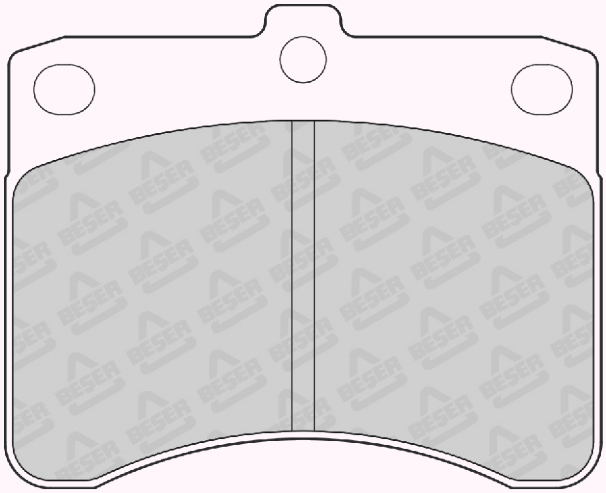

78,7 x 63,7

REFERENCE	T(mm)	REMARKS	MAKE	F/R	WVA No
3747	8	4 PADS PLAIN	AIXAM - LIGIER - PIAGGIO	F	---

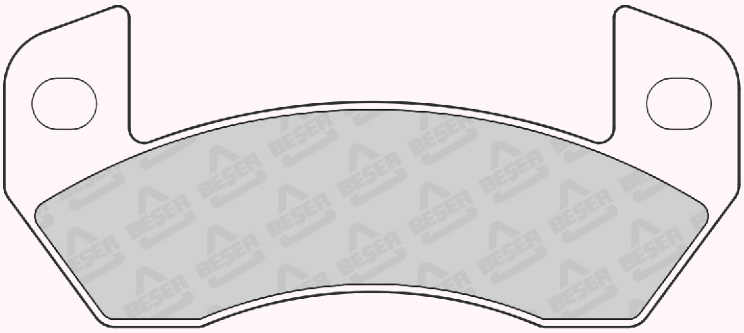

97 x 42,4

REFERENCE	T(mm)	REMARKS	MAKE	F/R	WVA No
3748	10	2 PADS WITH WEAR SENSOR (180mm)	AIXAM	F	24730 24731 24732

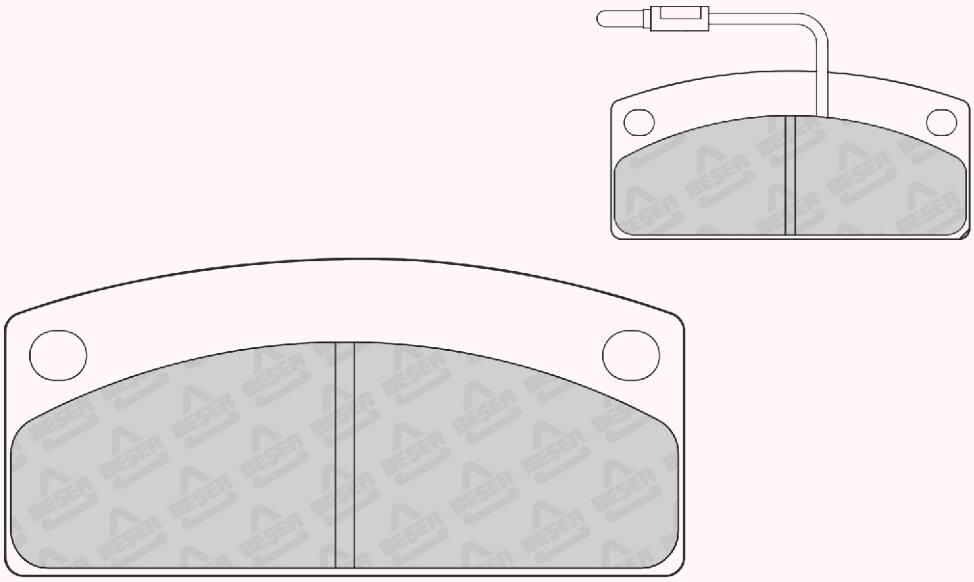

89,7 x 42

REFERENCE	T(mm)	REMARKS	MAKE	F/R	WVA No
3749	20	2 PADS WITH WEAR SENSOR (210mm)	IVECO	F	29001 29003 29107

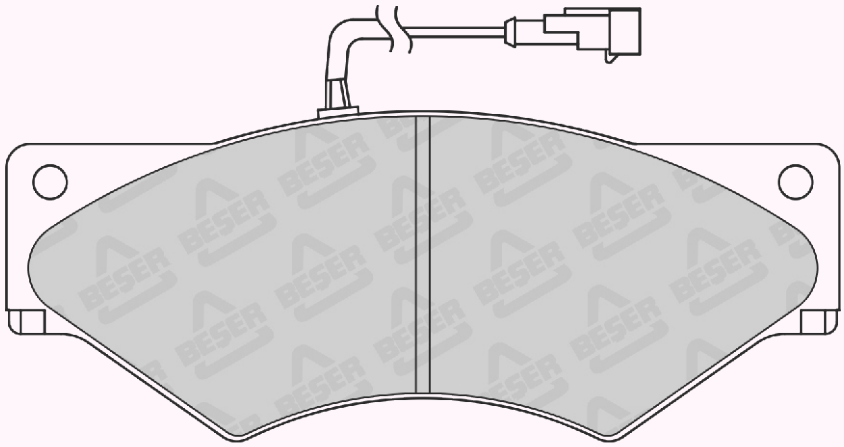

174,4 x 69
(NOT SCALE)

REFERENCE	T(mm)	REMARKS	MAKE	F/R	WVA No
3749/1	20	2 PADS WITH WEAR SENSOR. (225 mm.)	IVECO	F	29001 29003

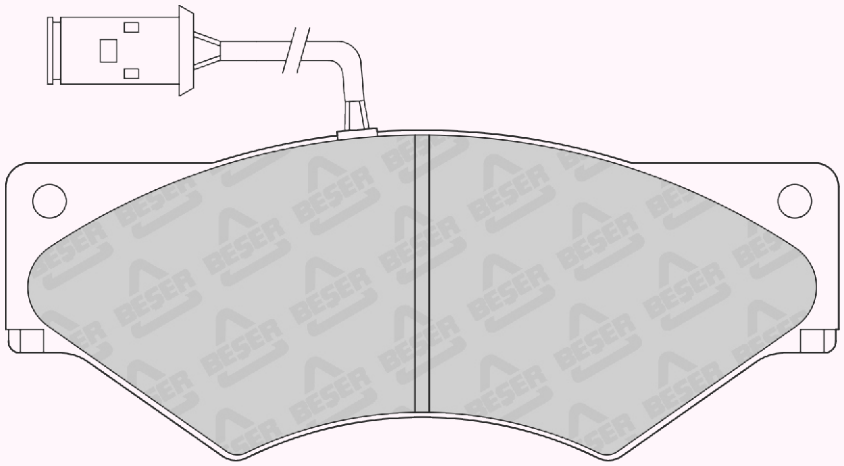

174,4 x 69
(NOT SCALE)

REFERENCE	T(mm)	REMARKS	MAKE	F/R	WVA No
3750	19	4 PADS WITH WEAR SENSOR (310mm)	PEUGEOT	F	21722 21723 21724 21749

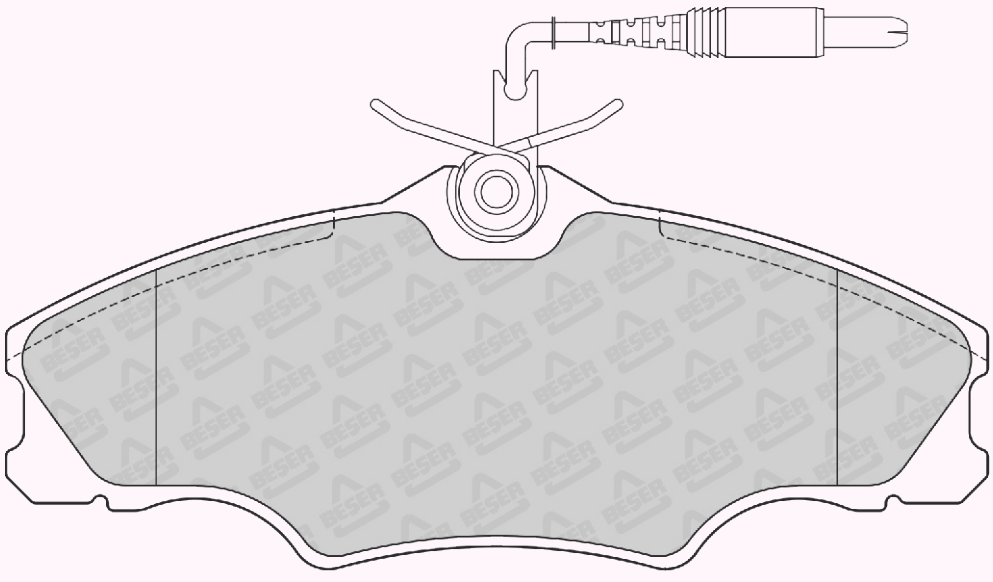

129,7 x 53

REFERENCE	T(mm)	REMARKS	MAKE	F/R	WVA No
3751	18	2 PADS WITH WEAR SENSOR	KIA	F	-

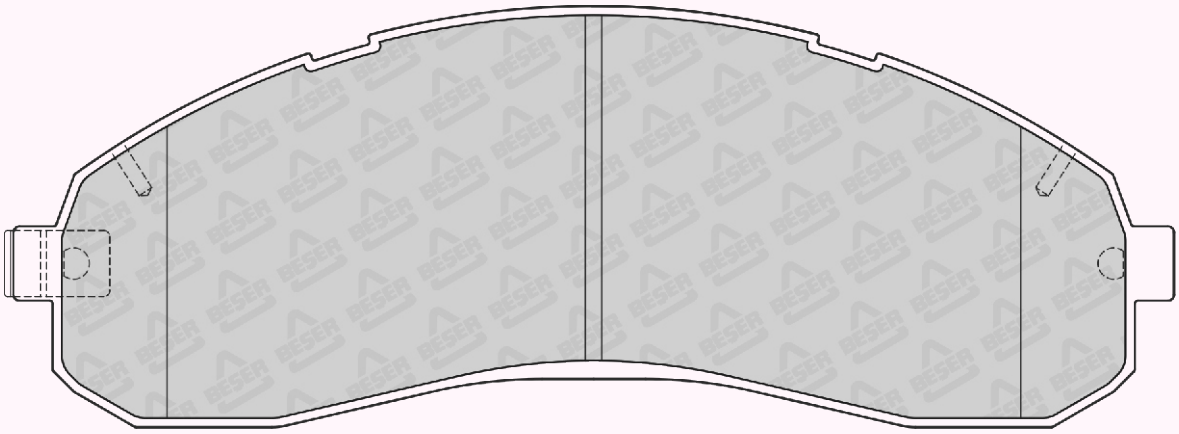

193 x 70
(NOT SCALE)

REFERENCE	T(mm)	REMARKS	MAKE	F/R	WVA No
3752	15	2 PADS WITH WEAR SENSOR	HONDA	F	20193 20194 20351 20959

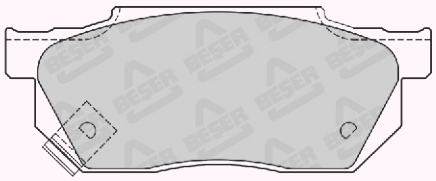

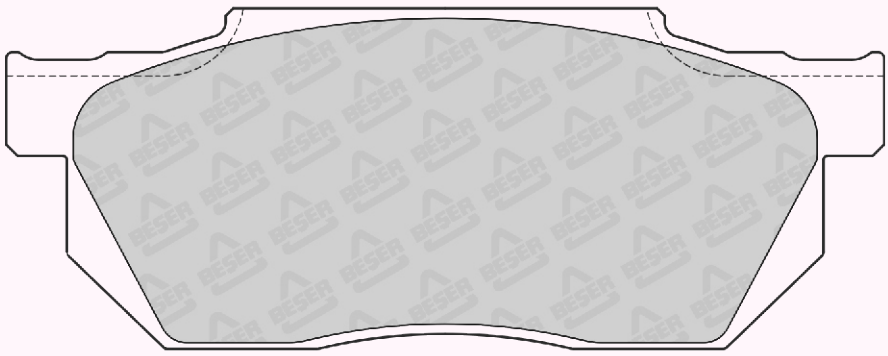

116 x 45

REFERENCE	T(mm)	REMARKS	MAKE	F/R	WVA No
3754	19	2 PADS WITH WEAR SENSOR (186mm)	FORD	F	23154 23155

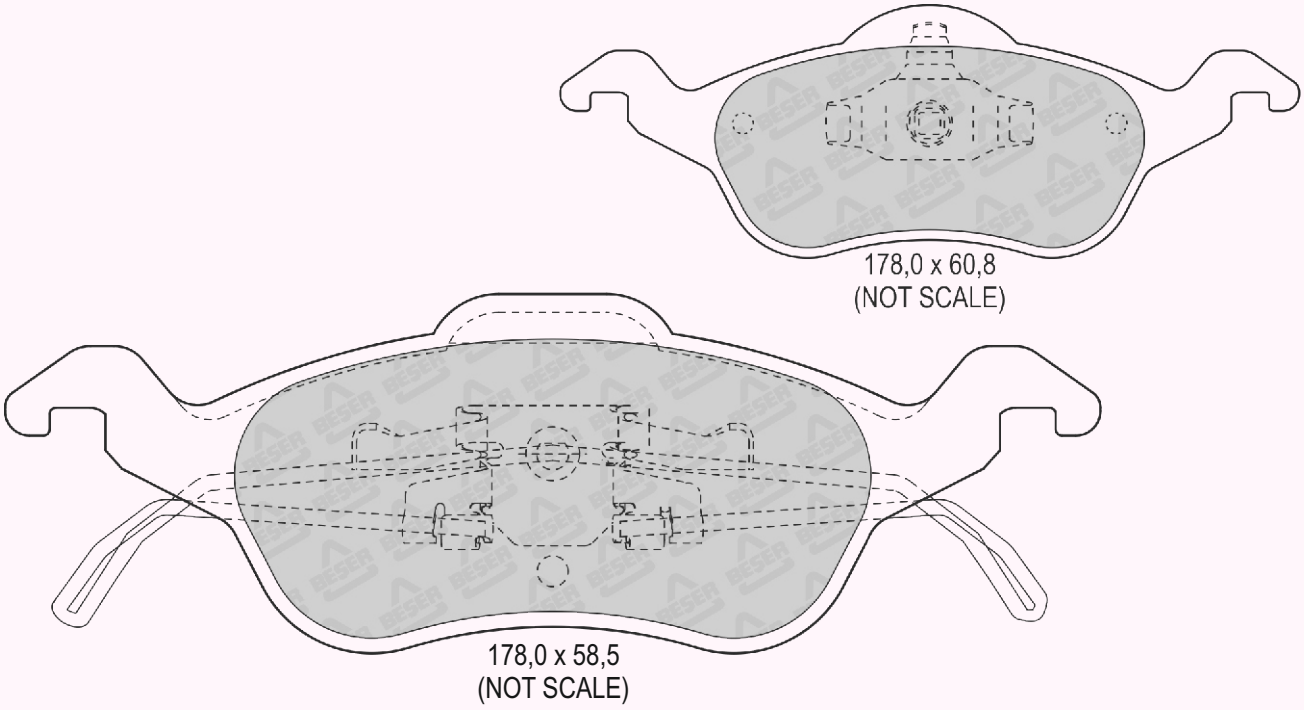

REFERENCE	T(mm)	REMARKS	MAKE	F/R	WVA No
3755	14,5	4 PADS PLAIN	FORD	R	23353

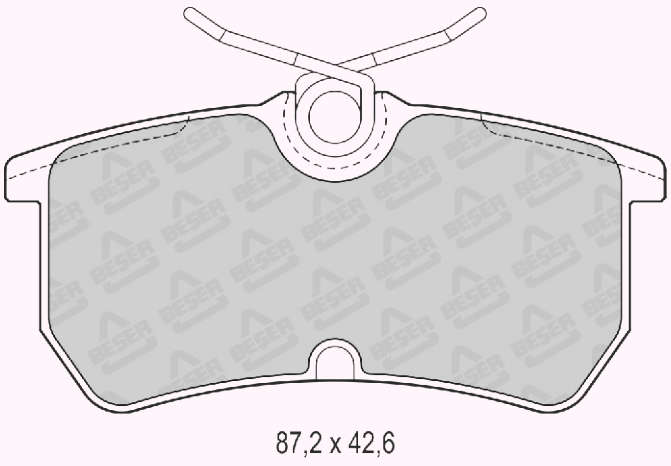

REFERENCE	T(mm)	REMARKS	MAKE	F/R	WVA No
3757	15,5	4 PADS WITH WEAR SENSOR	HOLDEN - ISUZU - LANDWIND (JMC) OPEL - VAUXHALL	F	21467 21543 21544

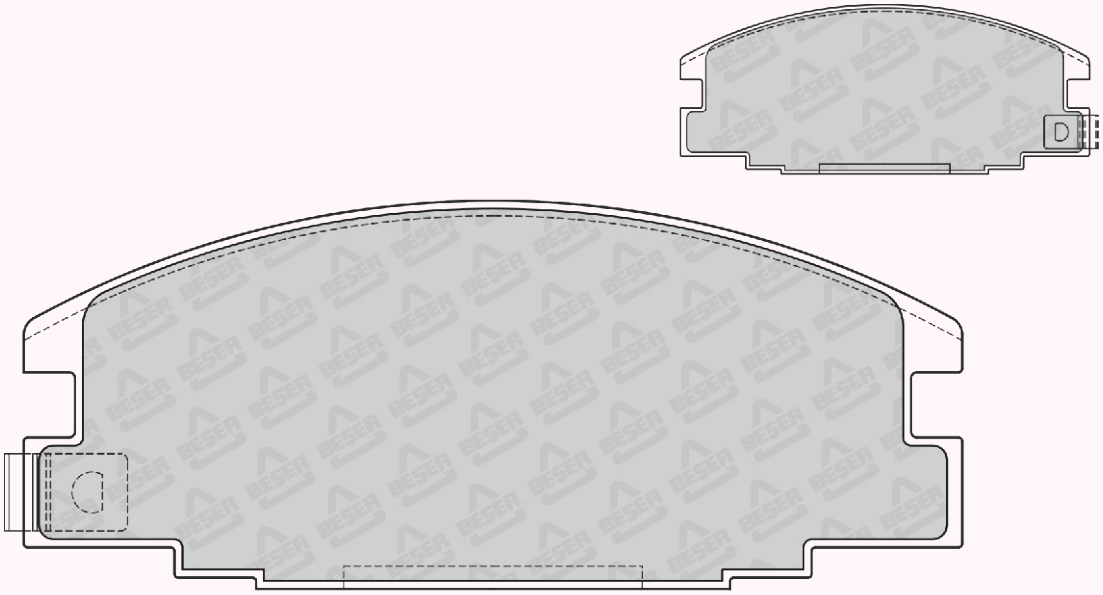

126,5 x 51,3

REFERENCE	T(mm)	REMARKS	MAKE	F/R	WVA No
3758	17	2 PADS WITH WEAR SENSOR	NISSAN	F	21099 21119 21130 21229

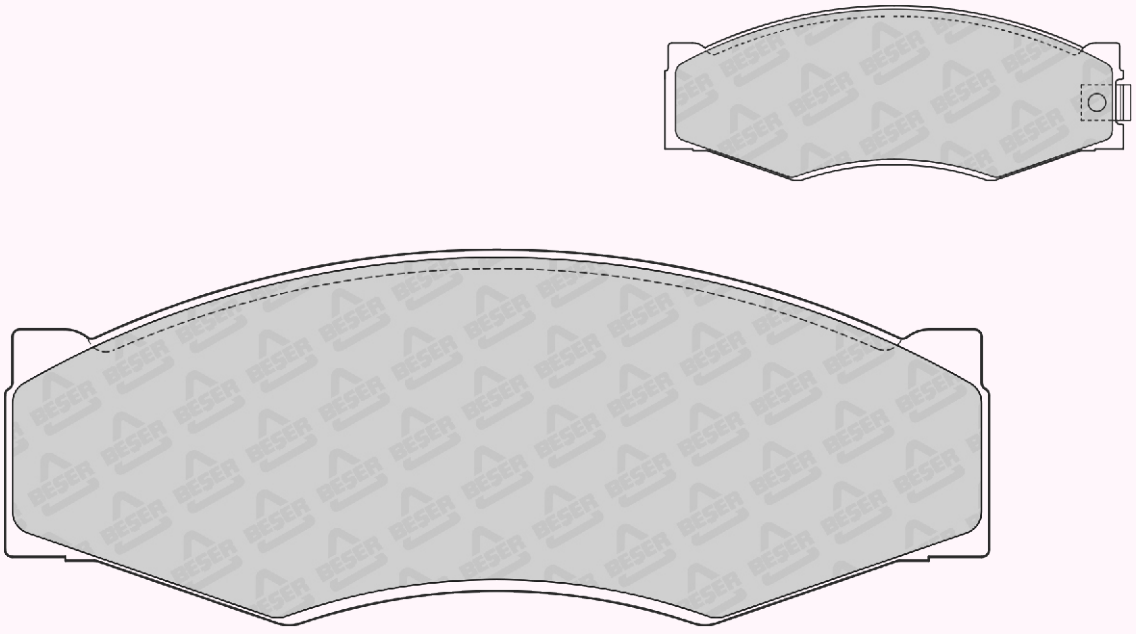

130 x 49,5

REFERENCE	T(mm)	REMARKS	MAKE	F/R	WVA No
3759	18	4 PADS PLAIN	CITROEN - PEUGEOT	F	21980 21981 23205

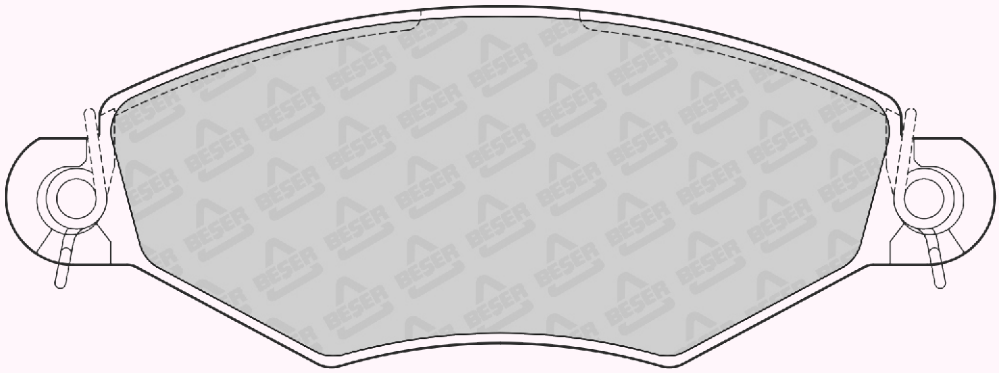

130,7 x 47,6

REFERENCE	T(mm)	REMARKS	MAKE	F/R	WVA No
3760	17	2 PADS WITH WEAR SENSOR	FORD - NISSAN SUBARU	F	21347 21348 21349

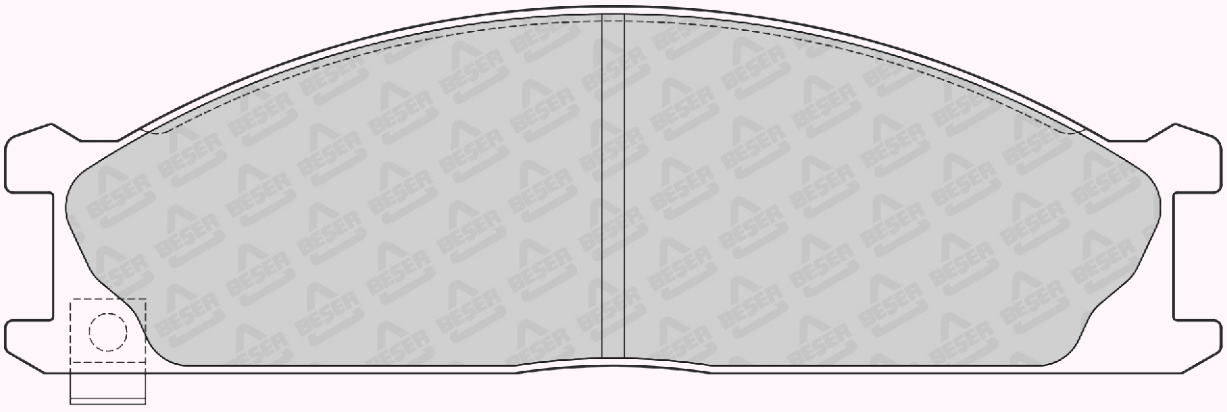

160,6 x 48,5

REFERENCE	T(mm)	REMARKS	MAKE	F/R	WVA No
3761	16	2 PADS WITH SPRIN	SEAT - VW	F	---

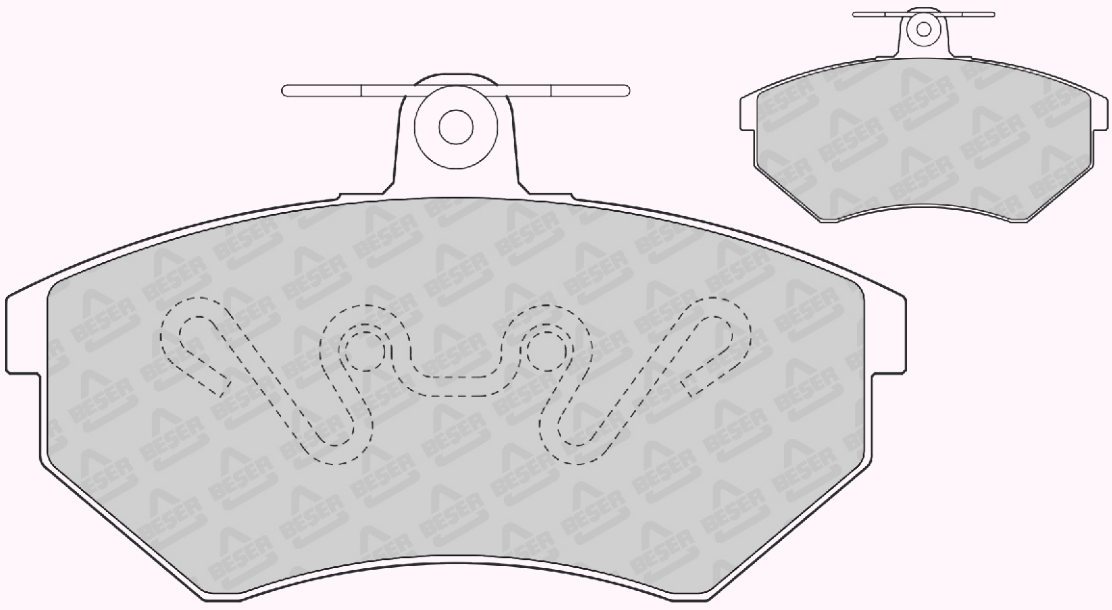

118,9 x 69,5

REFERENCE	T(mm)	REMARKS	MAKE	F/R	WVA No
3762	18.0/17.5	2 PADS WITH WEAR SENSOR	CHEVROLET - HOLDEN OPEL - VAUXHALL	F	23063 23064 23066 23067

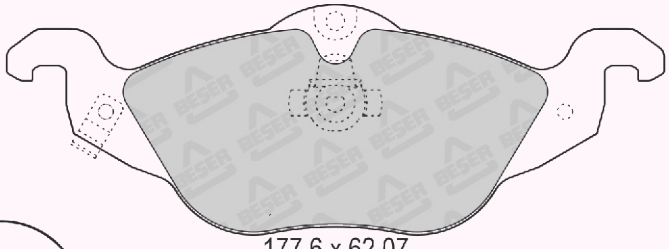

177,6 x 62,07
(NOT SCALE)

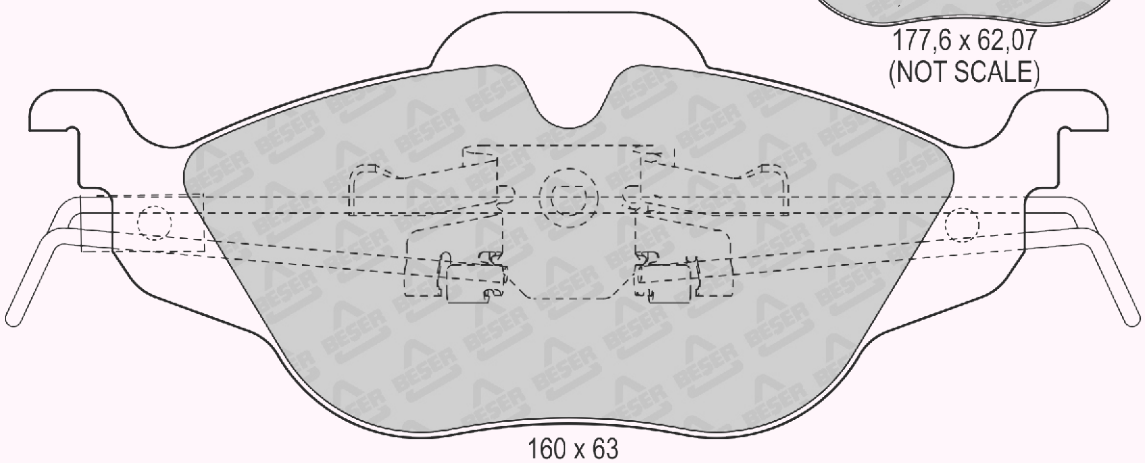

160 x 63
(NOT SCALE)

REFERENCE	T(mm)	REMARKS	MAKE	F/R	WVA No
3763	17.0/16.0	2 PADS WITH WEAR SENSOR	OPEL - VAUXHALL	R	23052 23053 23054 23055

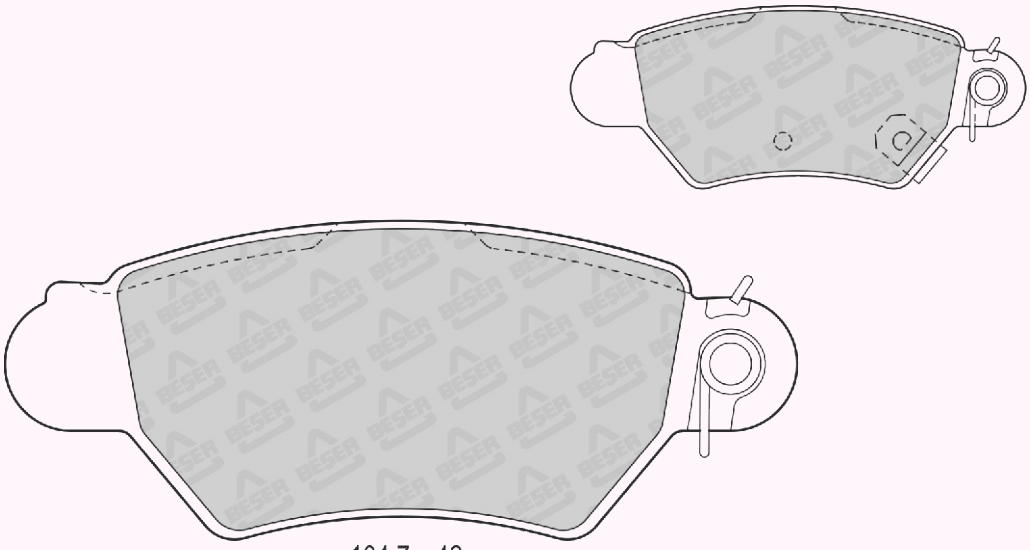

REFERENCE	T(mm)	REMARKS	MAKE	F/R	WVA No
3764	17,5	2 PADS WITH WEAR SENSOR	SUBARU	F	23780 23781 23782

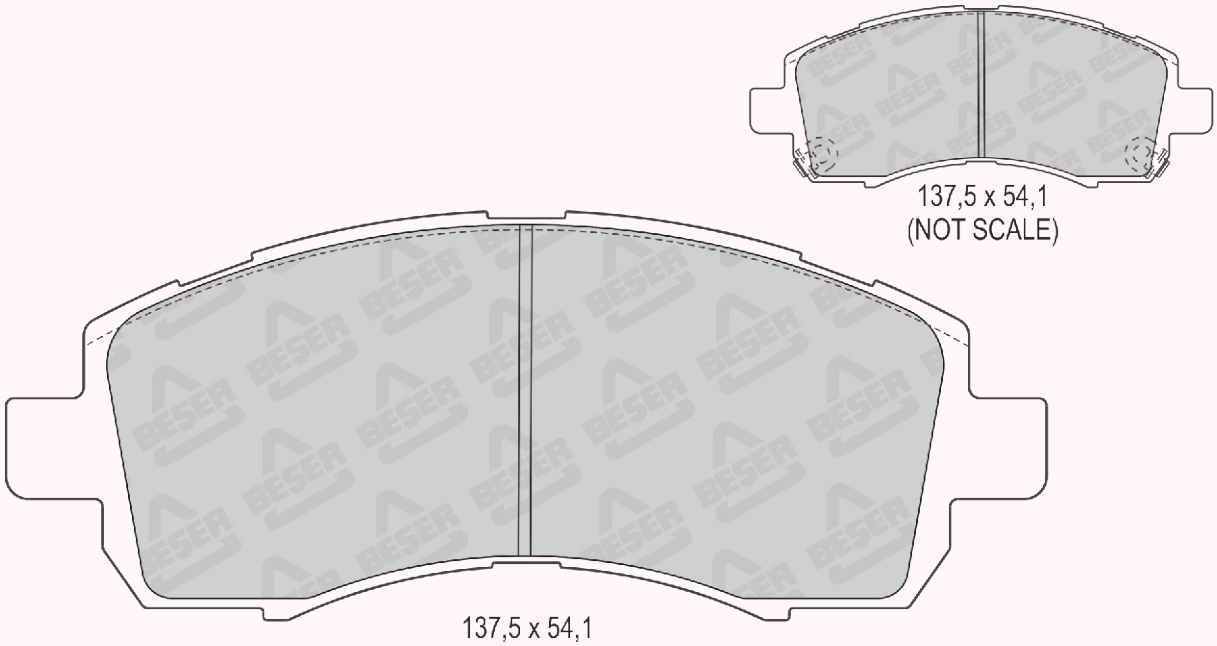

REFERENCE	T(mm)	REMARKS	MAKE	F/R	WVA No
3765	15,5	2 PADS WITH WEAR SENSOR	MITSUBISHI	F	24291

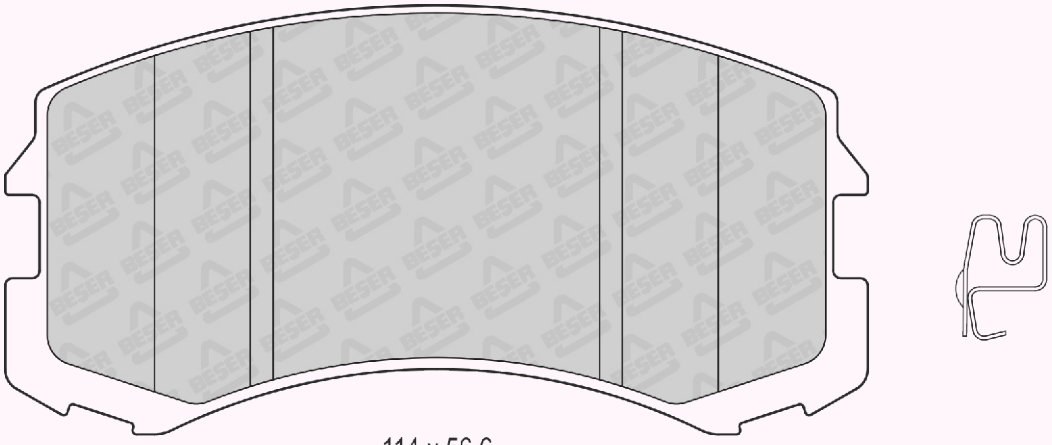

114 x 56,6

REFERENCE	T(mm)	REMARKS	MAKE	F/R	WVA No
3766	16,5	2 PADS WITH WEAR SENSOR	NISSAN	F	21657 21658 21659

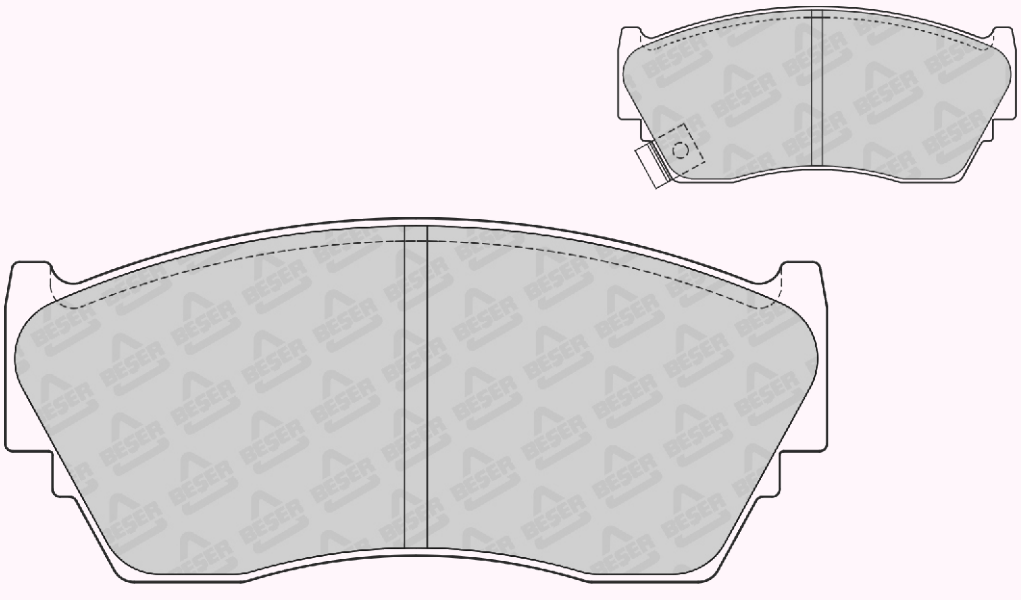

108,5 x 48

REFERENCE	T(mm)	REMARKS	MAKE	F/R	WVA No
3767	16	4 PADS PLAIN	FORD - MAZDA	F	23540

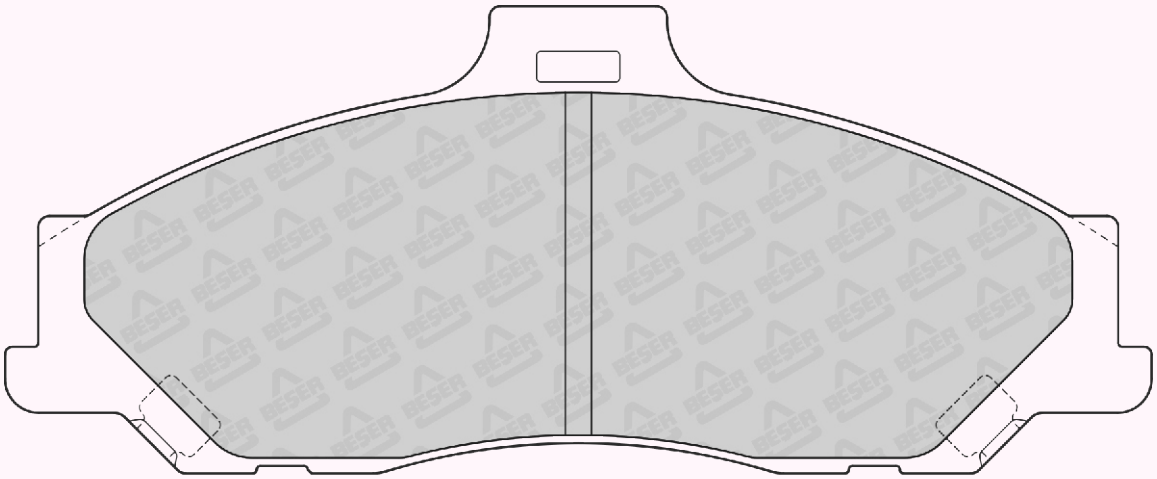

151,5 x 61,7

REFERENCE	T(mm)	REMARKS	MAKE	F/R	WVA No
3768	16,5	2 PADS WITH WEAR SENSOR	TOYOTA	F	23348 23349 23350

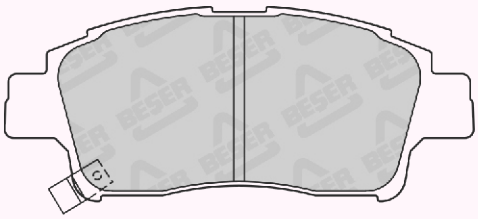

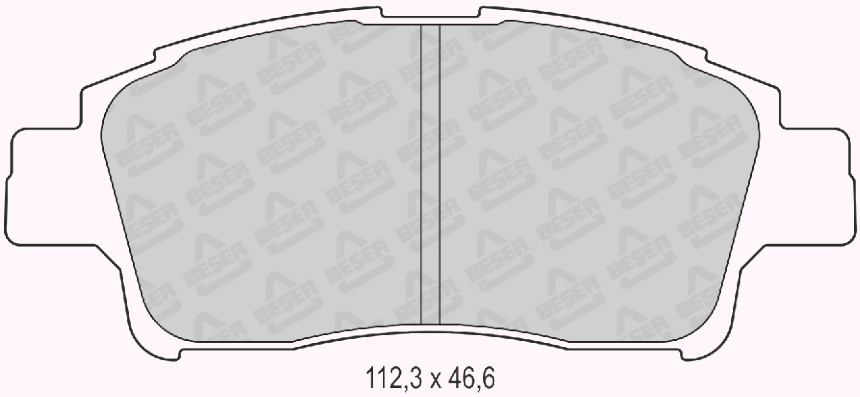

112,3 x 46,6

REFERENCE	T(mm)	REMARKS	MAKE	F/R	WVA No
3769	16,7	2 PADS WITH WEAR SENSOR	TOYOTA	F	23510 23511 23512

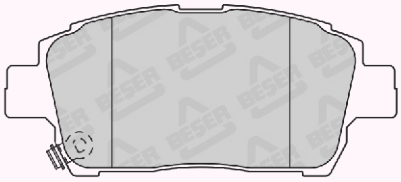

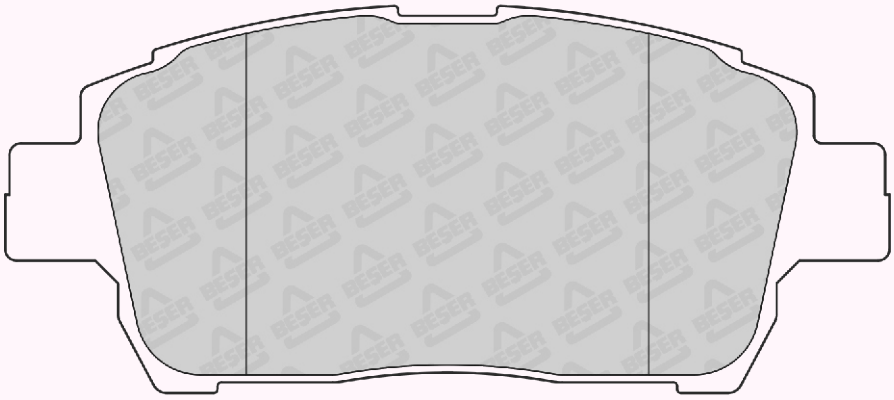

116,4 x 51,1

REFERENCE	T(mm)	REMARKS	MAKE	F/R	WVA No
3771	15,5	1 PAD WITH WEAR SENSOR (210mm)	LAND ROVER	R	21238 21237 21514

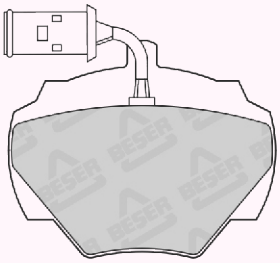

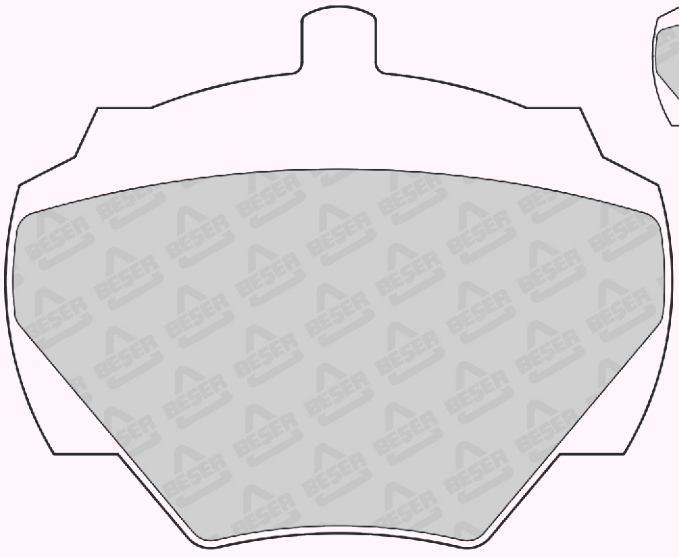

88,6 x 72

REFERENCE	T(mm)	REMARKS	MAKE	F/R	WVA No
3773	22,0	2 PADS WITH WEAR SENSOR (300mm)	IVECO NISSAN - RENAULT	F	29067

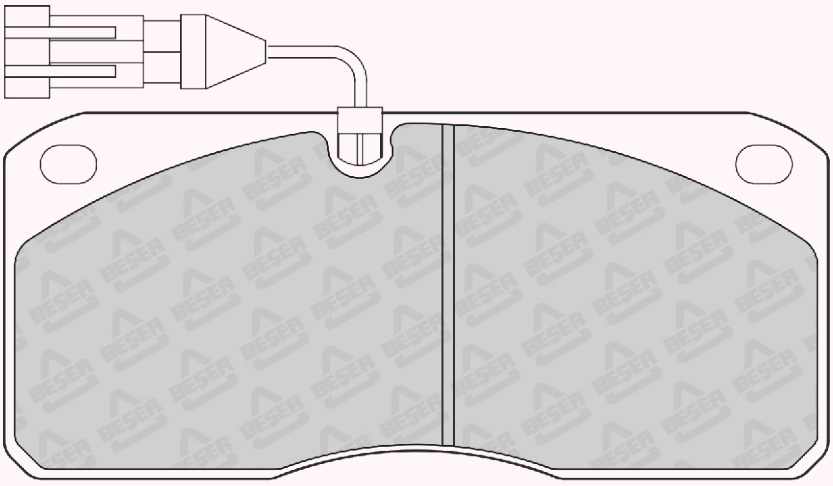

175,4 x 78
(NOT SCALE)

REFERENCE	T(mm)	REMARKS	MAKE	F/R	WVA No
3776	15,0	2 PADS WITH WEAR SENSOR	HOLDEN - LEXUS TOYOTA	R	21833 21834

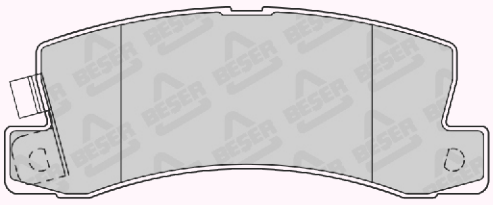

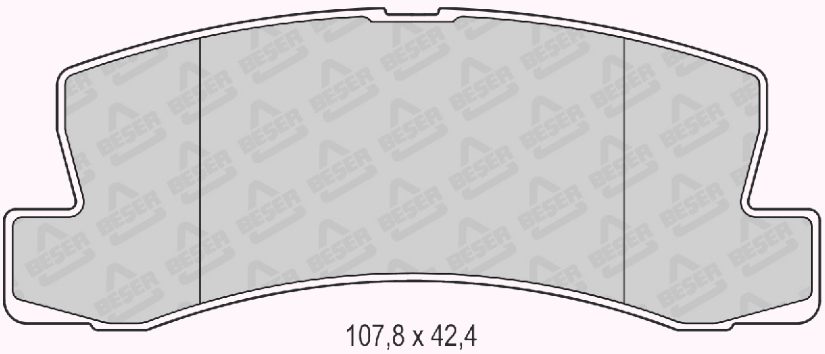

107,8 x 42,4

REFERENCE	T(mm)	REMARKS	MAKE	F/R	WVA No
3777	16,3	4 PADS PLAIN	TOYOTA	F	21468

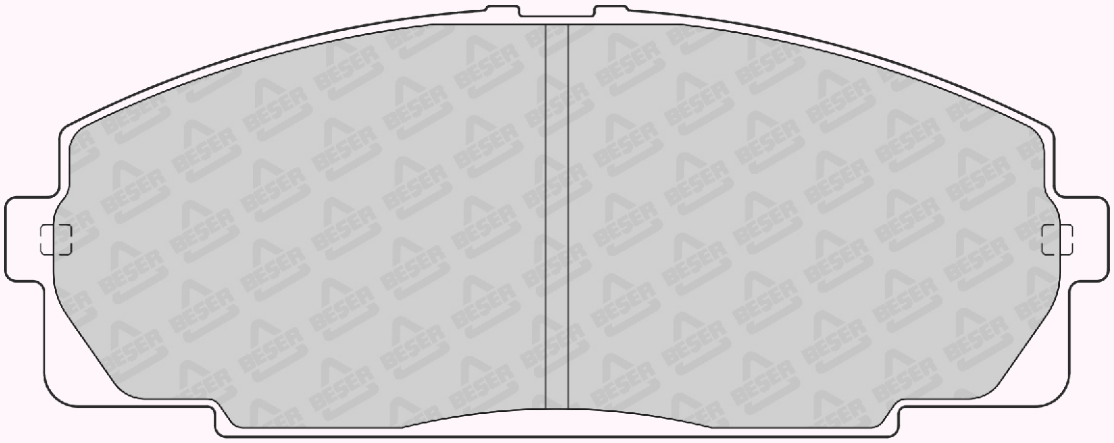

145,7 x 56,8

REFERENCE	T(mm)	REMARKS	MAKE	F/R	WVA No
3778	16	2 PADS WITH WEAR SENSOR	HYUNDAI	F	23238 23239 23240

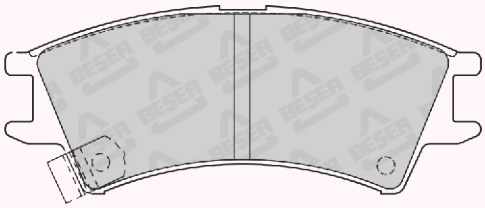

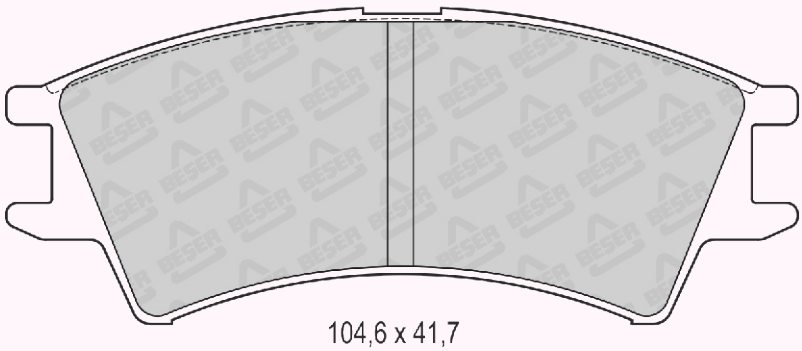

104,6 x 41,7

REFERENCE	T(mm)	REMARKS	MAKE	F/R	WVA No
3779	16	4 PADS PLAIN	INFINITI - NISSAN SUZUKI	F	21561 21562 21633

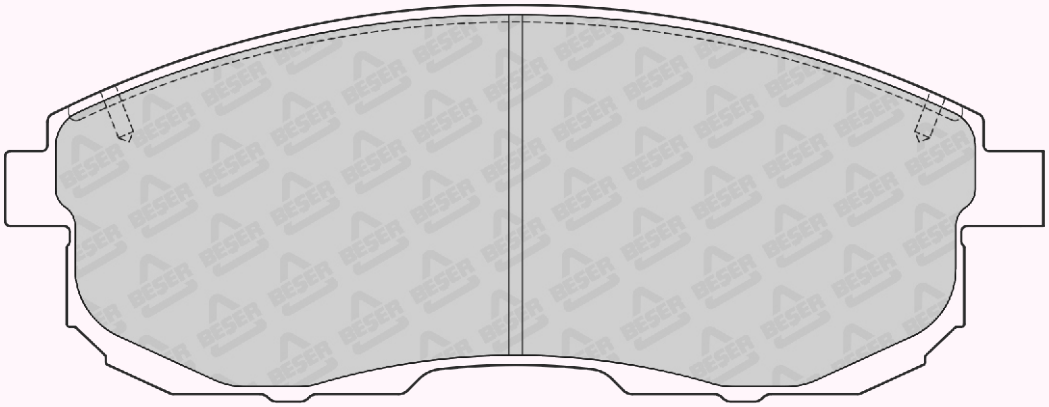

137,1 x 53,1

REFERENCE	T(mm)	REMARKS	MAKE	F/R	WVA No
3780	16	4 PADS PLAIN	FORD - MAZDA	F	23490

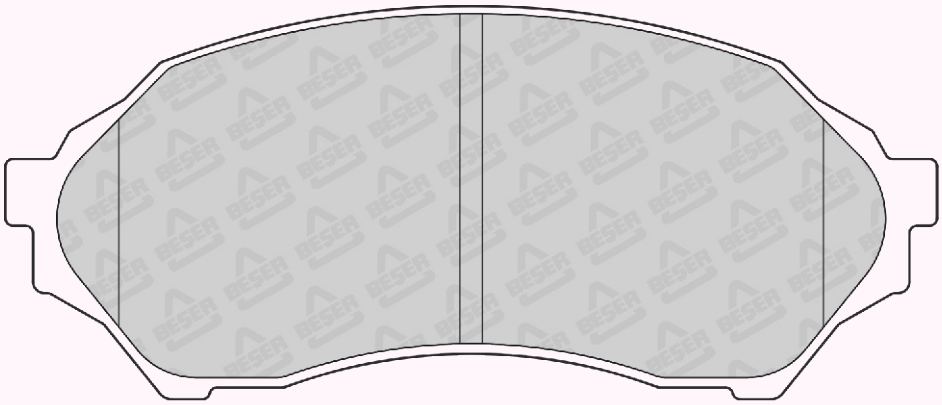

123 x 51,9

REFERENCE	T(mm)	REMARKS	MAKE	F/R	WVA No
3781	17,3	2 PADS WITH WEAR SENSOR	FORD - MAZDA	F	23472 23473 23636

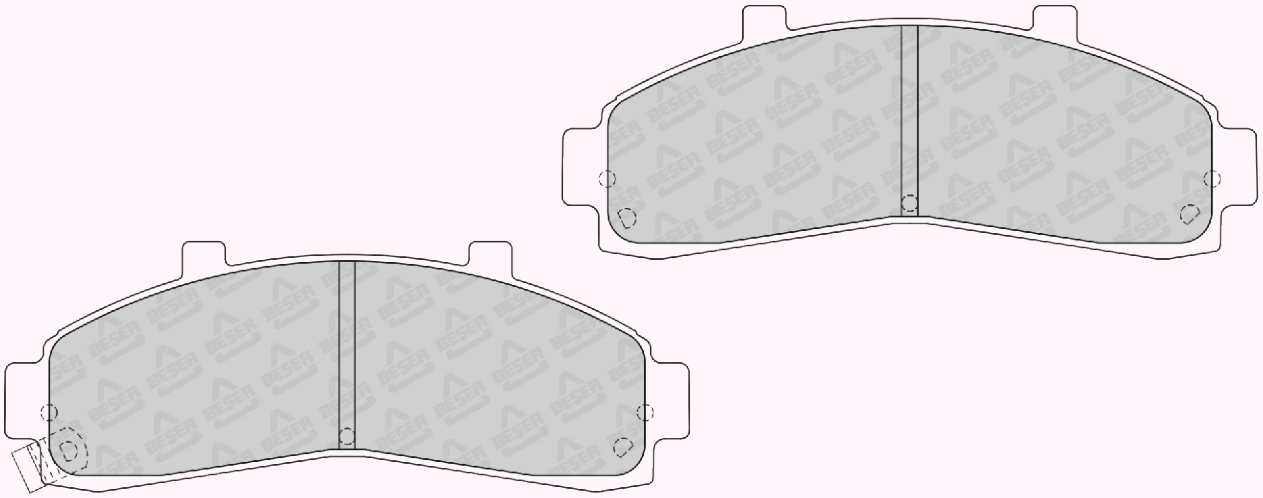

154 x 56,1
(NOT SCALE)

REFERENCE	T(mm)	REMARKS	MAKE	F/R	WVA No
3781/1	17,3	2 PADS WITH WEAR SENSOR	FORD - MAZDA	F	.....

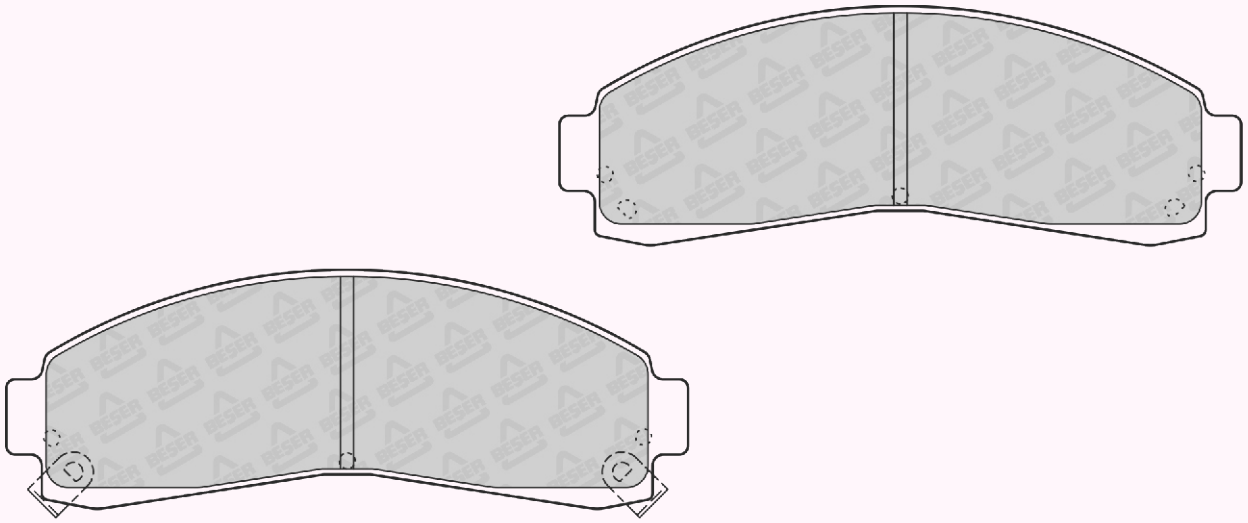

154 x 54,04
(NOT SCALE)

REFERENCE	T(mm)	REMARKS	MAKE	F/R	WVA No
3782	19,6	1 PAD WITH WEAR SENSOR (155mm)	AUDI - SEAT SKODA - VW	F	21974 23130 23131

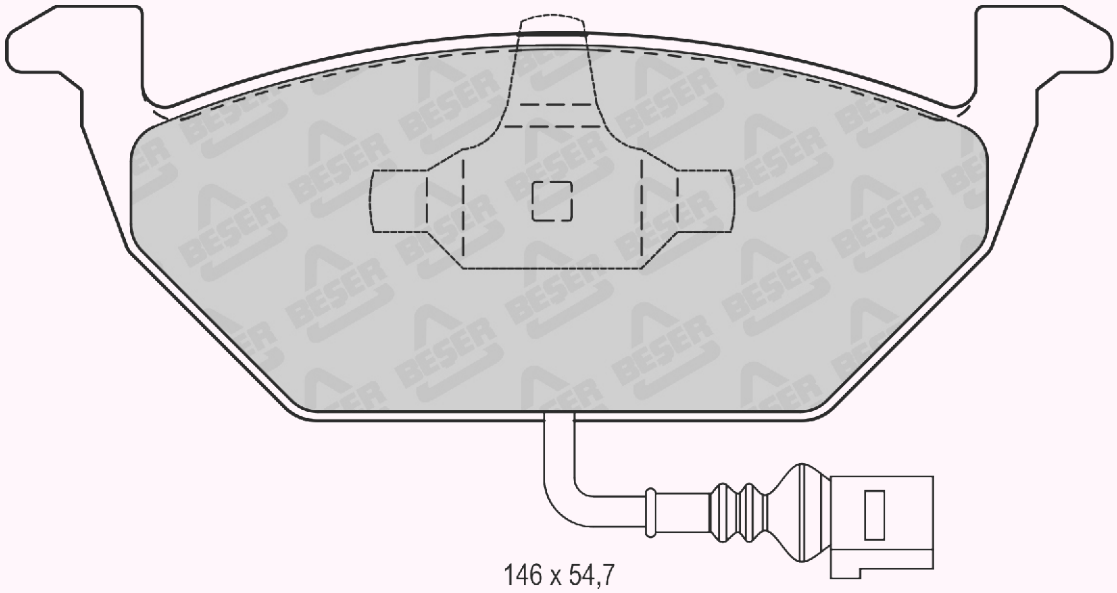

146 x 54,7

REFERENCE	T(mm)	REMARKS	MAKE	F/R	WVA No
3782/1	19,6	4 PADS PLAIN	AUDI - SEAT SKODA - VW	F	21974 23130 23131 23187

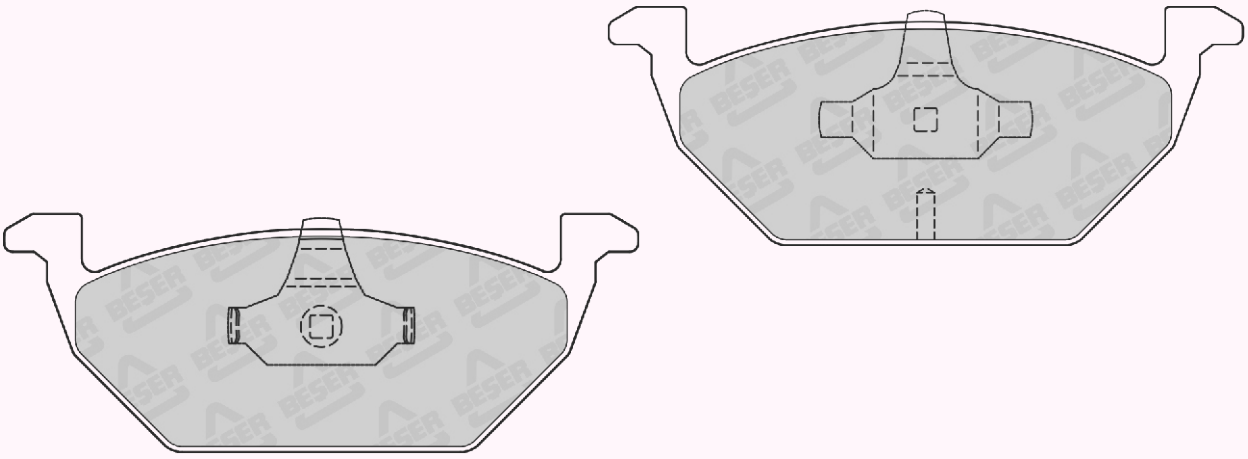

146 x 54,7
(NOT SCALE)

REFERENCE	T(mm)	REMARKS	MAKE	F/R	WVA No
3784	18,7	2 PADS WITH WEAR SENSOR	FORD	F	23430 23577 23578 23579 23580

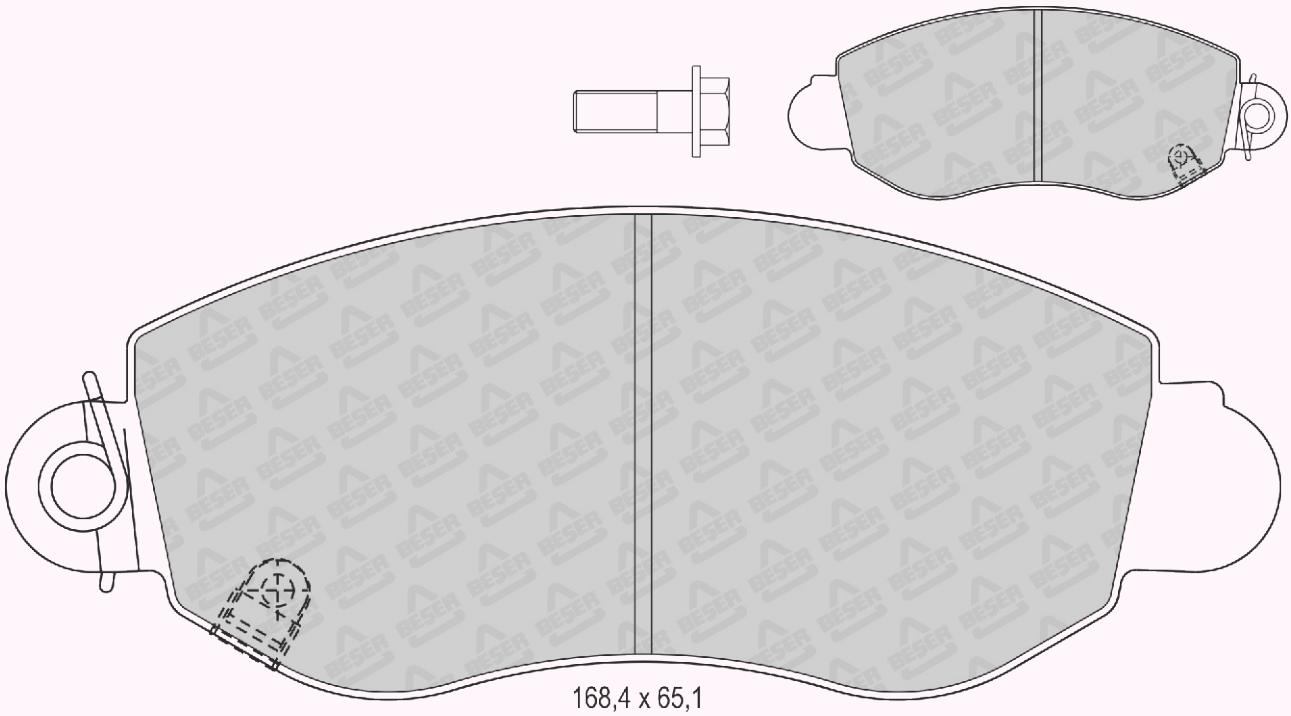

168,4 x 65,1

REFERENCE	T(mm)	REMARKS	MAKE	F/R	WVA No
3788	14,0	2 PADS WITH WEAR SENSOR	CELICA - TOYOTA	R	23521

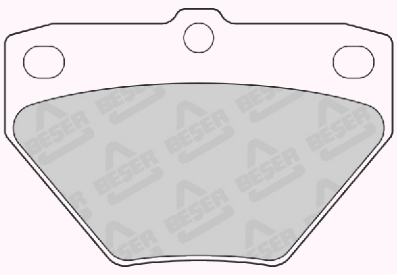

78,5 x 48,9
(NOT SCALE)

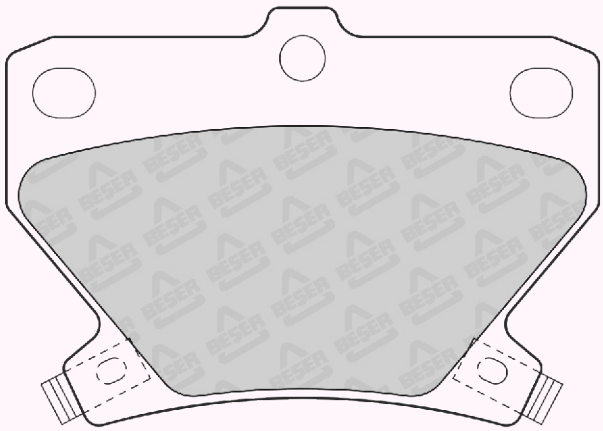

78,3 x 55,3

REFERENCE	T(mm)	REMARKS	MAKE	F/R	WVA No
3790	18	4 PADS PLAIN	FIAT	F	20907 23552

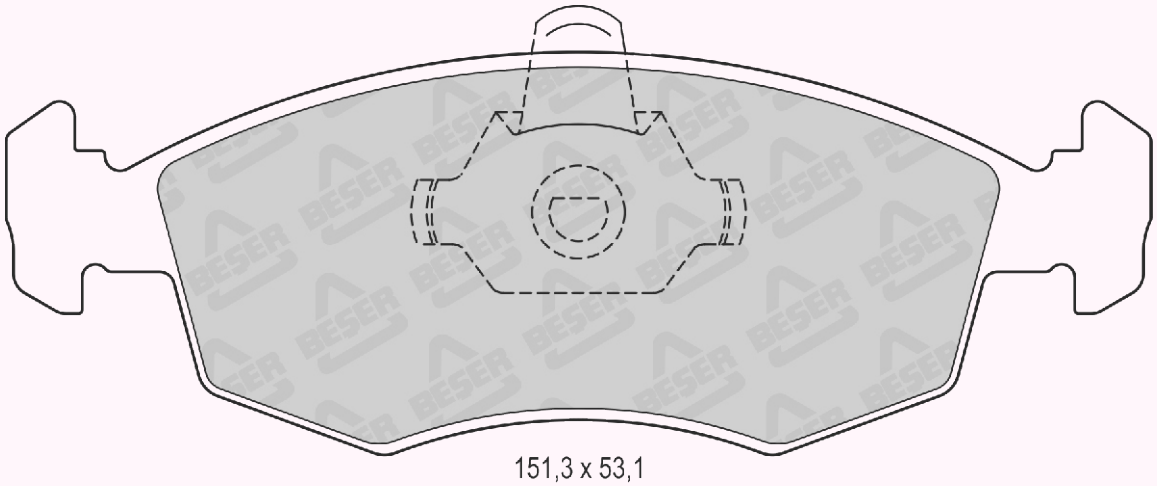

151,3 x 53,1

REFERENCE	T(mm)	REMARKS	MAKE	F/R	WVA No
3790/1	18	4 PADS PLAIN	FIAT	F	20907 23842

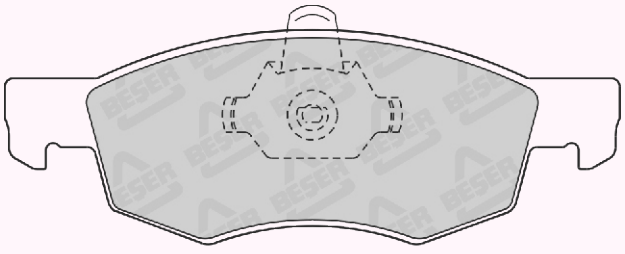

151,3 x 52,6
(NOT SCALE)

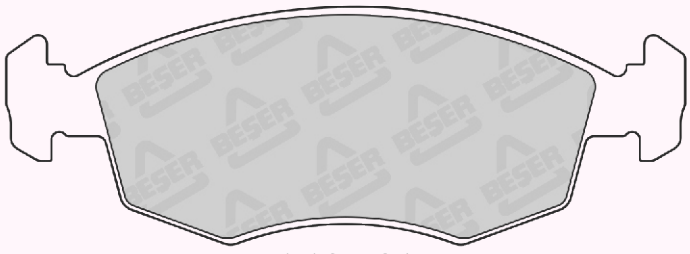

151,3 x 53,1
(NOT SCALE)

REFERENCE	T(mm)	REMARKS	MAKE	F/R	WVA No
3793	15,8	2 PADS WITH WEAR SENSOR	ISTANA - SANGYONG	F	---

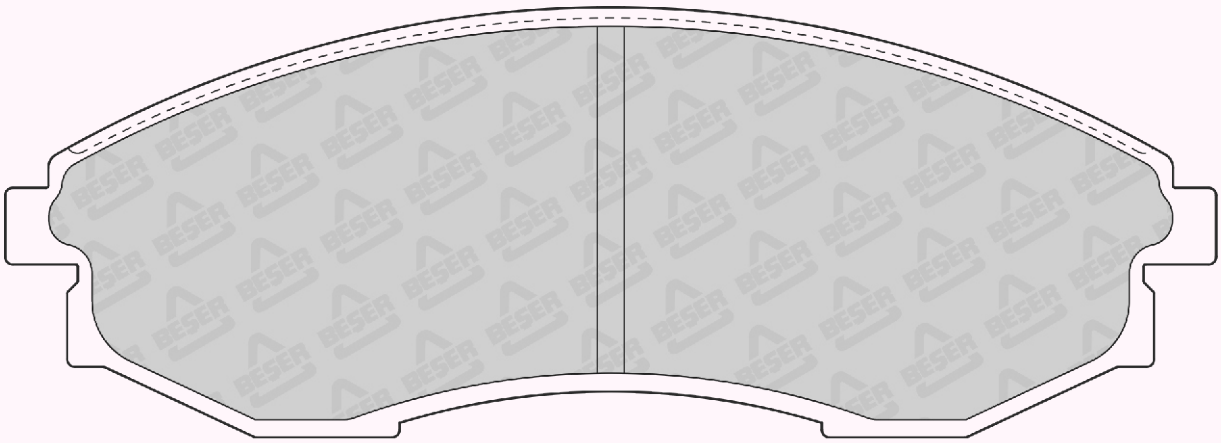

160,0 x 56,7

REFERENCE	T(mm)	REMARKS	MAKE	F/R	WVA No
3794	19,5	2 PADS WITH WEAR SENSOR	VW	F	21883 21885 23163

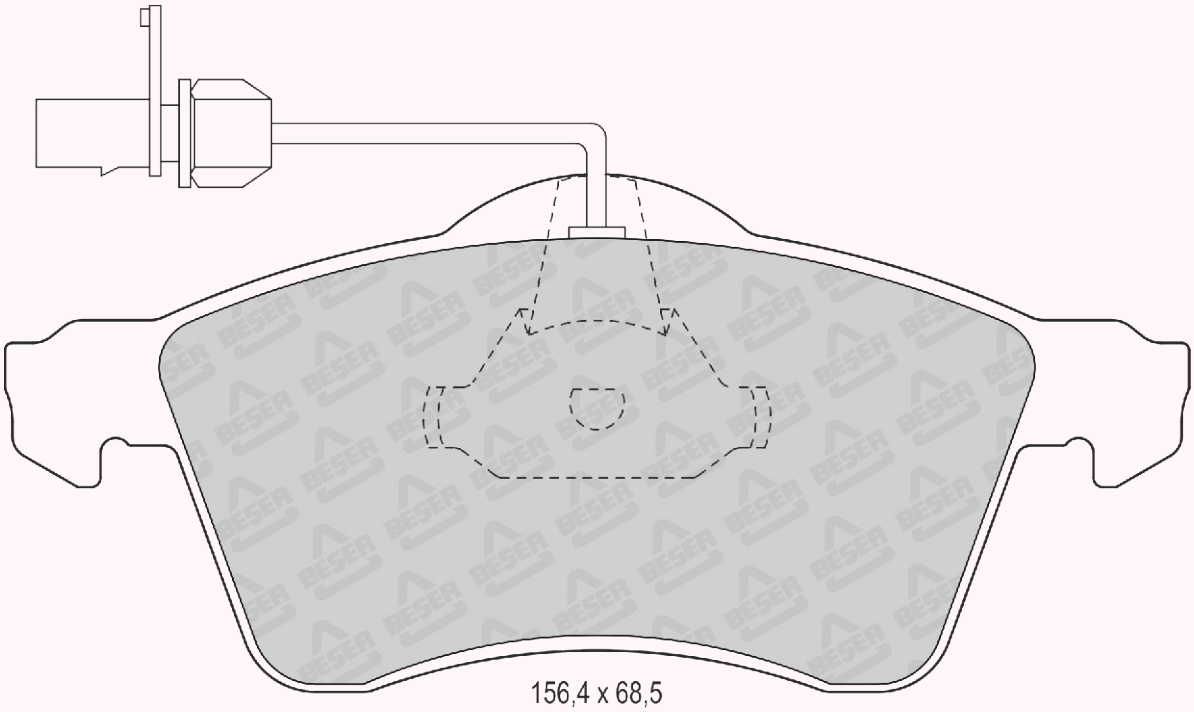

156,4 x 68,5

REFERENCE	T(mm)	REMARKS	MAKE	F/R	WVA No
3795	16,2	1 PAD WITH WEAR SENSOR (210mm)	VW	R	23980

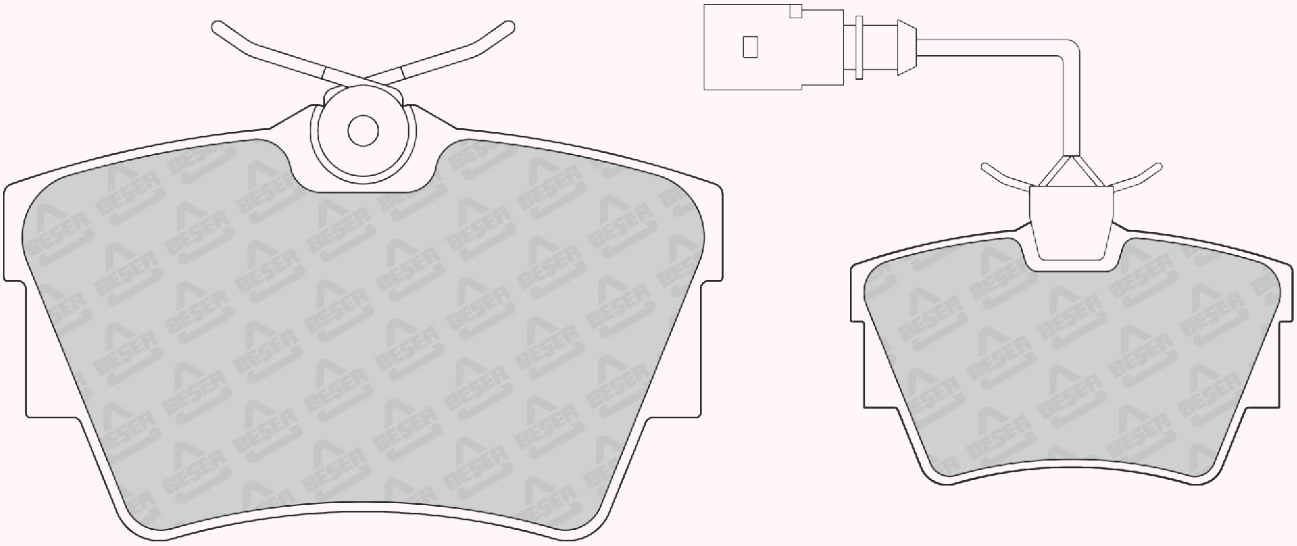

95 x 57,4

REFERENCE	T(mm)	REMARKS	MAKE	F/R	WVA No
3795/1	16,2	4 PADS PLAIN	NISSAN - OPEN RENAULT - VAUXHALL	R	23980

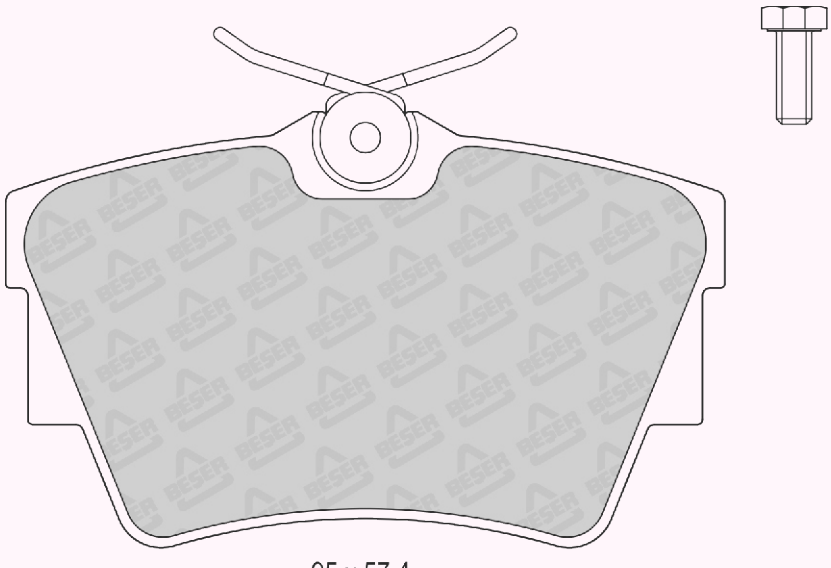

95 x 57,4

REFERENCE	T(mm)	REMARKS	MAKE	F/R	WVA No
3797	15,5	2 PADS WITH WEAR SENSOR	NISSAN	F	24647 24648 24649

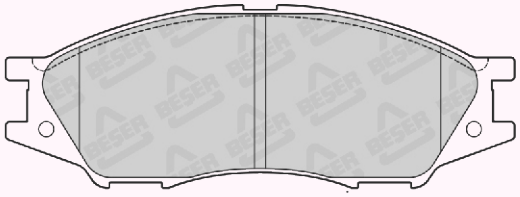

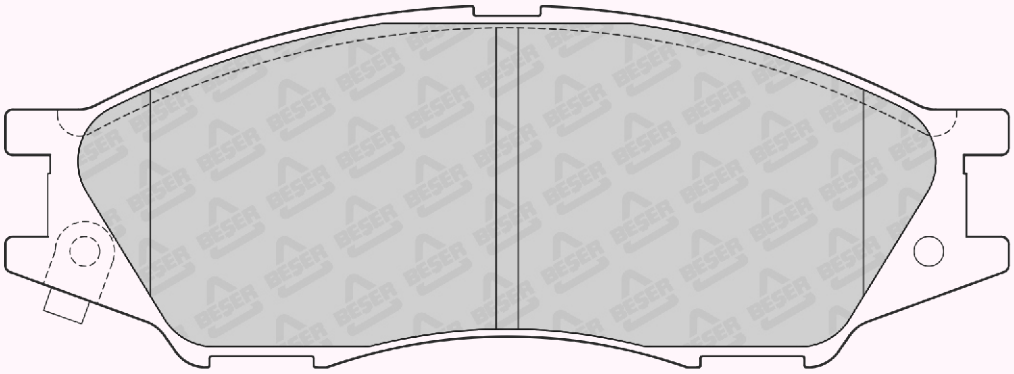

135,1 x 48,6

REFERENCE	T(mm)	REMARKS	MAKE	F/R	WVA No
3799	18,5	2 PADS WITH WEAR SENSOR (285mm)	CITROEN - FIAT PEUGEOT	F	23003 23040 23041 23042

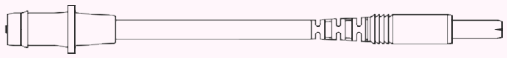

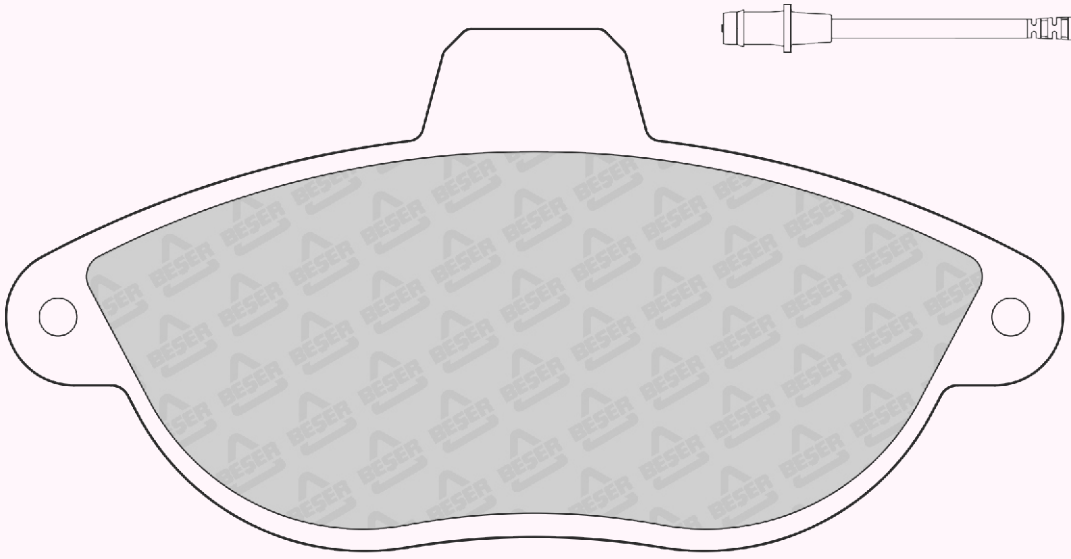

139,6 x 68,9

REFERENCE	T(mm)	REMARKS	MAKE	F/R	WVA No
3800	19,2	4 PADS PLAIN	CITROEN - PEUGEOT	F	23600

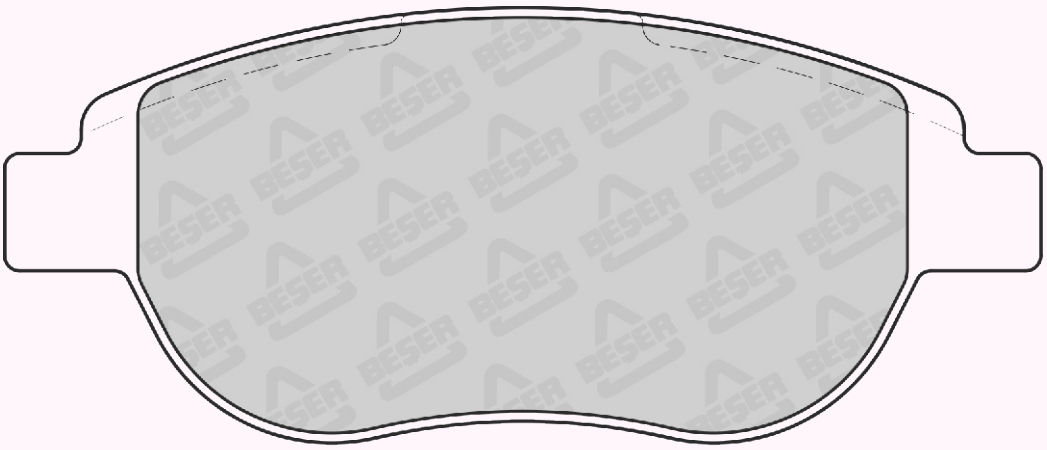

136,9 x 57,36

REFERENCE	T(mm)	REMARKS	MAKE	F/R	WVA No
3800/1	19,2	1 PAD WITH WEAR SENSOR	CITROEN - PEUGEOT	F	23978

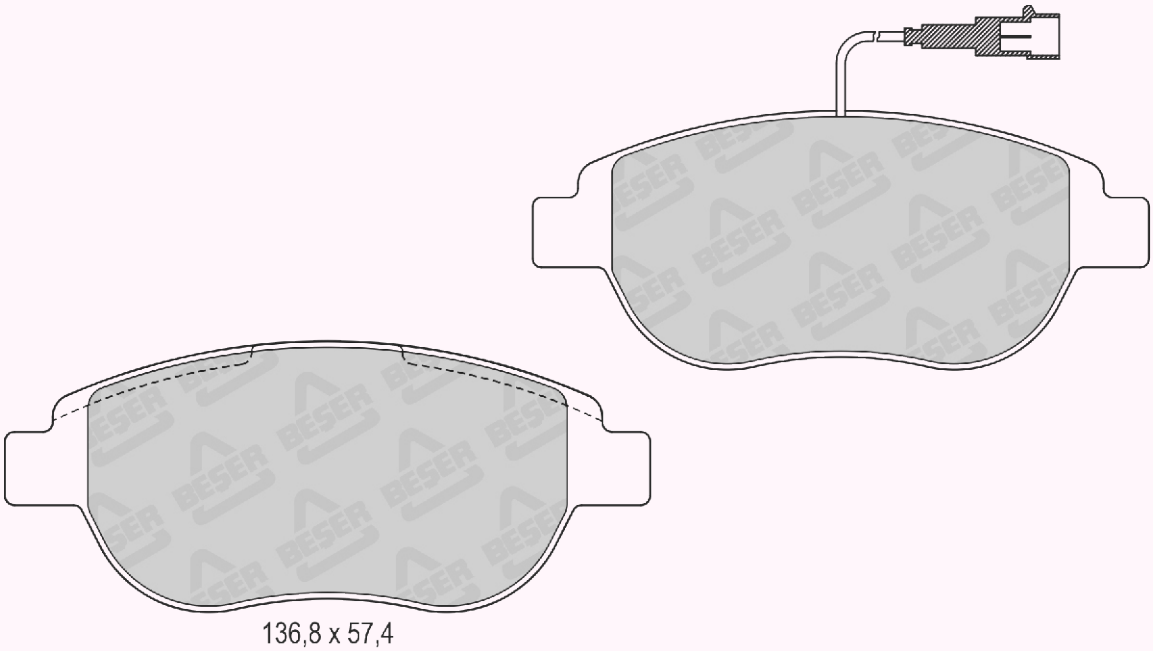

136,8 x 57,4
(NOT SCALE)

REFERENCE	T(mm)	REMARKS	MAKE	F/R	WVA No
3800/2	19	2 PADS WITH WEAR SENSOR	CITROEN - PEUGEOT	F	23708 23709 23710 24549

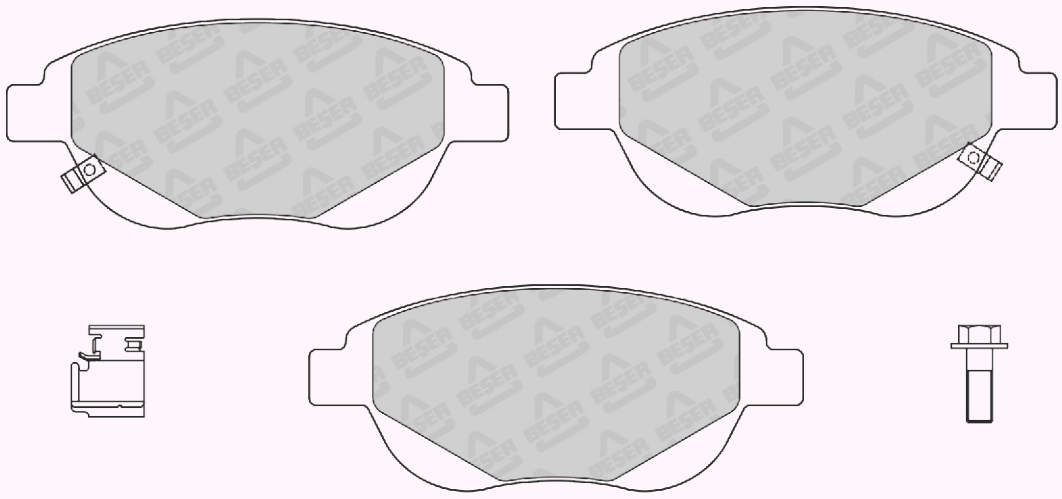

136,8 x 57,4
(NOT SCALE)

REFERENCE	T(mm)	REMARKS	MAKE	F/R	WVA No
3800/3	19,2	2 PADS WITH WEAR SENSOR	CITROEN - PEUGEOT	F	23978

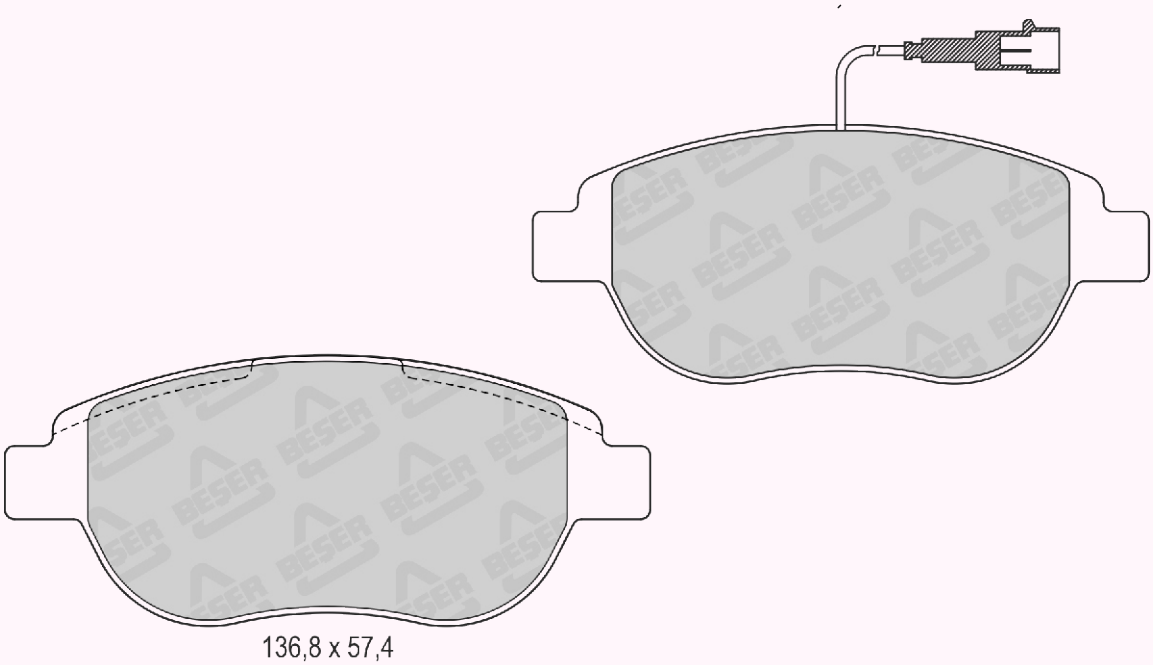

136,8 x 57,4
(NOT SCALE)

REFERENCE	T(mm)	REMARKS	MAKE	F/R	WVA No
3801	17,5 18,3	4 PADS PLAIN	FORD	F	23440 23441

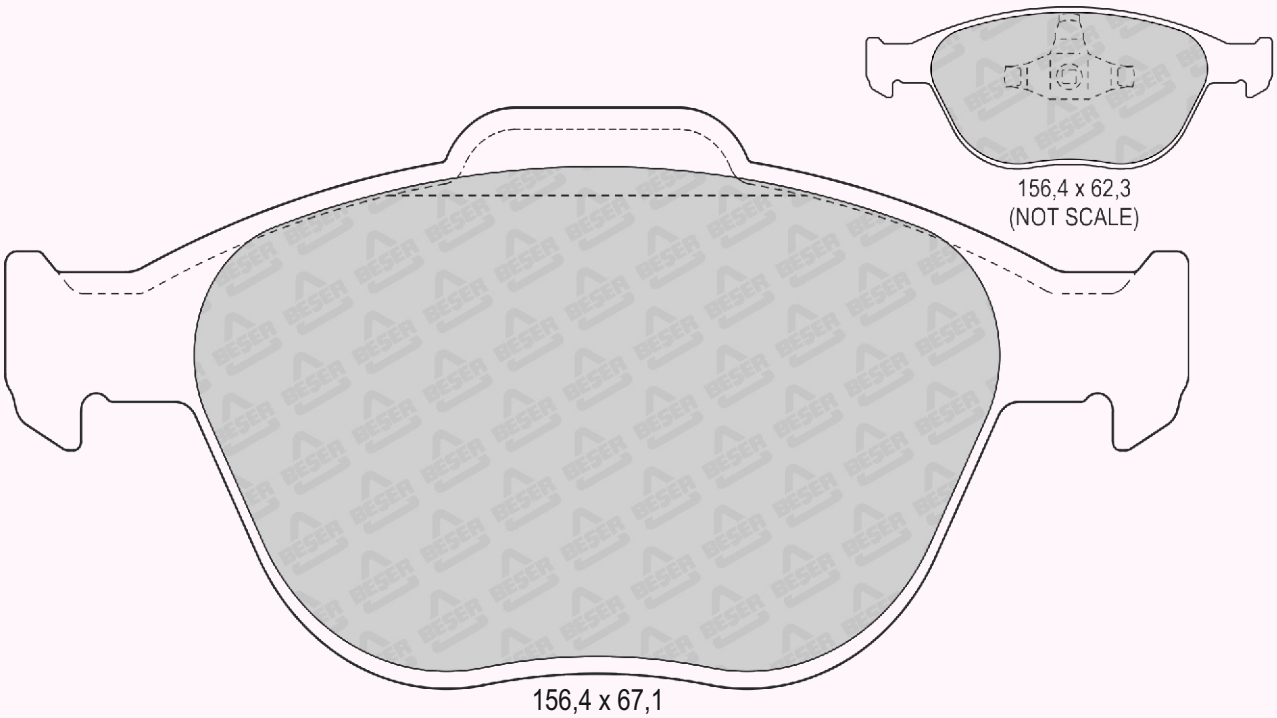

REFERENCE	T(mm)	REMARKS	MAKE	F/R	WVA No
3802	16,5	2 PADS WITH WEAR SENSOR	KIA - NAZA	F	23565 23650 23566 23651 23649 25229

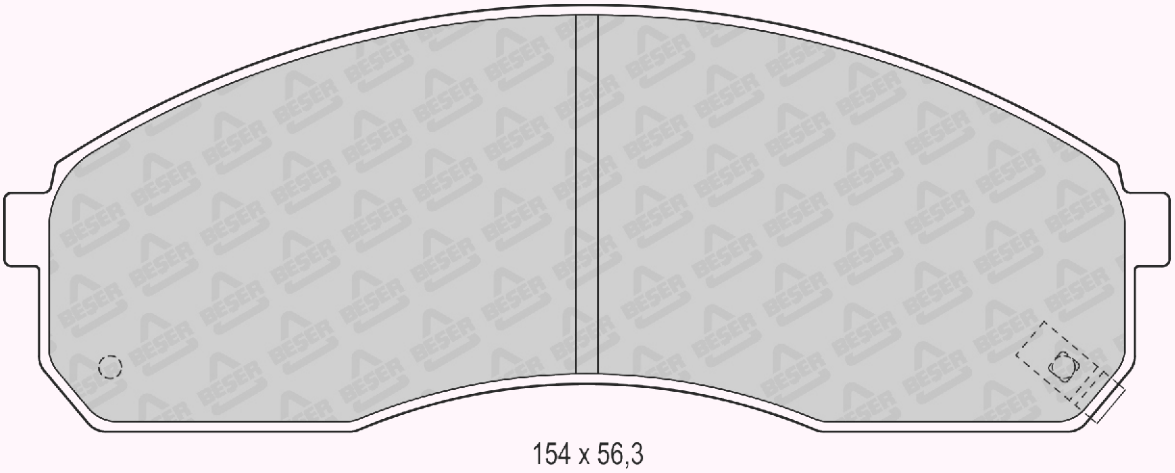

REFERENCE	T(mm)	REMARKS	MAKE	F/R	WVA No
3804	18,8	4 PADS PLAIN	MERCEDES BENZ - PUCH VW	R	23021

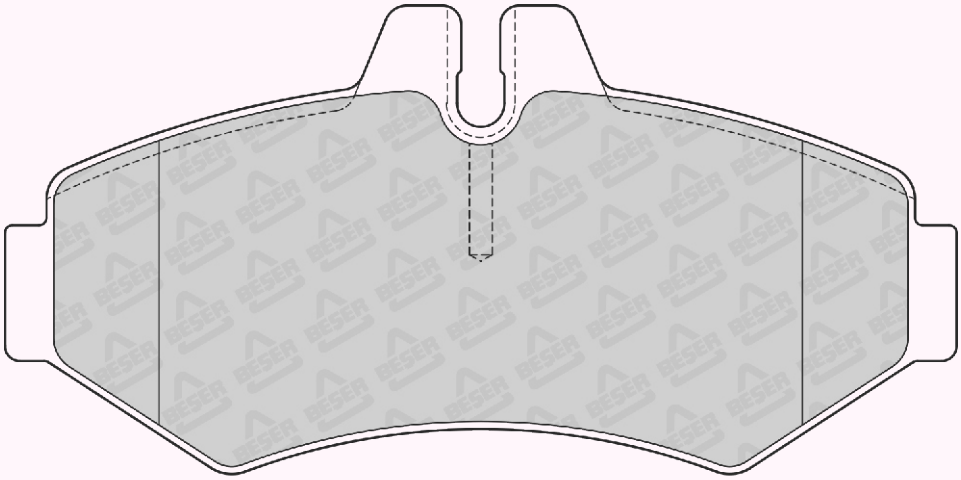

125,7 x 61,8

REFERENCE	T(mm)	REMARKS	MAKE	F/R	WVA No
3806	15	2 PADS WITH WEAR SENSOR (215mm)	PEUGEOT - RENAULT	F	20260 20506

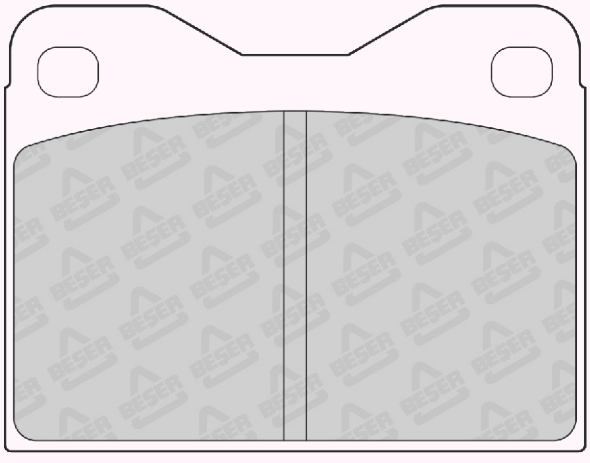

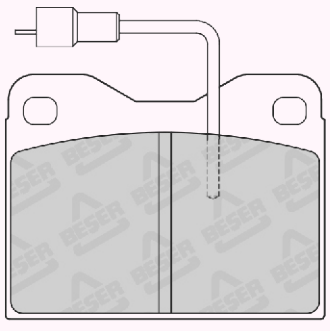

76,7 x 58,8

REFERENCE	T(mm)	REMARKS	MAKE	F/R	WVA No
3806/1	16,5	4 PADS PLAIN	PEUGEOT - RENAULT	F	20260

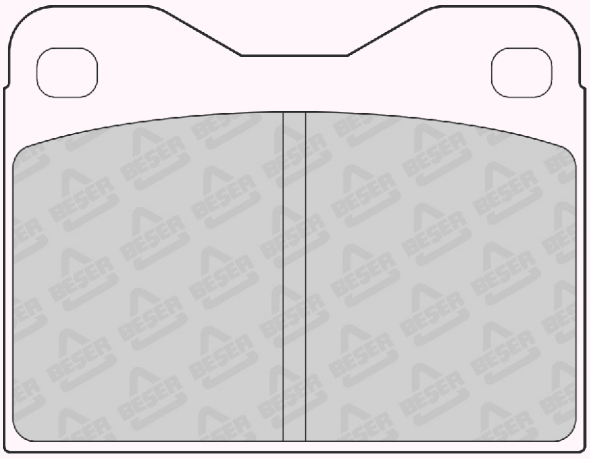

76,7 X 58,8

REFERENCE	T(mm)	REMARKS	MAKE	F/R	WVA No
3809	16,0	2 PADS WITH WEAR SENSOR	CHANGFENG FENGXING(DONGFENG) - MISTUBISHI	F	23290

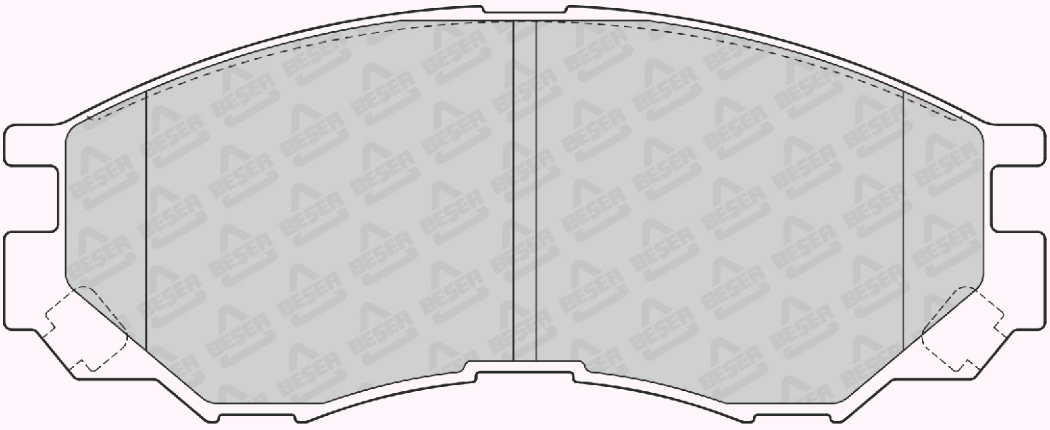

137,5 x 54,9

REFERENCE	T(mm)	REMARKS	MAKE	F/R	WVA No
3816	18,2	4 PADS PLAIN	LAND ROVER	F	21519 24955

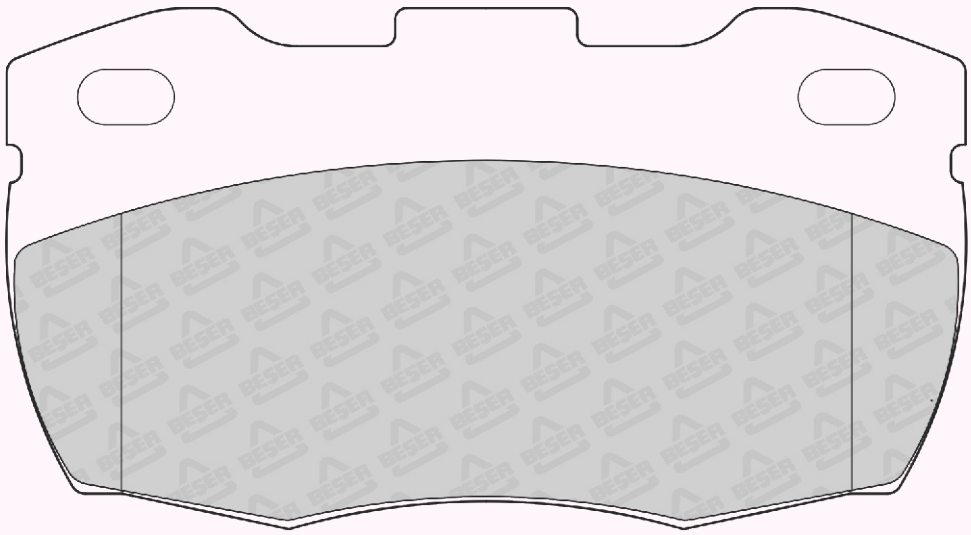

126,7 x 68,6

REFERENCE	T(mm)	REMARKS	MAKE	F/R	WVA No
3817	17,8	4 PADS PLAIN	TOYOTA	F	23766 23767 23818 23819

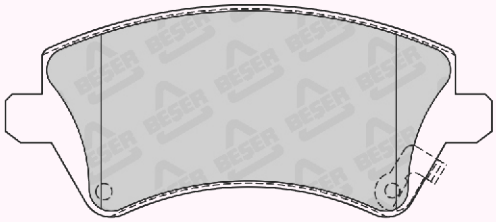

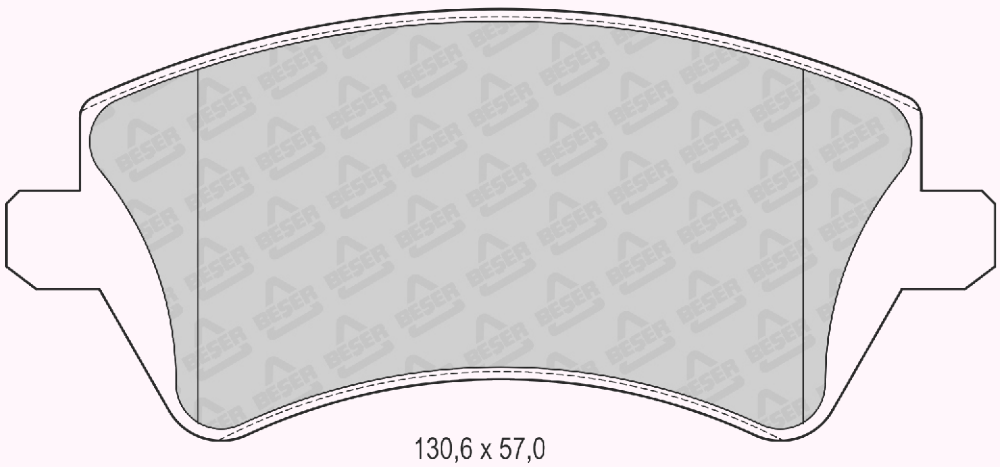

130,6 x 57,0

REFERENCE	T(mm)	REMARKS	MAKE	F/R	WVA No
3819	17,0	2 PADS WITH WEAR SENSOR	CITROEN	F	21631

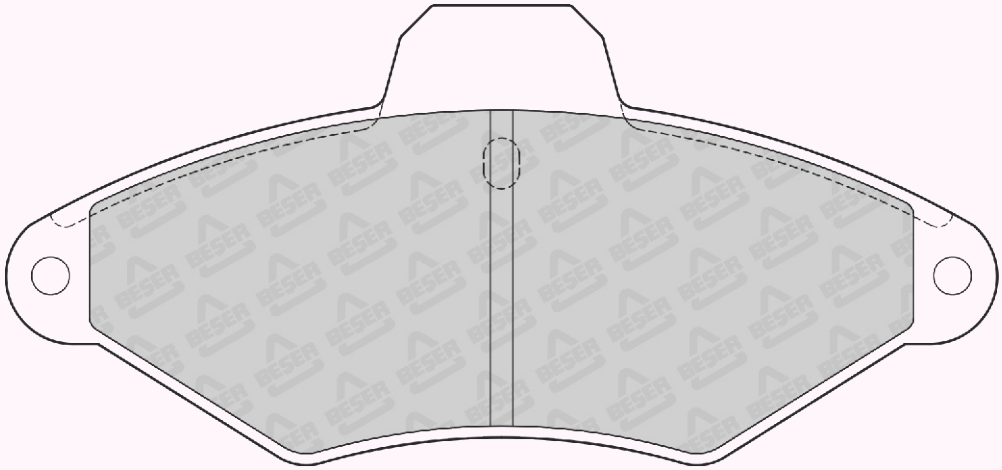

131 x 60,7

REFERENCE	T(mm)	REMARKS	MAKE	F/R	WVA No
3820	18,5	4 PADS PLAIN	CITROEN - PEUGEOT	F	23599 23954 24101

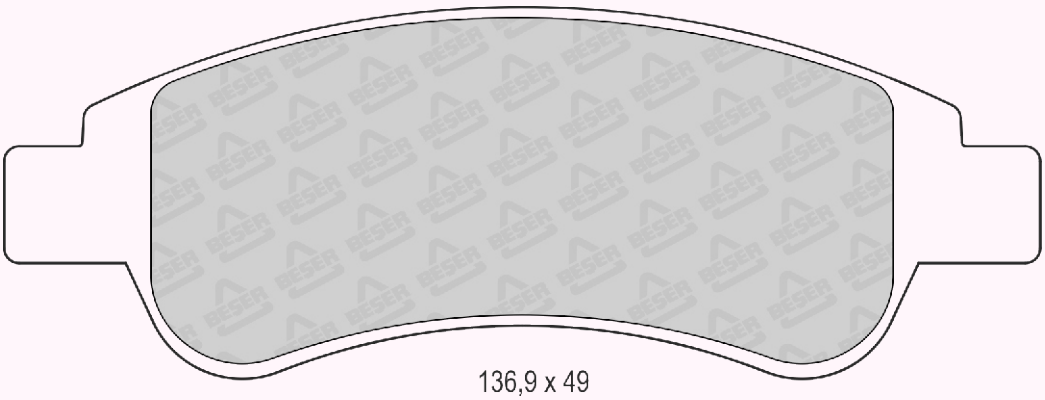

136,9 x 49

REFERENCE	T(mm)	REMARKS	MAKE	F/R	WVA No
3820/1	18,5	4 PADS PLAIN	CITROEN - PEUGEOT	F	24101 24465

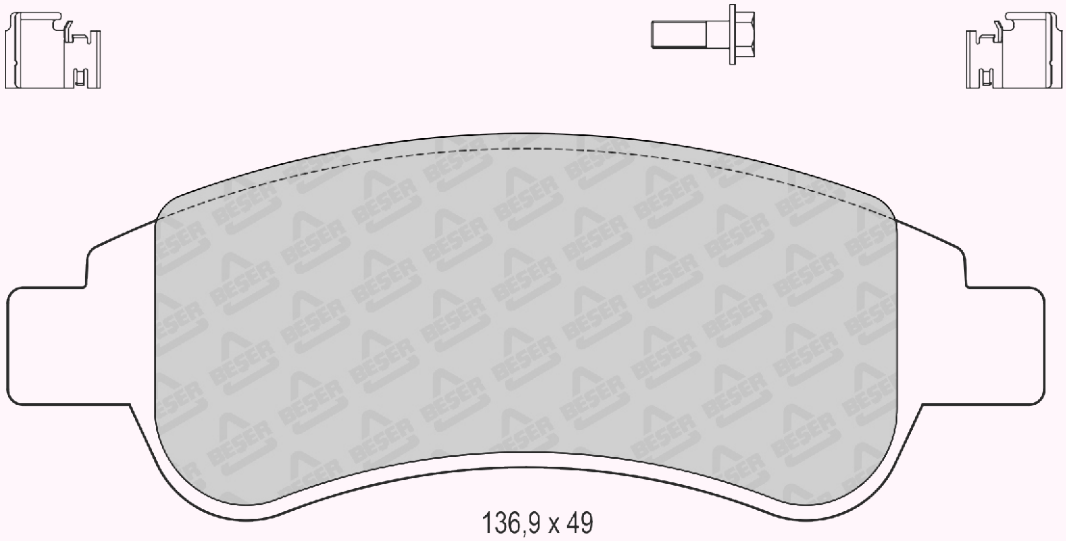

REFERENCE	T(mm)	REMARKS	MAKE	F/R	WVA No
3820/2	18,5	4 PADS PLAIN	CITROEN - PEUGEOT	F	24101

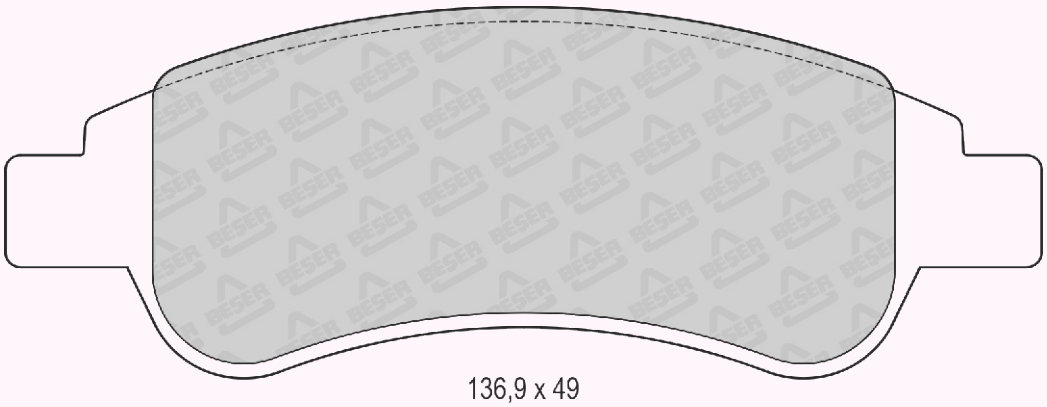

REFERENCE	T(mm)	REMARKS	MAKE	F/R	WVA No
3820/3	18,5	2 PADS WITH WEAR SENSOR	CITROEN - PEUGEOT	F/R	22041

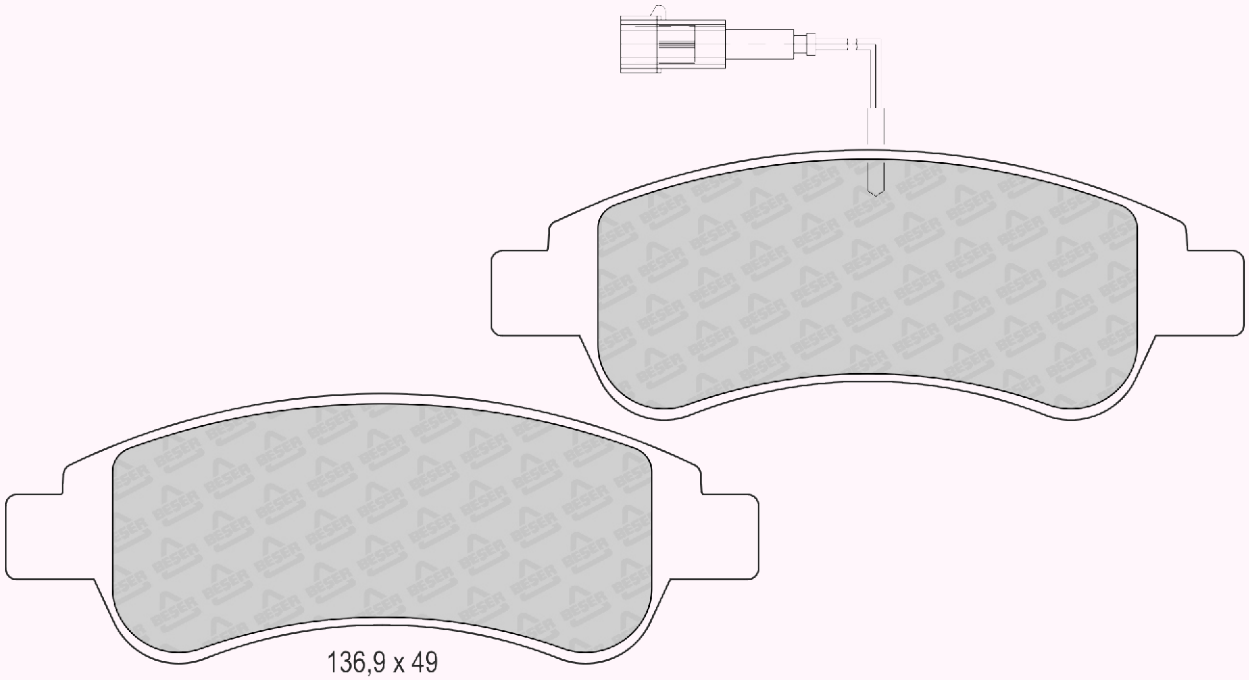

REFERENCE	T(mm)	REMARKS	MAKE	F/R	WVA No
3821	15,5	1 PAD WITH INDICATOR SLOT	MERCEDES BENZ	F	21898 21899

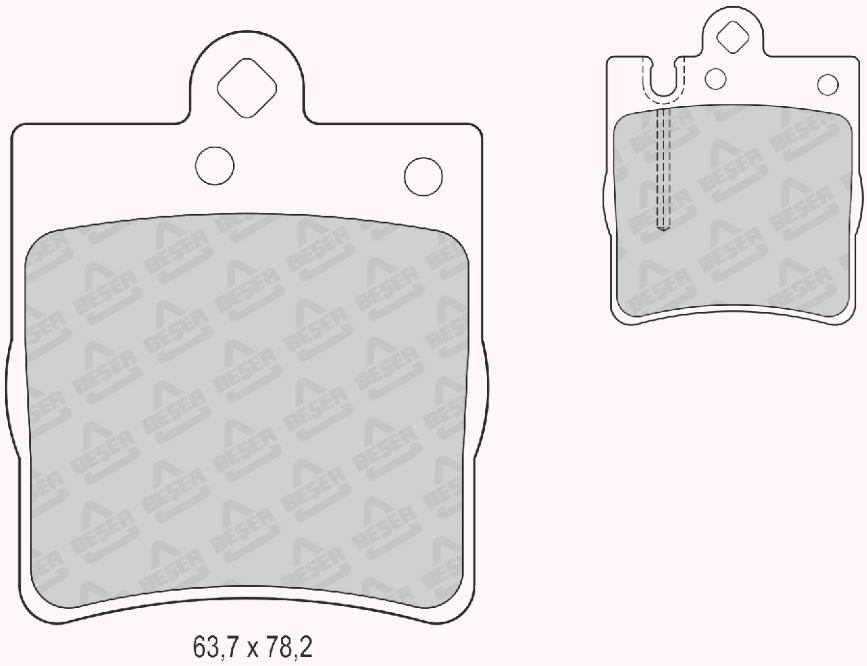

REFERENCE	T(mm)	REMARKS	MAKE	F/R	WVA No
3822	17,0	4 PADS PLAIN	LEXUS - MTOYOTA	F	23513

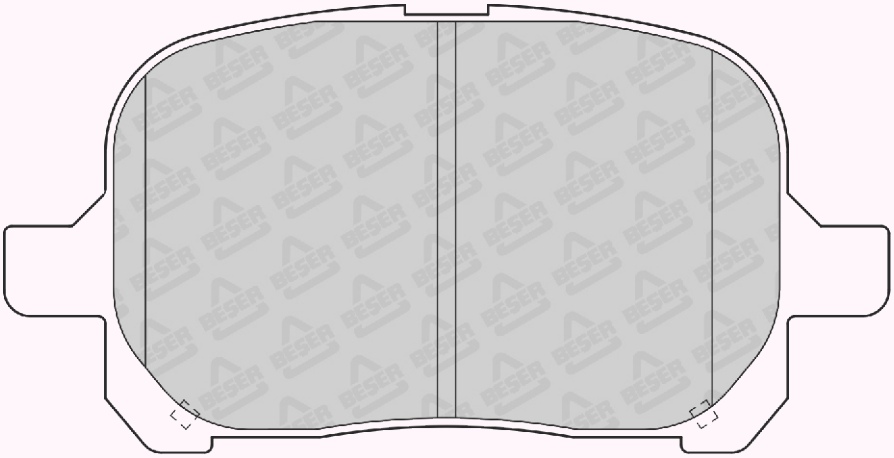

116,8 x 59,1

REFERENCE	T(mm)	REMARKS	MAKE	F/R	WVA No
3823	20	4 PADS PLAIN	IVECO	F	29123

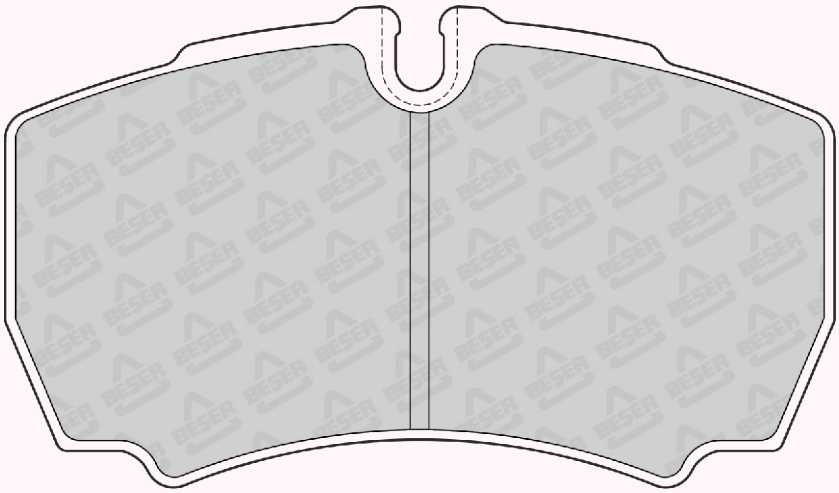

109,6 x 63,4

REFERENCE	T(mm)	REMARKS	MAKE	F/R	WVA No
3825	16,1	2 PADS WITH WEAR SENSOR	TOYOTA	R	23816

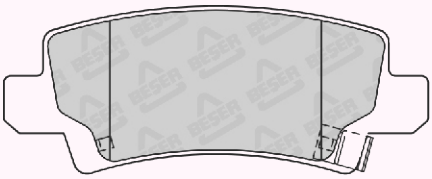

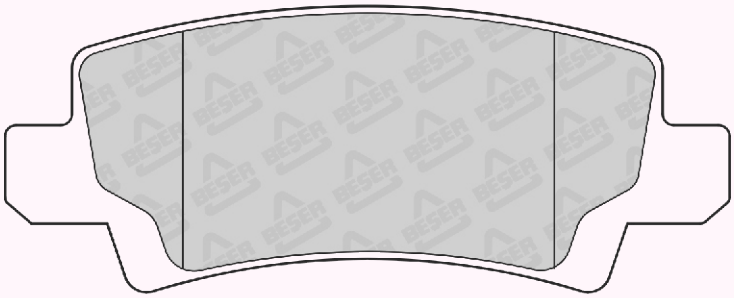

95,7 x 37,8

REFERENCE	T(mm)	REMARKS	MAKE	F/R	WVA No
3826	17,8	4 PADS PLAIN	FIAT	F	23705 25982

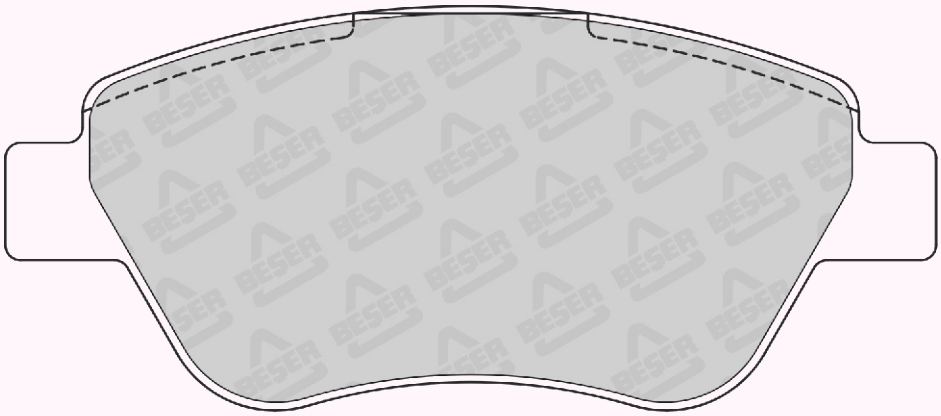

123 x 53,4

REFERENCE	T(mm)	REMARKS	MAKE	F/R	WVA No
3826/1	17,8	1 PAD WITH WEAR SENSOR (215 mm)	FIAT - LANCIA	F	23705

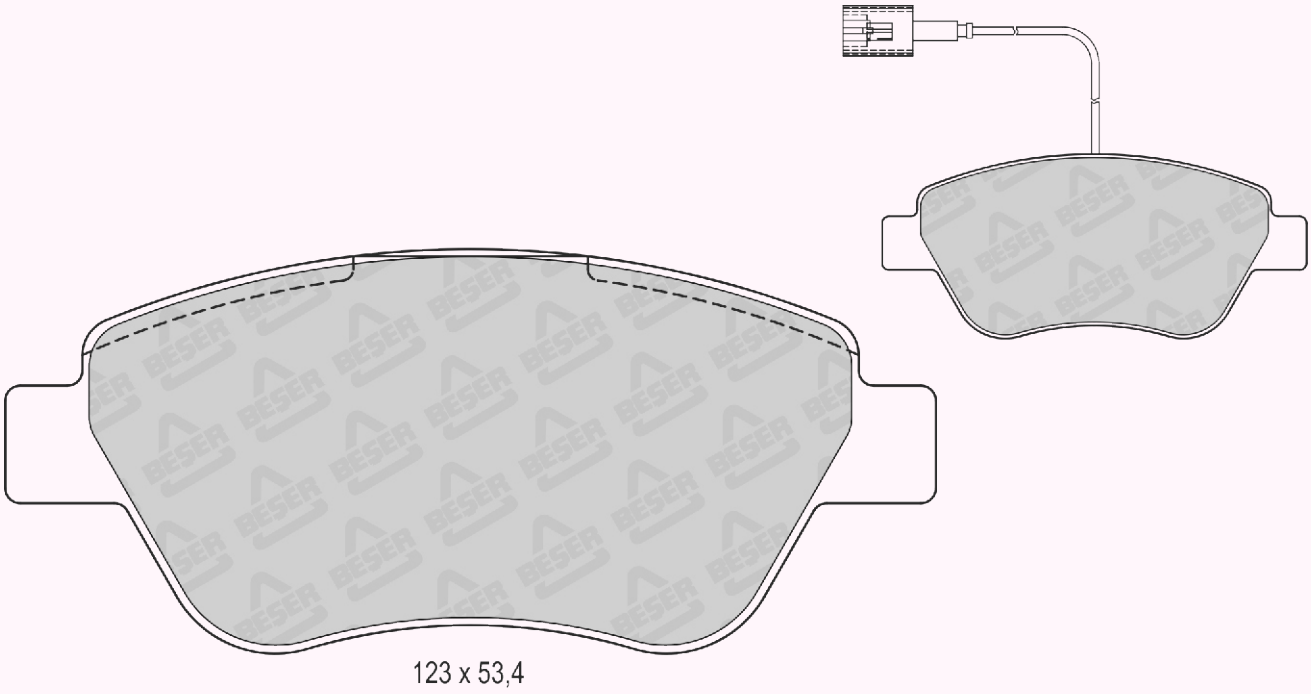

REFERENCE	T(mm)	REMARKS	MAKE	F/R	WVA No
3826/2	17,8	2 PADS WITH WEAR SENSOR	OPEL - VAUXHALL	F	24288

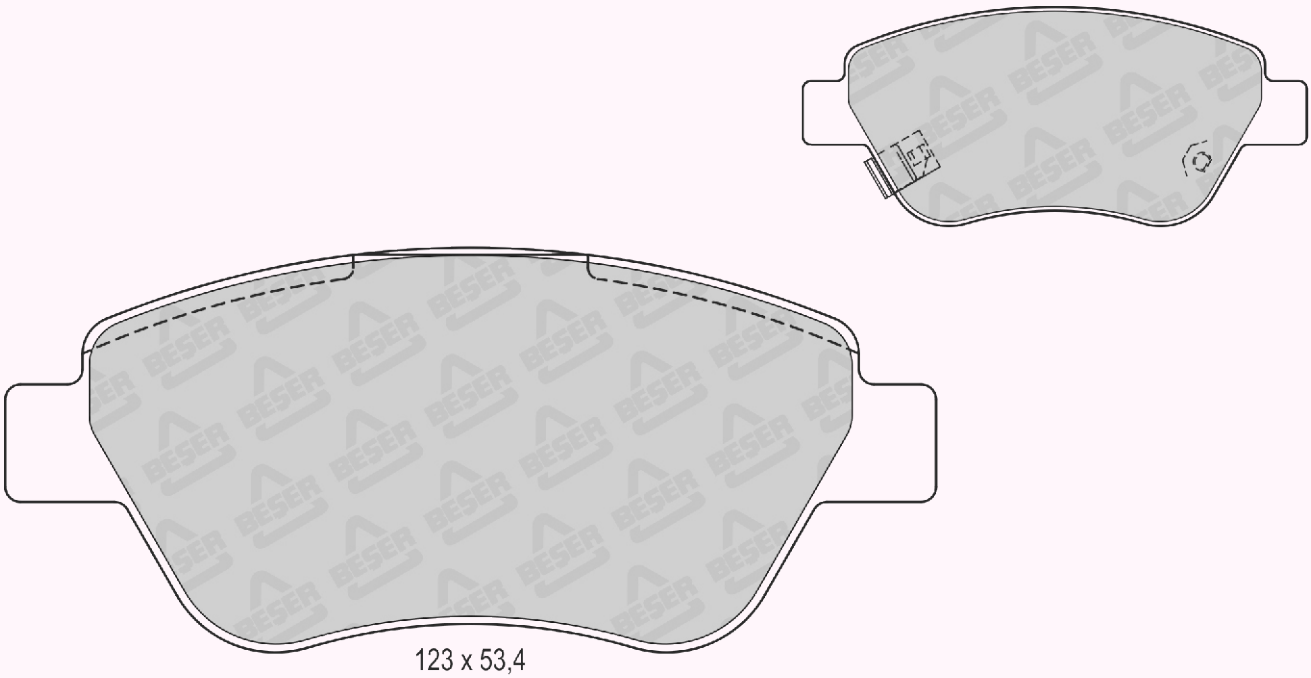

REFERENCE	T(mm)	REMARKS	MAKE	F/R	WVA No
3826/3	17,8	2 PADS WITH WEAR SENSOR	CITROEN - FIAT PEUGEOT	F	23705 23979 23706 23982 23707

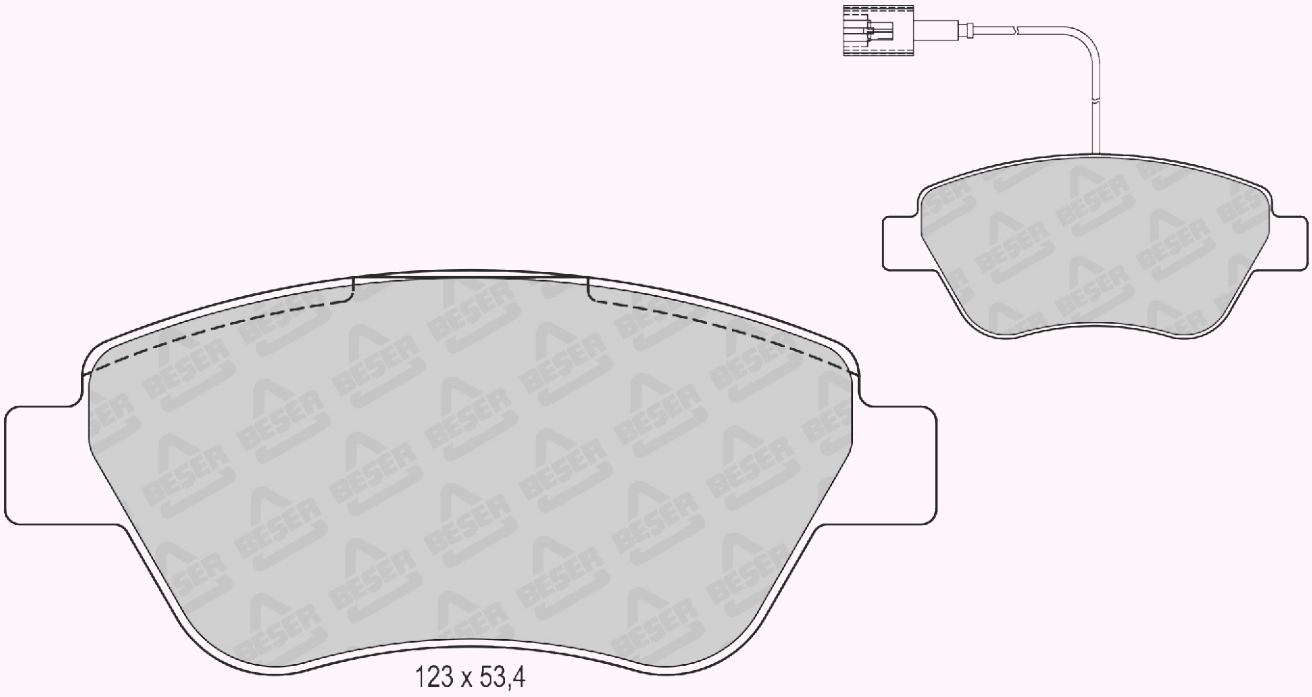

REFERENCE	T(mm)	REMARKS	MAKE	F/R	WVA No
3827	17,8	4 PADS PLAIN	FIAT - RENAULT	F	24393

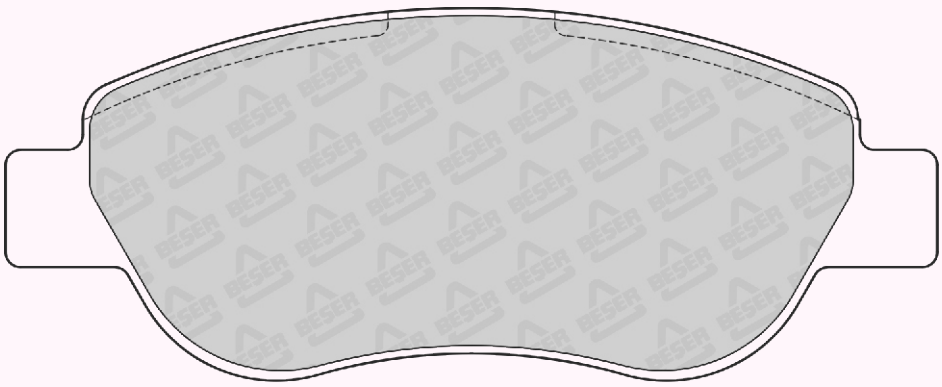

REFERENCE	T(mm)	REMARKS	MAKE	F/R	WVA No
3829	17,5	2 PADS WITH WEAR SENSOR	LEXUS - TOYOTA	F	23524 23525

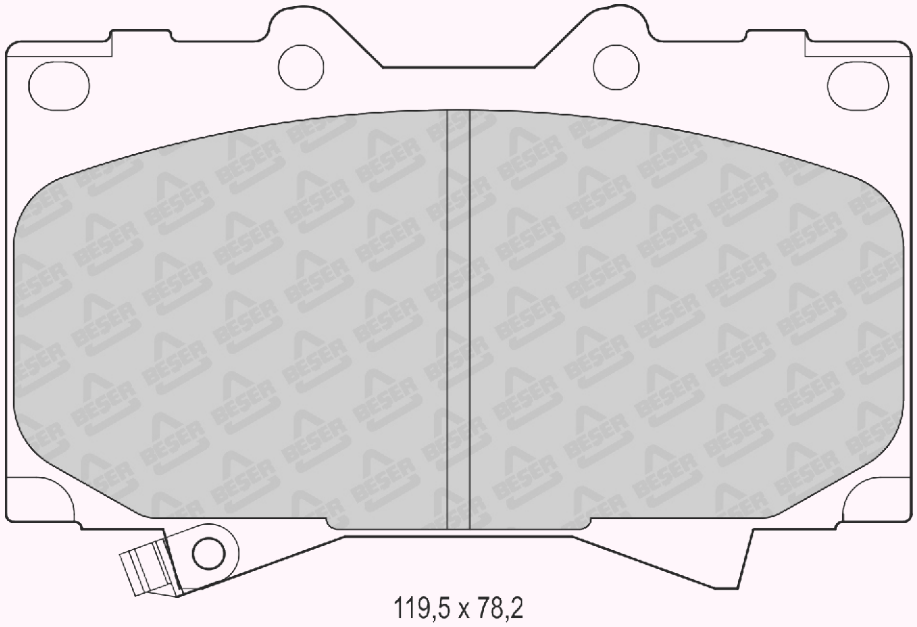

119,5 x 78,2

REFERENCE	T(mm)	REMARKS	MAKE	F/R	WVA No
3830	17,5	4 PADS PLAIN	LEXUS - TOYOTA	R	23539

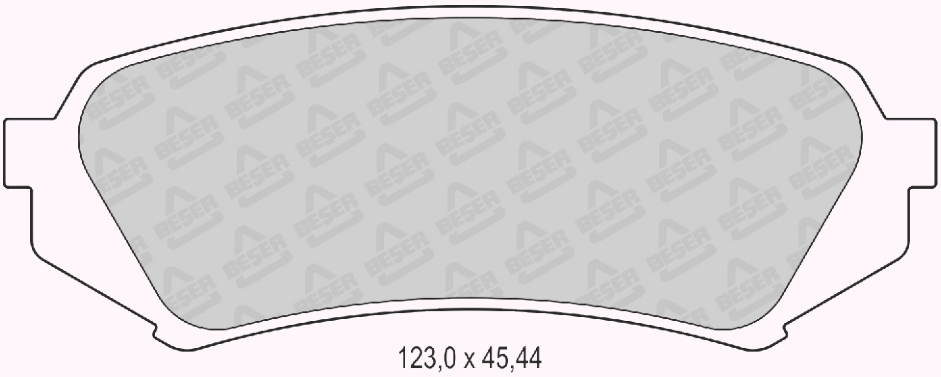

123,0 x 45,44

REFERENCE	T(mm)	REMARKS	MAKE	F/R	WVA No
3831	17,5	2 PADS WITH WEAR SENSOR	HONDA	F	23868 23869 23870

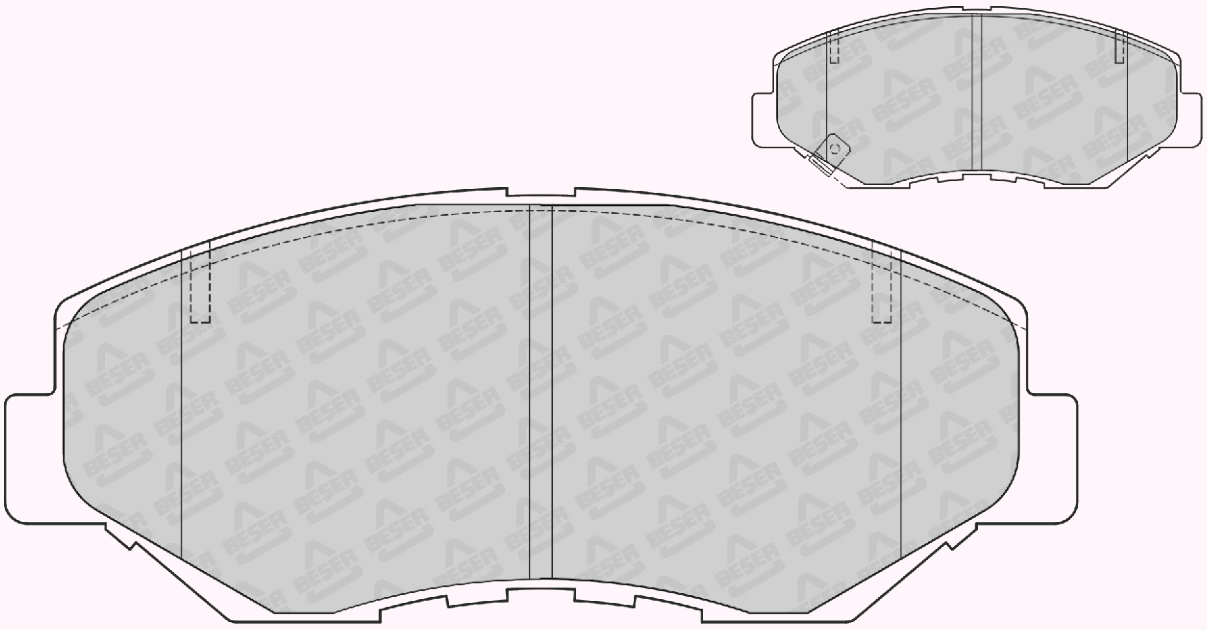

141,65 x 57,23

REFERENCE	T(mm)	REMARKS	MAKE	F/R	WVA No
3832	16	2 PADS WITH WEAR SENSOR	EUNOS - FORD HAIMA(FAW) - MAZDA	F	21754 21755 21756 21757

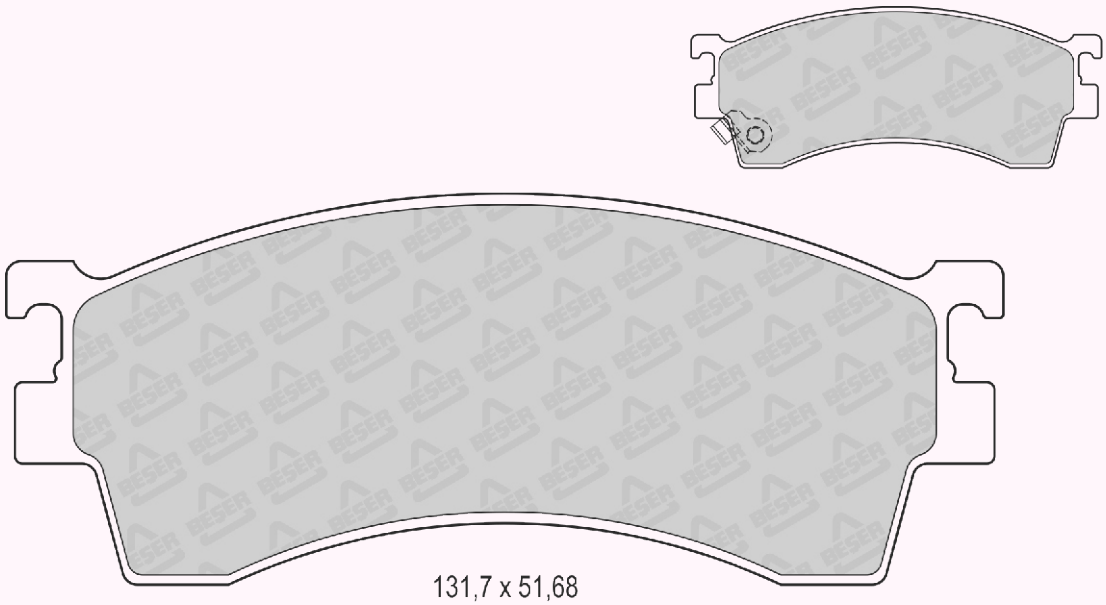

131,7 x 51,68

REFERENCE	T(mm)	REMARKS	MAKE	F/R	WVA No
3833	13,6	4 PADS PLAIN	EUNOS FORD - MAZDA	R	21766

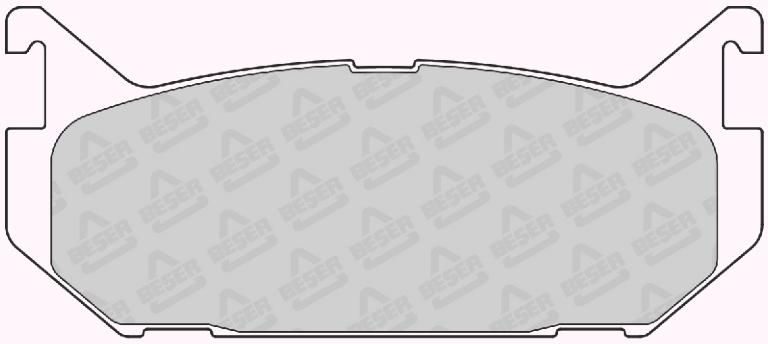

99,8 x 43,5

REFERENCE	T(mm)	REMARKS	MAKE	F/R	WVA No
3834	18,5	1 PAD WITH WEAR SENSOR	CITROEN - FIAT PEUGEOT	F	23917 23918 23920

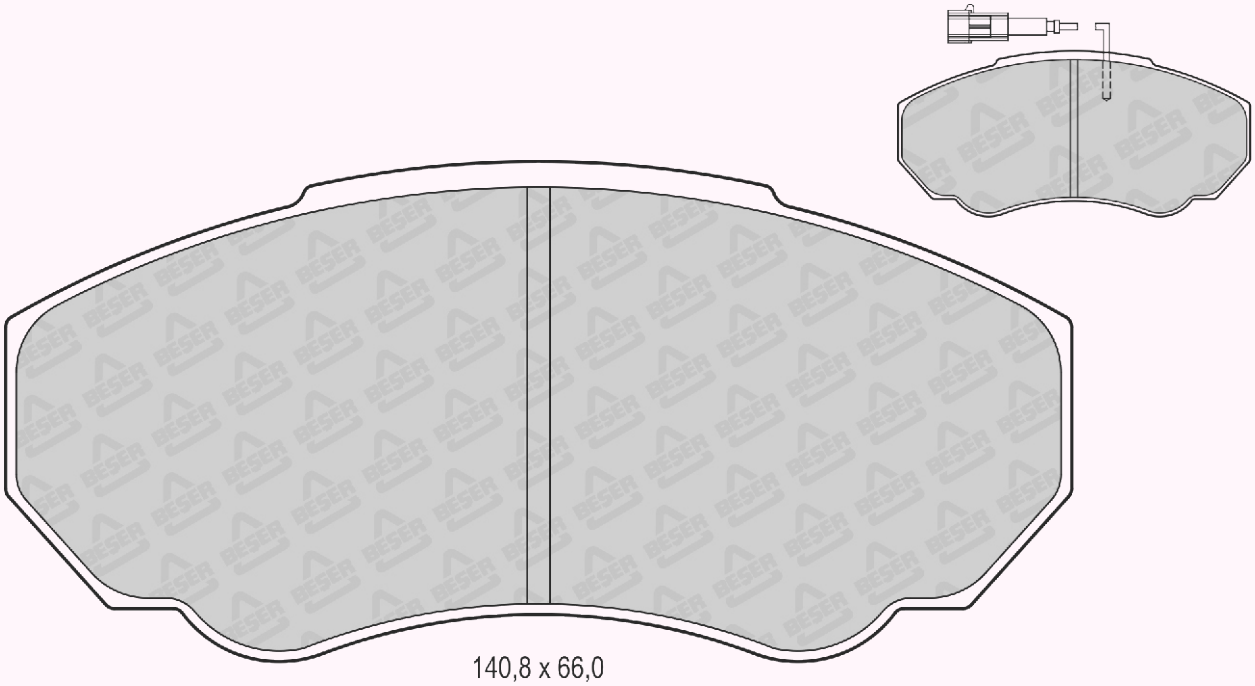

140,8 x 66,0

REFERENCE	T(mm)	REMARKS	MAKE	F/R	WVA No
3835	18,5	1 PAD WITH WEAR SENSOR	CITROEN - FIAT PEUGEOT	F	23919 23920

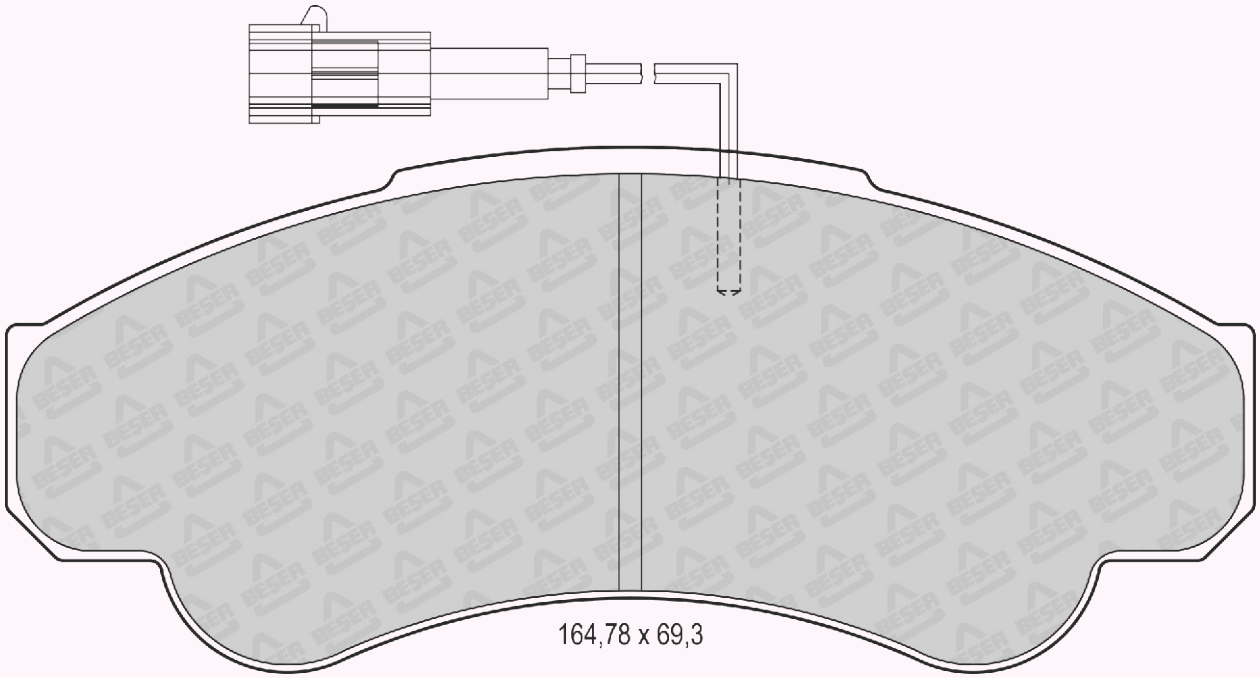

REFERENCE	T(mm)	REMARKS	MAKE	F/R	WVA No
3836	19,6	2 PADS INNER & 2 PADS OUTER	MERCEDES BENZ	F	23144 23145

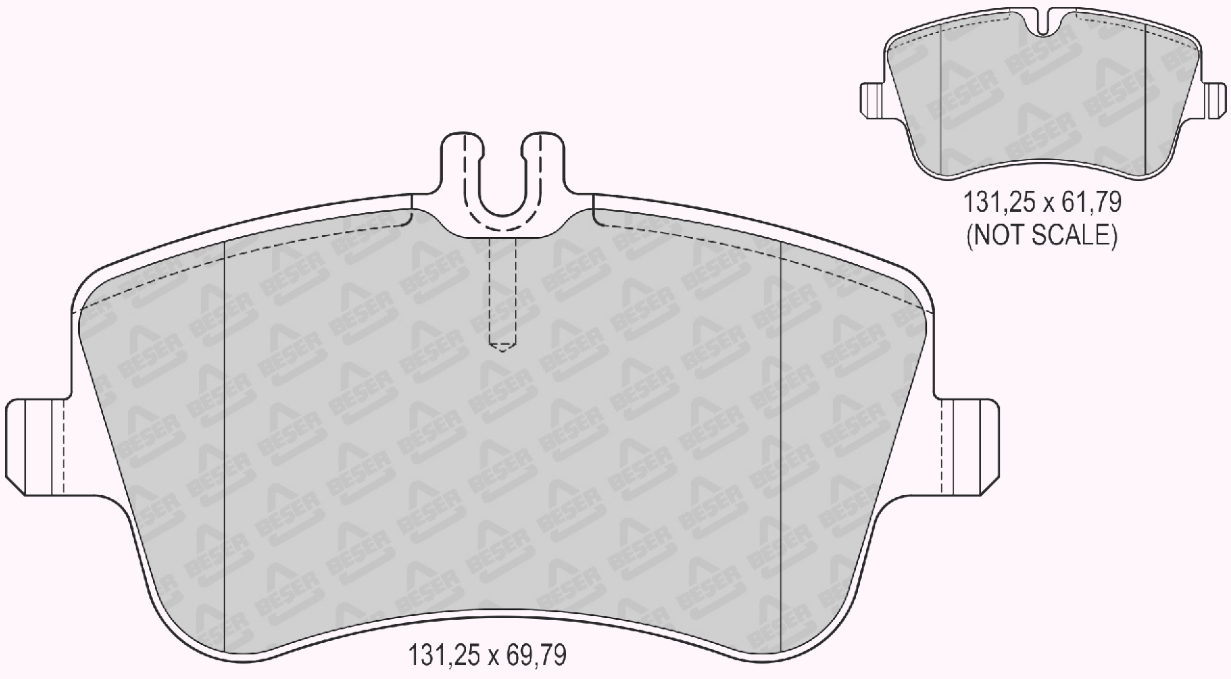

REFERENCE	T(mm)	REMARKS	MAKE	F/R	WVA No
3840	15	2 PADS RIGHT & 2 PADS LEFT	TRIUMPH	---	---

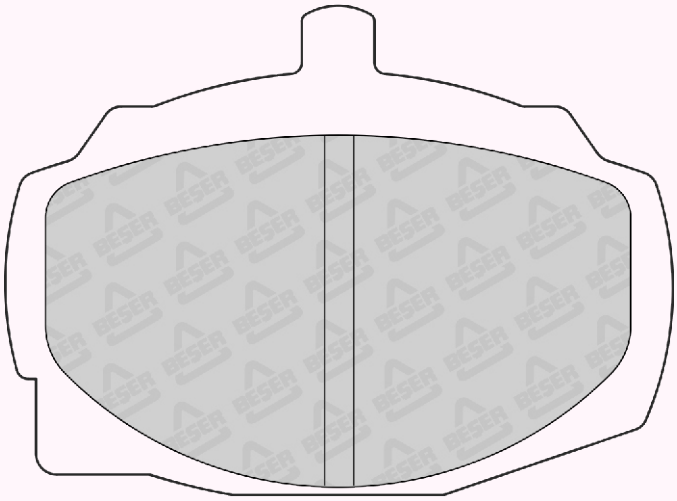

88,2 x 64,6

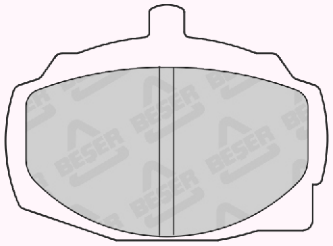

88,2 x 64,6
(NOT SCALE)

REFERENCE	T(mm)	REMARKS	MAKE	F/R	WVA No
3841	18,85 19,95	1 PAD WITH WEAR SENSOR	VW	F	23467 23746 23747 23749 23835

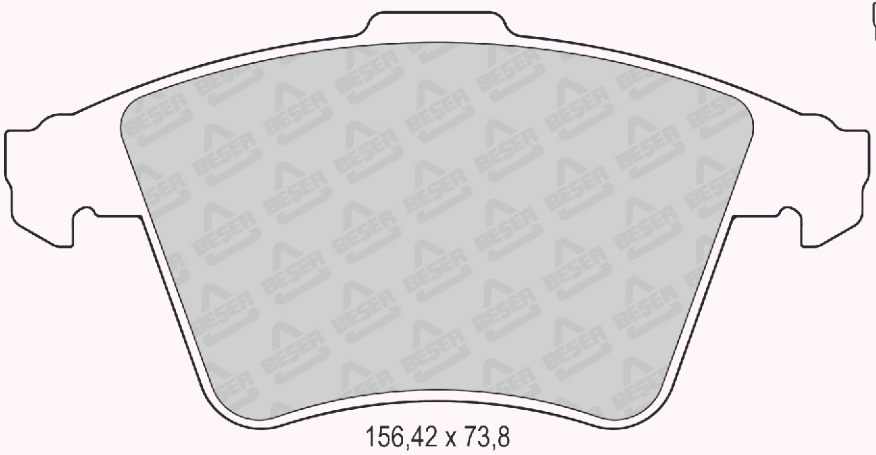

156,42 x 73,8
(NOT SCALE)

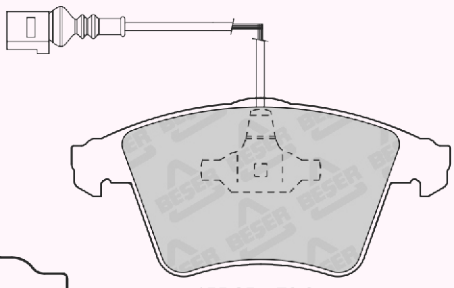

155,25 x 73,3
(NOT SCALE)

REFERENCE	T(mm)	REMARKS	MAKE	F/R	WVA No
3841/1	17 17,5	1 PAD WITH WEAR SENSOR	VW	F	23467

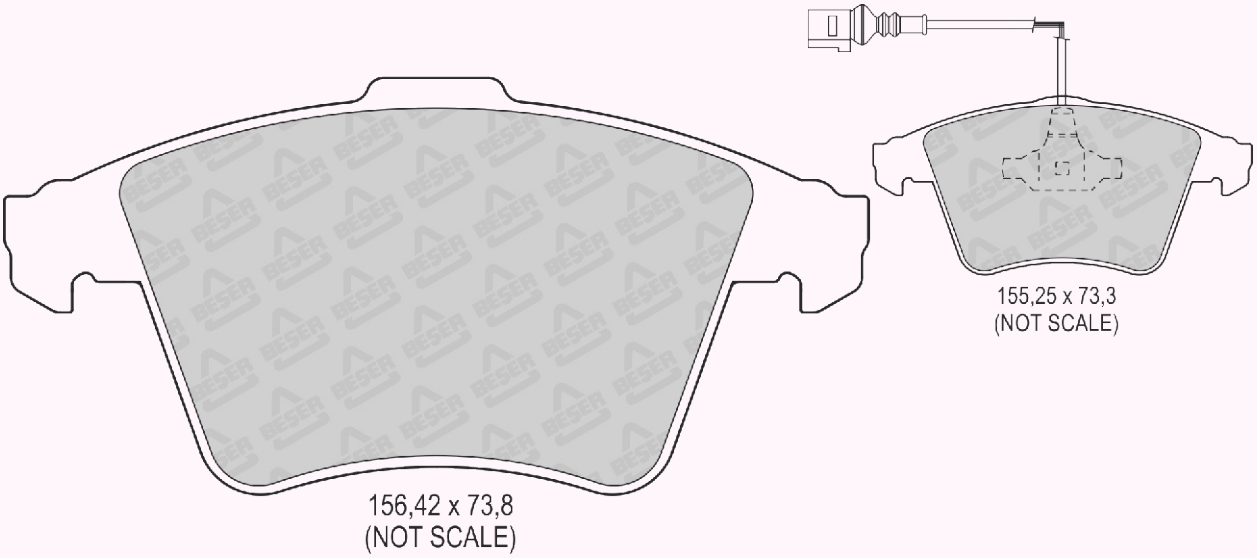

REFERENCE	T(mm)	REMARKS	MAKE	F/R	WVA No
3842	17,4	1 PAD WITH WEAR SENSOR	VW	R	23326 23882 23883

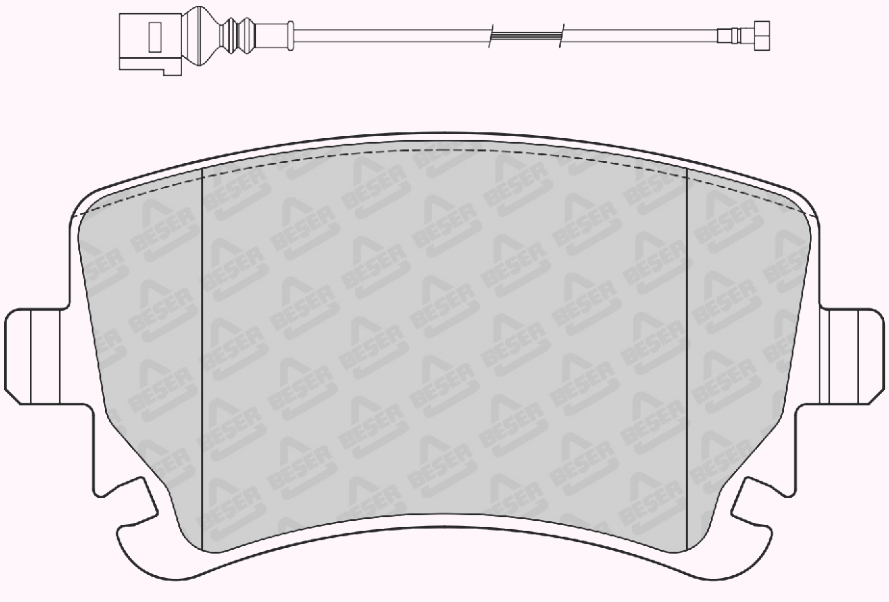

REFERENCE	T(mm)	REMARKS	MAKE	F/R	WVA No
3843	16,5	2 PADS WITH WEAR SENSOR	DAEWOO - HYUNDAI SSANGYONG	F	23569 23570 23571

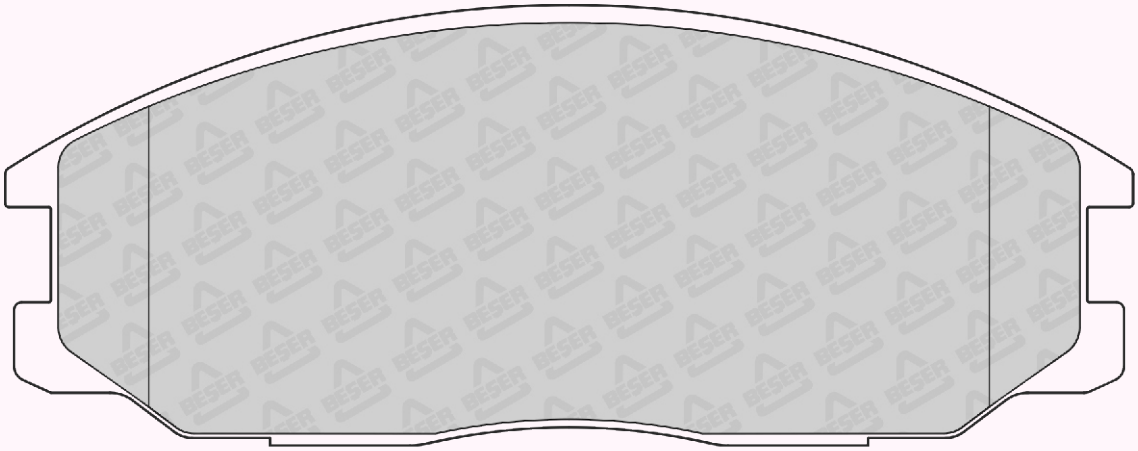

149 x 58,17

REFERENCE	T(mm)	REMARKS	MAKE	F/R	WVA No
3846	16.5	2 PADS INNER & 2 PADS OUTER	HOLDEN - OPEL VAUXHALL	F	23225 23226

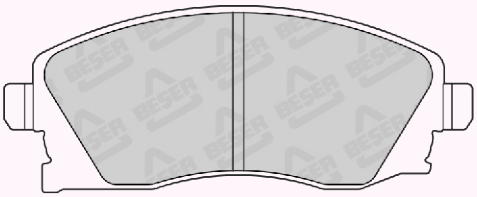

131,4 x 51,4
(NOT SCALE)

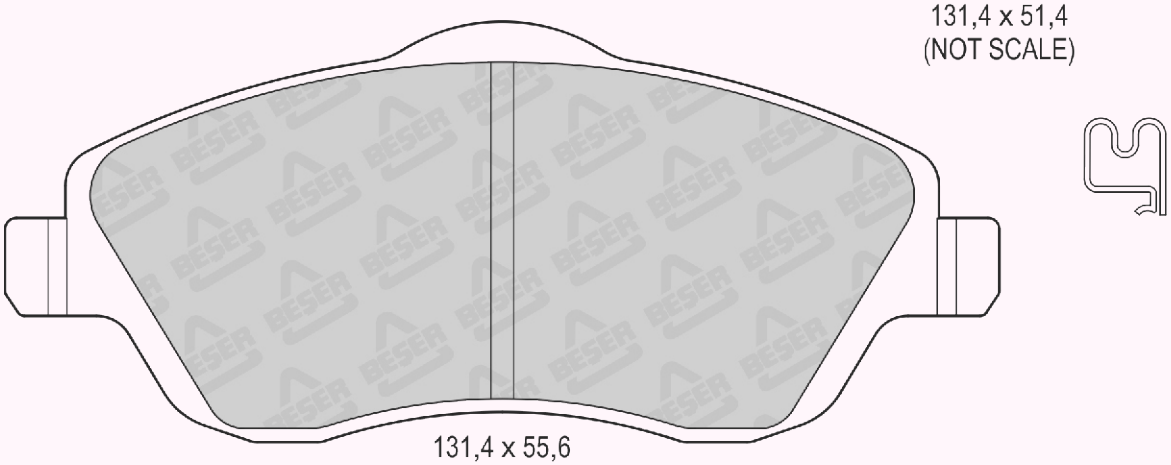

131,4 x 55,6

REFERENCE	T(mm)	REMARKS	MAKE	F/R	WVA No
3848	18.1	4 PADS PLAIN	NISSAN - OPEL RENAULT -VAUXHALL	F	23098 23099 23100

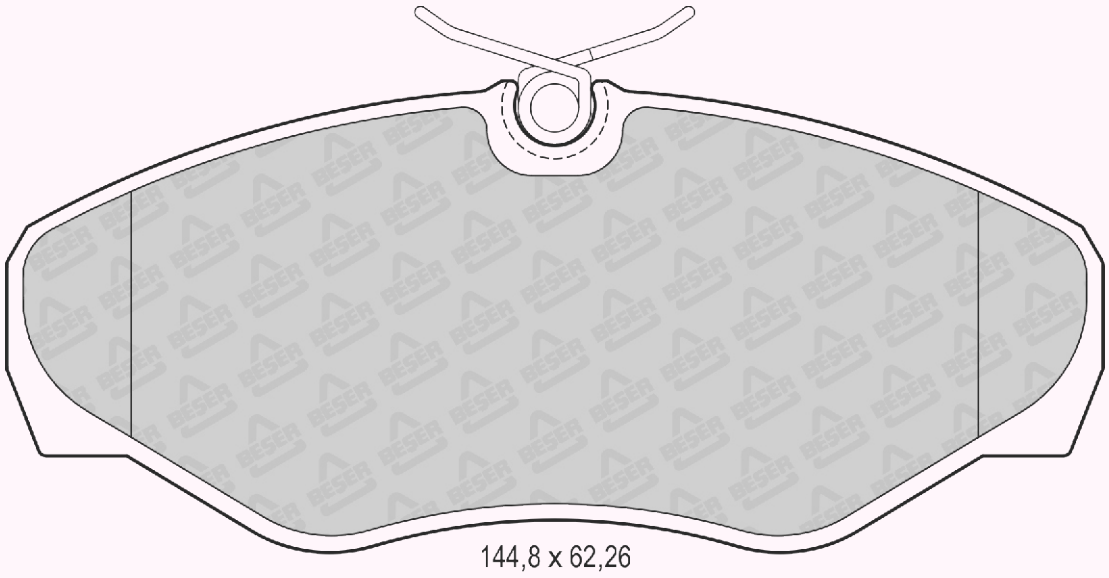

REFERENCE	T(mm)	REMARKS	MAKE	F/R	WVA No
3849	18.1	4 PADS PLAIN	RENAULT	F	23930 24065 24169

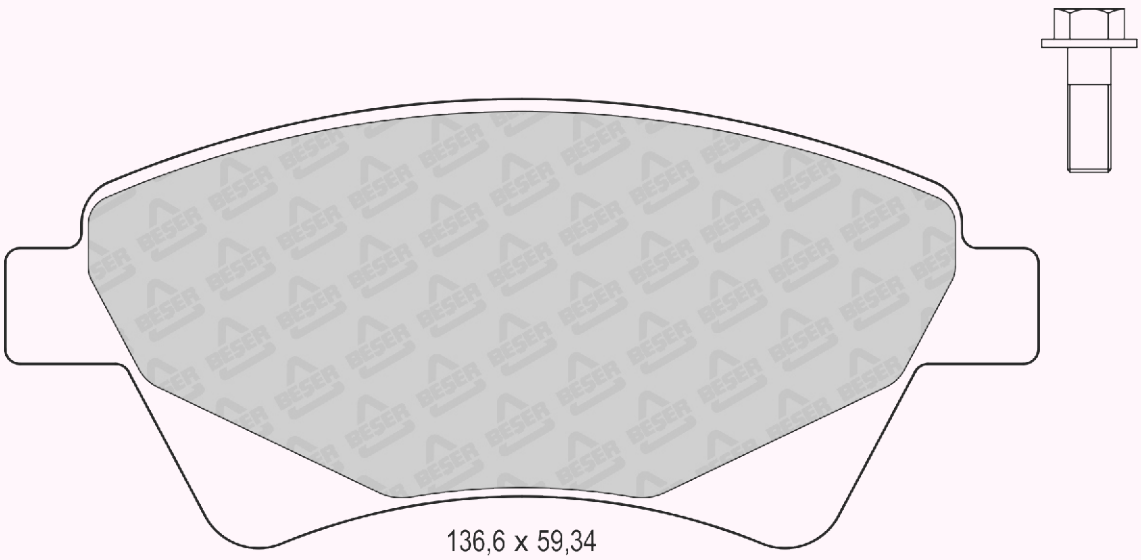

REFERENCE	T(mm)	REMARKS	MAKE	F/R	WVA No
3850	18.15	4 PADS PLAIN	RENAULT	F	23934

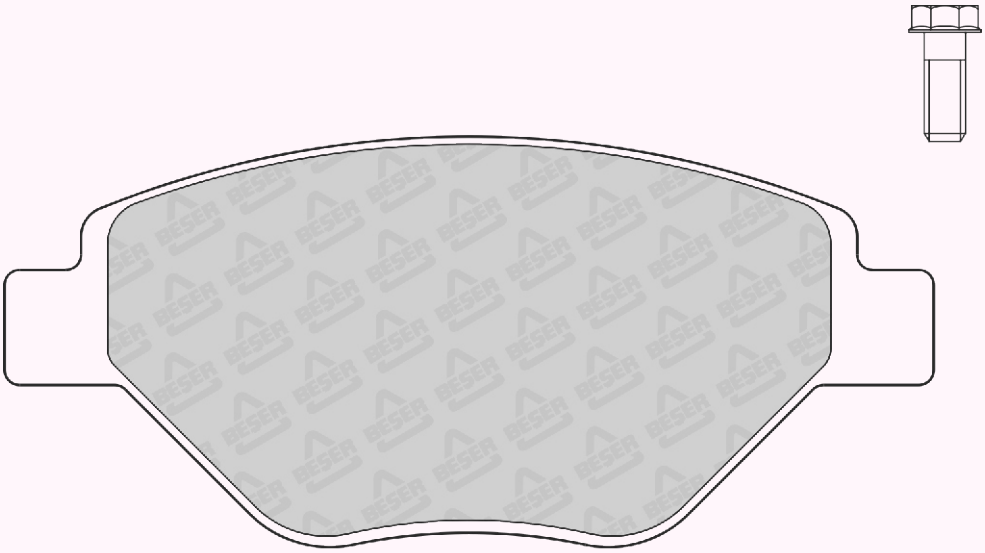

122,7 x 54,2

REFERENCE	T(mm)	REMARKS	MAKE	F/R	WVA No
3852	18	2 PADS INNER & 2 PADS OUTER	RENAULT	F	23245 23247 23248 23659 23660

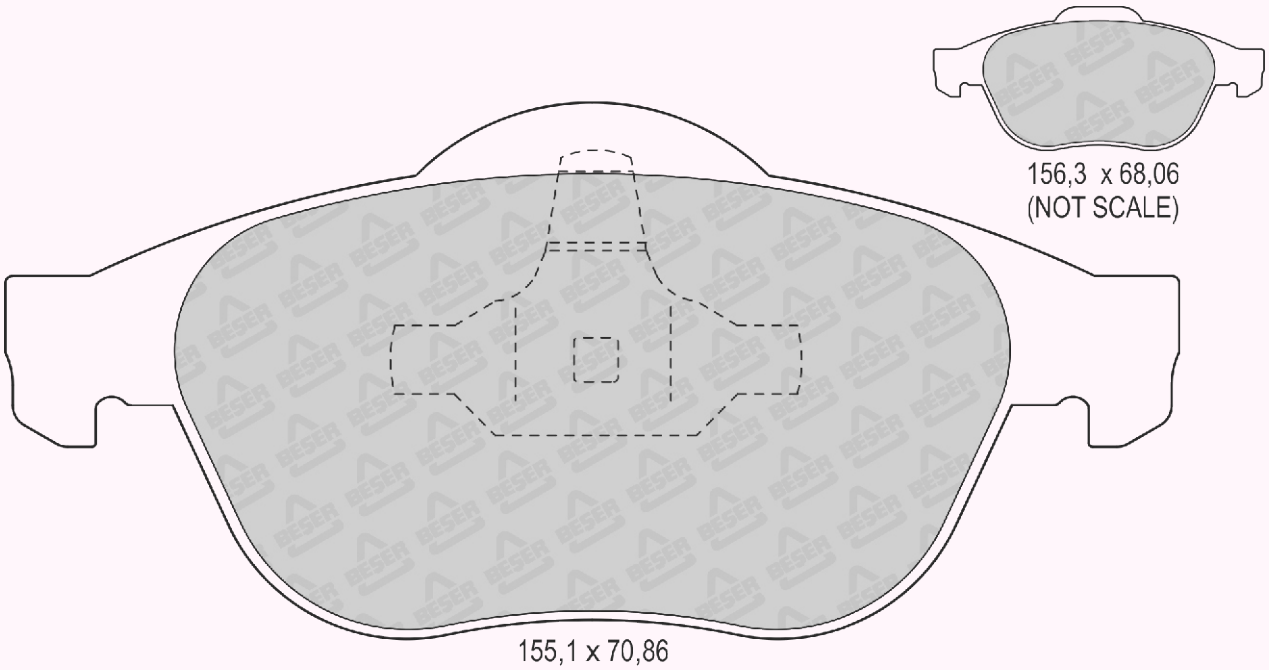

156,3 x 68,06
(NOT SCALE)

155,1 x 70,86

REFERENCE	T(mm)	REMARKS	MAKE	F/R	WVA No
3853	16.5	2 PADS INNER & 2 PADS OUTER	NISSAN - RENAULT	R	23482 23483 24137

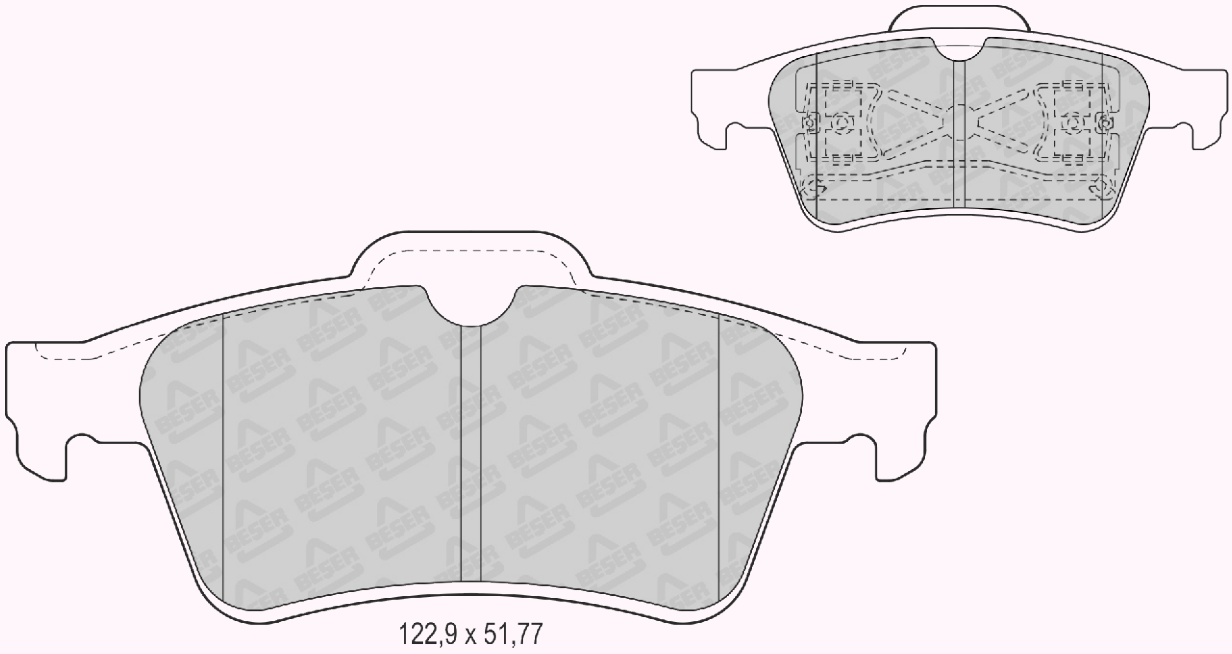

REFERENCE	T(mm)	REMARKS	MAKE	F/R	WVA No
3853/1	16.5	2 PADS INNER & 2 PADS OUTER	CADILLAC - CHEVROLET - CITROEN FORD - HOLDEN - JAGUAR - MAZDA OPEL - PONTIAC - RENAULT - SAAB VAUXHALL - VOLVO	R	23482 24137

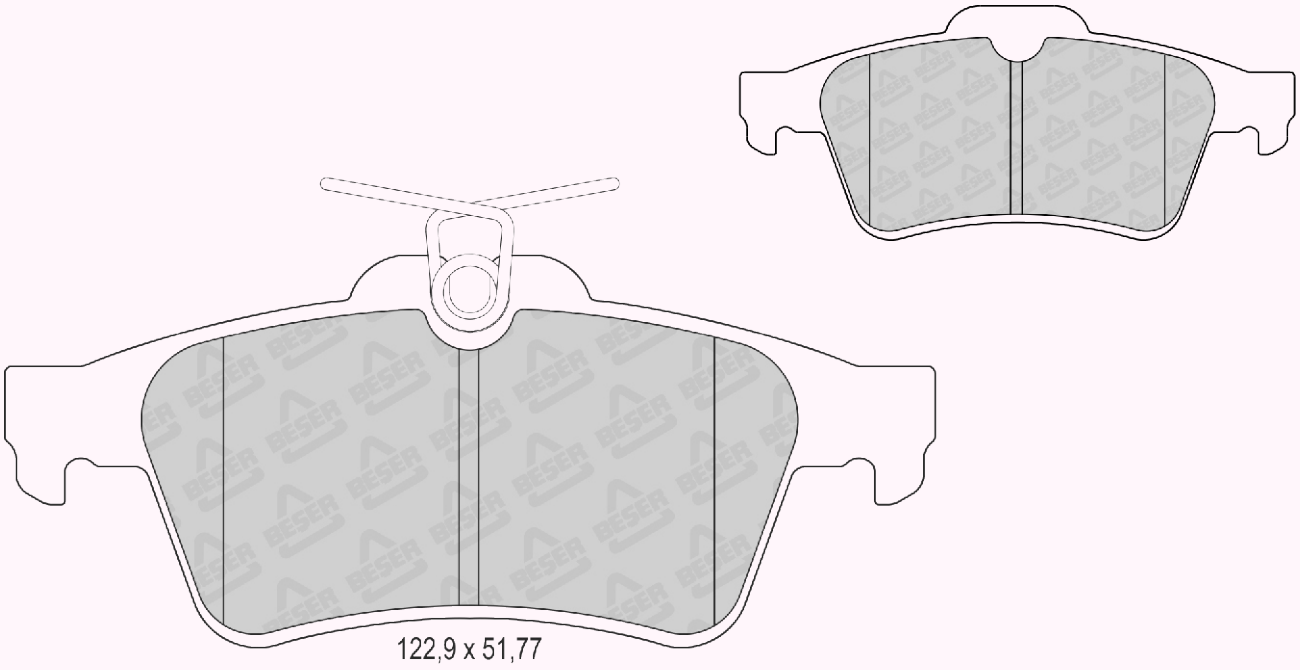

REFERENCE	T(mm)	REMARKS	MAKE	F/R	WVA No
3854	19	4 PADS PLAIN	CITROEN	F	23406 23407 23808

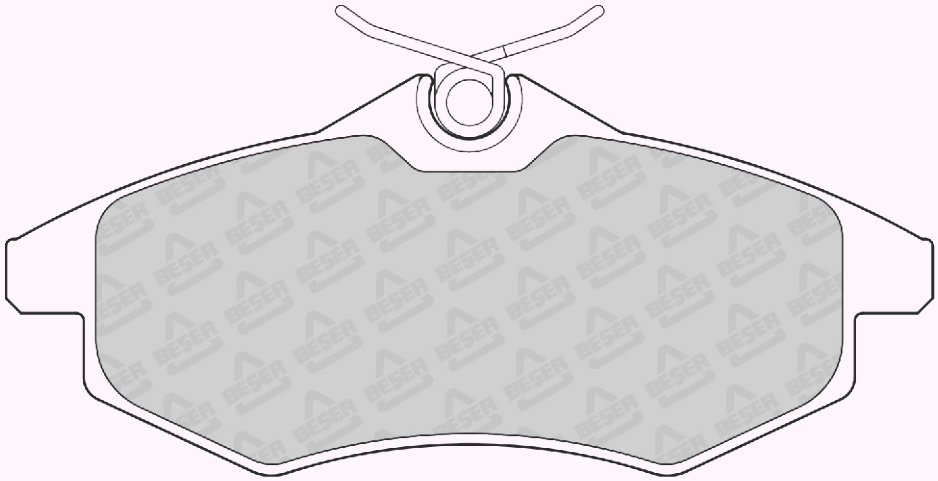

122,5 x 52,89

REFERENCE	T(mm)	REMARKS	MAKE	F/R	WVA No
3855	16.8	4 PADS WITH WEAR SENSOR	NISSAN - OPEL RENAULT - VAUXHALL	R	23669

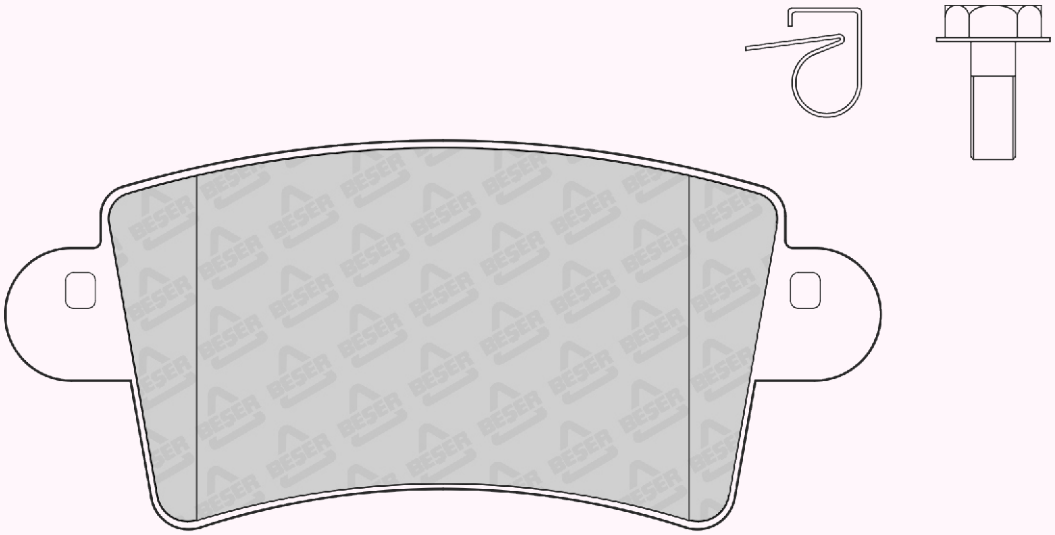

115,6 x 51,32

REFERENCE	T(mm)	REMARKS	MAKE	F/R	WVA No
3856	17.75	4 PADS PLAIN	NISSAN - OPEL RENAULT - VAUXHALL	F	23613

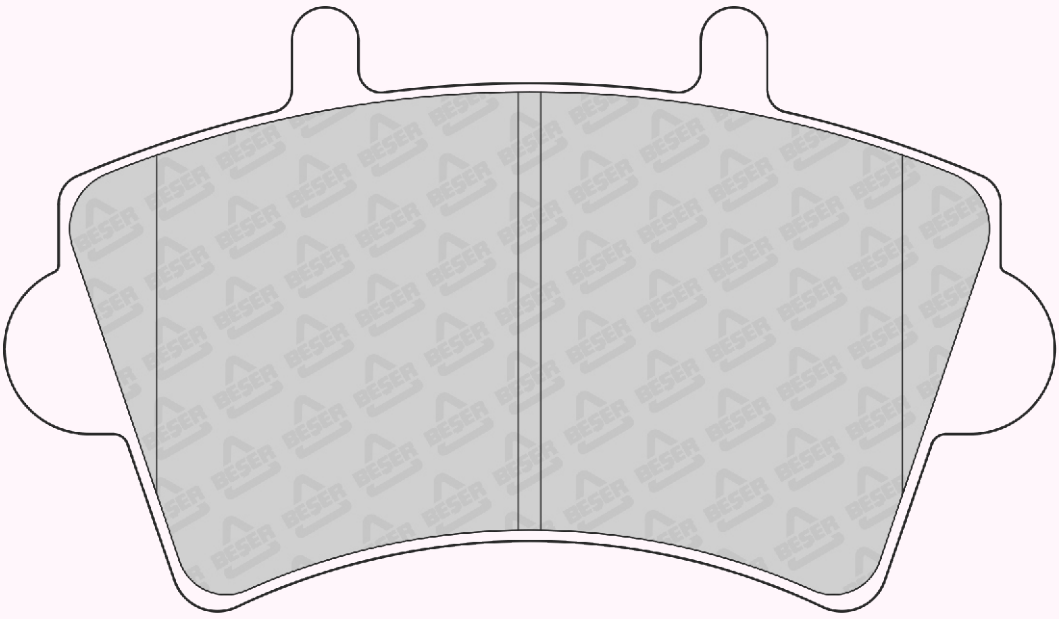

138,7 x 79,65

REFERENCE	T(mm)	REMARKS	MAKE	F/R	WVA No
3857	16,5	4 PADS WITH WEAR SENSOR	HOLDEN - ISUZU - LANDWIND(JMC) OPEL - VAUXHALL	F	21463 21467 21543 21544

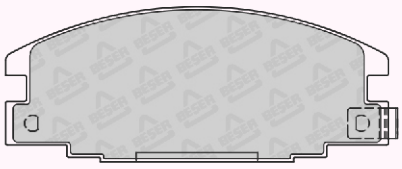

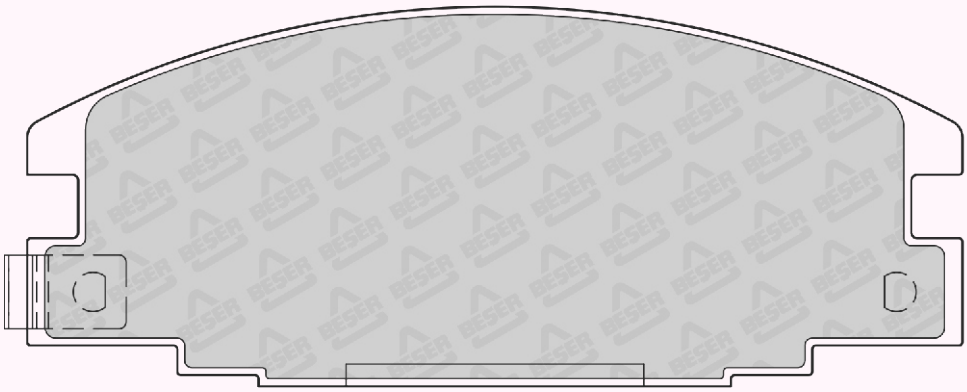

126,5 x 51,3

REFERENCE	T(mm)	REMARKS	MAKE	F/R	WVA No
3859	18.8	4 PADS WITH WEAR SENSOR	NISSAN	F	23611 23612 24132

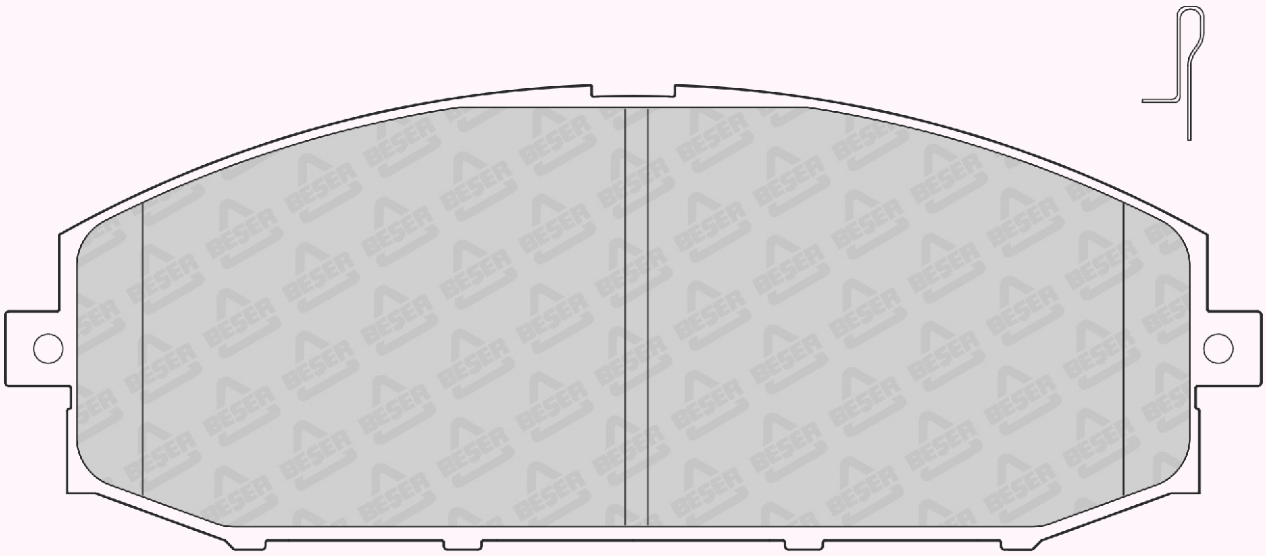

165,85 x 61,2

REFERENCE	T(mm)	REMARKS	MAKE	F/R	WVA No
3861	18	4 PADS PLAIN	MERCEDES BENZ	R	23020

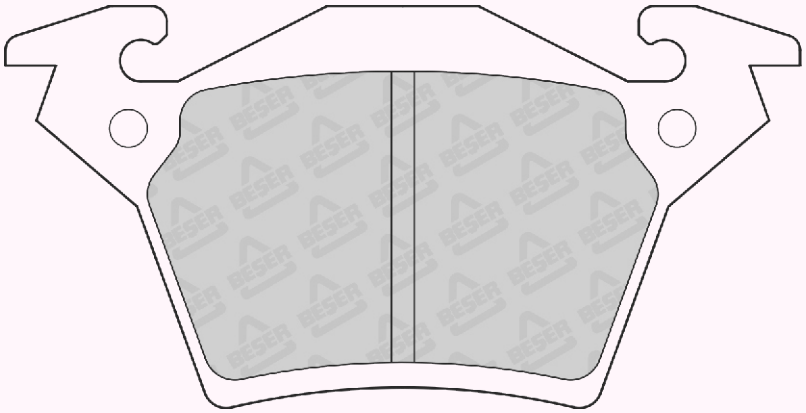

104,95 x 53,05

REFERENCE	T(mm)	REMARKS	MAKE	F/R	WVA No
3863	20	4 PADS PLAIN	CHRYSLER MERCEDES BENZ	F	21670 21671 21794

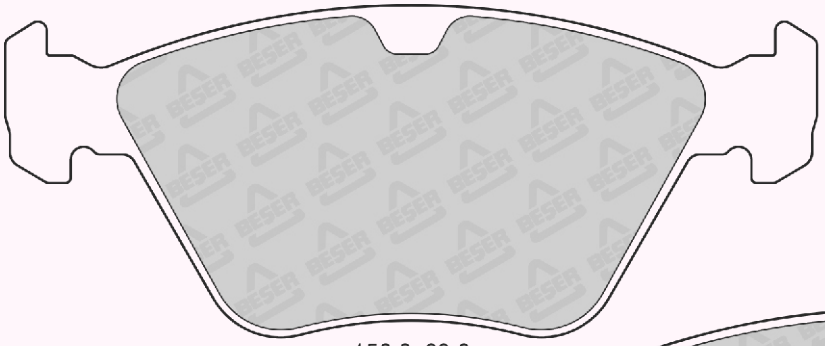

156,3x63,8
(NOT SCALE)

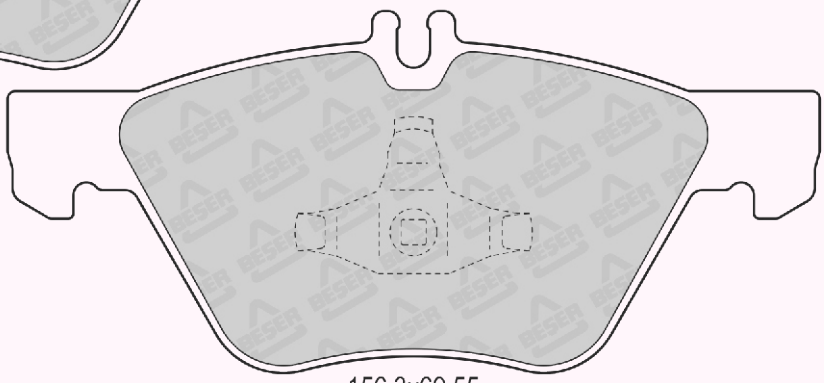

156,3x69,55
(NOT SCALE)

REFERENCE	T(mm)	REMARKS	MAKE	F/R	WVA No
3864	15,6-14,6	4 PADS PLAIN	BUICK - CADILLAC - CHEVROLET JEEP - PONTIAC	F	21215 21216

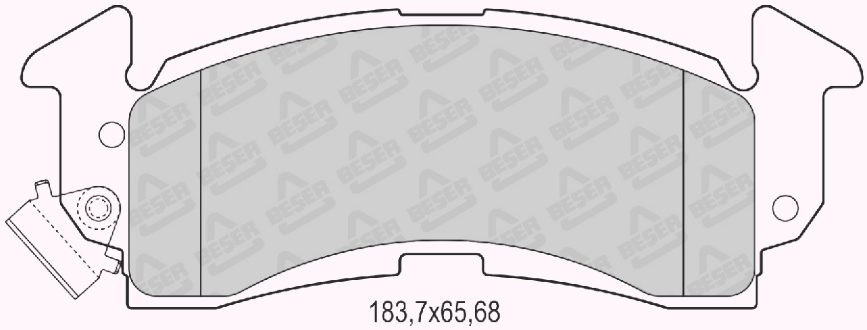

183,7x65,68
(NOT SCALE)

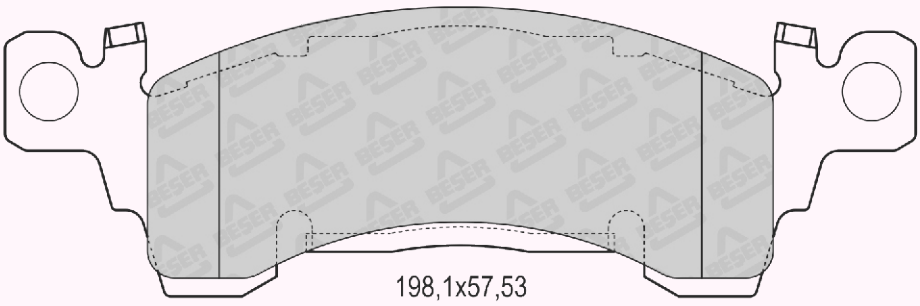

198,1x57,53
(NOT SCALE)

REFERENCE	T(mm)	REMARKS	MAKE	F/R	WVA No
3865	15,4-16,8	4 PADS PLAINS	FORD	F	-

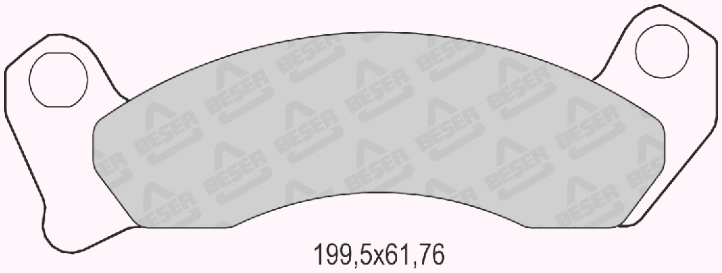

199,5x61,76
(NOT SCALE)

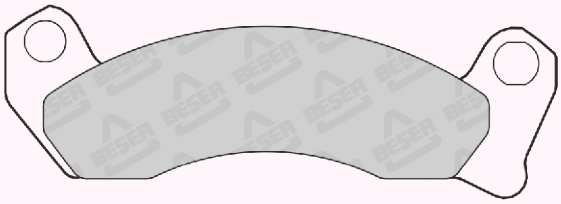

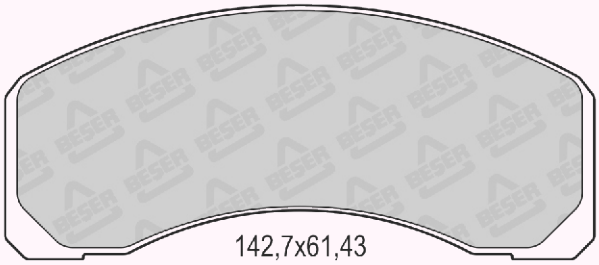

142,7x61,43
(NOT SCALE)

REFERENCE	T(mm)	REMARKS	MAKE	F/R	WVA No
3866	17.5 -16,6	4 PADS PLAIN	CHEVROLET - GMC	F	24769 24770 24771

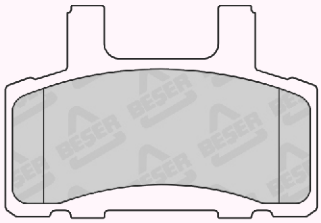

125,9x85,7
(NOT SCALE)

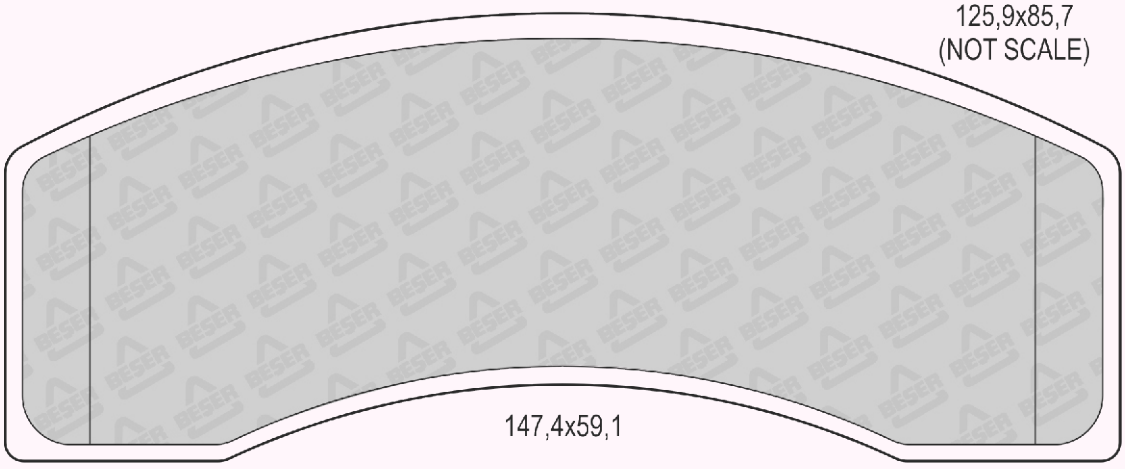

147,4x59,1

REFERENCE	T(mm)	REMARKS	MAKE	F/R	WVA No
3867	16,5-18,5	4 PADS PLAIN	CHRYSLER - PLYMOUTH	F	21812 21813 21814

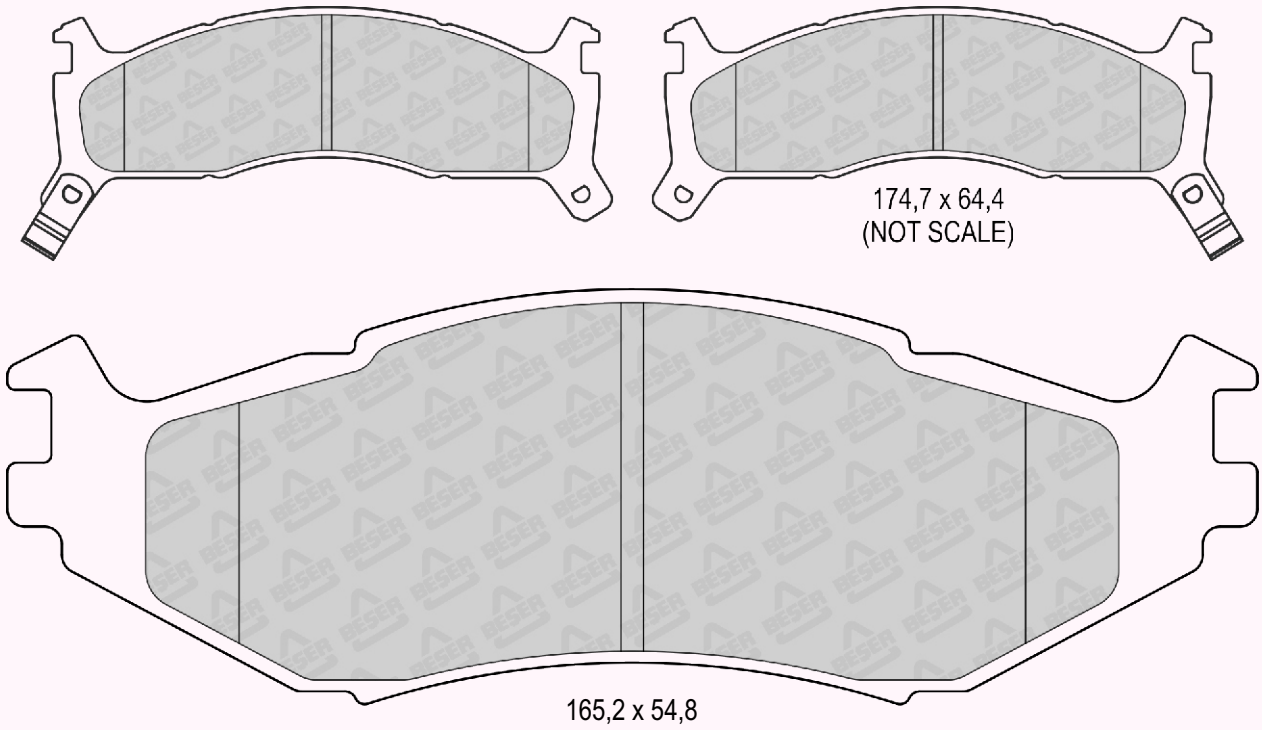

REFERENCE	T(mm)	REMARKS	MAKE	F/R	WVA No
3868	15.75 - 17	2 PADS INNER & 2 PADS OUTER	CADILLAC -CHEVROLET DODGE	F	---

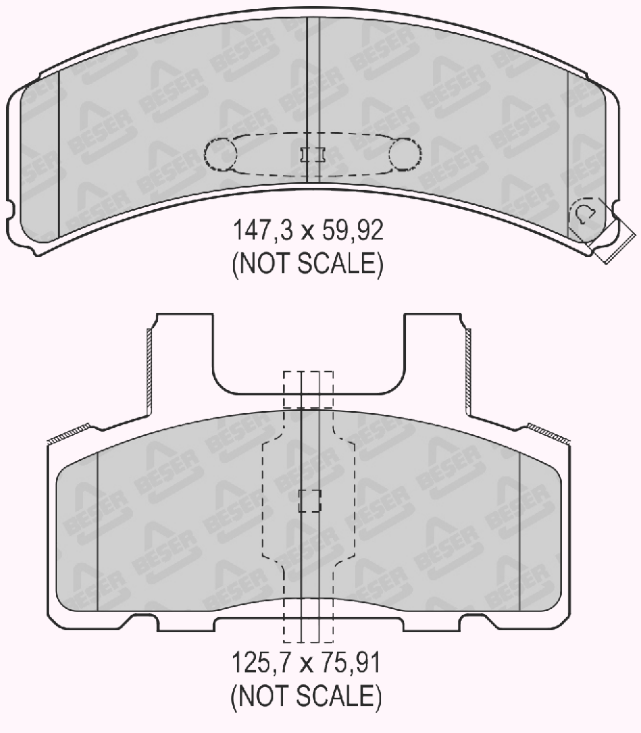

REFERENCE	T(mm)	REMARKS	MAKE	F/R	WVA No
3871	18	2 PADS WITH WEAR SENSOR	BMC	F	---

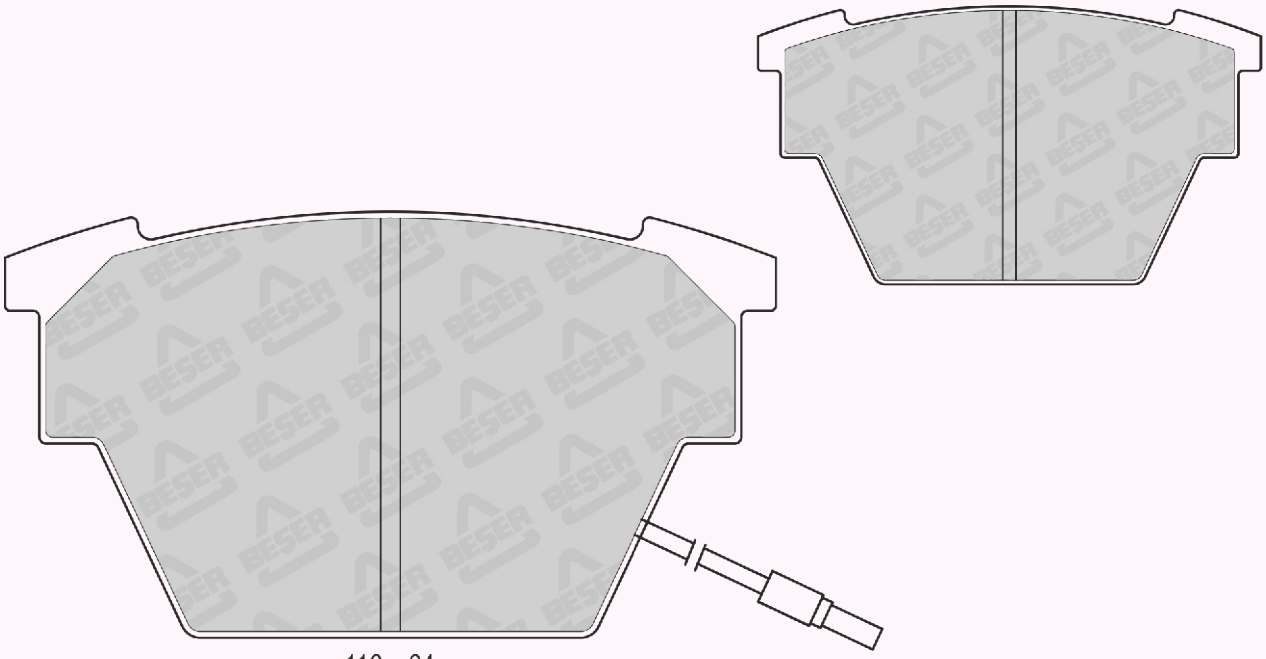

116 x 64

REFERENCE	T(mm)	REMARKS	MAKE	F/R	WVA No
3871/1	17	2 PADS WITH WEAR SENSOR	BMC	F	---

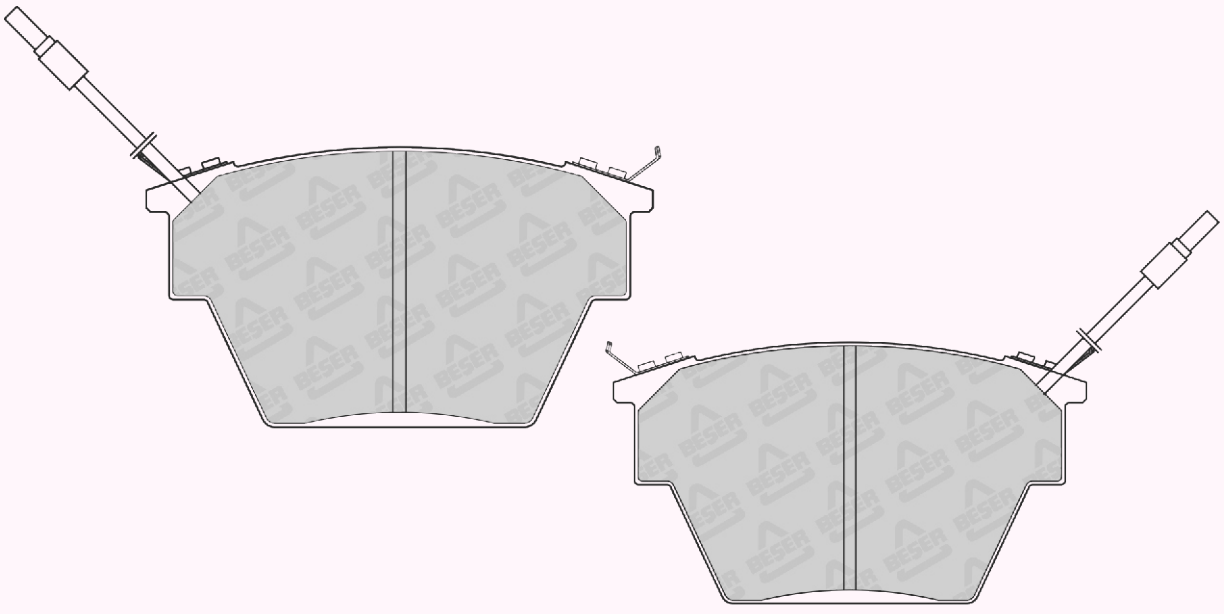

116 x 64
(NOT SCALE)

REFERENCE	T(mm)	REMARKS	MAKE	F/R	WVA No
3871/2	17	2 PADS WITH WEAR SENSOR	BMC	F	---

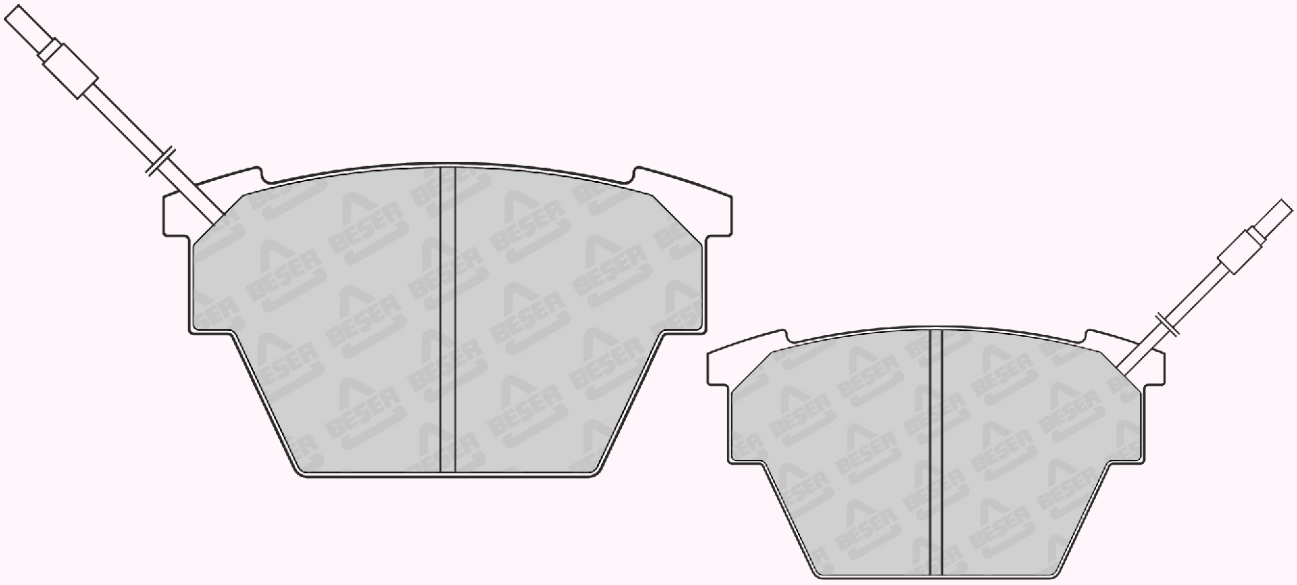

116 x 64
(NOT SCALE)

REFERENCE	T(mm)	REMARKS	MAKE	F/R	WVA No
3872	17.5	4 PADS PLAIN	HONDA - LAND ROVER MG-ROVER	F	21515 23158

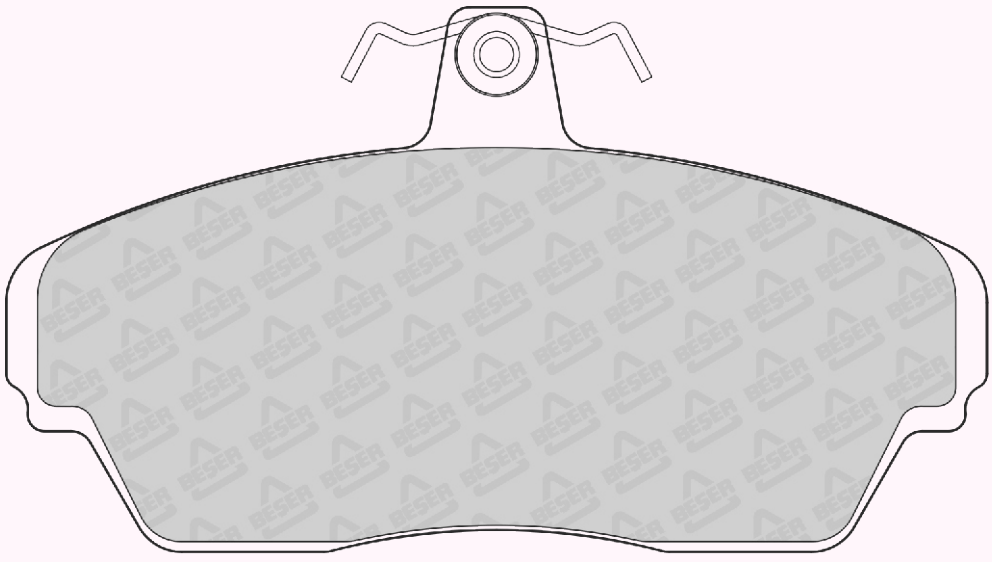

129,5 x 71,8

REFERENCE	T(mm)	REMARKS	MAKE	F/R	WVA No
3872/1	17.5	4 PADS PLAIN	HONDA - LANDROVER MG - ROVER	F	21515

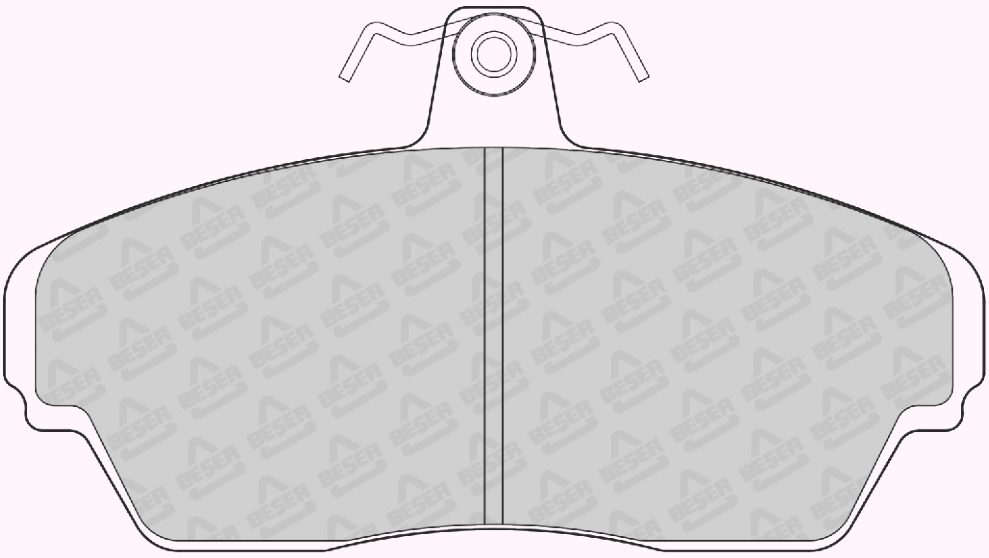

129,5 x 71,8

REFERENCE	T(mm)	REMARKS	MAKE	F/R	WVA No
3873	15	4 PADS PLAIN	CITROEN	R	20162 20165 21278

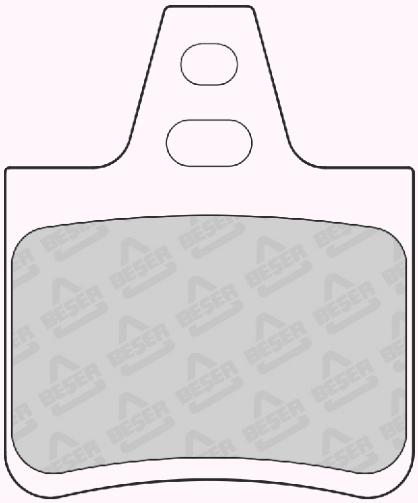

53,8 x 64,82

REFERENCE	T(mm)	REMARKS	MAKE	F/R	WVA No
3873/1	15	4 PADS PLAIN	CITROEN	R	20162

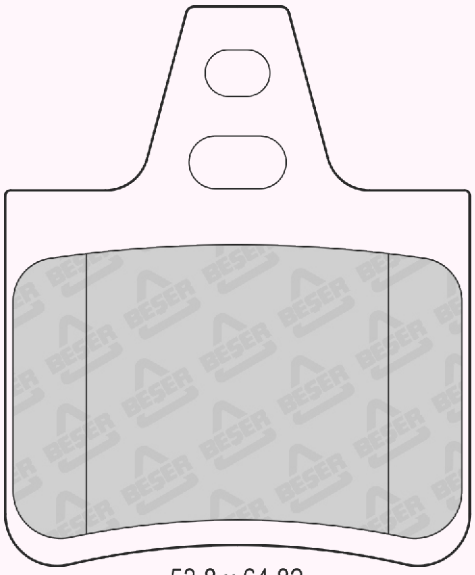

53,8 x 64,82

REFERENCE	T(mm)	REMARKS	MAKE	F/R	WVA No
3874	15.85	2 PADS WITH WEAR SENSOR	MAZDA	F	23515

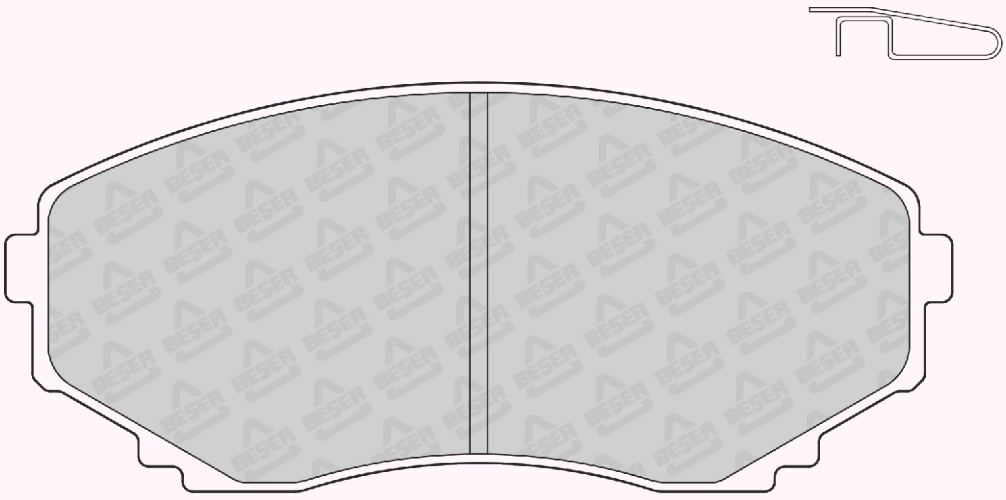

138,94 x 60,07
(NOT SCALE)

REFERENCE	T(mm)	REMARKS	MAKE	F/R	WVA No
3875	13	4 PADS PLAIN	HAIMA (FAW) - MAZDA	R	20031 23596 24045

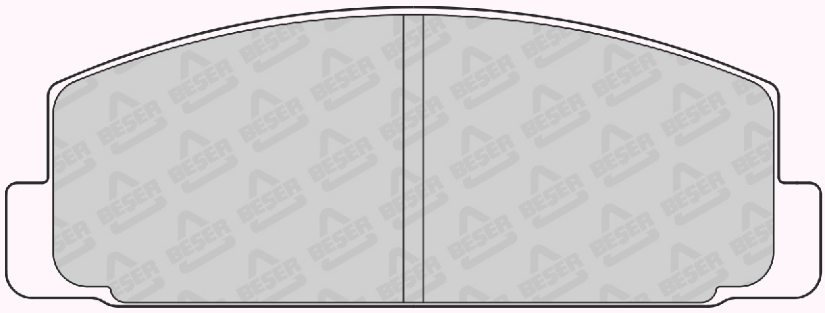

107,6 x 39,5

REFERENCE	T(mm)	REMARKS	MAKE	F/R	WVA No
3876	14.8	4 PADS PLAIN	BYD - GEELY LEXUS - LIFAN - TOYOTA	R	23592

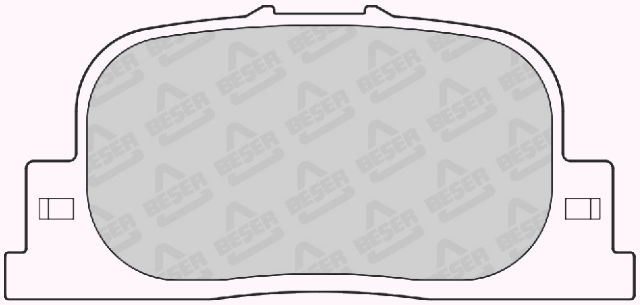

83 x 38,6

REFERENCE	T(mm)	REMARKS	MAKE	F/R	WVA No
3877	18.5	2 PADS RIGHT & 2 PADS LEFT	FORD - MAZDA	F	23202 23203 23604

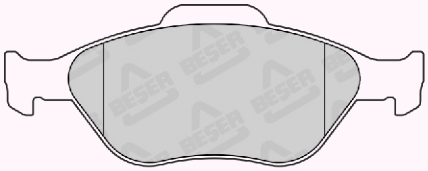

151,4 x 58,32
(NOT SCALE

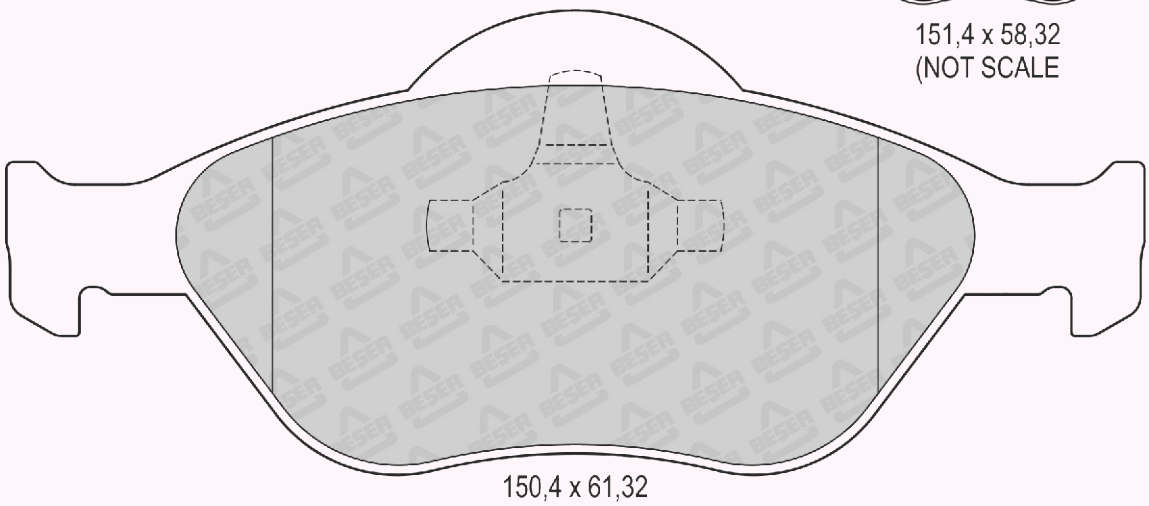

150,4 x 61,32

REFERENCE	T(mm)	REMARKS	MAKE	F/R	WVA No
3878	16	4 PADS WITH WEAR SENSOR	CITROEN	F	21632 23148 23149

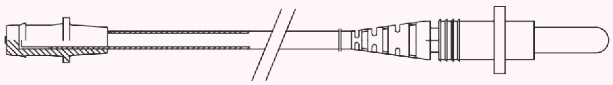

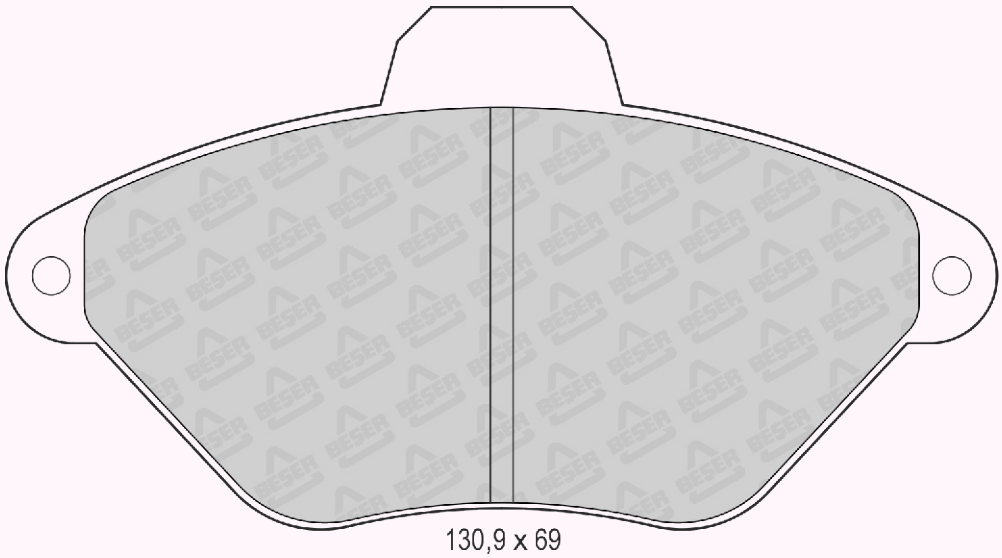

130,9 x 69

REFERENCE	T(mm)	REMARKS	MAKE	F/R	WVA No
3879	17	2 PADS WITH WEAR SENSOR	ALPINA - BMW LAND ROVER - MASERATI	R	21282 21487

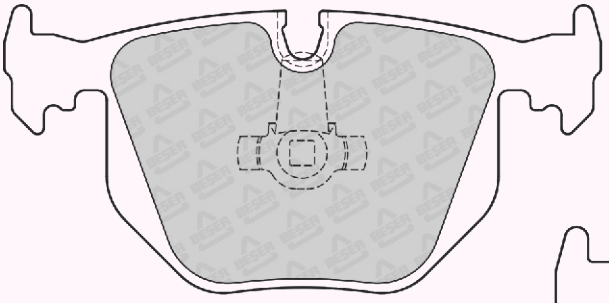

123,17 x 58,25
(NOT SCALE)

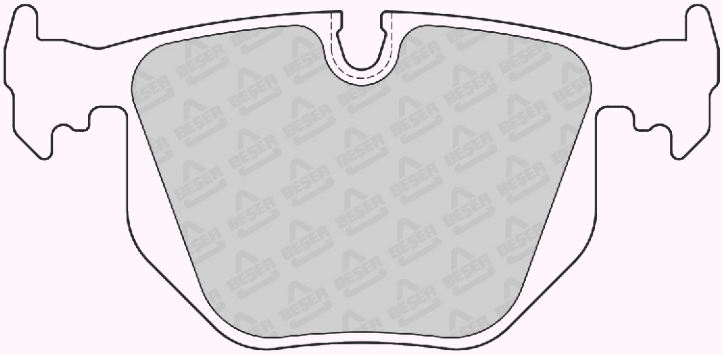

123,17 x 58,25
(NOT SCALE)

REFERENCE	T(mm)	REMARKS	MAKE	F/R	WVA No
3880	18	2 PADS WITH WEAR SENSOR	HYUNDAI - KIA	F-R	24317 24318 24319

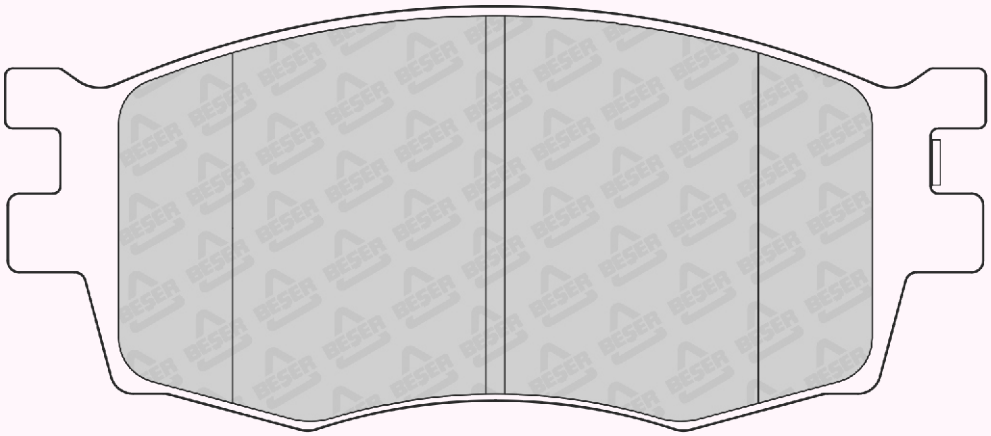

129,6 x 56

REFERENCE	T(mm)	REMARKS	MAKE	F/R	WVA No
3881	18.5	2 PADS WITH WEAR SENSOR	ALPINA - BMW	F	21486 21642

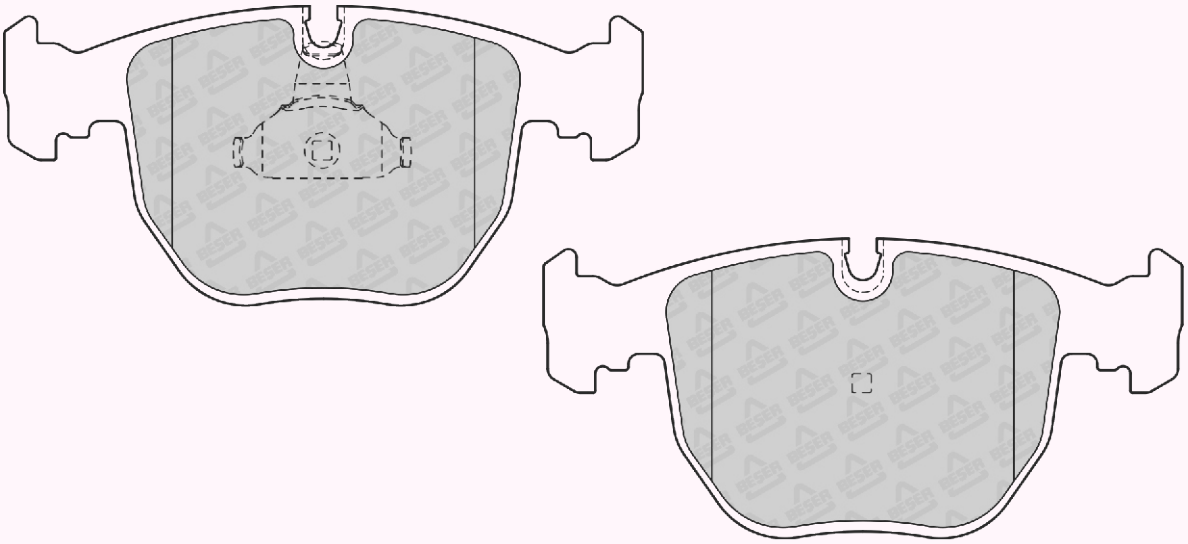

156,3x73,19
(NOT SCALE)

REFERENCE	T(mm)	REMARKS	MAKE	F/R	WVA No
3882	14.8	4 PADS PLAIN	ISUZU	F	21500 21501 21502

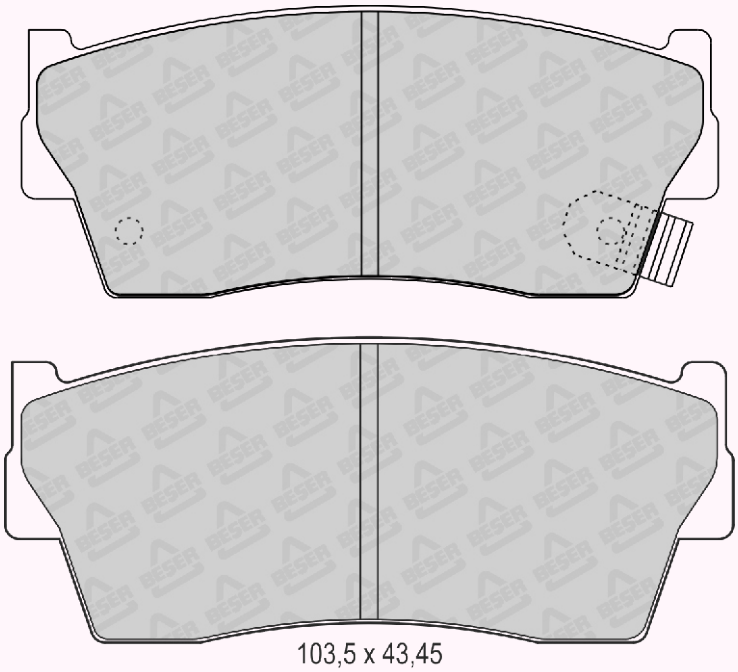

103,5 x 43,45
(NOT SCALE)

REFERENCE	T(mm)	REMARKS	MAKE	F/R	WVA No
3883	14.8	2 PADS WITH WEAR SENSOR	ISUZU	F	20262 21909 21907 23228 21908 23229

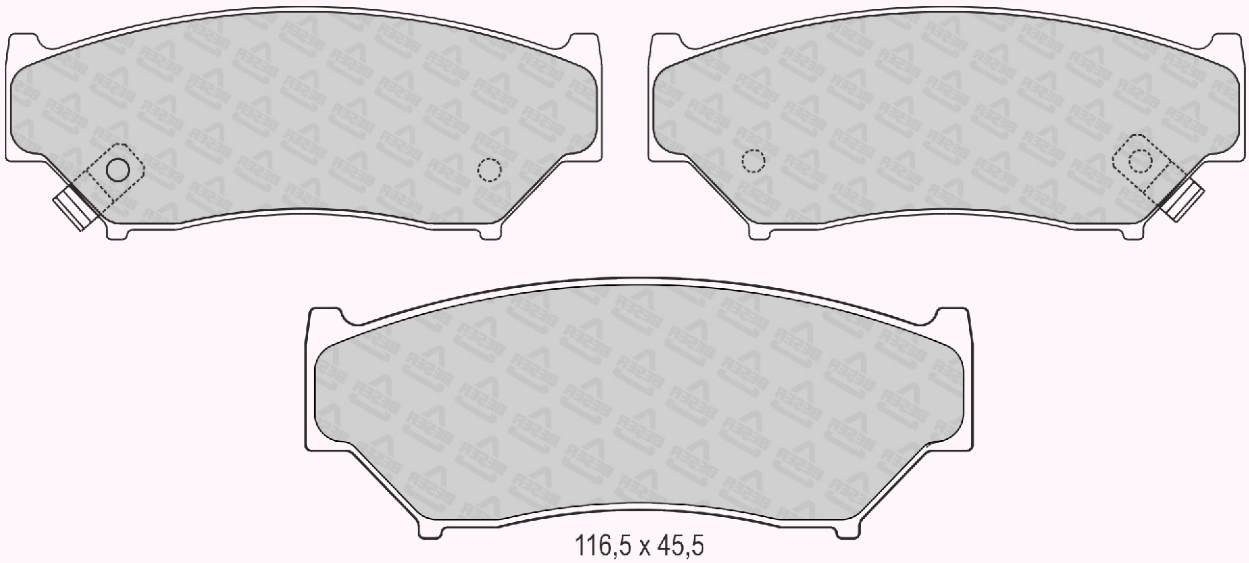

116,5 x 45,5
(NOT SCALE)

REFERENCE	T(mm)	REMARKS	MAKE	F/R	WVA No
3884	14.5	2 PADS WITH WEAR SENSOR	ISUZU	F	23314

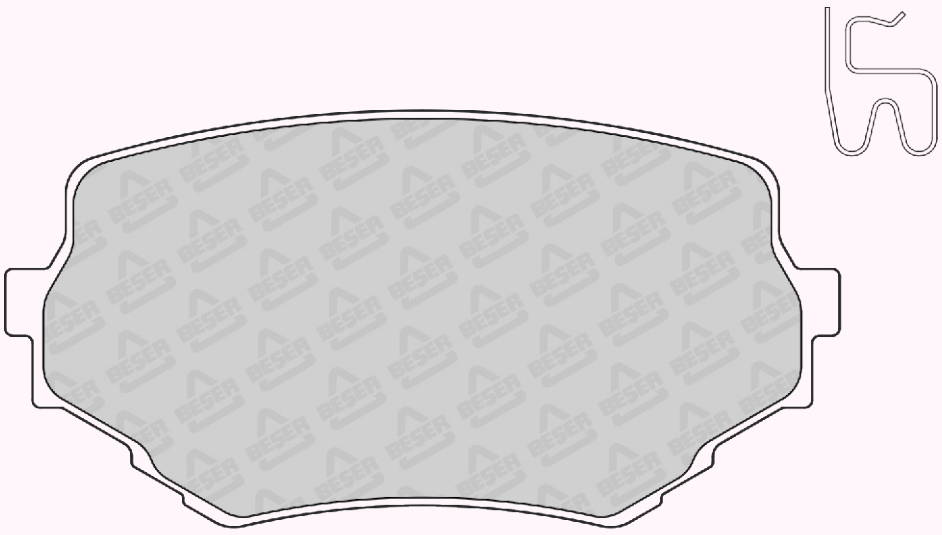

110,2 x 54,98

REFERENCE	T(mm)	REMARKS	MAKE	F/R	WVA No
3885	18.2	2 PADS INNER & 2 PADS OUTER	FORD MAZDA - VOLVO	F	23723 23724 24139

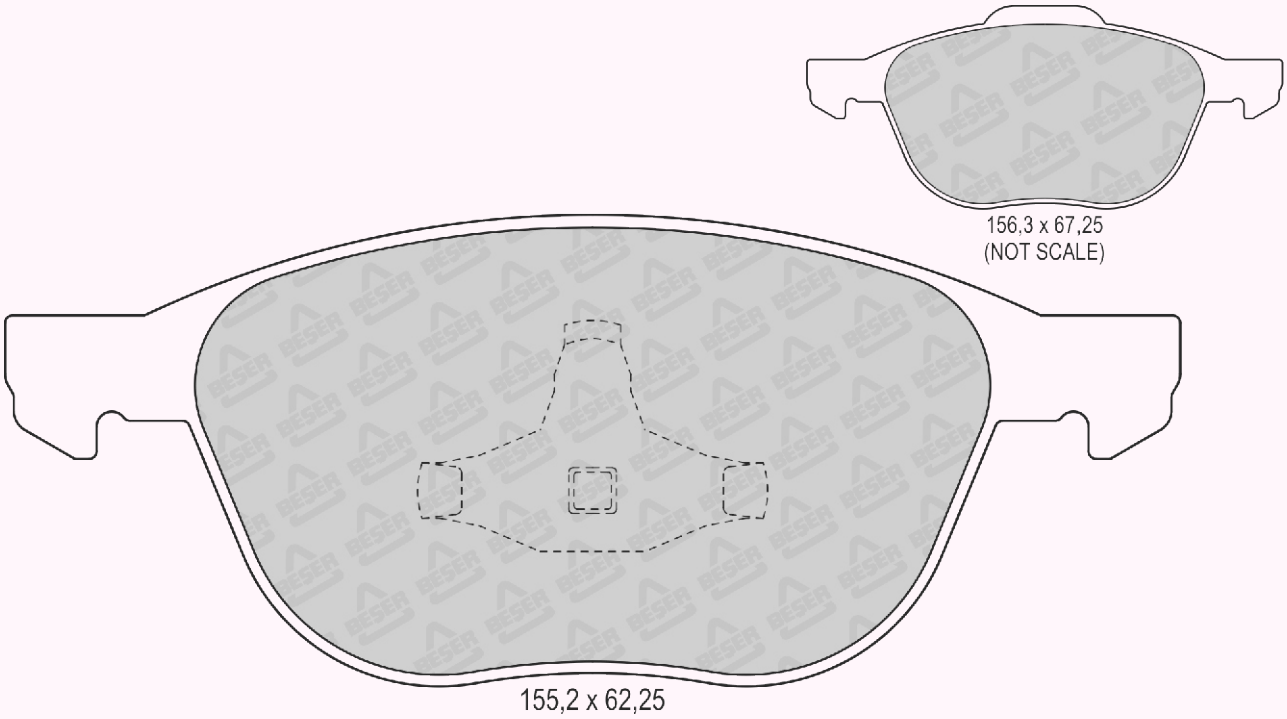

REFERENCE	T(mm)	REMARKS	MAKE	F/R	WVA No
3886	16	4 PADS WITH WEAR SENSOR	CHEVROLET HOLDEN - ISUZU	F	24182 24370 24594 24595

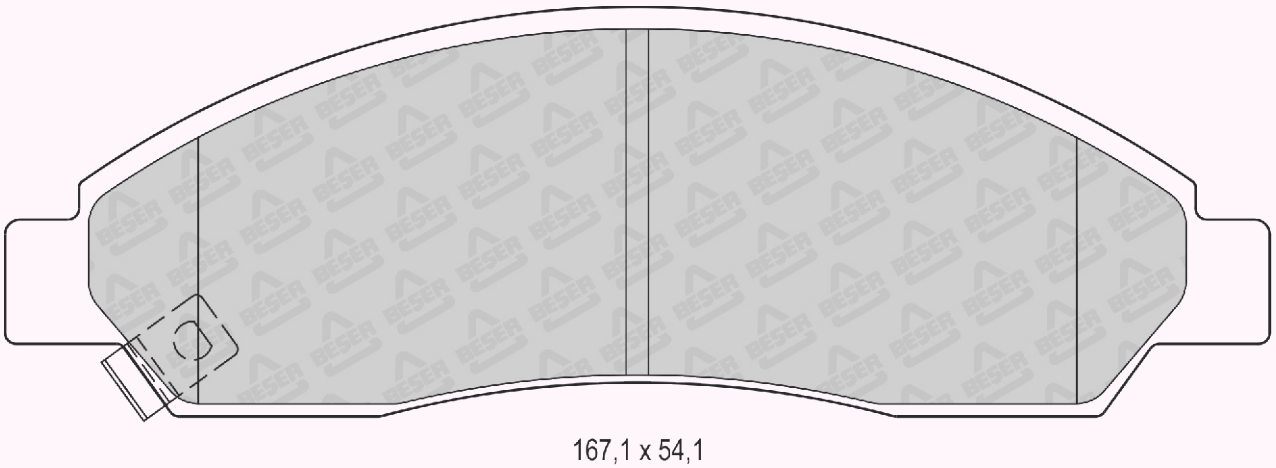

REFERENCE	T(mm)	REMARKS	MAKE	F/R	WVA No
3887	16	2 PADS WITH WEAR SENSOR	ACURA - CHANGFENG - HOLDEN ISUZU - OPEL - VAUXHALL	R	21875 23366 21876 24183 21877 24184 23365 24185

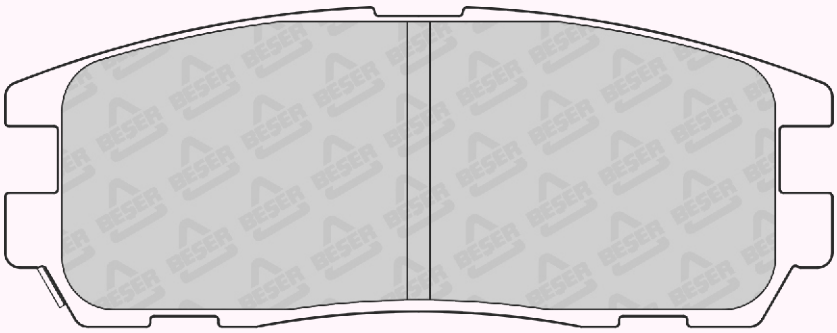

109,3 x 42,19

REFERENCE	T(mm)	REMARKS	MAKE	F/R	WVA No
3888	15.5	4 PADS PLAIN	FORD LDV - NISSAN	F	21410 21481

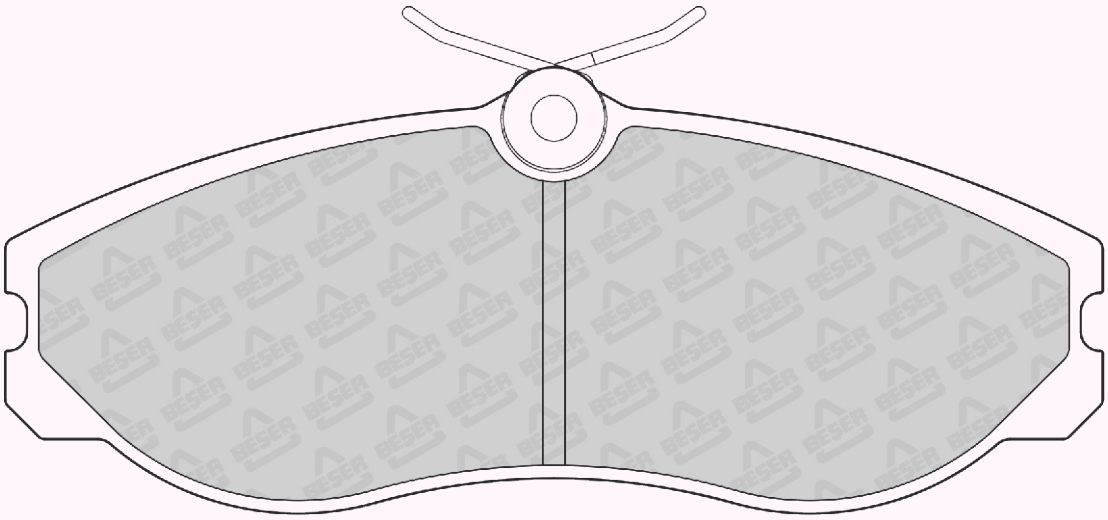

144,9 x 55,6

REFERENCE	T(mm)	REMARKS	MAKE	F/R	WVA No
3889	18,3	2 PADS WITH WEAR SENSOR	MAZDA	F	24046 24047 24048

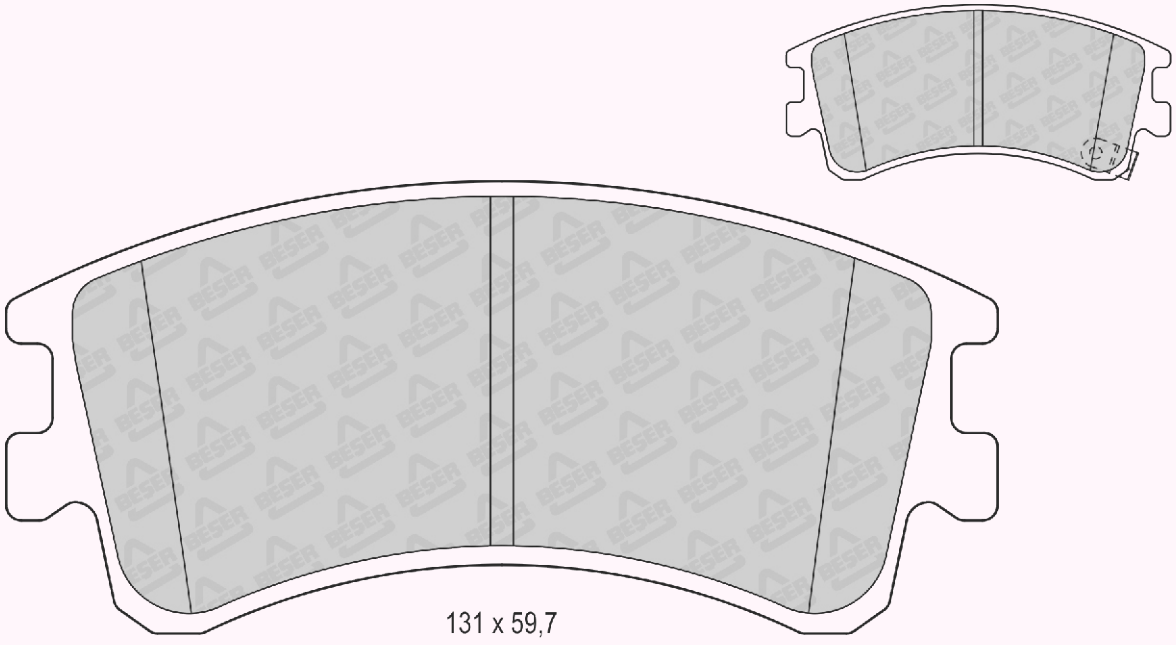

131 x 59,7

REFERENCE	T(mm)	REMARKS	MAKE	F/R	WVA No
3890	18,5	2 PADS WITH WEAR SENSOR	TOYOTA	F	23479 23480 23481 23768

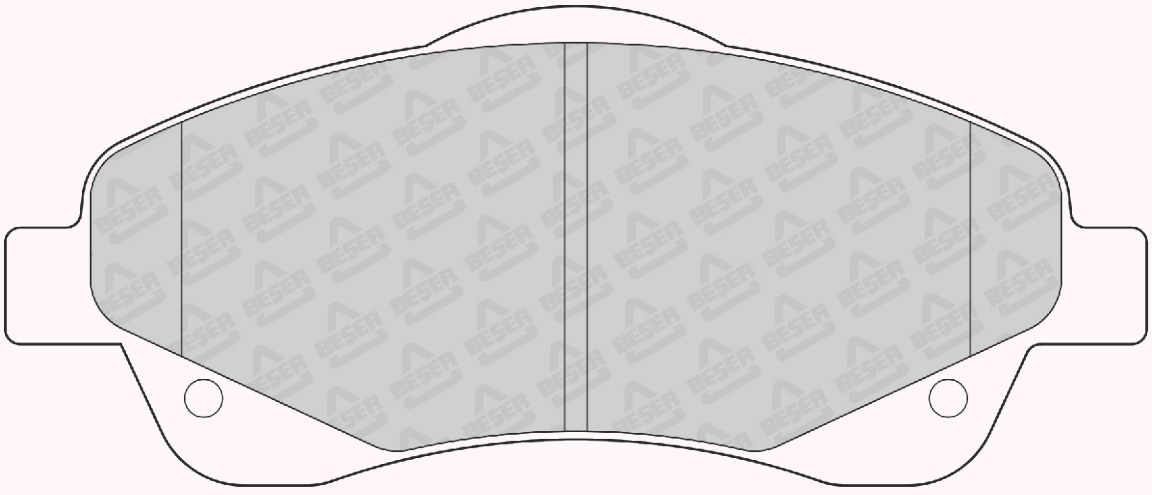

150,8 x 63,15

REFERENCE	T(mm)	REMARKS	MAKE	F/R	WVA No
3891	17	2 PADS WITH WEAR SENSOR	LEXUS - TOYOTA	F	24024 23479 24025 23480 24026 23481

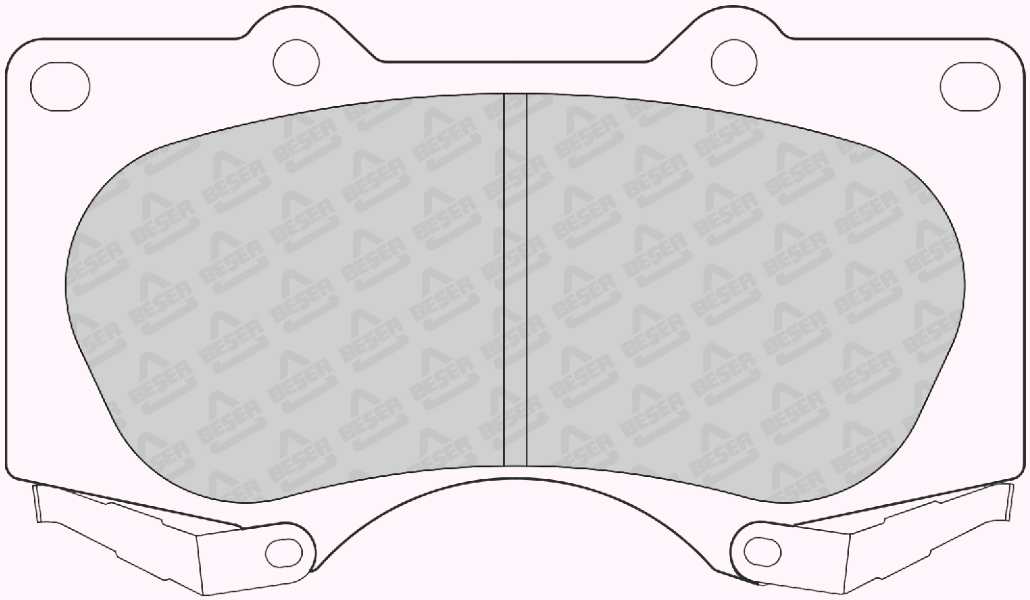

134,5 x 76,47

REFERENCE	T(mm)	REMARKS	MAKE	F/R	WVA No
3892	15.2	4 PADS PLAIN	FORD MAZDA - MITSUBISHI	F	23488 24066

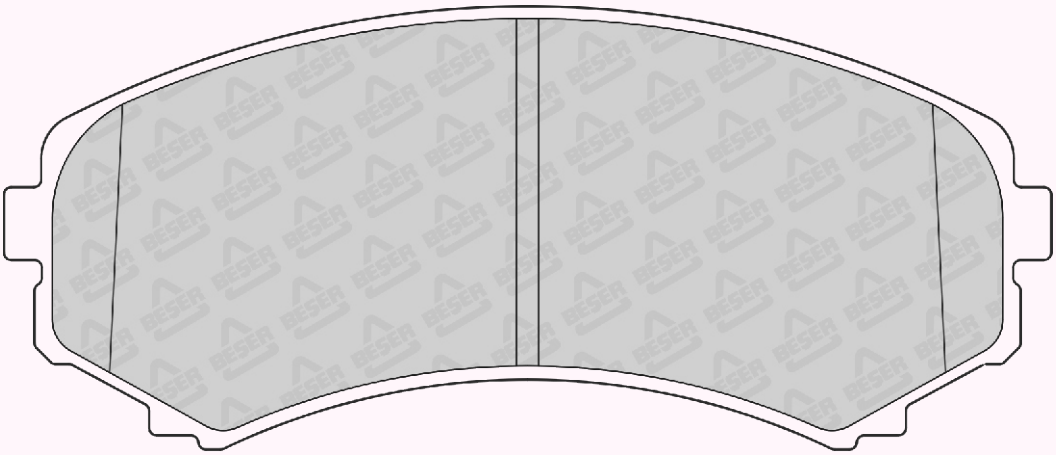

138,4 x 58,4

REFERENCE	T(mm)	REMARKS	MAKE	F/R	WVA No
3893	15.5	2 PADS RIGHT & 2 PADS LEFT	CHRYSLER - CITROEN - DODGE JEEP - LANCIA - MITSUBISHI PEUGEOT	R	23582 23583

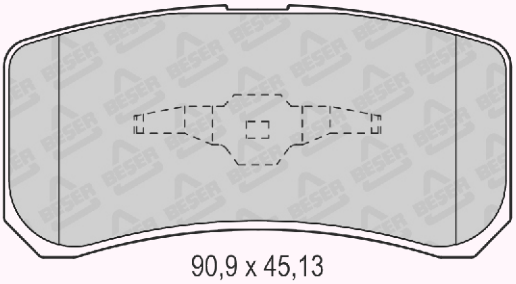

90,9 x 45,13
(NOT SCALE)

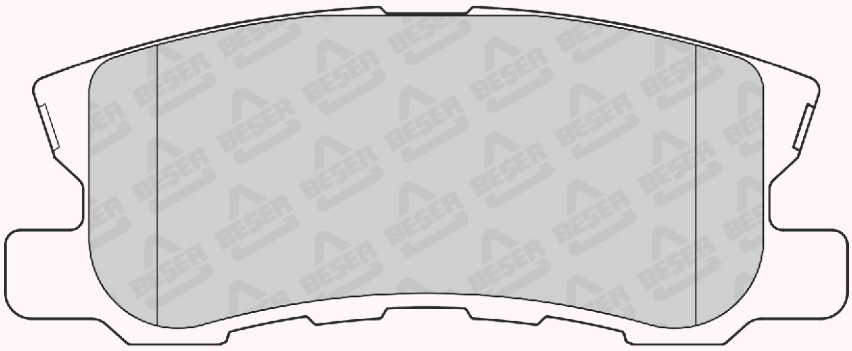

111,25 x 44,56

REFERENCE	T(mm)	REMARKS	MAKE	F/R	WVA No
3894	14.6	4 PADS PLAIN	BUICK - CHEVROLET DAEWOO - HOLDEN	R	24071

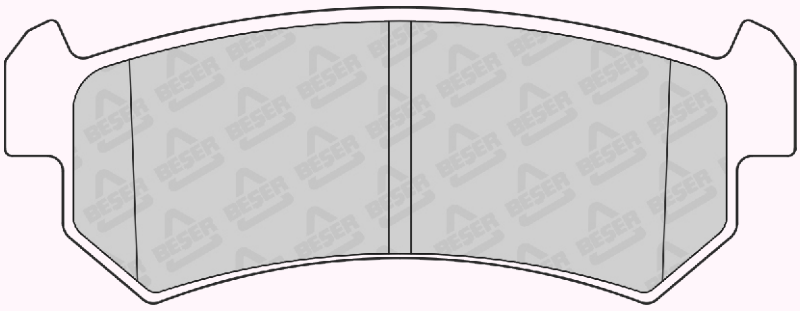

104,35 x 38,96

REFERENCE	T(mm)	REMARKS	MAKE	F/R	WVA No
3895	14,9	2 PADS WITH WEAR SENSOR	DAEWOO-SSANGYONG	R	23673 24050 23674 24051 23675 24052

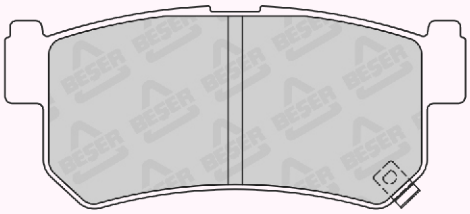

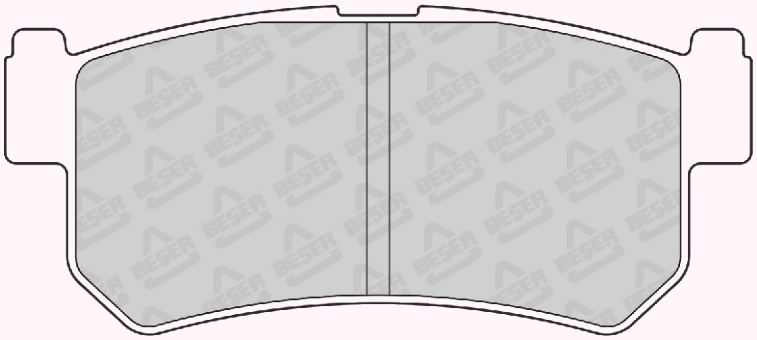

98,55 x 43,02

REFERENCE	T(mm)	REMARKS	MAKE	F/R	WVA No
3896	19.5	2 PADS WITH WEAR SENSOR	AUDI - SEAT VW	F	21945 20778 20168 20901 20669 23393

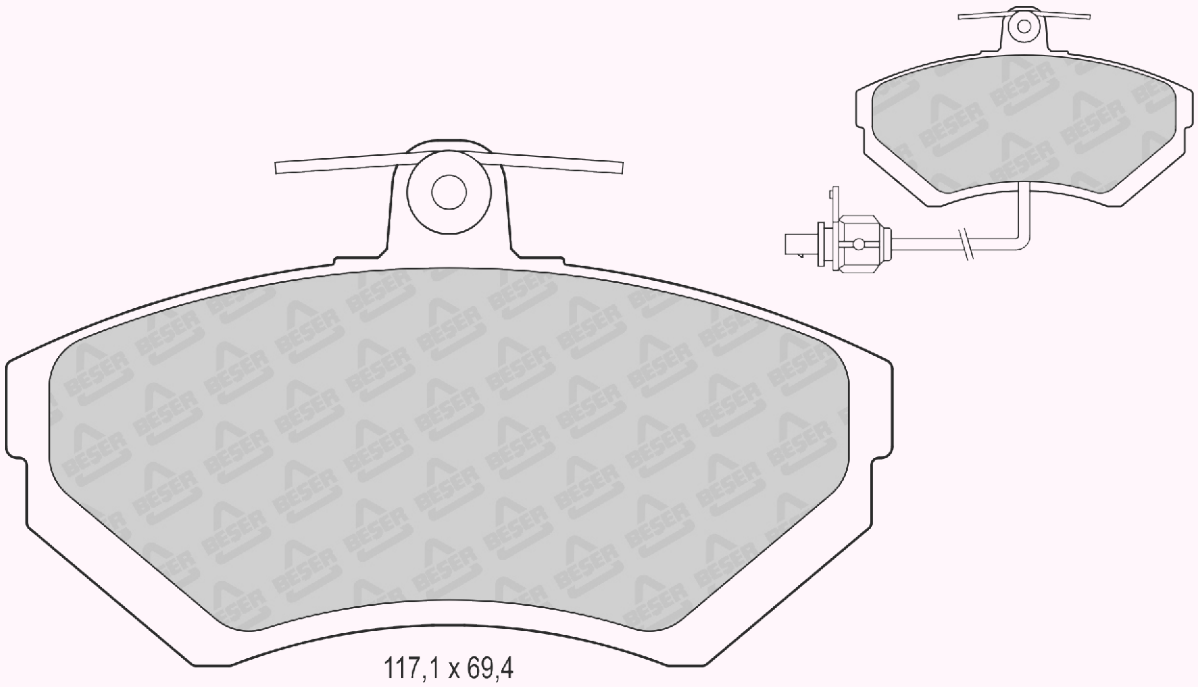

117,1 x 69,4

REFERENCE	T(mm)	REMARKS	MAKE	F/R	WVA No
3897	17.6	2 PADS WITH WEAR SENSOR	FIAT - LANCIA	F	21930 21931 21932 23181

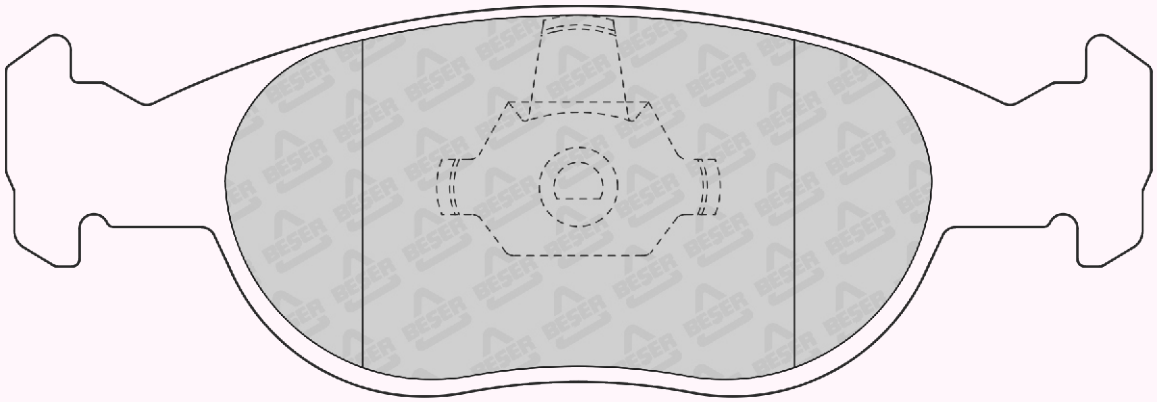

151,35 x 51,54

REFERENCE	T(mm)	REMARKS	MAKE	F/R	WVA No
3898	15.3	2 PADS WITH WEAR SENSOR	DAIHATSU	F	21952 21953 21954

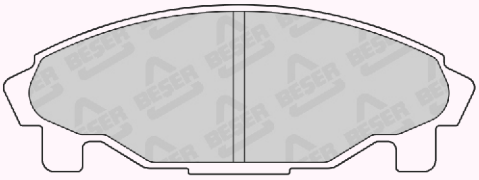

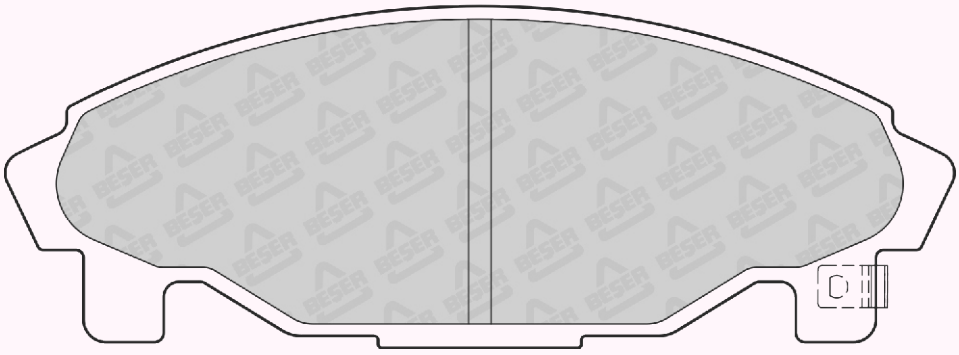

125,4 x 45,1

REFERENCE	T(mm)	REMARKS	MAKE	F/R	WVA No
3899	15.5	2 PADS WITH WEAR SENSOR	SUZUKI	F	24830 24831

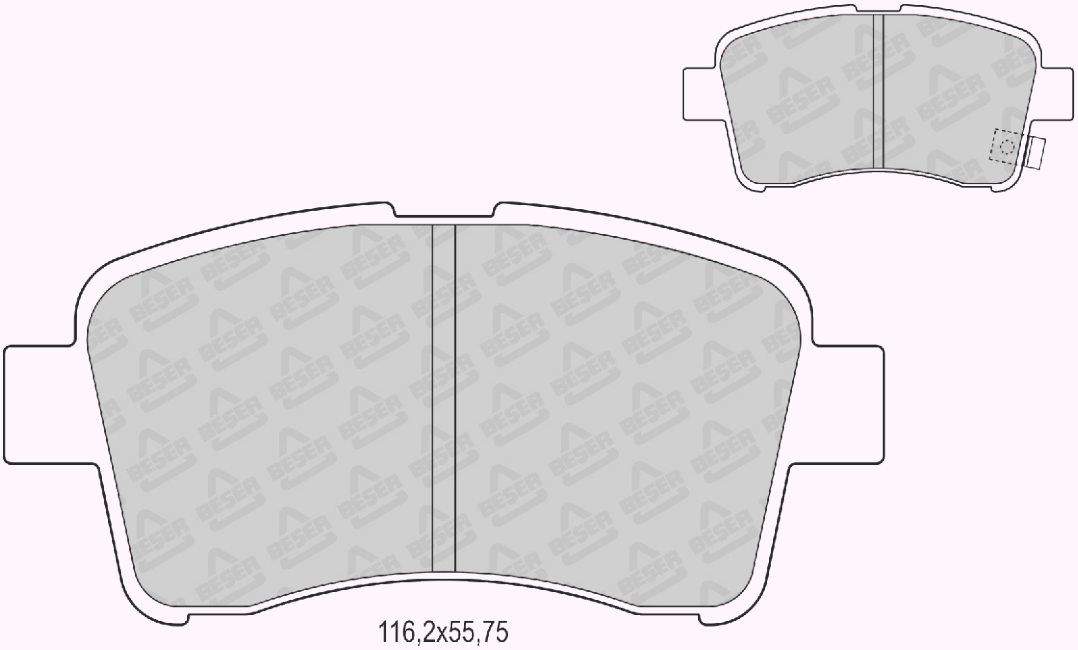

116,2x55,75

REFERENCE	T(mm)	REMARKS	MAKE	F/R	WVA No
3900	16.0	1 PAD WITH WEAR SENSOR	MITSUBISHI	F	23879 23880

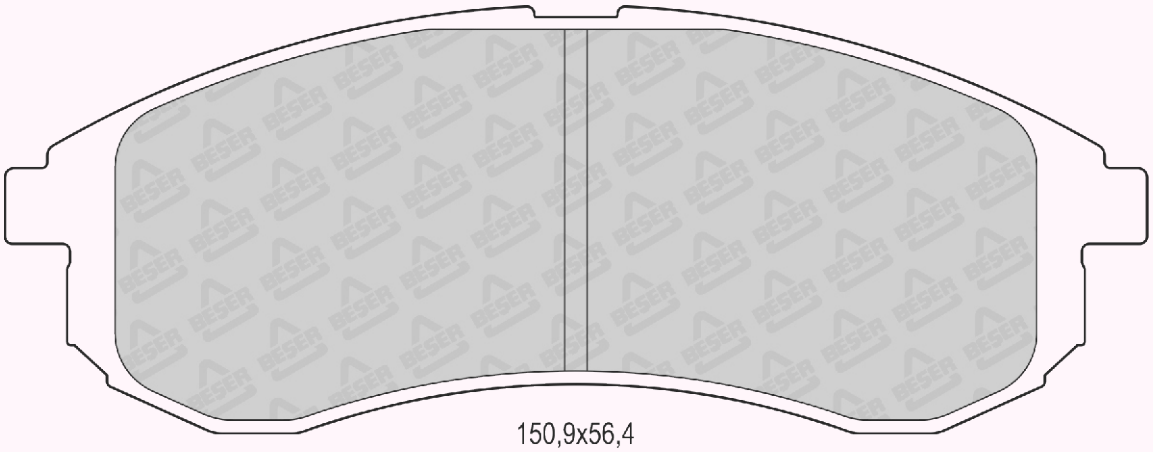

150,9x56,4

REFERENCE	T(mm)	REMARKS	MAKE	F/R	WVA No
3901	15.5	2 PADS RIGHT & 2 PADS LEFT	DAIHATSU - PERODUA TOYOTA	F	23497 23498

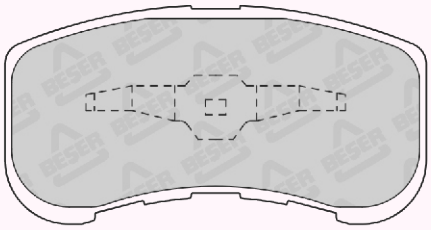

94,9 x 49,25
(NOT SCALE)

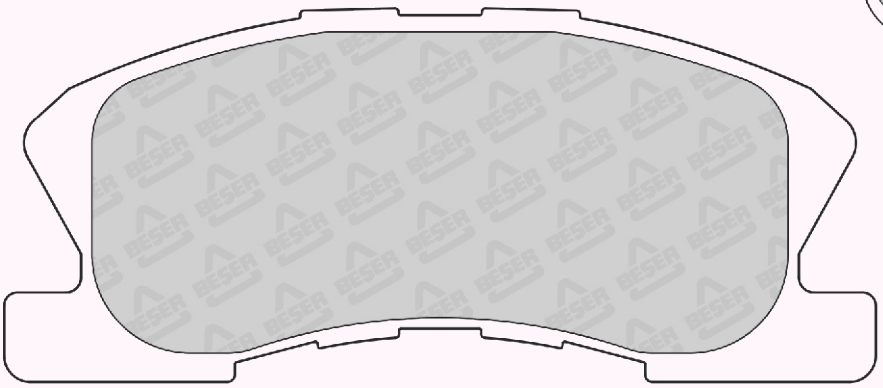

115,25 x 49,5

REFERENCE	T(mm)	REMARKS	MAKE	F/R	WVA No
3903	15.6	4 PADS PLAIN	TOYOTA	F	24567

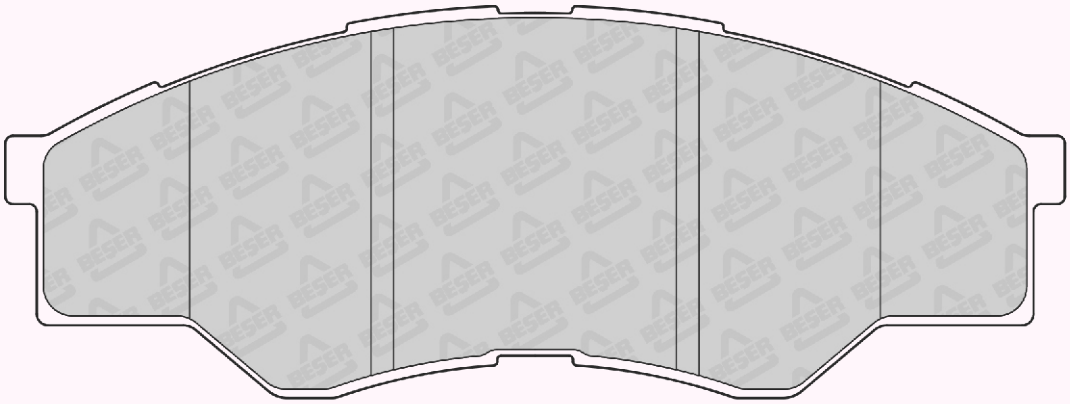

140 x 51,69

REFERENCE	T(mm)	REMARKS	MAKE	F/R	WVA No
3904	20	1 PAD WITH WEAR SENSOR	AUDI - SEAT - SKODA - VW	F	23587 23588 23589

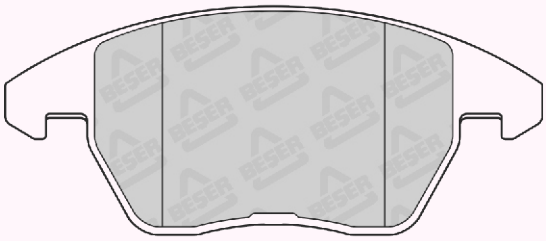

155,2 x 65,95
(NOT SCALE)

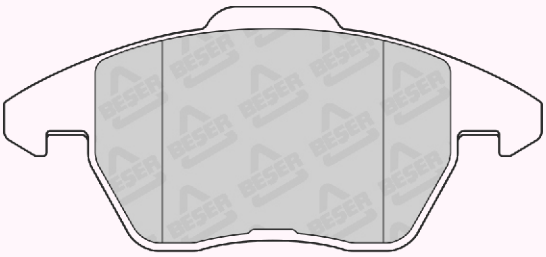

156,35 x 71,05
(NOT SCALE)

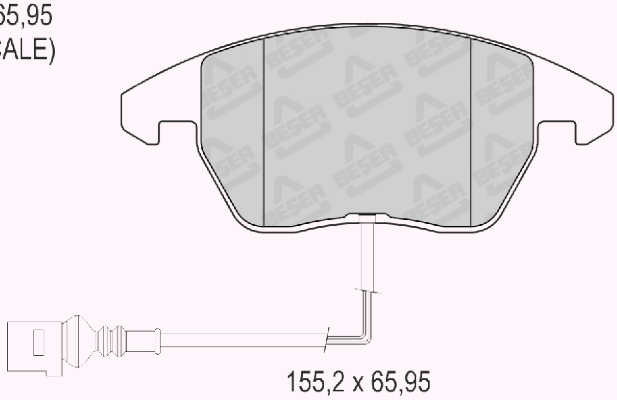

155,2 x 65,95
(NOT SCALE)

REFERENCE	T(mm)	REMARKS	MAKE	F/R	WVA No
3905	15,9	4 PADS PLAIN	AUDI - SEAT - SKODA - VW	R	23914

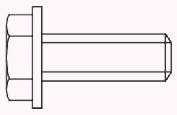

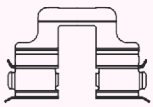

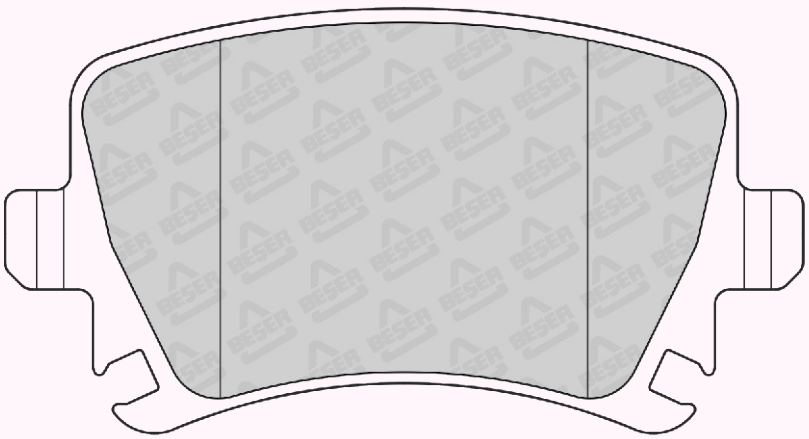

105,4 x 56,05

REFERENCE	T(mm)	REMARKS	MAKE	F/R	WVA No
3906	18	2 PADS WITH WEAR SENSOR	FORD	F	24484

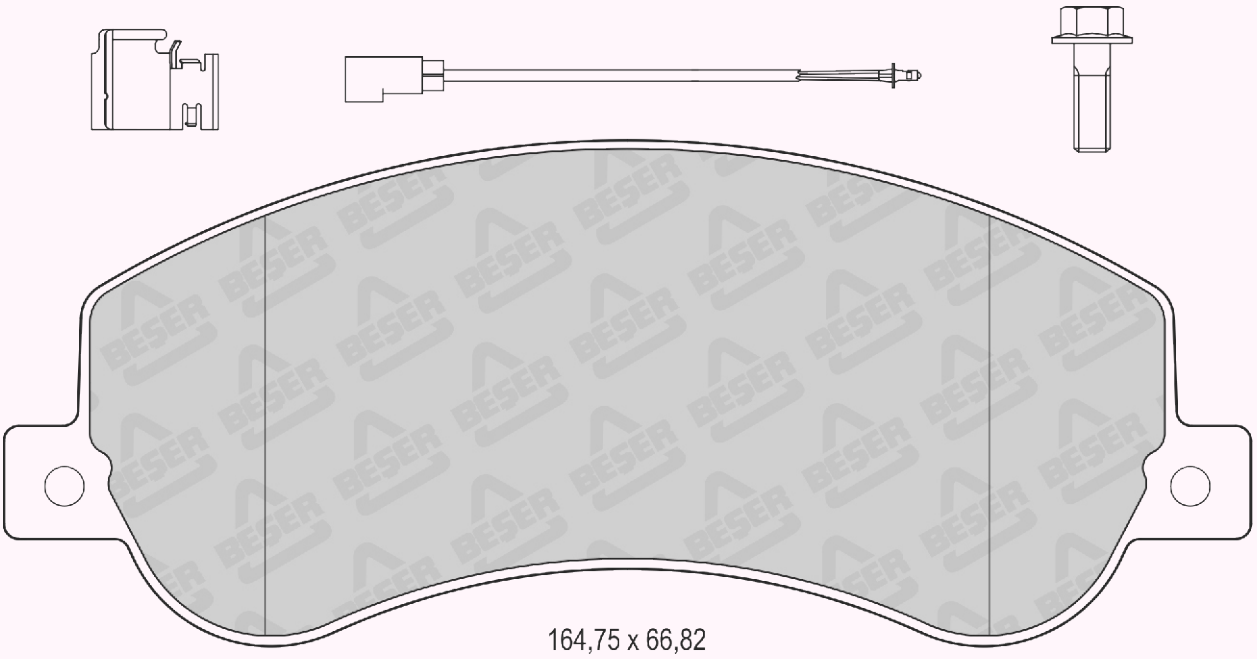

REFERENCE	T(mm)	REMARKS	MAKE	F/R	WVA No
3906/1	18	4 PADS PLAIN	FORD	F	24484

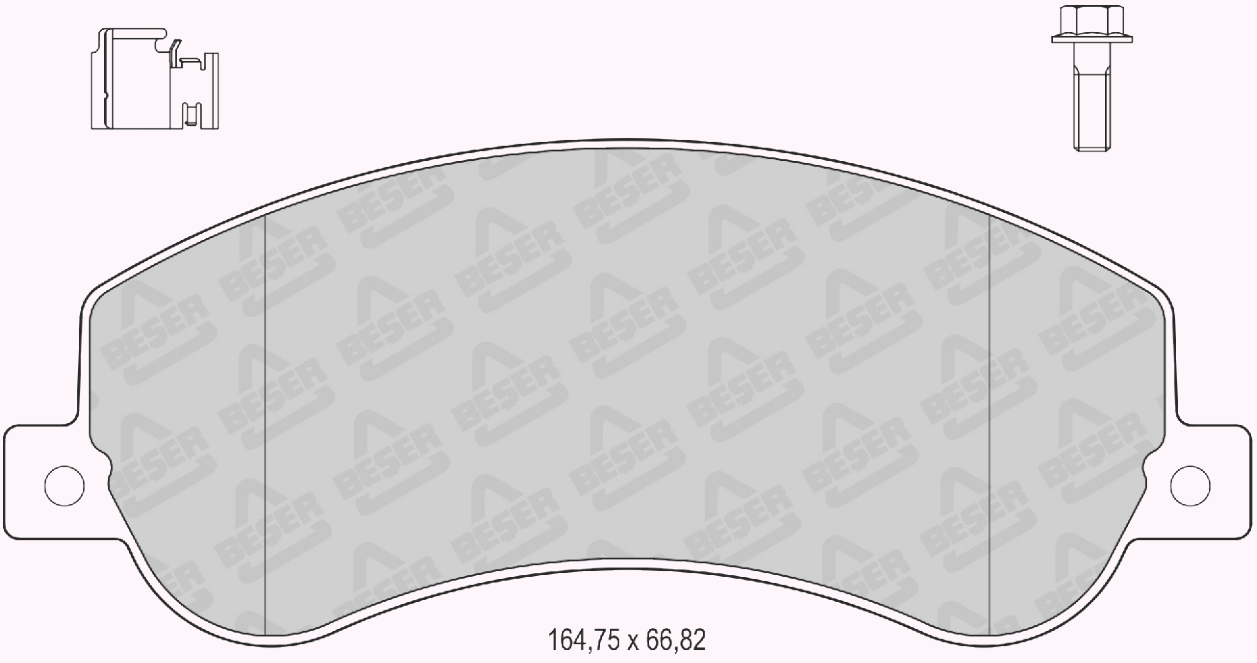

REFERENCE	T(mm)	REMARKS	MAKE	F/R	WVA No
3906/2	18	1 PAD WITH WEAR SENSOR	FORD	F	24484

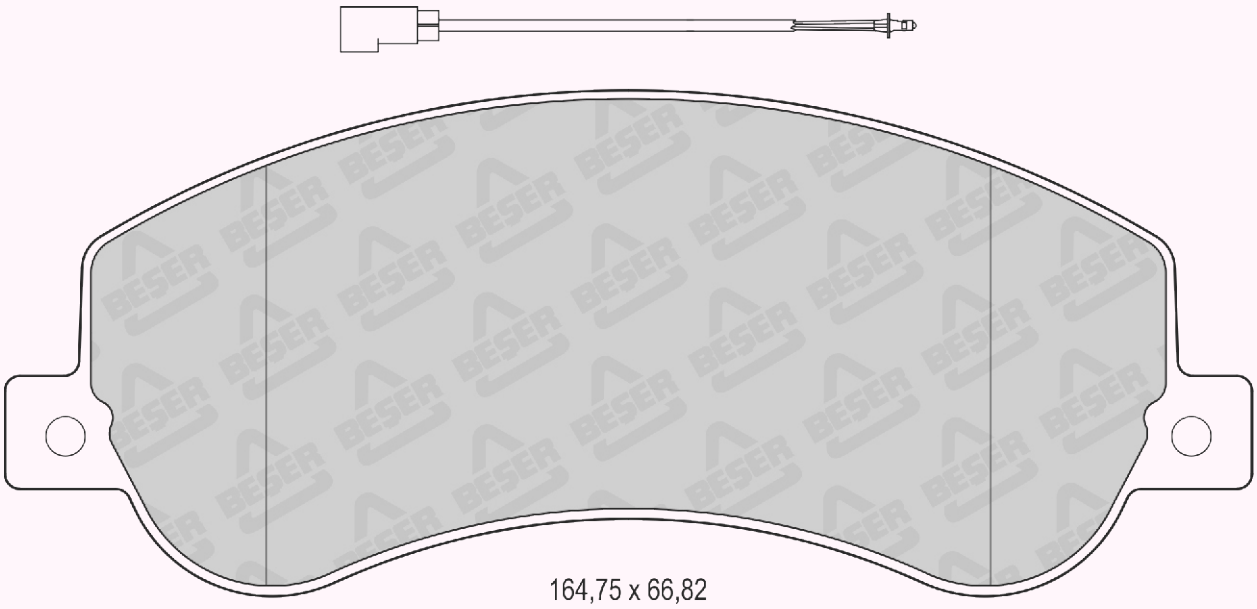

164,75 x 66,82

REFERENCE	T(mm)	REMARKS	MAKE	F/R	WVA No
3906/1A	18	4 PADS PLAIN	FORD	F	24484

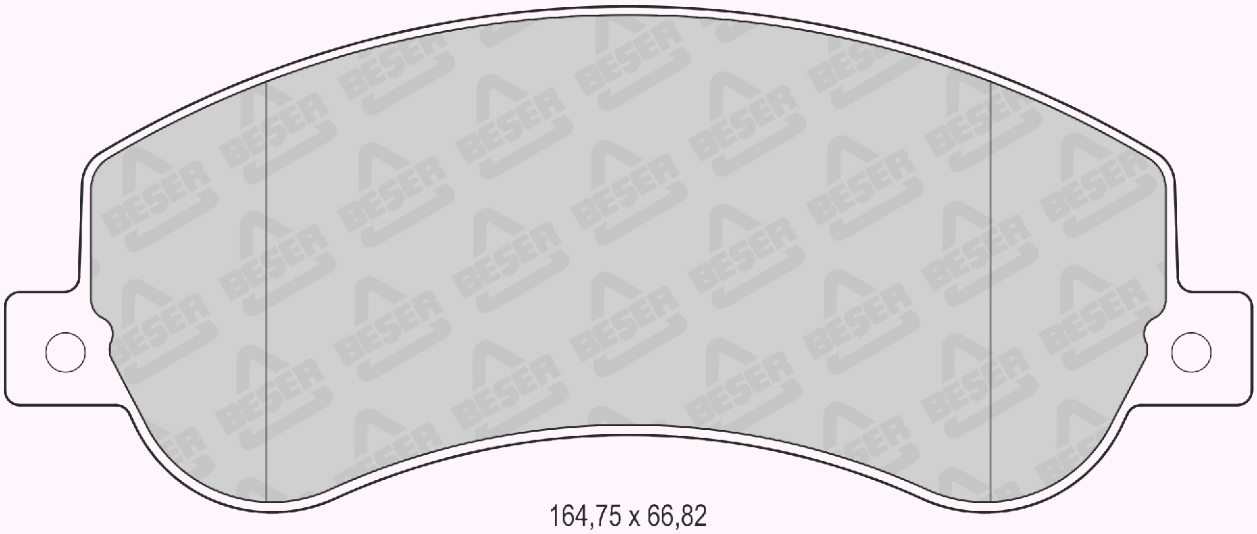

164,75 x 66,82

REFERENCE	T(mm)	REMARKS	MAKE	F/R	WVA No
3907	17	2 PADS WITH WEAR SENSOR	FORD	R	24486

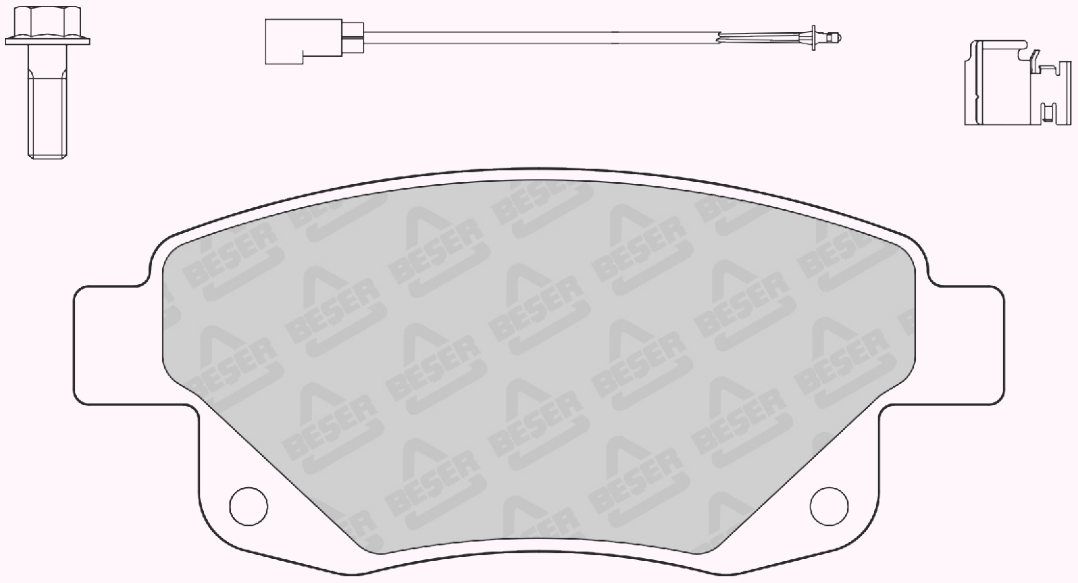

122,8 x 53,68

REFERENCE	T(mm)	REMARKS	MAKE	F/R	WVA No
3907/1	17	4 PADS PLAIN	FORD	R	24486

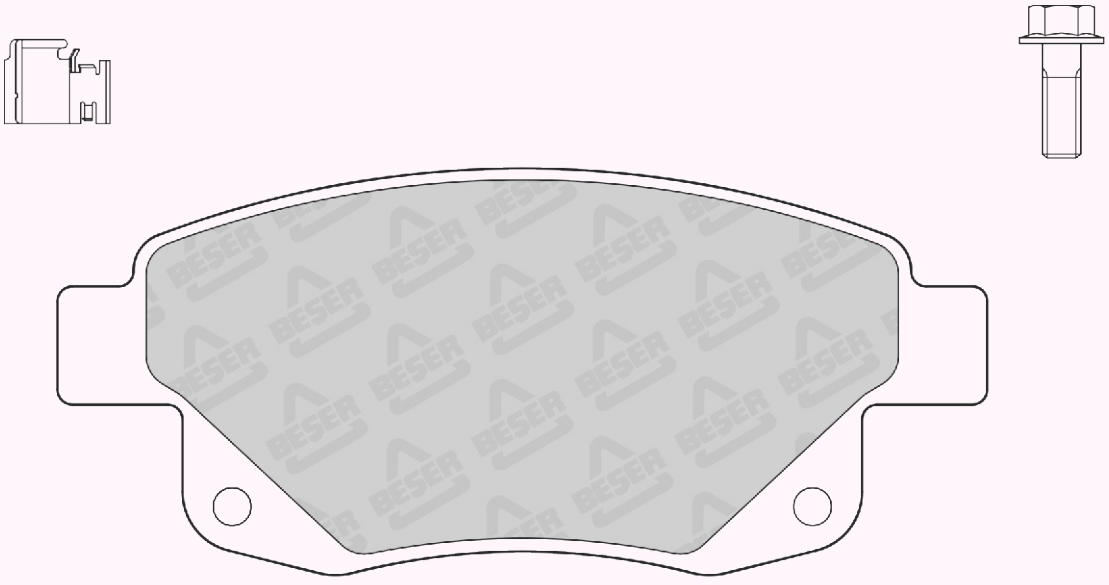

122,8 x 53,68

REFERENCE	T(mm)	REMARKS	MAKE	F/R	WVA No
3907/2	17	1 PAD WITH WEAR SENSOR	FORD	R	24486

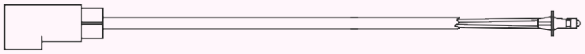

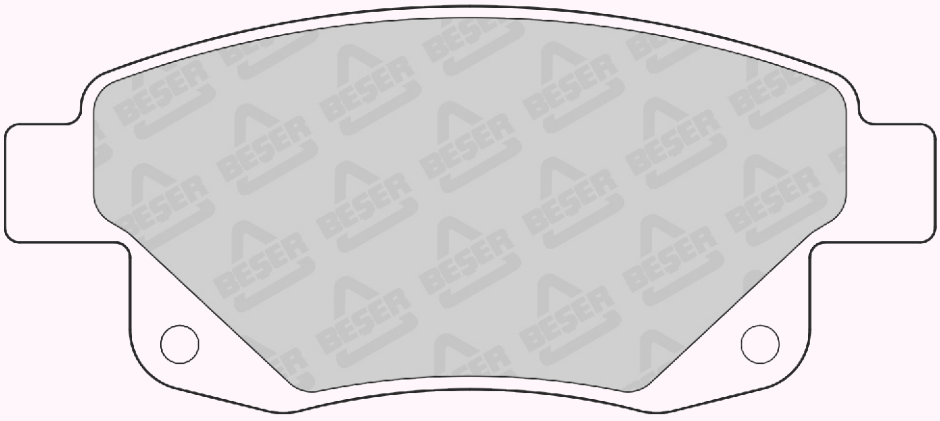

122,8 x 53,68

REFERENCE	T(mm)	REMARKS	MAKE	F/R	WVA No
3907/1A	17	4 PADS PLAIN	FORD	R	24486

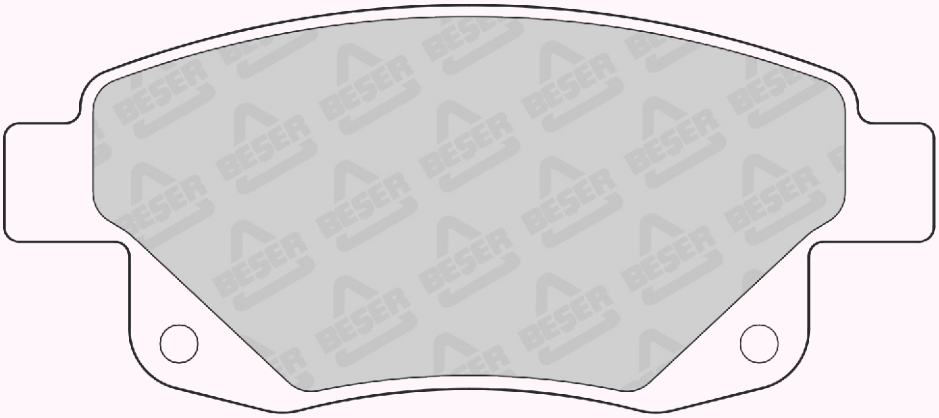

122,8 x 53,68

REFERENCE	T(mm)	REMARKS	MAKE	F/R	WVA No
3909	16.7	4 PADS PLAIN	BMW - HONDA	F	21471

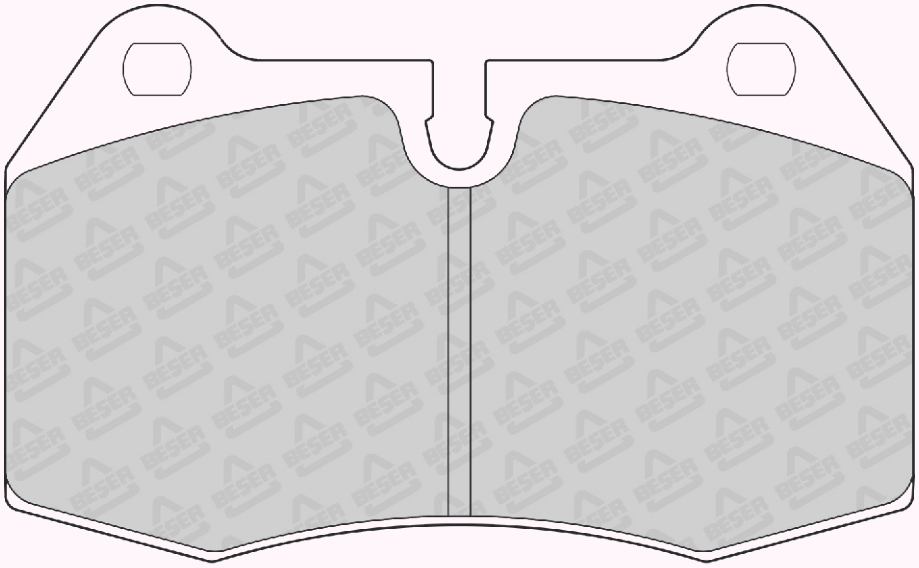

120 x 73,7

REFERENCE	T(mm)	REMARKS	MAKE	F/R	WVA No
3910	17.3	4 PADS PLAIN	HONGQI - TOYOTA	F	23806 23928

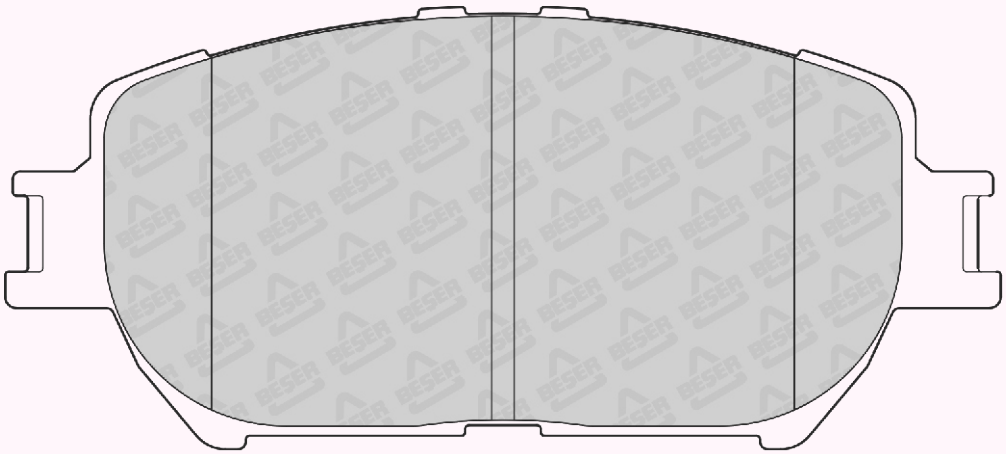

131,5 x 58,4

REFERENCE	T(mm)	REMARKS	MAKE	F/R	WVA No
3911	15.9	4 PADS PLAIN	CHERY - LEXUS RELY - TOYOTA	R	23702

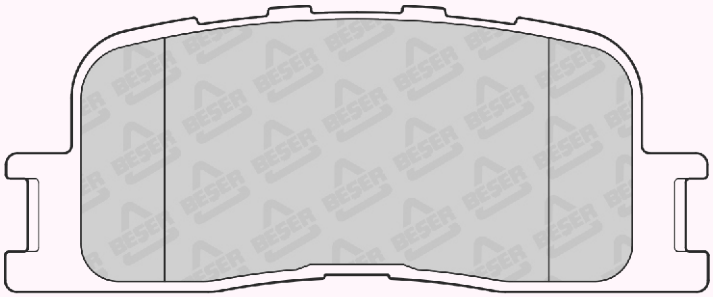

92,8 x 37,85

REFERENCE	T(mm)	REMARKS	MAKE	F/R	WVA No
3912	16.4	2 PADS WITH WEAR SENSOR	SUBARU	F	23865 23866 23867

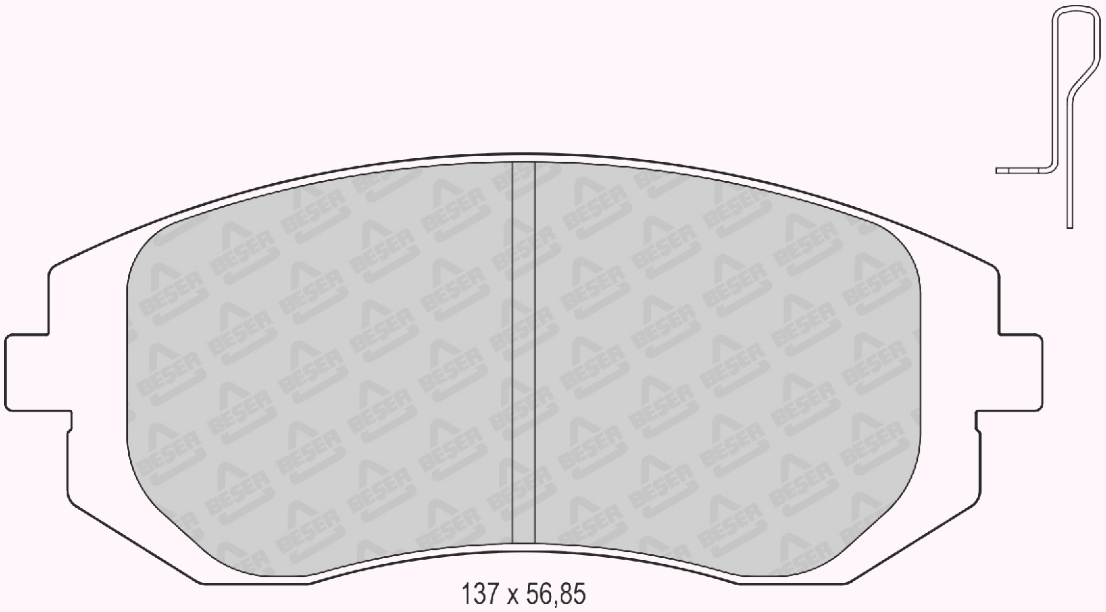

137 x 56,85

REFERENCE	T(mm)	REMARKS	MAKE	F/R	WVA No
3913	14	2 PADS WITH WEAR SENSOR	SUBARU	R	23572 23573 23574

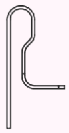

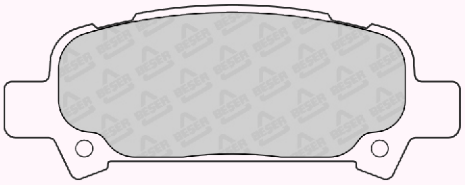

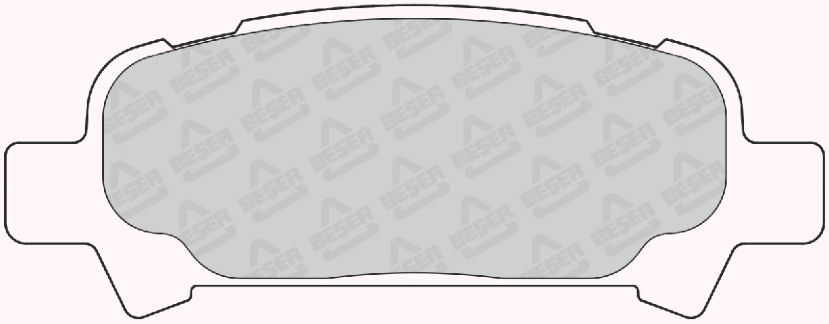

108,15 x 41,3

REFERENCE	T(mm)	REMARKS	MAKE	F/R	WVA No
3914	20	4 PADS PLAIN	CITROEN - FIAT PEUGEOT	R	23860 23921

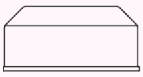

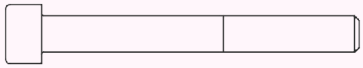

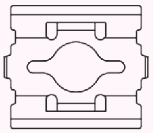

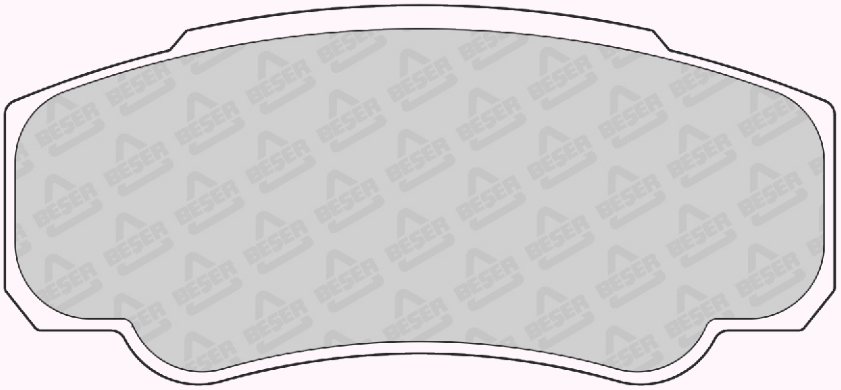

109,7 x 50

REFERENCE	T(mm)	REMARKS	MAKE	F/R	WVA No
3914/1	20	4 PADS PLAIN	CITROEN - FIAT PEUGEOT	R	23860 23921

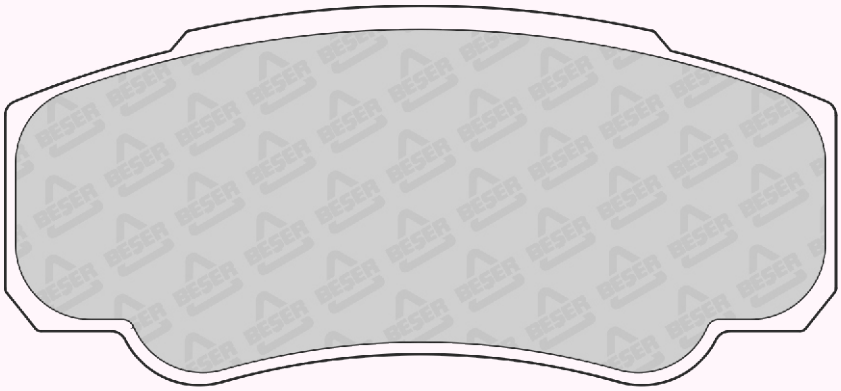

109,7 x 50

REFERENCE	T(mm)	REMARKS	MAKE	F/R	WVA No
3915	17	2 PADS WITH WEAR SENSOR	LEXUS - TOYOTA	F	21490 23848 21788 23849 21789

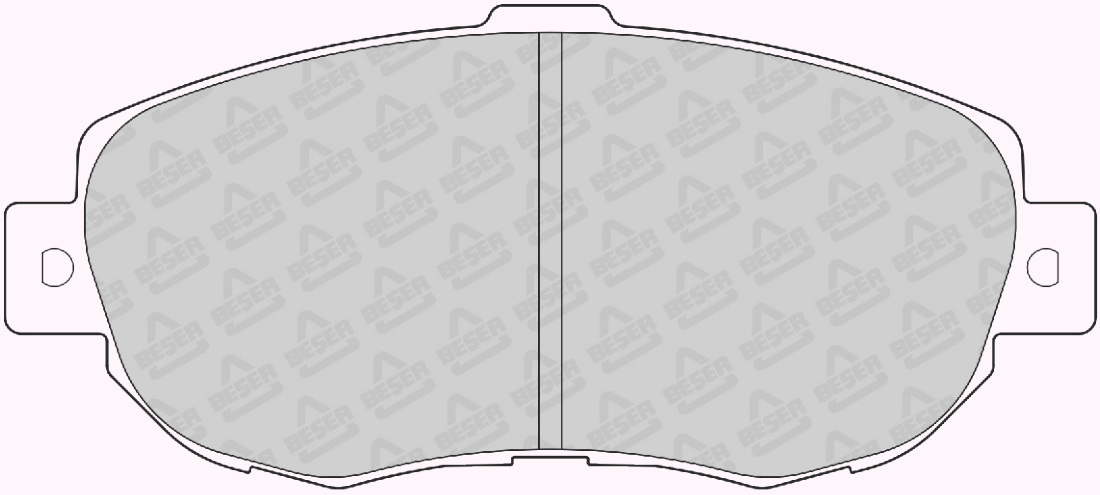

144 x 63,7

REFERENCE	T(mm)	REMARKS	MAKE	F/R	WVA No
3916	15.6	2 PADS WITH WEAR SENSOR	MITSUBISHI	R	25309 25310

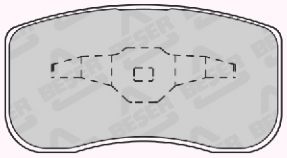

94,1 x 50,3
(NOT SCALE)

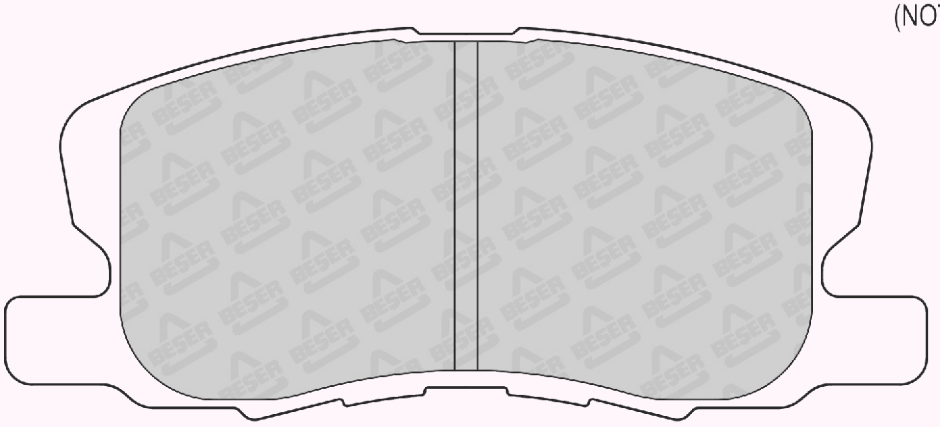

121,8 x 51,9

REFERENCE	T(mm)	REMARKS	MAKE	F/R	WVA No
3918	17.3	2 PADS RIGHT & 2 PADS LEFT	VOLVO	R	23075 23076 23077

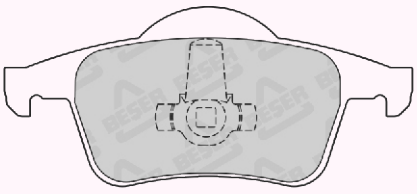

122,5 x 53,84
(NOT SCALE)

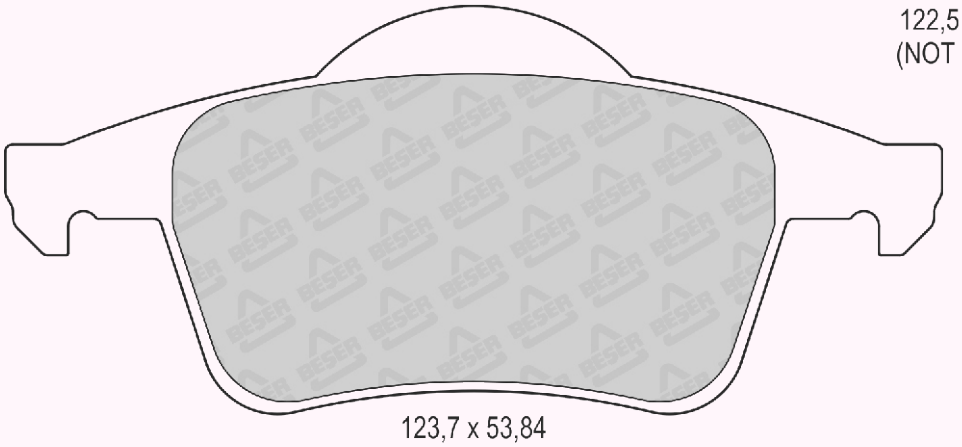

123,7 x 53,84

REFERENCE	T(mm)	REMARKS	MAKE	F/R	WVA No
3919	18.5	2 PADS RIGHT & 2 PADS LEFT	VOLVO	F	23072 23464 23073 23465 23074 23466

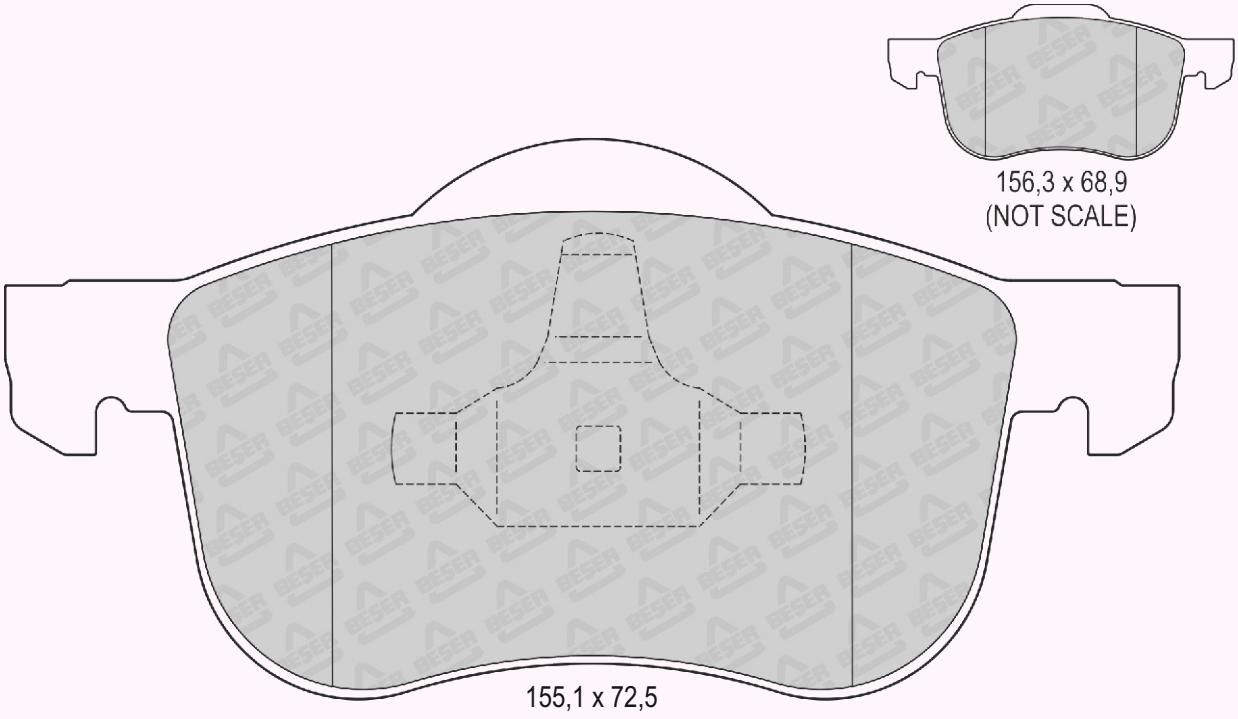

REFERENCE	T(mm)	REMARKS	MAKE	F/R	WVA No
3920	18.8	2 PADS WITH WEAR SENSOR	FORD	F	24485

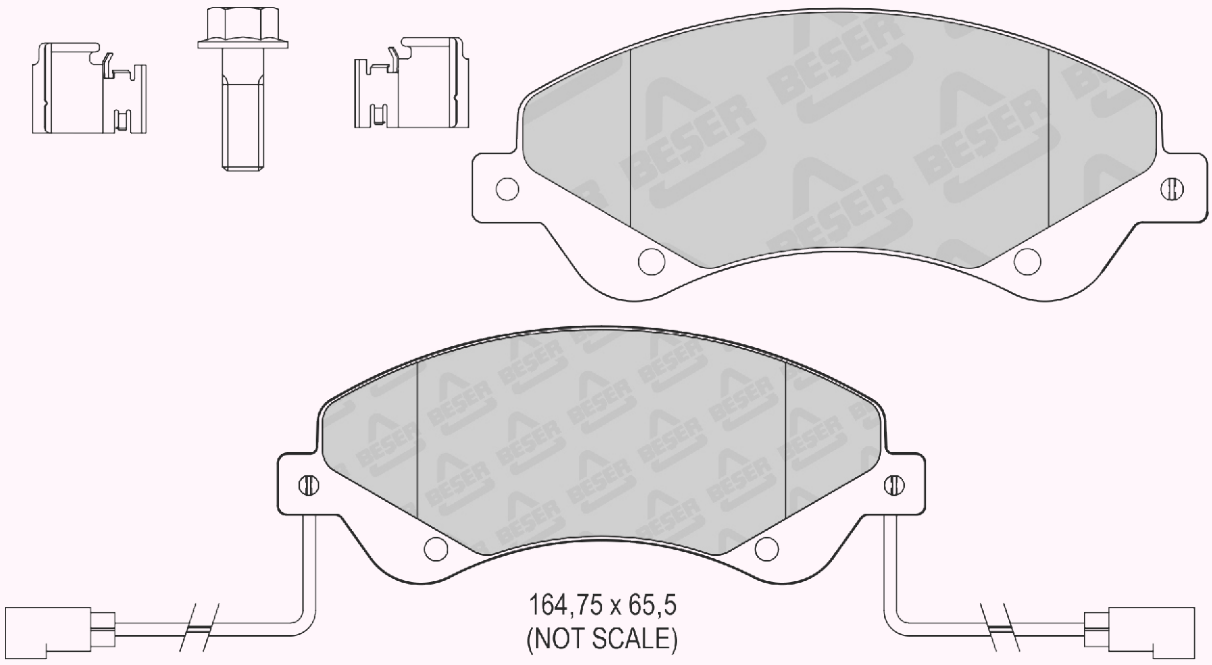

REFERENCE	T(mm)	REMARKS	MAKE	F/R	WVA No
3920/1	18.8	2 PADS WITH WEAR SENSOR	FORD	F	24485

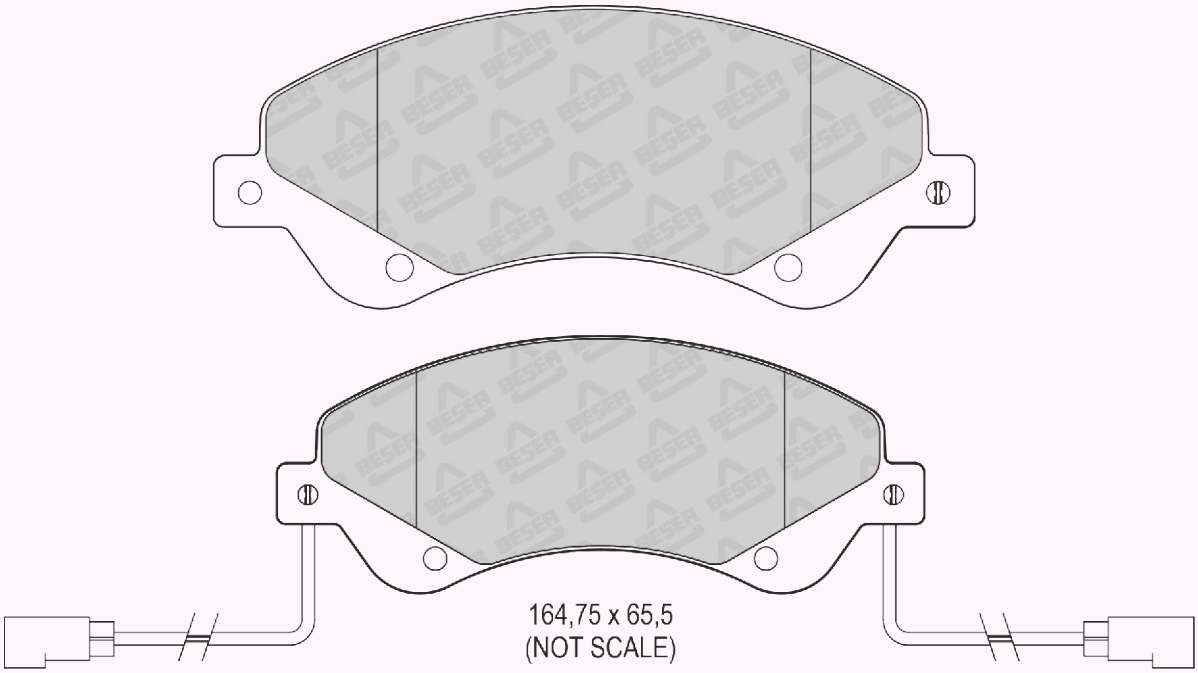

REFERENCE	T(mm)	REMARKS	MAKE	F/R	WVA No
3921	18.15	2 PADS WITH WEAR SENSOR	FORD	F	23434 23437 23435 23840 23436 23841

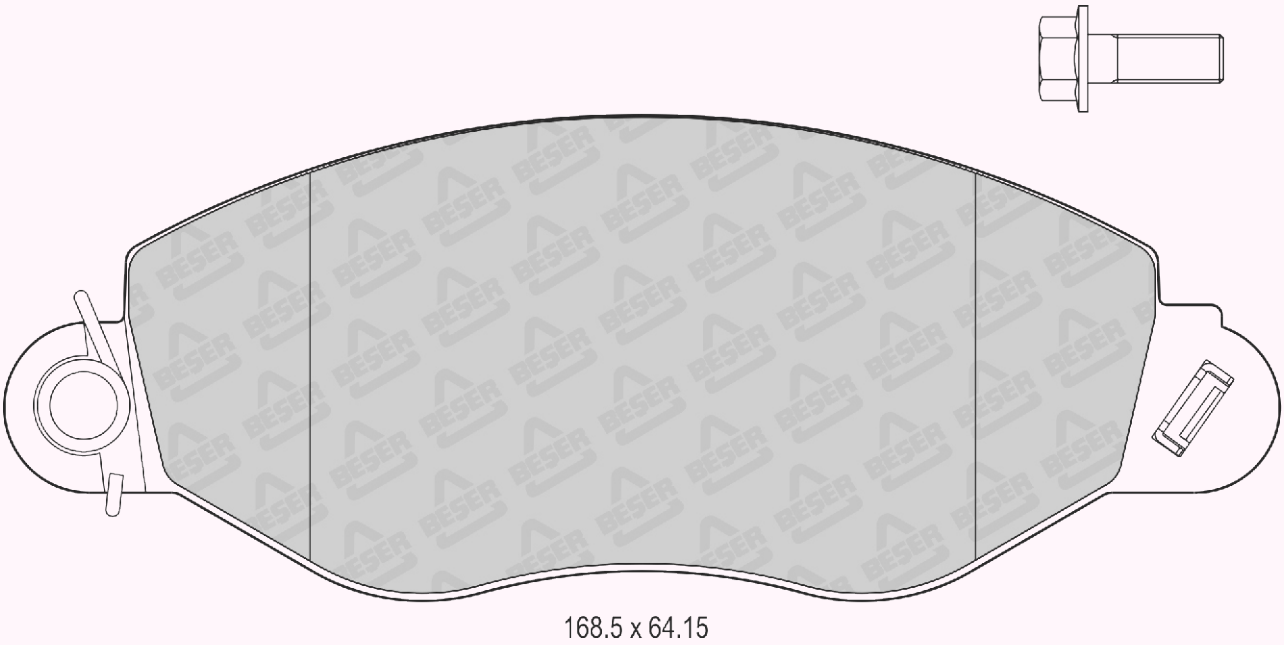

REFERENCE	T(mm)	REMARKS	MAKE	F/R	WVA No
3922	19.1	1 PAD WITH WEAR SENSOR	FIAT - CITROEN PEUGEOT	F	24466 24467

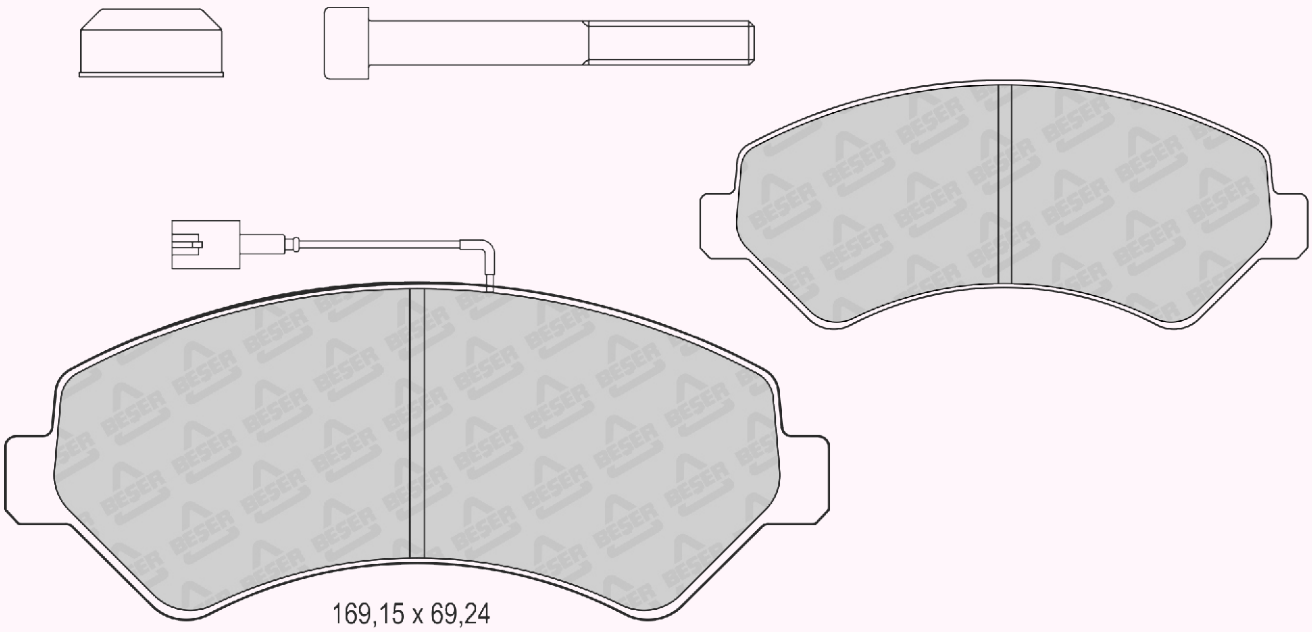

REFERENCE	T(mm)	REMARKS	MAKE	F/R	WVA No
3922/1	19.1	4 PADS PLAIN	CITROEN - FIAT RENAULT	F	24466

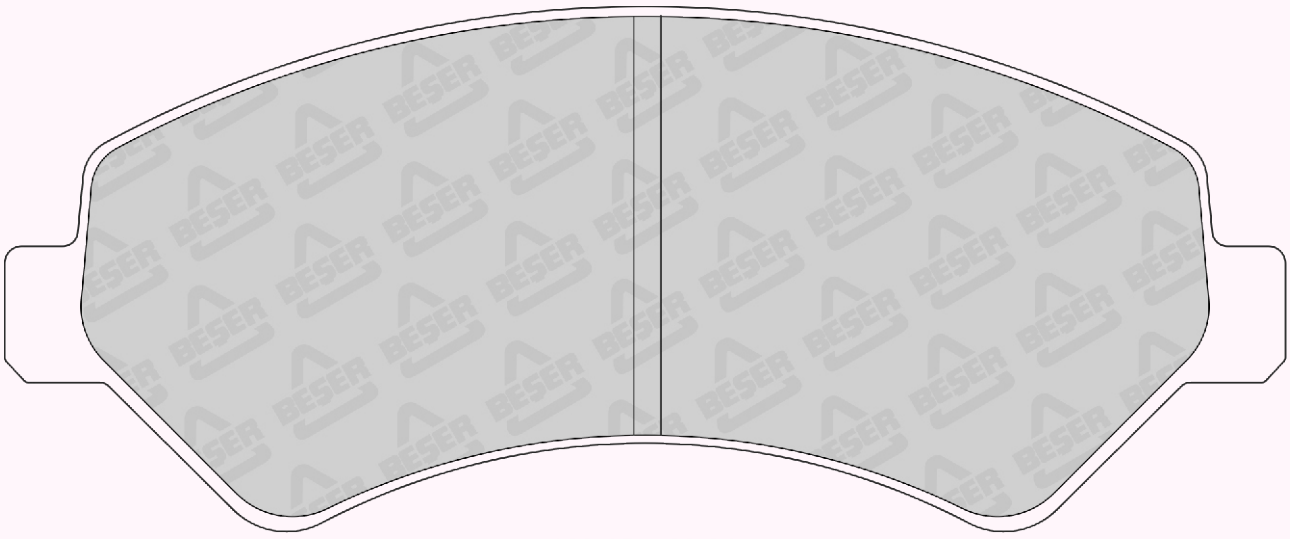

REFERENCE	T(mm)	REMARKS	MAKE	F/R	WVA No
3922/2	19,1	1 PAD WITH WEAR SENSOR	CITROEN - FIAT PEUGEOT	F	24466

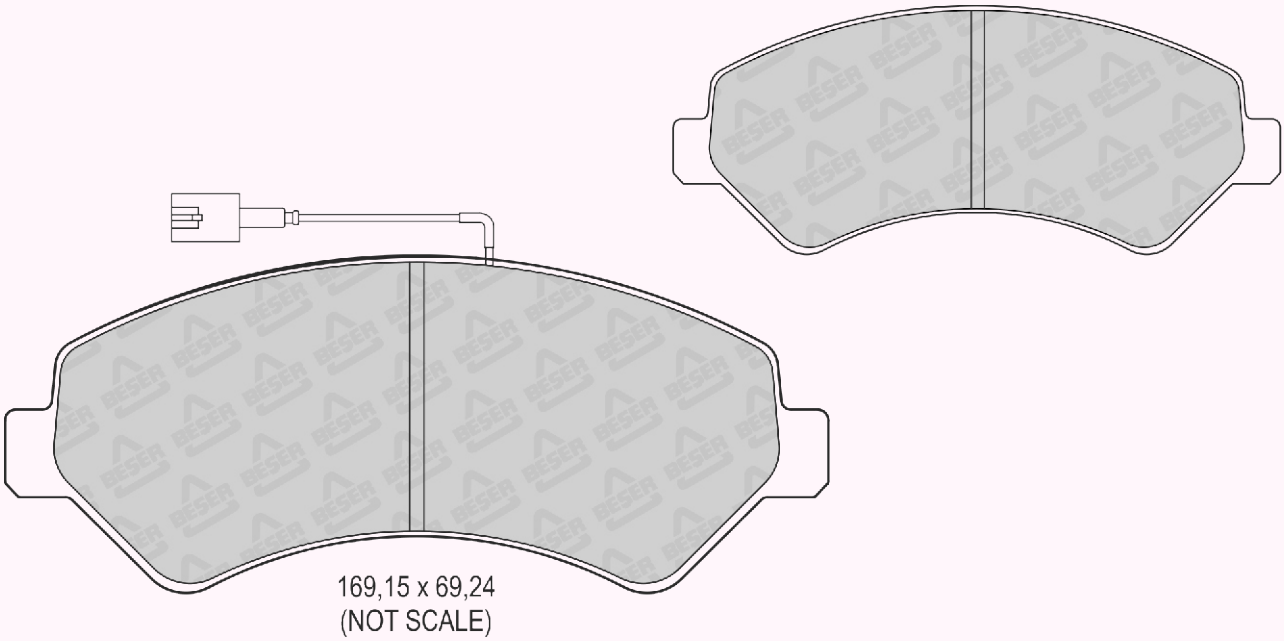

REFERENCE	T(mm)	REMARKS	MAKE	F/R	WVA No
3922/3	19,1	2 PADS WITH WEAR SENSOR	CITROEN - FIAT PEUGEOT	F	24466

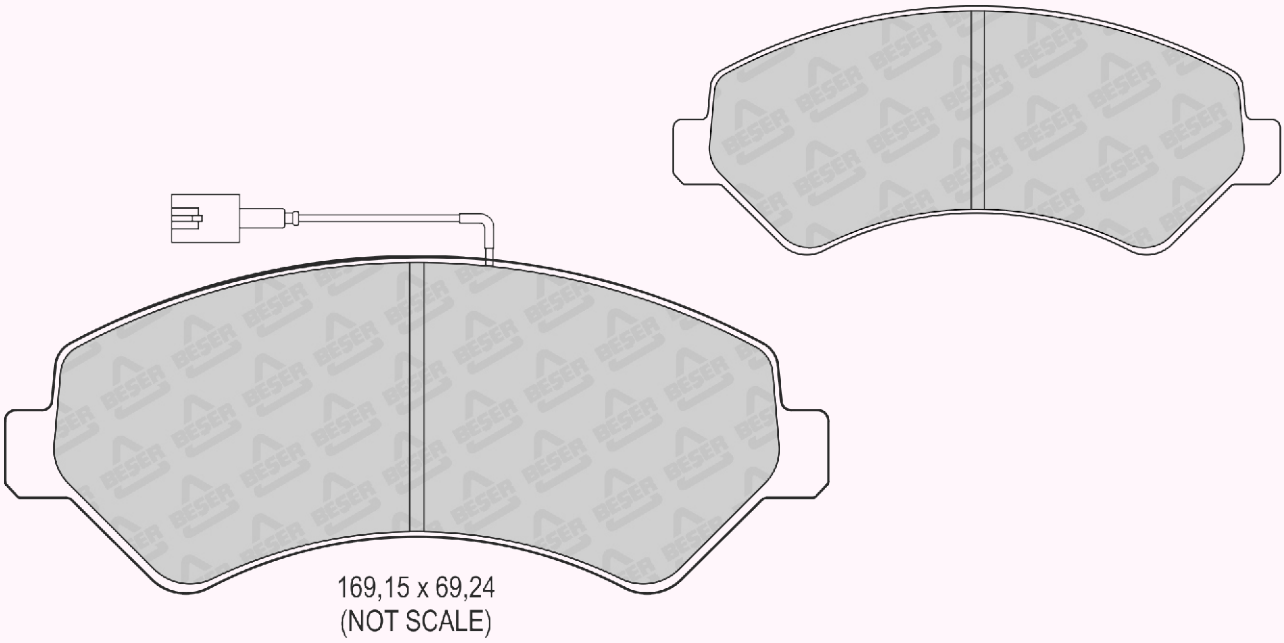

REFERENCE	T(mm)	REMARKS	MAKE	F/R	WVA No
3923	20.8	4 PADS PLAIN	MERCEDES	F	24007

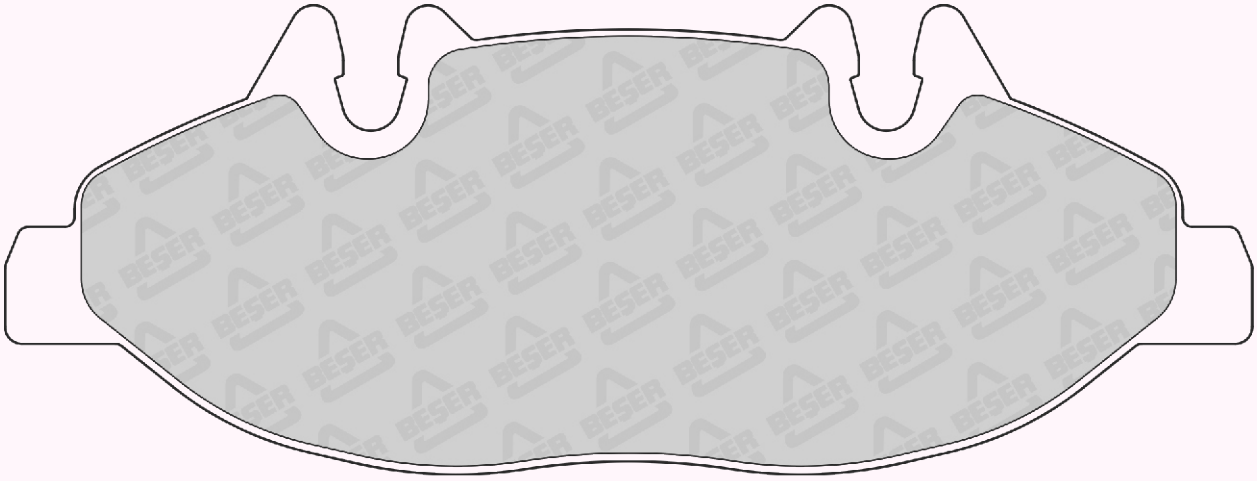

164.85 x 61.92

REFERENCE	T(mm)	REMARKS	MAKE	F/R	WVA No
3923/1	20,8	2 PADS WITH WEAR SENSOR	MERCEDES	F	24007

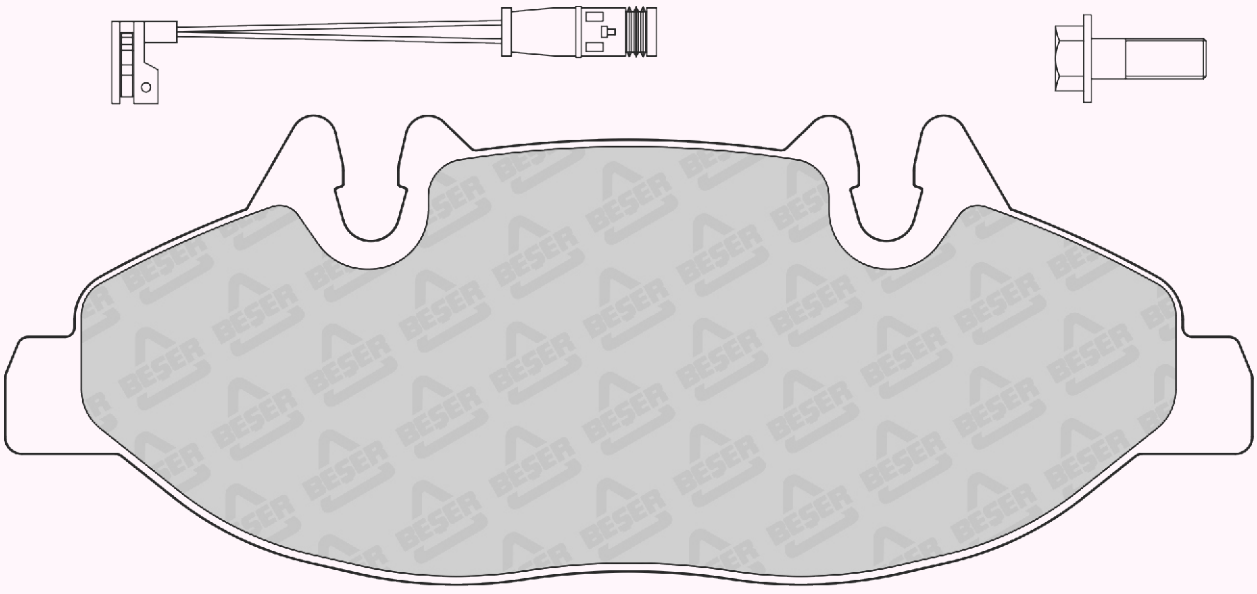

164.85 x 61.92

REFERENCE	T(mm)	REMARKS	MAKE	F/R	WVA No
3924	18.3	4 PADS PLAIN	MERCEDES	R	24008

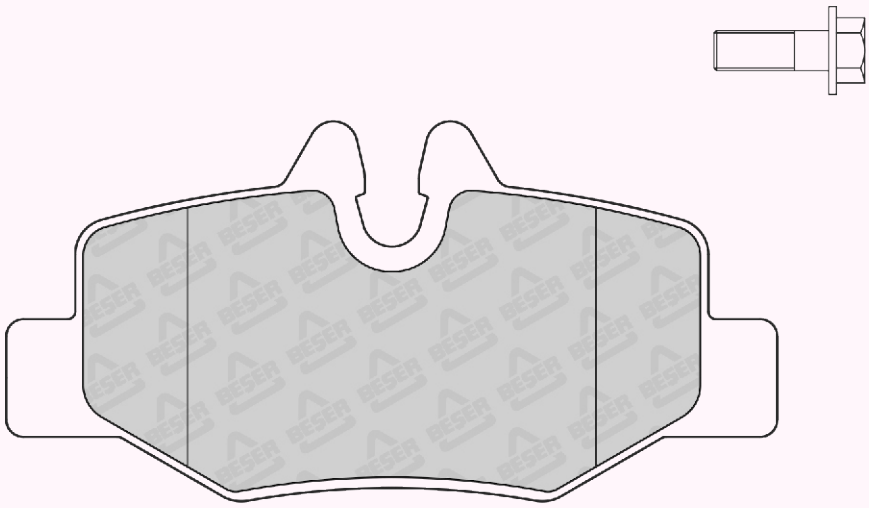

101.9 x 50.2

REFERENCE	T(mm)	REMARKS	MAKE	F/R	WVA No
3924/1	18.3	2 PADS WITH WEAR SENSOR	MERCEDES	R	24008

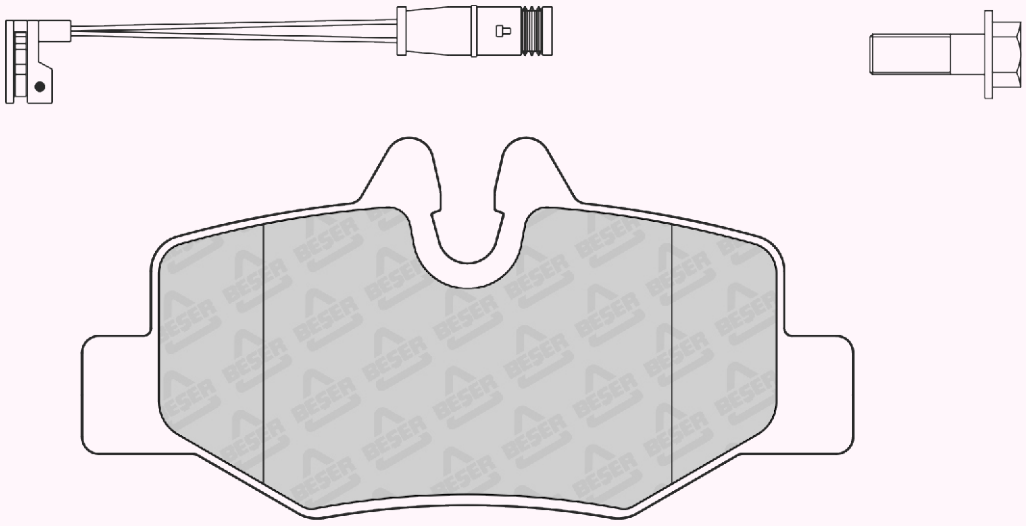

101.9 x 50.2

REFERENCE	T(mm)	REMARKS	MAKE	F/R	WVA No
3925	20.8	4 PADS PLAIN	MERCEDES - BENZ VW	F	29192

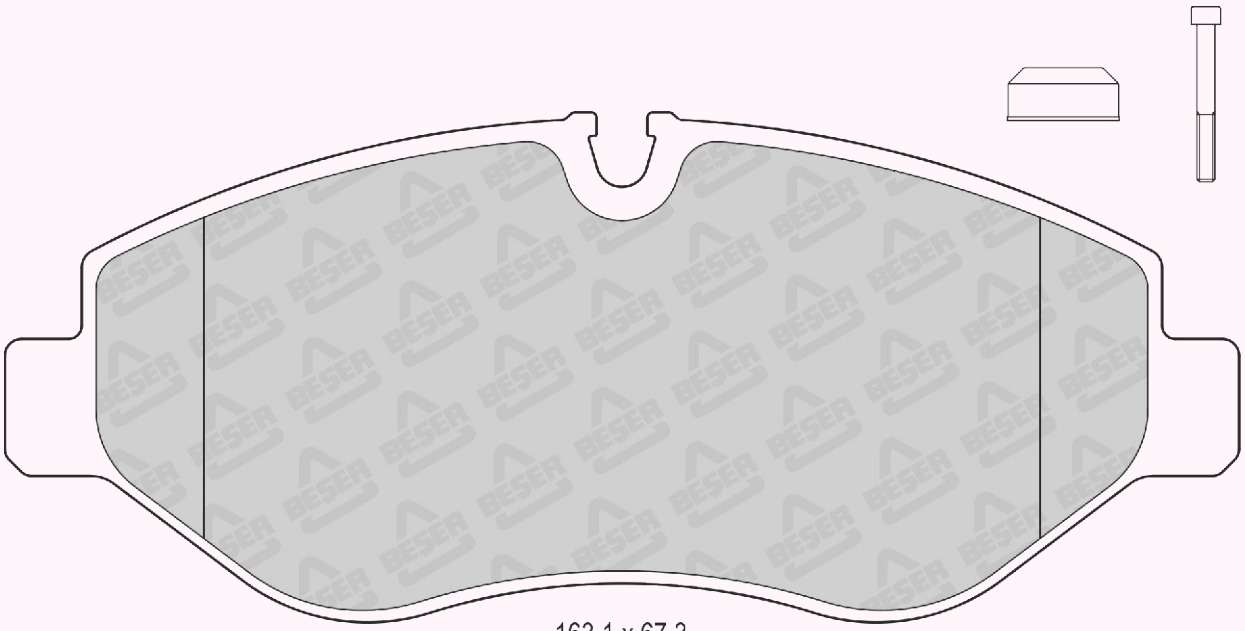

163,1 x 67,3

REFERENCE	T(mm)	REMARKS	MAKE	F/R	WVA No
3925/2	20,8	2 PADS WITH WEAR SENSOR	MERCEDES - BENZ VW	F	29192

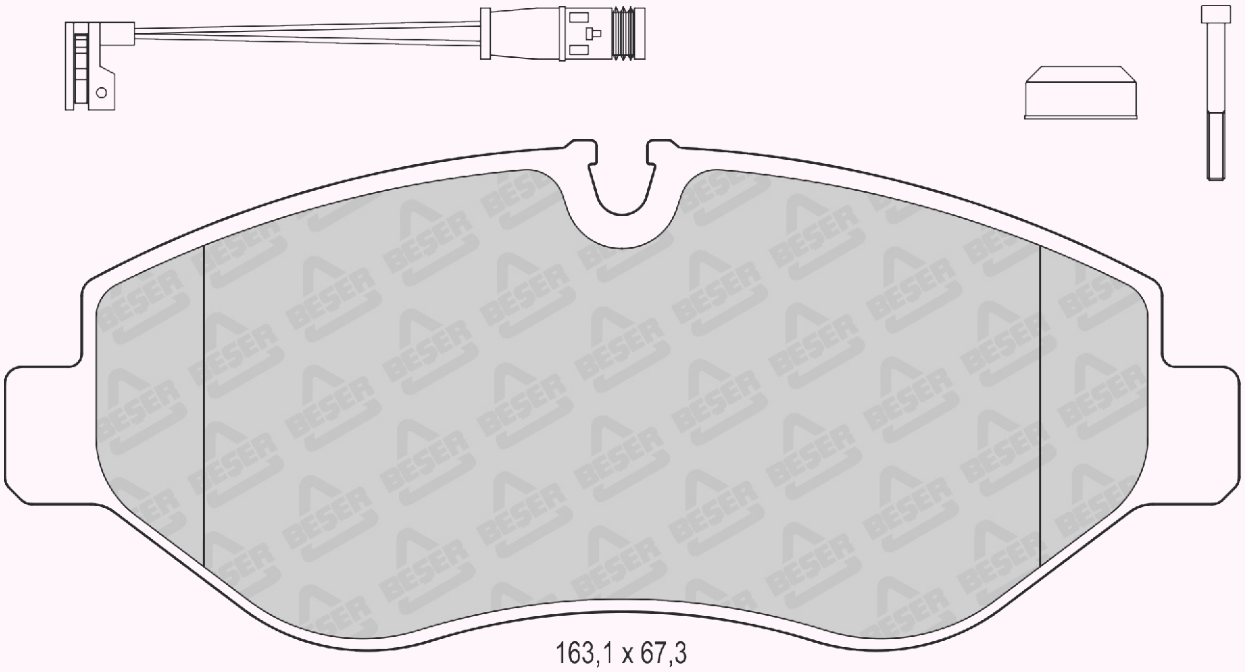

163,1 x 67,3

REFERENCE	T(mm)	REMARKS	MAKE	F/R	WVA No
3926	19,75	4 PADS PLAIN	MERCEDES - BENZ VW	R	29190

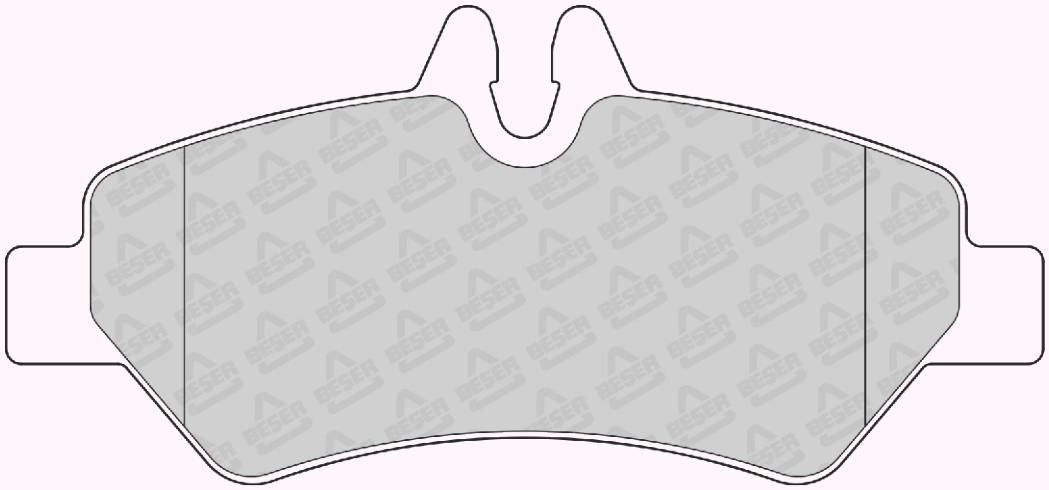

137 x 63

REFERENCE	T(mm)	REMARKS	MAKE	F/R	WVA No
3926/1	19,75	2 PADS WITH WEAR SENSOR	MERCEDES - BENZ VW	R	29190

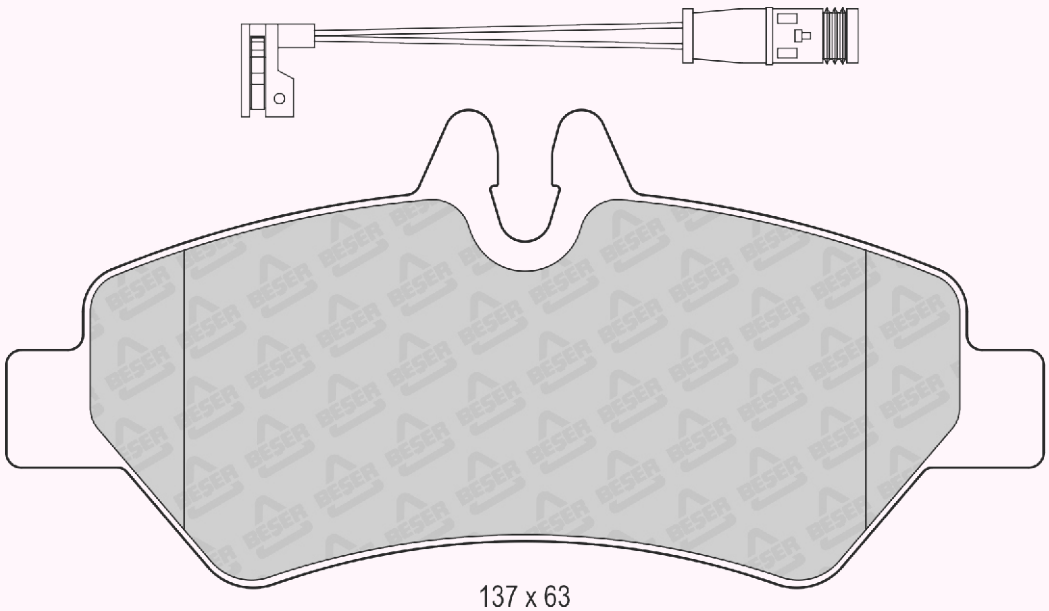

137 x 63

REFERENCE	T(mm)	REMARKS	MAKE	F/R	WVA No
3927	14	4 PADS PLAIN	TOYOTA	F	25060

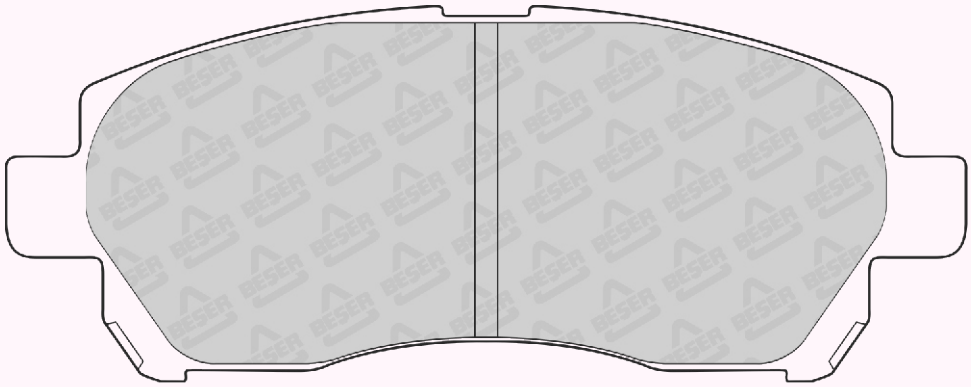

126,85 x 49,47

REFERENCE	T(mm)	REMARKS	MAKE	F/R	WVA No
3928	15	2 PADS WITH WEAR SENSOR	CHEVROLET - DAIHATSU - HOLDEN PERODUA - SUBARU - SUZUKI TOYOTA	F	23507 23508 23509

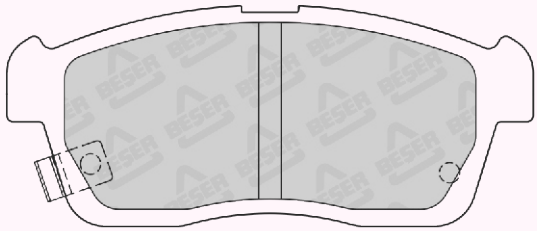

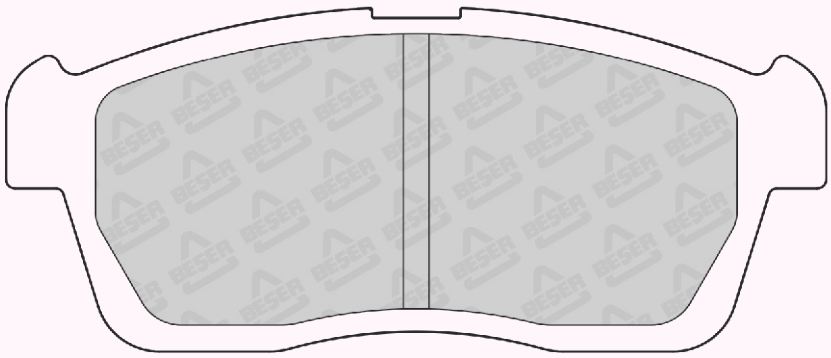

108.4 x 45.33

REFERENCE	T(mm)	REMARKS	MAKE	F/R	WVA No
3929	17	4 PADS PLAIN	SUZUKI	F	24346

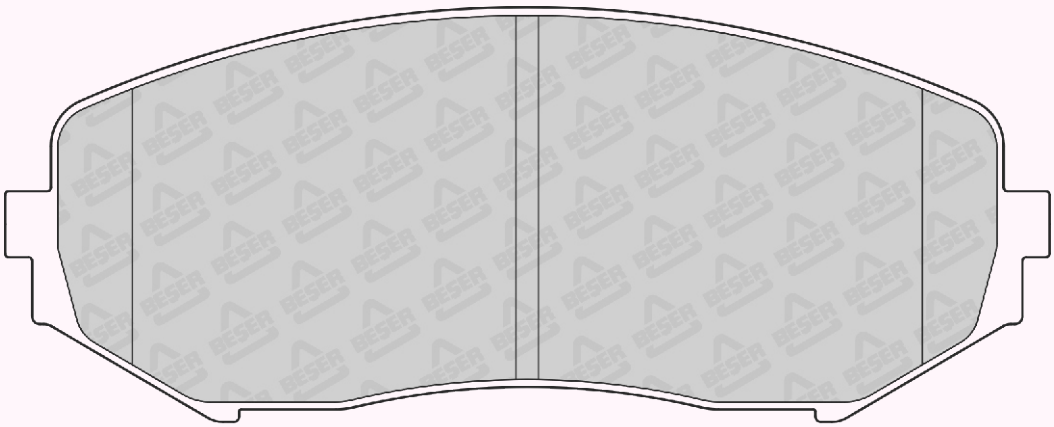

138,05 x 54,7

REFERENCE	T(mm)	REMARKS	MAKE	F/R	WVA No
3930	20,0	4 PADS PLAIN	TOYOTA	F	23306

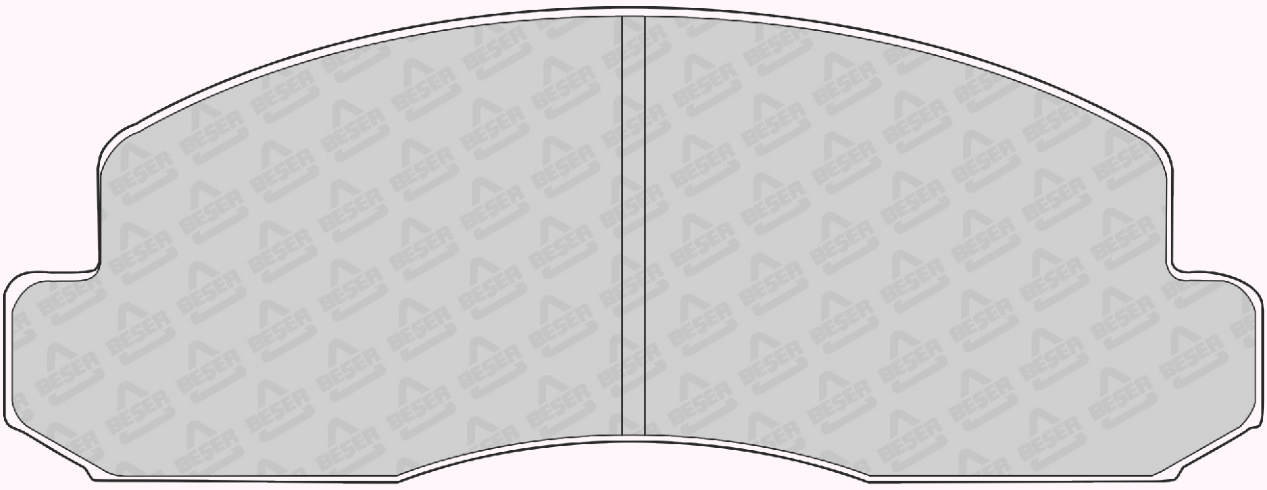

166,3 x 62,39

REFERENCE	T(mm)	REMARKS	MAKE	F/R	WVA No
3931	19	4 PADS PLAIN	CITROEN	F	23409

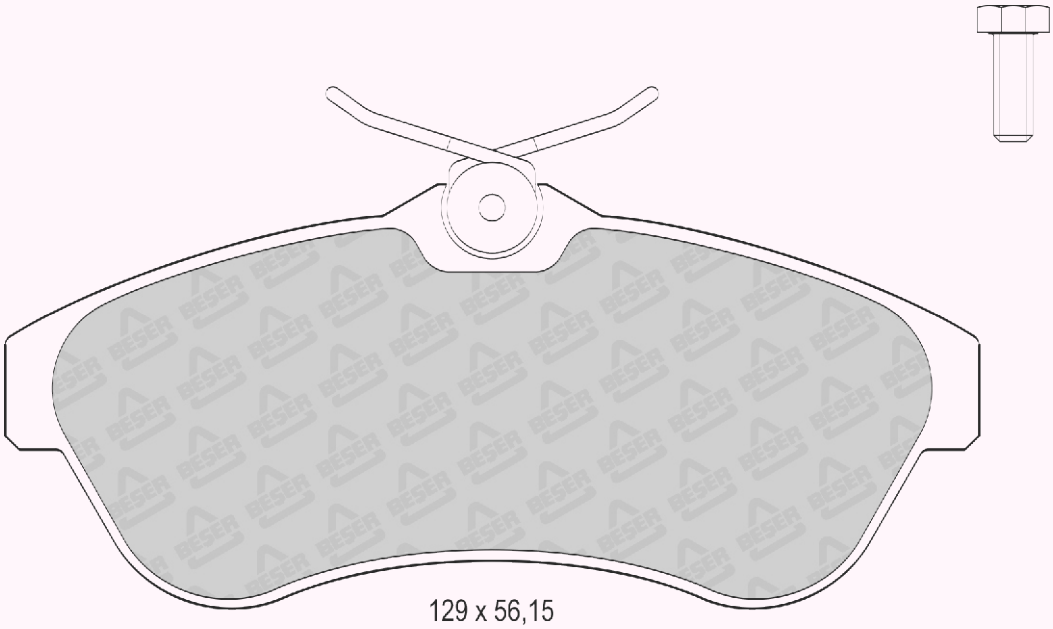

129 x 56,15

REFERENCE	T(mm)	REMARKS	MAKE	F/R	WVA No
3932	16,5	4 PADS WITH WEAR SENSOR	ACURA - NISSAN	F	23420 23421

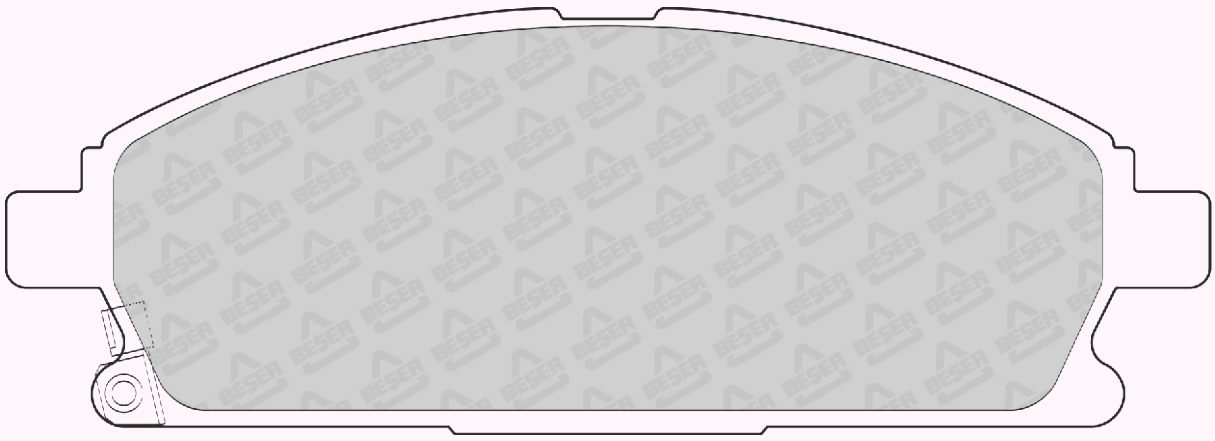

159 x 56,39

REFERENCE	T(mm)	REMARKS	MAKE	F/R	WVA No
3933	14,3	2 PADS WITH WEAR SENSOR	INFINITY - NISSAN - RENAULT SAMSUNG-SUZIKI	R	23814 23871 23872 24088

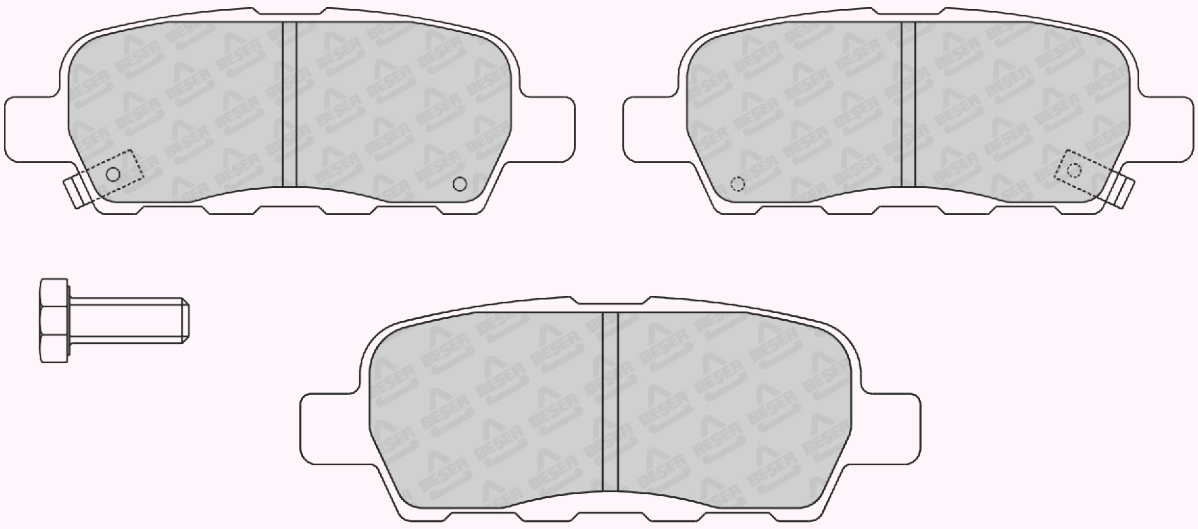

105,6 x 38,13
(NOT SCALE)

REFERENCE	T(mm)	REMARKS	MAKE	F/R	WVA No
3933/1	13,8	2 PADS WITH WEAR SENSOR	INFINITY - NISSAN - RENAULT SAMSUNG-SUZIKI	R	23871

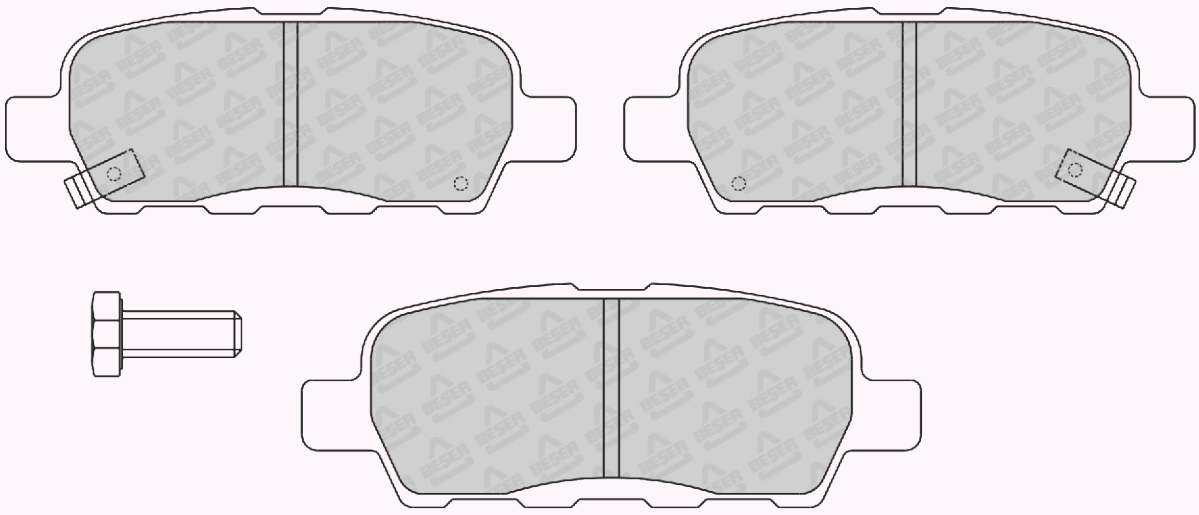

105,6 x 38,13
(NOT SCALE)

REFERENCE	T(mm)	REMARKS	MAKE	F/R	WVA No
3934	18	2 PADS WITH WEAR SENSOR	CITROEN	F	23273

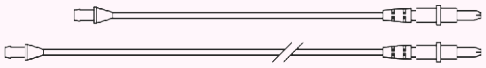

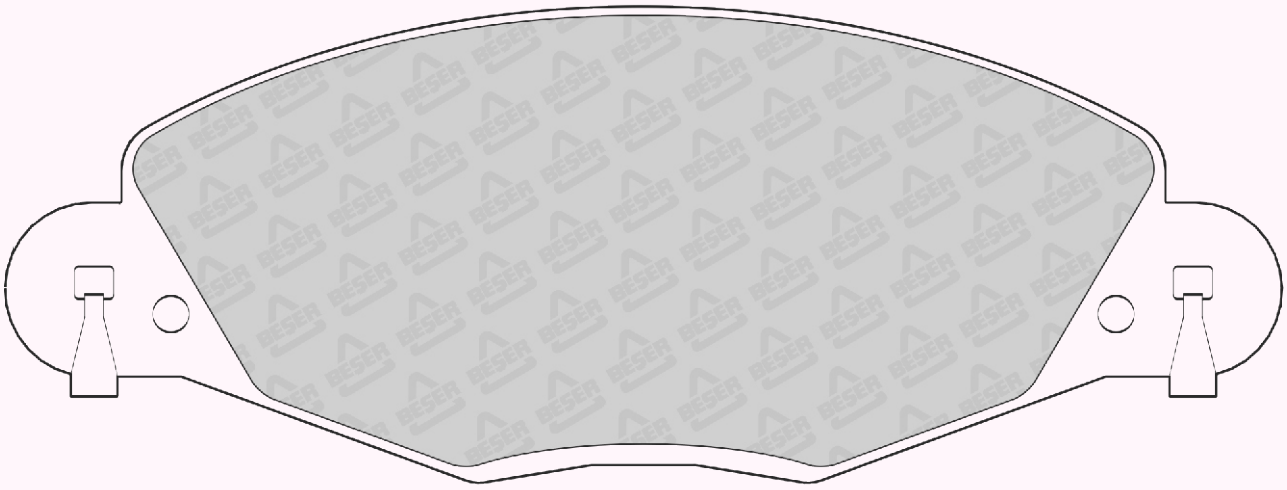

168,7 x 62,7

REFERENCE	T(mm)	REMARKS	MAKE	F/R	WVA No
3935	18	2 PADS WITH WEAR SENSOR	CITROEN	F	23277

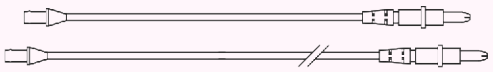

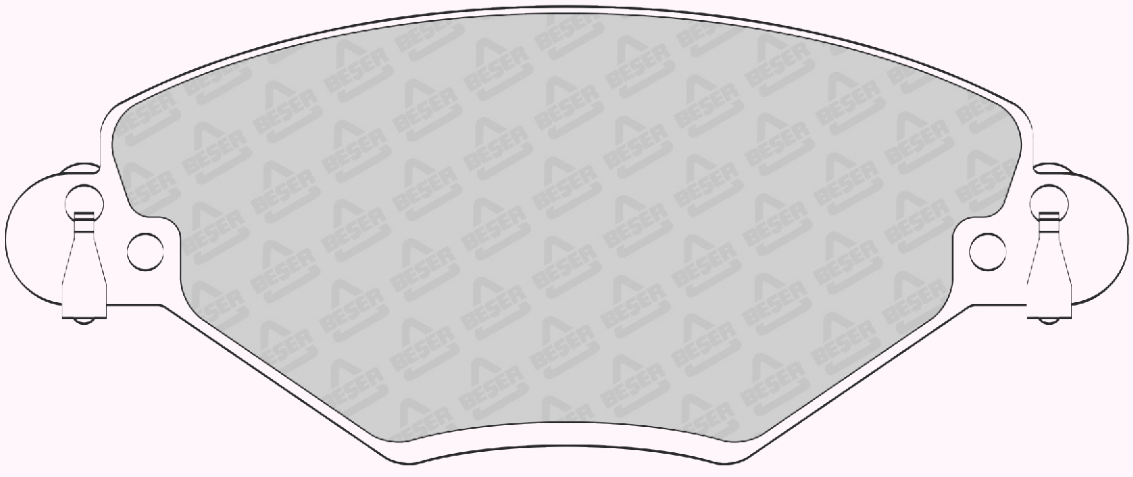

148,6 x 60,48

REFERENCE	T(mm)	REMARKS	MAKE	F/R	WVA No
3938	18	2 PADS WITH WEAR SENSOR	CITROEN - PEUGEOT	F	23205 23597 23598

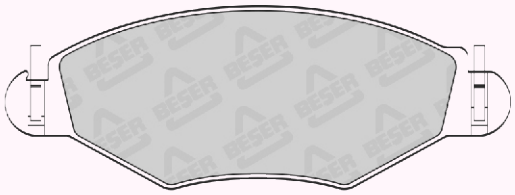

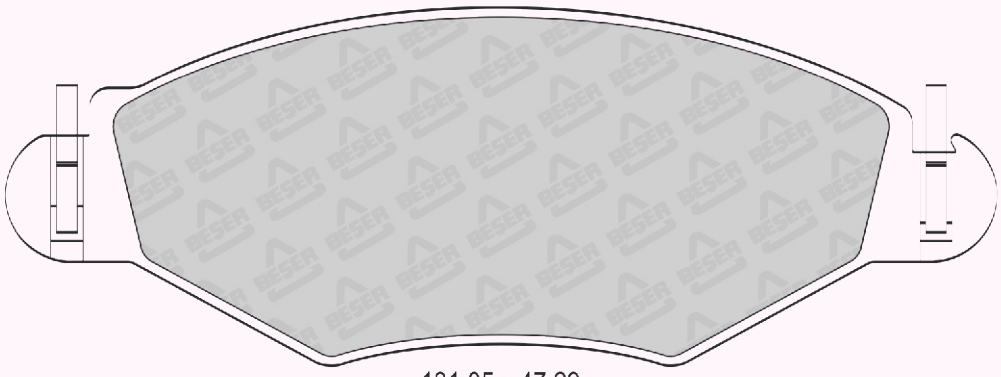

131,05 x 47,29

REFERENCE	T(mm)	REMARKS	MAKE	F/R	WVA No
3939	19,5	2 PADS WITH WEAR SENSOR (410 mm - 455 mm)	PEUGEOT	F	24134 24175

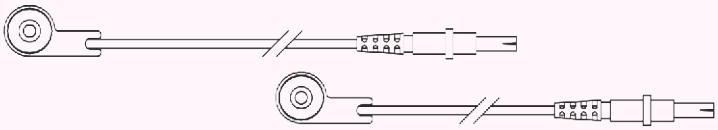

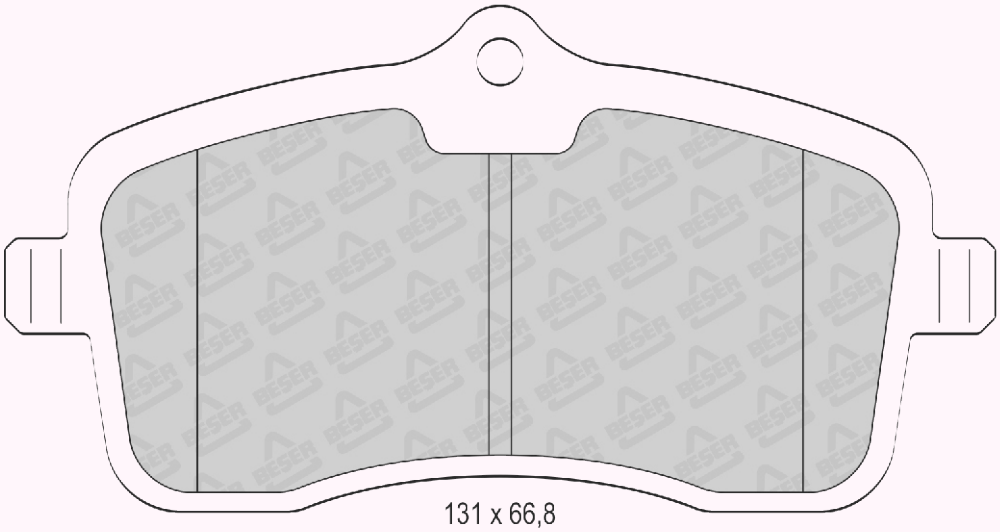

131 x 66,8

REFERENCE	T(mm)	REMARKS	MAKE	F/R	WVA No
3940	18	2 PADS WITH WEAR SENSOR (410 mm - 455 mm)	CITROËN - PEUGEOT	F	24133 24174

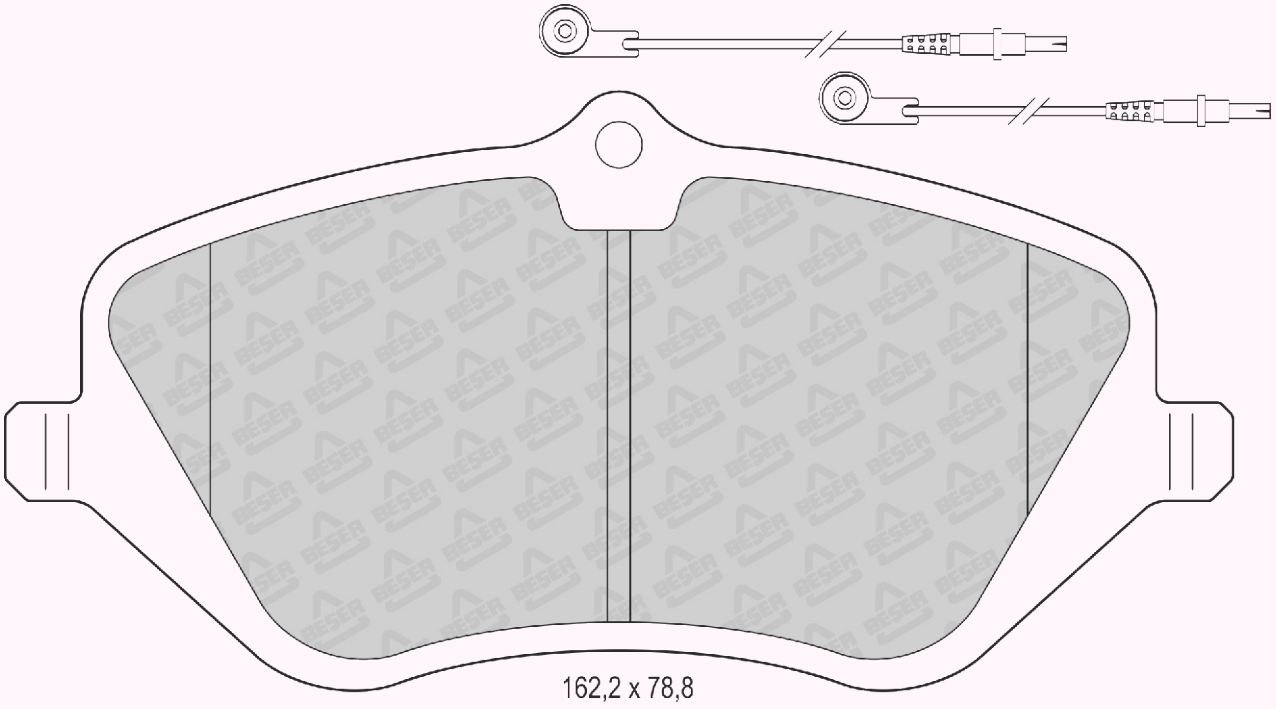

REFERENCE	T(mm)	REMARKS	MAKE	F/R	WVA No
3941	18,7	2 PADS WITH WEAR SENSOR	KARSAN	F	---

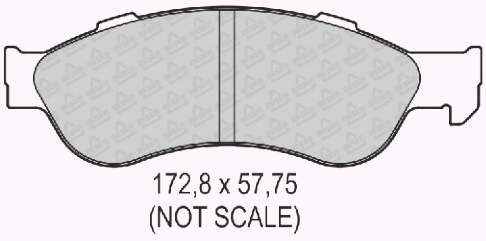

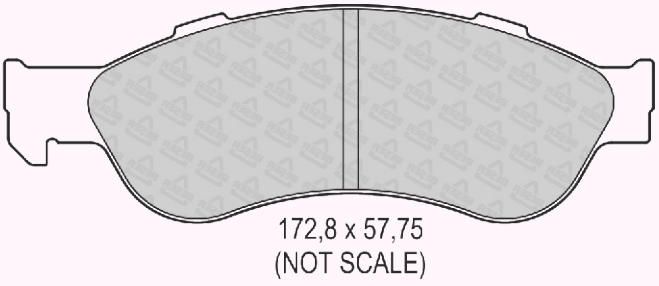

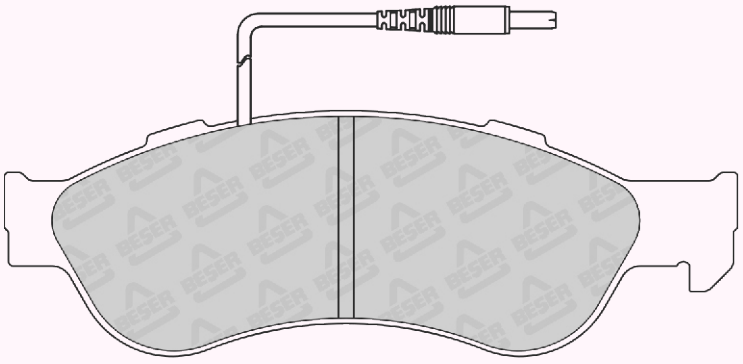

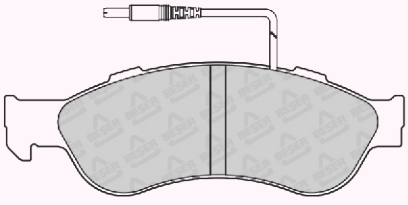

REFERENCE	T(mm)	REMARKS	MAKE	F/R	WVA No
3941/A	18,7	4 PADS PLAIN	KARSAN	F	---

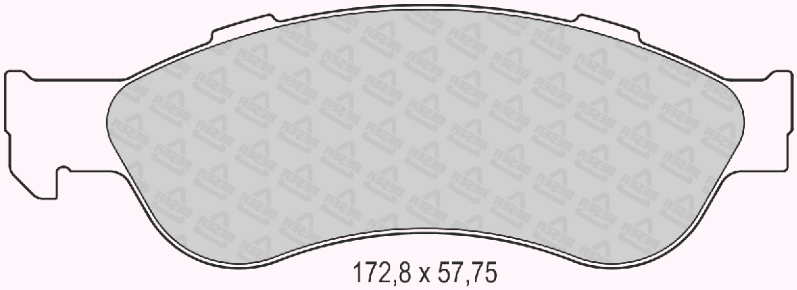

172,8 x 57,75
(NOT SCALE)

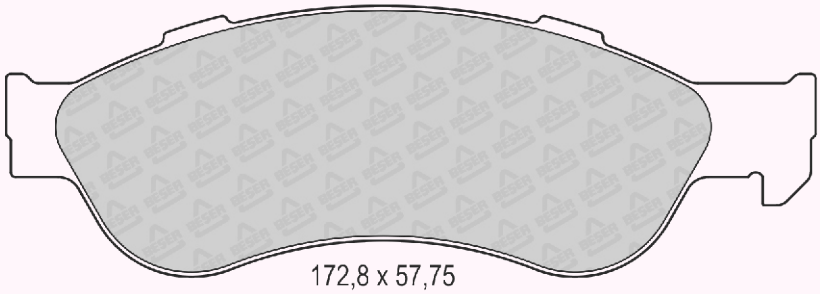

172,8 x 57,75
(NOT SCALE)

REFERENCE	T(mm)	REMARKS	MAKE	F/R	WVA No
3942	20	4 PADS PLAIN	IVECO - NISSAN RENAULT	F	29160 29161



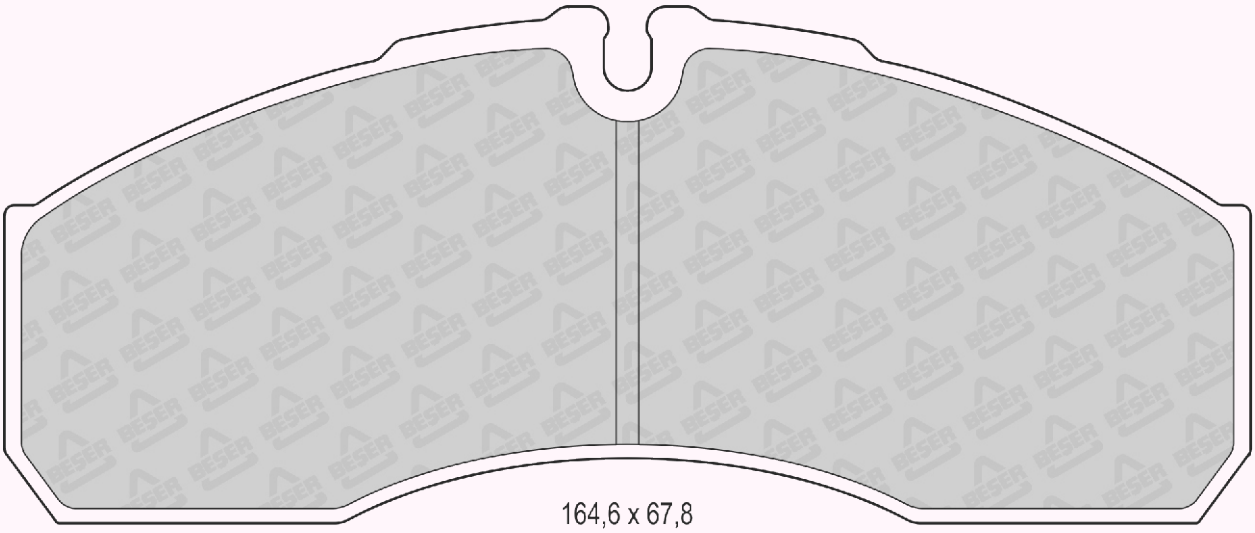

164,6 x 67,8

REFERENCE	T(mm)	REMARKS	MAKE	F/R	WVA No
3942/A	20	4 PADS PLAIN	IVECO - NISSAN RENAULT	F	29160 29161

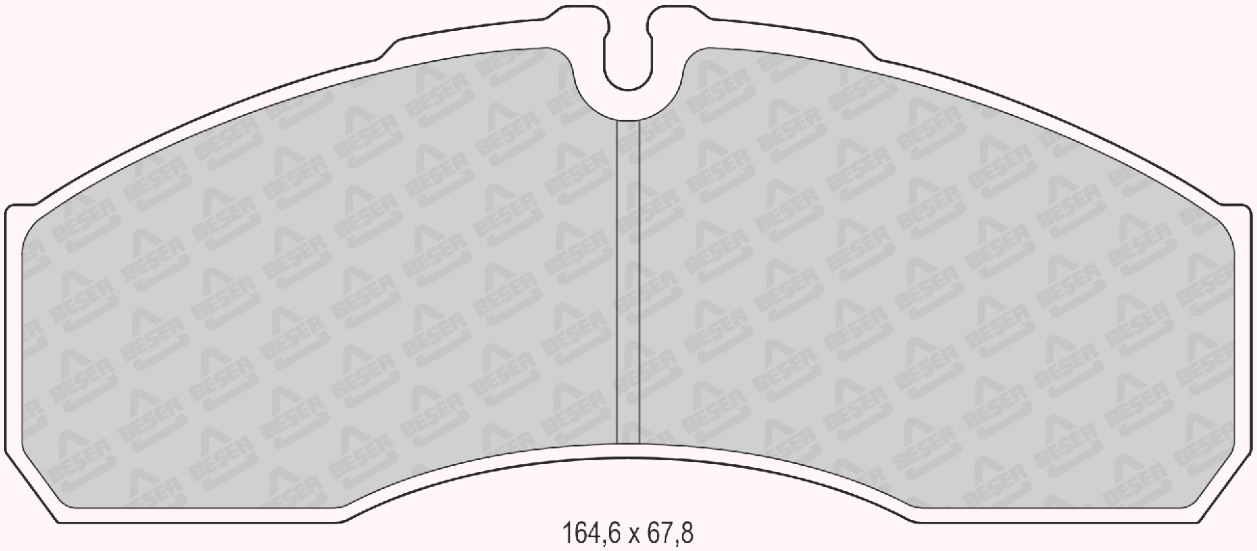

164,6 x 67,8

REFERENCE	T(mm)	REMARKS	MAKE	F/R	WVA No
3943	18,5	2 PADS RIGHT & 2 PADS LEFT	MG - ROEWE(SAIC) ROVER	F	23112 23113 23114

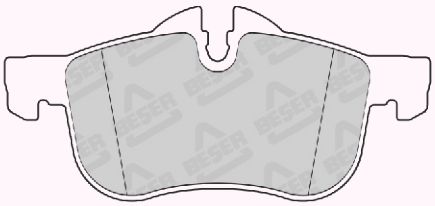

155,3 x 70,05
(NOT SCALE)

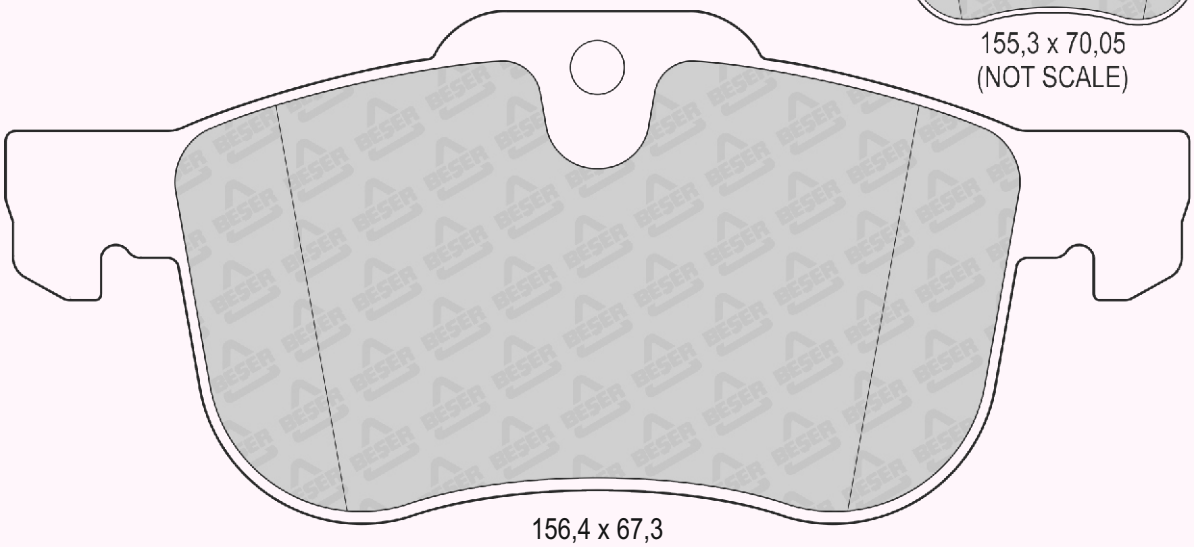

156,4 x 67,3

REFERENCE	T(mm)	REMARKS	MAKE	F/R	WVA No
3944	17,4	4 PADS PLAIN	LAND ROVER	R	24192

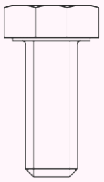

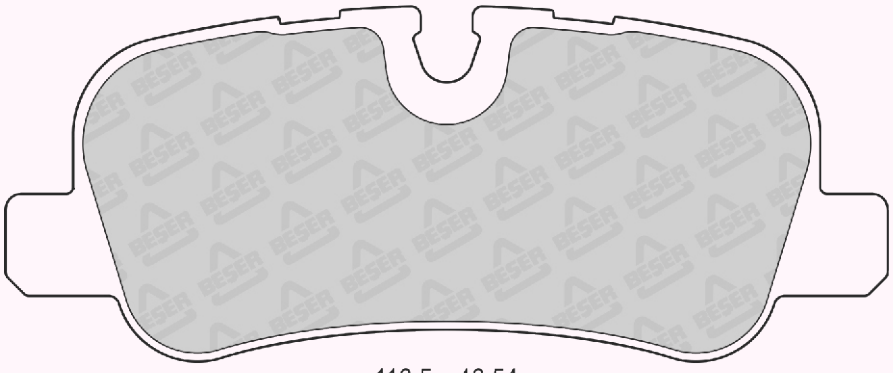

116,5 x 46,54

REFERENCE	T(mm)	REMARKS	MAKE	F/R	WVA No
3945	17,0	4 PADS PLAIN	VW	F	24098

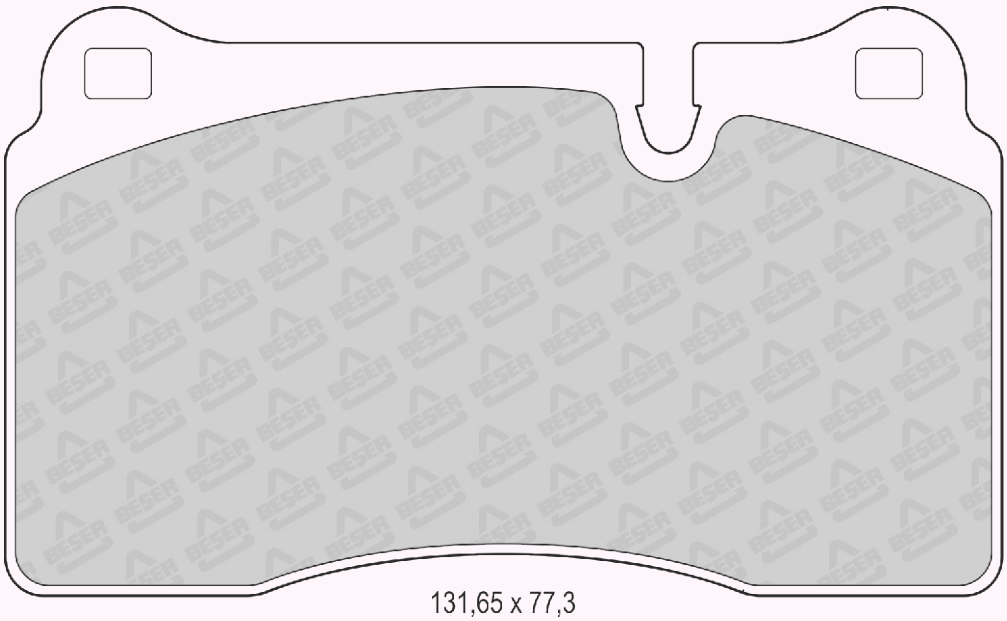

131,65 x 77,3

REFERENCE	T(mm)	REMARKS	MAKE	F/R	WVA No
3946	17,8	4 PADS PLAIN	CITROEN - PEUGEOT	R	24135

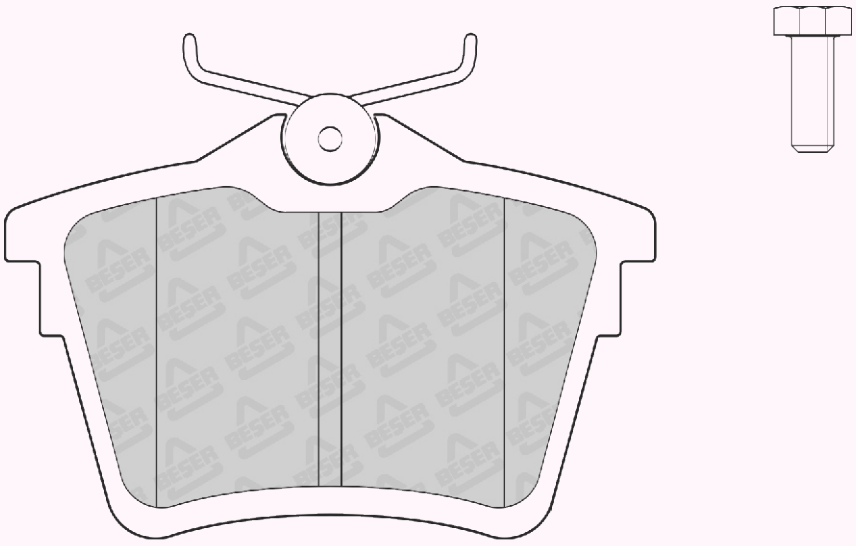

85,9 x 55,7

REFERENCE	T(mm)	REMARKS	MAKE	F/R	WVA No
3948	17,6	4 PADS PLAIN	LEXUS - TOYOTA	F	24350

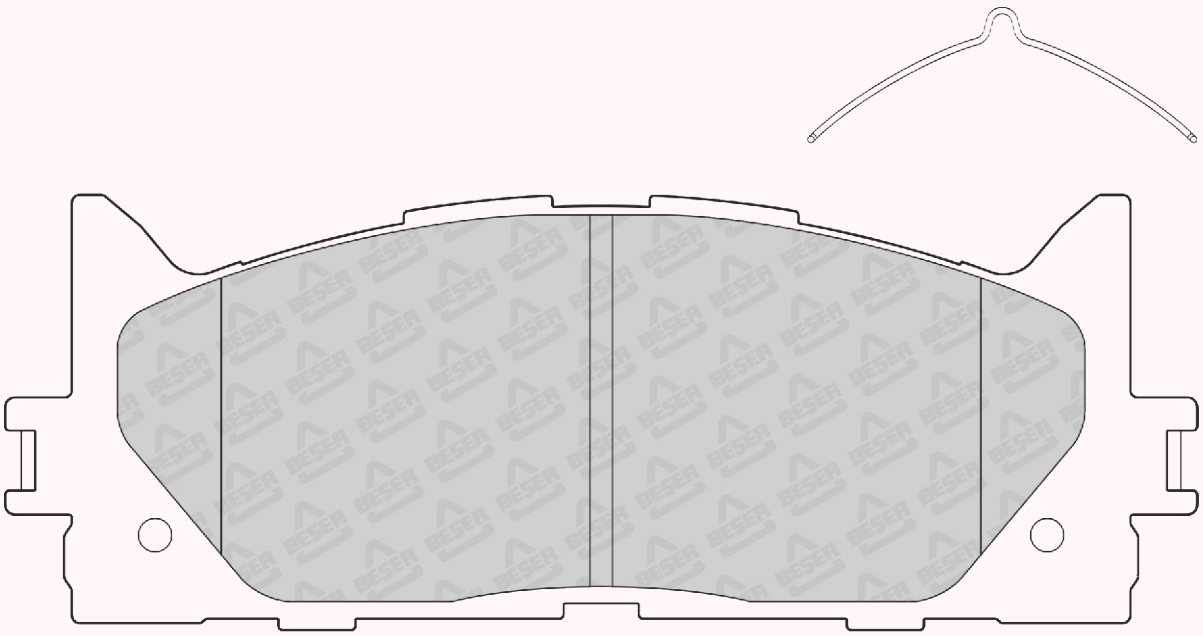

157,5 x 57,1

REFERENCE	T(mm)	REMARKS	MAKE	F/R	WVA No
3949	15,6	4 PADS PLAIN	LEXUS - TOYOTA	R	24338 25539

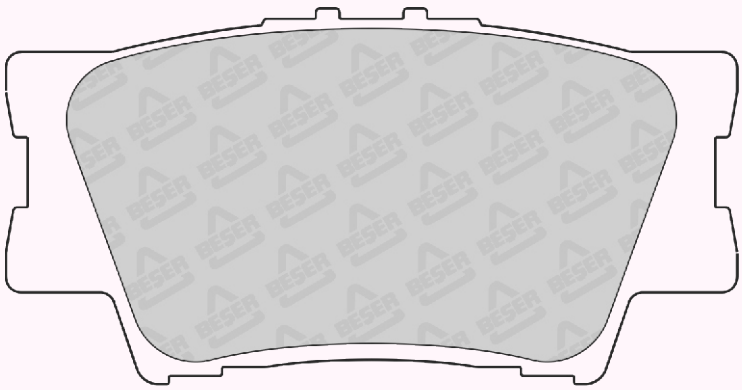

96,65 x 49,25

REFERENCE	T(mm)	REMARKS	MAKE	F/R	WVA No
3950	18	2 PADS RIGHT & 2 PADS LEFT	RENAULT	F	23215 23217

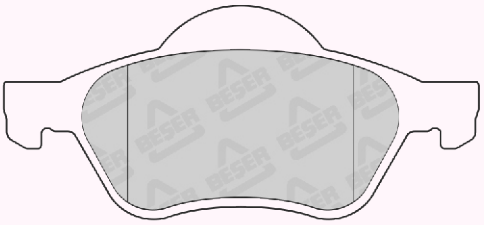

155,4 x 69,05
(NOT SCALE)

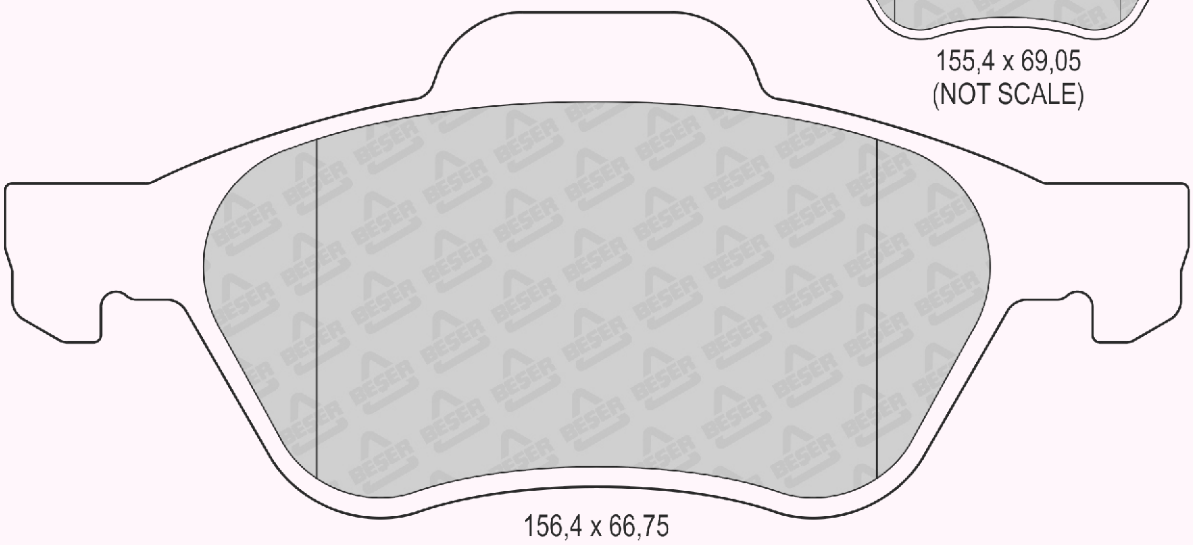

156,4 x 66,75

REFERENCE	T(mm)	REMARKS	MAKE	F/R	WVA No
3951	17,7	4 PADS PLAIN	CHEVROLET - DAEWOO HOLDEN - PROTON	F	23974

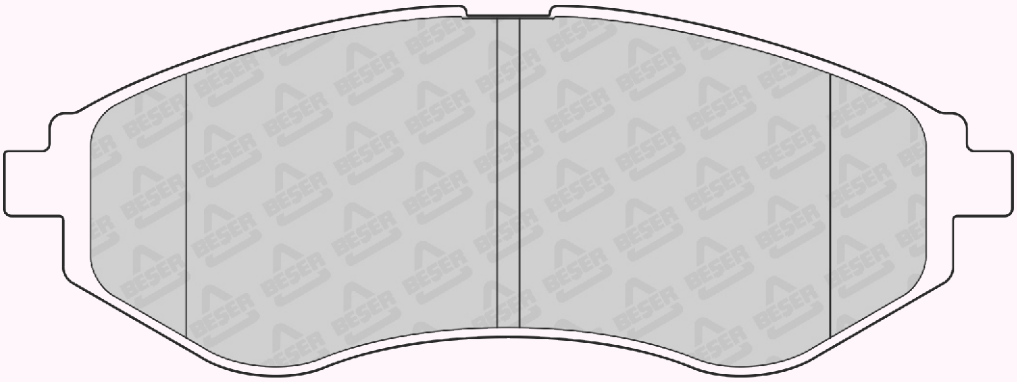

133,1 x 48,84

REFERENCE	T(mm)	REMARKS	MAKE	F/R	WVA No
3952	16	2 PADS WITH WEAR SENSOR	NISSAN - SUZUKI	F	24227 24228 25254

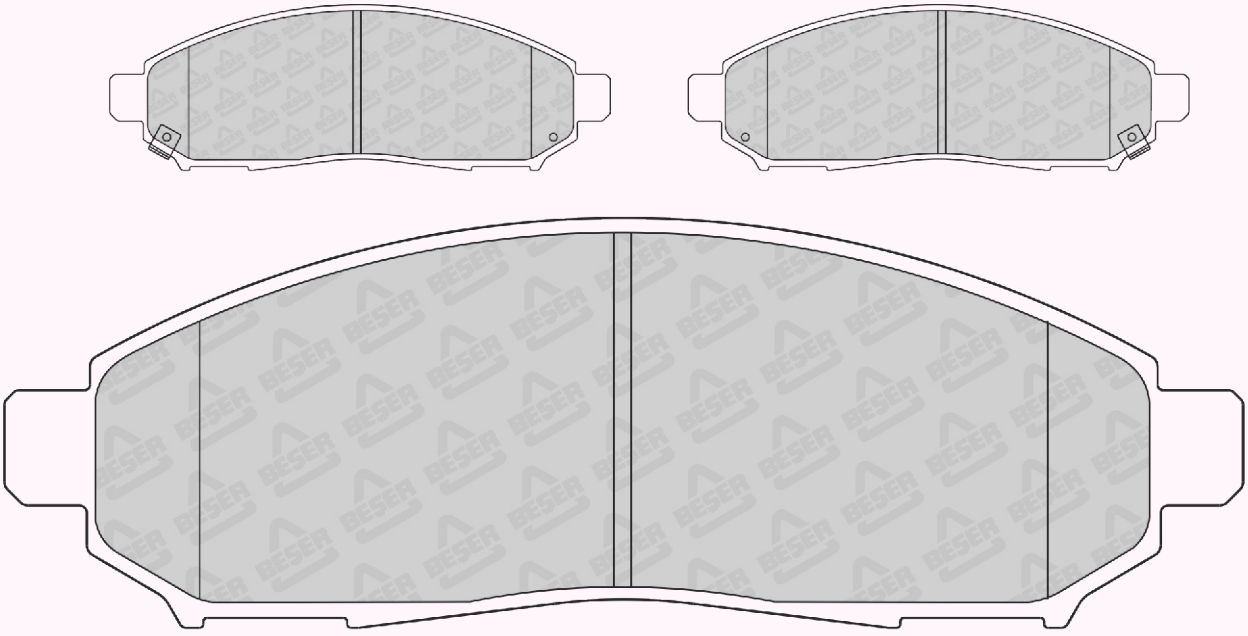

163,6 x 54,09

REFERENCE	T(mm)	REMARKS	MAKE	F/R	WVA No
3953	17,6	4 PADS PLAIN	LEXUS - SUBARU TOYOTA	F	24336

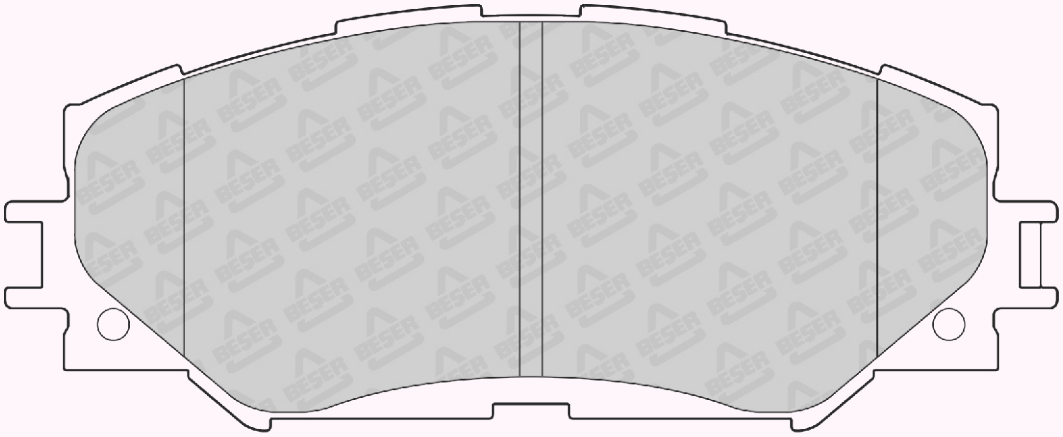

139 x 55,52

REFERENCE	T(mm)	REMARKS	MAKE	F/R	WVA No
3954	14,4	4 PADS PLAIN	ASTON MARTIN - SUBARU TOYOTA	R	24610 24611 24612

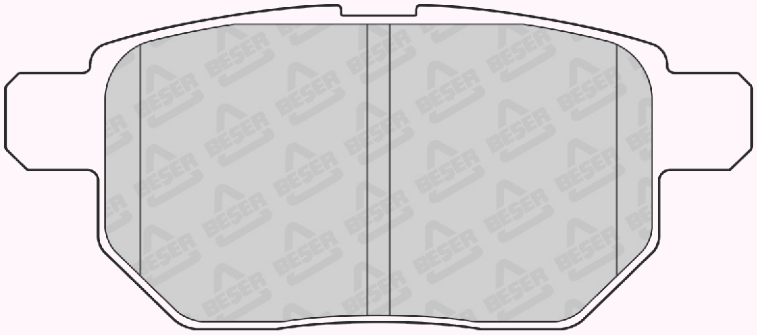

98,55 x 42,33

REFERENCE	T(mm)	REMARKS	MAKE	F/R	WVA No
3955	15,9	4 PADS PLAIN	CHRYSLER - DODGE JEEP	F	23584

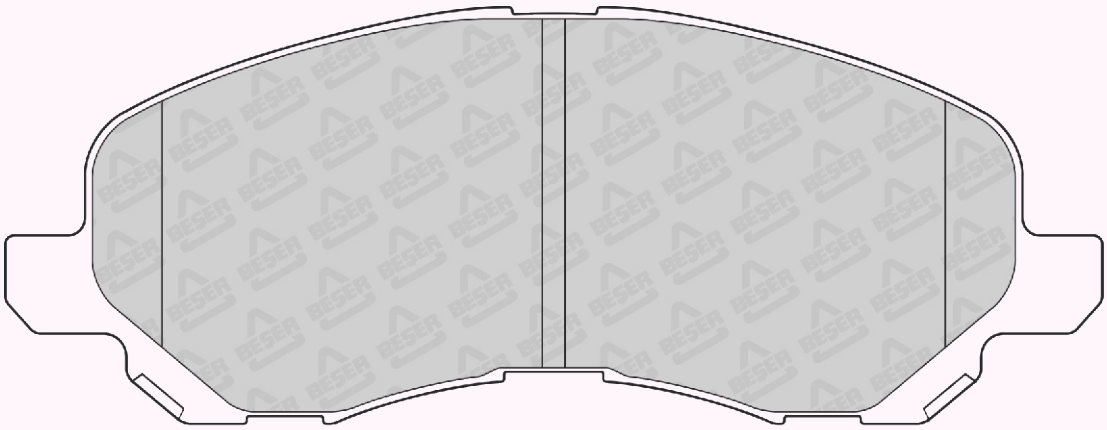

144,85 x 54,9

REFERENCE	T(mm)	REMARKS	MAKE	F/R	WVA No
3956	18,0	2 PADS RIGHT & 2 PADS LEFT	TOYOTA	F	24121 24122 24590 24591

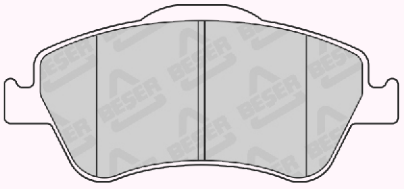

136,9 x 61,6
(NOT SCALE)

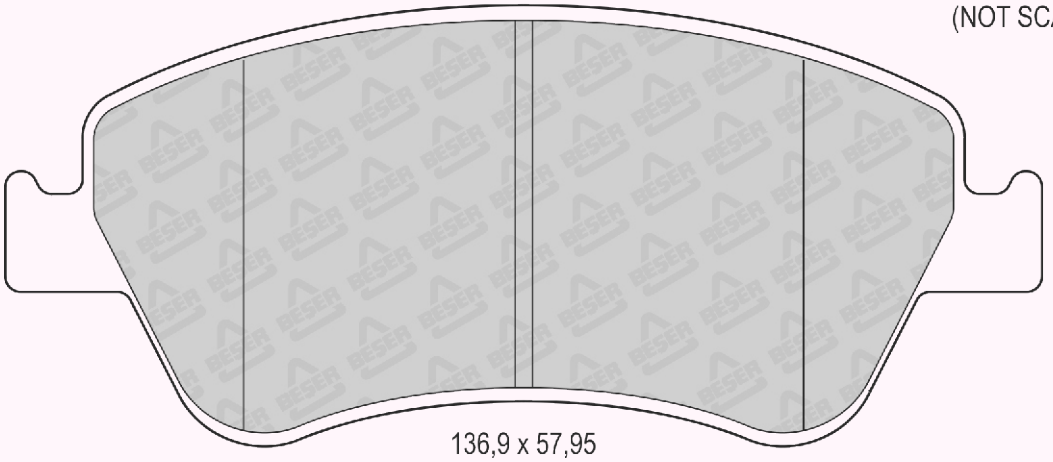

136,9 x 57,95

REFERENCE	T(mm)	REMARKS	MAKE	F/R	WVA No
3957	15,8	4 PADS PLAIN	KIA	---	-----

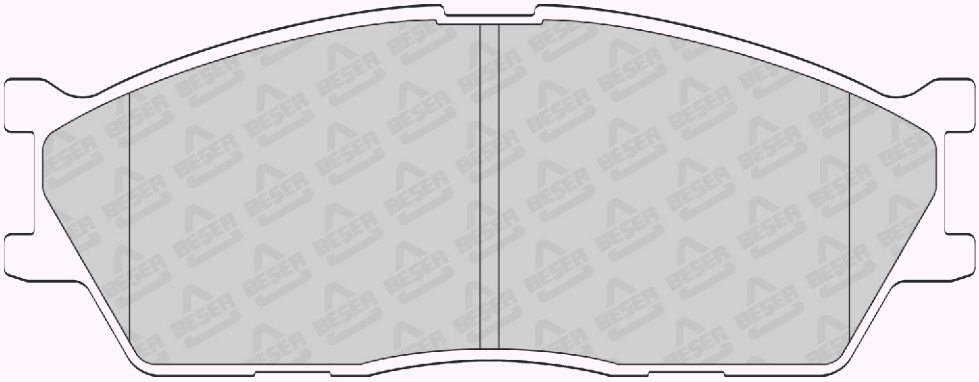

128,2 x 48,96

REFERENCE	T(mm)	REMARKS	MAKE	F/R	WVA No
3958	17,5	4 PADS PLAIN	DAIHATSU - TOYOTA	F	24347 24451

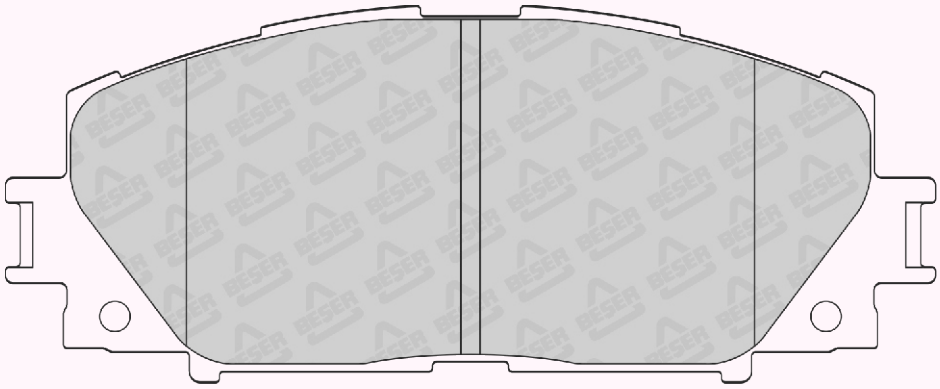

122,8 x 49,67

REFERENCE	T(mm)	REMARKS	MAKE	F/R	WVA No
3959	17,6	4 PADS PLAIN	HYUNDAI - KIA	F	23891 23892 23893

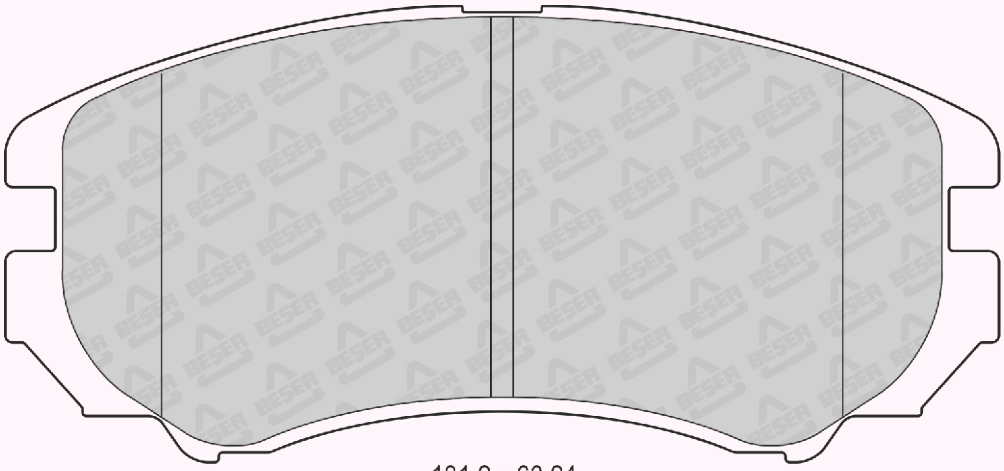

131,2 x 60,24

REFERENCE	T(mm)	REMARKS	MAKE	F/R	WVA No
3960	17,0	4 PADS PLAIN	HAWTAI - HYUNDAI KIA - SSANGYONG	F	24351 24568 24569

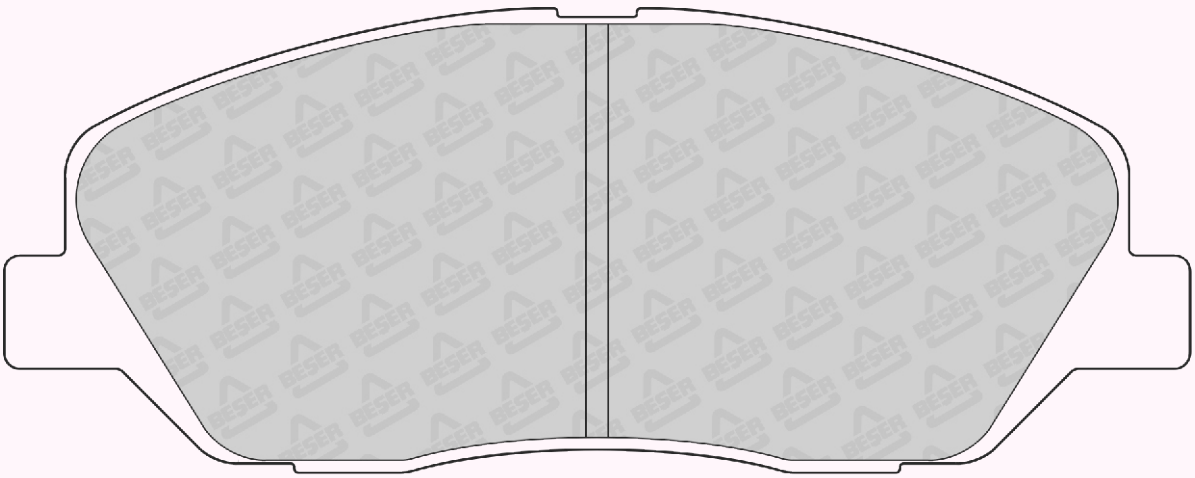

156,6 x 60,94

REFERENCE	T(mm)	REMARKS	MAKE	F/R	WVA No
3961	17,8	4 PADS PLAIN	HYUNDAI	F	24031 24032 24033

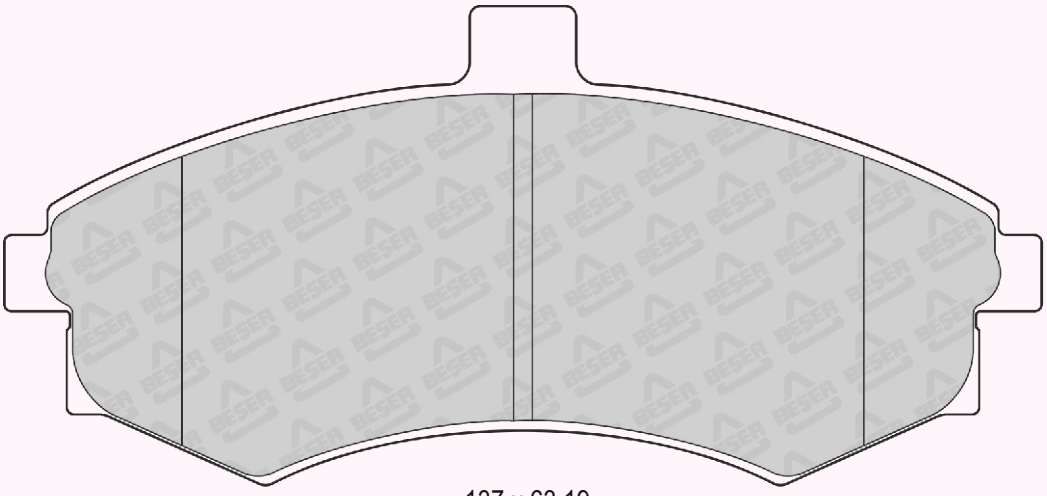

137 x 63,19

REFERENCE	T(mm)	REMARKS	MAKE	F/R	WVA No
3962	20,1	4 PADS PLAIN	MERCEDES BENZ - VW	F	29200

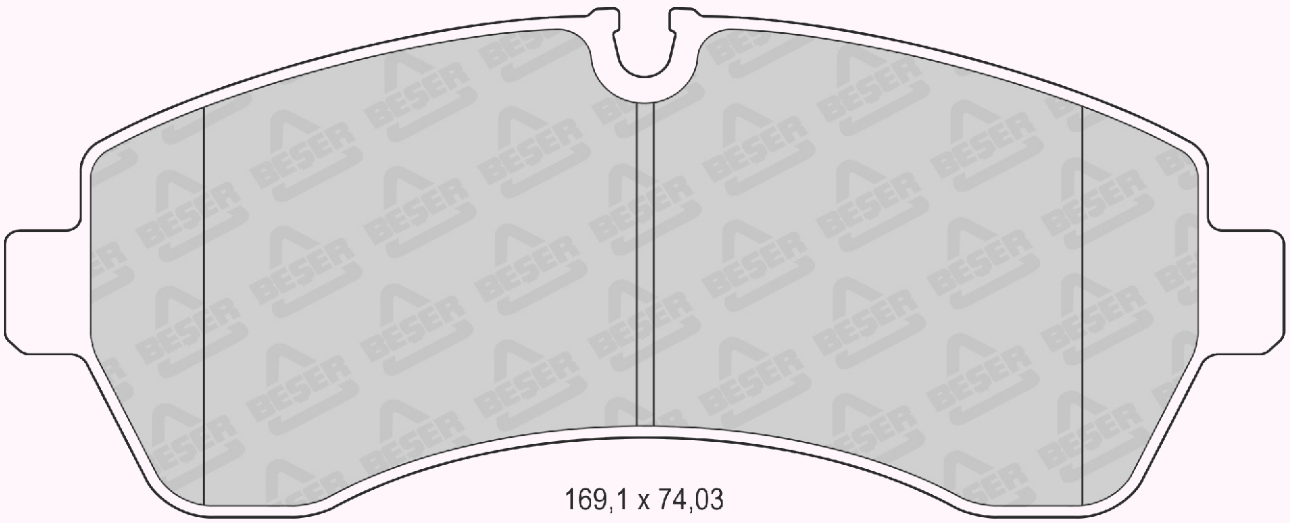

169,1 x 74,03

REFERENCE	T(mm)	REMARKS	MAKE	F/R	WVA No
3962/1	20,1	2 PADS WITH WEAR SENSOR	MERCEDES BENZ - VW	F	29200



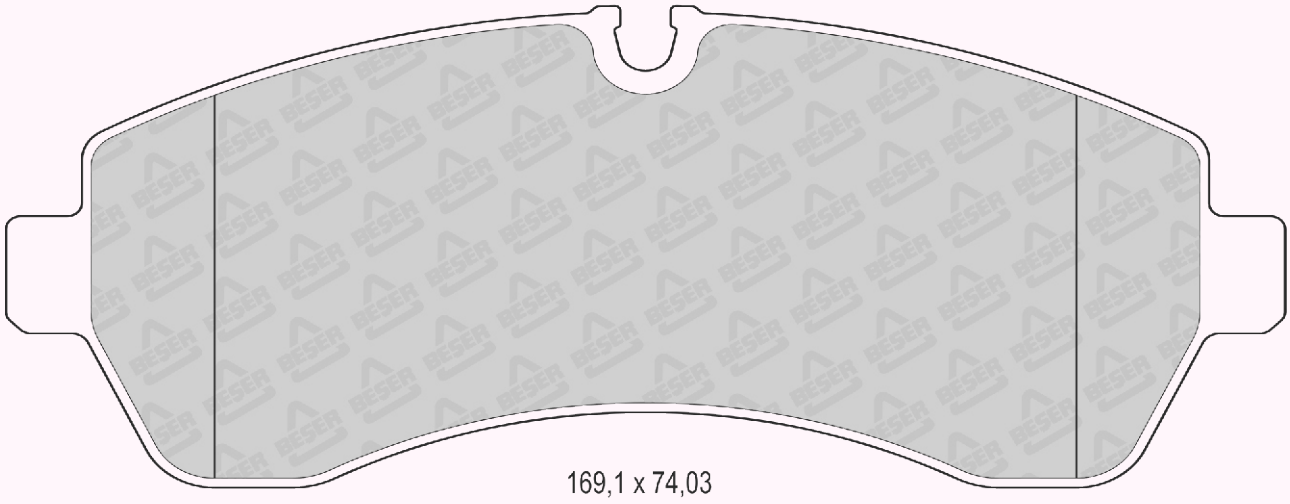

REFERENCE	T(mm)	REMARKS	MAKE	F/R	WVA No
3963	20,7	4 PADS PLAIN	MERCEDES BENZ - VW	R	29217

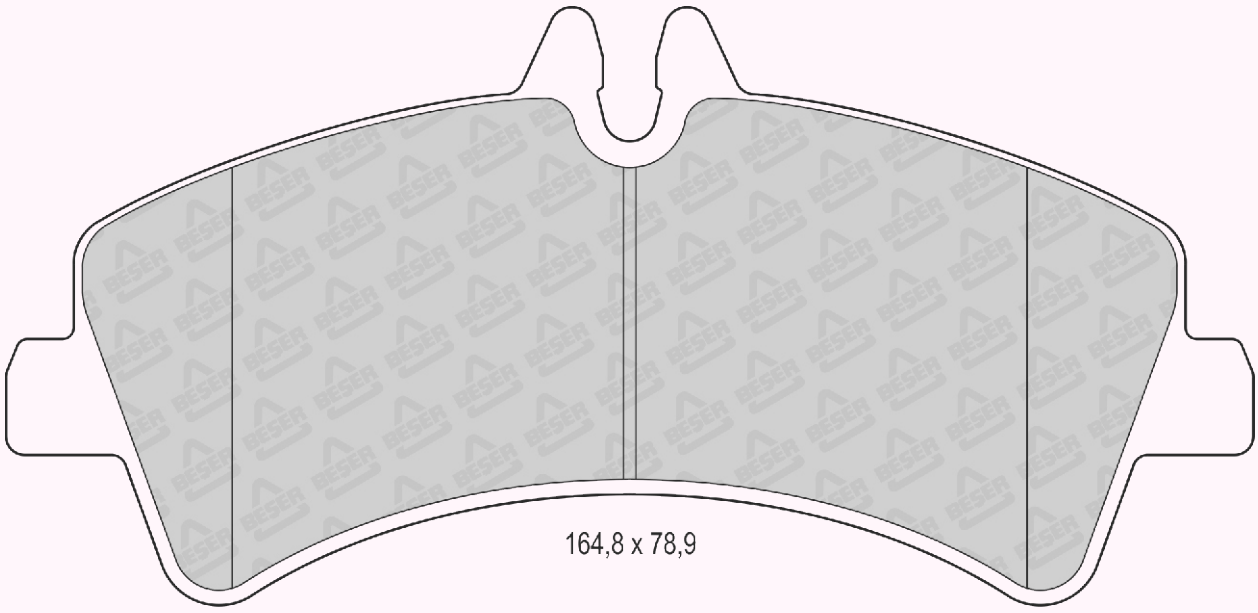

REFERENCE	T(mm)	REMARKS	MAKE	F/R	WVA No
3963/1	20,7	2 PADS WITH WEAR SENSOR	MERCEDES BENZ - VW	R	29217

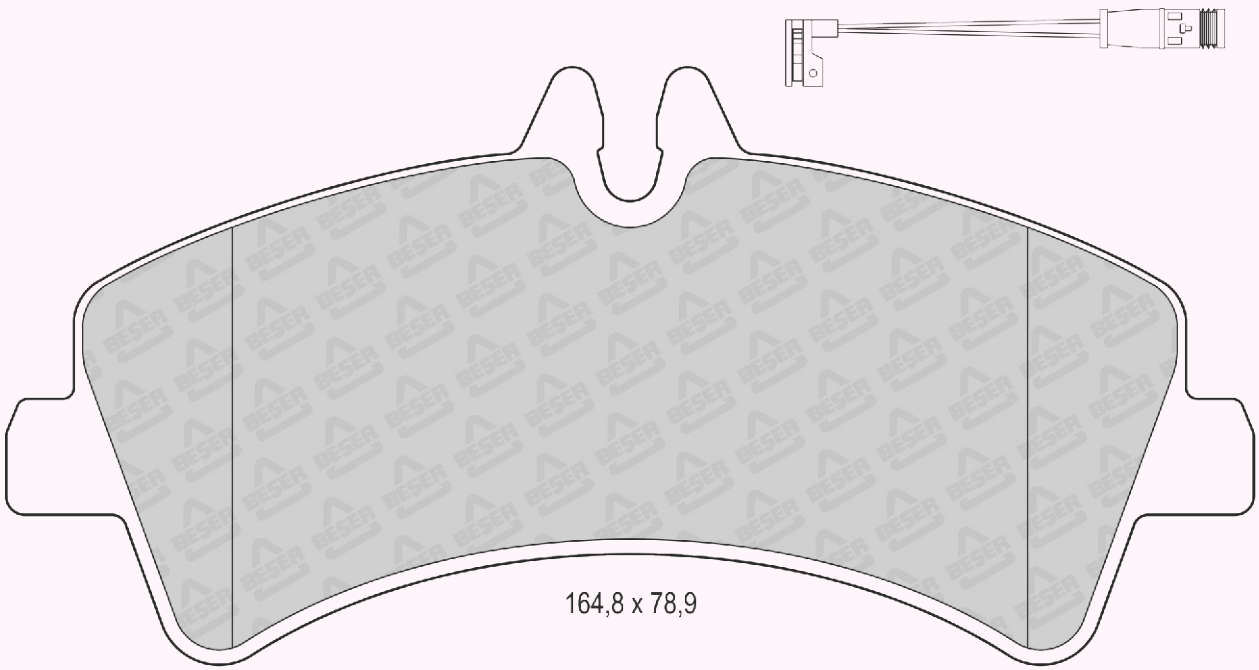

REFERENCE	T(mm)	REMARKS	MAKE	F/R	WVA No
3964	18,6-16,1	2 PADS RIGHT - 2 PADS LEFT	CITROEN - DS PEUGEOT	F	24538 24539

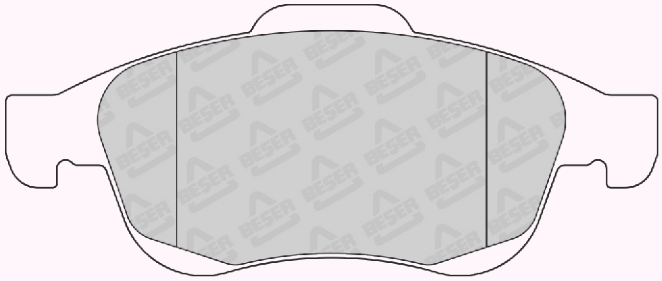

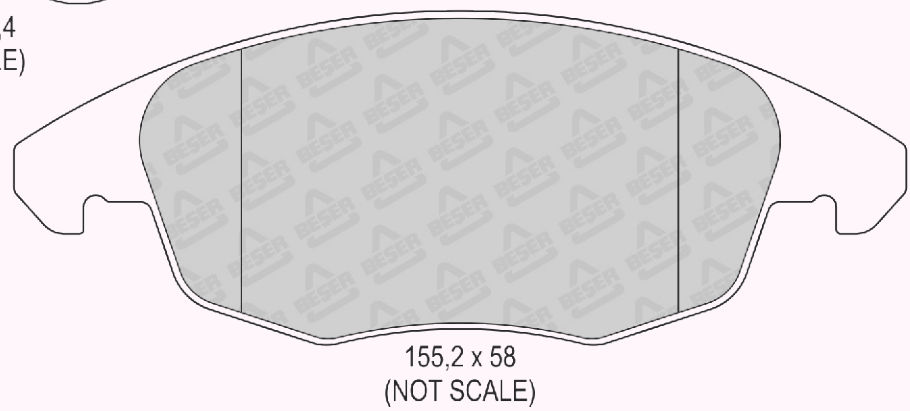

REFERENCE	T(mm)	REMARKS	MAKE	F/R	WVA No
3964/1	17,2	2 PADS RIGHT - 2 PADS LEFT	DACIA - RENAULT	F	24914

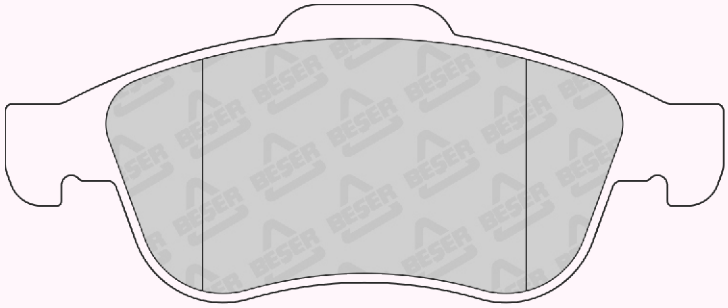

155,2 x 64,4
(NOT SCALE)

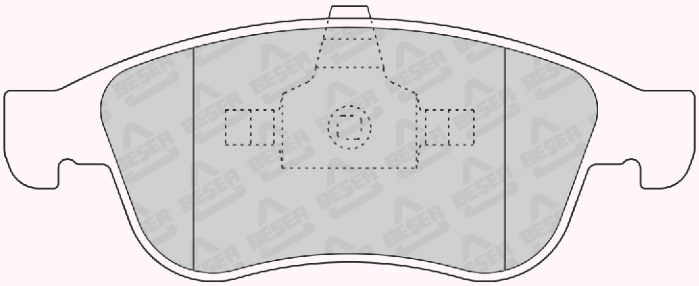

155,2 x 59,16
(NOT SCALE)

REFERENCE	T(mm)	REMARKS	MAKE	F/R	WVA No
3965	20,8	4 PADS PLAIN	IVECO	F	29229 29230

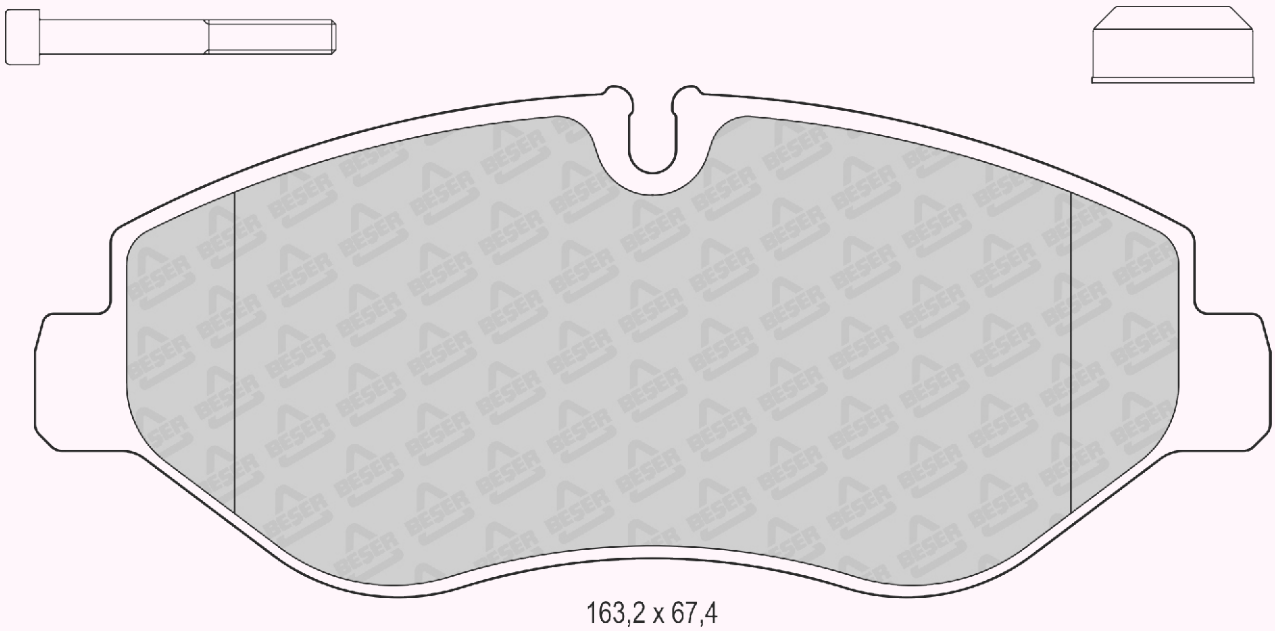

163,2 x 67,4

REFERENCE	T(mm)	REMARKS	MAKE	F/R	WVA No
3965/1	20,8	4 PADS PLAIN (145 mm)	NISSAN - RENAULT	F	29229

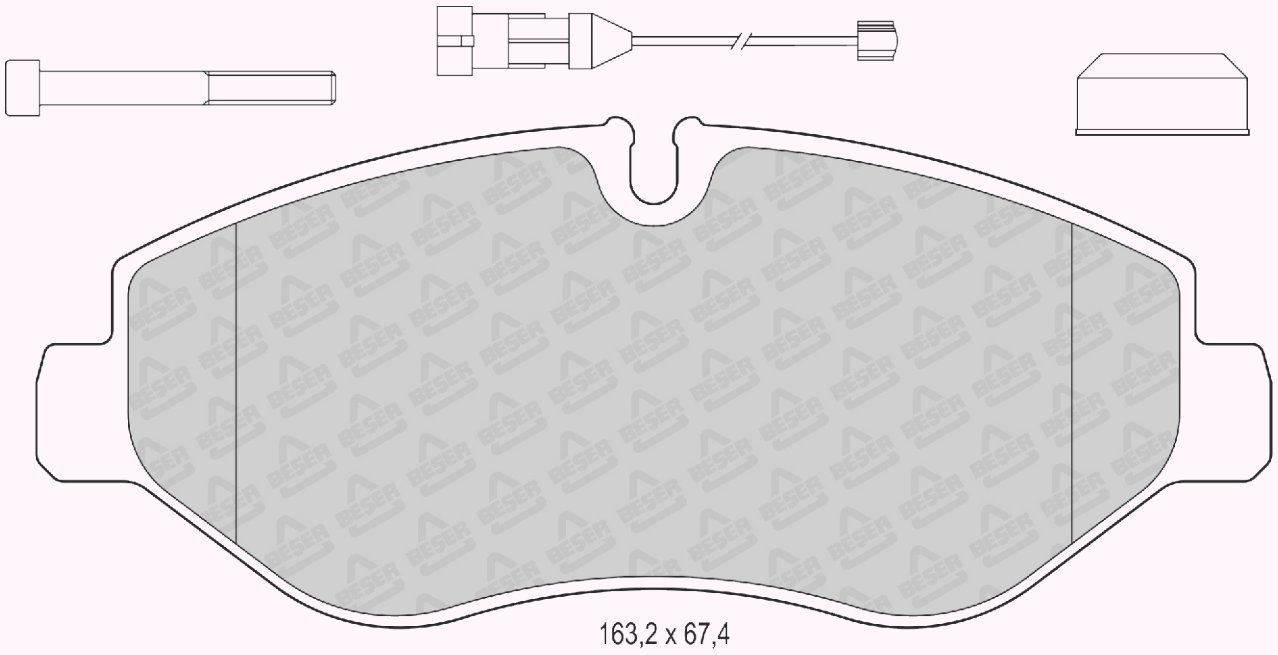

REFERENCE	T(mm)	REMARKS	MAKE	F/R	WVA No
3966	18,5	4 PADS PLAIN	MERCEDES BENZ - RENAULT	F	24693

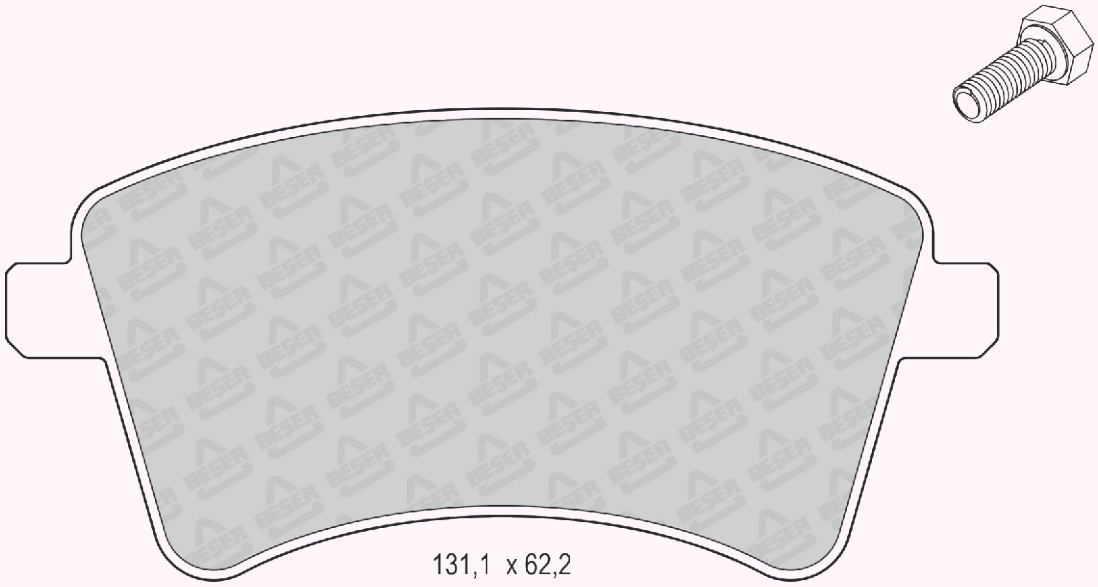

REFERENCE	T(mm)	REMARKS	MAKE	F/R	WVA No
3966/1	18,5	4 PADS PLAIN	MERCEDES BENZ - RENAULT	F	24693

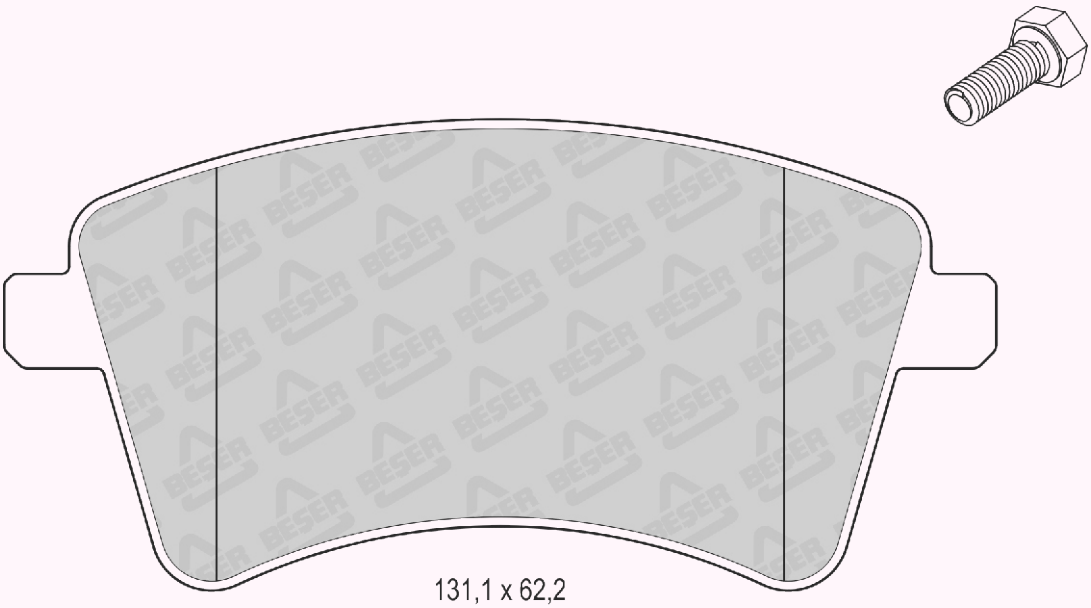

131,1 x 62,2

REFERENCE	T(mm)	REMARKS	MAKE	F/R	WVA No
3967	16	4 PADS PLAIN	RENAULT	R	24692

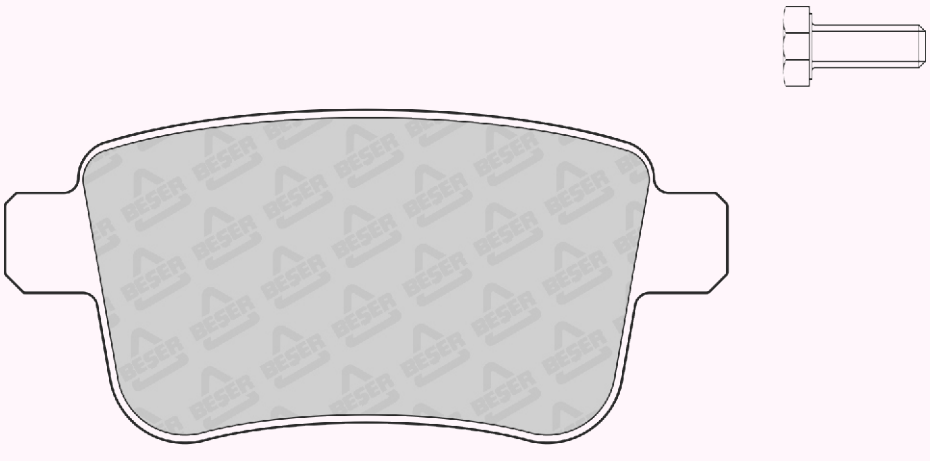

95,4 x 43,88

REFERENCE	T(mm)	REMARKS	MAKE	F/R	WVA No
3968	16	2 PADS WITH WEAR SENSOR	HYUNDAI - KIA NAZA	F	24275 24410 24411

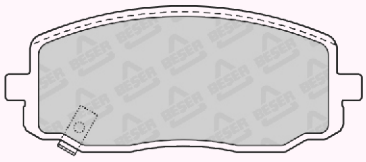

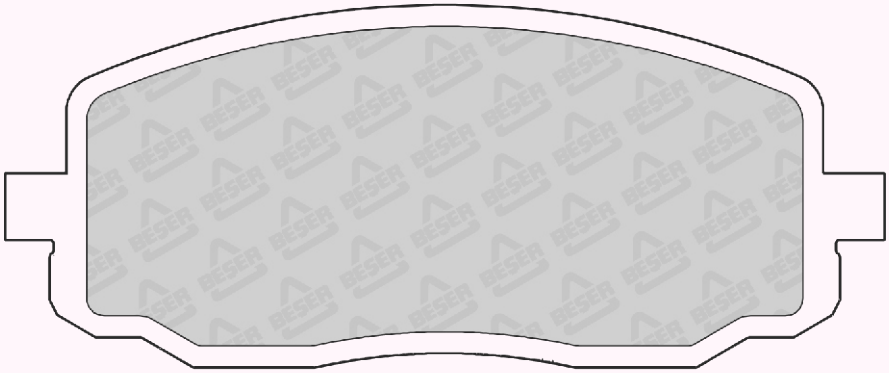

116,15 x 47,5

REFERENCE	T(mm)	REMARKS	MAKE	F/R	WVA No
3969	14,8	2 PADS WITH WEAR SENSOR	HYUNDAI - KIA	R	24276 24479 24480

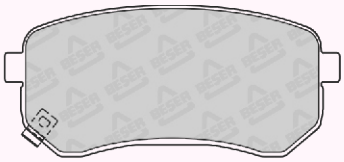

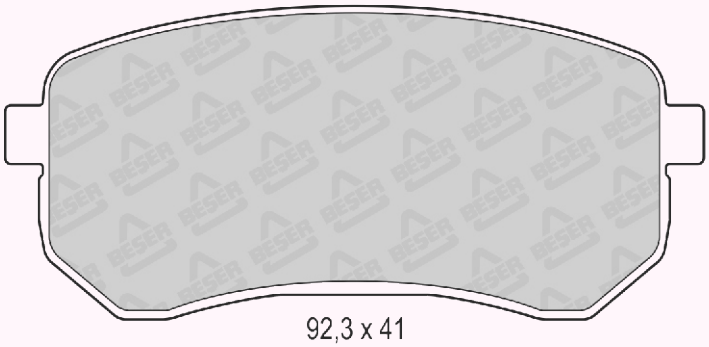

92,3 x 41

REFERENCE	T(mm)	REMARKS	MAKE	F/R	WVA No
3970	18	4 PADS PLAIN	PEUGEOT	F	24660

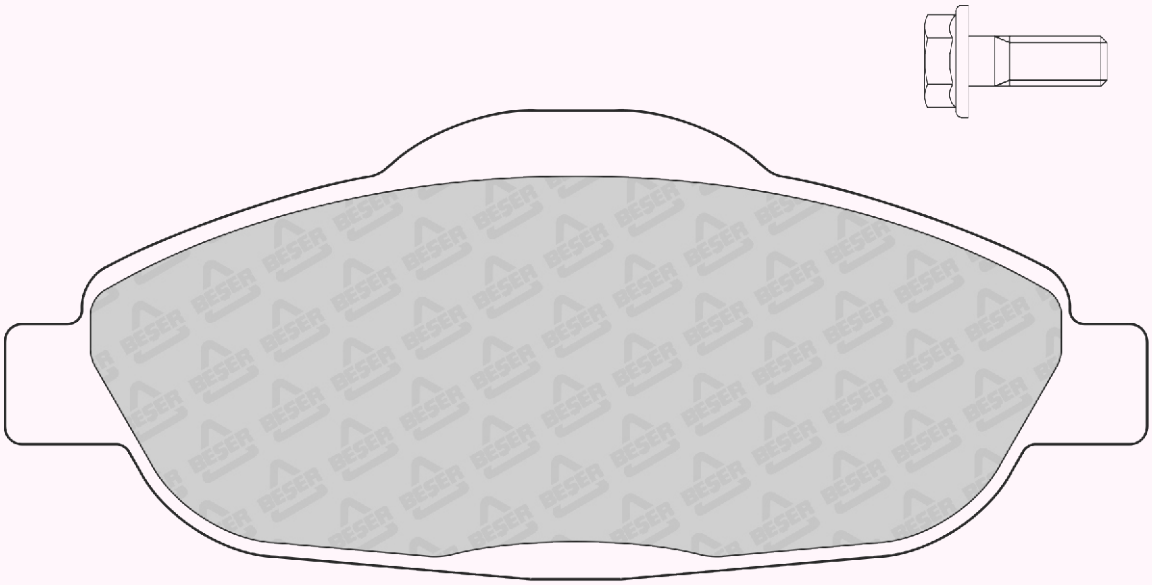

150,9 x 61,5

REFERENCE	T(mm)	REMARKS	MAKE	F/R	WVA No
3971	16,5	4 PADS PLAIN	CITROEN - PEUGEOT	R	24765

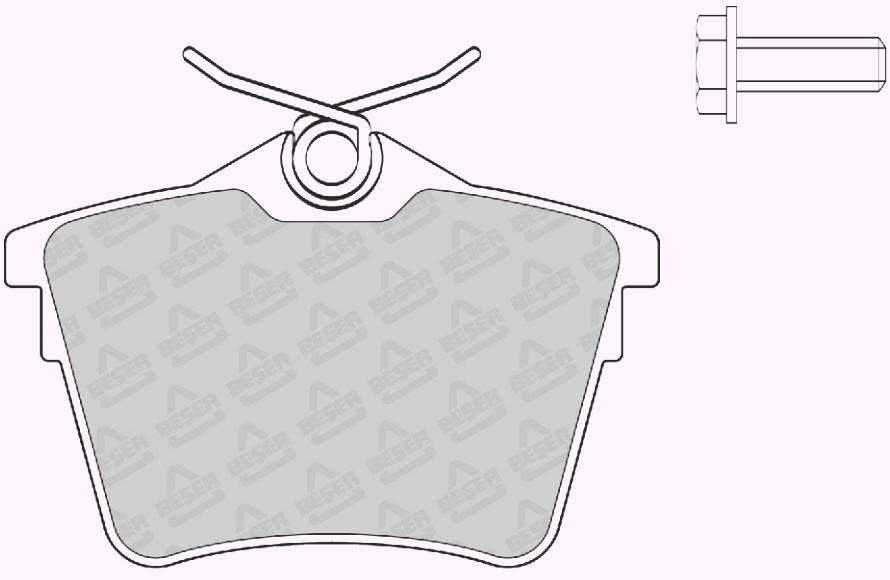

86,4 x 57,25

REFERENCE	T(mm)	REMARKS	MAKE	F/R	WVA No
3972	18,5	4 PADS PLAIN	CITROEN - FIAT PEUGEOT - TOYOTA	F	24595 24596 24608

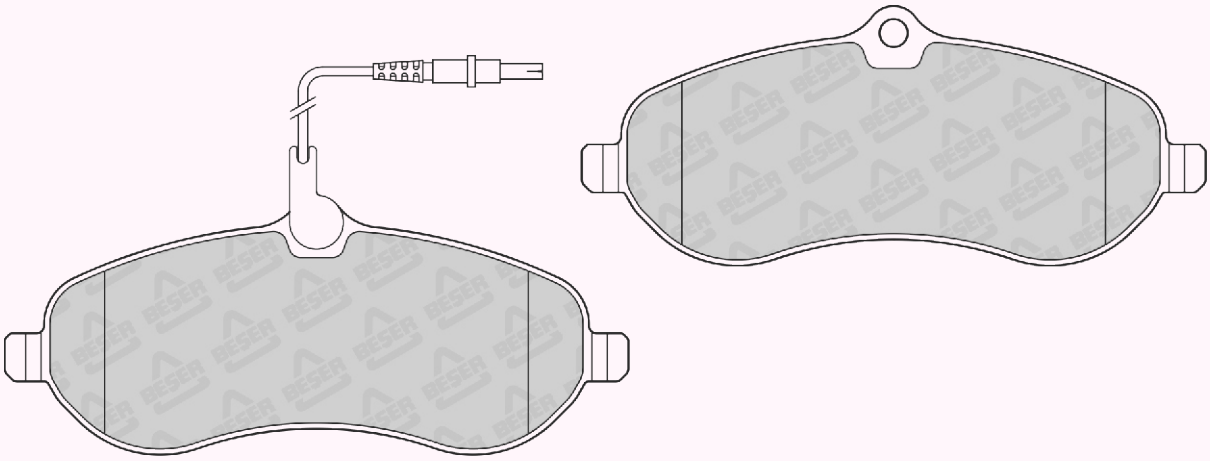

162 x 67,4
(NOT SCALE)

REFERENCE	T(mm)	REMARKS	MAKE	F/R	WVA No
3974	15	2 PADS RIGHT & 2 PADS LEFT	GEELY - HAFEI	---	-----

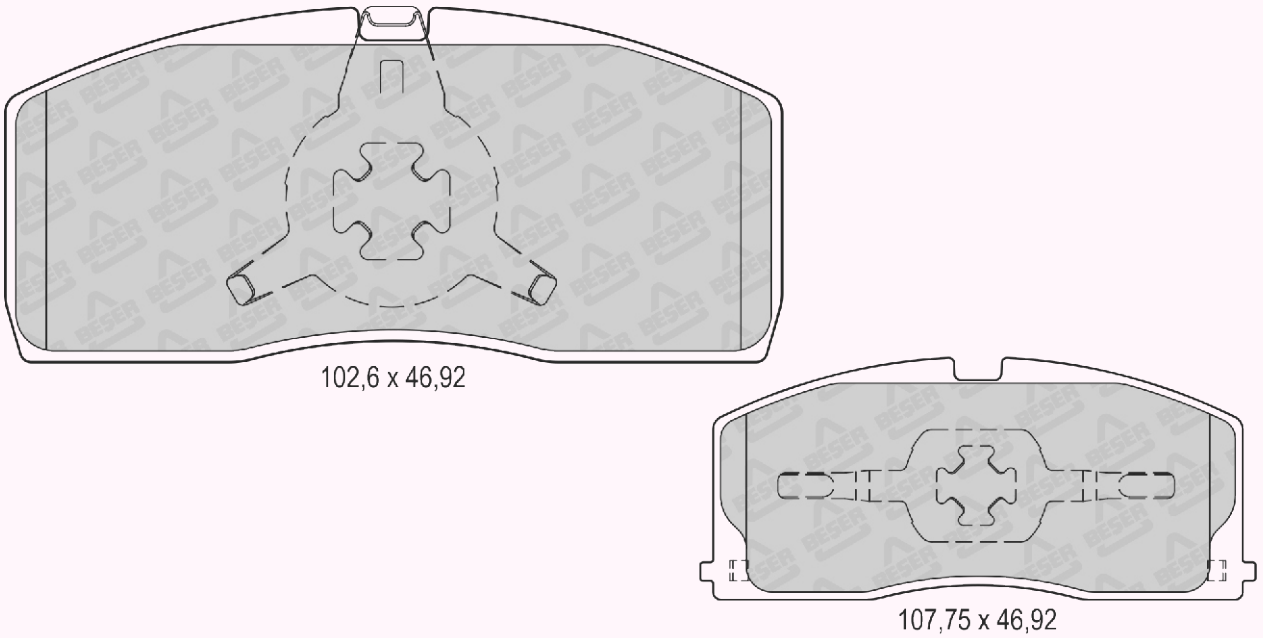

102,6 x 46,92

107,75 x 46,92
(NOT SCALE)

REFERENCE	T(mm)	REMARKS	MAKE	F/R	WVA No
3975	15,9	1 PAD WITH WEAR SENSOR	MITSUBISHI	F	24529 24530

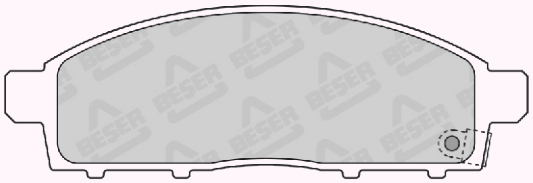

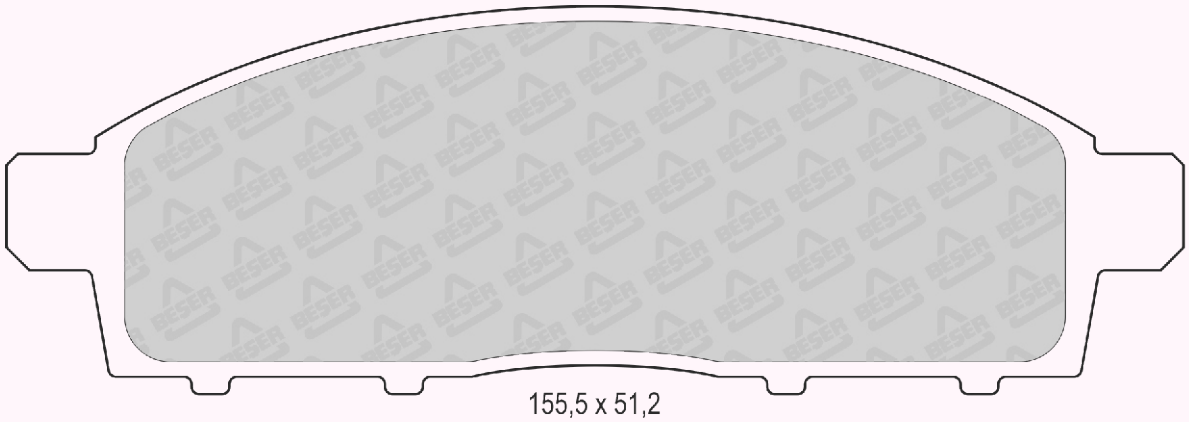

155,5 x 51,2

REFERENCE	T(mm)	REMARKS	MAKE	F/R	WVA No
3976	16,5	2 PADS WITH WEAR SENSOR	CHEVROLET - DAEWOO - HOLDEN OPEL - VAUXHALL	F	24167 24510 24234 24511 24235 24512

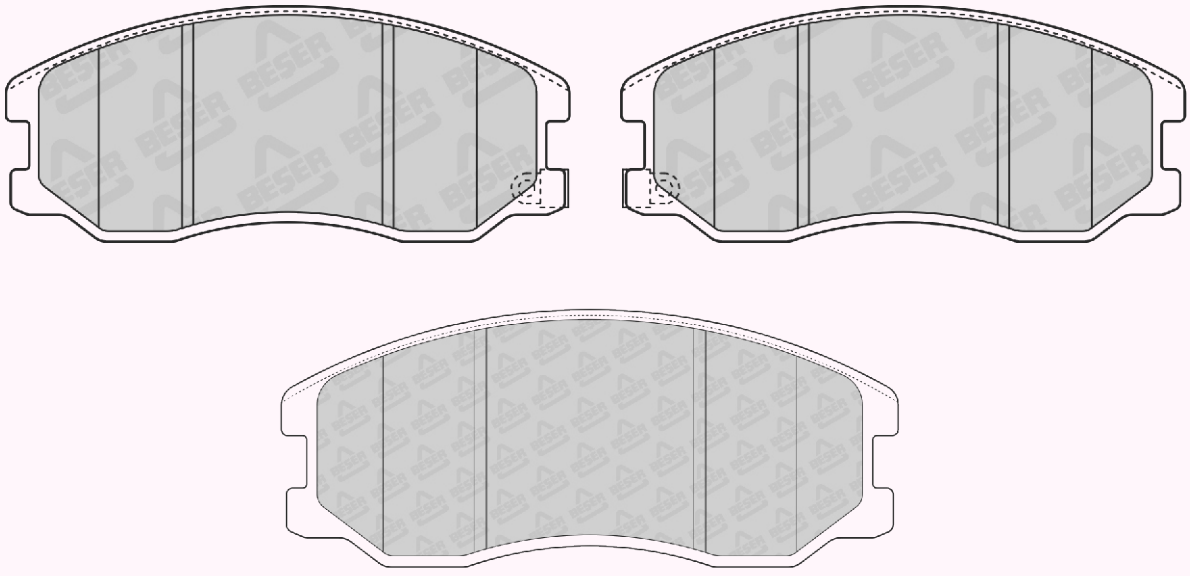

149,15 x 62,11
(NOT SCALE)

REFERENCE	T(mm)	REMARKS	MAKE	F/R	WVA No
3976/1	16,5	2 PADS WITH WEAR SENSOR	HYUNDAI - KIA SSANGYONG	F	23728

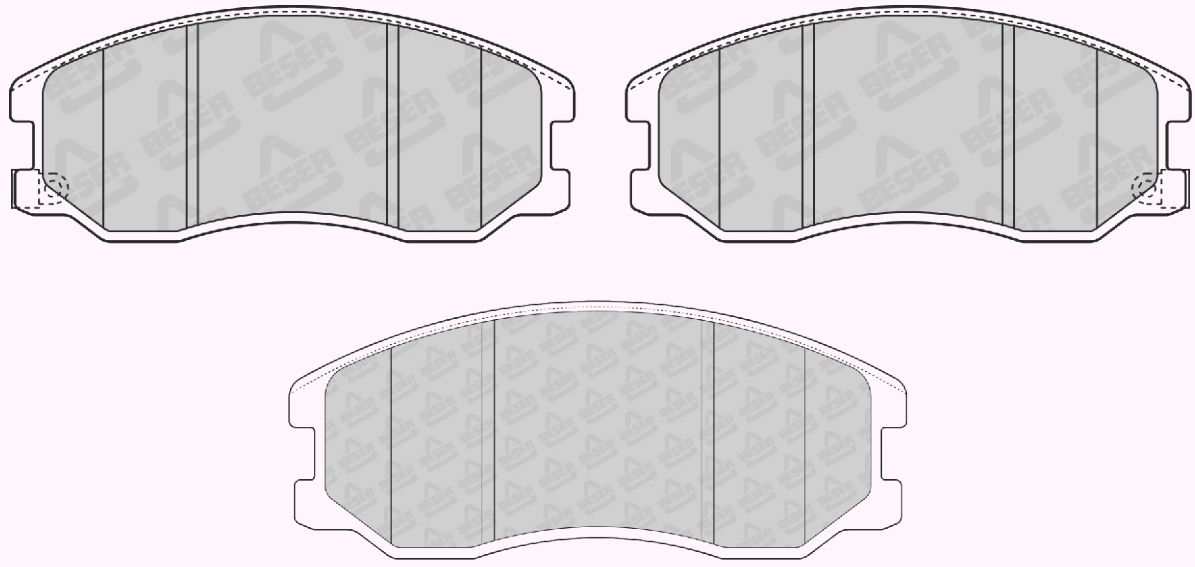

149,15 x 62,11
(NOT SCALE)

REFERENCE	T(mm)	REMARKS	MAKE	F/R	WVA No
3978	16,3	2 PADS WITH WEAR SENSOR	KIA	F	24092 24178 24179

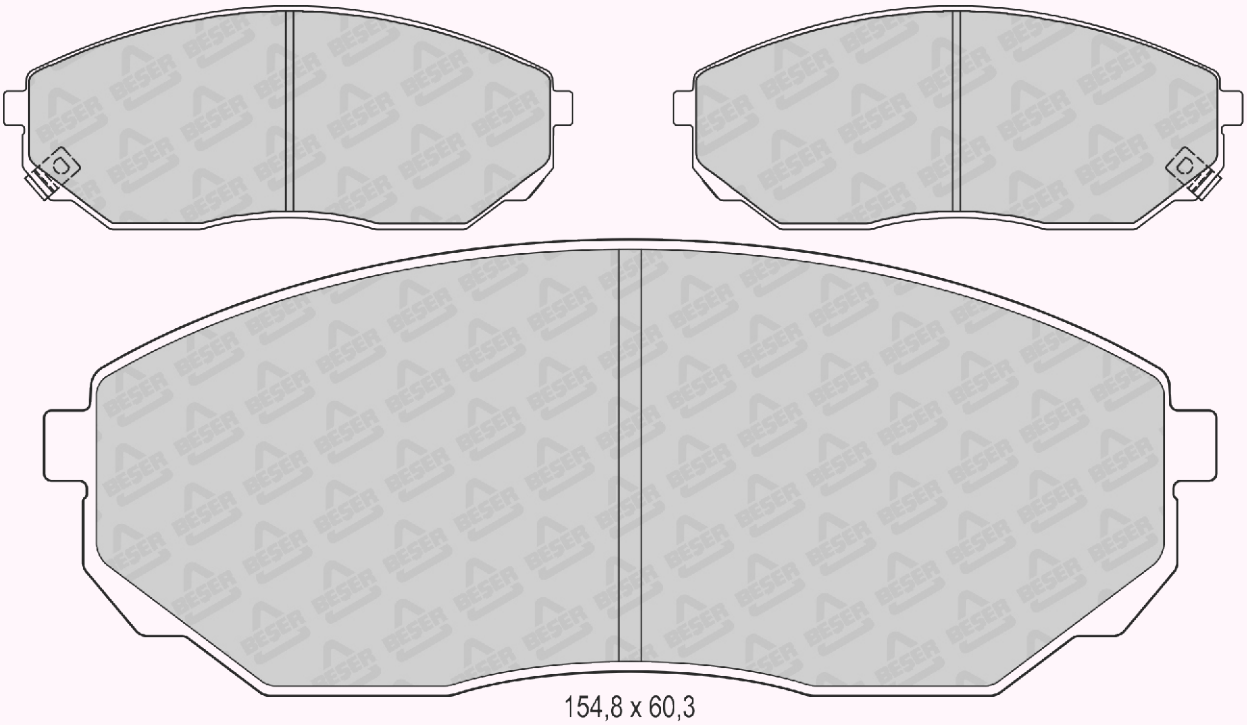

154,8 x 60,3

REFERENCE	T(mm)	REMARKS	MAKE	F/R	WVA No
3979	14,5-15,8	2 PADS WITH WEAR SENSOR	KIA	R	23993 23997 24058

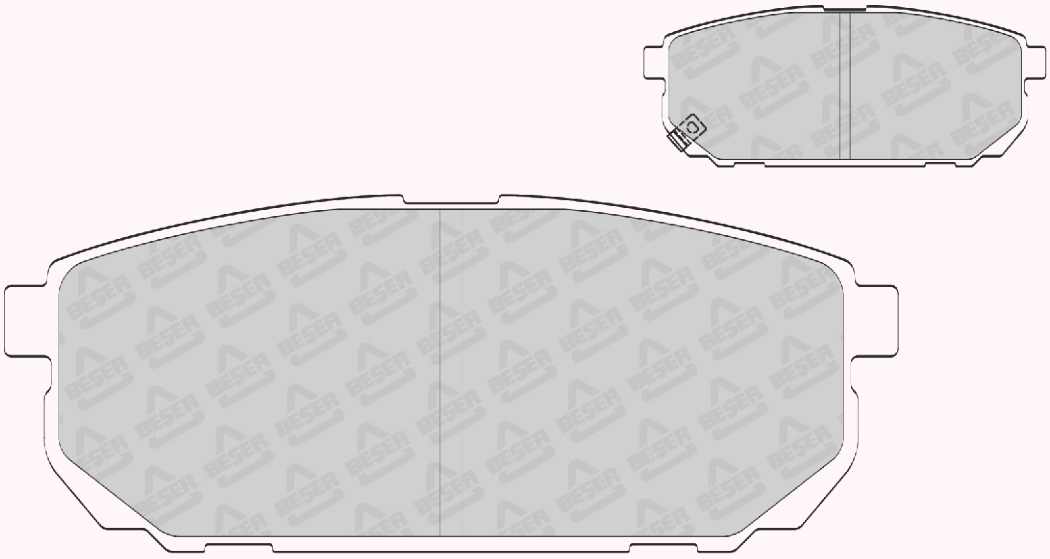

118,1 x 47,04

REFERENCE	T(mm)	REMARKS	MAKE	F/R	WVA No
3980	15,5	2 PADS WITH WEAR SENSOR	HYUNDAI - KIA	R	24320 24321 24322

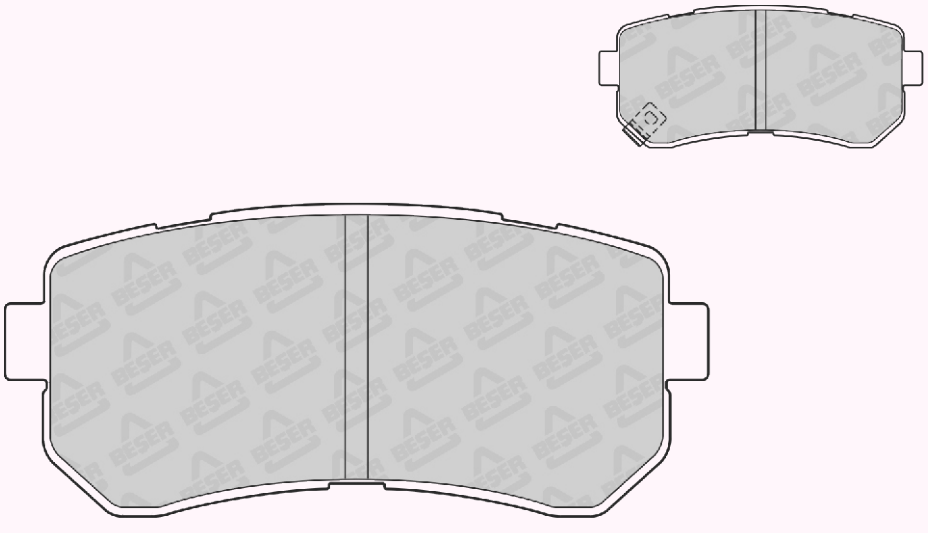

92,9 x 40,9

REFERENCE	T(mm)	REMARKS	MAKE	F/R	WVA No
3981	19,2	2 PADS WITH WEAR SENSOR	CITROEN - FIAT PEUGEOT	F	24468 24469

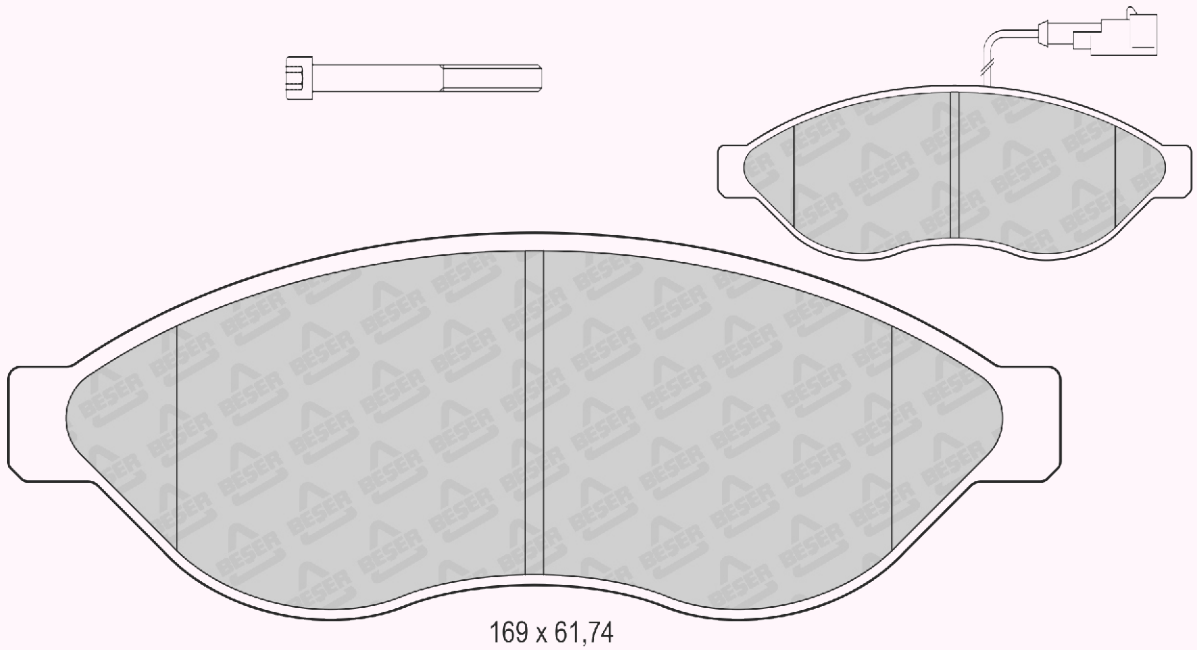

169 x 61,74
(NOT SCALE)

REFERENCE	T(mm)	REMARKS	MAKE	F/R	WVA No
3982	16,2	2 PADS WITH WEAR SENSOR	CHRYSLER - TOYOTA	F	24523

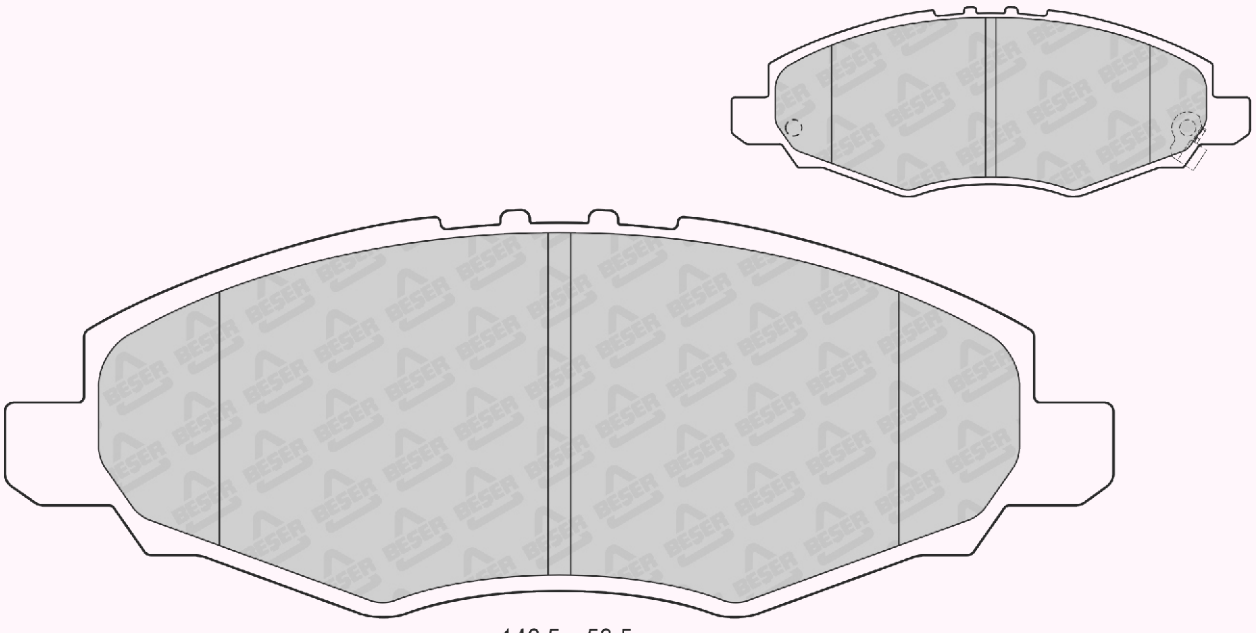

146,5 x 53,5

REFERENCE	T(mm)	REMARKS	MAKE	F/R	WVA No
3983	17,3	4 PADS PLAIN	DACIA - LADA - MERCEDES BENZ NISSAN - RENAULT	F	23973 25729

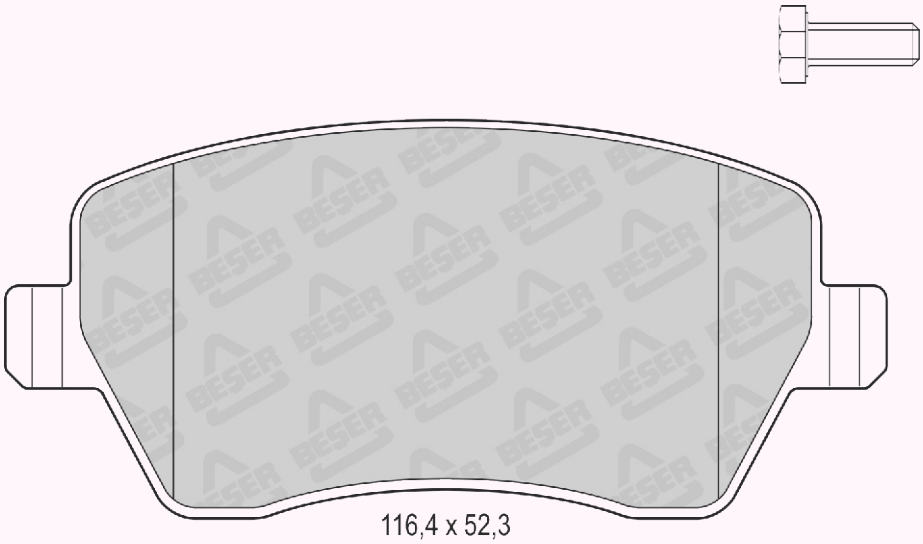

REFERENCE	T(mm)	REMARKS	MAKE	F/R	WVA No
3983/1	16,5	1 PAD WITH WEAR SENSOR	OPEL - SUZUKI VAUXHALL	F	24403

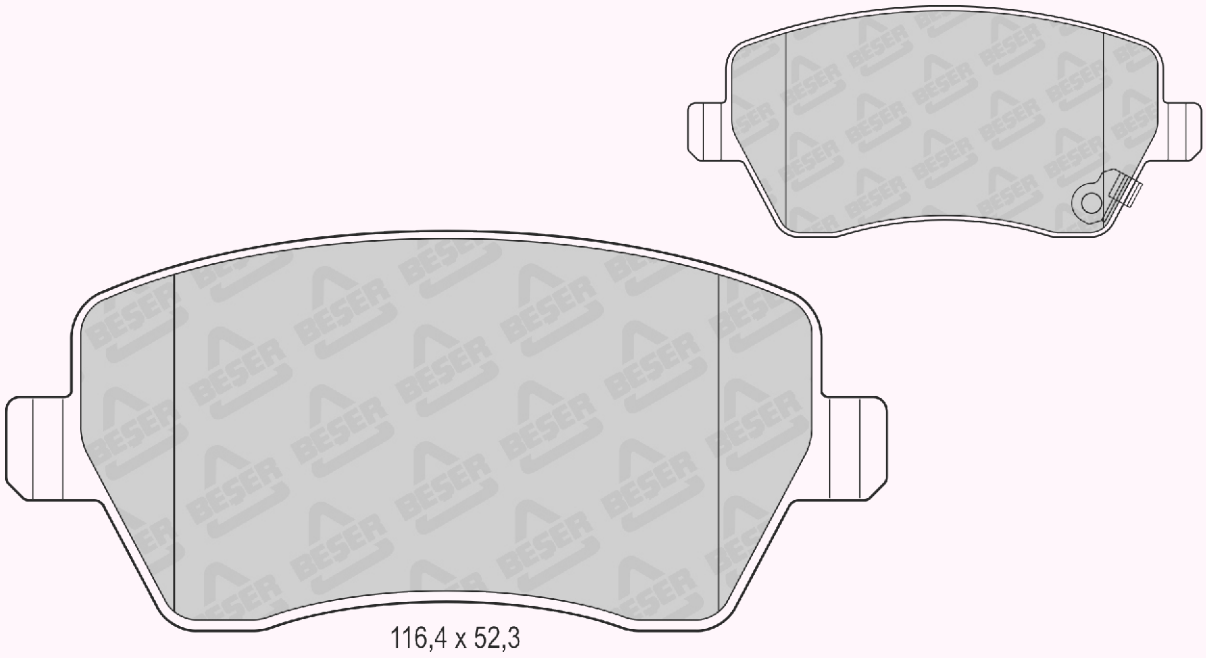

REFERENCE	T(mm)	REMARKS	MAKE	F/R	WVA No
3983/2	17,3	2 PAD WITH WEAR SENSOR	NISSAN	F	25261

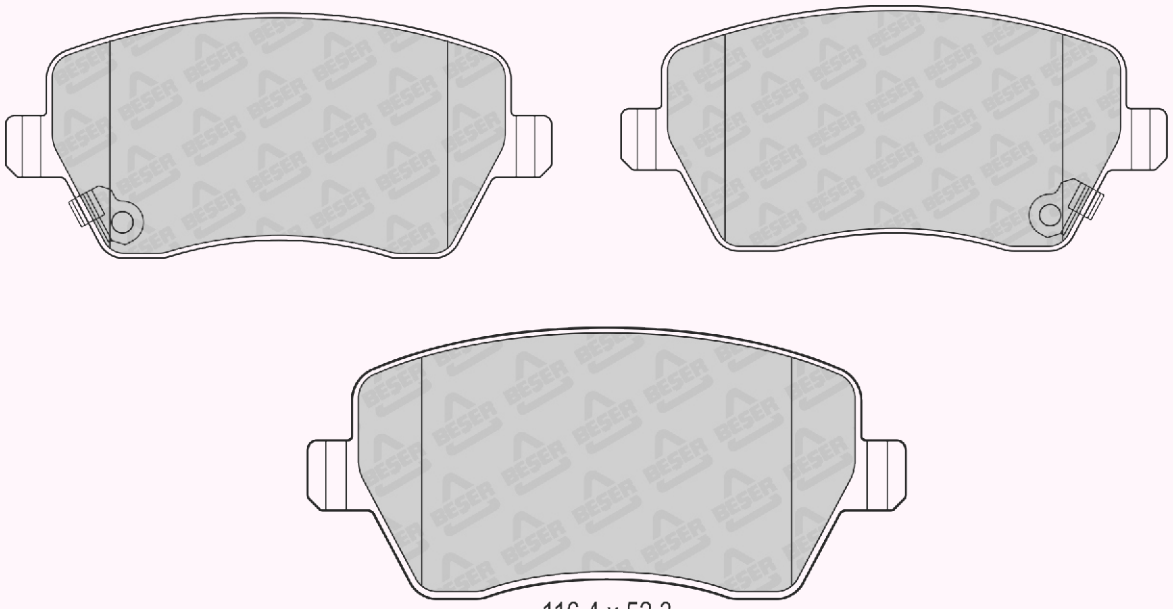

116,4 x 52,3
(NOT SCALE)

REFERENCE	T(mm)	REMARKS	MAKE	F/R	WVA No
3983/3	17,3	4 PADS PLAIN	NISSAN	F	-

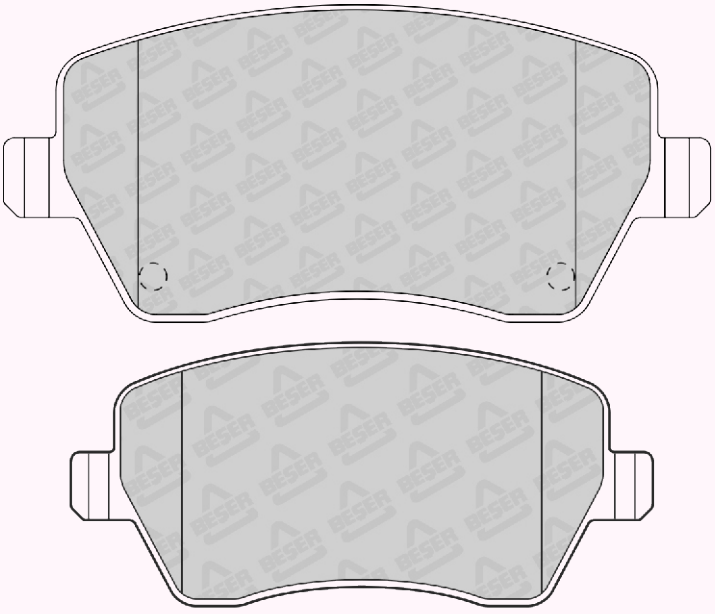

116,4 x 52,3
(NOT SCALE)

REFERENCE	T(mm)	REMARKS	MAKE	F/R	WVA No
3984	17,6	4 PADS PLAIN	CITROEN - PEUGEOT	R	24150 24737

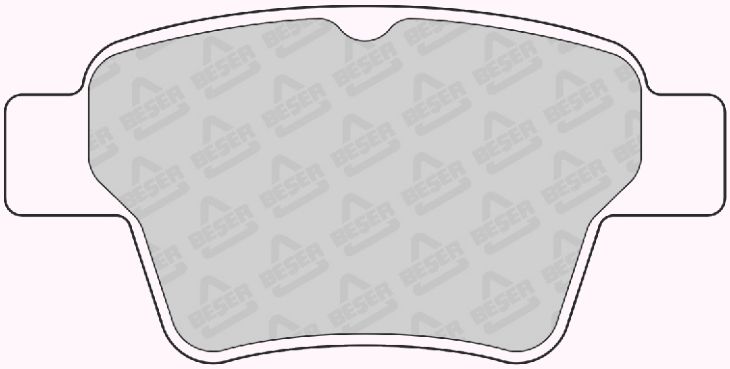

95 x 46,83

REFERENCE	T(mm)	REMARKS	MAKE	F/R	WVA No
3984/1	17,6	4 PADS PLAIN	CITROEN - PEUGEOT	R	24150 24737

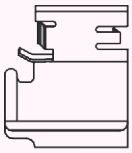

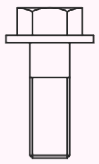

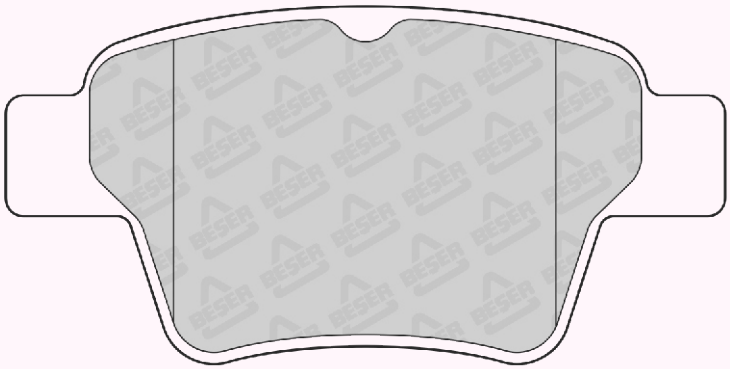

95 x 46,83

REFERENCE	T(mm)	REMARKS	MAKE	F/R	WVA No
3985	16,0	2 PADS WITH WEAR SENSOR	HYUNDAI	F	24277

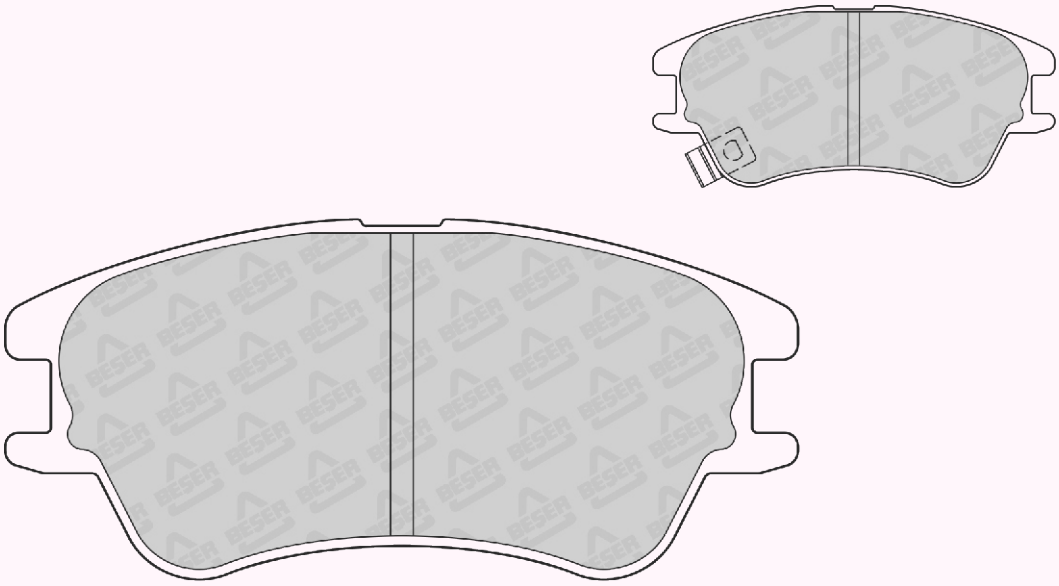

104,7x 47,16

REFERENCE	T(mm)	REMARKS	MAKE	F/R	WVA No
3986	18,8	1 PAD WITH WEAR SENSOR	CITROEN - FIAT LANCIA - PEUGEOT	F	20261 20267

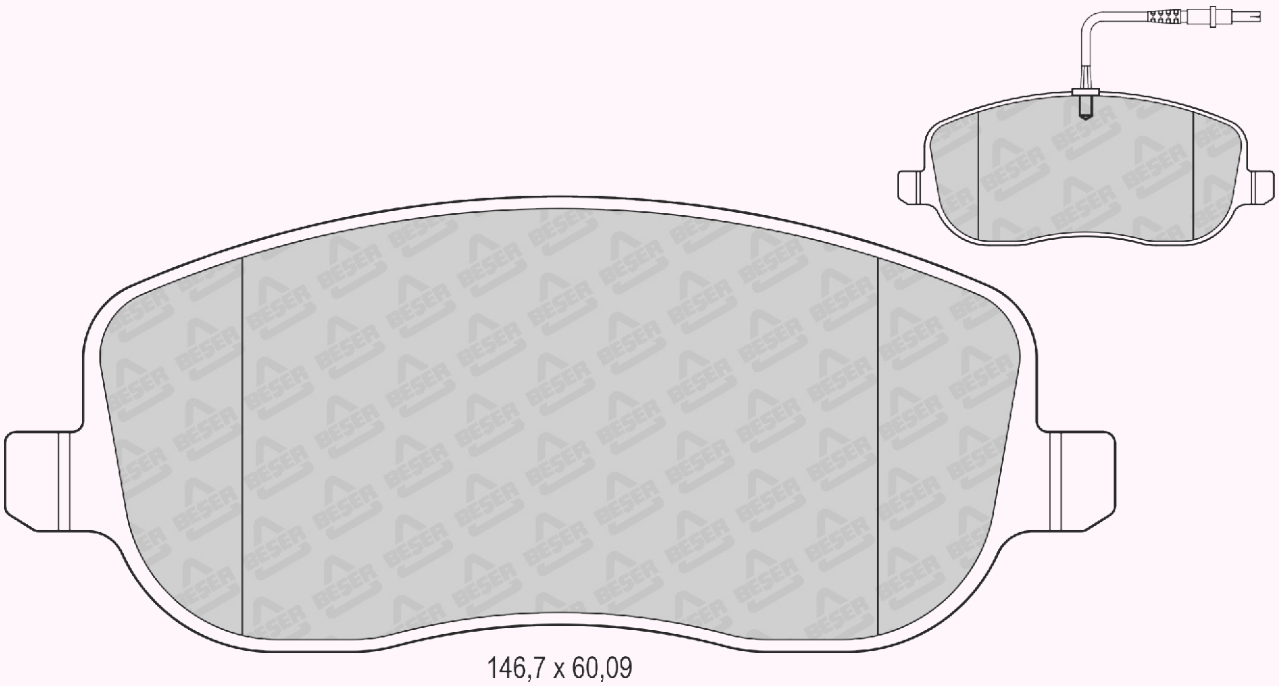

146,7 x 60,09

REFERENCE	T(mm)	REMARKS	MAKE	F/R	WVA No
3987	17,3	4 PADS PLAIN	CITROEN - PEUGEOT TOYOTA	F	23959

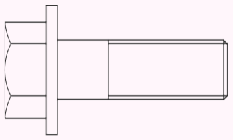

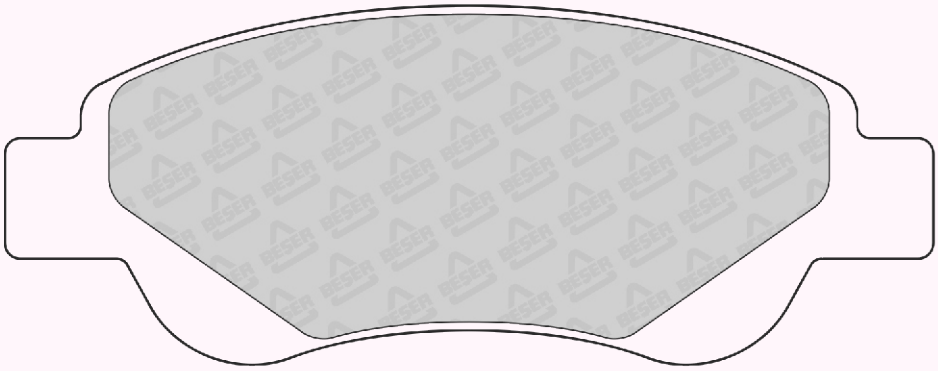

122,7 x 47,13

REFERENCE	T(mm)	REMARKS	MAKE	F/R	WVA No
3988	15,5	4 PADS PLAIN	FORD - MAZDA	F	24353 24354

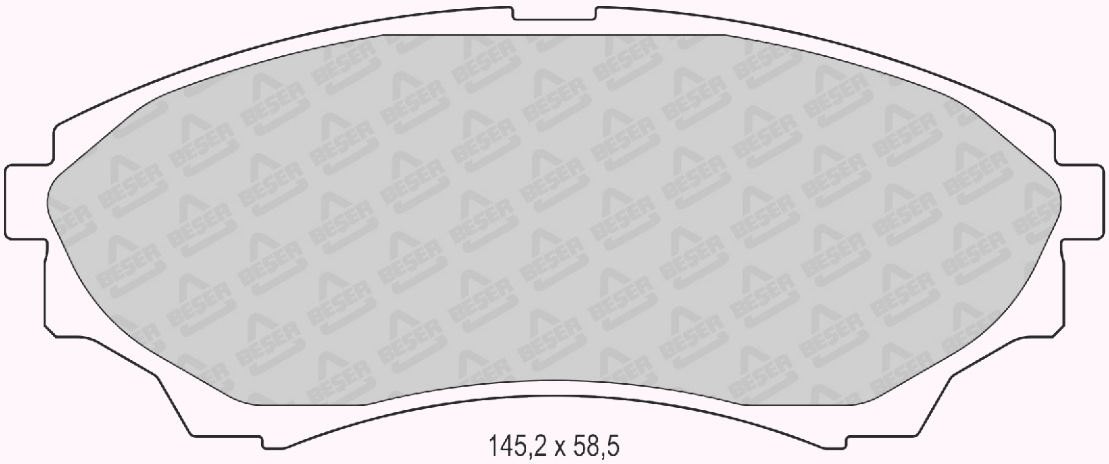

145,2 x 58,5

REFERENCE	T(mm)	REMARKS	MAKE	F/R	WVA No
3988/1	15,2	2 PADS WITH WEAR SENSOR	FORD - MAZDA	F	24353

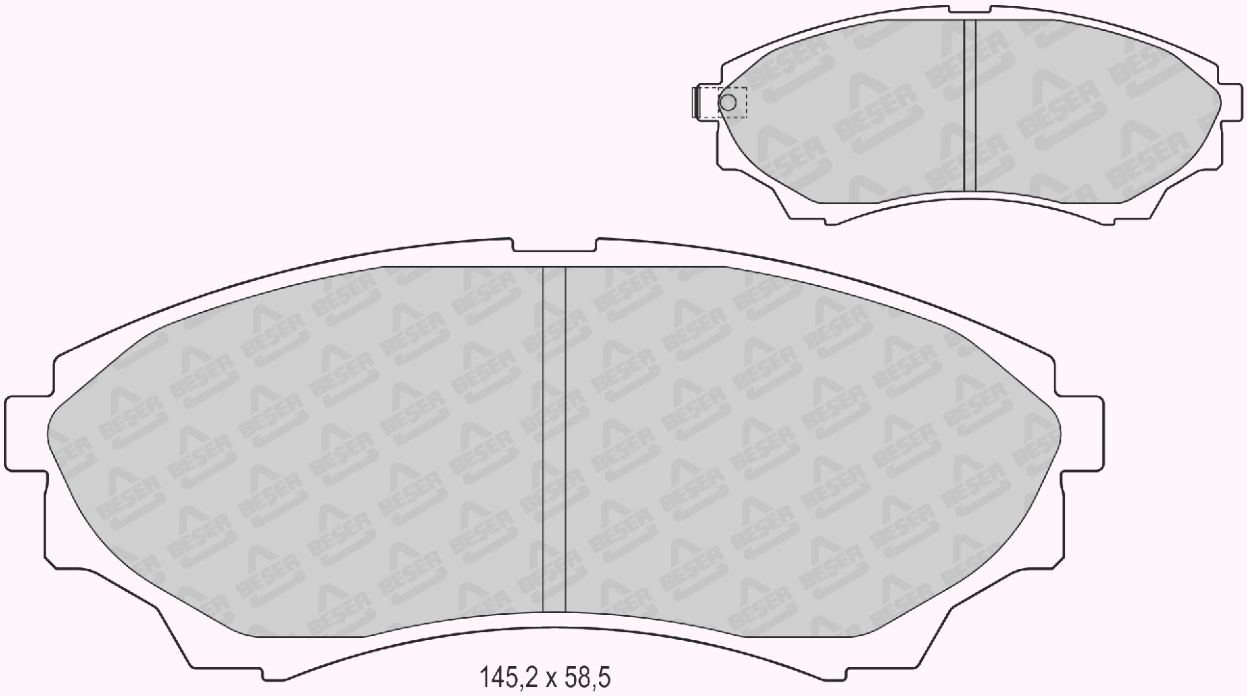

145,2 x 58,5

REFERENCE	T(mm)	REMARKS	MAKE	F/R	WVA No
3989	14,8	2 PADS WITH WEAR SENSOR	HAWTAI - HYUNDAI	R	24488 24489 24490

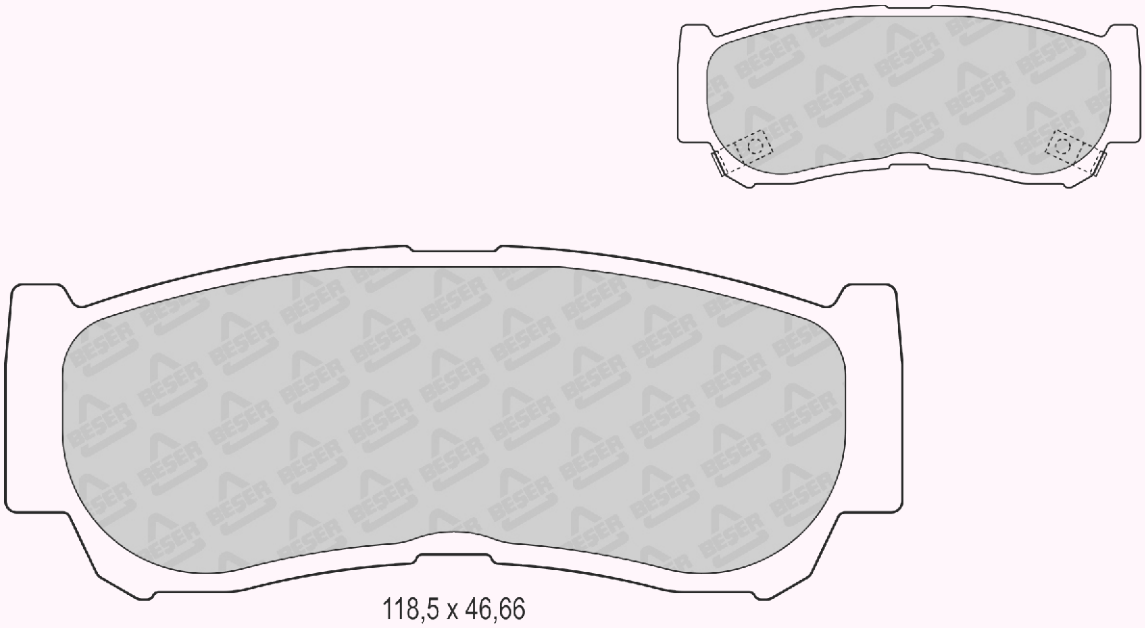

118,5 x 46,66

REFERENCE	T(mm)	REMARKS	MAKE	F/R	WVA No
3993	15,7	2 PADS WITH WEAR SENSOR	HYUNDAI - JAC - KIA	F	23543 23544 23545

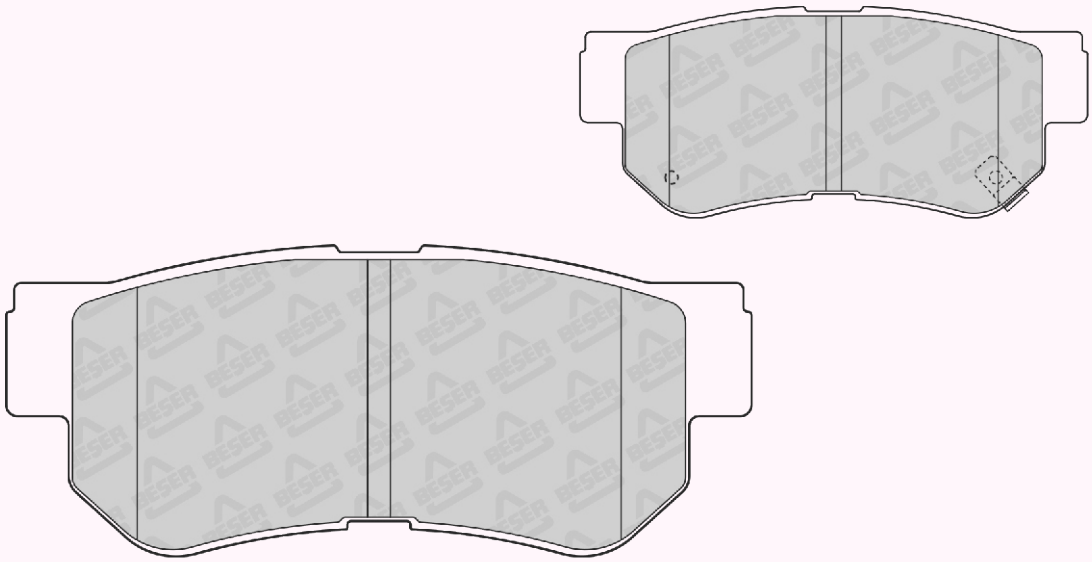

98,5 x 41,02

REFERENCE	T(mm)	REMARKS	MAKE	F/R	WVA No
3994	22	4 PADS PLAIN	IRISBUS - IVECO	F	29122

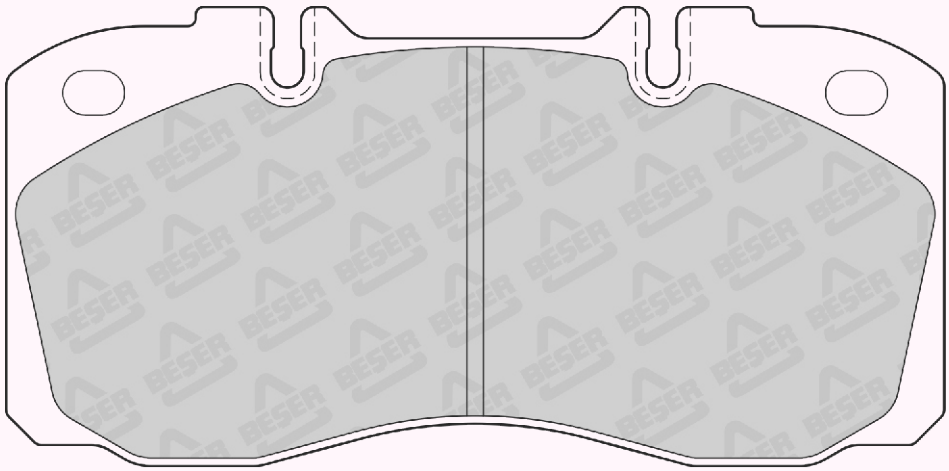

174,6 x 85,3
(NOT SCALE)

REFERENCE	T(mm)	REMARKS	MAKE	F/R	WVA No
3994/1	22	2 PADS WITH WEAR SENSOR	IRISBUS - IVECO	F	29122

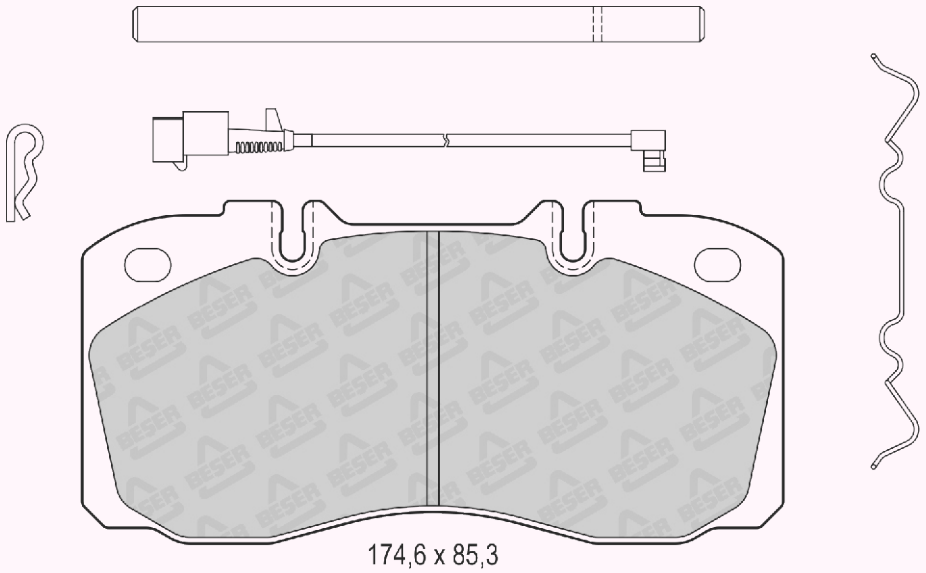

174,6 x 85,3
(NOT SCALE)

REFERENCE	T(mm)	REMARKS	MAKE	F/R	WVA No
3995	23	4 PADS PLAIN	IRISBUS - IVECO	R	29231

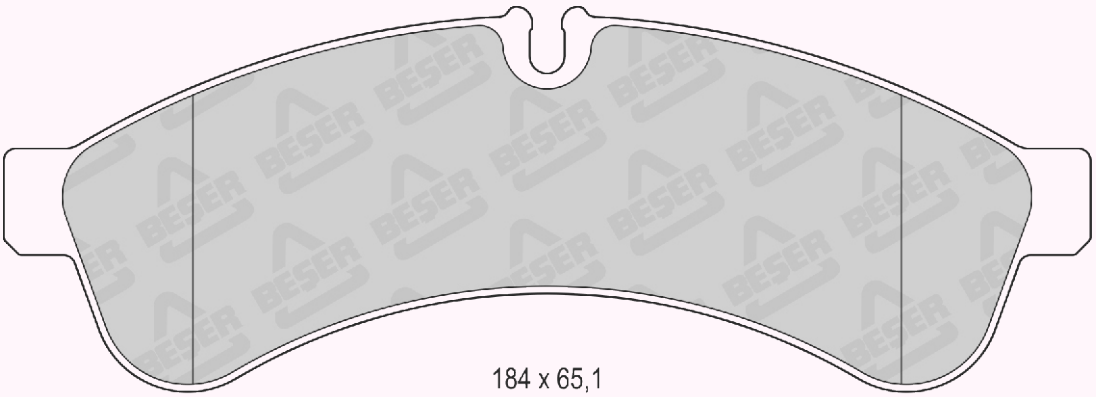

184 x 65,1
(NOT SCALE)

REFERENCE	T(mm)	REMARKS	MAKE	F/R	WVA No
3995/1	23	2 PADS WITH WEAR SENSOR	IRISBUS - IVECO	R	29231

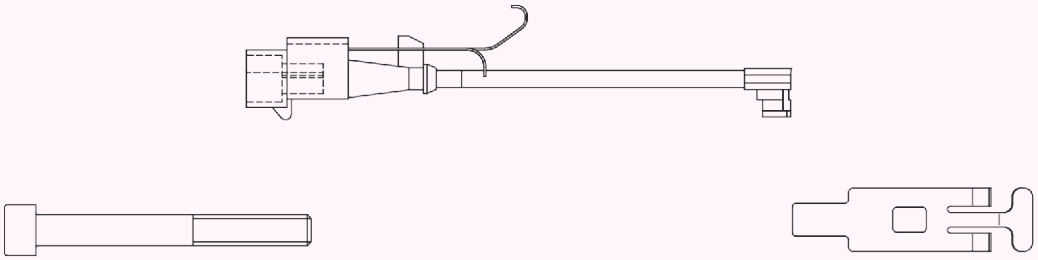

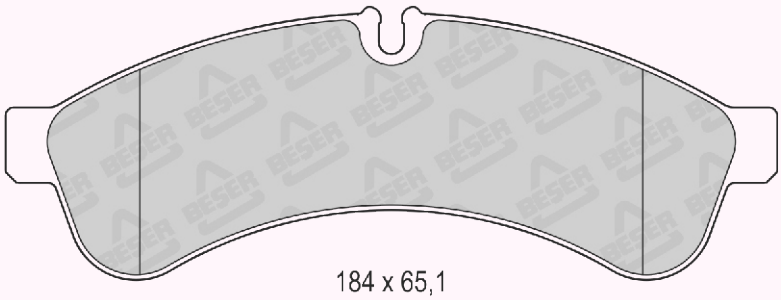

REFERENCE	T(mm)	REMARKS	MAKE	F/R	WVA No
3996	19	2 PADS WITH WEAR SENSOR	LEXUS - TOYOTA	F	24386 24394 24395

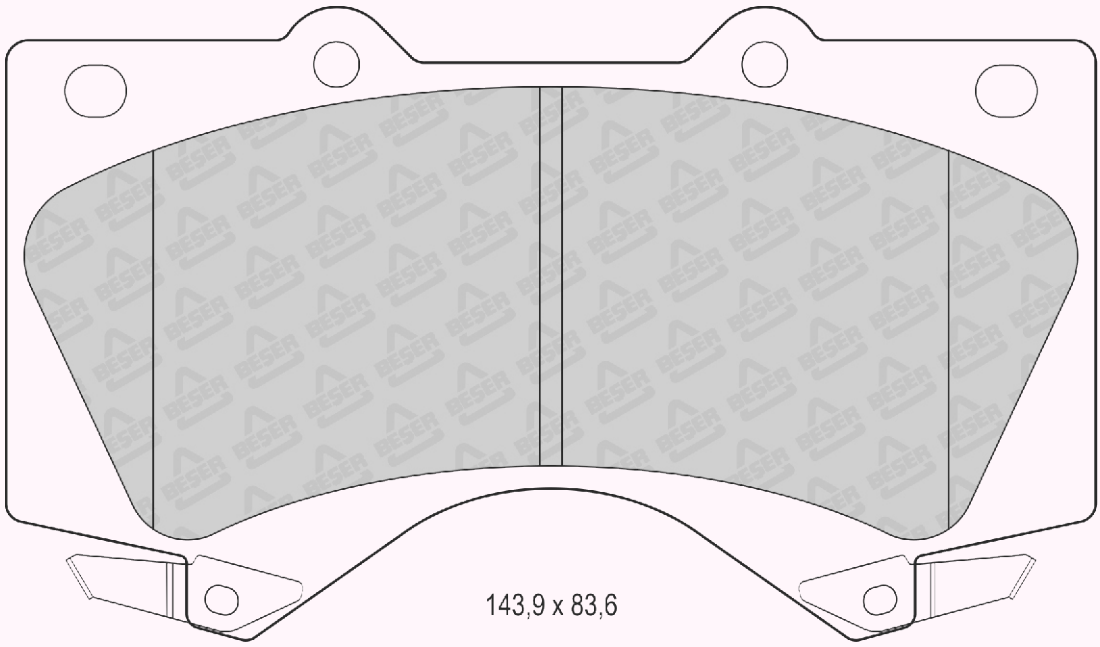

REFERENCE	T(mm)	REMARKS	MAKE	F/R	WVA No
3997	17,4	4 PADS PLAIN	LEXUS - TOYOTA	R	24653

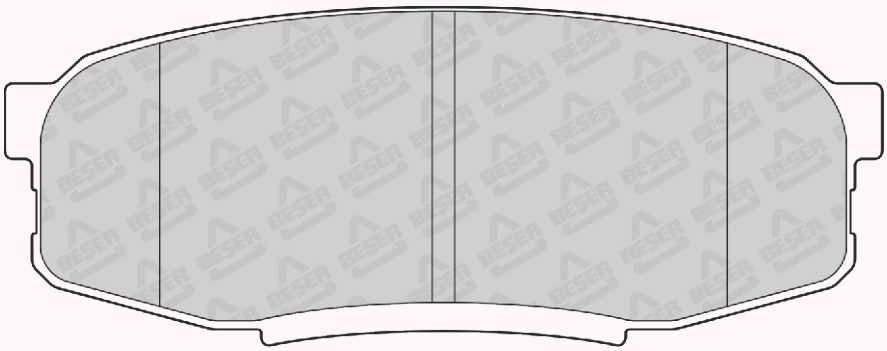

115,8 x 44,3

REFERENCE	T(mm)	REMARKS	MAKE	F/R	WVA No
3998	15,5	4 PADS PLAIN	TOYOTA	F	25246

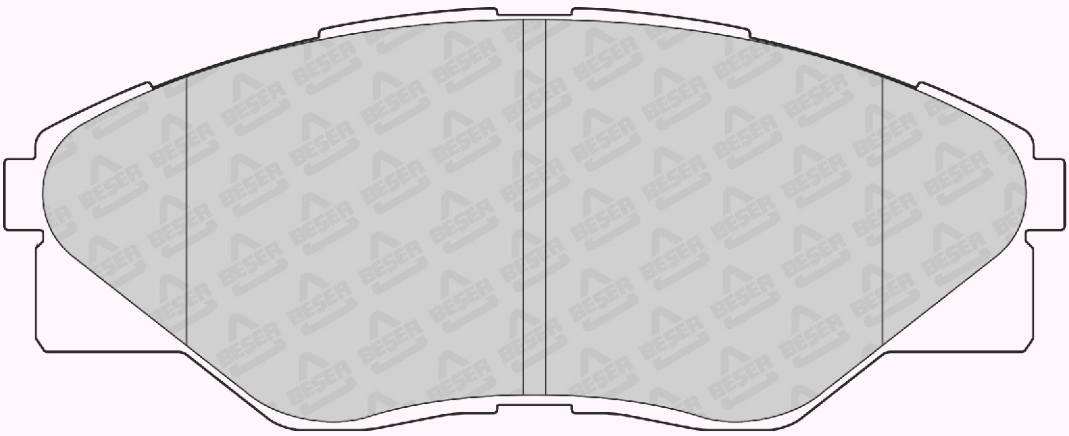

140,15 x 55,29

REFERENCE	T(mm)	REMARKS	MAKE	F/R	WVA No
4000	16,25	4 PADS PLAIN	SUZUKI	F	24301

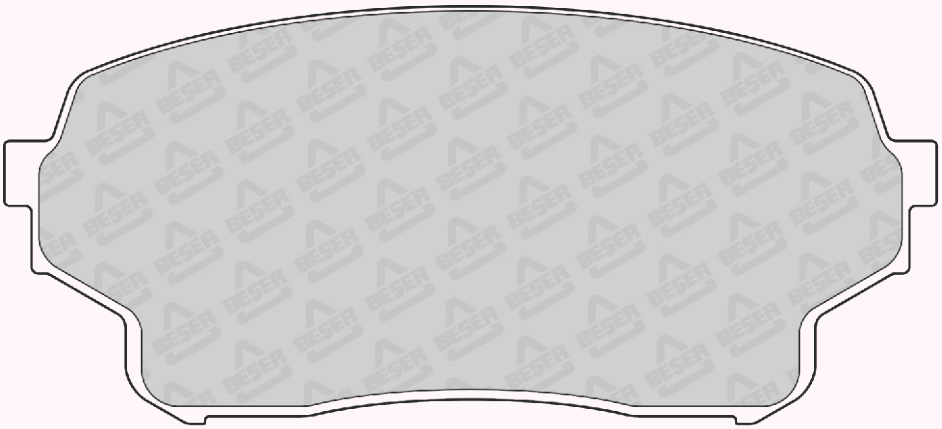

123,1 x 55,34

REFERENCE	T(mm)	REMARKS	MAKE	F/R	WVA No
4001	17,25 17,8	2 PADS WITH WEAR SENSOR	KIA	F	24218 24219 24220

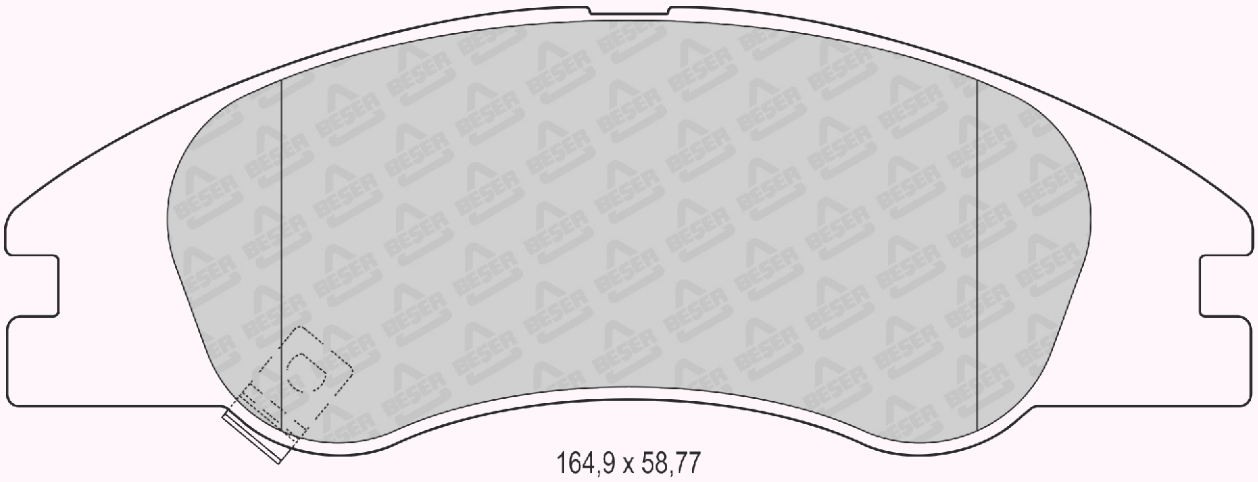

164,9 x 58,77

REFERENCE	T(mm)	REMARKS	MAKE	F/R	WVA No
4002	17	4 PADS PLAIN	NISSAN	F	25870 25871 25872

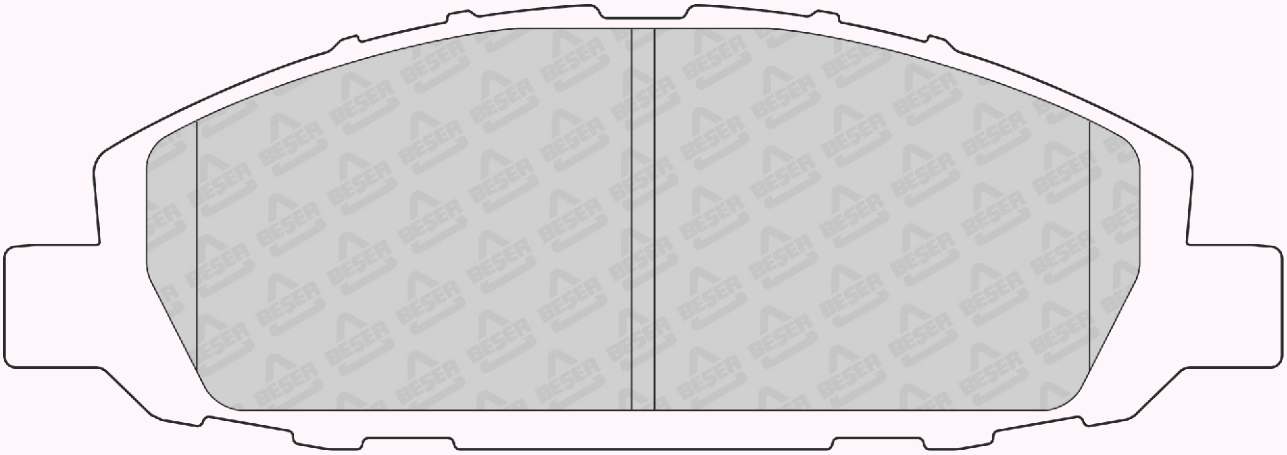

168,8 x 58,21

REFERENCE	T(mm)	REMARKS	MAKE	F/R	WVA No
4003	17,4	4 PADS PLAIN	TOYOTA-LEXUS	F	23855

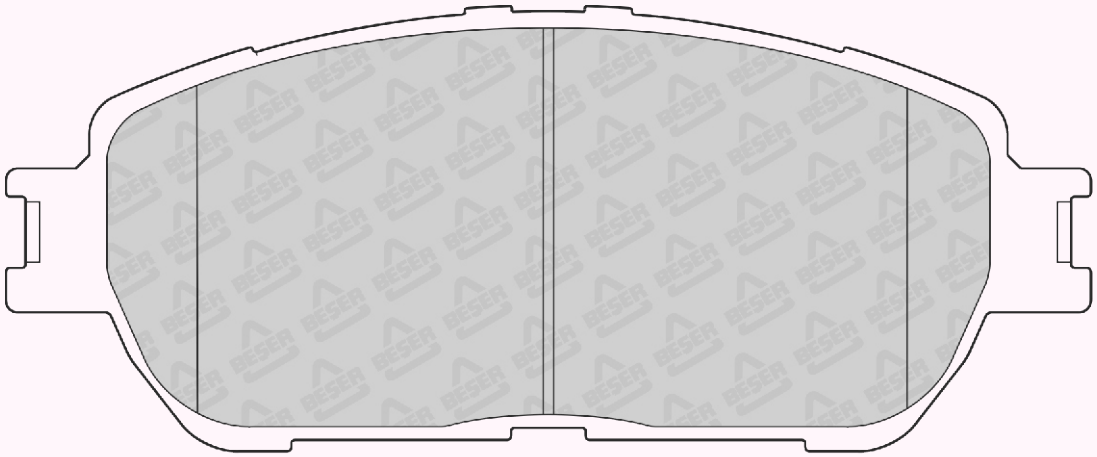

143,2 x 58,46

REFERENCE	T(mm)	REMARKS	MAKE	F/R	WVA No
4004	16,7	2 PADS WITH WEAR SENSOR	DODGE - JEEP	R	24602 24603

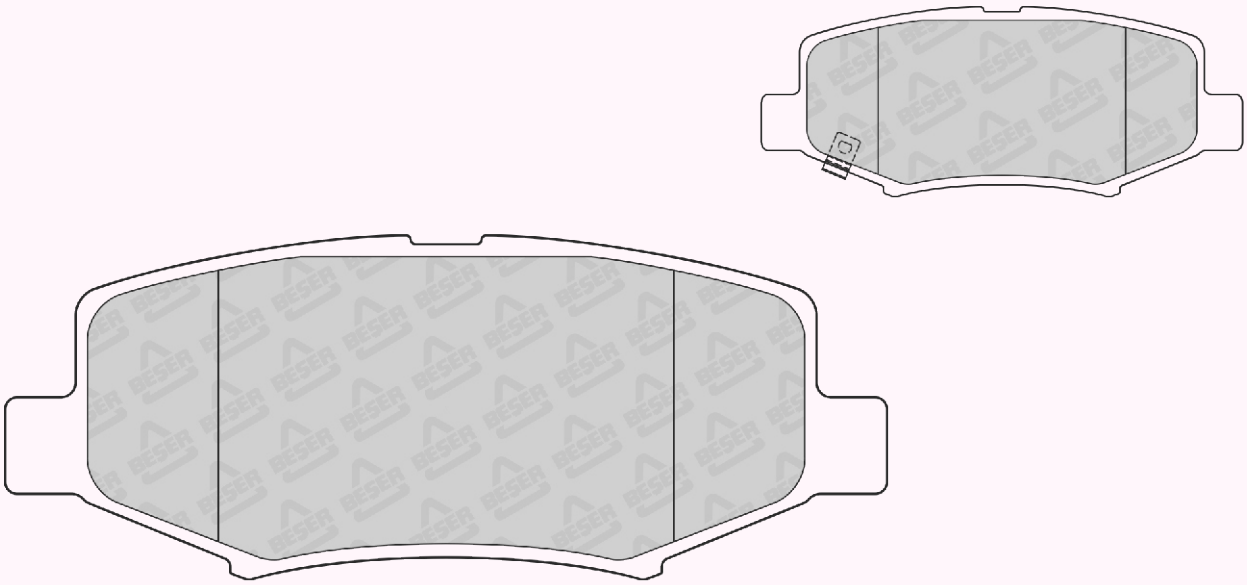

116,5 x 45,4

REFERENCE	T(mm)	REMARKS	MAKE	F/R	WVA No
4005	16,7	2 PADS WITH WEAR SENSOR	CHRYSLER - DODGE FIAT - JEEP - LANCIA	F	24604 24605

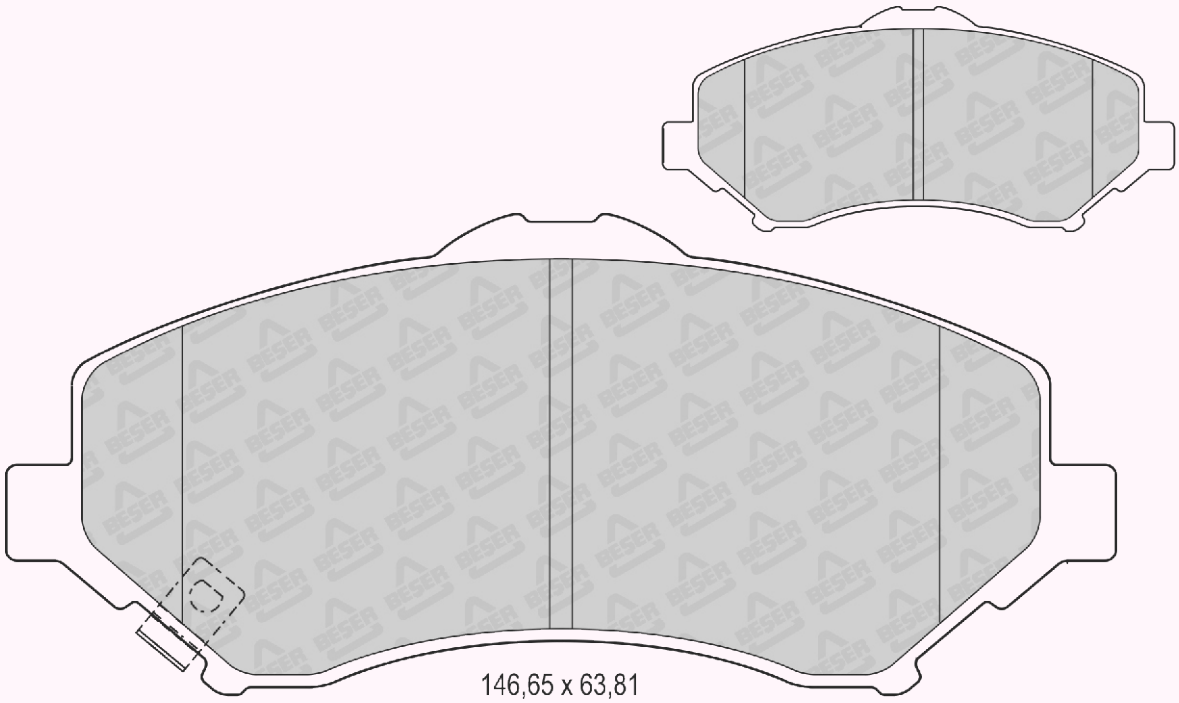

146,65 x 63,81

REFERENCE	T(mm)	REMARKS	MAKE	F/R	WVA No
4006	18,8	4 PADS WITH WEAR SENSOR	CHRYSLER - DODGE LANCIA	F	24166

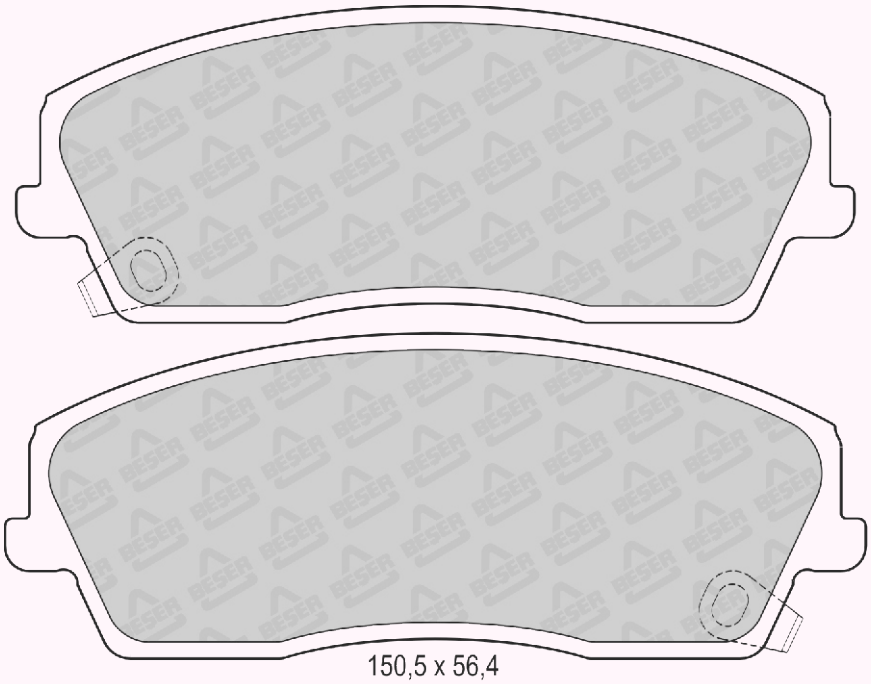

150,5 x 56,4
(NOT SCALE)

REFERENCE	T(mm)	REMARKS	MAKE	F/R	WVA No
4008	17,4	2 PADS WITH WEAR SENSOR	BUICK - CADILLAC - CHEVROLET HOLDEN - OPEL - VAUXHALL	F	25034 25035 25036

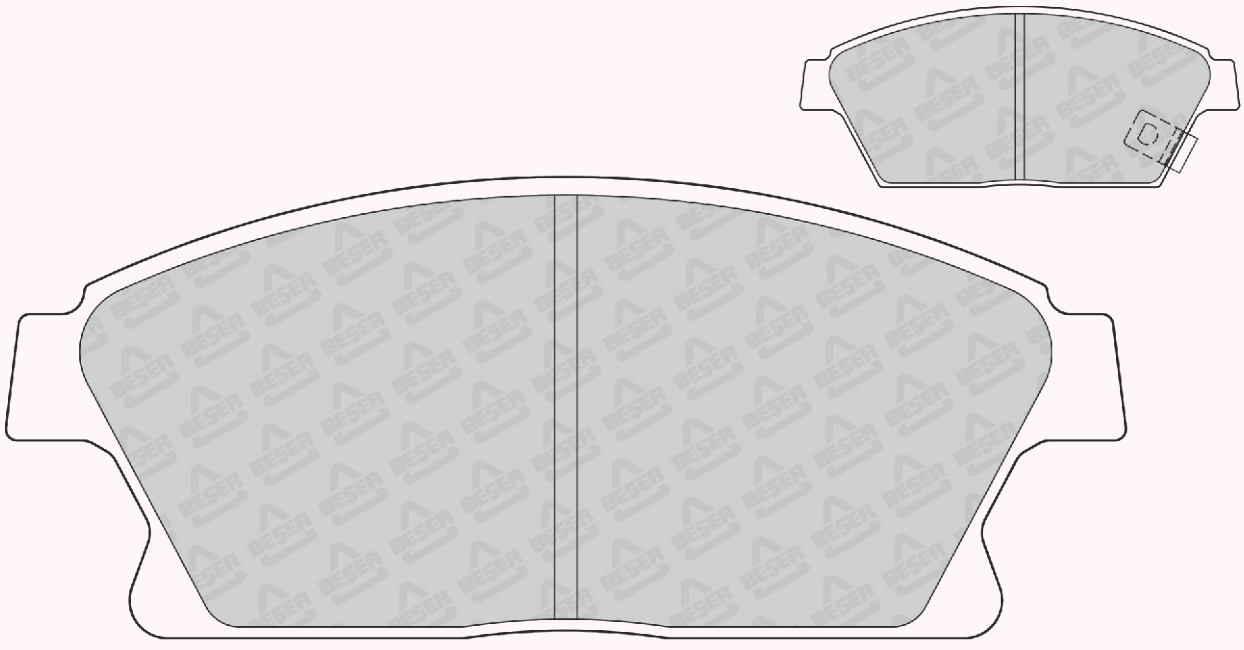

147,9 x 60,9

REFERENCE	T(mm)	REMARKS	MAKE	F/R	WVA No
4009	17	4 PADS PLAIN	ASIA MOTORS - KIA	F	23442 23443 23444

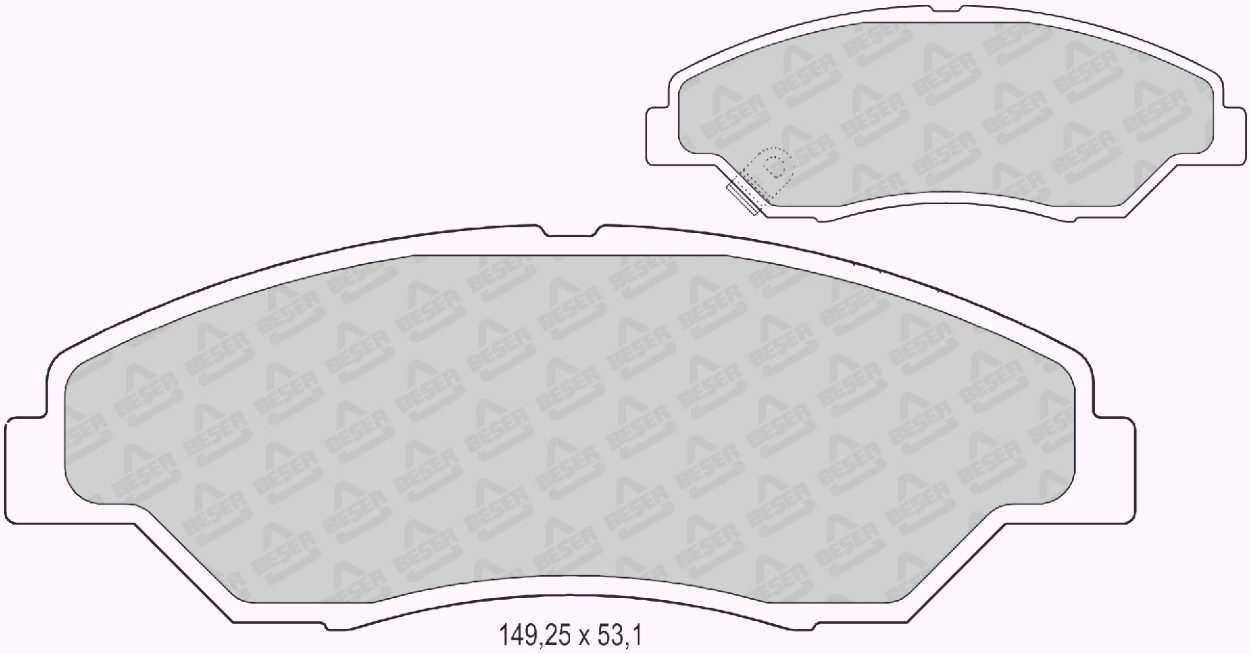

149,25 x 53,1

REFERENCE	T(mm)	REMARKS	MAKE	F/R	WVA No
4010	16	4 PADS PLAIN	NISSAN	F	23502 23503 23504

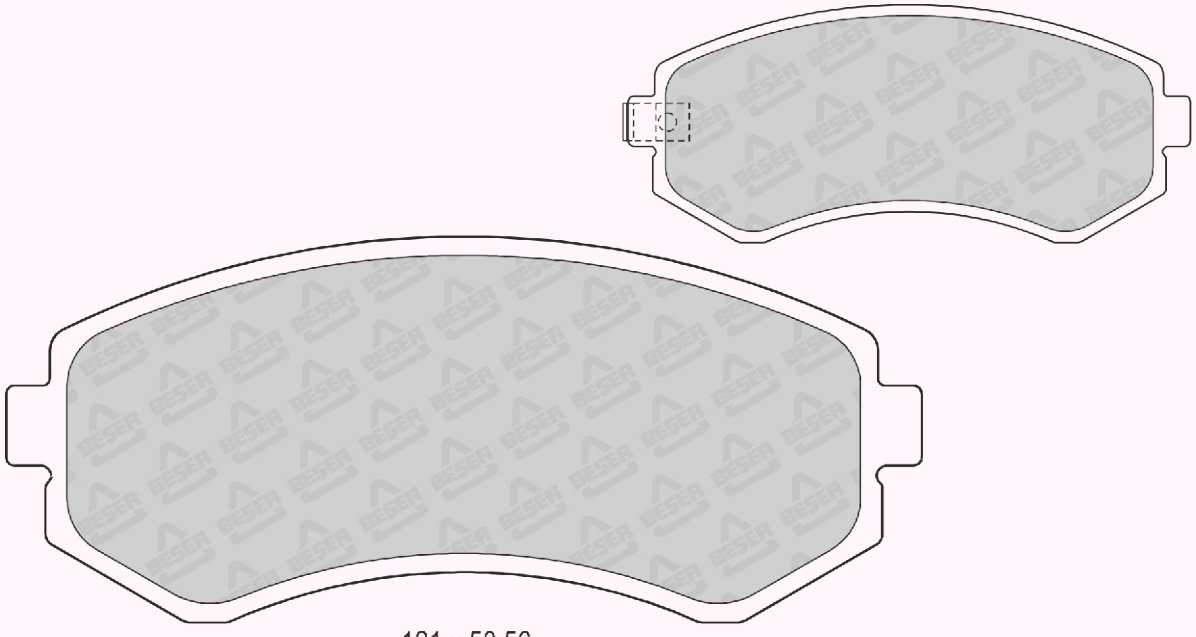

121 x 50,56

REFERENCE	T(mm)	REMARKS	MAKE	F/R	WVA No
4011	18,6	2 PADS WITH WEAR SENSOR	JEEP	F	23631 23632 23633

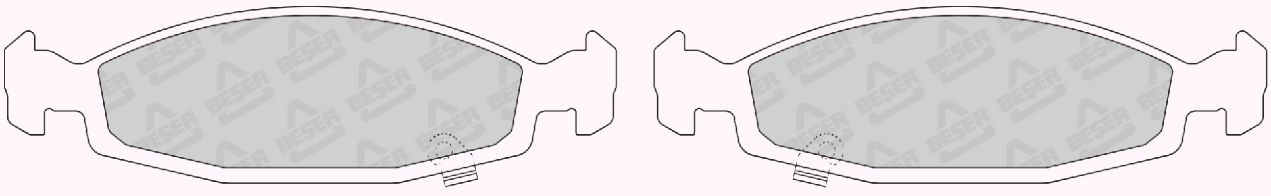

194,45 x 55,35
(NOT SCALE)

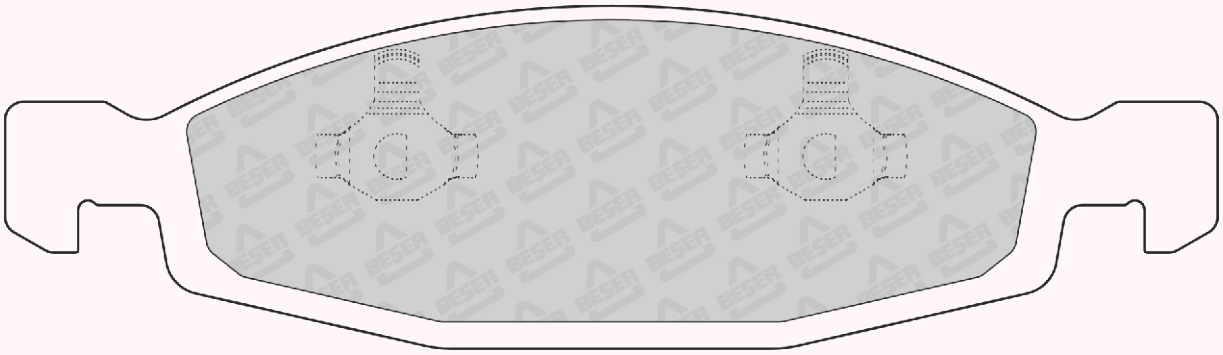

192,3 x 55,35
(NOT SCALE)

REFERENCE	T(mm)	REMARKS	MAKE	F/R	WVA No
4012	18	2 PADS WITH WEAR SENSOR	CHRYSLER - DODGE JEEP	F	23638

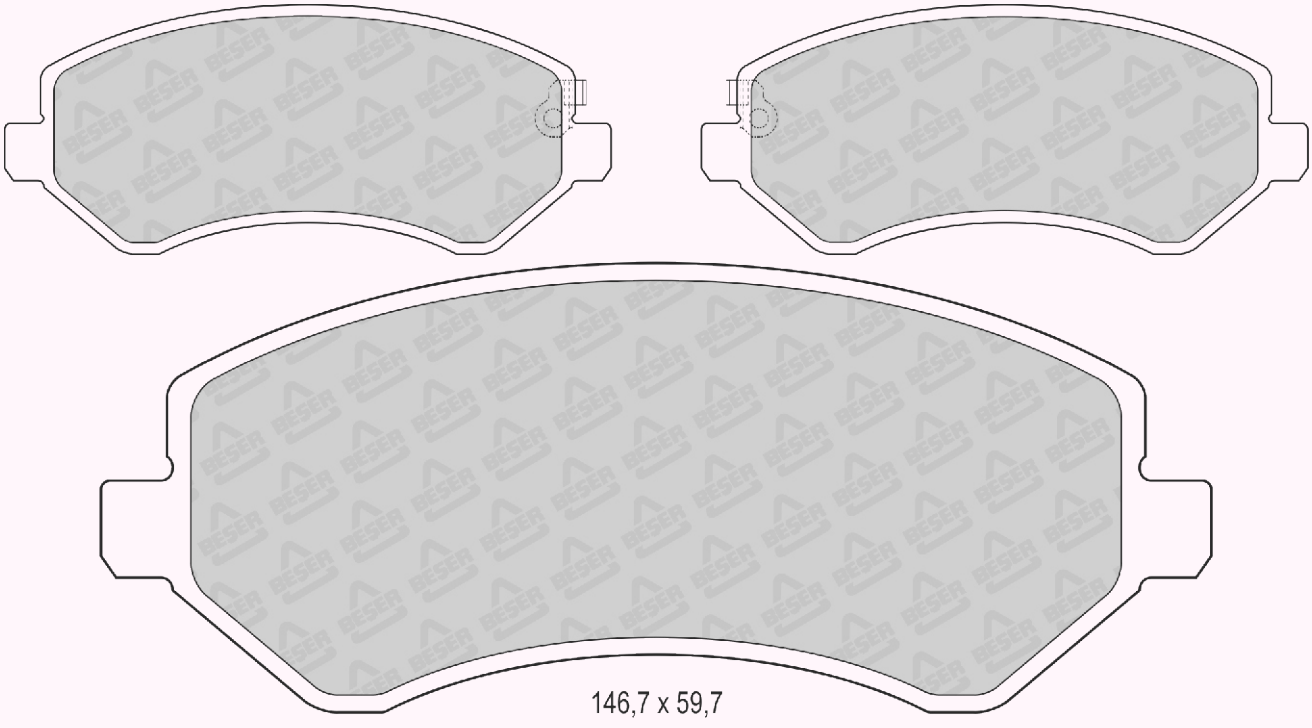

146,7 x 59,7

REFERENCE	T(mm)	REMARKS	MAKE	F/R	WVA No
4013	17	2 PADS WITH WEAR SENSOR	TOYOTA	F	23836

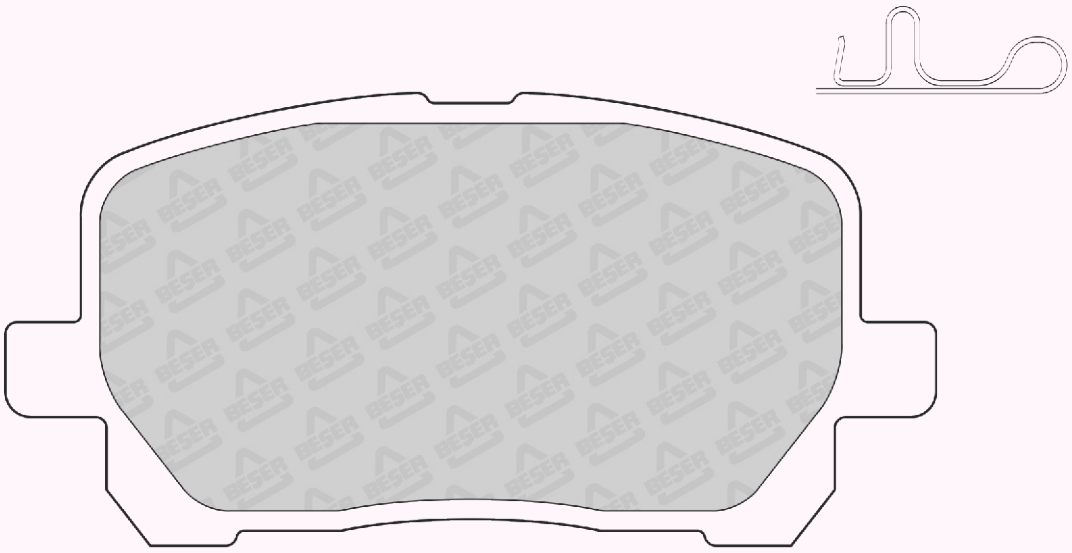

123 x 59,46

REFERENCE	T(mm)	REMARKS	MAKE	F/R	WVA No
4014	16,3	2 PADS WITH WEAR SENSOR	BUICK(SGM) - CHEVROLET HOLDEN - OPEL VAUXHALL	F	25096 25097 25098

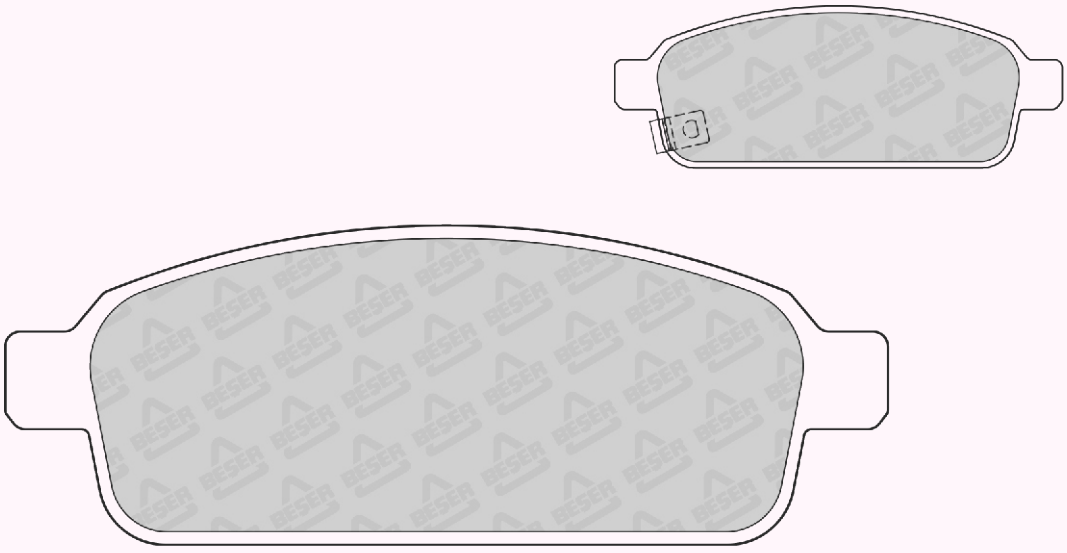

116,6 x 42,15

REFERENCE	T(mm)	REMARKS	MAKE	F/R	WVA No
4015	14,5	2 PADS WITH WEAR SENSOR	NISSAN	F	24682 24683 24684

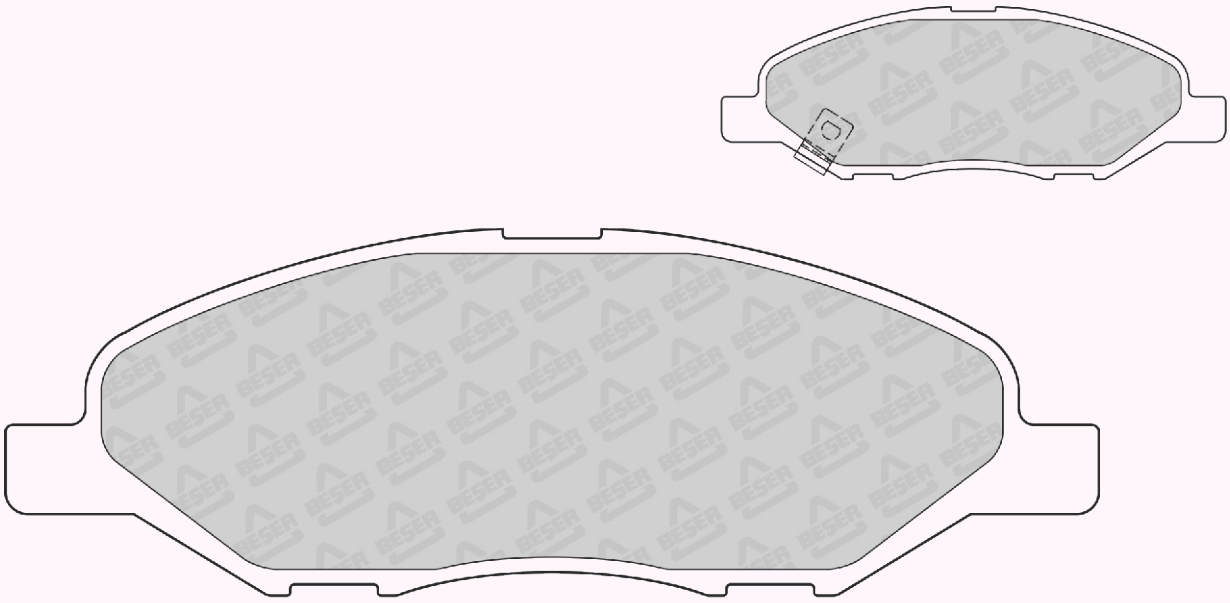

144,4 x 48,89

REFERENCE	T(mm)	REMARKS	MAKE	F/R	WVA No
4016	18	4 PADS PLAIN	JEEP	F	24250 24251 24252

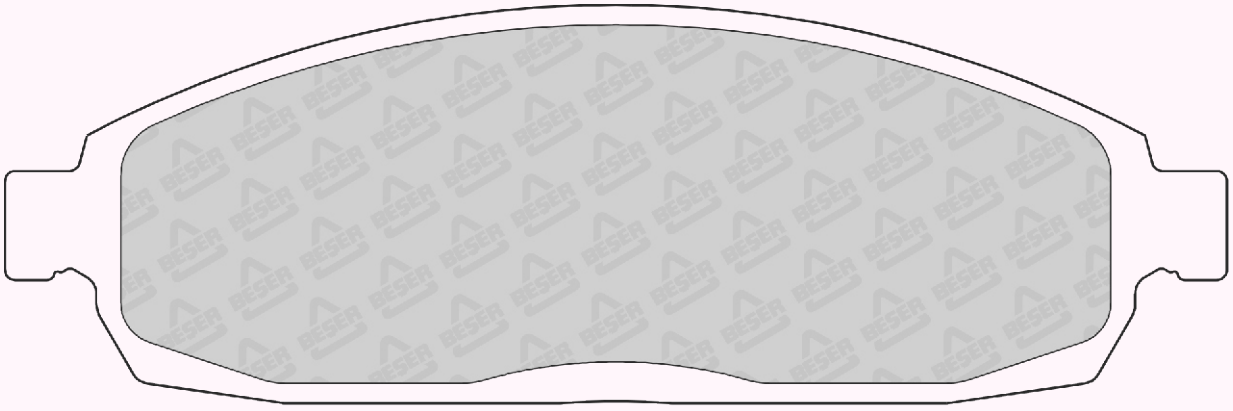

175,9 x 56,90
(NOT SCALE)

REFERENCE	T(mm)	REMARKS	MAKE	F/R	WVA No
4017	15,9	2 PADS WITH WEAR SENSOR	NISSAN	F	23970 23971 23972

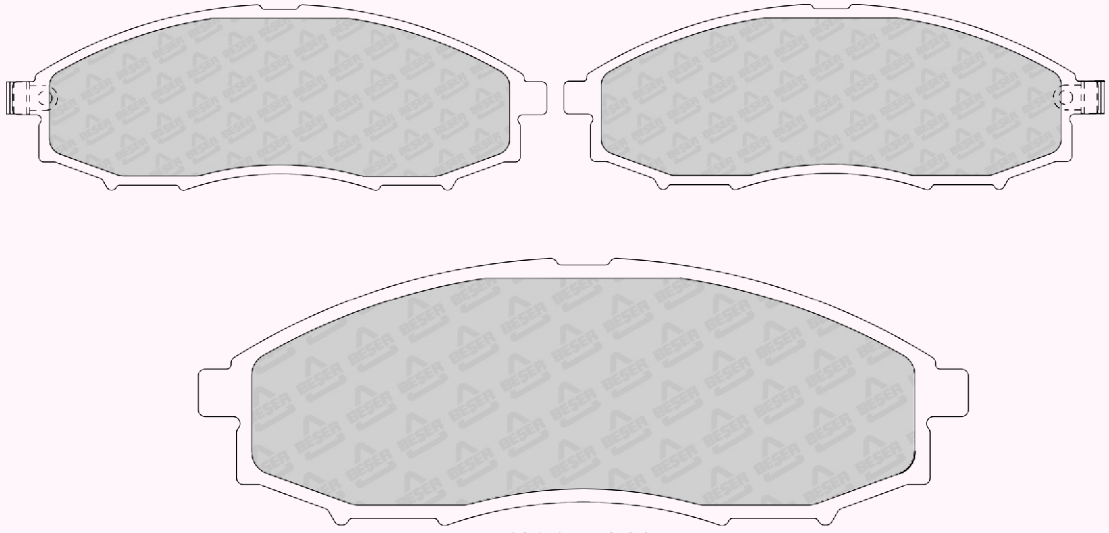

164,1 x 56,91
(NOT SCALE)

REFERENCE	T(mm)	REMARKS	MAKE	F/R	WVA No
4017/1	16,9	2 PADS WITH WEAR SENSOR	NISSAN	F	23970

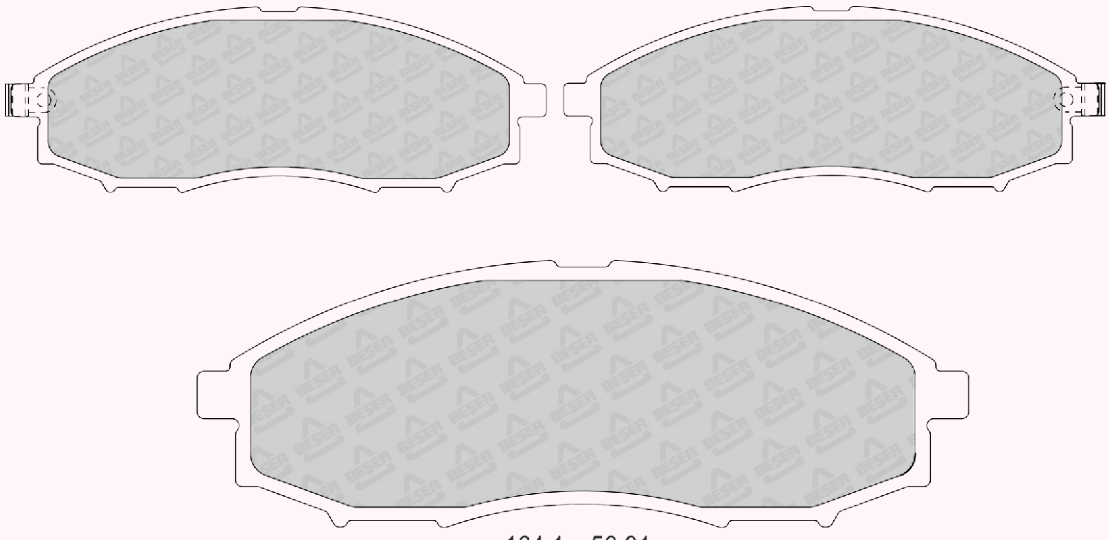

164,1 x 56,91
(NOT SCALE)

REFERENCE	T(mm)	REMARKS	MAKE	F/R	WVA No
4018	17,8	4 PADS WITH WEAR SENSOR	CHRYSLER - DODGE LANCIA	R	24163

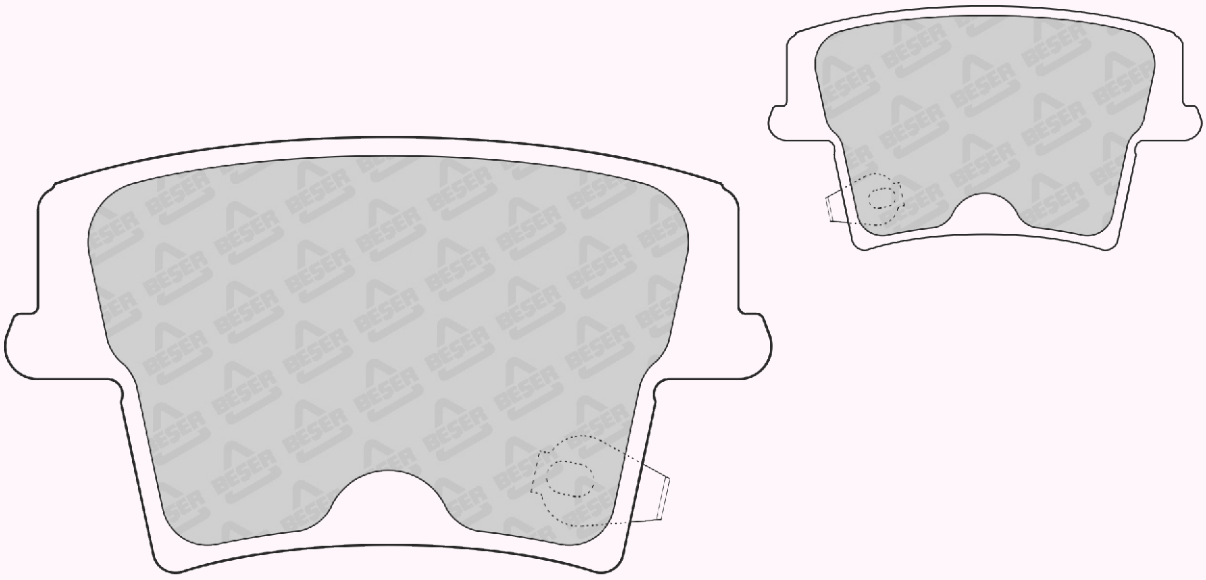

101,19 x 57,48

REFERENCE	T(mm)	REMARKS	MAKE	F/R	WVA No
4019	18,5	2 PADS WITH WEAR SENSOR	DAIHATSU - TOYATA	F	25610 25611 25612

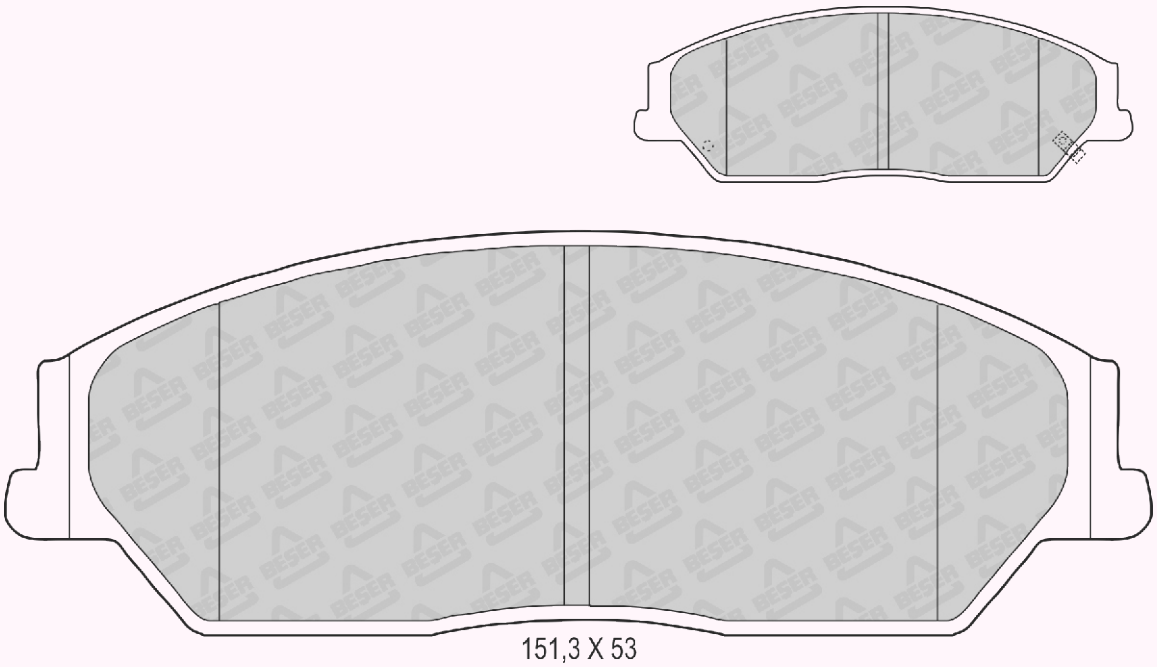

151,3 X 53

REFERENCE	T(mm)	REMARKS	MAKE	F/R	WVA No
4020	18,2	4 PADS PLAIN	VW	F	20652 21634

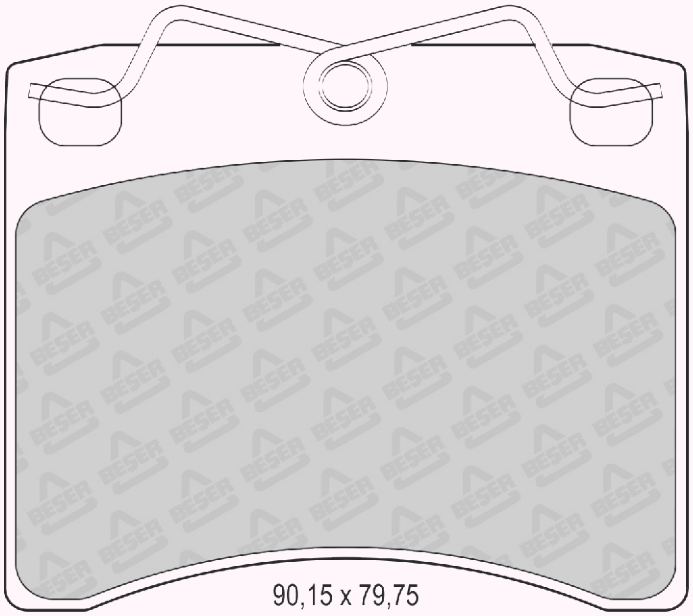

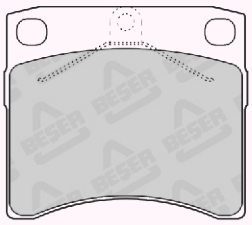

REFERENCE	T(mm)	REMARKS	MAKE	F/R	WVA No
4021	18,2	2 PADS WITH WEAR SENSOR	CADILLAC	F	24628

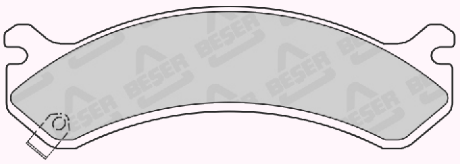

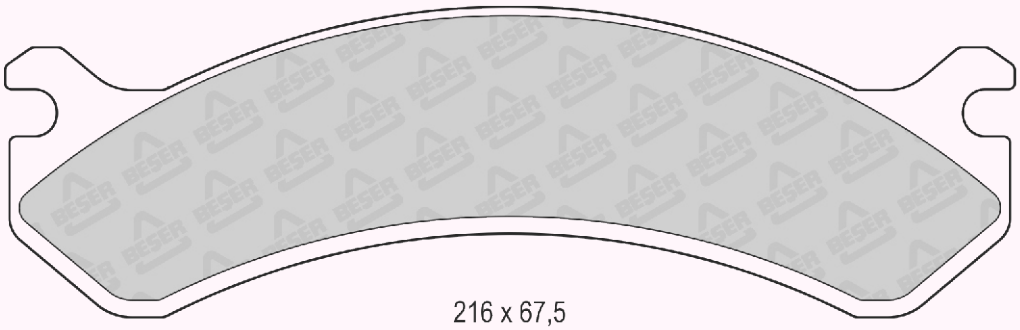

REFERENCE	T(mm)	REMARKS	MAKE	F/R	WVA No
4022	18,4	2 PADS WITH WEAR SENSOR	CHEVROLET - CADILLAC GMC - HUMMER	F-R	24626 24627 24792

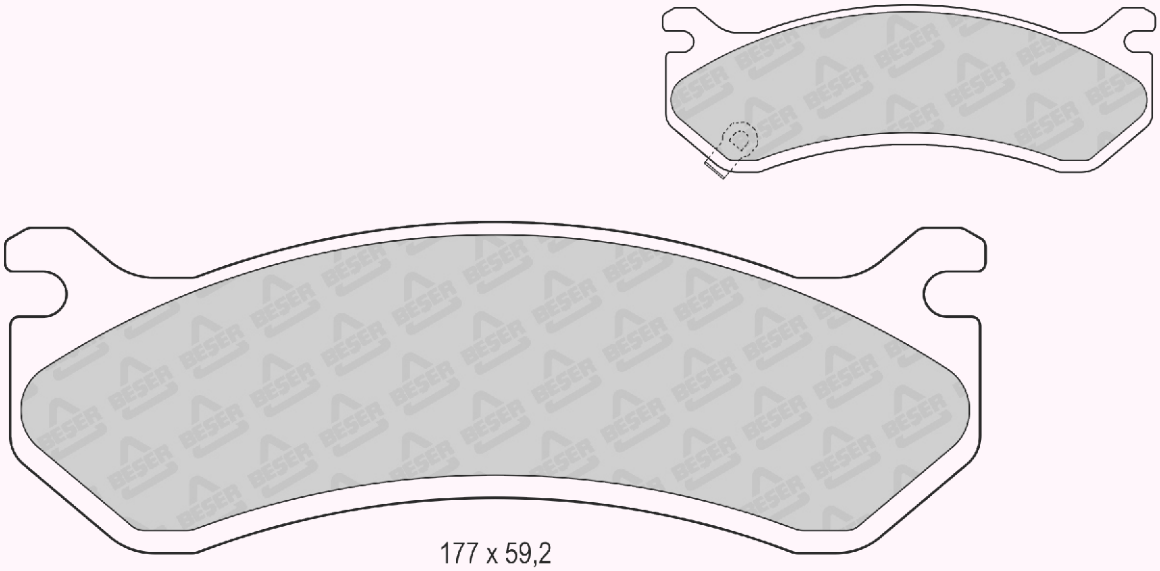

REFERENCE	T(mm)	REMARKS	MAKE	F/R	WVA No
4023	20	2 PADS WITH WEAR SENSOR	CHEVROLET	R	24879 24880 24881 24882

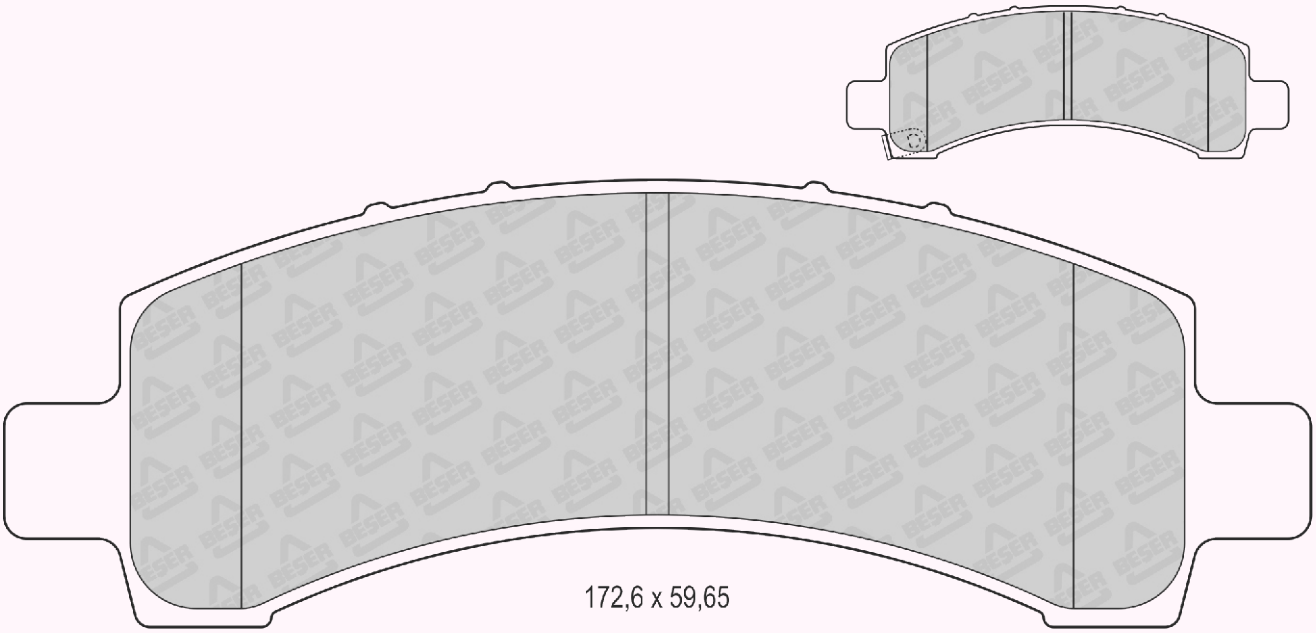

REFERENCE	T(mm)	REMARKS	MAKE	F/R	WVA No
4024	18	2 PADS WITH WEAR SENSOR	GM	F	24240 24242 24243

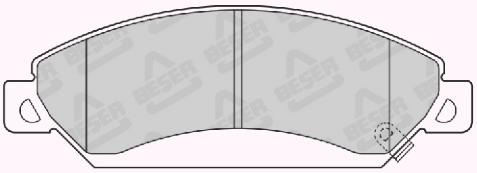

184,15 x 63,6
(NOT SCALE)

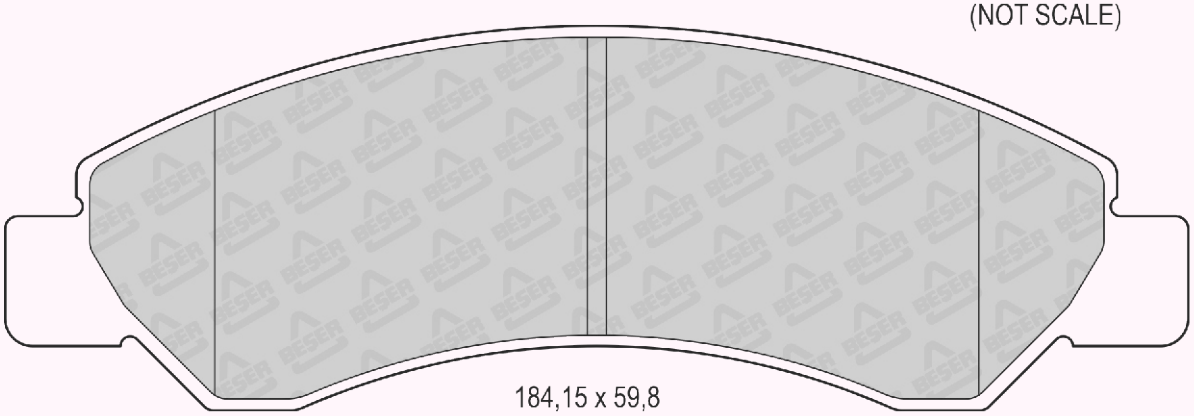

184,15 x 59,8
(NOT SCALE)

REFERENCE	T(mm)	REMARKS	MAKE	F/R	WVA No
4025	16	2 PADS WITH WEAR SENSOR	NISSAN	R	24240

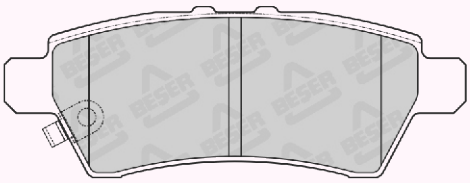

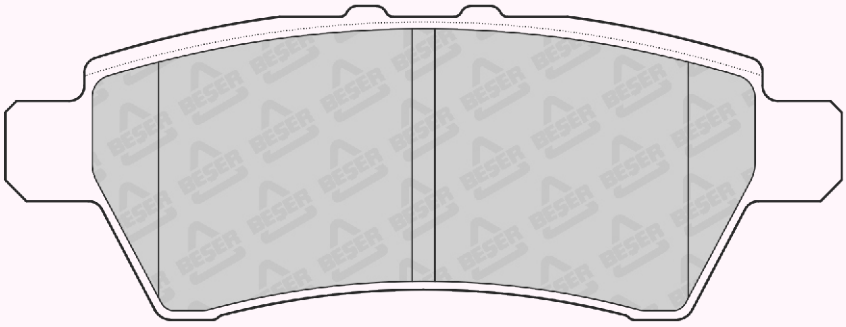

110,5 x 41,1

REFERENCE	T(mm)	REMARKS	MAKE	F/R	WVA No
4026	16,7	2 PADS WITH WEAR SENSOR	HUMMER	F	.....

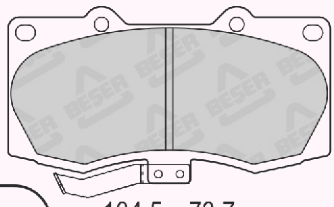

134,5 x 73,7
(NOT SCALE)

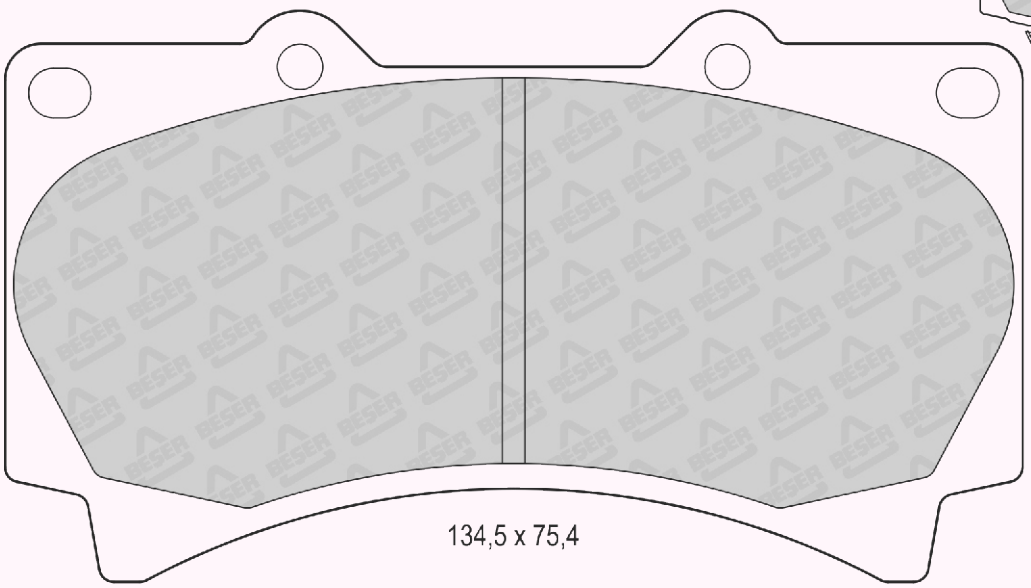

134,5 x 75,4

REFERENCE	T(mm)	REMARKS	MAKE	F/R	WVA No
4027	15	4 PADS PLAIN	DR-SUZUKI	F	23662

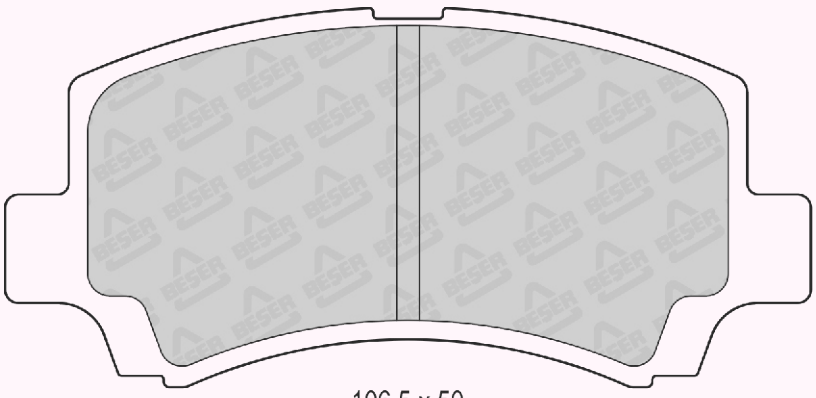

106,5 x 50

REFERENCE	T(mm)	REMARKS	MAKE	F/R	WVA No
4028	17,8	2 PADS WITH WEAR SENSOR	HYUNDAI - KIA	F	23966 23987 23988

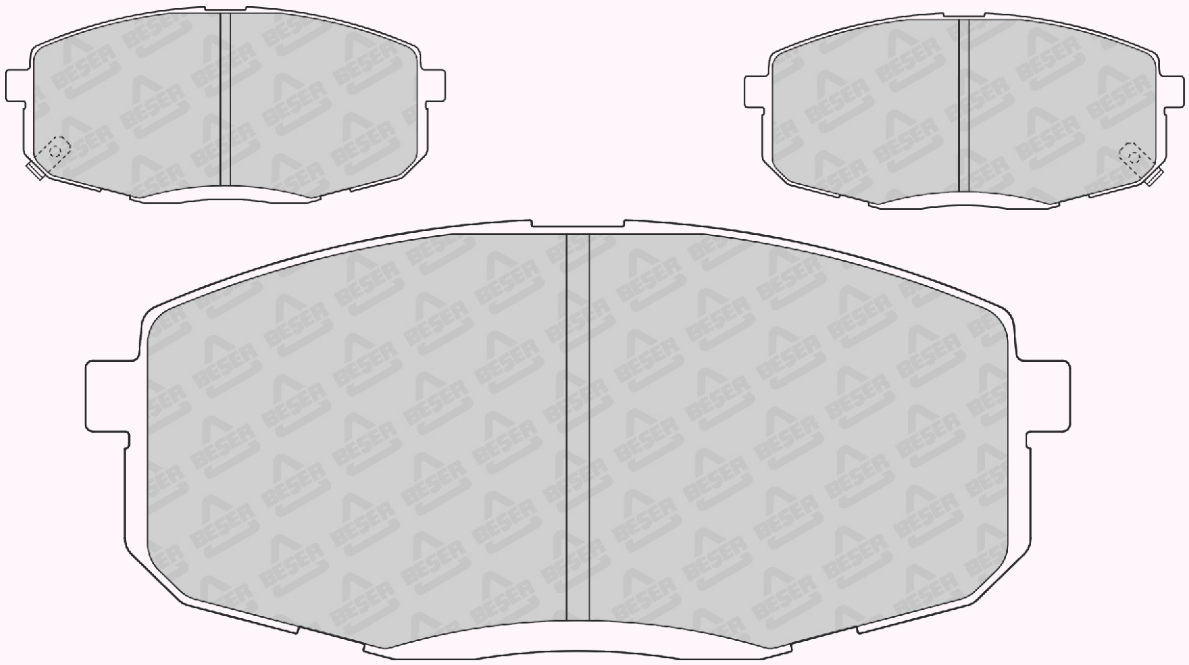

REFERENCE	T(mm)	REMARKS	MAKE	F/R	WVA No
4029	17,5	2 PADS WITH WEAR SENSOR	MAZDA	F	24582 24629 24630

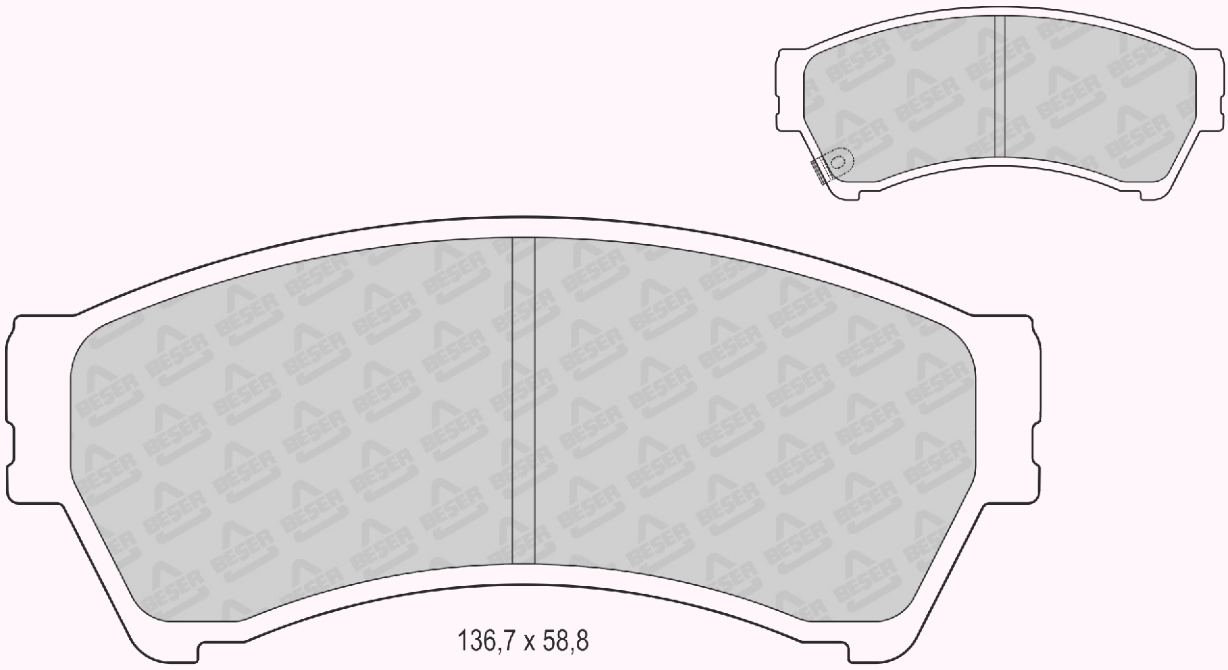

REFERENCE	T(mm)	REMARKS	MAKE	F/R	WVA No
4030	17,2	2 PADS WITH WEAR SENSOR	JEEP	R	24111 24113 24115

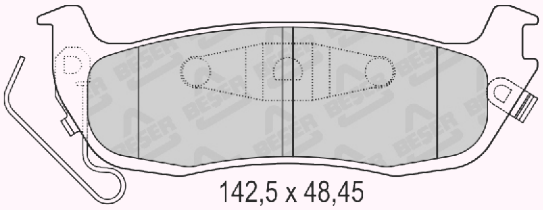

142,5 x 48,45
(NOT SCALE)

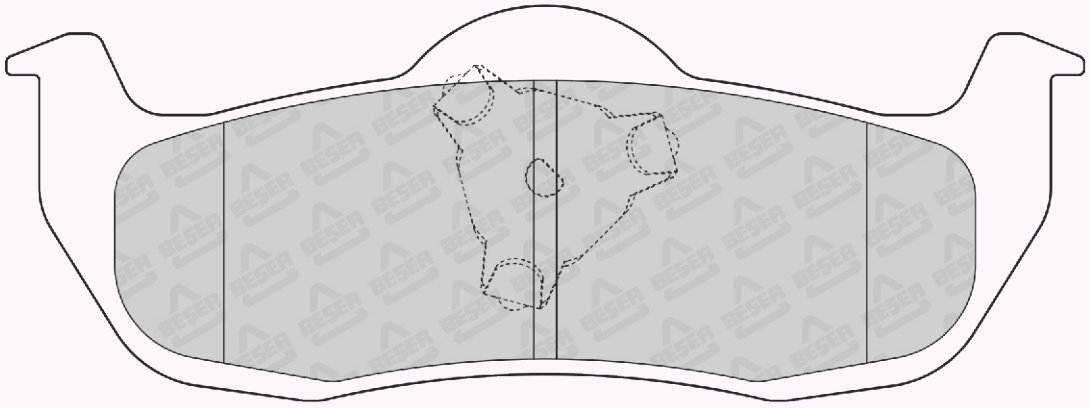

142,5 x 52,15

REFERENCE	T(mm)	REMARKS	MAKE	F/R	WVA No
4031	18,4	2 PADS WITH WEAR SENSOR	JEEP	F	24083

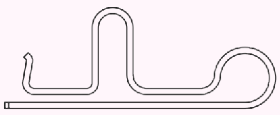

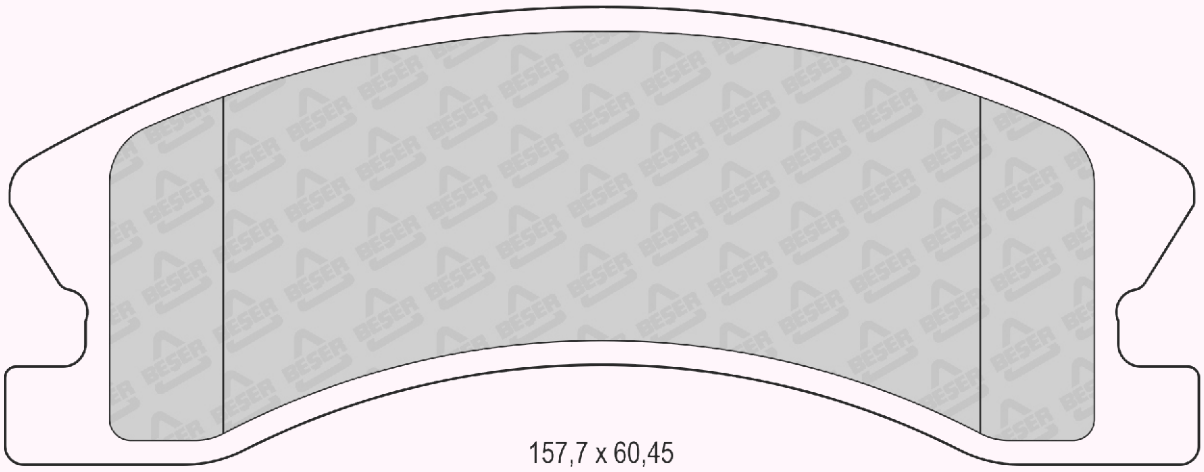

157,7 x 60,45

REFERENCE	T(mm)	REMARKS	MAKE	F/R	WVA No
4032	15	2 PADS WITH WEAR SENSOR	TOYOTA	R	24835



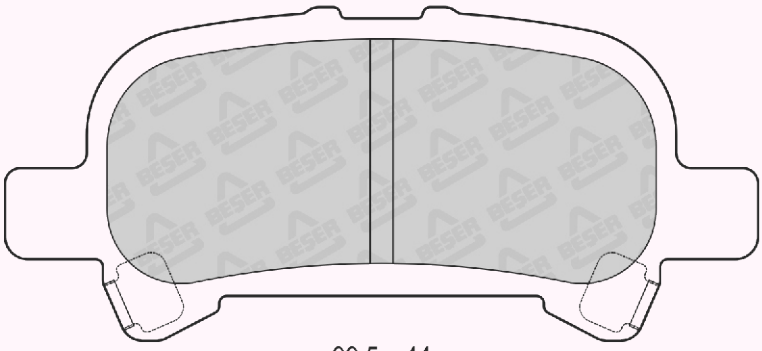

99,5 x 44

REFERENCE	T(mm)	REMARKS	MAKE	F/R	WVA No
4033	15,7	2 PADS WITH WEAR SENSOR	DONGNAN(SOUEAST) MITSUBISHI	F	24832 24833 24834

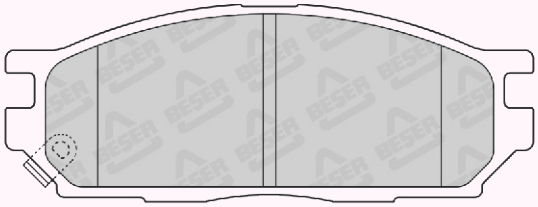

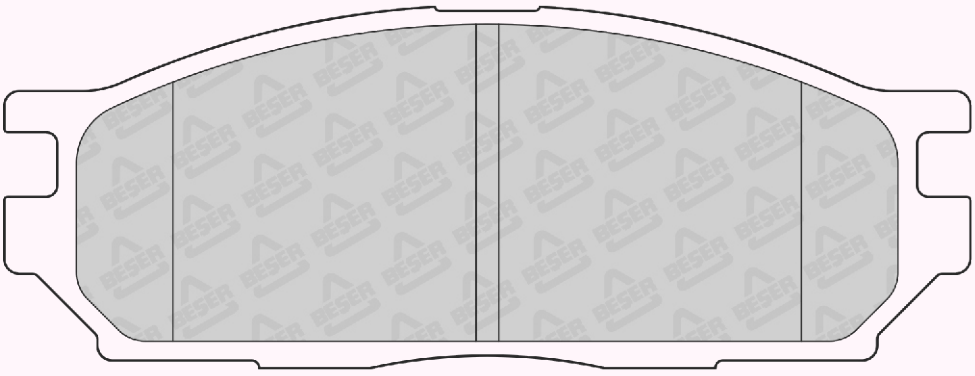

127,6 x 47,65

REFERENCE	T(mm)	REMARKS	MAKE	F/R	WVA No
4034	15,3	4 PADS PLAIN	ASIA - FORD HOLDEN - SUZUKI	F	23303 23304

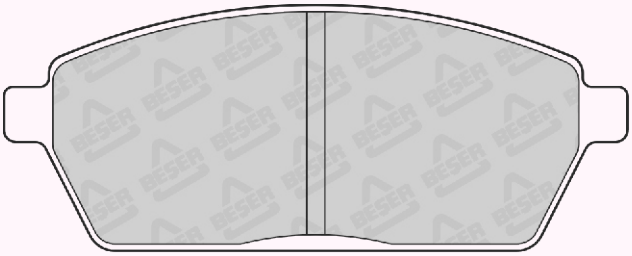

102,2 x 40,25
(NOT SCALE)

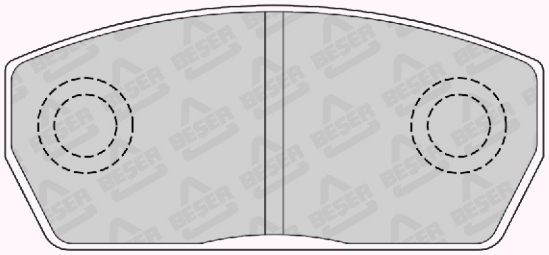

88,15 x 40
(NOT SCALE)

REFERENCE	T(mm)	REMARKS	MAKE	F/R	WVA No
4034/1	15,3	2 PADS WITH WEAR SENSOR	ASIA - FORD HOLDEN - SUZUKI	F	23303

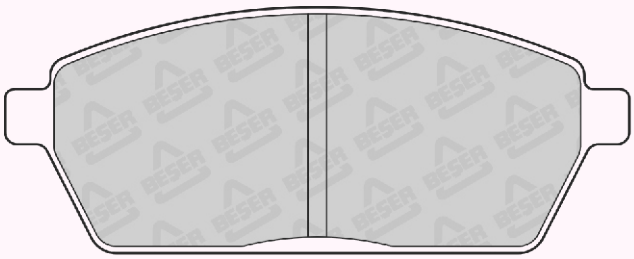

102,2 x 40,25
(NOT SCALE)

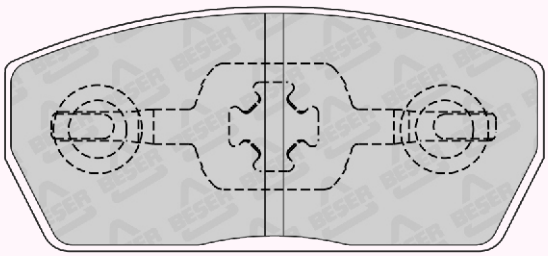

88,15 x 40
(NOT SCALE)

REFERENCE	T(mm)	REMARKS	MAKE	F/R	WVA No
4035	17,6	2 PADS WITH WEAR SENSOR	HYUNDAI - KIA	F	24597 24598 24609

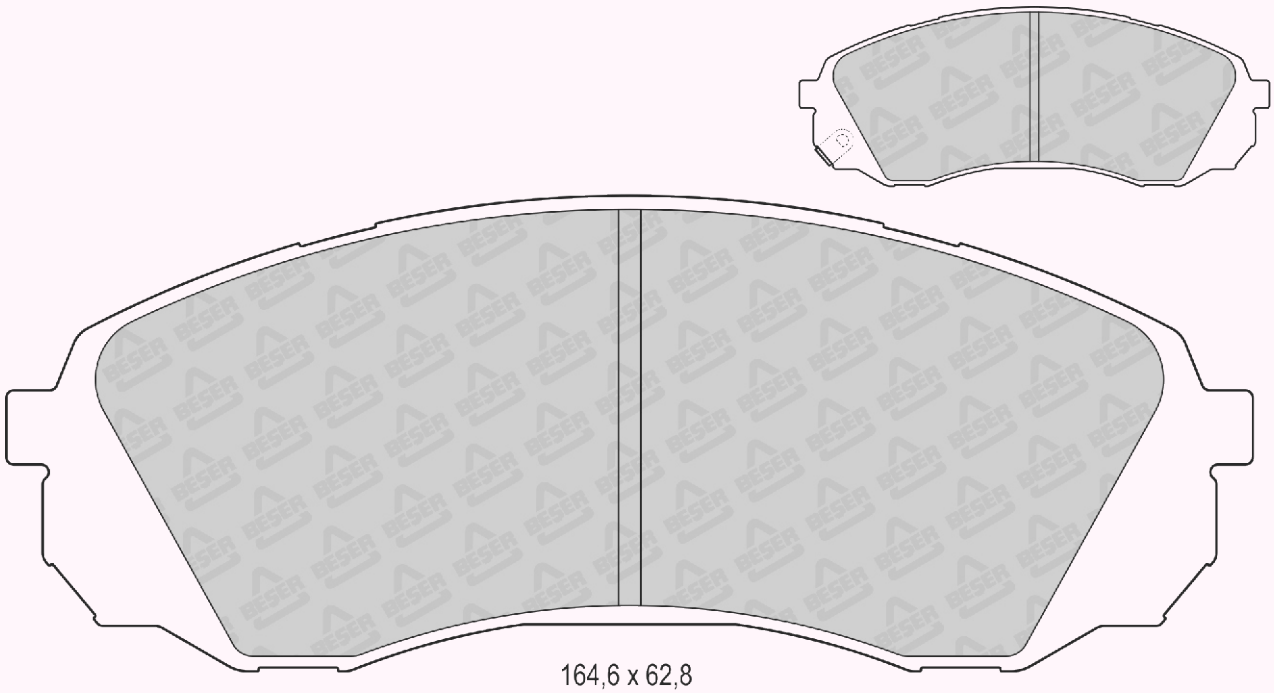

164,6 x 62,8

REFERENCE	T(mm)	REMARKS	MAKE	F/R	WVA No
4036	17,9	2 PADS WITH WEAR SENSOR	SUBARU	F	24372

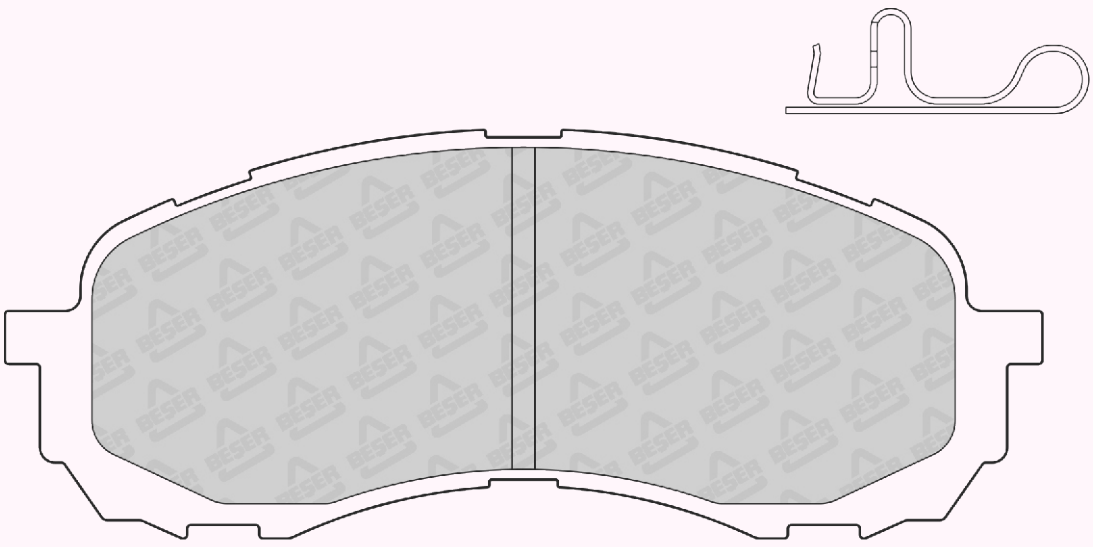

137 x 53,9

REFERENCE	T(mm)	REMARKS	MAKE	F/R	WVA No
4037	16,25	2 PADS WITH WEAR SENSOR	TOYOTA	R	24664 24665 24666

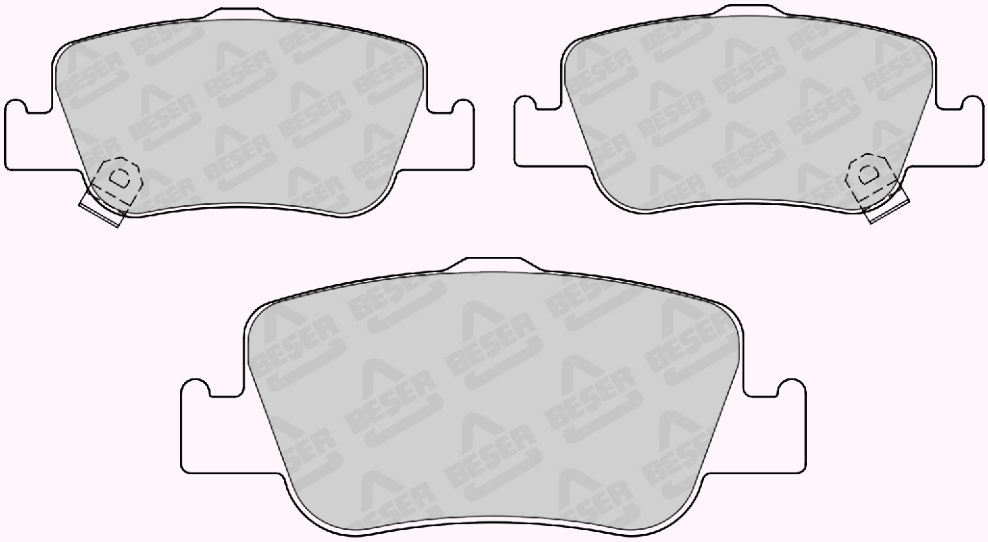

102,4 x 45,56
(NOT SCALE)

REFERENCE	T(mm)	REMARKS	MAKE	F/R	WVA No
4037/1	16,25	2 PADS WITH WEAR SENSOR	TOYOTA	R	24664 24665 24666

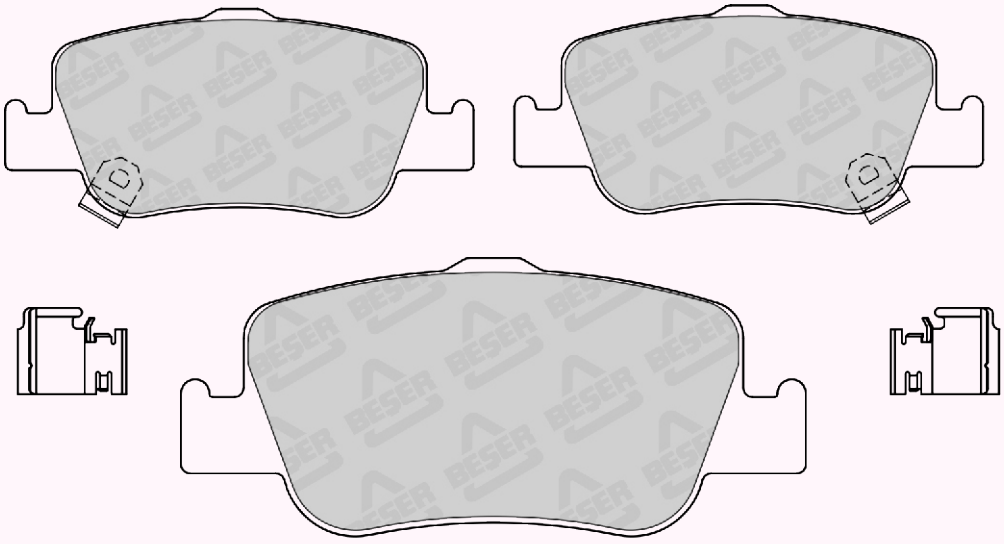

102,4 x 45,56
(NOT SCALE)

REFERENCE	T(mm)	REMARKS	MAKE	F/R	WVA No
4038	16,7	4 PADS PLAIN	NISSAN	F	24632 25202

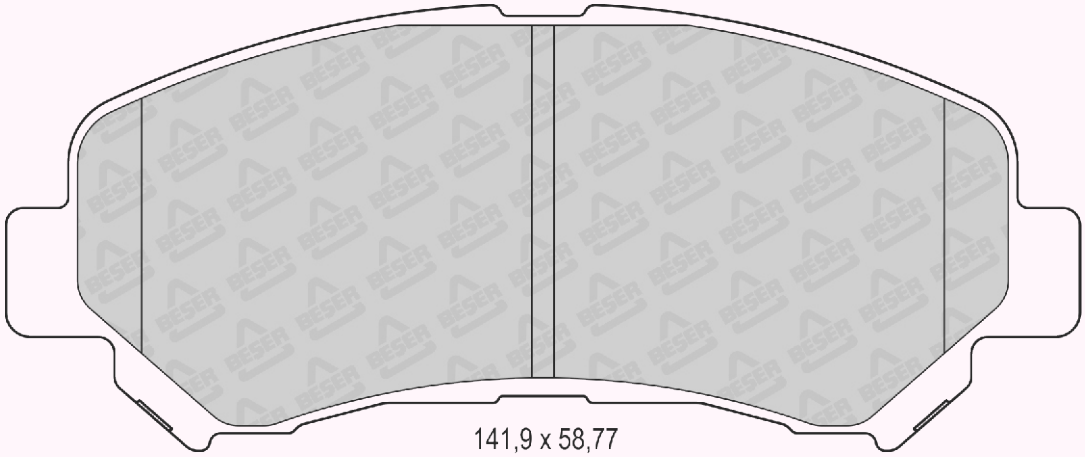

141,9 x 58,77

REFERENCE	T(mm)	REMARKS	MAKE	F/R	WVA No
4039	16,5	2 PADS WITH WEAR SENSOR	KIA	F	24501 24502 24503

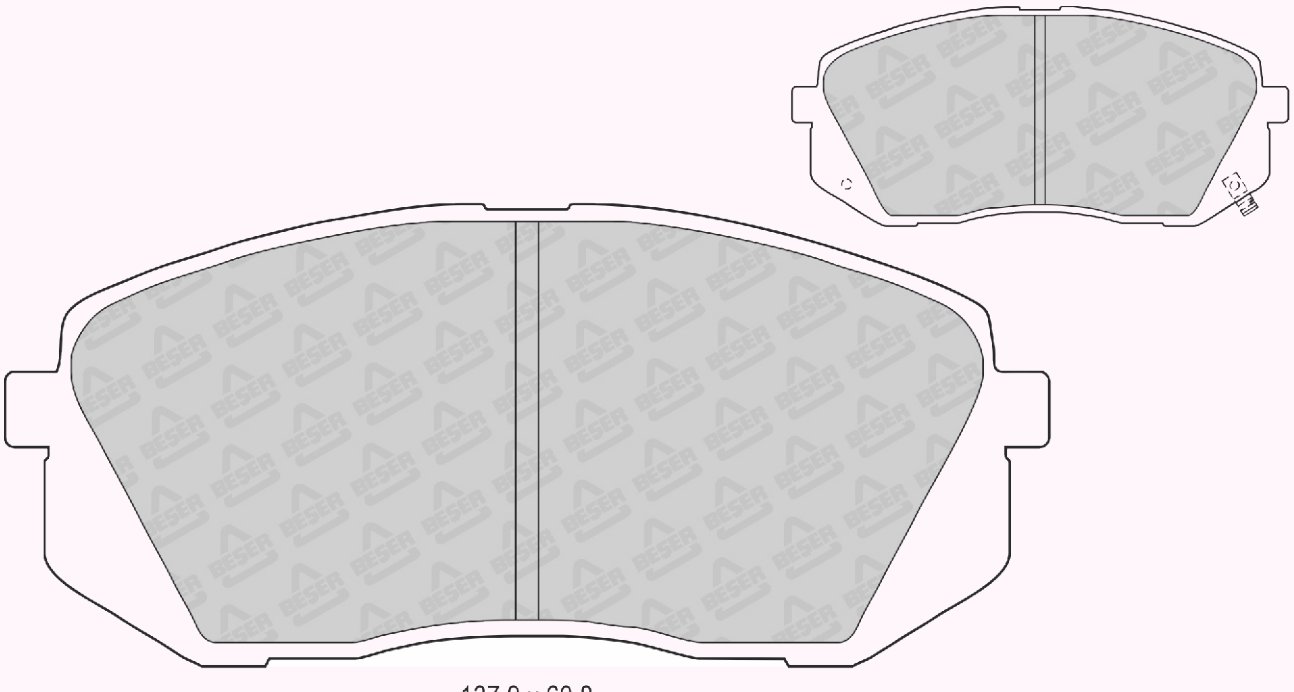

137,9 x 60,8

REFERENCE	T(mm)	REMARKS	MAKE	F/R	WVA No
4039/1	16,5	2 PADS WITH WEAR SENSOR	KIA	F	24501 24505 24506

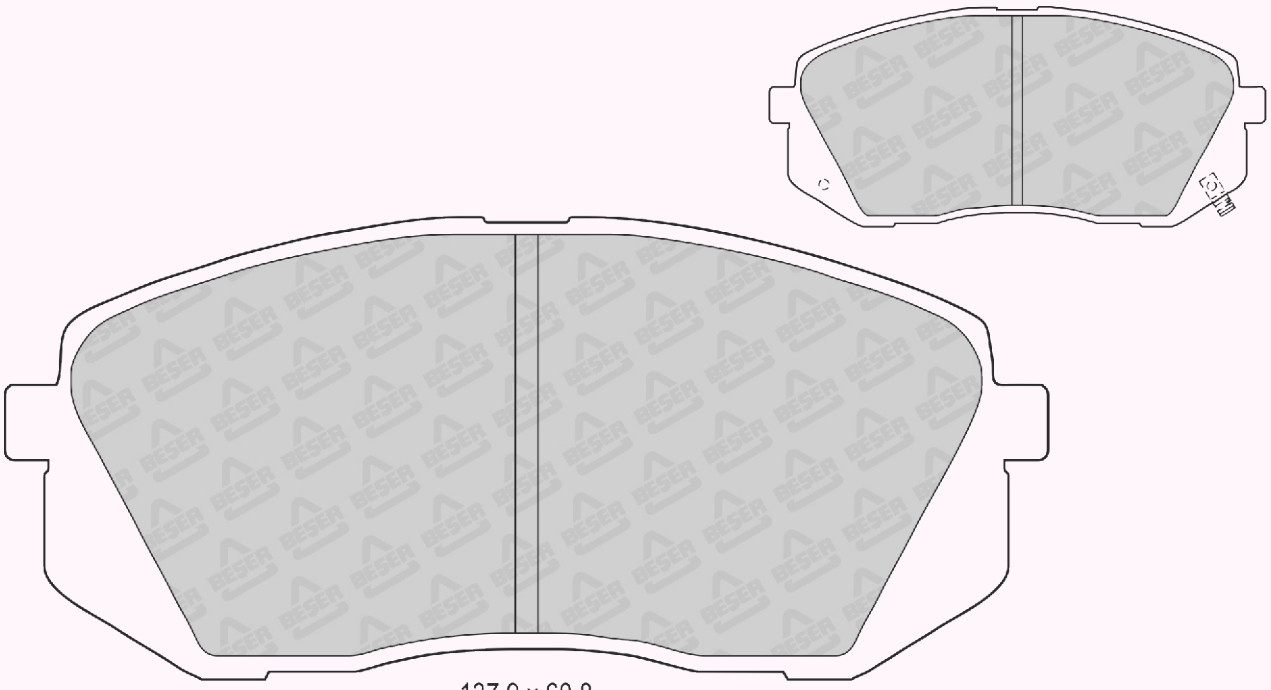

137,9 x 60,8

REFERENCE	T(mm)	REMARKS	MAKE	F/R	WVA No
4040	14,4	2 PADS WITH WEAR SENSOR	CHEVROLET - HOLDEN - KIA OPEL - VAUXHALL	R	23417

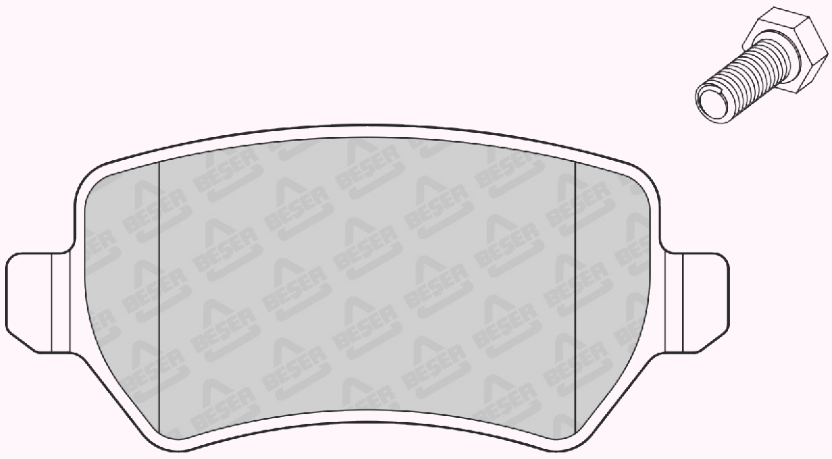

95,4 x 43,1

REFERENCE	T(mm)	REMARKS	MAKE	F/R	WVA No
4041	17,6	2 PADS WITH WEAR SENSOR	KIA	F	25757 25758 25759

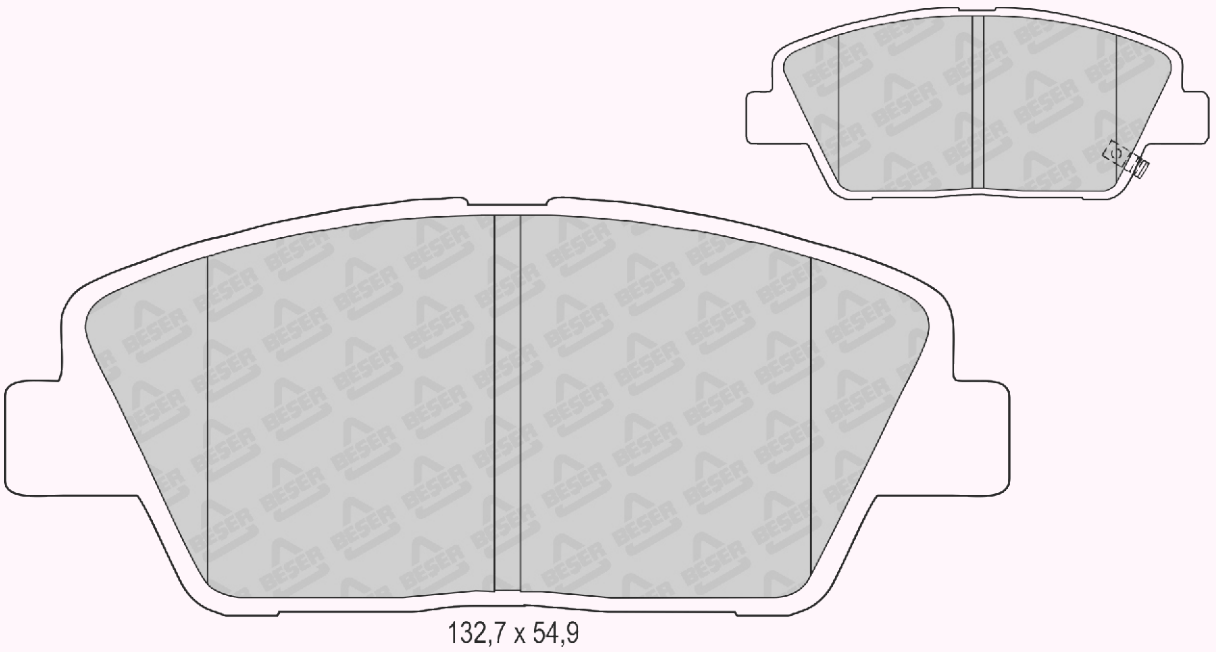

REFERENCE	T(mm)	REMARKS	MAKE	F/R	WVA No
4042	19,7	2 PADS WITH WEAR SENSOR	CHEVROLET - HOLDEN OPEL - VAUXHALL	F	23832 23833 23844

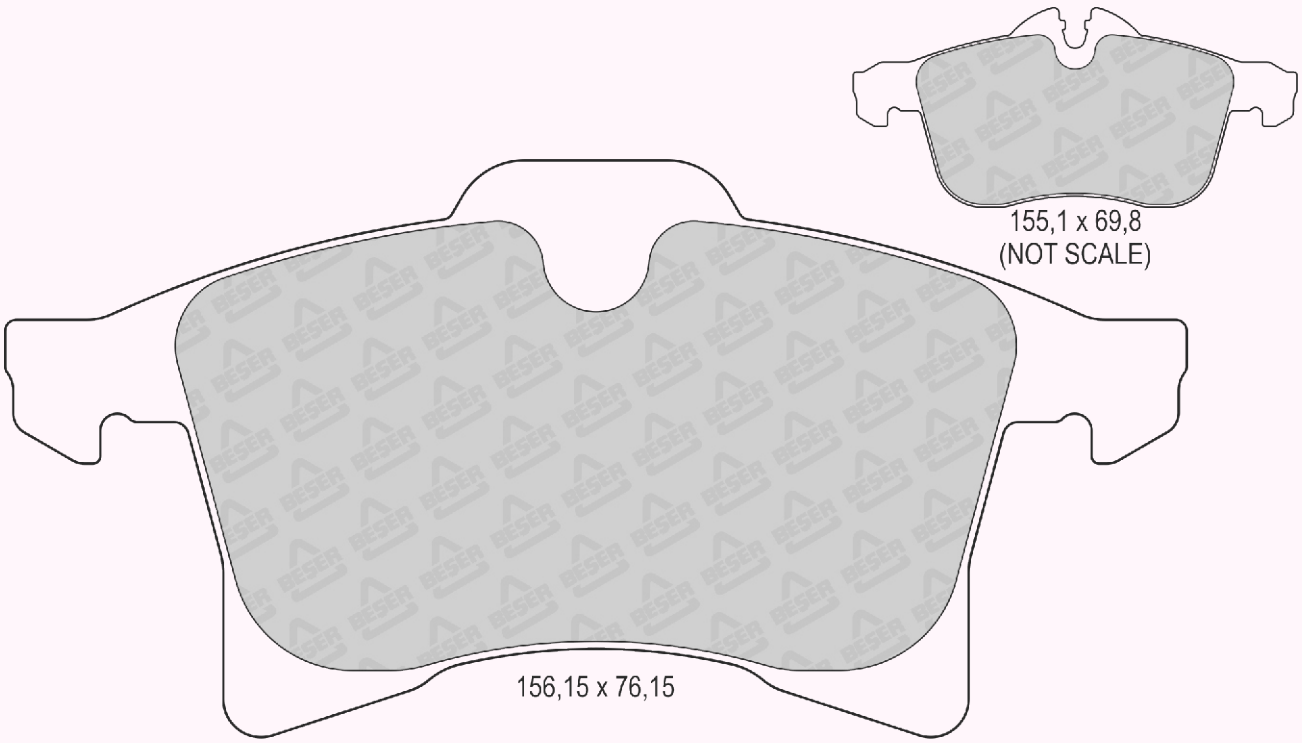

REFERENCE	T(mm)	REMARKS	MAKE	F/R	WVA No
4048	16,1	2 PADS WITH WEAR SENSOR	PEUGEOT	F	....

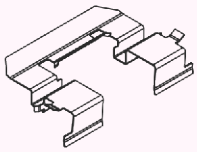

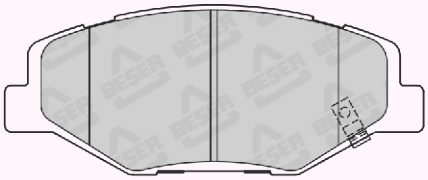

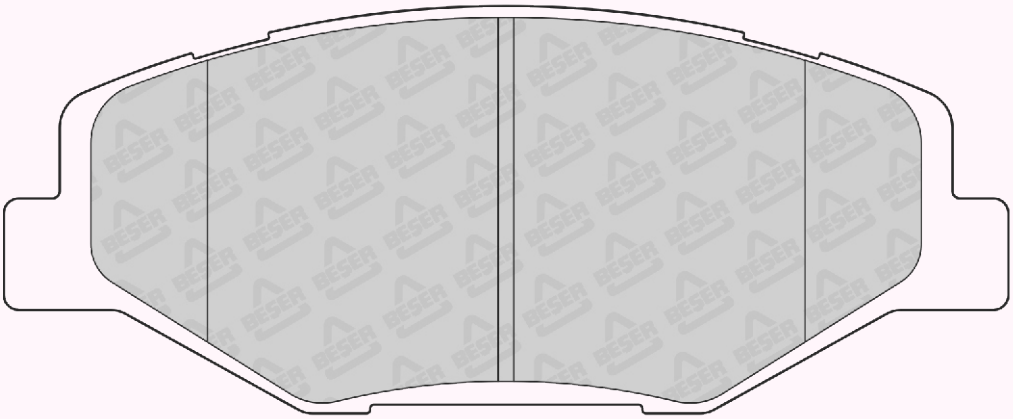

132,8 x 53,75

REFERENCE	T(mm)	REMARKS	MAKE	F/R	WVA No
4048/1	16,1	2 PADS WITH WEAR SENSOR	PEUGEOT	F	.....

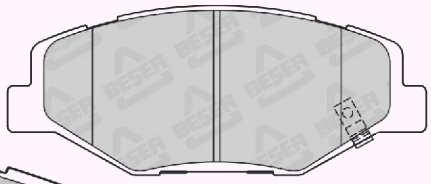

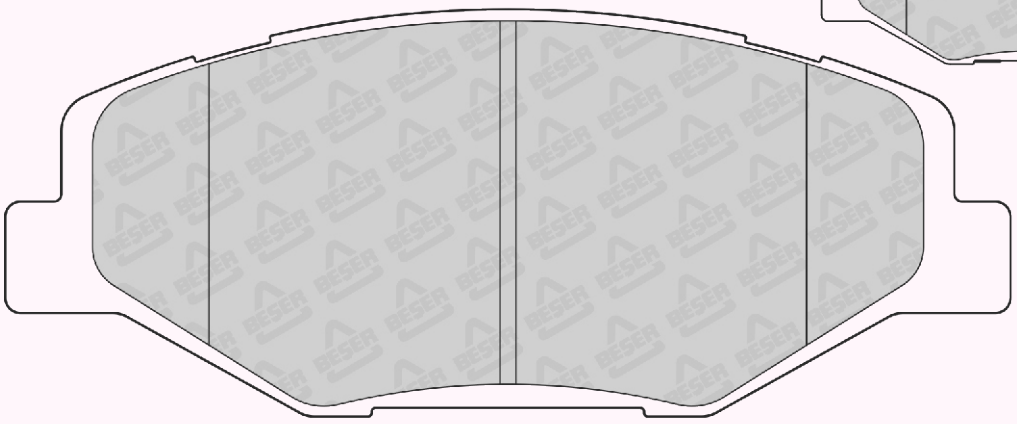

132,8 x 53,75

REFERENCE	T(mm)	REMARKS	MAKE	F/R	WVA No
4049	17,5	2 PADS WITH WEAR SENSOR	HYUNDAI - KIA	F	25187 25188 25189

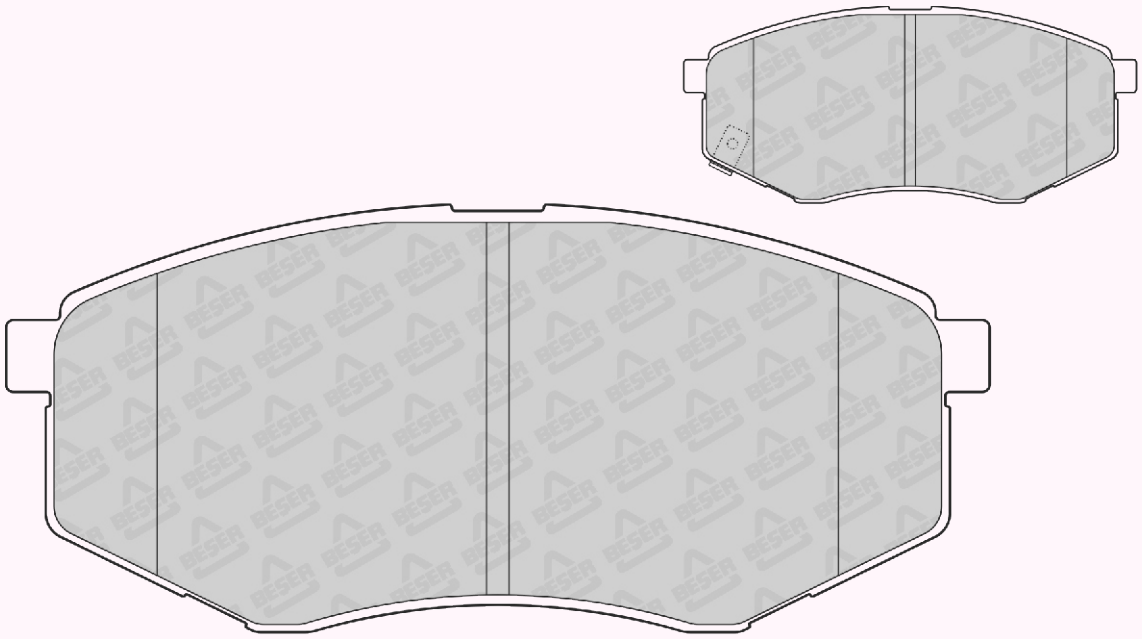

130 x 56,5

REFERENCE	T(mm)	REMARKS	MAKE	F/R	WVA No
4054	17,5	8 PADS PLAIN	MITSUBISHI	F	29240 29241 29249

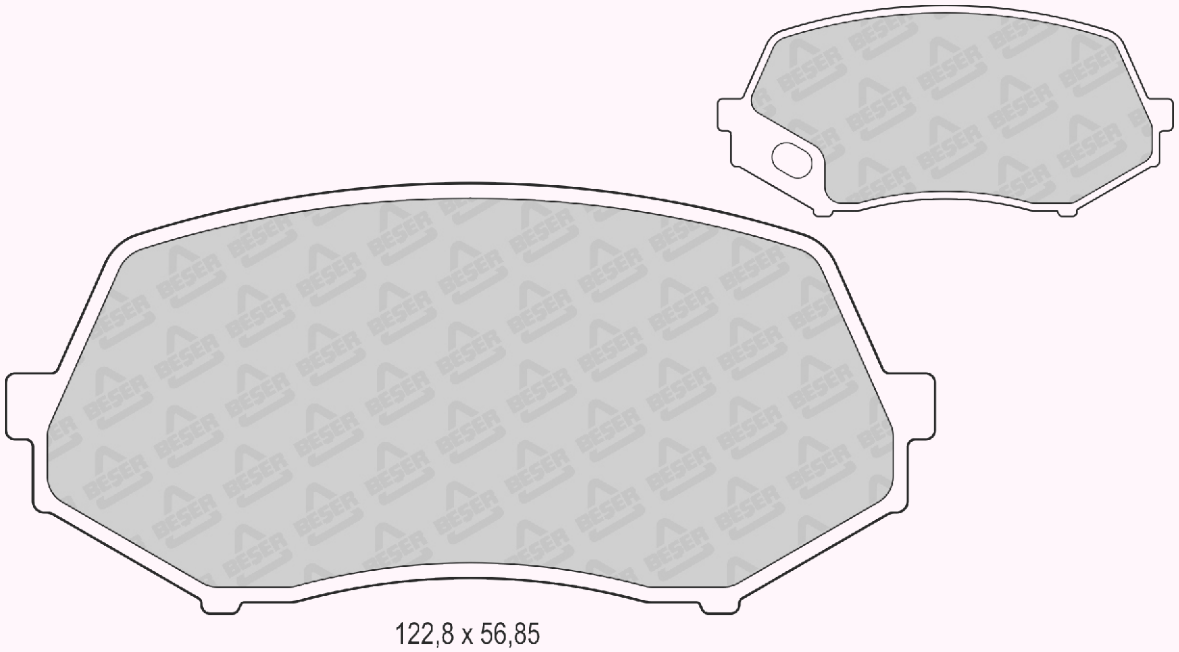

122,8 x 56,85

REFERENCE	T(mm)	REMARKS	MAKE	F/R	WVA No
4055	17,2	8 PADS PLAIN	MITSUBISHI	F	.....

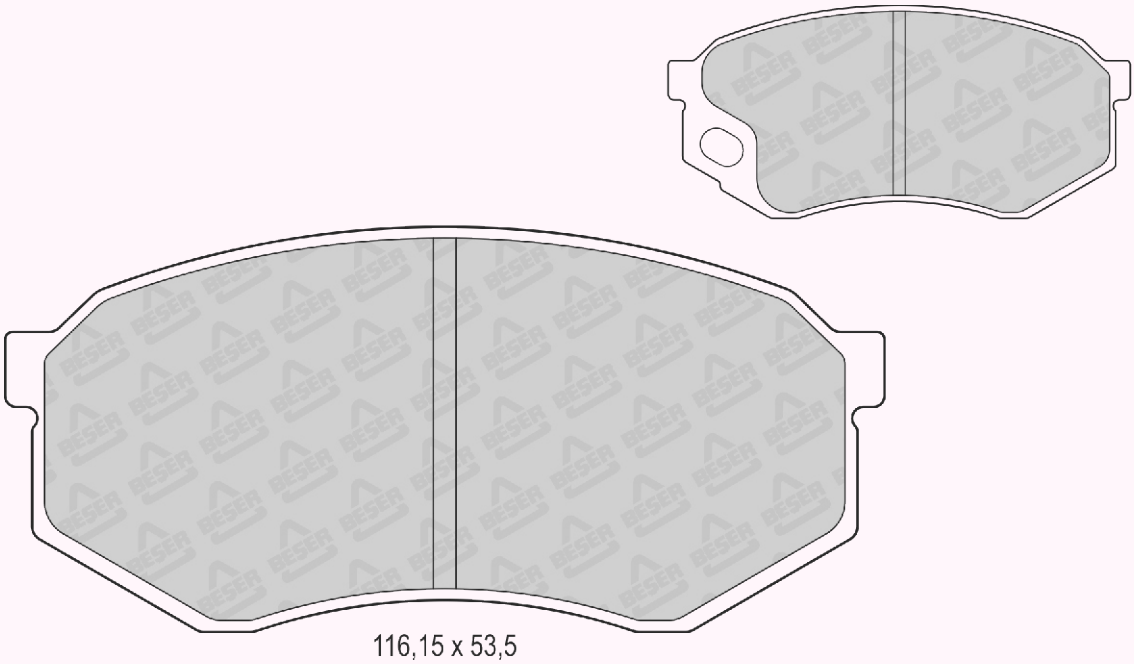

116,15 x 53,5

REFERENCE	T(mm)	REMARKS	MAKE	F/R	WVA No
4056	18	1 PAD WITH WEAR SENSOR	NISSAN - OPEL RENAULT - VAUXHALL	F	25147 25148 25165

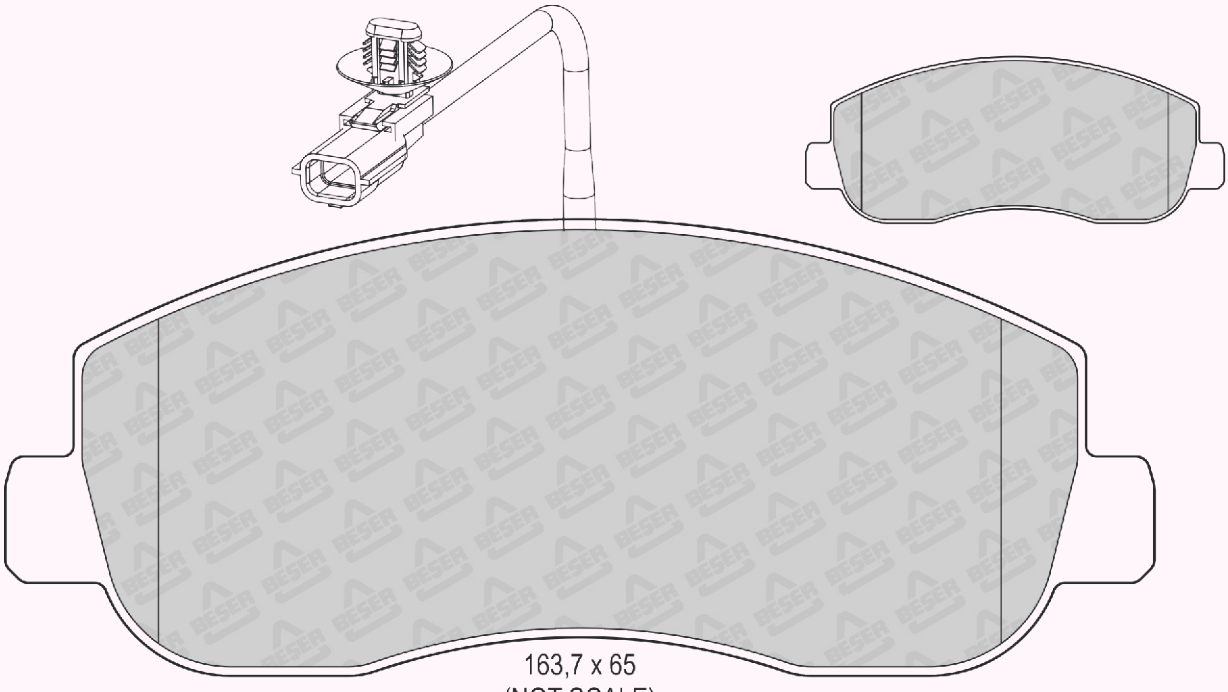

163,7 x 65
(NOT SCALE)

REFERENCE	T(mm)	REMARKS	MAKE	F/R	WVA No
4057	18,2	1 PAD WITH WEAR SENSOR	NISSAN - OPEL - RENAULT VAUXHALL	R	25112 25113

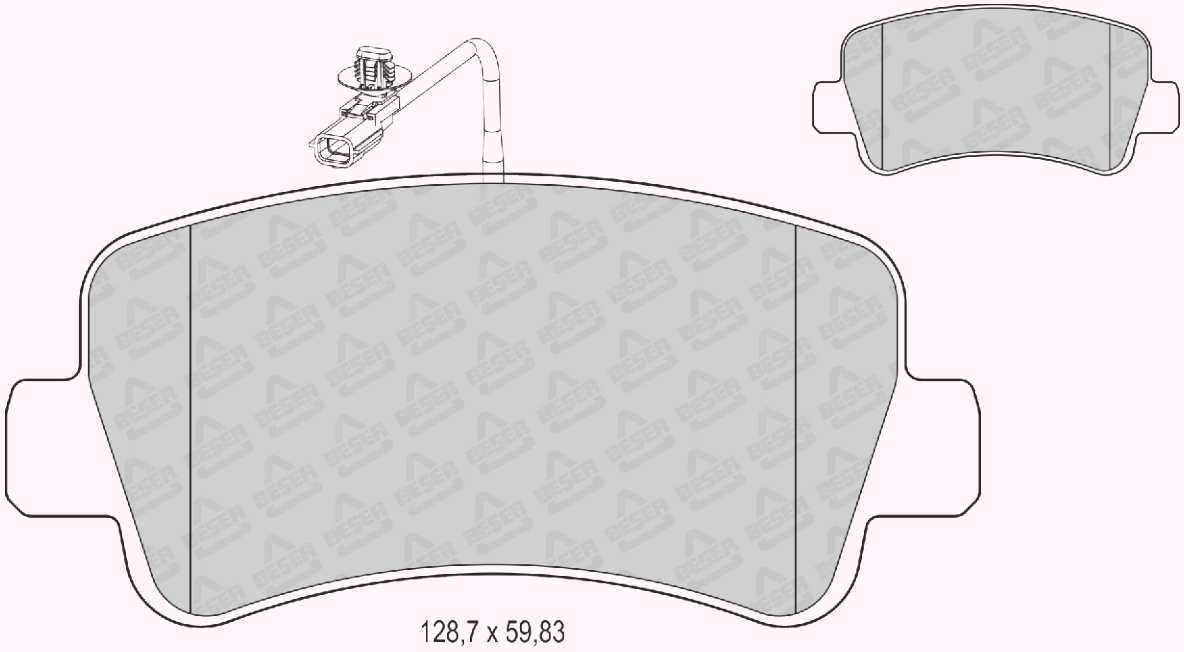

128,7 x 59,83

REFERENCE	T(mm)	REMARKS	MAKE	F/R	WVA No
4058	17,4	4 PADS PLAIN	FORD - JAGUAR	R	24260

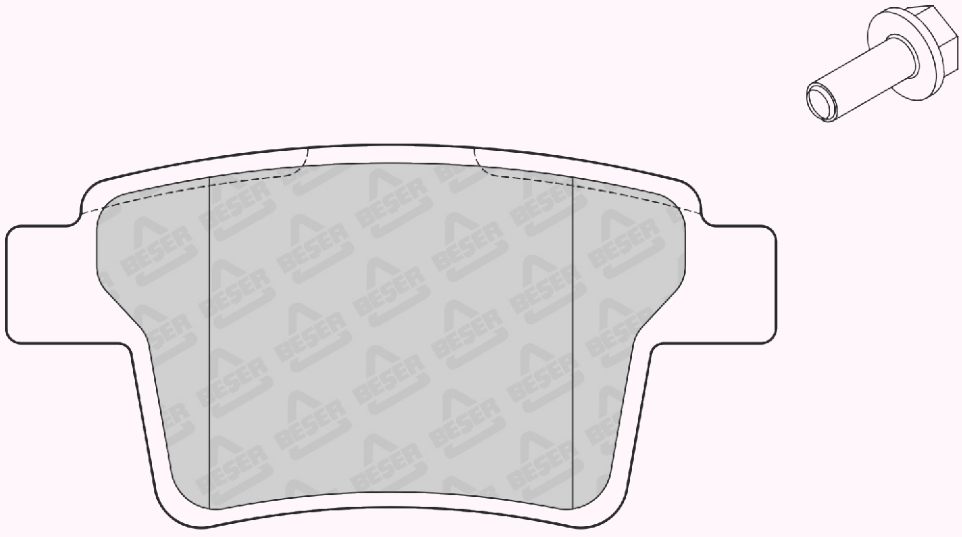

101,7 x 50,64

REFERENCE	T(mm)	REMARKS	MAKE	F/R	WVA No
4058/1	17,4	2 PADS WITH WEAR SENSOR	FORD - JAGUAR	R	24260

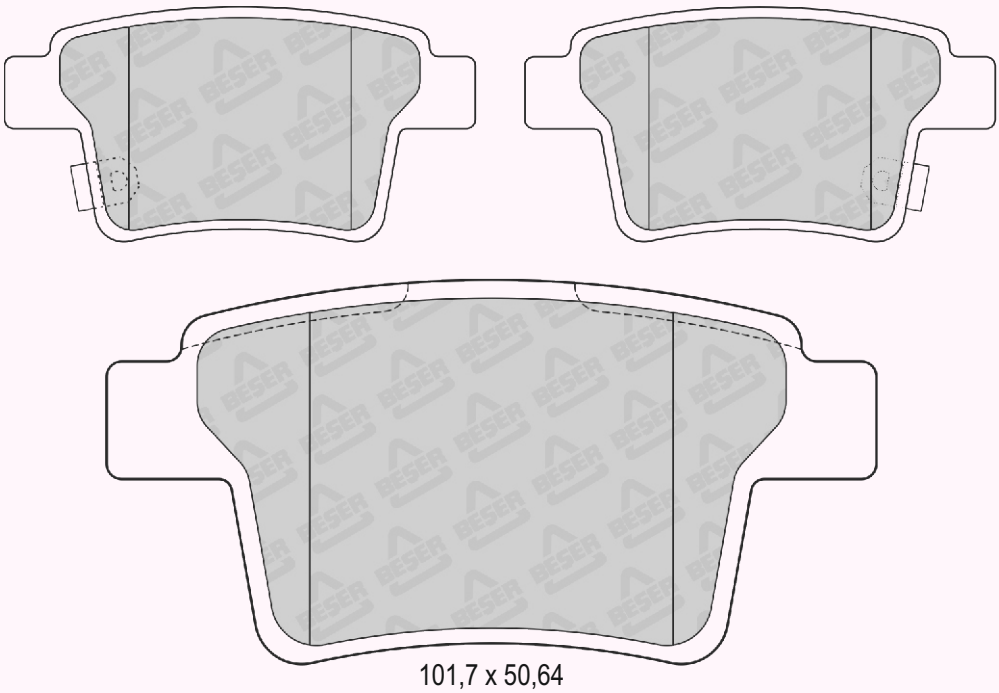

101,7 x 50,64

REFERENCE	T(mm)	REMARKS	MAKE	F/R	WVA No
4059	16,6	2 PADS WITH WEAR SENSOR	MITSUBISHI	F	21982 21983

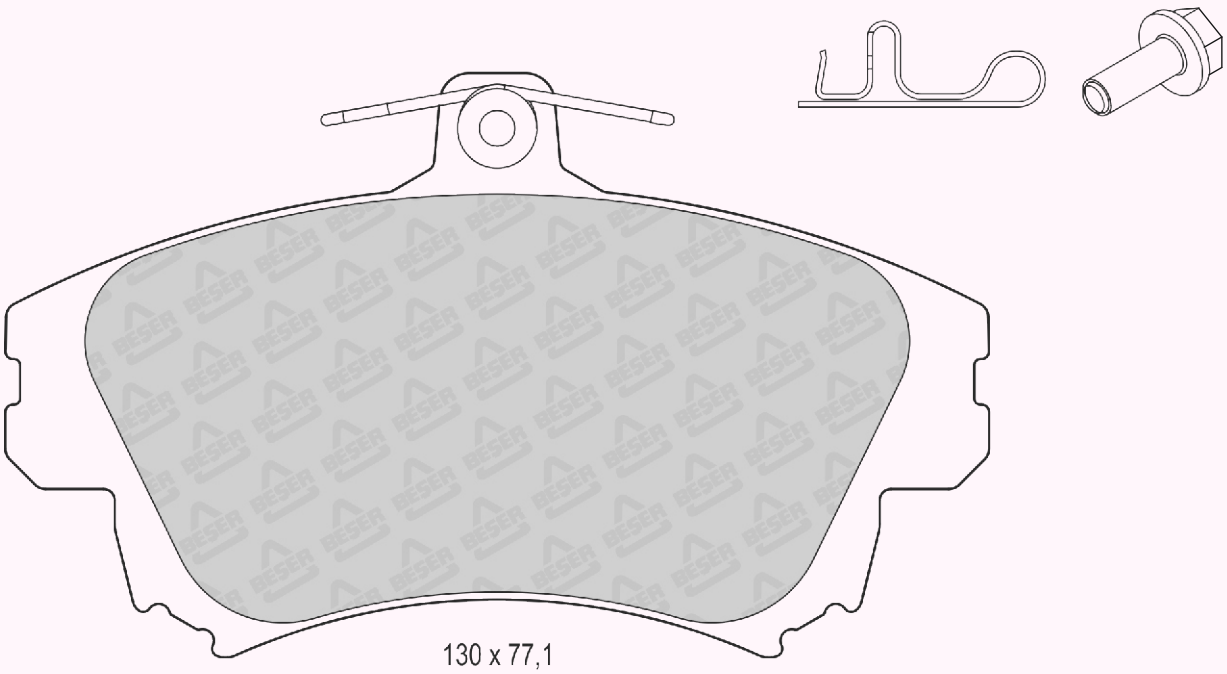

130 x 77,1

REFERENCE	T(mm)	REMARKS	MAKE	F/R	WVA No
4060	15,5	2 PADS WITH WEAR SENSOR	HYUNDAI - KIA	R	24915 25153 24916 25154 24917 25155

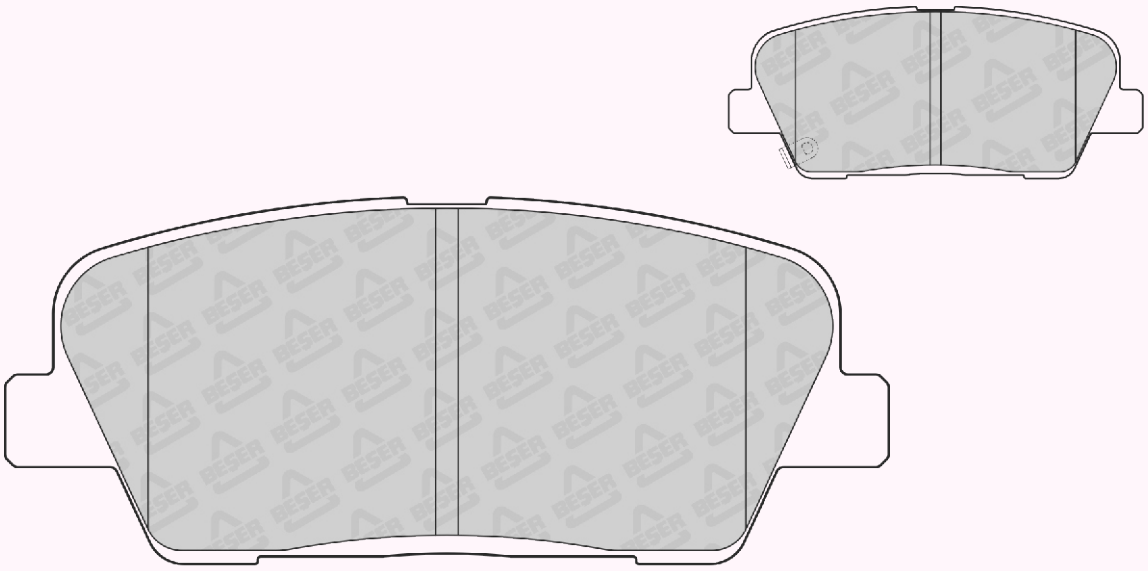

116,75 x 48,4

REFERENCE	T(mm)	REMARKS	MAKE	F/R	WVA No
4061	15,5	2 PADS WITH WEAR SENSOR	HYUNDAI - KIA SSANGYONG	R	24934 25337 24935 25338 24936 25339

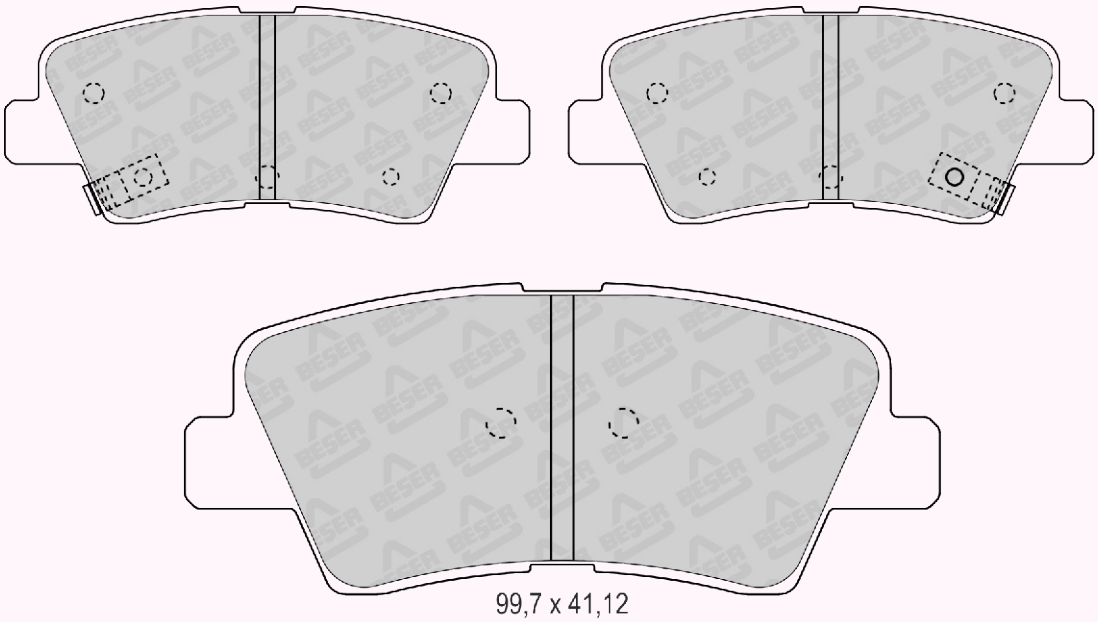

99,7 x 41,12
(NOT SCALE)

REFERENCE	T(mm)	REMARKS	MAKE	F/R	WVA No
4062	14,5	2 PADS WITH WEAR SENSOR	MITSUBISHI - PROTON SMART - VOLVO	R	21861

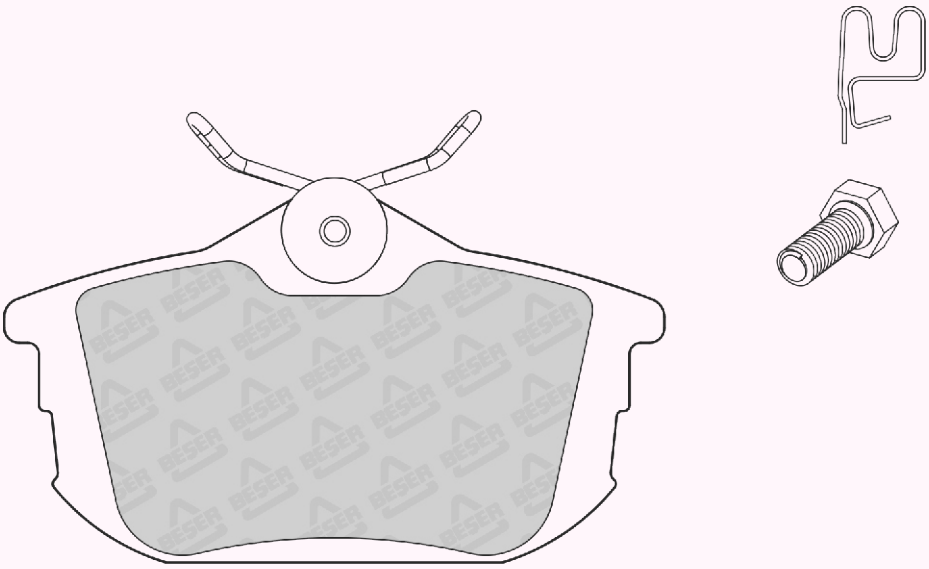

87,2 x 47,1

REFERENCE	T(mm)	REMARKS	MAKE	F/R	WVA No
4069	16,6	2 PADS WITH WEAR SENSOR	MERCEDES-BENZ	R	23189 23190 23191 23192

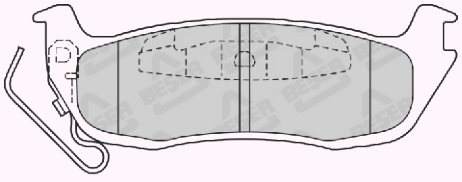

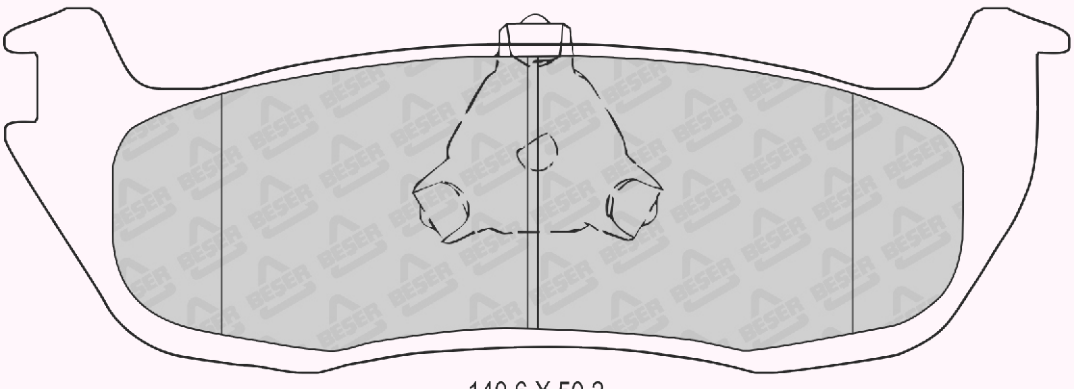

140,6 X 50,2

REFERENCE	T(mm)	REMARKS	MAKE	F/R	WVA No
4071	15,4	2 PADS WITH WEAR SENSOR	TOYOTA	F	23032 23033 23505 23506

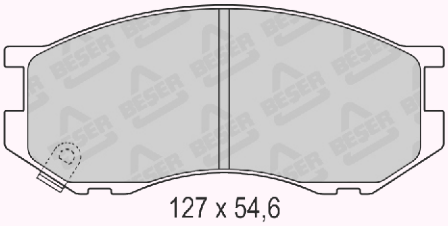

127 x 54,6
(NOT SCALE)

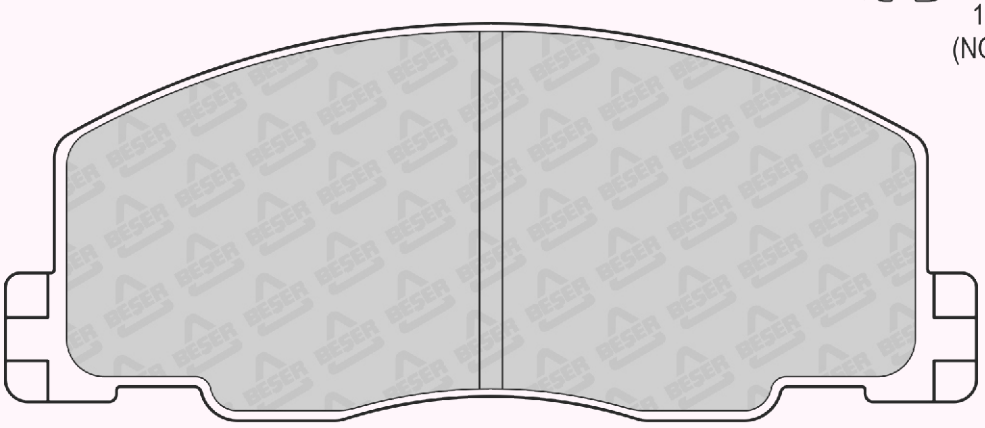

128,4 x 52,4

REFERENCE	T(mm)	REMARKS	MAKE	F/R	WVA No
4072	15,8	4 PADS PLAIN	TOYOTA	R	21688

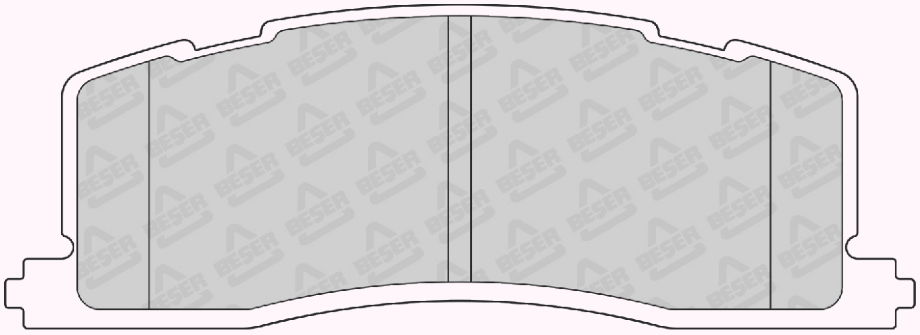

120 x 42,7

REFERENCE	T(mm)	REMARKS	MAKE	F/R	WVA No
4073	17,5	2 PADS WITH WEAR SENSOR	CHEVROLET - HOLDEN	F	24864 24865 24866

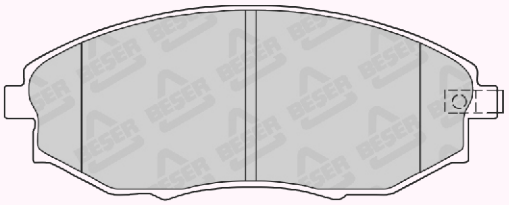

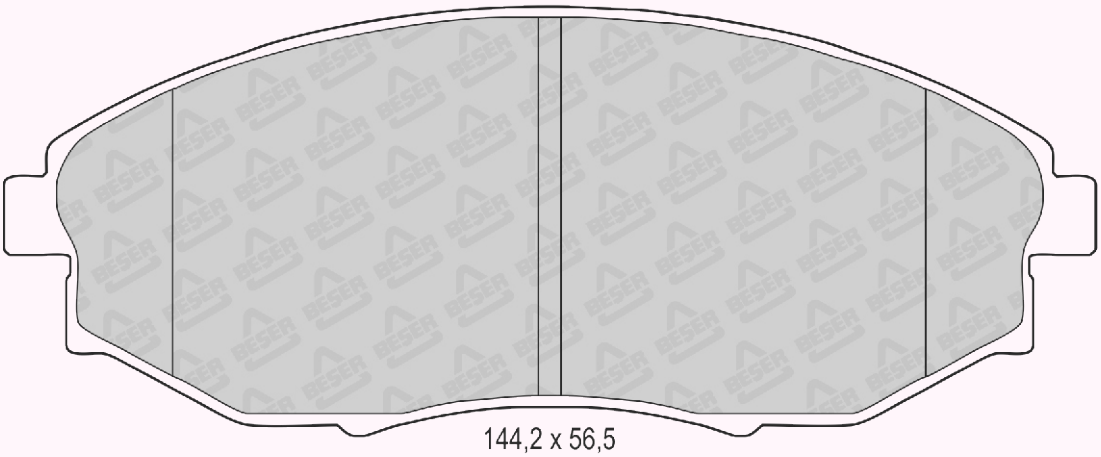

144,2 x 56,5

REFERENCE	T(mm)	REMARKS	MAKE	F/R	WVA No
4074	15	2 PADS WITH WEAR SENSOR	INFINITI - NISSAN	F	24056 24057 23834

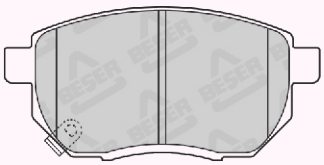

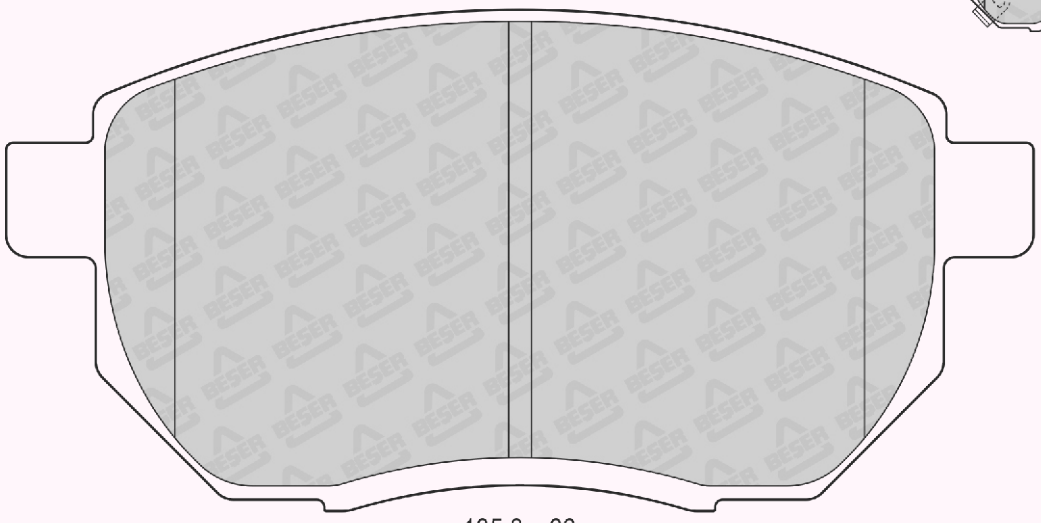

135,8 x 66

REFERENCE	T(mm)	REMARKS	MAKE	F/R	WVA No
4075	15,5	4 PADS PLAIN	AUDI - PORSCHE VW	F	23692

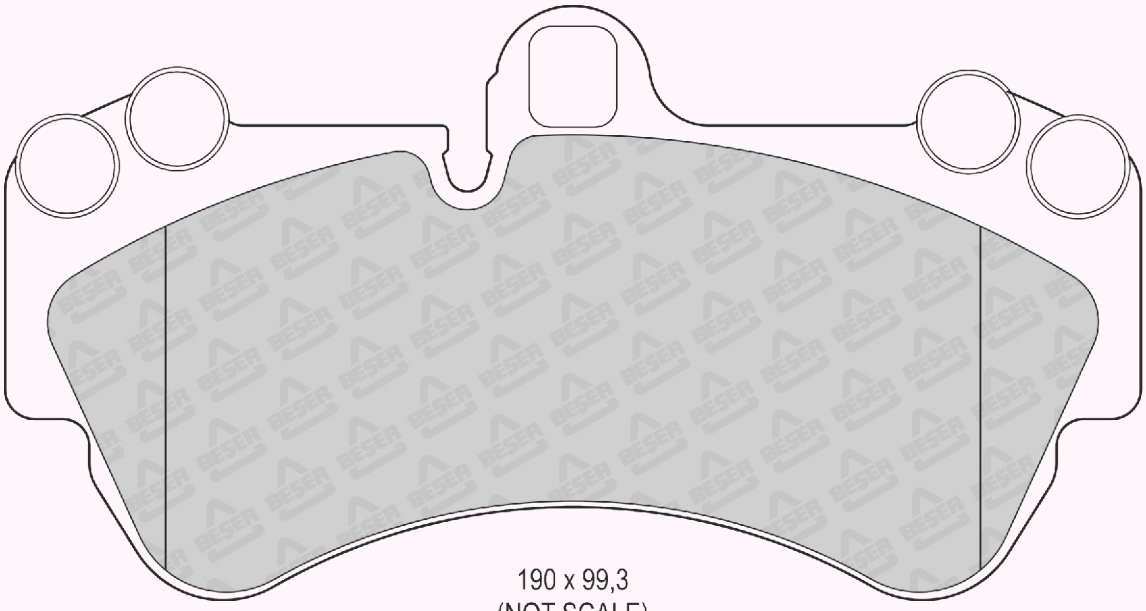

190 x 99,3
(NOT SCALE)

REFERENCE	T(mm)	REMARKS	MAKE	F/R	WVA No
4075/1	15,5	4 PADS PLAIN	AUDI - PORSCHE VW	F	23693

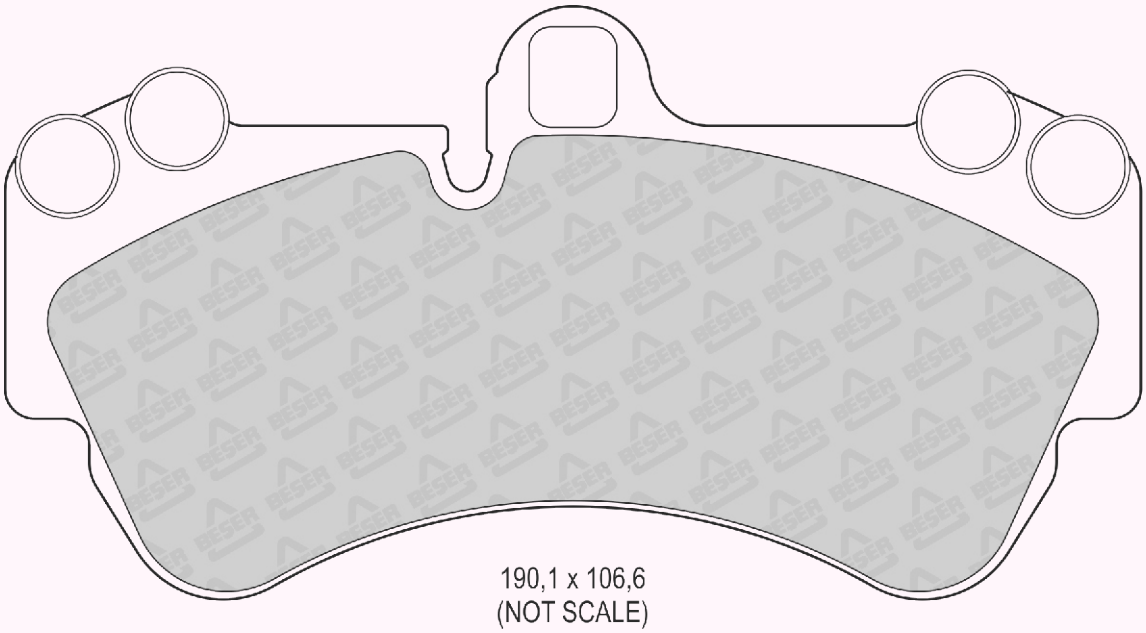

190,1 x 106,6
(NOT SCALE)

REFERENCE	T(mm)	REMARKS	MAKE	F/R	WVA No
4076	15,7	4 PADS PLAIN	AUDI - PORSCHE VW	R	23694

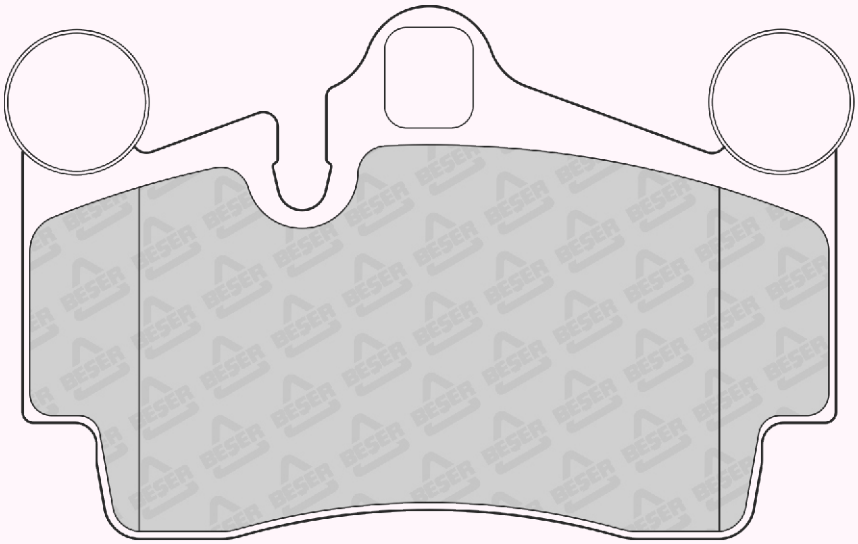

112,2 x 73,4

REFERENCE	T(mm)	REMARKS	MAKE	F/R	WVA No
4077	18	4 PADS PLAIN	TOYOTA	F	24337

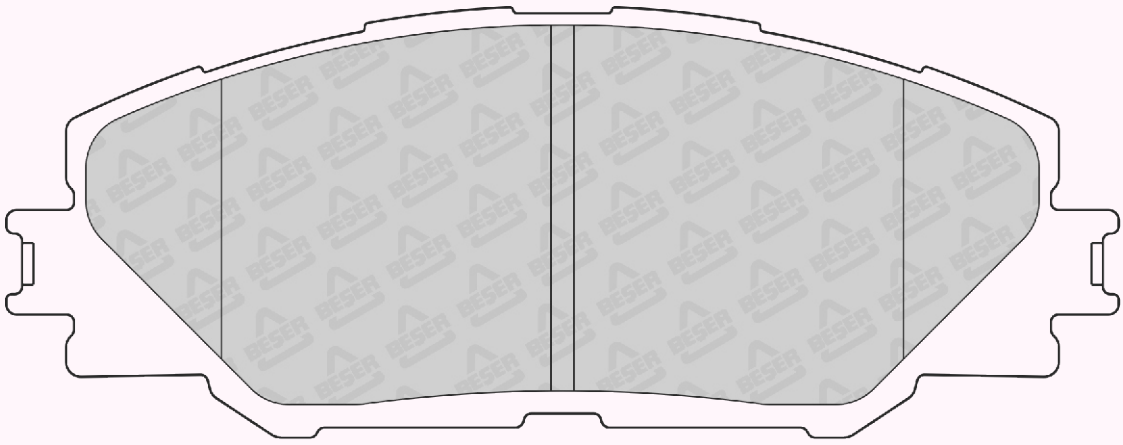

147 x 56,7

REFERENCE	T(mm)	REMARKS	MAKE	F/R	WVA No
4078	17,2	2 PADS WITH WEAR SENSOR	SUBARU	F	21482 24389 24390 24866

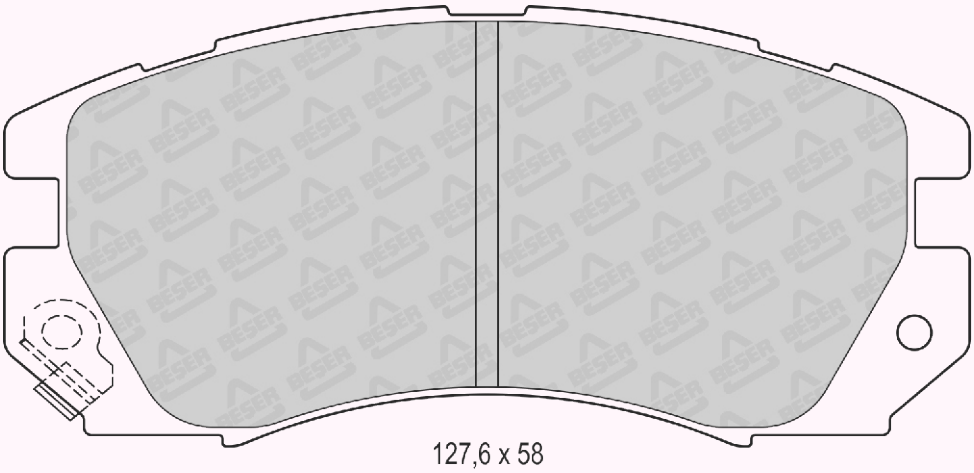

127,6 x 58

REFERENCE	T(mm)	REMARKS	MAKE	F/R	WVA No
4079	16,8	4 PADS PLAIN	SUBARU	F	21915 23558 23559 23560

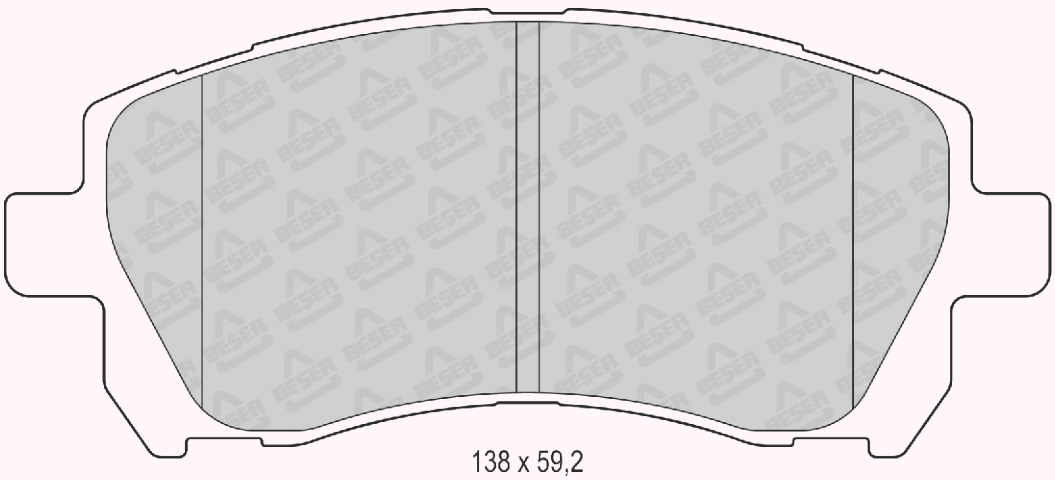

138 x 59,2

REFERENCE	T(mm)	REMARKS	MAKE	F/R	WVA No
4080	14,8	2 PADS WITH WEAR SENSOR	SUBARU	R	21703 21704 21705

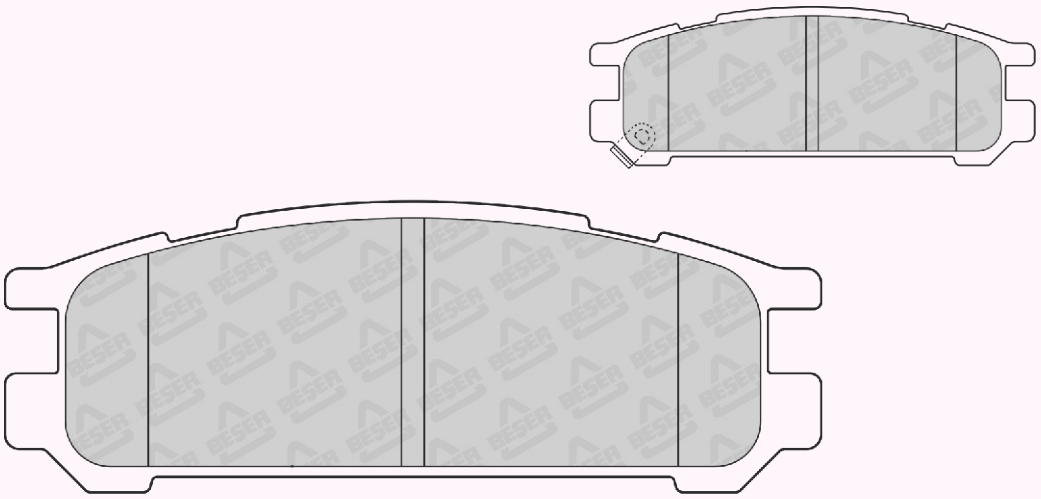

107,9 x 38,4

REFERENCE	T(mm)	REMARKS	MAKE	F/R	WVA No
4081	16,8	2 PADS WITH WEAR SENSOR	SUBARU	F	24222 24223 24224 24225

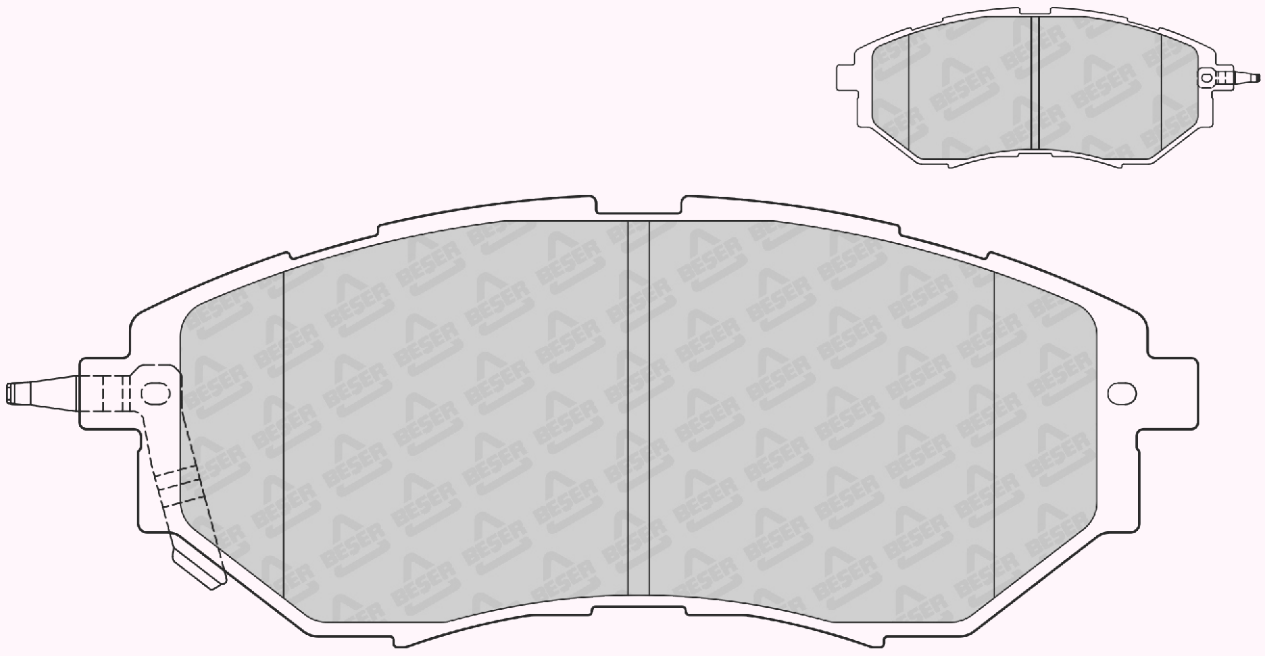

157,4 x 63,4

REFERENCE	T(mm)	REMARKS	MAKE	F/R	WVA No
4082	16,9	4 PADS PLAIN	LEXUS - TOYOTA	F	23703

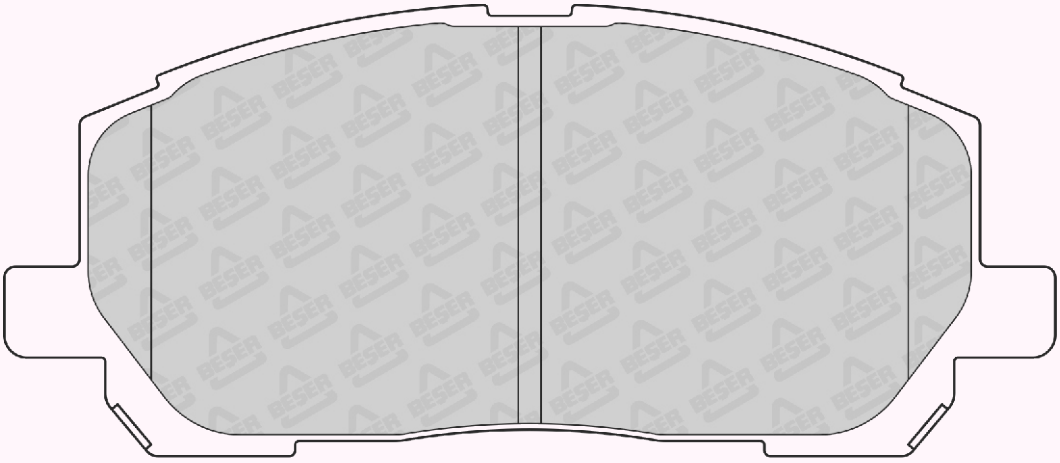

138,75 x 59,55

REFERENCE	T(mm)	REMARKS	MAKE	F/R	WVA No
4083	14,4	4 PADS PLAIN	LEXUS	R	23804

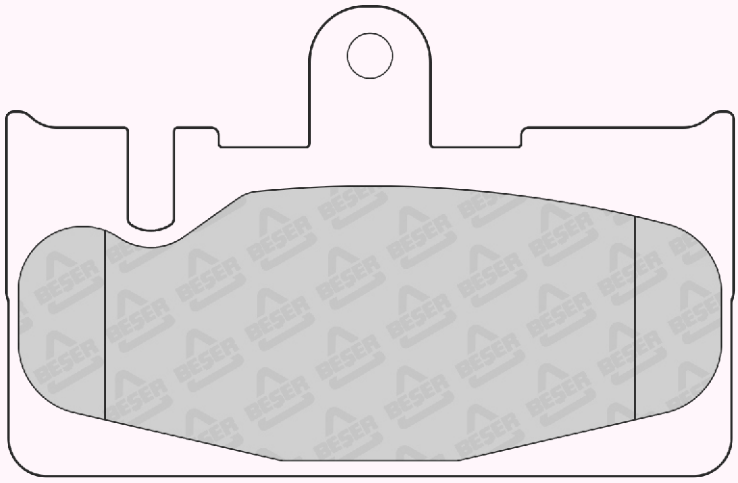

96,1 x 62

REFERENCE	T(mm)	REMARKS	MAKE	F/R	WVA No
4084	14,8	2 PADS WITH WEAR SENSOR	MITSUBISHI	R	23593 23594 23595

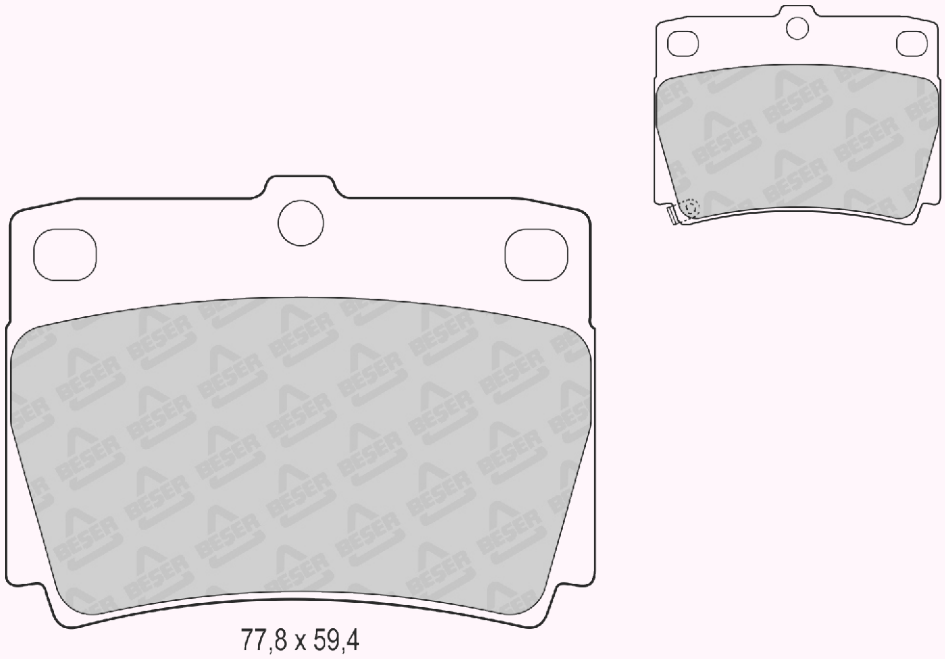

77,8 x 59,4

REFERENCE	T(mm)	REMARKS	MAKE	F/R	WVA No
4085	14,8	2 PADS WITH WEAR SENSOR	LEXUS - TOYOTA	R	23429

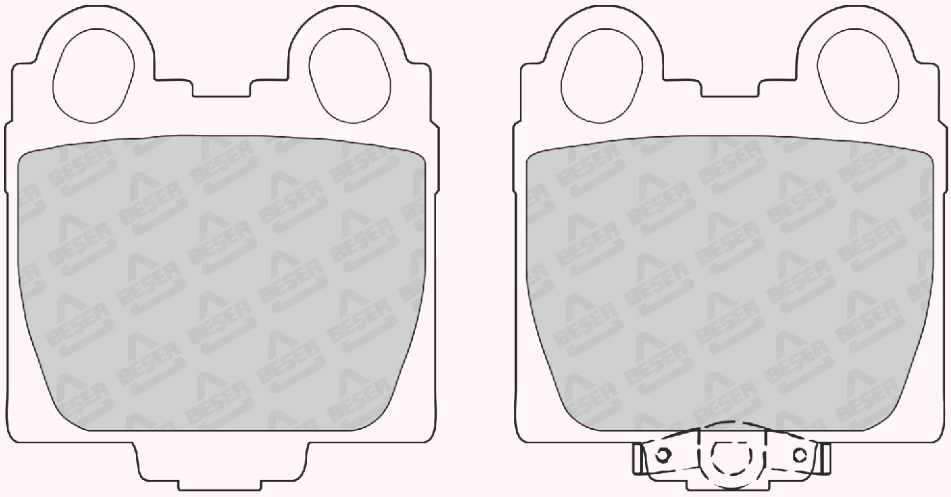

57,2 x 64

REFERENCE	T(mm)	REMARKS	MAKE	F/R	WVA No
4086	16,9	4 PADS PLAIN	LEXUS - HOLDEN TOYOTA	F	21791

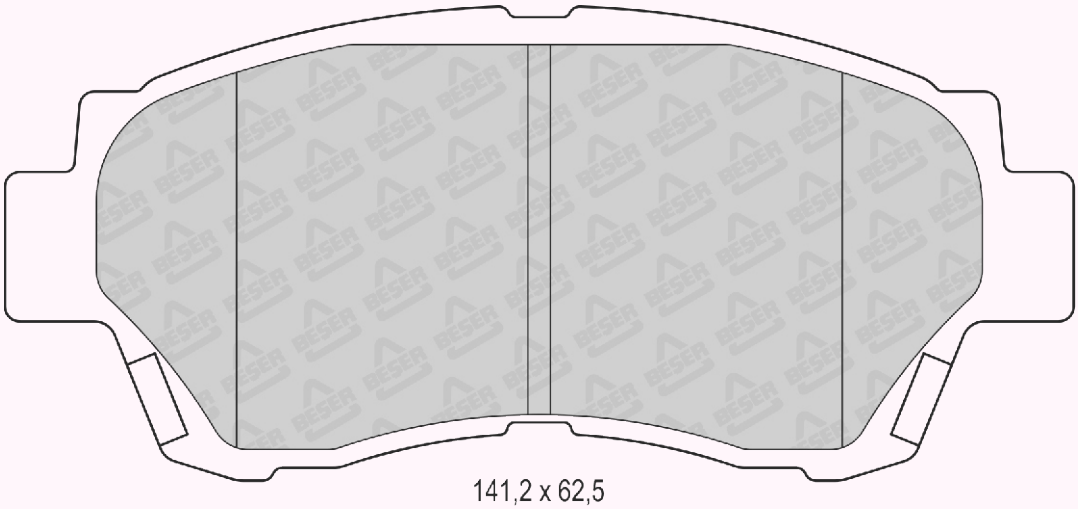

141,2 x 62,5

REFERENCE	T(mm)	REMARKS	MAKE	F/R	WVA No
4087	14	2 PADS WITH WEAR SENSOR	FORD - HYUNDAI KIA - NISSAN	F	21553

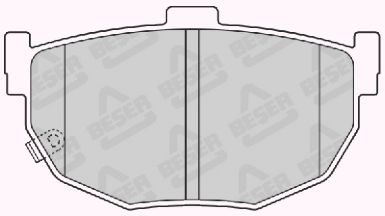

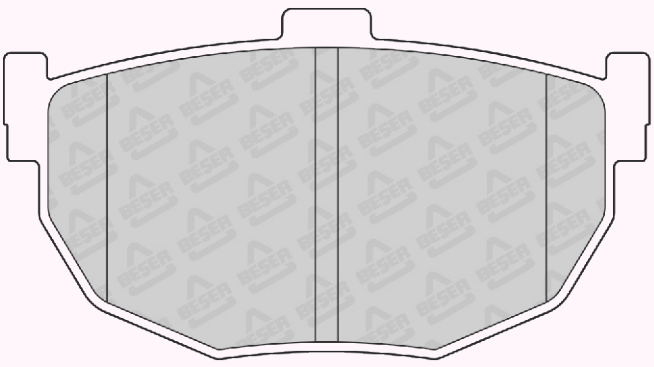

85,3 x 46,2

REFERENCE	T(mm)	REMARKS	MAKE	F/R	WVA No
4088	15,5	2 PADS WITH WEAR SENSOR	TOYOTA	F	21780 21781 21835 23037 23038

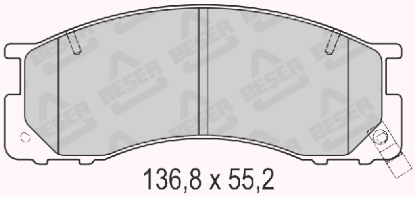

136,8 x 55,2
(NOT SCALE)

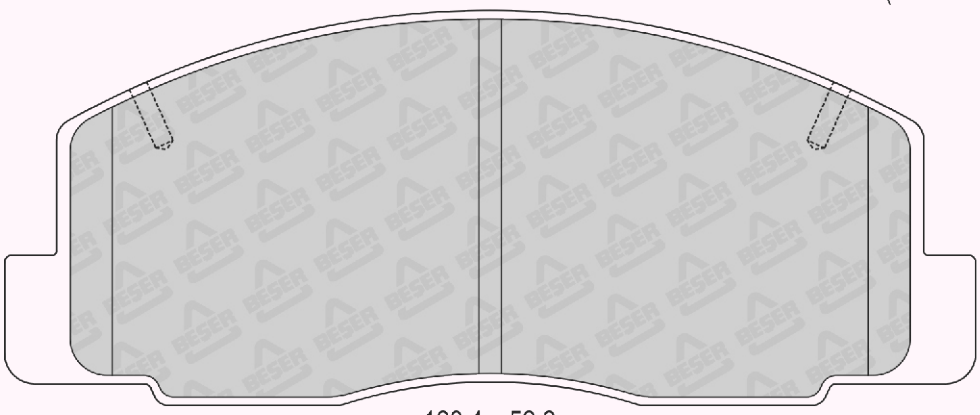

128,4 x 52,2

REFERENCE	T(mm)	REMARKS	MAKE	F/R	WVA No
4090	15,7	4 PADS PLAIN	KIA MOTORS	F	-----

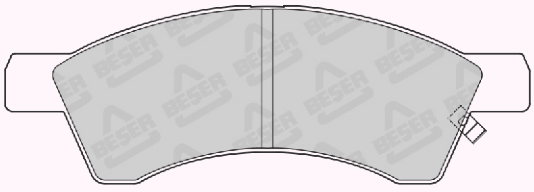

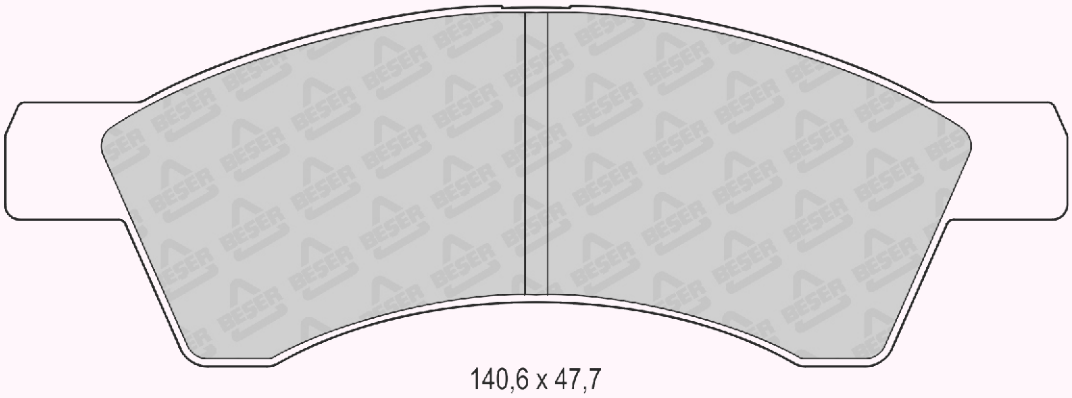

140,6 x 47,7

REFERENCE	T(mm)	REMARKS	MAKE	F/R	WVA No
4092	21	4 PADS PLAIN	IVECO	R	24570 29232

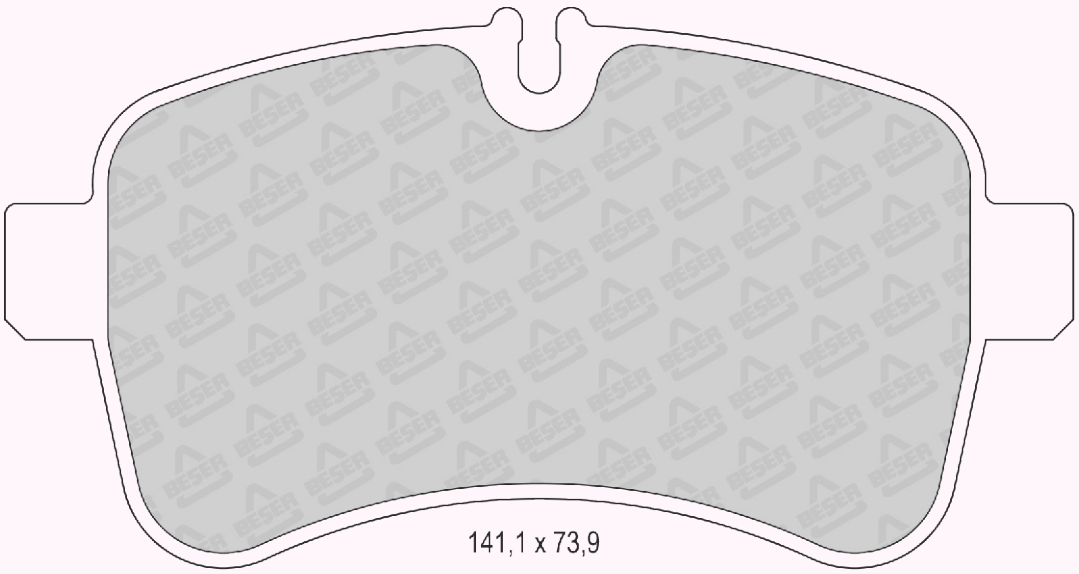

REFERENCE	T(mm)	REMARKS	MAKE	F/R	WVA No
4092/1	21	4 PADS PLAIN	IVECO	R	24570 29232

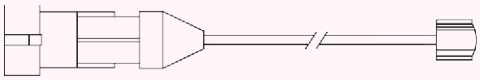

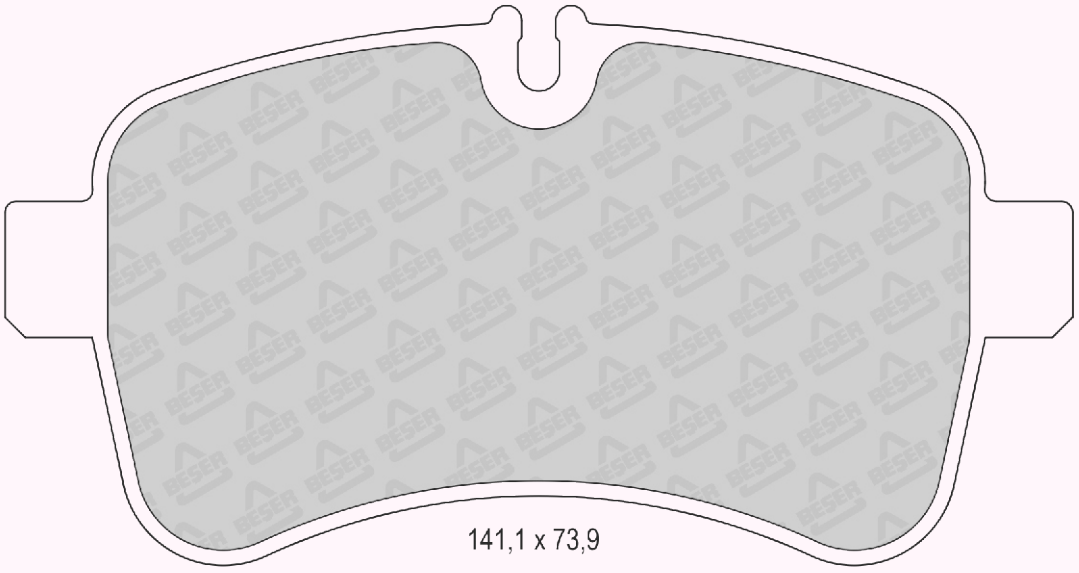

REFERENCE	T(mm)	REMARKS	MAKE	F/R	WVA No
4093	17	4 PADS PLAIN	FORD - JAGUAR RENAULT	R	23557

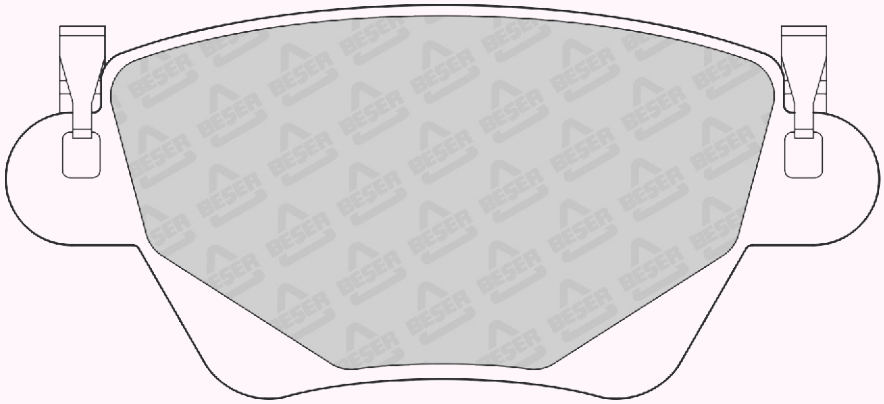

115,6 x 52

REFERENCE	T(mm)	REMARKS	MAKE	F/R	WVA No
4094	18	2 LEFT - 2 RIGHT	LAND ROVER	F	23615

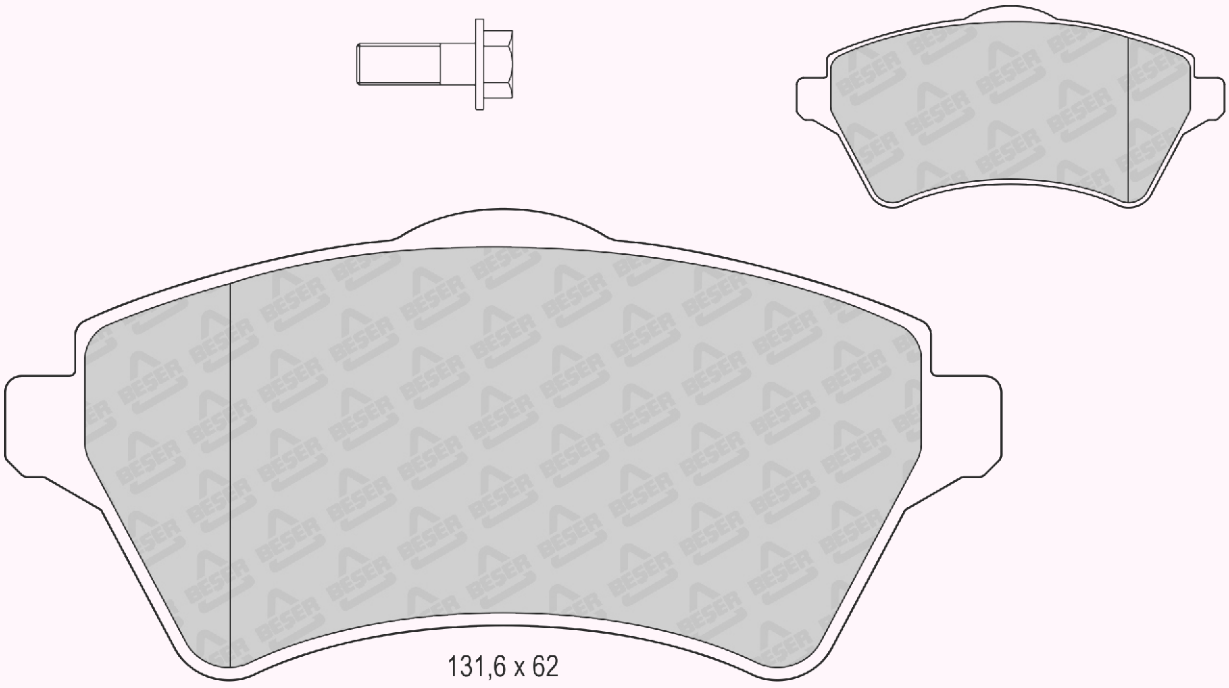

131,6 x 62

REFERENCE	T(mm)	REMARKS	MAKE	F/R	WVA No
4095	19,5	2 PADS WITH WEAR SENSOR	FORD - SEAT VW	F	23269 23270

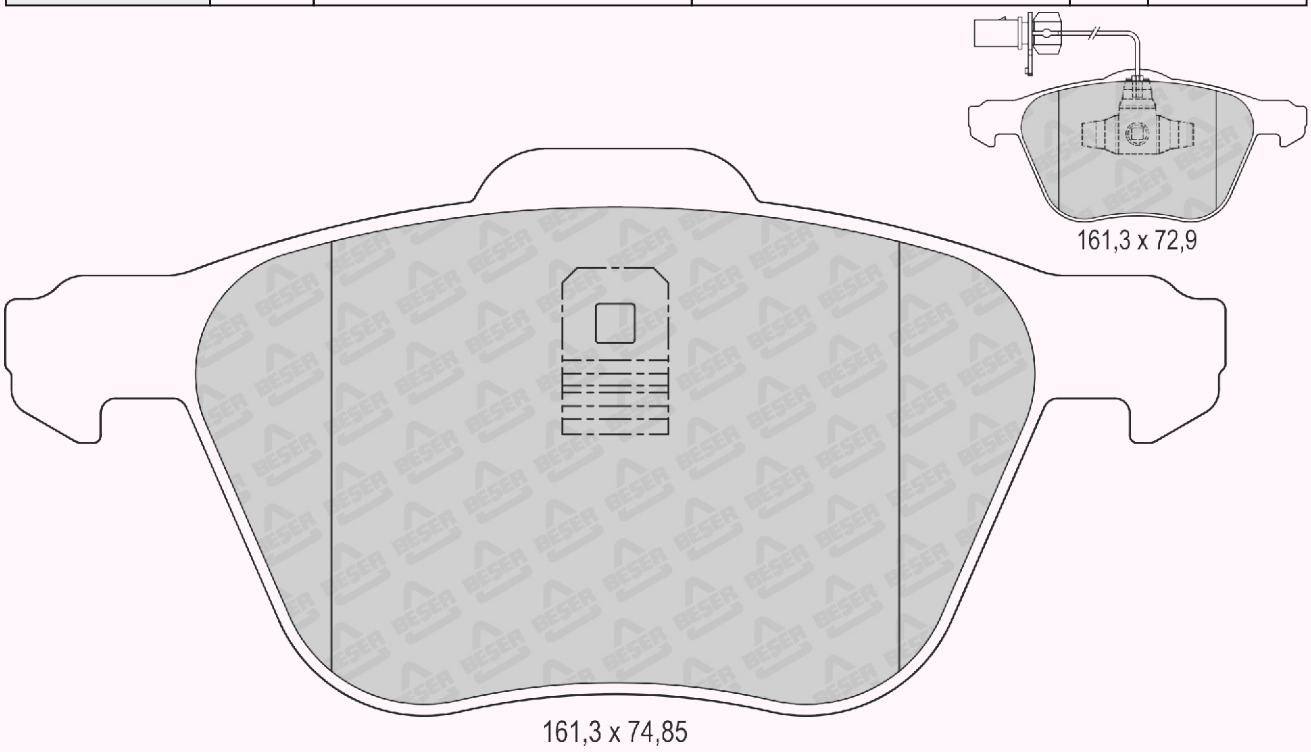

REFERENCE	T(mm)	REMARKS	MAKE	F/R	WVA No
4096	19	2 PADS WITH WEAR SENSOR	AUDI	F	23763 23801

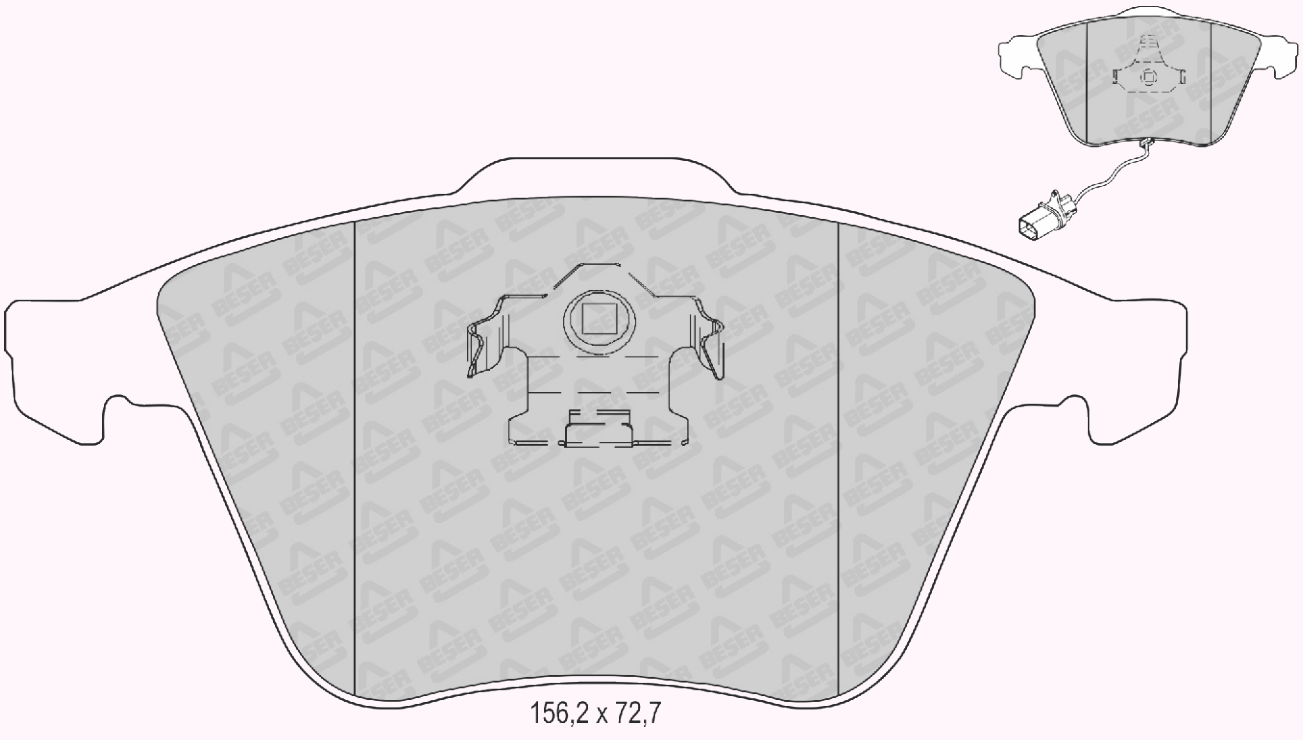

REFERENCE	T(mm)	REMARKS	MAKE	F/R	WVA No
4097	20	2 PADS WITH WEAR SENSOR	MERCEDES BENZ	F	23428 23743 23744

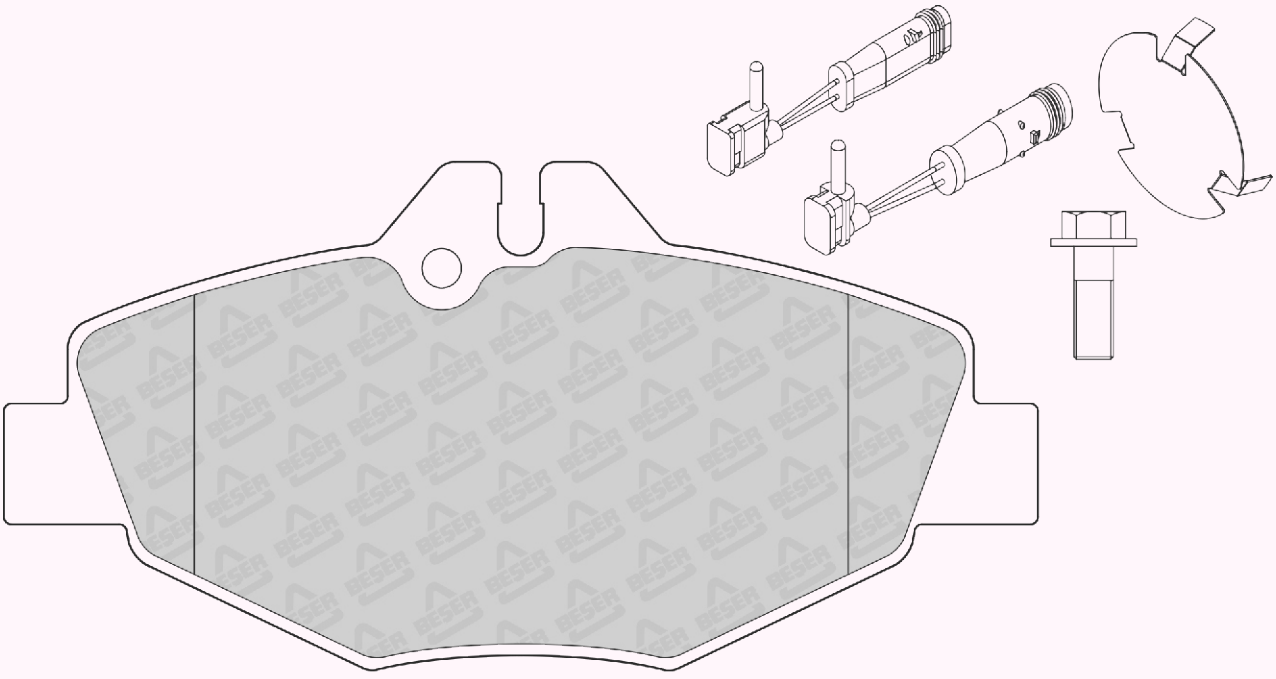

137 x 67,4

REFERENCE	T(mm)	REMARKS	MAKE	F/R	WVA No
4098	17,3	2 PADS WITH WEAR SENSOR	TOYOTA	R	24844 24845 24846

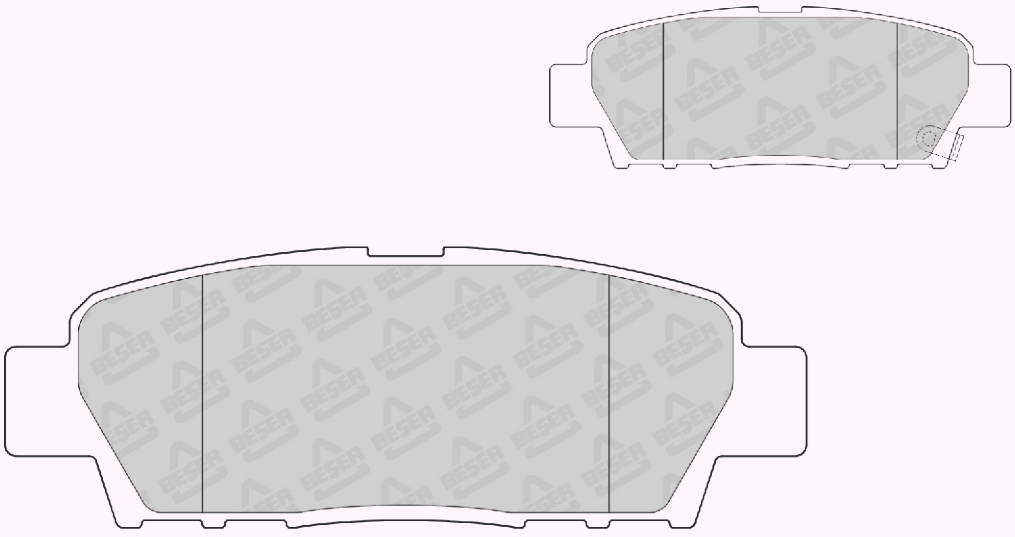

106,2 x 37,2

REFERENCE	T(mm)	REMARKS	MAKE	F/R	WVA No
4099	15,3	2 PADS WITH WEAR SENSOR	LEXUS - TOYOTA	R	21491 24130 24131

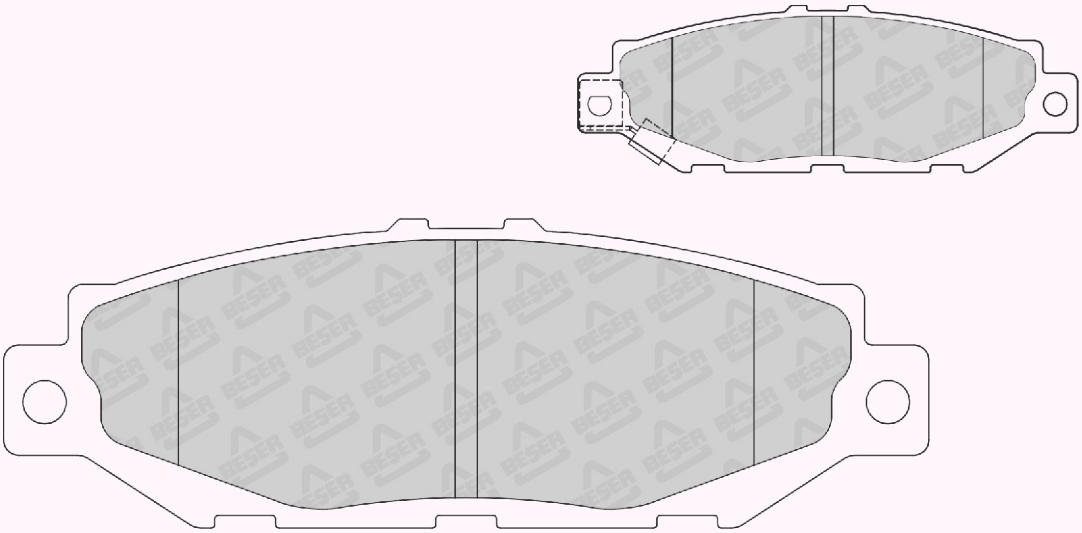

122,4 x 40,7

REFERENCE	T(mm)	REMARKS	MAKE	F/R	WVA No
4100	17,3	4 PADS PLAIN	FORD - JAGUAR	F	23278 23279 23321 23322

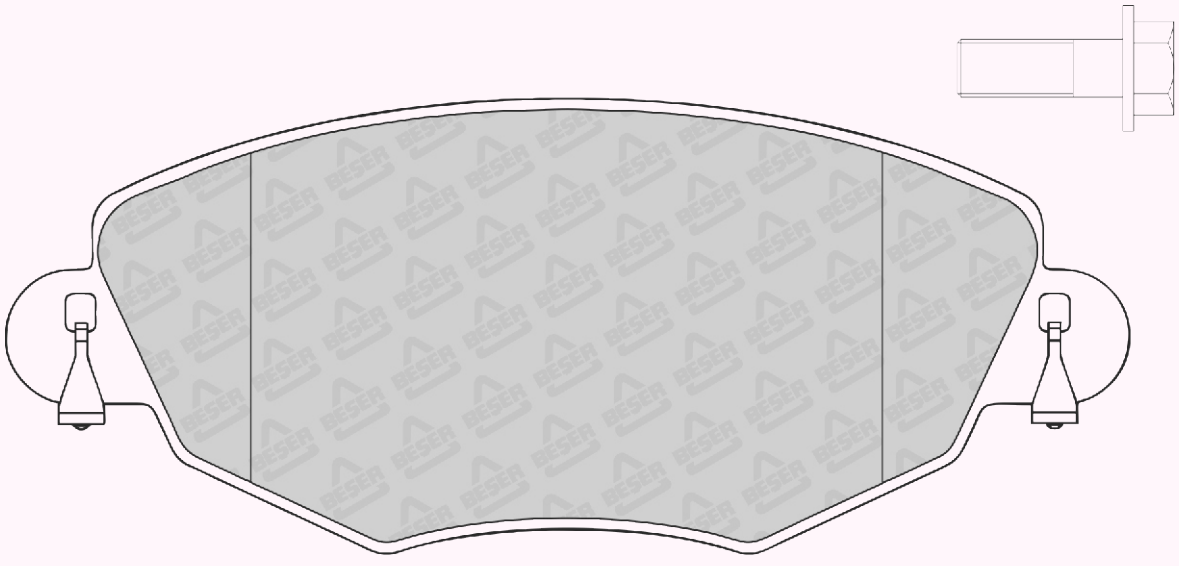

148,7 x 60,6

REFERENCE	T(mm)	REMARKS	MAKE	F/R	WVA No
4101	14,6	4 PADS PLAIN	MERCEDES BENZ	R	23078

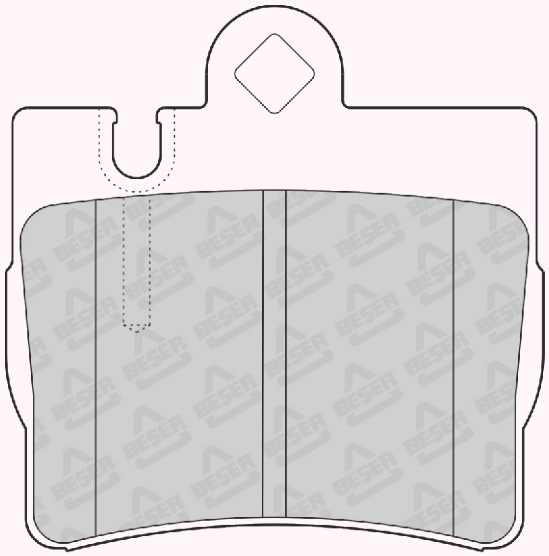

70,92 x 72,01

REFERENCE	T(mm)	REMARKS	MAKE	F/R	WVA No
4102	17,2	4 PADS PLAIN	MERCEDES BENZ	F	23271

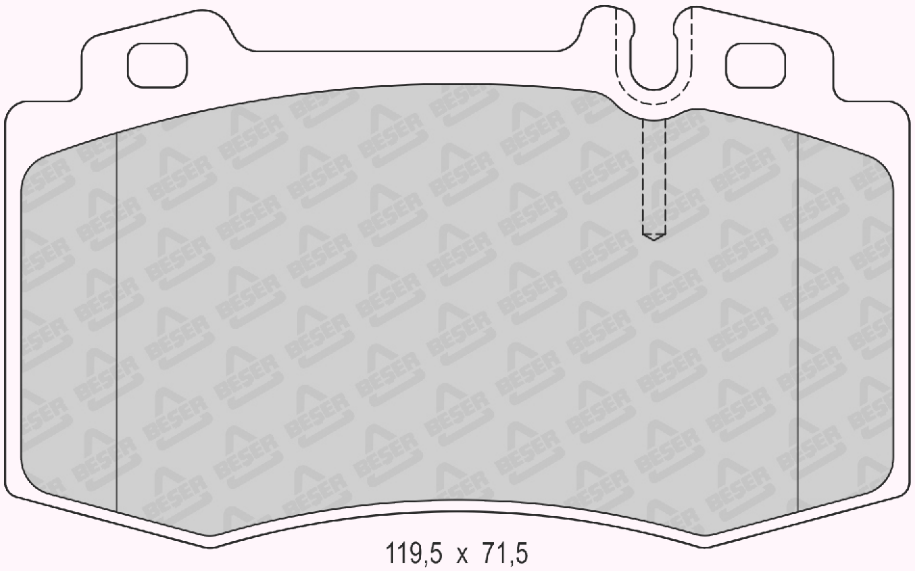

119,5 x 71,5

REFERENCE	T(mm)	REMARKS	MAKE	F/R	WVA No
4103	15,8	4 PADS PLAIN	MASERATI - MERCEDES	R	23157

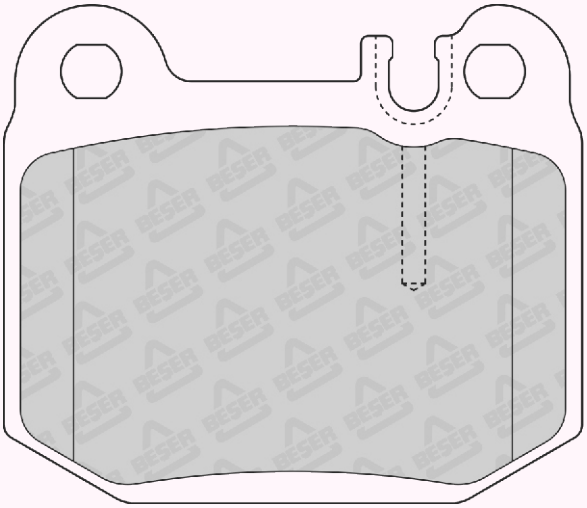

76,4 x 65,7

REFERENCE	T(mm)	REMARKS	MAKE	F/R	WVA No
4104	16	4 PADS PLAIN	NISSAN	F	21280

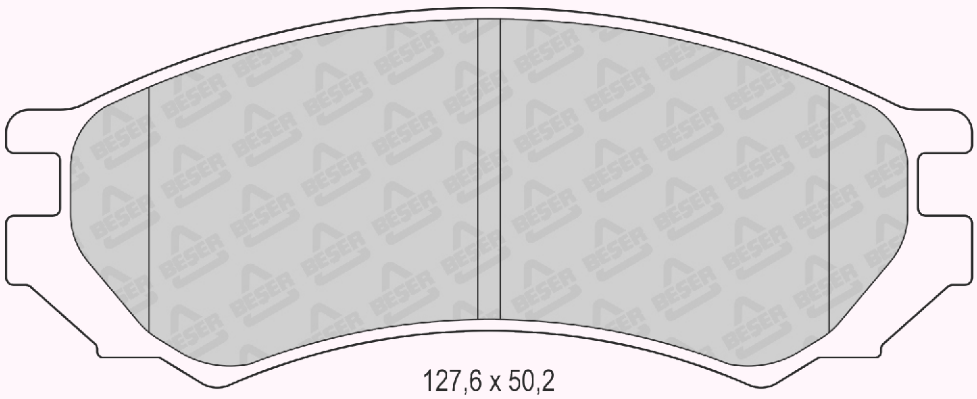

127,6 x 50,2

REFERENCE	T(mm)	REMARKS	MAKE	F/R	WVA No
4105	16,7	4 PADS PLAIN	LEXUS - TOYOTA	F	23734 23989

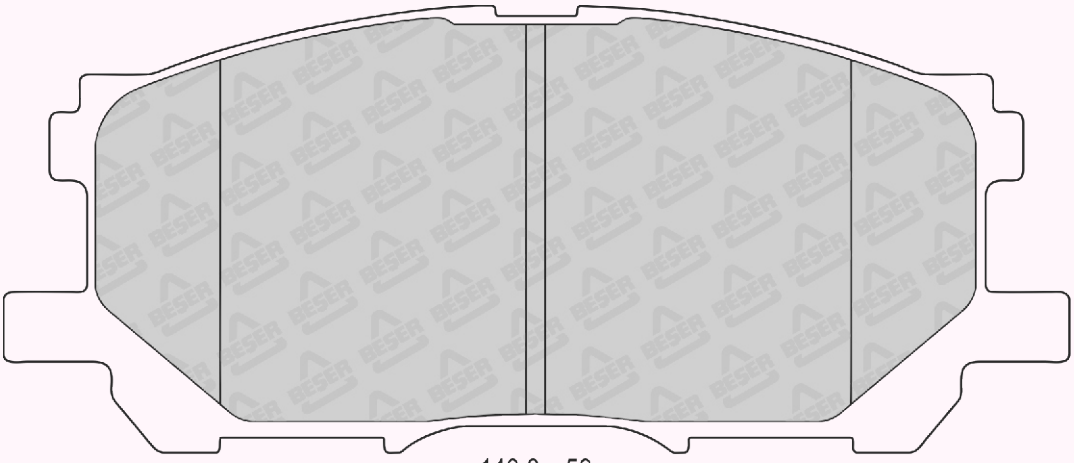

140,8 x 59

REFERENCE	T(mm)	REMARKS	MAKE	F/R	WVA No
4106	15,5	2 PADS WITH WEAR SENSOR	CHRYSLER - DODGE JEEP - MITSUBISHI	R	24014 24015



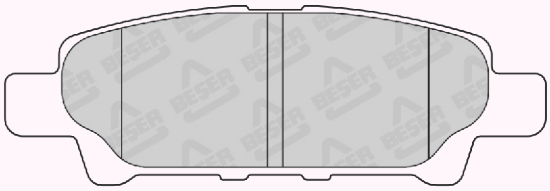

105,7 x 35,1
(NOT SCALE)

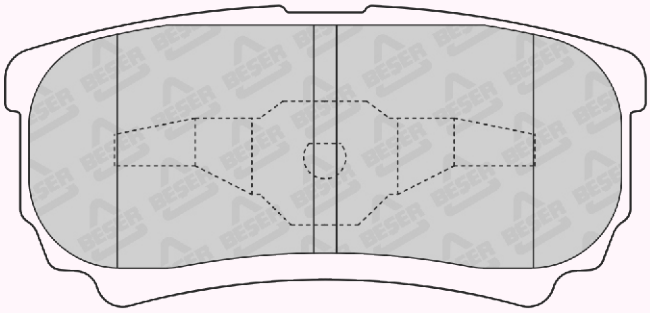

84,6 x 39,7

REFERENCE	T(mm)	REMARKS	MAKE	F/R	WVA No
4107	15,5	2 PADS WITH WEAR SENSOR	MITSUBISHI	F	25030

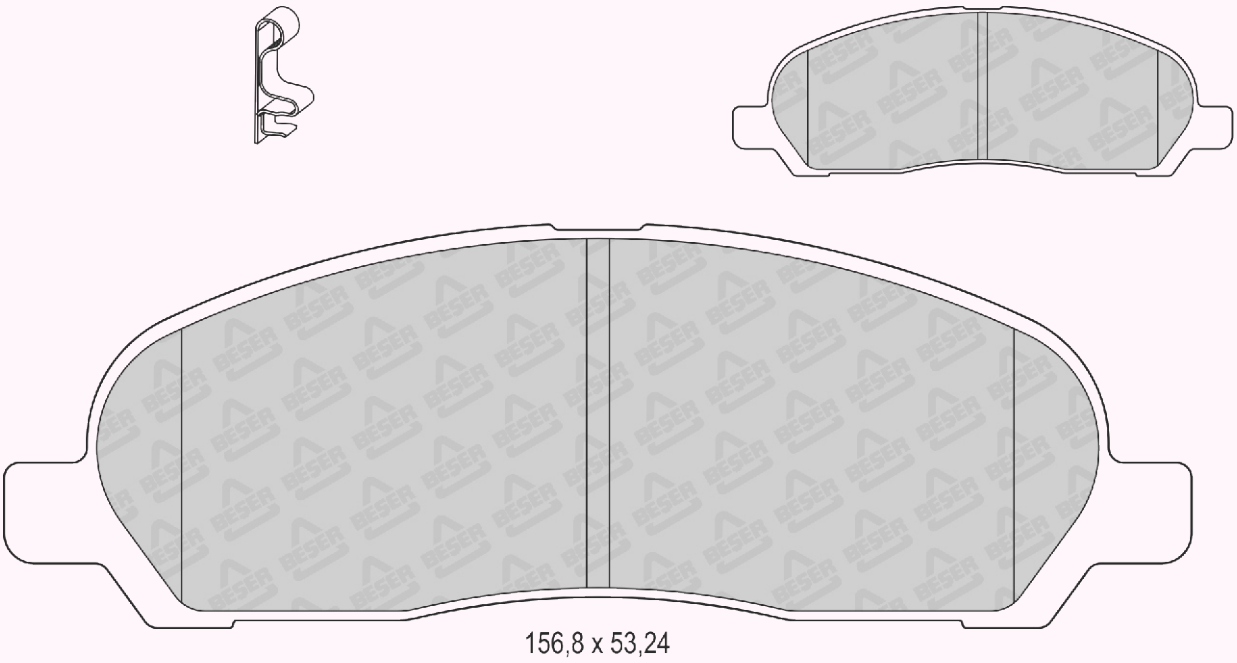

156,8 x 53,24

REFERENCE	T(mm)	REMARKS	MAKE	F/R	WVA No
4108	15,3	2 PADS WITH WEAR SENSOR	CHRYSLER - HYUNDAI MITSUBISHI - PROTON	R	21706 21707 21708

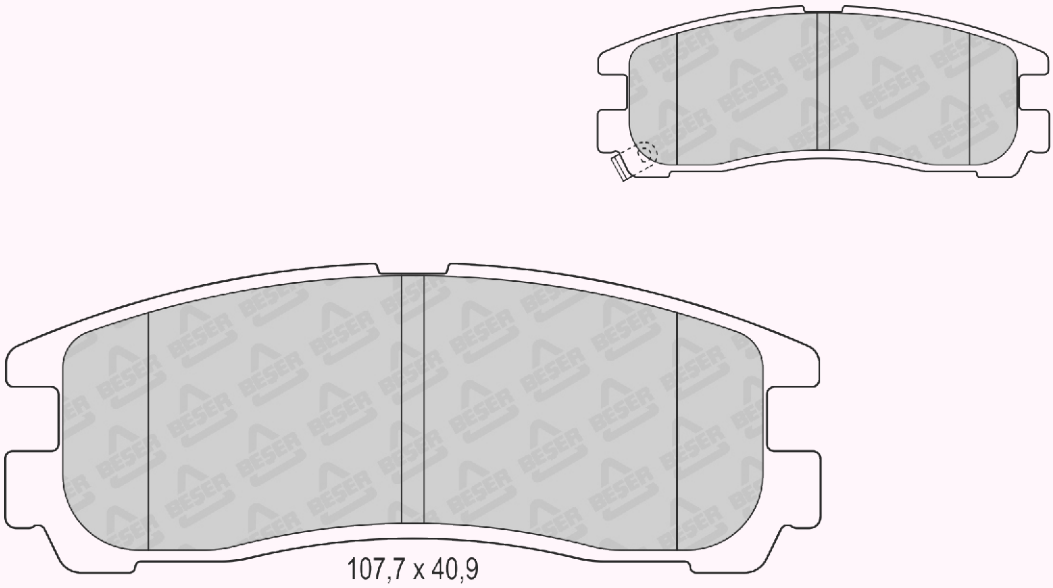

107,7 x 40,9

REFERENCE	T(mm)	REMARKS	MAKE	F/R	WVA No
4109	17	2 PADS WITH WEAR SENSOR	ACURA - HONDA NISSAN	F	23722 23729 24090 24091

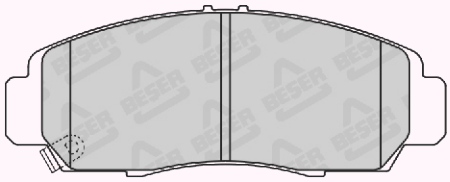

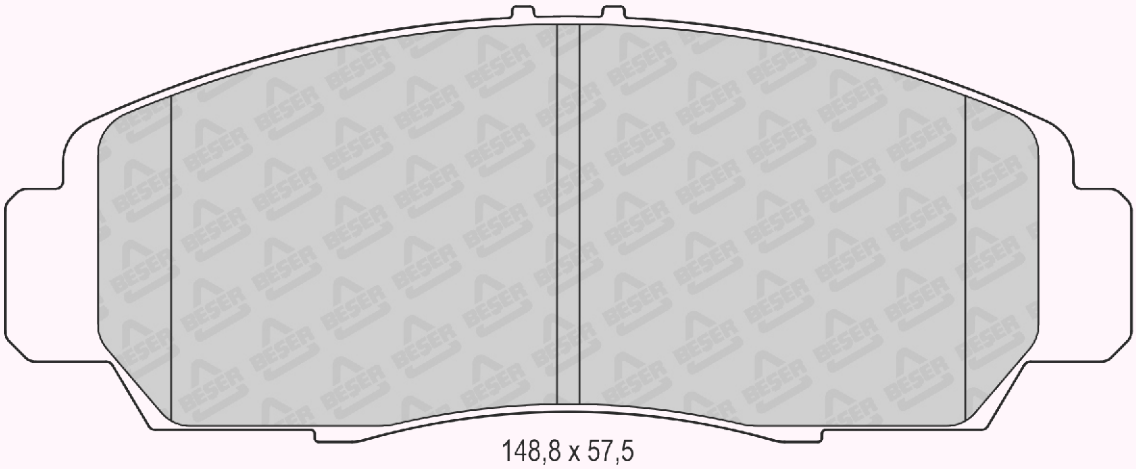

148,8 x 57,5

REFERENCE	T(mm)	REMARKS	MAKE	F/R	WVA No
4110	16,8	2 PADS WITH WEAR SENSOR	HONDA	F	23178 23179 23530 23531

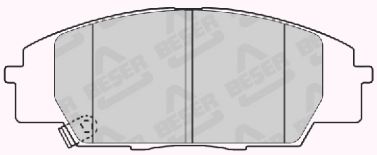

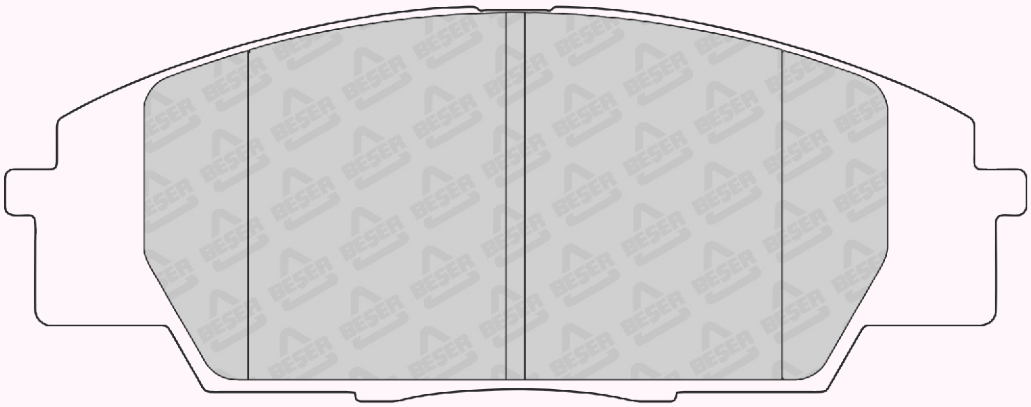

135 x 52

REFERENCE	T(mm)	REMARKS	MAKE	F/R	WVA No
4111	15,3	2 PADS WITH WEAR SENSOR	LEXUS - TOYOTA	R	23967

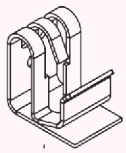

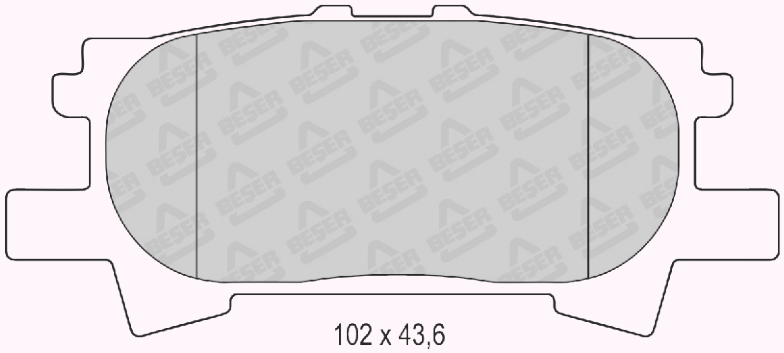

102 x 43,6

REFERENCE	T(mm)	REMARKS	MAKE	F/R	WVA No
4112	16,8	2 PADS WITH WEAR SENSOR	TOYOTA	F	23340 23341 23342 23958

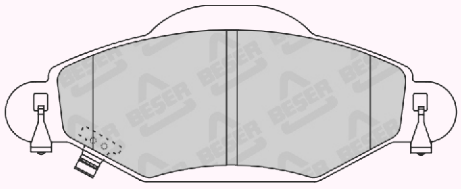

130,6 x 51
(NOT SCALE)

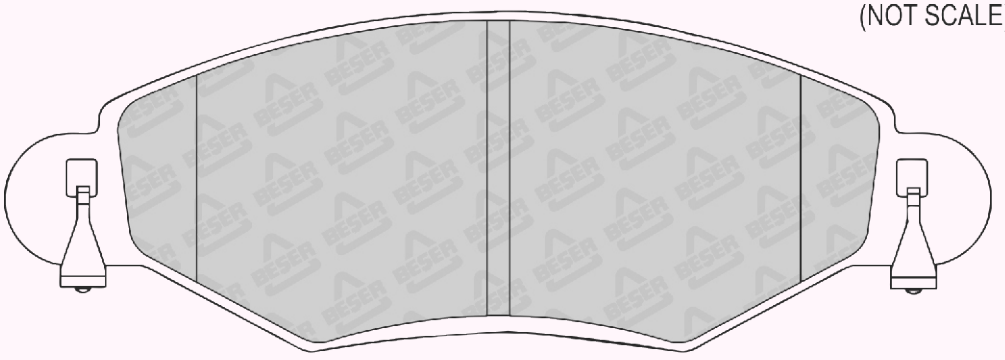

130,6 x 44,9

REFERENCE	T(mm)	REMARKS	MAKE	F/R	WVA No
4113	15	2 PADS WITH WEAR SENSOR	LEXUS - TOYOTA	R	24323 24324 24325

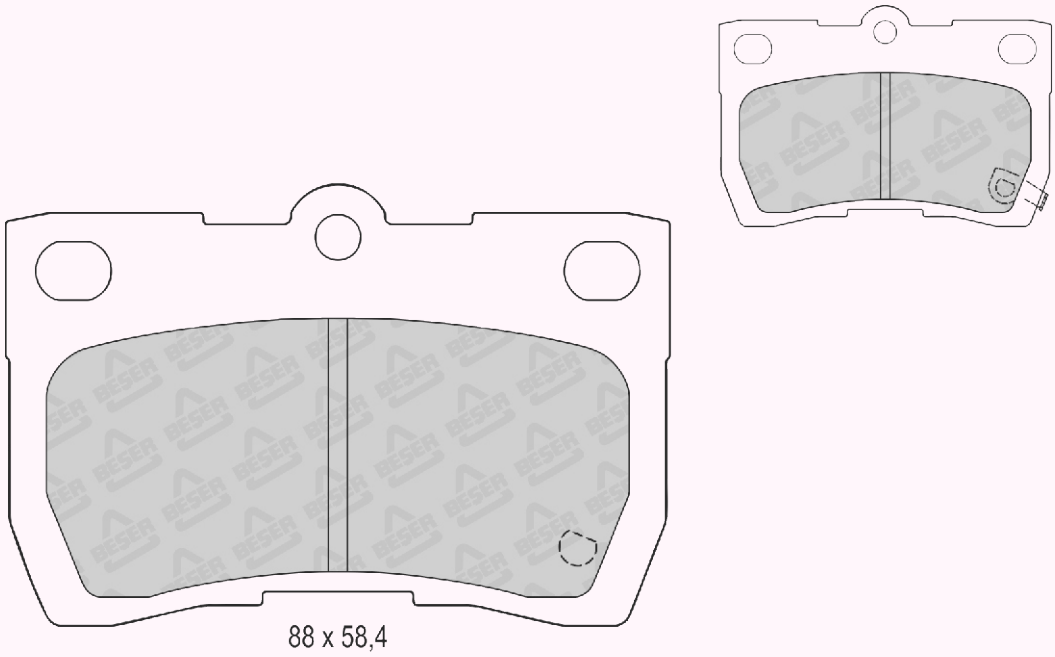

REFERENCE	T(mm)	REMARKS	MAKE	F/R	WVA No
4114	17,3	4 PADS PLAIN	TOYOTA	R	-----

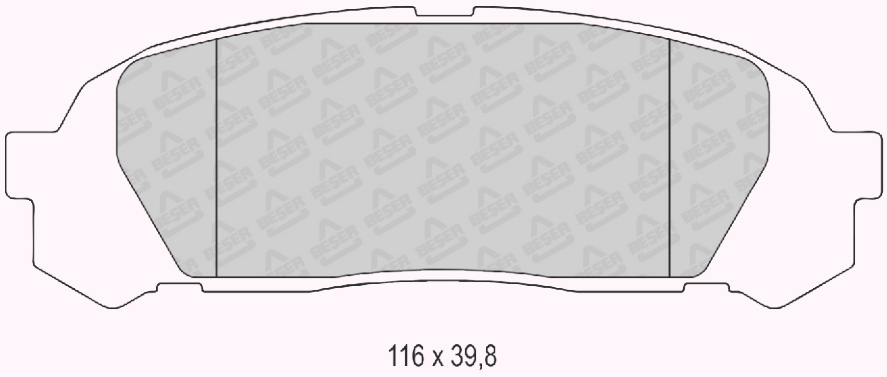

REFERENCE	T(mm)	REMARKS	MAKE	F/R	WVA No
4115	16,5	4 PADS PLAIN	HONDA - NISSAN MG	F	23094 23563

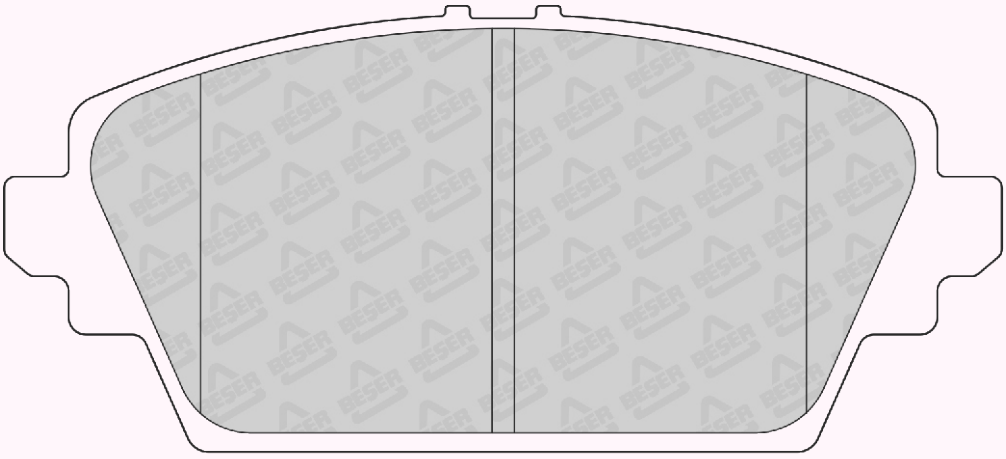

131,7 x 58,8

REFERENCE	T(mm)	REMARKS	MAKE	F/R	WVA No
4116	19,2	4 PADS PLAIN	NISSAN	F	-

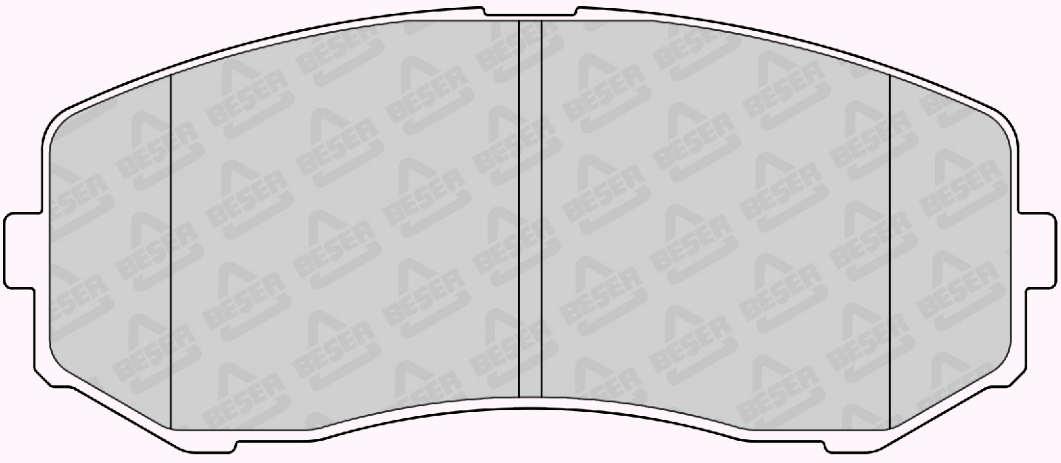

139 x 58,80

REFERENCE	T(mm)	REMARKS	MAKE	F/R	WVA No
4117	17	4 PADS PLAIN	TOYOTA	F	-----

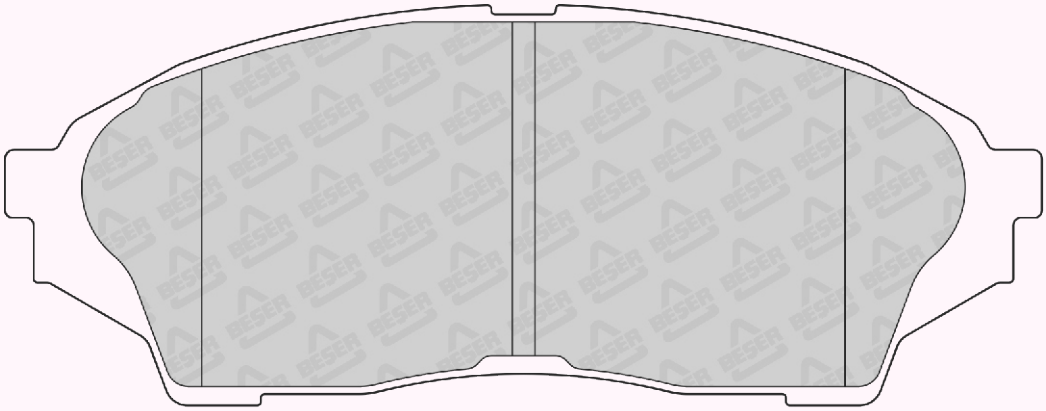

137 x 52,8

REFERENCE	T(mm)	REMARKS	MAKE	F/R	WVA No
4118	17	2 PADS WITH WEAR SENSOR	HAWTAI - HYUNDAI LANDWIND(JMC) - MAZDA	F	24246 24247 24248 24249

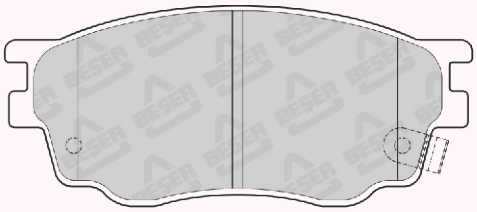

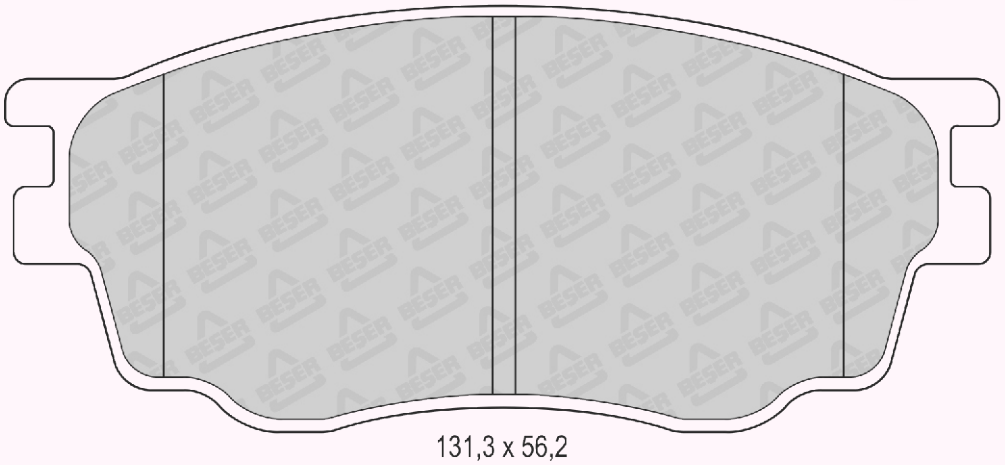

131,3 x 56,2

REFERENCE	T(mm)	REMARKS	MAKE	F/R	WVA No
4119	17,8 18,8	4 PADS PLAIN	FORD - MAZDA	F	23787 23788

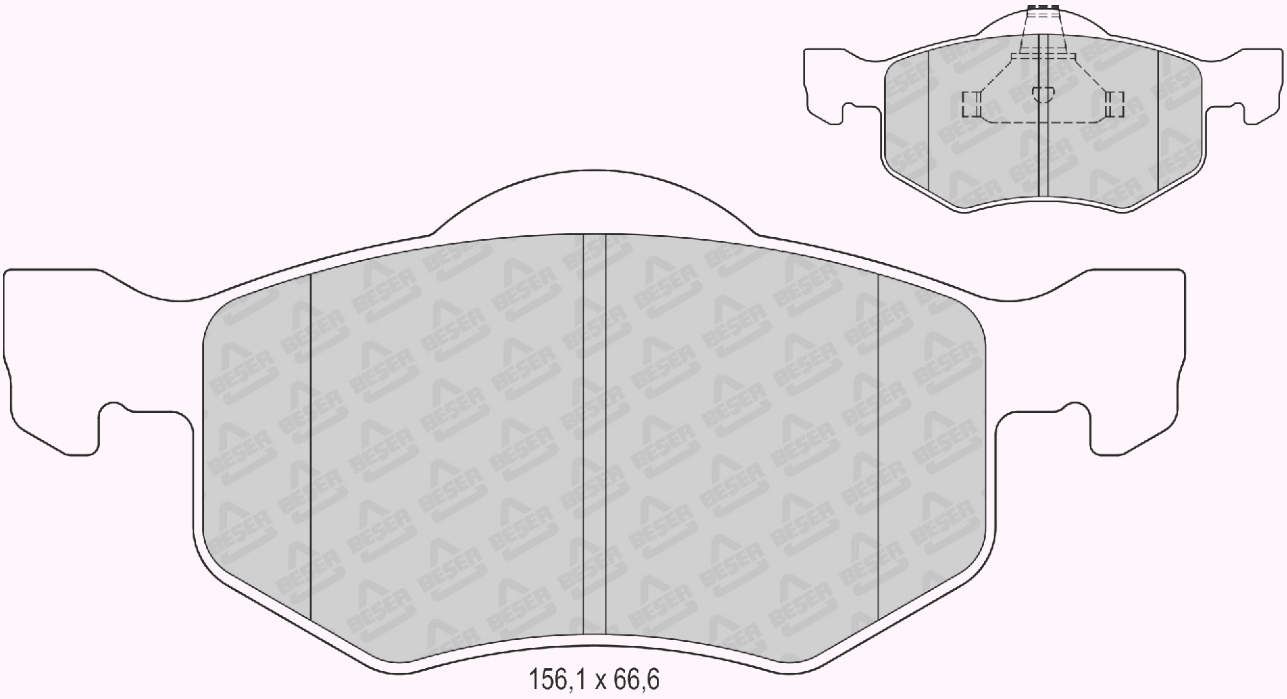

156,1 x 66,6

REFERENCE	T(mm)	REMARKS	MAKE	F/R	WVA No
4121	19,8	1 PAD WITH WEAR SENSOR	CHRYSLER - FIAT - LANCIA OPEL - VAUXHALL	F	24727 24728 24729

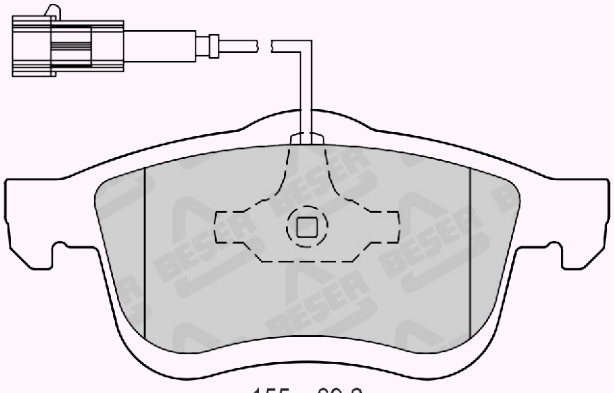

155 x 69,2
(NOT SCALE)

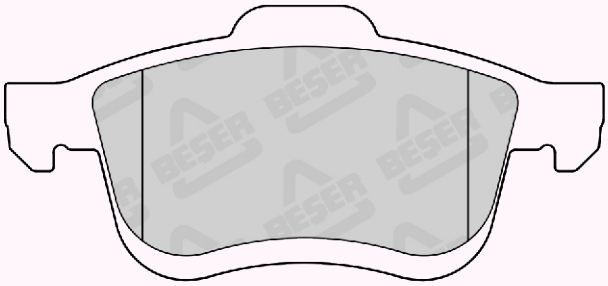

156,3 x 71,6
(NOT SCALE)

REFERENCE	T(mm)	REMARKS	MAKE	F/R	WVA No
4121/1	19,8	2 PADS WITH WEAR SENSOR	CHRYSLER - FIAT - LANCIA OPEL - VAUXHALL	F	24727 24728 24729

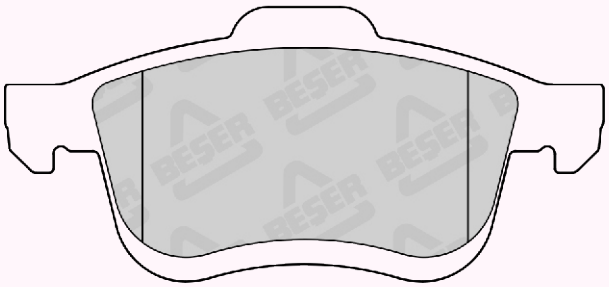

156,3 x 71,6
(NOT SCALE)

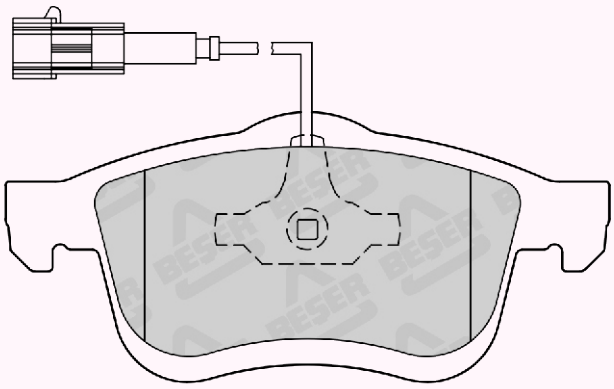

155 x 69,2
(NOT SCALE)

REFERENCE	T(mm)	REMARKS	MAKE	F/R	WVA No
4122	16,5	2 PADS WITH WEAR SENSOR	DAIHATSU - ISUZU - MAZDA SUBARU - SUZUKI -	F	24283 24284 24285

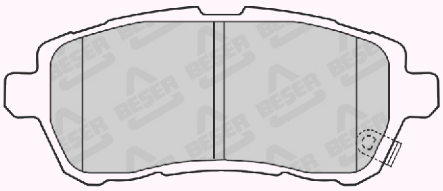

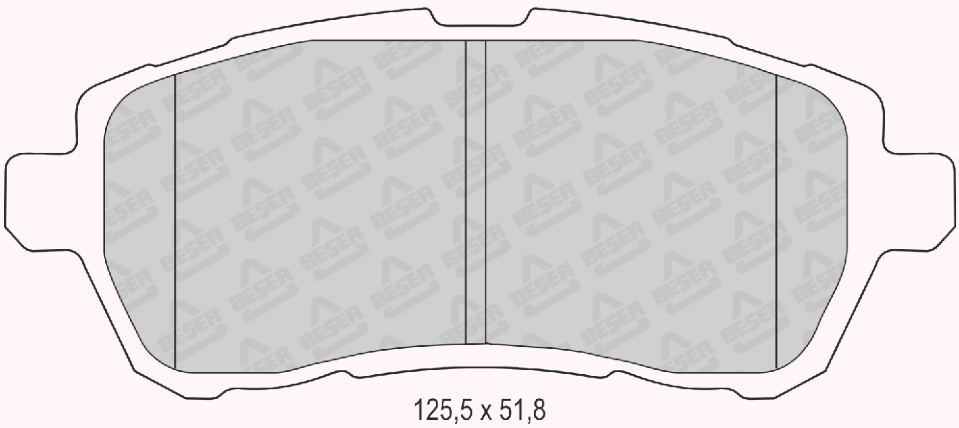

125,5 x 51,8

REFERENCE	T(mm)	REMARKS	MAKE	F/R	WVA No
4123	16,5	4 PADS PLAIN	ALFAROMEO - FIAT LANCIA	R	23517 25237

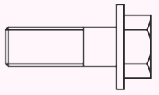

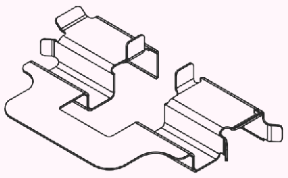

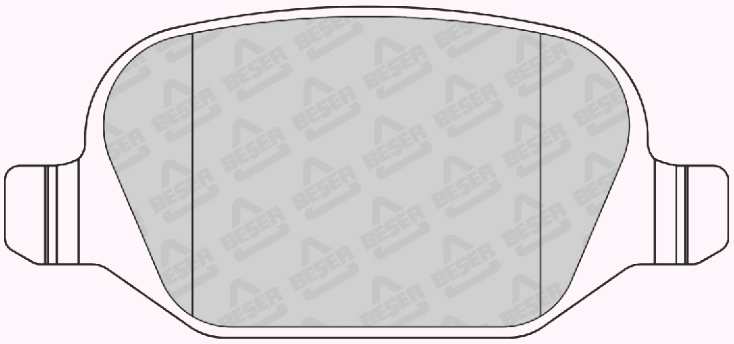

95,6 x 43,7

REFERENCE	T(mm)	REMARKS	MAKE	F/R	WVA No
4124	17	2 PADS WITH WEAR SENSOR	HOLDEN - ISUZU	F	25149 25150 25151

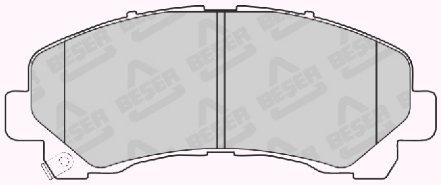

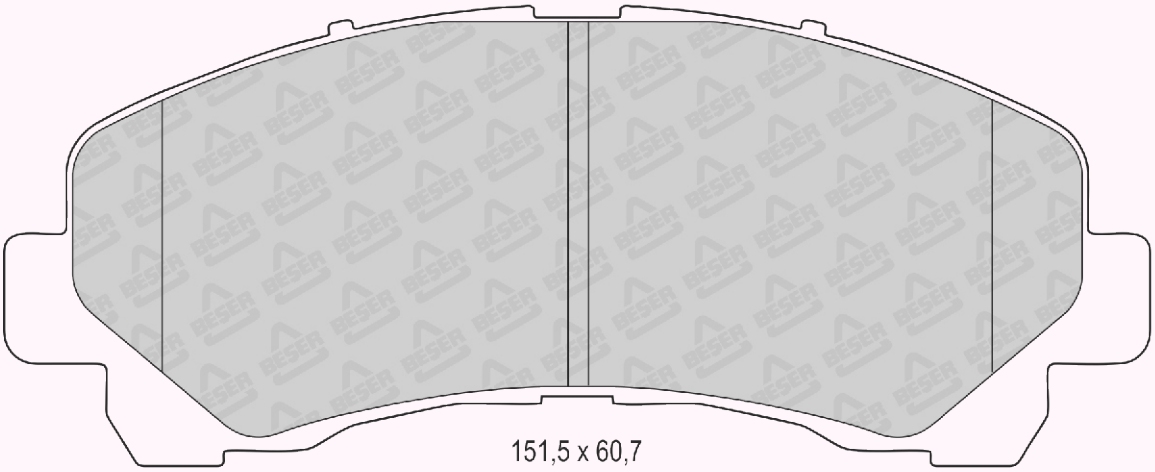

151,5 x 60,7

REFERENCE	T(mm)	REMARKS	MAKE	F/R	WVA No
4125	16,75	4 PADS PLAIN	MERCEDES BENZ	F	23070

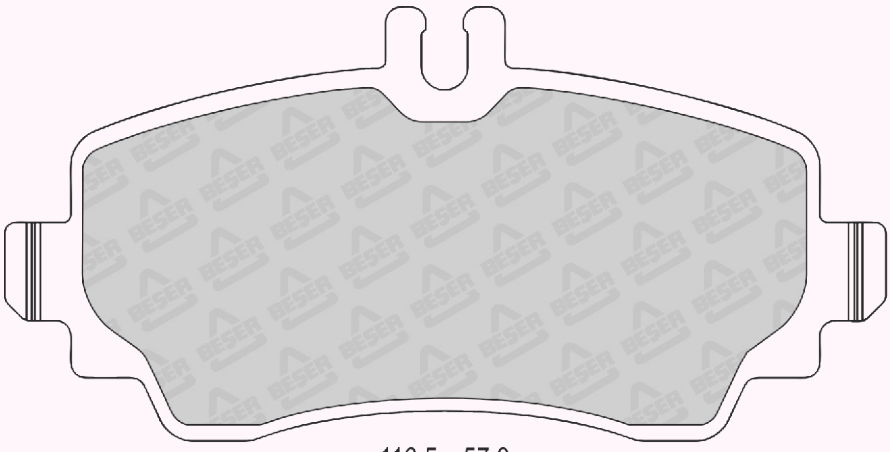

116,5 x 57,3

REFERENCE	T(mm)	REMARKS	MAKE	F/R	WVA No
4126	16,3 17,3	1 PAD WITH WEAR SENSOR	MERCEDES BENZ	F	23193 23194 23195 23196

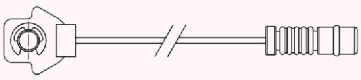

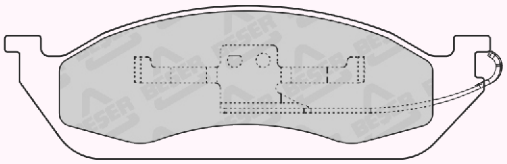

187,7 x 59
(NOT SCALE)

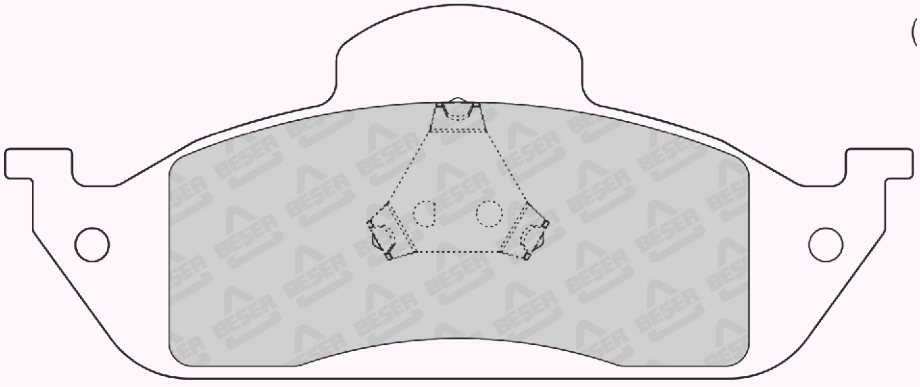

187,7 x 77,2
(NOT SCALE)

REFERENCE	T(mm)	REMARKS	MAKE	F/R	WVA No
4126 /1	16,3 17,3	1 PAD WITH WEAR SENSOR	MERCEDES BENZ	F	23193

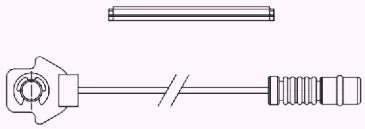

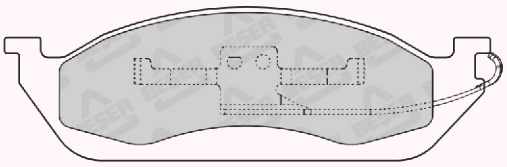

187,7 x 59
(NOT SCALE)

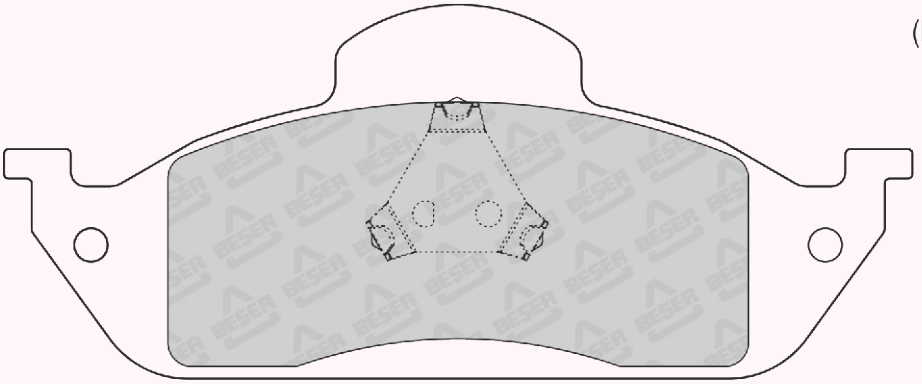

187,7 x 77,2
(NOT SCALE)

REFERENCE	T(mm)	REMARKS	MAKE	F/R	WVA No
4127	16,7	4 PADS PLAIN	MERCEDES BENZ	R	23334

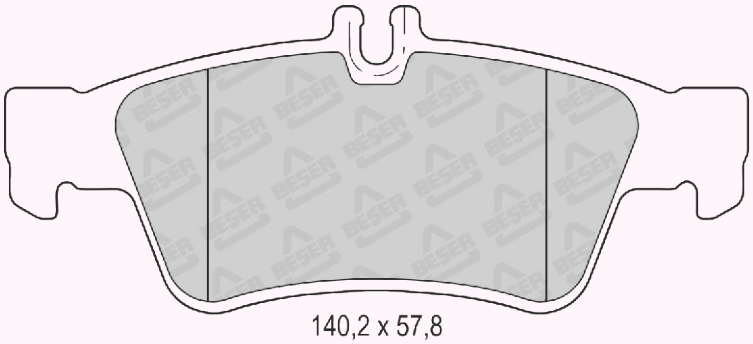

140,2 x 57,8
(NOT SCALE)

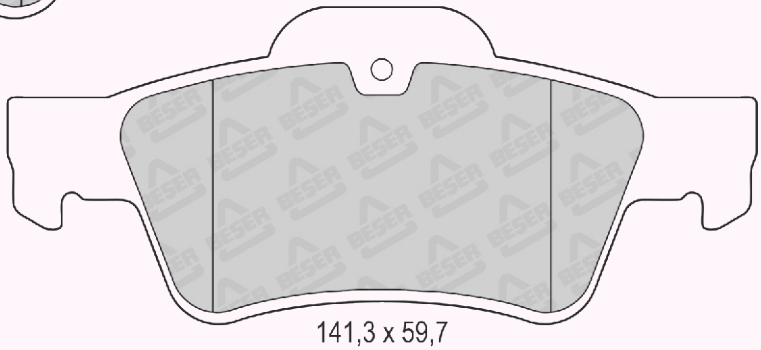

141,3 x 59,7
(NOT SCALE)

REFERENCE	T(mm)	REMARKS	MAKE	F/R	WVA No
4128	15,5	4 PADS PLAIN	NISSAN	F	21626 29109 29105 29163 29106 29179 29108

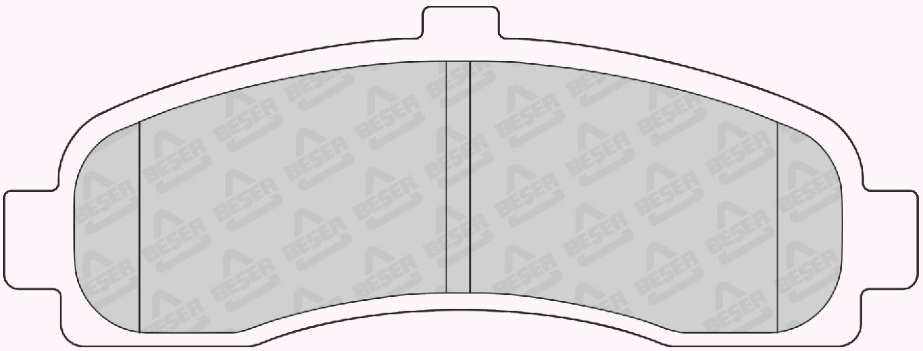

120,7 x 44,8

REFERENCE	T(mm)	REMARKS	MAKE	F/R	WVA No
4132	18,2	1 PAD WITH WEAR SENSOR	NISSAN - OPEL RENAULT - VAUXHALL	R	25172 25173

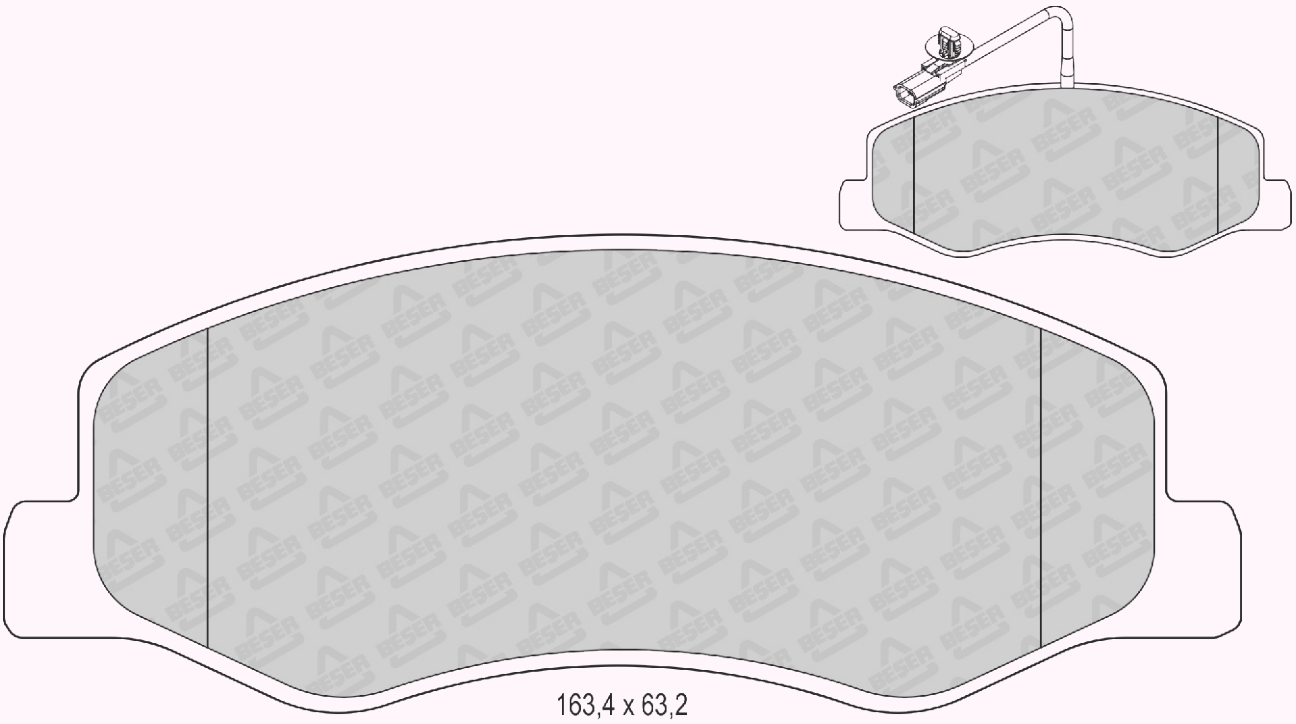

163,4 x 63,2

REFERENCE	T(mm)	REMARKS	MAKE	F/R	WVA No
4134	18	4 PADS PLAIN	RENAULT	F	24709 24710

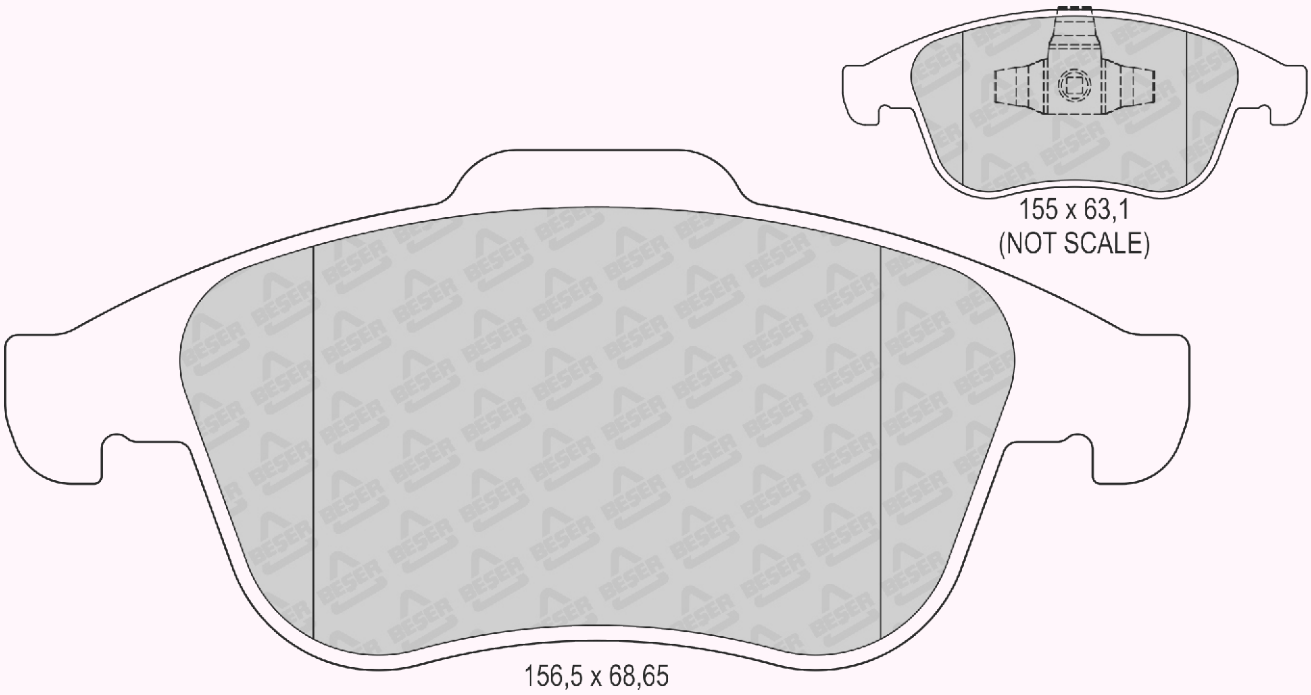

REFERENCE	T(mm)	REMARKS	MAKE	F/R	WVA No
4135	16,5	4 PADS PLAIN	AUDI - SEAT SKODA - VW	R	24563

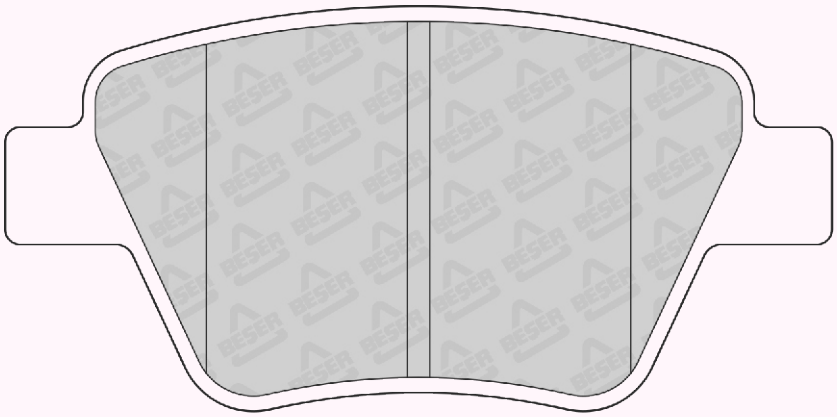

REFERENCE	T(mm)	REMARKS	MAKE	F/R	WVA No
4136	16,8	2 PADS WITH WEAR SENSOR	HYUNDAI - KIA	F	25348 25349 25350

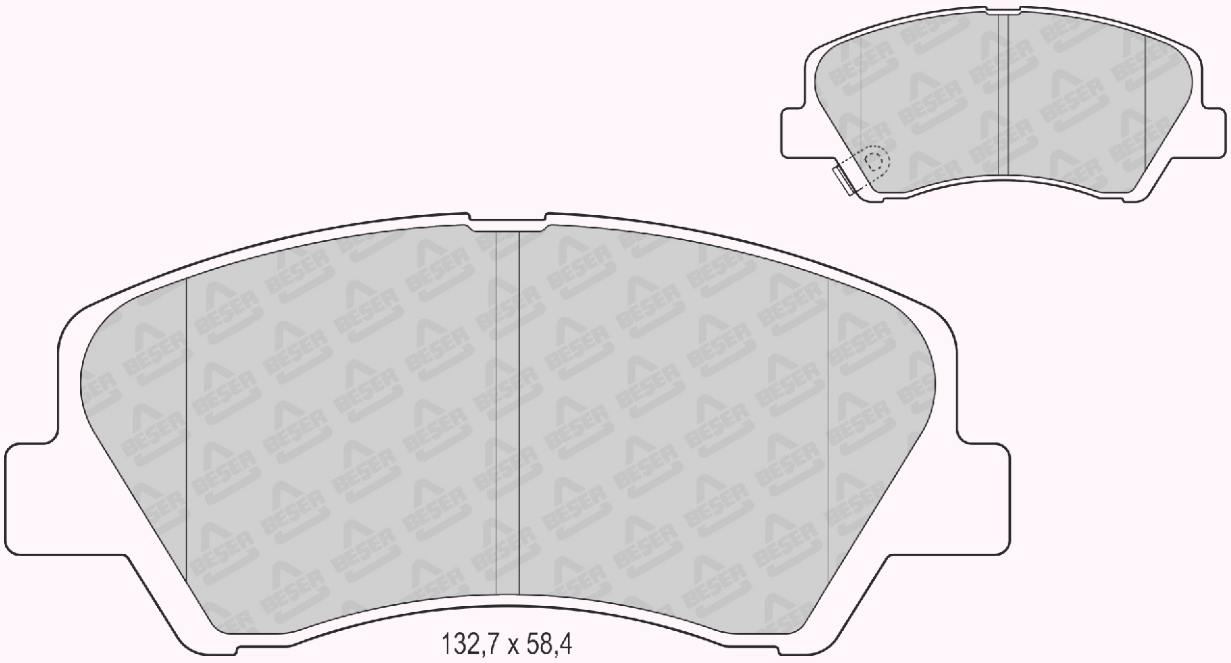

REFERENCE	T(mm)	REMARKS	MAKE	F/R	WVA No
4137	15,2	4 PADS PLAIN	RENAULT	F	24162

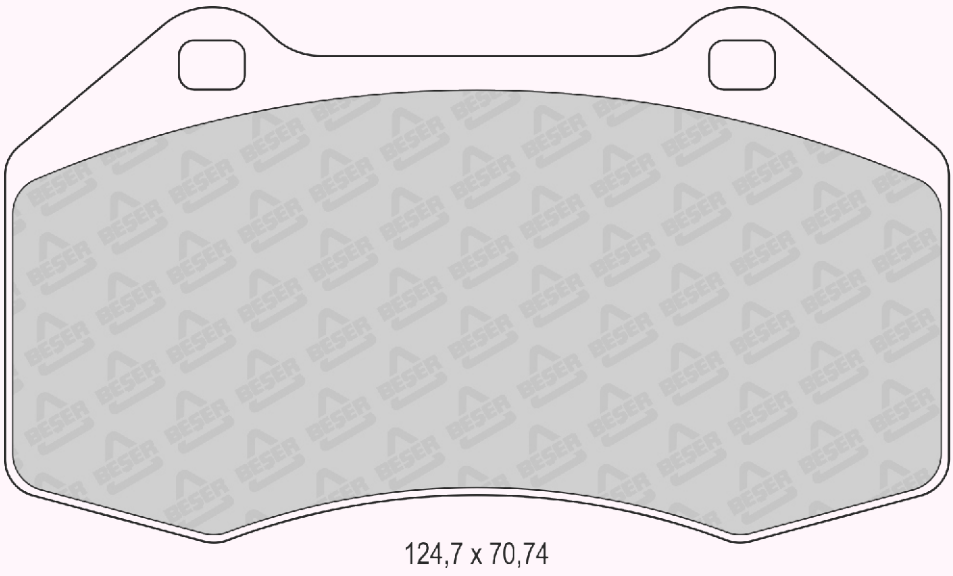

REFERENCE	T(mm)	REMARKS	MAKE	F/R	WVA No
4138	18,4	2 PADS WITH WEAR SENSOR	SEAT - SKODA VW	F	23581 23843

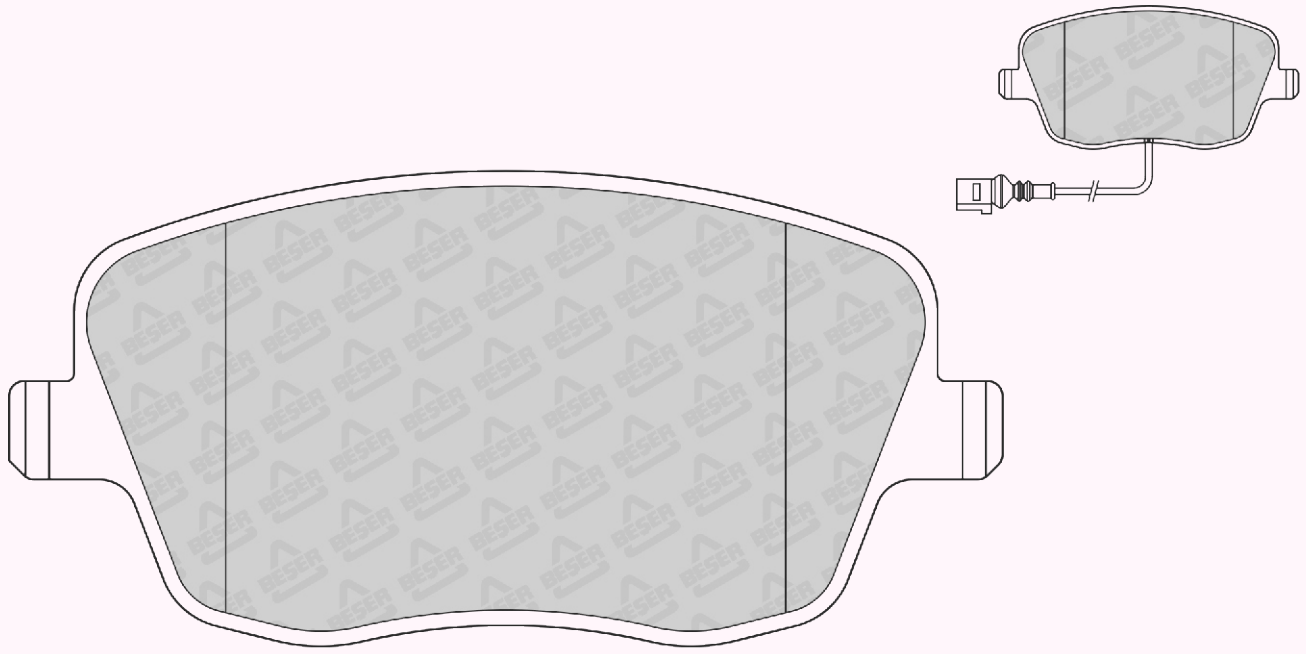

131,3 x 62,8

REFERENCE	T(mm)	REMARKS	MAKE	F/R	WVA No
4138/1	18,4	1 PAD WITH WEAR SENSOR	SEAT - SKODA VW	F	23581

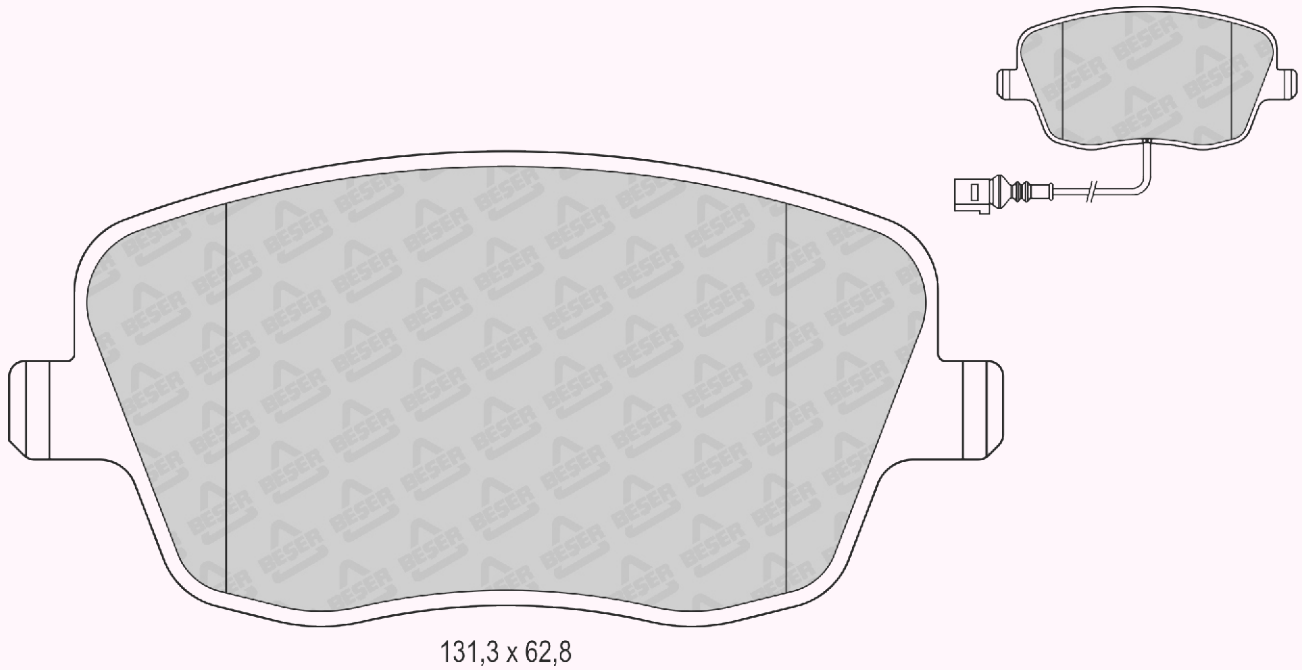

131,3 x 62,8

REFERENCE	T(mm)	REMARKS	MAKE	F/R	WVA No
4140	18	4 PADS PLAIN	DACIA - RENAULT SMART	F	25702 25703 25728



140,2 x 42
(NOT SCALE)

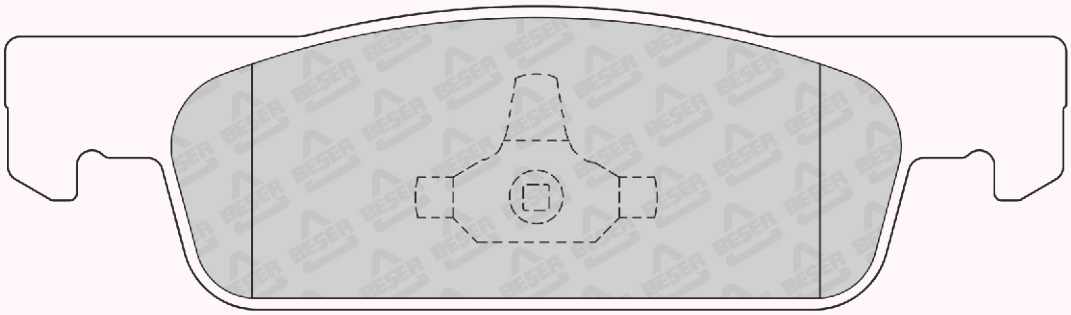

140,2 x 36

REFERENCE	T(mm)	REMARKS	MAKE	F/R	WVA No
4141	18	4 PADS PLAIN	DACIA - LADA RENAULT	F	24673 24674



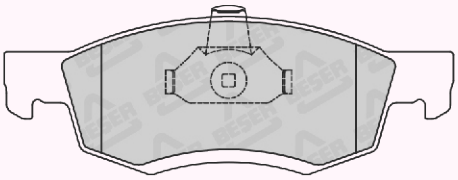

150,1 x 52,6
(NOT SCALE)

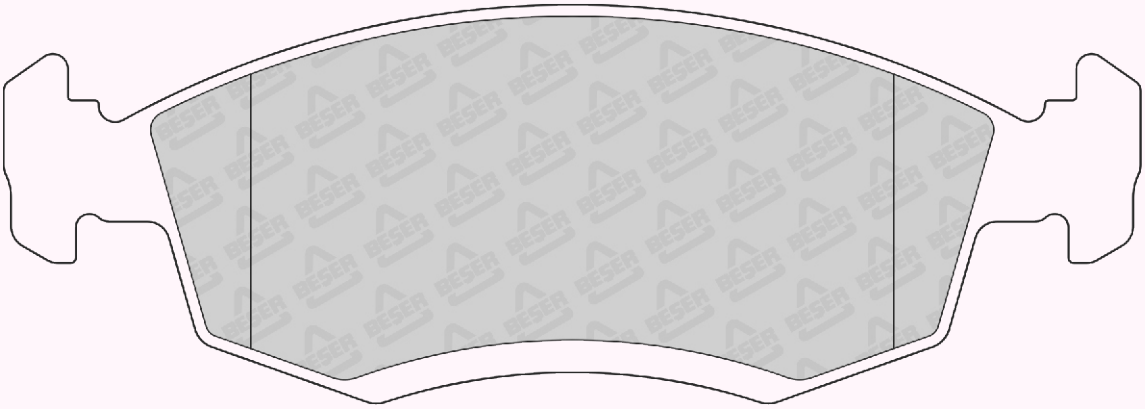

150,3 x 52,6

REFERENCE	T(mm)	REMARKS	MAKE	F/R	WVA No
4141/1	18	4 PADS PLAIN	DACIA - LADA RENAULT	F	24673

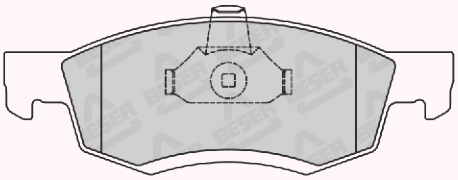

150,1 x 52,6
(NOT SCALE)



150,3 x 52,6

REFERENCE	T(mm)	REMARKS	MAKE	F/R	WVA No
4142	16	4 PADS PLAIN	RENAULT	R	24820

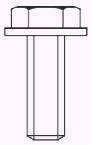

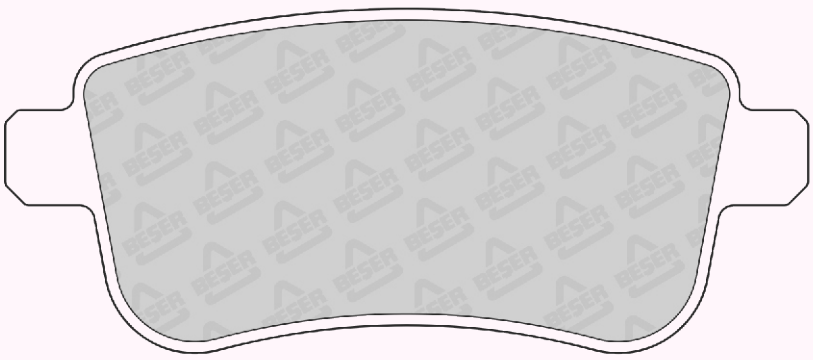

106,1 x 45,4

REFERENCE	T(mm)	REMARKS	MAKE	F/R	WVA No
4143	17	4 PADS WITH WEAR SENSOR	INFINITI - NISSAN - RENAULT SAMSUNG	F	23698 23699

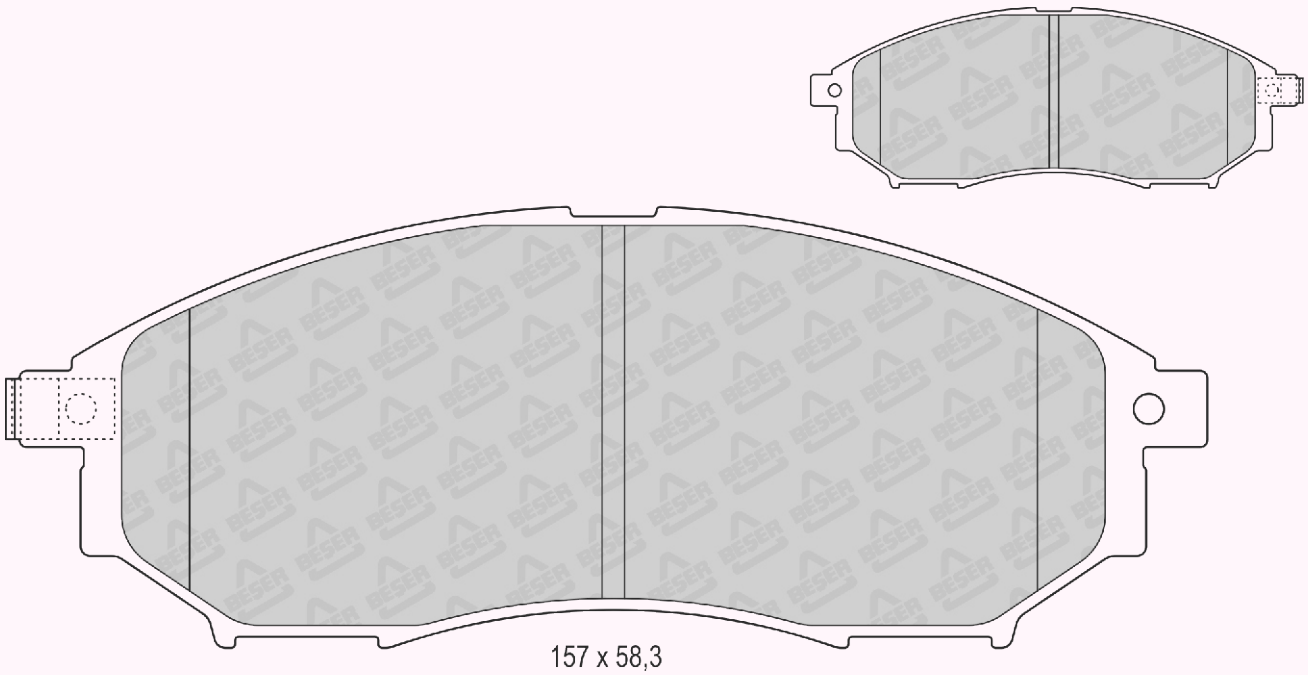

REFERENCE	T(mm)	REMARKS	MAKE	F/R	WVA No
4145	18,5	4 PADS PLAIN	CITROEN	F	25220 25221

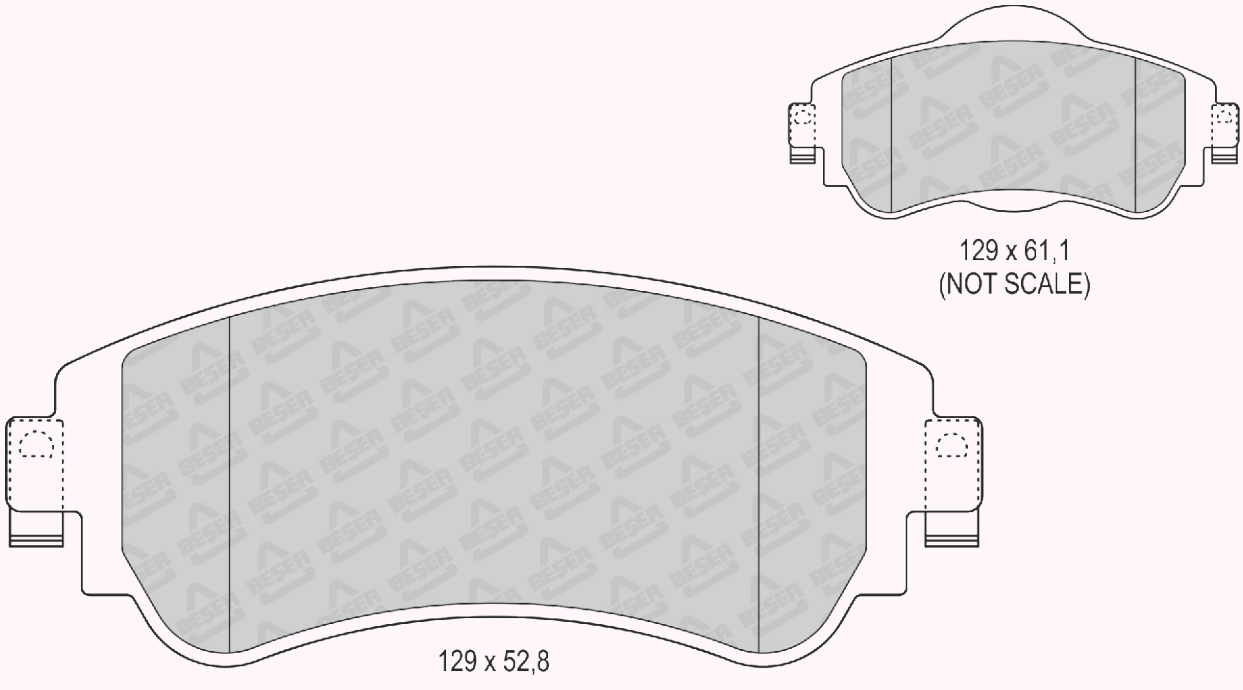

REFERENCE	T(mm)	REMARKS	MAKE	F/R	WVA No
4146	15,5	2 PADS WITH WEAR SENSOR	TOYOTA	R	24885 24886 24887

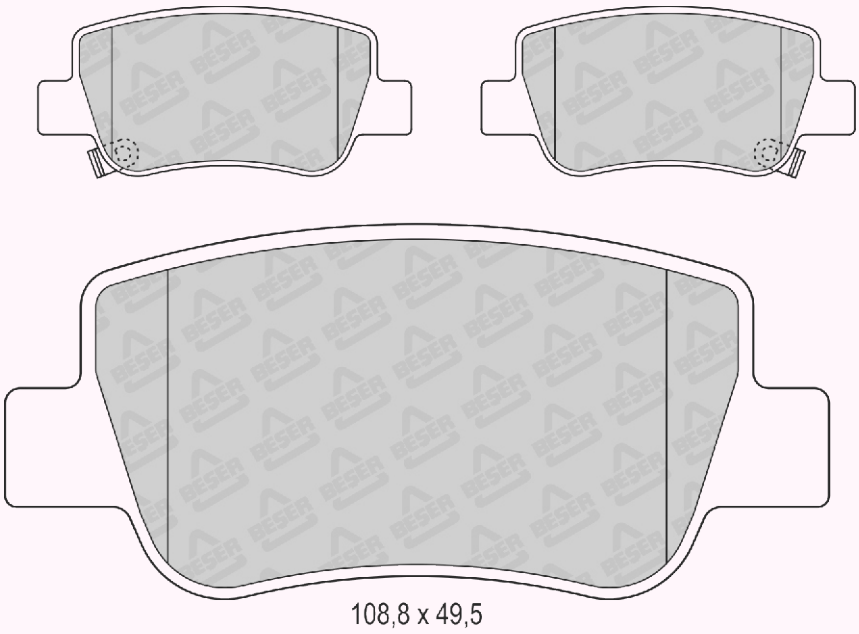

REFERENCE	T(mm)	REMARKS	MAKE	F/R	WVA No
4147	18,5	2 PADS WITH WEAR SENSOR	TOYOTA	F	24668 24669 24929

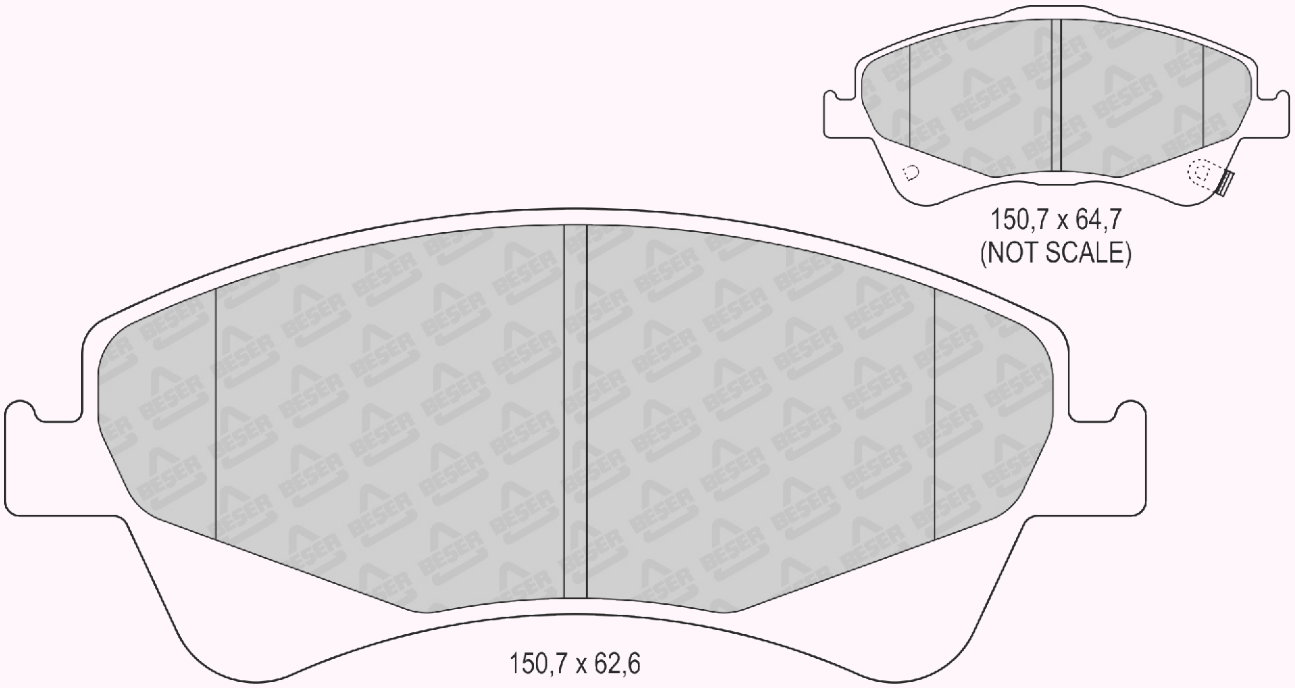

REFERENCE	T(mm)	REMARKS	MAKE	F/R	WVA No
4148	14,6	2 PADS WITH WEAR SENSOR	ACURA - FIAT - HONDA - MG ROVER - SUZUKI	R	21719 21720 21721

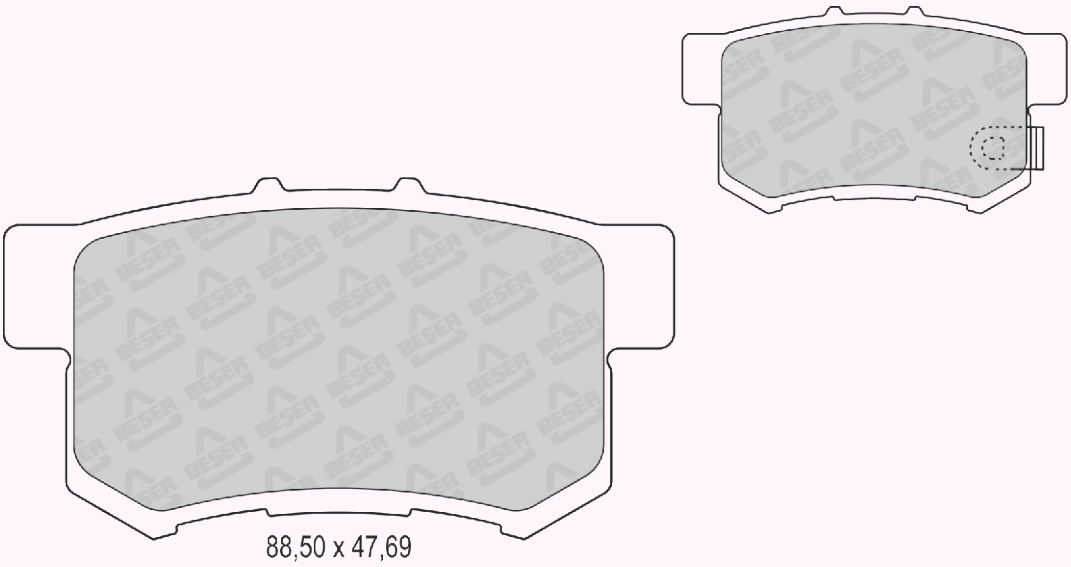

REFERENCE	T(mm)	REMARKS	MAKE	F/R	WVA No
4149	18	2 PADS WITH WEAR SENSOR	CHEVROLET - HOLDEN - OPEL SAAB - VAUXHALL	F	24412 24413 24414

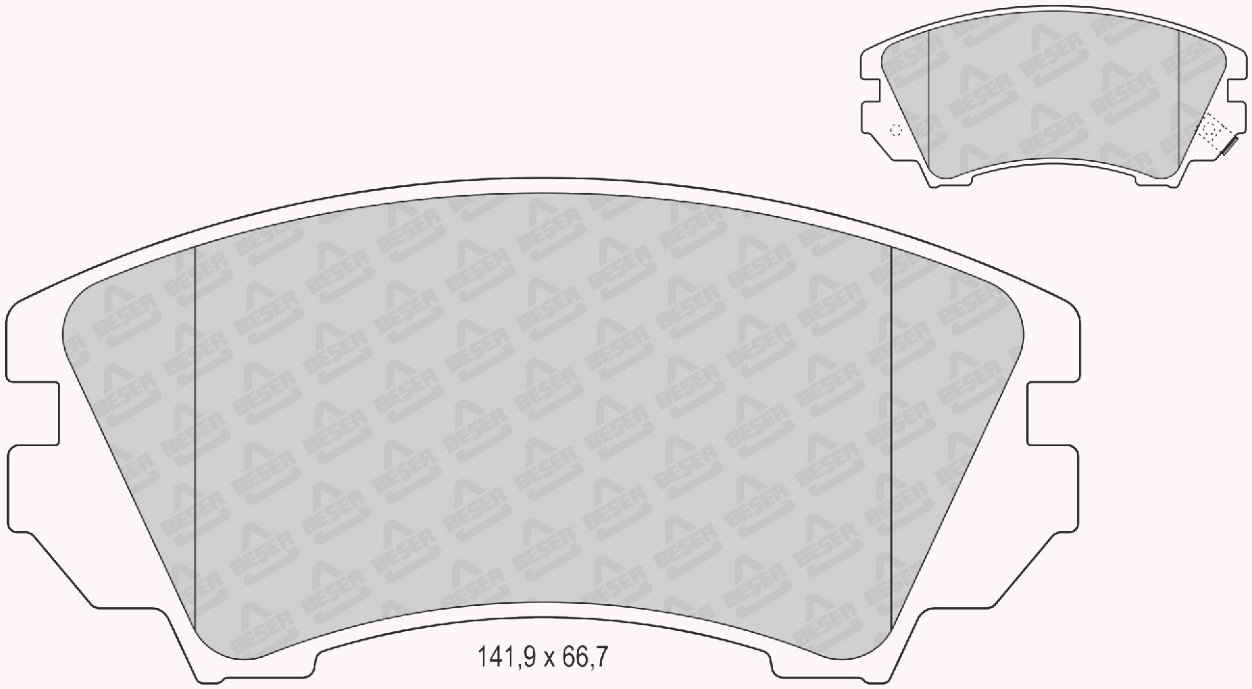

REFERENCE	T(mm)	REMARKS	MAKE	F/R	WVA No
4150	17	2 PADS WITH WEAR SENSOR	CHEVROLET - HOLDEN - OPEL SAAB - VAUXHALL	R	24421 24422

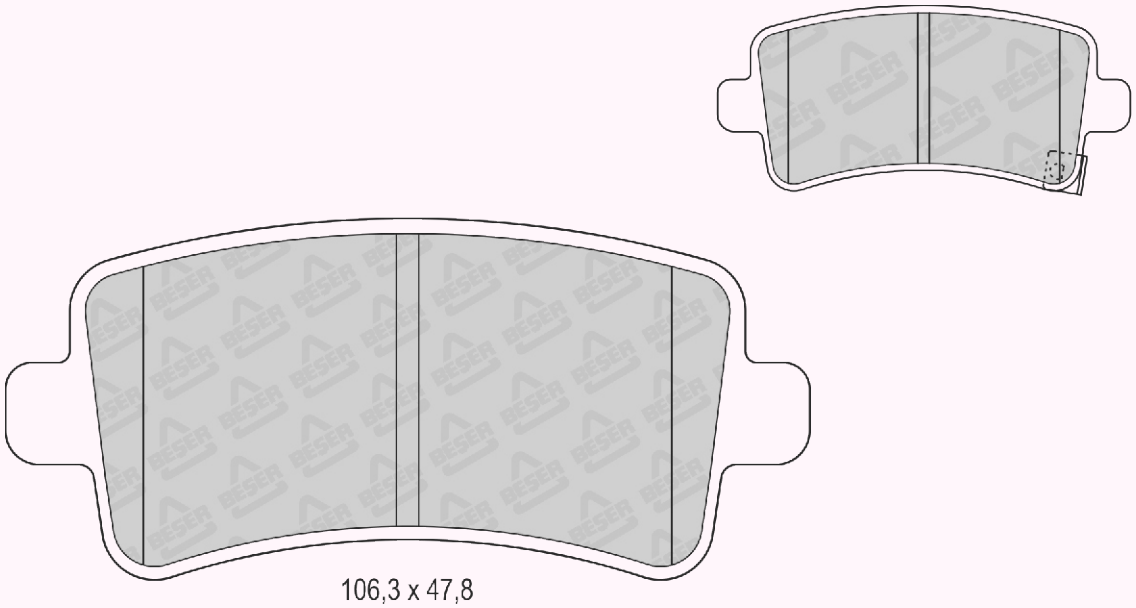

106,3 x 47,8

REFERENCE	T(mm)	REMARKS	MAKE	F/R	WVA No
4151	16,5	4 PADS PLAIN	CITROEN - FIAT PEUGEOT - TOYOTA	R	24578

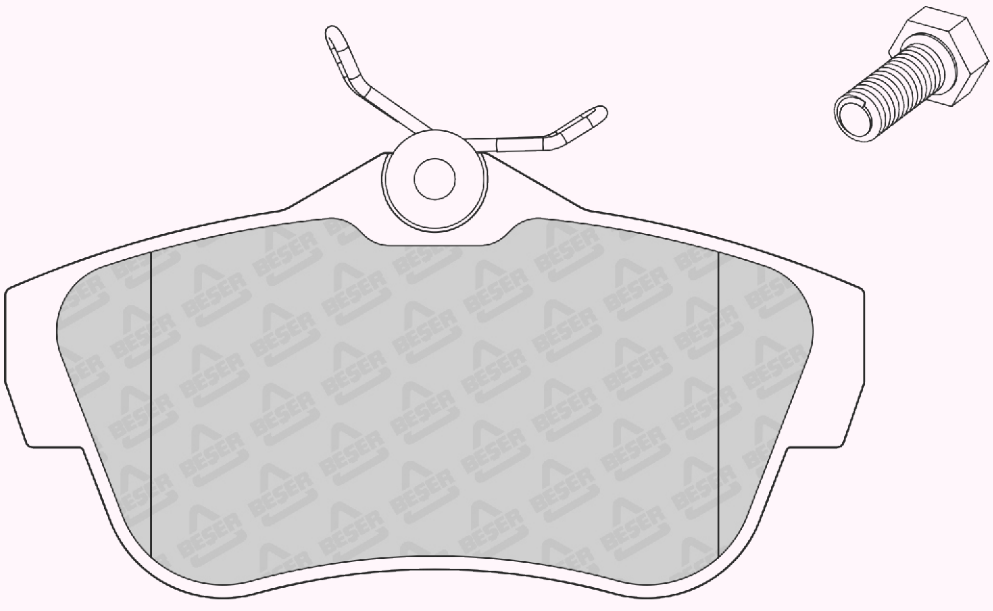

113,5 x 58,8

REFERENCE	T(mm)	REMARKS	MAKE	F/R	WVA No
4151/1	16,5	4 PADS PLAIN	CITROEN - FIAT PEUGEOT - TOYOTA	R	24578

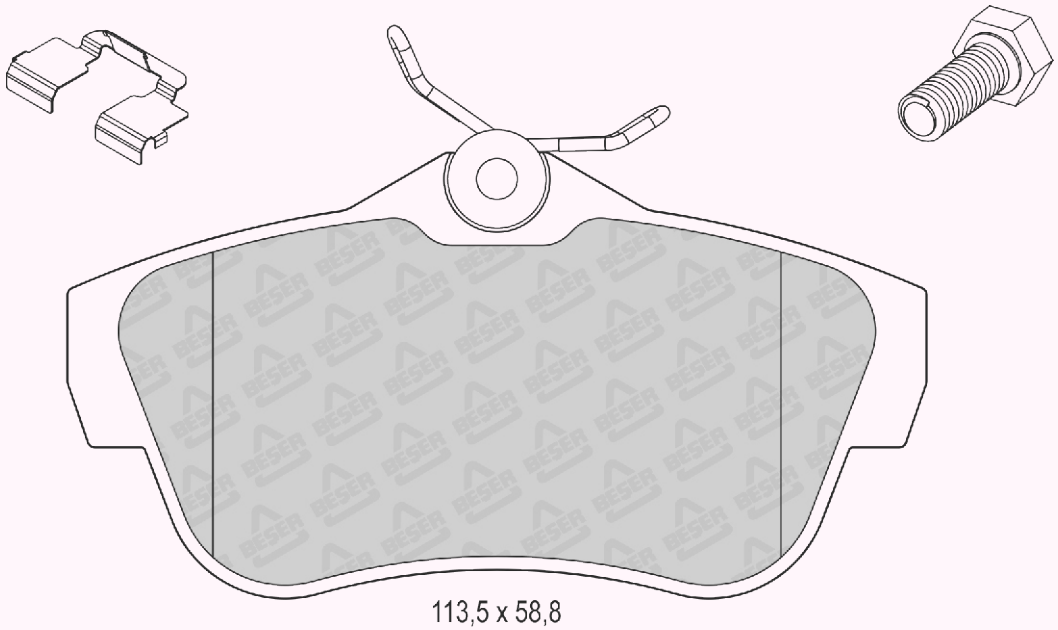

REFERENCE	T(mm)	REMARKS	MAKE	F/R	WVA No
4152	17	1 PAD WITH WEAR SENSOR	SEAT - SKODA VW	R	23554 23823

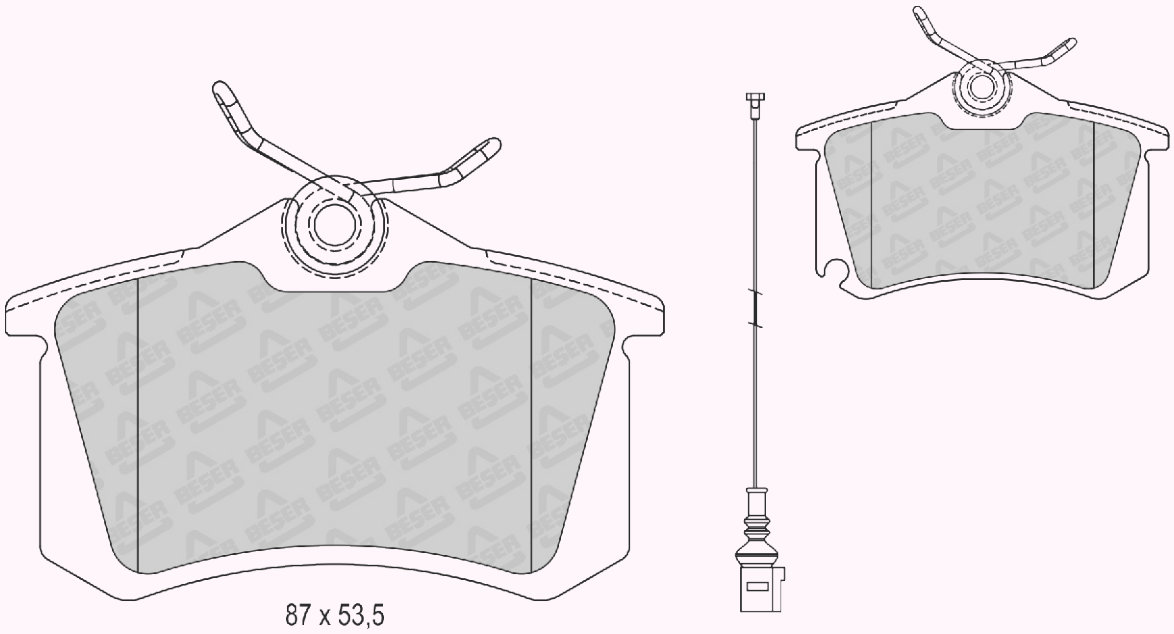

REFERENCE	T(mm)	REMARKS	MAKE	F/R	WVA No
4153	13,5	2 PADS WITH WEAR SENSOR	DR - TOYOTA	R	23656 23620 23657 23621 23658 23622

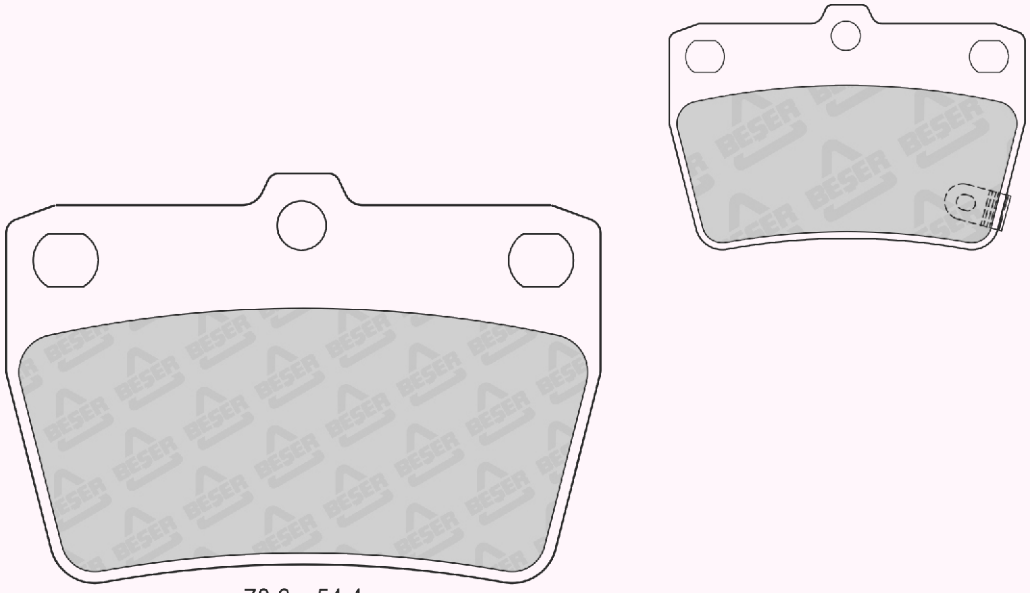

78,6 x 54,4

REFERENCE	T(mm)	REMARKS	MAKE	F/R	WVA No
4154	15,8	2 PADS WITH WEAR SENSOR	TOYOTA	R	23620

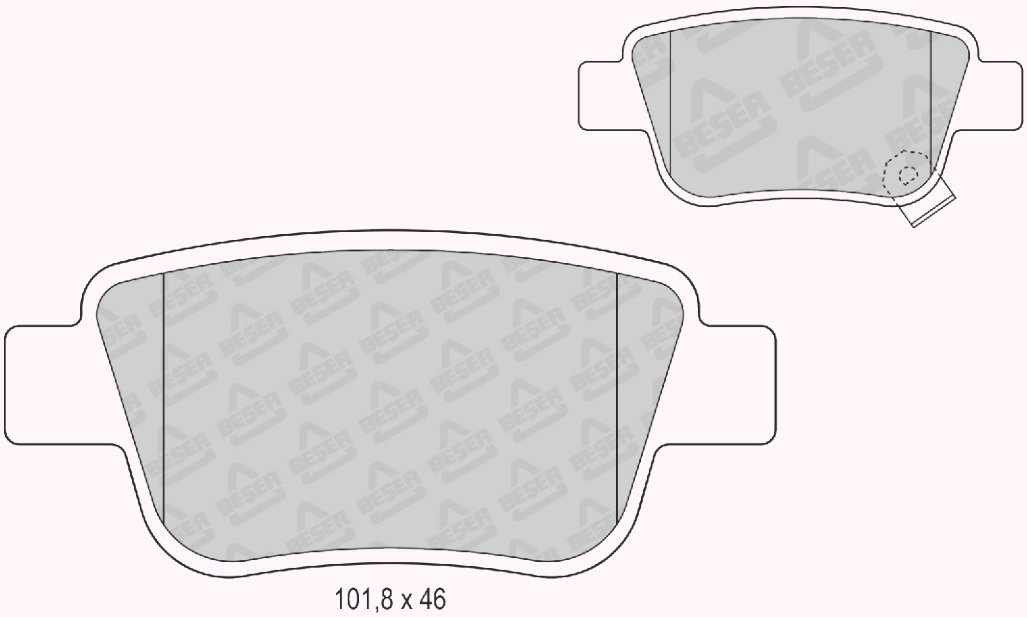

101,8 x 46

REFERENCE	T(mm)	REMARKS	MAKE	F/R	WVA No
4155	15	4 PADS PLAIN	HONDA	R	23527

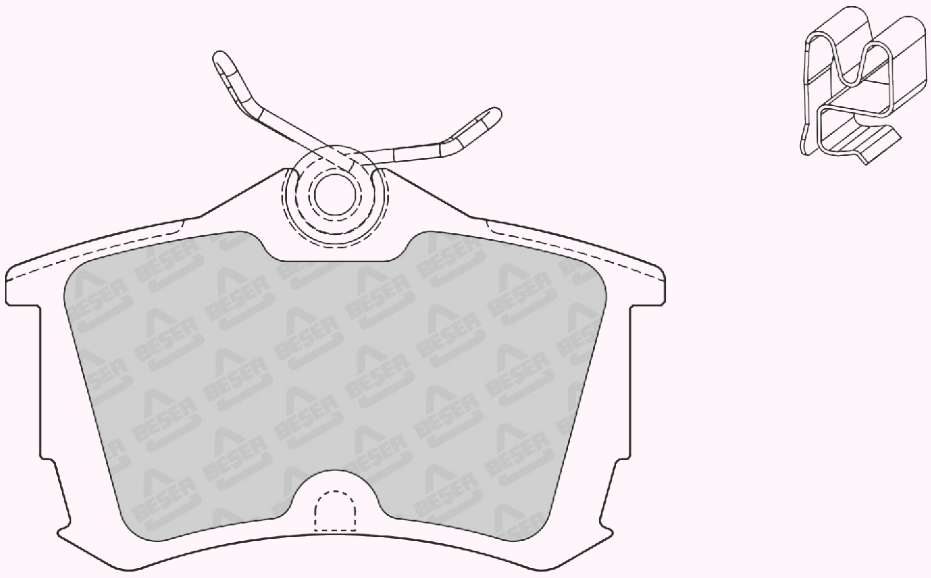

87 x 53

REFERENCE	T(mm)	REMARKS	MAKE	F/R	WVA No
4156	15,8	2 PADS WITH WEAR SENSOR	HONDA	R	24635 24636 24637

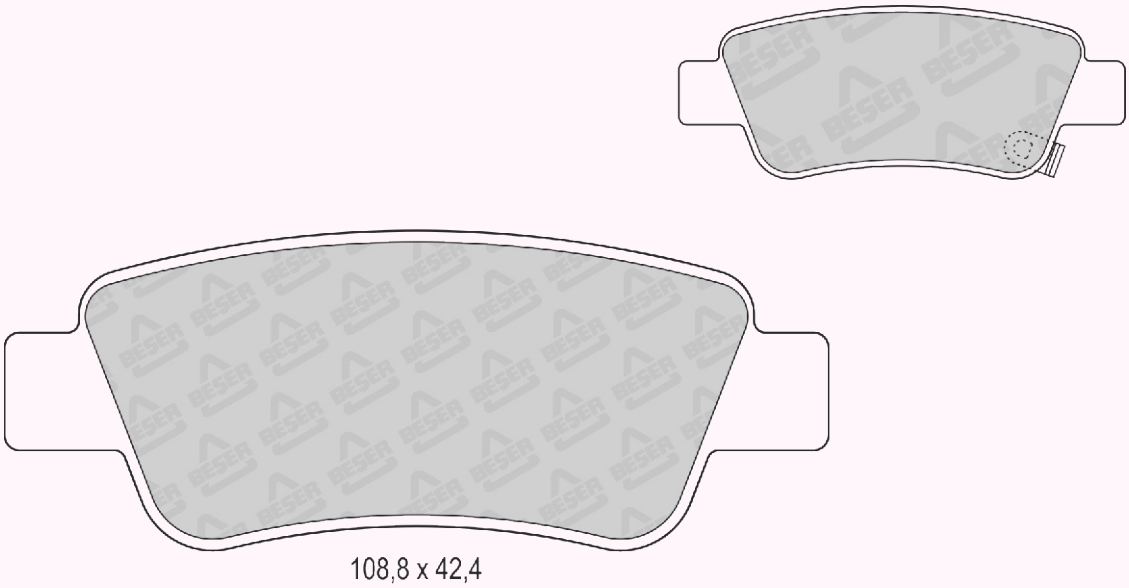

108,8 x 42,4

REFERENCE	T(mm)	REMARKS	MAKE	F/R	WVA No
4157	15	4 PADS PLAIN	FORD - LAND ROVER	R	24537

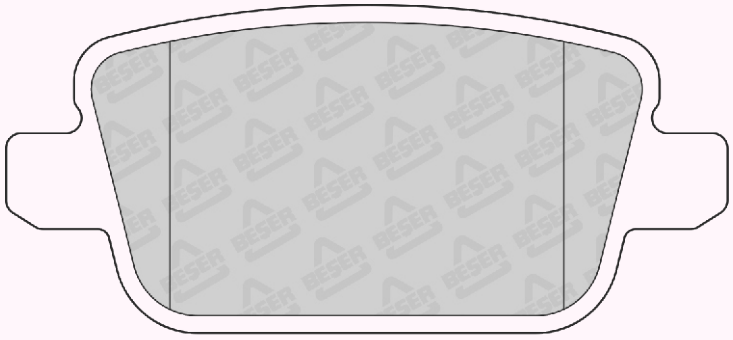

95,2 x 43,3

REFERENCE	T(mm)	REMARKS	MAKE	F/R	WVA No
4158	17,5	4 PADS PLAIN	TOYOTA	F	23585 23586

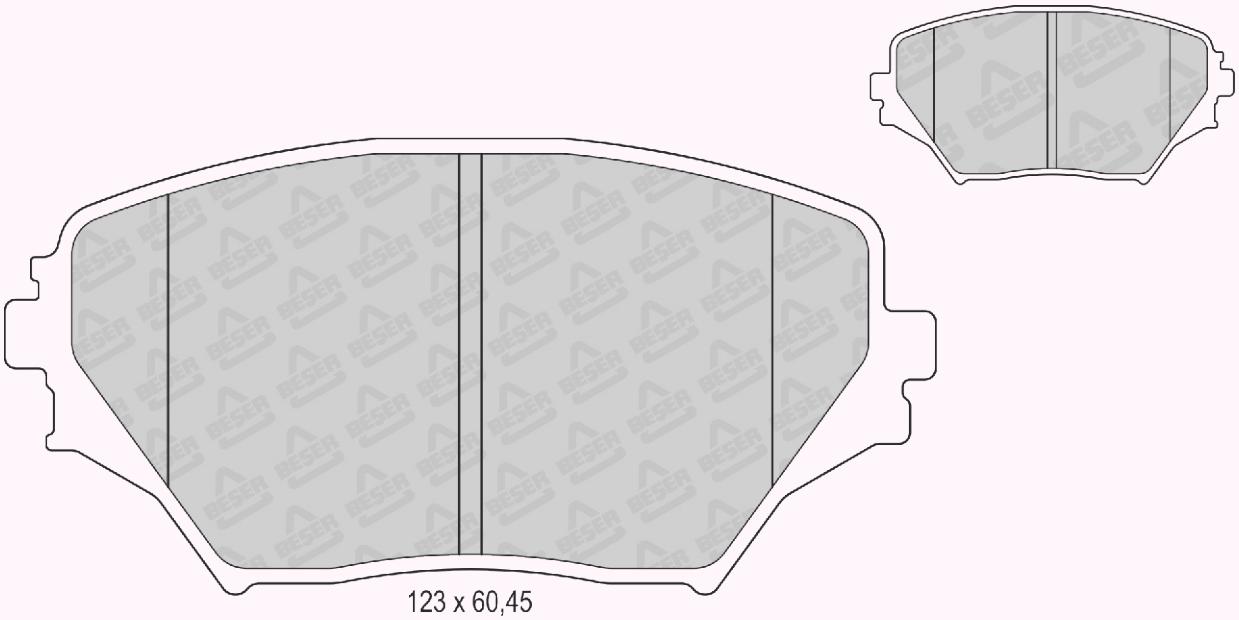

123 x 60,45

REFERENCE	T(mm)	REMARKS	MAKE	F/R	WVA No
4159	17,5	4 PADS PLAIN	HONDA	F	24213 24214

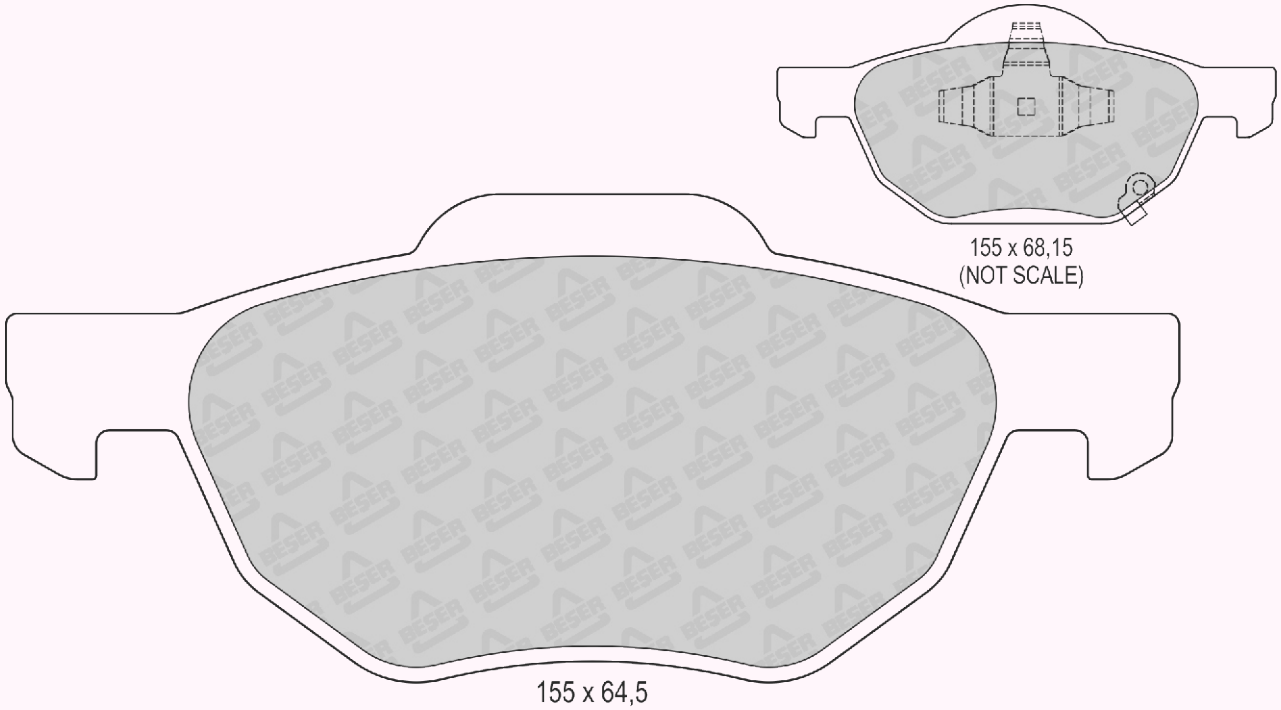

REFERENCE	T(mm)	REMARKS	MAKE	F/R	WVA No
4160	18,8	2 PADS WITH WEAR SENSOR	HONDA	F	24638 24639 24640

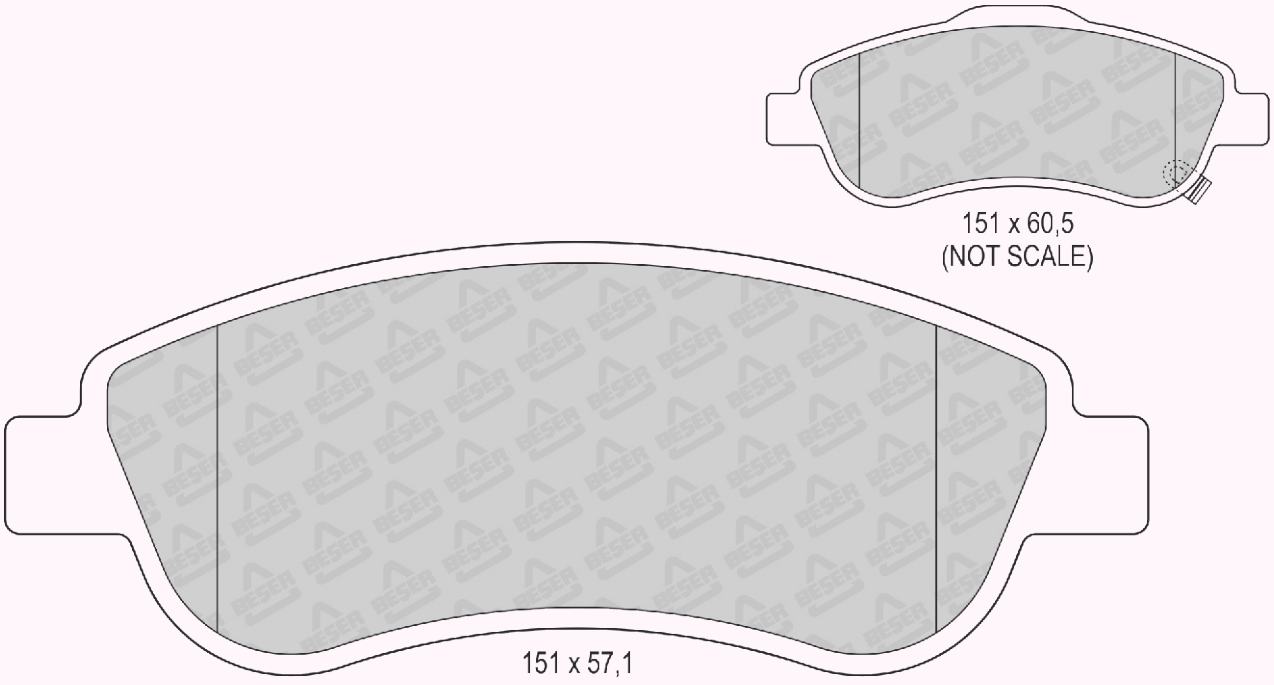

REFERENCE	T(mm)	REMARKS	MAKE	F/R	WVA No
4161	18,6	2 PADS WITH WEAR SENSOR	FORD - LANDROVER VOLVO	F	24123 24124

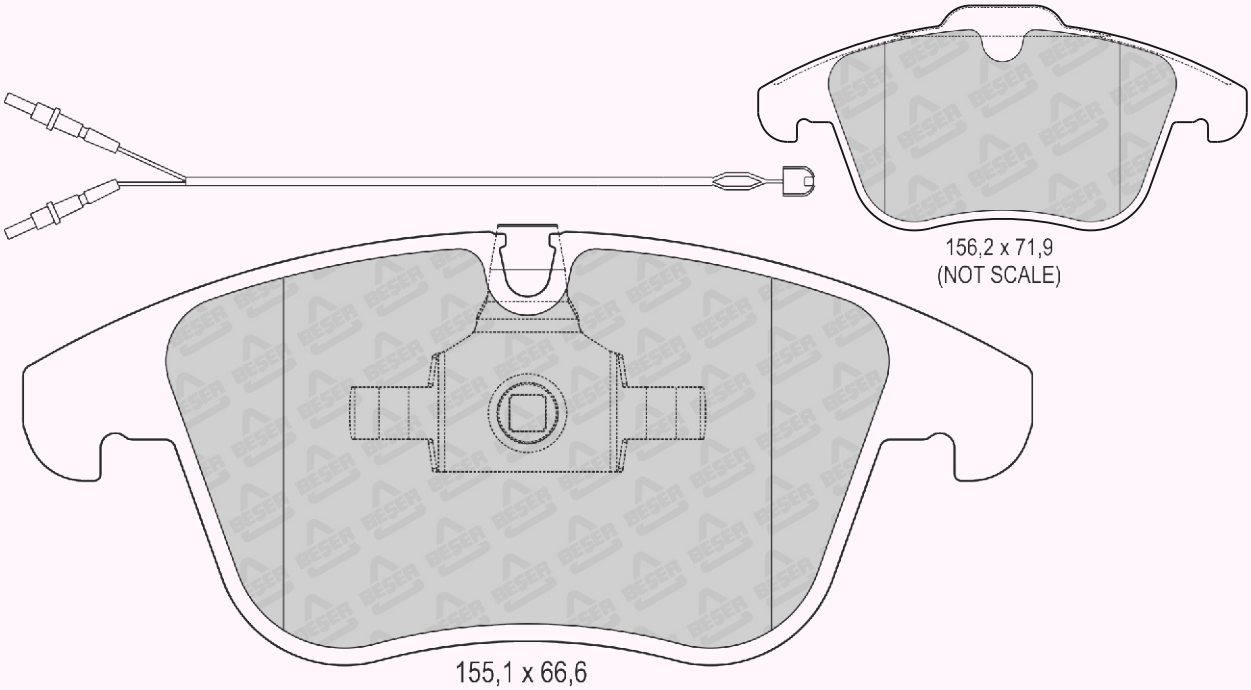

REFERENCE	T(mm)	REMARKS	MAKE	F/R	WVA No
4162	17,5	1 PAD WITH WEAR SENSOR	VW	F	24623 24624 24625

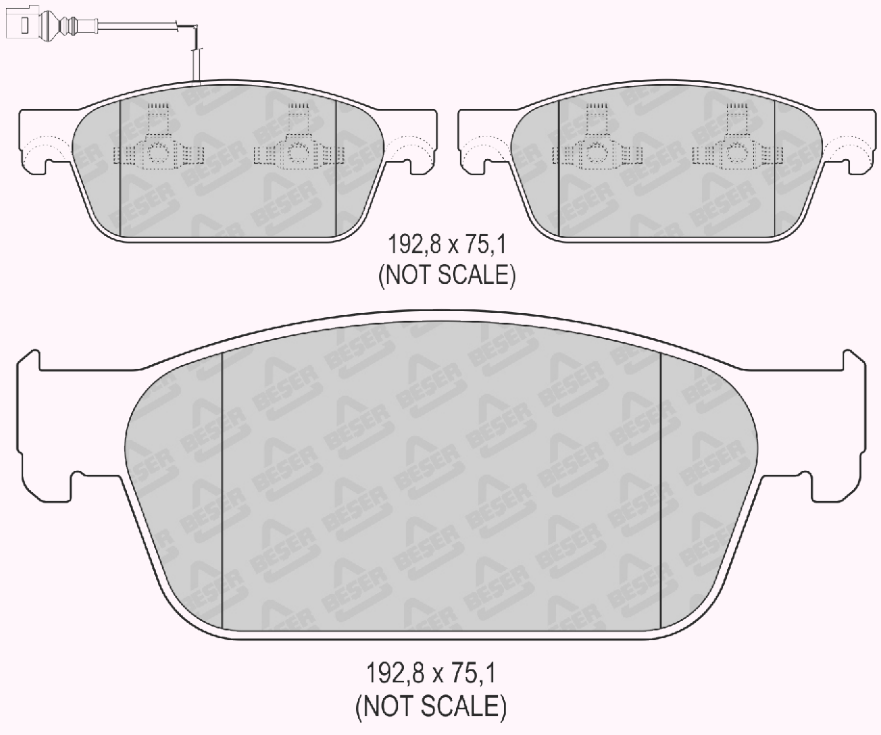

REFERENCE	T(mm)	REMARKS	MAKE	F/R	WVA No
4165	15	2 PADS WITH WEAR SENSOR	KIA	R	24491 24492 24493

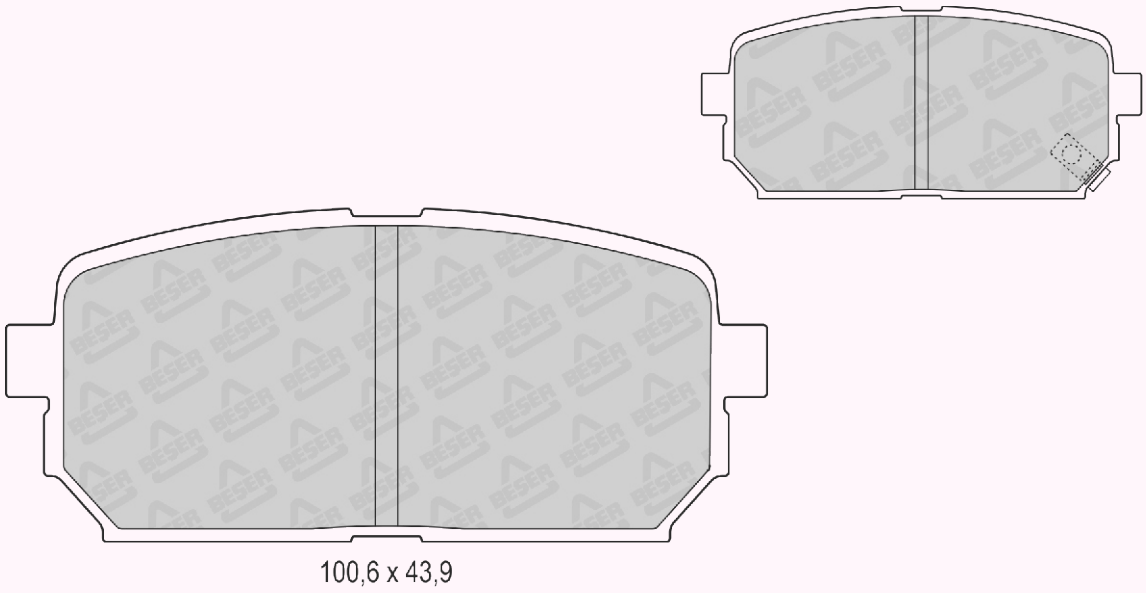

REFERENCE	T(mm)	REMARKS	MAKE	F/R	WVA No
4166	18	2 PADS WITH WEAR SENSOR	HYUNDAI - KIA	F	25708 25709 25710

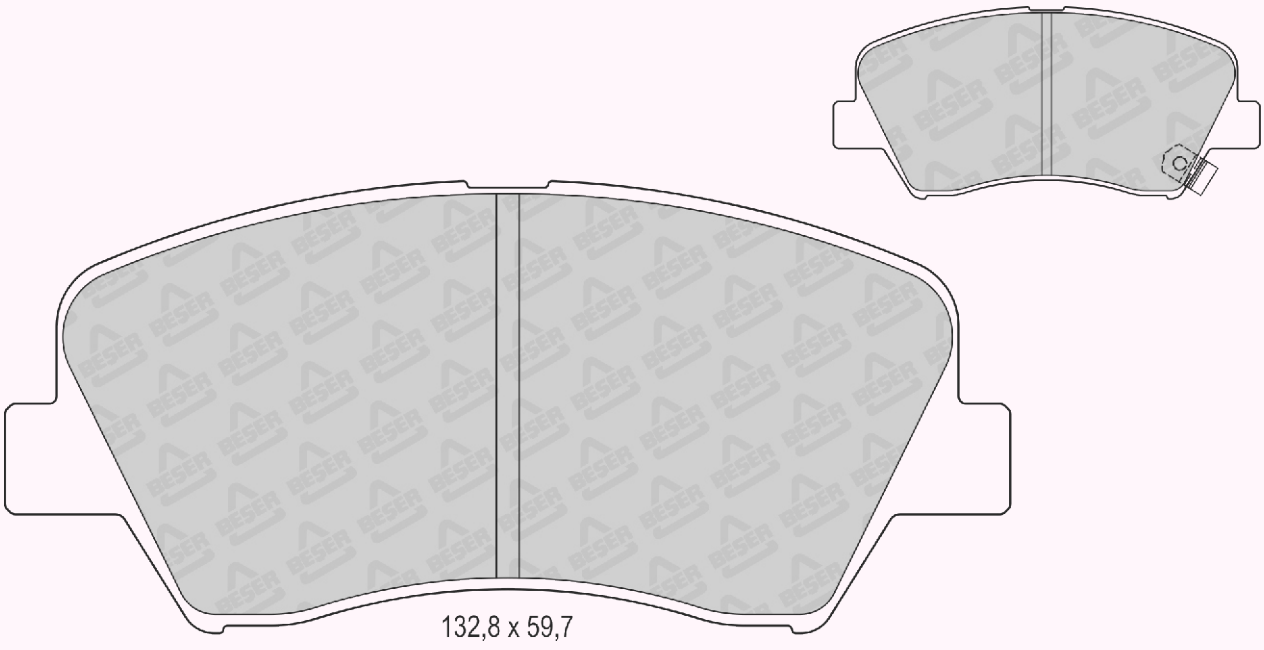

REFERENCE	T(mm)	REMARKS	MAKE	F/R	WVA No
4167	17	2 PADS WITH WEAR SENSOR	TOYOTA	F	25209 25210

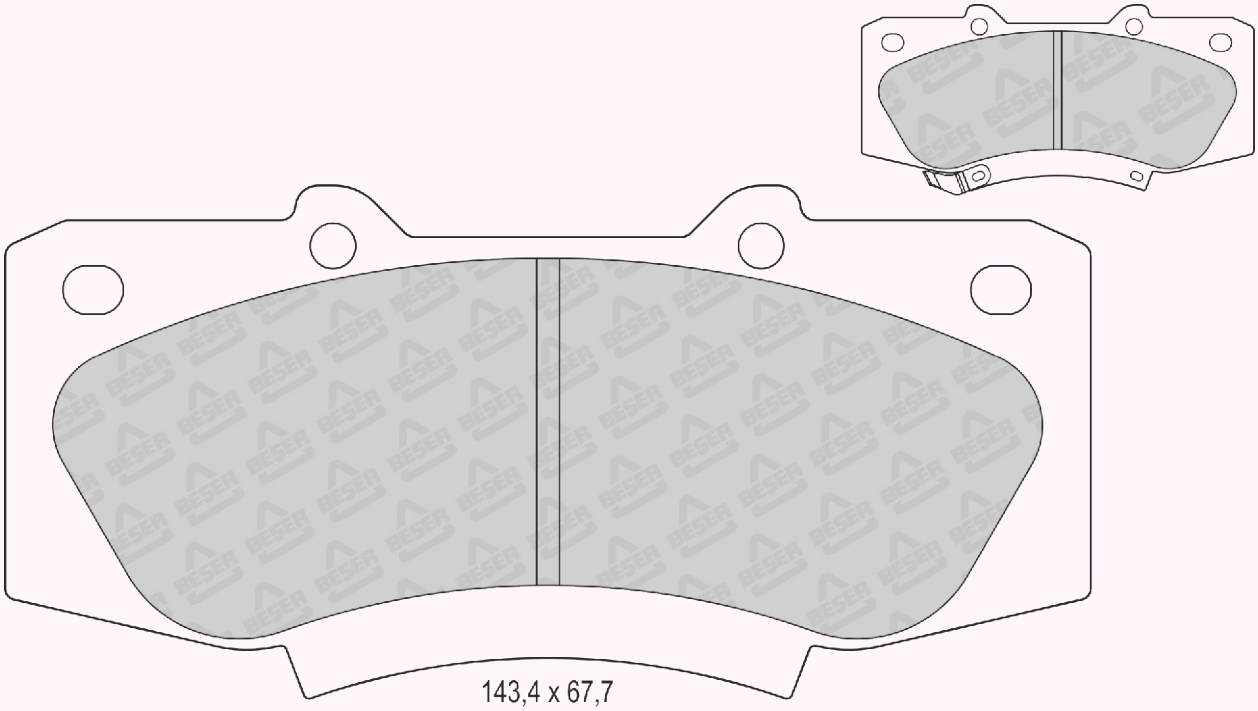

REFERENCE	T(mm)	REMARKS	MAKE	F/R	WVA No
4169	27	4 PADS PLAIN	IVECO	F - R	29256

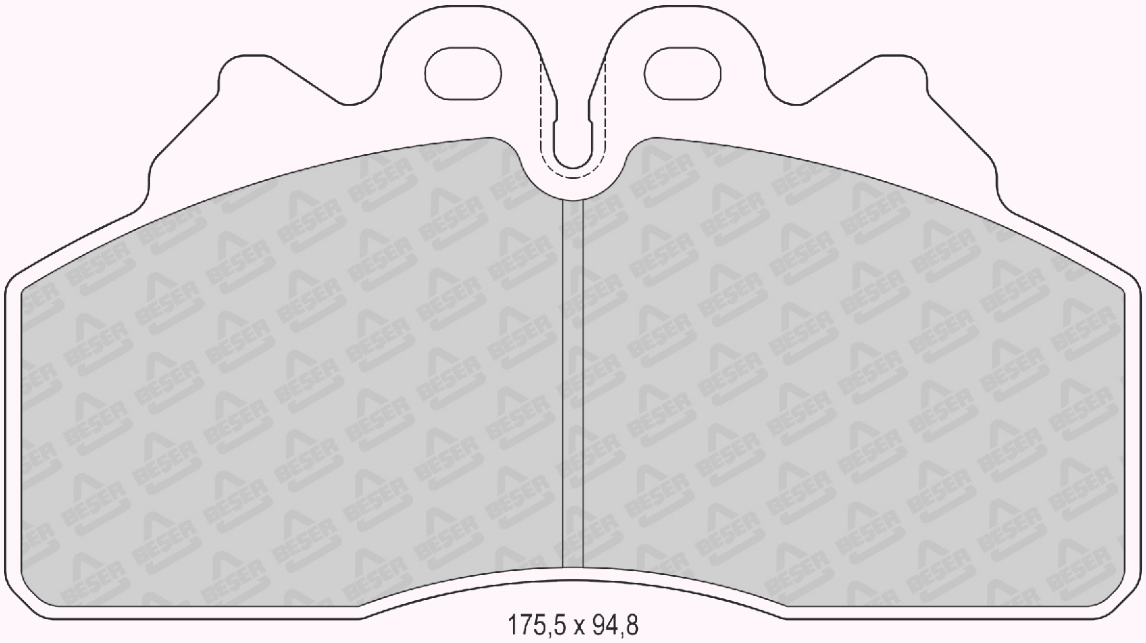

REFERENCE	T(mm)	REMARKS	MAKE	F/R	WVA No
4170	19	4 PADS WITH WEAR SENSOR (8 PADS PCS.)	MITSUBISHI	F - R	25749 25750 25751

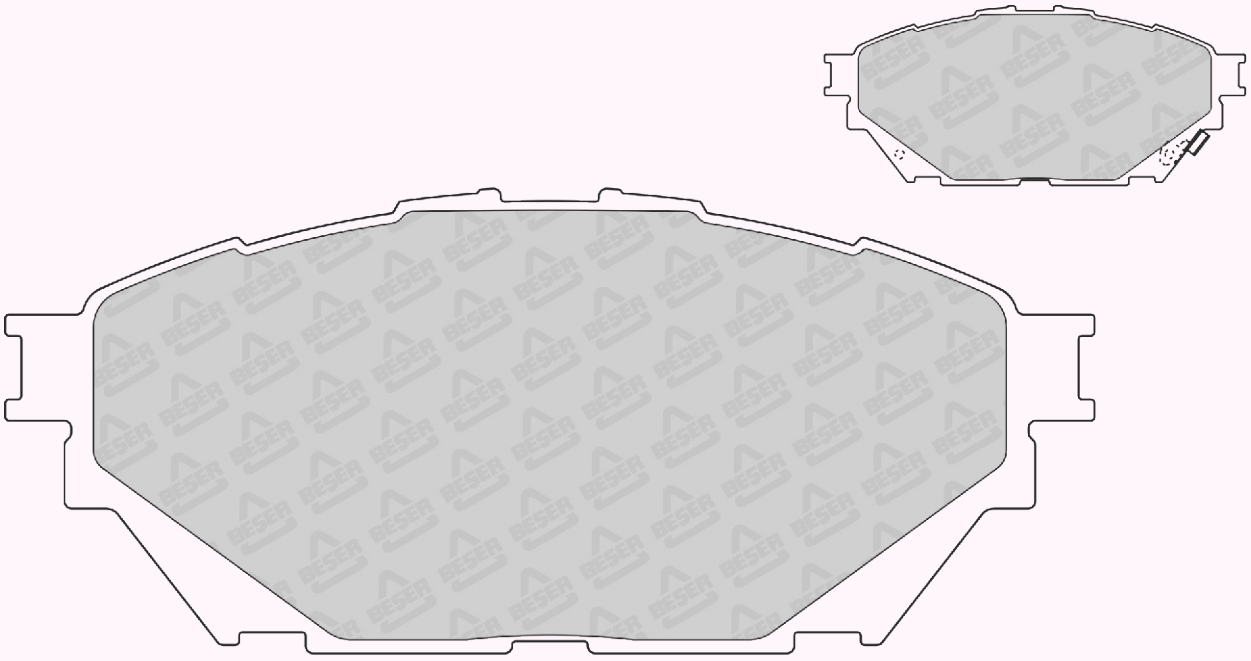

144 x 61,3

REFERENCE	T(mm)	REMARKS	MAKE	F/R	WVA No
4171	19,1	2 PADS WITH WEAR SENSOR	CITROEN - FIAT PEUGEOT	F	24466 24467

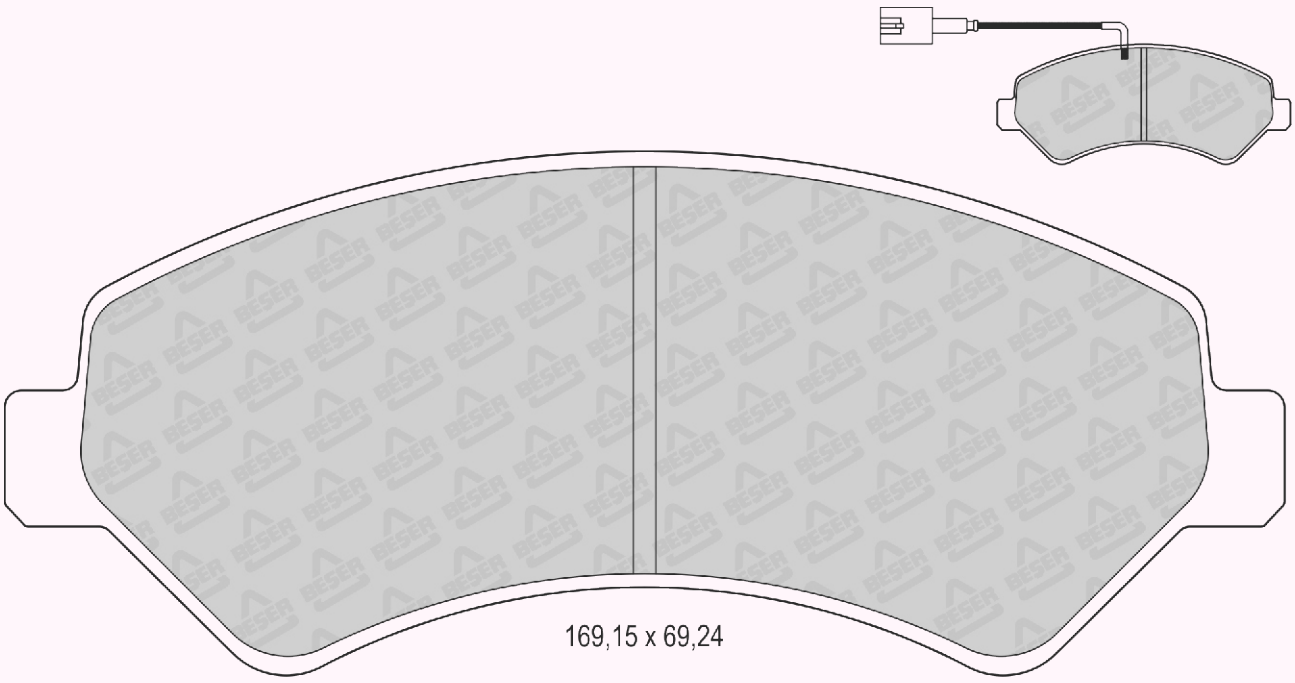

169,15 x 69,24

REFERENCE	T(mm)	REMARKS	MAKE	F/R	WVA No
4171/1	19,1	2 PADS WITH WEAR SENSOR	CITROEN - FIAT PEUGEOT	F	24466

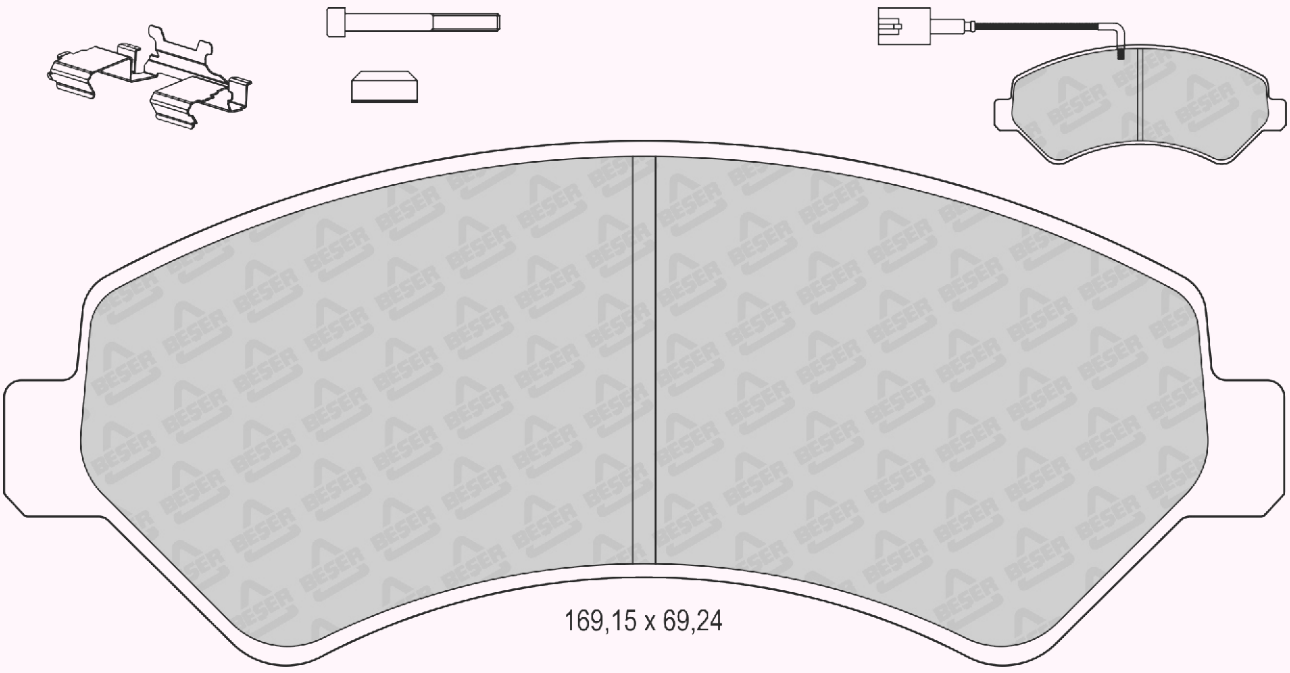

REFERENCE	T(mm)	REMARKS	MAKE	F/R	WVA No
4172	18,2	4 PADS PLAIN	NISSAN - OPEL RENAULT - VAUXHALL	R	25172 25173

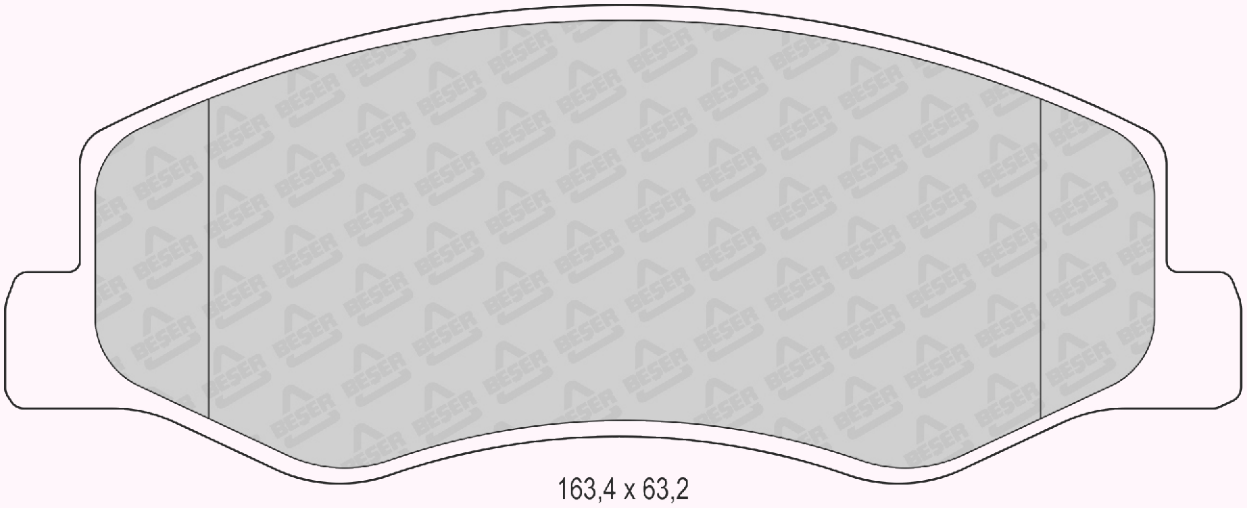

REFERENCE	T(mm)	REMARKS	MAKE	F/R	WVA No
4172/1	18,2	4 PADS PLAIN	NISSAN - OPEL RENAULT - VAUXHALL	R	25172

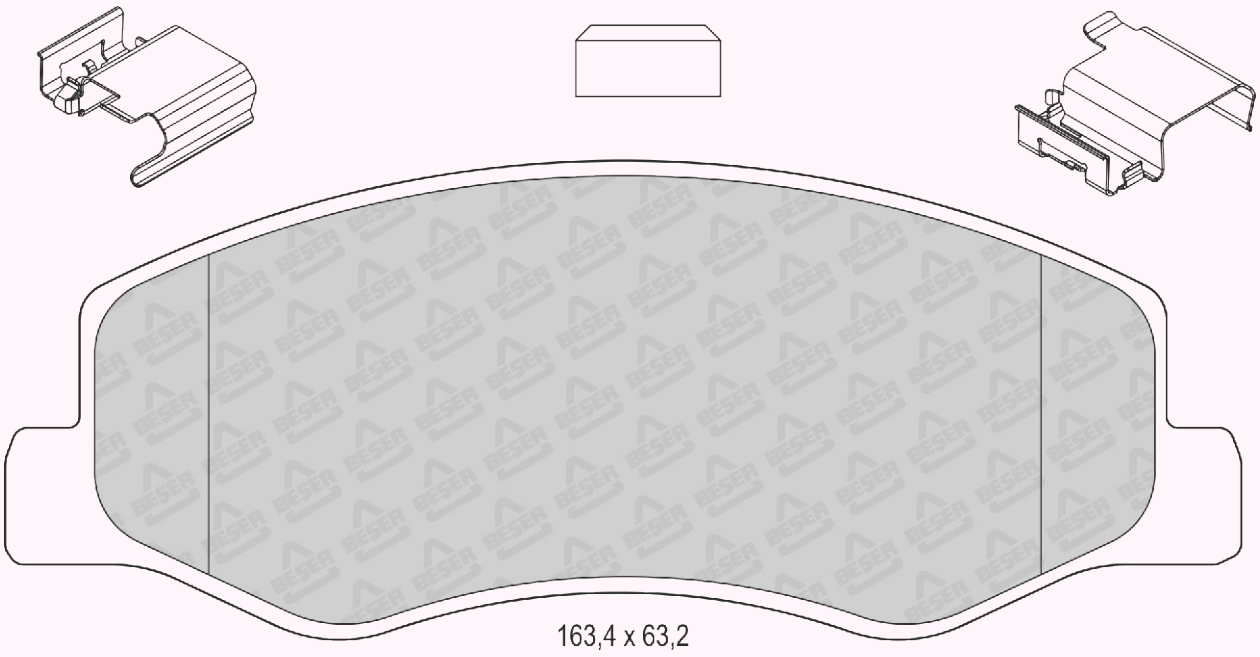

163,4 x 63,2

REFERENCE	T(mm)	REMARKS	MAKE	F/R	WVA No
4173	17,5	4 PADS PLAIN	FIAT	F	24072 24138 24764

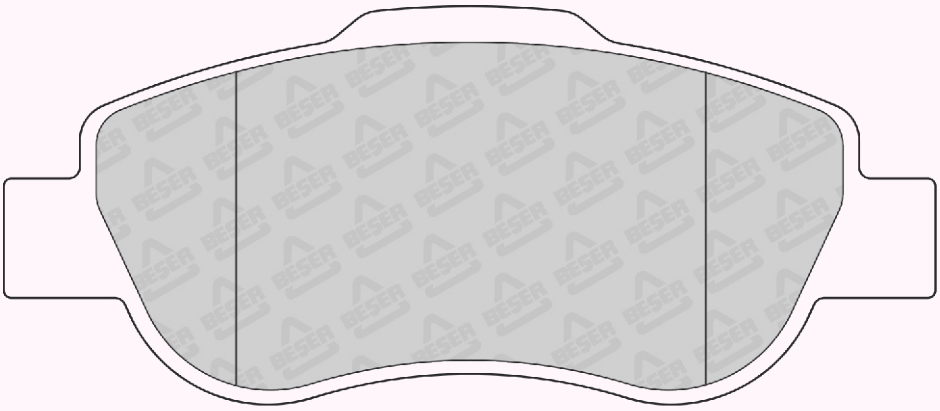

123 x 52,5

REFERENCE	T(mm)	REMARKS	MAKE	F/R	WVA No
4173/1	17,5	1 PAD WITH WEAR SENSOR	FIAT	F	24072

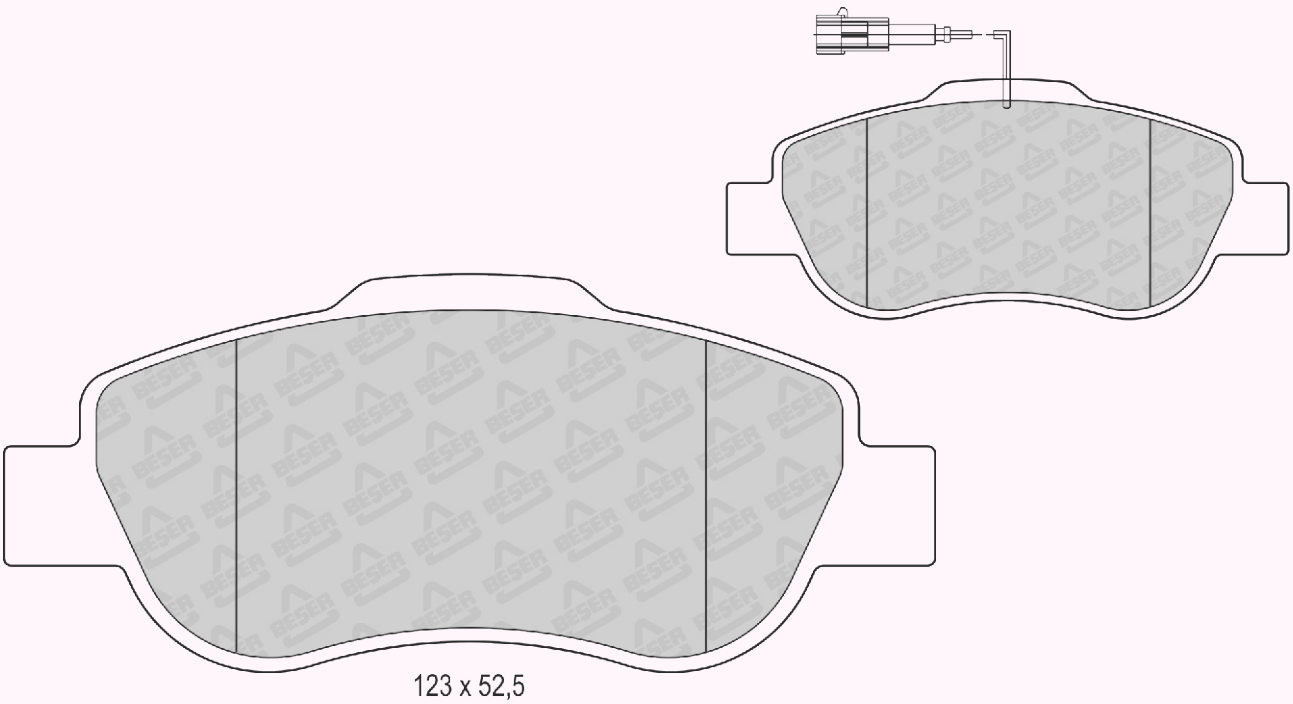

REFERENCE	T(mm)	REMARKS	MAKE	F/R	WVA No
4173/2	17,5	2 PADS WITH WEAR SENSOR	FIAT	F	24072

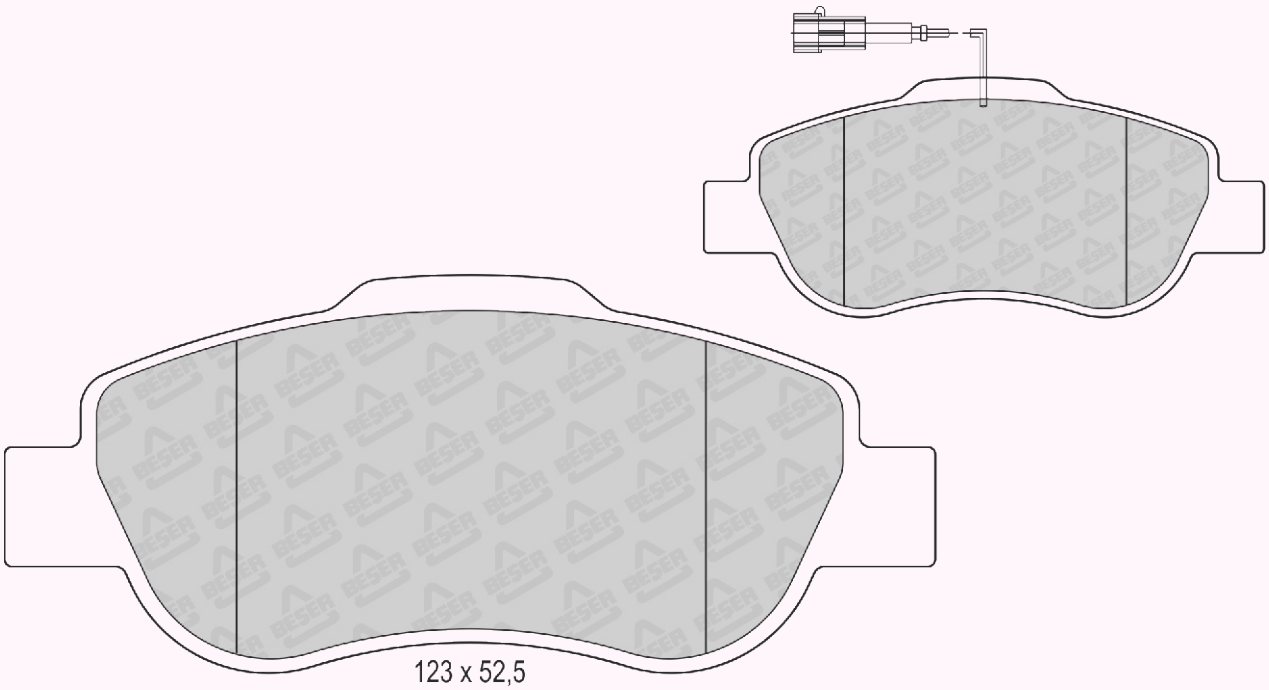

REFERENCE	T(mm)	REMARKS	MAKE	F/R	WVA No
4174	17	4 PADS PLAIN	FORD	F	25602

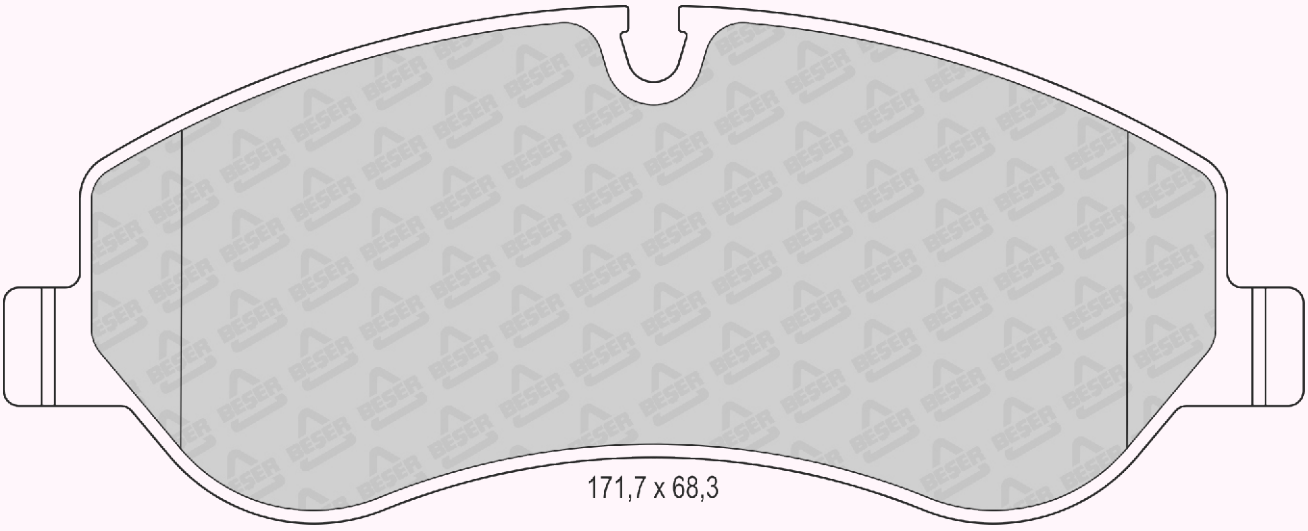

REFERENCE	T(mm)	REMARKS	MAKE	F/R	WVA No
4174/1	17	2 PADS WITH WEAR SENSOR (480mm)	FORD	F	25602

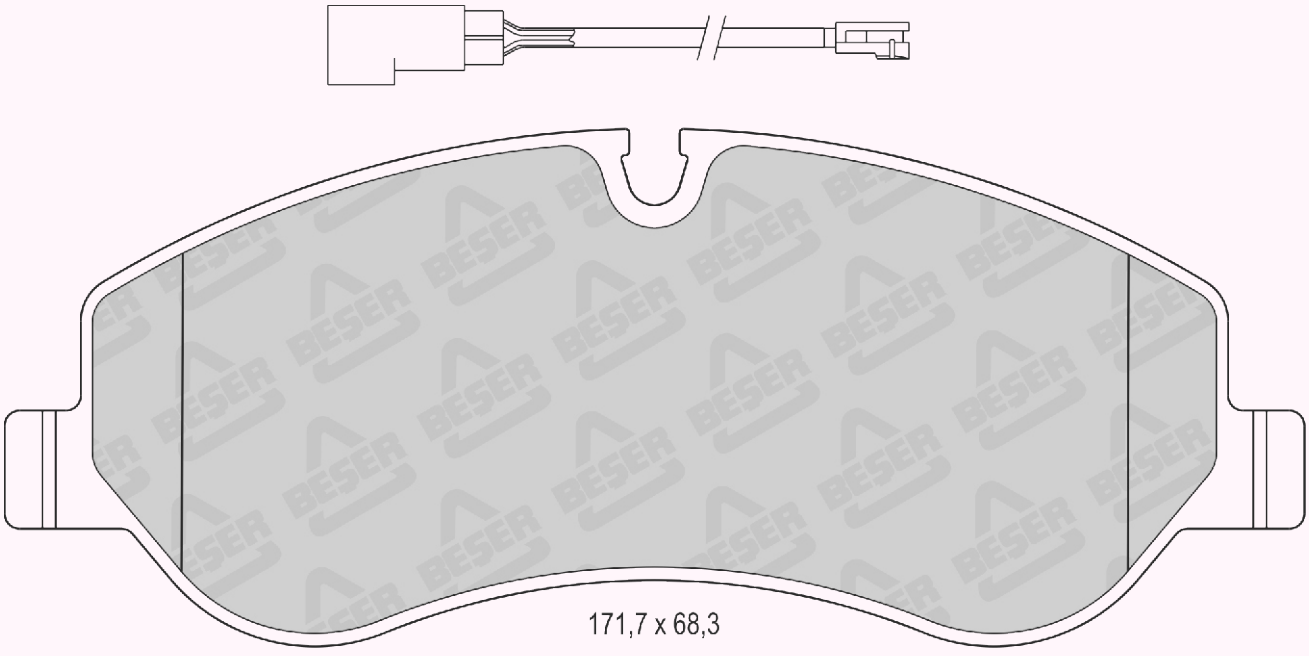

REFERENCE	T(mm)	REMARKS	MAKE	F/R	WVA No
4175	17,6	4 PADS PLAIN	FORD	R	25603 25604

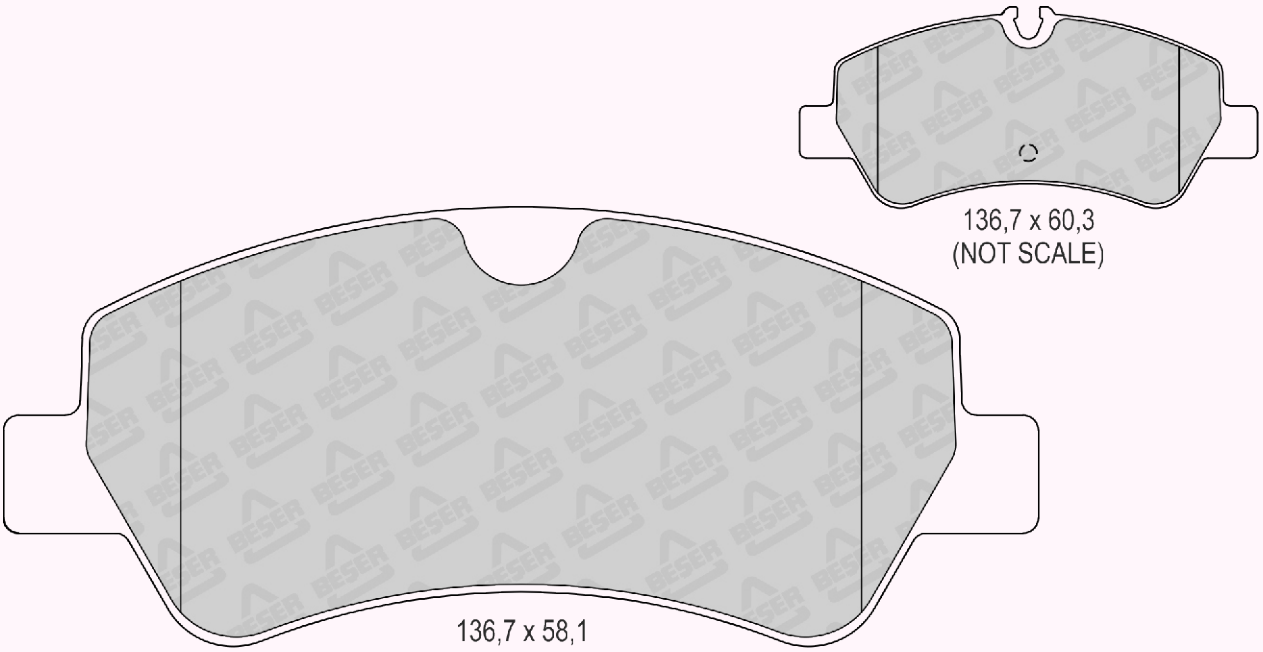

REFERENCE	T(mm)	REMARKS	MAKE	F/R	WVA No
4175/1	17,6	2 PADS WITH WEAR SENSOR	FORD	R	25603 25604

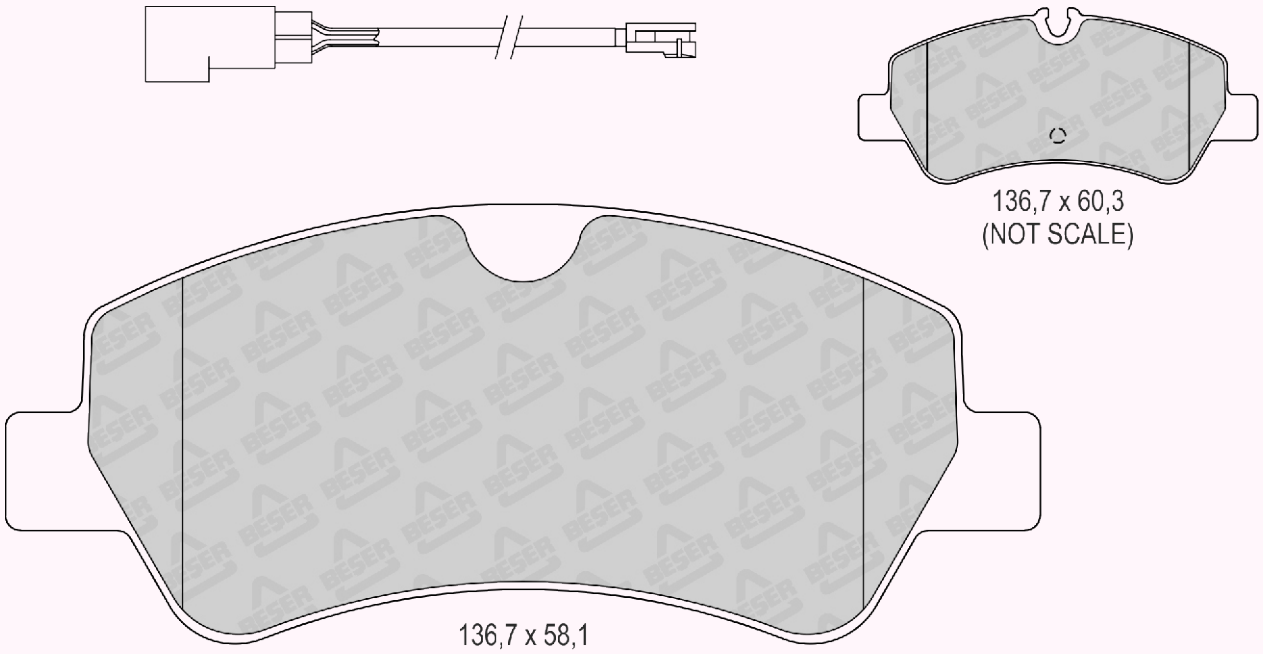

REFERENCE	T(mm)	REMARKS	MAKE	F/R	WVA No
4176	19-18,7	2 PADS WITH WEAR SENSOR	TOYOTA	F	25698 25699 25700

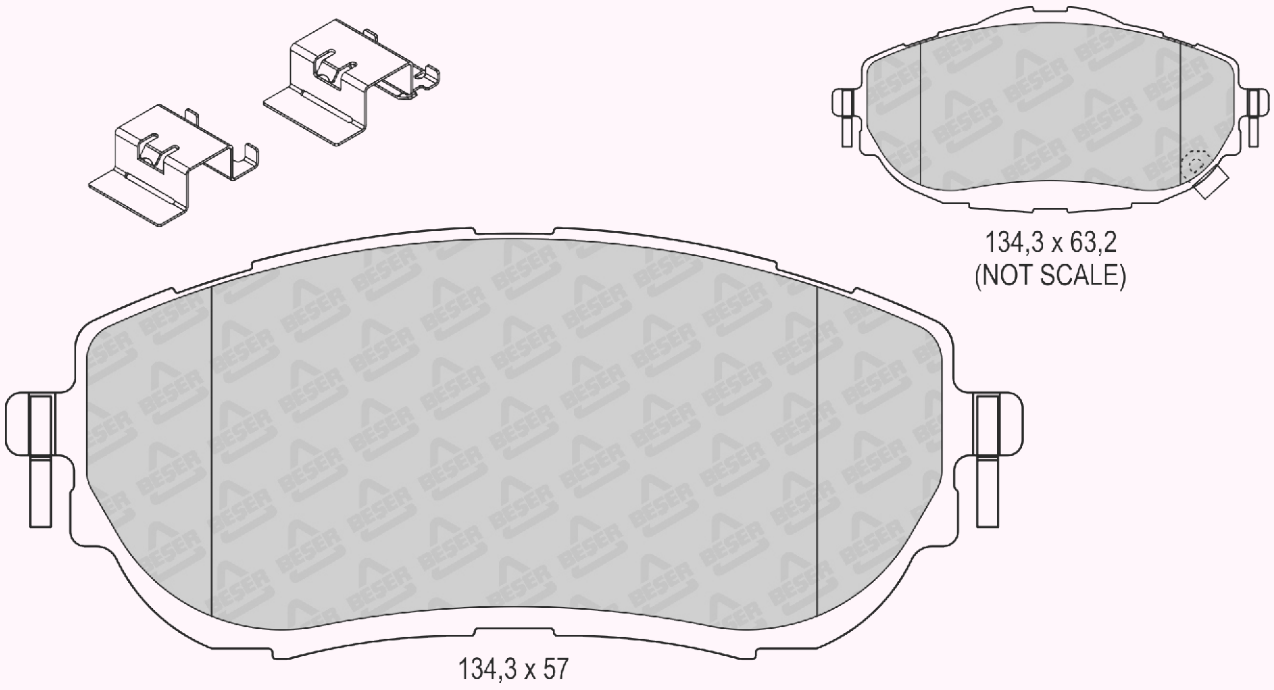

REFERENCE	T(mm)	REMARKS	MAKE	F/R	WVA No
4176/1	19-18,7	2 PADS WITH WEAR SENSOR	TOYOTA	F	25698

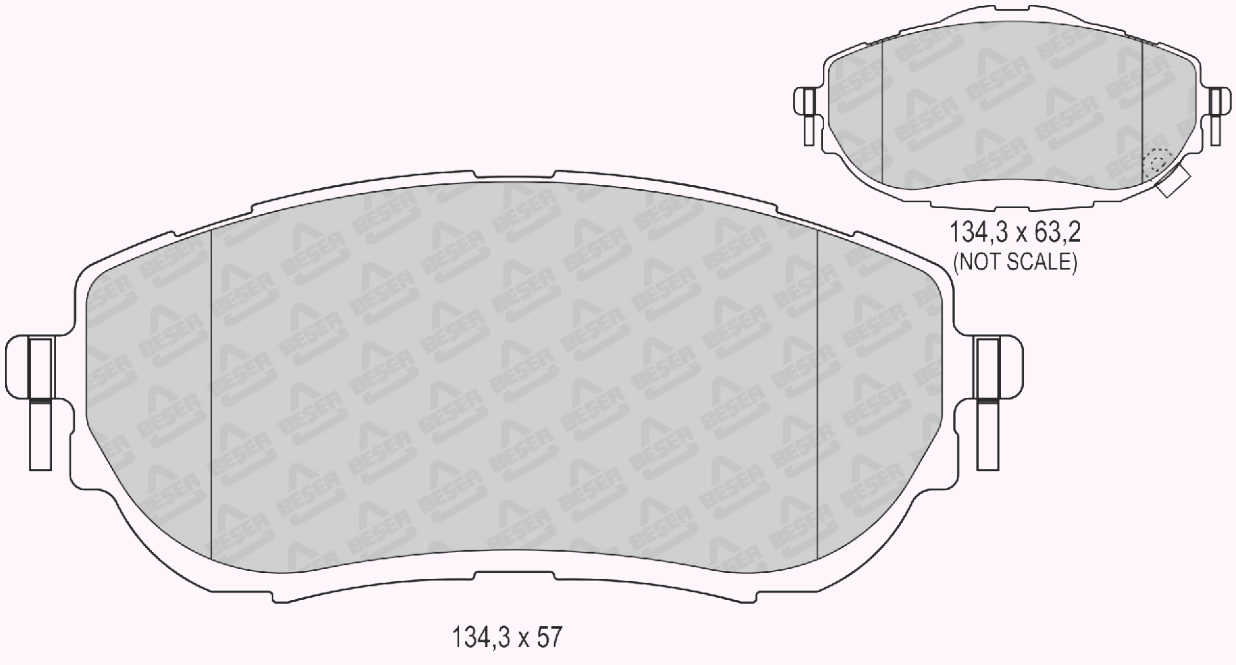

REFERENCE	T(mm)	REMARKS	MAKE	F/R	WVA No
4179	15,9	2 PADS INNER & 2 PADS OUTER	ALPINA - BENTLY- BMW ROLLS ROYCE	R	23308

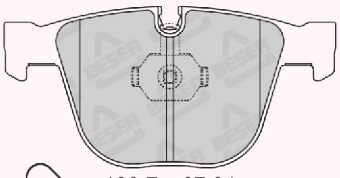

139,7 x 67,91
(NOT SCALE)

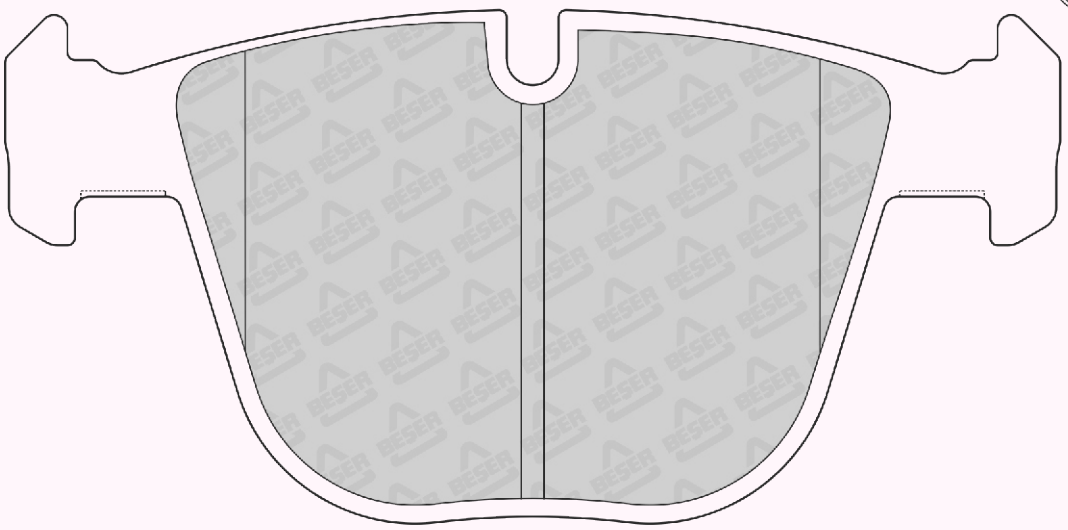

139,45 x 67,91

REFERENCE	T(mm)	REMARKS	MAKE	F/R	WVA No
4180	19,5	4 PADS PLAIN	BMW	F	23312 23347

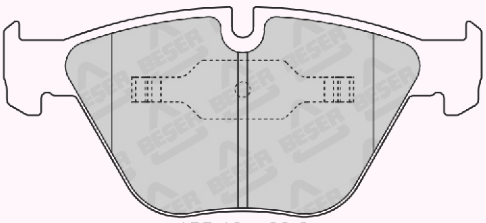

155,10 x 68,2
(NOT SCALE)

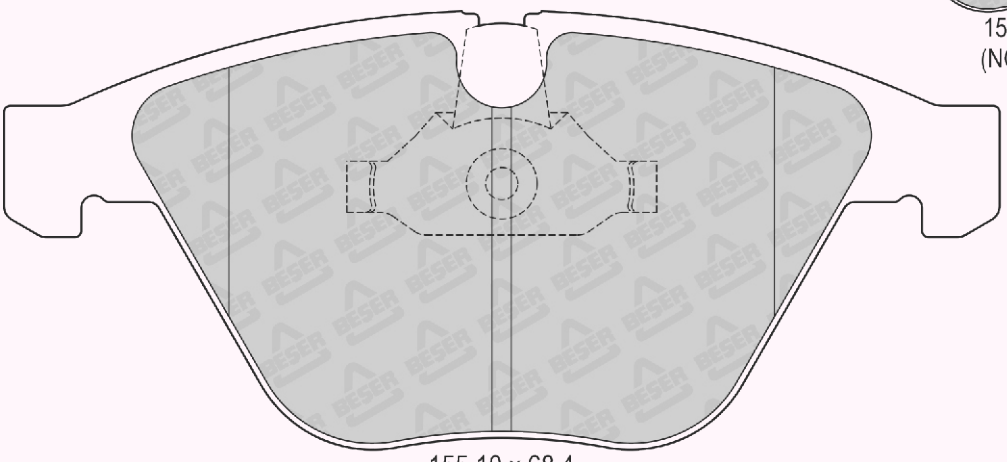

155,10 x 68,4
(NOT SCALE)

REFERENCE	T(mm)	REMARKS	MAKE	F/R	WVA No
4181	16	2 PADS INNER & 2 PADS OUTER	BMW	R	23732 23737

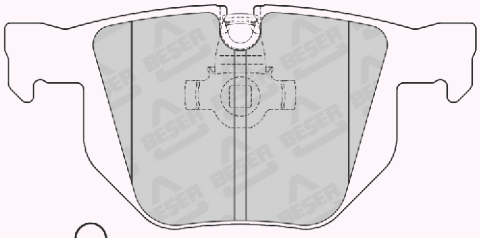

121,92 x 58,14
(NOT SCALE)

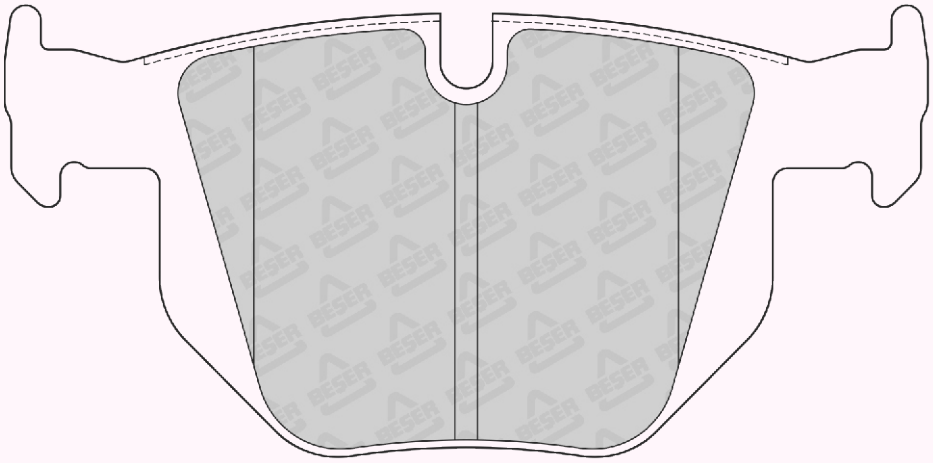

121,92 x 59,18

REFERENCE	T(mm)	REMARKS	MAKE	F/R	WVA No
4181/1	16	2 PADS INNER & 2 PADS OUTER	BMW	R	23732 23737

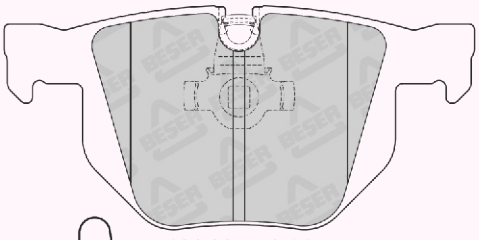

121,92 x 58,14
(NOT SCALE)

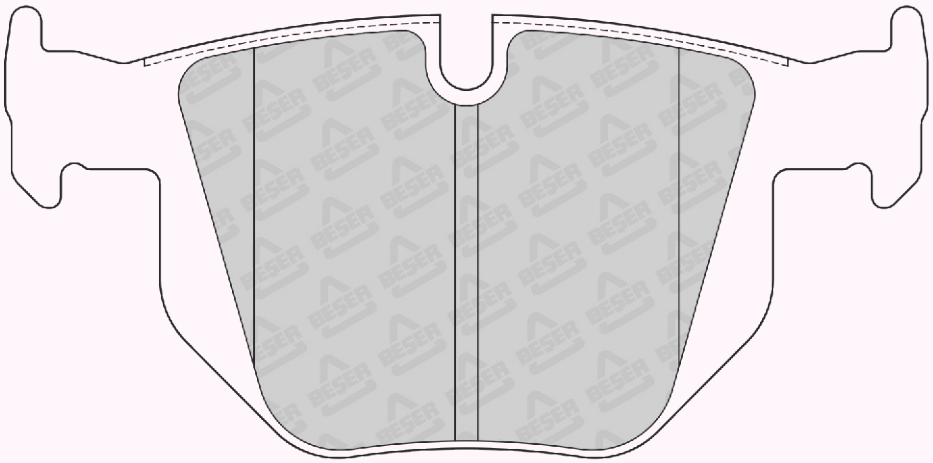

121,92 x 59,18

REFERENCE	T(mm)	REMARKS	MAKE	F/R	WVA No
4182	16,9	4 PADS PLAIN	JEEP - KIA	F	21822 21823 21824 21825

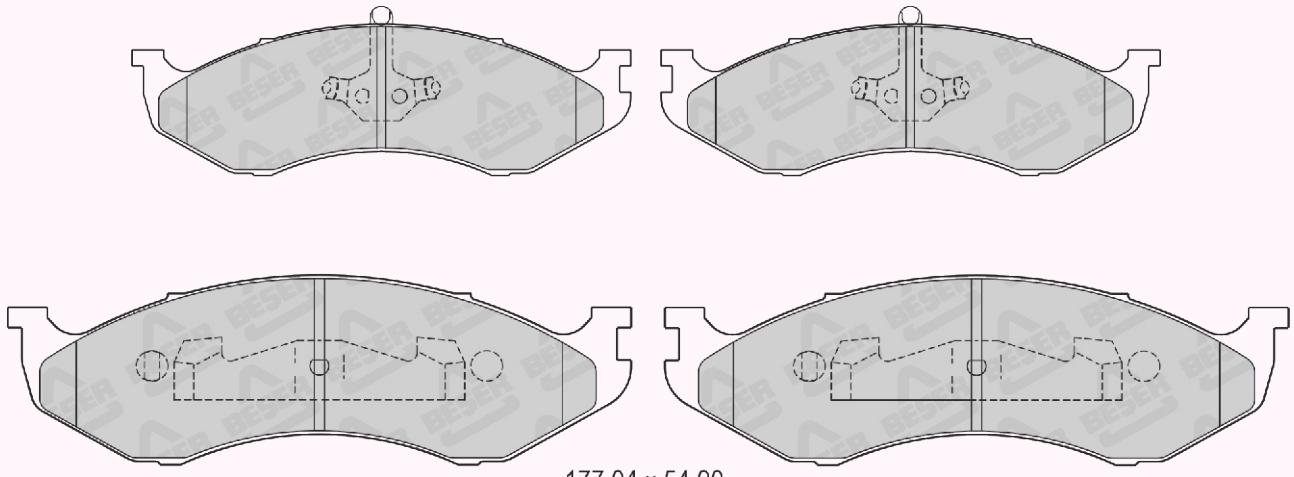

177,04 x 54,90
(NOT SCALE)

REFERENCE	T(mm)	REMARKS	MAKE	F/R	WVA No
4184	16,3	2 PADS WITH WEAR SENSOR	CADILLAC - CHEVROLET GMC	R	.....

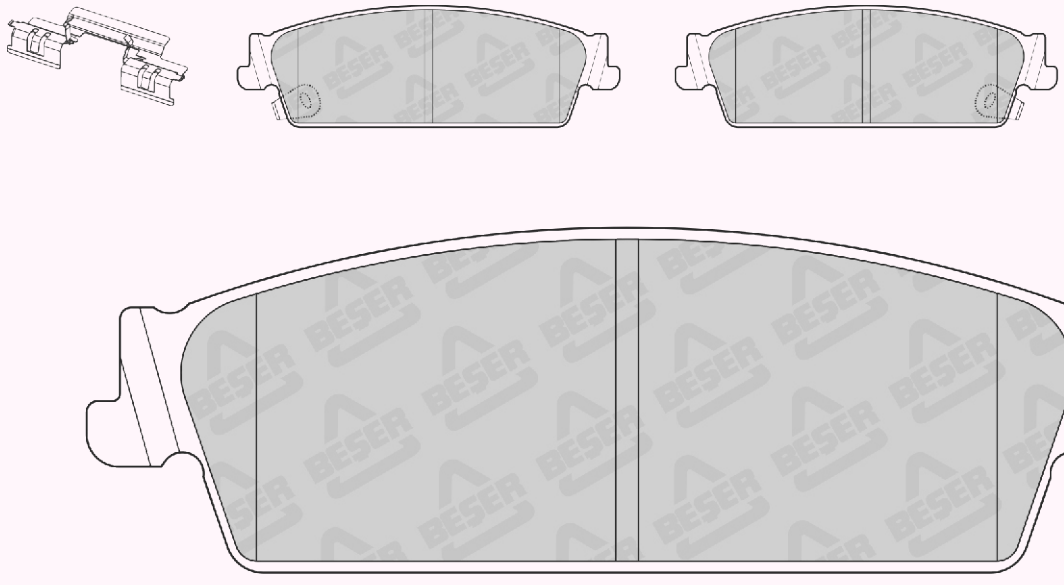

142,70 x 45,60

REFERENCE	T(mm)	REMARKS	MAKE	F/R	WVA No
4185	17,8	2 PADS WITH WEAR SENSOR	CADILLAC	F	.....

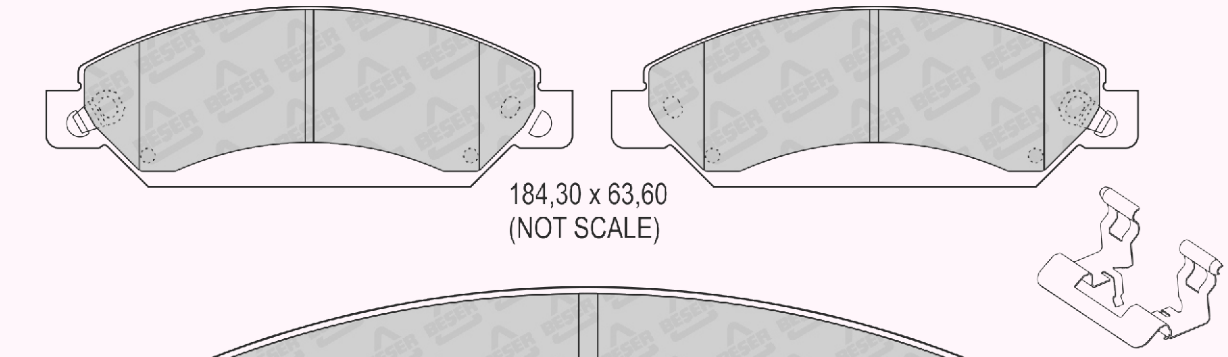

184,30 x 63,60
(NOT SCALE)

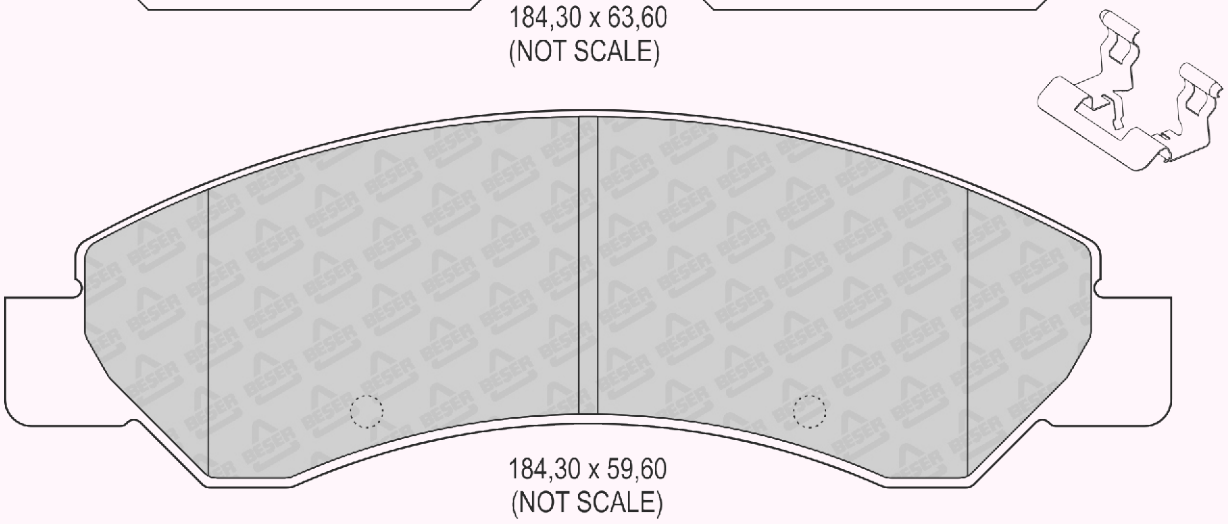

184,30 x 59,60
(NOT SCALE)

REFERENCE	T(mm)	REMARKS	MAKE	F/R	WVA No
4186	15	4 PADS PLAIN	FORD	R	24381 24382 24383 24384

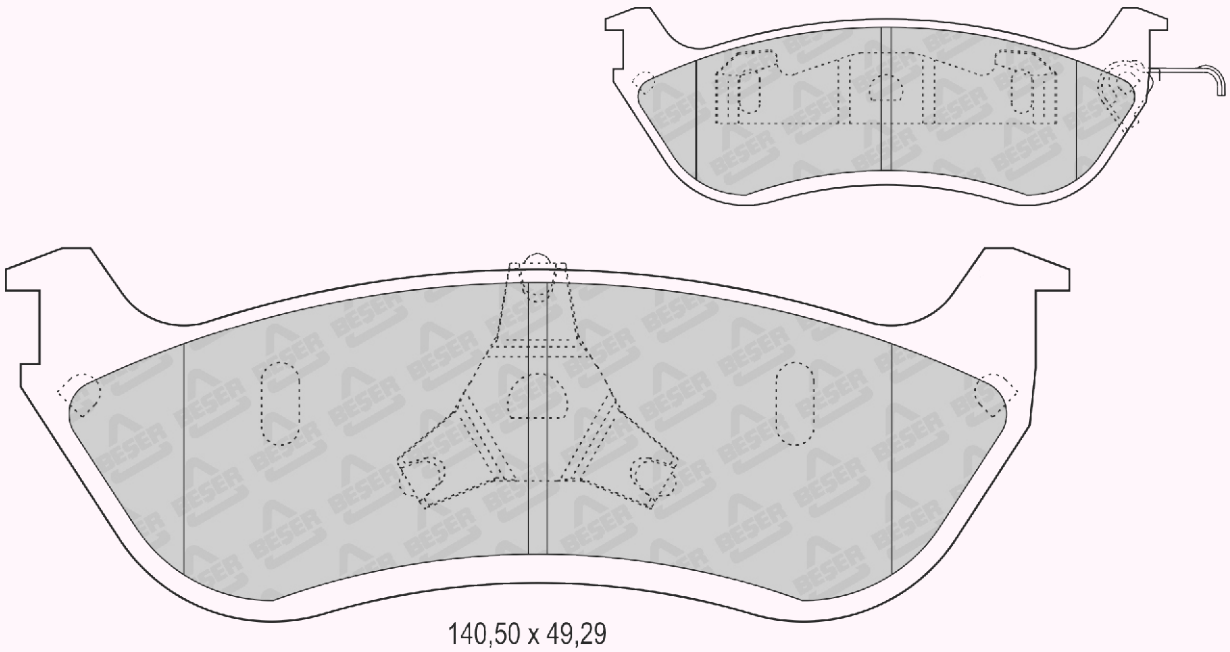

140,50 x 49,29

REFERENCE	T(mm)	REMARKS	MAKE	F/R	WVA No
4187	16	4 PADS WITH WEAR SENSOR	CHEVROLET	R	.....

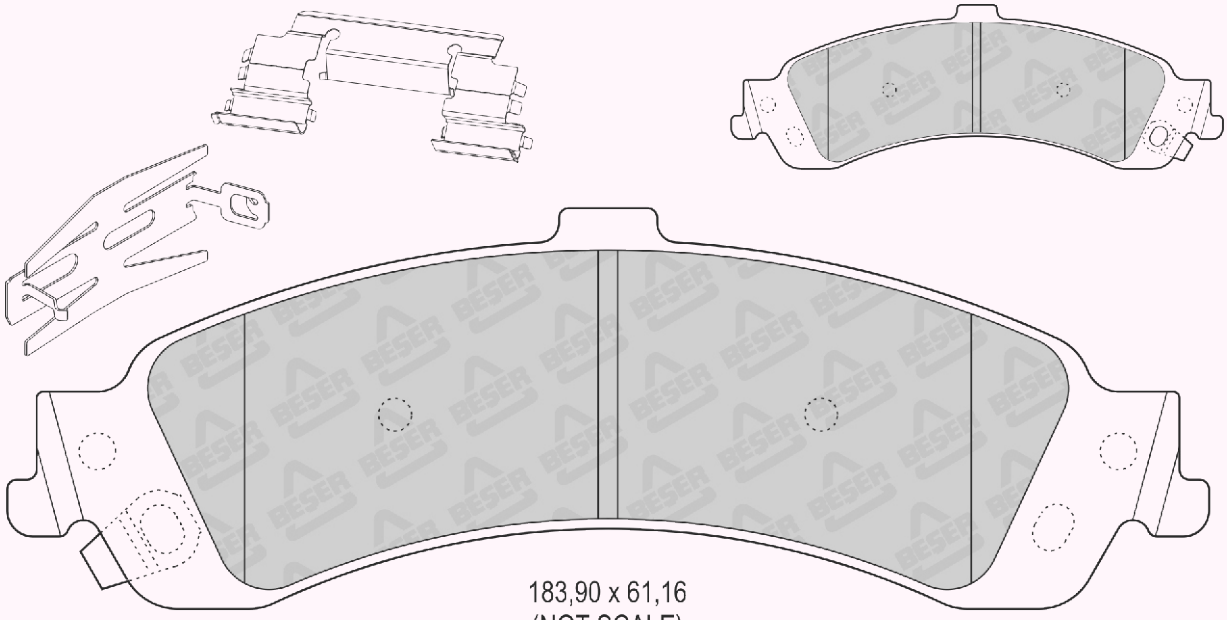

REFERENCE	T(mm)	REMARKS	MAKE	F/R	WVA No
4188	16	4 PADS PLAIN	HOLDEN - HSV VAUXHALL	R	24818 24819

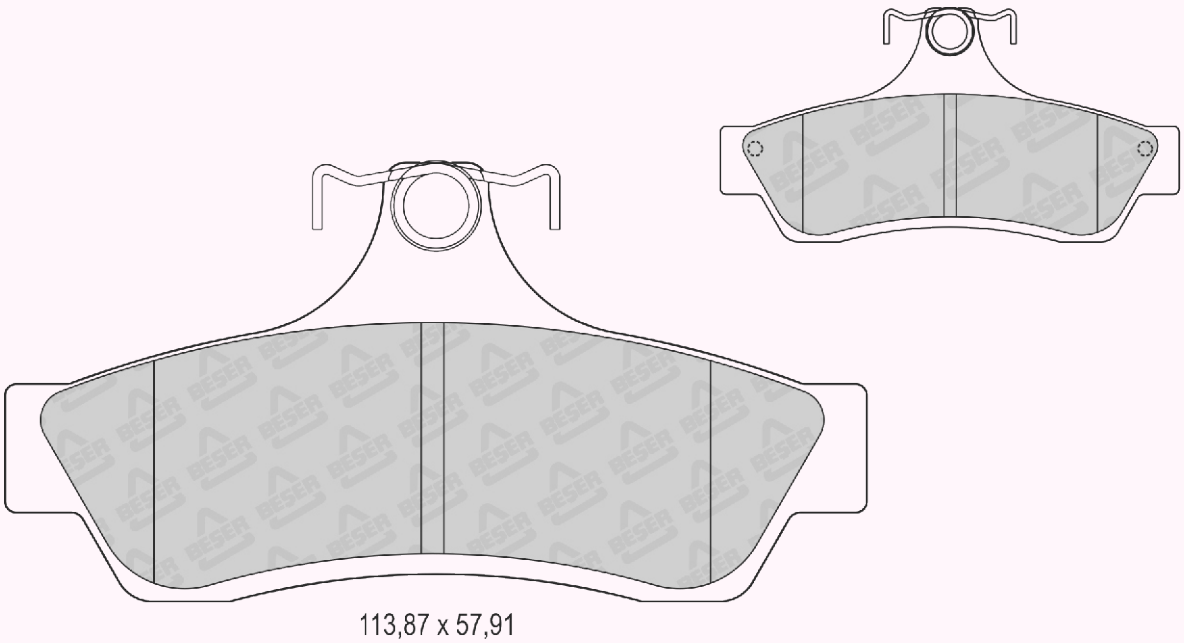

REFERENCE	T(mm)	REMARKS	MAKE	F/R	WVA No
4189	14,3	4 PADS PLAIN	HOLDEN - PONTIAC VAUXHALL	F	24815

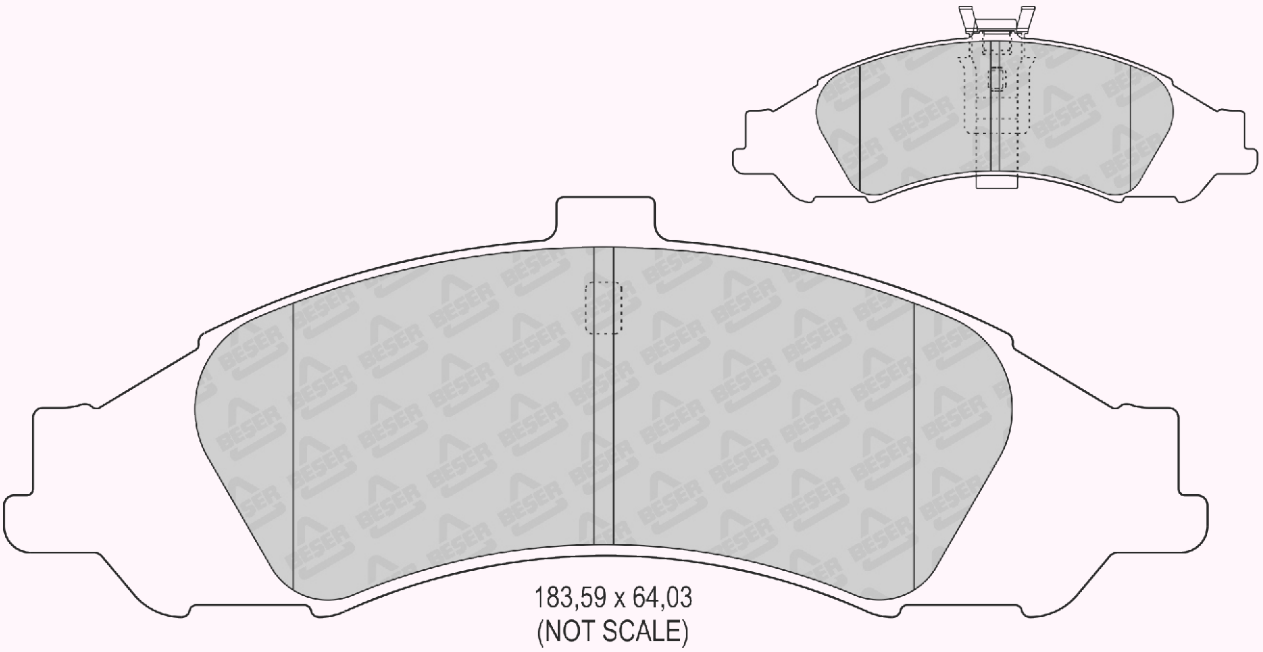

REFERENCE	T(mm)	REMARKS	MAKE	F/R	WVA No
4190	18,2	4 PADS WITH WEAR SENSOR	CADILLAC	R	24626 24627 24792

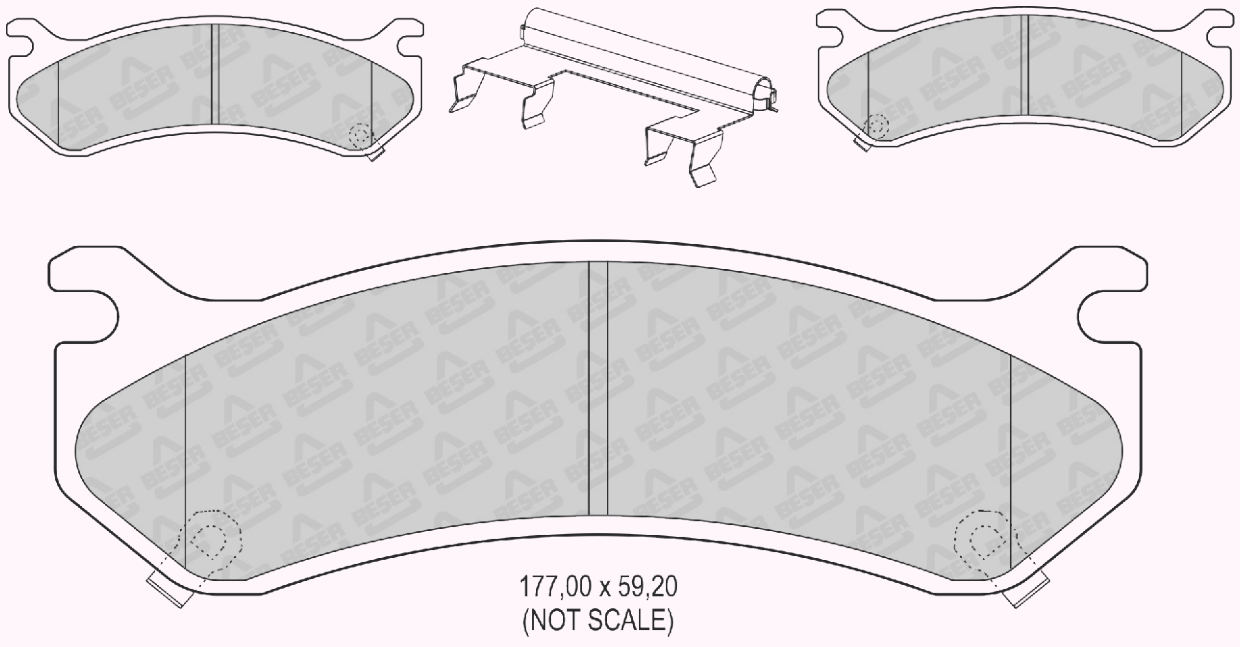

REFERENCE	T(mm)	REMARKS	MAKE	F/R	WVA No
4191	17,26	4 PADS WITH WEAR SENSOR	CHEVROLET	R	24659

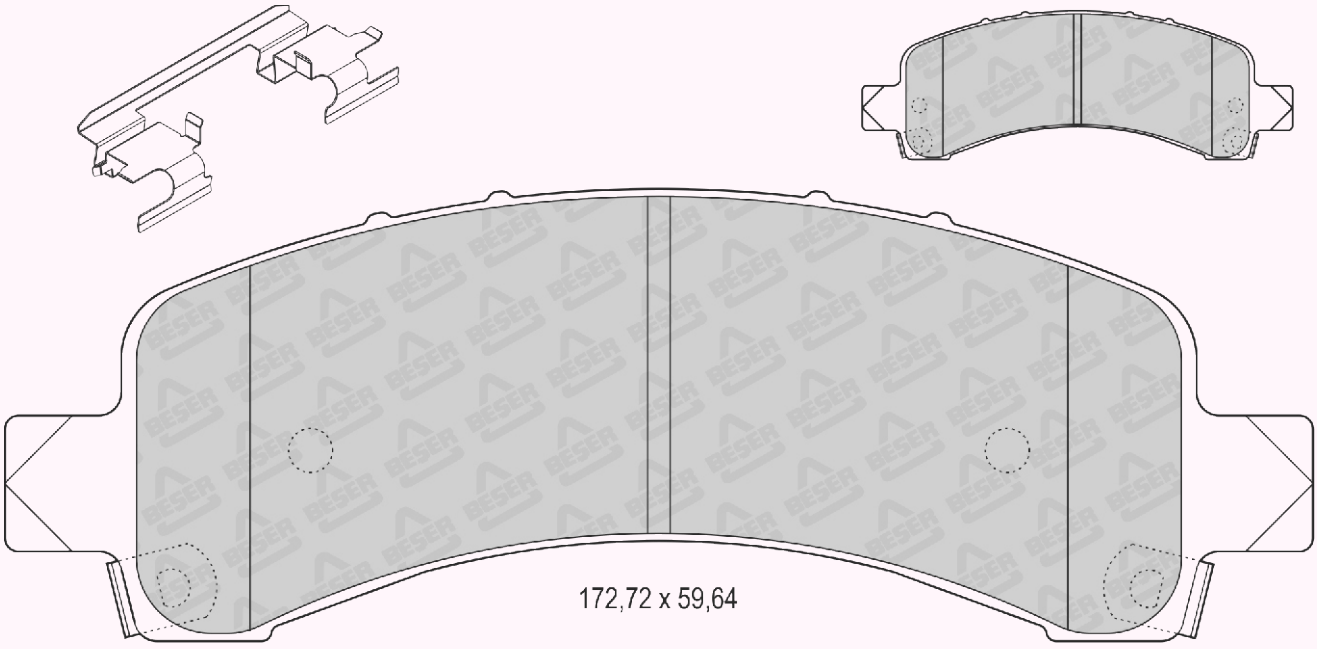

REFERENCE	T(mm)	REMARKS	MAKE	F/R	WVA No
4192	16,3	4 PADS PLAIN	FORD - LINCOLN MERCURY	F	.....

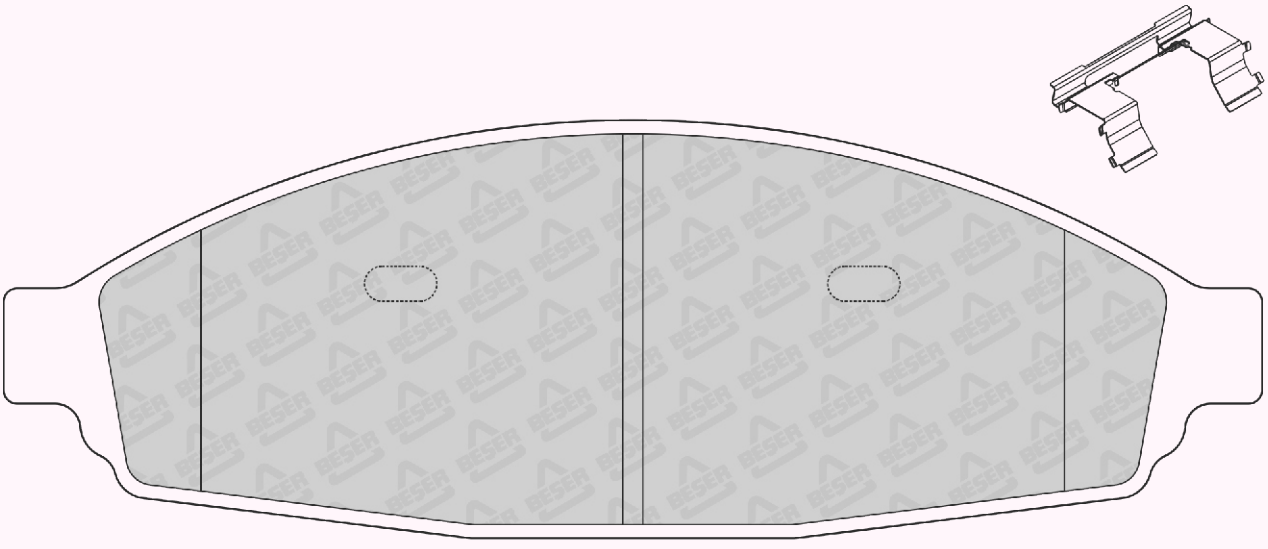

REFERENCE	T(mm)	REMARKS	MAKE	F/R	WVA No
4193	17	4 PADS PLAIN	FORD - LINCOLN	F	.....

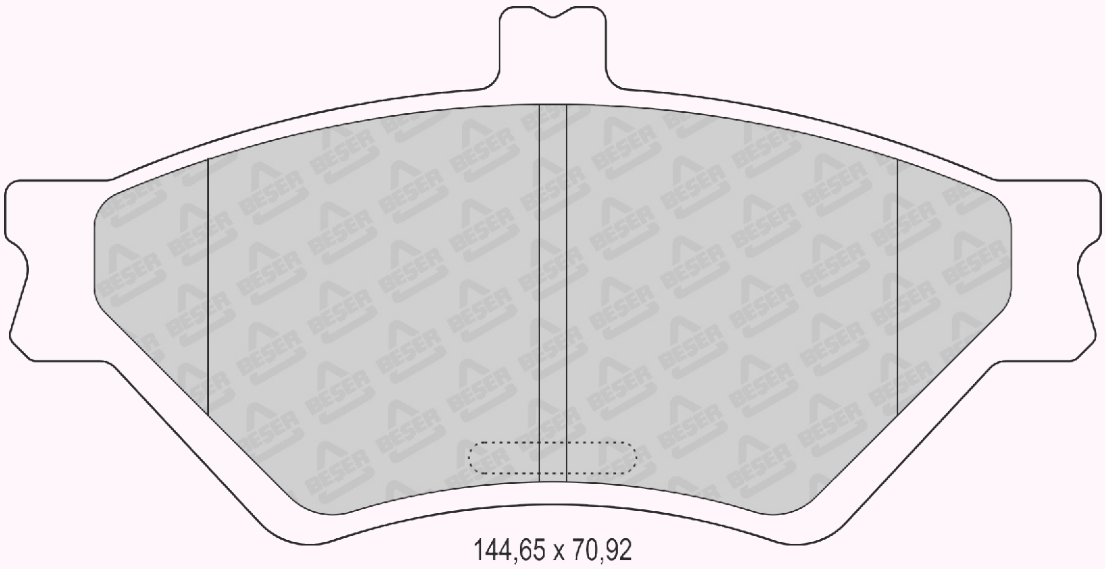

144,65 x 70,92

REFERENCE	T(mm)	REMARKS	MAKE	F/R	WVA No
4194	16	4 PADS PLAIN	LINCOLN	F	.....

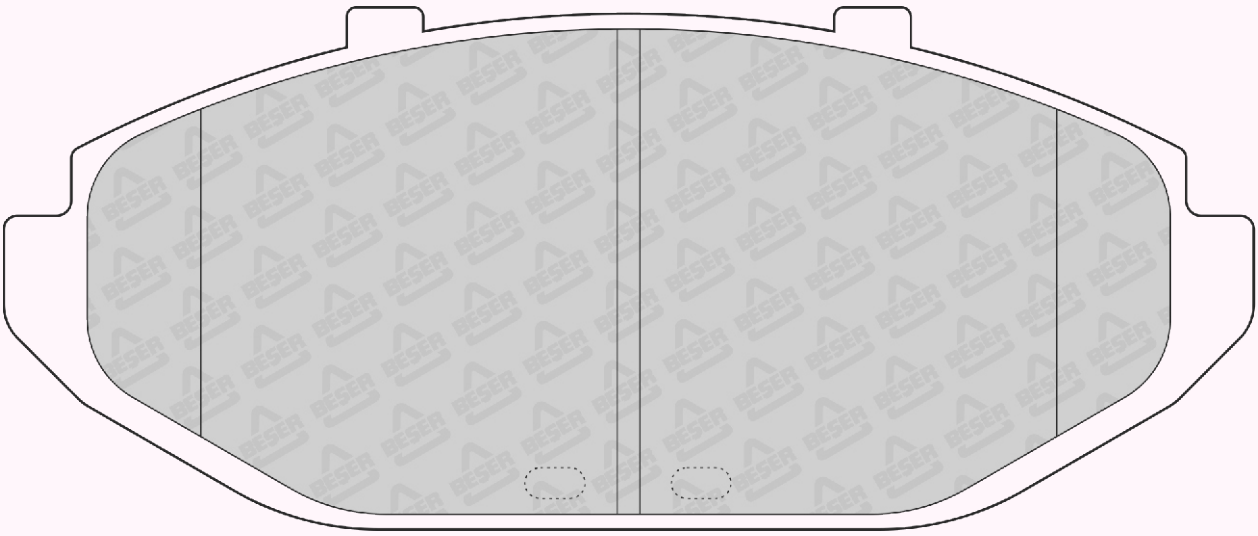

165,1 x 68,83

REFERENCE	T(mm)	REMARKS	MAKE	F/R	WVA No
4195	15,5	2 PADS INNER & 2 PADS OUTER	FORD - LINCOLN MERCURY	F	.....

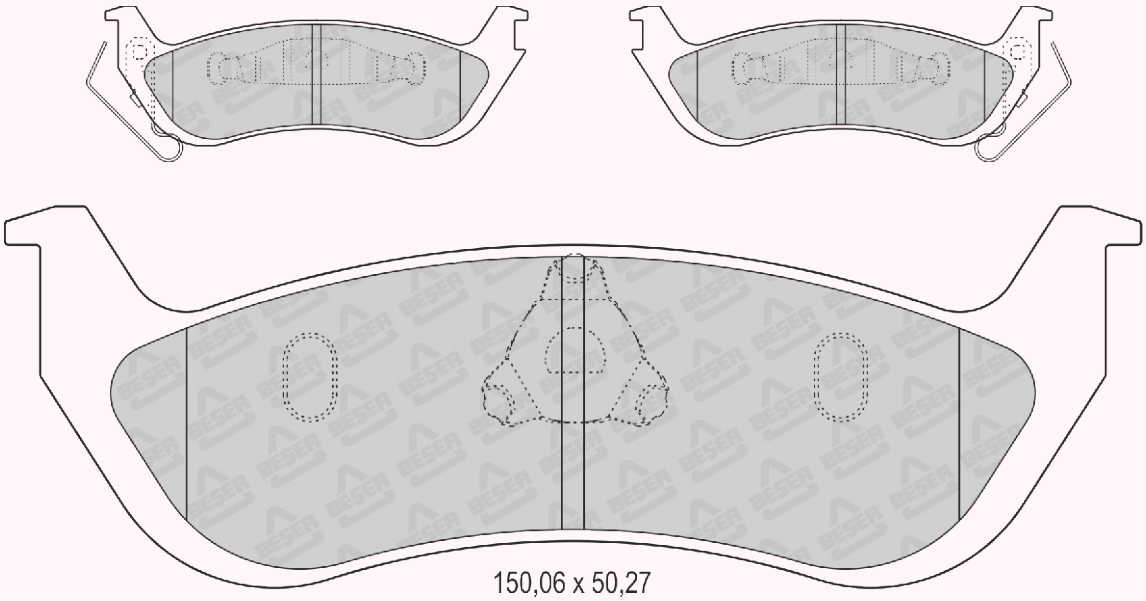

150,06 x 50,27

REFERENCE	T(mm)	REMARKS	MAKE	F/R	WVA No
4196	15	2 PADS INNER & 2 PADS OUTER	FORD - MERCURY	R	.....

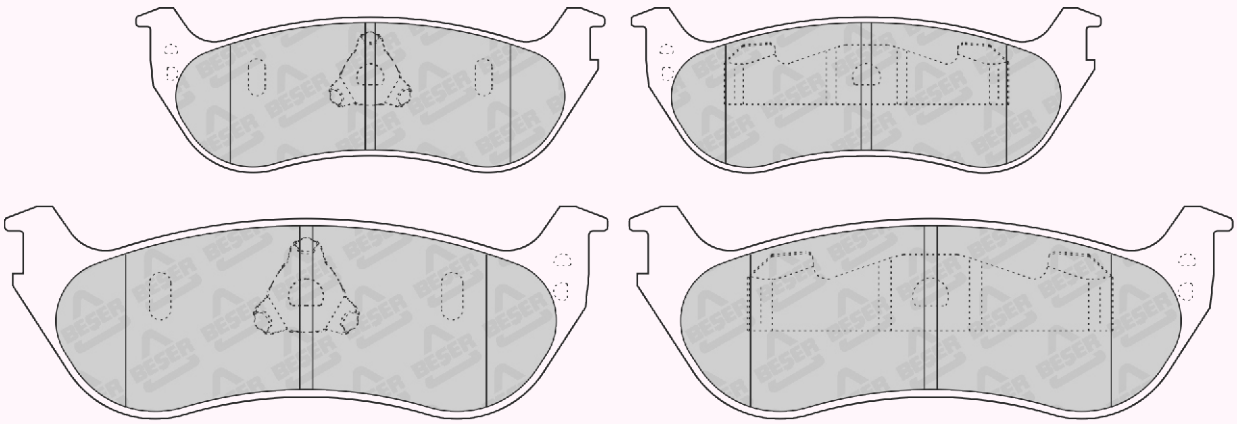

140,5 x 49,29
(NOT SCALE)

REFERENCE	T(mm)	REMARKS	MAKE	F/R	WVA No
4197	15,4-17,4	2 PADS INNER & 2 PADS OUTER	CHRYSLER - DODGE PLYMOUTH	F	23043 23044

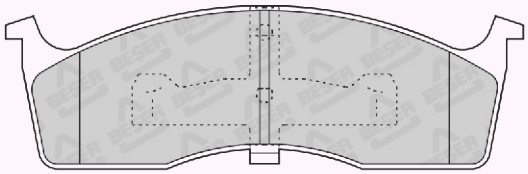

164,6 x 51,57
(NOT SCALE)

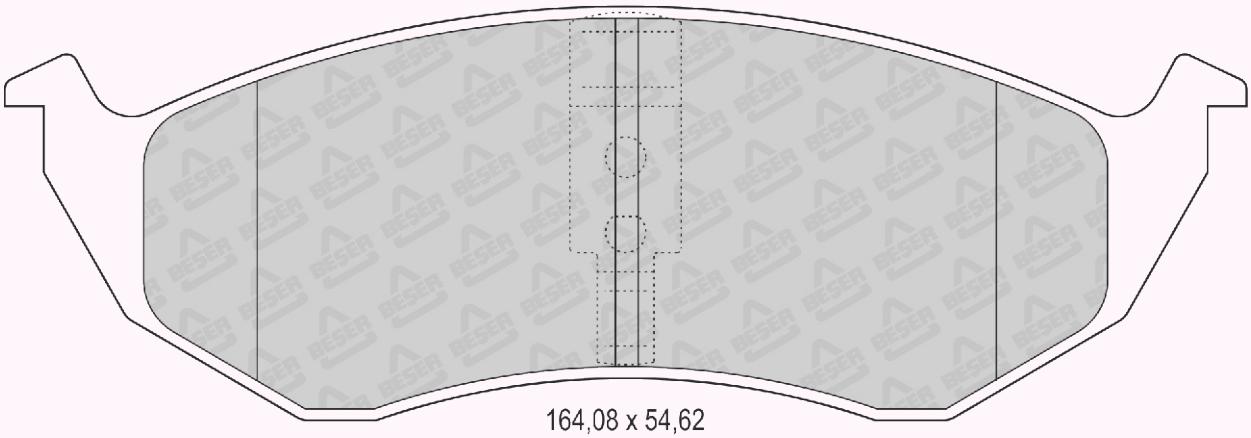

164,08 x 54,62

REFERENCE	T(mm)	REMARKS	MAKE	F/R	WVA No
4198	16,97	4 PADS WITH WEAR SENSOR	DODGE - CHRYSLER LANCIA	F	24164

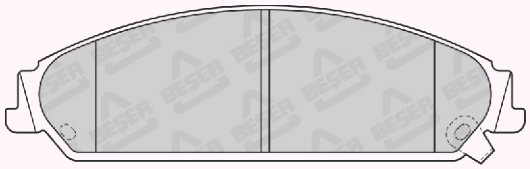

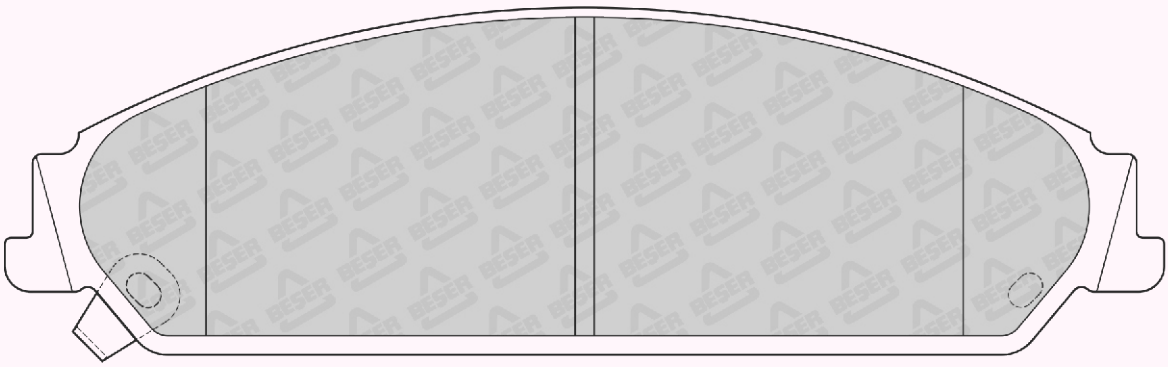

183,39 x 54,90
(NOT SCALE)

REFERENCE	T(mm)	REMARKS	MAKE	F/R	WVA No
4199	16	4 PADS PLAIN	SUZUKI - TOYOTA	F	.....

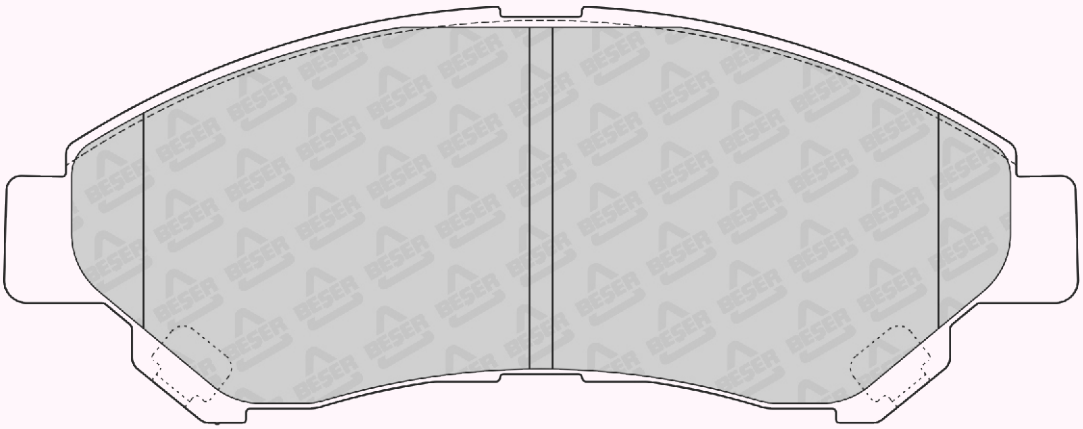

141,8 x 55,05

REFERENCE	T(mm)	REMARKS	MAKE	F/R	WVA No
4200	17,8	4 PADS PLAIN	SKODA - VW	F	25681 25682

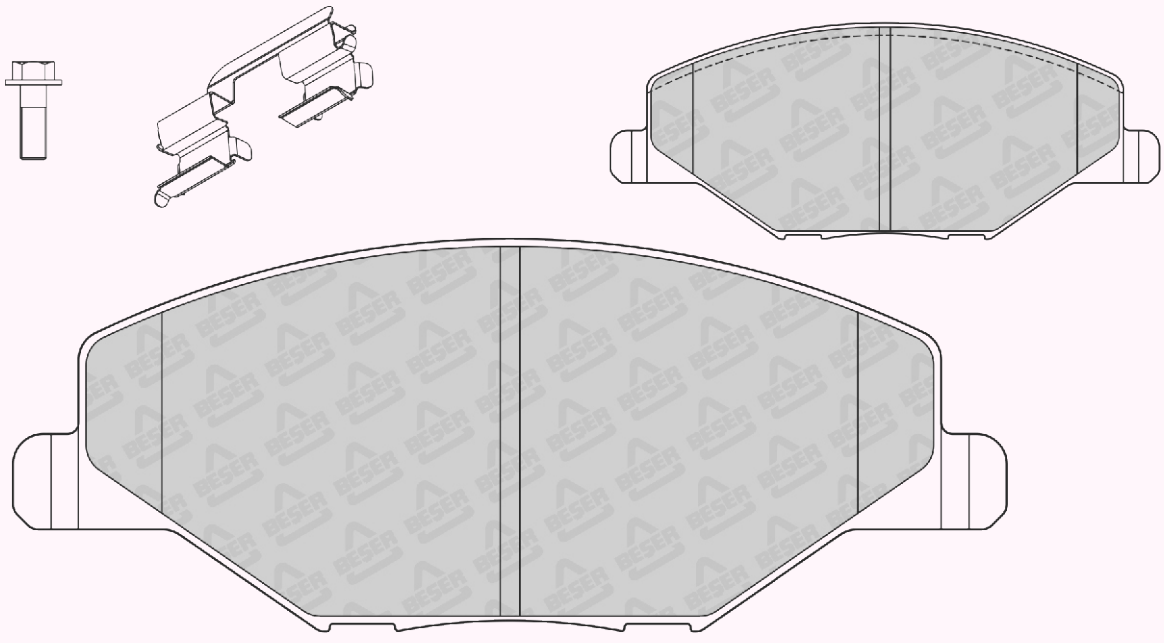

131,2 x 51,84

REFERENCE	T(mm)	REMARKS	MAKE	F/R	WVA No
4201	18	4 PADS PLAIN	CITROEN - PEUGEOT	F	25250 25251

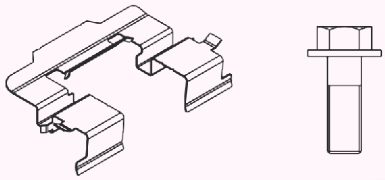

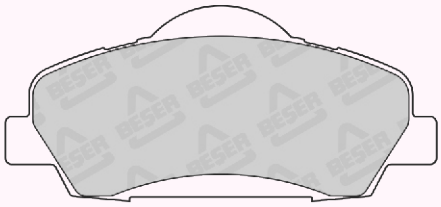

132,8 x 60,1
(NOT SCALE)

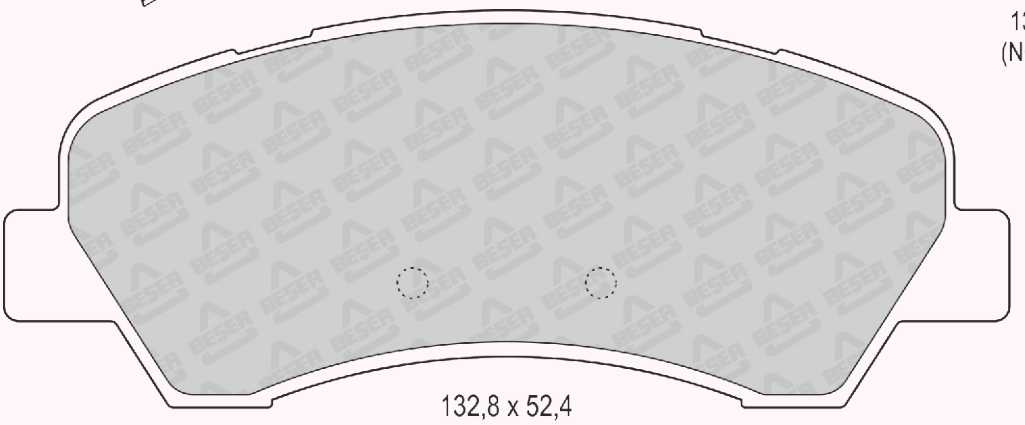

132,8 x 52,4

REFERENCE	T(mm)	REMARKS	MAKE	F/R	WVA No
4201/1	18	4 PADS PLAIN	CITROEN - PEUGEOT	F	25250

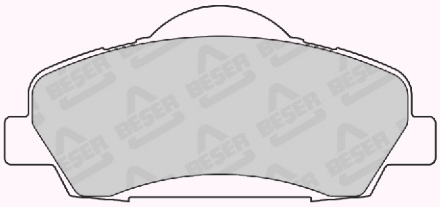

132,8 x 60,1
(NOT SCALE)

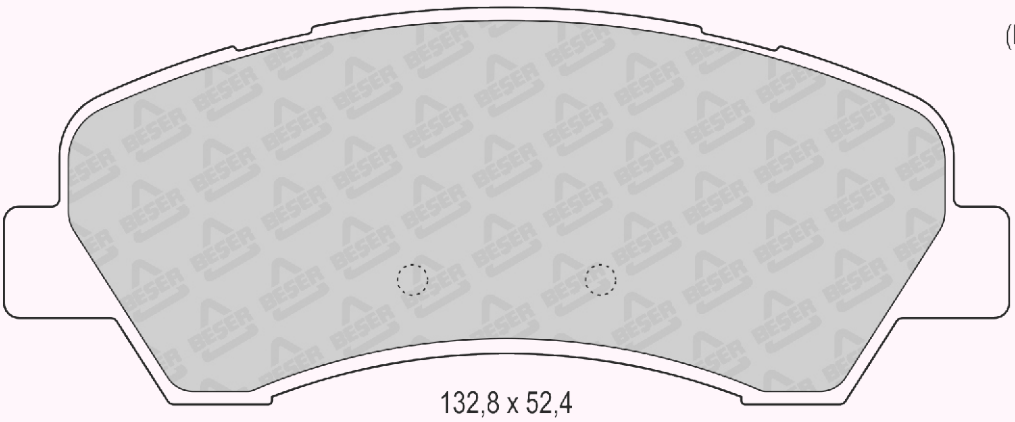

132,8 x 52,4

REFERENCE	T(mm)	REMARKS	MAKE	F/R	WVA No
4202	16	2 PADS WITH WEAR SENSOR	TOYOTA	R	25599

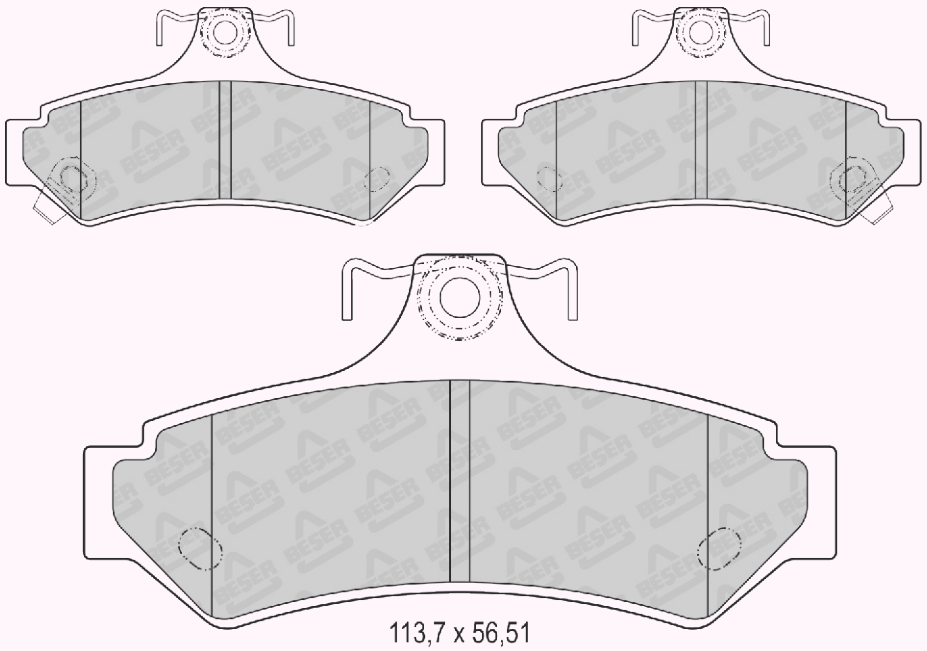

113,7 x 56,51
(NOT SCALE)

REFERENCE	T(mm)	REMARKS	MAKE	F/R	WVA No
4204	17,2	4 PADS PLAIN	FORD	F	25134 25135

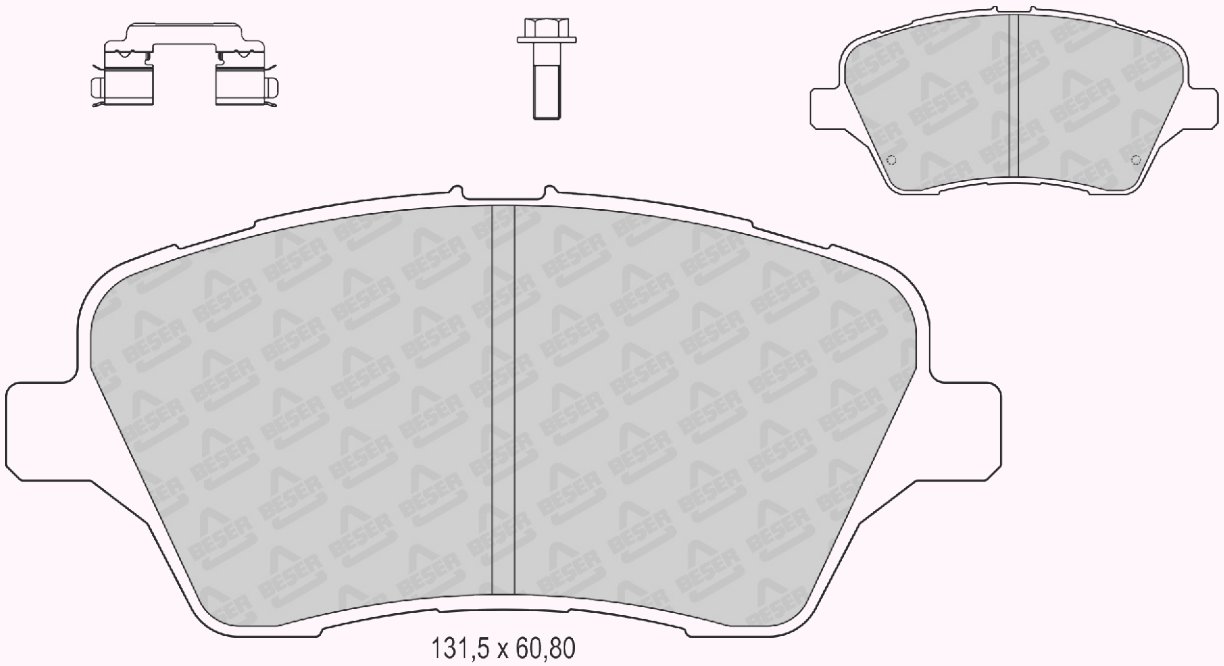

131,5 x 60,80

REFERENCE	T(mm)	REMARKS	MAKE	F/R	WVA No
4205	17,2	4 PADS PLAIN	TOYOTA	F	25823

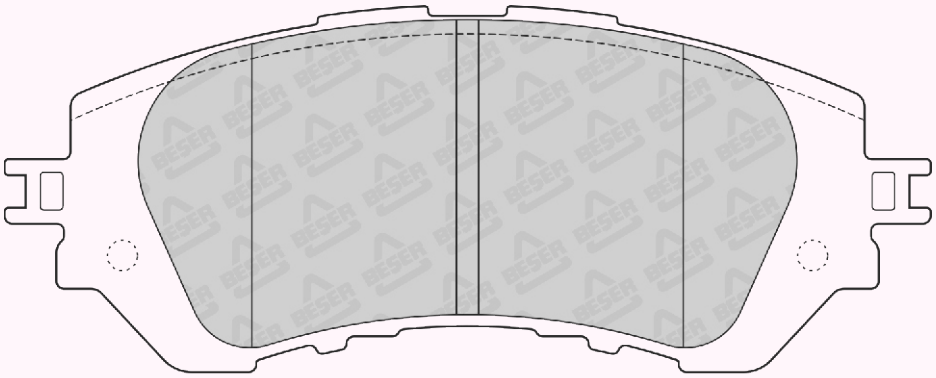

122,20 x 48,30

REFERENCE	T(mm)	REMARKS	MAKE	F/R	WVA No
4206	17,3	2 PADS WITH WEAR SENSOR	PEUGEOT	F	.....

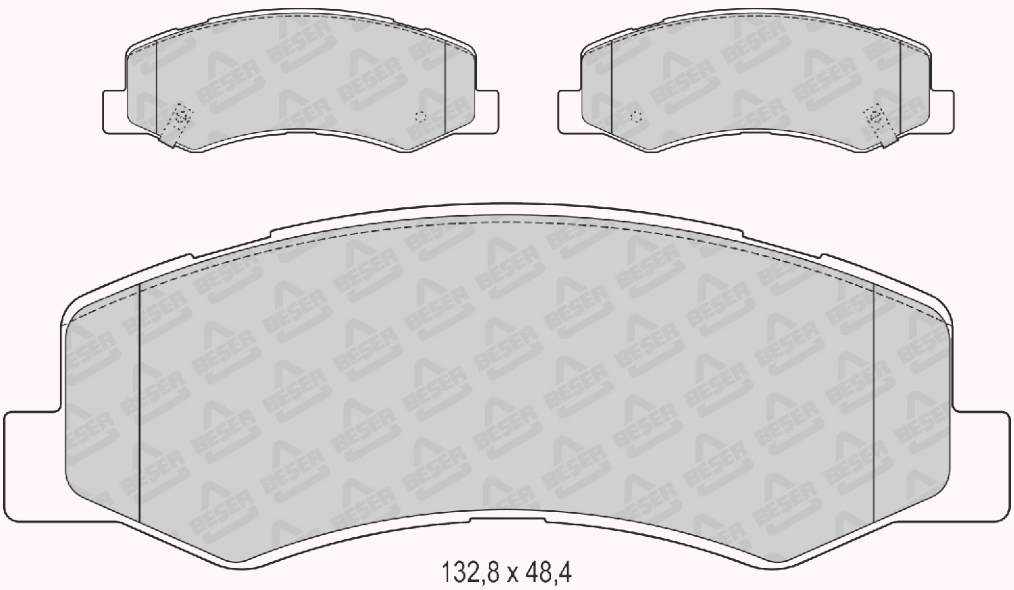

132,8 x 48,4

REFERENCE	T(mm)	REMARKS	MAKE	F/R	WVA No
4207	18,1-18,6	2 PADS INNER & 2 PADS OUTER	BMW	F	24170 24171

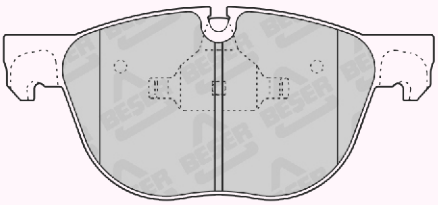

171,20x76,88
(NOT SCALE)

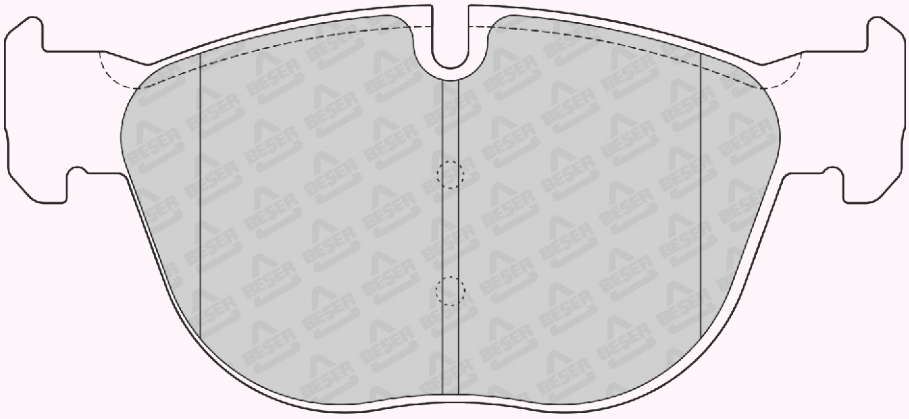

170,20x76,88
(NOT SCALE)

REFERENCE	T(mm)	REMARKS	MAKE	F/R	WVA No
4208	19,3 - 19,5	2 PADS INNER & 2 PADS OUTER	BMW - ROLLS ROYCE	F	23791 23792 23820

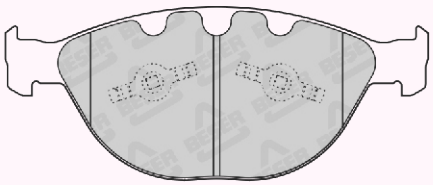

193,15 x 79,16
(NOT SCALE)

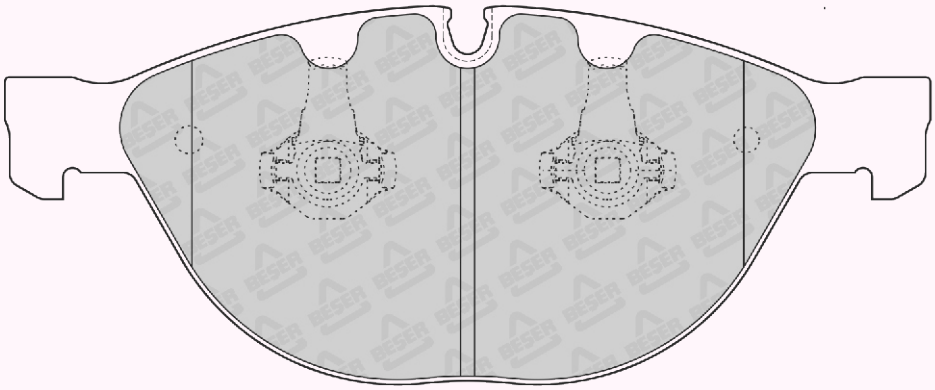

193,15 x 79,01
(NOT SCALE)

REFERENCE	T(mm)	REMARKS	MAKE	F/R	WVA No
4209	14,6	1 PAD WITH WEAR SENSOR	MERCEDES BENZ	R	23078



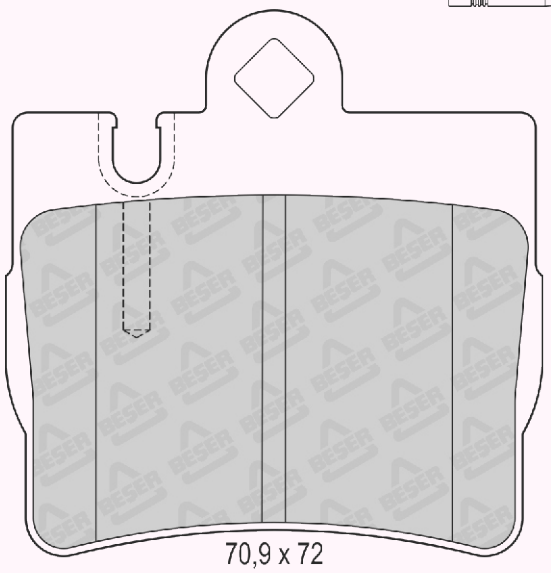

70,9 x 72

REFERENCE	T(mm)	REMARKS	MAKE	F/R	WVA No
4210	19,3 - 19,9	2 PADS RIGHT & 2 PADS LEFT	MERCEDES BENZ	F	23922 23925

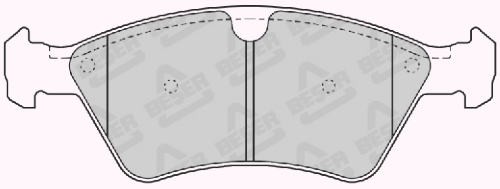

194,45 x 69,90
(NOT SCALE)

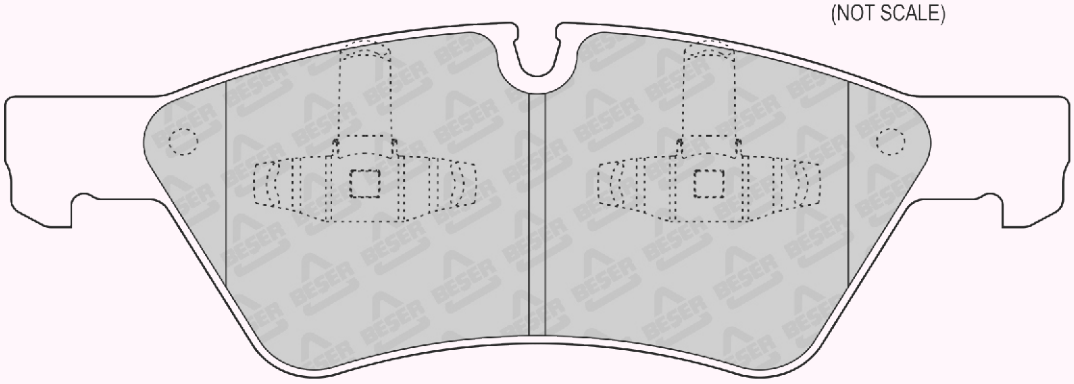

194,45 x 69,90
(NOT SCALE)

REFERENCE	T(mm)	REMARKS	MAKE	F/R	WVA No
4211	19,5	2 PADS RIGHT & 2 PADS LEFT	CADILLAC - CHEVROLET - FIAT HOLDEN - OPEL - SAAB - VAUXHALL	F	23402 23403 23738

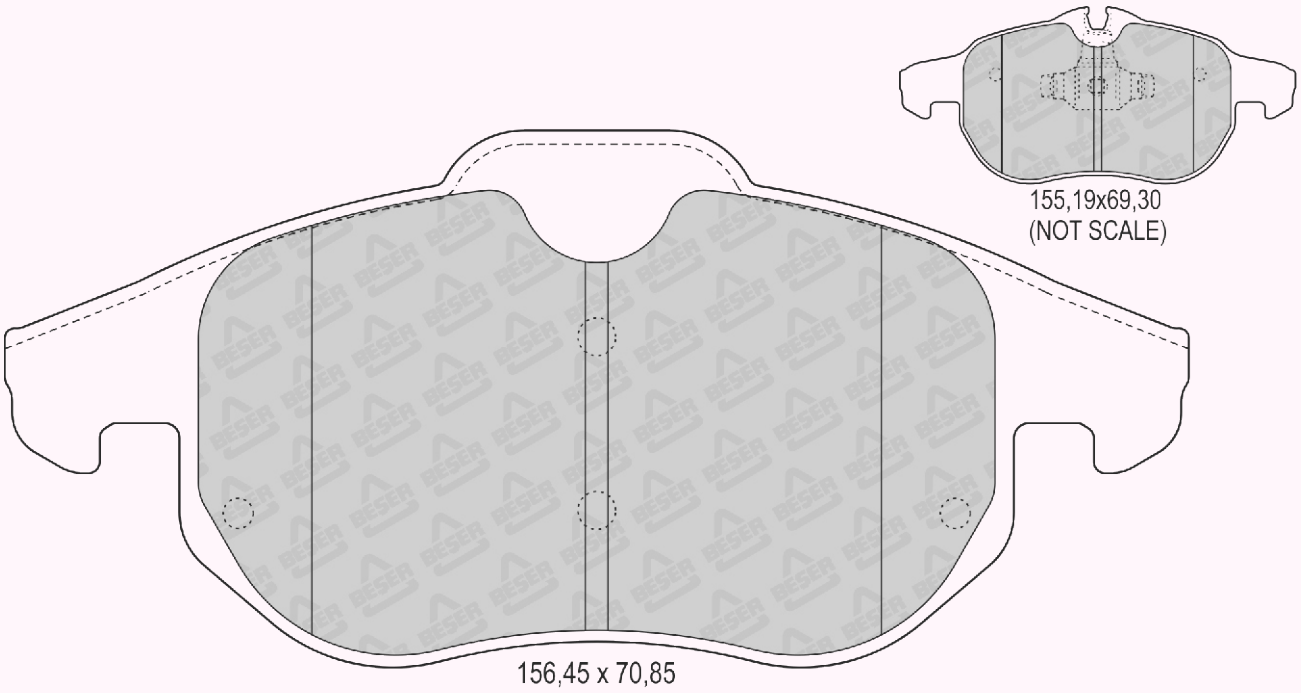

REFERENCE	T(mm)	REMARKS	MAKE	F/R	WVA No
4212	12,2-12,88	2 PADS WITH WEAR SENSOR	ACURA - HONDA MG - ROVER	R	21312 21313 21314

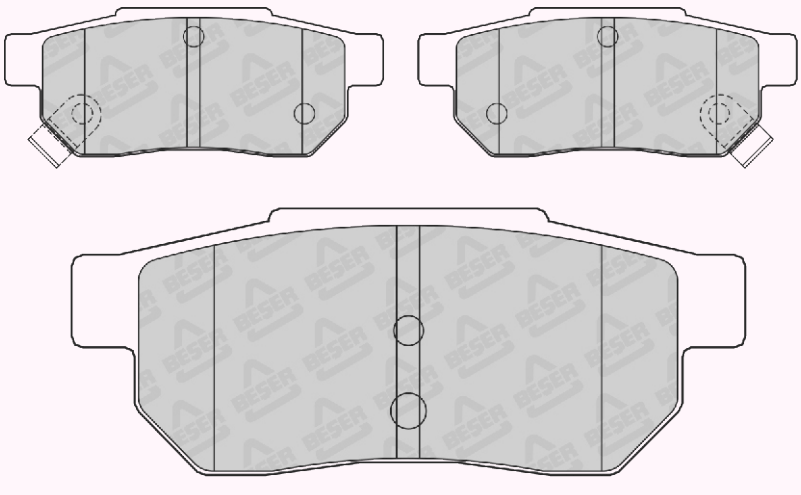

REFERENCE	T(mm)	REMARKS	MAKE	F/R	WVA No
4213	13,5	1 PAD WITH WEAR SENSOR	SUBARU - TOYOTA	R	24271 24272

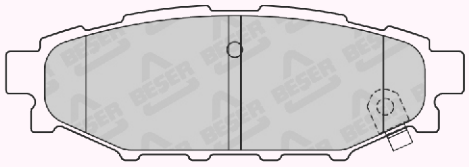

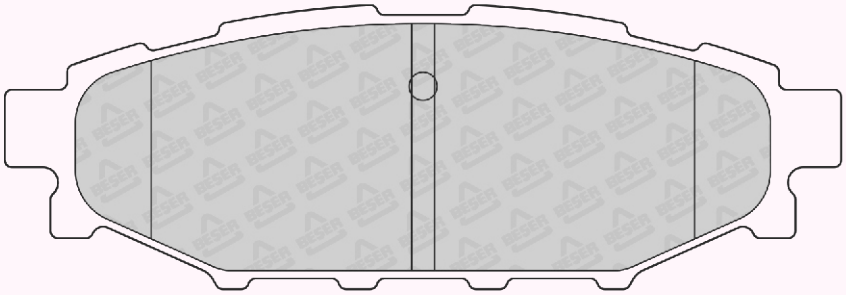

110,5 x 37,49

REFERENCE	T(mm)	REMARKS	MAKE	F/R	WVA No
4214	14,4	4 PADS PLAIN	FORD	R	21586

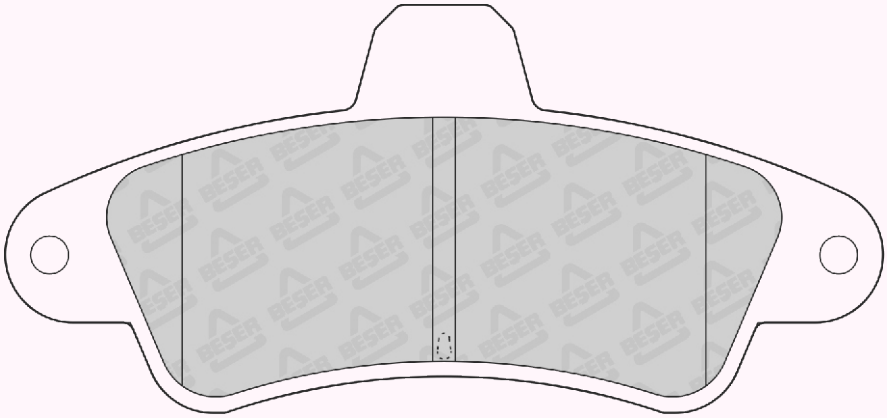

115,9 x 53,75

REFERENCE	T(mm)	REMARKS	MAKE	F/R	WVA No
4215	16,8	2 PADS INNER & 2 PADS OUTER	FORD - MAZDA	R	24670 24671

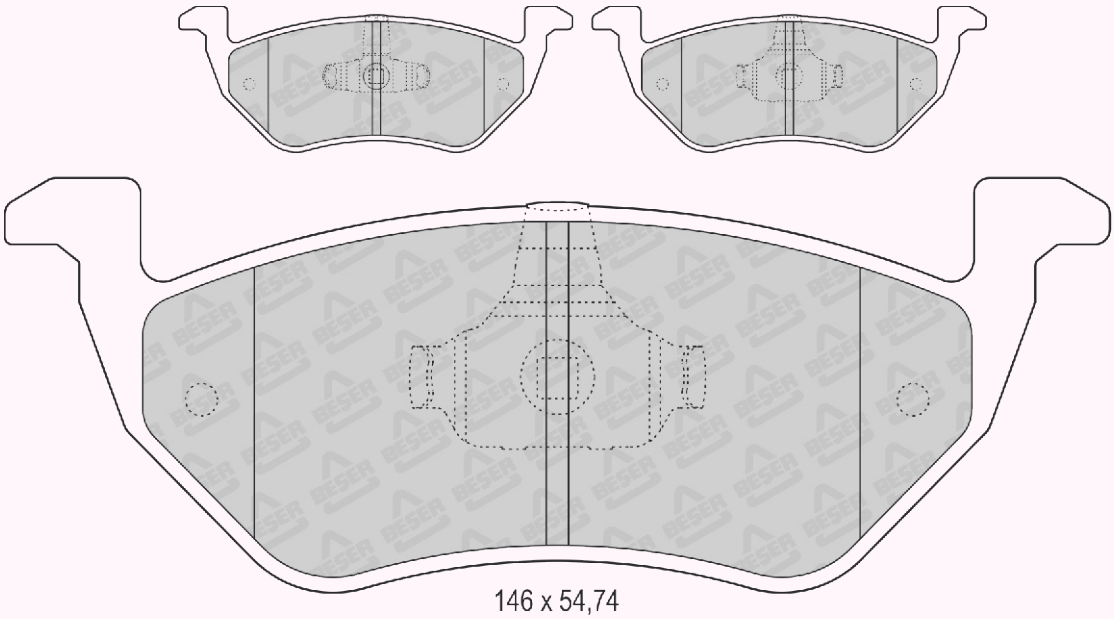

146 x 54,74

REFERENCE	T(mm)	REMARKS	MAKE	F/R	WVA No
4216	18,6	8 PADS PLAIN	MITSUBISHI	F	29242 29243

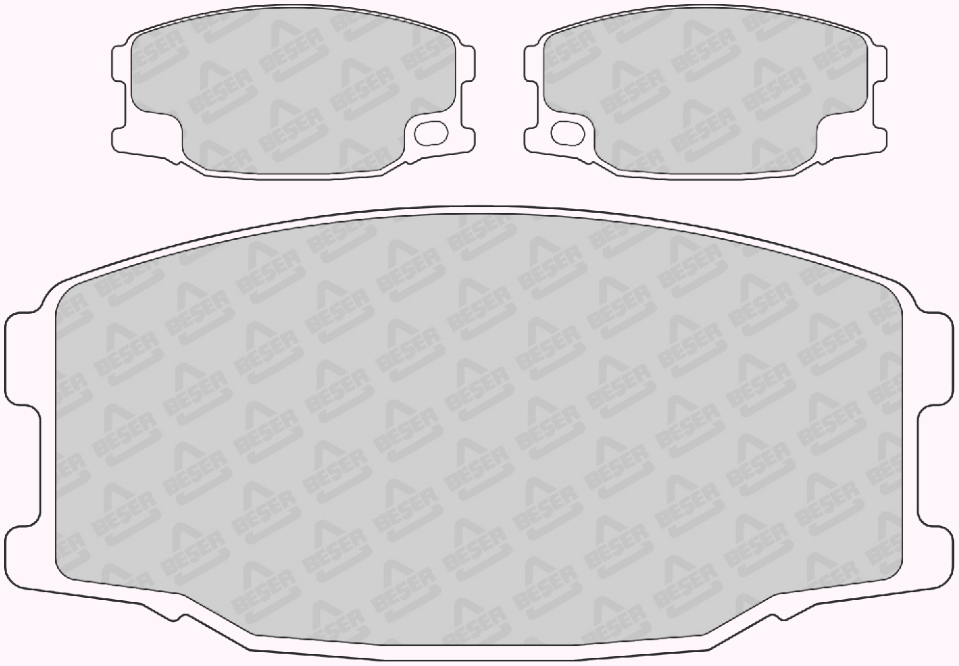

125,2 x 60

REFERENCE	T(mm)	REMARKS	MAKE	F/R	WVA No
4217	15	2 PADS WITH WEAR SENSOR	HYUNDAI	F	-

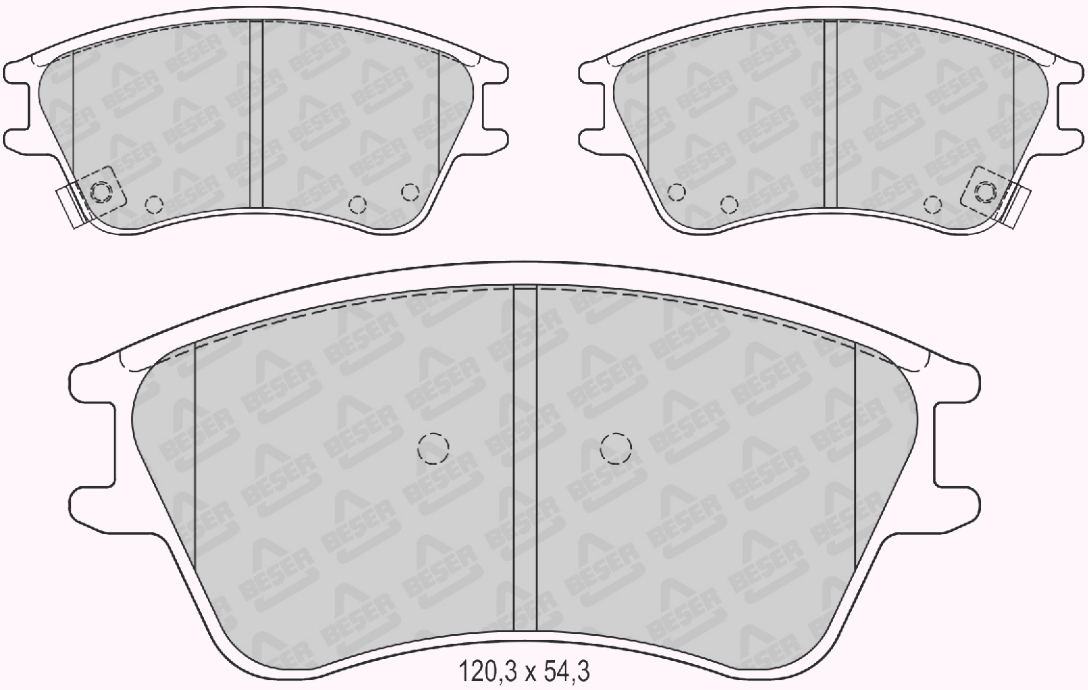

120,3 x 54,3

REFERENCE	T(mm)	REMARKS	MAKE	F/R	WVA No
4218	17,55	2 PADS WITH WEAR SENSOR	CHEVROLET - SAAB	F	.....

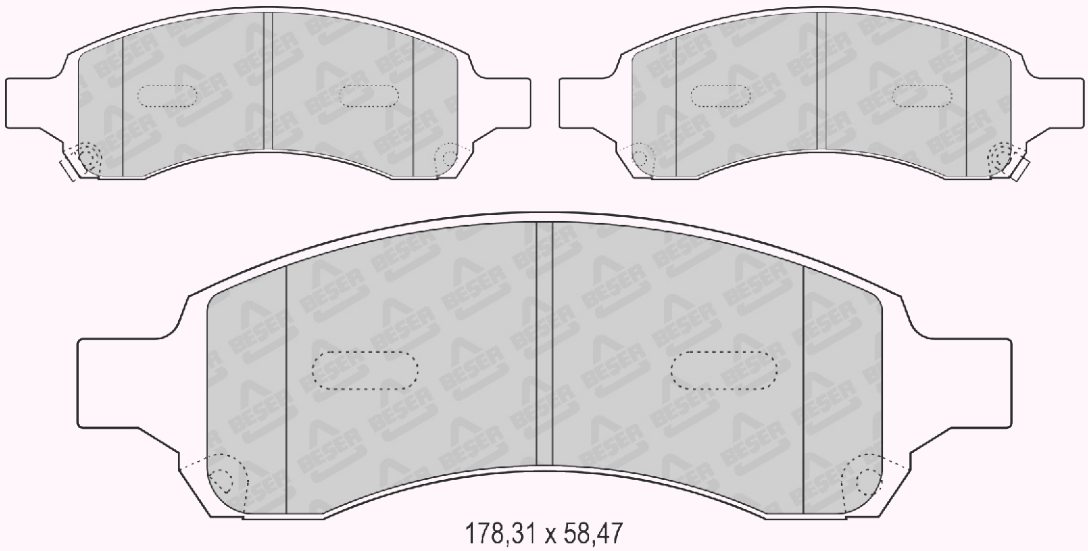

178,31 x 58,47
(NOT SCALE)

REFERENCE	T(mm)	REMARKS	MAKE	F/R	WVA No
4219	16,8	4 PADS PLAIN	BUICK - CHEVROLET - GMC ISUZU - SAAB	R	24445 24446 24447

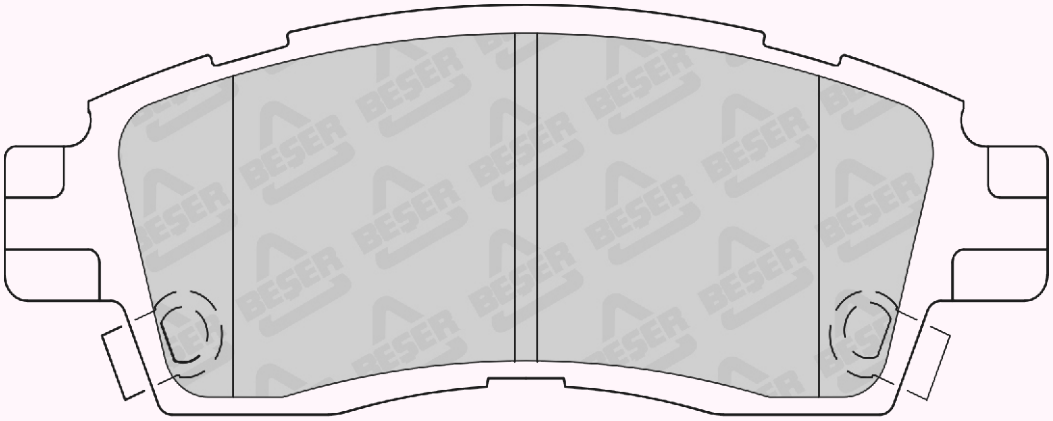

137,67 x 46,99

REFERENCE	T(mm)	REMARKS	MAKE	F/R	WVA No
4220	14,4	2 PADS INNER & 2 PADS OUTER	FORD - MAZDA MERCURY	F	24438 24439 25093

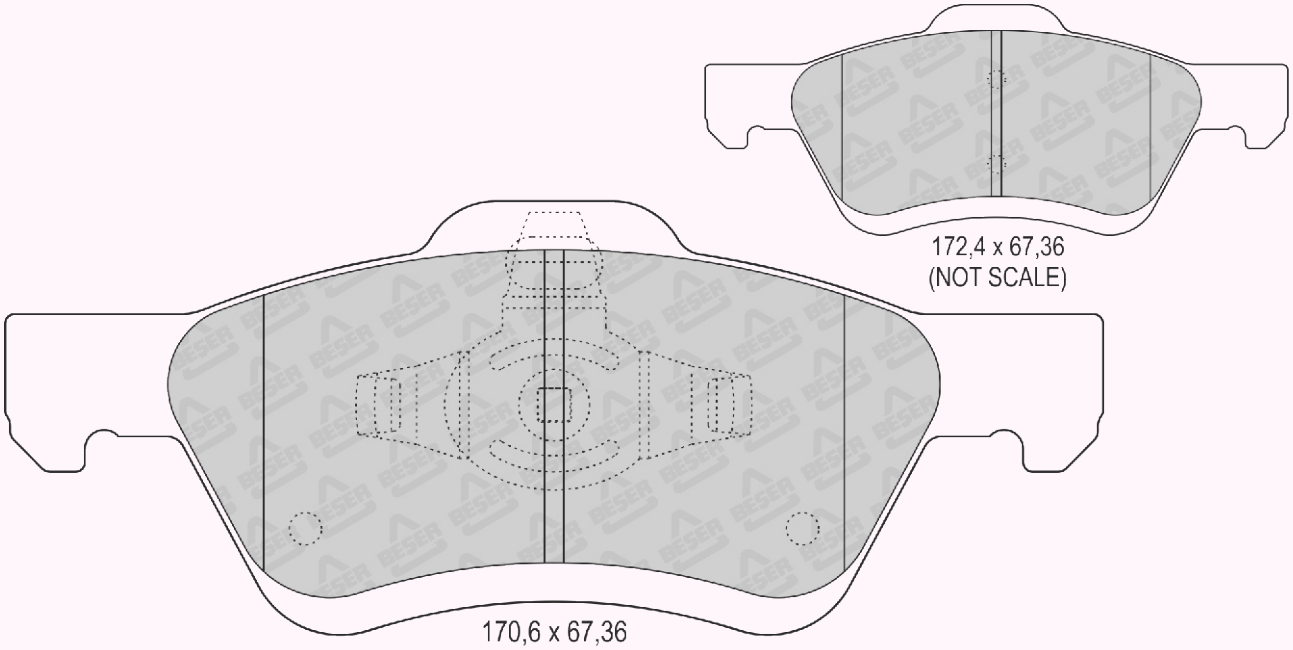

172,4 x 67,36
(NOT SCALE)

170,6 x 67,36
(NOT SCALE)

REFERENCE	T(mm)	REMARKS	MAKE	F/R	WVA No
4221	16,1	2 PADS WITH WEAR SENSOR	CHEVROLET - ISUZU SAAB	F	24448

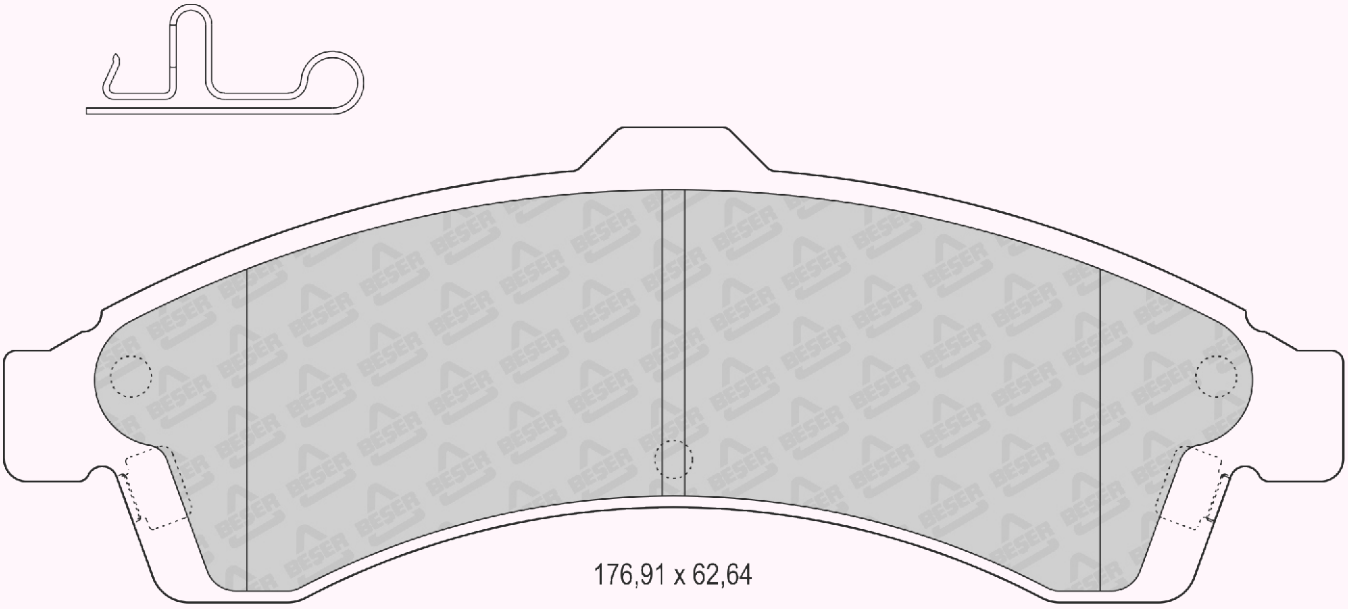

REFERENCE	T(mm)	REMARKS	MAKE	F/R	WVA No
4222	17,6	2 PADS WITH WEAR SENSOR	AUDI	F	23118 23119 23280 23828

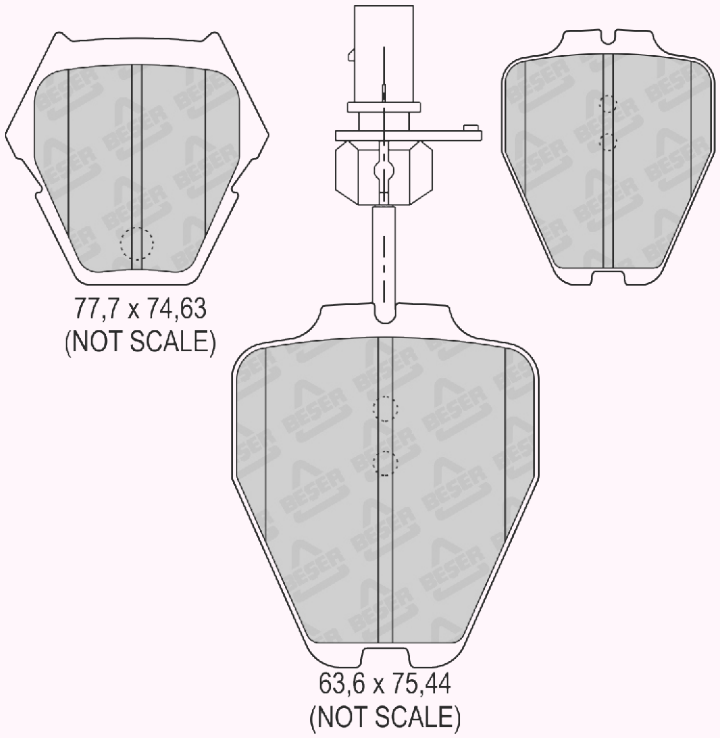

REFERENCE	T(mm)	REMARKS	MAKE	F/R	WVA No
4224	21,25	2 PADS WITH WEAR SENSOR	CITROEN - PEUGEOT	R	25987 25988

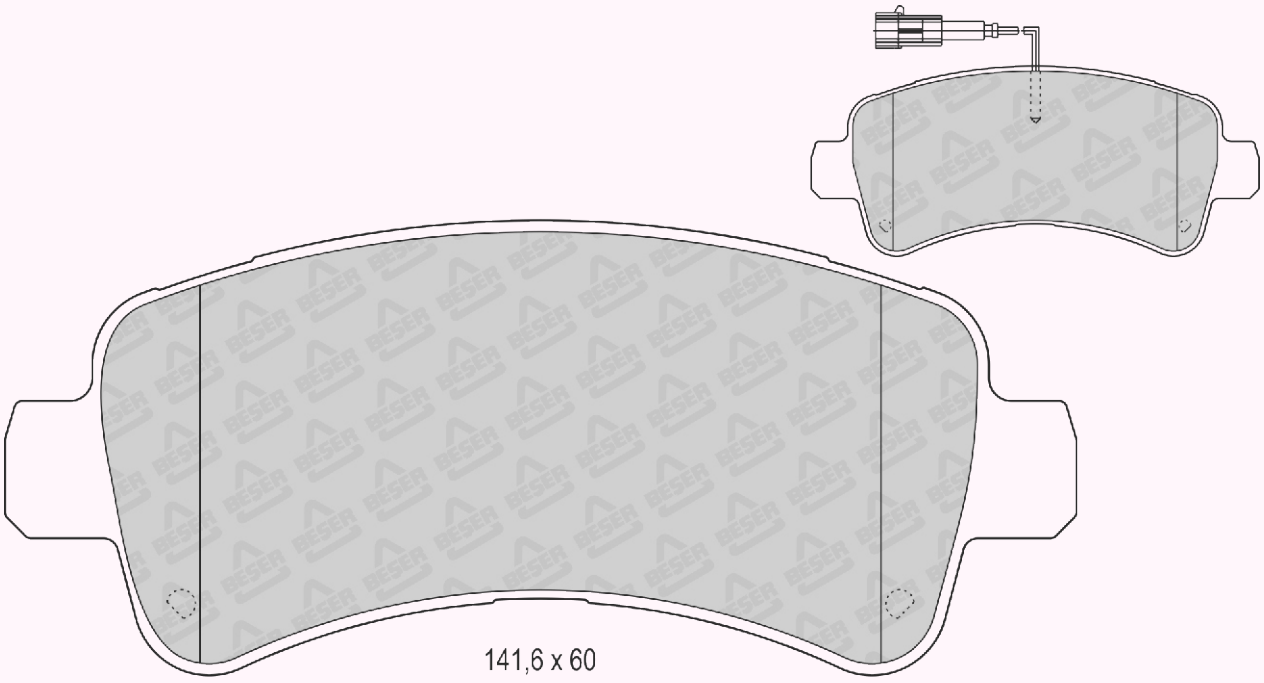

REFERENCE	T(mm)	REMARKS	MAKE	F/R	WVA No
4226	17,6-18,2	2 PADS INNER & 2 PADS OUTER	FORD	F	25736 25737

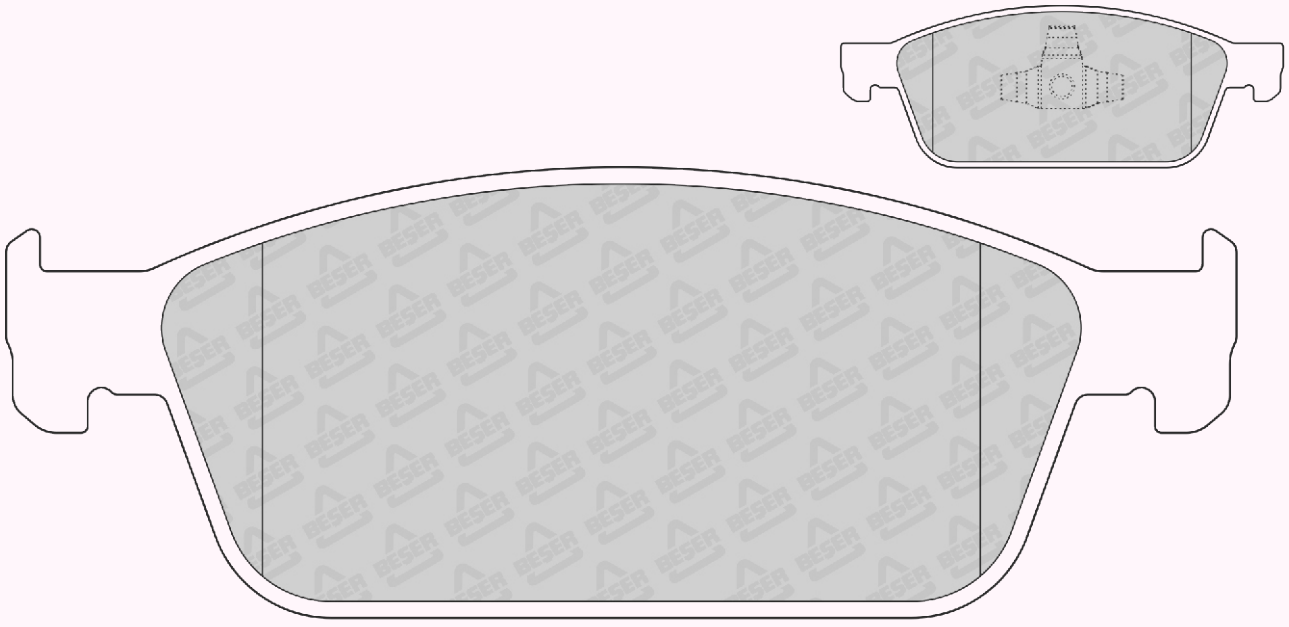

REFERENCE	T(mm)	REMARKS	MAKE	F/R	WVA No
4227	18	4 PADS PLAIN	OPEL - RENAULT VAUXHALL	F	22087

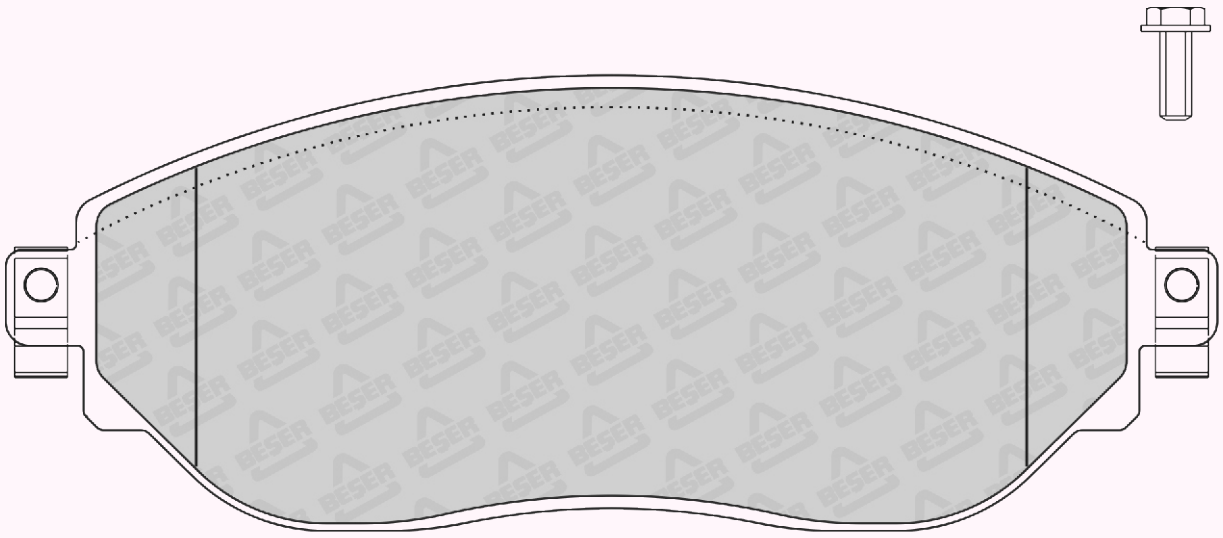

160 x 60,1

REFERENCE	T(mm)	REMARKS	MAKE	F/R	WVA No
4228	19	4 PADS PLAIN	AUDI-SEAT-SKODA VW	F	25086 25683 25684

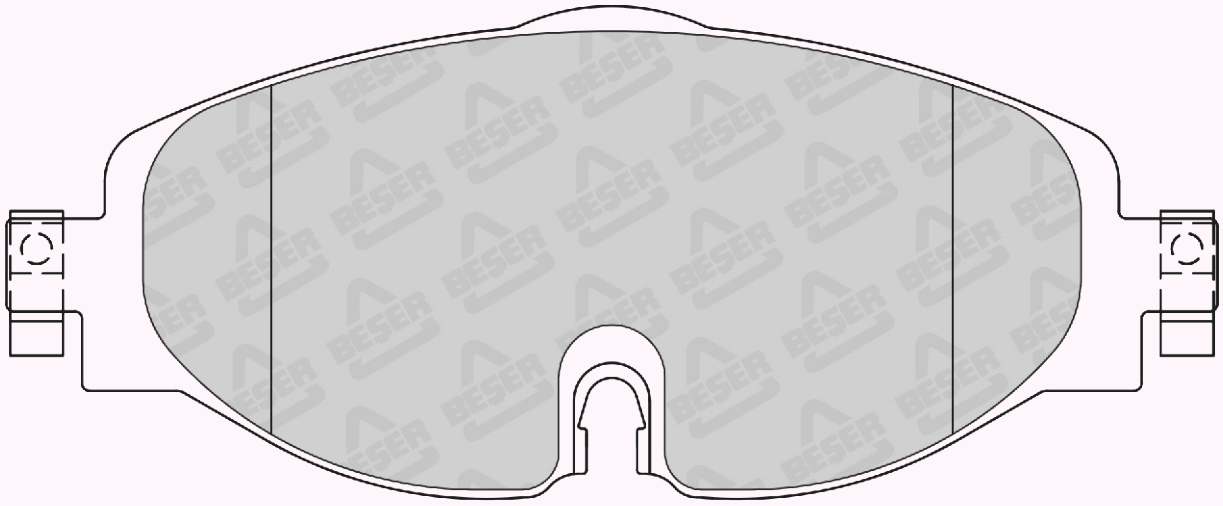

160 x 65

REFERENCE	T(mm)	REMARKS	MAKE	F/R	WVA No
4229	15,5	2 PADS WITH WEAR SENSOR	NISSAN	F	-

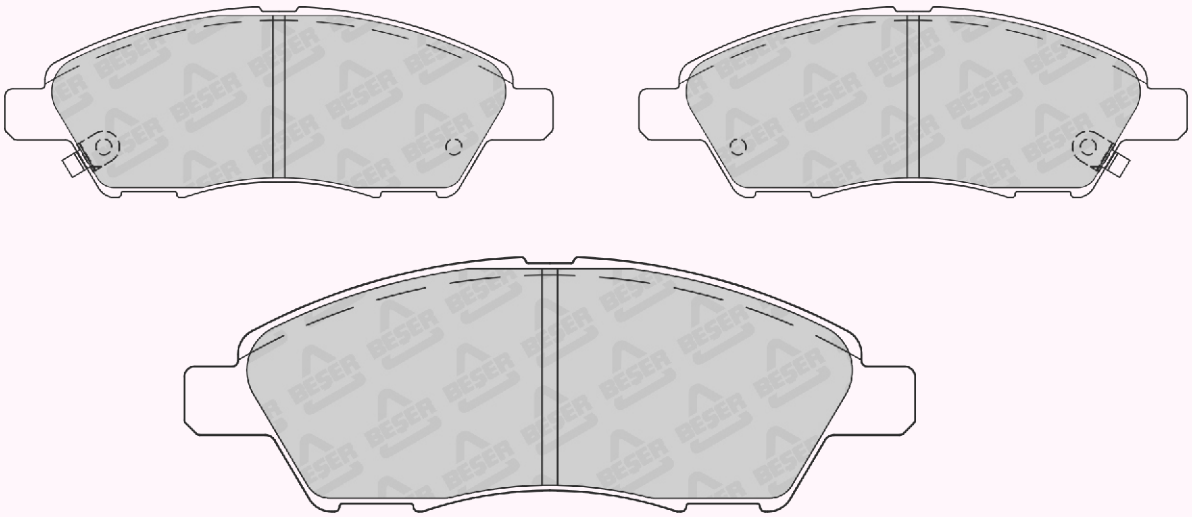

138,5 x 48,3
(NOT SCALE)

REFERENCE	T(mm)	REMARKS	MAKE	F/R	WVA No
4230	18,8	2 PADS WITH WEAR SENSOR	BUICK(SGM) - CHEVROLET - HOLDEN OPEL - VAUXHALL	F	25031 25032 25033

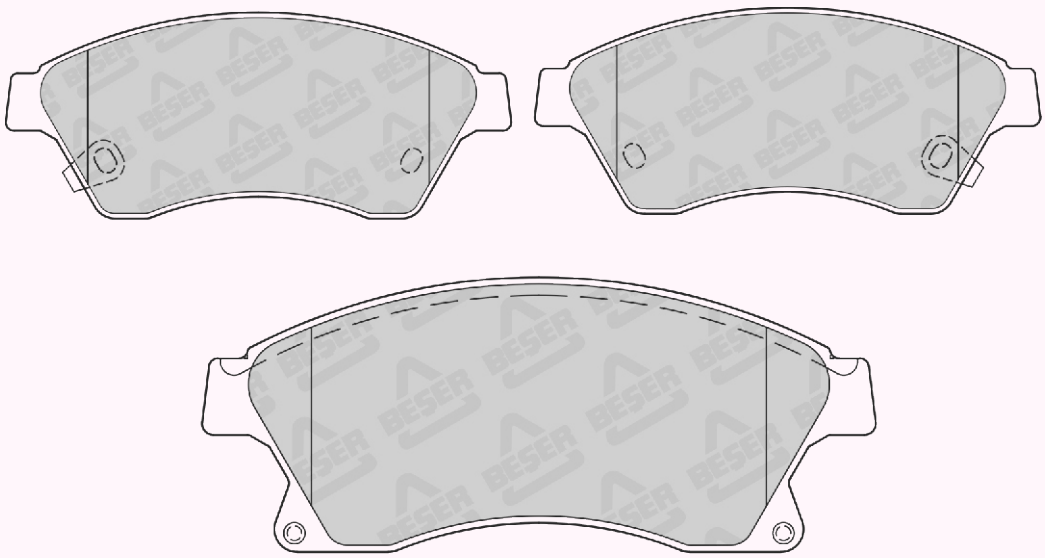

148,7 x 60,3
(NOT SCALE)

REFERENCE	T(mm)	REMARKS	MAKE	F/R	WVA No
4231	16,2	2 PADS WITH WEAR SENSOR	HYUNDAI	F	-

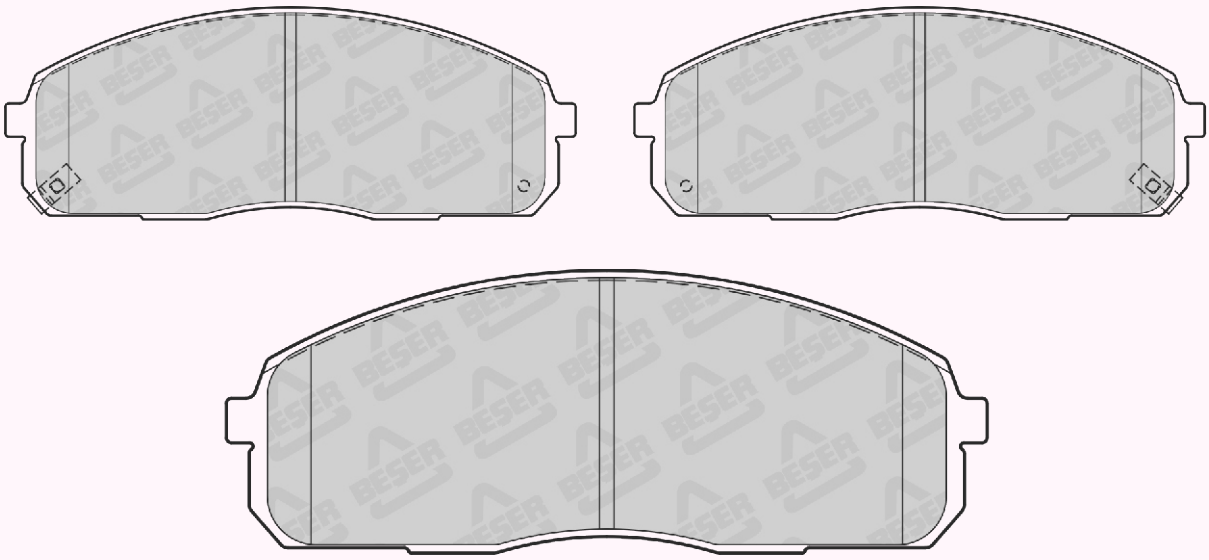

154,2 x 57,5
(NOT SCALE)

REFERENCE	T(mm)	REMARKS	MAKE	F/R	WVA No
4232	16,9	4 PADS PLAIN	ACURA - HONDA NISSAN	F	23722 24055 23729 24090 24053 24091 24054

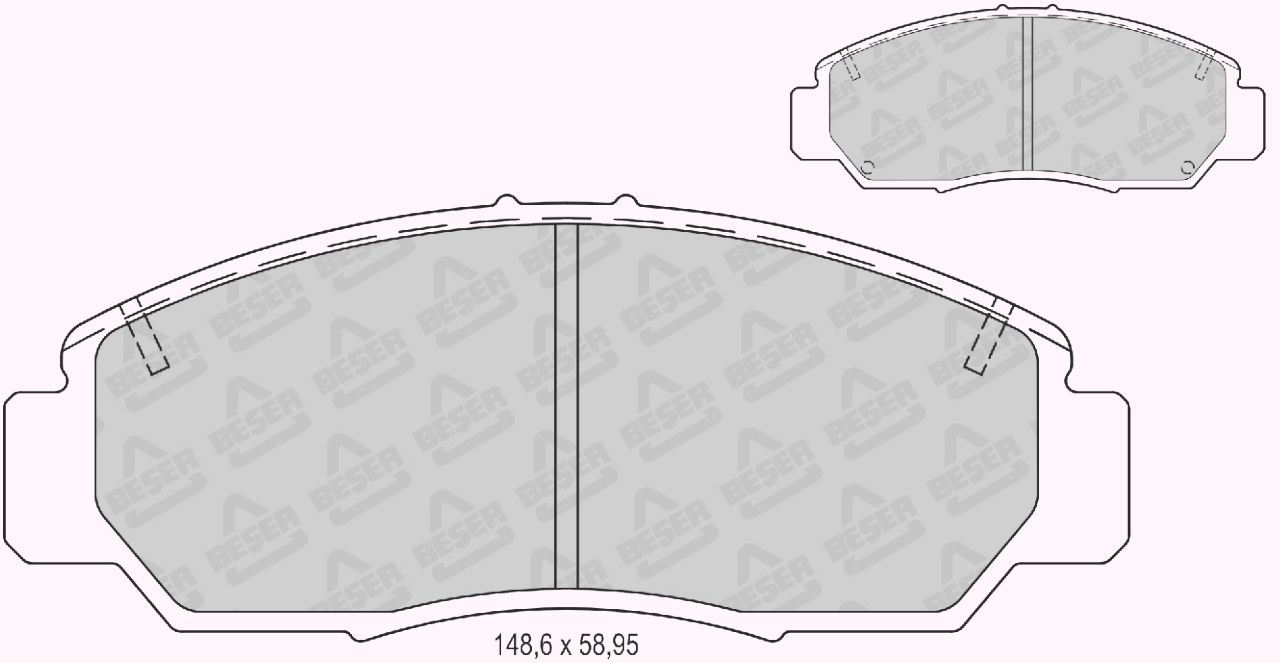

148,6 x 58,95

REFERENCE	T(mm)	REMARKS	MAKE	F/R	WVA No
4233	16,5	2 PADS WITH WEAR SENSOR	KIA	F	25116 25644 25645 25646

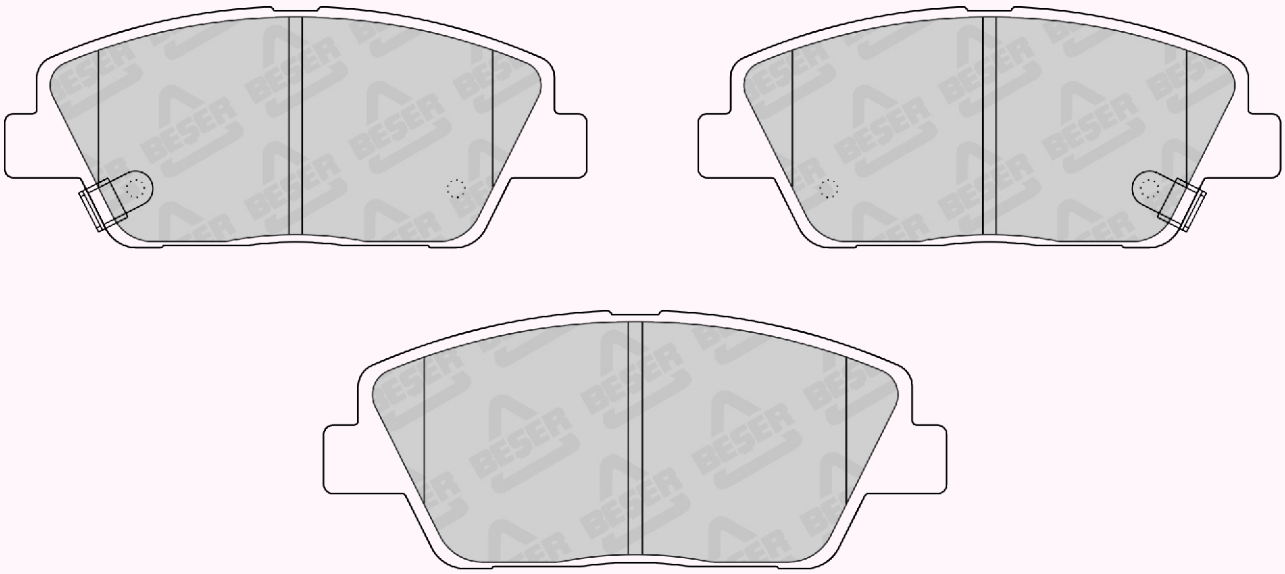

132,75 x 54,97
(NOT SCALE)

REFERENCE	T(mm)	REMARKS	MAKE	F/R	WVA No
4234	19	2 PADS WITH WEAR SENSOR	FIAT	F	22397 22398 22399

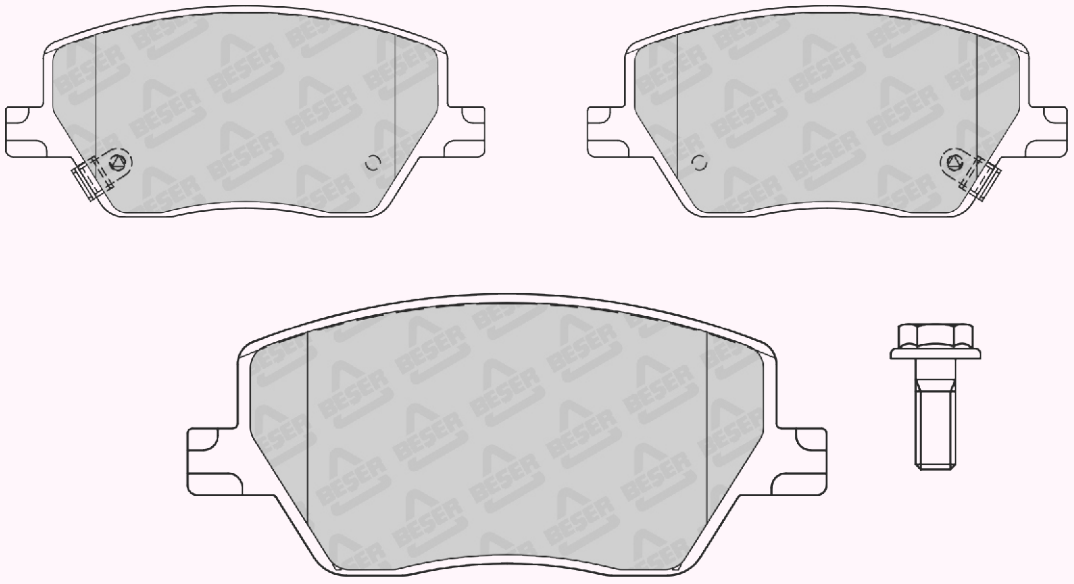

132,8 x 58,5
(NOT SCALE)

REFERENCE	T(mm)	REMARKS	MAKE	F/R	WVA No
4239	16	4 PADS PLAIN	TOYATA	-	22310

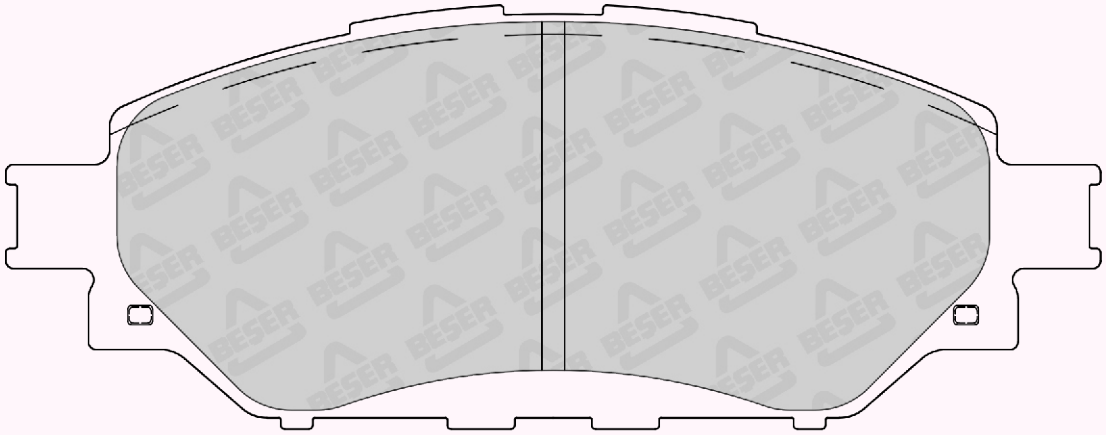

144,7 x 56,1

REFERENCE	T(mm)	REMARKS	MAKE	F/R	WVA No
4240	17,5	4 PADS PLAIN	MERCEDES BENZ	F	23960

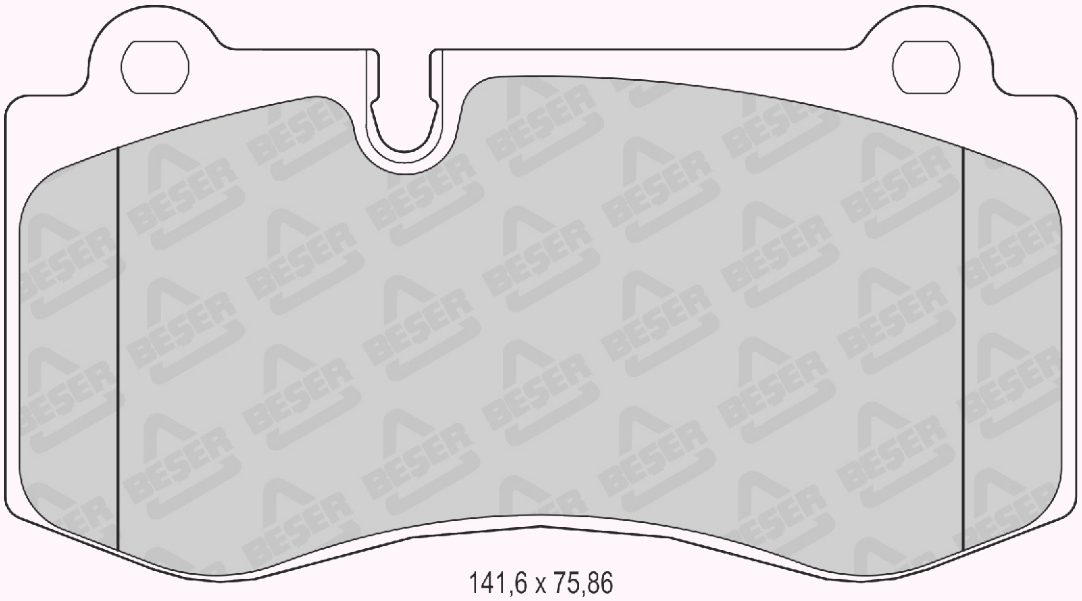

141,6 x 75,86

REFERENCE	T(mm)	REMARKS	MAKE	F/R	WVA No
4241	16,4	4 PADS PLAIN	AUDI - SEAT VW	R	22171 22172 25008 25010

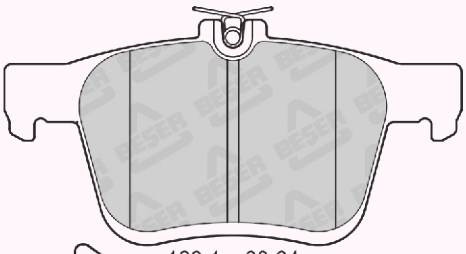

123,1 x 60,64
(NOT SCALE)

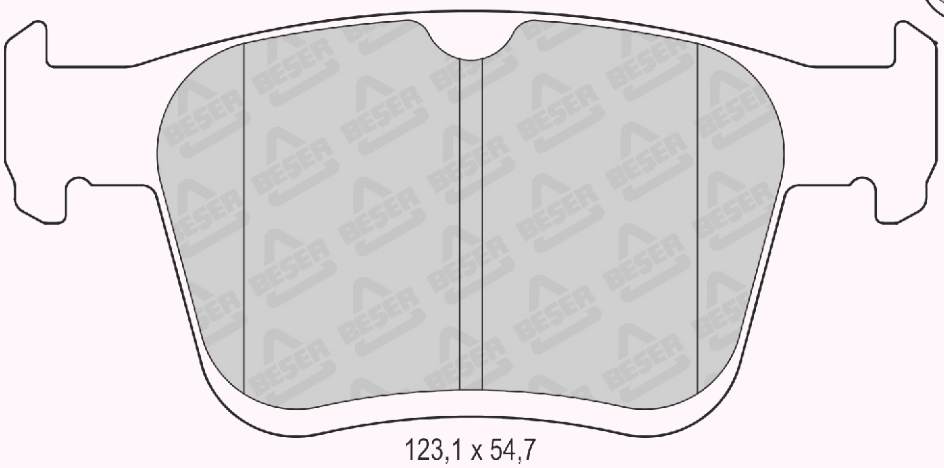

123,1 x 54,7

REFERENCE	T(mm)	REMARKS	MAKE	F/R	WVA No
4242	15	4 PADS PLAIN	MAZDA	R	24581 25112 25786 25971

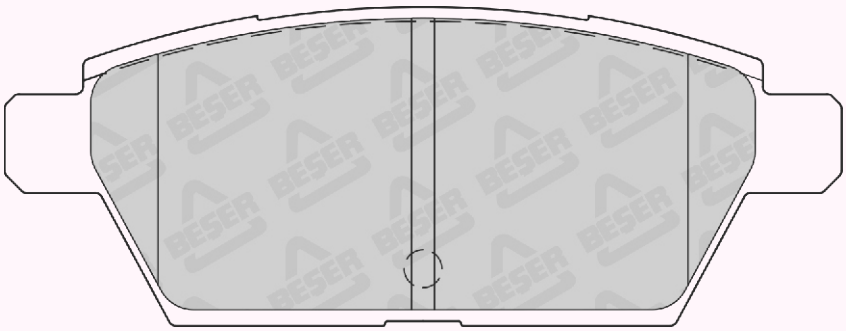

110,6 x 42

REFERENCE	T(mm)	REMARKS	MAKE	F/R	WVA No
4244	20,75	2 PADS WITH WEAR SENSOR	MITSUBISHI	F	-

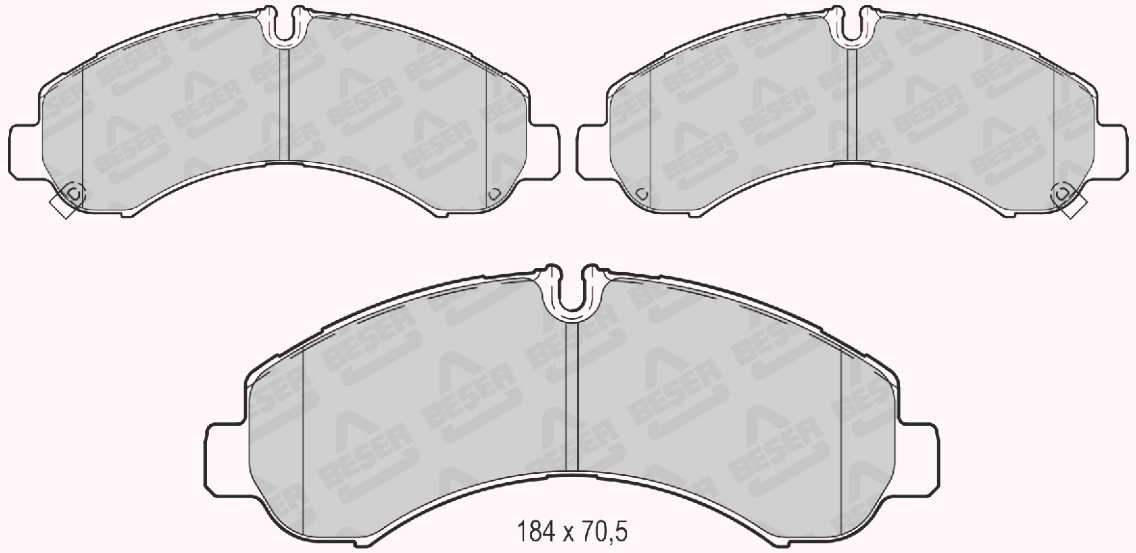

REFERENCE	T(mm)	REMARKS	MAKE	F/R	WVA No
4244/1	20,75	2 PADS WITH WEAR SENSOR	MITSUBISHI	F	-

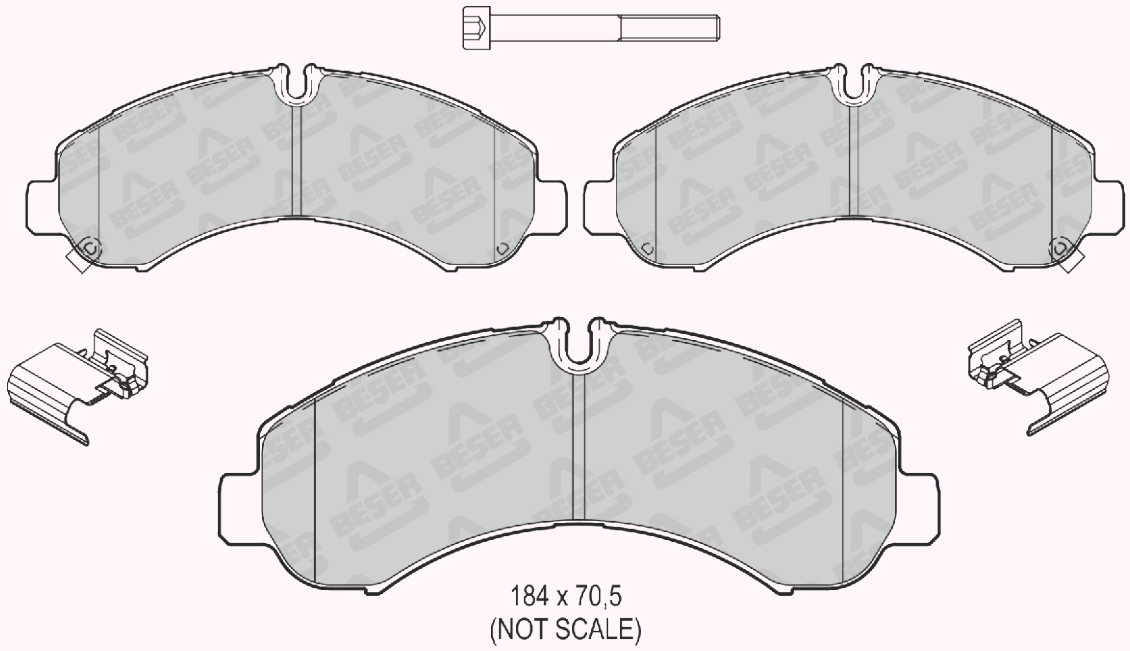

REFERENCE	T(mm)	REMARKS	MAKE	F/R	WVA No
4245	19,8	2 PADS WITH WEAR SENSOR	MITSUBISHI	R	-

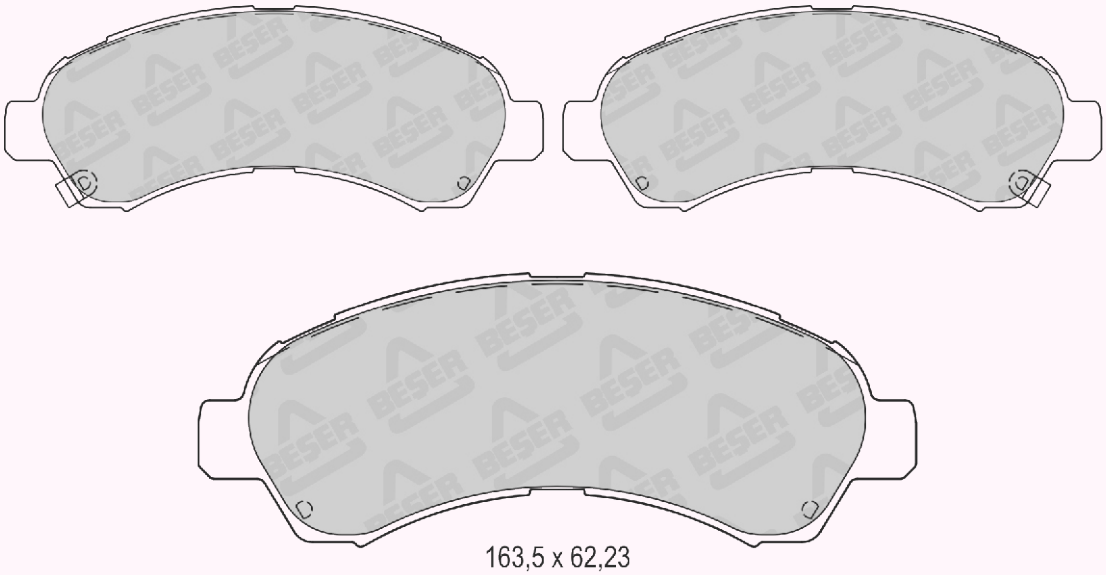

163,5 x 62,23
(NOT SCALE)

REFERENCE	T(mm)	REMARKS	MAKE	F/R	WVA No
4245/1	19,8	2 PADS WITH WEAR SENSOR	MITSUBISHI	R	-

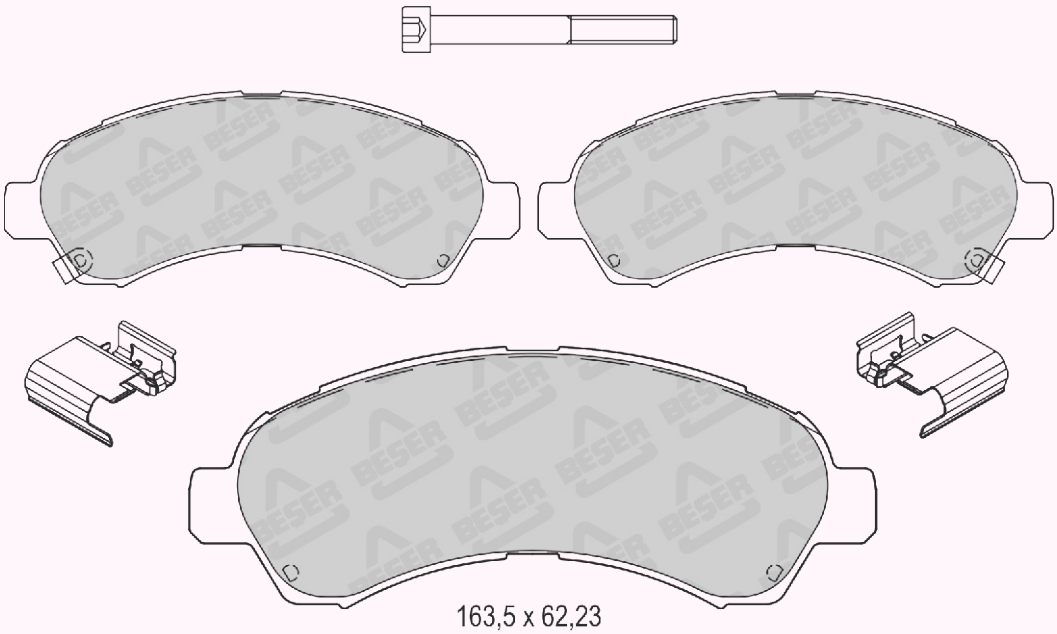

163,5 x 62,23
(NOT SCALE)

REFERENCE	T(mm)	REMARKS	MAKE	F/R	WVA No
4246	17,4	2 PADS WITH WEAR SENSOR	FIAT	R	22449 22450 22451

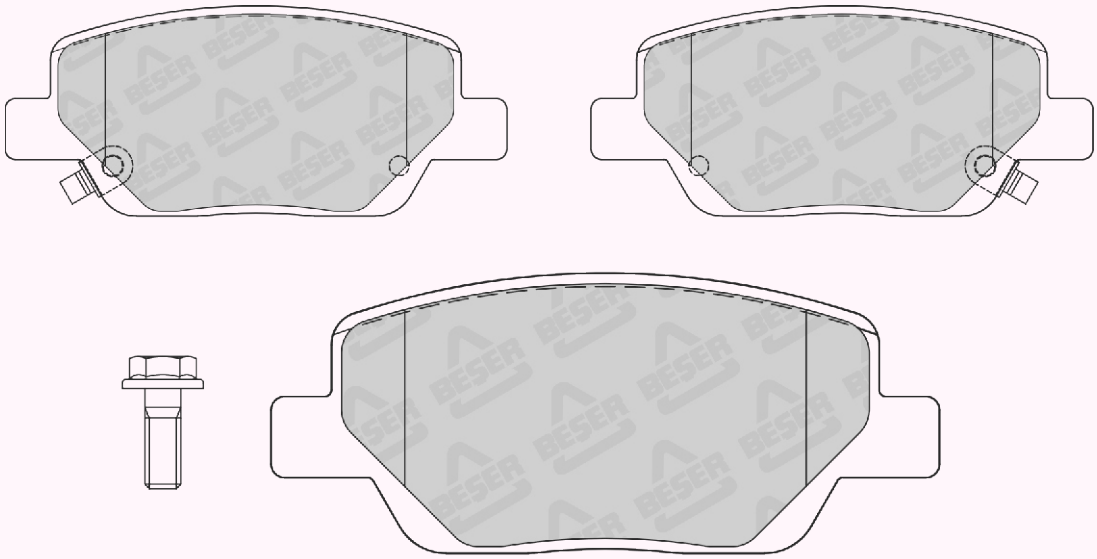

99,85 x 41,85
(NOT SCALE)

REFERENCE	T(mm)	REMARKS	MAKE	F/R	WVA No
4247	17,8	4 PADS PLAIN	MERCEDES BENZ	R	24253 24254

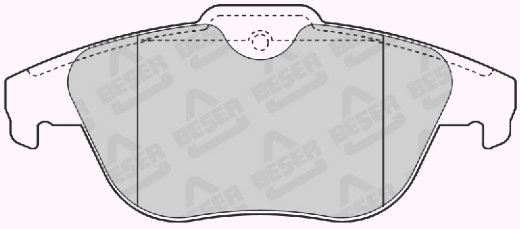

122,6 x 52,64
(NOT SCALE)

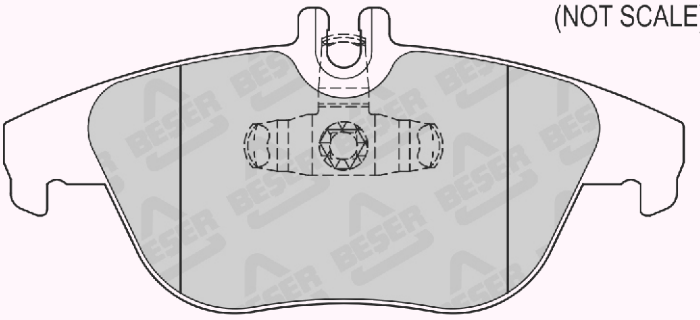

122,6 x 54,54
(NOT SCALE)

REFERENCE	T(mm)	REMARKS	MAKE	F/R	WVA No
4248	19,4	4 PADS PLAIN	MERCEDES BENZ	F	24207 24306

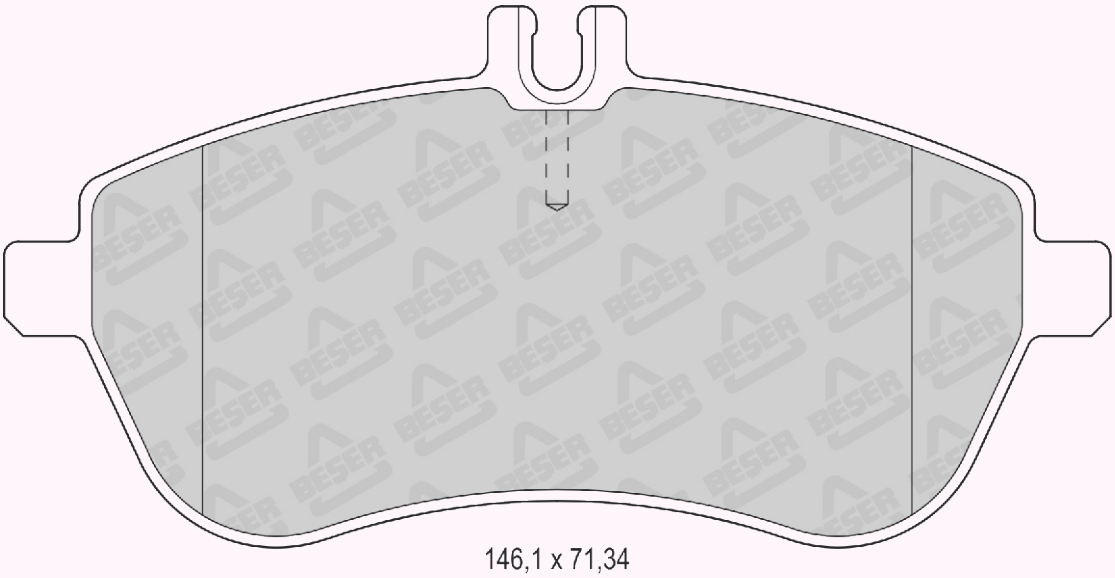

146,1 x 71,34

REFERENCE	T(mm)	REMARKS	MAKE	F/R	WVA No
4249	19	4 PADS PLAIN	MERCEDES BENZ	F	24208 24311 24209 24456 24310

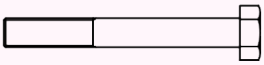

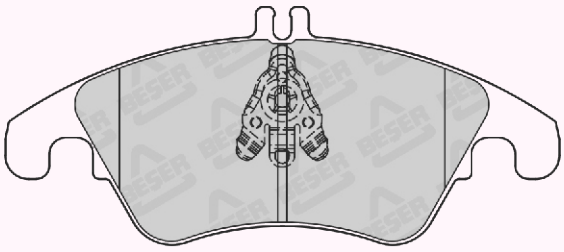

188,1 x 80,8
(NOT SCALE)

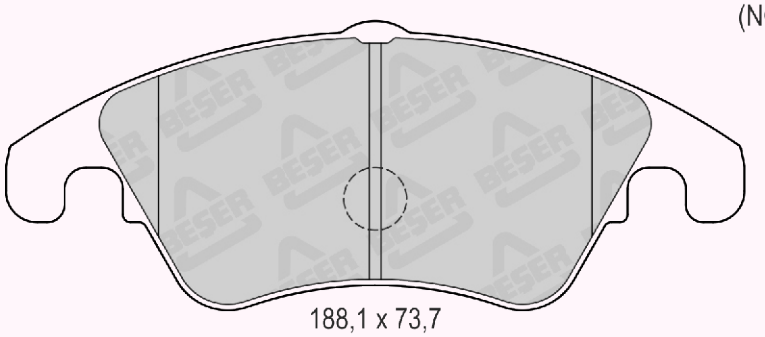

188,1 x 73,7
(NOT SCALE)

REFERENCE	T(mm)	REMARKS	MAKE	F/R	WVA No
4251	21	2 PADS WITH WEAR SENSOR	HYUNDAI	F	22420 22421 22422 22499

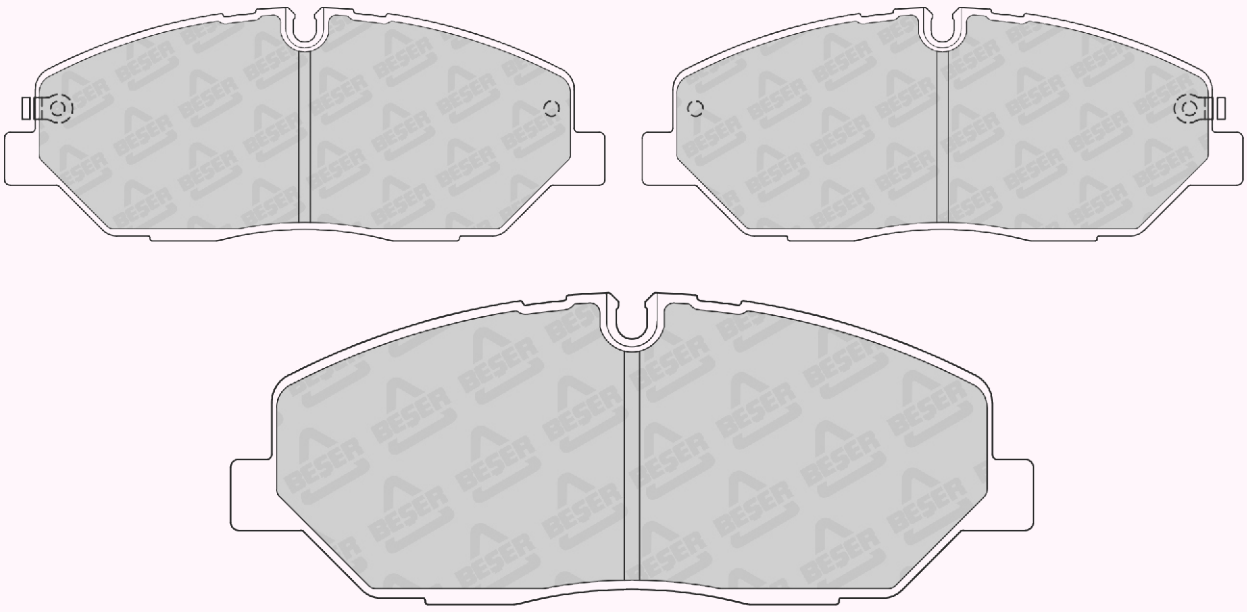

156,8 x 60,84
(NOT SCALE)

REFERENCE	T(mm)	REMARKS	MAKE	F/R	WVA No
4251/1	21	4 PADS PLAIN	HYUNDAI	F	22420 22421 22422 22499

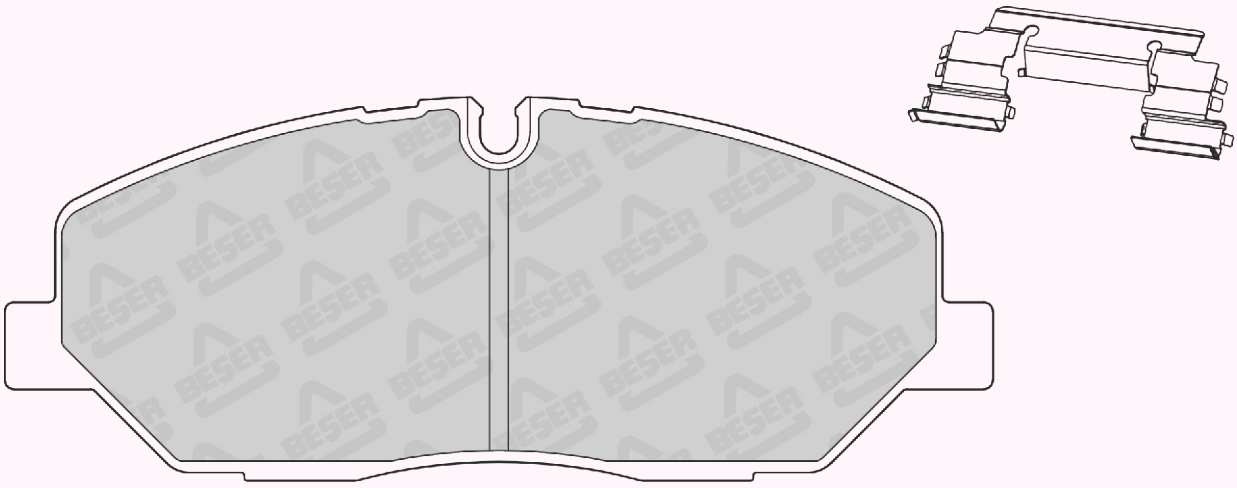

156,8 x 60,84
(NOT SCALE)

REFERENCE	T(mm)	REMARKS	MAKE	F/R	WVA No
4252	17,7	2 PADS WITH WEAR SENSOR	CHEVROLET	-	-

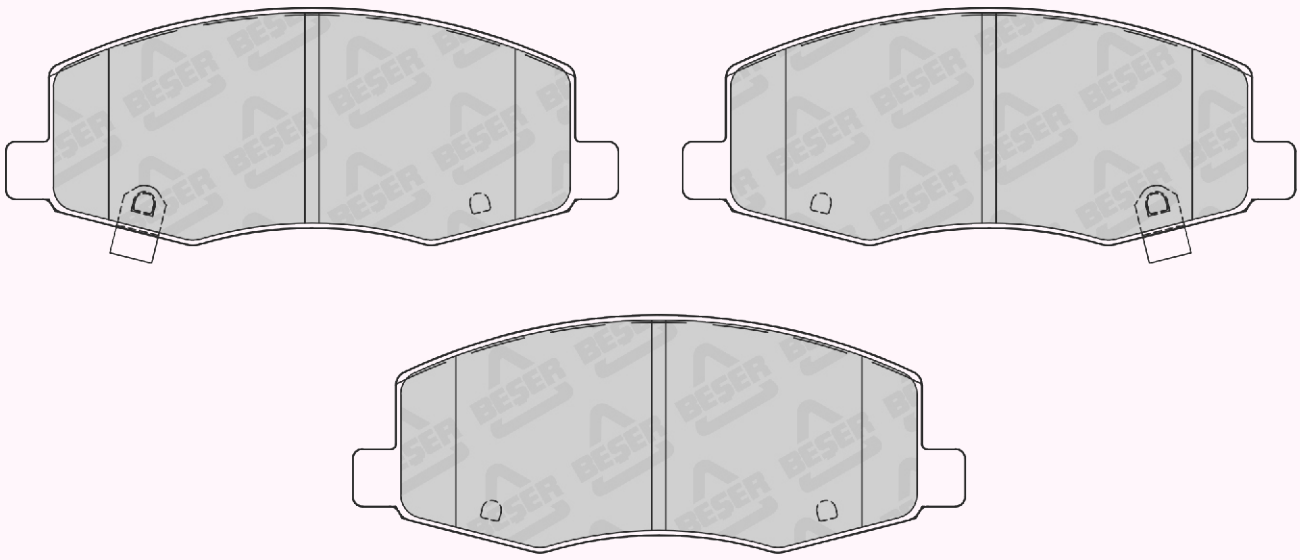

128 x 49,65
(NOT SCALE)

REFERENCE	T(mm)	REMARKS	MAKE	F/R	WVA No
4253	17,2	4 PADS PLAIN	DACIA - LADA RENAULT	F	22525 22526

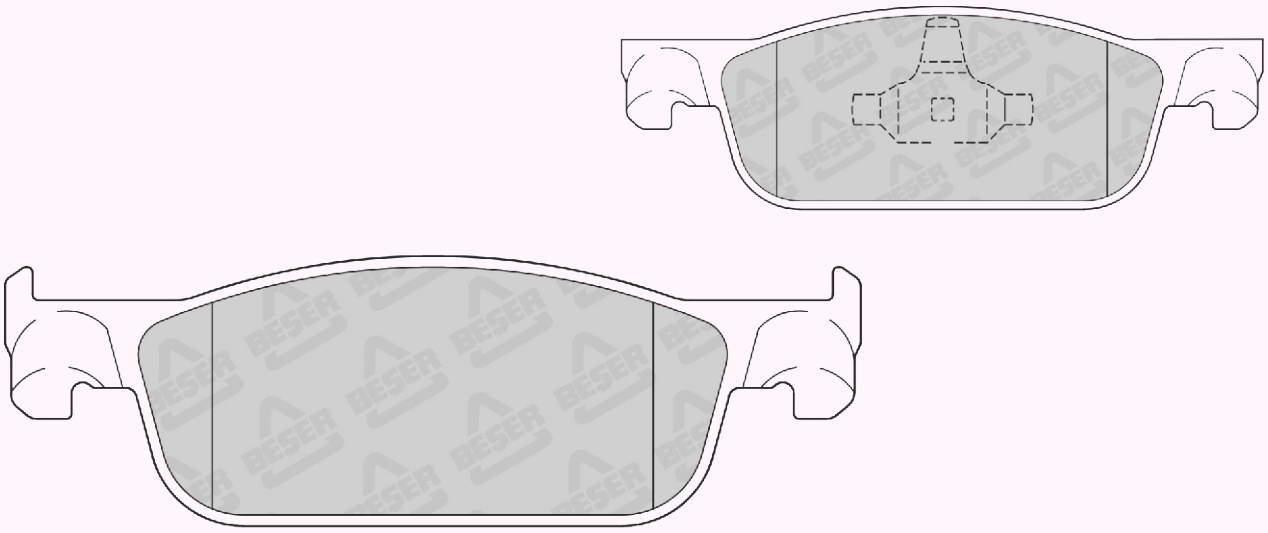

155 x 49
(NOT SCALE)

REFERENCE	T(mm)	REMARKS	MAKE	F/R	WVA No
4254	15,3	4 PADS PLAIN	TOYOTA	R	25481

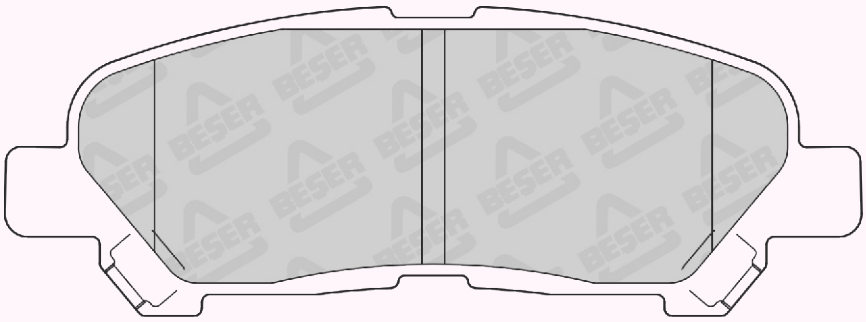

113,20 x 40,73

REFERENCE	T(mm)	REMARKS	MAKE	F/R	WVA No
4255	17,5	4 PADS PLAIN	LEXUS - SCION TOYOTA	F	24452

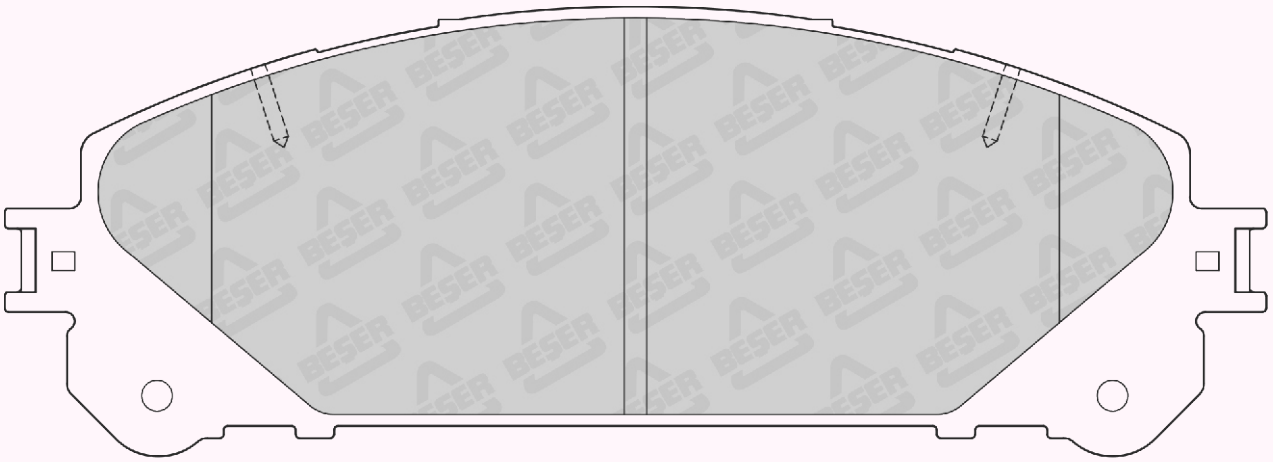

166,6 x 59,34

REFERENCE	T(mm)	REMARKS	MAKE	F/R	WVA No
4256	15,2	4 PADS PLAIN	LEXUS - TOYOTA	R	24918

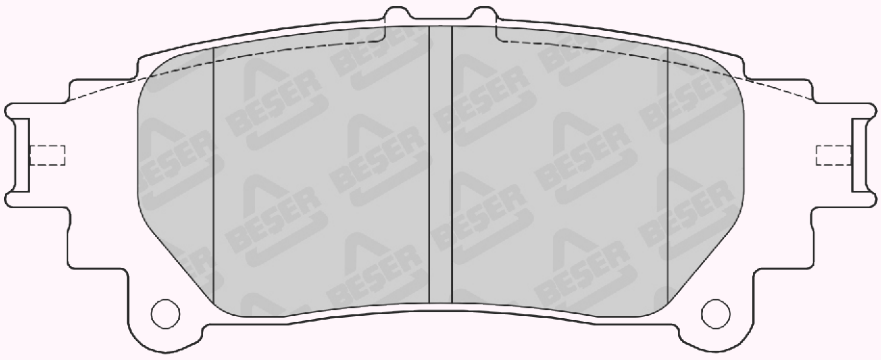

115,1 x 45,59

REFERENCE	T(mm)	REMARKS	MAKE	F/R	WVA No
4258	16	2 PADS WITH WEAR SENSOR	SCION - SUBARU TOYOTA	R	24463 24854 24855

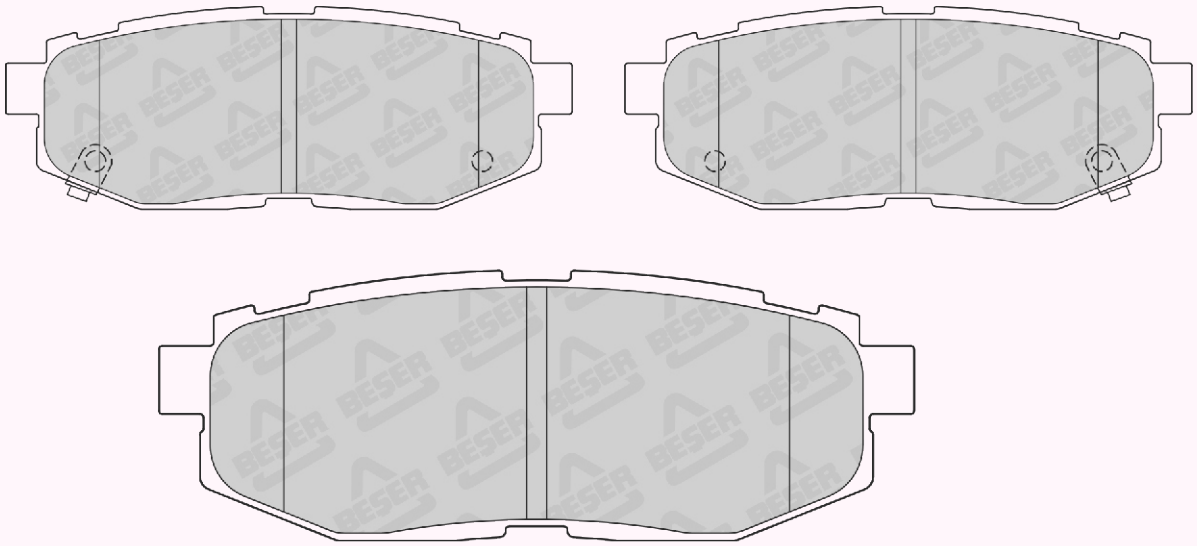

110,5 x 39,51
(NOT SCALE)

REFERENCE	T(mm)	REMARKS	MAKE	F/R	WVA No
4259	18,9	4 PADS PLAIN	AUDI	F	22252 24408 24409

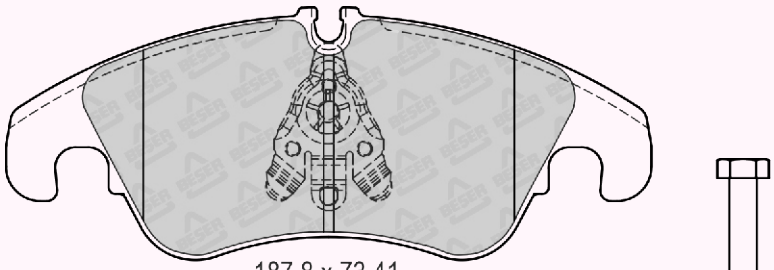

187,8 x 73,41
(NOT SCALE)

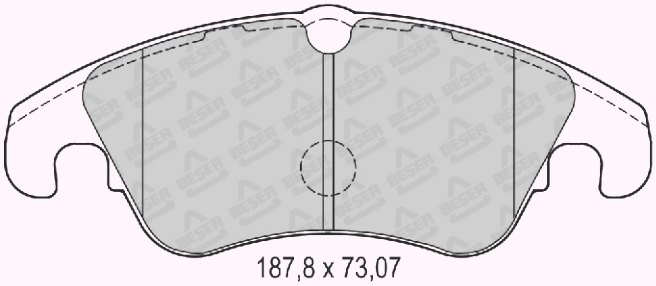

187,8 x 73,07
(NOT SCALE)

REFERENCE	T(mm)	REMARKS	MAKE	F/R	WVA No
4260	17,5	4 PADS PLAIN	AUDI	R	24606 25214

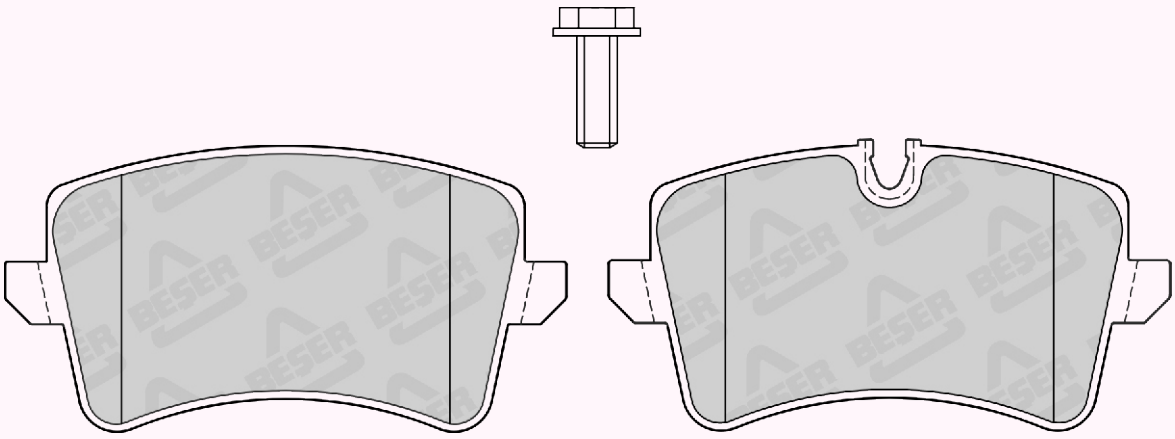

116,4 x 59,21
(NOT SCALE)

116,4 x 60,26
(NOT SCALE)

REFERENCE	T(mm)	REMARKS	MAKE	F/R	WVA No
4265	16	2 PADS WITH WEAR SENSOR	KIA	F	25365 25366 25367

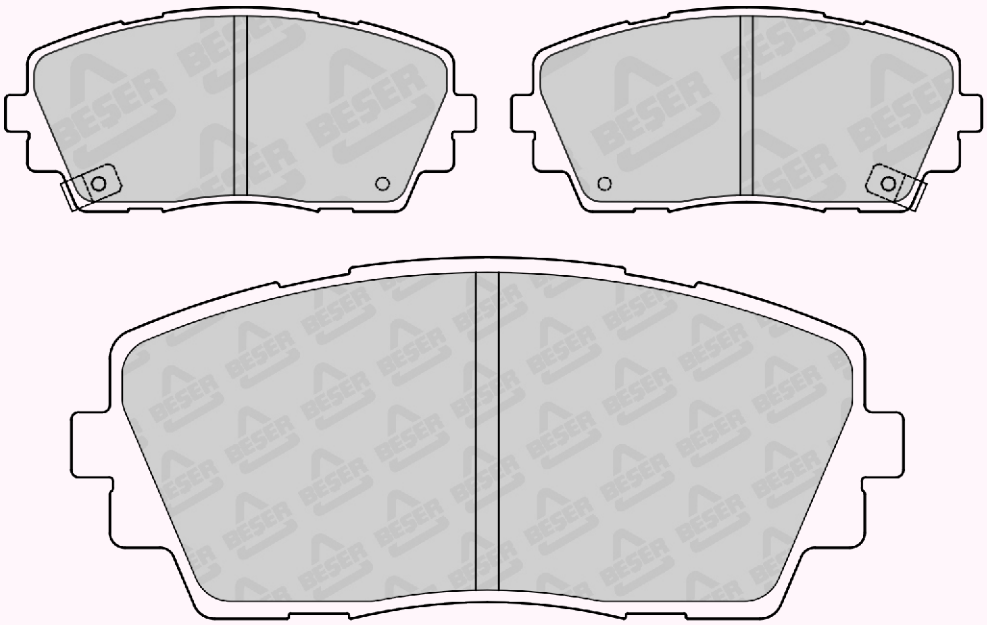

REFERENCE	T(mm)	REMARKS	MAKE	F/R	WVA No
4269	15,9	2 PADS WITH WEAR SENSOR	KIA	F	23873 23874 23875

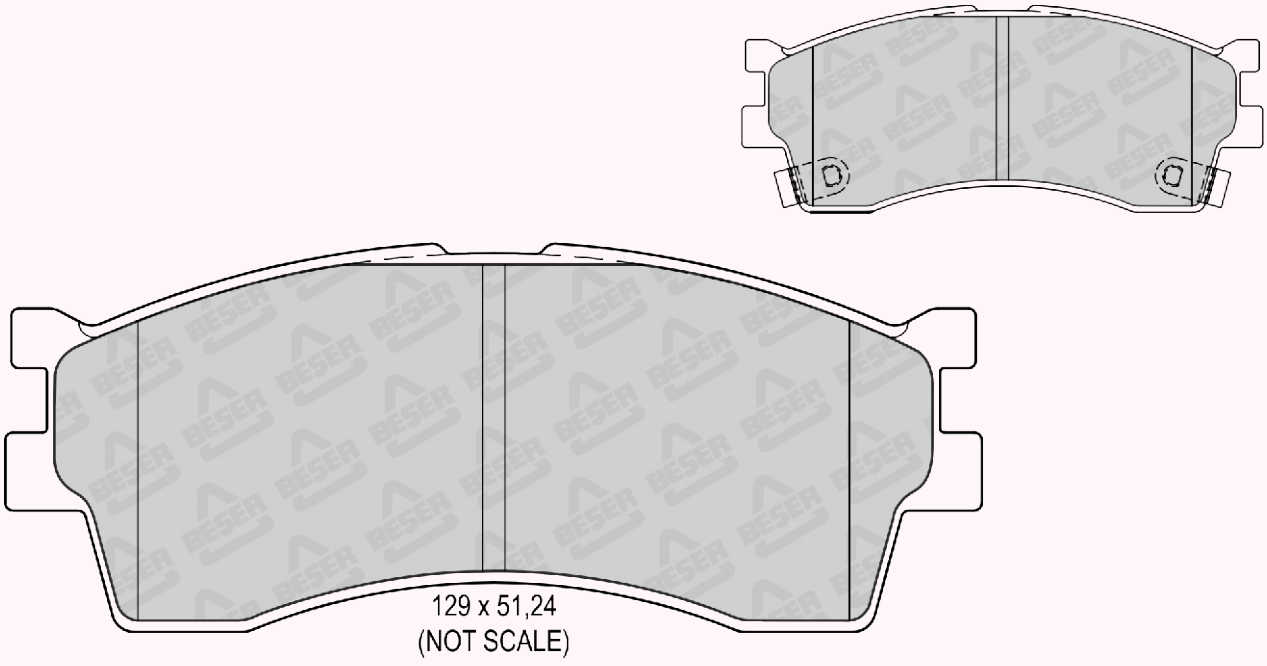

REFERENCE	T(mm)	REMARKS	MAKE	F/R	WVA No
4270	14,7	4 PADS PLAIN	FORD - LINCOLN REX MOTORCYCLES - SKODA	R	22231 25798 22531 25799

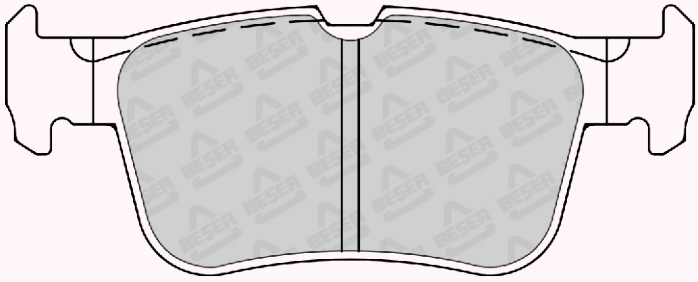

123,1 x 48,33
(NOT SCALE)

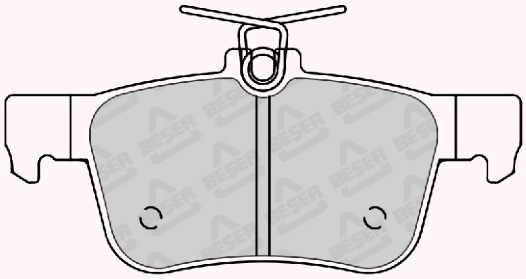

123,1 x 53,53
(NOT SCALE)

REFERENCE	T(mm)	REMARKS	MAKE	F/R	WVA No
4271	15,5	4 PADS PLAIN	MITSUBISHI	F	23487

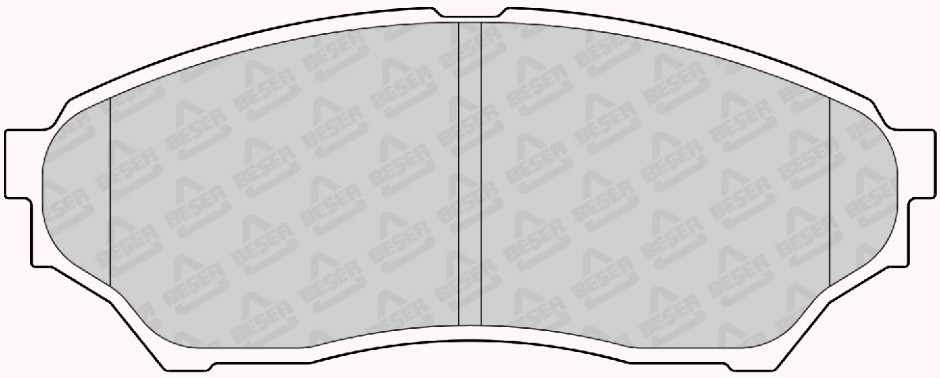

122,9x47,88

REFERENCE	T(mm)	REMARKS	MAKE	F/R	WVA No
4274	16,9	4 PADS PLAIN	LEXUS	F	23499 23500

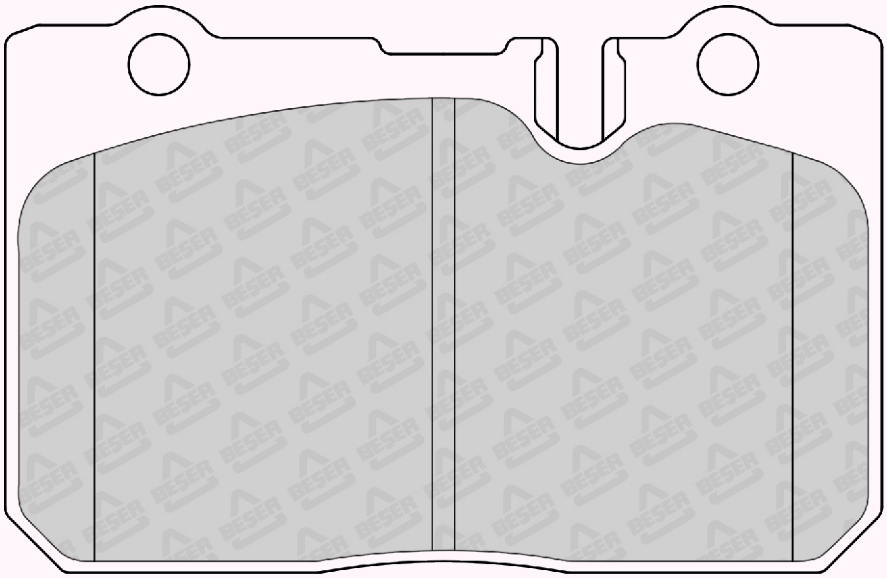

115,8 x 74,6

REFERENCE	T(mm)	REMARKS	MAKE	F/R	WVA No
4275	14,9	4 PADS PLAIN	LEXUS - TOYOTA	R	21786 21787

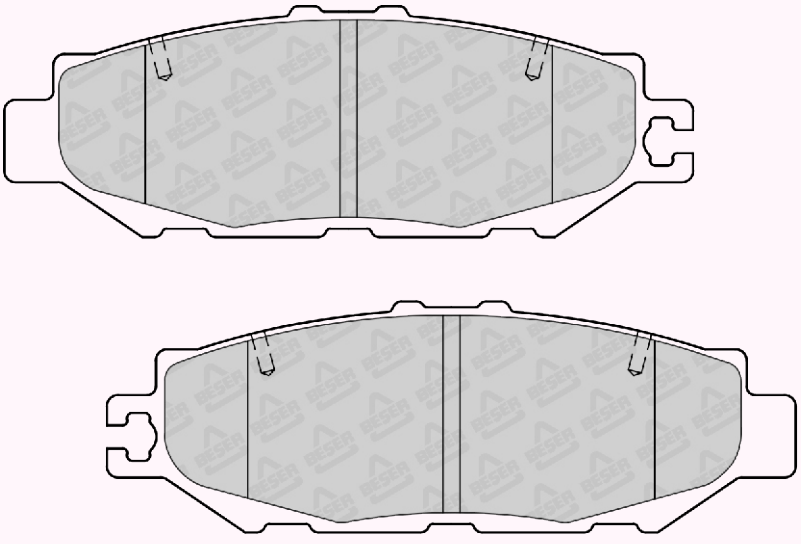

122,2 x 40,9
(NOT SCALE)

REFERENCE	T(mm)	REMARKS	MAKE	F/R	WVA No
4276	15,6	4 PADS PLAIN	LEXUS - TOYOTA	F	20325 24396 25383

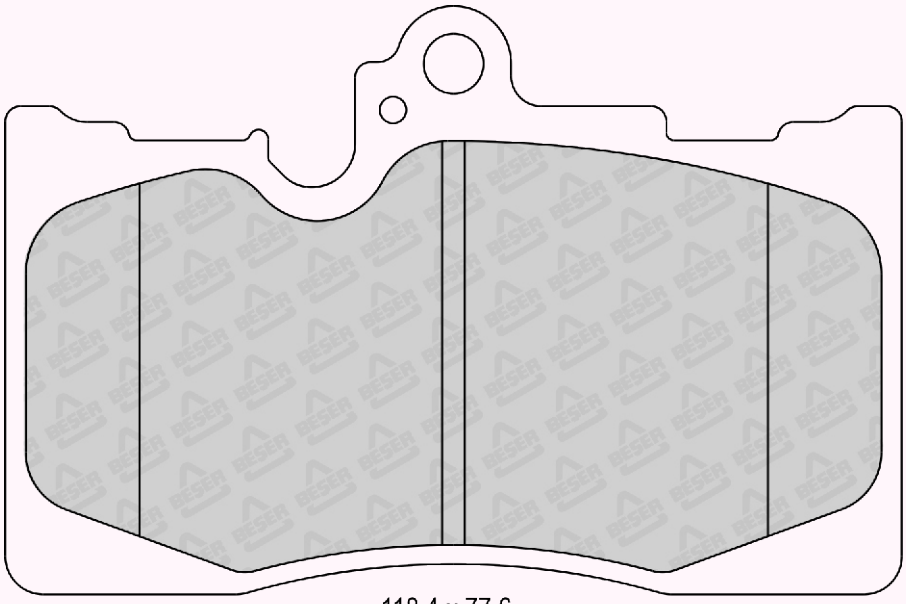

118,4 x 77,6

REFERENCE	T(mm)	REMARKS	MAKE	F/R	WVA No
4276/1	15,6	4 PADS PLAIN	LEXUS	F	23331 23812

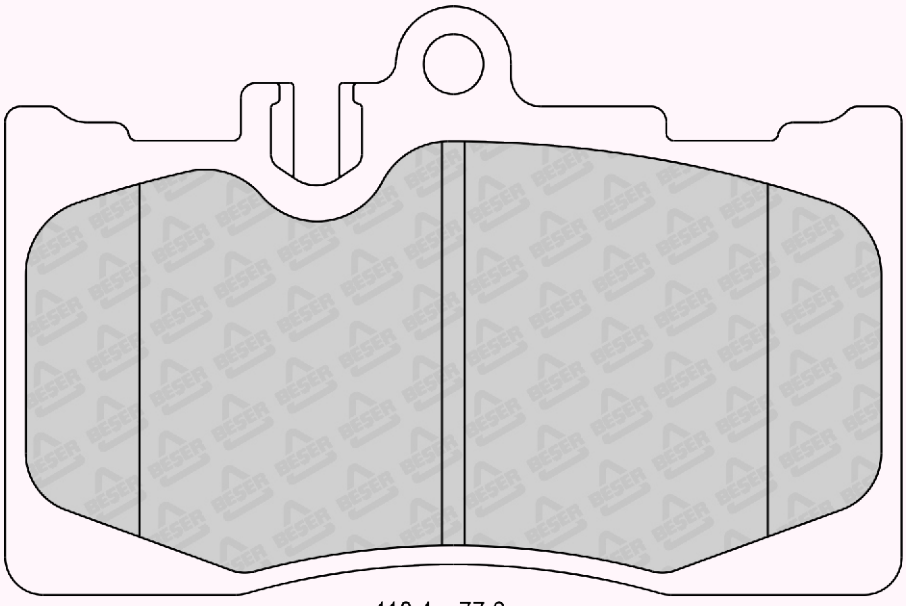

118,4 x 77,6

REFERENCE	T(mm)	REMARKS	MAKE	F/R	WVA No
4277	17,7	4 PADS PLAIN	LEXUS	R	24244

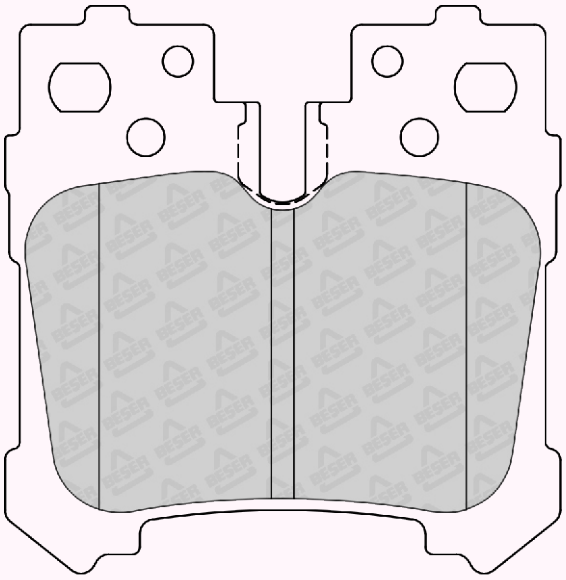

75 x 76,7
(NOT SCALE)

REFERENCE	T(mm)	REMARKS	MAKE	F/R	WVA No
4279	16,6	2 PADS WITH WEAR SENSOR	HONDA	R	25947 25948 25949

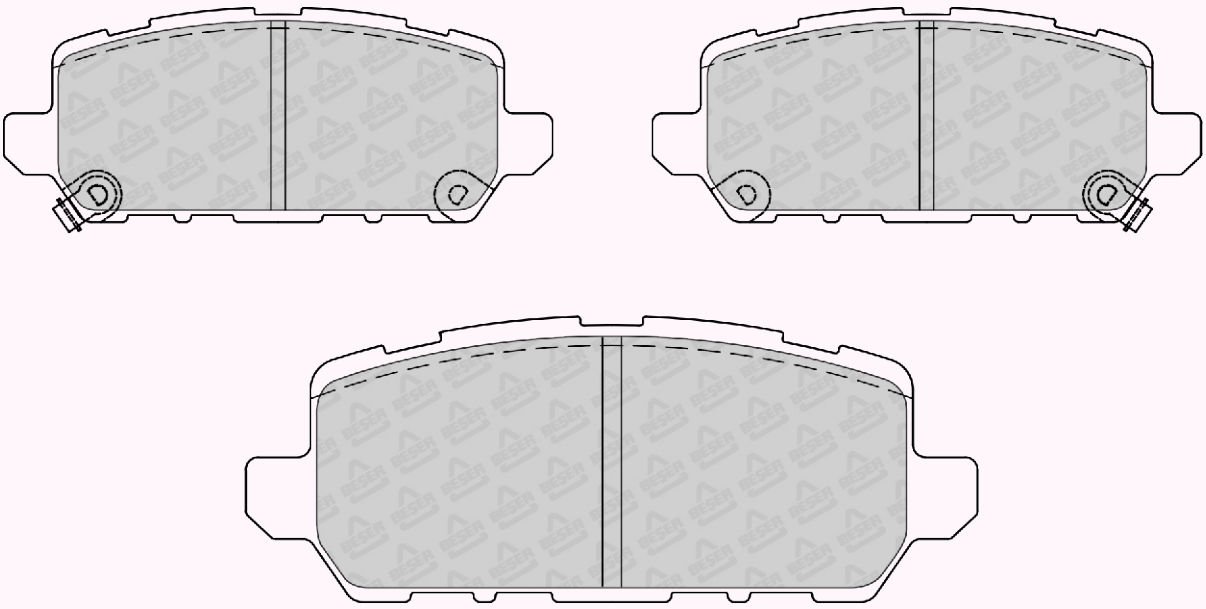

116,6 x 45,39
(NOT SCALE)

REFERENCE	T(mm)	REMARKS	MAKE	F/R	WVA No
4280	17,4	4 PADS PLAIN	RENAULT	F	22610

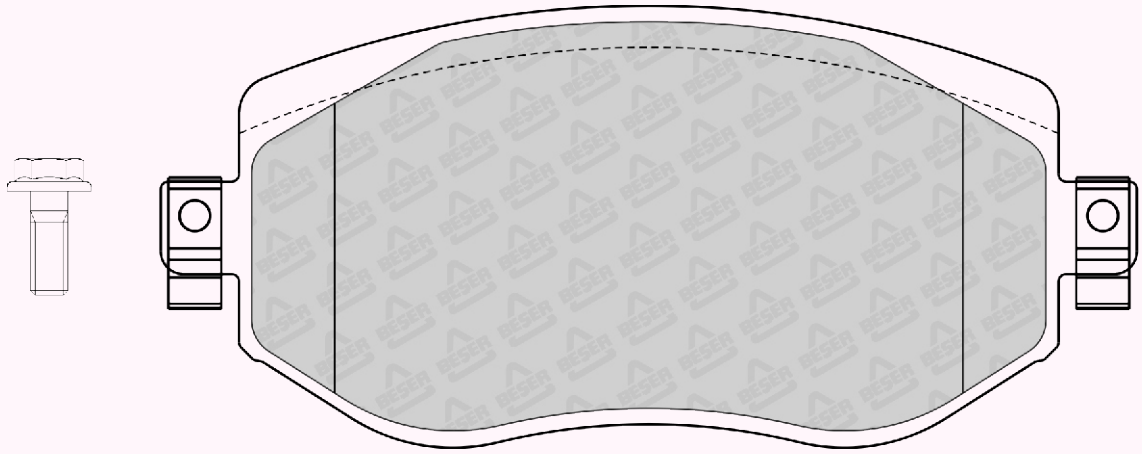

129 x 58,3
(NOT SCALE)

REFERENCE	T(mm)	REMARKS	MAKE	F/R	WVA No
4281	16	2 PADS WITH WEAR SENSOR	SMART	F	21998 23001 21999 23002

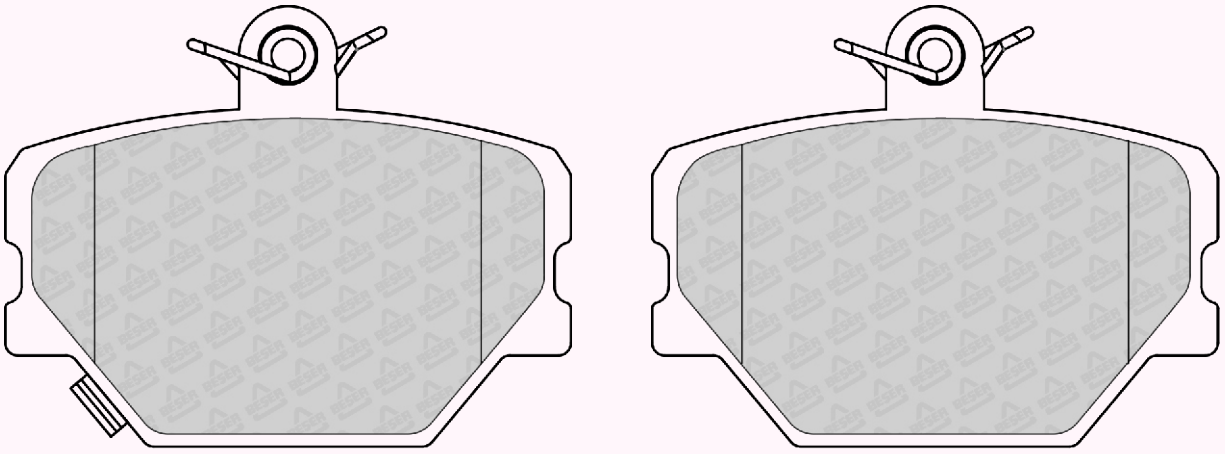

90 x 70
(NOT SCALE)

REFERENCE	T(mm)	REMARKS	MAKE	F/R	WVA No
4282	18,2	2 PADS WITH WEAR SENSOR	NISSAN - RENAULT	F	22065 25970

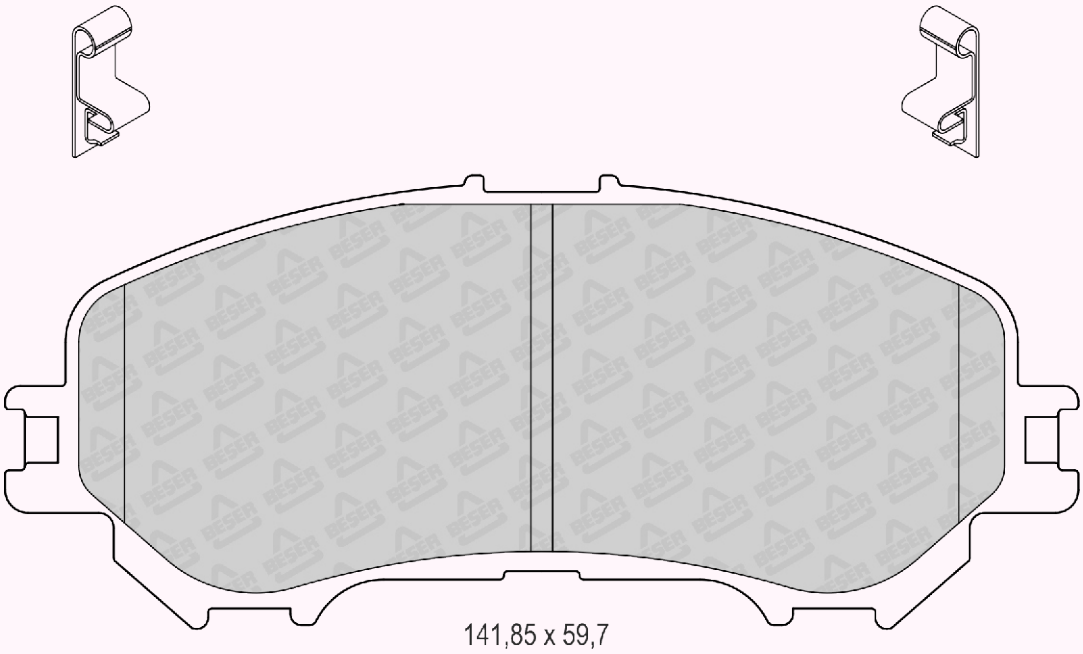

REFERENCE	T(mm)	REMARKS	MAKE	F/R	WVA No
4282/1	17	2 PADS WITH WEAR SENSOR	NISSAN - RENAULT	F	22065 25970

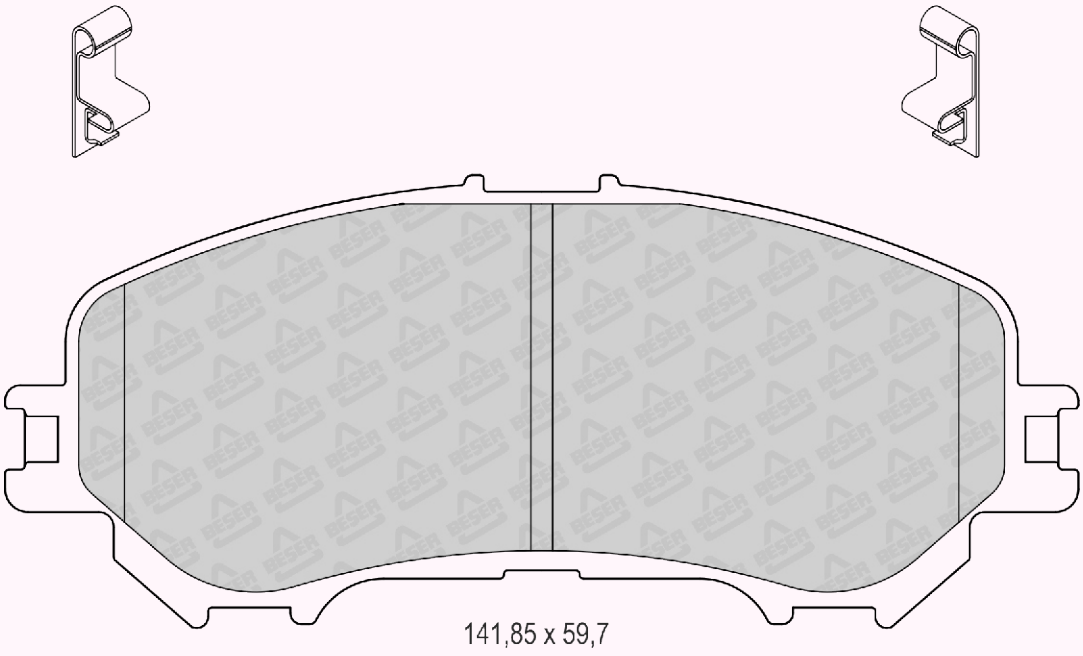

REFERENCE	T(mm)	REMARKS	MAKE	F/R	WVA No
4283	15,5	2 PADS WITH WEAR SENSOR	NISSAN - RENAULT	F	25965 25966 25967

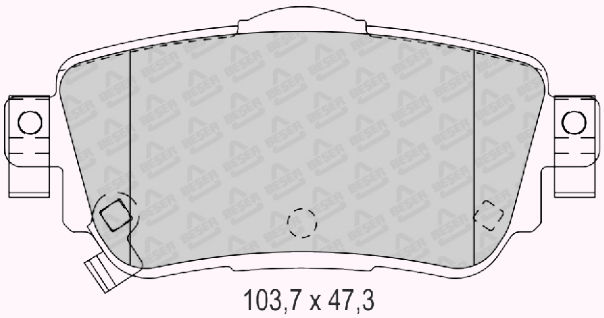

103,7 x 47,3
(NOT SCALE)

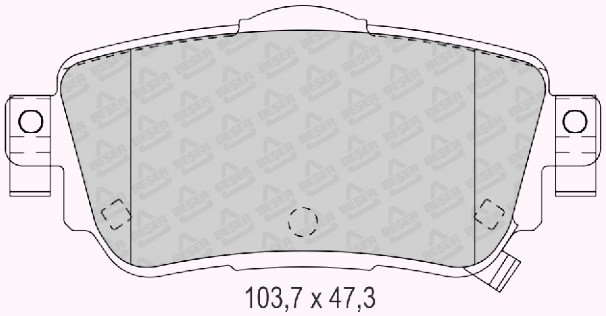

103,7 x 47,3
(NOT SCALE)

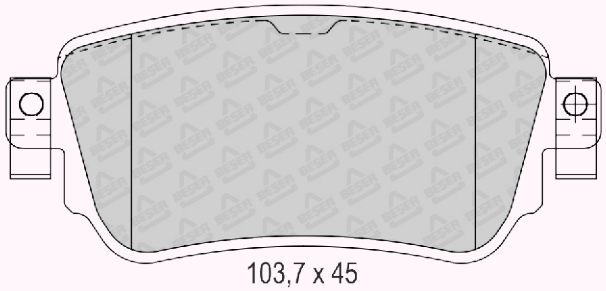

103,7 x 45
(NOT SCALE)

REFERENCE	T(mm)	REMARKS	MAKE	F/R	WVA No
4283/1	15	2 PADS WITH WEAR SENSOR	NISSAN - RENAULT	F	25965 25966 25967

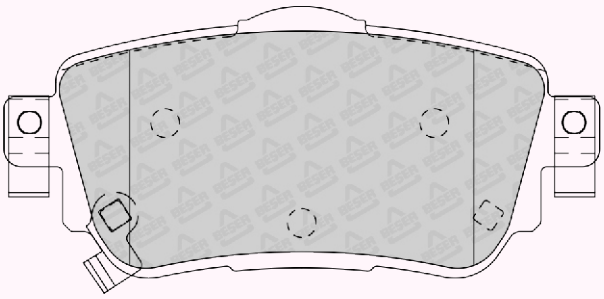

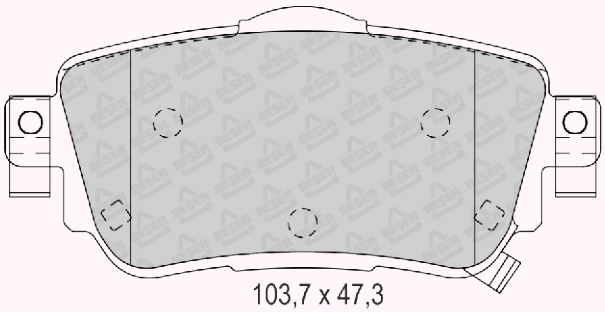

103,7 x 47,3
(NOT SCALE)

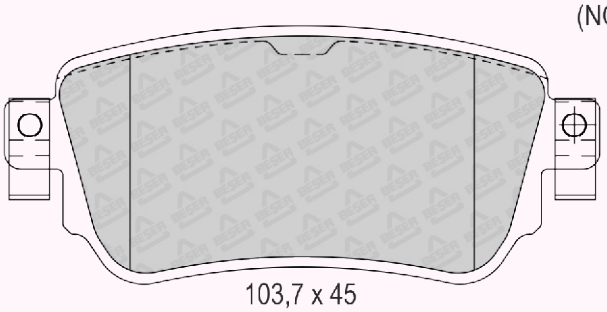

103,7 x 45
(NOT SCALE)

REFERENCE	T(mm)	REMARKS	MAKE	F/R	WVA No
4284	17	2 PADS WITH WEAR SENSOR	OPEL - VAUXHALL	F	22143 22144

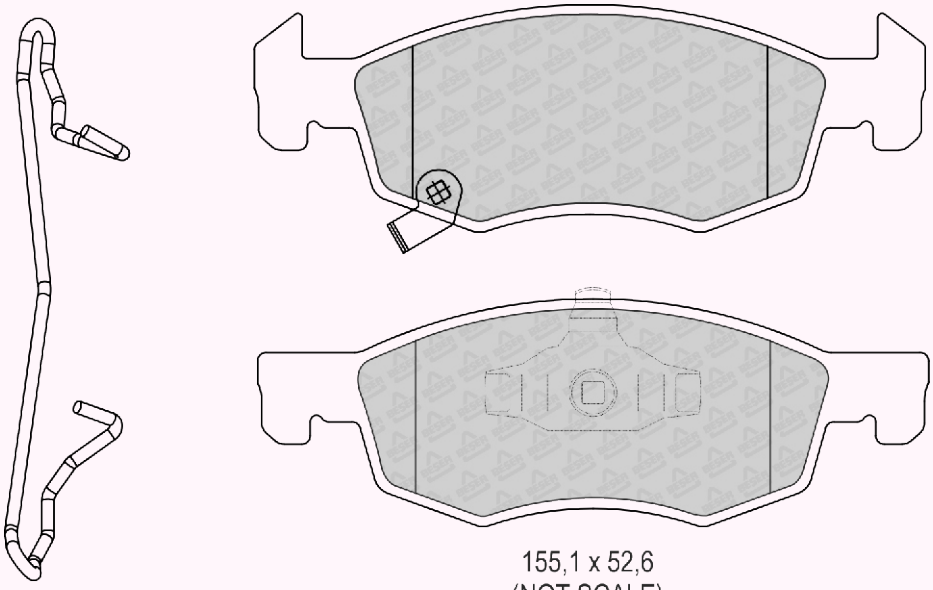

REFERENCE	T(mm)	REMARKS	MAKE	F/R	WVA No
4285	18	2 PADS WITH WEAR SENSOR	OPEL - VAUXHALL	F	22123 22124 22125

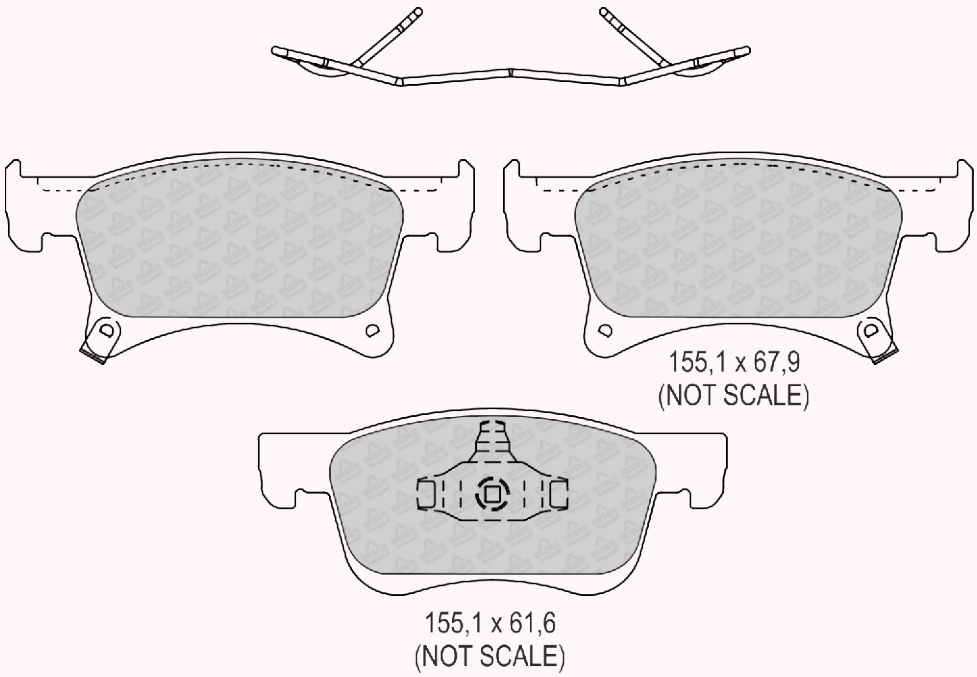

REFERENCE	T(mm)	REMARKS	MAKE	F/R	WVA No
4286	17,2	2 PADS WITH WEAR SENSOR	OPEL - VAUXHALL	R	22220 25819 22221 25820 25818 25973

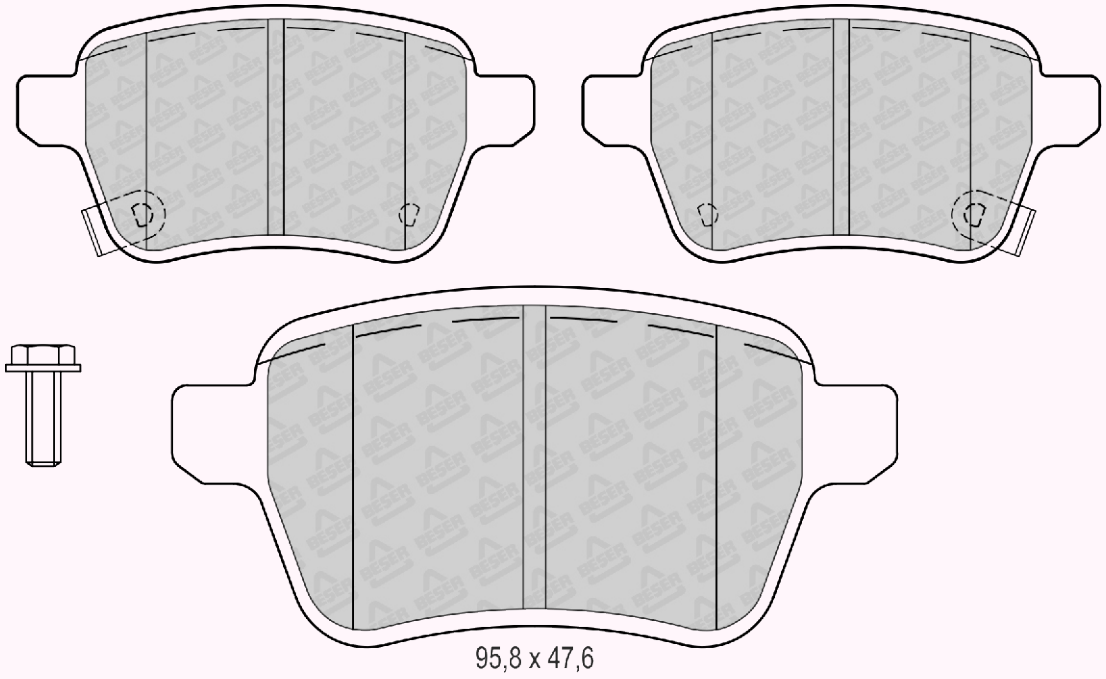

REFERENCE	T(mm)	REMARKS	MAKE	F/R	WVA No
4287	16	4 PADS PLAIN	RENAULT	R	22103 22104 22356

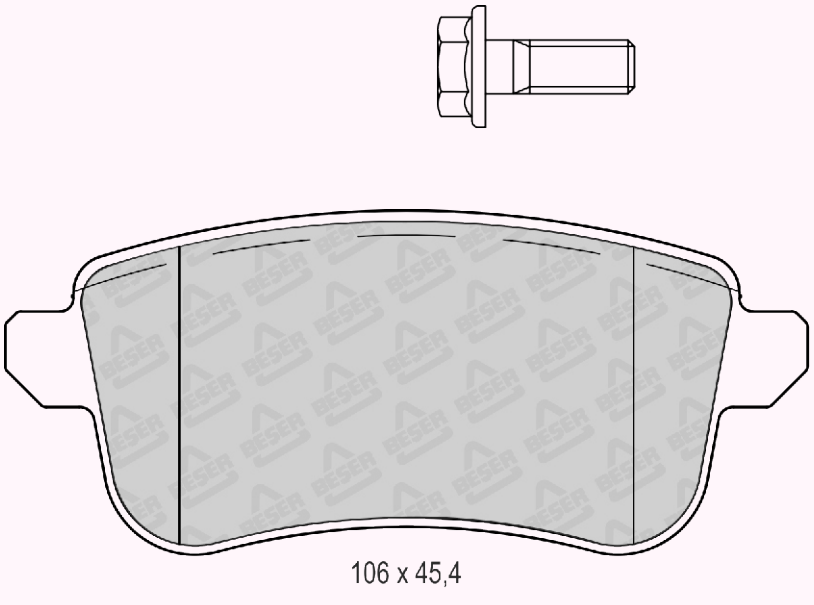

REFERENCE	T(mm)	REMARKS	MAKE	F/R	WVA No
4289	14,9	4 PADS PLAIN	OTOKAR - KOBRA -1	-	-

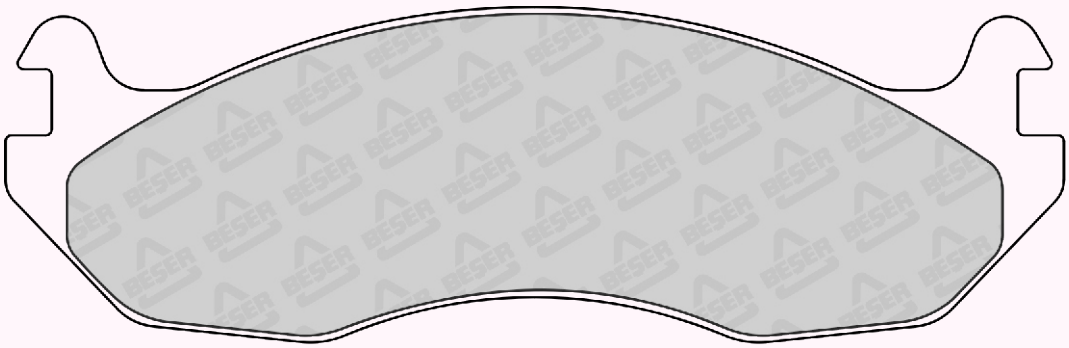

176,7 x 55,9
(NOT SCALE)

REFERENCE	T(mm)	REMARKS	MAKE	F/R	WVA No
4291	16,7	2 PADS PLAN	LAND ROVER	F	24659

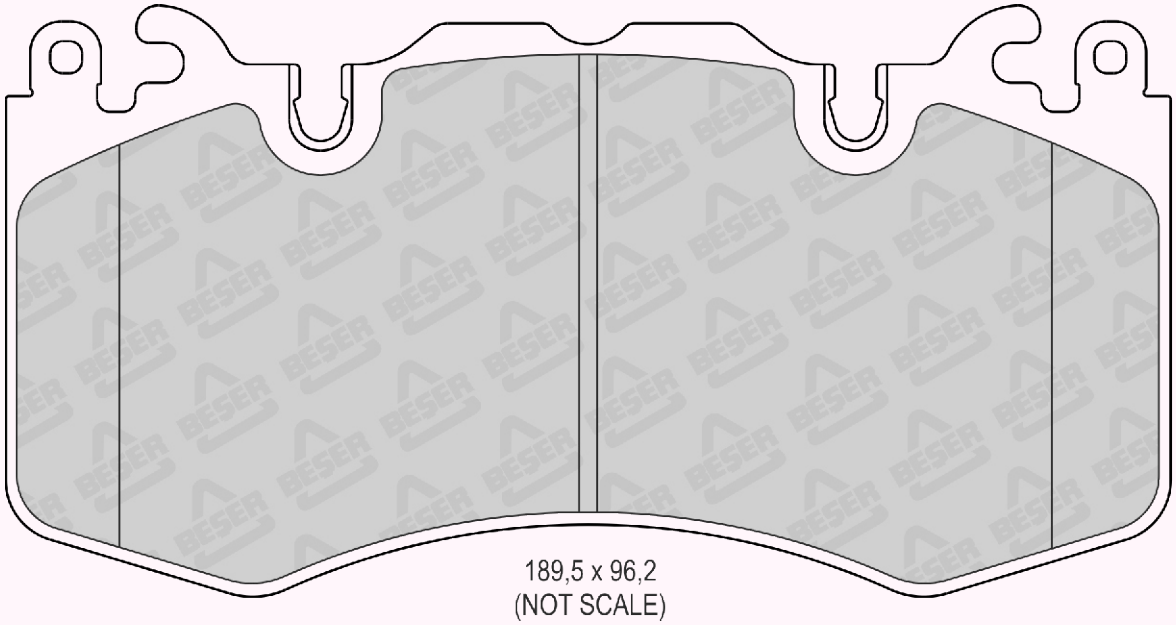

189,5 x 96,2
(NOT SCALE)

REFERENCE	T(mm)	REMARKS	MAKE	F/R	WVA No
4293	18	4 PADS PLAIN	LAND ROVER	F	24191

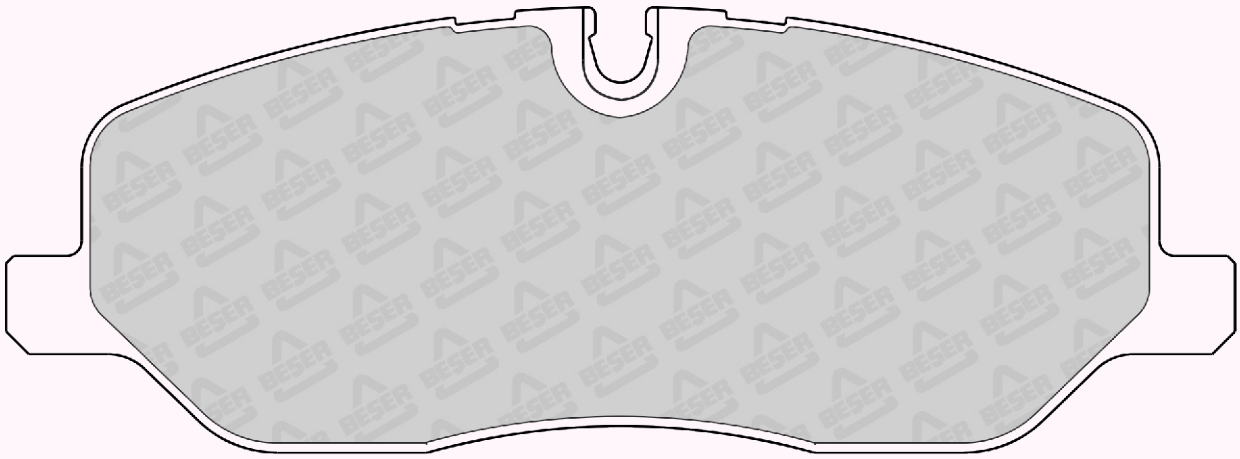

162,4 x 58,74

REFERENCE	T(mm)	REMARKS	MAKE	F/R	WVA No
4295	17,5	1 PAD WITH WEAR SENSOR	AUDI - SEAT SKODA - VW	F	22035 22036 22037

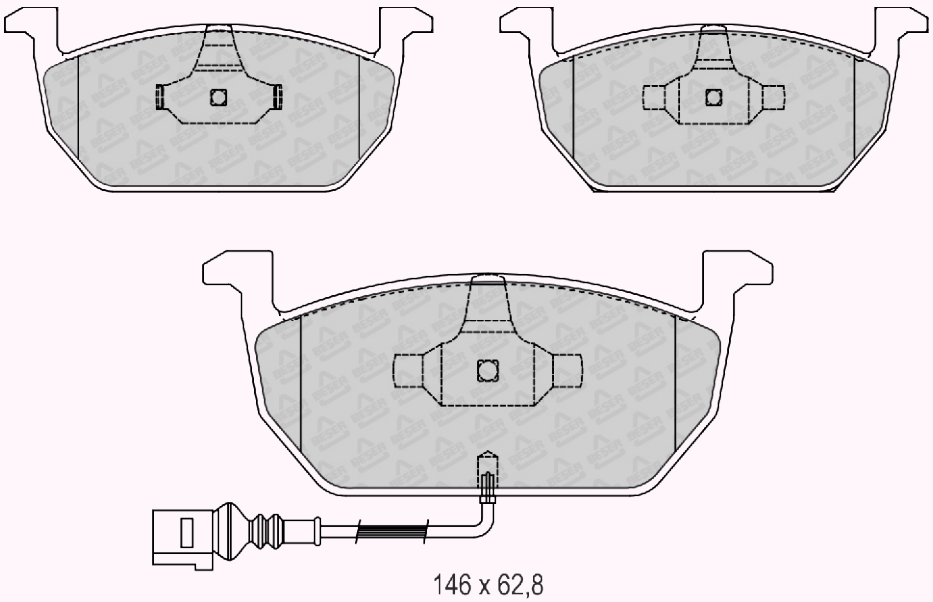

146 x 62,8
(NOT SCALE)

REFERENCE	T(mm)	REMARKS	MAKE	F/R	WVA No
4296	18,1	4 PADS PLAIN	FORD	F	-

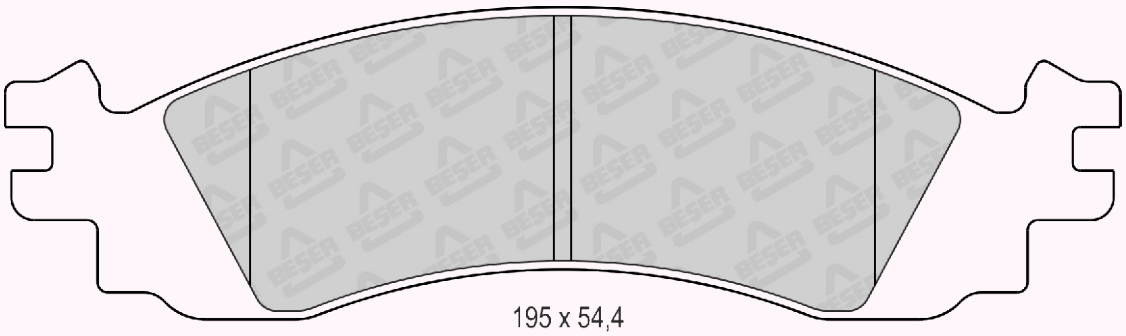

195 x 54,4
(NOT SCALE)

REFERENCE	T(mm)	REMARKS	MAKE	F/R	WVA No
4297	20,8	4 PADS PLAIN	FORD - LINCOLN	F	-

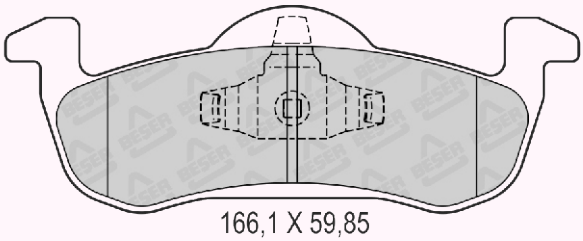

166,1 X 59,85
(NOT SCALE)

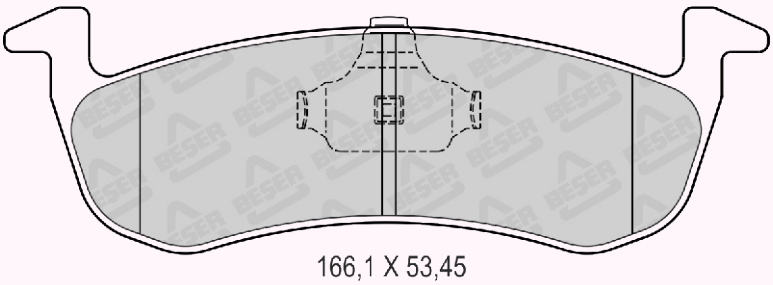

166,1 X 53,45
(NOT SCALE)

REFERENCE	T(mm)	REMARKS	MAKE	F/R	WVA No
4298	18,3	4 PADS PLAIN	LINCOLN	F	-

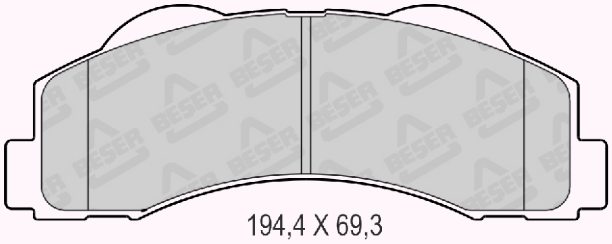

194,4 X 69,3
(NOT SCALE)

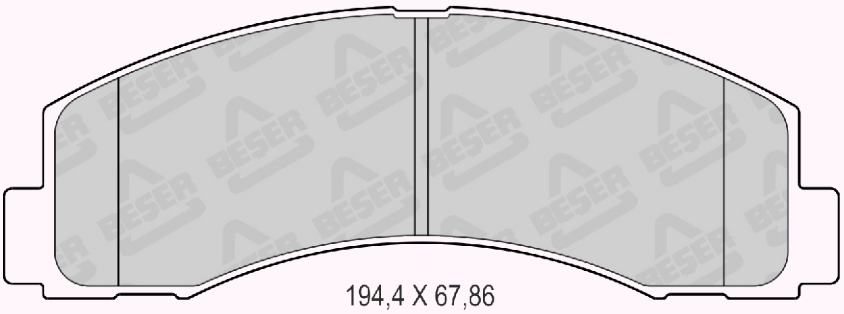

194,4 X 67,86
(NOT SCALE)

REFERENCE	T(mm)	REMARKS	MAKE	F/R	WVA No
4299	17,6	4 PADS PLAIN	FORD	F	-

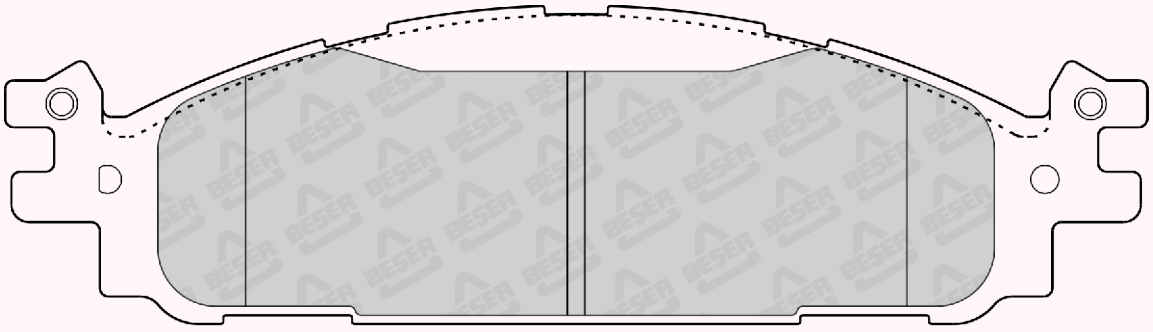

195,2 X 54,29
(NOT SCALE)

REFERENCE	T(mm)	REMARKS	MAKE	F/R	WVA No
4300	15,7	4 PADS PLAIN	FORD	R	-

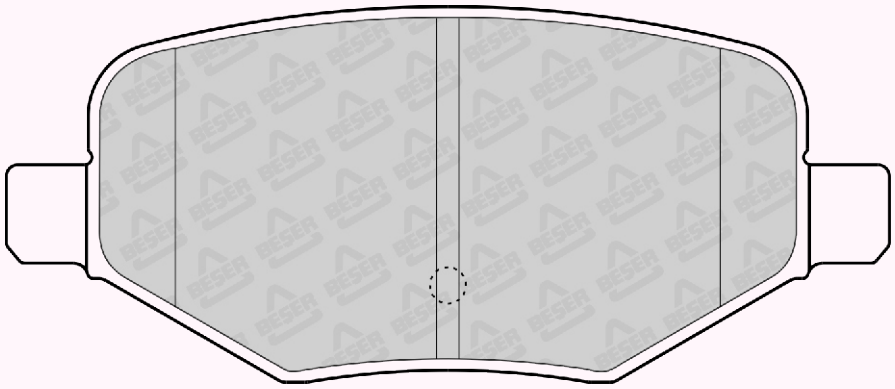

116,6 x 49,6

REFERENCE	T(mm)	REMARKS	MAKE	F/R	WVA No
4301	19,4	2 PADS WITH WEAR SENSOR	FIAT	F	22476 22477 23713

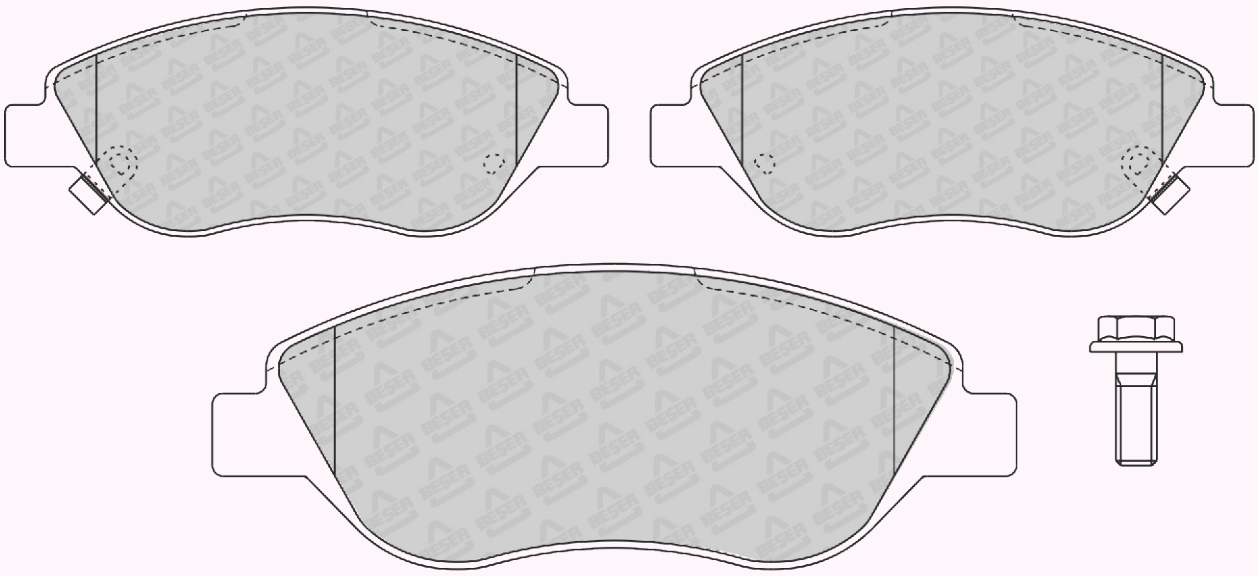

150,9 x 57,3
(NOT SCALE)

REFERENCE	T(mm)	REMARKS	MAKE	F/R	WVA No
4301/1	19,4	2 PADS WITH WEAR SENSOR	FIAT	F	22476 22477 23713

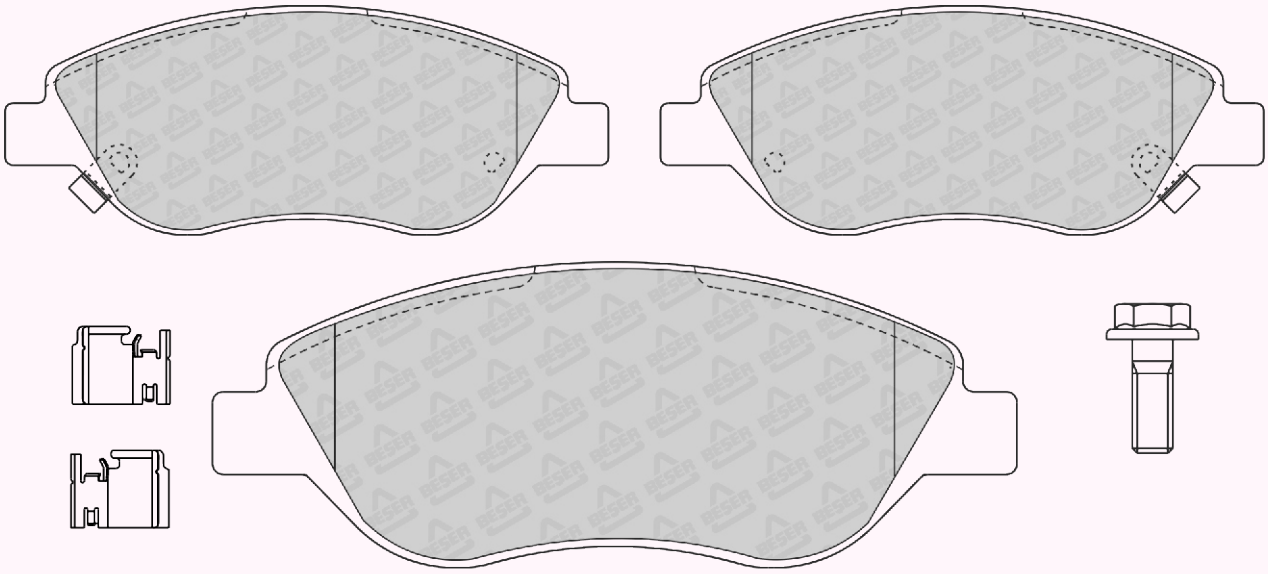

150,9 x 57,3
(NOT SCALE)

REFERENCE	T(mm)	REMARKS	MAKE	F/R	WVA No
4303	15,3	1 PAD WITH WEAR SENSOR	CHEVROLET - SUZUKI	R	24039 24040 24041

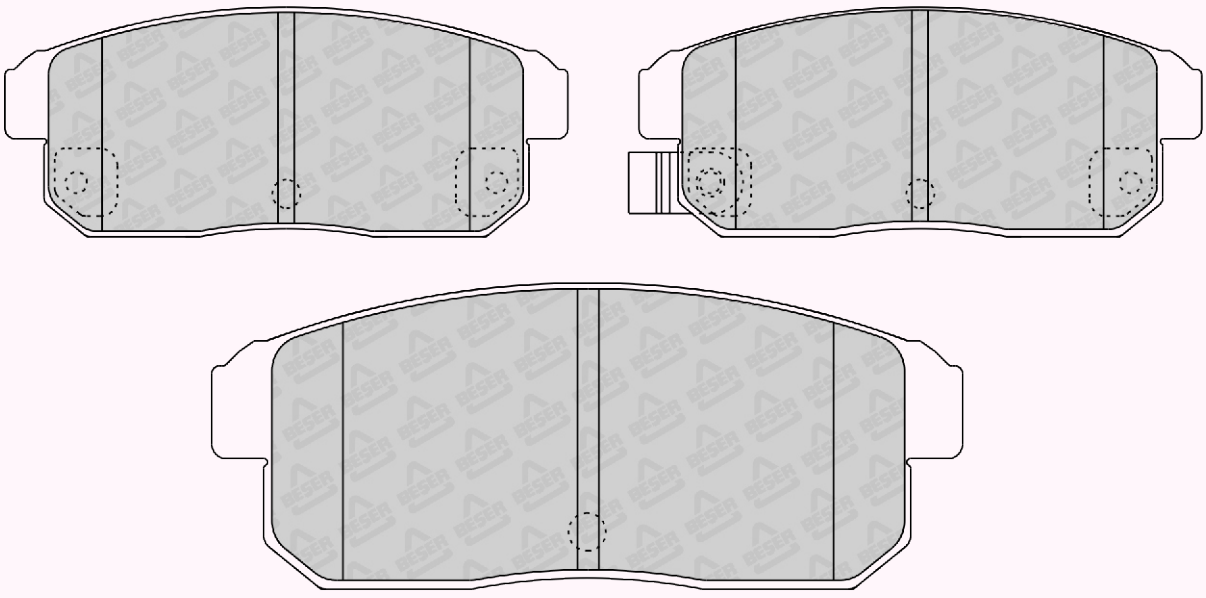

105,66 X 43
(NOT SCALE)

REFERENCE	T(mm)	REMARKS	MAKE	F/R	WVA No
4304	14	2 PADS PLAIN	RIMO GO KART	-	-

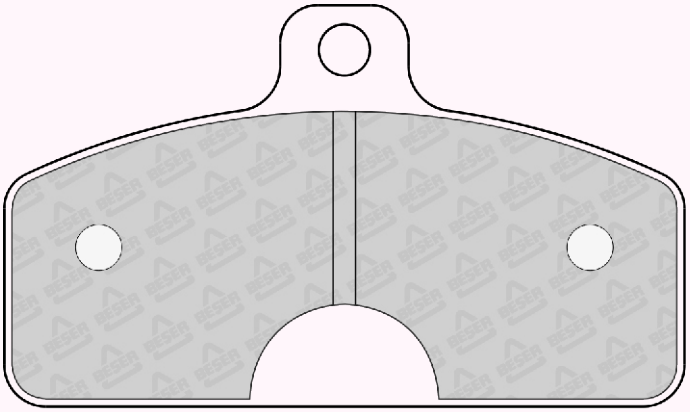

89,8 x 53

REFERENCE	T(mm)	REMARKS	MAKE	F/R	WVA No
4307	16,8	4 PADS PLAIN	NISSAN - RENAULT	F	22240 22439

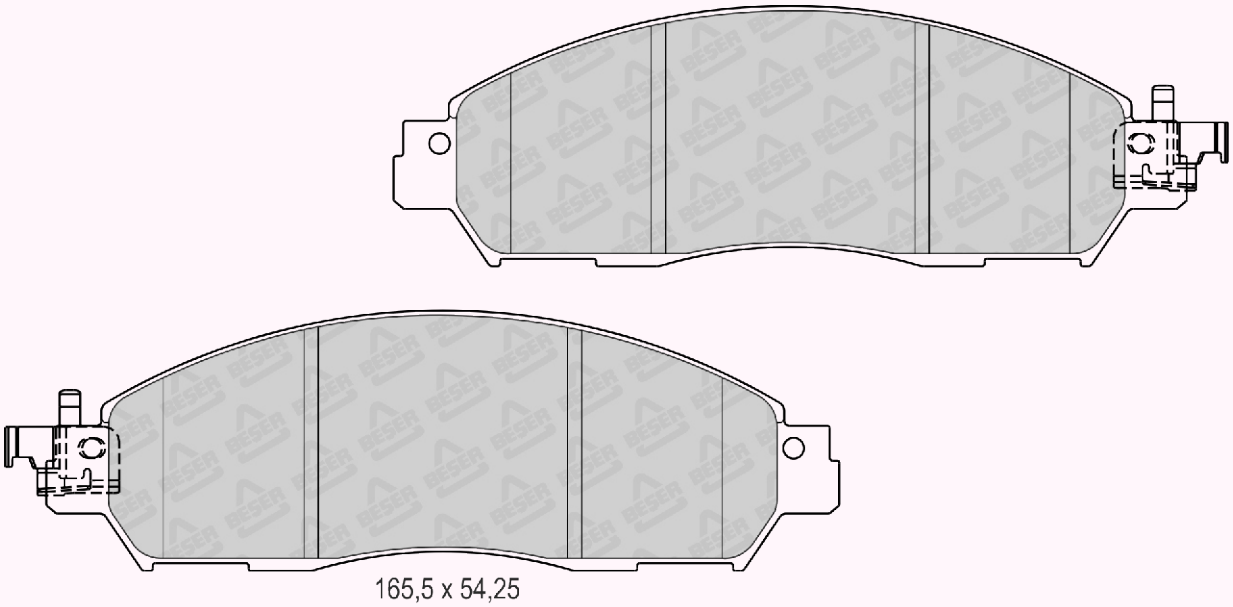

165,5 x 54,25
(NOT SCALE)

REFERENCE	T(mm)	REMARKS	MAKE	F/R	WVA No
4308	15,8	2 PADS WITH WEAR SENSOR	NISSAN	F	22117 25910 22118 25911 22119 25912

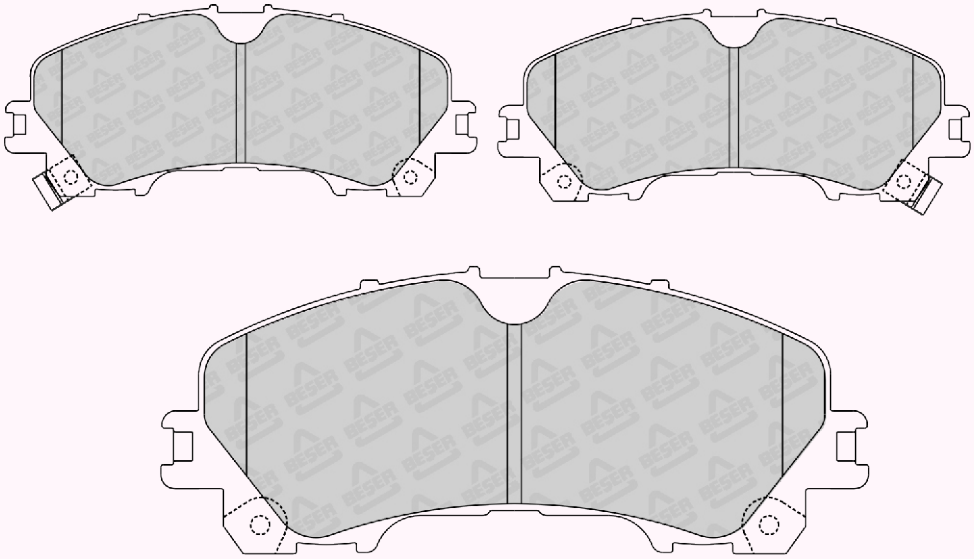

151,8 x 61,63
(NOT SCALE)

REFERENCE	T(mm)	REMARKS	MAKE	F/R	WVA No
4309	14,3	2 PADS WITH WEAR SENSOR (419 mm)	PORSCHE	F	22148 24295 24553 25007 25701

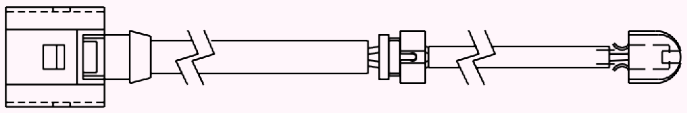

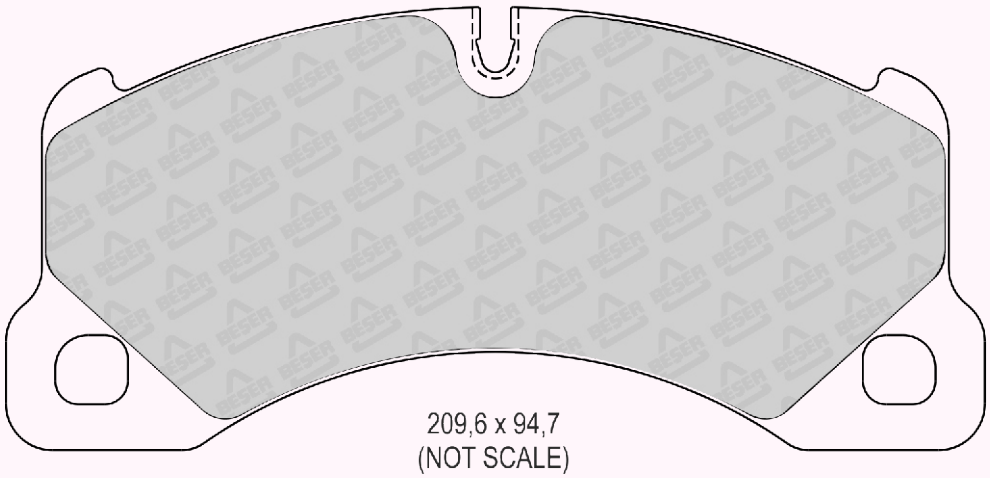

209,6 x 94,7
(NOT SCALE)

REFERENCE	T(mm)	REMARKS	MAKE	F/R	WVA No
4310	15,8	2 PADS WITH WEAR SENSOR (140mm)	PORSCHE	R	24552 24721

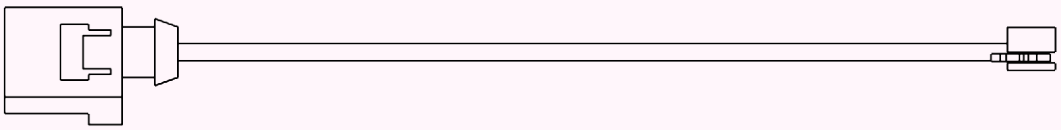

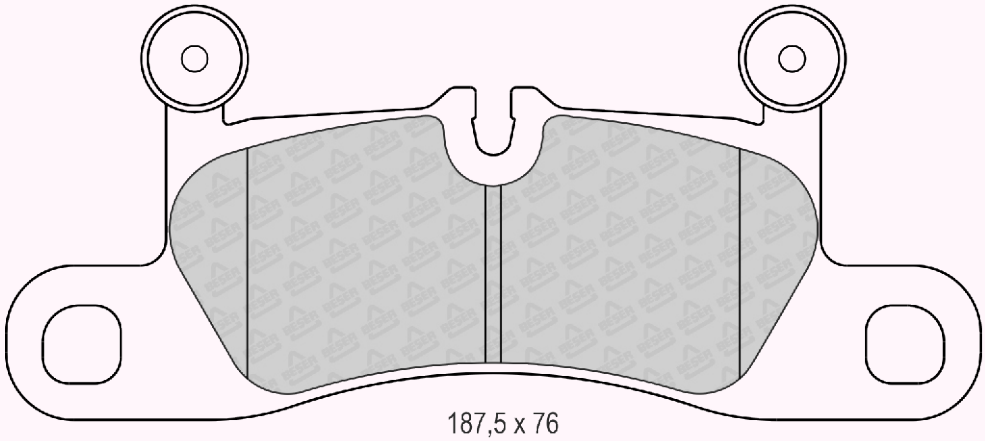

187,5 x 76
(NOT SCALE)

REFERENCE	T(mm)	REMARKS	MAKE	F/R	WVA No
4311	15,8	2 PADS WITH WEAR SENSOR	PEUGEOT	-	25337 25338 25339

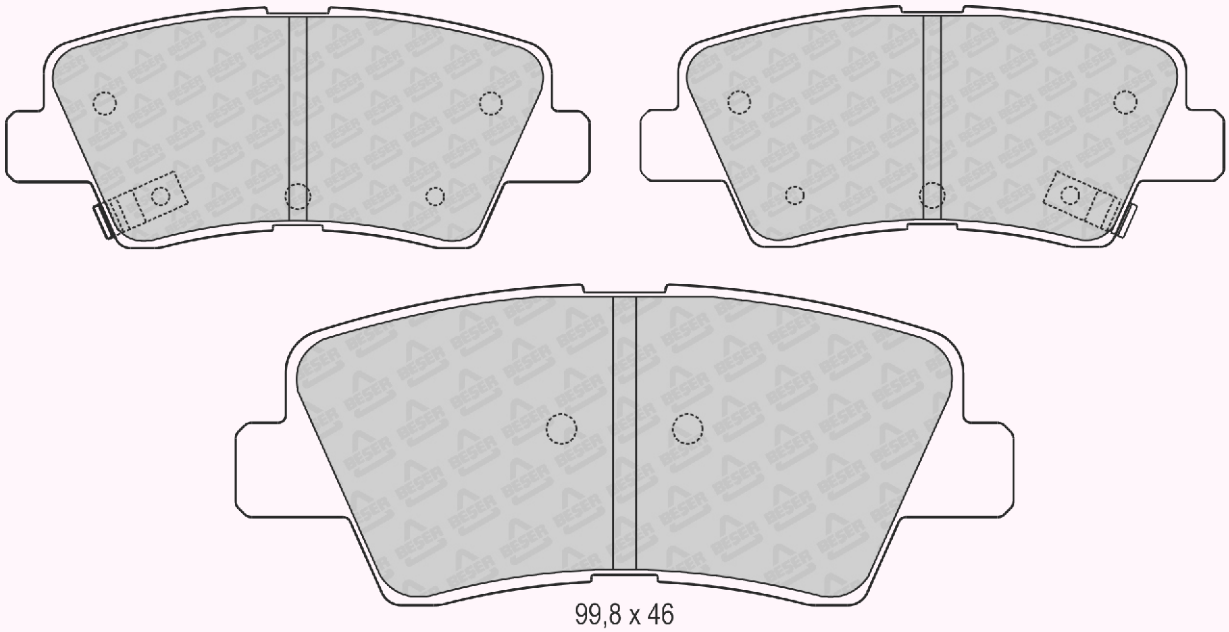

99,8 x 46
(NOT SCALE)

REFERENCE	T(mm)	REMARKS	MAKE	F/R	WVA No
4312	15,5	2 PADS WITH WEAR SENSOR	HONDA	F	25792 25793 25794

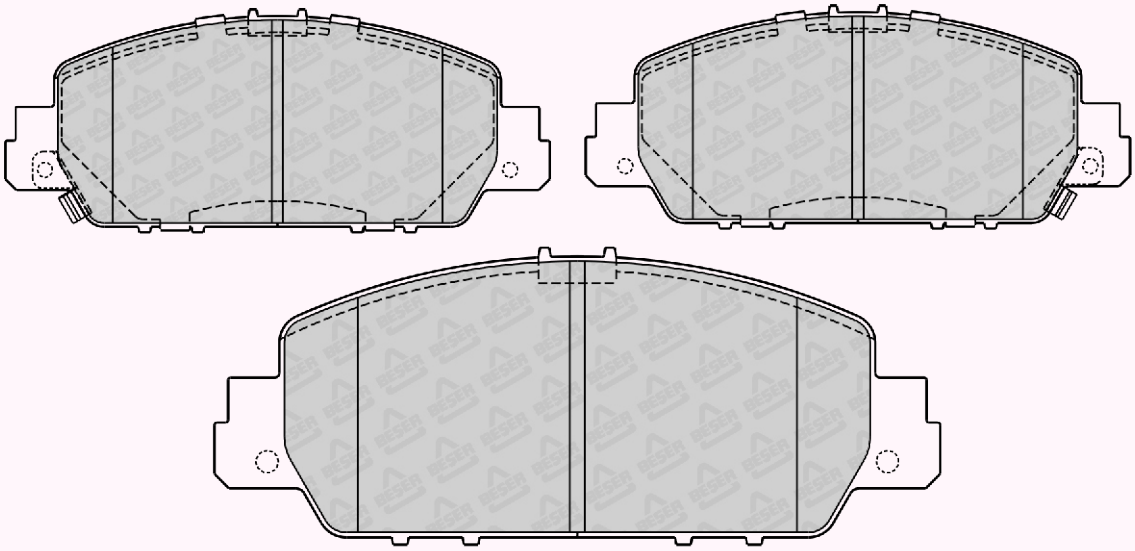

148,6 x 60,8
(NOT SCALE)

REFERENCE	T(mm)	REMARKS	MAKE	F/R	WVA No
4313	16,7	4 PADS PLAIN	MERCEDES BENZ	F	25179 25706

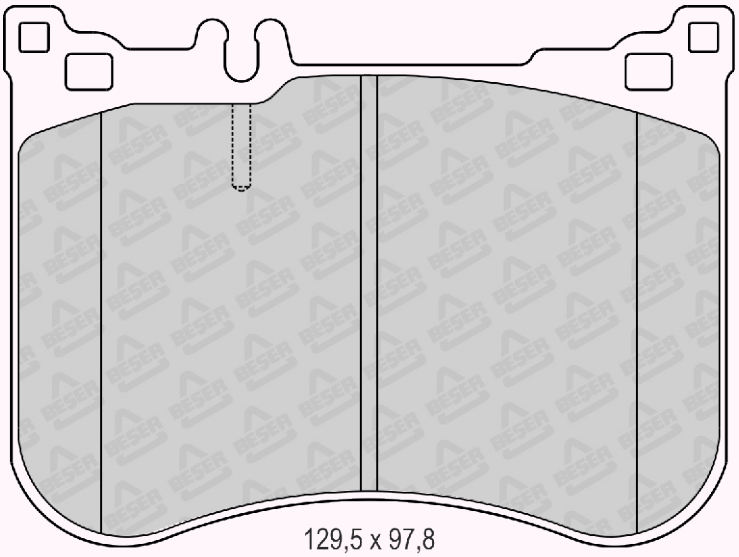

129,5 x 97,8
(NOT SCALE)

REFERENCE	T(mm)	REMARKS	MAKE	F/R	WVA No
4314	17,3	2 PADS WITH WEAR SENSOR	LAND ROVER	F	25021 25022 25203 25204

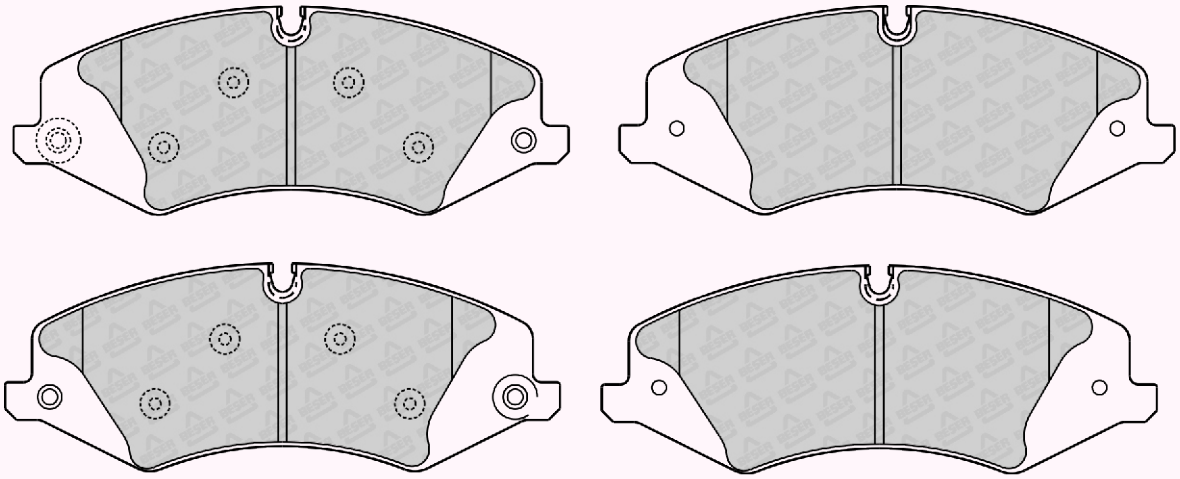

192,8 X 72,3
(NOT SCALE)

REFERENCE	T(mm)	REMARKS	MAKE	F/R	WVA No
4315	15,2	4 PADS PLAIN	MAZDA	F	25725

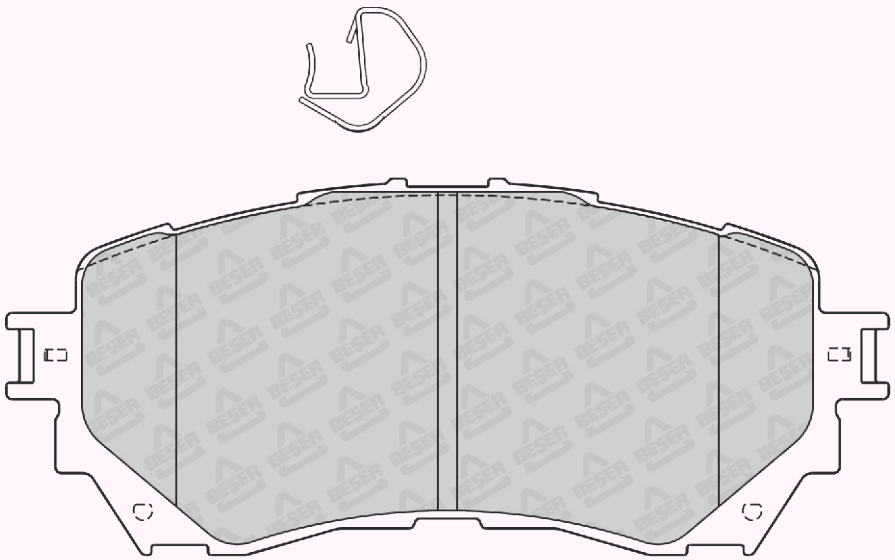

140,2 x 59,8
(NOT SCALE)

REFERENCE	T(mm)	REMARKS	MAKE	F/R	WVA No
4316	14,5	2 PADS WITH WEAR SENSOR	CITROEN - MAZDA MITSUBISHI - PEUGEOT	R	25688 25689 25690

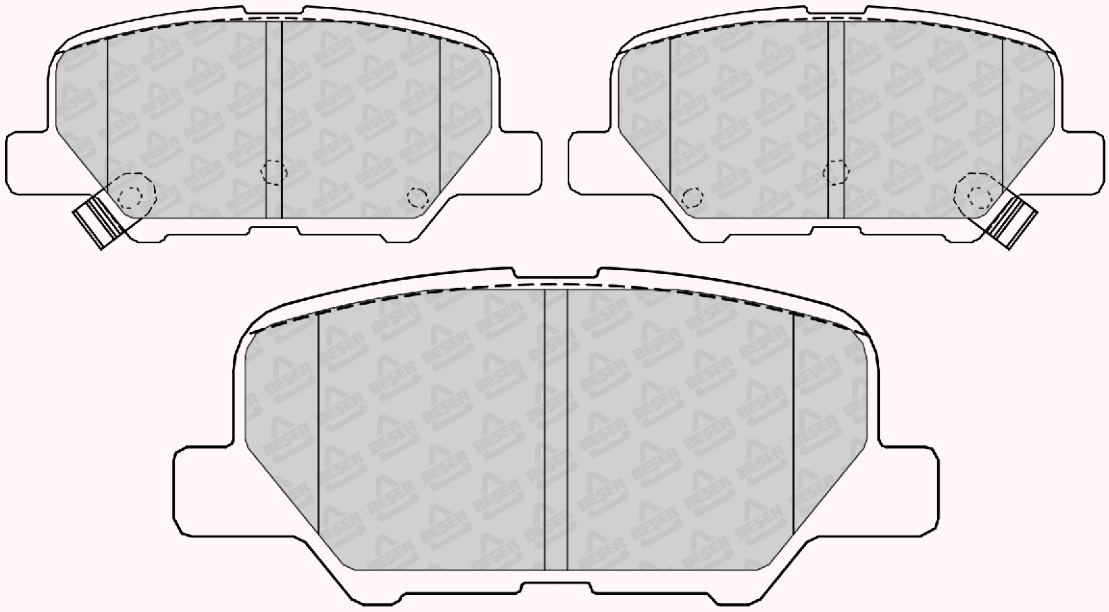

101 x 44,42

REFERENCE	T(mm)	REMARKS	MAKE	F/R	WVA No
4317	15,5	2 PADS WITH WEAR SENSOR	MAZDA	F	25875 25876 25877

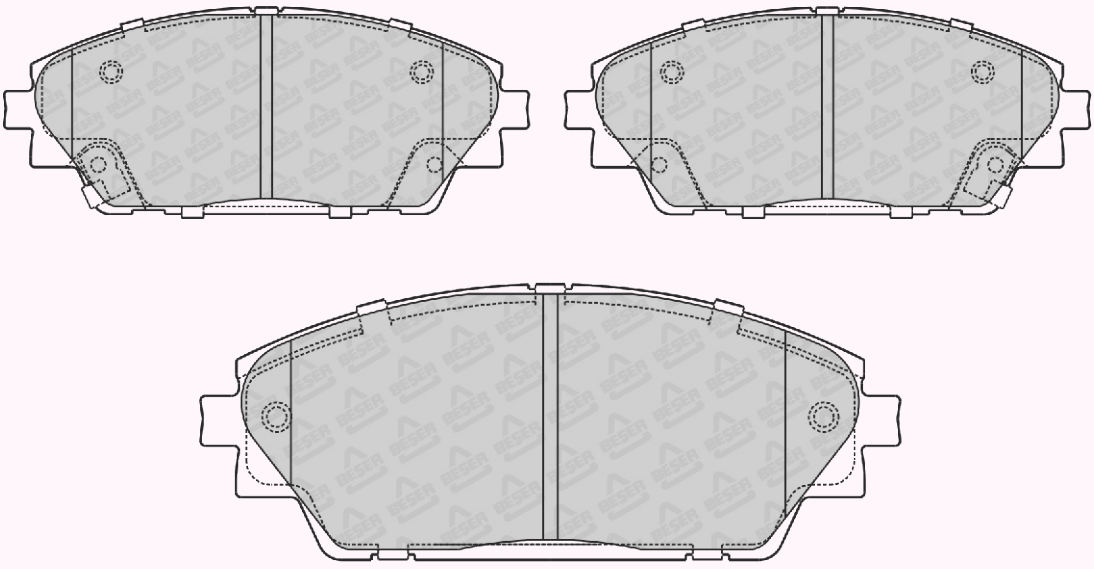

142 X 55,73
(NOT SCALE)

REFERENCE	T(mm)	REMARKS	MAKE	F/R	WVA No
4318	13,5	2 PADS WITH WEAR SENSOR	MAZDA	R	25878 25879 25880

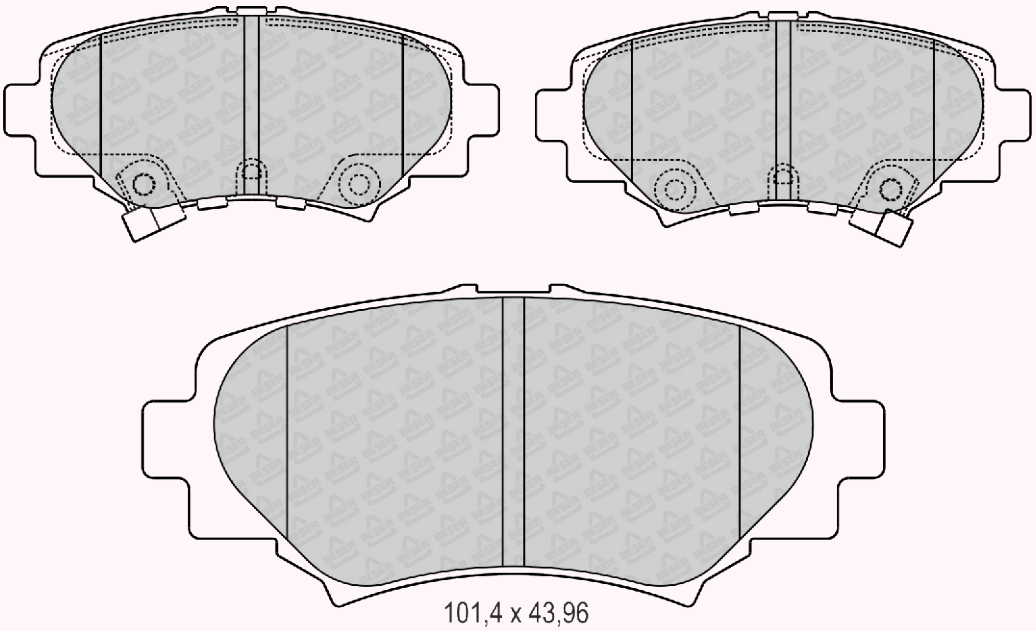

101,4 x 43,96
(NOT SCALE)

REFERENCE	T(mm)	REMARKS	MAKE	F/R	WVA No
4319	16,35	4 PADS WITH WEAR SENSOR	NISSAN	F	25581 25582

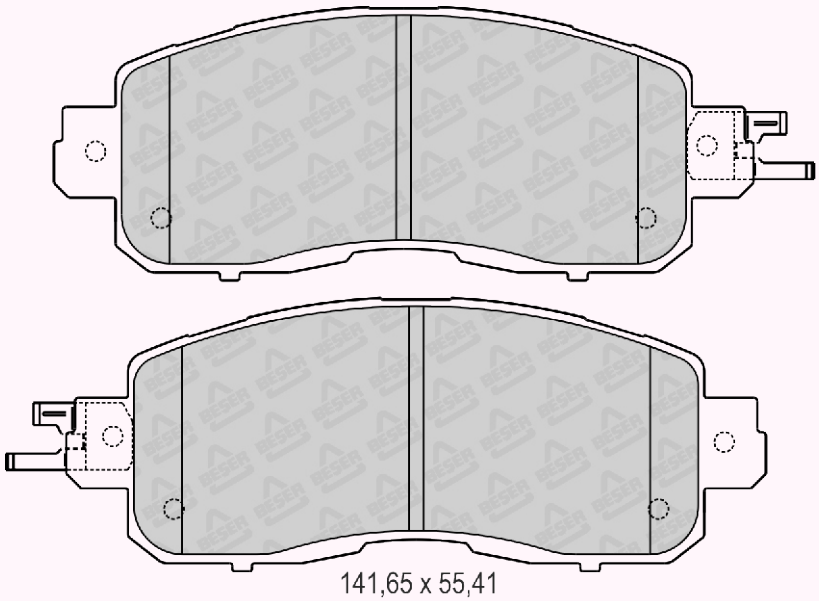

141,65 x 55,41
(NOT SCALE)

REFERENCE	T(mm)	REMARKS	MAKE	F/R	WVA No
4320	17,9	2 PADS WITH WEAR SENSOR	FORD U.S.A	R	-

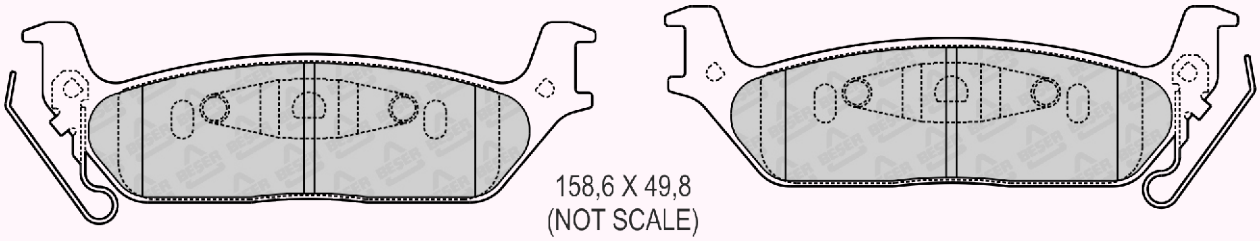

158,6 X 49,8
(NOT SCALE)

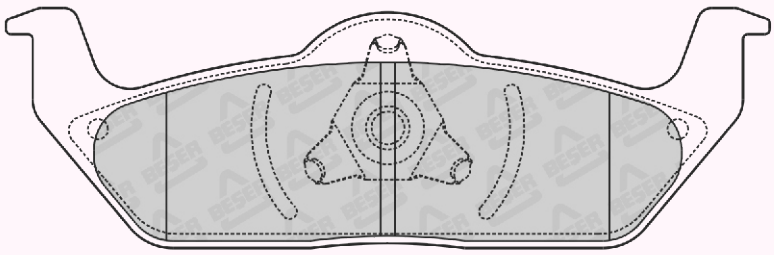

158,5 X 49,8
(NOT SCALE)

REFERENCE	T(mm)	REMARKS	MAKE	F/R	WVA No
4324	17,4	2 PADS WITH WEAR SENSOR	NISSAN	F	25240 25241 25242

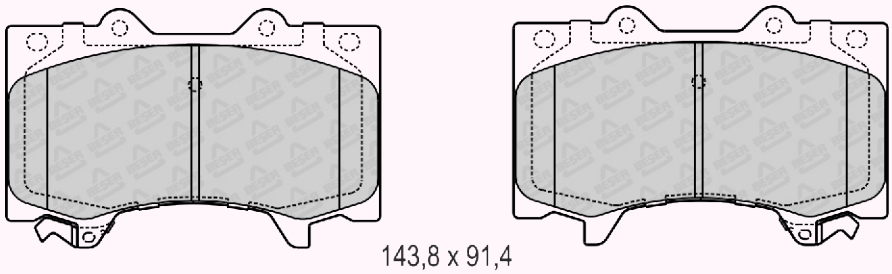

143,8 x 91,4
(NOT SCALE)

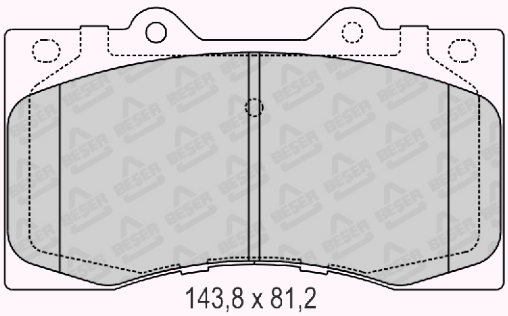

143,8 x 81,2
(NOT SCALE)

REFERENCE	T(mm)	REMARKS	MAKE	F/R	WVA No
4325	16,5	4 PADS PLAIN	BMW	R	24561 24562

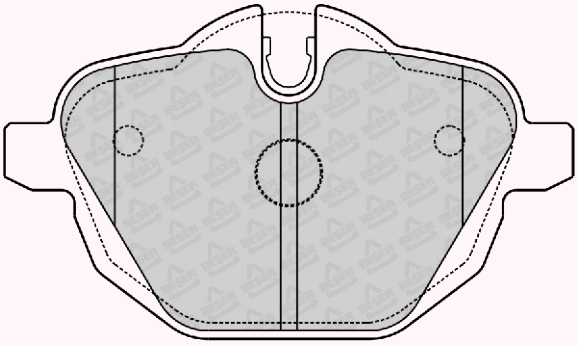

106,2 x 62,3
(NOT SCALE)

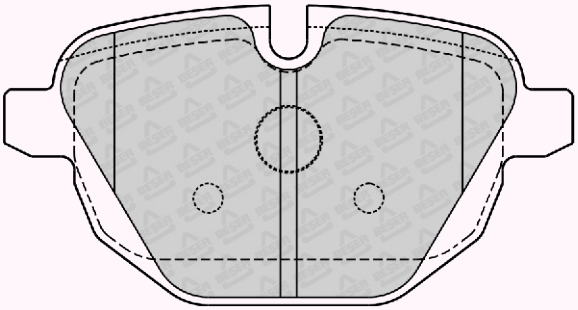

106,2 x 56,0
(NOT SCALE)

REFERENCE	T(mm)	REMARKS	MAKE	F/R	WVA No
4326	18,1	4 PADS PLAIN	MERCEDES BENZ	F	24869

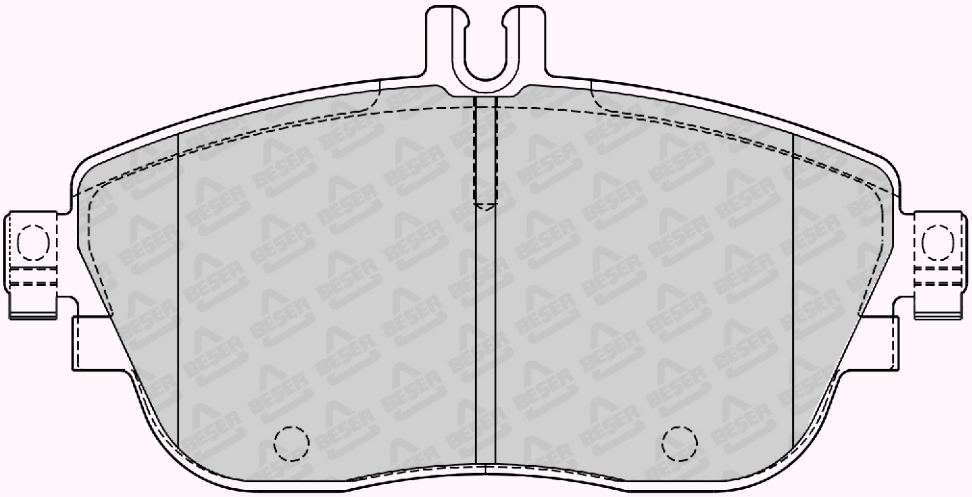

143,8 x 72,4
(NOT SCALE)

REFERENCE	T(mm)	REMARKS	MAKE	F/R	WVA No
4327	16,0	4 PADS PLAIN	DODGE	F	-

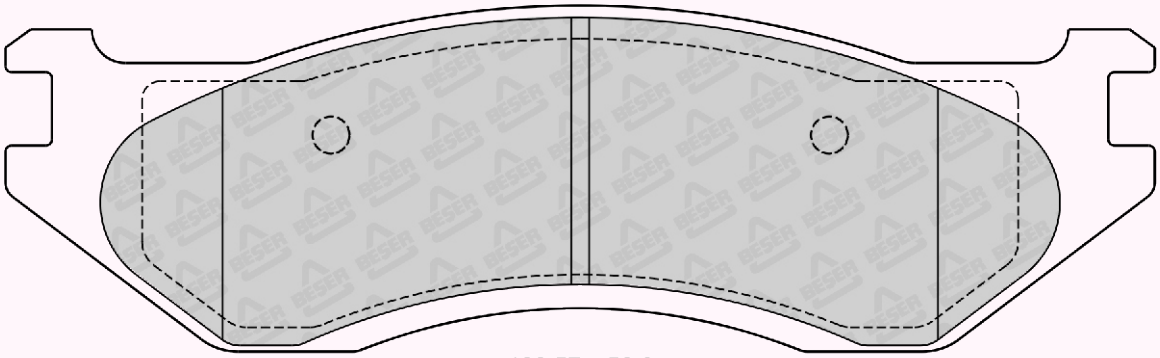

188,57 x 56,6
(NOT SCALE)

REFERENCE	T(mm)	REMARKS	MAKE	F/R	WVA No
4328	17,21	4 PADS PLAIN	NISSAN	F	22223

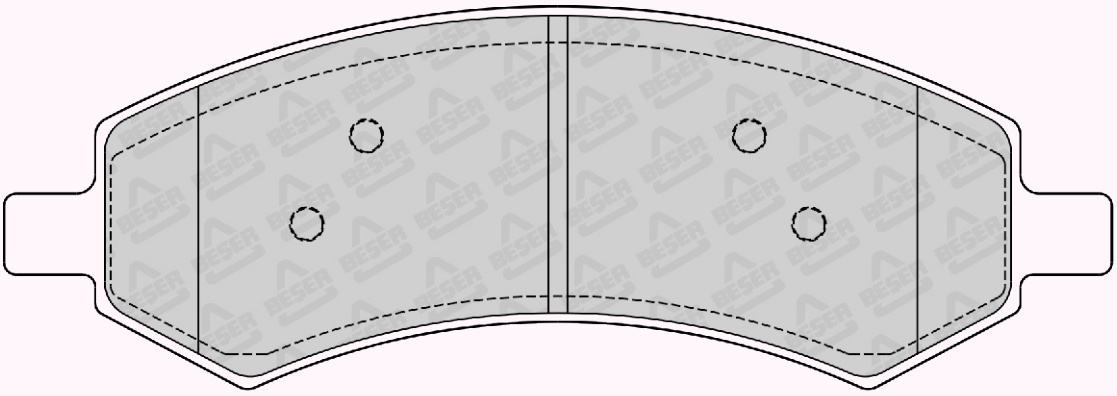

177,8 x 61,2
(NOT SCALE)

REFERENCE	T(mm)	REMARKS	MAKE	F/R	WVA No
4329	15,3	4 PADS PLAIN	CHRYSLER-DODGE	R	24803

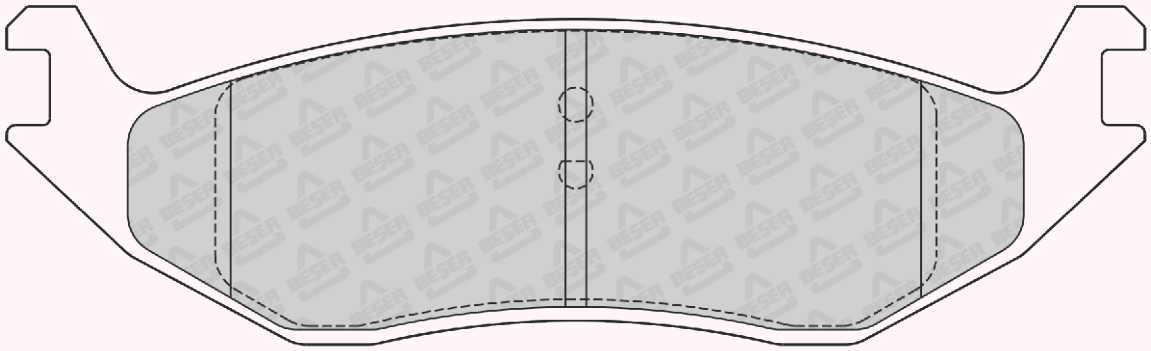

166,2 x 49,3
(NOT SCALE)

REFERENCE	T(mm)	REMARKS	MAKE	F/R	WVA No
4330	16,5	2 PADS WITH WEAR SENSOR	CHEVROLET	F	-

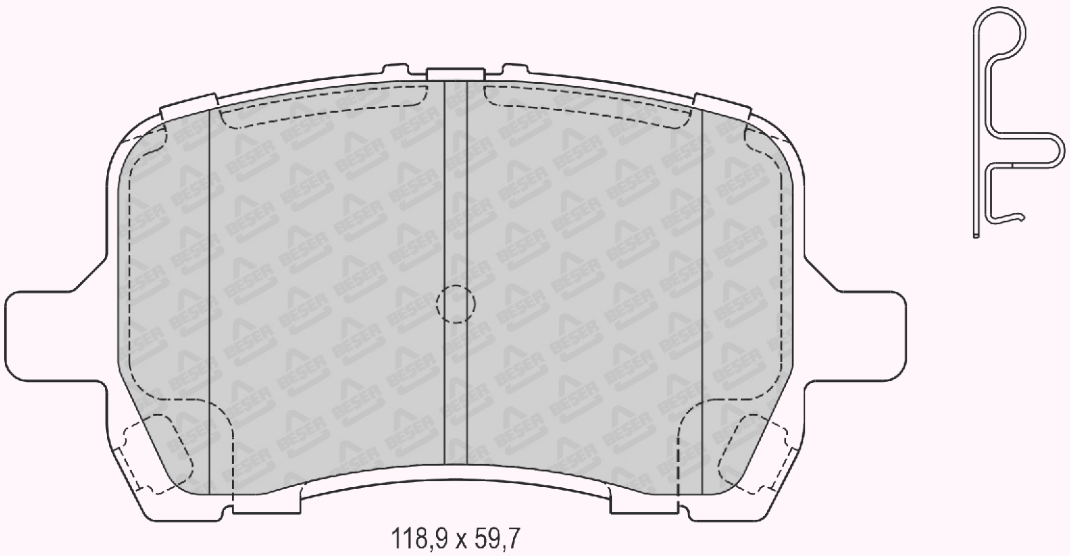

118,9 x 59,7
(NOT SCALE)

REFERENCE	T(mm)	REMARKS	MAKE	F/R	WVA No
4331	13,46	2 PADS WITH WEAR SENSOR	CHEVROLET	R	-

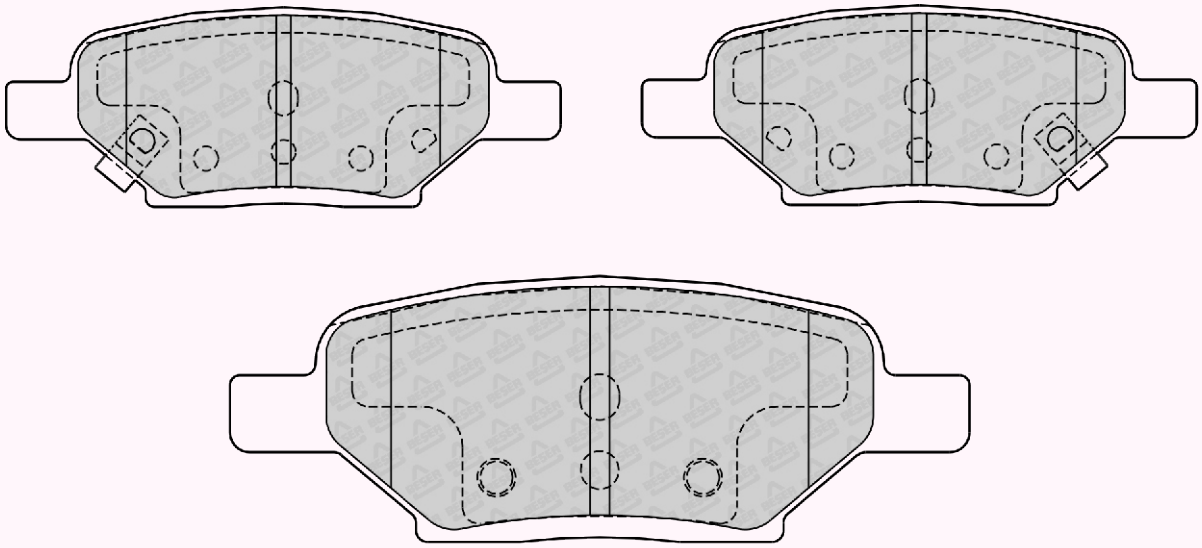

113,84 x 40,9
(NOT SCALE)

REFERENCE	T(mm)	REMARKS	MAKE	F/R	WVA No
4332	16,7	4 PADS PLAIN	FORD	F	24513

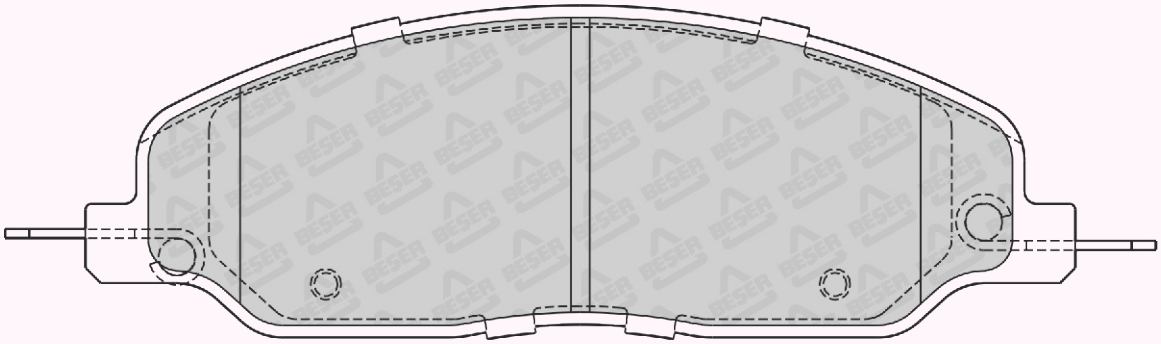

162,6 x 54,5
(NOT SCALE)

REFERENCE	T(mm)	REMARKS	MAKE	F/R	WVA No
4333	16,41	4 PADS PLAIN	FORD	R	-

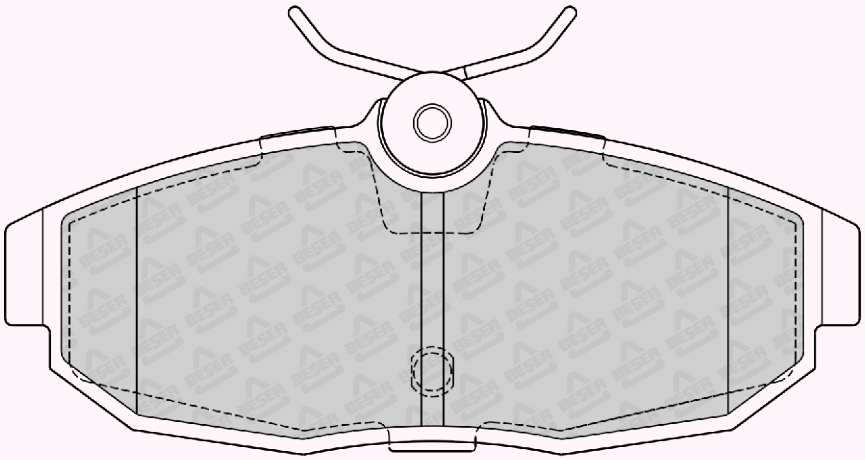

112,9 x 47,2

REFERENCE	T(mm)	REMARKS	MAKE	F/R	WVA No
4334	19	4 PADS PLAIN	MERCEDES BENZ	F	22031 22032 25534 25535

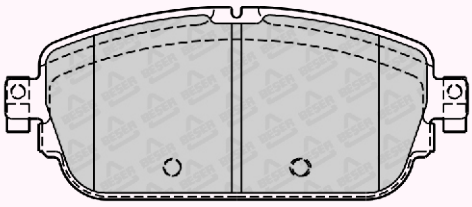

144,2 X 60,2
(NOT SCALE)

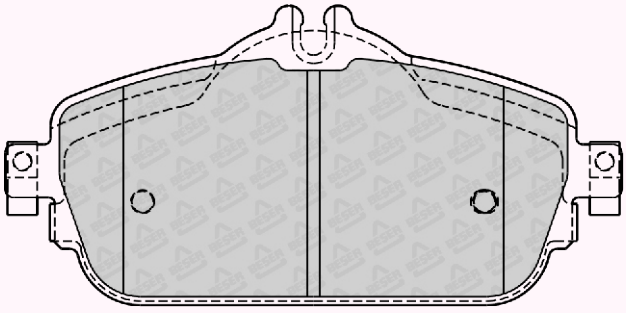

144,2 X 70
(NOT SCALE)

REFERENCE	T(mm)	REMARKS	MAKE	F/R	WVA No
4335	17,5	4 PADS PLAIN	MERCEDES BENZ	R	25071 25072 25711

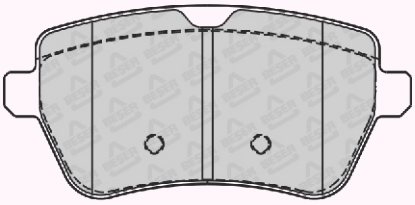

116,4 X 55,3
(NOT SCALE)

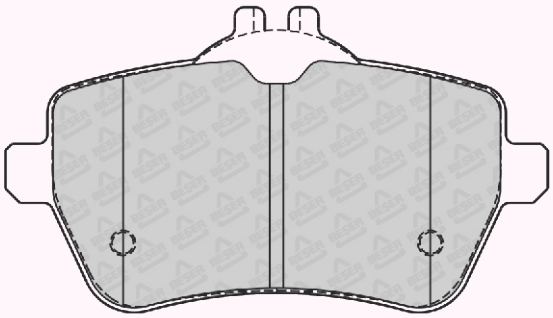

116,4 X 65,5
(NOT SCALE)

REFERENCE	T(mm)	REMARKS	MAKE	F/R	WVA No
4336	15,9	4 PADS PLAIN	AUDI - SEAT SKODA - VW	R	25109 25110

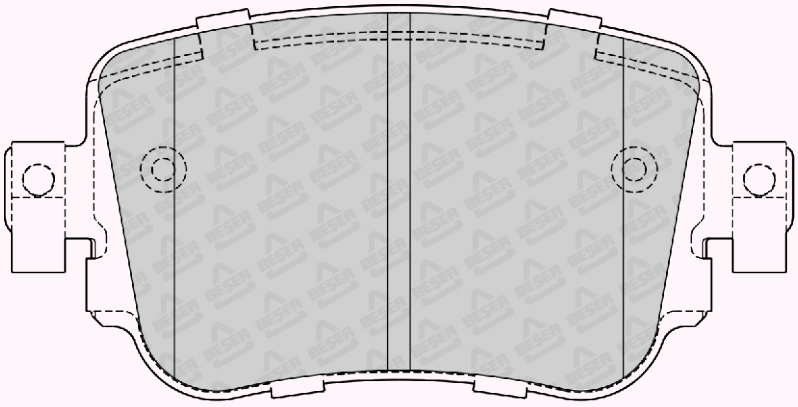

104,1 x 52,1

REFERENCE	T(mm)	REMARKS	MAKE	F/R	WVA No
4337	16,6	2 PADS WITH WEAR SENSOR	CHEVROLET - TOYOTA	F	25268 25269 25270

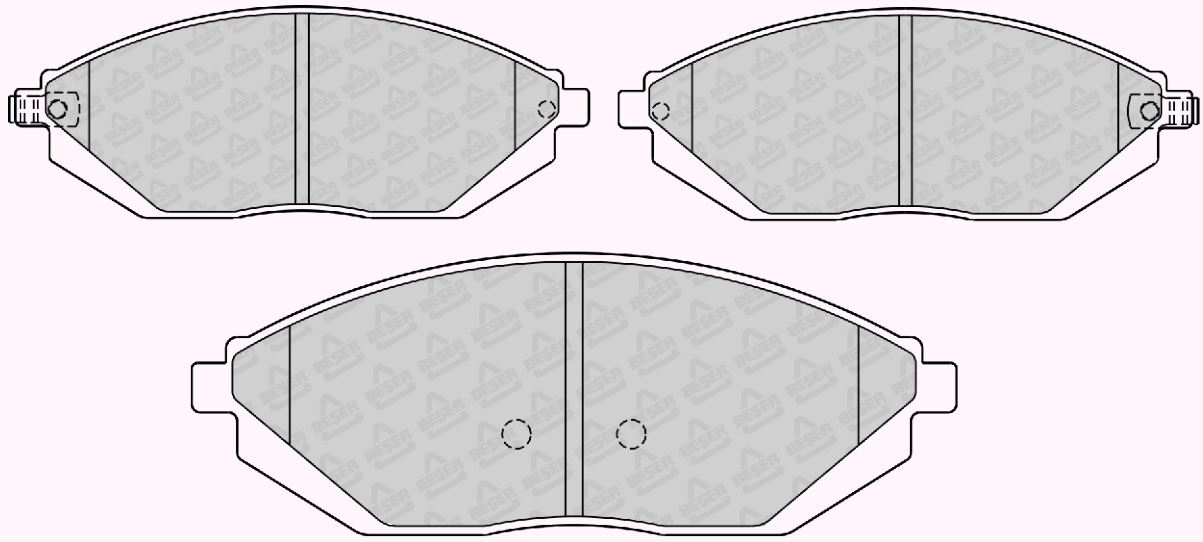

133,1 X 49
(NOT SCALE)

REFERENCE	T(mm)	REMARKS	MAKE	F/R	WVA No
4338	18,1	2 PADS WITH WEAR SENSOR	DODGE - JEEP MERCEDES	F	25190 25480 25191 25500 25192

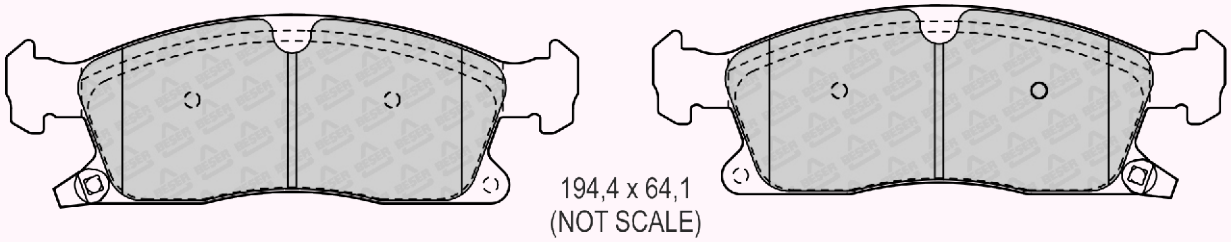

194,4 x 64,1
(NOT SCALE)

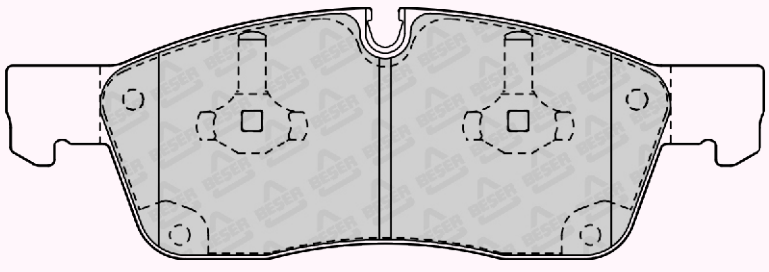

193,2 x 64,1
(NOT SCALE)

REFERENCE	T(mm)	REMARKS	MAKE	F/R	WVA No
4339	16,5	2 PADS WITH WEAR SENSOR	DODGE - JEEP	R	25196 25197 25198

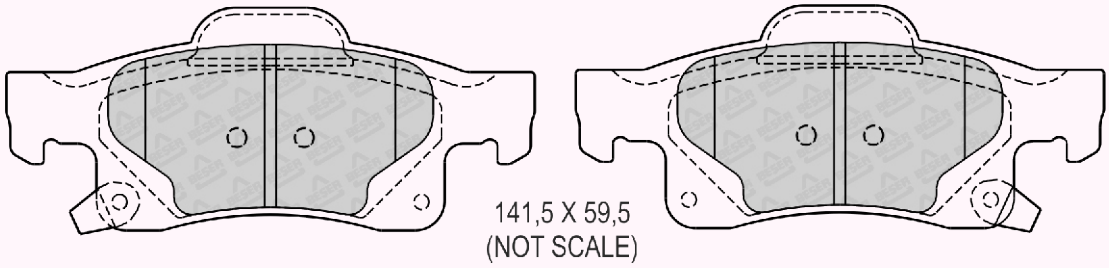

141,5 X 59,5
(NOT SCALE)

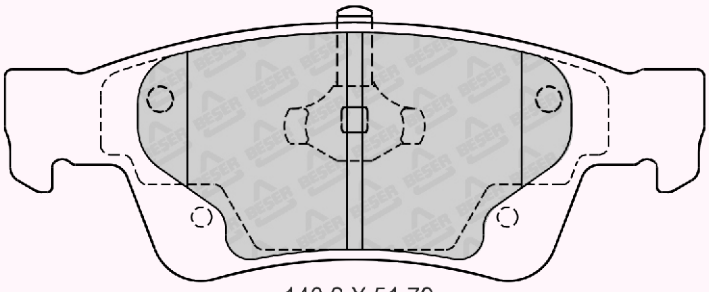

140,2 X 51,79
(NOT SCALE)

REFERENCE	T(mm)	REMARKS	MAKE	F/R	WVA No
4340	19,3	4 PADS PLAIN	AUSTRALIA / USA - FORD	F	-

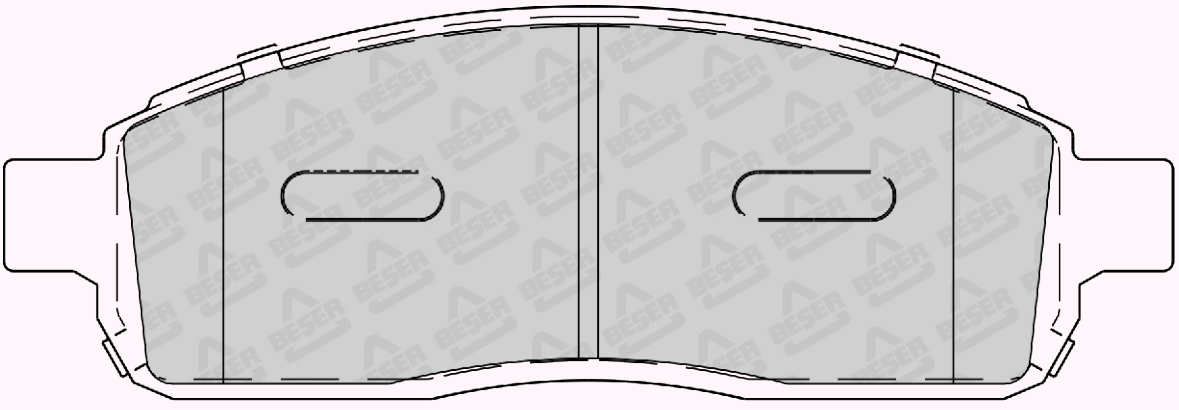

176 x 58,7
(NOT SCALE)

REFERENCE	T(mm)	REMARKS	MAKE	F/R	WVA No
4341	15,5	4 PADS WITH WEAR SENSOR	INFINITY - NISSAN	F	25588 25589

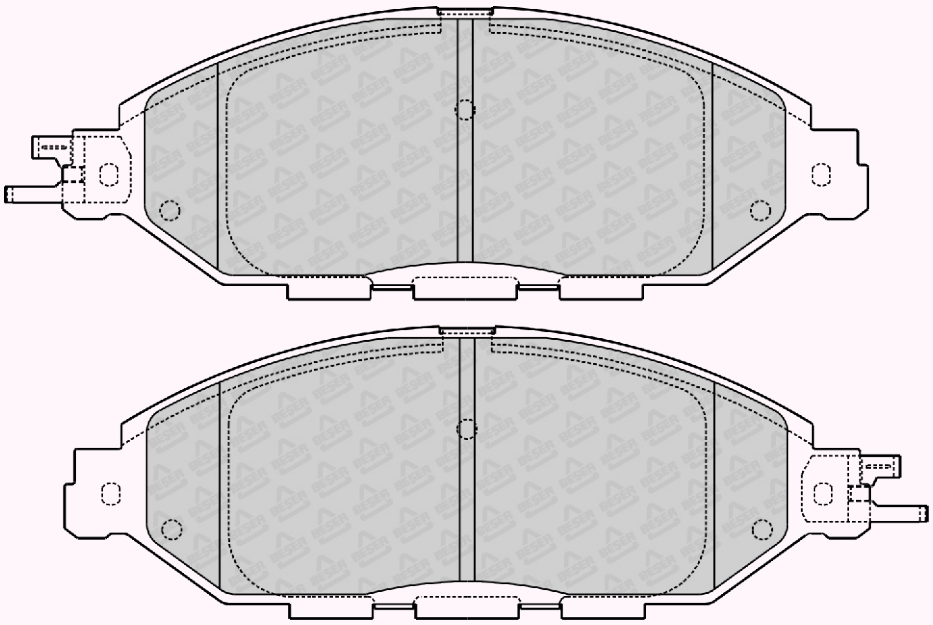

165,4 x 60,1
(NOT SCALE)

REFERENCE	T(mm)	REMARKS	MAKE	F/R	WVA No
4342	18	2 PADS WITH WEAR SENSOR	HYUNDAI - KIA	F	25692 25708 25693 25709 25694 25710

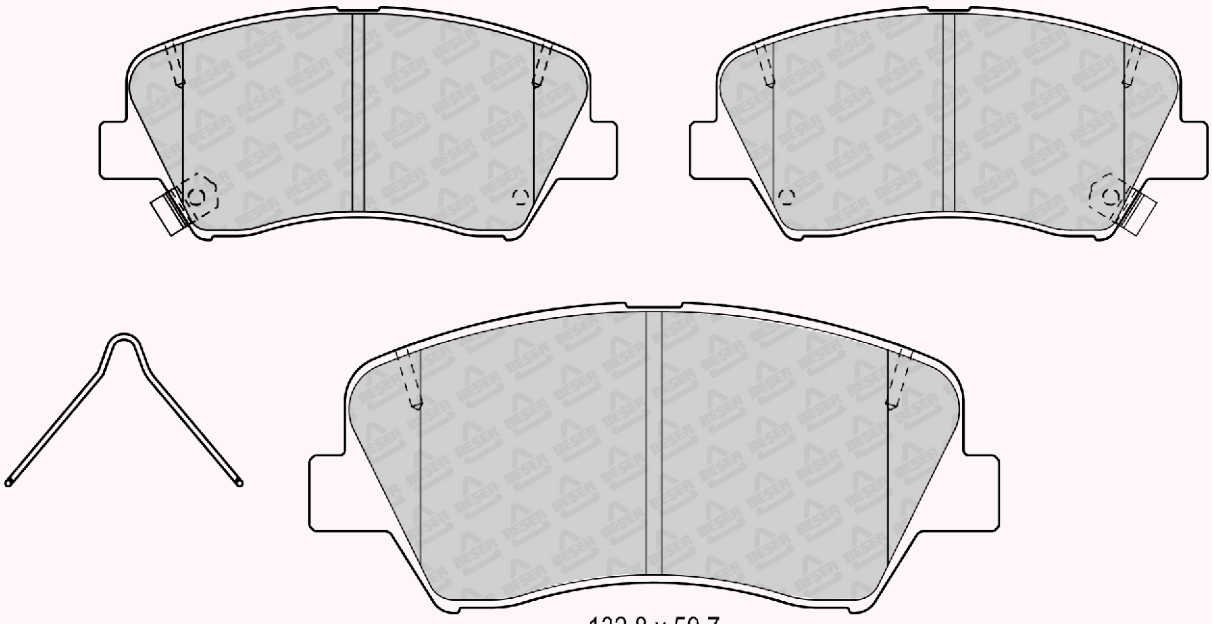

132,8 x 59,7
(NOT SCALE)

REFERENCE	T(mm)	REMARKS	MAKE	F/R	WVA No
4343	15,5	2 PADS WITH WEAR SENSOR	DODGE - HYUNDAI KIA - SSANGYONG	R	25337 25338 25339

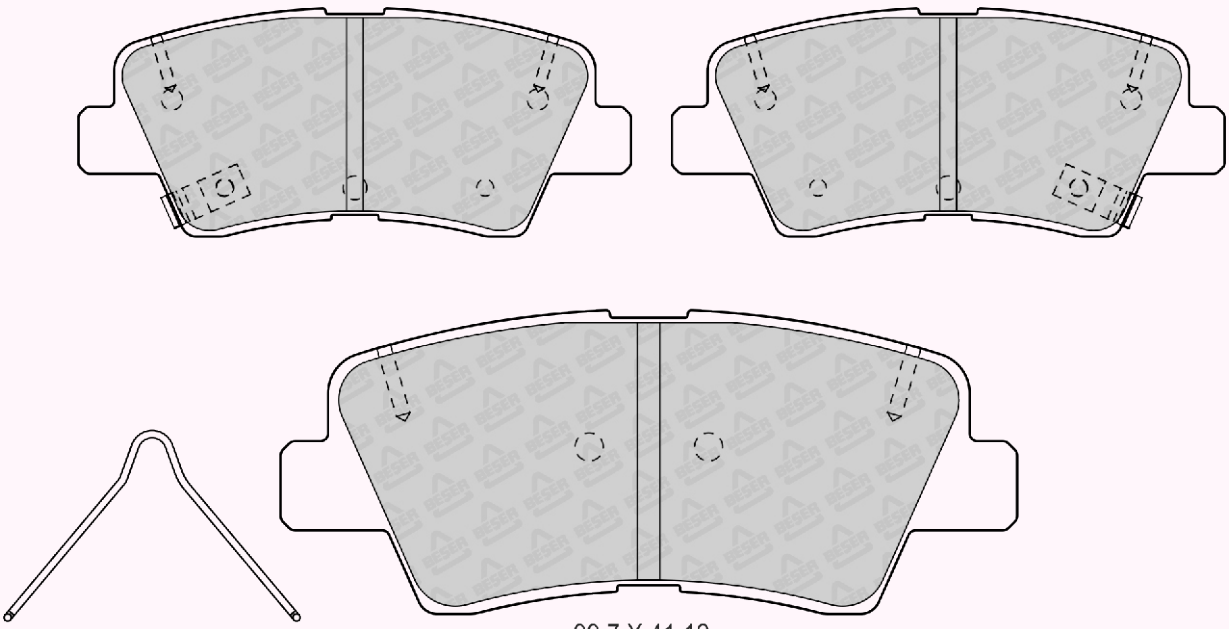

99,7 X 41,12
(NOT SCALE)

REFERENCE	T(mm)	REMARKS	MAKE	F/R	WVA No
4344	18	2 PADS WITH WEAR SENSOR	GAZ	R	-

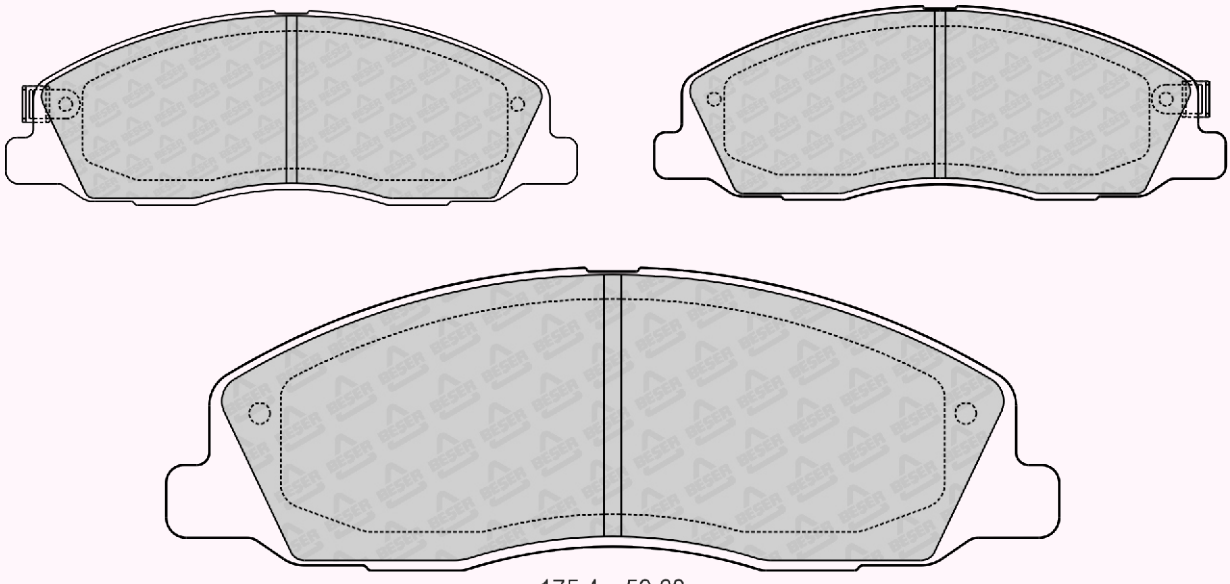

175,4 x 59,63
(NOT SCALE)

REFERENCE	T(mm)	REMARKS	MAKE	F/R	WVA No
4345	16,5	1 PAD WITH WEAR SENSOR	VOLKSWAGEN	R	23223 23224 23446

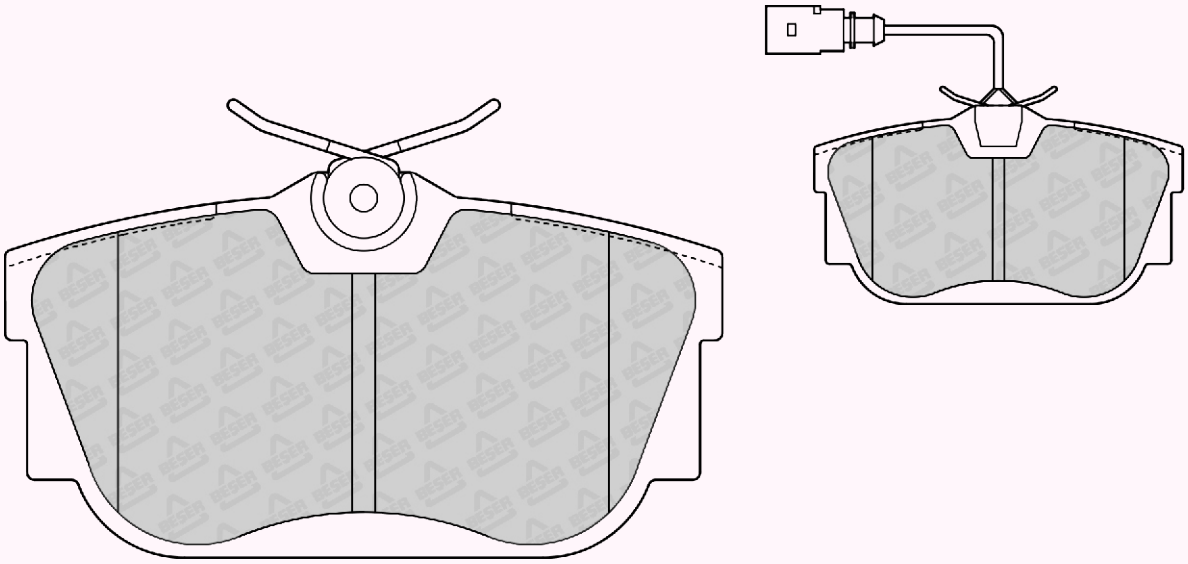

94,8 x 51

REFERENCE	T(mm)	REMARKS	MAKE	F/R	WVA No
4346	20,3	4 PADS PLAIN	BMW	F	25708 25709 25710

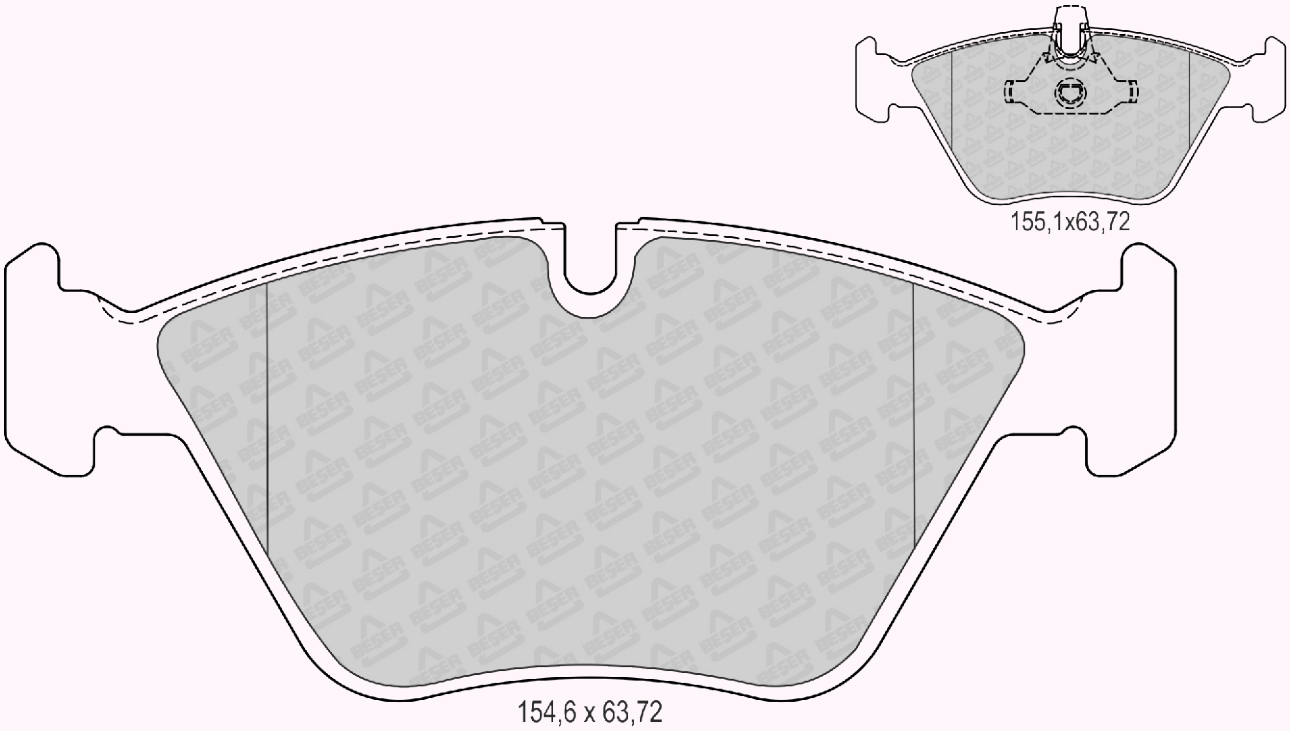

155,1x63,72

154,6 x 63,72

REFERENCE	T(mm)	REMARKS	MAKE	F/R	WVA No
4347	20,30	2 PADS WITH PISTON CLIP	BMW - MG ROVER	F	21676 23182 23183

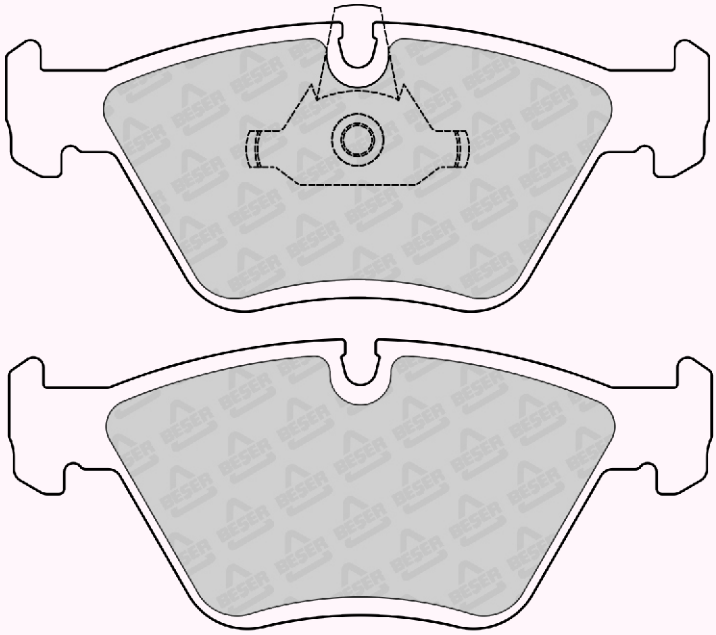

155,30 x 63,86
(NOT SCALE)

REFERENCE	T(mm)	REMARKS	MAKE	F/R	WVA No
4349	16,1	2 PADS WITH WEAR SPRING	MERCEDES BENZ	R	25353 25354

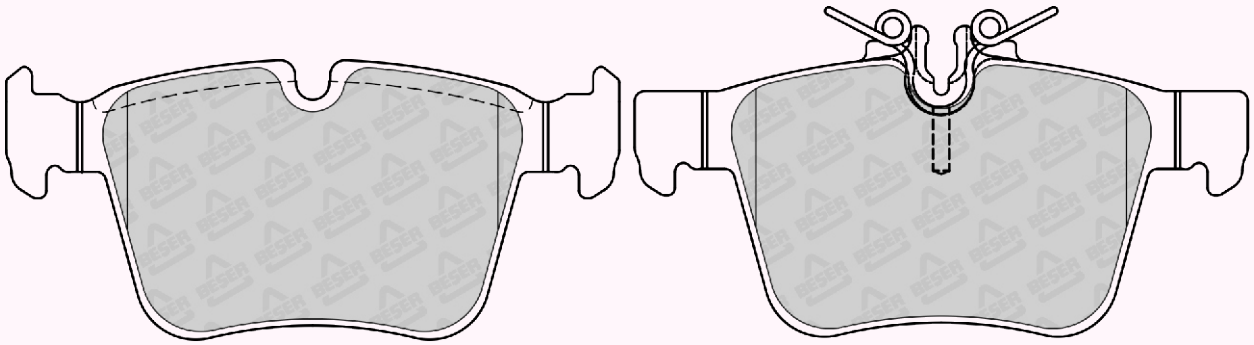

122,4 x 55,7
(NOT SCALE)

122,4 x 62
(NOT SCALE)

CROSS REFERENCE

ABEX	BESER
NO	NO
AVR101	3799
AVR102	3856
AVR103	3595
AVR105	3523
AVR106	3855
AVR107	3440
AVR108	3834
AVR109	3835
AVR110	3482
AVR111	3921
AVR112	3559
AVR114	3567
AVR115	3784
AVR116	3795
AVR117	3804
AVR119	3527
AVR120	3681
AVR121	3423
AVR123	3526
AVR124	3848
AVR125	3914
AVR126	3603
AVR131	3423
AVR132	3614
AVR133	3473
AVR135	3543
AVR136	3575
AVR137	3670
AVR140	3823
AVR141	3513
AVR142	3366
G0857	3433
G6070	3537
G6198	3679
G6268	3433
G6487	3773
G6495	3773
G6516	3749
G6727	3994
G6802	3433
G6803	3749
G6892	3942
G6895	3679
G6969	4169

ABS	BESER
NO	NO
35014	4312
35062	4308
35081	4284
35118	4287
35128	4307
35147	4301
36003	3317
36004	3316
36009	3318
36025	3320
36037	3311
36042	3329
36043	3321
36047	3373
36072	3709
36079	3710
36080	3393
36084	3425
36088	3327
36090	3335
36092	3366
36102	3416
36105	3315
36105	3515
36106	3343
36106	3483
36107	3405
36108	3374
36109	3312
36124	3423
36125	3661
36131	3527
36135	3324
36136	3421
36138	3378
36140	3365
36145	3410
36150	3314
36156	3509
36158	3370
36159	3407
36167	3752
36168	3397
36172	3502
36174	3546
36177	3641
36178	3400
36368	3379
36418	3339
36418	3514
36420	3369
36446	3417
36459	3417
36459	3417
36462	3371
36470	3440
36473	3415
36477	3579
36485	3417
36485	3417
36486	3484
36488	3573
36489	3572
36490	3513
36491	3468
36495	3646
36496	3625
36498	3611
36503	3493
36504	3413
36507	3429
36508	3401
36513	3624
36516	3419
36518	3424
36520	3394
36521	3466
36522	3467
36525	3495
36532	3490

ABS	BESER
NO	NO
36534	3621
36535	3402
36536	3444
36539	3441
36540	3486
36544	3442
36545	3620
36547	3556
36556	3408
36565	3380
36570	3482
36571	3875
36574	3723
36575	3605
36576	3422
36577	3428
36578	3603
36588	3436
36589	3543
36593	3462
36594	3449
36603	3714
36604	3776
36615	3582
36619	4212
36621	3746
36623	3529
36630	3432
36632	3757
36632	3857
36636	4212
36642	3499
36648	3448
36650	3564
36651	3457
36657	3760
36658	3600
36660	3430
36663	3446
36664	3609
36665	3679
36666	3437
36667	3470
36675	3882
36678	3563
36680	3666
36683	3680
36690	4108
36691	3779
36692	4087
36694	3469
36696	3453
36701	4088
36702	3777
36707	3589
36709	3464
36712	4148
36713	4086
36715	3879
36716	3629
36720	3426
36721	4080
36722	3696
36724	3560
36726	3522
36727	3640
36728	3766
36730	3695
36734	4072
36736	3436
36737	3704
36739	4104
36740	3562
36741	3660
36744	3642
36746	3683
36749	3733
36753	3685
36755	3584
36757	4148

ABS	BESER
NO	NO
36758	4148
36763	3622
36769	3539
36771	3623
36772	3603
36772	3604
36773	3590
36775	3473
36777	3554
36777	3651
36781	3688
36784	3686
36785	3445
36787	3581
36788	3596
36789	3551
36790	3531
36793	3674
36794	3887
36796	3833
36798	3366
36805	3736
36808	3593
36809	3558
36814	3545
36818	3536
36824	3578
36828	3689
36831	3607
36836	3819
36837	3878
36838	3658
36840	3523
36844	4214
36848	4128
36850	3528
36852	3883
36853	3585
36854	3608
36855	3540
36861	3888
36869	3898
36871	3507
36875	3693
36876	3553
36878	4078
36879	3610
36881	3503
36882	3673
36883	3595
36884	3559
36886	3740
36894	3617
36896	3505
36896	3615
36901	3567
36902	3678
36903	3677
36904	3628
36908	3656
36911	3799
36913	3670
36918	3675
36921	4099
36922	4275
36923	3915
36924	4274
36925	3809
36931	3749
36939	3512
36943	3863
36948	3574
36950	4062
36953	3667
36955	3577
36958	3909
36960	3602
36961	3881
36965	3884
36969	3566

ABS	BESER
NO	NO
36970	3538
36972	4079
36974	3697
36976	3750
36986	3606
36995	3874
36997	3570
36997	3594
37000	3614
37002	3511
37006	3663
37008	3782
37009	3680
37010	3896
37011	3896
37013	3618
37016	3636
37017	3745
37020	4059
37021	3676
37022	3821
37033	3822
37040	3659
37044	3653
37059	3763
37065	3762
37078	4125
37079	3552
37081	3932
37082	4010
37084	3859
37086	4027
37092	3637
37095	3681
37096	4034
37097	3919
37098	3918
37099	4020
37100	3754
37101	3755
37104	3861
37113	3575
37121	3568
37122	3548
37122	3690
37124	3804
37126	3778
37127	3722
37130	3648
37132	3897
37133	3590
37134	3769
37135	3768
37136	3788
37137	4009
37138	3539
37139	3744
37142	4345
37143	3794
37148	4069
37149	4102
37150	4101
37150	4209
37151	3943
37152	3644
37155	3782
37160	3896
37162	4222
37163	3764
37164	3913
37165	3836
37169	3901
37170	3790
37174	4110
37175	4155
37180	4269
37184	4123
37186	3780
37193	3767
37194	4103

ABS	BESER
NO	NO
37195	3877
37198	4126
37200	4271
37202	3955
37203	3892
37205	4115
37209	3932
37213	3846
37215	4100
37216	3853
37218	3852
37220	4281
37222	3928
37226	3830
37227	4153
37230	4158
37231	3829
37239	3590
37240	4095
37241	4138
37247	3993
37252	3993
37254	4093
37255	4119
37256	3921
37258	4085
37260	4082
37272	3820
37273	3800
37274	3553
37275	3802
37277	3935
37280	3826
37282	3800
37284	4084
37285	3934
37286	3790
37287	3848
37288	3795
37289	3855
37290	3856
37292	3790
37294	3784
37298	3823
37299	3575
37300	4211
37303	4094
37307	3854
37308	3931
37309	4112
37312	4109
37312	4232
37321	3933
37328	4013
37329	3986
37331	3834
37332	3835
37333	3914
37334	4152
37338	4138
37340	3748
37341	3747
37346	4180
37349	3801
37351	4118
37352	3951
37355	3911
37356	3910
37359	4159
37360	3826
37361	4042
37362	3979
37364	3978
37365	4076
37370	4208
37371	4179
37379	3942
37381	3889
37384	4106
37395	3983

ABS	BESER
NO	NO
37397	3849
37398	3850
37399	4071
37400	3890
37401	4153
37403	3961
37405	3817
37406	3825
37409	4346
37411	3905
37412	3529
37413	3842
37414	3904
37415	3841
37416	3841
37418	3800
37419	4303
37420	3891
37422	3885
37423	3959
37424	3831
37428	4096
37430	3939
37431	3940
37432	3778
37439	4173
37442	4028
37443	4036
37446	3912
37449	3923
37458	4105
37459	4111
37460	3895
37461	3894
37463	4208
37466	3946
37473	4303
37474	3968
37475	3984
37476	3820
37477	3853
37478	3983
37481	3900
37483	3987
37484	4042
37489	4058
37491	3765
37492	4001
37499	4213
37500	3944
37501	4293
37502	4081
37503	4000
37504	4074
37505	3976
37507	4210
37511	4198
37512	4018
37515	3969
37517	4016
37518	3952
37519	4137
37520	3880
37521	4059
37522	3960
37523	3989
37526	3687
37531	3929
37533	3980
37538	3940
37540	3988
37541	4017
37542	3958
37543	4077
37544	3953
37545	3949
37548	3976
37552	3962
37553	3925
37554	3963

ABS	BESER
NO	NO
37555	3926
37556	4113
37558	3906
37559	3920
37560	3907
37561	4157
37564	3800
37565	4240
37568	4161
37576	3922
37577	3981
37578	3820
37580	3954
37582	3976
37584	4248
37585	4247
37586	4249
37588	4260
37589	3972
37590	4151
37592	4028
37594	4173
37598	3964
37606	4122
37607	3970
37609	4006
37614	3945
37616	4037
37618	4035
37620	3956
37621	4165
37622	4039
37623	3827
37624	3975
37625	4038
37630	4092
37633	3965
37637	4207
37638	3995
37647	4181
37650	4160
37651	4156
37654	3886
37656	4122
37657	4216
37659	3965
37664	3966
37665	3967
37668	4029
37670	4258
37672	3982
37673	4220
37674	4215
37677	3948
37679	4141
37680	3797
37683	4149
37684	3903
37695	4309
37698	4004
37699	4073
37700	3971
37701	3996
37702	3997
37707	4134
37710	3996
37711	3997
37714	4121
37718	4173
37719	3996
37722	4147
37729	4150
37732	4142
37737	4146
37743	3994
37745	3933
37760	3964
37764	4008
37766	3944
37767	4162

ABS	BESER
NO	NO
37772	4054
37777	4061
37784	4135
37788	4310
37789	4230
37790	4014
37791	4143
37793	3906
37795	4060
37800	3826
37801	4291
37811	4049
37815	4256
37817	3826
37824	3826
37837	3458
37840	4124
37844	4255
37846	4132
37846	4172
37847	4057
37848	4056
37851	3886
37862	3905
37871	3800
37873	3983
37881	4167
37890	4145
37895	3945
37896	3608
37897	4093
37900	3966
37907	3981
37908	3922
37908	4171
37914	4311
37916	4136
37923	4161
37930	4166
37932	4049
37934	4310
37935	3966
37937	3998
37939	4057
37943	4124
37956	4204
37957	4200
37961	4140
37964	4241
37966	4175
37977	4315
37980	4174
37984	3790
37990	4201
38418	4005
38423	4004
38429	4185
38457	4058
38460	4016
38477	4182
38521	3867
38591	4197
38712	4182
38790	4011
38856	4012
38945	4031
2112845	3319
36009	3318
36010/1	3326
36025	3320
36025/1	3350
36037	3311
36047	3373
36091/1	3806
36091/3	3806
36105	3315
36105	3515
36124	3423
36125	3661
36125/1	3771

ABS	BESER
NO	NO
36125/1	3771
36138	3378
36145	3410
36168	3397
36168/1	3758
36172	3502
36175/1	3634
36177	3641
36341/1	3526
36418	3339
36418	3514
36446	3417
36459	3417
36459	3417
36462	3371
36470	3440
36488	3573
36489	3572
36489/1	3583
36489/1	3583
36490	3513
36498	3611
36498/1	3550
36498/1	3550
36498/2	3550
36498/2	3550
36503	3493
36520	3394
36521	3466
36525	3495
36535	3402
36536	3444
36539	3441
36540	3486
36556	3408
36556/1	3408
36565	3380
36565/1	3580
36571	3875
36604	3776
36611/1	3395
36623	3529
36623/1	3529
36623/1	3529
36624/1	3717
36624/1	3717
36630	3432
36630/1	3491
36636	4212
36642/1	3463
36648	3448
36650	3564
36651	3457
36658	3600
36660	3430
36664	3609
36664S	3609
36666	3437
36667	3470
36678	3563
36678S	3563
36683	3680
36692	4087
36694	3469
36696	3453
36696/1	3662
36702	3777
36707	3589
36709	3464
36712	4148
36713	4086
36715	3879
36716	3629
36720	3426
36721	4080
36722	3696
36724	3560
36726	3522
36727	3640
36728	3766

ABS	BESER
NO	NO
36737	3704
36739	4104
36740	3562
36741	3660
36744	3642
36746	3683
36749	3733
36753	3685
36755	3584
36757	4148
36763	3622
36769	3539
36771	3623
36772	3603
36772	3604
36773	3590
36773S	3590
36775	3473
36777	3554
36777	3651
36781	3688
36784	3686
36785	3445
36787	3581
36788	3596
36789	3551
36790	3531
36790S	3531
36793	3674
36794	3887
36796	3833
36805	3736
36808	3593
36809	3558
36814	3545
36818	3536
36824	3578
36828	3689
36831	3607
36836	3819
36837	3878
36838	3658
36848	4128
36850	3528
36852	3883
36853	3585
36853S	3585
36854	3608
36855	3540
36861	3888
36869	3898
36871	3507
36875	3693
36876	3553
36878	4078
36879	3610
36881	3503
36883	3595
36884	3559
36886	3740
36894	3617
36896	3505
36896	3615
36901	3567
36902	3678
36903	3677
36904	3628
36908	3656
36911	3799
36913	3670
36918	3675
36923	3915
36924	4274
36925	3809
36943	3863
36950	4062
36955	3577
36958	3909
36960	3602
36961	3881

ABS	BESER
NO	NO
36961S	3881
36965	3884
36969	3566
36970	3538
36970S	3538
36972	4079
36976	3750
36986	3606
36995	3874
36997	3570
36997	3594
37000	3614
37002	3511
37006	3663
37008	3782
37008S	3782
37009	3680
37010	3896
37010S	3896
37011	3896
37011S	3896
37013	3618
37016	3636
37020	4059
37021	3676
37022	3821
37033	3822
37040	3659
37059	3763
37065	3762
37078	4125
37079	3552
37081	3932
37082	4010
37084	3859
37086	4027
37092	3637
37092S	3637
37095	3681
37097	3919
37098	3918
37099	4020
37100	3754
37101	3755
37104	3861
37113	3575
37122	3548
37122	3690
37124	3804
37126	3778
37127	3722
37130	3648
37132	3897
37133	3590
37133S	3590
37134	3769
37135	3768
37136	3788
37137	4009
37138	3539
37139	3744
37142	4345
37143	3794
37148	4069
37149	4102
37150	4101
37150	4209
37151	3943
37152	3644
37155	3782
37155S	3782
37160	3896
37162	4222
37163	3764
37164	3913
37165	3836
37169	3901
37170	3790
37174	4110
37175	4155

ABS	BESER
NO	NO
37180	4269
37184	4123
37186	3780
37194	4103
37195	3877
37198	4126
37200	4271
37202	3955
37203	3892
37205	4115
37213	3846
37215	4100
37216	3853
37218	3852
37220	4281
37222	3928
37226	3830
37230	4158
37231	3829
37239	3590
37240	4095
37241	4138
37247	3993
37254	4093
37255	4119
37256	3921
37258	4085
37260	4082
37272	3820
37273	3800
37274	3553
37275	3802
37277	3935
37280	3826
37282	3800
37284	4084
37285	3934
37286	3790
37287	3848
37288	3795
37289	3855
37290	3856
37292	3790
37294	3784
37298	3823
37299	3575
37300	4211
37303	4094
37307	3854
37308	3931
37309	4112
37312	4109
37312	4232
37321	3933
37328	4013
37329	3986
37331	3834
37332	3835
37333	3914
37334	4152
37338	4138
37346	4180
37349	3801
37351	4118
37352	3951
37355	3911
37356	3910
37359	4159
37360	3826
37361	4042
37362	3979
37364	3978
37365	4076
37370	4208
37371	4179
37379	3942
37381	3889
37384	4106
37395	3983
37397	3849

ABS	BESER
NO	NO
37398	3850
37399	4071
37400	3890
37401	4153
37403	3961
37405	3817
37406	3825
37409	4346
37409S	4346
37411	3905
37412	3529
37413	3842
37414	3904
37414S	3904
37415	3841
37416	3841
37418	3800
37419	4303
37420	3891
37422	3885
37423	3959
37424	3831
37428	4096
37430	3939
37431	3940
37432	3778
37439	4173
37442	4028
37443	4036
37446	3912
37449	3923
37458	4105
37459	4111
37460	3895
37461	3894
37463	4208
37466	3946
37474	3968
37475	3984
37476	3820
37477	3853
37478	3983
37481	3900
37483	3987
37484	4042
37489	4058
37491	3765
37492	4001
37500	3944
37501	4293
37502	4081
37503	4000
37504	4074
37505	3976
37507	4210
37511	4198
37512	4018
37515	3969
37517	4016
37518	3952
37519	4137
37520	3880
37521	4059
37522	3960
37523	3989
37526	3687
37531	3929
37533	3980
37538	3940
37540	3988
37541	4017
37542	3958
37543	4077
37544	3953
37545	3949
37552	3962
37553	3925
37554	3963
37555	3926
37556	4113

ABS	BESER
NO	NO
37558	3906
37559	3920
37560	3907
37561	4157
37564	3800
37565	4240
37568	4161
37576	3922
37577	3981
37578	3820
37580	3954
37582	3976
37584	4248
37585	4247
37586	4249
37588	4260
37589	3972
37590	4151
37592	4028
37594	4173
37598	3964
37606	4122
37607	3970
37609	4006
37614	3945
37616	4037
37618	4035
37620	3956
37621	4165
37622	4039
37623	3827
37624	3975
37625	4038
37630	4092
37633	3965
37637	4207
37638	3995
37647	4181
37650	4160
37651	4156
37654	3886
37656	4122
37657	4216
37659	3965
37664	3966
37665	3967
37668	4029
37670	4258
37672	3982
37673	4220
37674	4215
37677	3948
37679	4141
37680	3797
37683	4149
37684	3903
37695	4309
37698	4004
37699	4073
37700	3971
37701	3996
37702	3997
37707	4134
37714	4121
37718	4173
37719	3996
37729	4150
37732	4142
37737	4146
37743	3994
37745	3933
37760	3964
37764	4008
37766	3944
37767	4162
37772	4054
37777	4061
37784	4135
37788	4310
37789	4230

ABS	BESER
NO	NO
37790	4014
37791	4143
37793	3906
37844	4255
37847	4057
37848	4056
37862	3905
37871	3800
37896	3608
37897	4093
38477	4182
38521	3867
38591	4197
38790	4011
38856	4012
38945	4031

AKRON	BESER
NO	NO
1039106	3417
1050003	4011
1050005	3754
1050006	3464
1050007	3470
1050008	3558
1050009	3448
1050010	4158
1050011	3318
1050012	3536
1050013	3444
1050014	3486
1050015	4212
1050017	3659
1050018	3778
1050019	3882
1050020	4042
1050022	3686
1050023	3430
1050028	3632
1050029	3879
1050030	3800
1050030	4248
1050032	3935
1050034	3496
1050036	4156
1050037	4092
1050038	3820
1050040	3958
1050042	3846
1050044	3912
1050046	3685
1050048	4148
1050049	3825
1050051	3985
1050052	3763
1050054	3861
1050055	3380
1050056	3495
1050057	3590
1050059	3317
1050060	3883
1050062	3896
1050063	3688
1050066	3817
1050067	3681
1050068	3800
1050069	3856
1050070	3799
1050071	4141
1050074	3529
1050075	3618
1050076	3801
1050077	3575
1050078	3790
1050079	3961
1050080	4038
1050081	4093
1050082	4180
1050083	4179
1050084	3949
1050087	3889
1050089	4109
1050089	4232
1050090	4122
1050091	3637
1050092	3896
1050093	4076
1050097	3769
1050098	3984
1050099	3976
1050102	3965
1050103	3782
1050104	3782
1050109	3529
1050110	3842
1050111	4143
1050113	3885
1050114	3663
1050115	3566

AKRON	BESER
NO	NO
1050116	3854
1050118	3853
1050120	3419
1050121	4123
1050122	3855
1050123	3834
1050124	3835
1050125	3914
1050126	3794
1050127	4211
1050130	3768
1050132	3938
1050133	3877
1050136	3848
1050137	3986
1050143	4230
1050144	4058
1050145	4014
1050147	3487
1050148	4293
1050149	3944
1050150	3904
1050151	3397
1050152	3905
1050154	3590
1050157	3543
1050161	4104
1050163	4260
1050165	3560
1050168	3931
1050169	4112
1050170	4153
1050171	3849
1050172	3649
1050173	3950
1050175	4142
1050176	3421
1050177	3656
1050178	4094
1050179	3939
1050180	3946
1050183	3430
1050184	4103
1050185	3852
1050186	3441
1050188	3968
1050191	4247
1050192	3590
1050193	3951
1050194	3895
1050195	4028
1050196	3978
1050197	4008
1050198	3983
1050199	3826
1050200	3880
1050201	4149
1050202	3717
1050203	3979
1050204	3983
1050205	3900
1050206	4210
1050207	3987
1050208	3923
1050209	3473
1050210	4096
1050211	3980
1050212	3960
1050214	4077
1050215	4173
1050216	3603
1050216	3604
1050219	3906
1050220	3975
1050221	3920
1050222	3550
1050223	3907
1050224	3593
1050225	3924
1050227	3539

AKRON	BESER
NO	NO
1050229	3926
1050230	3925
1050231	3963
1050234	3922
1050236	4160
1050238	3955
1050239	3890
1050240	4153
1050241	3943
1050242	3972
1050245	4161
1050250	3971
1050252	3967
1050253	3970
1050254	3964
1050259	4150
1050261	4281
1050265	3989
1050268	3966
1050269	4207
1050270	3425
1050272	4121
1050273	4057
1050275	3897
1050276	3928
1050277	4145
1050283	4084
1050289	3660
1050290	3623
1050291	4347
1050292	3821
1050295	3826
1050296	3466
1050298	3603
1050300	3881
1050301	3788
1050304	3611
1050305	3424
1050306	4039
1050307	3371
1050310	4152
1050312	3892
1050313	3674
1050314	3887
1050315	3581
1050316	3693
1050318	3658
1050320	3884
1050321	3677
1050322	3863
1050323	4126
1050324	3676
1050325	3896
1050326	3919
1050328	3687
1050329	3795
1050330	3933
1050331	3993
1050332	3769
1050333	4059
1050334	3918
1050334	4062
1050335	4182
1050336	3440
1050337	3595
1050339	3559
1050340	3567
1050341	3614
1050342	3419
1050343	3432
1050344	3445
1050346	3755
1050347	4269
1050348	4151
1050349	3959
1050350	3416
1050351	3670
1050354	3836
1050355	3969
1050356	3888

AKRON	BESER
NO	NO
1050357	3744
1050358	4128
1050359	3683
1050360	3722
1050361	3589
1050364	3648
1050366	3585
1050369	3945
1050371	3704
1050372	3553
1050374	3794
1050375	3802
1050378	3523
1050379	3551
1050380	3423
1050381	3503
1050382	3819
1050383	3608
1050386	3636
1050387	3678
1050388	3804
1050389	3921
1050390	3784
1050391	3746
1050392	3981
1050393	4125
1050394	4157
1050395	4100
1050396	3820
1050397	3843
1050398	3809
1050400	3800
1050402	4173
1050403	3617
1050404	3762
1050412	3618
1050423	3584
1050428	3757
1050428	3857
1050455	3493
1050459	3873
1050462	3878
1050470	3934
1050473	3415
1050478	3692
1050481	3562
1050492	3632
1050495	3577
1050500	4010
1050509	3749
1050510	3575
1050515	3417
1050515	3417
1050516	3621
1050522	3549
1050527	3545
1050545	3607
1050548	4155
1050549	3831
1050550	4159
1050559	4108
1050561	3675
1050564	4106
1050565	4271
1050585	3832
1050590	3874
1050591	3780
1050593	3522
1050596	3767
1050599	3315
1050599	3515
1050600	3339
1050600	3514
1050602	3469
1050606	3513
1050607	3408
1050608	3628
1050609	3689
1050610	3630
1050614	4069

AKRON	BESER
NO	NO
1050616	4101
1050616	4209
1050619	3962
1050628	3740
1050631	4009
1050632	3802
1050633	4269
1050636	3410
1050637	3469
1050650	3457
1050652	3680
1050658	3750
1050659	3610
1050662	3800
1050663	3940
1050665	3482
1050666	3596
1050668	3496
1050677	3850
1050678	4137
1050685	3423
1050686	3512
1050687	3662
1050689	3453
1050690	3872
1050704	3764
1050705	4079
1050706	3913
1050710	3402
1050730	3777
1050731	4086
1050741	3829
1050742	3830
1050745	4013
1050751	3891
1050753	3327
1050755	3605
1050759	3619
1050766	4020
1050772	3553
1050773	4095
1050775	4345
1050782	4222
1050784	4138
1050790	4138
1050791	3373
1050797	3642
1050807	3894
1050812	3901
1050819	4027
1050832	4197
1050836	4016
1050840	3318
1050841	3320
1050852	3436
1050853	3583
1050854	3609
1050856	3714
1050858	3504
1050860	3679
1050864	3590
1050867	4208
1050892	3685
1050900	4017
1050901	3933
1050902	3952
1050905	3965
1050911	3790
1050914	3995
1050917	3568
1050926	4148
1050930	4148
1050935	4118
1050939	4029
1050944	4249
1050952	3993
1050955	3993
1050956	3632
1050957	3502
1050959	4165

AKRON	BESER
NO	NO
1050961	4035
1050962	4061
1050964	3959
1050965	4049
1050969	4166
1050971	3522
1050972	4001
1050973	4087
1050977	4061
1050989	3827
1050990	4134
1050992	4132
1050992	4172
1050993	4056
1050995	3964
1050996	3771
1050997	4161
1051002	4213
1051003	4081
1051009	4113
1051010	3954
1051013	3956
1051014	4147
1051015	4037
1051016	3903
1051018	4146
1051019	3982
1051023	3953
1051026	3998
1051036	4309
1051045	3976
1051047	4073
1051054	4000
1051055	3929
1051056	3933
1051064	4310
1051071	4006
1051072	4018
1051077	4198
1051078	3704
1051082	4135
1051083	4162
1051089	3945
1051110	4004
1051117	4291
1051121	4226
1051124	4241
1051125	4295
1051129	3826
1051137	4201
1051138	4282
1051139	4286
1051142	4317
1051146	4060
1051148	4200
1051149	4167
1051150	4111
1051153	3886
1051154	4124
1051156	4204
1051159	4176
1051161	4174
1051162	4175
1051164	4315

ALANKO	BESER
NO	NO
10302247	4185

APEC	BESER
NO	NO
PAD1001	3644
PAD1004	4071
PAD1005	3496
PAD1010	4148
PAD1014	3704
PAD1015	3994
PAD1017	3778
PAD1018	4099
PAD1019	3872
PAD1020	3529
PAD1021	3722
PAD1022	3762
PAD1024	3763
PAD1026	3874
PAD1028	3745
PAD1031	3505
PAD1031	3615
PAD1034	3754
PAD1036	3674
PAD1038	3744
PAD1039	3755
PAD1040	3380
PAD1041	3938
PAD1046	4155
PAD1047	3887
PAD1049	4274
PAD1051	3897
PAD1053	3618
PAD1056	4182
PAD1059	3809
PAD1060	3529
PAD1062	3782
PAD1063	3676
PAD1066	4148
PAD1070	4079
PAD1071	3918
PAD1073	3522
PAD1074	3681
PAD1075	3919
PAD1076	3829
PAD1077	3861
PAD1080	3821
PAD1081	3780
PAD1084	4059
PAD1085	3674
PAD1086	3882
PAD1087	3650
PAD1088	3619
PAD1089	3795
PAD1091	3685
PAD1092	3768
PAD1093	4027
PAD1095	4281
PAD1096	3915
PAD1097	3764
PAD1099	3830
PAD1102	4126
PAD1103	4069
PAD1104	3804
PAD1109	3782
PAD1110	3590
PAD1111	3928
PAD1112	3790
PAD1113	3788
PAD1116	3769
PAD1117	3877
PAD1119	3529
PAD1120	3943
PAD1121	3993
PAD1122	3687
PAD1124	4009
PAD1126	4085
PAD1128	4110
PAD1129	3782
PAD1131	4011
PAD1133	3763
PAD1136	3704
PAD1140	3686
PAD1141	3539
PAD1143	3913

APEC	BESER
NO	NO
PAD1145	3740
PAD1147	4010
PAD1148	3901
PAD1149	3767
PAD1151	3859
PAD1152	3896
PAD1153	4102
PAD1155	3553
PAD1156	4101
PAD1156	4209
PAD1158	4345
PAD1160	4269
PAD1161	4222
PAD1162	3782
PAD1163	3843
PAD1164	3821
PAD1166	3836
PAD1167	3784
PAD1170	4115
PAD1171	3644
PAD1172	4084
PAD1173	3846
PAD1174	4100
PAD1175	4093
PAD1178	4138
PAD1181	4198
PAD1182	3794
PAD1183	3921
PAD1184	4095
PAD1185	3683
PAD1186	3852
PAD1187	4109
PAD1187	4232
PAD1188	4269
PAD119	3318
PAD1190	3529
PAD1193	4103
PAD1194	3800
PAD1195	3853
PAD1196	4153
PAD1197	3855
PAD1198	3820
PAD1200	3895
PAD1201	4271
PAD1203	3632
PAD1204	3856
PAD1207	3802
PAD1208	4094
PAD1209	4123
PAD121	3318
PAD1213	3938
PAD1216	3820
PAD1219	3697
PAD122	3320
PAD1220	4152
PAD1221	3846
PAD1223	3817
PAD1224	3986
PAD1225	3584
PAD1230	3687
PAD1237	3843
PAD1239	3834
PAD1240	3848
PAD1243	3825
PAD1245	3993
PAD1248	4211
PAD1249	3529
PAD1250	3931
PAD1251	3835
PAD1252	4138
PAD1254	4119
PAD1256	3529
PAD1259	3935
PAD126	3350
PAD1261	3914
PAD1262	4158
PAD1263	4180
PAD1264	3933
PAD1267	4012
PAD1268	3892

APEC	BESER
NO	NO
PAD1269	3820
PAD1270	3950
PAD1274	3826
PAD1277	3823
PAD1279	3795
PAD1282	4082
PAD1283	3934
PAD1284	3831
PAD1285	4179
PAD1288	3632
PAD1289	3854
PAD129	3317
PAD1290	3910
PAD1292	3575
PAD1293	3800
PAD1294	4125
PAD1295	4093
PAD1301	4118
PAD1302	3889
PAD1303	3831
PAD1305	3850
PAD1306	3849
PAD1308	3849
PAD1309	4123
PAD1310	3502
PAD1311	3932
PAD1312	3983
PAD1313	3904
PAD1315	4112
PAD1318	4076
PAD1319	3951
PAD1320	3912
PAD1321	3632
PAD1324	3905
PAD1326	3801
PAD1329	3894
PAD1330	3790
PAD1331	3979
PAD1332	4013
PAD1333	3890
PAD1334	4153
PAD1336	3841
PAD1337	3841
PAD1338	4105
PAD1341	4346
PAD1343	3978
PAD1344	4181
PAD1345	4111
PAD1348	4042
PAD135	3333
PAD1350	4028
PAD1352	3842
PAD1353	4208
PAD1355	4096
PAD1361	4216
PAD1362	3912
PAD1364	4074
PAD1369	4303
PAD137	3316
PAD1371	3777
PAD1376	3955
PAD1382	3891
PAD1384	3959
PAD1385	4186
PAD1388	3961
PAD1389	4031
PAD1390	4106
PAD1393	3863
PAD1394	4159
PAD1395	3632
PAD1396	3617
PAD1399	4303
PAD1400	3826
PAD1401	3923
PAD1404	3940
PAD1405	3900
PAD1410	3849
PAD1412	3827
PAD1413	4173
PAD1415	3885

APEC	BESER
NO	NO
PAD1416	4137
PAD1417	3939
PAD142	3327
PAD1426	3946
PAD1429	4017
PAD143	3343
PAD143	3483
PAD1430	3748
PAD1431	3879
PAD1432	4347
PAD1433	3984
PAD1437	3872
PAD1441	4210
PAD1442	3969
PAD1444	3853
PAD1448	3853
PAD1449	4001
PAD1450	3800
PAD1451	3959
PAD1453	4213
PAD1454	3912
PAD1455	4081
PAD1458	3968
PAD1460	3987
PAD1461	3765
PAD1462	3895
PAD1463	3928
PAD1465	4016
PAD1466	3983
PAD1467	4058
PAD1468	4293
PAD1469	3944
PAD1470	3988
PAD1471	3911
PAD1474	3985
PAD1475	3906
PAD1476	3920
PAD1477	3907
PAD1482	4113
PAD1485	4018
PAD1487	3980
PAD1489	4006
PAD1490	3952
PAD1491	3880
PAD1497	3747
PAD1501	4000
PAD1502	4143
PAD1503	4161
PAD1507	3976
PAD1508	3945
PAD1509	3874
PAD1514	3962
PAD1515	3925
PAD1516	3926
PAD1517	3963
PAD1519	3975
PAD1520	3883
PAD1525	3964
PAD1528	3993
PAD1532	4157
PAD1533	3800
PAD1539	3972
PAD1540	4151
PAD1545	3955
PAD1546	3820
PAD1547	3800
PAD1548	3800
PAD1549	3826
PAD1550	3800
PAD1553	3959
PAD1555	4028
PAD1556	3978
PAD1557	4198
PAD1558	3984
PAD1560	4240
PAD1561	4240
PAD1563	3980
PAD1564	3960
PAD1565	4248
PAD1567	3981

APEC	BESER
NO	NO
PAD1568	3989
PAD1571	3965
PAD1574	3976
PAD1575	3922
PAD1578	3954
PAD1579	3954
PAD158	3709
PAD1582	4160
PAD1583	4156
PAD1584	4035
PAD1589	3820
PAD1591	3949
PAD1592	4077
PAD1593	3953
PAD1596	3929
PAD1597	3965
PAD1598	3958
PAD1599	3982
PAD1606	3903
PAD1608	4092
PAD1609	3970
PAD161	3710
PAD1612	4173
PAD1614	4207
PAD1617	4039
PAD1618	4165
PAD1619	4247
PAD1620	4249
PAD1621	4038
PAD1626	4122
PAD1630	3800
PAD1638	3885
PAD1640	3886
PAD1641	3956
PAD1644	4036
PAD1645	3995
PAD1649	3950
PAD1655	4260
PAD1656	3966
PAD1657	3967
PAD1658	3503
PAD1659	3971
PAD1660	3607
PAD1662	4143
PAD1664	3983
PAD1669	3964
PAD1670	4309
PAD1674	4037
PAD1684	4149
PAD1685	3950
PAD1687	4004
PAD1689	4142
PAD1690	4054
PAD1697	4150
PAD1698	4029
PAD1700	4005
PAD1706	4122
PAD1707	4147
PAD1708	4134
PAD1716	3950
PAD1718	4256
PAD1723	4146
PAD1728	4169
PAD1731	3904
PAD1733	3944
PAD1736	4124
PAD1737	4291
PAD1742	4208
PAD1745	4073
PAD1751	4135
PAD1753	4060
PAD1754	4061
PAD1755	4233
PAD1760	4015
PAD1761	3996
PAD1762	3997
PAD1764	4061
PAD1771	4230
PAD1772	4008
PAD1773	4014

APEC	BESER
NO	NO
PAD1775	3826
PAD1777	3945
PAD1781	4057
PAD1782	4162
PAD1783	4132
PAD1783	4172
PAD1793	4121
PAD1796	4310
PAD1797	4056
PAD1813	4145
PAD1814	3529
PAD1816	3906
PAD1821	3885
PAD1822	3853
PAD1826	3933
PAD1827	3826
PAD1828	4148
PAD1829	4148
PAD1835	4122
PAD1836	4314
PAD1839	3998
PAD1840	4167
PAD1841	4122
PAD1847	3894
PAD1849	3945
PAD1853	4255
PAD1858	3981
PAD1859	3922
PAD1859	4171
PAD1860	4039
PAD1864	4014
PAD1865	4166
PAD1867	3952
PAD1869	4038
PAD1870	4311
PAD1872	4167
PAD1878	4161
PAD1883	4136
PAD1887	3983
PAD1896	4311
PAD1902	4228
PAD1903	4241
PAD1905	4204
PAD1918	3955
PAD1930	4174
PAD1931	4175
PAD1937	4201
PAD1940	4156
PAD1944	4140
PAD1949	4226
PAD1954	4258
PAD1956	3959
PAD1957	4213
PAD1958	4200
PAD1968	4317
PAD1969	4318
PAD1973	4176
PAD1988	3885
PAD1989	4311
PAD2001	3826
PAD2002	3826
PAD2028	4295
PAD2031	4349
PAD2044	4307
PAD2119	4287
PAD2171	4301
PAD267	3315
PAD267	3515
PAD271	3806
PAD274	3393
PAD282	3335
PAD290	3315
PAD290	3515
PAD291	3374
PAD293	3324
PAD301	3378
PAD306	3410
PAD310	3379
PAD311	3421
PAD314	3527

APEC	BESER
NO	NO
PAD317	3405
PAD318	3365
PAD328	3509
PAD329	3369
PAD331	3370
PAD332	3579
PAD340	3339
PAD340	3514
PAD351	3417
PAD356	3417
PAD356	3417
PAD366	3407
PAD370	3531
PAD371	3536
PAD375	3415
PAD376	3573
PAD377	3624
PAD379	3394
PAD384	3440
PAD385	3419
PAD386	3429
PAD388	3646
PAD391	3503
PAD398	3371
PAD404	3572
PAD405	3611
PAD409	3493
PAD417	3424
PAD420	3513
PAD421	3402
PAD423	3621
PAD428	3410
PAD435	3486
PAD437	3400
PAD438	3444
PAD439	3441
PAD441	3490
PAD442	3466
PAD444	3641
PAD445	3620
PAD446	3436
PAD447	3875
PAD452	3758
PAD453	3509
PAD457	3394
PAD458	3633
PAD460	3634
PAD461	3397
PAD466	3408
PAD470	3495
PAD472	3752
PAD473	3474
PAD476	3714
PAD481	3395
PAD483	3462
PAD489	3482
PAD492	3546
PAD495	3401
PAD496	3442
PAD497	3603
PAD502	3582
PAD506	3504
PAD507	3449
PAD512	3526
PAD514	3446
PAD518	3605
PAD520	3467
PAD521	3543
PAD528	3428
PAD530	3422
PAD532	3549
PAD533	3529
PAD534	3463
PAD538	3311
PAD546	3610
PAD547	3529
PAD548	3432
PAD556	3484
PAD558	3609
PAD560	3323

APEC	BESER
NO	NO
PAD561	3589
PAD562	3321
PAD563	3773
PAD567	3583
PAD573	3496
PAD576	3373
PAD581	3410
PAD582	3771
PAD586	3746
PAD587	4212
PAD589	3470
PAD590	3578
PAD591	3412
PAD592	3662
PAD596	3564
PAD597	3469
PAD60	3416
PAD602	3448
PAD605	3760
PAD606	3600
PAD608	3430
PAD61	3423
PAD611	4212
PAD614	3882
PAD615	3757
PAD615	3857
PAD619	3717
PAD624	3380
PAD625	3503
PAD626	3312
PAD632	3366
PAD636	3543
PAD638	3723
PAD640	3437
PAD641	3469
PAD644	3642
PAD645	3641
PAD650	3873
PAD653	3757
PAD653	3857
PAD655	3584
PAD658	3679
PAD666	3700
PAD668	4108
PAD669	3779
PAD673	4088
PAD674	4087
PAD676	3583
PAD678	3680
PAD679	3696
PAD680	4148
PAD684	3522
PAD685	3464
PAD686	3433
PAD687	3640
PAD688	4212
PAD689	3683
PAD69	3413
PAD690	3491
PAD692	3562
PAD693	3660
PAD694	4104
PAD700	3631
PAD703	3560
PAD704	3631
PAD705	3502
PAD706	3661
PAD707	3531
PAD711	3466
PAD712	3487
PAD717	3448
PAD719	3632
PAD721	3695
PAD722	3603
PAD722	3604
PAD725	3563
PAD728	3473
PAD729	3445
PAD730	3623
PAD735	3423

APEC	BESER
NO	NO
PAD737	3704
PAD739	3426
PAD740	3523
PAD742	3779
PAD748	4080
PAD749	3596
PAD752	3766
PAD754	4072
PAD756	3628
PAD757	3733
PAD759	3581
PAD761	3545
PAD765	3832
PAD770	3873
PAD772	3630
PAD773	3556
PAD776	3539
PAD777	3776
PAD781	3685
PAD782	3598
PAD785	4086
PAD789	3590
PAD792	3554
PAD792	3651
PAD794	3688
PAD797	3674
PAD798	3887
PAD800	4128
PAD801	3558
PAD802	3593
PAD803	3819
PAD804	3878
PAD805	3658
PAD806	3888
PAD810	3503
PAD812	3608
PAD814	3528
PAD815	3607
PAD816	3686
PAD820	3879
PAD822	3693
PAD823	3833
PAD825	3580
PAD827	3536
PAD828	3474
PAD833	3714
PAD835	3777
PAD836	3909
PAD844	3883
PAD845	4078
PAD847	3736
PAD848	3553
PAD852	4182
PAD855	3585
PAD859	4148
PAD861	3673
PAD863	3915
PAD864	4275
PAD867	3595
PAD868	3559
PAD873	3436
PAD875	3506
PAD876	3667
PAD879	3675
PAD880	3577
PAD884	3749
PAD886	3677
PAD890	3602
PAD891	3496
PAD892	3470
PAD897	3453
PAD899	3511
PAD901	3750
PAD903	3884
PAD907	3512
PAD909	3570
PAD909	3594
PAD910	4020
PAD911	3538
PAD914	3622

APEC	BESER
NO	NO
PAD915	3457
PAD918	3678
PAD921	3567
PAD922	3740
PAD923	3863
PAD924	3419
PAD928	3614
PAD929	3670
PAD933	3566
PAD934	4062
PAD935	3799
PAD936	3680
PAD937	3617
PAD942	3656
PAD948	3881
PAD952	3898
PAD954	3606
PAD955	3773
PAD956	3879
PAD961	3896
PAD962	3822
PAD963	3994
PAD966	3682
PAD967	3663
PAD968	4034
PAD969	3554
PAD969	3651
PAD970	3636
PAD971	3507
PAD973	3896
PAD974	3637
PAD976	3659
PAD978	4197
PAD979	3867
PAD980	3687
PAD984	3575
PAD985	3704
PAD987	3617
PAD988	3781
PAD991	3632
PAD993	4125
PAD995	3417
PAD998	3598
PAD999	4087

ASHIKA	BESER
NO	NO
50-00-000	3421
50-00-003	3872
50-00-004	3955
50-00-0048	4346
50-00-005	3872
50-00-010	4104
50-00-011	4211
50-00-012	4128
50-00-013	3983
50-00-015	3562
50-00-017	3888
50-00-018	4016
50-00-021	3748
50-00-031	3964
50-00-032	3619
50-00-056	3867
50-00-057	4182
50-00-090	4031
50-00-097	4011
50-00-099	4197
50-00-190	3562
50-01-101	3394
50-01-106	3370
50-01-109	3848
50-01-111	3397
50-01-114	3659
50-01-115	4143
50-01-116	3369
50-01-117	3965
50-01-118	4074
50-01-121	3952
50-01-122	3942
50-01-123	4038
50-01-127	4015
50-01-130	3397
50-01-133	3758
50-01-134	3415
50-01-137	3760
50-01-139	3760
50-01-143	3779
50-01-144	3700
50-01-149	3598
50-01-150	3797
50-01-151	3856
50-01-153	4002
50-01-154	3932
50-01-156	4056
50-01-164	4308
50-01-176	4115
50-01-177	4010
50-01-178	3859
50-01-183	3779
50-01-189	3779
50-01-191	3577
50-01-194	3632
50-01-195	3758
50-01-198	3577
50-01-199	3882
50-02-2000	4176
50-02-2001	4255
50-02-2004	3998
50-02-2006	4274
50-02-2007	4071
50-02-2008	3822
50-02-2009	3927
50-02-203	3769
50-02-204	4112
50-02-205	3891
50-02-206	3890
50-02-207	3915
50-02-208	3324
50-02-209	4105
50-02-210	3710
50-02-211	3817
50-02-213	4013
50-02-215	3768
50-02-217	3987
50-02-218	3910
50-02-219	3958
50-02-224	3379

ASHIKA	BESER
NO	NO
50-02-225	3982
50-02-230	4077
50-02-234	3369
50-02-235	3402
50-02-236	3371
50-02-239	3634
50-02-240	3714
50-02-242	4088
50-02-243	3903
50-02-247	3714
50-02-248	3777
50-02-250	3956
50-02-253	3379
50-02-254	3560
50-02-257	3402
50-02-261	3554
50-02-261	3651
50-02-262	4088
50-02-264	3554
50-02-264	3651
50-02-265	4086
50-02-268	3829
50-02-269	3953
50-02-272	3996
50-02-273	4082
50-02-277	3948
50-02-278	4167
50-02-280	4158
50-02-281	3768
50-02-288	3673
50-02-289	3554
50-02-289	3651
50-02-290	3554
50-02-290	3651
50-02-292	3673
50-02-297	3666
50-03-300	3885
50-03-302	3877
50-03-305	4118
50-03-306	3889
50-03-307	3889
50-03-309	4317
50-03-310	3709
50-03-311	3780
50-03-315	4220
50-03-317	4220
50-03-322	4119
50-03-323	3988
50-03-325	3462
50-03-326	3449
50-03-330	3666
50-03-331	3437
50-03-332	3723
50-03-333	3449
50-03-334	3436
50-03-338	3632
50-03-339	3502
50-03-341	3522
50-03-342	3640
50-03-343	4122
50-03-345	3723
50-03-346	4029
50-03-373	3767
50-03-375	3687
50-03-376	3470
50-03-377	3312
50-03-378	3484
50-03-379	3740
50-03-384	3874
50-03-385	3832
50-03-386	3640
50-03-387	3522
50-03-389	3687
50-03-390	3623
50-03-393	3874
50-03-396	3892
50-03-398	3740
50-03-399	3832
50-03-594	3502
50-04-401	3831

ASHIKA	BESER
NO	NO
50-04-404	3509
50-04-405	4160
50-04-413	3646
50-04-414	3501
50-04-417	4212
50-04-418	3582
50-04-419	3752
50-04-420	3504
50-04-424	3582
50-04-425	3686
50-04-426	3631
50-04-427	3683
50-04-432	3704
50-04-435	3607
50-04-438	4312
50-04-440	3631
50-04-452	4159
50-04-490	4110
50-04-492	3695
50-04-493	3696
50-04-496	3683
50-04-497	3704
50-04-498	3704
50-04-499	3704
50-05-501	3955
50-05-503	3765
50-05-504	3975
50-05-505	4271
50-05-508	3407
50-05-509	3892
50-05-512	4054
50-05-514	4216
50-05-515	3900
50-05-516	4059
50-05-517	3916
50-05-518	4107
50-05-521	3401
50-05-523	3603
50-05-523	3604
50-05-524	3400
50-05-525	3401
50-05-527	3448
50-05-530	3622
50-05-582	3900
50-05-583	3778
50-05-585	3809
50-05-587	3622
50-05-588	3675
50-05-591	3632
50-05-592	3675
50-05-595	3507
50-05-598	3622
50-05-599	3685
50-06-601	3436
50-06-602	3620
50-06-605	3746
50-06-606	3600
50-06-607	3436
50-06-611	4122
50-06-612	3928
50-06-615	3901
50-06-698	3436
50-06-699	3898
50-07-700	3394
50-07-701	3579
50-07-703	3395
50-07-705	3426
50-07-706	3912
50-07-708	4078
50-07-709	4081
50-07-711	3764
50-07-712	4036
50-07-796	4079
50-08-800	3983
50-08-802	3929
50-08-806	3882
50-08-807	4000
50-08-809	3928
50-08-811	3883
50-08-813	4027

ASHIKA	BESER
NO	NO
50-08-816	3602
50-08-886	4034
50-08-887	3633
50-08-893	3884
50-08-895	3511
50-08-896	3745
50-08-897	3883
50-09-901	3446
50-09-902	3462
50-09-903	3674
50-09-904	3757
50-09-904	3857
50-09-906	3623
50-09-908	3886
50-09-910	4005
50-09-911	4198
50-09-913	4006
50-09-914	4124
50-09-994	4012
50-09-999	3674
50-0H-H14	3960
50-0H-H17	4049
50-0H-H18	4166
50-0K-010	3968
50-0K-019	4035
50-0K-K11	4001
50-0K-K12	3880
50-0K-K20	4039
50-0K-K24	4136
50-0K-K28	4233
50-0L-L00	4161
50-0L-L01	4293
50-0L-L02	3453
50-0L-L03	4094
50-0L-L10	3662
50-0L-L11	3413
50-0M-000	4281
50-0S-S01	3976
50-0W-008	3539
50-0W-W09	4073
50-0W-W10	3976
50-0W-W12	4230
50-0W-W13	4008
50-0W-W16	4149
50-H0-002	3648
50-H0-003	3843
50-H0-004	3632
50-H0-005	3843
50-H0-007	3648
50-H0-008	3985
50-H0-009	3502
50-H0-010	3959
50-H0-013	3961
50-K0-000	4009
50-K0-001	3653
50-K0-005	3802
50-K0-005P	3802
50-K0-006	3778
50-K0-007	4269
50-K0-008	3978
50-K0-009	4028
50-K0-014	3632
50-K0-015	3959
50-K0-017	4269
50-W0-000	3511
50-W0-002	3510
50-W0-003	3687
50-W0-004	3744
50-W0-007	3951
51.04.402	4212
51.04.425	4212
51-00-002	4106
51-00-005	3853
51-00-008	3747
51-00-015	3660
51-01-102	3855
51-01-109	3795
51-01-123	4087
51-01-137	4010
51-01-138	3853

ASHIKA	BESER
NO	NO
51-01-154	3933
51-02-200	4153
51-02-201	3693
51-02-203	3788
51-02-210	3693
51-02-211	4111
51-02-213	3776
51-02-214	3954
51-02-215	3830
51-02-216	3911
51-02-217	4113
51-02-218	3949
51-02-220	4037
51-02-221	3997
51-02-223	4146
51-02-256	4153
51-02-257	3825
51-02-259	3830
51-02-260	4085
51-02-262	4072
51-02-295	4275
51-02-297	3693
51-02-298	3693
51-03-302	3875
51-03-304	4303
51-03-307	3833
51-03-310	4215
51-03-390	3833
51-03-392	3833
51-04-400	4156
51-04-402	4212
51-04-404	4212
51-04-405	4148
51-04-407	4155
51-04-408	4148
51-04-409	4148
51-04-414	4279
51-04-425	4212
51-04-495	4148
51-04-497	4148
51-04-498	4148
51-05-503	4108
51-05-506	3335
51-05-507	4062
51-05-508	4106
51-05-592	4084
51-05-594	4108
51-05-595	4087
51-05-599	3688
51-07-701	4080
51-07-702	3913
51-07-704	4213
51-07-705	4258
51-09-901	4004
51-09-902	4018
51-09-903	3887
51-09-999	3887
51-0A-A01	3777
51-0H-H01	4311
51-0H-H04	3993
51-0H-H05	4087
51-0H-H06	3993
51-0H-H08	3989
51-0H-H09	4311
51-0K-004	3969
51-0K-K01	3545
51-0K-K03	3979
51-0K-K06	4061
51-0K-K08	3993
51-0K-K09	3980
51-0K-K10	4165
51-0K-K11	4060
51-0L-L00	3879
51-0L-L01	3944
51-0L-L03	4157
51-0L-L04	3661
51-0L-L06	3512
51-0L-L07	3771
51-0S-S01	3895
51-0W-W02	3894

ASHIKA	BESER
NO	NO
51-0W-W05	4014
51-0W-W06	4150
51-H0-H07	3993

ASHUKI	BESER
NO	NO
US104242	4185

ASIMCO	BESER
NO	NO
KD6340	4185

ATE	BESER
NO	NO
600028	3896
600030	3564
600032	3590
600035	3551
600036	3503
600037	3836
600038	3444
600039	3470
600040	3677
600041	3863
600042	3665
600044	3782
600045	3877
600046	3896
600047	3658
600048	3623
600049	3762
600050	3531
600058	3570
600058	3594
600059	3754
600060	4347
602709	3983
602718	4094
602719	3944
602723	4157
602726	3836
602727	3408
602728	4293
602731	3944
602732	4248
602733	4248
602734	4249
602737	4157
602738	3972
602739	4151
602740	3529
602741	3966
602742	3966
602744	3967
602745	3971
602747	4260
602748	4260
602753	3529
602755	4150
602758	4150
602760	4325
602779	4326
602780	4335
602790	4336
602792	4334
602801	3624
602803	3683
602813	3466
602815	3733
602816	3750
602819	3529
602820	3529
602821	3896
602822	3896
602823	3529
602824	3526
602825	3556
602829	3636
602831	4062
602833	4125
602834	3503
602835	3755
602837	3896
602838	3553
602840	3795
602842	3529
602843	3773
602845	3529
602853	4059
602854	3836
602856	3323
602857	3846
602860	3529
602861	3539

ATE	BESER
NO	NO
602862	3644
602863	3986
602864	3529
602867	4123
602869	3610
602870	3848
602871	3854
602874	4345
602876	4222
602877	4152
602880	3905
602881	3931
602882	3842
602883	4138
602884	4138
602886	3529
602887	3905
602891	3939
602892	3940
602893	3946
602894	3529
602895	3539
602897	4062
602899	4012
602901	3440
602902	3543
602903	3605
602912	3419
602913	3429
602921	3609
602923	3430
602924	3378
602925	3619
602926	3649
602927	3408
602934	3650
602935	3642
602936	3490
602937	3529
602938	3378
602939	3467
602941	3466
602942	3466
602944	3468
602948	3432
602949	3466
602953	3373
602954	3311
602955	3503
602956	3474
602957	3531
602958	3551
602962	3536
602964	3419
602965	3422
602966	3393
602967	3374
602971	3457
602973	4020
602975	3658
602976	3595
602977	3559
602982	3553
602983	3539
602984	3529
603009	3326
603306	3583
603503	3630
603504	3630
603602	3536
603800	3856
603803	3578
603806	3855
603807	3643
603808	3318
603809	4173
603810	3826
603811	3800
603813	3984
603814	3850

ATE	BESER
NO	NO
603815	3849
603817	3800
603818	3826
603819	3923
603823	3496
603826	3826
603827	3800
603829	3987
603831	4058
603832	3926
603833	3920
603834	3906
603835	3907
603837	3926
603840	3800
603842	3963
603846	4173
603847	3970
603849	3827
603850	3826
603851	3984
603853	4146
603860	3906
603903	3442
603904	3425
603911	3380
603914	3641
603915	3493
603926	3496
603928	3333
603933	3428
603935	3464
603936	3316
603937	3317
603939	3424
603940	3424
603944	3603
603945	3689
603950	3643
603951	3608
603952	3487
603954	3496
603955	3495
603956	3819
603957	3799
603959	3445
603960	3473
603965	3722
603966	3800
603968	3527
603969	3482
603970	3366
603971	3366
603972	3878
603974	3659
603975	3938
603976	3763
603979	4281
603980	3681
603982	3826
603983	3800
603985	3861
603987	4100
603988	4093
603990	3804
603992	3921
603993	3784
603994	3820
603997	3935
603998	3934
604014	3680
604028	3327
604029	3343
604029	3483
604030	3611
604033	3318
604034	3550
604035	3318
604040	3717
604043	3469

ATE	BESER
NO	NO
604044	3318
604047	3581
604058	3545
604059	3680
604060	3663
604063	3806
604064	3676
604065	3821
604069	4101
604069	4209
604201	3629
604202	3628
604401	3513
604805	4137
604807	3981
604809	3981
604810	3922
604811	3922
604812	3820
604817	4240
604823	4092
604826	3925
604827	3962
604828	3994
604829	3995
604830	3965
604833	3945
604844	4169
604847	3942
604856	4056
604857	4132
604857	4172
604858	4057
604870	4313
604914	3994
604955	3523
604956	3873
604957	3596
604965	3909
604966	3575
604976	4076
604977	4103
604978	3834
604979	3835
604980	3914
604984	4102
604989	3575
604996	3823
605030	3335
605032	3365
605409	3459
605418	3405
605423	3484
605469	3320
605600	4039
605601	4165
605602	3956
605604	4037
605608	4277
605609	3929
605610	4029
605612	4149
605616	3903
605618	3996
605619	3997
605622	3976
605629	4004
605631	3975
605632	4017
605642	4337
605645	4342
605700	3983
605711	4148
605714	4159
605717	4010
605718	3507
605722	3777
605725	3802
605734	4111
605735	4106

ATE	BESER
NO	NO
605738	3911
605739	3894
605742	4028
605743	3910
605744	3693
605745	3673
605746	3829
605747	3891
605748	4085
605749	3830
605750	4105
605751	4010
605752	4038
605753	4160
605754	4156
605755	4110
605760	3955
605763	3745
605764	3948
605765	3949
605766	4077
605767	3953
605769	3954
605772	3978
605773	3979
605775	3969
605776	3968
605777	3960
605778	4143
605779	3880
605780	3980
605782	3989
605783	3952
605785	3976
605787	3912
605790	4113
605791	4001
605792	3648
605794	4122
605795	3988
605797	4081
605799	4035
605800	4112
605801	3983
605802	3780
605803	3778
605806	3463
605810	3769
605811	3768
605812	3788
605813	3890
605814	4153
605815	3817
605816	3436
605818	3696
605819	3825
605820	3607
605821	3889
605822	4118
605827	4155
605829	3985
605830	3872
605832	3843
605833	3993
605836	4027
605838	3602
605843	3933
605846	4013
605848	4158
605849	4153
605850	4080
605851	4079
605852	3901
605853	3892
605854	4271
605856	4303
605857	3884
605860	3831
605862	4072
605863	3687

ATE	BESER
NO	NO
605864	3883
605868	4269
605872	3502
605873	3959
605874	4087
605875	3961
605878	4109
605878	4232
605879	3859
605881	3397
605882	4082
605884	3874
605887	3928
605890	3809
605891	3822
605895	3764
605896	4009
605898	3898
605899	3951
605916	3509
605917	3646
605918	3582
605919	3752
605922	3631
605923	3740
605924	3545
605925	3470
605926	3674
605927	3887
605928	3607
605929	4148
605931	3449
605932	3437
605933	3632
605935	3371
605936	3504
605937	3758
605938	3714
605940	3448
605941	3766
605942	3757
605942	3857
605943	3686
605944	3522
605945	3709
605947	3401
605948	3400
605949	4104
605950	3562
605951	3554
605951	3651
605952	3622
605953	3603
605953	3604
605954	3832
605956	4128
605957	3760
605958	3685
605959	3888
605960	3415
605963	3394
605967	3882
605970	3723
605973	3833
605974	3640
605976	3402
605978	3426
605980	4108
605981	3688
605982	3704
605986	3660
605987	3675
605988	3577
605990	3600
605991	3395
605992	3560
605994	3687
605996	3744
605998	4212
606015	3679

ATE	BESER
NO	NO
606027	3320
606028	3350
606030	3315
606030	3515
606031	3315
606031	3515
606033	3564
606905	3423
606908	3423
606910	3416
606911	3423
606916	3662
606917	3771
606923	3512
606925	3453
606925	3816
607005	3621
607027	3417
607027	3417
607030	3441
607032	3444
607033	3486
607036	3572
607038	3410
607040	3549
607042	3312
607046	3573
607047	3572
607048	3410
607050	3590
607051	3623
607052	3505
607052	3615
607056	3593
607057	3558
607058	3528
607059	3585
607060	3593
607067	3618
607069	3617
607071	3570
607071	3594
607072	3538
607075	3583
607076	3506
607078	3881
607079	3879
607080	3736
607082	3567
607083	3678
607084	3670
607085	3680
607086	3677
607087	3863
607090	3656
607091	3665
607100	3566
607101	3637
607102	3606
607108	3548
607108	3690
607109	3563
607111	3782
607114	3897
607115	3762
607117	3782
607121	3754
607122	3590
607124	3794
607126	3790
607127	3569
607128	3568
607132	3569
607135	3918
607137	3853
607138	3584
607141	3790
607142	3877
607143	3590
607144	3943

ATE	BESER
NO	NO
607145	3919
607153	4095
607155	4347
607157	3950
607158	3852
607160	3853
607167	4180
607169	4179
607172	4211
607174	4181
607175	3853
607176	4346
607179	4042
607181	3617
607184	3904
607186	3801
607192	3841
607193	3885
607194	3853
607195	3853
607201	4096
607205	4119
607206	4011
607209	3853
607210	4208
607220	4210
607226	3904
607228	4161
607229	3964
607231	4207
607234	4220
607235	4215
607236	3841
607240	3841
607244	4247
607248	3950
607249	4134
607251	3853
607253	3853
607254	3964
607258	4121
607262	4230
607263	4008
607264	4014
607265	4121
607266	3964
607270	4141
607904	3614
607906	3749
608003	4197
608004	4126
608005	4069
608006	3421
609028	3315
609028	3515
609029	3339
609029	3514
609032	3625
13.0460.7091.2	3665
13.0460-0028.2	3896
13.0460-0030.2	3564
13.0460-0032.2	3590
13.0460-0035.2	3551
13.0460-0036.2	3503
13.0460-0037.2	3836
13.0460-0038.2	3444
13.0460-0039.2	3470
13.0460-0040.2	3677
13.0460-0041.2	3863
13.0460-0044.2	3782
13.0460-0045.2	3877
13.0460-0046.2	3896
13.0460-0047.2	3658
13.0460-0048.2	3623
13.0460-0049.2	3762
13.0460-0050.2	3531
13.0460-0058.2	3570
13.0460-0058.2	3594
13.0460-0059.2	3754
13.0460-0060.2	4347

ATE	BESER
NO	NO
13.0460-2600.2	4283
13.0460-2709.2	3983
13.0460-2718.2	4094
13.0460-2719.2	3944
13.0460-2723.2	4157
13.0460-2726.2	3836
13.0460-2727.2	3408
13.0460-2727.2	3836
13.0460-2728.2	4293
13.0460-2731.2	3944
13.0460-2732.2	4248
13.0460-2733.2	4248
13.0460-2734.2	4249
13.0460-2737.2	4157
13.0460-2738.2	3972
13.0460-2739.2	4151
13.0460-2740.2	3529
13.0460-2741.2	3966
13.0460-2742.2	3966
13.0460-2744.2	3967
13.0460-2745.2	3971
13.0460-2747.2	4260
13.0460-2748.2	4260
13.0460-2753.2	3529
13.0460-2755.2	4150
13.0460-2756.2	4142
13.0460-2757.2	4142
13.0460-2758.2	4150
13.0460-2760.2	4325
13.0460-2762.2	4314
13.0460-2774.2	3983
13.0460-2775.2	3529
13.0460-2776.2	4125
13.0460-2779.2	4326
13.0460-2780.2	4335
13.0460-2784.2	4204
13.0460-2787.2	3529
13.0460-2790.2	4336
13.0460-2792.2	4334
13.0460-2793.2	4286
13.0460-2801.2	3624
13.0460-2803.2	3683
13.0460-2813.2	3466
13.0460-2815.2	3733
13.0460-2816.2	3750
13.0460-2819.2	3529
13.0460-2820.2	3529
13.0460-2821.2	3896
13.0460-2822.2	3896
13.0460-2823.2	3529
13.0460-2824.2	3526
13.0460-2825.2	3556
13.0460-2829.2	3636
13.0460-2831.2	4062
13.0460-2833.2	4125
13.0460-2834.2	3503
13.0460-2835.2	3755
13.0460-2837.2	3896
13.0460-2838.2	3553
13.0460-2840.2	3795
13.0460-2842.2	3529
13.0460-2843.2	3773
13.0460-2845.2	3529
13.0460-2853.2	4059
13.0460-2854.2	3836
13.0460-2856.2	3323
13.0460-2857.2	3846
13.0460-2860.2	3529
13.0460-2861.2	3539
13.0460-2862.2	3644
13.0460-2863.2	3986
13.0460-2864.2	3529
13.0460-2867.2	4123
13.0460-2869.2	3610
13.0460-2870.2	3848
13.0460-2871.2	3854
13.0460-2874.2	4345
13.0460-2876.2	4222
13.0460-2877.2	4152
13.0460-2880.2	3905

ATE	BESER
NO	NO
13.0460-2881.2	3931
13.0460-2882.2	3842
13.0460-2883.2	4138
13.0460-2884.2	4138
13.0460-2886.2	3529
13.0460-2887.2	3905
13.0460-2891.2	3939
13.0460-2892.2	3940
13.0460-2893.2	3946
13.0460-2894.2	3529
13.0460-2895.2	3539
13.0460-2897.2	4062
13.0460-2899.2	4012
13.0460-2901.2	3440
13.0460-2902.2	3543
13.0460-2903.2	3605
13.0460-2905.2	3328
13.0460-2912.2	3419
13.0460-2913.2	3429
13.0460-2921.2	3609
13.0460-2923.2	3430
13.0460-2924.2	3378
13.0460-2925.2	3619
13.0460-2926.2	3649
13.0460-2927.2	3408
13.0460-2934.2	3650
13.0460-2935.2	3642
13.0460-2936.2	3490
13.0460-2937.2	3529
13.0460-2938.2	3378
13.0460-2939.2	3467
13.0460-2941.2	3466
13.0460-2942.2	3466
13.0460-2944.2	3468
13.0460-2948.2	3432
13.0460-2949.2	3466
13.0460-2953.2	3373
13.0460-2954.2	3311
13.0460-2955.2	3503
13.0460-2956.2	3474
13.0460-2957.2	3531
13.0460-2958.2	3551
13.0460-2962.2	3536
13.0460-2964.2	3419
13.0460-2965.2	3422
13.0460-2966.2	3393
13.0460-2967.2	3374
13.0460-2971.2	3457
13.0460-2973.2	4020
13.0460-2975.2	3658
13.0460-2976.2	3595
13.0460-2977.2	3559
13.0460-2981.2	3555
13.0460-2982.2	3553
13.0460-2983.2	3539
13.0460-2984.2	3529
13.0460-3009.2	3326
13.0460-3024.2	3326
13.0460-3306.2	3583
13.0460-3503.2	3630
13.0460-3504.2	3630
13.0460-3602.2	3536
13.0460-3800.2	3856
13.0460-3803.2	3578
13.0460-3806.2	3855
13.0460-3807.2	3643
13.0460-3808.2	3318
13.0460-3809.2	4173
13.0460-3810.2	3826
13.0460-3811.2	3800
13.0460-3813.2	3984
13.0460-3814.2	3850
13.0460-3815.2	3849
13.0460-3817.2	3800
13.0460-3818.2	3826
13.0460-3819.2	3923
13.0460-3823.2	3496
13.0460-3826.2	3826
13.0460-3827.2	3800
13.0460-3829.2	3987

ATE	BESER
NO	NO
13.0460-3831.2	4058
13.0460-3832.2	3926
13.0460-3833.2	3920
13.0460-3834.2	3906
13.0460-3835.2	3907
13.0460-3837.2	3926
13.0460-3840.2	3800
13.0460-3842.2	3963
13.0460-3846.2	4173
13.0460-3847.2	3970
13.0460-3849.2	3827
13.0460-3850.2	3826
13.0460-3851.2	3984
13.0460-3853.2	4146
13.0460-3858.2	4135
13.0460-3860.2	3906
13.0460-3863.2	3826
13.0460-3864.2	3800
13.0460-3867.2	4201
13.0460-3903.2	3442
13.0460-3904.2	3425
13.0460-3911.2	3380
13.0460-3914.2	3641
13.0460-3915.2	3493
13.0460-3926.2	3496
13.0460-3928.2	3333
13.0460-3933.2	3428
13.0460-3935.2	3464
13.0460-3936.2	3316
13.0460-3937.2	3317
13.0460-3939.2	3424
13.0460-3940.2	3424
13.0460-3944.2	3603
13.0460-3945.2	3689
13.0460-3950.2	3643
13.0460-3951.2	3608
13.0460-3952.2	3487
13.0460-3954.2	3496
13.0460-3955.2	3495
13.0460-3956.2	3819
13.0460-3957.2	3799
13.0460-3959.2	3445
13.0460-3960.2	3473
13.0460-3965.2	3722
13.0460-3968.2	3527
13.0460-3969.2	3482
13.0460-3970.2	3366
13.0460-3971.2	3366
13.0460-3972.2	3878
13.0460-3974.2	3659
13.0460-3975.2	3938
13.0460-3976.2	3763
13.0460-3979.2	4281
13.0460-3980.2	3681
13.0460-3982.2	3826
13.0460-3983.2	3800
13.0460-3985.2	3861
13.0460-3987.2	4100
13.0460-3988.2	4093
13.0460-3990.2	3804
13.0460-3992.2	3921
13.0460-3993.2	3784
13.0460-3994.2	3820
13.0460-3997.2	3935
13.0460-3998.2	3934
13.0460-4014.2	3680
13.0460-4028.2	3327
13.0460-4029.2	3343
13.0460-4029.2	3483
13.0460-4030.2	3611
13.0460-4033.2	3318
13.0460-4034.2	3550
13.0460-4035.2	3318
13.0460-4040.2	3717
13.0460-4043.2	3469
13.0460-4044.2	3318
13.0460-4047.2	3581
13.0460-4058.2	3545
13.0460-4059.2	3680
13.0460-4060.2	3663

ATE	BESER
NO	NO
13.0460-4063.2	3806
13.0460-4064.2	3676
13.0460-4065.2	3821
13.0460-4069.2	4101
13.0460-4069.2	4209
13.0460-4201.2	3629
13.0460-4202.2	3628
13.0460-4401.2	3513
13.0460-4805.2	4137
13.0460-4807.2	3981
13.0460-4809.2	3981
13.0460-4810.2	3922
13.0460-4811.2	3922
13.0460-4812.2	3820
13.0460-4817.2	4240
13.0460-4823.2	4092
13.0460-4826.2	3925
13.0460-4827.2	3962
13.0460-4828.2	3994
13.0460-4829.2	3995
13.0460-4830.2	3965
13.0460-4833.2	3945
13.0460-4844.2	4169
13.0460-4847.2	3942
13.0460-4852.2	4309
13.0460-4856.2	4056
13.0460-4857.2	4132
13.0460-4857.2	4172
13.0460-4858.2	4057
13.0460-4866.2	3965
13.0460-4870.2	4313
13.0460-4872.2	4310
13.0460-4877.2	3925
13.0460-4914.2	3994
13.0460-4955.2	3523
13.0460-4956.2	3873
13.0460-4957.2	3596
13.0460-4965.2	3909
13.0460-4966.2	3575
13.0460-4976.2	4076
13.0460-4977.2	4103
13.0460-4978.2	3834
13.0460-4979.2	3835
13.0460-4980.2	3914
13.0460-4984.2	4102
13.0460-4989.2	3575
13.0460-4992.2	4075
13.0460-4996.2	3823
13.0460-5030.2	3335
13.0460-5032.2	3365
13.0460-5409.2	3459
13.0460-5418.2	3405
13.0460-5423.2	3484
13.0460-5469.2	3320
13.0460-5600.2	4039
13.0460-5601.2	4165
13.0460-5602.2	3956
13.0460-5604.2	4037
13.0460-5608.2	4277
13.0460-5609.2	3929
13.0460-5610.2	4029
13.0460-5612.2	4149
13.0460-5616.2	3903
13.0460-5618.2	3996
13.0460-5619.2	3997
13.0460-5622.2	3976
13.0460-5623.2	3895
13.0460-5629.2	4004
13.0460-5631.2	3975
13.0460-5632.2	4017
13.0460-5633.2	4060
13.0460-5634.2	4255
13.0460-5637.2	3989
13.0460-5641.2	4049
13.0460-5642.2	4337
13.0460-5645.2	4166
13.0460-5645.2	4342
13.0460-5646.2	4136
13.0460-5700.2	3983
13.0460-5711.2	4148

ATE	BESER
NO	NO
13.0460-5714.2	4159
13.0460-5717.2	4010
13.0460-5718.2	3507
13.0460-5722.2	3777
13.0460-5725.2	3802
13.0460-5734.2	4111
13.0460-5735.2	4106
13.0460-5738.2	3911
13.0460-5739.2	3894
13.0460-5742.2	4028
13.0460-5743.2	3910
13.0460-5744.2	3693
13.0460-5745.2	3673
13.0460-5746.2	3829
13.0460-5747.2	3891
13.0460-5748.2	4085
13.0460-5749.2	3830
13.0460-5750.2	4105
13.0460-5751.2	4010
13.0460-5752.2	4038
13.0460-5753.2	4160
13.0460-5754.2	4156
13.0460-5755.2	4110
13.0460-5760.2	3955
13.0460-5763.2	3745
13.0460-5764.2	3948
13.0460-5765.2	3949
13.0460-5766.2	4077
13.0460-5767.2	3953
13.0460-5769.2	3954
13.0460-5772.2	3978
13.0460-5773.2	3979
13.0460-5775.2	3969
13.0460-5776.2	3968
13.0460-5777.2	3960
13.0460-5778.2	4143
13.0460-5779.2	3880
13.0460-5780.2	3980
13.0460-5782.2	3989
13.0460-5783.2	3952
13.0460-5785.2	3976
13.0460-5786.2	4061
13.0460-5787.2	3912
13.0460-5790.2	4113
13.0460-5791.2	4001
13.0460-5792.2	3648
13.0460-5793.2	4036
13.0460-5794.2	4122
13.0460-5795.2	3988
13.0460-5797.2	4081
13.0460-5799.2	4035
13.0460-5800.2	4112
13.0460-5801.2	3983
13.0460-5802.2	3780
13.0460-5803.2	3778
13.0460-5806.2	3463
13.0460-5810.2	3769
13.0460-5811.2	3768
13.0460-5812.2	3788
13.0460-5813.2	3890
13.0460-5814.2	4153
13.0460-5815.2	3817
13.0460-5816.2	3436
13.0460-5818.2	3696
13.0460-5819.2	3825
13.0460-5820.2	3607
13.0460-5821.2	3889
13.0460-5822.2	4118
13.0460-5827.2	4155
13.0460-5829.2	3985
13.0460-5830.2	3872
13.0460-5832.2	3843
13.0460-5833.2	3993
13.0460-5836.2	4027
13.0460-5838.2	3602
13.0460-5843.2	3933
13.0460-5846.2	4013
13.0460-5848.2	4158
13.0460-5849.2	4153
13.0460-5850.2	4080

ATE	BESER
NO	NO
13.0460-5851.2	4079
13.0460-5852.2	3901
13.0460-5853.2	3892
13.0460-5854.2	4271
13.0460-5856.2	4303
13.0460-5857.2	3884
13.0460-5860.2	3831
13.0460-5862.2	4072
13.0460-5863.2	3687
13.0460-5864.2	3883
13.0460-5868.2	4269
13.0460-5872.2	3502
13.0460-5873.2	3959
13.0460-5874.2	4087
13.0460-5875.2	3961
13.0460-5878.2	4109
13.0460-5878.2	4232
13.0460-5879.2	3859
13.0460-5881.2	3397
13.0460-5882.2	4082
13.0460-5884.2	3874
13.0460-5887.2	3928
13.0460-5890.2	3809
13.0460-5891.2	3822
13.0460-5895.2	3764
13.0460-5896.2	4009
13.0460-5898.2	3898
13.0460-5899.2	3951
13.0460-5916.2	3509
13.0460-5917.2	3646
13.0460-5918.2	3582
13.0460-5919.2	3752
13.0460-5922.2	3631
13.0460-5923.2	3740
13.0460-5924.2	3545
13.0460-5925.2	3470
13.0460-5926.2	3674
13.0460-5927.2	3887
13.0460-5928.2	3607
13.0460-5929.2	4148
13.0460-5931.2	3449
13.0460-5932.2	3437
13.0460-5933.2	3632
13.0460-5935.2	3371
13.0460-5936.2	3504
13.0460-5937.2	3758
13.0460-5938.2	3414
13.0460-5938.2	3714
13.0460-5940.2	3448
13.0460-5941.2	3766
13.0460-5942.2	3757
13.0460-5942.2	3857
13.0460-5943.2	3686
13.0460-5944.2	3522
13.0460-5945.2	3709
13.0460-5947.2	3401
13.0460-5948.2	3400
13.0460-5949.2	4104
13.0460-5950.2	3562
13.0460-5951.2	3554
13.0460-5951.2	3651
13.0460-5952.2	3622
13.0460-5953.2	3603
13.0460-5953.2	3604
13.0460-5954.2	3832
13.0460-5956.2	4128
13.0460-5957.2	3760
13.0460-5958.2	3685
13.0460-5959.2	3888
13.0460-5960.2	3415
13.0460-5963.2	3394
13.0460-5967.2	3882
13.0460-5970.2	3723
13.0460-5973.2	3833
13.0460-5974.2	3640
13.0460-5976.2	3402
13.0460-5978.2	3426
13.0460-5980.2	4108
13.0460-5981.2	3688
13.0460-5982.2	3704

ATE	BESER
NO	NO
13.0460-5986.2	3660
13.0460-5987.2	3675
13.0460-5988.2	3577
13.0460-5990.2	3600
13.0460-5991.2	3395
13.0460-5992.2	3560
13.0460-5994.2	3687
13.0460-5996.2	3744
13.0460-5998.2	4212
13.0460-6015.2	3679
13.0460-6027.2	3320
13.0460-6028.2	3350
13.0460-6030.2	3315
13.0460-6030.2	3515
13.0460-6031.2	3315
13.0460-6031.2	3515
13.0460-6033.2	3564
13.0460-6036.2	3626
13.0460-6905.2	3423
13.0460-6908.2	3423
13.0460-6910.2	3416
13.0460-6911.2	3423
13.0460-6916.2	3662
13.0460-6917.2	3771
13.0460-6923.2	3512
13.0460-6925.2	3453
13.0460-6925.2	3816
13.0460-7005.2	3621
13.0460-7027.2	3417
13.0460-7027.2	3417
13.0460-7030.2	3441
13.0460-7032.2	3444
13.0460-7033.2	3486
13.0460-7036.2	3572
13.0460-7038.2	3410
13.0460-7040.2	3549
13.0460-7042.2	3312
13.0460-7046.2	3573
13.0460-7047.2	3572
13.0460-7048.2	3410
13.0460-7050.2	3590
13.0460-7051.2	3623
13.0460-7052.2	3505
13.0460-7052.2	3615
13.0460-7056.2	3593
13.0460-7057.2	3558
13.0460-7058.2	3528
13.0460-7059.2	3585
13.0460-7060.2	3593
13.0460-7067.2	3618
13.0460-7069.2	3617
13.0460-7071.2	3570
13.0460-7071.2	3594
13.0460-7072.2	3538
13.0460-7075.2	3583
13.0460-7076.2	3506
13.0460-7078.2	3881
13.0460-7079.2	3879
13.0460-7080.2	3736
13.0460-7082.2	3567
13.0460-7083.2	3678
13.0460-7084.2	3670
13.0460-7085.2	3680
13.0460-7086.2	3677
13.0460-7087.2	3863
13.0460-7090.2	3656
13.0460-7100.2	3566
13.0460-7101.2	3637
13.0460-7102.2	3606
13.0460-7103.2	3682
13.0460-7108.2	3548
13.0460-7108.2	3690
13.0460-7109.2	3563
13.0460-7111.2	3782
13.0460-7114.2	3897
13.0460-7115.2	3762
13.0460-7117.2	3782
13.0460-7121.2	3754
13.0460-7122.2	3590
13.0460-7124.2	3794

ATE	BESER
NO	NO
13.0460-7126.2	3790
13.0460-7127.2	3569
13.0460-7128.2	3568
13.0460-7132.2	3569
13.0460-7135.2	3918
13.0460-7137.2	3853
13.0460-7138.2	3584
13.0460-7141.2	3790
13.0460-7142.2	3877
13.0460-7143.2	3590
13.0460-7144.2	3943
13.0460-7145.2	3919
13.0460-7153.2	4095
13.0460-7155.2	4347
13.0460-7157.2	3950
13.0460-7158.2	3852
13.0460-7160.2	3853
13.0460-7167.2	4180
13.0460-7169.2	4179
13.0460-7172.2	4211
13.0460-7174.2	4181
13.0460-7175.2	3853
13.0460-7176.2	4346
13.0460-7179.2	4042
13.0460-7181.2	3617
13.0460-7184.2	3904
13.0460-7186.2	3801
13.0460-7192.2	3841
13.0460-7193.2	3885
13.0460-7194.2	3853
13.0460-7195.2	3853
13.0460-7201.2	4096
13.0460-7205.2	4119
13.0460-7206.2	4011
13.0460-7209.2	3853
13.0460-7210.2	4208
13.0460-7220.2	4210
13.0460-7226.2	3904
13.0460-7228.2	4161
13.0460-7229.2	3964
13.0460-7231.2	4207
13.0460-7234.2	4220
13.0460-7235.2	4215
13.0460-7236.2	3841
13.0460-7240.2	3841
13.0460-7244.2	4247
13.0460-7248.2	3950
13.0460-7249.2	4134
13.0460-7251.2	3853
13.0460-7253.2	3853
13.0460-7254.2	3964
13.0460-7258.2	4121
13.0460-7262.2	4230
13.0460-7263.2	4008
13.0460-7264.2	4014
13.0460-7265.2	4121
13.0460-7266.2	3964
13.0460-7270.2	4141
13.0460-7285.2	3904
13.0460-7286.2	4162
13.0460-7293.2	4241
13.0460-7298.2	4140
13.0460-7303.2	4295
13.0460-7304.2	4349
13.0460-7904.2	3614
13.0460-7906.2	3749
13.0460-8003.2	4197
13.0460-8004.2	4126
13.0460-8005.2	4069
13.0460-8006.2	3421
13.0460-9028.2	3315
13.0460-9028.2	3515
13.0460-9029.2	3339
13.0460-9029.2	3514
13.0460-9030.2	3331
13.0460-9032.2	3625
13.0463.7091.2	3665
13.460-5410.2	3461

BARUM	BESER
NO	NO
BA2010	3683
BA2015	3750
BA2017	3529
BA2018	3896
BA2020	3556
BA2021	3636
BA2023	3503
BA2024	3440
BA2025	3605
BA2026	3609
BA2027	3430
BA2028	3619
BA2029	3408
BA2031	3650
BA2032	3529
BA2033	3432
BA2034	3466
BA2036	3474
BA2037	3531
BA2038	3551
BA2039	3419
BA2040	3422
BA2041	3393
BA2043	3457
BA2044	3658
BA2045	3595
BA2046	3559
BA2049	3553
BA2050	3539
BA2052	3536
BA2054	3578
BA2055	3380
BA2056	3493
BA2060	3428
BA2064	3424
BA2065	3424
BA2068	3689
BA2072	3643
BA2073	3608
BA2074	3487
BA2076	3496
BA2077	3495
BA2078	3819
BA2079	3799
BA2080	3445
BA2081	3473
BA2084	3722
BA2086	3482
BA2089	3938
BA2091	3681
BA2093	3611
BA2094	3550
BA2095	3717
BA2098	3469
BA2099	3680
BA2101	3513
BA2106	3873
BA2107	3596
BA2110	3437
BA2111	3504
BA2112	3448
BA2113	3766
BA2114	3757
BA2114	3857
BA2115	3522
BA2116	3554
BA2116	3651
BA2117	3622
BA2118	3832
BA2119	3888
BA2121	3402
BA2122	3687
BA2123	3744
BA2125	3564
BA2131	3441
BA2132	3444
BA2133	3486
BA2134	3410
BA2135	3590
BA2136	3623

BARUM	BESER
NO	NO
BA2137	3505
BA2137	3615
BA2138	3593
BA2139	3558
BA2140	3528
BA2141	3585
BA2144	3570
BA2144	3594
BA2145	3538
BA2147	3506
BA2149	3567
BA2150	3677
BA2152	3566
BA2153	3637
BA2154	3782
BA2155	3782
BA2160	3896
BA2163	3581
BA2164	3676
BA2166	3881
BA2167	3879
BA2168	3863
BA2170	3656
BA2171	3606
BA2173	3762
BA2175	3733
BA2176	4125
BA2177	3836
BA2178	3649
BA2182	3629
BA2184	4102
BA2185	3365
BA2187	3662
BA2188	3573
BA2189	3572
BA2190	4347
BA2191	4126
BA2192	4069
BA2195	3904
BA2196	3905
BA2197	3763
BA2198	3896
BA2199	3877
BA2201	3794
BA2202	4345
BA2205	3590
BA2206	3821
BA2208	3755
BA2209	3754
BA2210	3846
BA2212	3529
BA2213	3663
BA2214	3820
BA2215	3670
BA2216	3804
BA2217	4281
BA2219	3539
BA2224	4100
BA2225	4093
BA2226	4062
BA2227	3660
BA2230	3849
BA2232	4128
BA2233	3678
BA2234	3885
BA2235	3853
BA2236	4211
BA2237	4059
BA2238	3853
BA2239	3614
BA2240	4181
BA2241	3834
BA2242	3841
BA2243	3842
BA2245	4180
BA2247	3795
BA2249	3685
BA2251	3856
BA2252	4346
BA2253	3919

BARUM	BESER
NO	NO
BA2254	3848
BA2255	4042
BA2259	4096
BA2261	3855
BA2262	3921
BA2263	3923
BA2265	3820
BA2269	3590
BA2270	3817
BA2271	4123
BA2274	3686
BA2275	3981
BA2277	3926
BA2279	3918
BA2280	4148
BA2281	3925
BA2282	3854
BA2283	3826
BA2284	3983
BA2285	3986
BA2287	4058
BA2288	3852
BA2289	3800
BA2290	3861
BA2291	3993
BA2292	3502
BA2293	3788
BA2294	3769
BA2295	3890
BA2296	3987
BA2298	4138
BA2299	3800
BA2300	3984
BA2301	3983
BA2304	3907
BA2305	3920
BA2306	3906
BA2313	4157
BA2314	4161
BA2318	4095
BA2321	3553
BA2322	4020
BA2323	3914
BA2324	3835
BA2326	4153
BA2328	3922
BA2329	3972
BA2330	4151
BA2331	3825
BA2332	3897
BA2334	3790
BA2335	4141
BA2339	3963

BENDIX	BESER
NO	NO
571202	3393
571204	3311
571206	3321
571215	3320
571217	3366
571218	3323
571221	3327
571224	3333
571226	3317
571228	3405
571232	3343
571232	3483
571233	3416
571234	3373
571236	3350
571246	3527
571247	3312
571248	3806
571250	3423
571251	3374
571262	3442
571265	3421
571271	3365
571272	3513
571276	3410
571278	3339
571278	3514
571279	3318
571291	3417
571291	3417
571297	3424
571298	3484
571300	3572
571302	3493
571304	3440
571305	3625
571306	3482
571308	3429
571309	3466
571312	3621
571313	3546
571315	3441
571316	3486
571317	3444
571319	3474
571321	3526
571327	3503
571330	3432
571331	3495
571332	3380
571333	3380
571334	3496
571336	3603
571339	3428
571340	3366
571344	3611
571346	3422
571350	3536
571352	3609
571353	3430
571355	3564
571356	3619
571357	3650
571359	3457
571361	3529
571363	3873
571368	3537
571370	3641
571372	3315
571372	3515
571375	3490
571376	3531
571380	3605
571382	3408
571387	3578
571389	3717
571391	3505
571391	3615
571393	3543
571394	3584

BENDIX	BESER
NO	NO
571398	3680
571400	4104
571401	3624
571406	3556
571407	3469
571411	3563
571412	3589
571413	3629
571418	3642
571421	3660
571422	3523
571425	3596
571428	3583
571429	3326
571438	3683
571439	3662
571440	3771
571442	3423
571448	3459
571452	3467
571462	3536
571463	3316
571464	3424
571474	3425
571476	3539
571491	3378
571492	3623
571493	3733
571509	3528
571510	3610
571512	3590
571513	3529
571515	3867
571519	4182
571522	3593
571523	3608
571525	3487
571526	3503
571528	3643
571530	3736
571536	3417
571539	3410
571540	3419
571542	3573
571543	3335
571546	3578
571552	3339
571552	3514
571553	3315
571553	3515
571555	3550
571556	3611
571557	3572
571560	3408
571561	3609
571722	3581
571725	3464
571726	3464
571743	3487
571744	3496
571745	3473
571746	3445
571753	3630
571754	4214
571756	3878
571757	3819
571803	3661
571822	3413
571827	3453
571828	3658
571832	3558
571833	3410
571839	3595
571840	3559
571841	3658
571843	3799
571844	3567
571845	3680
571846	3678
571847	3553

BENDIX	BESER
NO	NO
571848	3585
571850	3545
571852	3909
571868	3430
571869	3491
571870	3346
571873	3881
571876	3863
571877	3677
571879	3628
571884	3617
571885	3537
571888	3618
571893	3608
571897	3750
571900	3506
571904	3610
571906	3529
571910	3670
571913	3589
571914	3570
571914	3594
571915	3538
571916	3569
571918	3879
571919	3636
571923	3566
571924	3623
571925	3676
571929	3682
571930	3938
571934	3606
571936	3656
571939	3637
571941	4062
571942	3675
571944	4125
571945	4125
571946	3681
571947	3861
571948	4020
571949	3897
571950	3804
571954	3938
571955	3896
571961	4102
571962	4101
571962	4209
571964	3722
571966	3644
571967	3754
571968	3762
571969	3896
571971	3782
571974	3549
571976	3683
571977	4212
571980	3943
571984	3590
571985	3682
571986	3836
571987	3836
571988	3821
571990	4180
571991	4179
571994	4347
571995	4281
571998	3755
572100	3723
572118	3746
572119	3710
572120	3709
572127	4087
572135	4212
572136	4212
572138	4148
572140	3560
572143	3449
572144	3449
572145	3522

BENDIX	BESER
NO	NO
572146	3640
572161	3833
572164	3600
572166	3882
572177	3579
572178	3371
572180	3646
572181	3633
572186	4108
572188	3776
572193	3875
572197	4080
572200	3688
572205	3324
572206	3394
572209	3400
572210	3766
572216	3407
572217	3745
572221	3887
572230	3370
572237	3501
572238	3752
572245	3693
572247	3883
572250	3509
572253	3673
572255	3402
572257	4128
572258	3446
572262	3620
572267	3395
572268	3504
572269	3502
572271	3757
572271	3857
572272	3757
572272	3857
572275	3426
572281	3448
572288	3582
572293	3436
572294	3436
572295	3401
572303	3634
572304	3634
572309	3631
572310	3562
572312	3397
572313	3758
572316	3369
572317	3437
572318	3437
572324	3686
572325	3832
572326	3379
572331	3499
572332	3463
572333	3554
572333	3651
572335	3462
572338	3700
572340	3607
572343	3700
572345	3779
572346	3779
572347	3632
572348	3674
572349	3696
572354	3695
572355	3714
572361	3415
572363	3714
572367	3777
572370	3685
572373	3760
572375	3603
572375	3604
572377	4078
572380	3915

BENDIX	BESER
NO	NO
572381	3622
572382	3888
572386	4072
572388	3740
572392	4086
572393	3704
572396	3577
572399	3602
572401	3778
572402	3744
572403	3687
572404	3768
572405	3769
572408	3687
572409	3898
572411	3507
572419	3809
572420	3884
572423	4079
572424	3913
572428	4115
572432	4110
572435	3874
572437	3780
572442	3648
572447	3685
572448	3859
572449	4109
572449	4232
572450	3788
572451	4010
572453	3843
572471	3928
572477	3764
572478	4155
572480	4159
572482	3889
572485	3890
572487	4158
572488	4153
572489	4118
572491	3817
572492	3825
572494	3512
572496	3632
572497	3892
572499	4271
572500	3900
572501	3933
572503	4119
572504	3831
572510	4112
572511	3978
572513	3961
572514	3959
572515	3891
572516	4153
572518	3976
572519	4084
572521	4293
572522	3944
572524	3956
572526	3968
572527	3969
572528	3829
572530	3511
572532	3802
572536	4009
572537	3767
572538	3822
572539	3951
572541	4010
572542	3598
572543	3554
572543	3651
572546	4013
572547	4106
572548	3830
572549	3979
572550	3912

BENDIX	BESER
NO	NO
572551	4017
572553	3910
572557	3993
572560	4269
572562	4105
572565	3901
572566	3764
572567	3574
572569	4077
572570	3976
572571	4036
572572	3988
572573	3933
572574	3975
572575	4143
572577	4028
572578	3958
572583	3911
572584	3929
572585	4001
572593	3880
572595	3949
572597	3997
572599	3996
572600	4147
572601	4037
572604	3980
572605	4160
572606	4156
572607	3960
572608	3989
572612	4039
572613	4165
572617	3928
572619	4035
572621	4111
572627	4146
572628	4029
572629	4061
572636	4082
572638	4081
572639	4060
572641	3982
572642	3903
572643	3886
572649	4074
572651	3948
572654	3933
572655	4255
572656	4256
573003	3919
573005	3529
573006	3896
573008	3539
573010	3763
573011	3846
573012	4093
573013	4100
573014	4123
573015	3784
573016	3950
573017	3852
573018	3853
573021	3918
573022	3590
573027	3935
573029	3934
573030	3820
573031	3800
573032	3529
573034	4126
573035	4069
573039	4059
573041	3877
573042	3617
573047	4095
573050	3553
573053	3663
573055	3855
573058	3848

BENDIX	BESER
NO	NO
573059	3795
573068	3512
573072	4197
573074	3826
573075	3800
573077	4011
573083	3854
573084	3931
573085	3801
573089	4211
573092	4102
573093	3676
573094	3548
573094	3690
573096	3986
573101	4138
573102	4094
573106	3794
573107	3856
573109	3568
573110	3921
573112	4152
573113	3834
573114	3835
573115	3914
573118	4012
573120	4093
573123	3850
573124	3849
573125	3983
573127	4138
573128	3904
573130	3790
573131	3940
573132	3939
573133	3946
573135	3987
573147	4103
573150	4208
573151	4346
573153	4042
573158	3905
573159	3841
573160	3841
573161	4347
573164	3826
573165	3800
573168	4173
573169	3643
573170	3826
573171	3800
573172	3800
573175	4210
573178	4240
573183	3820
573184	3800
573186	3853
573189	4180
573192	3964
573196	4096
573198	4096
573201	4161
573203	3872
573208	4222
573209	3885
573216	3894
573218	4058
573220	3842
573221	3923
573224	4181
573227	4076
573235	3984
573241	3970
573243	4134
573247	4259
573249	4122
573253	4137
573255	3983
573259	4260
573261	3922

BENDIX	BESER
NO	NO
573266	4173
573268	3964
573270	4149
573272	3967
573274	3820
573275	3906
573276	3920
573277	3907
573278	3955
573280	3972
573281	4151
573284	3966
573291	4249
573295	4141
573296	3945
573300	4207
573306	3800
573308	3800
573312	4135
573313	4150
573320	4093
573323	4004
573325	4008
573329	4309
573330	4162
573332	4230
573334	4121
573335	4014
573340	4016
573343	4291
573357	4056
573358	4132
573358	4172
573359	4057
573363	4204
573365	4215
573368	4136
573369	4311
573377	3895
573379	4038
573380	4213
573393	4113
573395	4310
573399	4145
573404	4198
573406	4166
573408	4220
573409	4241
573414	3966
573416	3998
573422	4140
573430	3980
573431	3952
573434	4175
573435	4167
573438	4174
573440	4176
573444	4315
573454	4049
573461	4201
573504	3614
573506	3575
573507	3926
573508	3925
573509	3962
573510	3963
573511	3965
573512	4092
573513	3749
573514	3823
573517	3995
573519	3926
571202B	3393
571202X	3393
571204B	3311
571204X	3311
571206B	3321
571206X	3321
571215B	3320
571215X	3320

BENDIX	BESER
NO	NO
571217B	3366
571217X	3366
571218B	3323
571218X	3323
571221B	3327
571221X	3327
571224B	3333
571224X	3333
571226B	3317
571226X	3317
571228B	3405
571228X	3405
571232B	3343
571232B	3483
571232X	3343
571232X	3483
571233B	3416
571233X	3416
571234B	3373
571234X	3373
571236B	3350
571236X	3350
571246B	3527
571246X	3527
571247B	3312
571247X	3312
571248B	3806
571248X	3806
571250B	3423
571250X	3423
571251B	3374
571251X	3374
571262B	3442
571262X	3442
571265B	3421
571265X	3421
571271B	3365
571271X	3365
571272B	3513
571272X	3513
571276B	3410
571276X	3410
571278B	3339
571278B	3514
571278X	3339
571278X	3514
571279B	3318
571279X	3318
571291B	3417
571291B	3417
571291X	3417
571291X	3417
571297B	3424
571297X	3424
571298B	3484
571298X	3484
571300B	3572
571300X	3572
571302B	3493
571302X	3493
571304B	3440
571304X	3440
571305B	3625
571305X	3625
571306B	3482
571306X	3482
571308B	3429
571308X	3429
571309B	3466
571309X	3466
571312B	3621
571312X	3621
571313B	3546
571313X	3546
571315B	3441
571315X	3441
571316B	3486
571316X	3486
571317B	3444
571317X	3444

BENDIX	BESER
NO	NO
571319B	3474
571319X	3474
571321B	3526
571321X	3526
571327B	3503
571327X	3503
571330B	3432
571330X	3432
571331B	3495
571331X	3495
571332B	3380
571332X	3380
571333B	3380
571333X	3380
571334B	3496
571334X	3496
571336B	3603
571336X	3603
571339B	3428
571339X	3428
571340B	3366
571340X	3366
571344B	3611
571344X	3611
571346B	3422
571346X	3422
571350B	3536
571350X	3536
571352B	3609
571352X	3609
571353B	3430
571353X	3430
571355B	3564
571355X	3564
571356B	3619
571356X	3619
571357B	3650
571357X	3650
571359B	3457
571359X	3457
571361B	3529
571361X	3529
571363B	3873
571363X	3873
571368B	3537
571368X	3537
571370B	3641
571370X	3641
571372B	3315
571372B	3515
571372X	3315
571372X	3515
571375B	3490
571375X	3490
571376B	3531
571376X	3531
571380B	3605
571380X	3605
571382B	3408
571382X	3408
571387B	3578
571387X	3578
571389B	3717
571389X	3717
571391B	3505
571391B	3615
571391X	3505
571391X	3615
571393B	3543
571393X	3543
571394B	3584
571394X	3584
571398B	3680
571398X	3680
571400B	4104
571400X	4104
571401B	3624
571401X	3624
571406B	3556
571406X	3556

BENDIX	BESER
NO	NO
571407B	3469
571407X	3469
571411B	3563
571411X	3563
571412B	3589
571412X	3589
571413B	3629
571413X	3629
571418B	3642
571418X	3642
571421B	3660
571421X	3660
571422B	3523
571422X	3523
571425B	3596
571425X	3596
571428B	3583
571428X	3583
571429B	3326
571429X	3326
571438B	3683
571438X	3683
571439B	3662
571439X	3662
571440B	3771
571440X	3771
571442B	3423
571442X	3423
571448B	3459
571448X	3459
571452B	3467
571452X	3467
571462B	3536
571462X	3536
571463B	3316
571463X	3316
571464B	3424
571464X	3424
571474B	3425
571474X	3425
571476B	3539
571476X	3539
571491B	3378
571491X	3378
571492B	3623
571492X	3623
571493B	3733
571493X	3733
571509B	3528
571509X	3528
571510B	3610
571510X	3610
571512B	3590
571512X	3590
571513B	3529
571513X	3529
571515B	3867
571515X	3867
571519B	4182
571519X	4182
571522B	3593
571522X	3593
571523B	3608
571523X	3608
571525B	3487
571525X	3487
571526B	3503
571526X	3503
571528B	3643
571528X	3643
571530B	3736
571530X	3736
571536B	3417
571536X	3417
571539B	3410
571539X	3410
571540B	3419
571540X	3419
571542B	3573
571542X	3573

BENDIX	BESER
NO	NO
571543B	3335
571543X	3335
571546B	3578
571546X	3578
571552B	3339
571552B	3514
571552X	3339
571552X	3514
571553B	3315
571553B	3515
571553X	3315
571553X	3515
571555B	3550
571555X	3550
571556B	3611
571556X	3611
571557B	3572
571557X	3572
571560B	3408
571560X	3408
571561B	3609
571561X	3609
571722B	3581
571722X	3581
571725B	3464
571725X	3464
571726B	3464
571726X	3464
571743B	3487
571743X	3487
571744B	3496
571744X	3496
571745B	3473
571745X	3473
571746B	3445
571746X	3445
571753B	3630
571753X	3630
571754B	4214
571754X	4214
571756B	3878
571756X	3878
571757B	3819
571757X	3819
571803B	3661
571803X	3661
571822B	3413
571822X	3413
571827B	3453
571827X	3453
571828B	3658
571828X	3658
571832B	3558
571832X	3558
571833B	3410
571833X	3410
571839B	3595
571839X	3595
571840B	3559
571840X	3559
571841B	3658
571841X	3658
571843B	3799
571843X	3799
571844B	3567
571844X	3567
571845B	3680
571845X	3680
571846B	3678
571846X	3678
571847B	3553
571847X	3553
571848B	3585
571848X	3585
571850B	3545
571850X	3545
571852B	3909
571852X	3909
571868B	3430
571868X	3430

BENDIX	BESER
NO	NO
571869B	3491
571869X	3491
571870B	3346
571870X	3346
571873B	3881
571873X	3881
571876B	3863
571876X	3863
571877B	3677
571877X	3677
571879B	3628
571879X	3628
571884B	3617
571884X	3617
571885B	3537
571885X	3537
571888B	3618
571888X	3618
571893B	3608
571893X	3608
571897B	3750
571897X	3750
571900B	3506
571900X	3506
571904B	3610
571904X	3610
571906B	3529
571906X	3529
571910B	3670
571910X	3670
571913B	3589
571913X	3589
571914B	3570
571914B	3594
571914X	3570
571914X	3594
571915B	3538
571915X	3538
571916B	3569
571916X	3569
571918B	3879
571918X	3879
571919B	3636
571919X	3636
571923B	3566
571923X	3566
571924B	3623
571924X	3623
571925B	3676
571925X	3676
571929B	3682
571929X	3682
571930B	3938
571930X	3938
571934B	3606
571934X	3606
571936B	3656
571936X	3656
571939B	3637
571939X	3637
571941B	4062
571941X	4062
571942B	3675
571942X	3675
571944B	4125
571944X	4125
571945B	4125
571945X	4125
571946B	3681
571946X	3681
571947B	3861
571947X	3861
571948B	4020
571948X	4020
571949B	3897
571949X	3897
571950B	3804
571950X	3804
571954B	3938
571954X	3938

BENDIX	BESER
NO	NO
571955B	3896
571955X	3896
571961B	4102
571961X	4102
571962B	4101
571962B	4209
571962X	4101
571962X	4209
571964B	3722
571964X	3722
571966B	3644
571966X	3644
571967B	3754
571967X	3754
571968B	3762
571968X	3762
571969B	3896
571969X	3896
571971B	3782
571971X	3782
571974B	3549
571974X	3549
571976B	3683
571976X	3683
571977B	4212
571977X	4212
571980B	3943
571980X	3943
571984B	3590
571984X	3590
571985B	3682
571985X	3682
571986B	3836
571986X	3836
571987B	3836
571987X	3836
571988B	3821
571988X	3821
571990B	4180
571990X	4180
571991B	4179
571991X	4179
571994B	4347
571994X	4347
571995B	4281
571995X	4281
571998B	3755
571998X	3755
572100B	3723
572100X	3723
572118B	3746
572118X	3746
572119B	3710
572119X	3710
572120B	3709
572120X	3709
572127B	4087
572127X	4087
572135B	4212
572135X	4212
572136B	4212
572136X	4212
572138B	4148
572138X	4148
572140B	3560
572140X	3560
572143B	3449
572143X	3449
572144B	3449
572144X	3449
572145B	3522
572145X	3522
572146B	3640
572146X	3640
572161B	3833
572161X	3833
572164B	3600
572164X	3600
572166B	3882
572166X	3882

BENDIX	BESER
NO	NO
572177B	3579
572177X	3579
572178B	3371
572178X	3371
572180B	3646
572180X	3646
572181B	3633
572181X	3633
572186B	4108
572186X	4108
572188B	3776
572188X	3776
572193B	3875
572193X	3875
572197B	4080
572197X	4080
572200B	3688
572200X	3688
572205B	3324
572205X	3324
572206B	3394
572206X	3394
572209B	3400
572209X	3400
572210B	3766
572210X	3766
572216B	3407
572216X	3407
572217B	3745
572217X	3745
572221B	3887
572221X	3887
572230B	3370
572230X	3370
572237B	3501
572237X	3501
572238B	3752
572238X	3752
572245B	3693
572245X	3693
572247B	3883
572247X	3883
572250B	3509
572250X	3509
572253B	3673
572253X	3673
572255B	3402
572255X	3402
572257B	4128
572257X	4128
572258B	3446
572258X	3446
572262B	3620
572262X	3620
572267B	3395
572267X	3395
572268B	3504
572268X	3504
572269B	3502
572269X	3502
572271B	3757
572271B	3857
572271X	3757
572271X	3857
572272B	3757
572272B	3857
572272X	3757
572272X	3857
572275B	3426
572275X	3426
572281B	3448
572281X	3448
572288B	3582
572288X	3582
572293B	3436
572293X	3436
572294B	3436
572294X	3436
572295B	3401
572295X	3401

BENDIX	BESER
NO	NO
572303B	3634
572303X	3634
572304B	3634
572304X	3634
572309B	3631
572309X	3631
572310B	3562
572310X	3562
572312B	3397
572312X	3397
572313B	3758
572313X	3758
572316B	3369
572316X	3369
572317B	3437
572317X	3437
572318B	3437
572318X	3437
572324B	3686
572324X	3686
572325B	3832
572325X	3832
572326B	3379
572326X	3379
572331B	3499
572331X	3499
572332B	3463
572332X	3463
572333B	3554
572333B	3651
572333X	3554
572333X	3651
572335B	3462
572335X	3462
572338B	3700
572338X	3700
572340B	3607
572340X	3607
572343B	3700
572343X	3700
572345B	3779
572345X	3779
572346B	3779
572346X	3779
572347B	3632
572347X	3632
572348B	3674
572348X	3674
572349B	3696
572349X	3696
572354B	3695
572354X	3695
572355B	3714
572355X	3714
572361B	3415
572361X	3415
572363B	3714
572363X	3714
572367B	3777
572367X	3777
572370B	3685
572370X	3685
572373B	3760
572373X	3760
572375B	3603
572375B	3604
572375X	3603
572375X	3604
572377B	4078
572377X	4078
572380B	3915
572380X	3915
572381B	3622
572381X	3622
572382B	3888
572382X	3888
572386B	4072
572386X	4072
572388B	3740
572388X	3740

BENDIX	BESER
NO	NO
572392B	4086
572392X	4086
572393B	3704
572393X	3704
572396B	3577
572396X	3577
572399B	3602
572399X	3602
572401B	3778
572401X	3778
572402B	3744
572402X	3744
572403B	3687
572403X	3687
572404B	3768
572404X	3768
572405B	3769
572405X	3769
572408B	3687
572408X	3687
572409B	3898
572409X	3898
572411B	3507
572411X	3507
572419B	3809
572419X	3809
572420B	3884
572420X	3884
572423B	4079
572423X	4079
572424B	3913
572424X	3913
572428B	4115
572428X	4115
572432B	4110
572432X	4110
572435B	3874
572435X	3874
572437B	3780
572437X	3780
572442B	3648
572442X	3648
572447B	3685
572447X	3685
572448B	3859
572448X	3859
572449B	4109
572449B	4232
572449X	4109
572449X	4232
572450B	3788
572450X	3788
572451B	4010
572451X	4010
572453B	3843
572453X	3843
572471B	3928
572471X	3928
572477B	3764
572477X	3764
572478B	4155
572478X	4155
572480B	4159
572480X	4159
572482B	3889
572482X	3889
572485B	3890
572485X	3890
572487B	4158
572487X	4158
572488B	4153
572488X	4153
572489B	4118
572489X	4118
572491B	3817
572491X	3817
572492B	3825
572492X	3825
572494B	3512
572494X	3512

BENDIX	BESER
NO	NO
572496B	3632
572496X	3632
572497B	3892
572497X	3892
572499B	4271
572499X	4271
572500B	3900
572500X	3900
572501B	3933
572501X	3933
572503B	4119
572503X	4119
572504B	3831
572504X	3831
572510B	4112
572510X	4112
572511B	3978
572511X	3978
572513B	3961
572513X	3961
572514B	3959
572514X	3959
572515B	3891
572515X	3891
572516B	4153
572516X	4153
572518B	3976
572518X	3976
572519B	4084
572519X	4084
572521B	4293
572521X	4293
572522B	3944
572522X	3944
572524B	3956
572524X	3956
572526B	3968
572526X	3968
572527B	3969
572527X	3969
572528B	3829
572528X	3829
572530B	3511
572530X	3511
572532B	3802
572532X	3802
572536B	4009
572536X	4009
572537B	3767
572537X	3767
572538B	3822
572538X	3822
572539B	3951
572539X	3951
572541B	4010
572541X	4010
572542B	3598
572542X	3598
572543B	3554
572543B	3651
572543X	3554
572543X	3651
572546B	4013
572546X	4013
572547B	4106
572547X	4106
572548B	3830
572548X	3830
572549B	3979
572549X	3979
572550B	3912
572550X	3912
572551B	4017
572551X	4017
572553B	3910
572553X	3910
572557B	3993
572557X	3993
572560B	4269
572560X	4269

BENDIX	BESER
NO	NO
572562B	4105
572562X	4105
572565B	3901
572565X	3901
572566B	3764
572566X	3764
572567B	3574
572567X	3574
572569B	4077
572569X	4077
572570B	3976
572570X	3976
572571B	4036
572571X	4036
572572B	3988
572572X	3988
572573B	3933
572573X	3933
572574B	3975
572574X	3975
572575B	4143
572575X	4143
572577B	4028
572577X	4028
572578B	3958
572578X	3958
572583B	3911
572583X	3911
572584B	3929
572584X	3929
572585B	4001
572585X	4001
572591B	3954
572591J	3954
572593B	3880
572593X	3880
572595B	3949
572595X	3949
572597B	3997
572597X	3997
572598B	3953
572598J	3953
572599B	3996
572599X	3996
572600B	4147
572600X	4147
572601B	4037
572601X	4037
572604B	3980
572604J	3980
572604X	3980
572605B	4160
572605J	4160
572605X	4160
572606B	4156
572606J	4156
572606X	4156
572607B	3960
572607J	3960
572607X	3960
572608B	3989
572608J	3989
572608X	3989
572612B	4039
572612J	4039
572612X	4039
572613B	4165
572613J	4165
572613X	4165
572617B	3928
572617J	3928
572617X	3928
572619B	4035
572619J	4035
572619X	4035
572621B	4111
572621J	4111
572621X	4111
572627B	4146
572627J	4146

BENDIX	BESER
NO	NO
572627X	4146
572628B	4029
572628J	4029
572628X	4029
572629B	4061
572629J	4061
572629X	4061
572636B	4082
572636J	4082
572636X	4082
572638B	4081
572638J	4081
572638X	4081
572639B	4060
572639J	4060
572639X	4060
572641B	3982
572641J	3982
572641X	3982
572642B	3903
572642J	3903
572642X	3903
572643B	3886
572643J	3886
572643X	3886
572648B	4277
572649B	4074
572649J	4074
572649X	4074
572651B	3948
572651J	3948
572651X	3948
572654B	3933
572654J	3933
572654X	3933
572655B	4255
572655X	4255
572656B	4256
572656X	4256
573003B	3919
573003X	3919
573005B	3529
573005X	3529
573006B	3896
573006X	3896
573008B	3539
573008X	3539
573010B	3763
573010X	3763
573011B	3846
573011X	3846
573012B	4093
573012X	4093
573013B	4100
573013X	4100
573014B	4123
573014X	4123
573015B	3784
573015X	3784
573016B	3950
573016X	3950
573017B	3852
573017X	3852
573018B	3853
573018X	3853
573021B	3918
573021X	3918
573022B	3590
573022X	3590
573027B	3935
573027X	3935
573029B	3934
573029X	3934
573030B	3820
573030X	3820
573031B	3800
573031X	3800
573032B	3529
573032X	3529
573034B	4126

BENDIX	BESER
NO	NO
573034X	4126
573035B	4069
573035X	4069
573039B	4059
573039X	4059
573041B	3877
573041X	3877
573042B	3617
573042X	3617
573047B	4095
573047X	4095
573050B	3553
573050X	3553
573053B	3663
573053X	3663
573055B	3855
573055X	3855
573058B	3848
573058X	3848
573059B	3795
573059X	3795
573068B	3512
573068X	3512
573072B	4197
573072X	4197
573074B	3826
573074X	3826
573075B	3800
573075X	3800
573077B	4011
573077X	4011
573083B	3854
573083X	3854
573084B	3931
573084X	3931
573085B	3801
573085X	3801
573089B	4211
573089X	4211
573092B	4102
573092X	4102
573093B	3676
573093X	3676
573094B	3548
573094B	3690
573094X	3548
573094X	3690
573096B	3986
573096X	3986
573101B	4138
573101X	4138
573102B	4094
573102X	4094
573106B	3794
573106X	3794
573107B	3856
573107X	3856
573109B	3568
573109X	3568
573110B	3921
573110X	3921
573112B	4152
573112X	4152
573113B	3834
573113X	3834
573114B	3835
573114X	3835
573115B	3914
573115X	3914
573118B	4012
573118X	4012
573120B	4093
573120X	4093
573123B	3850
573123X	3850
573124B	3849
573124X	3849
573125B	3983
573125X	3983
573127B	4138

BENDIX	BESER
NO	NO
573127X	4138
573128B	3904
573128X	3904
573130B	3790
573130X	3790
573131B	3940
573131X	3940
573132B	3939
573132X	3939
573133B	3946
573133X	3946
573135B	3987
573135X	3987
573147B	4103
573147X	4103
573150B	4208
573150J	4208
573150X	4208
573151B	4346
573151X	4346
573153B	4042
573153X	4042
573158B	3905
573158X	3905
573159B	3841
573159X	3841
573160B	3841
573160X	3841
573161B	4347
573161X	4347
573164B	3826
573164X	3826
573165B	3800
573165X	3800
573168B	4173
573168X	4173
573169B	3643
573169X	3643
573170B	3826
573170X	3826
573171B	3800
573171X	3800
573172B	3800
573172X	3800
573175B	4210
573175X	4210
573178B	4240
573178X	4240
573183B	3820
573183X	3820
573184B	3800
573184X	3800
573186B	3853
573186X	3853
573189B	4180
573189X	4180
573192B	3964
573192X	3964
573196B	4096
573196X	4096
573198B	4096
573198X	4096
573201B	4161
573201X	4161
573203B	3872
573203X	3872
573208B	4222
573208X	4222
573209B	3885
573209X	3885
573216B	3894
573216X	3894
573218B	4058
573218X	4058
573220B	3842
573220X	3842
573221B	3923
573221X	3923
573224B	4181
573224X	4181

BENDIX	BESER
NO	NO
573227B	4076
573227X	4076
573235B	3984
573235X	3984
573241B	3970
573241X	3970
573243B	4134
573243J	4134
573243X	4134
573247B	4259
573247J	4259
573247X	4259
573249B	4122
573249J	4122
573249X	4122
573253B	4137
573253X	4137
573255B	3983
573255J	3983
573255X	3983
573257B	4248
573259B	4260
573259X	4260
573260B	3981
573261B	3922
573261J	3922
573261X	3922
573263B	4157
573266B	4173
573266X	4173
573268B	3964
573268J	3964
573268X	3964
573270B	4149
573270J	4149
573270X	4149
573272B	3967
573272X	3967
573274B	3820
573274X	3820
573275B	3906
573275X	3906
573276B	3920
573276X	3920
573277B	3907
573277X	3907
573278B	3955
573278X	3955
573280B	3972
573280X	3972
573281B	4151
573281X	4151
573284B	3966
573284X	3966
573289B	3971
573289J	3971
573291B	4249
573291X	4249
573295B	4141
573295J	4141
573295X	4141
573296B	3945
573296J	3945
573296X	3945
573300B	4207
573300J	4207
573300X	4207
573306B	3800
573306X	3800
573308B	3800
573308X	3800
573312B	4135
573312J	4135
573312X	4135
573313B	4150
573313J	4150
573313X	4150
573320B	4093
573320J	4093
573320X	4093

BENDIX	BESER
NO	NO
573323B	4004
573323J	4004
573323X	4004
573325B	4008
573325J	4008
573325X	4008
573329B	4309
573329X	4309
573330B	4162
573330J	4162
573330X	4162
573332B	4230
573332J	4230
573332X	4230
573334B	4121
573334J	4121
573334X	4121
573335B	4014
573335J	4014
573335X	4014
573340B	4016
573340X	4016
573343B	4291
573343X	4291
573352B	4325
573357B	4056
573357X	4056
573358B	4132
573358B	4172
573358X	4132
573358X	4172
573359B	4057
573359X	4057
573363B	4204
573363X	4204
573365B	4215
573365X	4215
573368B	4136
573368X	4136
573369B	4311
573369X	4311
573375B	4148
573375X	4148
573377B	3895
573377X	3895
573379B	4038
573379X	4038
573380B	4213
573380X	4213
573385B	4337
573388B	4313
573393B	4113
573393X	4113
573395B	4310
573395X	4310
573397B	4324
573399B	4145
573399X	4145
573403B	4326
573404B	4198
573404X	4198
573406B	4166
573406B	4342
573406X	4166
573408B	4220
573408X	4220
573409B	4241
573409X	4241
573414B	3966
573414X	3966
573416B	3998
573416X	3998
573422B	4140
573422X	4140
573430B	3980
573430X	3980
573431B	3952
573431X	3952
573434B	4175
573434X	4175

BENDIX	BESER
NO	NO
573435B	4167
573435X	4167
573438B	4174
573438X	4174
573440B	4176
573440X	4176
573444B	4315
573444X	4315
573451B	4335
573454B	4049
573454X	4049
573461B	4201
573461X	4201
573504B	3614
573504X	3614
573506B	3575
573506X	3575
573507B	3926
573507X	3926
573508B	3925
573508X	3925
573509B	3962
573509X	3962
573510B	3963
573510X	3963
573511B	3965
573511X	3965
573512B	4092
573512X	4092
573513B	3749
573513X	3749
573514B	3823
573514X	3823
573517B	3995
573517X	3995
573518B	3679
573518X	3679
573519B	3926
573519X	3926
573520B	3575
573520X	3575
573524B	3575
573524X	3575

BERAL	BESER
NO	NO
2976520	3390
2157619004045070	3567
2159218804045070	3670
2162117004045070	3678
2190417004145070	3680
2302017904048010	3861
2302118604048010	3804
2302220604048010	3681
2900120004134750	3749
2901723004034220	3433
2902423004117210	3433
2904118304117210	3523
2906722004017210	3773
2906722004034750	3773
2907620004017240	3614
2910720004134750	3749
2912117304144010	3575
2912120304017170	3575
2912120304144010	3575
2912222004017210	3994
2912320304044010	3823
2916020304144010	3942
2919019704141560	3926
2919220804140200	3925
2920020704140200	3962
2921720604141560	3963
2925627004034220	4169
2958115004045080	3515
2970617004017080	3537
2978418004017200	3513
2983521704040270	3679
2983522004017200	3679
2983522004040270	3679
21 576 19,00 40 3	3567
21 592 18,80 40 3	3670
21 621 17,00 40 3	3678
21 904 17,00 41 3	3680
23 020 17,90 40 4	3861
23 021 18,60 40 4	3804
23 022 20,60 40 4	3681
29 017 23,00 40 3	3433
29 017 23,00 40 4	3433
29 024 23,00 41 3	3433
29 041 18,30 41 4	3523
29 067 22,00 40 3	3773
29 067 22,00 40 4	3773
29 076 20,00 40 1	3614
29 121 17,30 41 4	3575
29 121 20,30 41 4	3575
29 122 22,00 40 4	3994
29 123 20,30 40 4	3823
29 160 20,30 41 4	3942

BERAL	BESER
NO	NO
29 190 19,70 41 3	3926
29 192 20,80 41 4	3925
29 200 20,70 41 4	3962
29 217 20,60 41 4	3963
29 256 27,00 40 3	4169
29 581 15,00 40 4	3315
29 581 15,00 40 4	3515
29 581 19,00 40 4	3315
29 706 17,00 40 3	3537
29 784 18,00 40 4	3513
29 835 21,70 40 4	3679
29 835 22,00 40 4	3679
2901723004017200	3433

BLUE PRINT	BESER
NO	NO
ADA104242	4185

BOSCH	BESER
NO	NO
986460701	3325
986462861	3328
986465760	3406
986495331	3418
0 986 424 030	3595
0 986 424 031	3559
0 986 424 045	3366
0 986 424 046	3366
0 986 424 047	3625
0 986 424 055	3324
0 986 424 098	3424
0 986 424 099	3746
0 986 424 100	3467
0 986 424 113	3413
0 986 424 124	4150
0 986 424 133	3634
0 986 424 134	3673
0 986 424 135	3504
0 986 424 144	3523
0 986 424 151	3624
0 986 424 155	3509
0 986 424 157	3462
0 986 424 160	3394
0 986 424 170	3628
0 986 424 180	3436
0 986 424 185	3879
0 986 424 192	3369
0 986 424 202	3437
0 986 424 204	3888
0 986 424 209	3909
0 986 424 211	4078
0 986 424 214	3683
0 986 424 215	3632
0 986 424 218	3567
0 986 424 219	3670
0 986 424 227	3750
0 986 424 229	3680
0 986 424 232	4086
0 986 424 236	3506
0 986 424 248	3617
0 986 424 251	3883
0 986 424 260	3631
0 986 424 266	3833
0 986 424 267	3771
0 986 424 268	3560
0 986 424 276	3867
0 986 424 277	4214
0 986 424 278	3878
0 986 424 284	4182
0 986 424 286	3453
0 986 424 286	3816
0 986 424 287	3662
0 986 424 295	3875
0 986 424 297	3436
0 986 424 313	3693
0 986 424 319	3777
0 986 424 340	3697
0 986 424 347	3538
0 986 424 348	3740
0 986 424 358	3630
0 986 424 359	3593
0 986 424 361	3566
0 986 424 363	4197
0 986 424 364	3782
0 986 424 365	3879
0 986 424 366	3674
0 986 424 367	3887
0 986 424 368	3507
0 986 424 369	3577
0 986 424 370	3675
0 986 424 373	3419
0 986 424 373	3731
0 986 424 375	3671
0 986 424 376	3556
0 986 424 379	3608
0 986 424 381	3429
0 986 424 382	3714
0 986 424 402	3606
0 986 424 414	3636
0 986 424 415	3799

BOSCH	BESER
NO	NO
0 986 424 418	4087
0 986 424 422	3710
0 986 424 427	4062
0 986 424 449	3637
0 986 424 450	3754
0 986 424 453	3659
0 986 424 455	3659
0 986 424 456	3762
0 986 424 462	3570
0 986 424 462	3594
0 986 424 463	3678
0 986 424 465	3602
0 986 424 468	3896
0 986 424 469	4125
0 986 424 470	4125
0 986 424 471	4281
0 986 424 472	3755
0 986 424 474	3687
0 986 424 475	4102
0 986 424 476	3681
0 986 424 487	3659
0 986 424 489	4010
0 986 424 496	3676
0 986 424 501	3590
0 986 424 510	3618
0 986 424 512	3744
0 986 424 514	3569
0 986 424 515	3548
0 986 424 515	3690
0 986 424 516	3804
0 986 424 517	3836
0 986 424 518	3836
0 986 424 519	3676
0 986 424 523	3685
0 986 424 527	3846
0 986 424 531	3848
0 986 424 533	3539
0 986 424 534	3769
0 986 424 535	3768
0 986 424 537	3794
0 986 424 539	3918
0 986 424 540	3919
0 986 424 541	4059
0 986 424 544	3897
0 986 424 547	3581
0 986 424 553	4123
0 986 424 554	3790
0 986 424 558	3877
0 986 424 563	3661
0 986 424 566	3872
0 986 424 567	3423
0 986 424 572	3809
0 986 424 575	3778
0 986 424 581	3934
0 986 424 582	3935
0 986 424 583	3644
0 986 424 584	3881
0 986 424 590	3898
0 986 424 596	3800
0 986 424 597	3826
0 986 424 610	3780
0 986 424 611	4126
0 986 424 614	3856
0 986 424 617	3853
0 986 424 618	3852
0 986 424 619	3950
0 986 424 626	4027
0 986 424 630	3788
0 986 424 633	3590
0 986 424 634	3854
0 986 424 635	3931
0 986 424 636	3848
0 986 424 639	3822
0 986 424 640	3829
0 986 424 641	3830
0 986 424 644	3722
0 986 424 648	4069
0 986 424 650	3913
0 986 424 656	3781
0 986 424 657	3921

BOSCH	BESER
NO	NO
0 986 424 659	3800
0 986 424 660	3938
0 986 424 661	4155
0 986 424 662	3795
0 986 424 666	4011
0 986 424 669	3884
0 986 424 670	3648
0 986 424 671	4093
0 986 424 672	3553
0 986 424 675	3855
0 986 424 677	4211
0 986 424 683	4093
0 986 424 689	4222
0 986 424 691	3921
0 986 424 695	3928
0 986 424 696	4009
0 986 424 697	3901
0 986 424 698	4179
0 986 424 700	4079
0 986 424 701	3801
0 986 424 703	3834
0 986 424 704	3914
0 986 424 707	4042
0 986 424 709	3892
0 986 424 711	4084
0 986 424 713	4271
0 986 424 714	3802
0 986 424 715	3932
0 986 424 716	3955
0 986 424 719	4158
0 986 424 720	3767
0 986 424 721	4094
0 986 424 722	4109
0 986 424 722	4232
0 986 424 726	3653
0 986 424 728	3993
0 986 424 729	3843
0 986 424 735	3817
0 986 424 740	4075
0 986 424 741	4076
0 986 424 748	4345
0 986 424 750	3823
0 986 424 751	3529
0 986 424 754	3717
0 986 424 758	3943
0 986 424 761	4013
0 986 424 764	4180
0 986 424 766	4181
0 986 424 767	4347
0 986 424 769	3835
0 986 424 770	3764
0 986 424 771	4148
0 986 424 774	3850
0 986 424 777	4095
0 986 424 783	3552
0 986 424 784	3826
0 986 424 785	3849
0 986 424 786	4173
0 986 424 787	4097
0 986 424 788	4112
0 986 424 789	3986
0 986 424 790	3825
0 986 424 791	4115
0 986 424 794	3885
0 986 424 795	3983
0 986 424 796	3905
0 986 424 797	3904
0 986 424 798	4153
0 986 424 803	3769
0 986 424 805	4103
0 986 424 806	4096
0 986 424 809	3831
0 986 424 810	3961
0 986 424 811	4028
0 986 424 812	4179
0 986 424 813	4152
0 986 424 814	4106
0 986 424 815	3959
0 986 424 818	3951
0 986 424 823	4031

BOSCH	BESER
NO	NO
0 986 424 824	3905
0 986 424 827	3512
0 986 424 828	3584
0 986 424 829	4138
0 986 424 830	4101
0 986 424 830	4209
0 986 424 831	3890
0 986 424 833	3575
0 986 460 002	3861
0 986 460 020	3463
0 986 460 090	3326
0 986 460 100	3326
0 986 460 101	3326
0 986 460 110	3320
0 986 460 111	3350
0 986 460 113	3320
0 986 460 114	3350
0 986 460 343	3318
0 986 460 345	3318
0 986 460 346	3318
0 986 460 390	3449
0 986 460 735	3316
0 986 460 736	3316
0 986 460 741	3317
0 986 460 880	3311
0 986 460 881	3311
0 986 460 932	3526
0 986 460 936	3582
0 986 460 937	3590
0 986 460 938	3623
0 986 460 939	3733
0 986 460 943	3531
0 986 460 944	3551
0 986 460 946	3482
0 986 460 947	3689
0 986 460 949	3464
0 986 460 953	3428
0 986 460 955	3469
0 986 460 958	3873
0 986 460 960	3757
0 986 460 960	3857
0 986 460 961	3641
0 986 460 962	3445
0 986 460 963	3473
0 986 460 965	3581
0 986 460 966	3629
0 986 460 967	3680
0 986 460 969	3558
0 986 460 970	3496
0 986 460 971	3593
0 986 460 974	3640
0 986 460 975	3832
0 986 460 977	3658
0 986 460 978	3448
0 986 460 979	3622
0 986 460 980	3603
0 986 460 980	3604
0 986 460 981	4104
0 986 460 983	3487
0 986 460 984	3426
0 986 460 986	3459
0 986 460 993	3660
0 986 460 995	3642
0 986 460 996	3583
0 986 460 997	3766
0 986 460 998	3543
0 986 461 006	4148
0 986 461 106	3585
0 986 461 111	3572
0 986 461 117	3555
0 986 461 119	3643
0 986 461 122	4128
0 986 461 123	3554
0 986 461 123	3651
0 986 461 124	3696
0 986 461 126	3686
0 986 461 127	3502
0 986 461 129	3736
0 986 461 131	4212
0 986 461 134	3395

BOSCH	BESER
NO	NO
0 986 461 136	3776
0 986 461 139	3779
0 986 461 140	4072
0 986 461 141	3522
0 986 461 142	3704
0 986 461 143	4080
0 986 461 145	4108
0 986 461 147	3562
0 986 461 148	3596
0 986 461 151	3566
0 986 461 395	3329
0 986 461 396	3329
0 986 461 397	3329
0 986 461 398	3424
0 986 461 661	3393
0 986 461 730	3318
0 986 461 731	3318
0 986 461 750	3882
0 986 461 753	3553
0 986 461 757	3819
0 986 461 759	3607
0 986 461 764	3528
0 986 461 765	3539
0 986 461 768	3688
0 986 461 769	3529
0 986 461 770	3425
0 986 462 000	3373
0 986 462 001	3373
0 986 462 280	3327
0 986 462 282	3327
0 986 462 283	3343
0 986 462 283	3483
0 986 462 285	3327
0 986 462 532	3323
0 986 463 232	3335
0 986 463 411	3339
0 986 463 411	3514
0 986 463 412	3339
0 986 463 412	3514
0 986 463 641	3416
0 986 463 730	3806
0 986 463 736	3806
0 986 463 920	3315
0 986 463 920	3515
0 986 463 921	3315
0 986 463 921	3515
0 986 464 361	3326
0 986 464 801	3374
0 986 464 881	3527
0 986 464 910	3312
0 986 464 911	3484
0 986 464 913	3312
0 986 464 914	3312
0 986 465 140	3410
0 986 465 141	3410
0 986 465 740	3378
0 986 465 744	3378
0 986 465 745	3490
0 986 465 880	3365
0 986 465 881	3365
0 986 465 961	3444
0 986 465 962	3444
0 986 465 963	3486
0 986 466 310	3442
0 986 466 311	3442
0 986 466 346	3495
0 986 466 350	3493
0 986 466 402	3417
0 986 466 403	3417
0 986 466 403	3417
0 986 466 601	3421
0 986 466 683	3529
0 986 466 693	3619
0 986 466 698	3649
0 986 466 699	3650
0 986 466 700	3650
0 986 466 750	3572
0 986 466 751	3572
0 986 466 870	3611
0 986 466 871	3550

BOSCH	BESER
NO	NO
0 986 466 874	3611
0 986 467 031	3709
0 986 467 310	3509
0 986 467 311	3509
0 986 467 410	3440
0 986 467 411	3440
0 986 467 490	3609
0 986 467 570	3573
0 986 467 720	3503
0 986 467 760	3424
0 986 467 840	3513
0 986 467 841	3513
0 986 467 930	3484
0 986 468 350	3679
0 986 468 380	3466
0 986 468 520	3371
0 986 468 540	3579
0 986 468 541	3579
0 986 468 570	3621
0 986 468 610	3419
0 986 468 611	3419
0 986 468 613	3419
0 986 468 630	3415
0 986 468 701	3402
0 986 468 870	3444
0 986 468 871	3486
0 986 468 872	3444
0 986 468 873	3444
0 986 468 890	3441
0 986 468 901	3408
0 986 468 902	3430
0 986 468 950	3633
0 986 469 070	3549
0 986 469 191	3546
0 986 469 370	3503
0 986 469 371	3503
0 986 469 390	3410
0 986 469 410	3408
0 986 469 550	3401
0 986 469 580	3394
0 986 469 610	3529
0 986 469 790	3605
0 986 469 905	3370
0 986 469 906	3415
0 986 469 912	3495
0 986 469 960	3578
0 986 469 961	3578
0 986 490 440	3752
0 986 490 500	3717
0 986 490 550	3430
0 986 490 640	3564
0 986 490 641	3564
0 986 490 990	3758
0 986 491 050	3432
0 986 491 260	3400
0 986 491 410	3603
0 986 491 700	3422
0 986 491 730	3609
0 986 491 900	3470
0 986 492 020	3589
0 986 492 090	3457
0 986 493 180	3666
0 986 493 390	3600
0 986 493 480	3760
0 986 493 550	3723
0 986 493 790	3437
0 986 494 000	3680
0 986 494 001	3863
0 986 494 002	3677
0 986 494 003	3506
0 986 494 004	3617
0 986 494 005	3566
0 986 494 006	3879
0 986 494 008	3606
0 986 494 009	3656
0 986 494 010	3896
0 986 494 011	3755
0 986 494 012	4102
0 986 494 013	3681
0 986 494 014	3763

BOSCH	BESER
NO	NO
0 986 494 015	3563
0 986 494 016	3676
0 986 494 017	3663
0 986 494 018	3590
0 986 494 019	3782
0 986 494 021	3896
0 986 494 022	3821
0 986 494 024	3539
0 986 494 026	4100
0 986 494 027	3820
0 986 494 028	3881
0 986 494 031	3856
0 986 494 032	3853
0 986 494 033	3852
0 986 494 034	3950
0 986 494 035	3590
0 986 494 037	3921
0 986 494 038	3800
0 986 494 039	3938
0 986 494 040	3795
0 986 494 042	3896
0 986 494 043	3855
0 986 494 044	4211
0 986 494 046	4093
0 986 494 047	3921
0 986 494 048	3834
0 986 494 049	3914
0 986 494 051	4345
0 986 494 053	3905
0 986 494 054	3890
0 986 494 055	3680
0 986 494 057	3585
0 986 494 058	3430
0 986 494 059	3536
0 986 494 062	3905
0 986 494 064	3968
0 986 494 065	3987
0 986 494 066	3511
0 986 494 070	3826
0 986 494 074	3800
0 986 494 076	4058
0 986 494 078	4118
0 986 494 079	3889
0 986 494 081	3923
0 986 494 090	3933
0 986 494 095	3946
0 986 494 097	3939
0 986 494 098	3940
0 986 494 099	3984
0 986 494 104	4096
0 986 494 105	4138
0 986 494 107	3841
0 986 494 108	3842
0 986 494 109	3922
0 986 494 110	3820
0 986 494 111	3981
0 986 494 112	3968
0 986 494 113	3826
0 986 494 114	4173
0 986 494 121	3925
0 986 494 122	3963
0 986 494 123	3926
0 986 494 127	3853
0 986 494 128	4212
0 986 494 132	3826
0 986 494 133	3894
0 986 494 135	4159
0 986 494 139	3880
0 986 494 140	3980
0 986 494 143	3978
0 986 494 144	4269
0 986 494 145	3969
0 986 494 146	4001
0 986 494 147	4293
0 986 494 148	3944
0 986 494 150	3859
0 986 494 151	3952
0 986 494 152	4017
0 986 494 153	3891
0 986 494 154	3949

BOSCH	BESER
NO	NO
0 986 494 155	3985
0 986 494 157	3800
0 986 494 160	3983
0 986 494 161	4248
0 986 494 162	4247
0 986 494 163	3972
0 986 494 165	4210
0 986 494 167	4240
0 986 494 169	4161
0 986 494 170	3906
0 986 494 171	3907
0 986 494 174	4077
0 986 494 180	4096
0 986 494 182	4037
0 986 494 183	3854
0 986 494 184	3677
0 986 494 186	3881
0 986 494 191	4207
0 986 494 192	4151
0 986 494 193	3749
0 986 494 194	3962
0 986 494 195	4122
0 986 494 197	4141
0 986 494 198	3958
0 986 494 204	3874
0 986 494 206	4309
0 986 494 207	3945
0 986 494 208	4149
0 986 494 211	3975
0 986 494 214	4157
0 986 494 218	4105
0 986 494 221	4029
0 986 494 223	4303
0 986 494 224	4111
0 986 494 227	3960
0 986 494 230	3989
0 986 494 231	4085
0 986 494 234	4249
0 986 494 235	3964
0 986 494 236	3920
0 986 494 237	3895
0 986 494 241	3929
0 986 494 242	3953
0 986 494 244	4038
0 986 494 246	4161
0 986 494 247	4157
0 986 494 250	3976
0 986 494 253	4113
0 986 494 254	4260
0 986 494 255	3954
0 986 494 259	4259
0 986 494 260	3956
0 986 494 261	3970
0 986 494 262	3854
0 986 494 263	4249
0 986 494 268	3975
0 986 494 270	3820
0 986 494 275	4149
0 986 494 277	3779
0 986 494 284	3754
0 986 494 285	4097
0 986 494 291	3816
0 986 494 293	3965
0 986 494 294	4179
0 986 494 295	4143
0 986 494 297	4150
0 986 494 299	3686
0 986 494 304	3971
0 986 494 311	4110
0 986 494 312	4034
0 986 494 320	4122
0 986 494 321	4122
0 986 494 328	3954
0 986 494 329	4156
0 986 494 330	3970
0 986 494 331	3967
0 986 494 332	3966
0 986 494 334	3965
0 986 494 335	3995
0 986 494 342	4161

BOSCH	BESER
NO	NO
0 986 494 346	3949
0 986 494 350	4153
0 986 494 358	4148
0 986 494 359	3911
0 986 494 361	4119
0 986 494 370	4016
0 986 494 373	4036
0 986 494 379	4160
0 986 494 380	3997
0 986 494 381	4134
0 986 494 384	4142
0 986 494 387	3529
0 986 494 399	3529
0 986 494 400	4165
0 986 494 410	4103
0 986 494 416	4135
0 986 494 417	3993
0 986 494 418	3910
0 986 494 422	4039
0 986 494 424	4277
0 986 494 425	3903
0 986 494 430	3948
0 986 494 432	4325
0 986 494 433	4230
0 986 494 434	4008
0 986 494 435	4014
0 986 494 441	3964
0 986 494 442	4216
0 986 494 444	4213
0 986 494 445	3913
0 986 494 449	3996
0 986 494 451	3681
0 986 494 452	4142
0 986 494 454	3827
0 986 494 457	3379
0 986 494 460	4092
0 986 494 462	3421
0 986 494 464	3800
0 986 494 483	4198
0 986 494 484	3940
0 986 494 491	3968
0 986 494 494	4150
0 986 494 498	4056
0 986 494 499	4132
0 986 494 499	4172
0 986 494 500	4057
0 986 494 501	4038
0 986 494 502	4106
0 986 494 504	3567
0 986 494 505	3782
0 986 494 506	4062
0 986 494 510	3846
0 986 494 511	3877
0 986 494 512	3877
0 986 494 513	4042
0 986 494 514	3529
0 986 494 515	3529
0 986 494 516	3529
0 986 494 517	3529
0 986 494 518	3529
0 986 494 519	3529
0 986 494 520	3529
0 986 494 521	3529
0 986 494 522	3503
0 986 494 523	3717
0 986 494 524	3782
0 986 494 525	3782
0 986 494 579	3375
0 986 494 662	4326
0 986 494 684	4337
0 986 494 693	4324
0 986 494 712	4342
0 986 494 773	4312
0 986 494 821	4308
0 986 494 838	4279
0 986 495 077	3393
0 986 495 079	3312
0 986 495 122	4275
0 986 495 126	4082
0 986 495 131	3874

BOSCH	BESER
NO	NO
0 986 495 133	4015
0 986 495 135	4258
0 986 495 138	4083
0 986 495 138	4276
0 986 495 142	3635
0 986 495 146	3797
0 986 495 149	4019
0 986 495 155	4004
0 986 495 156	4081
0 986 495 158	3765
0 986 495 159	3886
0 986 495 160	4003
0 986 495 165	4060
0 986 495 166	4071
0 986 495 169	4255
0 986 495 170	3955
0 986 495 171	3667
0 986 495 174	4256
0 986 495 299	4326
0 986 495 318	3899
0 986 495 330	3701
0 986 495 349	4337
0 986 495 393	4246
0 986 TB2 269	3864
0 986 TB2 271	3868
0 986 TB2 315	3759
0986 495 164	4219
0986 495 173	4202
0986 495 322	4032

BRECK	BESER
NO	NO
20904	3413
29017	3433
29024	3433
29041	3523
29067	3773
29071	3537
29107	3749
29190	3926
29200	3962
29217	3963
29581	3315
29581	3515
29706	3537
20162 00 704 00	3873
20168 00 701 00	3531
20168 10 701 00	3551
20261 00 W	3986
20293 00	4076
20341 00 701 10	3339
20341 00 701 10	3514
20359 00 701 00	3423
20392 00	3315
20392 00	3515
20410 00 704 00	3596
20547 00 702 00	3623
20574 00 701 00	3490
20574 10 701 00	3378
20629 00	3573
20635 00 702 10	3493
20640 00	3570
20640 00	3594
20668 00	3536
20669 00 701 00	3649
20669 10	3650
20669 10 701 10	3619
20676 00 701 10	3590
20687 00 704 00	3611
20687 10 704 00	3550
20708 00 C	3648
20753 00 701 00	3570
20753 00 701 00	3594
20775 00 C1	3424
20775 00 C2	3424
20784 00 703 10	3513
20788 00 C	3955
20833 00 701 10	3466
20857 00	3621
20861 00 702 00	3419
20870 00 701 10	3402
20887 00 702 00	3486
20887 10 702 00	3585
20887 20 702 00	3444
20889 00 702 00	3441
20905 00 702 10	3380
20906 00 702 10	3487
20907 10 1	3790
20907 10 3	3790
20908 00 702 00	3549
20919 00 W	3546
20939 00 702 00	3410
20941 00 701 00	3408
20950 00 702 10	3424
20960 00	3529
20961 00 704 00	3529
20961 10 704 00	3529
20968 00 701 00	3584
20968 10 701 00	3564
20973 00 704 00	3496
20974 00	3496
20979 00 703 00	3605
20989 00 W	3474
20995 00 704 00	3578
21012 00 701 00	3504

BRECK	BESER
NO	NO
21012 00 C	3502
21050 00 704 00	3717
21055 00 701 00	3430
21121 00	3603
21121 00	3604
21140 00 704 00	3469
21141 00 701 00	3603
21144 00 704 00	3536
21153 00 701 20	3628
21153 10 701 20	3629
21171 00 702 00	3464
21173 00 701 00	3609
21190 00 701 00	3470
21202 00 702 00	3589
21205 00 703 10	3543
21209 00 501 10	3457
21278 00 W	3680
21282 00	3879
21282 00 702 00	3879
21301 00 704 20	3630
21305 00 704 20	3581
21312 00 C	4212
21363 00 C	3685
21368 00 701 00	3733
21388 00 702 10	3539
21394 00 701 00	3558
21396 00 W	3593
21411 00	3736
21436 00 702 00	3643
21439 00 701 10	3658
21463 00 702 10	3503
21463 00 W	3503
21469 00 701 00	3445
21470 00 701 00	3473
21471 00	3909
21479 00 703 00	3553
21479 00 W	3553
21486 00	3881
21486 00 701 00	3881
21490 00 C	3915
21515 00	3872
21515 00 702 10	3683
21539 00 C	3640
21545 00 704 00	3660
21546 00 701 00	3562
21553 00 C	4087
21573 00 706 00	3689
21576 00 703 10	3567
21586 00	4214
21592 00 705 10	3670
21601 00 701 10	3554
21601 00 701 10	3651
21614 00 W	3556
21621 00 705 10	3678
21626 00 701 00	4128
21631 00 701 10	3819
21632 00 W	3878
21635 00 703 00	4020
21636 00 701 10	3617
21643 00 701 00	3563
21647 00 701 10	3622
21651 00 C	3704
21654 00 702 10	3522
21654 10 C	3764
21664 00 701 20	3677
21670 00 701 20	3863
21676 10	4347
21691 00 702 00	3656
21694 00 701 10	3607
21697 00 C	3686
21719 00 C	4148
21724 00 701 10	3750
21725 00 C	3632
21739 00	4086
21754 00 701 10	3832
21755 00 701 10	3832
21766 00	3833
21790 00 C	4085
21797 00 703 10	3595
21799 00 703 10	3559

BRECK	BESER
NO	NO
21832 00	3545
21848 00 701 00	3506
21849 00 701 10	3590
21861 00 704 10	4062
21861 10 704 10	4062
21862 00 701 00	3505
21862 00 701 00	3615
21866 00 702 00	3637
21866 10 702 00	3566
21866 20 702 00	3538
21883 00 701 00	3606
21885 00 701 10	3794
21899 00 702 20	3821
21900 00 702 00	3663
21904 00 701 10	3680
21919 00 702 00	3676
21920 00	3693
21927 00 W2	3618
21945 00 701 00	3896
21945 10 701 00	3896
21980 00 702 00	3659
21983 00 701 10	4059
23004 00 701 10	3577
23005 00 C	3598
23020 00 704 00	3861
23021 00 704 20	3804
23022 00 703 20	3681
23042 00 701 10	3799
23043 00	4197
23063 00 702 10	3762
23070 00 701 20	4125
23073 00 703 00	3919
23076 00 702 00	3918
23078 00	4101
23078 00	4209
23080 00 C	3675
23081 00 C	3507
23094 00	4115
23095 00	4115
23099 00 703 00	3848
23112 00	3943
23118 00 W	4222
23124 00 701 10	3636
23130 00 702 00	3782
23130 00 W	3782
23131 00 702 10	3782
23144 00 701 20	3836
23144 00 701 30	3836
23154 00 702 00	3754
23157 00	4103
23169 00 W	3610
23172 00 702 00	3539
23181 00	3897
23183 00 701 00	4347
23189 00 C	4069
23193 00 W	4126
23202 00	3877
23202 00 702 00	3877
23215 00 701 00	3877
23225 00 702 10	3846
23227 00 W	3548
23227 00 W	3690
23234 00 701 10	3687
23238 00 702 10	3778
23241 00 702 00	3744
23258 00 704 10	3763
23271 00 701 20	4102
23273 00 W	3934
23277 00 701 10	3935
23277 00 W	3935
23279 00 701 10	4100
23290 00 C	3809
23300 00 702 10	3722
23309 00	4179
23312 00	4180
23314 00 C	3884
23326 00 703 10	3842
23326 00 W	3842
23346 00	3644
23348 00 701 10	3768

BRECK	BESER
NO	NO
23353 00 704 00	3755
23384 00 C	3740
23392 00 701 10	3590
23393 00 W	3896
23400 00 C	3602
23402 00 701 00	4211
23407 00	3854
23407 00 702 00	3854
23407 10	3931
23420 00 C	3932
23434 00 703 10	3921
23440 00	3801
23440 00 701 00	3801
23442 00 C	4009
23480 00 C	3890
23482 00 702 00	3853
23507 00 C	3928
23510 00 702 10	3769
23513 00	3822
23517 00	4123
23521 00 704 10	3788
23521 00 C	3788
23524 00 C	3829
23527 00 C	4155
23539 00	3830
23543 00 704 10	3993
23543 00 C	3993
23545 00 C	3993
23552 00 702 00	3790
23557 00 704 10	4093
23558 00 C	4079
23572 00 C	3913
23577 00 703 10	3784
23581 00 702 00	4138
23581 00 702 10	4138
23585 00	4158
23585 00 701 00	4158
23587 00 701 10	3904
23587 00 W	3904
23597 00 702 10	3938
23599 00 701 00	3820
23600 00 702 00	3800
23601 00	4123
23613 00 703 00	3856
23620 00 702 10	4153
23652 00 C	4148
23656 00 702 10	4153
23656 00 C	4153
23669 00 703 10	3855
23705 00	3826
23705 00 701 10	3826
23705 00 W	3826
23705 10 W	3826
23708 00 701 10	3800
23708 00 W	3800
23720 00 701 10	4159
23723 00 701 00	3885
23732 00 702 00	4181
23746 00 W	3841
23746 10 703 10	3841
23749 00 W	3841
23763 00 W	4096
23766 00 701 10	3817
23768 00 701 10	3890
23794 00 701 00	4346
23816 00 704 10	3825
23816 00 C	3825
23823 10 704 10	4152
23832 00 702 10	4042
23836 00	4013
23836 00 701 00	4013
23865 00 C	3912
23868 00 C	3831
23871 00 702 10	3933
23871 00 C	3933
23873 00 501 10	4269
23873 00 C	4269
23891 00 701 10	3959
23891 00 C	3959
23904 00 C	3769

BRECK	BESER
NO	NO
23914 00	3905
23914 00 704 00	3905
23917 00 703 10	3834
23919 00 703 10	3835
23921 00	3914
23928 00	3910
23930 00 702 00	3849
23934 00	3850
23959 00 702 00	3987
23966 00 701 10	4028
23973 00	3983
23973 00 702 00	3983
23974 00 702 00	3951
23979 00 701 10	3826
23980 00 703 00	3795
24007 00	3923
24007 00 703 00	3923
24008 00	3924
24008 00 703 00	3924
24014 00 C	4106
24024 00 C	3891
24031 00 C	3961
24046 00 701 10	3889
24046 00 C	3889
24058 00 C	3979
24065 00	3849
24066 00 C	3892
24092 00 C	3978
24122 00 701 10	3956
24133 00 701 10	3940
24133 00 W	3940
24134 00 701 10	3939
24135 00 704 00	3946
24137 00 702 00	3853
24150 00	3984
24246 00 701 10	4118
24260 00 704 00	4058
24283 00 702 00	4122
24320 00 704 10	3980
24412 00 701 10	4149
24421 00 702 10	4150
24465 00 703 00	3820
24468 00 703 10	3981
24468 00 703 20	3981
24484 00 703 10	3906
24485 00 703 10	3920
24486 00 702 10	3907
24538 00 701 00	3964
24582 00 701 10	4029
24638 00 701 10	4160
24692 00 704 00	3967
24693 00 701 00	3966
24765 00 704 00	3971
24820 00 704 00	4142
25353 00 704 00	4349
29001 00 902 10	3749
29076 00 703 10	3614
29121 00 703 00	3575
29122 00 902 10	3994
29123 00 703 00	3823
29190 00 703	3926
29190 00 703 10	3926
29192 00 703 00	3925
29200 00 703	3962
29200 00 703 00	3962
29217 00 702 00	3963
29217 00 703	3963
29835 00 902 10	3679
New 086 C	3632
New 093	3853
New 094 C	4118

BREMBO	BESER
NO	NO
P 00 009	3572
P 00 010	3609
P 05 001	4179
P 06 006	3365
P 06 008	3573
P 06 009	3572
P 06 010	3609
P 06 011	3578
P 06 012	3564
P 06 014	3563
P 06 017	3658
P 06 018	3909
P 06 020	3879
P 06 021	3881
P 06 023	3656
P 06 026	4179
P 06 031	4180
P 06 033	4181
P 06 043	4347
P 06 044	3879
P 06 046	4180
P 06 047	4208
P 06 048	3881
P 06 049	4207
P 06 057	4346
P 06 064	4325
P 10 001	3894
P 10 003	3976
P 10 005	4303
P 10 007	4073
P 10 011	4211
P 10 013	4040
P 10 054	4337
P 11 017	4198
P 11 018	4018
P 11 019	4006
P 11 025	4005
P 11 026	3955
P 15 001	3511
P 15 002	3687
P 15 006	3744
P 15 007	3687
P 15 010	3895
P 16 002	3436
P 16 003	3746
P 16 004	3620
P 16 005	3600
P 16 007	3898
P 16 008	3901
P 16 013	4122
P 18 024	4004
P 18 025	4136
P 23 001	3320
P 23 002	3317
P 23 013	3424
P 23 015	3333
P 23 017	3466
P 23 021	3424
P 23 022	3440
P 23 023	3543
P 23 025	3625
P 23 028	3467
P 23 037	3536
P 23 040	3459
P 23 044	3432
P 23 056	3540
P 23 058	3617
P 23 060	3608
P 23 065	4123
P 23 068	3595
P 23 069	3559
P 23 071	3618
P 23 072	3799
P 23 077	3617
P 23 079	3790
P 23 085	3826
P 23 087	3800
P 23 090	3986
P 23 091	3834
P 23 092	3835

BREMBO	BESER
NO	NO
P 23 093	3914
P 23 096	3643
P 23 097	4173
P 23 099	3826
P 23 107	4173
P 23 108	3826
P 23 118	3790
P 23 119	3800
P 23 120	3800
P 23 122	3568
P 23 123	3569
P 23 125	3897
P 23 130	4121
P 23 136	3922
P 23 136	4171
P 23 137	3800
P 23 140	3826
P 23 141	3826
P 23 178	4301
P 24 001	3311
P 24 002	3312
P 24 004	3416
P 24 006	3417
P 24 008	3423
P 24 010	3484
P 24 012	3417
P 24 012	3417
P 24 013	3419
P 24 014	3429
P 24 016	3621
P 24 017	3499
P 24 019	3549
P 24 023	3603
P 24 024	3437
P 24 026	3692
P 24 028	3589
P 24 029	3464
P 24 030	3545
P 24 031	3464
P 24 032	3473
P 24 033	3445
P 24 034	3593
P 24 036	3833
P 24 037	3558
P 24 039	3888
P 24 041	3781
P 24 043	3417
P 24 045	3722
P 24 046	3754
P 24 047	3755
P 24 048	3951
P 24 051	3767
P 24 052	3784
P 24 053	3921
P 24 055	3877
P 24 056	4119
P 24 058	3801
P 24 059	4093
P 24 060	4100
P 24 061	3885
P 24 062	3853
P 24 063	4058
P 24 064	3906
P 24 065	3920
P 24 066	3907
P 24 067	3853
P 24 068	4186
P 24 071	3801
P 24 072	4122
P 24 075	4157
P 24 076	4161
P 24 084	3823
P 24 085	4215
P 24 086	3988
P 24 148	3853
P 24 151	4204
P 24 157	4226
P 24152	4174
P 28 002	3324
P 28 004	3646

BREMBO	BESER
NO	NO
P 28 006	3501
P 28 008	3752
P 28 010	3582
P 28 011	4212
P 28 013	3631
P 28 017	4212
P 28 020	3683
P 28 022	4148
P 28 023	3607
P 28 024	3686
P 28 026	3704
P 28 028	3704
P 28 030	4155
P 28 032	4110
P 28 034	4109
P 28 034	4232
P 28 035	3831
P 28 036	4159
P 28 039	4148
P 28 042	3696
P 28 045	4160
P 28 046	4156
P 28 077	4312
P 28 090	4279
P 30 001	3504
P 30 003	4087
P 30 005	3507
P 30 009	3740
P 30 010	3648
P 30 011	3778
P 30 012	3802
P 30 013	3843
P 30 014	3993
P 30 015	4009
P 30 016	4269
P 30 018	3959
P 30 019	3978
P 30 020	3961
P 30 023	3979
P 30 024	3502
P 30 025	3980
P 30 026	3880
P 30 027	3985
P 30 028	3976
P 30 032	3968
P 30 033	3969
P 30 034	4028
P 30 036	3960
P 30 037	3989
P 30 039	4039
P 30 040	4165
P 30 041	4035
P 30 042	4001
P 30 043	3959
P 30 044	3653
P 30 046	3980
P 30 047	4061
P 30 051	3980
P 30 053	4145
P 30 054	4061
P 30 055	4049
P 30 056	4039
P 30 062	3740
P 30 063	4060
P 30 073	4342
P 34 002	3446
P 34 005	3886
P 34 007	4124
P 36 007	3584
P 37 003	4182
P 37 004	4182
P 37 005	4011
P 37 007	4012
P 37 008	4031
P 37 010	4016
P 37 016	4339
P 41 001	3393
P 41 002	3421
P 41 003	3422
P 41 004	3552

BREMBO	BESER
NO	NO
P 41 005	3421
P 44 001	3661
P 44 003	3771
P 44 004	3662
P 44 005	3453
P 44 005	3816
P 44 007	3512
P 44 010	3872
P 44 011	4094
P 44 013	3944
P 44 014	4293
P 44 015	3453
P 44 015	3816
P 44 016	4157
P 44 017	4157
P 44 019	3944
P 44 020	4161
P 49 006	3449
P 49 007	3449
P 49 010	3463
P 49 011	3640
P 49 013	3723
P 49 016	3522
P 49 018	3832
P 49 024	3874
P 49 027	3780
P 49 028	3874
P 49 032	3889
P 49 033	4118
P 49 035	4303
P 49 037	3875
P 49 039	4029
P 50 001	3318
P 50 002	3315
P 50 002	3515
P 50 003	3513
P 50 004	3339
P 50 004	3514
P 50 007	3611
P 50 008	3408
P 50 010	3629
P 50 011	3430
P 50 012	3630
P 50 013	3550
P 50 017	3581
P 50 019	3670
P 50 020	3804
P 50 021	3689
P 50 022	3628
P 50 023	3677
P 50 024	3663
P 50 025	3676
P 50 026	3863
P 50 027	3678
P 50 028	3614
P 50 029	3567
P 50 030	3680
P 50 031	3681
P 50 032	3861
P 50 033	3821
P 50 034	3679
P 50 035	4125
P 50 036	4125
P 50 038	4281
P 50 039	4126
P 50 040	4069
P 50 041	4102
P 50 042	4101
P 50 042	4209
P 50 043	4103
P 50 045	3836
P 50 046	3836
P 50 050	3923
P 50 059	3962
P 50 060	3963
P 50 063	4210
P 50 065	3679
P 50 067	4248
P 50 068	4247
P 50 069	4249

BREMBO	BESER
NO	NO
P 50 070	4248
P 50 071	4248
P 50 072	3676
P 50 074	4240
P 50 084	3926
P 50 085	3925
P 50 093	4326
P 50 095	4313
P 50 103	4335
P 50 107	3967
P 50 114	4313
P 50 117	4335
P 50 118	4334
P 50 119	4334
P 50 122	4349
P 52 001	3319
P 52 003	3311
P 52 010	3423
P 52 011	3624
P 52 012	3413
P 52 016	3683
P 52 017	3943
P 54 001	3709
P 54 006	3401
P 54 008	3448
P 54 009	3400
P 54 012	4108
P 54 014	3622
P 54 015	3603
P 54 015	3604
P 54 017	3685
P 54 018	3688
P 54 020	3809
P 54 021	3675
P 54 023	4062
P 54 026	4084
P 54 028	4271
P 54 029	3892
P 54 030	3955
P 54 032	3697
P 54 033	3900
P 54 034	4106
P 54 035	4216
P 54 036	4059
P 54 038	3975
P 54 041	3765
P 54 044	4054
P 54 046	3916
P 56 004	3370
P 56 010	4087
P 56 011	3394
P 56 014	3397
P 56 015	3415
P 56 021	3779
P 56 022	3562
P 56 023	4104
P 56 024	3660
P 56 026	3598
P 56 027	3598
P 56 031	4128
P 56 033	3577
P 56 039	4010
P 56 040	3932
P 56 041	3859
P 56 043	3779
P 56 044	4115
P 56 046	3933
P 56 049	4017
P 56 051	4074
P 56 056	3758
P 56 058	4143
P 56 059	3952
P 56 061	3848
P 56 062	4038
P 56 066	3965
P 56 068	3933
P 56 072	3667
P 56 081	4324
P 56 083	3797
P 56 086	3983

BREMBO	BESER
NO	NO
P 56 106	4308
P 59 001	3318
P 59 002	3320
P 59 004	3335
P 59 005	3410
P 59 006	3410
P 59 007	3509
P 59 008	3462
P 59 011	3623
P 59 012	3416
P 59 013	3470
P 59 014	3717
P 59 015	3757
P 59 015	3857
P 59 016	3733
P 59 017	3505
P 59 017	3615
P 59 018	3469
P 59 019	3736
P 59 020	3674
P 59 021	3887
P 59 023	3717
P 59 024	3717
P 59 026	3596
P 59 030	3762
P 59 031	3763
P 59 036	3846
P 59 039	3856
P 59 040	3855
P 59 041	3795
P 59 042	3853
P 59 043	4211
P 59 044	3853
P 59 045	4042
P 59 050	3983
P 59 052	3800
P 59 055	4149
P 59 059	4150
P 59 060	4150
P 59 076	4230
P 59 077	4008
P 59 078	4014
P 59 080	4014
P 59 084	4284
P 61 004	3321
P 61 005	3323
P 61 009	3806
P 61 011	3366
P 61 017	3405
P 61 018	3806
P 61 028	3380
P 61 029	3493
P 61 031	3556
P 61 032	3496
P 61 033	3366
P 61 035	3457
P 61 037	3873
P 61 038	3680
P 61 041	3556
P 61 042	3487
P 61 050	3610
P 61 052	3819
P 61 053	3878
P 61 054	3528
P 61 056	3750
P 61 060	3636
P 61 062	3873
P 61 063	3938
P 61 066	3820
P 61 068	3800
P 61 069	3644
P 61 071	3935
P 61 072	3934
P 61 074	3854
P 61 075	3931
P 61 077	3939
P 61 078	3940
P 61 079	3946
P 61 080	3984
P 61 081	3987

BREMBO	BESER
NO	NO
P 61 082	3820
P 61 083	3964
P 61 084	3971
P 61 088	3529
P 61 089	3685
P 61 090	3981
P 61 091	3820
P 61 092	3981
P 61 093	3922
P 61 094	3922
P 61 095	4151
P 61 096	3972
P 61 098	3659
P 61 099	3487
P 61 100	3984
P 61 101	3970
P 61 109	3939
P 61 113	4201
P 65 001	3320
P 65 017	4309
P 65 027	4310
P 66 001	3826
P 66 002	4058
P 68 001	3333
P 68 005	3374
P 68 006	3482
P 68 007	3527
P 68 008	3503
P 68 009	3380
P 68 010	3380
P 68 011	3442
P 68 012	3526
P 68 013	3537
P 68 014	3539
P 68 015	3495
P 68 016	3428
P 68 017	3596
P 68 024	3529
P 68 027	3539
P 68 028	4093
P 68 029	3950
P 68 030	3852
P 68 031	3850
P 68 033	3983
P 68 034	3849
P 68 035	3529
P 68 036	4137
P 68 037	3503
P 68 038	3503
P 68 039	4141
P 68 043	3967
P 68 044	3966
P 68 046	4134
P 68 049	3827
P 68 050	3964
P 68 053	3966
P 68 054	4142
P 68 059	4140
P 68 064	4287
P 68 068	4280
P 71 003	3583
P 71 008	3717
P 78 002	3579
P 78 003	3395
P 78 004	3426
P 78 005	4080
P 78 007	4078
P 78 009	3764
P 78 010	3764
P 78 011	3913
P 78 013	3912
P 78 015	4036
P 78 017	4081
P 78 018	4258
P 78 020	4213
P 79 004	3745
P 79 006	3882
P 79 008	3883
P 79 009	3884
P 79 010	3602

BREMBO	BESER
NO	NO
P 79 011	4027
P 79 012	3928
P 79 016	3928
P 79 017	4034
P 79 018	3929
P 79 019	4000
P 79 020	3928
P 79 027	4148
P 79 028	4038
P 82 001	3872
P 83 003	3710
P 83 005	3579
P 83 006	3371
P 83 007	3634
P 83 009	3560
P 83 011	3402
P 83 013	3714
P 83 015	3776
P 83 024	3693
P 83 025	3673
P 83 027	4086
P 83 030	4072
P 83 034	3554
P 83 034	3651
P 83 036	4275
P 83 037	3915
P 83 038	4099
P 83 039	4274
P 83 040	3822
P 83 045	4085
P 83 046	3890
P 83 047	4153
P 83 048	3829
P 83 049	3830
P 83 050	3768
P 83 051	3769
P 83 052	3788
P 83 053	4112
P 83 055	4158
P 83 057	4153
P 83 061	4013
P 83 062	3910
P 83 064	3817
P 83 065	3825
P 83 066	3891
P 83 067	4105
P 83 068	4111
P 83 071	4077
P 83 073	4113
P 83 076	4277
P 83 078	4082
P 83 079	3956
P 83 080	4037
P 83 082	3953
P 83 083	3954
P 83 086	3958
P 83 088	3911
P 83 089	3949
P 83 092	3777
P 83 093	4071
P 83 094	3982
P 83 096	3903
P 83 098	3997
P 83 102	3891
P 83 103	3769
P 83 107	3996
P 83 109	4147
P 83 112	4146
P 83 117	3948
P 83 137	3998
P 83 140	4167
P 83 145	4255
P 85 001	3406
P 85 002	3350
P 85 003	3327
P 85 004	3343
P 85 004	3483
P 85 005	3486
P 85 006	3404
P 85 008	3605

BREMBO	BESER
NO	NO
P 85 010	3378
P 85 011	3551
P 85 012	3444
P 85 013	3536
P 85 014	3490
P 85 015	3531
P 85 016	3619
P 85 017	3529
P 85 019	3441
P 85 020	3529
P 85 022	3419
P 85 022	3731
P 85 024	3585
P 85 025	3566
P 85 027	4020
P 85 029	3553
P 85 030	3538
P 85 031	3637
P 85 032	3896
P 85 038	4222
P 85 039	3506
P 85 041	3782
P 85 042	3896
P 85 043	3782
P 85 044	3896
P 85 045	3590
P 85 046	4345
P 85 047	3606
P 85 049	3794
P 85 050	3553
P 85 057	4138
P 85 060	3590
P 85 061	4095
P 85 064	3842
P 85 066	4152
P 85 070	4076
P 85 072	3782
P 85 073	3905
P 85 075	3904
P 85 077	4138
P 85 081	3841
P 85 082	3841
P 85 083	3842
P 85 084	4096
P 85 086	4096
P 85 089	3529
P 85 092	3551
P 85 093	3649
P 85 095	3905
P 85 097	4096
P 85 098	4259
P 85 099	4260
P 85 100	4260
P 85 110	3945
P 85 114	4135
P 85 115	3906
P 85 116	3945
P 85 121	4200
P 85 125	4241
P 85 135	4336
P 85 140	4336
P 86 001	3311
P 86 003	3373
P 86 006	3641
P 86 008	3583
P 86 009	3642
P 86 014	3918
P 86 016	3919
P 86 020	3919
P 99 003	3574
P A6 001	3423
P A6 006	3423
P A6 007	3749
P A6 012	3523
P A6 017	3575
P A6 018	3749
P A6 021	3575
P A6 022	3942
P A6 023	3823
P A6 025	3994

BREMBO	BESER
NO	NO
P A6 026	3965
P A6 027	4092
P06 003	3332
P06 004	3326
P10 009	4221
P23 039	3461
P23 170	4234
P30 090	4251
P36 001	3455
P42 051	4242
P50 049	4097
P59 082	4227
P61 043	3555
P61 130	4224
P68065	4253
P79 021	3899
P83 013	3414
P83 058	4276
P83 059	4083
P83 111	4098
P83 138	4254
P83105	4003
P83110	4032
P85 069	4075

BREMSI	BESER
NO	NO
BP2015	3322
BP2043	3331
BP2050	3403
BP2153	3330
BP2168	3376
BP2360	3372
BP3480	3793
BP3662	4253
BP7237	3390

COMLINE	BESER
NO	NO
ADB01006	3628
ADB01007	3505
ADB01007	3615
ADB0101	3327
ADB01011	3656
ADB01018	3897
ADB01033	3820
ADB01034	3823
ADB01035	3856
ADB01036	3855
ADB01038	3800
ADB0104	3343
ADB0104	3483
ADB01042	3914
ADB0105	3490
ADB01052	3453
ADB01053	3583
ADB01066	3413
ADB01067	3630
ADB01078	3512
ADB0108	3529
ADB01081	3596
ADB01088	4216
ADB01096	3881
ADB01097	3909
ADB0111	3709
ADB01110	4100
ADB01114	4093
ADB01115	3950
ADB01117	4102
ADB0112	3316
ADB01127	3848
ADB01132	4013
ADB01137	4211
ADB01143	4101
ADB01143	4209
ADB01145	3854
ADB01146	3931
ADB01147	4138
ADB01150	3801
ADB01159	3850
ADB01160	3849
ADB0117	3469
ADB01173	3942
ADB0118	3417
ADB01186	3951
ADB01191	3894
ADB01199	3910
ADB01209	4097
ADB01215	4180
ADB01221	3790
ADB0124	3605
ADB0125	3315
ADB0125	3515
ADB01252	3946
ADB01279	4111
ADB01284	3905
ADB0130	3509
ADB01300	4346
ADB01305	3923
ADB01306	3924
ADB0131	3710
ADB01316	4076
ADB0132	3473
ADB01323	3885
ADB0134	3623
ADB0135	3410
ADB0136	3441
ADB0139	3549
ADB0144	3419
ADB0147	3339
ADB0147	3514
ADB0148	3486
ADB0149	3444
ADB0150	3470
ADB01507	4082
ADB01515	3953
ADB01517	4093
ADB0152	3531
ADB01525	3820

COMLINE	BESER
NO	NO
ADB01533	4293
ADB01535	3826
ADB01547	3879
ADB01552	3987
ADB01555	3925
ADB01557	4058
ADB01559	4123
ADB0156	3312
ADB01569	3962
ADB01575	3963
ADB01577	4038
ADB01581	3949
ADB01591	4161
ADB01599	3853
ADB01600	4173
ADB01604	3820
ADB0161	3410
ADB01610	4157
ADB01612	3958
ADB01616	3965
ADB01617	4092
ADB01618	4122
ADB01622	4151
ADB01625	4077
ADB01626	3945
ADB01629	3853
ADB01658	3984
ADB01677	3964
ADB01703	4137
ADB01707	3966
ADB01709	4260
ADB01715	3967
ADB01716	3529
ADB01719	3964
ADB01725	4134
ADB01726	3944
ADB01727	3995
ADB0173	3422
ADB01738	3827
ADB01744	4347
ADB01748	3800
ADB01750	4105
ADB01763	4186
ADB01765	3970
ADB0177	3397
ADB01773	3903
ADB01778	4036
ADB01780	3848
ADB01783	3800
ADB01786	4248
ADB01792	4247
ADB01794	4179
ADB01797	3971
ADB0180	3637
ADB0186	3606
ADB0187	3324
ADB0189	3401
ADB0192	3421
ADB0193	4104
ADB02007	4054
ADB0201	3790
ADB02014	4142
ADB02014	4287
ADB0202	3745
ADB02020	3852
ADB02021	3944
ADB02022	4135
ADB0207	3394
ADB0212	3567
ADB02143	4175
ADB02144	4140
ADB02196	4226
ADB02197	4204
ADB0220	3663
ADB0222	3378
ADB0223	3373
ADB0224	3661
ADB0228	3459
ADB0232	3872
ADB0235	3400

COMLINE	BESER
NO	NO
ADB0238	3513
ADB0239	3416
ADB0242	4212
ADB0247	3350
ADB0253	3504
ADB0264	3379
ADB0265	3371
ADB0268	3646
ADB0270	3407
ADB0271	3614
ADB0274	3677
ADB0276	3415
ADB0281	3393
ADB0297	3714
ADB0306	3462
ADB0307	3550
ADB0309	3611
ADB0312	3335
ADB0319	3423
ADB0323	3436
ADB0327	3833
ADB0328	3430
ADB0331	4086
ADB0352	3578
ADB0355	3573
ADB0356	3572
ADB0358	3564
ADB0360	3408
ADB0361	3609
ADB0368	3370
ADB0382	3365
ADB0389	3311
ADB0390	3603
ADB0391	3369
ADB0393	3464
ADB0397	3621
ADB0404	3693
ADB0410	3620
ADB0415	3603
ADB0415	3604
ADB0419	3553
ADB0435	3687
ADB0439	3436
ADB0444	3570
ADB0444	3594
ADB0447	3888
ADB0453	3678
ADB0454	3676
ADB0459	3777
ADB0476	3667
ADB0478	3670
ADB0479	3897
ADB0480	3681
ADB0485	3659
ADB0486	3744
ADB0490	3754
ADB0493	3733
ADB0502	3589
ADB0503	3658
ADB0508	4128
ADB0511	3551
ADB0513	3563
ADB0514	3558
ADB0519	3603
ADB0519	3604
ADB0522	3496
ADB0526	3539
ADB0558	3536
ADB0559	3598
ADB0566	3562
ADB0589	4088
ADB06001	4181
ADB06030	3945
ADB06078	4256
ADB06125	4280
ADB0702	3581
ADB0703	3585
ADB0704	3938
ADB0705	3755
ADB0706	3538

COMLINE	BESER
NO	NO
ADB0707	3566
ADB0709	3822
ADB0710	4274
ADB0715	3506
ADB0725	3642
ADB0729	3918
ADB0730	3919
ADB0731	3318
ADB0732	3583
ADB0734	4034
ADB0736	3896
ADB0737	3682
ADB0738	3736
ADB0741	3717
ADB0748	4125
ADB0770	3746
ADB0773	4027
ADB0788	4275
ADB0797	3529
ADB0798	3584
ADB0802	4115
ADB0819	3875
ADB0826	4271
ADB0832	3830
ADB0845	4182
ADB0854	3836
ADB0873	4094
ADB0874	3795
ADB0877	3545
ADB0878	3660
ADB0888	3861
ADB0889	3782
ADB0891	3877
ADB0892	3644
ADB0898	3943
ADB0909	3575
ADB0913	3863
ADB0914	3804
ADB0915	3821
ADB0924	3445
ADB0928	3419
ADB0931	3575
ADB0944	4158
ADB0946	3853
ADB0953	4020
ADB0960	4119
ADB0984	3983
ADB0989	3896
ADB11016	3618
ADB11025	3590
ADB11037	3826
ADB11038	3800
ADB11040	3834
ADB11041	3835
ADB11060	3680
ADB11063	3491
ADB11098	3610
ADB11111	3590
ADB11136	4095
ADB11147	4138
ADB11158	3986
ADB1118	3417
ADB1118	3417
ADB11184	3546
ADB11224	3904
ADB11250	3939
ADB11251	3940
ADB11275	4152
ADB11312	3841
ADB11313	3842
ADB1133	3503
ADB1142	3432
ADB1144	3429
ADB1152	3635
ADB1156	3484
ADB11589	3981
ADB11600	4173
ADB11621	3972
ADB11623	3922
ADB11702	3826

COMLINE	BESER
NO	NO
ADB1174	3636
ADB11753	4096
ADB11770	4222
ADB1191	3474
ADB1201	3548
ADB1201	3690
ADB12047	3826
ADB12105	4057
ADB12106	4056
ADB12108	4132
ADB12108	4172
ADB1224	3771
ADB1254	3440
ADB1275	3559
ADB1319	3423
ADB1396	3624
ADB1401	3662
ADB1419	3553
ADB1431	3503
ADB1433	3750
ADB1437	3523
ADB1455	3680
ADB1511	3619
ADB1512	3457
ADB1514	3593
ADB1515	3474
ADB1526	3539
ADB1570	3528
ADB16002	4162
ADB1715	3590
ADB1736	3896
ADB1851	3782
ADB1852	3794
ADB1897	3617
ADB1911	4126
ADB1926	3556
ADB21048	3482
ADB21056	3428
ADB21079	3878
ADB21120	3935
ADB21121	3934
ADB21511	3920
ADB21512	3906
ADB21554	3907
ADB21556	3926
ADB21615	3380
ADB22142	4174
ADB2219	3595
ADB2258	3380
ADB2310	3493
ADB2416	3487
ADB2509	3608
ADB2533	3495
ADB2568	3819
ADB2714	3799
ADB31019	4281
ADB31038	3800
ADB31107	3921
ADB31108	3784
ADB31109	4011
ADB31112	3846
ADB31113	3928
ADB31126	3993
ADB31134	4153
ADB31140	3890
ADB31141	4153
ADB3115	3449
ADB31152	4112
ADB31154	3817
ADB31162	4012
ADB31176	3961
ADB31178	3978
ADB31189	3687
ADB31192	3895
ADB31193	4017
ADB31194	3831
ADB31195	4159
ADB31196	3959
ADB31201	3891
ADB31202	4031

COMLINE	BESER
NO	NO
ADB31208	3912
ADB31245	3767
ADB31256	3955
ADB3127	3426
ADB31277	4028
ADB31283	4303
ADB31288	3979
ADB31290	4106
ADB31298	3985
ADB31307	4042
ADB31319	3968
ADB31320	3969
ADB31321	4001
ADB31504	3763
ADB31508	3982
ADB31519	3880
ADB31520	3952
ADB31523	4000
ADB31524	4143
ADB31543	3980
ADB31572	4037
ADB31573	3886
ADB31576	3956
ADB31578	3929
ADB31579	3954
ADB31582	3976
ADB31584	3975
ADB31585	4073
ADB31620	4122
ADB3163	3402
ADB31674	4156
ADB31676	3960
ADB3168	3463
ADB31680	4149
ADB3170	3673
ADB31705	4160
ADB31714	3989
ADB3172	3892
ADB31729	4113
ADB31730	3954
ADB31732	3874
ADB31745	4074
ADB31749	3900
ADB31757	4165
ADB31760	3912
ADB31762	4081
ADB31768	4039
ADB31774	3959
ADB31776	3959
ADB31777	3883
ADB31782	4035
ADB31787	4029
ADB31795	4150
ADB31798	4028
ADB31799	4147
ADB3182	3723
ADB3184	3395
ADB3185	3752
ADB32008	3983
ADB32012	3988
ADB32013	3978
ADB32016	3980
ADB32023	4061
ADB32024	4014
ADB32026	4146
ADB32037	4008
ADB32038	4230
ADB3206	3640
ADB32161	4311
ADB3218	4080
ADB32213	4301
ADB3225	3507
ADB3229	3674
ADB3232	3683
ADB3233	3688
ADB3234	3685
ADB3242	4212
ADB3245	3522
ADB3253	3502
ADB3255	3437

COMLINE	BESER
NO	NO
ADB3260	3554
ADB3260	3651
ADB3263	3602
ADB3267	3582
ADB3269	3809
ADB3273	3882
ADB3295	3448
ADB3322	3757
ADB3322	3857
ADB3325	3600
ADB3326	3832
ADB3333	3560
ADB3363	3622
ADB3387	3758
ADB3393	3722
ADB3399	3579
ADB3422	3634
ADB3436	3631
ADB3443	4072
ADB3444	3740
ADB3445	4148
ADB3449	3577
ADB3452	3675
ADB3457	3898
ADB3461	3887
ADB3468	4108
ADB3471	4148
ADB3475	3884
ADB3484	4010
ADB3488	3778
ADB3499	3598
ADB3551	3704
ADB3555	3607
ADB3556	3686
ADB3559	3766
ADB3582	3768
ADB3584	3762
ADB3587	3883
ADB3591	3932
ADB36006	4124
ADB36009	4060
ADB36044	4015
ADB36052	4213
ADB36080	4233
ADB3722	4079
ADB3745	4071
ADB3747	3776
ADB3750	3763
ADB3751	3779
ADB3757	3764
ADB3775	4084
ADB3776	3697
ADB3777	3859
ADB3789	3915
ADB3792	3867
ADB3803	4155
ADB3813	4059
ADB3816	3901
ADB3817	3780
ADB3831	3829
ADB3835	4099
ADB3836	4085
ADB3840	4078
ADB3841	3788
ADB3843	4009
ADB3850	4197
ADB3863	3760
ADB3866	3674
ADB3867	3696
ADB3879	3993
ADB3882	3913
ADB3901	3769
ADB3902	3843
ADB3910	4069
ADB3912	3933
ADB3922	3502
ADB3935	3993
ADB3936	3740
ADB3938	3843
ADB3941	4269

COMLINE	BESER
NO	NO
ADB3942	3825
ADB3945	4062
ADB3947	4110
ADB3948	4118
ADB3949	4109
ADB3949	4232
ADB3950	3889
ADB3968	3802
ADB3984	3983
ADB4129	3424
ADB4137	3466
ADB4155	3641
CBP02014	4287
CBP06125	4280
CBP32213	4301

DELPHI	BESER
NO	NO
LP1003	3881
LP1004	3909
LP1007	3617
LP1008	3677
LP1009	3863
LP1010	3809
LP1011	3577
LP1014	3602
LP1015	3884
LP1016	3538
LP1022	3799
LP1023	4062
LP1044	3678
LP1045	3670
LP1046	3614
LP106	3321
LP1064	3898
LP1068	3507
LP1069	3665
LP1073	4087
LP1075	3667
LP1077	3566
LP108	3405
LP1082	3570
LP1082	3594
LP1083	3505
LP1083	3615
LP1084	3610
LP1085	3636
LP109	3671
LP1092	3606
LP1095	3874
LP1100	3511
LP1104	3682
LP1107	3656
LP1109	3872
LP1111	3659
LP1137	4182
LP1138	3575
LP1139	3722
LP1140	3915
LP1143	3879
LP1144	3822
LP1167	3868
LP1169	3544
LP119	3328
LP1206	4020
LP1208	3339
LP1208	3514
LP1210	3872
LP1242	4214
LP1249	3637
LP1299	4126
LP1304	3687
LP1305	3859
LP1307	3763
LP1308	3829
LP1310	3762
LP1314	3938
LP1315	3754
LP1316	3755
LP139	3930
LP1390	3744
LP1398	4059
LP1401	4125
LP1402	3663
LP1403	3676
LP1409	3896
LP1410	3896
LP1413	3618
LP1414	3768
LP1416	3548
LP1416	3690
LP1425	3681
LP1429	3419
LP1429	3731
LP1430	4034
LP1433	3574
LP1434	3648
LP1436	3782

DELPHI	BESER
NO	NO
LP1437	3804
LP1438	3830
LP1439	4027
LP1440	3780
LP1441	3717
LP1442	3928
LP1447	3788
LP1448	4271
LP145	3806
LP1450	3872
LP1458	3919
LP1460	4274
LP1461	4071
LP1462	3892
LP1465	4281
LP1469	3877
LP1471	3861
LP1474	3897
LP15	3311
LP1501	4069
LP1502	3778
LP1504	3918
LP1507	4148
LP1508	4099
LP1509	3913
LP1510	4085
LP1513	3788
LP1514	3782
LP1521	3943
LP1524	3539
LP1525	3590
LP1530	4222
LP1532	4197
LP1533	4100
LP1537	3617
LP1539	3993
LP154	3312
LP1541	4345
LP1542	3553
LP1544	4010
LP1545	3764
LP1546	4084
LP1549	3790
LP1551	3901
LP1553	3763
LP1555	3767
LP1557	4011
LP1559	4110
LP1564	3909
LP1582	3784
LP1583	3921
LP1587	3617
LP1588	3677
LP1589	3863
LP1590	3577
LP1591	3538
LP1592	3799
LP1593	4062
LP1595	3678
LP1596	3670
LP1599	3507
LP160	3806
LP1600	3665
LP1601	3566
LP1604	3570
LP1604	3594
LP1605	3505
LP1605	3615
LP1606	3610
LP1607	3636
LP161	3365
LP1610	3659
LP1615	4182
LP1616	3575
LP1617	3759
LP1617	3938
LP1618	3821
LP1622	3887
LP1624	3644
LP1625	3781

DELPHI	BESER
NO	NO
LP1626	4155
LP1628	3685
LP1631	3896
LP1632	4158
LP1633	4222
LP1634	4009
LP1652	4094
LP1653	3800
LP1654	3935
LP1655	3934
LP1659	3932
LP1663	4079
LP1664	3653
LP1671	3802
LP1673	3762
LP1676	3846
LP1679	3820
LP1681	4040
LP1682	4093
LP1684	3955
LP1685	4123
LP1688	4102
LP1689	4276
LP1690	4083
LP1695	3848
LP1696	3836
LP1697	4101
LP1697	4209
LP1699	3938
LP17	3455
LP170	3374
LP1701	3853
LP1702	4269
LP1704	4109
LP1704	4232
LP1705	4103
LP1706	3590
LP1707	3794
LP1708	3852
LP1711	4013
LP1713	3529
LP1714	3950
LP1715	3931
LP1716	3854
LP1718	3912
LP1721	3800
LP1722	3826
LP1723	4211
LP1724	3801
LP1725	4093
LP1726	3853
LP1727	3820
LP1728	4138
LP1729	3877
LP1730	3849
LP1732	4115
LP1735	3598
LP1737	3817
LP1738	3910
LP1742	3769
LP1743	3843
LP1744	3539
LP1745	3795
LP1746	3856
LP1747	3855
LP1750	3834
LP1751	3835
LP1754	4138
LP1758	4088
LP1759	3900
LP1765	3895
LP1769	3978
LP1773	4012
LP1778	3496
LP1779	3687
LP178	3340
LP1782	3891
LP1785	4153
LP1786	3890
LP1788	3961

DELPHI	BESER
NO	NO
LP1789	4109
LP1789	4232
LP179	3378
LP1790	3914
LP1791	4097
LP1792	3986
LP1793	4179
LP1794	4180
LP1796	3790
LP1799	3889
LP18	3318
LP1800	3552
LP1801	4095
LP1802	3575
LP1803	3879
LP1806	3831
LP1807	3933
LP1808	3900
LP1811	3568
LP1815	4152
LP1816	3687
LP1819	4028
LP1823	4105
LP1824	3905
LP1826	3823
LP1827	3769
LP1829	4303
LP1836	3986
LP1837	3904
LP1840	4112
LP1843	4347
LP1849	3978
LP1850	3979
LP1852	4106
LP1855	3568
LP1857	3976
LP186	3324
LP1861	4042
LP1864	3825
LP1865	3983
LP1866	3850
LP1869	3885
LP1870	3853
LP189	3421
LP1890	3939
LP1891	3940
LP1892	3946
LP1895	3951
LP1896	3769
LP1899	3826
LP1900	4119
LP1901	3765
LP1902	3959
LP1906	4031
LP1908	4082
LP1909	3892
LP1910	3894
LP1911	3842
LP1913	3841
LP1914	3841
LP1916	4118
LP1922	4096
LP1926	3984
LP1927	4181
LP1929	4173
LP1931	4016
LP1932	4001
LP1933	3968
LP1935	4293
LP1936	3944
LP1940	4137
LP1941	4081
LP1942	4153
LP1947	3923
LP1949	3987
LP1951	3880
LP1952	3980
LP1953	3920
LP1954	3906
LP1955	3907

DELPHI	BESER
NO	NO
LP1956	4346
LP1957	4058
LP1958	3853
LP1967	4161
LP1969	4157
LP197	3527
LP1976	3969
LP1980	4240
LP1981	3962
LP1982	3925
LP1983	3926
LP1984	3963
LP1986	4074
LP1987	3976
LP199	3379
LP1990	3800
LP1992	3981
LP1993	3922
LP1994	3820
LP1995	3972
LP1998	4076
LP1999	4213
LP20	3320
LP2000	4000
LP2001	3929
LP2002	3953
LP2003	4077
LP2004	3949
LP2006	3958
LP2011	3952
LP2012	3945
LP2014	4173
LP2015	3826
LP2028	4248
LP2029	4247
LP2030	4143
LP2031	4038
LP2033	4198
LP2034	4006
LP2035	4018
LP2036	3988
LP2037	3886
LP2039	3965
LP204	3417
LP2040	4092
LP2041	4208
LP2043	3965
LP2047	4156
LP2048	3960
LP2049	3989
LP2050	4039
LP2051	4165
LP2059	3982
LP2060	3903
LP2062	3985
LP2069	4122
LP2070	3970
LP2071	4151
LP2073	4216
LP2074	3975
LP2075	3827
LP2077	4259
LP2078	3966
LP2079	4134
LP208	3509
LP2081	4149
LP2084	4150
LP2090	4207
LP2092	4122
LP2093	4160
LP2094	4035
LP2099	4249
LP2101	3964
LP2102	3956
LP2103	4037
LP2105	3954
LP2106	4260
LP211	3661
LP2111	4029
LP2117	4309

DELPHI	BESER
NO	NO
LP2125	4210
LP2126	3967
LP2127	3895
LP2128	4036
LP2130	4113
LP2132	4003
LP2134	3996
LP2137	4141
LP2138	3994
LP2142	4230
LP2147	3971
LP2152	3964
LP2153	4142
LP2154	3997
LP2158	4215
LP2161	4220
LP2167	4014
LP2168	4121
LP2169	3948
LP2170	4008
LP2171	4230
LP2172	4004
LP2178	4135
LP2183	4073
LP2184	3797
LP2187	4291
LP219	3370
LP2190	4056
LP2191	4057
LP2192	4132
LP2192	4172
LP2195	4061
LP2196	4256
LP2199	4162
LP220	3579
LP2201	4255
LP2205	3899
LP2206	4146
LP2208	4054
LP2209	4040
LP221	3339
LP221	3514
LP2219	3928
LP2227	4049
LP2228	4145
LP2229	4124
LP2230	3826
LP2233	4310
LP2240	3800
LP2244	4167
LP2254	3529
LP2255	3529
LP2257	3906
LP2276	3826
LP2293	4166
LP2294	4039
LP2295	4311
LP2303	3980
LP2306	4122
LP241	3484
LP2444	4200
LP2474	4204
LP2478	3826
LP2479	4140
LP248	3503
LP2480	3755
LP2483	3893
LP2485	4201
LP2487	4315
LP249	3429
LP2490	4241
LP2492	3922
LP2492	4171
LP2493	4242
LP2495	4226
LP2496	3998
LP2497	4136
LP2498	3981
LP250	3419
LP254	3624

DELPHI	BESER
NO	NO
LP255	3417
LP255	3417
LP26	3481
LP261	3394
LP2700	4202
LP2701	4317
LP2702	4318
LP275	3468
LP28	3346
LP286	3407
LP29	3317
LP30	3316
LP3146	4295
LP3183	4308
LP3185	4224
LP3243	4312
LP3244	4279
LP3283	4287
LP3306	4280
LP350	3493
LP351	3621
LP353	3424
LP355	3646
LP358	3397
LP373	3415
LP378	3440
LP382	3381
LP39	3373
LP399	3620
LP400	3436
LP401	3875
LP403	3691
LP409	3634
LP41	3423
LP412	3446
LP415	3410
LP420	3486
LP421	3444
LP424	3649
LP427	3315
LP427	3515
LP429	3650
LP431	3635
LP440	3611
LP441	3573
LP442	3572
LP443	3326
LP444	3619
LP445	3752
LP448	3371
LP45	3416
LP451	3536
LP453	3490
LP458	3401
LP459	3466
LP460	3402
LP463	3625
LP467	3400
LP468	3513
LP472	3423
LP475	3771
LP476	3462
LP488	3603
LP489	3428
LP490	3380
LP491	3495
LP493	3474
LP496	3467
LP499	3408
LP504	3482
LP505	3441
LP506	3453
LP509	3424
LP523	3425
LP525	3582
LP530	3463
LP531	3449
LP538	3714
LP542	3546
LP543	3760

DELPHI	BESER
NO	NO
LP547	3395
LP548	3605
LP551	3422
LP555	3578
LP56	3333
LP564	3457
LP565	3529
LP566	3432
LP567	3543
LP568	3526
LP571	3529
LP573	3583
LP576	3583
LP577	3701
LP578	3746
LP581	3410
LP585	3470
LP586	3469
LP587	3549
LP588	3366
LP589	3366
LP590	3717
LP591	3589
LP593	3504
LP594	3543
LP595	3437
LP596	3609
LP597	3430
LP599	3662
LP602	3564
LP604	3461
LP606	3632
LP608	3408
LP61	3350
LP616	3562
LP617	3660
LP619	3683
LP620	3723
LP625	4212
LP626	3600
LP629	3757
LP629	3857
LP630	3666
LP633	3448
LP637	3642
LP643	3641
LP645	3700
LP647	3609
LP655	3873
LP660	3433
LP661	3773
LP662	3679
LP665	3631
LP667	3680
LP670	4104
LP673	3464
LP675	3491
LP677	3459
LP684	3882
LP695	3555
LP696	3487
LP697	3513
LP699	3496
LP7	3319
LP702	3623
LP704	3502
LP705	3584
LP707	3758
LP710	3563
LP720	3501
LP726	3692
LP73	3710
LP733	3695
LP734	3696
LP735	3689
LP736	3603
LP736	3604
LP739	4088
LP74	3709
LP743	3522

DELPHI	BESER
NO	NO
LP755	3486
LP756	3444
LP76	3327
LP760	3441
LP766	3473
LP767	3445
LP770	3531
LP772	4212
LP777	3512
LP778	3551
LP779	4128
LP78	3375
LP781	3593
LP782	3558
LP783	3598
LP784	3590
LP787	3819
LP788	3539
LP789	3554
LP789	3651
LP792	3878
LP793	3528
LP801	3832
LP802	3833
LP803	3622
LP804	3766
LP8040	3749
LP809	3607
LP810	3686
LP812	3779
LP813	3426
LP814	4080
LP821	3596
LP823	3556
LP828	3537
LP834	3776
LP838	3503
LP84	3315
LP84	3515
LP841	3581
LP847	3888
LP848	3733
LP851	3608
LP854	3560
LP857	3433
LP858	3994
LP859	3773
LP86	3343
LP86	3483
LP863	3523
LP87	3335
LP871	3685
LP872	3704
LP873	3736
LP877	3595
LP878	3559
LP881	3658
LP885	3503
LP904	3545
LP912	3740
LP915	3550
LP918	3553
LP92	3393
LP930	4078
LP935	3640
LP936	4086
LP943	4072
LP945	3745
LP947	3630
LP948	4148
LP954	3688
LP955	4108
LP962	3673
LP963	3693
LP964	3674
LP965	3887
LP967	3883
LP978	3506
LP979	3585
LP980	3567

DELPHI	BESER
NO	NO
LP985	3750
LP989	3777
LP99	3329
LP992	3675
LP2162	4325
LP2214	4277
LP2218	4337
LP2251	4339
LP2293	4342
LP2441	4326
LP2445	4313
LP2659	4335
LP2709	4336
LP2712	4324
LP2714	4019
LP2764	4334
LP883	3816

DEX	BESER
NO	NO
2001.0	3316
2001.1	3346
2002.0	3326
2003.0	3318
2005.0	3329
2005.5	3333
2006.0	3373
2008.0	3393
2011.0	3327
2011.1	3343
2011.1	3483
2013.0	3315
2013.0	3515
2013.1	3339
2013.1	3514
2014.0	3374
2015.1	3335
2016.0	3513
2017.1	3806
2017.4	3806
2018.0	3423
2018.2	3423
2019.0	3366
2019.1	3366
2022.0	3311
2023.0	3405
2025.0	3312
2025.1	3484
2026.0	3378
2026.1	3490
2029.0	3365
2030.0	3625
2031.0	3417
2031.1	3417
2031.1	3417
2032.0	3468
2032.1	3466
2032.2	3467
2033.0	3440
2035.0	3424
2035.1	3424
2037.0	3425
2038.0	3493
2038.1	3381
2038.2	3495
2039.0	3380
2039.1	3487
2039.3	3580
2040.0	3496
2040.2	3496
2041.0	3419
2041.1	3429
2043.0	3430
2044.0	3609
2045.0	3621
2046.0	3410
2047.0	3486
2047.0K	3486
2047.1	3444
2047.1K	3444
2047.2	3585
2047.2K	3585
2048.0	3421
2049.0	3441
2049.0K	3441
2050.0	3536
2051.0	3474
2051.2	3556
2052.0	3531
2052.2	3551
2053.2	3523
2056.0	3646
2056.2	3633
2057.0	3689
2058.0	3603
2059.1	3540
2059.2	3459
2059.5	3458
2060.1	3543
2061.0	3432

DEX	BESER
NO	NO
2061.1	3491
2063.0	3408
2064.0	3422
2064.1	3552
2068.0	3397
2068.1	3758
2070.0	3437
2072.0	3583
2072.1	3572
2073.0	3464
2073.1	3722
2075.0	3589
2077.0	3641
2079.0	3623
2080.0	3350
2080.1	3320
2081.1	3897
2082.0	3321
2082.1	3340
2083.0	3504
2083.1	3502
2084.1	3618
2085.0	3617
2086.0	3323
2088.0	3317
2089.0	3509
2091.1	3526
2092.0	3442
2093.0	3573
2094.0	3611
2094.1	3550
2095.0	3570
2095.0	3594
2096.2	3549
2098.0	3428
2100.0	3482
21005.0	4226
21006.0	4174
21007.0	4175
21008.0	4317
21009.0	4318
2101.0	3457
2101.1	3610
21010.0	4315
21014.0	4176
21019.0	4227
2102.0	3529
2102.1	3529
2102.2	3529
2102.4	4152
21030.0	4200
21034.0	4282
21035.0	4283
21036.0	4286
21044.0	4349
21048.0	4291
2105.0	3449
21052.0	4295
21057.0	4224
21058.0	4284
21059.0	4285
2107.0	3799
2109.0	3692
2109.1	3760
2110.0	3402
2111.0	3371
2112.0	3415
2113.1	3537
2116.0	3401
2117.0	3448
2118.0	3882
2119.0	3470
2122.0	3503
2122.0W	3503
2124.0	3564
2124.1	3584
2125.0	3562
2126.0	3563
2127.0	3578
2129.0	3740

DEX	BESER
NO	NO
2130.0	3736
2131.0	3560
2133.0	3642
2136.0	3685
2137.0	3426
2138.0	3883
2140.0	3686
2142.0	4078
2143.0	3469
2144.0	3539
2144.1	3546
2144.2	3539
2145.0	4214
2146.0	3819
2147.0	4128
2148.0	3558
2148.1	3593
2151.0	3650
2151.1	3619
2151.2	3649
2151.3	3635
2152.0	3554
2152.0	3651
2154.0	3688
2156.0	3673
2157.0	3595
2158.0	3559
2159.0	3528
2160.0	3878
2161.0	3658
2162.0	3608
2162.1	3643
2164.1	3776
2166.1	4020
2167.0	3553
2167.1	3553
2168.0	3596
2170.0	4086
2173.0	4212
2173.1	4212
2174.0	3631
2176.0	4148
2177.0	3683
2177.1	3872
2178.0	3607
2180.0	3662
2184.0	4104
2188.0	3590
2188.4	3590
2193.0	3527
2195.0	3632
2197.0	3700
2198.0	3624
2199.0	3680
2201.0	3473
2202.0	3445
2203.0	3522
2205.0	3640
2206.0	3888
2207.0	3660
2210.0	3746
2211.1	3394
2213.0	4080
2215.0	3566
2215.1	3538
2215.2	3637
2216.3	4347
2217.0	3505
2217.0	3615
2219.0	3656
2220.0	3682
2220.1	3782
2220.2	3782
2221.0	3575
2221.3	3575
2222.0	3750
2224.0	3896
2224.1	3896
2224.2	3896
2226.0	3636

DEX	BESER
NO	NO
2226.1	3644
2227.0	4182
2228.0	3677
2230.0	3603
2230.0	3604
2232.0	3832
2233.0	3622
2236.0	3714
2237.0	3709
2241.0	3499
2241.1	3463
2246.1	3582
2247.0	3400
2248.0	3436
2249.0	3600
2250.0	3395
2253.0	3757
2253.0	3857
2254.0	3370
2255.0	3598
2255.1	3766
2256.0	3501
2256.1	3752
2257.0	3602
2258.0	3884
2259.0	3675
2261.0	3863
2262.0	3659
2263.0	3938
2264.0	3663
2265.0	3567
2266.0	3762
2268.0	3763
2271.0	3614
2272.0	3606
2272.1	3794
2274.0	3462
2276.0	3679
2277.0	3994
2278.0	3773
2282.1	3568
2282.2	3569
2283.0	3548
2283.0	3690
2283.2	3790
2283.3	3790
2284.0	3717
2284.1	3717
2286.0	3577
2287.0	3598
2288.0	3506
2288.1	3590
2289.0	4088
2294.0	3873
2295.0	4059
2300.0	3754
2301.0	3768
2302.0	3744
2303.0	3687
2304.0	3764
2305.0	4079
2306.0	3648
2307.0	3704
2311.0	3875
2312.0	3833
2313.0	4010
2315.0	3697
2316.0	3943
2318.0	3919
2319.0	4125
2320.0	3670
2325.0	3877
2326.0	3755
2327.0	4100
2328.0	4093
2329.0	3784
2330.0	3826
2330.1	3826
2330.3	3826
2330.4	3826

DEX NO	BESER NO
2331.0	3800
2331.1	3800
2331.2	3800
2331.3	3800
2333.1	4123
2334.0	3834
2335.0	3835
2336.0	3820
2337.0	3854
2338.0	3931
2340.0	3935
2341.0	3934
2344.0	3950
2345.0	3852
2346.0	3853
2346.1	3853
2347.2	3848
2349.0	3846
2350.0	4281
2351.0	3836
2352.0	3676
2353.0	3821
2355.1	4345
2356.0	4062
2357.0	3918
2358.0	4094
2361.0	3453
2361.1	3412
2362.0	3661
2362.1	3771
2363.0	3512
2365.0	4197
2366.0	3674
2367.0	3887
2369.0	3446
2370.0	3778
2371.0	4087
2373.0	3843
2374.0	3993
2375.0	3507
2376.0	3511
2379.0	3723
2382.0	3653
2383.0	3802
2385.0	4009
2386.0	3574
2388.0	3898
2389.0	3620
2390.0	3901
2393.0	3696
2394.0	3695
2396.0	3780
2412.0	4271
2413.0	4108
2414.0	3892
2415.1	3893
2416.0	3809
2419.0	3779
2421.1	3932
2422.0	3859
2429.0	3913
2430.0	3928
2432.0	3745
2434.0	4027
2436.0	4112
2438.0	3769
2439.0	3788
2441.0	4072
2442.0	4013
2444.0	3822
2445.0	4158
2446.0	4153
2447.0	3693
2449.0	3777
2450.0	4110
2454.0	4034
2456.0	3710
2462.0	3817
2463.0	3825
2466.0	3890

DEX NO	BESER NO
2467.0	4153
2468.0	3829
2469.0	3830
2470.0	3891
2471.0	3634
2472.0	4071
2473.0	3379
2477.0	3324
2478.0	4109
2478.0	4232
2480.0	4115
2481.0	4155
2487.0	3666
2491.0	4118
2492.0	3889
2493.0	3874
2495.0	3767
2496.0	3407
2497.0	3955
2498.0	3900
2500.0	4084
2501.0	3983
2501.1	3983
2501.2	3983
2506.0	3369
2511.0	3667
2514.0	3579
2516.0	3912
2518.0	3985
2519.0	3959
2520.0	3961
2524.0	3951
2527.0	3894
2528.0	4269
2529.0	4028
2531.0	3978
2532.0	3979
2533.0	3793
2535.0	3895
2540.0	4012
2541.0	4011
2546.0	3986
2548.0	3914
2549.0	3801
2550.0	3885
2551.0	3545
2552.0	3921
2554.0	3733
2555.0	4042
2556.0	4211
2558.1	4040
2559.0	3850
2560.0	3849
2561.0	3856
2562.0	3855
2563.0	4138
2563.1	4138
2564.0	3904
2564.2	3904
2565.1	4096
2567.0	4095
2568.0	3841
2568.1	3841
2569.0	3905
2570.0	3842
2573.0	4346
2574.0	4180
2575.0	3881
2576.0	3879
2578.0	4097
2579.0	4102
2580.0	4103
2582.0	3630
2583.0	3581
2585.0	4126
2586.0	4069
2587.0	3678
2588.0	3804
2589.0	3681
2590.0	3861

DEX NO	BESER NO
2591.0	3923
2591.0W	3923
2592.0	3924
2594.0	3942
2594.3	3942
2595.0	3433
2595.1	3433
2613.0	4101
2613.0	4209
2616.0	3939
2617.0	3940
2618.0	3946
2620.0	3823
2622.0	3831
2625.0	4119
2626.0	3988
2627.0	4017
2628.0	3933
2632.0	4082
2634.0	4105
2635.0	4111
2638.0	4216
2642.0	4031
2645.0	3968
2646.0	4001
2649.0	3976
2651.0	3795
2652.0	3605
2653.0	3987
2654.0	4173
2654.1	4173
2654.2	4173
2655.0	3984
2660.0	4181
2661.0	3909
2667.0	4137
2671.0	4076
2675.0	3945
2681.0	4248
2682.0	4247
2683.0	3629
2683.1	3628
2685.0	4240
2686.0	4210
2687.0	3925
2687.1	3965
2687.4	3965
2688.0	3926
2689.0	3962
2690.0	3963
2691.0	4161
2693.0	4058
2694.0	3416
2695.0	3920
2696.0	3906
2696.1	3906
2697.0	3907
2699.0	3781
2703.0	4186
2708.0	3413
2709.0	4293
2710.0	3944
2723.0	3972
2724.0	3981
2724.1	3981
2725.0	3922
2725.1	3922
2725.1	4171
2726.0	3820
2727.0	4092
2728.0	4151

DEX NO	BESER NO
2730.0	3867
2732.0	4006
2733.0	4198
2734.0	4018
2735.0	4016
2740.0	3880
2741.0	3980
2742.0	3510
2746.0	4159
2747.0	3886
2749.0	4303
2752.0	3765
2753.0	4106
2757.0	4074
2759.0	3952
2761.0	3958
2762.0	3954
2763.0	3953
2764.0	4077
2765.0	3949
2767.0	3910
2769.0	3911
2772.0	3915
2773.0	4274
2774.0	4085
2775.0	4099
2775.1	4275
2777.0	4113
2778.0	4036
2779.0	4081
2780.0	4213
2781.0	4000
2782.0	3929
2783.1	3748
2786.0	4207
2788.0	4208
2789.0	4179
2790.0	4222
2791.0	4259
2791.2	4249
2792.0	4260
2794.0	3976
2796.0	4157
2797.0	3827
2799.0	4039
2799.1	4039
2800.0	4165
2801.0	4035
2803.0	3960
2804.0	3989
2805.0	4160
2806.0	4156
2807.0	3975
2808.0	4038
2809.0	4122
2809.1	4122
2809.2	4122
2810.0	3956
2812.0	4037
2813.0	3903
2814.0	3982
2816.0	3964
2818.0	4141
2819.0	4134
2820.0	3970
2823.0	3818
2826.0	3797
2827.0	4015
2828.0	3966
2830.0	3967
2831.0	3969
2832.0	3971
2833.0	3964
2834.0	4142
2835.0	4143
2837.0	3996
2838.0	3997
2840.0	4121
2848.0	4162
2853.6	4314

DEX	BESER
NO	NO
2855.0	4230
2856.0	4008
2857.0	4014
2859.0	4149
2861.0	4150
2862.0	4073
2866.0	3749
2866.1	3749
2867.0	4169
2868.0	3995
2879.0	4005
2880.0	4004
2886.0	4029
2891.0	4054
2892.0	4258
2895.0	4147
2898.0	4146
2899.0	3948
2903.0	4061
2903.1	4311
2906.0	4135
2915.0	4056
2916.0	4057
2917.0	4132
2917.0	4172
2918.0	4060
2919.0	4124
2921.0	4002
2923.0	4220
2924.0	4215
2929.0	3747
2944.0	3927
2952.0	3998
2953.0	4167
2954.0	4255
2955.0	4256
2956.0	3916
2958.0	4049
2959.0	4136
2960.0	4166
2961.0	4233
2965.0	4145
2966.0	4228
2967.0	4241
2973.0	4309
2974.0	4310
2991.0	4140
2992.0	4204
2998.0	4201

DON	BESER
NO	NO
CVP002	3679
CVP003	3433
CVP007	3773
CVP017	3749
CVP019	3773
CVP025	3994
CVP027	3433
CVP070	3567
CVP071	3678
CVP072	3670
CVP073	3614
CVP097	3942
PCP1586	4287
29581	3339
29581	3514

DURON	BESER
NO	NO
DBP200471	3771
DBP200520	3662
DBP200549	3746
DBP200844	3661
DBP200871	3453
DBP200872	3512
DBP201116	3687
DBP201291	3872
DBP201337	3744
DBP201355	3943
DBP201473	4094
DBP201613	3944
DBP201615	4293
DBP201639	3912
DBP201699	3951
DBP201736	3979
DBP201783	3968
DBP201869	4028
DBP201902	3969
DBP201937	3895
DBP210725	3563
DBP210997	3881
DBP211075	3656
DBP211483	3879
DBP211628	4180
DBP211748	4181
DBP211773	4346
DBP214052	4207
DBP220002	3318
DBP220415	3408
DBP220854	3658
DBP221038	3567
DBP221049	3677
DBP221050	3863
DBP221162	4281
DBP221303	4125
DBP221304	3681
DBP221305	3861
DBP221306	3804
DBP221311	3676
DBP221322	3821
DBP221426	4102
DBP221428	3836
DBP221512	4103
DBP221778	3925
DBP221780	3926
DBP221830	4210
DBP221980	4247
DBP230022	3317
DBP230029	3316
DBP230222	3536
DBP230287	3440
DBP230351	3424
DBP230370	3466
DBP230519	3459
DBP230524	3432
DBP230896	3569
DBP230912	3540
DBP230925	3608
DBP230967	3595
DBP230968	3559
DBP231052	3617
DBP231102	3575
DBP231137	3618
DBP231160	3897
DBP231349	4123
DBP231376	3790
DBP231377	3548
DBP231377	3690
DBP231466	3826
DBP231467	3800
DBP231478	3834
DBP231479	3835
DBP231652	4173
DBP231666	3826
DBP231923	3981
DBP231924	3981
DBP231925	3922
DBP231927	3820
DBP231945	4173

DURON	BESER
NO	NO
DBP234184	4121
DBP240589	3589
DBP240617	3464
DBP240700	3473
DBP240701	3445
DBP240766	3593
DBP240884	3558
DBP241055	3506
DBP241081	3570
DBP241081	3594
DBP241276	3722
DBP241318	3754
DBP241319	3755
DBP241381	3784
DBP241394	3877
DBP241416	4093
DBP241425	4100
DBP241461	3921
DBP241496	3590
DBP241568	3801
DBP241594	3885
DBP241885	4058
DBP241897	4161
DBP241917	4157
DBP241928	3906
DBP241929	3920
DBP241930	3907
DBP241931	3853
DBP244179	4122
DBP250584	3470
DBP250686	3733
DBP250732	3623
DBP251015	3674
DBP251067	3505
DBP251067	3615
DBP251117	3717
DBP251293	3762
DBP251294	3763
DBP251424	3846
DBP251520	4211
DBP251640	4042
DBP251919	3800
DBP251934	3976
DBP254208	4149
DBP254262	4230
DBP254263	4014
DBP254264	4008
DBP260435	3502
DBP260613	3683
DBP260621	4212
DBP260777	3686
DBP260905	3704
DBP260956	4148
DBP261506	4155
DBP261704	4159
DBP271326	3778
DBP271595	3802
DBP271605	3843
DBP271606	3993
DBP271733	3959
DBP271950	3985
DBP281017	3887
DBP290655	3523
DBP291315	3575
DBP294037	4092
DBP310759	3603
DBP310759	3604
DBP310765	3685
DBP310804	3688
DBP311095	4062
DBP314023	3975
DBP320715	3522
DBP321619	3889
DBP330604	3562
DBP330707	3660
DBP330859	4128
DBP330909	3888
DBP331091	3577
DBP331580	4115
DBP334051	4038

DURON	BESER
NO	NO
DBP340558	3496
DBP340619	3680
DBP340719	3487
DBP340845	3503
DBP340874	3819
DBP340876	3528
DBP341002	3799
DBP341062	3750
DBP341112	3636
DBP341378	3938
DBP341399	3820
DBP341411	3935
DBP341476	3800
DBP341477	3644
DBP341480	3914
DBP341542	3854
DBP341543	3931
DBP341556	3986
DBP341725	3939
DBP341727	3946
DBP341771	3972
DBP341772	4151
DBP341784	3984
DBP341790	3987
DBP341971	3964
DBP344003	3970
DBP344222	3529
DBP344250	3971
DBP350393	3380
DBP350406	3539
DBP350440	3495
DBP351135	3659
DBP351420	3539
DBP351440	3950
DBP351441	3852
DBP351452	3856
DBP351453	3855
DBP351515	3848
DBP351516	3795
DBP351540	3853
DBP351544	3849
DBP351617	3983
DBP354180	3964
DBP354185	3966
DBP360712	3882
DBP361020	3883
DBP361532	3928
DBP361565	3884
DBP364060	3929
DBP364069	3983
DBP370308	3402
DBP370797	3560
DBP370867	3554
DBP370867	3651
DBP371021	3693
DBP371368	3768
DBP371392	3769
DBP371395	3788
DBP371513	4112
DBP371531	4153
DBP371573	3817
DBP371574	3825
DBP371648	3890
DBP371649	4153
DBP371892	3949
DBP374048	4037
DBP381382	3919
DBP381383	3918
DBP381384	4059
DBP390419	3444
DBP390541	3529
DBP390610	3419
DBP390774	3531
DBP390775	3551
DBP391072	3585
DBP391094	3682
DBP391101	3566
DBP391288	3637
DBP391398	3782
DBP391463	3590

DURON	BESER
NO	NO
DBP391518	3794
DBP391629	4096
DBP391636	3905
DBP391641	3904
DBP391642	3841
DBP391645	4152

ETF	BESER
NO	NO
1214403	3537
1216959	3433
1218786	3433
1219881	3773
1224995	3749
1226821	3773
1231569	3773
1231935	3994
1243256	3749
1251292	4169
12-0001	3346
12-0003	3317
12-0004	3316
12-0009	3318
12-0011	3320
12-0014	3321
12-0019	3311
12-0035	3373
12-0047	3326
12-0054	3327
12-0058	3840
12-0065	3393
12-0066	3323
12-0079	3710
12-0082	3350
12-0085	3335
12-0091	3343
12-0091	3483
12-0096	3318
12-0097	3315
12-0097	3515
12-0098	3806
12-0102	3416
12-0103	3661
12-0108	3315
12-0108	3515
12-0109	3423
12-0118	3405
12-0124	3374
12-0132	3527
12-0134	3366
12-0135	3806
12-0138	3421
12-0139	3312
12-0143	3378
12-0144	3365
12-0150	3324
12-0156	3625
12-0163-1	3417
12-0167-1	3579
12-0172	3339
12-0172	3514
12-0176	3509
12-0178	3468
12-0180	3369
12-0187	3536
12-0192	3407
12-0196	3440
12-0198	3709
12-0201	3503
12-0203	3424
12-0205	3484
12-0208	3419
12-0209	3429
12-0210	3467
12-0212	3425
12-0216	3493
12-0217	3496
12-0220	3329
12-0227	3611
12-0229	3381

ETF	BESER
NO	NO
12-0230	3442
12-0231	3573
12-0234	3415
12-0236	3572
12-0237	3370
12-0238	3513
12-0239	3379
12-0242	3371
12-0245	3646
12-0246	3394
12-0252	3413
12-0255	3402
12-0258	3624
12-0260	3486
12-0261	3444
12-0262	3441
12-0263	3621
12-0266	3417
12-0266	3417
12-0268	3466
12-0269	3380
12-0270	3400
12-0271	3410
12-0276-1	3474
12-0277	3546
12-0280	3620
12-0281	3490
12-0286	3408
12-0287	3649
12-0288	3633
12-0289	3752
12-0293	3502
12-0297	3436
12-0299	3401
12-0301	3758
12-0302	3397
12-0307	3634
12-0312	3482
12-0314	3550
12-0315-1	3423
12-0316	3603
12-0320	3428
12-0321	3462
12-0322	3714
12-0327	3449
12-0333	3422
12-0334	3495
12-0335	3605
12-0337	3543
12-0340	3526
12-0343-1	3459
12-0349	3582
12-0351	4212
12-0353	3746
12-0357	4087
12-0358	3395
12-0360	3503
12-0361	3771
12-0366	3529
12-0367	3757
12-0367	3857
12-0368	3717
12-0370	3760
12-0375	3432
12-0379	3457
12-0381	3564
12-0386	3641
12-0387	3448
12-0389	3499
12-0390	3463
12-0396	4212
12-0400	3446
12-0409	3679
12-0414	3529
12-0415	3578
12-0417	3470
12-0418	3469
12-0419	3882
12-0421	3666
12-0423	3437

ETF	BESER
NO	NO
12-0425	3430
12-0427	3589
12-0428	4108
12-0429	3723
12-0431	3680
12-0432	3563
12-0435	4088
12-0437	3600
12-0438	3777
12-0443	3779
12-0448	3875
12-0451	3609
12-0455	3873
12-0456	3583
12-0461	3436
12-0462	3464
12-0463	3560
12-0468	4104
12-0470	3562
12-0471	3660
12-0473	4010
12-0475	3491
12-0477	3373
12-0480	3631
12-0482	3696
12-0483	4148
12-0485	3408
12-0487	3410
12-0489	3522
12-0491	3640
12-0494	3632
12-0497	3619
12-0499	3549
12-0501	3501
12-0502	3683
12-0506	3629
12-0509	3622
12-0511	3766
12-0514	3733
12-0516	3590
12-0517	3523
12-0518	3662
12-0519	3695
12-0520	3623
12-0524	3366
12-0525	3473
12-0526	3554
12-0526	3651
12-0527	3539
12-0530	4212
12-0531	3531
12-0532	3551
12-0535	3426
12-0536	4080
12-0538	4072
12-0539	4088
12-0542	3642
12-0543	3704
12-0544	4148
12-0546	3607
12-0547	3686
12-0549	3445
12-0550	3487
12-0553	3596
12-0558	3603
12-0558	3604
12-0561	3593
12-0563	4128
12-0564	3819
12-0565	3878
12-0566	3689
12-0568	3994
12-0569	3779
12-0573	3685
12-0574	3688
12-0577	3892
12-0578	3874
12-0580	3674
12-0581	3887
12-0584	3623

ETF	BESER
NO	NO
12-0585	3736
12-0586	3658
12-0589	3540
12-0590	3503
12-0592	3558
12-0593	4214
12-0595	3528
12-0596	3745
12-0597	3693
12-0600	3643
12-0601	3898
12-0603	3556
12-0604	3556
12-0612	3536
12-0614	3595
12-0615	3559
12-0620	3883
12-0622	3832
12-0623	3673
12-0624	3888
12-0625	3553
12-0626	3608
12-0630	3545
12-0631	3630
12-0632	3833
12-0635	4086
12-0641	3649
12-0642	3650
12-0643	3619
12-0644	3635
12-0645	3585
12-0646	3610
12-0647	3740
12-0652	3879
12-0653	3581
12-0660	3909
12-0663	4078
12-0665	3584
12-0668	3511
12-0672	3538
12-0673	3617
12-0674	3896
12-0675	3570
12-0675	3594
12-0677	3618
12-0678	3799
12-0681	3614
12-0682	3566
12-0684	3602
12-0686	3750
12-0687	3567
12-0688	3678
12-0689	3670
12-0691	3577
12-0694	3677
12-0695	3863
12-0700	3675
12-0703	4059
12-0704	3505
12-0704	3615
12-0705	3680
12-0706	3575
12-0708	3507
12-0709	3628
12-0711	3636
12-0712	3682
12-0713	3884
12-0715	4182
12-0716	3512
12-0717	3453
12-0718	3687
12-0721	3598
12-0723	3606
12-0730	3896
12-0733	3590
12-0734	3779
12-0735	3552
12-0739	3867
12-0742	4062
12-0743	3697

ETF	BESER
NO	NO
12-0749	3659
12-0750	4148
12-0753	4275
12-0761	3822
12-0762	3667
12-0763	4125
12-0768	3523
12-0770	3897
12-0771	3663
12-0774	3881
12-0775	3809
12-0802	4020
12-0803	3687
12-0804	3744
12-0806	3529
12-0807	3529
12-0808	3637
12-0810	3762
12-0812	3763
12-0819	4079
12-0820	3764
12-0821	3681
12-0824	3754
12-0825	3778
12-0826	3598
12-0827	3722
12-0828	3648
12-0829	3781
12-0831	4099
12-0832	3915
12-0833	3687
12-0835	3782
12-0839	3768
12-0841	4197
12-0842	3919
12-0843	3918
12-0844	3755
12-0845	3804
12-0847	3938
12-0848	3782
12-0849	3539
12-0858	4274
12-0861	3676
12-0865	4011
12-0868	3794
12-0872	3877
12-0874	3539
12-0878	3943
12-0880	3861
12-0881	4281
12-0887	3784
12-0890	4123
12-0892	4069
12-0894	4027
12-0895	3780
12-0896	3836
12-0897	4126
12-0898	3829
12-0899	3830
12-0901	3653
12-0902	3928
12-0905	3767
12-0906	3529
12-0909	3843
12-0911	4009
12-0915	3846
12-0921	3644
12-0925	3575
12-0926	4100
12-0927	4093
12-0928	3820
12-0931	3769
12-0935	3896
12-0936	3821
12-0937	3934
12-0939	3935
12-0942	3826
12-0943	3800
12-0945	4115
12-0950	3790

ETF	BESER
NO	NO
12-0951	3790
12-0952	3942
12-0953	3685
12-0959	3569
12-0960	3918
12-0962	4085
12-0964	3632
12-0966	3993
12-0967	4087
12-0968	3932
12-0970	3852
12-0972	3800
12-0973	4138
12-0975	3856
12-0976	4155
12-0978	3590
12-0980	3853
12-0981	3950
12-0984	3590
12-0989	4082
12-0993	4158
12-0994	3553
12-0996	3914
12-0997	3834
12-0998	3835
12-0999	4101
12-0999	4209
12-1000	3846
12-1001	3892
12-1004	3529
12-1005	4152
12-1007	3859
12-1008	3854
12-1009	3931
12-1010	3921
12-1012	3848
12-1013	4138
12-1014	4211
12-1018	3901
12-1025	3823
12-1026	3983
12-1028	3986
12-1030	3817
12-1036	3780
12-1039	3802
12-1040	3826
12-1043	3993
12-1044	3574
12-1047	4034
12-1050	4153
12-1055	4269
12-1056	3913
12-1057	4084
12-1058	4119
12-1059	4109
12-1059	4232
12-1060	3911
12-1061	3788
12-1067	3933
12-1068	3932
12-1070	3825
12-1072	3849
12-1073	4180
12-1074	3855
12-1076	4095
12-1077	4110
12-1078	3801
12-1079	3961
12-1080	3955
12-1082	4112
12-1083	4109
12-1083	4232
12-1089	3889
12-1091	3853
12-1092	4118
12-1093	4042
12-1094	3890
12-1095	4208
12-1097	4076
12-1100	3923

ETF	BESER
NO	NO
12-1101	3924
12-1102	3879
12-1103	3904
12-1105	3979
12-1106	4106
12-1110	3918
12-1111	3951
12-1112	4153
12-1113	3850
12-1115	4179
12-1116	3978
12-1117	3831
12-1122	4222
12-1124	3504
12-1125	3598
12-1126	3910
12-1127	4013
12-1129	4179
12-1130	3905
12-1132	3900
12-1133	3885
12-1134	3841
12-1135	4347
12-1138	3985
12-1139	3891
12-1140	3842
12-1141	4036
12-1144	4071
12-1145	3800
12-1146	3959
12-1147	4028
12-1148	3894
12-1149	4222
12-1150	4096
12-1158	3912
12-1168	4105
12-1169	4111
12-1171	4303
12-1177	4103
12-1178	4173
12-1181	3940
12-1182	3939
12-1183	3946
12-1184	4303
12-1185	4159
12-1186	3827
12-1192	3765
12-1198	3984
12-1199	3886
12-1200	4001
12-1201	3769
12-1202	3632
12-1203	3895
12-1204	3968
12-1205	4000
12-1206	4293
12-1207	3944
12-1208	3797
12-1211	4081
12-1212	3969
12-1214	4096
12-1217	3853
12-1218	4213
12-1221	4012
12-1225	3987
12-1230	4017
12-1232	3988
12-1234	3687
12-1237	4002
12-1238	4016
12-1240	3880
12-1241	3980
12-1243	3826
12-1244	3929
12-1248	3983
12-1249	3958
12-1250	4077
12-1251	3953
12-1252	3949
12-1253	3948

ETF	BESER
NO	NO
12-1256	3952
12-1266	4058
12-1269	4031
12-1272	3982
12-1273	3920
12-1274	3906
12-1275	3907
12-1277	4198
12-1278	4018
12-1279	4210
12-1281	3976
12-1283	3972
12-1284	4151
12-1285	3981
12-1286	3820
12-1289	3945
12-1290	3962
12-1291	3963
12-1292	3925
12-1293	3926
12-1295	3800
12-1296	3975
12-1297	4161
12-1300	4157
12-1303	3976
12-1313	3960
12-1314	3989
12-1315	4092
12-1316	4122
12-1317	4249
12-1318	4216
12-1321	4038
12-1322	3954
12-1323	3922
12-1324	3965
12-1325	4173
12-1327	4248
12-1328	4247
12-1329	3964
12-1334	3965
12-1335	4015
12-1336	4035
12-1340	3956
12-1341	4037
12-1343	4029
12-1347	4259
12-1349	4260
12-1350	4143
12-1351	3933
12-1352	4160
12-1353	4156
12-1355	4137
12-1358	4039
12-1359	4165
12-1362	4240
12-1364	3970
12-1365	3995
12-1367	3966
12-1368	3967
12-1371	4207
12-1375	3903
12-1377	4149
12-1379	4150
12-1381	3996
12-1382	3997
12-1384	4142
12-1386	3971
12-1389	4006
12-1391	4141
12-1392	3964
12-1395	3933
12-1398	4004
12-1399	4073
12-1404	4230
12-1405	4008
12-1406	4014
12-1408	4258
12-1413	4121
12-1414	4291
12-1417	3944

ETF	BESER
NO	NO
12-1420	4113
12-1422	4147
12-1423	4146
12-1425	3826
12-1426	3800
12-1429	4135
12-1430	4134
12-1435	4060
12-1439	4056
12-1440	4132
12-1440	4172
12-1441	4057
12-1442	4124
12-1444	3945
12-1456	4061
12-1457	4309
12-1459	4310
12-1466	4122
12-1470	4136
12-1471	4061
12-1478	4162
12-1481	4255
12-1482	4256
12-1488	4346
12-1491	4145
12-1495	3983
12-1504	3820
12-1508	3841
12-1512	4140
12-1518	4241
12-1616	4349
12-1627	4312
12-1644	4301
12-1667	4185

FEBI	BESER
NO	NO
16000	3564
16002	3563
16005	3444
16006	3538
16008	3551
16011	3441
16012	3585
16016	3423
16017	3416
16018	3423
16021	3549
16023	3417
16024	3417
16024	3417
16026	3573
16027	3677
16028	3863
16030	3470
16031	3733
16033	3513
16035	3593
16038	3464
16039	3722
16040	3570
16040	3594
16044	3566
16045	3339
16045	3514
16046	3896
16048	3531
16049	3543
16051	3440
16052	3529
16055	3623
16057	3315
16057	3515
16058	3590
16059	3408
16061	3430
16066	3619
16067	3658
16068	3327
16069	3559
16070	3490
16072	3637
16076	3486
16077	3424
16078	3650
16079	3466
16084	3608
16092	3643
16093	3897
16094	3681
16095	3628
16098	3484
16109	3909
16114	3683
16119	3704
16128	3448
16133	3717
16134	3320
16135	3469
16137	3680
16141	3572
16142	3536
16144	3536
16146	3529
16147	3676
16148	3529
16149	3821
16152	3663
16154	3550
16155	3717
16156	3611
16158	3581
16160	3670
16162	3678
16163	3545
16164	3614

FEBI	BESER
NO	NO
16167	3755
16168	3425
16173	3680
16175	3879
16189	3496
16190	3656
16191	3503
16192	3380
16193	3408
16194	3833
16195	3603
16195	3604
16197	3609
16198	3832
16200	4020
16201	3562
16202	3558
16203	3410
16204	3598
16207	4062
16211	3641
16214	4059
16221	3750
16222	3496
16225	3799
16226	3938
16233	3762
16234	3736
16235	3763
16236	3495
16237	3636
16240	3595
16241	3503
16244	3617
16247	3629
16249	3626
16251	3567
16255	3861
16258	3610
16259	3528
16262	4128
16263	3415
16264	3888
16265	3692
16267	3577
16268	4104
16274	3660
16279	3754
16280	3506
16282	3437
16284	3529
16286	3760
16293	3617
16296	3696
16297	4148
16298	3605
16299	3752
16300	3350
16303	3686
16304	3553
16305	3607
16306	3606
16307	3683
16308	3619
16309	4212
16318	3649
16320	3378
16323	3757
16323	3857
16325	3603
16325	3604
16326	3782
16327	3622
16328	3782
16329	3448
16330	3782
16332	3782
16334	3590
16335	3423
16336	3896

FEBI	BESER
NO	NO
16337	3523
16339	3470
16340	3896
16341	3744
16342	3529
16344	3529
16345	3881
16346	3529
16348	3575
16354	3943
16355	3872
16359	3919
16360	3918
16371	3549
16373	4125
16374	4125
16378	3836
16379	3428
16381	3539
16386	3419
16389	4115
16390	3548
16390	3690
16393	4214
16397	3540
16398	3590
16399	3821
16401	3877
16402	4100
16403	3596
16404	3529
16406	3529
16410	4126
16412	4345
16413	3819
16415	3878
16417	3935
16419	3934
16421	3644
16422	3800
16423	3846
16424	3921
16425	3784
16426	4093
16427	3852
16428	3853
16429	3539
16432	3820
16433	4180
16437	4103
16438	4101
16438	4209
16442	4347
16443	3482
16444	3526
16445	3763
16446	3782
16449	3553
16450	3804
16453	4062
16457	3529
16461	4076
16462	3841
16464	3794
16465	3841
16466	4181
16467	4179
16471	3978
16472	3795
16473	3848
16474	3676
16476	3905
16477	3849
16479	3885
16480	3782
16481	4102
16484	4138
16485	4281
16486	3782
16487	3923

FEBI	BESER
NO	NO
16488	3529
16489	3959
16491	4042
16492	4211
16493	3855
16495	3856
16498	3780
16499	3640
16502	3904
16503	4346
16510	3687
16511	4040
16512	4040
16519	4208
16520	3767
16523	3983
16524	3979
16527	3529
16537	3560
16539	3817
16540	3905
16541	3778
16542	3502
16547	3939
16548	3946
16549	3879
16551	3704
16552	3831
16553	4109
16553	4232
16554	3800
16555	3826
16557	4009
16566	3679
16570	3801
16571	4058
16576	4112
16577	3825
16579	3371
16581	3402
16582	3892
16584	4096
16586	4096
16589	3987
16590	3854
16591	3931
16595	3773
16598	3994
16599	3749
16600	3749
16603	4042
16604	3433
16613	4161
16616	3554
16616	3651
16617	3782
16618	3782
16619	4076
16620	3782
16621	4210
16623	3850
16624	3975
16629	4095
16630	3800
16632	3976
16637	3906
16639	4152
16641	3887
16642	4157
16643	3912
16644	3955
16645	3809
16646	3685
16647	3884
16648	3929

FEBI	BESER
NO	NO
16649	3983
16650	3953
16651	3949
16652	4153
16653	3890
16656	3882
16657	3883
16659	3913
16660	4079
16662	3928
16663	3835
16667	3960
16668	3989
16673	3920
16674	3993
16675	3993
16676	4087
16678	3993
16679	3961
16680	3648
16682	3843
16683	3502
16699	3880
16701	3907
16702	3823
16704	3575
16705	3575
16706	3942
16708	3926
16709	3963
16710	3925
16712	4096
16713	3964
16715	3984
16716	3981
16718	3853
16720	3426
16721	3951
16723	4153
16725	3769
16726	3891
16729	4207
16731	3830
16732	3693
16734	3945
16735	3926
16736	4247
16737	3630
16738	4038
16739	3988
16741	3955
16744	3853
16745	4240
16748	3846
16749	4248
16750	4141
16753	3962
16755	4260
16763	4222
16764	3873
16765	3820
16769	4069
16771	4122
16774	4106
16775	4148
16776	3685
16777	4249
16783	3964
16784	4142
16788	4008
16789	4230
16790	4155
16797	4135
16799	3993
16800	3683
16805	4156
16806	4160

FEBI	BESER
NO	NO
16813	3984
16814	3820
16816	4039
16817	4165
16818	3457
16819	4132
16819	4172
16820	4122
16824	4162
16827	3986
16829	3940
16830	3972
16831	3971
16834	3529
16840	3922
16841	4173
16843	4057
16844	3970
16845	4056
16849	3617
16853	4123
16855	3569
16857	3827
16859	3826
16860	3842
16864	3853
16866	4145
16871	3885
16873	4148
16876	3826
16879	3826
16891	4151
16892	4149
16893	4014
16894	4014
16998	4138
16999	4222
40586	4092
116000	3618
116003	3617
116008	3617
116026	3529
116028	3879
116034	3556
116040	3873
116042	4309
116043	3380
116045	3529
116047	3914
116049	3834
116052	3568
116054	3800
116055	3826
116056	3790
116057	3800
116058	4151
116059	4121
116067	4119
116068	4122
116069	3473
116070	3445
116071	4220
116080	4093
116083	3584
116086	3584
116096	3466
116104	4121
116108	4198
116109	4018
116112	4198
116113	4094
116114	3944
116117	3512
116118	3944
116119	4293
116120	3453
116123	4161
116124	4314
116126	4291
116147	4150

FEBI	BESER
NO	NO
116161	3496
116179	3333
116180	3983
116181	3374
116183	3527
116184	3966
116185	3496
116186	4134
116188	4143
116189	3596
116197	4182
116198	3933
116199	3983
116206	4211
116209	3419
116210	3904
116216	3529
116217	3458
116219	3945

FERODO	BESER
NO	NO
FCV1043	3614
FCV1102	3575
FCV1126	3994
FCV1315	3575
FCV1390	3942
FCV1405	3823
FCV1522	3679
FCV1940	3707
FCV239	3513
FCV376	3433
FCV4254	4169
FCV501	3679
FCV503	3433
FCV733	3773
FCV791	3537
FCV958	3521
FDB1002	3799
FDB1004	3574
FDB1009	3898
FDB1014	3507
FDB1015	3674
FDB1017	3887
FDB1020	3883
FDB1021	3693
FDB1037	3628
FDB1038	3567
FDB1039	3678
FDB1043	3614
FDB1044	3680
FDB1045	3670
FDB1049	3677
FDB105	3327
FDB1050	3863
FDB1052	3617
FDB1052B	3617

FERODO	BESER
NO	NO
FDB1054	3538
FDB1055	3506
FDB1062	3750
FDB1066	3643
FDB1067	3505
FDB1067	3615
FDB1068	3665
FDB1072	3585
FDB1072	3585
FDB1075	3656
FDB1081	3570
FDB1081	3594
FDB1083	3529
FDB1085	3539
FDB1091	3577
FDB1092	3675
FDB1094	3782
FDB1095	4062
FDB1098	4197
FDB11	3320
FDB1100	3602
FDB1101	3566
FDB1103	3598
FDB1108	3511
FDB1112	3636
FDB1116	3687
FDB1117	3717
FDB1117B	3717
FDB1129	3781
FDB113	3329
FDB1131	4020
FDB1135	3659
FDB1137	3618
FDB1139	3873
FDB116	3335
FDB1160	3897
FDB1162	4281
FDB1163	3606
FDB1166	4010
FDB1263	3932
FDB1267	4182
FDB1276	3722
FDB128	3343
FDB128	3483
FDB1288	3637
FDB1289	3896
FDB1291	3872
FDB1293	3762
FDB1294	3763
FDB1303	4125
FDB1304	3681
FDB1305	3861
FDB1306	3804
FDB1310	3663
FDB1311	3676
FDB1312	3896
FDB1318	3754
FDB1318B	3754
FDB1319	3755
FDB1319B	3755
FDB1322	3821
FDB1325	3552
FDB1326	3778
FDB1327	4079
FDB1333	3913
FDB1337	3744
FDB1349	4123
FDB1355	3943
FDB1357	4125
FDB1368	3768
FDB1369	3687
FDB1376	3790
FDB1377	3548
FDB1377	3690
FDB1378	3938
FDB1380	4093
FDB1381	3784
FDB1382	3919
FDB1383	3918
FDB1384	4059

FERODO	BESER
NO	NO
FDB1565	3884
FDB1568	3801
FDB1570	4084
FDB1571	4119
FDB1573	3817
FDB1574	3825
FDB1576	4012
FDB1577	3859
FDB1580	4115
FDB1594	3885
FDB1595	3802
FDB1596	4271
FDB160	3806
FDB1602	4269
FDB1603	3892
FDB1605	3843
FDB1606	3993
FDB161	3331
FDB1610	4085
FDB1612	3764
FDB1613	3944
FDB1615	4293
FDB1617	3983
FDB1619	3889
FDB162	3326
FDB1620	3910
FDB1621	3955
FDB1625	4075
FDB1627	4076
FDB1628	4180
FDB1629	4096
FDB1630	3643
FDB1635	3782
FDB1636	3905
FDB1639	3912
FDB1640	4042
FDB1641	3904
FDB1642	3841
FDB1643	3841
FDB1644	3842
FDB1645	4152
FDB1648	3890
FDB1649	4153
FDB1652	4173
FDB1658	3831
FDB1659	4031
FDB1662	4138
FDB1666	3826
FDB1667	4137
FDB1669	4109
FDB1669	4232
FDB167	3312
FDB1672	4179
FDB1675	3853
FDB1679	4148
FDB1684	4275
FDB1688	4276
FDB1689	4083
FDB169	3375
FDB1693	3933
FDB1698	3891
FDB1699	3951
FDB170	3376
FDB1702	3900
FDB1703	4099
FDB1704	4159
FDB1707	4118
FDB1708	3933
FDB1710	4222
FDB1715	4105
FDB1725	3939
FDB1726	3940
FDB1727	3946
FDB173	3410
FDB1731	4111
FDB1733	3959
FDB1735	3978
FDB1736	3979
FDB1737	3632
FDB173C	3410

FERODO	BESER
NO	NO
FDB173G	3410
FDB1745	4017
FDB1748	4181
FDB175	3378
FDB1757	3874
FDB1759	4303
FDB175C	3378
FDB176	3374
FDB1766	3853
FDB1770	3529
FDB1771	3972
FDB1772	4151
FDB1773	4346
FDB1781	3503
FDB1783	3968
FDB1784	3984
FDB1785	3849
FDB1786	4074
FDB1788	3529
FDB179	3527
FDB1790	3987
FDB1793	4186
FDB1816	3886
FDB1817	3988
FDB1827	4096
FDB1829	3958
FDB1830	4210
FDB1836	3982
FDB1839	4106
FDB1840	3961
FDB186	3379
FDB1863	4036
FDB1869	4028
FDB1877	3945
FDB1881	4143
FDB1883	4208
FDB1885	4058
FDB1886	3765
FDB1887	3903
FDB1889	3894
FDB1891	3953
FDB1892	3949
FDB1897	4161
FDB1902	3969
FDB1909	3911
FDB1910	3989
FDB1911	4082
FDB1917	4157
FDB1919	3800
FDB192	3365
FDB1923	3981
FDB1924	3981
FDB1926	3922
FDB1927	3820
FDB1931	3853
FDB1932	4157
FDB1933	4157
FDB1934	3976
FDB1937	3895
FDB1945	4173
FDB1946	3826
FDB1947	4213
FDB195	3421
FDB1950	3985
FDB1953	4018
FDB1954	4006
FDB1955	3880
FDB1956	3980
FDB1971	3964
FDB1978	4248
FDB1979	4249
FDB198	3705
FDB1980	4247
FDB1981	3598
FDB1984	4081
FDB1985	3769
FDB1990	3802
FDB1991	3948
FDB1993	3685
FDB1997	3952

FERODO	BESER
NO	NO
FDB1999	3976
FDB2	3318
FDB206	3417
FDB208	3509
FDB21	3346
FDB210	3706
FDB211	3650
FDB212	3417
FDB212	3417
FDB215	3369
FDB219	3579
FDB22	3317
FDB222	3536
FDB225	3370
FDB230	3407
FDB243	3339
FDB243	3514
FDB254	3381
FDB256	3573
FDB274	3624
FDB275	3419
FDB285	3646
FDB286	3484
FDB287	3440
FDB287B	3440
FDB288	3371
FDB289	3429
FDB29	3316
FDB296	3572
FDB2H	3318
FDB2M	3318
FDB300	3501
FDB302	3366
FDB306	3634
FDB308	3402
FDB318	3414
FDB318	3714
FDB328	3611
FDB340	3397
FDB343	3619
FDB346	3424
FDB350	3467
FDB351	3424
FDB351B	3424
FDB357	3400
FDB361	3333
FDB365	3621
FDB368	3401
FDB370	3466
FDB370B	3466
FDB372	3875
FDB375	3410
FDB385	3441
FDB392	3486
FDB393	3380
FDB393C	3380
FDB393D	3380
FDB393F	3380
FDB4001	4113
FDB4002	4016
FDB4003	3970
FDB4004	3529
FDB4013	3748
FDB4014	4001
FDB402	3442
FDB4023	3975
FDB4035	4141
FDB4037	4092
FDB4039	3995
FDB4042	3954
FDB4046	3956
FDB4048	4037
FDB405	3758
FDB4050	4260
FDB4051	4038
FDB4052	4207
FDB4055	4240
FDB406	3539
FDB4060	3929
FDB4062	4029

FERODO	BESER
NO	NO
FDB4064	4309
FDB4066	3820
FDB4068	4134
FDB4069	3983
FDB407	3620
FDB4074	4005
FDB4076	3502
FDB4077	4000
FDB4078	4198
FDB4105	3944
FDB4110	4122
FDB4111	3960
FDB4113	4035
FDB412	3490
FDB413	3531
FDB4136	4077
FDB414	3482
FDB4140	3823
FDB415	3408
FDB4177	4143
FDB4178	3529
FDB4179	4122
FDB418	3462
FDB4180	3964
FDB4182	4142
FDB4183	3529
FDB4184	4121
FDB4185	3966
FDB4186	3967
FDB4187	4258
FDB419	3444
FDB4190	4260
FDB4193	4165
FDB4194	4039
FDB4199	4248
FDB42	3321
FDB420	3625
FDB4208	4149
FDB4209	4150
FDB4210	4277
FDB4222	3529
FDB4228	4160
FDB4229	3996
FDB4230	3997
FDB4233	4156
FDB4235	3980
FDB4239	4004
FDB4245	4326
FDB4247	3993
FDB4250	3971
FDB4252	4150
FDB4256	3966
FDB4260	3529
FDB4262	4230
FDB4263	4014
FDB4264	4008
FDB4265	4014
FDB4279	4122
FDB428	3493
FDB428B	3493
FDB4290	3748
FDB4299	4124
FDB4302	4162
FDB4304	4073
FDB4309	3747
FDB4316	4135
FDB4324	3933
FDB4326	4147
FDB4336	4145
FDB434	3474
FDB4347	4056
FDB435	3502
FDB4354	4255
FDB4376	4325
FDB4379	4291
FDB4387	4061
FDB4388	3955
FDB4395	4256
FDB440	3495
FDB4408	3980

FERODO	BESER
NO	NO
FDB440D	3495
FDB4411	4146
FDB4416	4226
FDB4424	4310
FDB4426	4122
FDB4432	3944
FDB4434	4241
FDB4435	4286
FDB4435	4287
FDB4443	4019
FDB4446	4317
FDB4447	4049
FDB4448	4028
FDB4454	4295
FDB4455	4314
FDB4457	4202
FDB4485	4336
FDB4486	3826
FDB4487	4349
FDB4491	4201
FDB450	3603
FDB454	3582
FDB456	3425
FDB4567	3574
FDB458	3320
FDB4590	4200
FDB46	3377
FDB4612	4204
FDB4613	4166
FDB4613	4342
FDB4615	4140
FDB4623	4136
FDB4648	4176
FDB4669	4337
FDB4700	4318
FDB471	3771
FDB4715	4167
FDB472	4212
FDB477	3701
FDB478	3776
FDB4799	4234
FDB484	4087
FDB487	3449
FDB489	3395
FDB505	3446
FDB506	3583
FDB509	3461
FDB510	3543
FDB517	3605
FDB519	3459
FDB520	3662
FDB524	3432
FDB524B	3432
FDB525	3717
FDB527	3422
FDB527H	3422
FDB532	3436
FDB534	3428
FDB537	3381
FDB540	3457
FDB541	3529
FDB547	3499
FDB549	3746
FDB554	3777
FDB556	3448
FDB558	3496
FDB558D	3496
FDB562	3583
FDB576	3437
FDB577	3584
FDB578	3578
FDB579	3549
FDB584	3470
FDB585	3752
FDB586	3469
FDB589	3589
FDB590	3590
FDB596	3536
FDB597	3723
FDB600	3632

FERODO	BESER
NO	NO
FDB604	3562
FDB610	3419
FDB610	3731
FDB610B	3419
FDB613	3683
FDB615	3873
FDB617	3464
FDB617C	3464
FDB619	3680
FDB621	4212
FDB626	3366
FDB628	3641
FDB635	3491
FDB638	4087
FDB641	3692
FDB643	3415
FDB646	3629
FDB648	3745
FDB655	3523
FDB656	3423
FDB660	3609
FDB667	4104
FDB669	3430
FDB676	3642
FDB678	3757
FDB678	3857
FDB686	3733
FDB687	3556
FDB690	3413
FDB691	3779
FDB693	3630
FDB700	3473
FDB701	3445
FDB707	3660
FDB708	3691
FDB71	3323
FDB712	3882
FDB714	3640
FDB715	3522
FDB718	3600
FDB719	3487
FDB72	3329
FDB720	3555
FDB725	3563
FDB732	3623
FDB748	3631
FDB757	3463
FDB759	3603
FDB759	3604
FDB761	3696
FDB763	3598
FDB764	3622
FDB765	3685
FDB766	3593
FDB77	3324
FDB772	3545
FDB774	3531
FDB774D	3531
FDB775	3551
FDB775D	3551
FDB776	3607
FDB777	3686
FDB779	3564
FDB789	3426
FDB790	4080
FDB797	3560
FDB798	3626
FDB799	3581
FDB800	3627
FDB803	4108
FDB804	3688
FDB805	3526
FDB809	3311
FDB809H	3311
FDB809M	3311
FDB813	3373
FDB829	3423
FDB833	3416
FDB84	3350
FDB844	3661

FERODO	BESER
NO	NO
FDB845	3503
FDB845B	3503
FDB845F	3503
FDB85	3709
FDB854	3658
FDB859	4128
FDB867	3554
FDB867	3651
FDB868	4086
FDB869	3833
FDB87	3710
FDB871	3453
FDB871	3816
FDB872	3512
FDB874	3819
FDB875	3878
FDB876	3528
FDB878	3596
FDB884	3558
FDB886	3423
FDB896	3569
FDB9	3455
FDB901	3736
FDB905	3704
FDB909	3888
FDB912	3540
FDB925	3608
FDB925B	3608
FDB929	4182
FDB931	4072
FDB941	3689
FDB948	4078
FDB950	3832
FDB954	3619
FDB956	4148
FDB96	3393
FDB967	3595
FDB968	3559
FDB970	3553
FDB973	3717
FDB976	3867
FDB979	3550
FDB982	3740
FDB989	3423
FDB991	3872
FDB993	3449
FDB997	3881
FDB998	3909
FDB999	3610
FDS1049	3677
FDS1050	3863
FDS1052	3617
FDS1067	3505
FDS1067	3615
FDS1072	3585
FDS1081	3570
FDS1081	3594
FDS1083	3529
FDS11	3320
FDS1101	3566
FDS1112	3636
FDS1160	3897
FDS1162	4281
FDS1288	3637
FDS1289	3896
FDS1293	3762
FDS1294	3763
FDS1303	4125
FDS1312	3896
FDS1318	3754
FDS1327	4079
FDS1333	3913
FDS1349	4123
FDS1376	3790
FDS1378	3938
FDS1398	3782
FDS1399	3820
FDS1419	4138
FDS1444	4110
FDS1463	3590

FERODO	BESER
NO	NO
FDS1466	3826
FDS1467	3800
FDS1543	3931
FDS1568	3801
FDS1573	3817
FDS1617	3983
FDS1628	4180
FDS1629	4096
FDS1641	3904
FDS1667	4137
FDS167	3312
FDS1672	4179
FDS1725	3939
FDS173	3410
FDS1773	4346
FDS2	3318
FDS212	3417
FDS212	3417
FDS256	3573
FDS308	3402
FDS370	3466
FDS392	3486
FDS393	3380
FDS406	3539
FDS434	3474
FDS458	3320
FDS541	3529
FDS558	3496
FDS578	3578
FDS584	3470
FDS586	3469
FDS596	3536
FDS600	3632
FDS604	3562
FDS610	3419
FDS613	3683
FDS617	3464
FDS691	3779
FDS725	3563
FDS732	3623
FDS765	3685
FDS766	3593
FDS774	3531
FDS775	3551
FDS776	3607
FDS777	3686
FDS779	3564
FDS789	3426
FDS790	4080
FDS845	3503
FDS867	3554
FDS867	3651
FDS905	3704
FDS925	3608
FDS948	4078
FDS956	4148
FDS96	3393
FDS998	3909
FQT1002	3799
FQT1049	3677
FQT1050	3863
FQT1052	3617
FQT1067	3505
FQT1067	3615
FQT1075	3656
FQT1083	3529
FQT1094	3782
FQT1095	4062
FQT1098	4197
FQT1101	3566
FQT1112	3636
FQT1117	3717
FQT1135	3659
FQT1276	3722
FQT1288	3637
FQT1293	3762
FQT1294	3763
FQT1303	4125
FQT1311	3676
FQT1312	3896

FERODO	BESER
NO	NO
FQT1318	3754
FQT1319	3755
FQT1322	3821
FQT1349	4123
FQT1355	3943
FQT1378	3938
FQT1382	3919
FQT1384	4059
FQT1394	3877
FQT1398	3782
FQT1399	3820
FQT1400	4126
FQT1411	3935
FQT1412	3934
FQT1416	4093
FQT1420	3539
FQT1424	3846
FQT1425	4100
FQT1426	4102
FQT1427	4101
FQT1427	4209
FQT1428	3836
FQT1429	3836
FQT1440	3950
FQT1441	3852
FQT1451	3896
FQT1463	3590
FQT1467	3800
FQT1473	4094
FQT1476	3800
FQT1483	3879
FQT1491	3529
FQT1496	3590
FQT1497	4095
FQT1506	4155
FQT1512	4103
FQT1514	4158
FQT1520	4211
FQT1523	4011
FQT1531	4153
FQT1540	3853
FQT1544	3849
FQT1556	3986
FQT1580	4115
FQT1594	3885
FQT1605	3843
FQT1606	3993
FQT1619	3889
FQT1627	4076
FQT1628	4180
FQT1629	4096
FQT1635	3782
FQT1640	4042
FQT1641	3904
FQT1648	3890
FQT1649	4153
FQT1659	4031
FQT1672	4179
FQT1704	4159
FQT1766	3853
FQT1788	3529
FQT1931	3853
FQT393	3380
FQT406	3539
FQT558	3496
FQT613	3683
FQT619	3680
FQT719	3487
FQT725	3563
FQT732	3623
FQT774	3531
FQT775	3551
FQT845	3503
FQT854	3658
FQT867	3554
FQT867	3651
FQT874	3819
FQT875	3878
FQT876	3528
FQT884	3558

FERODO	BESER
NO	NO
FQT925	3608
FQT997	3881
FQT998	3909
FSL1002	3799
FSL1004	3574
FSL1014	3507
FSL1015	3674
FSL1017	3887
FSL1020	3883
FSL1021	3693
FSL1038	3567
FSL1039	3678
FSL1043	3614
FSL1044	3680
FSL1045	3670
FSL1049	3677
FSL105	3327
FSL1050	3863
FSL1052	3617
FSL1054	3538
FSL1055	3506
FSL1062	3750
FSL1067	3505
FSL1067	3615
FSL1072	3585
FSL1075	3656
FSL1081	3570
FSL1081	3594
FSL1083	3529
FSL1091	3577
FSL1092	3675
FSL1094	3782
FSL1095	4062
FSL1098	4197
FSL1100	3602
FSL1101	3566
FSL1102	3575
FSL1112	3636
FSL1116	3687
FSL1117	3717
FSL1129	3781
FSL1131	4020
FSL1135	3659
FSL1160	3897
FSL1162	4281
FSL1163	3606
FSL1166	4010
FSL1263	3932
FSL1267	4182
FSL1276	3722
FSL1288	3637
FSL1289	3896
FSL1291	3872
FSL1293	3762
FSL1294	3763
FSL1303	4125
FSL1304	3681
FSL1305	3861
FSL1306	3804
FSL1310	3663
FSL1311	3676
FSL1312	3896
FSL1315	3575
FSL1318	3754
FSL1319	3755
FSL1322	3821
FSL1326	3778
FSL1327	4079
FSL1333	3913
FSL1337	3744
FSL1349	4123
FSL1355	3943
FSL1368	3768
FSL1369	3687
FSL1376	3790
FSL1378	3938
FSL1381	3784
FSL1382	3919
FSL1383	3918
FSL1384	4059

FERODO	BESER
NO	NO
FSL1390	3942
FSL1392	3769
FSL1394	3877
FSL1395	3788
FSL1398	3782
FSL1399	3820
FSL1400	4126
FSL1405	3823
FSL1409	3850
FSL1411	3935
FSL1412	3934
FSL1416	4093
FSL1419	4138
FSL142	3405
FSL1420	3539
FSL1421	4027
FSL1422	3809
FSL1424	3846
FSL1425	4100
FSL1426	4102
FSL1427	4101
FSL1427	4209
FSL1428	3836
FSL143	3315
FSL143	3515
FSL1440	3950
FSL1441	3852
FSL1444	4110
FSL1445	3874
FSL1451	3896
FSL1452	3856
FSL1453	3855
FSL1455	3780
FSL1456	3829
FSL1457	3830
FSL1461	3921
FSL1463	3590
FSL1466	3826
FSL1467	3800
FSL1473	4094
FSL1476	3800
FSL1477	3644
FSL1478	3834
FSL1479	3835
FSL1480	3914
FSL1483	3879
FSL1493	3923
FSL1496	3590
FSL1501	3901
FSL1505	3704
FSL1506	4155
FSL1512	4103
FSL1513	4112
FSL1514	4158
FSL1515	3848
FSL1516	3795
FSL1518	3794
FSL1519	3553
FSL1520	4211
FSL1523	4011
FSL1527	3767
FSL1529	4013
FSL1531	4153
FSL1532	3928
FSL1536	4009
FSL1540	3853
FSL1542	3854
FSL1543	3931
FSL1544	3849
FSL1556	3986
FSL1564	3915
FSL1565	3884
FSL1568	3801
FSL1570	4084
FSL1571	4119
FSL1573	3817
FSL1574	3825
FSL1576	4012
FSL1580	4115
FSL1594	3885

FERODO	BESER
NO	NO
FSL1595	3802
FSL1596	4271
FSL1602	4269
FSL1603	3892
FSL1605	3843
FSL1606	3993
FSL1610	4085
FSL1612	3764
FSL1613	3944
FSL1615	4293
FSL1617	3983
FSL1619	3889
FSL1621	3955
FSL1627	4076
FSL1628	4180
FSL1635	3782
FSL1636	3905
FSL1639	3912
FSL1640	4042
FSL1641	3904
FSL1642	3841
FSL1643	3841
FSL1644	3842
FSL1645	4152
FSL1648	3890
FSL1649	4153
FSL1652	4173
FSL1658	3831
FSL1659	4031
FSL1662	4138
FSL1666	3826
FSL1669	4109
FSL1669	4232
FSL167	3312
FSL1672	4179
FSL1679	4148
FSL1684	4275
FSL1693	3933
FSL1698	3891
FSL1699	3951
FSL1702	3900
FSL1703	4099
FSL1704	4159
FSL1707	4118
FSL1715	4105
FSL1725	3939
FSL1726	3940
FSL1727	3946
FSL173	3410
FSL1731	4111
FSL1733	3959
FSL1735	3978
FSL1736	3979
FSL1737	3632
FSL1745	4017
FSL1748	4181
FSL175	3378
FSL1757	3874
FSL1759	4303
FSL176	3374
FSL1766	3853
FSL1771	3972
FSL1772	4151
FSL1773	4346
FSL1777	3962
FSL1778	3925
FSL1779	3963
FSL1780	3926
FSL1781	3503
FSL1783	3968
FSL1784	3984
FSL179	3527
FSL1790	3987
FSL1816	3886
FSL1817	3988
FSL1827	4096
FSL1829	3958
FSL1830	4210
FSL1836	3982
FSL1839	4106

FERODO	BESER
NO	NO
FSL1840	3961
FSL1863	4036
FSL1869	4028
FSL1877	3945
FSL1881	4143
FSL1884	3777
FSL1885	4058
FSL1889	3894
FSL1891	3953
FSL1892	3949
FSL1897	4161
FSL1902	3969
FSL1906	4216
FSL1909	3911
FSL1910	3989
FSL1917	4157
FSL1919	3800
FSL1923	3981
FSL1924	3981
FSL1925	3922
FSL1926	3922
FSL1927	3820
FSL1928	3906
FSL1929	3920
FSL1930	3907
FSL1931	3853
FSL1933	4157
FSL1934	3976
FSL1937	3895
FSL1946	3826
FSL195	3421
FSL1950	3985
FSL1953	4018
FSL1954	4006
FSL1955	3880
FSL1956	3980
FSL1971	3964
FSL1978	4248
FSL1979	4249
FSL1980	4247
FSL1985	3769
FSL1993	3685
FSL1997	3952
FSL1999	3976
FSL2	3318
FSL206	3417
FSL208	3509
FSL212	3417
FSL212	3417
FSL222	3536
FSL243	3339
FSL243	3514
FSL274	3624
FSL275	3419
FSL287	3440
FSL29	3316
FSL296	3572
FSL300	3501
FSL308	3402
FSL318	3714
FSL328	3611
FSL340	3397
FSL346	3424
FSL351	3424
FSL365	3621
FSL368	3401
FSL370	3466
FSL372	3875
FSL385	3441
FSL392	3486
FSL393	3380
FSL4001	4113
FSL4002	4016
FSL4003	3970
FSL4004	3529
FSL4014	4001
FSL4023	3975
FSL4035	4141
FSL4036	3965
FSL4037	4092

FERODO	BESER
NO	NO
FSL4039	3995
FSL4042	3954
FSL4046	3956
FSL4048	4037
FSL405	3758
FSL4050	4260
FSL4051	4038
FSL4052	4207
FSL4053	3965
FSL406	3539
FSL4060	3929
FSL4062	4029
FSL4066	3820
FSL4068	4134
FSL4069	3983
FSL4074	4005
FSL4077	4000
FSL4078	4198
FSL4110	4122
FSL4111	3960
FSL4113	4035
FSL4136	4077
FSL414	3482
FSL4140	3823
FSL415	3408
FSL4177	4143
FSL4179	4122
FSL418	3462
FSL4180	3964
FSL4182	4142
FSL4183	3529
FSL4185	3966
FSL4186	3967
FSL4187	4258
FSL419	3444
FSL4193	4165
FSL4194	4039
FSL4208	4149
FSL4209	4150
FSL4222	3529
FSL4228	4160
FSL4229	3996
FSL4233	4156
FSL4235	3980
FSL4239	4004
FSL4247	3993
FSL4250	3971
FSL4256	3966
FSL4260	3529
FSL4262	4230
FSL4263	4014
FSL4264	4008
FSL4265	4014
FSL4279	4122
FSL428	3493
FSL4299	4124
FSL4302	4162
FSL4304	4073
FSL4316	4135
FSL4324	3933
FSL4326	4147
FSL4336	4145
FSL434	3474
FSL435	3502
FSL4387	4061
FSL4388	3955
FSL440	3495
FSL4408	3980
FSL4411	4146
FSL4424	4310
FSL4426	4122
FSL4432	3944
FSL4447	4049
FSL4448	4028
FSL4455	4314
FSL4486	3826
FSL4487	4349
FSL450	3603
FSL4567	3574
FSL4648	4176

FERODO	BESER
NO	NO
FSL471	3771
FSL472	4212
FSL478	3776
FSL484	4087
FSL487	3449
FSL489	3395
FSL506	3583
FSL510	3543
FSL517	3605
FSL519	3459
FSL520	3662
FSL524	3432
FSL525	3717
FSL532	3436
FSL534	3428
FSL540	3457
FSL541	3529
FSL549	3746
FSL556	3448
FSL558	3496
FSL562	3583
FSL576	3437
FSL577	3584
FSL578	3578
FSL579	3549
FSL584	3470
FSL585	3752
FSL586	3469
FSL589	3589
FSL590	3590
FSL597	3723
FSL600	3632
FSL604	3562
FSL610	3419
FSL613	3683
FSL615	3873
FSL617	3464
FSL619	3680
FSL621	4212
FSL626	3366
FSL628	3641
FSL638	4087
FSL641	3692
FSL655	3523
FSL656	3423
FSL660	3609
FSL667	4104
FSL669	3430
FSL676	3642
FSL678	3757
FSL678	3857
FSL686	3733
FSL687	3556
FSL690	3413
FSL693	3630
FSL700	3473
FSL701	3445
FSL707	3660
FSL712	3882
FSL714	3640
FSL715	3522
FSL719	3487
FSL725	3563
FSL732	3623
FSL757	3463
FSL759	3603
FSL759	3604
FSL763	3598
FSL764	3622
FSL765	3685
FSL766	3593
FSL774	3531
FSL775	3551
FSL776	3607
FSL777	3686
FSL779	3564
FSL789	3426
FSL790	4080
FSL797	3560
FSL799	3581

FERODO	BESER
NO	NO
FSL803	4108
FSL804	3688
FSL805	3526
FSL813	3373
FSL829	3423
FSL833	3416
FSL84	3350
FSL844	3661
FSL845	3503
FSL854	3658
FSL859	4128
FSL867	3554
FSL867	3651
FSL869	3833
FSL871	3453
FSL872	3512
FSL874	3819
FSL875	3878
FSL876	3528
FSL878	3596
FSL884	3558
FSL886	3423
FSL896	3569
FSL901	3736
FSL905	3704
FSL909	3888
FSL912	3540
FSL925	3608
FSL929	4182
FSL931	4072
FSL948	4078
FSL950	3832
FSL954	3619
FSL956	4148
FSL967	3595
FSL968	3559
FSL970	3553
FSL973	3717
FSL979	3550
FSL997	3881
FSL998	3909
FSL999	3610
FVC959	3390
FVR1002	3799
FVR1014	3507
FVR1038	3567
FVR1039	3678
FVR1043	3614
FVR1044	3680
FVR1045	3670
FVR1102	3575
FVR1126	3994
FVR1131	4020
FVR1132	3671
FVR1163	3606
FVR1304	3681
FVR1305	3861
FVR1306	3804
FVR1315	3575
FVR1350	3749
FVR1381	3784
FVR1390	3942
FVR1405	3823
FVR1452	3856
FVR1453	3855
FVR1461	3921
FVR1478	3834
FVR1479	3835
FVR1480	3914
FVR1493	3923
FVR1497	4095
FVR1498	3648
FVR1515	3848
FVR1516	3795
FVR1518	3794
FVR1519	3553
FVR1522	3679
FVR1568	3801
FVR1598	3664
FVR1642	3841

FERODO	BESER
NO	NO
FVR1643	3841
FVR1644	3842
FVR1771	3972
FVR1772	4151
FVR1777	3962
FVR1778	3925
FVR1779	3963
FVR1780	3926
FVR179	3527
FVR1884	3777
FVR1906	4216
FVR1923	3981
FVR1924	3981
FVR1925	3922
FVR1926	3922
FVR1927	3820
FVR1928	3906
FVR1929	3920
FVR1930	3907
FVR215	3369
FVR239	3513
FVR287	3440
FVR302	3366
FVR4036	3965
FVR4037	4092
FVR4038	3994
FVR4039	3995
FVR4053	3965
FVR414	3482
FVR4140	3823
FVR418	3462
FVR4302	4162
FVR4347	4056
FVR4348	4057
FVR4349	4132
FVR4349	4172
FVR4398	4175
FVR4429	3963
FVR4469	3925
FVR4470	3962
FVR450	3603
FVR4661	4174
FVR4840	4227
FVR501	3679
FVR505	3446
FVR510	3543
FVR517	3605
FVR547	3499
FVR549	3746
FVR626	3366
FVR641	3692
FVR655	3523
FVR656	3423
FVR690	3413
FVR700	3473
FVR701	3445
FVR757	3463
FVR791	3537
FVR805	3526
FVR829	3423
FVR833	3416
FVR84	3350
FVR852	3749
FVR886	3423
FVR941	3689
FVR967	3595
FVR968	3559
FVR970	3553

FMSI	BESER
NO	NO
D0030	3326
D0031	3318
D0043	3373
D0044	3311
D0045	3320
D0045	3350
D0054	3316
D0054	3346
D0071	3317
D0077	3321
D0096	3327
D0096	3343
D0096	3483
D0097	3329
D0097	3333
D0101	3709
D0109	3335
D0111	3806
D0111	3806
D0130	3324
D0135	3526
D0137	3371
D0141	3405
D0145	3315
D0145	3339
D0145	3514
D0145	3515
D0147	3378
D0147	3490
D0157	3323
D0166	3369
D0169	3710
D0174	3365
D0189	3579
D0197	3379
D0227	3649
D0227	3650
D0228	3536
D0233	3394
D0239	3436
D0242	3402
D0253	3573
D0256	3752
D0263	3634
D0265	3397
D0266	3758
D0276	3633
D0276	3646
D0279	3572
D0280	3444
D0280	3444
D0281	3509
D0285	3446
D0290	3619
D0290	3635
D0292	3503
D0292	3503
D0298	3549
D0299	3400
D0303	3714
D0307	3486
D0307	3486
D0311	3395
D0319	3449
D0322	3583
D0323	4087
D0325	3776
D0328	3401
D0330	3312
D0330	3484
D0332	3875
D0333	3692
D0333	3760
D0334	3582
D0335	3550
D0335	3611
D0338	3605
D0340	3529
D0340	3529
D0340	3529

FMSI	BESER
NO	NO
D0349	3448
D0350	3458
D0351	3428
D0355	4088
D0363	3757
D0363	3857
D0371	3380
D0374	4212
D0374	4212
D0383	4108
D0389	3666
D0391	3642
D0394	3564
D0394	3584
D0396	3578
D0399	3437
D0402	3723
D0404	3502
D0404	3504
D0409	3631
D0418	3882
D0422	4010
D0423	3408
D0427	3469
D0430	3779
D0436	3560
D0449	3632
D0454	3457
D0456	3600
D0462	3700
D0465	3696
D0466	3522
D0470	3426
D0471	4080
D0473	3640
D0476	4086
D0477	4182
D0484	3622
D0487	3430
D0492	3641
D0493	3609
D0496	3695
D0501	4072
D0502	3673
D0503	3704
D0510	3598
D0510	3766
D0518	3661
D0518	3771
D0519	3423
D0519	3423
D0520	3662
D0521	3867
D0530	3685
D0535	3603
D0535	3604
D0536	4148
D0551	3874
D0555B	3590
D0555C	3590
D0556	3883
D0558	3563
D0561	3628
D0561	3629
D0562	3554
D0562	3651
D0563	4078
D0567	3688
D0572	4099
D0579	3674
D0580	3887
D0583	3832
D0584	3833
D0591	4197
D0603	3581
D0606	3693
D0613	4275
D0619	3915
D0620	3630
D0621	3607

FMSI	BESER
NO	NO
D0638	3553
D0639	3909
D0644	3736
D0645	3658
D0648	3558
D0648	3593
D0649	3740
D0652	3781
D0661	4214
D0665	4274
D0668	3598
D0671	3453
D0677	3602
D0680	3884
D0681	3881
D0683	3879
D0684	3551
D0688	3623
D0691	3932
D0692	3656
D0693	3545
D0694	3538
D0694	3566
D0694	3637
D0696	3531
D0703	4020
D0704	3896
D0705	3606
D0707	3822
D0710	3677
D0716	4071
D0720	3733
D0721	4079
D0722	3764
D0733	4084
D0734	4216
D0739	3663
D0760	4126
D0761	4069
D0768	3782
D0770	3913
D0771	4085
D0772	3829
D0773	3830
D0774	4009
D0779	3676
D0780	3896
D0790	4011
D0794	3919
D0795	3918
D0796	3470
D0797	3687
D0798	3780
D0808	3795
D0811	3717
D0813	3993
D0816	3754
D0823	3788
D0829	4110
D0830	4017
D0831	3768
D0837	4059
D0838	4062
D0843	4119
D0848	4101
D0848	4209
D0853	3863
D0856	4012
D0862	4158
D0864	3843
D0866	3955
D0867	3892
D0872	3836
D0874	4103
D0876	3821
D0877	4345
D0880	4095
D0881	4186
D0884	4082
D0885	3911

FMSI	BESER
NO	NO
D0886	3755
D0888	4143
D0889	4269
D0904	3765
D0905	3933
D0908	3910
D0910	4100
D0911	4093
D0914	3831
D0918	4180
D0919	4179
D0923	4013
D0924	3959
D0926	4094
D0927	3513
D0928	3804
D0929	3912
D0941	3961
D0945	4031
D0946	4347
D0949	3614
D0950	3567
D0951	3678
D0957	3889
D0959	4109
D0959	4232
D0969	4074
D0970	3801
D0972	4211
D0973	3853
D0976	3891
D0978	4076
D0987	4097
D0996	4111
D1005	4105
D1006	3670
D1008	4303
D1012-7916	4320
D1013	3976
D1018	3842
D1021	4058
D1024	4222
D1026	3433
D1027	3773
D1031	4073
D1036	3894
D1037	4106
D1039	3886
D1041	4030
D1044	3885
D1047	4220
D1051	4153
D1055	4215
D1056	4006
D1057	4018
D1058	4198
D1061	4346
D1062	3679
D1074	4001
D1078	4081
D1080	4016
D1094	3952
D1095	3853
D1098	4293
D1099	3944
D1105	4000
D1107	3904
D1108	3905
D1111	4096
D1113	4113
D1114	4213
D1123	4210
D1124	4258
D1129	3945
D1142	3985
D1145	3539
D1151	4208
D1156	3880
D1157	3980
D1164	4029

FMSI	BESER
NO	NO
D1175	3877
D1176	3846
D1184	3958
D1187	3660
D1188	3929
D1191	4002
D1193	3797
D1194-8312	4184
D1198	3834
D1202	3960
D1205	3855
D1210	3953
D1211	4077
D1212	3949
D1213	3820
D1214	3900
D1215	3817
D1216	3825
D1222	3948
D1223	4240
D1245	3940
D1250	4125
D1252	4281
D1253	3681
D1255	3872
D1261	3979
D1264	3976
D1268	3962
D1269	3951
D1273	4005
D1274	4004
D1283-8399	4277
D1284	4060
D1293	3948
D1294	4207
D1295	4039
D1296	4165
D1297	3989
D1303	3996
D1304	3997
D1306	4161
D1313	4061
D1314	4157
D1316	3925
D1317	3926
D1318	3963
D1322	4259
D1324	4255
D1338	4038
D1340	4248
D1341	4247
D1342	4249
D1343	3893
D1344	3777
D1345	4015
D1349	4309
D1354	3954
D1374	4038
D1386	4260
D1387	4060
D1391	4256
D1426	4291
D1430	4150
D1435	3983
D1436	3410
D1437	4138
D1437	4138
D1444	4233
D1447	4049
D1453	4310
D1454	4122
D1456	4135
D1458	3496
D1467	4230
D1468	4014
D1471	3927
D1473-8672	4325
D1479	4314

FMSI	BESER
NO	NO
D1487	3575
D1488	4173
D1488	4173
D1489	3981
D1490	3820
D1497	4008
D1498-8698	4339
D1499	3659
D1500	3848
D1501	3852
D1502	3907
D1514	3916
D1515	4269
D1515-8724	3957
D1519	3975
D1522	4230
D1523	3998
D1528	3920
D1532	3762
D1540	3922
D1541	3800
D1542	3950
D1543	4166
D1543-8751	4342
D1544	4311
D1555	3906
D1557	4149
D1566	4035
D1567	4167
D1571	3956
D1572	4037
D1573	3767
D1574	3988
D1590-8801	4337
D1593	4136
D1594	4311
D1595-8810	4342
D1601	3968
D1615	3924
D1616	3826
D1618	3800
D1621	3984
D1627	3964
D1632	3949
D1654	4312
D1667-8895	4342
D1668	4226
D1677	4124
D1688-8915	4313
D1689-8916	4335
D1694-8920	4326
D1710	3903
D1711	4315
D1722	4286
D1725-8947	4199
D1726-8950	4019
D1728	4317
D1729	4318
D1730	4204
D1736	4308
D1737	4282
D1748-8976	4324
D1760	4228
D1776	4200
D1779-9008	4336
D1795	4349
D1812-8428	4343
D1815-8549	4041
D1837-9066	4334
D1841	4279
D1900	3952
D1911	4307
D1965	4283
D1968	4295
D260-7105	3314
D44-754	3311
D44-765	3311
D45-7036	3315
D671-7552	3816
D79-797	3312

FMSI	BESER
NO	NO
D967-7867	4329
D99-7034	3313

FRAS-LE	BESER
NO	NO
PD/1	3320
PD/1000-B	3904
PD/1030	3905
PD/104	3679
PD/111	3614
PD/111-A	3614
PD/115	3560
PD/118	3804
PD/13	3350
PD/132	3640
PD/139	3994
PD/16	3327
PD/17	3343
PD/17	3483
PD/18	3625
PD/189	3965
PD/24	3417
PD/24-A	3417
PD/24-A	3417
PD/305-A	3503
PD/31	3393
PD/318-A	3482
PD/32	3421
PD/321-A	3428
PD/322-A	3380
PD/326-A	3457
PD/328	3444
PD/330	3746
PD/331	3574
PD/332	3781
PD/333	3463
PD/334	3536
PD/335-A	3466
PD/338	3503
PD/338-A	3503
PD/339-A	3749
PD/34	3417
PD/340-B	3590
PD/341	3670
PD/346	3800
PD/347	3856
PD/35	3722
PD/352	3558
PD/352-A	3593
PD/358-A	3595
PD/36	3545
PD/362	3529
PD/367	3566
PD/368	3637
PD/37	3470
PD/376	3522
PD/377	3448
PD/378	3882
PD/38	3717
PD/382	3502
PD/383	3685
PD/384-A	3590
PD/385	3563
PD/387	3554
PD/387	3651
PD/39	3549
PD/390	3417
PD/391-A	3539
PD/397	3696
PD/404	3686
PD/41	3469
PD/411	3644
PD/411-E	3636
PD/412	3659
PD/414-E	3750
PD/416	3512
PD/417	3567
PD/418	4182
PD/419	3883
PD/42	3623
PD/422	3559
PD/422-A	3559
PD/423	3426

FRAS-LE	BESER
NO	NO
PD/427	3760
PD/429	3714
PD/431	3410
PD/432	3884
PD/435	3938
PD/442	3754
PD/444	4148
PD/449	3704
PD/450	3688
PD/458-B	3662
PD/46	3846
PD/464-B	3771
PD/465	3496
PD/469	3622
PD/47	3459
PD/473	3507
PD/474	3453
PD/475	3687
PD/478	3778
PD/47-A	3540
PD/48	3790
PD/480	3755
PD/482	3596
PD/486	4009
PD/488	3578
PD/489	3658
PD/490	3873
PD/491	3817
PD/493	3607
PD/494	3790
PD/497	3877
PD/498-A	3834
PD/501	3914
PD/505	3820
PD/509-B	3826
PD/511-B	3800
PD/512	3825
PD/514	3931
PD/516	3855
PD/52	3505
PD/52	3615
PD/520	4138
PD/528	3891
PD/532	3766
PD/535	3985
PD/536	4017
PD/538	3892
PD/550	3779
PD/554	4148
PD/561	3932
PD/57	3762
PD/58	3782
PD/580	4012
PD/585	3933
PD/586	4100
PD/58-B	3782
PD/592-B	3842
PD/599	4093
PD/6	3318
PD/60	3569
PD/601	3849
PD/611	3602
PD/612	4071
PD/613	4079
PD/614	3764
PD/616	4084
PD/619	3913
PD/620	4011
PD/628	4158
PD/629	4153
PD/630	3843
PD/631	3955
PD/633	3968
PD/634	3978
PD/635	3959
PD/638	4074
PD/64	3653
PD/644	3831
PD/647	4029

FRAS-LE	BESER
NO	NO
PD/648	3854
PD/649-E	3935
PD/65	3570
PD/65	3594
PD/650-E	3934
PD/652-B	3835
PD/66	3617
PD/665	4001
PD/666	4087
PD/668	3979
PD/669	3956
PD/66-A	3617
PD/672	4015
PD/67-A	4125
PD/68	3790
PD/681	3894
PD/689	4037
PD/69	3802
PD/695	3693
PD/708	4182
PD/711	3976
PD/725	3993
PD/73	3682
PD/74	4271
PD/745	3910
PD/767	3885
PD/771	3975
PD/78-A	3617
PD/80	3877
PD/811	3952

FREEMAX	BESER
NO	NO
FBP-0086	4185
FBP0126	3320
FBP0137	3318
FBP0170	3373
FBP0248	3327
FBP0249	3343
FBP0249	3483
FBP0294	3339
FBP0294	3514
FBP0300	3522
FBP0304	3723
FBP0308	3350
FBP0315	3513
FBP0351	3570
FBP0351	3594
FBP0353	3417
FBP0368	3424
FBP0425	3611
FBP042501	3550
FBP0443	3650
FBP044301	3531
FBP0444	3536
FBP0446	3619
FBP0459	3621
FBP0461	3486
FBP046101	3585
FBP0462	3444
FBP0464	3380
FBP0467	3441
FBP0473	3410
FBP0476	3466
FBP0477	3495
FBP0492	3422
FBP0494	3573
FBP0498	3603
FBP050601	3556
FBP050901	3539
FBP0537	3449
FBP0539	3417
FBP0539	3417
FBP0540	3605
FBP0554	3501
FBP0558	3490
FBP0564	3572
FBP0573	3457
FBP057301	3610
FBP0575	3529
FBP057501	3529
FBP0596	3432
FBP0615	3529
FBP0618	3641
FBP0624	3564
FBP0625	3584
FBP0663	4212
FBP0681	3589
FBP071701	3717
FBP0718	3717
FBP0728	3609
FBP0731	3470
FBP073101	3505
FBP073101	3615
FBP0732	3469
FBP0733	3578
FBP073301	3656
FBP0735	3583
FBP0740	3437
FBP0743	3680
FBP074301	3680
FBP0746	3430
FBP0755	3683
FBP0756	3464
FBP075601	3722
FBP0758	3623
FBP0761	3487
FBP0771	3445
FBP0774	3473
FBP0779	3596
FBP0797	3640
FBP0810	3531
FBP081001	3551

FREEMAX	BESER
NO	NO
FBP0813	3619
FBP0825	3642
FBP0827	3607
FBP0828	3686
FBP0837	3629
FBP083701	3628
FBP0842	4020
FBP0868	3590
FBP086801	3590
FBP0872	3590
FBP0881	3539
FBP0885	3819
FBP0887	3878
FBP0902	3528
FBP0905	3658
FBP0906	3558
FBP090601	3593
FBP0911	3608
FBP0914	3559
FBP0915	3595
FBP0920	3503
FBP0923	3685
FBP0927	3630
FBP0930	3704
FBP0933	3799
FBP0938	3553
FBP093801	3553
FBP0957	3888
FBP0968	3897
FBP097101	3618
FBP0972	3617
FBP0978	3674
FBP0981	3736
FBP0984	3538
FBP098401	3637
FBP0985	3566
FBP098501	3566
FBP0986	4182
FBP0996	3733
FBP1032	3567
FBP1034	3678
FBP1035	3670
FBP1040	3677
FBP1047	3863
FBP1049	3750
FBP1050	3896
FBP105001	3896
FBP1051	3896
FBP1052	4062
FBP1061	3606
FBP106101	3794
FBP1062	4059
FBP1068	3636
FBP106801	3644
FBP1069	3682
FBP106901	3782
FBP107001	3782
FBP1073	3663
FBP1076	3762
FBP1080	4125
FBP1082	3763
FBP1083	3659
FBP108301	3938
FBP1084	3659
FBP1092	3744
FBP1094	3754
FBP1095	4197
FBP1118	4126
FBP1119	4069
FBP1130	3681
FBP1131	3804
FBP1133	4281
FBP1134	3861
FBP1136	3755
FBP1139	3676
FBP1142	3821
FBP1143	3768
FBP1145	3919
FBP1146	3918
FBP1152	3795

FREEMAX	BESER
NO	NO
FBP1154	4123
FBP1160	3877
FBP116901	3820
FBP1170	3790
FBP1181	3836
FBP1191	3935
FBP1193	3934
FBP1196	4100
FBP1197	4093
FBP1203	3784
FBP120301	3921
FBP1207	3887
FBP1212	3820
FBP1213	3820
FBP1214	3311
FBP1217	3800
FBP1218	3826
FBP121901	3800
FBP1224	3856
FBP1239	4012
FBP1251	3950
FBP1253	3852
FBP1254	3853
FBP125401	3853
FBP1256	4138
FBP125601	4138
FBP1257	4095
FBP1265	4211
FBP1268	3854
FBP1269	3931
FBP1271	3986
FBP1272	3848
FBP1275	3855
FBP1280	3850
FBP1281	3849
FBP1293	3834
FBP1295	3835
FBP1299	4102
FBP1325	4011
FBP1332	3881
FBP1334	3879
FBP1337	3983
FBP1351	3904
FBP1362	3885
FBP1370	3909
FBP1373	3875
FBP1388	4180
FBP1519	3849
FBP1520	3925
FBP1521	3926
FBP1522	4210
FBP1538	3972
FBP1584	4141
FBP1610	3832
FBP1703	4198
FBP1738	4087
FBP1739	3693
FBP1741	3993
FBP1747	3891
FBP1748	4152
FBP1749	3371
FBP1751	3771
FBP1753	3673
FBP1754	3453
FBP1758	3648
FBP1763	4132
FBP1763	4172
FBP1767	3536
FBP1770	4104
FBP1773	4080
FBP1775	3602
FBP1779	3764
FBP1780	3898
FBP1784	3548
FBP1784	3690
FBP1786	4119
FBP1794	3765
FBP1797	3895
FBP1799	4303
FBP1800	4081

FREEMAX	BESER
NO	NO
FBP1802	3976
FBP1803	4000
FBP1804	3829
FBP1805	3830
FBP1814	4165
FBP1817	3996
FBP1818	3997
FBP1825	4004
FBP1829	4309
FBP1840	3661
FBP1849	4310
FBP1867	4061
FBP1883	4006
FBP1885	4124
FBP1886	4258
FBP1890	4049
FBP1896	4226
FBP1900	4110
FBP1903	4073
FBP1914	3933
FBP1935	4121
FBP1939	4056
FBP1947	4145
FBP1951	4201
FBP1952	4175

FRI.TECH	BESER
NO	NO
180305	3332
001.0	3316
001.1	3346
002.1	3326
003.0	3318
005.0	3329
005.5	3333
006.0	3373
008.0	3393
011.0	3327
011.1	3343
011.1	3483
013.0	3315
013.0	3515
013.1	3339
014.0	3374
015.1	3335
016.0	3513
017.1	3806
017.4	3806
018.0	3423
018.2	3423
019.0	3366
019.1	3366
022.0	3311
023.0	3405
025.0	3312
025.1	3484
026.0	3378
026.1	3490
029.0	3365
030.0	3625
031.0	3417
031.1	3417
031.1	3417
032.0	3468
032.1	3466
032.2	3467
033.0	3440
034.1	3555
035.0	3424
035.1	3424
037.0	3425
038.1	3381
038.2	3495
039.0	3380
039.1	3487
039.3	3580
040.0	3496
040.2	3496
041.0	3419
041.1	3429
043.0	3430
044.0	3609
045.0	3621
046.0	3410
047.0	3486
047.0K	3486
047.1	3444
047.1K	3444
047.2	3585
047.2K	3585
048.0	3421
048.0	3536
049.0	3441
049.0K	3441
049.2	3556
051.0	3474
052.0	3531
052.2	3551
053.2	3523
056.0	3646
056.2	3633
057.0	3689
058.0	3603
059.0	3461
059.1	3540
059.2	3459
059.5	3458
060.1	3543

FRI.TECH	BESER
NO	NO
061.0	3432
061.1	3491
063.0	3408
064.0	3422
064.1	3552
068.0	3397
068.1	3758
070.0	3437
072.0	3583
072.1	3572
073.0	3464
073.1	3722
074.1	3375
075.0	3589
077.0	3641
079.0	3623
080.0	3350
080.1	3320
080.1	3320
081.1	3897
082.0	3321
082.1	3340
083.0	3504
083.1	3502
084.1	3618
085.0	3617
086.0	3323
088.0	3317
091.1	3526
092.0	3442
093.0	3573
094.0	3611
094.1	3550
095.0	3570
095.0	3594
096.2	3549
098.0	3428
100.0	3482
1005.0	4226
1006.0	4174
1007.0	4175
101.0	3457
101.1	3610
1014.0	4176
1019.0	4227
102.0	3529
102.1	3529
102.2	3529
102.4	4152
1030.0	4200
1034.0	4282
1035.0	4283
1036.0	4286
105.0	3449
1057.0	4224
1057.0	4224
1058.0	4284
1059.0	4285
107.0	3799
1076.0	4030
109.0	3692
109.1	3760
110.0	3402
111.0	3371
112.0	3415
113.1	3537
116.0	3401
117.0	3448
118.0	3590
118.0	3882
119.0	3470
122.0W	3503
122-0	3503
124.0	3564
124.1	3584
125.0	3562
126.0	3563
127.0	3578
127.0	3578
129.0	3740

FRI.TECH	BESER
NO	NO
130.0	3736
131.0	3560
133.0	3642
136.0	3685
137.0	3426
138.0	3883
140.0	3686
142.0	4078
143.0	3469
144.0	3539
144.1	3546
145.0	4214
146.0	3819
147.0	4128
148.0	3558
148.1	3593
151.0	3650
151.1	3619
151.2	3649
151.3	3635
152.0	3554
152.0	3651
154.0	3688
156.0	3673
157.0	3595
158.0	3559
159.0	3528
160.0	3878
161.0	3658
162.0	3608
162.1	3643
164.1	3776
166.1	4020
167.0	3553
167.1	3553
168.0	3596
170.0	4086
173.0	4212
173.1	4212
174.0	3631
176.0	4148
177.0	3683
177.1	3872
178.0	3607
180.0	3662
184.0	4104
188.4	3590
193.0	3527
195.0	3632
197.0	3700
198.0	3624
199.0	3680
201.0	3473
202.0	3445
203.0	3522
205.0	3640
206.0	3888
207.0	3660
210.0	3746
211.1	3394
213.0	4080
215.0	3566
215.1	3538
215.2	3637
217.0	3615
219.0	3656
220.0	3682
220.1	3782
220.2	3782
221.0	3575
221.3	3575
222.0	3750
224.0	3896
224.1	3896
224.2	3896
226.0	3636
226.1	3644
227.0	4182
228.0	3677
230.0	3604

FRI.TECH	BESER
NO	NO
232.0	3832
233.0	3622
236.0	3414
236.0	3714
237.0	3709
241.0	3499
241.1	3463
246.01	3582
247.0	3400
248.0	3436
249.0	3600
250.0	3395
253.0	3757
253.0	3857
254.0	3370
255.0	3598
255.1	3765
256.0	3501
256.1	3752
257.0	3602
258.0	3884
259.0	3675
261.0	3863
262.0	3659
263.0	3938
264.0	3663
265.0	3567
266.0	3762
268.0	3763
271.0	3614
272.0	3606
272.1	3794
274.0	3462
276.0	3679
277.0	3994
278.0	3773
282.1	3568
282.2	3569
283.0	3548
283.0	3690
283.2	3790
283.3	3790
284.0	3717
284.1	3717
286.0	3577
287.0	3598
288.0	3506
288.1	3590
289.0	4088
294.0	3873
295.0	4059
300.0	3754
301.0	3768
302.0	3744
304.0	3764
305.0	4079
306.0	3648
307.0	3704
311.0	3875
312.0	3833
313.0	4010
315.0	3697
316.0	3943
318.0	3919
319.0	4125
320.0	3670
325.0	3877
326.0	3755
327.0	4100
328.0	4093
329.0	3784
330.0	3826
330.1	3826
330.3	3826
330.4	3826
331.0	3800
331.1	3800
331.1	4123
331.2	3800
331.3	3800

FRI.TECH	BESER
NO	NO
334.0	3834
335.0	3835
336.0	3820
337.0	3854
338.0	3931
340.0	3935
341.0	3934
344.0	3950
345.0	3852
346.0	3853
346.1	3853
347.2	3848
349.0	3846
350.0	4281
351.0	3836
352.0	3676
353.0	3821
356.0	4062
357.0	3918
359.0	4094
361.0	3453
361.1	3412
362.0	3661
362.1	3771
363.0	3512
366.0	3674
367.0	3887
369.0	3446
370.0	3778
371.0	4087
373.0	3843
374.0	3993
376.0	3511
379.0	3723
382.0	3653
383.0	3802
385.0	4009
386.0	3574
388.0	3898
389.0	3620
390.0	3901
393.0	3696
394.0	3695
396.0	3780
412.0	4271
413.0	4108
414.0	3892
415.1	3893
416.0	3809
419.0	3779
421.1	3932
422.0	3859
429.0	3913
430.0	3928
432.0	3745
434.0	4027
436.0	4112
438.0	3769
439.0	3788
441.0	4072
442.0	4013
444.0	3822
445.0	4158
446.0	4153
447.0	3693
449.0	3777
450.0	4110
454.0	4034
456.0	3710
462.0	3817
463.0	3825
466.0	3890
467.0	4153
468.0	3829
469.0	3830
470.0	3891
471.0	3634
472.0	4071
473.0	3379
477.0	3324

FRI.TECH	BESER
NO	NO
478.0	4109
478.0	4232
480.0	4115
481.0	4155
487.0	3666
491.0	4118
492.0	3889
493.0	3874
495.0	3767
496.0	3407
497.0	3326
497.0	3955
498.0	3900
500.0	4084
501.0	3983
501.1	3983
501.2	3983
506.0	3369
511.0	3667
514.0	3579
516.0	3912
518.0	3985
519.0	3959
520.0	3961
524.0	3951
527.0	3894
528.0	4269
529.0	4028
531.0	3978
532.0	3979
533.0	3793
535.0	3895
540.0	4012
541.0	4011
546.0	3986
548.0	3914
549.0	3801
550.0	3885
551.0	3545
552.0	3921
554.0	3733
555.0	4042
556.0	4211
558.1	4040
559.0	3850
560.0	3849
561.0	3856
562.0	3855
563.0	4138
563.1	4138
564.0	3904
564.2	3904
565.1	4096
567.0	4095
568.0	3841
568.1	3841
569.0	3905
570.0	3842
574.0	4180
575.0	3881
576.0	3879
578.0	4097
579.0	4102
580.0	4103
582.0	3630
583.0	3581
585.0	4126
586.0	4069
587.0	3678
588.0	3804
589.0	3681
590.0	3861
591.0	3923
591.W	3923
592.0	3924
594.0	3942
594.3	3942
595.0	3433
595.1	3433
599.1	3908

FRI.TECH	BESER
NO	NO
613.0	4101
613.0	4209
616.0	3939
617.0	3940
618.0	3946
620.0	3823
622.0	3831
625.0	4119
626.0	3988
627.0	4017
628.0	3933
632.0	4082
634.0	4105
635.0	4111
638.0	4216
642.0	4031
645.0	3968
646.0	4001
649.0	3976
651.0	3795
652.0	3605
653.0	3987
654.0	4173
654.1	4173
654.2	4173
655.0	3984
660.0	4181
661.0	3909
667.0	4137
669.0	4075
670.0	4075
671.0	4076
675.0	3945
681.0	4248
682.0	4247
683.0	3628
683.0	3629
685.0	4240
686.0	4210
687.0	3925
687.1	3965
687.4	3965
688.0	3926
689.0	3962
690.0	3963
691.0	4161
693.0	4058
694.0	3416
695.0	3920
696.0	3906
696.1	3906
697.0	3907
699.0	3781
703.0	4186
708.0	3413
710.0	3944
723.0	3972
724.0	3981
724.1	3981
725.0	3922
725.1	3922
725.1	4171
726.0	3820
727.0	4092
728.0	4151
730.0	3867
732.0	4006
733.0	4198
734.0	4018
735.0	4016
740.0	3880
741.0	3980

FRI.TECH	BESER
NO	NO
742.0	3510
746.0	4159
747.0	3886
752.0	3765
753.0	4106
757.0	4074
759.0	3952
761.0	3958
762.0	3954
763.0	3953
764.0	4077
765.0	3949
767.0	3910
768.0	3876
769.0	3911
772.0	3915
773.0	4274
774.0	4085
775.0	4099
775.1	4275
777.0	4113
778.0	4036
779.0	4081
780.0	4213
781.0	4000
782.0	3929
783.1	3748
786.0	4207
788.0	4208
789.0	4179
790.0	4222
791.0	4259
791.2	4249
792.0	4260
796.0	4157
797.0	3827
799.0	4039
799.1	4039
800.0	4165
801.0	4035
803.0	3960
804.0	3989
805.0	4160
806.0	4156
807.0	3975
808.0	4038
809.0	4122
809.1	4122
809.2	4122
810.0	3956
812.0	4037
813.0	3903
814.0	3982
816.0	3964
818.0	4141
819.0	4134
820.0	3970
826.0	3797
827.0	4015
828.0	3966
830.0	3967
831.0	3969
832.0	3971
833.0	3964
834.0	4142
835.0	4143
837.0	3996
838.0	3997
840.0	4121
848.0	4162
855.0	4230
856.0	4008
857.0	4014
859.0	4149
861.0	4150
862.0	4073
866.0	3749
866.1	3749

FRI.TECH	BESER
NO	NO
867.0	4169
868.0	3995
879.0	4005
880.0	4004
886.0	4029
891.0	4054
892.0	4258
895.0	4147
898.0	4146
899.0	3948
903.0	4061
906.0	4135
915.0	4056
916.0	4057
917.0	4132
917.0	4172
918.0	4060
919.0	4124
921.0	4002
923.0	4220
924.0	4215
929.0	3747
944.0	3927
952.0	3998
953.0	4167
954.0	4255
955.0	4256
956.0	3916
958.0	4049
959.0	4136
960.0	4166
961.0	4233
965.0	4145
966.0	4228
967.0	4241
991.0	4140
992.0	4204
998.0	4201

FRIXA	BESER
NO	NO
FPD02	3510
FPD05	3470
FPD06	3687
FPD08	3687
FPD09	3744
FPD12	3687
FPD12R	3894
FPD13	3951
FPD14	4073
FPD16	3976
FPH01	3502
FPH01R	4087
FPH02	3632
FPH02F	3632
FPH02NF	3959
FPH06	3507
FPH09	3648
FPH11	3843
FPH17R	3993
FPH18	3960
FPH20	4028
FPH21	3959
FPHXGR	3993
FPK01N	3880
FPK01NR	3980
FPK04N	4269
FPK10N	3802
FPK14N	4028
FPK15	3978
FPK15R	3979
FPK17	3961
FPK17N	4001
FPK20	3968
FPK20R	3969
FPK24	4269
FPK25	4039
FPK25R	4165
FPS02	3797
FPY03R	3895
FXD02	3687
FXH03	3843
FXH05	3959
FXH08	3502
FXK03	4001
S1H01	3502
S1H02NF	3959
S1H17R	3993
S1H20	4028
S1HXGR	3993
S1K01N	3880

FTE	BESER
NO	NO
BL2513A1	4189

GALFER	BESER
NO	NO
20009	3444
20010	3486
20013	3350
20015	3410
20025	3441
20026	3549
20031	3317
20034	3316
20038	3335
20040	3423
20044	3408
20080	3318
20093	3625
20097	3327
20098	3312
20100	3343
20100	3483
20103	3365
20105	3320
20107	3315
20107	3515
20117	3806
20121	3374
20123	3378
20136	3468
20139	3424
20140	3466
20141	3424
20144	3467
20147	3440
20158	3503
20160	3339
20160	3514
20167	3466
20179	3425
20180	3459
20182	3536
20183	3543
20184	3432
20194	3417
20194	3417
20196	3650
20197	3619
20198	3649
20200	3572
20201	3529
20202	3621
20203	3573
20204	3419
20205	3429
20209	3605
20214	3380
20216	3496
20218	3493
20219	3495
20225	3490
20230	3466
20231	3423
20232	3523
20240	3680
20243	3740
20246	3536
20247	3433
20249	3773
20252	3609
20253	3444
20256	3457
20257	3430
20258	3470
20265	3593
20266	3593
20271	3717
20272	3469
20273	3531
20274	3551
20286	3464
20290	3545
20292	3528
20295	3487
20297	3470

GALFER	BESER
NO	NO
20298	3608
20299	3556
20301	3595
20302	3559
20305	3643
20306	3689
20308	3578
20309	3513
20311	3590
20315	4020
20317	3623
20320	3558
20326	3539
20327	3596
20328	3819
20329	3873
20331	3782
20332	3589
20334	3417
20336	3506
20337	3658
20343	3618
20344	3585
20345	3529
20347	3553
20349	3540
20350	3799
20351	3897
20354	3563
20355	3538
20357	3575
20360	3617
20362	3750
20365	4214
20367	3879
20368	3881
20369	3736
20371	3733
20372	3909
20373	3680
20374	3994
20376	3466
20386	3335
20388	3569
20390	3637
20394	3567
20395	3680
20396	3678
20397	3670
20398	3677
20400	3581
20401	3863
20408	3566
20413	3529
20415	3656
20419	3606
20421	3896
20422	3663
20423	3722
20426	3569
20427	3568
20433	3529
20434	3548
20434	3690
20440	4125
20441	3676
20442	3821
20444	3896
20445	3942
20448	3790
20451	3636
20454	3878
20455	3659
20458	4062
20461	3614
20463	3782
20464	3938
20470	3853
20473	3617
20474	3564

GALFER	BESER
NO	NO
20478	4112
20480	3918
20489	3529
20491	3800
20492	3529
20494	3679
20496	3790
20501	3503
20502	3826
20503	3800
20505	3754
20507	3755
20511	3896
20512	3590
20514	3986
20516	3834
20517	3835
20518	3914
20519	3877
20522	3496
20524	3553
20534	3794
20535	3853
20537	4059
20538	3983
20539	3827
20540	4281
20542	3762
20545	3846
20547	3852
20549	3529
20552	3836
20554	3763
20557	3590
20559	3529
20562	4100
20563	4093
20568	4123
20569	3539
20570	3644
20574	4102
20575	4103
20576	3950
20578	3919
20580	4095
20582	3681
20583	3804
20584	3861
20586	4346
20588	4181
20591	4347
20595	3921
20597	3784
20599	3853
20602	3935
20603	3934
20613	4173
20614	3800
20616	3820
20617	3473
20618	3445
20620	3617
20621	3643
20622	3885
20624	3856
20625	4058
20627	3855
20629	3826
20630	3984
20631	3575
20634	4180
20636	3610
20638	4179
20650	4211
20656	4042
20658	4345
20660	3946
20662	3890
20663	4153
20668	3983

GALFER	BESER
NO	NO
20670	3853
20676	3529
20680	3904
20682	3905
20684	3850
20685	3849
20686	3854
20687	3931
20692	3801
20703	3800
20706	3841
20707	3841
20711	4076
20712	3817
20713	3825
20714	3769
20717	4118
20719	3889
20722	3607
20727	3853
20730	3820
20732	4138
20733	4138
20734	3905
20735	3800
20736	3823
20737	3826
20738	3800
20740	3826
20741	3983
20746	4208
20748	3853
20751	3923
20754	4096
20761	3939
20762	3940
20763	3981
20764	3922
20765	4042
20766	3926
20768	4037
20769	3925
20770	3962
20780	4062
20786	4157
20790	3964
20800	3920
20801	3906
20802	3907
20803	4181
20806	4207
20810	3904
20812	4159
20817	4160
20819	4156
20825	4092
20826	3994
20827	3995
20828	3965
20830	3987
20833	3800
20834	4134
20836	4211
20838	3853
20842	3950
20853	4122
20859	3970
20860	4210
20866	4038
20868	4137
20872	3981
20873	3922
20874	3967
20875	3966
20876	3966
20877	4240
20880	3320
20889	4161
20897	4146
20901	4094

GALFER	BESER
NO	NO
20905	4056
20906	4132
20906	4172
20907	4057
20908	3853
20915	4169
20918	3964
20920	3529
20921	3971
20922	3926
20924	3836
20925	3836
20926	4230
20928	4008
20933	4248
20934	4248
20935	4249
20937	3972
20938	4151
20940	3963
20952	4173
20953	4014
20955	3642
20957	4121
20963	4247
20972	3841
20975	3954
20979	3976
20987	3826
20988	3956
20994	4077
20995	3984
21004	3624
21006	3683
21011	3526
21014	3642
21016	3373
21017	3311
21019	3422
21020	3393
21022	3326
21024	3583
21028	3630
21033	3318
21034	3442
21035	3641
21036	3428
21037	3603
21038	3445
21039	3473
21041	3527
21042	3482
21043	3366
21044	3366
21048	3339
21048	3514
21052	3545
21053	3629
21054	3628
21065	3405
21066	3484
21071	3509
21072	3646
21073	3582
21074	3752
21077	3674
21078	3887
21080	3449
21081	3437
21083	3371
21084	3504
21085	3397
21086	3714
21088	3448
21089	3633
21090	3757
21090	3857
21091	3686
21092	3522
21093	3709

GALFER	BESER
NO	NO
21096	3400
21097	4104
21098	3562
21099	3554
21099	3651
21100	3622
21101	3603
21101	3604
21102	3832
21104	4128
21105	3760
21106	3685
21107	3888
21108	3415
21111	3394
21114	3882
21116	3723
21118	3402
21119	3600
21120	3395
21121	4212
21124	3994
21125	3315
21125	3515
21128	3416
21139	3462
21146	3687
21148	3744
21149	3436
21150	3436
21151	3746
21158	3696
21159	4148
21160	3631
21161	3704
21162	3607
21164	3632
21166	3507
21169	4281
21170	3640
21172	3892
21176	4103
21177	3675
21180	3809
21181	4108
21182	3688
21183	3577
21184	3660
21197	3662
21198	3771
21200	3661
21203	3717
21204	3426
21205	4080
21209	3602
21210	3884
21211	3883
21214	3776
21215	4086
21216	3560
21217	3693
21222	3496
21225	3502
21230	3584
21235	3763
21242	3539
21243	3496
21244	3943
21246	3453
21249	3768
21257	4126
21258	4069
21259	3421
21261	3320
21262	3778
21268	4197
21271	3872
21278	3648
21280	4011
21282	4013

GALFER	BESER
NO	NO
21283	4009
21287	4182
21288	4078
21289	3867
21291	3673
21292	3829
21293	3769
21294	4158
21295	3843
21296	3449
21297	3522
21298	3552
21299	4010
21300	3632
21301	3632
21302	3632
21303	3683
21306	3892
21308	4269
21309	4269
21311	3915
21313	3667
21318	3822
21321	3872
21323	4079
21325	4274
21327	4115
21328	3780
21331	3932
21332	3859
21335	3901
21336	3928
21340	4110
21343	4222
21345	4109
21345	4232
21350	4119
21351	3802
21352	4094
21353	4271
21355	4082
21357	3723
21358	3687
21367	3833
21368	3823
21369	3873
21375	3830
21378	3512
21382	3693
21387	4087
21388	4148
21391	3688
21392	4108
21393	4275
21397	4155
21399	4085
21401	4084
21404	3779
21407	3795
21408	3933
21414	3951
21415	3831
21417	3959
21418	3961
21419	3993
21420	3900
21422	4031
21423	4028
21424	3978
21425	3979
21428	4101
21428	4209
21431	4017
21433	3912
21434	4152
21435	3913
21436	3764
21438	4027
21441	3788
21442	3825

GALFER	BESER
NO	NO
21444	3891
21446	3955
21447	3892
21448	4106
21455	4198
21456	4001
21457	3968
21458	3985
21459	3872
21460	3697
21461	4153
21466	3895
21467	3944
21471	3969
21472	4016
21473	3976
21474	4000
21477	3894
21479	4111
21481	4213
21483	3975
21484	3903
21485	4165
21487	3996
21488	3997
21502	4061
201002	4028
201004	4028
201005	4260
201008	3948
201010	3945
201022	3949
201023	3978
201025	3979
201028	4113
201029	4143
201030	3952
201031	3960
201033	3880
201035	3980
201037	3989
201047	3968
201049	4039
201053	4122
201055	4081
201056	3745
201061	3906
201065	3953
201081	4029
201082	4293
201085	3929
201126	3964
201127	4152
201134	4157
201135	4157
201145	4149
201148	4150
201149	4150
201183	4141
205135	3829
205171	4011
205192	4082
205196	3764
205213	4119
205238	4012
205241	3955
205242	3910
205262	3831
205274	4105
205279	3830
205295	3673
205322	3915
205333	3891
205344	4110
205373	4009
205404	3693
205416	4085
205418	3912

GIRLING	BESER
NO	NO
6118404	4325
6119321	4326
6120141	4335
6120195	4313
6120421	4336
6120702	4334
6121445	4313
6134759	4277
6135526	4342
6135605	4324
6136146	4019
6144482	4339
6146069	4337

GRANTEX	BESER
NO	NO
PAS - 258	3679
PAS - 352	3433
PAS - 429	3773
PAS - 473	3749
PAS - 490	3575
PAS - 549	3994

HELLA	BESER
NO	NO
8DB 355 020-351	4339
8DB 355 020-471	4335
8DB 355 020-581	4313
8DB 355 020-741	4019
8DB 355 021-211	4313
8DB 355 021-291	4336
8DB 355 021-471	4312
8DB 355 021-511	4335
8DB 355 021-541	4334
8DB 355 021-551	4334
8DB 355 021-781	4342
8DB 355 021-911	4336
8DB 355 023-211	4287
8DB 355 024-621	4308
8DB 355 025-631	4301
T1560	4277
T1769	4325
T1859	4325
T2044	4324
T2051	4337
T2149	4326

ICER	BESER
NO	NO
140187	3366
140313	3379
140315	3369
140316	3537
140347	3415
140352	3371
140365	3527
140403	3440
140405	3513
140444	4087
140503	3413
140506	3397
140518	3758
140521	3462
140523	3634
140524	3634
140526	3397
140542	3603
140544	3526
140604	3436
140610	3446
140614	3414
140614	3714
140620	3482
140648	3605
140687	3499
140690	3463
140700	3543
140701	3448
140702	3771
140799	3412
140814	3513
140834	3537
140839	3662
140853	3757
140853	3857
140854	3757
140854	3857
140884	3692
140885	3760
140892	3523
140896	3473
140897	3445
140926	3459
140927	3461
140933	3888
140965	3749
140968	4182
140979	3685
140980	3688
140990	3674
140991	3887
141002	3882
141007	3560
141009	3714
141021	3436
141022	3436
141026	3673
141027	3693
141028	3366
141049	3553
141053	3595
141054	3559
141089	3453
141090	3512
141096	3883
141102	3678
141103	3670
141104	3567
141111	3507
141122	3799
141126	3614
141166	3606
141167	3671
141168	4020
141170	3777
141175	3544
141208	3575
141224	3574
141228	3781

ICER	BESER
NO	NO
141232	3872
141234	3809
141241	3680
141246	3653
141251	4034
141266	3648
141284	3861
141288	3681
141289	3804
141315	3848
141320	3794
141328	3749
141345	3874
141351	3795
141367	3784
141425	3553
141442	3856
141455	3802
141498	3921
141511	3855
141522	3835
141523	3834
141524	3914
141563	3868
141785	3962
141786	3925
141787	3926
141792	3920
141793	3906
141794	3907
141802	3972
141803	3981
141804	3820
141813	4002
141823	4151
141832	3965
141836	3922
141837	4092
141846	3965
141849	3963
141953	4162
141999	4056
142000	4132
142000	4172
142001	4057
142116	4175
142119	4174
142219	4227
150277	3390
150565	3521
150722	3679
150759	3433
150764	3433
150894	3773
151078	3773
151161	3994
151640	3823
151880	3995
151958	4169
180009	3455
180011	3350
180020	3320
180033	3311
180038	3326
180041	3346
180060	3333
180067	3317
180068	3316
180069	3481

ICER	BESER
NO	NO
180070	3840
180085	3325
180088	3373
180091	3377
180091	3377
180092	3416
180093	3312
180101	3329
180102	3329
180120	3321
180121	3322
180127	3323
180130	3313
180140	3315
180140	3515
180142	3373
180155	3393
180161	3328
180162	3318
180164	3709
180169	3327
180169	3375
180170	3335
180185	3710
180197	3315
180197	3515
180198	3405
180207	3376
180219	3343
180219	3483
180221	3327
180224	3806
180229	3324
180230	3423
180231	3661
180235	3374
180242	3806
180247	3601
180248	3340
180255	3312
180257	3527
180258	3329
180269	3421
180281	3378
180284	3404
180286	3407
180293	3314
180301	3416
180302	3326
180307	3365
180311	3509
180317	3370
180318	3378
180323	3339
180323	3514
180324	3339
180324	3514
180329	3417
180337	3536
180348	3579
180353	3418
180375	3381
180388	3646
180397	3468
180402	3484
180409	3394
180410	3417
180410	3417
180413	3419
180414	3429
180415	3466
180417	3493
180418	3424
180420	3611
180422	3572
180423	3573
180448	3490
180451	3621
180454	3410
180455	3624

ICER	BESER
NO	NO
180457	3381
180459	3486
180460	3444
180461	3441
180462	3402
180467	3620
180469	3442
180473	3625
180474	3424
180484	3633
180494	3752
180497	3400
180509	3395
180510	3408
180511	3315
180511	3515
180517	3550
180543	3549
180552	3422
180554	3503
180555	3474
180556	3428
180557	3546
180602	3401
180609	3691
180611	3449
180616	3504
180619	3701
180622	3372
180633	3380
180646	4087
180649	3496
180660	3467
180671	3423
180692	3717
180696	3457
180697	3529
180723	3495
180725	3746
180729	3432
180734	3776
180741	3419
180745	3430
180746	3580
180750	3582
180751	4212
180752	4212
180758	3470
180766	3609
180771	3622
180773	3564
180775	3583
180776	3589
180778	3583
180784	3536
180787	3680
180789	3529
180790	3464
180795	3437
180797	3696
180798	4148
180801	3563
180803	3562
180804	3660
180807	3469
180808	3590
180809	3649
180812	3873
180835	3650
180836	3619
180837	3641
180838	3424
180858	3623
180860	3683
180861	3629
180862	3556
180863	3555
180864	3487
180865	3378
180874	3596

ICER	BESER
NO	NO
180875	3603
180875	3604
180878	4104
180879	3640
180882	3766
180883	3584
180887	3502
180916	3558
180917	3593
180918	4214
180920	3819
180921	3878
180922	4128
180924	3608
180928	3491
180930	3539
180932	3528
180937	3598
180938	3545
180950	3635
180951	3600
180953	3608
180958	3686
180959	3607
180960	4212
180962	3631
180969	3723
180970	3522
180971	3832
180972	3408
180973	3658
180974	3630
180976	3581
180981	4108
180985	3700
180988	3736
180989	3733
180993	3503
180998	3426
180999	4078
181000	4080
181001	3745
181005	3554
181005	3651
181011	3551
181012	3531
181018	3643
181019	3704
181023	3717
181045	4212
181048	3585
181051	3578
181084	3623
181092	3510
181094	3577
181101	3779
181107	3750
181110	3833
181115	3677
181116	3602
181117	3675
181119	3538
181125	3617
181128	3665
181130	3566
181133	3695
181134	3511
181136	3636
181139	3506
181141	3656
181142	3570
181142	3594
181144	4087
181152	3505
181152	3615
181153	3598
181155	3642
181156	3896
181157	3896
181158	3627

ICER	BESER
NO	NO
181159	3863
181165	4062
181178	3637
181179	3697
181184	3682
181185	3740
181187	4148
181204	3659
181210	3554
181210	3651
181215	3458
181217	3659
181229	3722
181233	4125
181236	4059
181243	3618
181247	4079
181249	3762
181255	3938
181259	3863
181260	3687
181260	3687
181262	3744
181263	3687
181264	3754
181265	3755
181267	3632
181268	3778
181271	3763
181273	3748
181274	4281
181276	4126
181277	4069
181282	3618
181283	3617
181285	3610
181287	4155
181297	3919
181298	3918
181299	3717
181300	4010
181304	3768
181308	3552
181309	3780
181310	3663
181311	3676
181312	3821
181317	3419
181318	3764
181319	3884
181332	3872
181335	3943
181338	3782
181340	3898
181342	3901
181343	3877
181348	3897
181349	3782
181353	3846
181358	3685
181363	3763
181366	3470
181369	3836
181370	4009
181372	3843
181374	3892
181380	4100
181381	4093
181384	3590
181386	3769
181388	3820
181390	4101
181390	4209
181391	4103
181395	4095
181396	3590
181398	4011
181406	3934
181419	3935
181428	4094

ICER	BESER
NO	NO
181429	3800
181431	3950
181432	3852
181433	3853
181436	4197
181438	3539
181439	3938
181440	3800
181441	3790
181443	4271
181444	3826
181448	3859
181450	3854
181451	3931
181452	3928
181502	4123
181507	3900
181508	3790
181509	3933
181512	4012
181513	3817
181514	3825
181517	4010
181518	3548
181518	3690
181519	4158
181520	4153
181521	3932
181526	3846
181527	4097
181530	3881
181532	4119
181534	3983
181535	3849
181536	4211
181537	3801
181540	4028
181542	4118
181543	4109
181543	4232
181548	3879
181549	3879
181550	4347
181552	3879
181553	3986
181557	3985
181558	3831
181565	4222
181566	3951
181567	3904
181570	3644
181572	3850
181573	3890
181575	4138
181577	4180
181578	3889
181579	3849
181580	3767
181581	4115
181583	3769
181584	4105
181587	4112
181589	4027
181592	4042
181593	4152
181596	3569
181597	4138
181600	3905
181604	3569
181606	3978
181607	3788
181610	4269
181611	4076
181614	4345
181617	3885
181618	3765
181620	4075
181632	3822
181635	3797
181643	3961

ICER	BESER
NO	NO
181644	3959
181645	3993
181646	3895
181648	3826
181649	3849
181650	3529
181651	3853
181654	4096
181656	3939
181657	3940
181658	3946
181659	4173
181660	4293
181661	3944
181665	3891
181667	4303
181668	4303
181673	3800
181675	3923
181676	3924
181679	4137
181682	4093
181683	4346
181684	4181
181687	4179
181688	4153
181689	3910
181695	4159
181696	4074
181697	4081
181702	3987
181703	4017
181705	4082
181706	3911
181708	4001
181709	3968
181710	3969
181711	3880
181712	3980
181713	4016
181714	3976
181715	4000
181717	3912
181719	4084
181720	3979
181722	4058
181723	3829
181727	3894
181729	3984
181734	3830
181736	3913
181743	3853
181744	3853
181746	4106
181747	3929
181748	3983
181751	4111
181753	4188
181754	4189
181759	4213
181760	3953
181761	3949
181762	4077
181764	3948
181765	3984
181771	4210
181774	3958
181775	4161
181778	3841
181779	3841
181784	3975
181789	3945
181790	3945
181794	3907
181796	4240
181798	3976
181800	4036
181801	4157
181806	3955
181809	3800

ICER	BESER
NO	NO
181817	4072
181820	4013
181821	4248
181822	3988
181823	4151
181824	3903
181825	3853
181826	4039
181827	4165
181828	3960
181829	3989
181834	4038
181835	4260
181838	3933
181843	4173
181851	3970
181852	3964
181854	3966
181855	3967
181856	4134
181863	4247
181865	4249
181867	3982
181868	4029
181869	3956
181870	4037
181873	3747
181874	3996
181875	3997
181876	4143
181881	4122
181883	3827
181887	4160
181888	4156
181891	4211
181892	4147
181895	3971
181899	3954
181901	3933
181903	4121
181904	4142
181908	4005
181909	4004
181911	4035
181913	4149
181915	3964
181916	4146
181919	4207
181921	4309
181924	4141
181929	4150
181936	4277
181939	4008
181942	4230
181943	4014
181946	3944
181948	3969
181954	4060
181955	3980
181956	4291
181967	4135
181972	4208
181973	4208
181974	3886
181975	4242
181976	4061
181982	4255
181983	4256
181987	4310
182003	3952
182006	4167
182019	3983
182027	4145
182029	4166
182030	4220
182031	4215
182035	4136
182036	4311
182060	4113
182066	3998

ICER	BESER
NO	NO
182067	4006
182068	4198
182069	4018
182074	4015
182075	4031
182078	4202
182082	4124
182088	4258
182099	4241
182108	4204
182110	4200
182115	4140
182126	4315
182129	4176
182131	4201
182133	3748
182134	4226
182136	4233
182153	4312
182169	4318
182170	4286
182171	4317
182180	4205
182181	4282
182189	4295
182198	4270
182202	4308
182214	4349
182222	4286
182222	4287
182223	4284
182249	4307
182268	4251
182269	4246
182274	4253
182822	4142
140403-700	3440
140526-087	3397
140526-87	3397
140648-700	3605
140700-700	3543
140853-700	3757
140853-700	3857
140892-066	3523
140933-700	3888
141049-700	3553
141053-700	3595
141054-700	3559
141089-071	3453
141102-046	3678
141103-046	3670
141104-046	3567
141111-700	3507
141122-700	3799
141126-204	3614
141126-700	3614
141208-117	3575
141208-200	3575
141232-701	3872
141315-701	3848
141351-700	3795
141367-701	3784
141425-700	3553
141498-701	3921
141511-703	3855
141522-066	3835
141523-066	3834
141524-066	3914
141787-204	3926
141793-204	3906
141813-202	4002
141836-203	3922
141836-203	4171
150722-204	3679
150894-066	3773
151078-110	3773
151078-111	3773
151078-116	3773
151078-117	3773
151080-110	3994

ICER	BESER
NO	NO
151080-111	3994
151161-116	3994
151161-117	3994
151640-117	3823
151958-117	4169
180060-067	3333
180235-700	3374
180281-700	3378
180337-700	3536
180413-700	3419
180414-700	3429
180415-700	3466
180417-066	3493
180448-700	3490
180454-066	3410
180454-072	3410
180454-073	3410
180455-700	3624
180510-700	3408
180552-700	3422
180553-203	3474
180554-700	3503
180555-700	3474
180557-700	3546
180696-700	3457
180697-700	3529
180697-703	3529
180729-203	3432
180729-700	3432
180745-700	3430
180752-701	4212
180766-006	3609
180766-6	3609
180766-700	3609
180784-700	3536
180789-700	3529
180803-700	3562
180804-700	3660
180809-700	3649
180835-700	3650
180836-700	3619
180860-701	3683
180861-200	3628
180862-700	3556
180930-700	3539
180950-700	3635
180972-700	3408
180973-700	3658
180989-700	3733
180993-204	3503
180993-700	3503
181011-700	3551
181012-700	3531
181107-700	3750
181117-700	3675

ICER	BESER
NO	NO
181134-700	3511
181136-700	3636
181155-700	3642
181156-700	3896
181157-203	3896
181157-700	3896
181165-700	4062
181204-702	3659
181217-702	3659
181233-701	4125
181236-701	4059
181255-702	3759
181255-702	3938
181265-700	3755
181271-702	3763
181274-704	4281
181282-700	3618
181285-700	3610
181287-703	4155
181312-202	3821
181317-700	3419
181335-203	3943
181353-701	3846
181363-702	3763
181369-701	3836
181375-202	3893
181380-701	4100
181381-701	4093
181388-701	3820
181406-701	3934
181419-701	3935
181428-701	4094
181429-701	3800
181438-700	3539
181439-702	3938
181440-203	3800
181440-701	3800
181444-203	3826
181444-701	3826
181445-208	4301
181450-700	3854
181451-700	3931
181502-703	4123
181526-701	3846
181534-700	3983
181535-701	3849
181553-701	3986
181570-700	3644
181572-701	3850
181575-701	4138
181579-701	3849
181593-703	4152
181597-701	4138
181600-703	3905
181614-700	4345
181617-202	3885
181617-203	3885
181648-701	3826
181649-701	3849
181650-703	3529
181656-700	3939
181657-700	3940
181658-703	3946
181659-700	4173
181660-700	4293
181661-700	3944
181673-701	3800
181674-203	3842
181675-701	3923
181682-701	4093
181690-200	4003
181702-701	3987
181722-701	4058
181729-701	3984
181810-203	3826
181826-201	4039
181843-203	4173
181854-200	3966
181881-200	4122
181901-203	3933

ICER	BESER
NO	NO
181939-202	4008
181942-202	4230
181957-203	4314
181987-200	4310
182003-200	3952
182111-204	4228
182170-203	4286
182222-208	4287

IRQ	BESER
NO	NO
900001	3318
900006	3317
900007	3316
900009	3311
900052	3327
900067	3321
900075	3315
900075	3515
900076	3339
900076	3514
900078	3423
900098	3393
900103	3405
900117	3527
900121	3340
900123	3421
900124	3365
900127	3410
900133	3513
900135	3468
900138	3417
900140	3440
900141	3625
900142	3378
900151	3466
900153	3467
900158	3493
900162	3381
900166	3424
900173	3417
900173	3417
900178	3611
900180	3486
900181	3380
900182	3573
900184	3572
900185	3621
900186	3624
900187	3619
900188	3536
900189	3441
900190	3444
900191	3495
900192	3379
900199	3484
900213	3650
900214	3635
900215	3649
900222	3474
900223	3526
900228	3423
900229	3543
900230	3603
900232	3371
900233	3490
900234	3428
900235	3422
900236	3758
900238	3459
900239	3432
900244	3709
900248	3509
900254	3523
900258	3641
900259	3589
900263	3609
900264	3449
900265	3400
900267	3463
900269	3564
900274	3457
900277	3757
900277	3857
900281	3448
900282	3560
900299	3470
900300	3469
900302	3717
900304	3529
900306	3430

IRQ	BESER
NO	NO
900308	3563
900310	3464
900313	3680
900321	3882
900323	3436
900324	3578
900326	3487
900332	3473
900333	3445
900335	3633
900336	3501
900338	4212
900341	3504
900349	3683
900351	3752
900358	3632
900366	3522
900386	3401
900388	3407
900390	3666
900409	4104
900410	3562
900416	3415
900420	3623
900422	3580
900431	3662
900432	3531
900444	3402
900456	3714
900458	3551
900471	3634
900473	3482
900474	3462
900484	3679
900491	3491
900497	3640
900507	3733
900508	3590
900510	3539
900520	3596
900538	3983
900540	4040
900551	3831
900554	4119
900555	3988
900556	3933
900560	4082
900562	4105
900563	4111
900569	3968
900570	4001
900573	3976
900576	3987
900577	4173
900578	3984
900585	4181
900588	3909
900598	4137
900778	4020
900782	3682
900786	3678
900789	3507
900790	3570
900790	3594
900792	3636
900813	3442
900817	3670
900818	3567
900821	3740
900825	4062
900828	3566
900830	3884
900831	3538
900834	3750
900838	3577
900843	3512
900845	3799
900863	3585
900867	3554
900867	3651

IRQ	BESER
NO	NO
900874	3583
900886	3528
900887	3503
900894	4128
900898	3766
900908	3408
900922	3502
900924	3686
900935	3593
900936	3558
900938	3608
900939	3617
900943	3556
900944	3878
900945	3819
900965	3553
900968	3673
900969	3883
900975	3688
900976	3685
900980	4182
900991	3674
900992	3888
900995	3559
900996	3595
901009	4260
901011	4259
901012	4222
901021	4208
901023	4179
901025	4207
901034	4006
901035	4018
901039	3867
901041	3964
901044	3820
901045	3981
901047	3922
901052	4141
901053	3510
901054	4122
901055	3925
901057	4173
901065	3826
901072	3781
901075	4186
901076	3853
901078	4161
901079	4058
901080	4157
901082	3416
901083	3920
901084	3906
901085	3907
901087	4159
901090	4160
901091	4156
901096	3980
901097	3960
901098	3989
901100	3886
901101	3965
901102	4092
901104	3852
901107	4106
901108	4016
901110	4039
901111	4165
901112	4035
901114	3969
901115	3880
901119	3412
901121	4293
901122	3944
901126	3413
901127	4099
901129	3915
901131	4085
901132	4113
901134	4274

IRQ	BESER
NO	NO
901135	4275
901143	4303
901146	4247
901147	4249
901149	3628
901150	4210
901151	4240
901153	3962
901154	3926
901155	3963
901157	3748
901163	3975
901164	3765
901171	3797
901172	3965
901178	4074
901179	3952
901182	4038
901183	4015
901186	3976
901189	3800
901197	3970
901209	3966
901210	3967
901212	4134
901217	3827
901232	4036
901235	4081
901236	4213
901237	4000
901242	3956
901244	4037
901245	3910
901246	3911
901249	3903
901251	3982
901253	3949
901254	4077
901255	3953
901258	3958
901259	3954
901276	3945
901326	3505
901326	3615
901347	4017
901350	3622
901354	3637
901355	4076
901363	3575
901364	3777
901370	3614
901384	3659
901385	3744
901395	3820
901400	3856
901408	4125
901438	3453
901439	3658
901487	3778
901492	3746
901500	3790
901501	3964
901502	3997
901509	3877
901514	3784
901516	3780
901517	3836
901525	4009
901527	3846
901530	4093
901531	3425
901534	3590
901537	3935
901540	3826
901541	3800
901590	4088
901591	3722
901621	3419
901628	3598

IRQ	BESER
NO	NO
901629	3602
901634	3822
901638	3896
901639	3896
901640	3644
901647	3938
901672	3754
901673	3648
901689	3755
901704	4069
901708	3762
901710	3763
901714	3768
901731	4281
901732	4094
901786	4248
901790	3629
901864	4198
905002	3677
905004	3429
905007	3630
905008	3873
905011	3675
905013	4197
905014	3809
905015	3931
905018	3643
905020	3581
905021	3854
905022	4095
905023	3374
905026	4148
905028	3529
905030	3546
905031	3550
905033	3312
905034	3329
905039	3794
905040	3804
905041	3861
905047	3333
905051	3760
905052	3397
905057	3681
905058	3607
905059	3553
905061	3736
905065	3832
905066	3863
905067	3606
905071	3323
905074	3618
905077	3879
905081	3610
905084	3496
905085	4010
905090	3872
905091	3782
905092	3776
905095	3782
905102	3642
905103	3660
905104	3545
905105	4345
905106	3934
905109	3549
905112	3539
905114	3598
905116	3366
905117	3897
905119	3696
905121	3687
905122	4102
905123	3663
905126	3896
905127	4103
905128	4126
905129	3887
905137	3343
905137	3483

IRQ	BESER
NO	NO
905140	3646
905141	3369
905144	3779
905147	3366
905148	3676
905149	4123
905152	3943
905155	3704
905167	4100
905168	3605
905169	3723
905171	4108
905174	3821
905175	4059
905176	3769
905177	4138
905182	4151
905184	3972
905185	3848
905188	4012
905191	3921
905192	3320
905196	4138
905197	3346
905198	3373
905202	3710
905205	3335
905207	3806
905215	3350
905216	3806
905224	3324
905226	3370
905228	3579
905232	3540
905234	3568
905237	3620
905238	3529
905242	3395
905246	3584
905247	3771
905248	3994
905252	3631
905253	3692
905254	3499
905260	3717
905261	3446
905264	3656
905265	3600
905266	3437
905271	3426
905275	3700
905277	3433
905278	3433
905285	3590
905287	4214
905295	4080
905297	3511
905298	3745
905308	4078
905309	3582
905315	4087
905318	4072
905324	3575
905328	3697
905331	3919
905332	3918
905336	3795
905345	3833
905350	3800
905352	3817
905353	4086
905356	3695
905363	3950
905364	3853
905365	4158
905366	4153
905369	4112
905370	4211
905371	3802

IRQ	BESER
NO	NO
905372	3986
905375	4027
905376	3855
905377	4079
905378	3764
905379	3850
905380	3849
905382	3898
905383	3901
905385	4110
905386	3834
905387	3835
905388	3914
905390	4101
905390	4209
905392	4097
905393	3801
905394	3955
905396	4109
905396	4232
905397	3843
905398	4269
905399	4271
905400	3892
905401	3928
905403	3829
905404	4011
905407	3881
905408	3983
905416	3904
905417	4042
905419	3326
905432	3496
905441	3552
905450	4152
905468	4212
905473	3394
905477	4347
905512	3773
905517	3569
905518	3548
905518	3690
905519	3506
905522	3875
905538	3993
905541	3653
905543	3574
905552	3859
905556	3913
905557	3788
905558	4013
905560	3693
905561	4034
905566	3825
905569	3890
905570	4153
905571	3830
905572	3891
905573	4071
905576	4155
905578	4118
905579	3889
905580	3874
905581	3767
905582	3900
905584	4084
905588	3667
905591	3912
905593	3985
905594	3959
905595	3961
905599	3951
905602	3894
905603	4028
905605	3978
905606	3979
905609	3895

IRQ	BESER
NO	NO
905615	3885
905621	4096
905622	3841
905623	3841
905625	3905
905626	3842
905631	4346
905633	4180
905660	3923
905662	3924
905664	3942
905666	3942
905667	3932
905673	3971
905675	4142
905676	4143
905678	3996
905681	4121
905717	3939
905718	3940
905719	3946
905892	3929
905993	3823
905994	4031
905996	4216
906017	3790
906019	3826
906020	3800
906068	4162
906080	4230
906081	4008
906082	4014
906084	4149
906086	4150
906087	4073
906091	3749
906092	3749
906093	4169
906095	3995
906108	4005
906110	4004
906116	4029
906121	4054
906122	4258
906126	4147
906129	4146
906130	3948
906134	4061
906137	4135
906154	4056
906155	4057
906156	4132
906156	4172
906170	3893
906171	3983
906172	4122
906176	3927
906186	4060
906187	4124
906189	4002
906191	4220
906192	4215
906196	3747
906208	3981
906209	3922
906209	4171
906211	3906
906214	4314
906218	3458
906229	4166
906235	4145
906237	4241
906243	3998
906244	4167
906245	4255
906247	4256

IRQ	BESER
NO	NO
906248	3916
906250	4049
906251	4136
906253	4233
906259	4228
906266	4309
906269	3826
906278	4173
906287	4140
906288	4204
906301	4310
906305	4311
915068	3486
915069	3444
915070	3585
915071	3441
915149	3923
915208	3503

JAPANLINE	BESER
NO	NO
6000	3421
6001	4281
6002	3446
6005	4126
6006	4012
6010	4104
6012	4128
6015	3562
6017	3888
6020	3507
6030	3662
6057	4182
6058	4011
6061	4197
6062	4182
6115	3660
6132	3771
16000	3577
16001	3394
16002	3779
16006	3758
16007	3859
16009	4010
16011	3397
16033	3758
16034	3415
16037	3760
16049	3766
16094	3632
16107	4010
16123	4087
26004	3829
26005	3768
26006	3769
26007	3769
26008	4158
26009	3822
26013	3817
26035	3402
26036	3371
26040	3714
26055	3673
26057	3560
26064	3554
26064	3651
26065	4086
26103	4072
26104	3830
26105	3776
26107	3788
26198	3693
36001	3874
36002	3623
36003	3687
36005	4009
36006	3744
36007	3802
36009	3653
36010	3709
36012	3767
36013	3723
36014	3978
36015	3951
36016	3968
36031	3437
36039	3502
36041	3522
36042	3640
36045	3723
36098	3740
36099	3832
36104	3979
36107	3833
46000	3696
46001	3752
46004	3509
46013	3646
46014	3501
46018	3582
46019	3501

JAPANLINE	BESER
NO	NO
46021	3695
46022	3631
46024	3582
46025	3686
46026	3631
46027	3683
46032	3704
46035	3607
46093	3696
46102	4212
46104	4212
46105	4148
46108	4148
56000	3809
56001	3675
56005	3778
56007	3648
56008	3892
56009	3843
56010	4271
56011	3632
56024	3400
56025	3401
56027	3448
56028	3603
56028	3604
56030	3622
56098	3622
56099	3685
56101	4084
56102	4087
56103	4108
56106	3993
56107	4108
56199	3688
66001	3436
66004	3898
66005	3746
66006	3600
66007	3436
76000	4079
76003	3395
76005	3426
76008	4078
76101	4080
86000	3745
86001	4027
86002	3884
86004	3602
86006	3882
86097	3883
96001	3446
96002	3462
96004	3757
96004	3857
96006	3623
96099	3674
96101	3895
96199	3887

JAPANPARTS	BESER
NO	NO
JPA-000	3421
JPA-000AF	3421
JPA-003	3872
JPA-003AF	3872
JPA-004	3955
JPA-0048	4346
JPA-0048AF	4346
JPA-005	3872
JPA-005AF	3872
JPA-010	4104
JPA-010AF	4104
JPA-011	4211
JPA-012	4128
JPA-012AF	4128
JPA-013	3983
JPA-013AF	3983
JPA-015	3562
JPA-015AF	3562
JPA-017	3888
JPA-017AF	3888
JPA-017P	3888
JPA-018	4016
JPA-018AF	4016
JPA-031	3964
JPA-031AF	3964
JPA-032	3619
JPA-032AF	3619
JPA-056	3867
JPA-056AF	3867
JPA-057	4182
JPA-057AF	4182
JPA-057P	4182
JPA-090	4031
JPA-090AF	4031
JPA-097	4011
JPA-097AF	4011
JPA-099	4197
JPA-099AF	4197
JPA-099P	4197
JPA-101	3394
JPA-101AF	3394
JPA-106	3370
JPA-106AF	3370
JPA-109	3848
JPA-109AF	3848
JPA-111	3397
JPA-111AF	3397
JPA-111P	3397
JPA-114	3659
JPA-114AF	3659
JPA-115	4143
JPA-115AF	4143
JPA-116	3369
JPA-116AF	3369
JPA-117	3965
JPA-121	3952
JPA-121AF	3952
JPA-122	3942
JPA-123	4038
JPA-127	4015
JPA-129	3909
JPA-129AF	3909
JPA-130	4017
JPA-130AF	4017
JPA-133	3758
JPA-133AF	3758
JPA-134	3415
JPA-134AF	3415
JPA-134P	3415
JPA-137	3760
JPA-137AF	3760
JPA-139	3760
JPA-139AF	3760
JPA-143	3779
JPA-143AF	3779
JPA-144	3700
JPA-144AF	3700
JPA-149	3598
JPA-149AF	3598
JPA-153	4002

JAPANPARTS	BESER
NO	NO
JPA-153AF	4002
JPA-154	3932
JPA-154AF	3932
JPA-156	4056
JPA-156AF	4056
JPA-176	4115
JPA-176AF	4115
JPA-177	4010
JPA-177AF	4010
JPA-178	3859
JPA-178AF	3859
JPA-183	3779
JPA-183AF	3779
JPA-189	3779
JPA-189AF	3779
JPA-190	3562
JPA-190AF	3562
JPA-191	3577
JPA-191AF	3577
JPA-194	3632
JPA-194AF	3632
JPA-195	3758
JPA-195AF	3758
JPA-198	3577
JPA-198AF	3577
JPA-199	3882
JPA-199AF	3882
JPA-2001	4255
JPA-2001AF	4255
JPA-2004	3998
JPA-2004AF	3998
JPA-2006	4274
JPA-2006AF	4274
JPA-2007	4071
JPA-2007AF	4071
JPA-2008	3822
JPA-2008AF	3822
JPA-2009	3927
JPA-2009AF	3927
JPA-203	3769
JPA-203AF	3769
JPA-204	4112
JPA-204AF	4112
JPA-205	3891
JPA-205AF	3891
JPA-206	3890
JPA-206AF	3890
JPA-209	4105
JPA-209AF	4105
JPA-210	3710
JPA-210AF	3710
JPA-211	3817
JPA-211AF	3817
JPA-213	4013
JPA-213AF	4013
JPA-215	3769
JPA-215AF	3769
JPA-217	3987
JPA-217AF	3987
JPA-218	3910
JPA-218AF	3910
JPA-219	3958
JPA-219AF	3958
JPA-224	3379
JPA-224AF	3379
JPA-225	3982
JPA-230	4077
JPA-233	3634
JPA-233AF	3634
JPA-234	3369
JPA-234AF	3369
JPA-235	3402
JPA-235AF	3402
JPA-236	3371
JPA-236AF	3371
JPA-236P	3371
JPA-239	3634
JPA-239AF	3634
JPA-240	3714
JPA-240AF	3714

JAPANPARTS	BESER
NO	NO
JPA-242	4088
JPA-242AF	4088
JPA-243	3903
JPA-247	3714
JPA-247AF	3714
JPA-248	3777
JPA-248AF	3777
JPA-250	3956
JPA-253	3379
JPA-253AF	3379
JPA-254	3560
JPA-254AF	3560
JPA-254P	3560
JPA-257	3402
JPA-257AF	3402
JPA-261	3554
JPA-261	3651
JPA-261AF	3554
JPA-261AF	3651
JPA-262	4088
JPA-262AF	4088
JPA-264	3554
JPA-264	3651
JPA-264AF	3554
JPA-264AF	3651
JPA-265	4086
JPA-265AF	4086
JPA-268	3829
JPA-268AF	3829
JPA-269	3953
JPA-272	3996
JPA-273	4082
JPA-277	3948
JPA-280	4158
JPA-280AF	4158
JPA-281	3768
JPA-281AF	3768
JPA-286	3777
JPA-286AF	3777
JPA-288	3673
JPA-288AF	3673
JPA-289	3554
JPA-289	3651
JPA-289AF	3554
JPA-289AF	3651
JPA-290	3554
JPA-290	3651
JPA-290AF	3554
JPA-290AF	3651
JPA-292	3673
JPA-292AF	3673
JPA-300	3885
JPA-300AF	3885
JPA-302	3877
JPA-302AF	3877
JPA-305	4118
JPA-305AF	4118
JPA-307	3889
JPA-307AF	3889
JPA-309	4317
JPA-309AF	4317
JPA-310	3709
JPA-310AF	3709
JPA-311	3780
JPA-311AF	3780
JPA-315	4220
JPA-315AF	4220
JPA-321	4110
JPA-321AF	4110
JPA-322	4119
JPA-322AF	4119
JPA-323	3988
JPA-325	3462
JPA-325AF	3462
JPA-326	3449
JPA-326AF	3449
JPA-330	3666
JPA-330AF	3666
JPA-331	3437
JPA-331AF	3437

JAPANPARTS	BESER
NO	NO
JPA-332	3723
JPA-332AF	3723
JPA-333	3449
JPA-333AF	3449
JPA-334	3436
JPA-334AF	3436
JPA-338	3832
JPA-338AF	3832
JPA-339	3502
JPA-339AF	3502
JPA-341	3522
JPA-341AF	3522
JPA-342	3640
JPA-342AF	3640
JPA-343	4122
JPA-345	3723
JPA-345AF	3723
JPA-346	4029
JPA-373	3767
JPA-373AF	3767
JPA-375	3687
JPA-375AF	3687
JPA-376	3470
JPA-376AF	3470
JPA-377	3312
JPA-377AF	3312
JPA-378	3484
JPA-378AF	3484
JPA-379	3740
JPA-379AF	3740
JPA-381	3646
JPA-381AF	3646
JPA-384	3874
JPA-384AF	3874
JPA-385	3832
JPA-385AF	3832
JPA-386	3640
JPA-386AF	3640
JPA-389	3744
JPA-389AF	3744
JPA-390	3623
JPA-390AF	3623
JPA-393	3874
JPA-393AF	3874
JPA-396	3892
JPA-396AF	3892
JPA-398	3740
JPA-398AF	3740
JPA-399	3832
JPA-399AF	3832
JPA-401	3831
JPA-401AF	3831
JPA-404	3509
JPA-404AF	3509
JPA-405	4160
JPA-406	3324
JPA-406AF	3324
JPA-413	3646
JPA-413AF	3646
JPA-414	3501
JPA-414AF	3501
JPA-417	4212
JPA-417AF	4212
JPA-418	3582
JPA-418AF	3582
JPA-419	3752
JPA-419AF	3752
JPA-420	3504
JPA-420AF	3504
JPA-424	3582
JPA-424AF	3582
JPA-425	3686
JPA-425AF	3686
JPA-426	3631
JPA-426AF	3631
JPA-427	3683
JPA-427AF	3683
JPA-429	3633
JPA-429AF	3633
JPA-432	3704

JAPANPARTS	BESER
NO	NO
JPA-432AF	3704
JPA-435	3607
JPA-435AF	3607
JPA-440	3631
JPA-440AF	3631
JPA-452	4159
JPA-452AF	4159
JPA-490	4110
JPA-490AF	4110
JPA-491	4109
JPA-491	4232
JPA-491AF	4109
JPA-491AF	4232
JPA-492	3695
JPA-492AF	3695
JPA-493	3696
JPA-493AF	3696
JPA-496	3683
JPA-496AF	3683
JPA-497	3704
JPA-497AF	3704
JPA-498	3704
JPA-498AF	3704
JPA-499	3704
JPA-499AF	3704
JPA-501	3955
JPA-501AF	3955
JPA-503	3765
JPA-503AF	3765
JPA-504	3975
JPA-505	4271
JPA-505AF	4271
JPA-506	3335
JPA-506AF	3335
JPA-508	3407
JPA-508AF	3407
JPA-509	3892
JPA-509AF	3892
JPA-509P	3892
JPA-512AF	4054
JPA-512MK	4054
JPA-514	4216
JPA-514AF	4216
JPA-515	3900
JPA-515AF	3900
JPA-516	4059
JPA-516AF	4059
JPA-517	3916
JPA-517AF	3916
JPA-521	3401
JPA-521AF	3401
JPA-523	3603
JPA-523	3604
JPA-523AF	3603
JPA-523AF	3604
JPA-524	3400
JPA-524AF	3400
JPA-525	3401
JPA-525AF	3401
JPA-527	3448
JPA-527AF	3448
JPA-527P	3448
JPA-530	3622
JPA-530AF	3622
JPA-583	3778
JPA-583AF	3778
JPA-585	3809
JPA-585AF	3809
JPA-585P	3809
JPA-587	3622
JPA-587AF	3622
JPA-588	3675
JPA-588AF	3675
JPA-590	3632
JPA-590AF	3632
JPA-591	3632
JPA-591AF	3632
JPA-592	3675
JPA-592AF	3675
JPA-594	3502

JAPANPARTS	BESER
NO	NO
JPA-594AF	3502
JPA-595	3507
JPA-595AF	3507
JPA-598	3622
JPA-598AF	3622
JPA-599	3685
JPA-599AF	3685
JPA-599P	3685
JPA-601	3436
JPA-601AF	3436
JPA-602	3620
JPA-602AF	3620
JPA-605	3746
JPA-605AF	3746
JPA-606	3600
JPA-606AF	3600
JPA-607	3436
JPA-607AF	3436
JPA-612	3928
JPA-615	3901
JPA-615AF	3901
JPA-698	3436
JPA-698AF	3436
JPA-699	3898
JPA-699AF	3898
JPA-700	3394
JPA-700AF	3394
JPA-701	3579
JPA-701AF	3579
JPA-703	3395
JPA-703AF	3395
JPA-705	3426
JPA-705AF	3426
JPA-706	3912
JPA-706AF	3912
JPA-708	4078
JPA-708AF	4078
JPA-709	4081
JPA-711	3764
JPA-712	4036
JPA-712AF	4036
JPA-796	4079
JPA-796AF	4079
JPA-800	3983
JPA-800AF	3983
JPA-802	3929
JPA-806	3882
JPA-806AF	3882
JPA-806P	3882
JPA-807	4000
JPA-809	3928
JPA-809AF	3928
JPA-811	3883
JPA-811AF	3883
JPA-813	4027
JPA-813AF	4027
JPA-816	3602
JPA-816AF	3602
JPA-886	4034
JPA-886AF	4034
JPA-893	3884
JPA-893AF	3884
JPA-895	3511
JPA-895AF	3511
JPA-896	3745
JPA-896AF	3745
JPA-897	3883
JPA-897AF	3883
JPA-901	3446
JPA-901AF	3446
JPA-902	3462
JPA-902AF	3462
JPA-903	3674
JPA-903AF	3674
JPA-904	3757
JPA-904	3857
JPA-904AF	3757
JPA-904AF	3857
JPA-906	3623
JPA-906AF	3623

JAPANPARTS	BESER
NO	NO
JPA-908	3886
JPA-908AF	3886
JPA-910	4005
JPA-911	4198
JPA-913	4006
JPA-994	4012
JPA-994AF	4012
JPA-999	3674
JPA-999AF	3674
JPA-H02	3648
JPA-H02AF	3648
JPA-H04	3632
JPA-H04AF	3632
JPA-H05	3843
JPA-H05AF	3843
JPA-H07	3648
JPA-H07AF	3648
JPA-H08	3985
JPA-H08AF	3985
JPA-H09	3951
JPA-H09AF	3951
JPA-H10	3959
JPA-H10AF	3959
JPA-H13	3961
JPA-H13AF	3961
JPA-H14	3960
JPA-K00	4009
JPA-K00AF	4009
JPA-K01	3653
JPA-K01AF	3653
JPA-K05	3802
JPA-K05AF	3802
JPA-K05P	3802
JPA-K06	3778
JPA-K06AF	3778
JPA-K07	4269
JPA-K07AF	4269
JPA-K08	3978
JPA-K08AF	3978
JPA-K09	4028
JPA-K09AF	4028
JPA-K10	3968
JPA-K10AF	3968
JPA-K11	4001
JPA-K11AF	4001
JPA-K12	3880
JPA-K12AF	3880
JPA-K14	3632
JPA-K14AF	3632
JPA-K17	4269
JPA-K17AF	4269
JPA-K19	4035
JPA-K20	4039
JPA-K28	4233
JPA-K28AF	4233
JPA-L10	3662
JPA-L10AF	3662
JPA-L11	3413
JPA-L11AF	3413
JPA-M00	4281
JPA-M00AF	4281
JPA-S01	3976
JPA-S01AF	3976
JPA-W00	3511
JPA-W00AF	3511
JPA-W01	3410
JPA-W01AF	3410
JPA-W02	3510
JPA-W02AF	3510
JPA-W03	3687
JPA-W03AF	3687
JPA-W04	3744
JPA-W04AF	3744
JPA-W07	3951
JPA-W07AF	3951
JPA-W09	4073
JPA-W10	3976
JPA-W12	4230
JPA-W13	4008
JPA-W16AF	4149

JAPANPARTS NO	BESER NO
JPA-W16MK	4149
JPP-0048	4346
JPP-0048AF	4346
JPP-005	3853
JPP-015	3660
JPP-015AF	3660
JPP-109	3795
JPP-109AF	3795
JPP-122	4087
JPP-122AF	4087
JPP-123	4087
JPP-123AF	4087
JPP-137	4010
JPP-137AF	4010
JPP-138	3853
JPP-138AF	3853
JPP-154	3933
JPP-154AF	3933
JPP-194	4087
JPP-194AF	4087
JPP-200	4153
JPP-200AF	4153
JPP-201	3693
JPP-201AF	3693
JPP-203	3788
JPP-203AF	3788
JPP-209	3776
JPP-209AF	3776
JPP-210	3693
JPP-210AF	3693
JPP-211	4111
JPP-211AF	4111
JPP-214	3954
JPP-216	3911
JPP-216AF	3911
JPP-217	4113
JPP-218	3949
JPP-220	4037
JPP-221	3997
JPP-223	4146
JPP-256	4153
JPP-256AF	4153
JPP-257	3825
JPP-257AF	3825
JPP-259	3830
JPP-259AF	3830
JPP-260	4085
JPP-260AF	4085
JPP-262	4072
JPP-262AF	4072
JPP-295	4275
JPP-295AF	4275
JPP-297	3693
JPP-297AF	3693
JPP-298	3693
JPP-298AF	3693
JPP-302	3875
JPP-302AF	3875
JPP-304	4303
JPP-304AF	4303
JPP-307	3833
JPP-307AF	3833
JPP-310	4215
JPP-310AF	4215
JPP-390	3833
JPP-390AF	3833
JPP-392	3833
JPP-392AF	3833
JPP-400	4156
JPP-402	4212
JPP-402AF	4212
JPP-404	4212
JPP-404AF	4212
JPP-405	4148
JPP-405AF	4148
JPP-407	4155
JPP-407AF	4155
JPP-408	4148
JPP-408AF	4148
JPP-409	4148

JAPANPARTS NO	BESER NO
JPP-409AF	4148
JPP-425	4212
JPP-425AF	4212
JPP-495	4148
JPP-495AF	4148
JPP-497	4148
JPP-497AF	4148
JPP-498	4148
JPP-498AF	4148
JPP-503	4108
JPP-503AF	4108
JPP-506	3335
JPP-506AF	3335
JPP-507	4062
JPP-507AF	4062
JPP-508	4106
JPP-508AF	4106
JPP-592	4084
JPP-592AF	4084
JPP-594	4108
JPP-594AF	4108
JPP-595	4087
JPP-595AF	4087
JPP-599P	3688
JPP-701	4080
JPP-701AF	4080
JPP-702	3913
JPP-702AF	3913
JPP-704	4213
JPP-704AF	4213
JPP-705	4258
JPP-901	4004
JPP-902	4018
JPP-903	3887
JPP-903AF	3887
JPP-995AF	3688
JPP-999	3887
JPP-999AF	3887
JPP-A01	3777
JPP-H04	3993
JPP-H04AF	3993
JPP-H08	3989
JPP-K01	3545
JPP-K01AF	3545
JPP-K03	3979
JPP-K03AF	3979
JPP-K04	3969
JPP-K04AF	3969
JPP-K06	4061
JPP-K09	3980
JPP-K09AF	3980
JPP-K10	4165
JPP-L03	4157
JPP-L06	3512
JPP-L06AF	3512
JPP-L07	3771
JPP-L07AF	3771
JPP-S01	3895
JPP-S01AF	3895
JPP-W02	3894
JPP-W02AF	3894
JPP-W05	4014
JPP-W06AF	4150
JPP-W06MK	4150
PA-000AF	3421
PA-000MK	3421
PA-003AF	3872
PA-003MK	3872
PA-0048AF	4346
PA-0048MK	4346
PA-004AF	3955
PA-004MK	3955
PA-005AF	3872
PA-005MK	3872
PA-010AF	4104
PA-010MK	4104
PA-011AF	4211
PA-011MK	4211
PA-012AF	4128
PA-012MK	4128

JAPANPARTS NO	BESER NO
PA-013AF	3983
PA-013MK	3983
PA-015AF	3562
PA-015MK	3562
PA-017AF	3888
PA-017MK	3888
PA-017P	3888
PA-018AF	4016
PA-018MK	4016
PA-021AF	3748
PA-031AF	3964
PA-031MK	3964
PA-032AF	3619
PA-032MK	3619
PA-056AF	3867
PA-056MK	3867
PA-057AF	4182
PA-057MK	4182
PA-057P	4182
PA-090AF	4031
PA-090MK	4031
PA-097AF	4011
PA-097MK	4011
PA-099AF	4197
PA-099MK	4197
PA-099P	4197
PA-101AF	3394
PA-101MK	3394
PA-106AF	3370
PA-106MK	3370
PA-109AF	3848
PA-109MK	3848
PA-111AF	3397
PA-111MK	3397
PA-111P	3397
PA-114AF	3659
PA-114MK	3659
PA-115AF	4143
PA-115MK	4143
PA-116AF	3369
PA-116MK	3369
PA-117AF	3965
PA-117MK	3965
PA-118AF	4074
PA-121AF	3952
PA-121MK	3952
PA-122AF	3942
PA-122MK	3942
PA-123AF	4038
PA-123MK	4038
PA-127AF	4015
PA-129AF	3909
PA-129MK	3909
PA-130AF	4017
PA-130MK	4017
PA-133AF	3758
PA-133MK	3758
PA-134AF	3415
PA-134MK	3415
PA-134P	3415
PA-137AF	3760
PA-137MK	3760
PA-139AF	3760
PA-139MK	3760
PA-143AF	3779
PA-143MK	3779
PA-144AF	3700
PA-144MK	3700
PA-149AF	3598
PA-149MK	3598
PA-150AF	3797
PA-151AF	3856
PA-153AF	4002
PA-153MK	4002
PA-154AF	3932
PA-154MK	3932
PA-156AF	4056
PA-156MK	4056
PA-164AF	4308
PA-176AF	4115

JAPANPARTS NO	BESER NO
PA-176MK	4115
PA-177AF	4010
PA-177MK	4010
PA-178AF	3859
PA-178MK	3859
PA-183AF	3779
PA-183MK	3779
PA-189AF	3779
PA-189MK	3779
PA-190AF	3562
PA-190MK	3562
PA-191AF	3577
PA-191MK	3577
PA-194AF	3632
PA-194MK	3632
PA-195AF	3758
PA-195MK	3758
PA-198AF	3577
PA-198MK	3577
PA-199AF	3882
PA-199MK	3882
PA-2000AF	4176
PA-2001AF	4255
PA-2001MK	4255
PA-2004AF	3998
PA-2004MK	3998
PA-2006AF	4274
PA-2006MK	4274
PA-2007AF	4071
PA-2007MK	4071
PA-2008AF	3822
PA-2008MK	3822
PA-2009AF	3927
PA-2009MK	3927
PA-203AF	3769
PA-203MK	3769
PA-204AF	4112
PA-204MK	4112
PA-205AF	3891
PA-205MK	3891
PA-206AF	3890
PA-206MK	3890
PA-209AF	4105
PA-209MK	4105
PA-210AF	3710
PA-210MK	3710
PA-211AF	3817
PA-211MK	3817
PA-213AF	4013
PA-213MK	4013
PA-215AF	3769
PA-215MK	3769
PA-217AF	3987
PA-217MK	3987
PA-218AF	3910
PA-218MK	3910
PA-219AF	3958
PA-219MK	3958
PA-224AF	3379
PA-224MK	3379
PA-225AF	3982
PA-225MK	3982
PA-230AF	4077
PA-230MK	4077
PA-233AF	3634
PA-233MK	3634
PA-234AF	3369
PA-234MK	3369
PA-235AF	3402
PA-235MK	3402
PA-236AF	3371
PA-236MK	3371
PA-236P	3371
PA-239AF	3634
PA-239MK	3634
PA-240AF	3714
PA-240MK	3714
PA-242AF	4088
PA-242MK	4088
PA-243AF	3903

JAPANPARTS	BESER
NO	NO
PA-243MK	3903
PA-247AF	3714
PA-247MK	3714
PA-248AF	3777
PA-248MK	3777
PA-250AF	3956
PA-250MK	3956
PA-253AF	3379
PA-253MK	3379
PA-254AF	3560
PA-254MK	3560
PA-254P	3560
PA-257AF	3402
PA-257MK	3402
PA-261AF	3554
PA-261AF	3651
PA-261MK	3554
PA-261MK	3651
PA-262AF	4088
PA-262MK	4088
PA-264AF	3554
PA-264AF	3651
PA-264MK	3554
PA-264MK	3651
PA-265AF	4086
PA-265MK	4086
PA-268AF	3829
PA-268MK	3829
PA-269AF	3953
PA-269MK	3953
PA-272AF	3996
PA-272MK	3996
PA-273AF	4082
PA-273MK	4082
PA-277AF	3948
PA-277MK	3948
PA-278AF	4167
PA-280AF	4158
PA-280MK	4158
PA-281AF	3768
PA-281MK	3768
PA-286AF	3777
PA-286MK	3777
PA-288AF	3673
PA-288MK	3673
PA-289AF	3554
PA-289AF	3651
PA-289MK	3554
PA-289MK	3651
PA-290AF	3554
PA-290AF	3651
PA-290MK	3554
PA-290MK	3651
PA-292AF	3673
PA-292MK	3673
PA-300AF	3885
PA-300MK	3885
PA-302AF	3877
PA-302MK	3877
PA-305AF	4118
PA-305MK	4118
PA-307AF	3889
PA-307MK	3889
PA-309AF	4317
PA-309MK	4317
PA-310AF	3709
PA-310MK	3709
PA-311AF	3780
PA-311MK	3780
PA-315AF	4220
PA-315MK	4220
PA-321AF	4110
PA-321MK	4110
PA-322AF	4119
PA-322MK	4119
PA-323AF	3988
PA-323MK	3988
PA-325AF	3462
PA-325MK	3462
PA-326AF	3449

JAPANPARTS	BESER
NO	NO
PA-326MK	3449
PA-330AF	3666
PA-330MK	3666
PA-331AF	3437
PA-331MK	3437
PA-332AF	3723
PA-332MK	3723
PA-333AF	3449
PA-333MK	3449
PA-334AF	3436
PA-334MK	3436
PA-338AF	3832
PA-338MK	3832
PA-339AF	3502
PA-339MK	3502
PA-341AF	3522
PA-341MK	3522
PA-342AF	3640
PA-342MK	3640
PA-343AF	4122
PA-343MK	4122
PA-345AF	3723
PA-345MK	3723
PA-346AF	4029
PA-346MK	4029
PA-373AF	3767
PA-373MK	3767
PA-375AF	3687
PA-375MK	3687
PA-376AF	3470
PA-376MK	3470
PA-377AF	3312
PA-377MK	3312
PA-378AF	3484
PA-378MK	3484
PA-379AF	3740
PA-379MK	3740
PA-381AF	3646
PA-381MK	3646
PA-384AF	3874
PA-384MK	3874
PA-385AF	3832
PA-385MK	3832
PA-386AF	3640
PA-386MK	3640
PA-389AF	3744
PA-389MK	3744
PA-390AF	3623
PA-390MK	3623
PA-393AF	3874
PA-393MK	3874
PA-396AF	3892
PA-396MK	3892
PA-398AF	3740
PA-398MK	3740
PA-399AF	3832
PA-399MK	3832
PA-401AF	3831
PA-401MK	3831
PA-404AF	3509
PA-404MK	3509
PA-405AF	4160
PA-405MK	4160
PA-406AF	3324
PA-406MK	3324
PA-413AF	3646
PA-413MK	3646
PA-414AF	3501
PA-414MK	3501
PA-417AF	4212
PA-417MK	4212
PA-418AF	3582
PA-418MK	3582
PA-419AF	3752
PA-419MK	3752
PA-420AF	3504
PA-420MK	3504
PA-424AF	3582
PA-424MK	3582
PA-425AF	3686

JAPANPARTS	BESER
NO	NO
PA-425MK	3686
PA-426AF	3631
PA-426MK	3631
PA-427AF	3683
PA-427MK	3683
PA-429AF	3633
PA-429MK	3633
PA-432AF	3704
PA-432MK	3704
PA-435AF	3607
PA-435MK	3607
PA-438AF	4312
PA-440AF	3631
PA-440MK	3631
PA-452AF	4159
PA-452MK	4159
PA-490AF	4110
PA-490MK	4110
PA-491AF	4109
PA-491AF	4232
PA-491MK	4109
PA-491MK	4232
PA-492AF	3695
PA-492MK	3695
PA-493AF	3696
PA-493MK	3696
PA-496AF	3683
PA-496MK	3683
PA-497AF	3704
PA-497MK	3704
PA-498AF	3704
PA-498MK	3704
PA-499AF	3704
PA-499MK	3704
PA-501AF	3955
PA-501MK	3955
PA-503AF	3765
PA-503MK	3765
PA-504AF	3975
PA-504MK	3975
PA-505AF	4271
PA-505MK	4271
PA-506AF	3335
PA-506MK	3335
PA-508AF	3407
PA-508MK	3407
PA-509AF	3892
PA-509MK	3892
PA-509P	3892
PA-512AF	4054
PA-512MK	4054
PA-514AF	4216
PA-514MK	4216
PA-515AF	3900
PA-515MK	3900
PA-516AF	4059
PA-516MK	4059
PA-517AF	3916
PA-517MK	3916
PA-518AF	4107
PA-521AF	3401
PA-521MK	3401
PA-523AF	3603
PA-523AF	3604
PA-523MK	3603
PA-523MK	3604
PA-524AF	3400
PA-524MK	3400
PA-525AF	3401
PA-525MK	3401
PA-527AF	3448
PA-527MK	3448
PA-527P	3448
PA-530AF	3622
PA-530MK	3622
PA-583AF	3778
PA-583MK	3778
PA-585AF	3809
PA-585MK	3809
PA-585P	3809

JAPANPARTS	BESER
NO	NO
PA-587AF	3622
PA-587MK	3622
PA-588AF	3675
PA-588MK	3675
PA-590AF	3632
PA-590MK	3632
PA-591AF	3632
PA-591MK	3632
PA-592AF	3675
PA-592MK	3675
PA-594AF	3502
PA-594MK	3502
PA-595AF	3507
PA-595MK	3507
PA-598AF	3622
PA-598MK	3622
PA-599AF	3685
PA-599MK	3685
PA-599P	3685
PA-601AF	3436
PA-601MK	3436
PA-602AF	3620
PA-602MK	3620
PA-605AF	3746
PA-605MK	3746
PA-606AF	3600
PA-606MK	3600
PA-607AF	3436
PA-607MK	3436
PA-611AF	4122
PA-612AF	3928
PA-612MK	3928
PA-615AF	3901
PA-615MK	3901
PA-698AF	3436
PA-698MK	3436
PA-699AF	3898
PA-699MK	3898
PA-700AF	3394
PA-700MK	3394
PA-701AF	3579
PA-701MK	3579
PA-703AF	3395
PA-703MK	3395
PA-705AF	3426
PA-705MK	3426
PA-706AF	3912
PA-706MK	3912
PA-708AF	4078
PA-708MK	4078
PA-709AF	4081
PA-709MK	4081
PA-711AF	3764
PA-711MK	3764
PA-712AF	4036
PA-712MK	4036
PA-796AF	4079
PA-796MK	4079
PA-800AF	3983
PA-800MK	3983
PA-802AF	3929
PA-802MK	3929
PA-806AF	3882
PA-806MK	3882
PA-806P	3882
PA-807AF	4000
PA-807MK	4000
PA-809AF	3928
PA-809MK	3928
PA-811AF	3883
PA-811MK	3883
PA-813AF	4027
PA-813MK	4027
PA-816AF	3602
PA-816MK	3602
PA-886AF	4034
PA-886MK	4034
PA-893AF	3884
PA-893MK	3884
PA-895AF	3511

JAPANPARTS	BESER
NO	NO
PA-895MK	3511
PA-896AF	3745
PA-896MK	3745
PA-897AF	3883
PA-897MK	3883
PA-901AF	3446
PA-901MK	3446
PA-902AF	3462
PA-902MK	3462
PA-903AF	3674
PA-903MK	3674
PA-904AF	3757
PA-904AF	3857
PA-904MK	3757
PA-904MK	3857
PA-906AF	3623
PA-906MK	3623
PA-908AF	3886
PA-908MK	3886
PA-910AF	4005
PA-910MK	4005
PA-911AF	4198
PA-911MK	4198
PA-913AF	4006
PA-914AF	4124
PA-994AF	4012
PA-994MK	4012
PA-999AF	3674
PA-999MK	3674
PA-H02AF	3648
PA-H02MK	3648
PA-H04AF	3632
PA-H04MK	3632
PA-H05AF	3843
PA-H05MK	3843
PA-H07AF	3648
PA-H07MK	3648
PA-H08AF	3985
PA-H08MK	3985
PA-H09AF	3951
PA-H09MK	3951
PA-H10AF	3959
PA-H10MK	3959
PA-H13AF	3961
PA-H13MK	3961
PA-H14AF	3960
PA-H14MK	3960
PA-H16AF	3976
PA-H17AF	4049
PA-H18AF	4166
PA-K00AF	4009
PA-K00MK	4009
PA-K01AF	3653
PA-K01MK	3653
PA-K05AF	3802
PA-K05MK	3802
PA-K05P	3802
PA-K06AF	3778
PA-K06MK	3778
PA-K07AF	4269
PA-K07MK	4269
PA-K08AF	3978
PA-K08MK	3978
PA-K09AF	4028
PA-K09MK	4028
PA-K10AF	3968
PA-K10MK	3968
PA-K11AF	4001
PA-K11MK	4001
PA-K12AF	3880
PA-K12MK	3880
PA-K14AF	3632
PA-K14MK	3632
PA-K16AF	3959
PA-K17AF	4269
PA-K17MK	4269
PA-K19AF	4035
PA-K19MK	4035
PA-K20AF	4039
PA-K20MK	4039

JAPANPARTS	BESER
NO	NO
PA-K24AF	4136
PA-K28AF	4233
PA-K28MK	4233
PA-L00AF	4161
PA-L01AF	4293
PA-L02AF	3453
PA-L03AF	4094
PA-L10AF	3662
PA-L10MK	3662
PA-L11AF	3413
PA-L11MK	3413
PA-M00AF	4281
PA-M00MK	4281
PA-S01AF	3976
PA-S01MK	3976
PA-W00AF	3511
PA-W00MK	3511
PA-W01AF	3410
PA-W01MK	3410
PA-W02AF	3510
PA-W02MK	3510
PA-W03AF	3687
PA-W03MK	3687
PA-W04AF	3744
PA-W04MK	3744
PA-W07AF	3951
PA-W07MK	3951
PA-W09AF	4073
PA-W09MK	4073
PA-W10AF	3976
PA-W10MK	3976
PA-W12AF	4230
PA-W12MK	4230
PA-W13AF	4008
PA-W13MK	4008
PA-W16AF	4149
PA-W16MK	4149
PP-005AF	3853
PP-005MK	3853
PP-008AF	3747
PP-015AF	3660
PP-015MK	3660
PP-102AF	3855
PP-109AF	3795
PP-109MK	3795
PP-122AF	4087
PP-122MK	4087
PP-123AF	4087
PP-123MK	4087
PP-137AF	4010
PP-137MK	4010
PP-138AF	3853
PP-138MK	3853
PP-154AF	3933
PP-154MK	3933
PP-194AF	4087
PP-194MK	4087
PP-200AF	4153
PP-200MK	4153
PP-201AF	3693
PP-201MK	3693
PP-203AF	3788
PP-203MK	3788
PP-209AF	3776
PP-209MK	3776
PP-210AF	3693
PP-210MK	3693
PP-211AF	4111
PP-211MK	4111
PP-214AF	3954
PP-214MK	3954
PP-216AF	3911
PP-216MK	3911
PP-217AF	4113
PP-217MK	4113
PP-218AF	3949
PP-218MK	3949
PP-220AF	4037
PP-220MK	4037
PP-221AF	3997

JAPANPARTS	BESER
NO	NO
PP-221MK	3997
PP-223AF	4146
PP-223MK	4146
PP-256AF	4153
PP-256MK	4153
PP-257AF	3825
PP-257MK	3825
PP-259AF	3830
PP-259MK	3830
PP-260AF	4085
PP-260MK	4085
PP-262AF	4072
PP-262MK	4072
PP-295AF	4275
PP-295MK	4275
PP-297AF	3693
PP-297MK	3693
PP-298AF	3693
PP-298MK	3693
PP-302AF	3875
PP-302MK	3875
PP-304AF	4303
PP-304MK	4303
PP-307AF	3833
PP-307MK	3833
PP-310AF	4215
PP-310MK	4215
PP-390AF	3833
PP-390MK	3833
PP-392AF	3833
PP-392MK	3833
PP-400AF	4156
PP-400MK	4156
PP-402AF	4212
PP-402MK	4212
PP-404AF	4212
PP-404MK	4212
PP-405AF	4148
PP-405MK	4148
PP-407AF	4155
PP-407MK	4155
PP-408AF	4148
PP-408MK	4148
PP-409AF	4148
PP-409MK	4148
PP-414AF	4279
PP-425AF	4212
PP-425MK	4212
PP-495AF	4148
PP-495MK	4148
PP-497AF	4148
PP-497MK	4148
PP-498AF	4148
PP-498MK	4148
PP-503AF	4108
PP-503MK	4108
PP-506AF	3335
PP-506MK	3335
PP-507AF	4062
PP-507MK	4062
PP-508AF	4106
PP-508MK	4106
PP-592AF	4084
PP-592MK	4084
PP-594AF	4108
PP-594MK	4108
PP-595AF	4087
PP-595MK	4087
PP-599P	3688
PP-701AF	4080
PP-701MK	4080
PP-702AF	3913
PP-702MK	3913
PP-704AF	4213
PP-704MK	4213
PP-705AF	4258
PP-705MK	4258
PP-901AF	4004
PP-901MK	4004
PP-902AF	4018

JAPANPARTS	BESER
NO	NO
PP-902MK	4018
PP-903AF	3887
PP-903MK	3887
PP-995AF	3688
PP-995MK	3688
PP-999AF	3887
PP-999MK	3887
PP-A-01AF	3777
PP-H01AF	4311
PP-H04AF	3993
PP-H04MK	3993
PP-H08AF	3989
PP-H08MK	3989
PP-H09AF	4311
PP-K01AF	3545
PP-K01MK	3545
PP-K03AF	3979
PP-K03MK	3979
PP-K04AF	3969
PP-K04MK	3969
PP-K06AF	4061
PP-K06MK	4061
PP-K09AF	3980
PP-K09MK	3980
PP-K10AF	4165
PP-K10MK	4165
PP-K11AF	4060
PP-L00AF	3879
PP-L01AF	3944
PP-L03AF	4157
PP-L04AF	3661
PP-L06AF	3512
PP-L06MK	3512
PP-L07AF	3771
PP-L07MK	3771
PP-S01AF	3895
PP-S01MK	3895
PP-W02AF	3894
PP-W02MK	3894
PP-W05AF	4014
PP-W05MK	4014
PP-W06AF	4150
PP-W06MK	4150

JAPKO	BESER
NO	NO
50438	4312
51414	4279

JP PARTS	BESER
NO	NO
900001	3318
900006	3317
900007	3316
900009	3311
900052	3327
900067	3321
900075	3315
900075	3515
900076	3339
900076	3514
900078	3423
900098	3393
900103	3405
900117	3527
900123	3421
900124	3365
900127	3410
900133	3513
900135	3468
900138	3417
900140	3440
900141	3625
900142	3378
900151	3466
900153	3467
900158	3493
900162	3381
900166	3424
900173	3417
900173	3417
900178	3611
900180	3486
900181	3380
900182	3573
900184	3572
900185	3621
900186	3624
900187	3619
900188	3536
900189	3441
900190	3444
900191	3495
900192	3379
900199	3484
900213	3650
900214	3635
900215	3649
900222	3474
900223	3526
900228	3423
900229	3543
900230	3603
900232	3371
900233	3490
900234	3428
900235	3422
900236	3758
900238	3459
900239	3432
900244	3709
900248	3509
900254	3523
900258	3641
900259	3589
900260	3661
900263	3609
900264	3449
900265	3400
900267	3463
900269	3564
900274	3457
900277	3757
900277	3857
900281	3448
900282	3560
900299	3470
900300	3469
900302	3717
900304	3529
900306	3430

JP PARTS	BESER
NO	NO
900308	3563
900310	3464
900313	3680
900321	3882
900323	3436
900324	3578
900326	3487
900332	3473
900333	3445
900335	3633
900336	3501
900338	4212
900341	3504
900349	3683
900351	3752
900358	3632
900366	3522
900386	3401
900388	3407
900390	3666
900409	4104
900410	3562
900416	3415
900420	3623
900422	3580
900431	3662
900432	3531
900444	3402
900456	3714
900458	3551
900471	3634
900473	3482
900474	3462
900484	3679
900491	3491
900497	3640
900507	3733
900508	3590
900510	3539
900520	3596
900538	3983
900540	4040
900551	3831
900554	4119
900555	3988
900556	3933
900560	4082
900562	4105
900563	4111
900569	3968
900570	4001
900573	3976
900576	3987
900577	4173
900578	3984
900585	4181
900588	3909
900598	4137
900778	4020
900782	3682
900786	3678
900789	3507
900790	3570
900790	3594
900792	3636
900813	3442
900817	3670
900818	3567
900821	3740
900825	4062
900828	3566
900830	3884
900831	3538
900834	3750
900838	3577
900843	3512
900845	3799
900863	3585
900867	3554
900867	3651

JP PARTS	BESER
NO	NO
900874	3583
900886	3528
900887	3503
900894	4128
900898	3766
900908	3408
900922	3502
900924	3686
900935	3593
900936	3558
900938	3608
900939	3617
900943	3556
900944	3878
900945	3819
900965	3553
900968	3673
900969	3883
900975	3688
900976	3685
900977	3689
900980	4182
900991	3674
900992	3888
900995	3559
900996	3595
901009	4260
901011	4259
901012	4222
901021	4208
901023	4179
901025	4207
901034	4006
901035	4018
901039	3867
901041	3964
901044	3820
901045	3981
901047	3922
901052	4141
901053	3510
901054	4122
901055	3925
901057	4173
901065	3826
901072	3781
901076	3853
901078	4161
901079	4058
901080	4157
901082	3416
901083	3920
901084	3906
901085	3907
901087	4159
901090	4160
901091	4156
901096	3980
901097	3960
901098	3989
901100	3886
901101	3965
901102	4092
901104	3852
901107	4106
901108	4016
901110	4039
901111	4165
901112	4035
901114	3969
901115	3880
901119	3412
901121	4293
901122	3944
901126	3413
901127	4099
901129	3915
901131	4085
901132	4113
901134	4274

JP PARTS	BESER
NO	NO
901135	4275
901143	4303
901146	4247
901147	4249
901149	3628
901150	4210
901151	4240
901153	3962
901154	3926
901155	3963
901157	3748
901163	3975
901164	3765
901171	3797
901172	3965
901178	4074
901179	3952
901182	4038
901183	4015
901186	3976
901189	3800
901197	3970
901209	3966
901210	3967
901212	4134
901217	3827
901232	4036
901235	4081
901236	4213
901237	4000
901242	3956
901244	4037
901245	3910
901246	3911
901249	3903
901251	3982
901253	3949
901254	4077
901255	3953
901258	3958
901259	3954
901276	3945
901326	3505
901326	3615
901347	4017
901350	3622
901354	3637
901355	4076
901363	3575
901364	3777
901370	3614
901384	3659
901385	3744
901395	3820
901400	3856
901408	4125
901438	3453
901439	3658
901487	3778
901492	3746
901500	3790
901509	3877
901514	3784
901516	3780
901517	3836
901525	4009
901527	3846
901530	4093
901531	3425
901534	3590
901537	3935
901540	3826
901541	3800
901590	4088
901591	3722
901621	3419
901628	3598
901629	3602
901634	3822

JP PARTS	BESER
NO	NO
901638	3896
901639	3896
901640	3644
901647	3938
901672	3754
901673	3648
901689	3755
901704	4069
901708	3762
901710	3763
901714	3768
901731	4281
901732	4094
901786	4248
901790	3629
901864	4198
905002	3677
905004	3429
905007	3630
905008	3873
905011	3675
905013	4197
905014	3809
905015	3931
905018	3643
905020	3581
905021	3854
905022	4095
905023	3374
905026	4148
905028	3529
905030	3546
905031	3550
905033	3312
905034	3329
905039	3794
905040	3804
905041	3861
905047	3333
905051	3760
905052	3397
905057	3681
905058	3607
905059	3553
905061	3736
905065	3832
905066	3863
905067	3606
905071	3323
905074	3618
905077	3879
905081	3610
905084	3496
905085	4010
905090	3872
905091	3782
905092	3776
905095	3782
905102	3642
905103	3660
905104	3545
905105	4345
905106	3934
905109	3549
905112	3539
905114	3598
905116	3366
905117	3897
905119	3696
905121	3687
905122	4102
905123	3663
905124	3537
905126	3896
905127	4103
905128	4126
905129	3887
905137	3343
905137	3483
905140	3646

JP PARTS	BESER
NO	NO
905141	3369
905144	3779
905147	3366
905148	3676
905149	4123
905152	3943
905155	3704
905167	4100
905168	3605
905169	3723
905171	4108
905174	3821
905175	4059
905176	3769
905177	4138
905182	4151
905184	3972
905185	3848
905188	4012
905191	3921
905192	3320
905196	4138
905197	3346
905198	3373
905202	3710
905205	3335
905207	3806
905215	3350
905216	3806
905222	3424
905224	3324
905226	3370
905228	3579
905232	3540
905234	3568
905237	3620
905238	3529
905242	3395
905246	3584
905247	3771
905248	3994
905252	3631
905253	3692
905254	3499
905260	3717
905261	3446
905264	3656
905265	3600
905266	3437
905268	3436
905271	3426
905275	3700
905277	3433
905278	3433
905285	3590
905287	4214
905295	4080
905297	3511
905298	3745
905308	4078
905309	3582
905315	4087
905318	4072
905324	3575
905328	3697
905331	3919
905332	3918
905336	3795
905345	3833
905350	3800
905352	3817
905353	4086
905356	3695
905363	3950
905364	3853
905365	4158
905366	4153
905369	4112
905370	4211

JP PARTS	BESER
NO	NO
905371	3802
905372	3986
905375	4027
905376	3855
905377	4079
905378	3764
905379	3850
905380	3849
905382	3898
905383	3901
905385	4110
905386	3834
905387	3835
905388	3914
905390	4101
905390	4209
905393	3801
905394	3955
905396	4109
905396	4232
905397	3843
905398	4269
905399	4271
905400	3892
905401	3928
905403	3829
905404	4011
905407	3881
905408	3983
905416	3904
905417	4042
905419	3326
905441	3552
905444	3340
905450	4152
905468	4212
905473	3394
905477	4347
905512	3773
905517	3569
905518	3548
905518	3690
905519	3506
905522	3875
905538	3993
905541	3653
905543	3574
905552	3859
905556	3913
905557	3788
905558	4013
905560	3693
905561	4034
905566	3825
905569	3890
905570	4153
905571	3830
905572	3891
905573	4071
905575	4115
905576	4155
905578	4118
905579	3889
905580	3874
905581	3767
905582	3900
905584	4084
905588	3667
905591	3912
905593	3985
905594	3959
905595	3961
905599	3951
905602	3894
905603	4028
905605	3978
905606	3979

JP PARTS	BESER
NO	NO
905609	3895
905615	3885
905621	4096
905622	3841
905623	3841
905625	3905
905626	3842
905631	4346
905633	4180
905660	3923
905662	3924
905666	3942
905667	3932
905673	3971
905675	4142
905676	4143
905678	3996
905681	4121
905717	3939
905718	3940
905719	3946
905892	3929
905993	3823
905994	4031
905996	4216
915050	4102
915051	4102
915052	4347
915054	3879
915055	3879
915056	3879
915057	3879
915058	3879
915059	3315
915059	3515
915060	3339
915060	3514
915061	3513
915062	3513
915063	3365
915064	3430
915065	3609
915066	3410
915067	3410
915068	3486
915069	3444
915070	3585
915071	3441
915072	3408
915073	3572
915074	3623
915075	3573
915076	3470
915078	3564
915080	3563
915081	3578
915082	3736
915083	3736
915090	3505
915090	3615
915091	3505
915091	3615
915092	3656
915093	3656
915094	3575
915095	3575
915096	3575
915097	3677
915098	3863
915099	3567
915103	3614
915104	3679
915105	3994
915106	3994
915107	3994
915108	3994
915109	3773
915110	3773

JP PARTS	BESER
NO	NO
915112	3773
915114	3943
915115	4125
915117	3670
915119	3836
915120	3821
915121	3821
915122	3733
915123	4211
915124	4211
915127	4346
915129	4180
915130	4180
915131	3881
915132	3881
915133	3881
915134	3881
915136	4097
915139	4103
915140	3630
915141	3581
915142	3581
915145	3678
915146	3804
915147	3681
915148	3861
915149	3923
915151	3942
915189	4101
915189	4209
915191	3823
915192	3823
915197	4181
915199	3909
915204	4076
915208	3503
915209	3658
915224	3945
915228	4248
915229	4247
915230	3629
915231	3628
915233	4240
915234	4210
915235	3925
915236	3965
915237	3926
915238	3962
915239	3963
915240	4293
915241	3944
915244	4092
915248	4207
915250	4208
915251	4208
915252	4179
915253	4179
915254	4179
915256	4249
915272	4179

JURATEK	BESER
NO	NO
JCP1102	3575
JCP1126	3994
JCP1390	3942
JCP733	3773

JURID	BESER
NO	NO
290760960	3614
2900109561	3749
2901709560	3433
2904409561	3707
2906509560	3773
2906709560	3773
2907604530	3614
2907609560	3614
2912109561	3575
2912114530	3575
2912309560	3823
2916009560	3942
2919009560	3926
2919009561	3926
2919209560	3925
2920009560	3962
2921709560	3963
2922909560	3965
2922909561	3965
2923109560	3995
2923209560	4092
2925609560	4169
2935709560	3575
2937409560	3994
2955405880	3315
2955405880	3515
2983505440	3679
2983509560	3679
571202D	3393
571202J	3393
571203J	3377
571204D	3311
571204J	3311
571206D	3321
571206J	3321
571215D	3320
571215J	3320
571217D	3366
571217J	3366
571218D	3323
571218J	3323
571221D	3327
571221J	3327
571224D	3333
571224J	3333
571226D	3317
571226J	3317
571228D	3405
571228J	3405
571232D	3343
571232D	3483
571232J	3343
571232J	3483
571233D	3416
571233J	3416
571234D	3373
571234J	3373
571236D	3350
571236J	3350
571246D	3527
571246J	3527
571247D	3312
571247J	3312
571248D	3806
571248J	3806
571250D	3423

JURID	BESER
NO	NO
571250J	3423
571251D	3374
571251J	3374
571260J	3331
571262D	3442
571262J	3442
571265D	3421
571265J	3421
571271D	3365
571271J	3365
571272D	3513
571272J	3513
571276D	3410
571276J	3410
571278D	3339
571278D	3514
571278J	3339
571278J	3514
571279D	3318
571279J	3318
571291D	3417
571291D	3417
571291J	3417
571291J	3417
571297D	3424
571297J	3424
571298D	3484
571298J	3484
571300D	3572
571300J	3572
571302D	3493
571302J	3493
571304D	3440
571304J	3440
571305D	3625
571305J	3625
571306D	3482
571306J	3482
571308D	3429
571308J	3429
571309D	3466
571309J	3466
571312D	3621
571312J	3621
571313D	3546
571313J	3546
571315D	3441
571315J	3441
571316D	3486
571316J	3486
571317D	3444
571317J	3444
571319D	3474
571319J	3474
571321D	3526
571321J	3526
571327D	3503
571327J	3503
571330D	3432
571330J	3432
571331D	3495
571331J	3495
571332D	3380
571332J	3380
571333D	3380
571333J	3380
571334D	3496
571334J	3496
571336D	3603
571336J	3603
571339D	3428
571339J	3428
571340D	3366
571340J	3366
571344D	3611
571344J	3611
571346D	3422
571346J	3422
571350D	3536
571350J	3536

JURID	BESER
NO	NO
571352D	3609
571352J	3609
571353D	3430
571353J	3430
571355D	3564
571355J	3564
571356D	3619
571356J	3619
571357D	3650
571357J	3650
571359D	3457
571359J	3457
571361D	3529
571361J	3529
571363D	3873
571363J	3873
571368D	3537
571368J	3537
571370D	3641
571370J	3641
571372D	3315
571372D	3515
571372J	3315
571372J	3515
571374J	3326
571375D	3490
571375J	3490
571376D	3531
571376J	3531
571380D	3605
571380J	3605
571382D	3408
571382J	3408
571387D	3578
571387J	3578
571389D	3717
571389J	3717
571391D	3505
571391D	3615
571391J	3505
571391J	3615
571393D	3543
571393J	3543
571394D	3584
571394J	3584
571398D	3680
571398J	3680
571400D	4104
571400J	4104
571401D	3624
571401J	3624
571406D	3556
571406J	3556
571407D	3469
571407J	3469
571411D	3563
571411J	3563
571412D	3589
571412J	3589
571413D	3629
571413J	3629
571418D	3642
571418J	3642
571421D	3660
571421J	3660
571422D	3523
571422J	3523
571425D	3596
571425J	3596
571428D	3583
571428J	3583
571429D	3326
571429J	3326
571438D	3683
571438J	3683
571439D	3662
571439J	3662
571440D	3771
571440J	3771
571442D	3423

JURID	BESER
NO	NO
571442J	3423
571448D	3459
571448J	3459
571449D	3461
571452D	3467
571452J	3467
571462D	3536
571462J	3536
571463D	3316
571463J	3316
571464D	3424
571464J	3424
571474D	3425
571474J	3425
571476D	3539
571476J	3539
571477J	3627
571489J	3706
571491D	3378
571491J	3378
571492D	3623
571492J	3623
571493D	3733
571493J	3733
571509D	3528
571509J	3528
571510D	3610
571510J	3610
571512D	3590
571512J	3590
571513D	3529
571513J	3529
571515D	3867
571515J	3867
571519D	4182
571519J	4182
571522D	3593
571522J	3593
571523D	3608
571523J	3608
571525D	3487
571525J	3487
571526D	3503
571526J	3503
571528D	3643
571528J	3643
571530D	3736
571530J	3736
571536D	3417
571536J	3417
571539D	3410
571539J	3410
571540D	3419
571540J	3419
571542D	3573
571542J	3573
571543D	3335
571543J	3335
571546D	3578
571546J	3578
571552D	3339
571552D	3514
571552J	3339
571552J	3514
571553D	3315
571553D	3515
571553J	3315
571553J	3515
571555D	3550
571555J	3550
571556D	3611
571556J	3611
571557D	3572
571557J	3572
571560D	3408
571560J	3408
571561D	3609
571561J	3609
571722D	3581
571722J	3581

JURID	BESER
NO	NO
571725D	3464
571725J	3464
571726D	3464
571726J	3464
571743D	3487
571743J	3487
571744D	3496
571744J	3496
571745D	3473
571745J	3473
571746D	3445
571746J	3445
571753D	3630
571753J	3630
571754D	4214
571754J	4214
571756D	3878
571756J	3878
571757D	3819
571757J	3819
571803D	3661
571803J	3661
571805J	3313
571822D	3413
571822J	3413
571823J	3404
571827D	3453
571827J	3453
571828D	3658
571828J	3658
571832D	3558
571832J	3558
571833D	3410
571833J	3410
571839D	3595
571839J	3595
571840D	3559
571840J	3559
571841D	3658
571841J	3658
571843D	3799
571843J	3799
571844D	3567
571844J	3567
571845D	3680
571845J	3680
571846D	3678
571846J	3678
571847D	3553
571847J	3553
571848D	3585
571848J	3585
571850D	3545
571850J	3545
571852D	3909
571852J	3909
571868D	3430
571868J	3430
571869D	3491
571869J	3491
571870D	3346
571870J	3346
571873D	3881
571873J	3881
571876D	3863
571876J	3863
571877D	3677
571877J	3677
571879D	3628
571879J	3628
571884D	3617
571884J	3617
571885D	3537
571885J	3537
571888D	3618
571888J	3618
571893D	3608
571893J	3608
571897D	3750
571897J	3750

JURID	BESER
NO	NO
571900D	3506
571900J	3506
571904D	3610
571904J	3610
571906D	3529
571906J	3529
571909J	3455
571910D	3670
571910J	3670
571913D	3589
571913J	3589
571914D	3570
571914D	3594
571914J	3570
571914J	3594
571915D	3538
571915J	3538
571916D	3569
571916J	3569
571918D	3879
571918J	3879
571919D	3636
571919J	3636
571923D	3566
571923J	3566
571924D	3623
571924J	3623
571925D	3676
571925J	3676
571929D	3682
571929J	3682
571930D	3938
571930J	3938
571934D	3606
571934J	3606
571936D	3656
571936J	3656
571939D	3637
571939J	3637
571941D	4062
571941J	4062
571942D	3675
571942J	3675
571944D	4125
571944J	4125
571945D	4125
571945J	4125
571946D	3681
571946J	3681
571947D	3861
571947J	3861
571948D	4020
571948J	4020
571949D	3897
571949J	3897
571950D	3804
571950J	3804
571954D	3938
571954J	3938
571955D	3896
571955J	3896
571961D	4102
571961J	4102
571962D	4101
571962D	4209
571962J	4101
571962J	4209
571964D	3722
571964J	3722
571966D	3644
571966J	3644
571967D	3754
571967J	3754
571968D	3762
571968J	3762
571969D	3896
571969J	3896
571971D	3782
571971J	3782
571974D	3549

JURID	BESER
NO	NO
571974J	3549
571976D	3683
571976J	3683
571977D	4212
571977J	4212
571980D	3943
571980J	3943
571984D	3590
571984J	3590
571985D	3682
571985J	3682
571986D	3836
571986J	3836
571987D	3836
571987J	3836
571988D	3821
571988J	3821
571990D	4180
571990J	4180
571991D	4179
571991J	4179
571994D	4347
571994J	4347
571995D	4281
571995J	4281
571998D	3755
571998J	3755
572100D	3723
572100J	3723
572115J	3375
572118D	3746
572118J	3746
572119D	3710
572119J	3710
572120D	3709
572120J	3709
572127D	4087
572127J	4087
572135D	4212
572135J	4212
572136D	4212
572136J	4212
572138D	4148
572138J	4148
572140D	3560
572140J	3560
572143D	3449
572143J	3449
572144D	3449
572144J	3449
572145D	3522
572145J	3522
572146D	3640
572146J	3640
572161D	3833
572161J	3833
572164D	3600
572164J	3600
572166D	3882
572166J	3882
572177D	3579
572177J	3579
572178D	3371
572178J	3371
572180D	3646
572180J	3646
572181D	3633
572181J	3633
572186D	4108
572186J	4108
572188D	3776
572188J	3776
572193D	3875
572193J	3875
572197D	4080
572197J	4080
572200D	3688
572200J	3688
572204J	3601
572205D	3324

JURID	BESER
NO	NO
572205J	3324
572206D	3394
572206J	3394
572209D	3400
572209J	3400
572210D	3766
572210J	3766
572216D	3407
572216J	3407
572217D	3745
572217J	3745
572221D	3887
572221J	3887
572229J	3705
572230D	3370
572230J	3370
572237D	3501
572237J	3501
572238D	3752
572238J	3752
572245D	3693
572245J	3693
572247D	3883
572247J	3883
572250D	3509
572250J	3509
572253D	3673
572253J	3673
572255D	3402
572255J	3402
572257D	4128
572257J	4128
572258D	3446
572258J	3446
572262D	3620
572262J	3620
572267D	3395
572267J	3395
572268D	3504
572268J	3504
572269D	3502
572269J	3502
572271D	3757
572271D	3857
572271J	3757
572271J	3857
572272D	3757
572272D	3857
572272J	3757
572272J	3857
572275D	3426
572275J	3426
572281D	3448
572281J	3448
572288D	3582
572288J	3582
572293D	3436
572293J	3436
572294D	3436
572294J	3436
572295D	3401
572303D	3634
572303J	3634
572304D	3634
572304J	3634
572309D	3631
572309J	3631
572310D	3562
572310J	3562
572312D	3397
572312J	3397
572313D	3758
572313J	3758
572316D	3369
572316J	3369
572317D	3437
572317J	3437
572318D	3437
572318J	3437
572324D	3686

JURID	BESER
NO	NO
572324J	3686
572325D	3832
572325J	3832
572326D	3379
572326J	3379
572331D	3499
572331J	3499
572332D	3463
572332J	3463
572333D	3554
572333D	3651
572333J	3554
572333J	3651
572335D	3462
572335J	3462
572338D	3700
572338J	3700
572340D	3607
572340J	3607
572343D	3700
572343J	3700
572345D	3779
572345J	3779
572346D	3779
572346J	3779
572347D	3632
572347J	3632
572348D	3674
572348J	3674
572349D	3696
572349J	3696
572354D	3695
572354J	3695
572355D	3714
572355J	3414
572355J	3714
572361D	3415
572361J	3415
572363D	3714
572363J	3714
572367D	3777
572367J	3777
572370D	3685
572370J	3685
572373D	3760
572373J	3760
572375D	3603
572375D	3604
572375J	3603
572375J	3604
572377D	4078
572377J	4078
572380D	3915
572380J	3915
572381D	3622
572381J	3622
572382D	3888
572382J	3888
572386D	4072
572386J	4072
572388D	3740
572388J	3740
572392D	4086
572392J	4086
572393D	3704
572393J	3704
572396D	3577
572396J	3577
572399D	3602
572399J	3602
572401D	3778
572401J	3778
572402D	3744
572402J	3744
572403D	3687
572403J	3687
572404D	3768
572404J	3768
572405D	3769
572405J	3769

JURID	BESER
NO	NO
572408D	3687
572408J	3687
572409D	3898
572409J	3898
572411D	3507
572411J	3507
572419D	3809
572419J	3809
572420D	3884
572420J	3884
572423D	4079
572423J	4079
572424D	3913
572424J	3913
572428D	4115
572428J	4115
572432D	4110
572432J	4110
572435D	3874
572435J	3874
572437D	3780
572437J	3780
572442D	3648
572442J	3648
572447D	3685
572447J	3685
572448D	3859
572448J	3859
572449D	4109
572449D	4232
572449J	4109
572449J	4232
572450D	3788
572450J	3788
572451D	4010
572451J	4010
572453D	3843
572453J	3843
572471D	3928
572471J	3928
572477D	3764
572477J	3764
572478D	4155
572478J	4155
572480D	4159
572480J	4159
572482D	3889
572482J	3889
572485D	3890
572485J	3890
572487D	4158
572487J	4158
572488D	4153
572488J	4153
572489D	4118
572489J	4118
572491D	3817
572491J	3817
572492D	3825
572492J	3825
572494D	3512
572494J	3512
572496D	3632
572496J	3632
572497D	3892
572497J	3892
572499D	4271
572499J	4271
572500D	3900
572500J	3900
572501D	3933
572501J	3933
572503D	4119
572503J	4119
572504D	3831
572504J	3831
572510D	4112
572510J	4112
572511D	3978
572511J	3978

JURID	BESER
NO	NO
572513D	3961
572513J	3961
572514D	3959
572514J	3959
572515D	3891
572515J	3891
572516D	4153
572516J	4153
572518D	3976
572518J	3976
572519D	4084
572519J	4084
572521D	4293
572521J	4293
572522D	3944
572522J	3944
572526D	3968
572526J	3968
572527D	3969
572527J	3969
572528D	3829
572528J	3829
572530D	3511
572530J	3511
572532D	3802
572532J	3802
572536D	4009
572536J	4009
572537D	3767
572537J	3767
572538D	3822
572538J	3822
572539D	3951
572539J	3951
572541D	4010
572541J	4010
572542D	3598
572542J	3598
572543D	3554
572543D	3651
572543J	3554
572543J	3651
572546D	4013
572546J	4013
572547D	4106
572547J	4106
572548D	3830
572548J	3830
572549D	3979
572549J	3979
572550D	3912
572550J	3912
572551D	4017
572551J	4017
572553D	3910
572553J	3910
572557D	3993
572557J	3993
572560D	4269
572560J	4269
572562D	4105
572562J	4105
572565D	3901
572565J	3901
572566D	3764
572566J	3764
572567D	3574
572567J	3574
572569D	4077
572569J	4077
572570D	3976
572570J	3976
572571D	4036
572571J	4036
572572D	3988
572572J	3988
572573D	3933
572573J	3933
572575D	4143
572575J	4143

JURID	BESER
NO	NO
572577D	4028
572577J	4028
572578D	3958
572578J	3958
572583D	3911
572583J	3911
572584D	3929
572584J	3929
572585D	4001
572585J	4001
572589D	4027
572589J	4027
572590D	3980
572590J	3980
572591D	3954
572591J	3954
572592D	4303
572592J	4303
572593D	3880
572593J	3880
572595D	3949
572595J	3949
572597D	3997
572597J	3997
572598D	3953
572598J	3953
572599D	3996
572599J	3996
572600D	4147
572600J	4147
572601D	4037
572601J	4037
572604D	3980
572604J	3980
572605D	4160
572605J	4160
572606D	4156
572606J	4156
572607D	3960
572607J	3960
572608D	3989
572608J	3989
572612D	4039
572612J	4039
572613D	4165
572613J	4165
572617D	3928
572617J	3928
572619D	4035
572619J	4035
572621D	4111
572621J	4111
572627D	4146
572627J	4146
572628D	4029
572628J	4029
572629D	4061
572629J	4061
572636D	4082
572636J	4082
572638D	4081
572638J	4081
572639D	4060
572639J	4060
572641D	3982
572641J	3982
572642D	3903
572642J	3903
572643D	3886
572643J	3886
572648J	4277
572649D	4074
572649J	4074
572651D	3948
572651J	3948
572654D	3933
572654J	3933
572655D	4255
572655J	4255
572656D	4256

JURID	BESER
NO	NO
572656J	4256
573003D	3919
573003J	3919
573005D	3529
573005J	3529
573006D	3896
573006J	3896
573008D	3539
573008J	3539
573010D	3763
573010J	3763
573011D	3846
573011J	3846
573012D	4093
573012J	4093
573013D	4100
573013J	4100
573014D	4123
573014J	4123
573015D	3784
573015J	3784
573016D	3950
573016J	3950
573017D	3852
573017J	3852
573018D	3853
573018J	3853
573021D	3918
573021J	3918
573022D	3590
573022J	3590
573027D	3935
573027J	3935
573029D	3934
573029J	3934
573030D	3820
573030J	3820
573031D	3800
573031J	3800
573032D	3529
573032J	3529
573034D	4126
573034J	4126
573035D	4069
573035J	4069
573039D	4059
573039J	4059
573041D	3877
573041J	3877
573042D	3617
573042J	3617
573047D	4095
573047J	4095
573050D	3553
573050J	3553
573053D	3663
573053J	3663
573055D	3855
573055J	3855
573058D	3848
573058J	3848
573059D	3795
573059J	3795
573068D	3512
573068J	3512
573072D	4197
573072J	4197
573074D	3826
573074J	3826
573075D	3800
573075J	3800
573077D	4011
573077J	4011
573083D	3854
573083J	3854
573084D	3931
573084J	3931
573085D	3801
573085J	3801
573089D	4211

JURID	BESER
NO	NO
573089J	4211
573092D	4102
573092J	4102
573093D	3676
573093J	3676
573094D	3548
573094D	3690
573094J	3548
573094J	3690
573096D	3986
573096J	3986
573101D	4138
573101J	4138
573102D	4094
573102J	4094
573106D	3794
573106J	3794
573107D	3856
573107J	3856
573109D	3568
573109J	3568
573110D	3921
573110J	3921
573112D	4152
573112J	4152
573113D	3834
573113J	3834
573114D	3835
573114J	3835
573115D	3914
573115J	3914
573118D	4012
573118J	4012
573120D	4093
573120J	4093
573123D	3850
573123J	3850
573124D	3849
573124J	3849
573125D	3983
573125J	3983
573127D	4138
573127J	4138
573128D	3904
573128J	3904
573130D	3790
573130J	3790
573131D	3940
573131J	3940
573132D	3939
573132J	3939
573133D	3946
573133J	3946
573135D	3987
573135J	3987
573147D	4103
573147J	4103
573150D	4208
573150J	4208
573151D	4346
573151J	4346
573153D	4042
573153J	4042
573158D	3905
573158J	3905
573159D	3841
573159J	3841
573160D	3841
573160J	3841
573161D	4347
573161J	4347
573164D	3826
573164J	3826
573165D	3800
573165J	3800
573168D	4173
573168J	4173
573169D	3643
573169J	3643
573170D	3826

JURID	BESER
NO	NO
573170J	3826
573171D	3800
573171J	3800
573172D	3800
573172J	3800
573175D	4210
573175J	4210
573178D	4240
573178J	4240
573183D	3820
573183J	3820
573184D	3800
573184J	3800
573186D	3853
573186J	3853
573189D	4180
573189J	4180
573192D	3964
573192J	3964
573196D	4096
573196J	4096
573198D	4096
573198J	4096
573201D	4161
573201J	4161
573203D	3872
573203J	3872
573208D	4222
573208J	4222
573209D	3885
573209J	3885
573216D	3894
573216J	3894
573218D	4058
573218J	4058
573220D	3842
573220J	3842
573221D	3923
573221J	3923
573224D	4181
573224J	4181
573227D	4076
573227J	4076
573235D	3984
573235J	3984
573241D	3970
573241J	3970
573243D	4134
573243J	4134
573247D	4259
573247J	4259
573248J-AS	4247
573249D	4122
573249J	4122
573253D	4137
573253J	4137
573255D	3983
573255J	3983
573257J	4248
573259D	4260
573259J	4260
573260J	3981
573261D	3922
573261J	3922
573263J	4157
573266D	4173
573266J	4173
573268D	3964
573268J	3964
573270D	4149
573270J	4149
573272D	3967
573272J	3967
573274D	3820
573274J	3820
573275D	3906
573275J	3906
573276D	3920
573276J	3920
573277D	3907

JURID	BESER
NO	NO
573277J	3907
573278D	3955
573278J	3955
573280D	3972
573280J	3972
573281D	4151
573281J	4151
573284D	3966
573284J	3966
573286D	4142
573286J	4142
573289D	3971
573289J	3971
573291D	4249
573291J	4249
573295D	4141
573295J	4141
573296D	3945
573296J	3945
573300D	4207
573300J	4207
573306D	3800
573306J	3800
573308D	3800
573308J	3800
573312D	4135
573312J	4135
573313D	4150
573313J	4150
573320D	4093
573320J	4093
573323D	4004
573323J	4004
573325D	4008
573325J	4008
573329D	4309
573329J	4309
573330D	4162
573330J	4162
573332D	4230
573332J	4230
573334D	4121
573334J	4121
573335D	4014
573335J	4014
573340D	4016
573340J	4016
573343D	4291
573343J	4291
573357D	4056
573357J	4056
573358D	4132
573358D	4172
573358J	4132
573358J	4172
573359D	4057
573359J	4057
573363D	4204
573363J	4204
573363JC	4204
573365D	4215
573365J	4215
573368D	4136
573368J	4136
573369D	4311
573369J	4311
573375D	4148
573375J	4148
573376J	4075
573377D	3895
573377J	3895
573379D	4038
573379J	4038
573380D	4213
573380J	4213
573393D	4113
573393J	4113
573395D	4310
573395J	4310
573399D	4145

JURID	BESER
NO	NO
573399J	4145
573404D	4198
573404J	4198
573406D	4166
573406J	4166
573408D	4220
573408J	4220
573409D	4241
573409J	4241
573414D	3966
573414J	3966
573416D	3998
573416J	3998
573422D	4140
573422J	4140
573430D	3980
573430J	3980
573431D	3952
573431J	3952
573434D	4175
573434J	4175
573435D	4167
573435J	4167
573438D	4174
573438J	4174
573440D	4176
573440J	4176
573444D	4315
573444J	4315
573454D	4049
573454J	4049
573461D	4201
573461J	4201
573504D	3614
573504J	3614
573506D	3575
573506J	3575
573507D	3926
573507J	3926
573508D	3925
573508J	3925
573509D	3962
573509J	3962
573510D	3963
573510J	3963
573511D	3965
573511J	3965
573512D	4092
573512J	4092
573513D	3749
573513J	3749
573514D	3823
573514J	3823
573517D	3995
573517J	3995
573518D	3679
573518J	3679
573519D	3926
573519J	3926
573520D	3575
573520J	3575
573524D	3575
573524J	3575
573656J	4227
573660J	4287

LPR	BESER
NO	NO
05P001	3346
05P002	3317
05P003	3316
05P006	3424
05P007	3424
05P010	3625
05P011	3543
05P012	3440
05P014	3423
05P016	3459
05P024	3318
05P026	3350
05P027	3320
05P035	3723
05P036	3437
05P039	3499
05P043	4108
05P047	3395
05P053	3446
05P055	3600
05P056	3746
05P058	3560
05P063	4088
05P072	4212
05P073	3582
05P076	3633
05P090	3779
05P092	3758
05P094	3466
05P095	3425
05P096	3467
05P1001	4112
05P1002	3817
05P1003	3769
05P1004	3846
05P1005	4012
05P1007	3574
05P1009	3507
05P1012	3622
05P1013	4072
05P1014	4148
05P1015	3648
05P102	3432
05P1020	3653
05P1021	4071
05P1025	3764
05P1028	4027
05P1029	4084
05P1030	3697
05P1033	3915
05P1037	4155
05P1042	3901
05P1050	3829
05P1051	4085
05P1053	4009
05P1062	3769
05P1065	4069
05P1067	3740
05P1068	3825
05P1070	4110
05P1071	4109
05P1071	4232
05P1072	3802
05P1076	3618
05P1079	3609
05P1080	3951
05P1081	3898
05P1082	3436
05P1088	3877
05P109	3327
05P1091	4119
05P1096	3674
05P1097	3632
05P1100	3680
05P1101	3598
05P1106	3659
05P1107	3503
05P1108	3380
05P1109	3942
05P1109B	3942

LPR	BESER
NO	NO
05P111	3318
05P1110	3928
05P1113	4153
05P1114	3890
05P1115	3911
05P1117	3560
05P112	3318
05P1124	4097
05P1129	3609
05P113	3311
05P1131	3628
05P1131A	3628
05P1132	3874
05P1133	3662
05P1134	3680
05P1138	3502
05P1142	3433
05P1143	3433
05P1164	3994
05P118	3321
05P1188	3820
05P1189	3853
05P1190	3885
05P1191	3643
05P1192	3800
05P1193	4180
05P1194	4181
05P1195	3946
05P1196	3939
05P1197	4042
05P1199	3894
05P120	3806
05P1202	3940
05P1205	3841
05P1206	3842
05P1207	3978
05P1208	3687
05P1210	3895
05P1211	4159
05P1212	3985
05P1219	3905
05P1220	3968
05P1222	3502
05P1225	3826
05P1226	4075
05P1227	3763
05P1228	3923
05P1229	3983
05P1231	3879
05P1235	3987
05P1236	3853
05P1238	3590
05P1239	4096
05P1240	4173
05P125	3484
05P1251	4347
05P1253	4210
05P1255	4161
05P1256	3842
05P1258	3953
05P1259	3920
05P126	3312
05P1260	3906
05P1261	3907
05P1263	4173
05P1264	3826
05P1266	3826
05P1268	3800
05P127	3393
05P1271	4346
05P1272	4157
05P1274	4247
05P1275	3925

LPR	BESER
NO	NO
05P1278	3984
05P1281	3949
05P1282	4077
05P1287	3981
05P1288	3922
05P1289	3820
05P1293	3926
05P1294	3963
05P1295	3962
05P1295K	3962
05P1296	4092
05P1296A	4092
05P1297	3965
05P1297A	3965
05P1297B	3965
05P1301	3536
05P131	3323
05P1310	3339
05P1310	3514
05P1311	3687
05P1312	3954
05P1314	4038
05P1315	4037
05P1316	3956
05P1318	3929
05P1319	3975
05P1322	3976
05P1326	4058
05P1327	3820
05P1328	3800
05P133	3873
05P1333	3958
05P1334	3900
05P1340	4248
05P1342	4074
05P1343	4017
05P1344	3980
05P1345	3880
05P1346	3797
05P1347	3955
05P1348	3972
05P1349	4001
05P135	3343
05P135	3483
05P1351	3964
05P1355	3767
05P1357	3779
05P1359	3944
05P136	3710
05P1360	4293
05P1361	3910
05P1362	4076
05P1363	3912
05P1364	3831
05P1365	4031
05P1367	4179
05P1368	4105
05P1369	3959
05P137	3335
05P1370	3979
05P1372	3886
05P1373	4106
05P1374	3961
05P1375	4028
05P1376	3945
05P1376A	3945
05P1376B	3945
05P1379	3891
05P1382	3960
05P1388	4134
05P1389	4137
05P139	3366
05P1398	3905
05P1399	4006
05P140	3423
05P1400	4018
05P1401	4198
05P1402	4081
05P1403	4016
05P1406	4143

LPR	BESER
NO	NO
05P1407	4113
05P1408	4213
05P141	3315
05P141	3515
05P1410	4208
05P1411	3969
05P1413	4029
05P1415	4039
05P1416	4165
05P1417	3989
05P1418	3996
05P1419	3997
05P141A	3315
05P141A	3515
05P1420	4259
05P1421	4249
05P1423	4148
05P143	3416
05P1432	4303
05P1436	4111
05P1448	3976
05P1449	3982
05P1451	4035
05P1452	3903
05P1454	4036
05P1455	4156
05P1456	4160
05P146	3405
05P1460	4151
05P1461	3995
05P1461A	3995
05P1464	4122
05P1464A	4122
05P1465	3966
05P1467	4149
05P147	3806
05P1471	3970
05P1483	4000
05P1484	4142
05P1487	3967
05P1489	4260
05P1491	3827
05P1493	3964
05P1494	4121
05P1495	3952
05P1496	4207
05P1497	4015
05P1499	3988
05P1500	3971
05P1506	4240
05P151	3374
05P1516	4082
05P1522	4146
05P1536	3841
05P1548	4005
05P1551	4162
05P1555	4004
05P1558	4061
05P1562	4008
05P1563	4008
05P1570	4132
05P1570	4172
05P1574	4054
05P1575	4014
05P1577	4258
05P1578	4057
05P1579	4056
05P158	3611
05P1580	4230
05P1581	4230
05P1584	4150
05P1586	4169
05P1586A	4169
05P1589	4147
05P1593	3948
05P1608	4135
05P161	3373
05P1616	4314
05P1616A	4314

LPR	BESER
NO	NO
05P1616B	4314
05P1620	4215
05P1621	3983
05P1622	4220
05P1625	4060
05P1630	4124
05P1635	4002
05P1639	3893
05P164	3709
05P1640	3747
05P1649	3748
05P1650	4040
05P1654	4141
05P1656	3826
05P1657	3800
05P1669	3965
05P1673	4122
05P1679	3906
05P1682	4167
05P1689	4039
05P169	3709
05P1691	4255
05P1693	4256
05P1698	3981
05P1702	4140
05P1710	4311
05P1718	3998
05P1721	3922
05P1721	4171
05P1727	4303
05P1733	3916
05P1736	4233
05P1740	4145
05P1744	4136
05P1753	4166
05P1754	4309
05P1755	4310
05P1757	4049
05P1770	4201
05P1784	4176
05P1786	4174
05P1787	4175
05P179	3421
05P181	3550
05P183	3324
05P1835	4241
05P1836	4295
05P186	3646
05P187	3490
05P1879	4226
05P188	3378
05P1882	3853
05P1886	4312
05P190	3410
05P1976	4284
05P1979	4287
05P2001	4301
05P2005	4280
05P201	3493
05P2012	4308
05P202	3371
05P2020	4349
05P203	3326
05P206	3717
05P207	3331
05P208	3332
05P210	3365
05P211	3339
05P211	3514
05P211A	3339
05P211A	3514
05P213	3511
05P215	3536
05P216	3650
05P217	3642
05P220	3503
05P221	3619
05P223	3441

LPR	BESER
NO	NO
05P224	3486
05P225	3444
05P228	3442
05P230	3381
05P231	3495
05P232	3621
05P233	3417
05P234	3419
05P235	3429
05P236	3624
05P237	3573
05P238	3572
05P242	3417
05P245	3509
05P249	3369
05P250	3379
05P252	3370
05P254	3407
05P257	3620
05P258	3546
05P260	3401
05P261	3413
05P264	3397
05P265	3400
05P266	3714
05P268	3402
05P270	3634
05P271	3380
05P274	3474
05P275	3496
05P276	3428
05P277	3603
05P278	3482
05P280	3408
05P284	3462
05P288	3422
05P289	3415
05P293	3457
05P294	3529
05P295	3589
05P296	3564
05P297	3578
05P299	3649
05P300	3635
05P302	3430
05P304	3470
05P306	3583
05P307	3496
05P314	3436
05P315	3448
05P318	3641
05P319	3609
05P322	3752
05P324	3662
05P325	3605
05P327	3417
05P327	3417
05P330	3680
05P331	3563
05P331A	3563
05P333	3469
05P334	3717
05P335	3463
05P336	3875
05P342	3882
05P346	3799
05P348	3632
05P349	3503
05P352	3700
05P354	4104
05P355	3562
05P360	3679
05P364	3504
05P366	3522
05P372	3526
05P374	3666
05P378	3760
05P379	3692
05P381	3436
05P383	3464

LPR	BESER
NO	NO
05P384	3487
05P387	3660
05P392	3661
05P396	3883
05P406	3863
05P406A	3863
05P408	3513
05P408A	3513
05P409	3677
05P409A	3677
05P411	3366
05P417	3584
05P420	3675
05P423	3629
05P423A	3629
05P425	3523
05P427	3596
05P430	3683
05P431	3771
05P435	3580
05P440	3536
05P445	3539
05P449	3733
05P450	3528
05P453	3590
05P455	3867
05P457	3898
05P459	4182
05P461	3593
05P462	3608
05P464	3643
05P465	3736
05P467	3579
05P468	3491
05P470	3888
05P471	3558
05P472	3704
05P474	3994
05P477	3581
05P477A	3581
05P479	4078
05P481	3473
05P482	3445
05P485	3630
05P485A	3630
05P486	3878
05P487	3819
05P492	3658
05P492A	3658
05P493	3595
05P494	3559
05P500	3773
05P502	3603
05P502	3604
05P506	4212
05P508	4148
05P510	3640
05P512	3833
05P514	3776
05P517	4080
05P518	3688
05P520	3766
05P522	3745
05P524	3887
05P537	3673
05P539	4128
05P542	3502
05P544	3757
05P544	3857
05P546	3426
05P555	3631
05P558	3686
05P559	3832
05P561	3554
05P561	3651
05P564	3607
05P565	3674
05P566	3696
05P569	3892
05P570	3874

LPR	BESER
NO	NO
05P571	3695
05P577	3777
05P578	3685
05P582	3496
05P585	3474
05P586	3773
05P587	3449
05P591	3585
05P599	3623
05P600	3551
05P605	3553
05P608	3567
05P608A	3567
05P609	3678
05P610	3670
05P611	3512
05P612	3506
05P613	3531
05P614	3617
05P617	3577
05P619	3750
05P621	4062
05P623	3680
05P626	3453
05P627	3538
05P628	3570
05P628	3594
05P629	4197
05P631	4020
05P633	3614
05P634	3529
05P636	3610
05P638	3566
05P645	3606
05P650	3656
05P651	3419
05P656	3505
05P656	3615
05P658	3674
05P659	3327
05P661	3659
05P662	3659
05P665	3602
05P667	3637
05P668	3682
05P670	4125
05P670A	4125
05P671	4125
05P672	3681
05P676	3468
05P678	3549
05P679	3569
05P680	3568
05P682	3687
05P683	3636
05P684	3575
05P685	3757
05P685	3857
05P686	3809
05P687	3897
05P691	3548
05P691	3690
05P692	3782
05P693	3744
05P695	3778
05P696	3754
05P697	3755
05P698	3762
05P699	3763
05P700	3768
05P701	4086
05P702	4274
05P704	3919
05P705	3918
05P708	3938
05P710	3687
05P711	4059
05P712	3822
05P713	4079
05P714	4214

LPR	BESER
NO	NO
05P717	3722
05P718	3896
05P719	3896
05P725	3663
05P726	3676
05P729	3687
05P730	3782
05P731	3527
05P737	3740
05P738	3495
05P747	3545
05P749	3693
05P756	3790
05P758	3846
05P759	3577
05P760	3994
05P761	4281
05P763	3826
05P763A	3826
05P764	3800
05P764A	3800
05P767	3836
05P771	3881
05P775	3784
05P785	3790
05P786	4345
05P787	3794
05P789	3820
05P791	3855
05P793	3935
05P796	3928
05P798	3884
05P799	3934
05P802	3820
05P805	3854
05P806	3931
05P807	3800
05P809	4269
05P813	3780
05P814	4211
05P815	3853
05P816	3539
05P817	4138
05P819	4271
05P826	3765
05P829	3852
05P830	3823
05P830A	3823
05P831	3986
05P833	4094
05P835	3830
05P836	3788
05P838	3913
05P840	4011
05P844	3667
05P845	3859
05P846	3932
05P847	3993
05P848	3993
05P849	4102
05P853	4152
05P856	4010
05P857	3933
05P858	3843
05P859	3843
05P860	3843
05P865	4100
05P866	3904
05P867	3983
05P868	3529
05P869	3848
05P870	4214
05P871	4123
05P877	4118
05P878	3889
05P879	3749
05P880	3749
05P884	3856
05P885	3914

LPR	BESER
NO	NO
05P887	3583
05P893	4216
05P896	4182
05P897	4093
05P898	3950
05P899A	4102
05P899B	4102
05P900	4101
05P900	4209
05P901	4103
05P901A	4103
05P903	3938
05P904	4013
05P905	4101
05P905	4209
05P906	3801
05P907	3853
05P910	3850
05P911	3849
05P913	3801
05P919	3501
05P920	3507
05P922	3872
05P924	3872
05P926	3600
05P928	4212
05P932	3603
05P932	3604
05P934	3598
05P936	4034
05P939	4275
05P940	4115
05P946	3795
05P948	3861
05P949	3877
05P950	3644
05P952	3943
05P955	3575
05P956	3804
05P957	3821
05P957A	3821
05P958	4158
05P961	3537
05P966	3834
05P967	3835
05P969	3590
05P971	4095
05P973	4138
05P977	3553
05P979	3896
05P983	4126
05P986	3408
05P988	3552
05P989	3781
05P994	3921
05P997	4153

MERITOR	BESER
NO	NO
MDP1038	3567
MDP1039	3678
MDP1043	3614
MDP1045	3670
MDP1126	3994
MDP3017	3433
MDP3024	3433
MDP3122	3994
MDP376	3433
MDP3835K	3679
MDP501	3679
MDP5020	3773
MDP503	3433
MDP5040	3679
MDP5453	3773
MDP5481	3679
MDP700	3473
MDP701	3445

MGA	BESER
NO	NO
4	3317
11	3320
12	3318
16	3369
20	3311
21	3379
33	3321
35	3405
51	3323
56	3625
58	3350
60	3373
75	3315
75	3515
76	3327
77	3343
77	3483
83	3709
87	3710
94	3366
96	3335
101	3393
102	3416
103	3423
110	3315
110	3515
112	3374
118	3527
119	3312
129	3468
130	3410
132	3513
142	3365
144	3421
146	3442
155	3526
156	3417
157	3417
157	3417
159	3370
161	3440
164	3493
170	3536
171	3419
172	3429
173	3484
175	3378
176	3467
178	3424
180	3430
181	3611
182	3339
182	3514
184	3466
185	3441
190	3621
191	3486
192	3444
193	3624
194	3380
195	3573
196	3572
201	3474
202	3381
204	3509
205	3641
207	3408
210	3546
212	3496
213	3428
214	3482
217	3603
218	3366
219	3381
221	3543
222	3457
223	3529
224	3432
225	3422
228	3609

MGA	BESER
NO	NO
229	3490
231	3583
232	3449
234	3437
236	3564
237	3578
238	3394
239	3402
242	3873
246	3717
248	3470
249	3680
252	3752
254	3504
260	3400
264	3415
266	3371
267	3634
268	3523
274	3589
277	3464
278	3758
279	3448
282	3487
283	3563
287	4104
288	3562
289	3660
291	3596
299	3491
301	4072
303	3683
305	4212
307	3556
308	3539
309	3623
311	3605
312	3522
313	3619
314	3635
315	3558
317	3593
319	3608
322	3528
325	3503
329	4214
331	3819
332	3878
333	3610
334	4088
336	3595
337	3559
339	3779
340	3888
341	3598
342	3686
343	3607
345	4128
346	4182
347	3658
349	3473
350	3445
351	3799
352	3506
354	3589
356	3750
357	3617
360	3590
361	3662
363	3867
364	3553
365	3577
367	4062
368	3567
372	3581
375	3554
375	3651
376	3632
377	3560
378	3704

MGA	BESER
NO	NO
380	4148
383	3740
384	3757
384	3857
385	3538
386	3566
387	3630
388	3677
389	3863
390	3603
390	3604
391	3636
396	3548
396	3690
397	3529
398	3722
399	3570
399	3594
401	3545
402	3832
406	3762
407	3682
408	3550
409	3469
411	3678
413	3631
414	3696
415	3505
415	3615
416	3733
417	3717
420	3736
421	3640
423	3585
424	3782
425	3938
426	3659
431	3656
434	3602
437	3502
438	3453
439	3771
443	3763
446	3896
447	3896
448	3606
449	3833
451	3670
452	3663
453	4125
456	3674
458	4197
459	3512
463	3884
465	3882
466	3685
467	4108
468	3688
470	3675
471	3693
472	3887
474	3764
475	4080
476	4079
477	3637
480	3754
481	3755
482	3744
483	3687
485	4281
486	4078
487	3782
488	3846
489	3778
490	3790
491	3875
495	3590
497	3909
501	3763
503	3829

MGA	BESER
NO	NO
504	3830
505	4027
506	3859
510	4123
512	4011
513	4009
515	3777
518	3681
519	3861
520	3804
521	3794
522	4345
523	3784
529	4059
530	3417
530	3417
531	3935
532	3618
535	4155
537	3919
538	3918
539	3934
540	3768
541	3780
542	3676
543	3821
544	3943
545	3836
546	3877
548	3897
553	4100
554	4093
555	3769
556	3852
557	3853
559	3800
560	3539
561	3938
562	3896
563	3854
564	3931
565	3800
566	3826
568	4103
571	3426
574	4152
575	3529
577	4087
578	3642
579	4010
580	3632
582	3704
584	3629
586	3879
589	3590
592	3892
593	3874
595	4269
599	3553
603	3795
604	3602
605	3881
607	3697
609	3614
610	3822
611	3644
615	3575
617	3932
618	4126
619	4069
622	3648
625	3901
627	3928
629	3913
630	4110
631	3788
633	3993
634	3993
635	4109
635	4232

MGA	BESER
NO	NO
637	4222
642	4102
643	4101
643	4209
644	3843
646	3921
647	3846
648	4138
649	4093
651	3889
653	4012
656	4158
658	3856
660	3802
661	4094
662	3817
664	3855
665	3848
668	4095
669	4153
671	4271
672	4180
676	3825
678	3933
682	3986
683	4211
684	3831
685	3912
686	4013
687	4040
688	3835
689	3834
690	3950
691	3769
692	3849
693	3849
694	3850
695	3801
696	3962
697	3914
698	4347
699	3983
700	4097
702	4112
704	3790
705	3548
705	3690
707	3419
709	3552
710	3885
712	3978
715	4042
717	4138
719	3890
720	3904
721	4118
722	4119
724	3985
725	3951
726	3820
728	3826
730	3643
731	4173
732	3939
733	3940
734	3946
737	4346
739	3841
740	3842
741	4028
742	3979
745	3983
747	3968
748	3923
750	3984
751	3800
752	3969
754	3924
757	4096
758	4181

MGA	BESER
NO	NO
759	3987
760	3894
763	3575
764	3823
767	4159
769	3961
770	3993
771	3959
772	4001
775	3895
776	4074
781	4076
782	4153
785	4137
787	3891
789	4106
790	4031
791	4084
798	3983
802	4058
803	4293
804	3944
805	3760
806	3853
808	4017
809	3880
810	3980
811	4016
812	4000
816	3853
817	3687
823	3952
825	4210
830	4240
833	3958
836	4077
841	3685
842	3984
843	3820
844	4161
845	3953
846	3949
847	3981
848	3929
849	3800
851	3925
852	3926
855	3906
856	3920
857	3907
858	3945
865	4157
866	3863
868	3964
870	3976
871	4105
872	4111
877	3922
878	3972
881	3903
884	3955
885	3976
887	4151
888	4005
889	4004
891	4092
892	3954
893	4035
895	4173
897	4160
899	3956
900	3989
904	3900
905	4039
906	4165
907	3975
908	3883
909	4213
910	3841
911	3966

MGA	BESER
NO	NO
912	4248
913	4249
914	4207
915	3970
916	4247
917	4137
919	4038
921	4156
922	3982
925	4037
929	4054
932	4260
934	4113
935	4029
936	3965
938	4143
939	3933
940	3967
941	4134
943	4211
946	3997
949	3507
954	3933
956	4081
960	3971
961	4122
962	3996
964	3965
965	3964
966	4142
967	4147
968	4134
972	4146
974	4309
977	4149
988	4150
989	4073
990	3463
997	3980
998	4230
1001	3944
1002	4061
1006	3988
1007	3529
1010	4014
1015	4135
1016	4060
1018	3886
1019	4008
1020	4230
1021	4121
1025	4291
1029	3906
1034	4310
1038	3980
1039	3767
1041	3797
1042	3826
1043	3826
1045	3933
1047	4255
1048	4256
1049	4122
1050	4132
1050	4172
1051	4162
1058	4057
1060	4056
1063	3983
1064	3800
1071	4145
1080	4039
1089	4161
1093	3893
1095	4136
1097	4208
1100	4166
1101	3966
1110	4173
1116	4124

MGA	BESER
NO	NO
1117	4311
1118	3952
1120	4204
1125	4241
1127	4314

MINTEX	BESER
NO	NO
MDB1002	3318
MDB1003	3320
MDB1005	3350
MDB1008	3317
MDB1009	3346
MDB1013	3316
MDB1023	3377
MDB1027	3333
MDB1054	3375
MDB1063	3710
MDB1068	3318
MDB1069	3709
MDB1074	3393
MDB1079	3315
MDB1079	3515
MDB1081	3327
MDB1083	3343
MDB1083	3483
MDB1086	3366
MDB1099	3335
MDB1103	3806
MDB1108	3405
MDB1109	3339
MDB1109	3514
MDB1114	3315
MDB1114	3515
MDB1115	3331
MDB1116	3326
MDB1118	3374
MDB1119	3324
MDB1131	3513
MDB1139	3371
MDB1141	3410
MDB1143	3527
MDB1144	3379
MDB1150	3378
MDB1151	3333
MDB1153	3365
MDB1154	3706
MDB1156	3421
MDB1158	3522
MDB1162	3369
MDB1166	3579
MDB1174	3417
MDB1174	3417
MDB1175	3417
MDB1180	3339
MDB1180	3514
MDB1183	3370
MDB1184	3509
MDB1185	3705
MDB1186	3407
MDB1190	3650
MDB1191	3536
MDB1192	3321
MDB1204	3415
MDB1205	3440
MDB1207	3394
MDB1209	3493
MDB1211	3429
MDB1212	3419
MDB1214	3503
MDB1215	3381
MDB1217	3490
MDB1218	3424
MDB1222	3611
MDB1223	3609
MDB1224	3624
MDB1225	3621
MDB1230	3573
MDB1235	3320
MDB1237	3401
MDB1239	3572
MDB1240	3466
MDB1241	3501
MDB1243	3752
MDB1244	3633
MDB1245	3513
MDB1251	3402
MDB1253	3649

MINTEX	BESER
NO	NO
MDB1256	3625
MDB1257	3468
MDB1259	3646
MDB1266	3486
MDB1267	3444
MDB1273	3441
MDB1278	3467
MDB1279	3397
MDB1280	3758
MDB1282	3400
MDB1290	3549
MDB1291	3380
MDB1293	3619
MDB1297	3634
MDB1298	3504
MDB1305	3620
MDB1310	3462
MDB1312	3408
MDB1316	3546
MDB1322	3701
MDB1327	3474
MDB1328	3436
MDB1331	3495
MDB1333	3482
MDB1334	3714
MDB1339	3496
MDB1341	3603
MDB1344	3582
MDB1346	3499
MDB1348	3449
MDB1350	3875
MDB1353	3422
MDB1354	3395
MDB1355	3428
MDB1360	4212
MDB1362	3605
MDB1369	3578
MDB1370	3717
MDB1371	3635
MDB1372	3692
MDB1376	3457
MDB1377	3529
MDB1381	3394
MDB1382	3529
MDB1384	3432
MDB1385	3469
MDB1386	3470
MDB1388	3543
MDB1393	3564
MDB1395	3723
MDB1397	3446
MDB1398	3777
MDB1401	3609
MDB1402	3430
MDB1404	3589
MDB1410	3683
MDB1411	4212
MDB1415	3641
MDB1417	3700
MDB1421	3757
MDB1421	3857
MDB1423	3562
MDB1427	3600
MDB1429	3746
MDB1430	3461
MDB1431	3691
MDB1436	3436
MDB1437	3408
MDB1439	3463
MDB1440	3666
MDB1441	3437
MDB1442	3680
MDB1443	4104
MDB1445	3596
MDB1446	3448
MDB1447	3448
MDB1451	3779
MDB1459	3583
MDB1464	3882
MDB1465	4088

MINTEX	BESER
NO	NO
MDB1467	3642
MDB1468	3491
MDB1471	3537
MDB1479	3366
MDB1480	3469
MDB1481	4108
MDB1482	3760
MDB1489	3660
MDB1493	3464
MDB1495	3603
MDB1495	3604
MDB1496	3426
MDB1497	4080
MDB1499	3455
MDB1502	3598
MDB1503	3629
MDB1507	3502
MDB1509	3622
MDB1510	3695
MDB1513	3459
MDB1516	3584
MDB1519	3487
MDB1530	3522
MDB1531	3590
MDB1533	3696
MDB1538	3563
MDB1539	3685
MDB1540	3733
MDB1543	3704
MDB1547	4072
MDB1549	3583
MDB1552	3879
MDB1554	3545
MDB1555	3816
MDB1556	3623
MDB1558	3473
MDB1559	3445
MDB1560	3550
MDB1564	4148
MDB1570	3531
MDB1571	3551
MDB1575	3640
MDB1578	4086
MDB1583	3609
MDB1585	3513
MDB1589	3631
MDB1610	3607
MDB1611	3556
MDB1613	3539
MDB1615	3686
MDB1620	3558
MDB1622	3593
MDB1623	4128
MDB16250	3627
MDB1627	3581
MDB1628	3503
MDB1629	3819
MDB1630	3878
MDB1642	3658
MDB1643	3630
MDB1644	3523
MDB1645	3512
MDB1646	3688
MDB1647	3560
MDB1648	3619
MDB1651	3717
MDB1657	3888
MDB1658	3554
MDB1658	3651
MDB1659	3683
MDB1662	3528
MDB1666	3608
MDB1678	3832
MDB1679	3511
MDB1680	3833
MDB1682	3553
MDB1683	3736
MDB1685	3674
MDB1688	4078
MDB1690	3883

MINTEX	BESER
NO	NO
MDB1695	3673
MDB1696	3693
MDB1698	3887
MDB1703	3595
MDB1704	3559
MDB1708	3915
MDB1710	4099
MDB1719	3745
MDB1720	3766
MDB1724	3628
MDB1725	3930
MDB1726	3675
MDB1731	3750
MDB1735	3617
MDB1736	3677
MDB1737	3678
MDB1738	3670
MDB1739	3567
MDB1740	3602
MDB1741	3506
MDB1744	3671
MDB1745	3881
MDB1749	3697
MDB1750	3884
MDB1752	3909
MDB1754	3740
MDB1760	3577
MDB1761	4034
MDB1762	3507
MDB1769	4182
MDB1770	3544
MDB1783	4197
MDB1785	3781
MDB1789	3867
MDB1793	3585
MDB1794	4079
MDB1802	3614
MDB1804	3538
MDB1805	3566
MDB1811	3682
MDB1812	3636
MDB1813	3665
MDB1814	3606
MDB1815	3799
MDB1822	4020
MDB1823	3809
MDB1829	3618
MDB1830	3874
MDB1831	4062
MDB1833	3667
MDB1837	3659
MDB1841	4275
MDB1842	3722
MDB1844	4010
MDB1845	3892
MDB1855	3680
MDB1858	3663
MDB1862	3898
MDB1866	4148
MDB1868	3896
MDB1869	3610
MDB1871	3863
MDB1872	3637
MDB1879	3656
MDB1883	3570
MDB1883	3594
MDB1885	4214
MDB1889	3505
MDB1889	3615
MDB1900	3687
MDB1902	3859
MDB1903	3648
MDB1904	3763
MDB1905	3830
MDB1906	3829
MDB1908	3762
MDB1909	4071
MDB1910	3901
MDB1913	3419
MDB1915	3574

MINTEX	BESER
NO	NO
MDB1917	3764
MDB1918	3717
MDB1919	3896
MDB1921	3822
MDB1923	3653
MDB1924	4125
MDB1926	3676
MDB1927	3872
MDB1932	3552
MDB1936	4126
MDB1937	4069
MDB1938	3778
MDB1941	3744
MDB1942	4274
MDB1943	3918
MDB1944	3919
MDB1945	4027
MDB1946	3780
MDB1948	3548
MDB1948	3690
MDB1956	3897
MDB1958	3754
MDB1959	3755
MDB1960	3938
MDB1962	3425
MDB1965	4084
MDB1967	3681
MDB1972	3872
MDB1975	3932
MDB1987	3928
MDB1990	4155
MDB1991	3821
MDB1995	4059
MDB1996	4271
MDB1997	3804
MDB1999	3913
MDB2002	3861
MDB2004	3879
MDB2006	3768
MDB2008	4085
MDB2010	3740
MDB2011	3943
MDB2014	3788
MDB2026	3575
MDB2029	3769
MDB2033	4281
MDB2034	3782
MDB2036	3993
MDB2040	3782
MDB2041	3590
MDB2043	4109
MDB2043	4232
MDB2044	4110
MDB2046	3632
MDB2050	4269
MDB2051	4123
MDB2053	3767
MDB2058	3763
MDB2060	3877
MDB2061	3784
MDB2062	4100
MDB2063	3843
MDB2064	4102
MDB2067	3644
MDB2068	3617
MDB2069	3836
MDB2070	3836
MDB2071	4101
MDB2071	4209
MDB2073	3846
MDB2074	3539
MDB2075	3896
MDB2076	3790
MDB2078	3921
MDB2081	4093
MDB2083	4119
MDB2085	4222
MDB2090	3788
MDB2094	4009
MDB2102	3590

MINTEX	BESER
NO	NO
MDB2104	3794
MDB2112	4103
MDB2113	4345
MDB2117	4115
MDB2119	3802
MDB2126	4095
MDB2130	3763
MDB2134	3955
MDB2135	4276
MDB2136	4083
MDB2144	3598
MDB2151	3662
MDB2152	4094
MDB2153	4011
MDB2155	4158
MDB2159	3848
MDB2160	4153
MDB2165	4098
MDB2174	3685
MDB2177	3553
MDB2178	4222
MDB2180	4017
MDB2183	3820
MDB2184	3436
MDB2186	3800
MDB2187	3935
MDB2188	3934
MDB2191	4212
MDB2192	3503
MDB2200	4032
MDB2206	3897
MDB2210	3853
MDB2211	4082
MDB2212	3911
MDB2215	4012
MDB2218	4221
MDB2219	4219
MDB2223	4040
MDB2225	3852
MDB2226	3950
MDB2239	3826
MDB2240	3800
MDB2247	4143
MDB2252	3900
MDB2253	3854
MDB2254	3931
MDB2256	3529
MDB2257	3817
MDB2258	3795
MDB2259	3900
MDB2260	3765
MDB2261	3933
MDB2262	4211
MDB2263	3910
MDB2265	3831
MDB2266	4013
MDB2267	3959
MDB2268	3856
MDB2269	3855
MDB2272	3801
MDB2274	3912
MDB2275	3899
MDB2281	3853
MDB2282	3823
MDB2283	3820
MDB2290	4303
MDB2294	4138
MDB2295	3895
MDB2308	3889
MDB2311	4003
MDB2314	3877
MDB2327	3849
MDB2328	3834
MDB2329	3835
MDB2352	4087
MDB2364	4022
MDB2364	4190
MDB2376	4031
MDB2387	4074
MDB2415	3584

MINTEX	BESER
NO	NO
MDB2418	4180
MDB2419	4179
MDB2434	3496
MDB2471	3436
MDB2472	3695
MDB2484	3643
MDB2505	3466
MDB2514	3487
MDB2526	3424
MDB2529	4088
MDB2531	3986
MDB2532	3790
MDB2534	3879
MDB2538	4138
MDB2539	4097
MDB2540	3914
MDB2541	4109
MDB2541	4232
MDB2542	3961
MDB2545	3890
MDB2546	4153
MDB2552	4023
MDB2552	4191
MDB2553	3891
MDB2555	3496
MDB2560	3687
MDB2561	3539
MDB2566	4152
MDB2570	4028
MDB2571	3575
MDB2572	4111
MDB2578	4105
MDB2580	3905
MDB2585	3978
MDB2586	3769
MDB2588	4303
MDB2590	3979
MDB2591	3850
MDB2594	3976
MDB2595	3983
MDB2596	3825
MDB2599	4159
MDB2602	3634
MDB2603	3749
MDB2604	3904
MDB2608	4028
MDB2609	4112
MDB2611	3894
MDB2612	4106
MDB2615	3569
MDB2616	3569
MDB2617	3568
MDB2620	4347
MDB2626	4220
MDB2627	4215
MDB2628	3820
MDB2632	3886
MDB2633	4042
MDB2634	3885
MDB2635	3853
MDB2637	3951
MDB2638	3842
MDB2642	3841
MDB2644	3826
MDB2646	4208
MDB2648	4096
MDB2649	4073
MDB2651	4030
MDB2652	4347
MDB2655	4173
MDB2663	3800
MDB2664	3841
MDB2667	4188
MDB2668	4189
MDB2678	3923
MDB2686	3853
MDB2687	4303
MDB2690	4118
MDB2691	4058
MDB2693	3984

MINTEX	BESER
NO	NO
MDB2694	4096
MDB2695	4018
MDB2696	4198
MDB2697	4006
MDB2698	3976
MDB2700	3940
MDB2701	3939
MDB2702	3946
MDB2703	4001
MDB2704	4081
MDB2705	4016
MDB2712	4293
MDB2713	3944
MDB2715	3952
MDB2719	4181
MDB2720	3968
MDB2723	4036
MDB2725	4137
MDB2728	4113
MDB2729	4210
MDB2732	4213
MDB2733	3880
MDB2734	3980
MDB2736	4029
MDB2739	3945
MDB2743	3987
MDB2746	4093
MDB2750	4075
MDB2752	4076
MDB2755	3797
MDB2759	3717
MDB2760	4277
MDB2762	3985
MDB2765	4179
MDB2767	4059
MDB2774	3929
MDB2776	3958
MDB2777	3960
MDB2778	3988
MDB2780	4000
MDB2782	3529
MDB2784	3919
MDB2785	3953
MDB2786	4077
MDB2787	3949
MDB2788	3948
MDB2792	3827
MDB2793	3801
MDB2796	3983
MDB2799	3969
MDB2802	3926
MDB2803	3925
MDB2804	3962
MDB2805	3963
MDB2820	3529
MDB2821	4240
MDB2823	3895
MDB2827	4207
MDB2830	4248
MDB2831	4249
MDB2832	3421
MDB2833	4309
MDB2837	4211
MDB2845	4247
MDB2846	3981
MDB2848	3922
MDB2850	3820
MDB2851	3906
MDB2852	3920
MDB2853	3907
MDB2855	3989
MDB2857	3453
MDB2857	3816
MDB2860	4161
MDB2865	4039
MDB2866	4165
MDB2867	4150
MDB2868	3496
MDB2869	4149
MDB2872	3976

MINTEX	BESER
NO	NO
MDB2875	4122
MDB2878	3996
MDB2880	3982
MDB2882	3975
MDB2887	4157
MDB2890	3964
MDB2895	3800
MDB2901	3972
MDB2903	4151
MDB2904	3458
MDB2906	3995
MDB2907	3965
MDB2908	4092
MDB2915	3903
MDB2917	3965
MDB2921	4035
MDB2923	3956
MDB2924	4037
MDB2925	3954
MDB2926	4156
MDB2929	4260
MDB2935	4029
MDB2936	3997
MDB2938	4038
MDB2939	4160
MDB2948	4325
MDB2949	4216
MDB2950	3970
MDB2951	3984
MDB2962	4141
MDB2963	3966
MDB2964	3967
MDB2965	4134
MDB2968	4122
MDB2972	4135
MDB2978	3971
MDB2984	3891
MDB2985	3955
MDB2987	4309
MDB2990	4054
MDB2993	3748
MDB2994	3748
MDB3000	4005
MDB3001	4121
MDB3006	4258
MDB3009	4015
MDB3011	4004
MDB3015	3800
MDB3019	4173
MDB3022	3904
MDB3026	3933
MDB3027	4061
MDB3029	4142
MDB3034	3964
MDB3036	4146
MDB3042	3823
MDB3047	3945
MDB3053	4147
MDB3056	3980
MDB3060	4162
MDB3067	4346
MDB3072	3928
MDB3076	4310
MDB3087	4014
MDB3088	4230
MDB3089	4008
MDB3093	4056
MDB3094	4057
MDB3095	4132
MDB3095	4172
MDB3098	4230
MDB3099	4008
MDB3100	4241
MDB3103	3560
MDB3104	4256
MDB3107	3906
MDB3114	4255
MDB3124	4314
MDB3129	4291
MDB3134	4148

MINTEX	BESER
NO	NO
MDB3136	3779
MDB3144	4324
MDB3150	3853
MDB3152	4337
MDB3155	3800
MDB3160	4167
MDB3165	4339
MDB3166	4039
MDB3172	4038
MDB3174	4145
MDB3182	4014
MDB3185	4124
MDB3186	3983
MDB3193	3826
MDB3199	3959
MDB3201	3952
MDB3202	3993
MDB3205	3942
MDB3212	3916
MDB3232	3980
MDB3241	3768
MDB3242	4326
MDB3248	4254
MDB3252	4311
MDB3260	4049
MDB3267	4060
MDB3272	3998
MDB3276	4136
MDB3279	4313
MDB3284	4335
MDB3290	4019
MDB3298	3922
MDB3298	4171
MDB3300	4200
MDB3302	4202
MDB3305	4233
MDB3306	4061
MDB3310	3942
MDB3312	3529
MDB3316	4173
MDB3322	4204
MDB3334	4176
MDB3337	3967
MDB3345	4201
MDB3360	4140
MDB3363	4342
MDB3364	4226
MDB3365	3981
MDB3368	3939
MDB3369	4174
MDB3370	4175
MDB3382	4336
MDB3386	4315
MDB3396	3933
MDB3399	4143
MDB3406	3826
MDB3417	4317
MDB3420	4313
MDB3431	4312
MDB3704	4334
MDB3711	4349
MDB3748	4308
MDB3755	4227
MDB3756	4287
MDB3765	4287
MDB3772	4284
MDB3778	4336
MDB3822	4030
MDB3867	4279
MDB3888	4205
MDB3896	4234
MDB3930	4253
MDB3931	4251
MDB3975	4301
MDB3986	4280
MGB443	3526
MGB533	3311
MGB550	3403
MGB560	3323
MGB576	3373

MINTEX	BESER
NO	NO
MGB633	3312
MGB693	3484
MLB040	3416
MLB041	3423
MLB043	3661
MLB069	3413
MLB079	3423
MLB105	3771
MLB114	3453
MLB114	3816
MLB116	3662
MLB40	3416
MLB41	3423
MLB43	3661
MLB69	3413
MLB79	3423

MK KASHIYAMA	BESER
NO	NO
D0004	3746
D0005	3620
D0008M	3600
D0020	3436
D0034	3901
D10000	4197
D10025	4011
D10031	4126
D10032	4069
D10041	3781
D10044	4012
D10048	3432
D10049	4281
D10050	4094
D10051	3748
D10055	3853
D10058	3928
D10064	3574
D10065	4031
D10068	3802
D10079	4102
D10080	4101
D10080	4209
D10081	4001
D10083	3976
D10085	3968
D10087	3687
D10088	3894
D10089	3856
D10090	3855
D10091	3848
D10092	3795
D10095	3748
D10098	3423
D10099	3413
D10100	3453
D10102	3771
D10103	3872
D10104	3512
D10107	4106
D10109	3632
D10110	3863
D10111	3676
D10112	3877
D10113	3853
D1012	3370
D1014	3415
D1017	3369
D1025	3397
D1031M	3758
D1038	3444
D1040	3486
D1044M	4087
D1050	3369
D1063M	3760
D1082	3650
D1083	3529
D1084M	4104
D1099M	4087
D1110M	3779
D1116M	4010
D1122	3692
D11302M	4233
D1142M	3632
D1143	3778
D1144M	3632
D1145M	3632
D1154	3700
D1155	3779
D1158	3766
D1162	4104
D1177	3667
D1180	3562
D1187	4087
D1191	4128
D1213	3888
D1214	3660
D1218M	3859
D1224M	3697
D1227M	3577

MK KASHIYAMA	BESER
NO	NO
D1239M	4303
D1244M	3933
D1247	4115
D1253	4002
D1258M	3859
D1261	3983
D1300	3507
D1301	3843
D1302	3648
D1305	3993
D2006	3710
D2007	3379
D2011	3369
D2020	3371
D2023	3402
D2026	3634
D2050M	3634
D2053M	3776
D2057	4088
D2069	3714
D2077M	4088
D2082M	3560
D2087	3666
D2088	4086
D2090	3693
D2094M	3673
D2104	3777
D2105	4072
D2118M	3554
D2118M	3651
D2121M	3634
D2123	4275
D2125M	4099
D2126M	3915
D2154	4274
D2166	3822
D2173	4085
D2174	3768
D2177	3829
D2179	3830
D2183M	3769
D2188M	4153
D2202	4158
D2204M	3788
D2217	4013
D2224M	3817
D2227M	3825
D2228M	3891
D2231	4082
D2233M	3890
D2239M	4153
D2990M	4112
D2992	4105
D2993	4111
D3015	3436
D3025	3462
D3028M	3449
D3043	3666
D3047M	3463
D3049	3449
D3050M	3723
D3053M	3437
D3062M	3522
D3066M	3640
D3083M	3833
D3084M	3832
D3088	3892
D3099	3874
D3109	3780
D3110	3874
D3114	4119
D3119	3767
D3120M	3877
D3122M	4118
D3125M	3889
D4001	3462
D4014M	3446
D4029M	3757
D4029M	3857
D4031M	3674

MK KAHIYAMA	BESER
NO	NO
D4034M	3887
D5004	3324
D5009	3509
D5013	3646
D5018	4212
D5019M	3752
D5022M	3582
D5042M	4212
D5046M	4148
D5050M	3631
D5053M	3695
D5056M	4148
D5060M	3704
D5066M	4148
D5070M	3607
D5073M	3686
D5080M	3696
D5091M	3696
D5094M	4110
D5100	4109
D5100	4232
D5103M	3683
D5109	4155
D5113M	4109
D5113M	4232
D5119M	4110
D5128M	3831
D5200M	4159
D5201M	4155
D5270M	3683
D5285	3662
D5300	3661
D6000	3709
D6004	3407
D6008	3401
D6010	3400
D6017	3401
D6018M	3448
D6024M	4108
D6039M	3685
D6053M	3622
D6054M	3688
D6068M	4062
D6070	3603
D6070	3604
D6081	3809
D6085	3892
D6086M	4084
D6089	4271
D6091	4216
D6102	3675
D6110M	3900
D6120	4062
D7005M	3579
D7011M	3395
D7014M	3426
D7017	4078
D7020M	4080
D7036M	4079
D7039M	3764
D7042	3913
D7051	3545
D7057	3410
D7058	3470
D7059	3687
D7061	3687
D7062	3744
D7063	3623
D7064	4269
D7067M	4009
D7069	3895
D7070	4269
D7074	3802
D7076	3632
D7077	3653
D7078	3978
D7079	3979
D7080	3895
D7090M	3912
D7150	3959

MK KAHIYAMA	BESER
NO	NO
D7152	3985
D7153	3502
D7154	3959
D7155	3951
D7156	4028
D7158	4087
D9010M	3882
D9013	3511
D9015	3745
D9017	4034
D9019M	3883
D9023	3511
D9024	3884
D9025	3602
D9026	4027
D9029M	3928
D9990M	3867
D9991M	4182

NECTO	BESER
NO	NO
FD2010A	3490
FD2012V	3513
FD2020A	3408
FD2023A	3467
FD2024A	3624
FD2112A	3539
FD211V	3526
FD213A	3419
FD215A	3429
FD221A	3466
FD222A	3432
FD225A	3374
FD236A	3373
FD2405A	3457
FD252A	3474
FD254A	3323
FD262A	3536
FD265A	3321
FD267A	3378
FD290V	3440
FD4018A	3405
FD4023A	3312
FD403A	3621
FD406A	3417
FD4093A	3339
FD4093A	3514
FD409A	3589
FD412A	3572
FD4137A	3315
FD4137A	3515
FD413A	3573
FD4143A	3365
FD4150A	3441
FD4151A	3486
FD4154A	3444
FD4162A	3484
FD4167A	3625
FD4173A	3611
FD449A	3327
FD451A	3343
FD451A	3483
FD465A	3335
FD497V	3350
FD50A	3318
FD51A	3320
FD571V	3416
FD578V	3423
FD580V	3413
FD6008V	3366
FD602A	3333
FD604A	3317
FD6065A	3496
FD6070V	3537
FD607A	3316
FD6089A	3428
FD6091V	3482
FD6105A	3646
FD6108V	3366
FD611A	3410
FD6130V	3423
FD6136A	3641
FD6138A	3771
FD6188A	3873
FD6198V	3679
FD6200A	3402
FD620A	3442
FD6210A	3680
FD6216A	3422
FD6238V	3543
FD6244A	3536
FD6249A	3459
FD6250A	3425
FD6253A	3424
FD6259A	3662
FD6262V	3462
FD6263V	3605
FD6264A	3714
FD6265A	3634
FD6276A	3469
FD6277A	3470

NECTO	BESER
NO	NO
FD6278A	3578
FD6279A	3584
FD6284A	3583
FD6285A	3583
FD6287A	3717
FD6290A	3582
FD6314A	3464
FD6319A	3487
FD6320V	3523
FD6337A	3400
FD6344A	4212
FD6345A	3776
FD6349A	4087
FD6350A	3449
FD6353A	3436
FD6354A	3529
FD6355V	3746
FD6357A	3437
FD6358A	3632
FD6374A	3609
FD6375A	3430
FD6376A	3609
FD6377A	3430
FD6378A	3311
FD6382A	3562
FD6385A	3683
FD6386A	3419
FD6391A	3623
FD6400A	3723
FD6401A	3531
FD6403V	3473
FD6404V	3445
FD6428A	3417
FD6428A	3417
FD6438A	3556
FD6452A	3819
FD6453A	3878
FD6458A	4212
FD6460A	3752
FD6461A	3448
FD6462V	3499
FD6463A	3395
FD6472A	3564
FD6475A	3593
FD6476A	3563
FD6477A	3660
FD6480A	4104
FD6481A	3590
FD6482A	3528
FD6483A	3503
FD6485A	3596
FD6486A	3558
FD6489A	3551
FD6504A	3608
FD6513A	4128
FD6516V	3749
FD6521V	3595
FD6522V	3559
FD6523A	3610
FD6524V	3446
FD6525A	3549
FD6527A	3757
FD6527A	3857
FD6528A	3640
FD6529A	3882
FD6532A	3733
FD6533A	3522
FD6535A	3631
FD6537A	3686
FD6554A	3875
FD6564A	4087
FD6566A	3692
FD6566V	3692
FD6568A	3779
FD6571V	3463
FD6572A	3598
FD6573A	3603
FD6573A	3604
FD6574A	3622
FD6575A	3685

NECTO	BESER
NO	NO
FD6577A	3545
FD6579A	3560
FD6580A	3607
FD6583A	3658
FD6584A	3554
FD6584A	3651
FD6585A	3453
FD6585A	3816
FD6586A	3512
FD6587A	3736
FD6591A	3704
FD6597A	4182
FD6599V	3689
FD6600A	3832
FD6602A	3619
FD6603A	3717
FD6605A	3867
FD6608A	3550
FD6618A	3629
FD6623A	3888
FD6625A	4148
FD6626V	3553
FD6635A	4086
FD6636A	3449
FD6641A	3581
FD6649A	3833
FD6653A	3617
FD6656A	3750
FD6664A	3426
FD6665A	3674
FD6667A	3600
FD6673A	3872
FD6674A	3628
FD6675A	3567
FD6675V	3567
FD6676V	3678
FD6677A	3680
FD6677V	3680
FD6680A	3538
FD6681A	3585
FD6683A	4078
FD6684A	3799
FD6684V	3799
FD6689A	3566
FD6691V	3575
FD6693A	3506
FD6695A	3909
FD6696A	3636
FD6697V	3507
FD6698A	3693
FD6700A	3661
FD6701A	4108
FD6706A	3630
FD6708A	4080
FD6709A	3505
FD6709A	3615
FD6711A	3570
FD6711A	3594
FD6713A	4197
FD6715A	3717
FD6716A	3642
FD6718A	3415
FD671A	3424
FD6720A	3529
FD6724A	3781
FD6725A	3569
FD6730A	3897
FD6733A	3659
FD6734A	3618
FD6736A	3688
FD6739A	3656
FD6741A	3873
FD6745A	3883
FD6749A	3677
FD6754A	3682
FD6756A	3722
FD6757A	3863
FD6759V	3606
FD6761A	3540
FD6766A	3872

NECTO	BESER
NO	NO
FD6769A	4010
FD6770A	3637
FD6773V	4020
FD6774A	4281
FD6777A	3896
FD6778A	3896
FD6779A	3577
FD6780A	3598
FD6782A	3681
FD6782V	3681
FD6783A	3861
FD6783V	3861
FD6784V	3804
FD6785A	3755
FD6788A	3762
FD6789A	3763
FD6790A	3754
FD6791A	4062
FD6794A	3663
FD6795A	3676
FD6798A	3675
FD6803V	3749
FD6809A	3881
FD6811A	4123
FD6815A	3687
FD6818A	3744
FD6819A	3687
FD6828A	3887
FD6834A	3602
FD6835A	3511
FD6844A	4093
FD6846A	3790
FD6847A	3938
FD6848V	3784
FD6853V	3942
FD6854A	3943
FD6855A	3919
FD6856A	3918
FD6857A	4059
FD6864A	3850
FD6866A	4125
FD6867A	3778
FD6869A	4125
FD686V	3603
FD6870A	3768
FD6873A	3782
FD6874A	3820
FD6875A	3935
FD6876A	3934
FD6878A	4093
FD6885V	3423
FD6886V	3575
FD6887V	3823
FD6892A	3644
FD6893V	3856
FD6894V	3855
FD6895V	3834
FD6896V	3835
FD6897V	3914
FD6899A	3539
FD6901V	3921
FD6902A	3896
FD6904A	4072
FD6906A	3898
FD6907A	3548
FD6907A	3690
FD6908A	3769
FD6909A	3877
FD690V	3527
FD6910A	3788
FD6912A	4027
FD6913A	3809
FD6915A	3590
FD6916A	3826
FD6917A	3800
FD691A	3380
FD6920A	3590
FD6929A	3923
FD6929V	3923
FD692A	3329

NECTO	BESER
NO	NO
FD6930A	3924
FD6931A	4100
FD6938A	3780
FD6940A	3529
FD6942A	3673
FD6944A	3848
FD6944V	3848
FD6945V	3795
FD6946V	3794
FD6947A	4211
FD6948A	3800
FD6949V	3553
FD6951V	3648
FD6952A	4182
FD6953A	4011
FD6956A	4155
FD6957A	3879
FD6958A	3849
FD695A	3493
FD6960A	3846
FD6961A	3836
FD6962A	3836
FD6963A	4138
FD6964A	3817
FD6965A	3825
FD6966A	3704
FD6967A	4112
FD6971A	3884
FD6973A	3822
FD6974A	3874
FD6978A	3830
FD697A	3495
FD6981A	4274
FD6984A	3779
FD6989A	3852
FD6991A	3767
FD6992A	4013
FD6993A	4084
FD6998A	3859
FD6999A	4158
FD7000A	4094
FD7001A	4153
FD7004A	3821
FD7005A	4126
FD7006A	4069
FD7007A	4097
FD7008A	4102
FD7009A	4101
FD7009A	4209
FD7010A	3950
FD7012A	4110
FD7015A	4095
FD7015V	4095
FD7016A	3901
FD7018A	4103
FD7022A	3928
FD7026A	3853
FD7027A	3854
FD7028A	3931
FD7032A	3986
FD7033A	3915
FD7034V	3801
FD7036A	4119
FD7038A	4012
FD7039A	4115
FD7047A	3802
FD7048A	4271
FD7050A	3820
FD7052A	3829
FD7054A	4085
FD7055A	3892
FD7057A	3843
FD7058A	3993
FD7060A	3764
FD7061A	3932
FD7063A	3983
FD7065A	3910
FD7066A	3955
FD7067A	3889
FD7070A	4076

NECTO	BESER
NO	NO
FD7071A	4180
FD7073A	4096
FD7075A	3643
FD7077A	3912
FD7078A	3885
FD7085A	3782
FD7089A	3826
FD7090A	4137
FD7091A	3831
FD7092A	4031
FD7094A	4099
FD7095A	4275
FD7097A	4105
FD7104A	3939
FD7105A	3940
FD7106A	3946
FD7108A	4269
FD7109A	3890
FD7111A	3904
FD7112A	3951
FD7113A	4173
FD7115A	3905
FD7119A	3944
FD7120A	4042
FD7121A	4152
FD7122A	4153
FD7123A	3891
FD7124A	4138
FD7126A	4109
FD7126A	4232
FD7129A	4179
FD7134A	3900
FD7135A	4159
FD7138A	4118
FD7139A	3933
FD7140A	4222
FD7147A	3959
FD7148A	3978
FD7149A	3979
FD7150A	3632
FD7155A	4017
FD7156V	3841
FD7157V	3841
FD7159A	4293
FD7163A	4181
FD7170A	4111
FD7171A	3874
FD7173A	4303
FD7174V	3842
FD7177A	3853
FD7179A	3529
FD7180A	4346
FD7181A	3503
FD7182A	3984
FD7184A	4074
FD7187A	3529
FD7188A	4148
FD7189A	3987
FD7190A	4186
FD7206A	4096
FD7208A	4210
FD7212A	4058
FD7215A	4106
FD7216A	3961
FD7218A	4079
FD7219A	3913
FD7231A	4028
FD7234A	3945
FD7238A	4143
FD7240A	4208
FD7241V	3777
FD7243A	3953
FD7244A	3949
FD7249A	4161
FD7251A	3969
FD7252A	3968
FD7254A	3894
FD7256V	4216
FD7259A	4082
FD7260A	4157

NECTO	BESER
NO	NO
FD7262A	3800
FD7266V	3981
FD7267V	3981
FD7268V	3922
FD7269V	3922
FD7270V	3820
FD7271V	3906
FD7272V	3920
FD7273V	3907
FD7274A	3853
FD7275A	4157
FD7276A	4157
FD7279A	4173
FD7280A	3826
FD7281A	4213
FD7285A	3985
FD7287A	4018
FD7288A	4006
FD7289A	3880
FD7290A	3980
FD7296A	3964
FD7301A	4248
FD7302A	4249
FD7303A	4247
FD7304A	3598
FD7307A	4081
FD7308A	3769
FD7312A	3802
FD7313V	4151
FD7319A	3976
FD7321A	4113
FD7322A	4016
FD7324A	3685
FD7326A	3529
FD7327A	4141
FD7328V	3965
FD7339A	4260
FD7344A	4207
FD7345V	3965
FD7347A	4240
FD7358A	4005
FD7362A	4001
FD7365A	4198
FD7415A	4277
FD7521A	4325
FD7567A	4326
FD7568A	4019
FD7577A	3976
FD7580V	3962
FD7581V	3925
FD7582V	3963
FD7583V	3926
FD7584A	3895
FD7592A	4336
FD7595A	4201
FD7618A	4337
FD7641A	4335
FD7652A	4313
FD804A	3324
FD809A	3709
FD810A	3393
FD812A	3710
FD817A	3410
FD825A	3421
FD827A	3397
FD838A	3370
FD854A	3509
FD865V	3369
FD882A	3371
FD897A	3502
FD902A	3501
FD903A	3401
FD906A	3745

NK	BESER
NO	NO
221017	3618
221017	3617
221023	4123
221207	3624
221214	3584
221402	3446
221403	3462
221405	3757
221405	3857
221407	3757
221407	3857
221501	3365
221506	3573
221507	3578
221508	3564
221509	3572
221510	3563
221512	3583
221514	3909
221515	3879
221517	3881
221518	3879
221520	3656
221528	4347
221533	4180
221534	4208
221536	4179
221540	4207
221812	3806
221918	3493
221919	3474
221923	3873
221924	3474
221925	3487
221926	3503
221927	3806
221930	3819
221931	3878
221932	3873
221934	3799
221937	3636
221942	3556
221944	3935
221945	3934
221947	3834
221948	3835
221949	3914
221950	3854
221951	3931
221952	3986
221954	3984
221955	3964
221959	3981
221960	3820
221961	3972
221962	3922
221963	3644
221964	4151
221965	3685
221970	4145
221977	4201
222205	3369
222207	3394
222208	3415
222210	3369
222211	3370
222212	3397
222214	3758
222215	3692
222219	4104
222220	3562
222221	3660
222222	4087
222223	3779
222234	3700
222236	3598
222238	3888
222239	4128
222244	3577
222249	3667

NK	BESER
NO	NO
222251	3697
222252	3632
222253	4010
222255	3859
222256	3932
222257	3933
222258	3983
222260	4017
222261	4143
222262	3933
222264	3952
222268	3965
222269	4038
222305	3316
222306	3317
222307	3393
222310	3421
222314	3424
222316	3468
222319	3625
222321	3422
222322	3466
222325	3432
222326	3543
222329	3425
222334	3608
222337	3441
222340	3617
222343	3523
222344	3773
222347	3749
222353	3994
222358	3575
222361	3994
222362	3790
222363	3897
222364	3800
222365	3826
222367	3575
222368	3823
222374	3643
222375	4173
222376	3790
222377	3800
222380	3826
222382	3965
222383	4092
222384	4173
222387	3995
222388	3826
222389	3800
222390	4121
222392	3569
222502	3429
222503	3417
222503	3417
222504	3621
222507	3417
222507	3417
222508	3417
222509	3484
222512	3419
222514	3603
222515	3589
222516	3549
222518	3464
222519	3593
222522	3445
222533	3545
222534	3558
222546	3781
222549	3722
222550	3755
222551	3754
222553	4100
222554	4093
222555	3590
222557	3877
222558	3921
222559	3784

NK	BESER
NO	NO
222560	3801
222561	3885
222562	3853
222563	4058
222564	3920
222565	3907
222566	3906
222567	4157
222568	4161
222569	4119
222573	4122
222574	3988
222579	4204
222602	3324
222603	3509
222606	3504
222607	3582
222609	3501
222610	4212
222612	3631
222613	3501
222620	3646
222621	4148
222623	3696
222624	3695
222625	3686
222626	3607
222631	4155
222632	3704
222633	3831
222634	4148
222635	4148
222636	4159
222637	4109
222637	4232
222640	4160
222641	4156
223001	3407
223003	3400
223004	3401
223006	3448
223016	4108
223017	3603
223017	3604
223018	3685
223019	3688
223020	3622
223021	3675
223023	3809
223026	3892
223027	4106
223028	3955
223029	4271
223030	4084
223031	3900
223033	3975
223211	3449
223213	3437
223214	3463
223216	3666
223220	3522
223221	3640
223225	3875
223230	3723
223232	3832
223233	3833
223238	3874
223239	3780
223242	3522
223244	4118
223245	3889
223248	4303
223250	3767
223255	4029
223303	3315
223303	3515
223304	3339
223304	3514
223306	3611
223307	3513

NK	BESER
NO	NO
223308	3408
223309	3550
223312	3679
223318	3408
223319	3628
223320	3689
223321	3658
223322	3630
223323	3581
223326	3680
223327	3567
223328	3678
223329	3670
223330	3677
223331	3863
223332	3614
223333	4125
223334	3663
223335	3676
223338	3804
223339	3821
223340	3681
223341	3861
223342	4126
223343	4069
223344	4281
223345	3836
223350	4103
223351	3923
223354	4101
223354	4209
223360	4210
223362	3925
223363	3926
223364	3962
223365	3963
223366	4248
223367	4249
223368	4247
223401	3632
223403	3502
223404	3507
223407	3632
223408	3778
223409	3648
223411	3993
223412	3632
223413	3961
223414	3843
223415	3993
223418	3632
223420	3843
223421	3993
223422	3993
223423	3632
223424	3502
223425	3959
223426	3985
223427	3960
223428	3989
223430	4039
223431	4165
223433	4035
223434	4061
223435	3959
223436	3959
223437	4049
223439	4233
223440	4039
223442	4311
223448	4049
223501	3740
223504	3802
223505	4009
223506	4028
223507	4269
223508	3978
223509	3979
223511	3653
223512	3802

NK	BESER
NO	NO
223513	3968
223514	3969
223515	3522
223516	4269
223517	4001
223518	4087
223520	3880
223521	3980
223525	4136
223602	3410
223604	3717
223606	3410
223607	3470
223608	3469
223609	3623
223611	3733
223612	3717
223614	3623
223618	3762
223619	3763
223620	3887
223621	3674
223624	3846
223625	4040
223626	3848
223627	3795
223628	4211
223629	3853
223631	3856
223632	3855
223633	4042
223636	3800
223638	3976
223641	4149
223643	4150
223644	4230
223645	4014
223646	4008
223647	4014
223648	4057
223704	3321
223709	3381
223710	3442
223714	3380
223715	3457
223716	3529
223719	3680
223723	3366
223724	3366
223728	3496
223729	3750
223733	3610
223735	3938
223740	3800
223741	3820
223743	3939
223744	3940
223745	3946
223747	3970
223748	3971
223753	3853
223911	3374
223913	3527
223915	3503
223917	3495
223918	3380
223919	3482
223920	3380
223921	3526
223925	3539
223926	3596
223928	3496
223929	3503
223938	3659
223944	3503
223946	3539
223947	3529
223948	3950
223949	3852
223950	3428

NK	BESER
NO	NO
223951	3849
223952	3850
223953	3503
223954	3827
223955	4137
223958	4141
223959	3966
223960	3967
223961	4134
223963	4142
223965	4132
223965	4172
223966	4056
223969	3964
223970	4140
224005	3771
224009	3683
224010	3413
224013	3512
224014	3662
224016	3433
224018	3412
224019	3943
224022	3872
224023	4094
224030	4293
224031	3944
224105	3609
224106	3609
224303	3419
224402	3579
224403	3395
224406	3426
224408	4080
224409	3764
224410	4079
224411	3913
224413	3912
224414	4213
224415	4081
224501	3710
224507	3379
224508	3402
224509	3371
224510	3714
224513	3634
224519	4088
224523	4072
224528	3554
224528	3651
224534	3777
224535	4086
224536	3554
224536	3651
224538	3693
224539	3673
224543	3915
224544	4275
224545	4071
224547	3768
224548	3829
224549	3830
224550	3822
224552	3769
224553	4013
224555	4158
224556	4153
224557	3788
224558	3769
224559	3817
224560	3825
224562	3890
224563	4153
224568	3910
224569	3891
224570	4112
224572	3987
224574	4113
224575	4077
224576	3958

NK	BESER
NO	NO
224577	3949
224580	3954
224582	3954
224584	3956
224586	4037
224587	3903
224589	4174
224595	3953
224599	4176
224704	3327
224705	3343
224705	3483
224706	3350
224711	3619
224712	3536
224714	3444
224715	3441
224716	3486
224717	3531
224718	3605
224719	3529
224720	3649
224723	3490
224725	3650
224727	3650
224729	3590
224731	3553
224733	3538
224735	3585
224736	3606
224737	3566
224738	4020
224739	3896
224740	3782
224743	3637
224745	3782
224746	3896
224747	4345
224750	3794
224751	3553
224754	4095
224756	3896
224757	3590
224758	4096
224759	4345
224761	3841
224762	3841
224764	3842
224770	3904
224773	4076
224774	3782
224775	3905
224776	4222
224779	4138
224781	4152
224782	4096
224788	3945
224791	4138
224796	4260
224797	4259
224798	4309
224802	3373
224808	3641
224809	3642
224815	4062
224820	3919
224821	3918
224822	4059
225001	3511
225002	3687
225004	3744
225007	3951
225008	3687
225009	3894
225011	3895
225012	3976
225014	4073
225102	3620
225104	3600
225106	3436

NK	BESER
NO	NO
225107	3746
225109	3898
225110	3436
225112	3901
225204	3882
225207	3602
225208	3883
225210	4027
225213	3928
225214	3884
225217	3983
225219	4000
225220	3929
225221	3933
229306	3867
229308	4197
229310	4182
229311	4197
229318	4012
229322	4011
229325	4006
229326	4018
229328	4016
229333	4198
229906	3318
229907	3320
229911	3311
229922	3416
229923	3312
229925	3806
229926	3709
229927	3378
229930	3423
229937	3408
229938	3405
229940	3440
229941	3323
229945	3378
229946	3572
229948	3436
229950	3433
229952	3536
229953	3380
229954	3543
229955	3496
229957	3503
229958	3419
229959	3583
229960	3609
229961	3463
229962	3560
229963	3714
229964	3440
229967	3504
229968	3531
229969	3444
229970	3529
229971	3487
229972	4212
229974	3595
229975	3559
229976	3679
229978	3736
229980	4148
229981	3704
229982	3466
229985	3506
229986	3529
2247101	4135
2247102	4162
2247105	3906
2247114	4241

OE	BESER
NO	NO
108073	3331
134848	3331
182043	3747
270987	3455
271179	3641
271182	3641
271706	3641
271739	3373
271829	3642
271958	3642
272291	3642
272399	3918
272401	3919
272675	3318
272867	3373
272873	3373
424538	3403
424539	3377
424541	3322
424543	3322
424552	3403
424553	3377
424561	3322
424582	3322
424893	3311
425005	3318
425008	3322
425013	3377
425014	3377
425041	3372
425070	3372
425178	3403
425204	3759
425212	3759
425228	3759
425302	3759
425303	3759
425320	3759
425494	3759
542039	4014
542040	4014
542115	4008
542120	4230
542125	4150
605135	4008
607783	3335
790475	3317
790475	3317
790605	3316
790710	3748
792383	3425
792486	3466
792487	3466
792489	3466
792558	3432
792561	3424
792561	3424
792561	3424
792588	3466
792698	3466
792698	3466
792703	3425
792725	3424
793120	3432
793184	3466
793220	3466
793221	3466
793271	3467
793322	3424
793322	3424
793323	3424
793330	3466
793355	3466
793355	3466
793356	3466
793357	3466
793382	3466
793465	3424
793470	3466

OE	BESER
NO	NO
794079	3432
794079	3432
794091	3466
794858	3466
794858	3466
794870	3432
794870	3432
794962	3466
794963	3466
795121	3466
1001095	3506
1001096	3529
1010503	3570
1010503	3570
1010503	3594
1010503	3594
1013843	3589
1013843	3589
1015598	3464
1015598	3464
1027640	3529
1027703	3506
1030602	3570
1030602	3594
1031843	3506
1039106	3417
1039106	3417
1042688	3570
1042688	3594
1048308	3722
1048308	3722
1048309	3722
1048309	3722
1064763	3570
1064763	3570
1064763	3594
1064763	3594
1073731	3558
1073732	3593
1075558	3754
1075565	3755
1079347	3558
1079920	3570
1079920	3570
1079920	3594
1079920	3594
1095201	3558
1095202	3593
1096940	3593
1096942	3558
1101462	3877
1101462	3877
1101463	3877
1101464	3877
1101464	3877
1107697	3754
1107698	3755
1121894	4100
1121895	4093
1126718	4100
1128463	3877
1128463	3877
1130120	4093
1130751	3464
1130758	3593
1130759	3558
1130759	3558
1130759	3558
1133445	3590
1133446	4095
1133750	3722
1133750	3722
1135167	3784
1136519	3754
1143349	3590
1144288	3921
1145299	3877
1151049	3754

OE	BESER
NO	NO
1152316	4093
1154458	3864
1155332	3864
1177227	3625
1204843	4100
1204845	4093
1205696	4095
1206064	3877
1207104	4093
1219892	4093
1219894	4093
1219897	4093
1223682	3885
1223682	3885
1227108	4093
1230032	3864
1230038	3864
1233679	3853
1233679	3853
1236880	3877
1236880	3877
1237132	3590
1250015	3864
1250688	4100
1301589	3473
1301592	3445
1318139	3784
1318147	3921
1321517	3885
1321517	3885
1324300	3853
1324300	3853
1345340	3529
1355950	3801
1355950	3801
1356392	4058
1356600	3988
1360254	3853
1360254	3853
1360290	3988
1360303	3801
1360304	3853
1360305	3885
1360305	3885
1360306	3853
1371402	3906
1371403	3920
1371454	3907
1379971	4161
1415166	3784
1415168	3921
1425406	3754
1425407	3755
1427386	4161
1432363	4161
1433952	3906
1433954	3920
1433958	3907
1436498	4161
1437761	4161
1439867	4157
1458247	4161
1459408	4157
1465166	3784
1465167	3784
1465168	3921
1477803	4157
1479223	3784
1488962	3906
1508074	3885
1508074	3885
1519528	3885
1519528	3885
1521328	3877
1521329	4058
1522062	4100
1522073	4058

OE	BESER
NO	NO
1530602	3907
1534428	3920
1540738	3312
1540739	3312
1540740	3312
1540857	3311
1543009	3480
1550219	4122
1550219	4122
1553797	3906
1554523	3920
1554524	3907
1559697	4173
1560014	3906
1560023	3920
1560026	3907
1566093	3885
1566093	3885
1566096	3853
1566232	4161
1566234	4157
1571569	3416
1571570	3423
1571571	3423
1571572	3423
1574839	3312
1576827	3312
1576829	3312
1576830	3312
1576835	3312
1576947	3480
1595523	3417
1595524	3417
1595524	3417
1605000	3762
1605000	3762
1605003	3736
1605004	3733
1605005	3717
1605006	3717
1605017	3674
1605019	3887
1605025	3763
1605025	3763
1605026	3717
1605033	3733
1605034	3762
1605034	3762
1605039	3763
1605047	3717
1605070	3762
1605070	3762
1605080	4042
1605080	4042
1605081	3846
1605081	3846
1605087	3623
1605088	4211
1605089	3505
1605089	3615
1605091	3762
1605092	3846
1605092	3846
1605093	3763
1605093	3763
1605094	4211
1605095	4211
1605098	4211
1605099	4042
1605099	4042
1605103	4150
1605105	3763
1605105	3763
1605113	4211
1605117	3853
1605121	3762
1605122	4040
1605122	4040
1605128	4040
1605136	4211

OE	BESER
NO	NO
1605137	4211
1605139	4211
1605140	4014
1605143	3320
1605157	3800
1605157	3800
1605164	4121
1605164	4121
1605170	4014
1605176	4014
1605178	4008
1605179	4150
1605180	4014
1605181	3800
1605181	3800
1605182	4121
1605182	4121
1605184	3826
1605186	4149
1605196	3853
1605198	3848
1605199	3795
1605223	4150
1605252	4042
1605252	4042
1605280	4284
1605281	4285
1605282	4211
1605283	4211
1605285	4286
1605291	3335
1605300	3335
1605354	3800
1605366	4150
1605367	4150
1605398	3335
1605434	4149
1605449	3318
1605454	3505
1605454	3615
1605455	3623
1605456	4042
1605466	3318
1605531	3410
1605531	3410
1605543	3318
1605556	3335
1605557	3335
1605586	3410
1605586	3410
1605654	3410
1605670	3410
1605671	3410
1605671	3410
1605687	3717
1605693	3469
1605703	3410
1605713	3335
1605714	3335
1605715	3335
1605723	3318
1605728	3469
1605746	3505
1605746	3615
1605782	3733
1605783	3410
1605787	3410
1605787	3410
1605788	3410
1605788	3410
1605789	3470
1605789	3470
1605791	3410
1605797	3318
1605799	3717
1605808	3470
1605808	3470
1605810	3623
1605810	3623
1605820	3410

OE	BESER
NO	NO
1605820	3410
1605824	3623
1605824	3623
1605825	3757
1605825	3857
1605848	3674
1605851	3887
1605852	3674
1605855	3736
1605870	3410
1605870	3410
1605877	3469
1605879	3717
1605881	3623
1605881	3623
1605883	3717
1605907	3623
1605907	3623
1605911	3505
1605911	3505
1605911	3615
1605911	3615
1605913	3674
1605916	3757
1605916	3857
1605924	3717
1605931	3757
1605931	3857
1605932	3733
1605959	3762
1605959	3762
1605961	3763
1605961	3763
1605964	3846
1605964	3846
1605972	4211
1605973	3853
1605974	3846
1605974	3846
1605975	4211
1605980	3856
1605982	3855
1605992	4042
1605993	3853
1605995	4040
1605995	4040
1605996	4042
1605996	4042
1605997	4042
1605997	4042
1605998	4042
1605998	4042
1619145	3480
1642643	3416
1647730	3549
1650317	3480
1661468	3419
1665599	3480
1676630	4122
1676630	4122
1682005	4157
1682498	3754
1683374	3853
1719275	4122
1719275	4122
1721086	3920
1721087	3906
1731171	4173
1736937	4173
1747043	4161
1751951	4204
1751951	4204
1763677	3853
1763915	4174
1763915	4174
1763916	4175
1763916	4175
1765066	4204

OE	BESER
NO	NO
1765066	4204
1775091	4226
1775091	4226
1775672	4204
1775672	4204
1780884	3755
1785193	4204
1785193	4204
1788734	4122
1802317	3755
1805813	3853
1809256	3885
1809256	3885
1809259	3853
1810990	3755
1819638	3907
1820122	3853
1840037	4175
1840037	4175
1842632	4174
1842632	4174
1848532	4204
1848532	4204
1855307	4122
1855307	4122
1860476	4204
1860476	4204
1903486	3433
1906043	3773
1906043	3773
1906153	3423
1906157	3423
1906159	3523
1906183	3749
1906297	3773
1906297	3773
1906298	3994
1906345	3433
1906401	3575
1906416	3994
1906427	3749
1906999	3994
1954460	3888
1956495	3888
1957042	3888
2711794	3641
2711828	3641
2717064	3641
2717395	3373
2718294	3642
2719581	3642
2724011	3919
2726750	3318
2728772	3318
2992339	3575
2994086	3575
2995631	3575
2995632	3942
2995633	3575
2995693	3575
2996091	3575
2996465	3575

OE	BESER
NO	NO
2996518	4169
2996520	4169
2996535	3575
2996605	3575
3079354	4161
3250077	3499
3256541	3499
3342534	3583
3344996	3378
3352413	3781
3502277	3887
3894956	3767
4077636	3784
4095132	3921
4096346	4119
4099896	4119
4114749	3921
4119192	3767
4196317	3583
4206320	3315
4206420	3315
4206520	3315
4206820	3315
4206920	3455
4209220	3390
4209320	3390
4210008	3455
4216110	3923
4218573	3316
4295800	3462
4308239	3983
4309780	3316
4310431	3757
4310431	3857
4310469	3757
4310469	3857
4346371	3801
4346371	3801
4387361	3801
4387361	3801
4387371	3853
4387371	3853
4387374	3853
4387374	3853
4402993	3856
4403271	3482
4403272	3482
4403467	3855
4404585	3856
4406239	4132
4406239	4172
4414021	3848
4414029	3795
4414519	3848
4414520	3795
4419950	4056
4420066	4057
4421289	4132
4421289	4172
4423332	4227
4423587	4227
4423715	3867
4423725	3867
4427737	3801
4427737	3801
4431470	3423
4432201	3988
4432234	3988
4432514	3988
4434816	3316
4434816	3316
4434816	3316
4434816	3316
4434816	3316
4434816	3316
4434879	3466

OE	BESER
NO	NO
4434879	3466
4435009	3625
4435009	3625
4467049	3736
4467072	3469
4483723	3736
4509526	3767
4509599	3767
4532488	4215
4547849	4119
4588141	4119
4592554	4215
4641690	4220
4646899	3736
4647371	3868
4648457	3736
4708239	3983
4711040	3983
4713175	4182
4717737	4215
4728124	4197
4746371	3868
4773575	3867
4778058	4182
4778223	4220
4780654	4220
4780682	4215
4808814	4330
4808861	3976
4817764	3976
4837241	3717
4882106	4197
4882107	4197
4901992	3781
5015924	3312
5015930	3480
5018111	3480
5018898	3621
5018898	3621
5018899	3417
5018899	3417
5018900	3417
5018900	3417
5018900	3417
5018900	3417
5018902	3312
5018903	3484
5018906	3480
5018907	3416
5018981	3419
5018982	3429
5020817	3549
5022397	3416
5022398	3423
5023486	3603
5023993	3621
5023993	3621
5023994	3417
5023994	3417
5023995	3417
5023995	3417
5023995	3417
5023995	3417
5023998	3549
5025929	3589
5025929	3589
5025948	3464
5025948	3464
5026169	3312
5028176	3464
5028763	3473
5028764	3445
5029147	3558
5029147	3558
5029147	3558
5055967	3583
5057336	3717
5059479	3840
5333787	4270
5333798	4270

OE	BESER
NO	NO
5341207	4270
5860343	3315
5860442	3455
5861042	3455
5862042	3455
5862742	3455
5863642	3315
5864042	3455
5864342	3455
5864542	3455
5882984	3459
5882984	3459
5882984	3459
5882985	3461
5888147	3466
5888147	3466
5888147	3466
5888149	3316
5888153	3468
5888154	3316
5888154	3316
5888154	3316
5888154	3316
5888154	3316
5888154	3316
5888528	3459
5888528	3459
5888528	3459
5888529	3461
5888553	3625
5888553	3625
5888575	3466
5888781	3432
5888939	3425
5889089	3466
5889089	3466
5892309	3424
5892309	3424
5892309	3424
5892309	3424
5892310	3424
5892310	3424
5892310	3424
5892330	3432
5892330	3432
5892481	3466
5892549	3466
5892549	3466
5892601	3466
5892608	3466
5892650	3536
5892727	3466
5892727	3466
5892727	3466
5892728	3466
5892728	3466
5892728	3466
5892728	3466
5892730	3466
5892732	3466
5892732	3466
5892733	3466
5892733	3466
5892733	3466
5892733	3466
5892734	3466
5892734	3466
5892735	3466
5892735	3466
5892735	3466
5892735	3466
5892736	3608
5892736	3608
5892737	3643
5892737	3643
5892737	3643
5892737	3643
5892738	3466
5951660	3424
5951660	3424

OE	BESER
NO	NO
5951660	3424
5951671	3424
5983918	3466
5983918	3466
5983919	3466
5983919	3466
5983924	3466
5983950	3466
6080703	3480
6099243	3312
6099244	3312
6107094	3480
6109375	3417
6109375	3417
6121606	3417
6121606	3417
6127521	3484
6127527	3549
6132471	3621
6132471	3621
6132472	3621
6132472	3621
6132808	3417
6132808	3417
6136892	3549
6150947	3603
6155611	3417
6155611	3417
6158945	3570
6158945	3594
6162190	3589
6162190	3589
6165965	3423
6166951	3429
6166953	3417
6166953	3417
6178479	3417
6178479	3417
6180371	3464
6180371	3464
6184245	3603
6188427	3589
6188427	3589
6189145	3603
6189147	3549
6189148	3549
6197738	3473
6197739	3445
6203650	3589
6203650	3589
6500952	3464
6500954	3464
6500959	3545
6567001	3416
6567002	3423
6613708	3423
6669779	4214
6669779	4214
6704268	3417
6704268	3417
6704269	3549
6704271	3464
6704271	3464
6877836	3558
6877836	3558
6877836	3558
6877837	3593
6882584	3558
6882584	3558
6882584	3558
6962492	3464
6962492	3464
7018202	3473
7018203	3445
7075049	3464
7075049	3464
7075050	3464
7075050	3464
7114005	3545
7153476	4214

OE	BESER
NO	NO
7153476	4214
7872906	3318
7873730	3318
8623861	3919
8623862	3918
8634921	3919
8634925	3918
8683615	3853
8830570	3319
8830570	3319
8961856	3583
8967101	3583
8967119	3583
8968026	3583
8993230	3326
9099240	3312
9110993	3856
9111271	3482
9111271	3482
9111272	3482
9111467	3855
9112585	3856
9117717	3763
9117717	3763
9192124	3733
9192180	3887
9192181	3887
9193251	3763
9193476	3717
9195058	3717
9195077	3733
9195607	3762
9195641	3763
9195685	3763
9198598	3763
9199257	3848
9199262	3795
9200108	3846
9200108	3846
9711388	3674
9938109	3333
9938205	3440
9938853	3466
9939028	3440
9939503	3536
9940092	3440
9940092	3440
9940969	3536
9941207	3440
9941208	3543
9941211	3536
9941873	3536
9943830	3432
9943830	3432
9944861	3543
9945070	3440
9945070	3440
9945076	3543
9945629	3536
9945629	3536
9945629	3536
9945750	3536
9945788	3595
9945810	3559
9947156	3617
9947156	3617
9947156	3617
9947156	3617
9947468	3643
9947468	3643
9947468	3643
9947468	3643
9947482	3466
9947776	3618
9947934	3897
9947934	3897
9947934	3897
9947935	3617
9947935	3617
9947935	3617

OE	BESER
NO	NO
9947935	3617
9947954	3548
9947954	3690
9947955	3617
9948037	3568
9948038	3569
9948045	3643
9948045	3643
9948045	3643
9948045	3643
9948054	3643
9948054	3643
9948054	3643
9948054	3643
9948095	3617
9948095	3617
9948095	3617
9948095	3617
9948131	3790
9948131	3790
9948334	3617
9948334	3617
9948334	3617
9948334	3617
9948338	4123
9948338	4123
9948476	3617
9948476	3617
9948476	3617
9948476	3617
9948870	3790
9948870	3790
9949125	3790
9949125	3790
9949134	3617
9949134	3617
9949134	3617
9949134	3617
9949183	3643
9949183	3643
9949183	3643
9949183	3643
9949273	3826
9949273	3826
9949273	3826
9949276	3800
9949276	3800
9949276	3800
9949276	3800
9949332	4123
9949332	4123
9949362	3835
9949407	3914
9949408	3914
9949409	3834
9949482	3834
9949508	4123
9949508	4123
9949516	3834
9949517	3835
9949552	3986
9949552	3986
9949552	3986
9949556	3826
9949556	3826
9949556	3826
9950637	3617
9950637	3617
9950637	3617
9950637	3617
9950778	3617
9950778	3617
9950778	3617
9950778	3617
9951222	4123
9951222	4123
9951243	3618
10365723	4331
11046148	3623
11046152	3470

OE	BESER
NO	NO
12300192	3864
12300213	3864
12321430	3868
12321436	3864
12321448	3868
12497782	4221
12799240	3853
12800120	4211
12803551	4211
13237751	4149
13237751	4149
13237765	4150
13237766	4150
13300867	4014
13300867	4014
13301207	4230
13301207	4230
13301234	4008
13301234	4008
13319293	4014
13319293	4014
13319294	4014
13319294	4014
13322091	3853
13338368	4150
13338368	4150
13343450	4150
13374966	4230
13411380	4014
13411383	4014
13412272	4230
13412272	4230
13412810	4008
13417473	4014
14207820	3315
14208220	3455
14208820	3390
14208920	3390
14209020	3390
14209120	3390
14209220	3315
14210910	3923
15243254	4331
15243704	4330
15243704	4330
15243704	4330
15271565	3853
15271565	3853
15808204	4330
15808204	4330
15808204	4330
15863342	3315
15863642	3315
15864942	3390
15865142	3390
15866042	3390
15866142	3390
15886462	4022
15886462	4190
16586609	4150
18004633	3864
18012239	3868
18026217	4022
18026217	4190
18037559	3868
18038503	3868
18041762	4022
18041762	4190
18048101	4022
18048101	4190
19149111	4219
19210705	4022
19210705	4190
19210707	4022
19210707	4190
20881786	4330
20881786	4330

OE	BESER
NO	NO
20881786	4330
22705327	4330
22705327	4330
22705327	4330
22705327	4330
22705372	4331
22731037	4330
22731037	4330
22731037	4330
22731037	4330
22799077	4008
22799077	4008
22820406	4330
22959104	4149
24201320	3390
24201320	3521
24201720	3315
24202420	3315
24202920	3390
25809846	4330
25809846	4330
25809846	4330
25852957	4185
25864605	4331
25894320	4330
25910431	4185
25910432	4185
25918342	4185
25957440	4330
25957440	4330
25976453	4022
25976453	4190
30620770	4062
30623259	4059
30623264	4062
30630555	4059
30630612	4059
30638455	4062
30648382	3918
30648385	3919
30648386	3919
30648387	3919
30671576	4157
30681739	3885
30683554	3885
30715023	3885
30736610	3853
30736923	3885
30742030	3885
30742031	3853
30769199	4059
30793107	4161
30793540	4161
30793618	3885
30793941	4161
30794553	4157
30850976	4059
30850978	4062
31262503	3919
31262506	3919
31341327	3853
31341331	3853
32017848	3853
32874224	3378
33422650	3378
33425349	3583
33456781	4062
34203620	3315
34203720	3315
34203820	3315
34207420	3315
34207520	3315
34207620	3315
34207820	3923
34207910	3923
41137937	3462
42470835	3575
42470841	3823
42470846	3575
42535791	3575

OE	BESER
NO	NO
42536101	3942
42548192	3942
42548194	3575
42555406	3823
42555633	3995
42555669	3994
42555881	3965
42555917	4092
42559248	4169
42559249	4169
42560080	3823
42561101	3823
42561102	3823
42561355	3965
43224000	3405
43224100	3405
60711959	3318
60713601	3320
60723584	3320
60727286	3318
60729251	3318
60736109	3331
60737389	3331
60743565	3536
60743565	3536
60743565	3536
60743578	3536
60743578	3536
60743578	3536
60760120	3536
60760120	3536
60760120	3536
60777600	3466
60778263	3318
60778315	3335
60810239	3466
64204320	3923
71711135	3799
71711135	3799
71713143	3617
71713143	3617
71713143	3617
71713143	3617
71737178	3608
71737178	3608
71737179	3643
71737179	3643
71737179	3643
71738151	3548
71738151	3690
71738152	3790
71738152	3790
71738153	3459
71738153	3459
71738155	3568
71738156	3568
71738158	3569
71748384	3424
71748385	3466
71748388	3617
71748388	3617
71748388	3617
71748388	3617
71750931	4148
71752978	3835
71752979	3834
71752980	3595
71752981	3897
71752985	3914
71752993	3559
71752994	3466
71752994	3466
71752995	3617
71753039	3617
71753039	3617
71753039	3617
71754802	3826

OE	BESER
NO	NO
71754803	3800
71754803	3800
71768576	4148
71769056	3643
71770012	3800
71770012	3800
71770026	3981
71770032	3981
71770042	3922
71770062	3643
71770094	3800
71770094	3800
71770104	3826
71770104	3826
71770106	3800
71770106	3800
71770106	3800
71770118	3826
71770118	3826
71770122	3800
71770122	3800
71770122	3800
71770132	3799
71770985	3643
71770985	3643
71771813	4005
71772525	3835
71772817	3820
71773145	3922
71773149	3820
77362091	3826
77362092	3800
77362092	3800
77362171	3569
77362177	3790
77362177	3790
77362178	3548
77362178	3690
77362179	3826
77362180	3790
77362180	3790
77362185	3643
77362185	3643
77362185	3643
77362185	3643
77362187	3536
77362190	3897
77362190	3897
77362190	3897
77362194	3826
77362195	3800
77362195	3800
77362195	3800
77362195	3800
77362202	3617
77362202	3617
77362202	3617
77362202	3617
77362205	3790
77362209	3559
77362212	3595
77362216	3835
77362219	3834
77362222	3617
77362222	3617
77362222	3617
77362222	3617
77362236	3986
77362236	3986
77362236	3986
77362238	3799
77362238	3799
77362245	3643
77362245	3643
77362245	3643
77362245	3643
77362266	3424
77362267	3643
77362267	3643
77362267	3643

OE	BESER
NO	NO
77362268	3466
77362274	3914
77362276	4123
77362276	4123
77362300	3618
77362310	3568
77362479	3643
77362479	3643
77362479	3643
77362479	3643
77362548	3826
77362548	3826
77362548	3826
77362675	4123
77362675	4123
77362683	3617
77362683	3617
77362683	3617
77362683	3617
77362689	4173
77362689	4173
77362691	4173
77362691	4173
77362712	3800
77362712	3800
77362743	3800
77362743	3800
77362743	3800
77363035	3826
77363035	3826
77363035	3826
77363341	4123
77363341	4123
77363420	3800
77363420	3800
77363420	3800
77363420	3800
77363496	3790
77363496	3790
77363604	4211
77363942	3826
77363942	3826
77363942	3826
77363956	3986
77363956	3986
77363956	3986
77363958	3800
77363958	3800
77363958	3800
77363958	3800
77363974	3826
77363974	3826
77363974	3826
77363992	3800
77363992	3800
77364014	3981
77364015	3922
77364016	3820
77364158	3826
77364158	3826
77364158	3826
77364160	3981
77364161	3922
77364281	3800
77364281	3800
77364281	3800
77364318	3922
77364319	3922
77364393	3826
77364393	3826
77364393	3826
77364394	3826
77364473	3800
77364473	3800
77364477	3826
77364477	3826
77364477	3826
77364511	3972
77364512	3972
77364512	3972

OE	BESER
NO	NO
77364513	4151
77364517	3826
77364517	3826
77364517	3826
77364588	3826
77364588	3826
77364588	3826
77364599	3800
77364599	3800
77364599	3800
77364599	3800
77364633	4173
77364636	4173
77364637	3826
77364637	3826
77364637	3826
77364798	3826
77364832	3826
77364839	4123
77364859	3835
77364860	3914
77364862	3834
77364874	3826
77364875	3800
77364875	3800
77364893	3826
77364897	3800
77364919	3826
77364919	3826
77364919	3826
77364929	4121
77364929	4121
77364929	4121
77365113	3800
77365113	3800
77365311	4121
77365337	3643
77365379	3800
77365379	3800
77365396	4121
77365396	4121
77365396	4121
77365465	3826
77365465	3826
77365465	3826
77365468	3800
77365468	3800
77365468	3800
77365543	3826
77365543	3826
77365543	3826
77365623	3800
77365623	3800
77365651	3826
77365651	3826
77365716	3800
77365716	3800
77365716	3800
77365810	3800
77365810	3800
77365810	3800
77365810	3800
77365817	4173
77365857	3826
77365857	3826
77365865	3800
77365865	3800
77365865	3800
77365928	3799
77366017	3981
77366017	3981
77366018	3981
77366018	3981
77366019	3981
77366019	3981
77366020	3981
77366020	3981
77366021	3922
77366021	3922
77366021	4171

OE	BESER
NO	NO
77366021	4171
77366022	3922
77366022	3922
77366022	4171
77366022	4171
77366023	3922
77366024	3922
77366024	3922
77366024	4171
77366024	4171
77366134	3826
77366134	3826
77366135	3826
77366336	4286
77366528	3800
77366528	3800
77366528	3800
77366595	4286
77366659	3617
77366761	3986
77366915	4286
77367090	3922
77367090	3922
77367090	4171
77367090	4171
77367091	3981
77367091	3981
77367092	3981
77367092	3981
77367094	4224
77367094	4224
77367628	4234
77367717	4246
77367910	4234
77367914	4286
77367923	4301
81349230	3375
86349255	3918
88928158	4022
88928158	4190
88964423	4221
88964424	4221
88982932	4221
88983902	4023
88983902	4191
89027019	4023
89027019	4191
89040317	3886
90018692	3335
90167765	3410
90167765	3410
90297410	3335
90297411	3335
90297412	3335
90297537	3469
90297770	3505
90297770	3615
90374747	3623
90374747	3623
90374748	3623
90374748	3623
90398116	3733
90398758	3410
90398758	3410
90398759	3410
90398759	3410
90399495	3470
90399495	3470
90421528	3717
90421736	3623
90442995	3623
90442995	3623
90443873	3736
90443902	3410
90443902	3410
90485138	3717
90485140	3623
90485140	3623

OE	BESER
NO	NO
90487271	3717
90510331	3623
90510331	3623
90511162	3505
90511162	3505
90511162	3615
90511162	3615
90540177	3717
90541257	3757
90541257	3857
90541293	3733
90544025	3762
90544025	3762
92175205	4188
92210619	4188
92210619	4188
93166942	3853
93166943	4211
93167551	4056
93167662	4057
93171035	3762
93172174	4211
93172190	3853
93172261	3846
93172261	3846
93173180	3856
93173182	3855
93173641	3848
93173646	3795
93175378	4211
93176115	4042
93176116	3853
93176120	3623
93176122	3505
93176122	3615
93176429	4042
93179707	4042
93179708	4042
93181189	4042
93183140	3853
93183728	4211
93184269	3846
93184519	3762
93185751	4211
93185752	4211
93186003	4211
93186713	4042
93188111	4211
93188112	4211
93188726	3762
93188727	4040
93189697	4042
93189698	4042
93189698	4042
93189816	3800
93190338	3853
93192063	3848
93192578	4042
93192637	3470
93192639	3623
93192962	3983
93220081	3623
93806190	3423
94130145	3462
94136642	3446
94137937	3462
94137937	3462
94337740	3462
94337740	3462
94337742	3462
94337742	3462
94337743	3462
94460851	3446
94461155	3757
94461155	3757
94461155	3857
94461155	3857
94467328	3446
94483220	3757
94483220	3757

OE	BESER
NO	NO
94483220	3757
94483220	3857
94483220	3857
94483220	3857
95459512	3976
95507110	4132
95507110	4172
95511321	3800
95511321	3800
95511378	4121
95511378	4121
95513810	3826
95513821	4057
95513823	4132
95513823	4172
95515197	3855
95517028	4284
95517029	4285
95517078	4286
95518304	4227
95518893	4227
95589273	3493
95616818	3474
95616818	3474
95624484	3493
95624970	3440
95640895	3543
95647733	3474
95647733	3474
95659341	3496
95659341	3496
95659353	3556
95659642	3873
95661871	3474
95661871	3474
95666671	3496
95666671	3496
95666970	3487
95666971	3496
95666971	3496
95666973	3873
95667764	3440
95667764	3440
95667765	3543
95667786	3819
95667787	3878
95667788	3873
96245178	3687
96245178	3687
96253367	3687
96253367	3687
96253382	3687
96253382	3687
96253383	3687
96253383	3687
96273708	3744
96273708	3744
96273708	3744
96281937	3687
96281939	3687
96281945	3744
96281945	3744
96281945	3744
96288629	3744
96316582	3744
96316582	3744
96316582	3744
96319060	3687
96319060	3687
96391891	3687
96391891	3687
96405129	3687
96405129	3687
96405130	3687
96405130	3687
96405131	3894
96405131	3894
96446176	3744
96446176	3744
96475027	4073

OE	BESER
NO	NO
96496765	4073
96534653	3951
96534653	3951
96534655	3687
96534655	3687
96566892	3951
96626069	3976
96626070	3976
96952179	4073
97035266	3887
97039269	3887
97113888	3674
97114300	3757
97114300	3757
97114300	3757
97114300	3857
97114300	3857
97114300	3857
97180525	3674
97329333	3886
98843400	3827
98845340	3827
99939353	3316
99939353	3316
99939353	3316
99939353	3316
99939353	3316
99939353	3316
113395241	3406
113395241	3406
113395241	3406
113395241	3406
113430200	3406
113430200	3406
113430200	3406
113430200	3406
113430201	3406
113430201	3406
113430201	3406
113430201	3406
114430200	3406
114430200	3406
114430200	3406
114430200	3406
114430201	3406
114430201	3406
114430201	3406
114430201	3406
114430281	3404
114430281	3404
114430281	3404
114430281	3404
240400001	3536
306483820	3918
307420310	3853
308509769	4059
312611860	3642
446512080	3314
446512430	3314
446522150	3375
446522170	3375
446535020	3414
446548020	4276
446550170	4276
446550171	4276
446550180	4276
446550180	4276
446550190	4276
446550230	4276
446550240	4276
446550250	4276
446552200	3958
446606030	4032
446607010	4098
446607020	4098
446614010	3701
446614030	3701
446614030	3701
446614030	3701

OE	BESER
NO	NO
446622040	3701
446622070	3701
446622090	3701
446622110	3701
446622110	3701
446622110	3701
446622140	4098
446624010	4099
446624020	4099
446630010	3701
446630020	4099
446630050	4099
446630100	4099
446630140	4099
446633060	4032
446633080	4032
446640010	3701
446640020	3701
446640030	3701
446641020	4032
446650040	4099
446650041	4099
446650090	4083
446650090	4083
446650091	4083
446650100	4083
446650100	4083
446650120	4083
449107010	4098
449114040	3376
449114041	3376
449114042	3376
449114060	3376
449114061	3376
449120110	3314
449120120	3376
449135111	3414
449187503	3746
449207010	4098
449214090	3701
449214090	3701
449214090	3701
449214100	3701
449214100	3701
449214100	3701
449214110	3701
449214110	3701
449214110	3701
449214150	4099
449214160	4099
449214161	4099
449217040	3701
449222030	3701
449222040	3701
449222041	3701
449222042	3701
449222043	3701
449222050	3701
449222070	3701
449222080	3701
449222100	3701
449222140	3701
449222141	3701
449224060	4099
449224070	4099
449224080	4099
449224090	4099
449224100	4099
449230080	3701
449230100	3701
449230101	3701
449230140	4099
449230150	4099
449230160	4099
449230161	4099
449230161	4099
449240101	3701
449250040	4099
449250060	4099
500054632	3664

OE	BESER
NO	NO
500054632	3664
509290040	3789
509290050	3789
586106234	3692
586106236	3692
586106238	3692
586116483	3692
586122917	3692
586122918	3692
586122928	3692
586129072	4002
586134702	3692
598154611	3899
625031030	3601
625031090	3601
625031131	3601
717552994	3466
720050005	3809
720050027	4027
980102750	3789
980102930	3789
980106200	3664
980106210	3789
980106350	3789
980106430	3789
980107090	3789
980107240	3789
1012799240	3853
1034001121	3974
1607083280	3529
1607690380	3955
1607690380	3955
1607690480	3955
1607690480	3955
1607878380	3981
1607878380	3981
1607878580	3981
1607878580	3981
1607878980	3922
1607878980	3922
1607878980	3922
1607878980	3922
1607878980	4171
1607878980	4171
1607878980	4171
1607878980	4171
1608520480	3971
1608520480	3971
1608681580	3529
1608681580	3529
1608691380	4201
1608691380	4201
1610489680	3820
1610489680	3820
1610489680	3820
1610699280	4201
1611293980	3820
1611293980	3820
1612433680	3922
1612433680	3922
1612433680	3922
1612433680	3922
1612433680	4171
1612433680	4171
1612433680	4171
1612433680	4171
1612434080	4224
1612434080	4224
1614005880	3820
3057008400	3839
3057008500	4243
4114500040	3769
4145960002	4281
4502169301	3705
4514210010	4281
4514210110	4281
4534210100	4140
4544201020	4062
4544210010	4059
4841305100	3895

OE	BESER
NO	NO
4841305102	3895
5000814345	3707
5000823566	3537
5001823557	3707
5006028410	3828
5006028410	3828
5006028410	3828
6000611054	3975
6000620046	4227
6000620052	3795
6025071042	3372
6614203021	3793
7701201059	3330
7701201449	3330
7701201456	3330
7701201464	3330
7701201775	3372
7701202285	3372
7701202516	3372
7701202539	3372
7701202540	3372
7701202712	3372
7701202894	3372
7701202895	3372
7701202974	3330
7701203129	3372
7701203282	3372
7701203895	3537
7701349449	3330
7701349970	3372
7701349973	3372
8124977820	4221
8305252531	4182
8305252531	4182
8660000781	3964
8888924640	4221
8889644230	4221
8889644240	4221
8889829320	4221
8941301450	3462
8941336421	3446
8941379370	3462
8942424940	3462
8943377400	3462
8943377411	3462
8943377421	3462
8943377430	3462
8943377431	3462
8944608510	3446
8944611550	3757
8944611550	3857
8944705980	3462
8944705990	3462
8944832200	3757
8944832200	3857
8944832201	3757
8944832201	3857
8970392691	3887
8980511160	3886
8980791040	4124
9404245119	3405
9404251518	3799
9404251518	3799
9404252328	3529
9404252328	3529
9404252328	3529
9467548887	3972
9467548888	3972
9467548987	3972
9467548987	3972
9467548988	3972
9467549087	4151
9467648988	3529
11046948322	3623
11046948372	3623
11046952012	3470
21103501080	3422
21213501090	3421
34111116007	3332
34111117878	3332

OE	BESER
NO	NO
34111119117	3332
34111119176	3332
34111119177	3332
34111150525	3706
34111151081	3332
34111152656	3332
34111155711	3332
34111156464	3332
34111158360	3332
34111159261	3332
34111159263	3332
34112226009	3332
34211108854	3326
34211111650	3326
34211150525	3706
34211152252	3706
34211152653	3326
34211159252	3706
34211159253	3706
34211159255	3706
34211159267	3326
45022692670	3705
45022692671	3705
45022692672	3705
45022693600	3705
45022693601	3705
81508205072	3828
81508205072	3828
81508205080	3828
81508205085	3908
81508206008	3789
81508206008	3789
81508206022	3789
81508206022	3789
81508206030	3664
81508206030	3664
81508206041	3828
81508206041	3828
81508206043	3908
81508206051	3828
81508206051	3828
81508206052	3828
81508206052	3828
81508206054	3908
81508206056	3664
81508206056	3664
81508206061	3664
81508206061	3664
91135194901	3320
91135195000	3320
91135195001	3320
91135195002	3320
91135195006	3320
94435195006	3320
95535193962	4309
95535193963	4309
95535293900	4076
95535293901	4076
95535293902	4076
95535293903	4076
95535293950	4076
95835293900	4310
265442100107	3872
265442800128	3872
26296AC030	4079
26296AC040	4079
26296AC041	4079
26296AC050	4079
26296AC060	4079
26296AC070	4079
26296AC200	4079
26296AE020	4079
26296AE080	4079
26296AE081	4079
26296AE100	4079
26296AE140	4079
26296AE141	4079
26296AE210	4079
26296AE220	4079
26296AF020	4079

OE	BESER
NO	NO
4B0698151AC	4096
4B0698151AC	4096
4B0698151AC	4096
4B0698151AD	4096
4B0698151AD	4096
4B0698151AD	4096
4B0698151Q	4096
4B0698151Q	4096
4B0698151Q	4096
4B0698151R	4096
4B0698151R	4096
4B0698151R	4096
A0004216110	3923
A0005862742	3471
A0014210910	3923
A0034207820	3923
A0034207910	3923
A0064204320	3923
AY060TY007	4099
K68029263AA	4005
K68053152AB	4005
K68068762AA	4005
K68093323AA	4005
K68093323AB	4005
000 420 30 02	4326
000 420 59 20	3339
000 420 59 20	3339
000 420 59 20	3514
000 420 59 20	3514
000 420 60 20	3339
000 420 60 20	3514
000 420 63 20	3315
000 420 63 20	3315
000 420 63 20	3515
000 420 63 20	3515
000 420 64 20	3315
000 420 64 20	3315
000 420 64 20	3515
000 420 64 20	3515
000 420 65 20	3315
000 420 65 20	3315
000 420 65 20	3515
000 420 65 20	3515
000 420 66 20	3320
000 420 67 20	3320
000 420 68 20	3315
000 420 68 20	3315
000 420 68 20	3515
000 420 68 20	3515
000 420 78 20	3339
000 420 78 20	3514
000 420 82 00	4349
000 420 87 00	4334
000 420 88 20	3611
000 420 90 20	3611
000 420 91 20	3430
000 420 94 20	3339
000 420 94 20	3514
000 420 95 20	3339
000 420 95 20	3514
000 420 97 20	3804
000 420 97 20	3804
000 420 98 20	3550
000 420 99 20	3408
000 421 05 10	3664
000 421 41 10	3681
000 421 41 10	3681
000 421 41 10	3681
000 421 42 10	3861
000 421 50 10	3789
000 421 61 10	3923
000 421 61 10	3923
000 586 55 42	3339
000 586 55 42	3514
000 586 75 42	3315
000 586 75 42	3315
000 586 75 42	3515
000 586 75 42	3515
0001431V002	4281
0001431V003	4281

OE	BESER
NO	NO
0001431V004000000	4281
0004206920	3471
0004210008	3471
0005860442	3471
0005861042	3471
0005862042	3471
0005862742	3471
0005864042	3471
0005864342	3471
0005864542	3471
001 420 01 20	3611
001 420 05 20	3339
001 420 05 20	3514
001 420 07 20	3408
001 420 09 20	3315
001 420 09 20	3515
001 420 12 20	3408
001 420 14 20	3513
001 420 14 20	3513
001 420 15 20	3679
001 420 75 20	3339
001 420 75 20	3514
001 420 77 20	3320
001 420 78 20	3315
001 420 78 20	3315
001 420 78 20	3515
001 420 78 20	3515
001 420 81 20	3430
001 420 90 20	3521
001 420 92 20	3315
001 420 92 20	3315
001 420 92 20	3515
001 420 92 20	3515
001 420 96 20	3430
001 420 98 20	3629
001 420 99 20	3339
001 420 99 20	3339
001 420 99 20	3514
001 420 99 20	3514
001 421 09 10	3923
001 421 09 10	3923
001 586 18 42	3315
001 586 18 42	3515
001 586 32 42	3315
001 586 32 42	3515
001 586 33 42	3315
001 586 33 42	3515
001 586 36 42	3315
001 586 36 42	3515
001 586 63 42	3315
001 586 63 42	3315
001 586 63 42	3515
001 586 63 42	3515
002 420 01 20	3630
002 420 02 20	3430
002 420 05 20	3581
002 420 09 99	3630
002 420 13 20	3521
002 420 14 20	3390
002 420 15 20	3629
002 420 16 20	3581
002 420 17 20	3315
002 420 19 20	3628
002 420 21 20	3658
002 420 21 20 05	3658
002 420 22 20	3658
002 420 23 20	3408
002 420 24 20	3315
002 420 37 20	3628
002 420 38 20	3678
002 420 39 20	3567
002 420 39 20	3567
002 420 40 20	3670
002 420 40 20	3670
002 420 41 20	3614
002 420 4120	3614
002 420 42 20	3614
002 420 43 20	3339
002 420 43 20	3339
002 420 43 20	3514

OE	BESER
NO	NO
002 420 43 20	3514
002 420 44 20	3677
002 420 45 20	3863
002 420 45 20	3863
002 420 46 20	3581
002 420 48 20	3680
002 420 48 20	3680
002 420 49 20	3664
002 420 50 20	3863
002 420 50 20	3863
002 420 51 20	3663
002 420 52 20	3821
002 420 52 20	3821
002 420 56 20	3678
002 420 57 20	3679
002 420 57 20	3679
002 420 60 20	3670
002 420 60 20	3670
002 420 60 20	3670
002 420 62 20	3679
002 420 69 20	3678
002 420 71 20	3676
002 420 74 20	3676
002 420 75 20	3339
002 420 75 20	3514
002 420 78 20	3789
002 420 79 20	3789
002 420 80 20	3581
002 420 96 20	3677
002 420 99 20	3567
002 420 99 20	3567
002 420 99 20	3664
002 586 45 42	3339
002 586 45 42	3339
002 586 45 42	3514
002 586 45 42	3514
002 586 46 42	3339
002 586 46 42	3339
002 586 46 42	3514
002 586 46 42	3514
0024200320	3626
0024200420	3627
0024201220	3627
002420122005	3627
0024201420	3390
0024202620	3627
002420262005	3627
003 420 0 720	3513
003 420 00 20	3680
003 420 00 20	3680
003 420 01 20	3681
003 420 01 20	3681
003 420 02 20	3861
003 420 02 20	3861
003 420 05 20	4102
003 420 06 20	4101
003 420 06 20	4209
003 420 07 20	3513
003 420 07 20	3513
003 420 08 20	4102
003 420 10 20	3664
003 420 15 20	3679
003 420 16 20	3664
003 420 17 20	3614
003 420 18 20	4102
003 420 19 20	4101
003 420 19 20	4209
003 420 22 20	3664
003 420 24 20	3804
003 420 24 20	3804
003 420 25 20	3836
003 420 26 20	3836
003 420 27 20	3676
003 420 28 20	3821
003 420 28 20	3821
003 420 29 20	3863
003 420 29 20	3863
003 420 30 20	3581
003 420 37 20	3315
003 420 38 20	3315

OE	BESER
NO	NO
003 420 42 20	4102
003 420 44 20	3679
003 420 45 20	3836
003 420 48 20	3581
003 420 49 20	3581
003 420 52 20	3821
003 420 52 20	3821
003 420 59 20	3836
003 420 60 20	3836
003 420 64 20	3678
003 420 65 20	4097
003 420 72 20	3908
003 420 73 20	3908
003 420 74 20	3315
003 420 74 20	3315
003 420 74 20	3515
003 420 74 20	3515
003 420 75 20	3315
003 420 76 20	3315
003 420 77 20	3679
003 420 77 20	3679
003 420 78 20	3923
003 420 78 20	3923
003 420 79 10	3923
003 420 79 10	3923
003 420 87 20	3804
003 420 87 20	3804
003 420 95 20	3836
003 420 99 20	4097
004 420 02 20	3677
004 420 03 20	3863
004 420 03 20	3863
004 420 04 20	4102
004 420 05 20	4102
004 420 08 20	4102
004 420 14 20	3513
004 420 16 20	3581
004 420 17 20	3676
004 420 22 20	3664
004 420 25 20	3804
004 420 40 20	4210
004 420 60 20	3664
004 420 61 20	3908
004 420 62 20	4240
004 420 67 20	3925
004 420 68 20	3962
004 420 69 20	3926
004 420 70 20	4243
004 420 80 20	4240
004 420 81 20	3963
004 420 81 20	3963
004 420 82 20	3962
004 420 82 20	3962
004 420 83 20	3925
004 420 91 20	3676
004 420 94 20	4101
004 420 94 20	4209
004 532 247 A	3419
004 532 247 A	3731
005 420 01 20	3628
005 420 02 20	3629
005 420 03 20	3658
005 420 07 20	4247
005 420 08 20	4248
005 420 09 20	4248
005 420 10 20	4249
005 420 12 20	4248
005 420 13 20	4249
005 420 15 20	4248
005 420 16 20	4249
005 420 19 20	3821
005 420 21 20	3925
005 420 43 20	4247
005 420 44 20	3408
005 420 47 20	3677
005 420 52 20	3925
005 420 53 20	3962
005 420 70 20	3925
005 420 74 20	3963
005 420 78 20	4240

OE	BESER
NO	NO
005 420 81 20	4247
0054200520	3627
006 420 13 20	4247
006 420 22 20	3963
006 420 28 20	4249
006 420 43 20	3923
006 420 45 20	3963
006 420 46 20	4326
006 420 47 20	4326
006 420 50 20	4313
006 420 57 20	4335
006 420 61 20	4247
006 420 61 20S1	4247
006 420 62 20	3836
006 420 71 20	4248
006 420 72 20	4335
006 420 85 20	4326
006 420 88 20	4313
006 420 92 20	4335
006 420 93 20	4313
007 420 28 20	4335
007 420 33 20	4313
007 420 56 20	4248
007 420 58 20	4249
007 420 75 20	4249
008 420 02 20	4313
008 420 03 20	4326
008 420 06 20	4326
008 420 08 20	4335
008 420 13 20	4349
008 420 14 20	4349
008 420 22 20	4335
008 420 33 20	4314
008 420 34 20	4335
008 420 36 20	4334
008 420 37 20	4334
008 420 46 20	4326
01018 89S	4197
03H17D03	4175
03H17D03	4175
03H23D05	4174
03H23D05	4174
044 916 00 60	3513
04465 06090	4019
04465 0W060	4276
04465 0W060	4276
04465 22150	3375
04465 22170	3375
04465 50170	4276
04465 50171	4276
04465 50190	4276
04465 50230	4276
04465 50230	4276
04465 50250	4276
04465-02061	3817
04465-02070	4013
04465-02080	4013
04465-02130	3817
04465-02160	3956
04465-02160	3956
04465-02170	3956
04465-02170	3956
04465-02200	3956
04465-02200	3956
04465-02210	3956
04465-02210	3956
04465-02220	3953
04465-02230	4077
04465-02270	3956
04465-02270	3956
04465-02280	4147
04465-02370	3956
04465-02370	3956
04465-02390	4176
04465-04070	3891
04465-05010	3554
04465-05010	3651
04465-05130	3890
04465-05131	3890
04465-05170	3890

OE	BESER
NO	NO
04465-05210	3890
04465-06070	3948
04465-06080	3948
04465-06090	3948
04465-06110	3948
04465-09020	4205
04465-0C020	3996
04465-0C020	3996
04465-0D010	4112
04465-0D040	4112
04465-0D150	4205
04465-0D160	4205
04465-0D170	4205
04465-0E010	4255
04465-0E010	4255
04465-0F010	4147
04465-0H020	3987
04465-0K040	3982
04465-0K090	3891
04465-0K100	3982
04465-0K110	3982
04465-0K130	3982
04465-0K160	3903
04465-0K240	4167
04465-0K240	4167
04465-0K260	4167
04465-0K260	4167
04465-0K290	3998
04465-0K290	3998
04465-0K300	4167
04465-0K300	4167
04465-0K320	4167
04465-0K320	4167
04465-0K330	4167
04465-0K330	4167
04465-0K340	4167
04465-0K340	4167
04465-0K360	3891
04465-0R010	3953
044650W030	4276
04465-0W070	4105
04465-10040	3402
04465-12040	3402
04465-12090	3402
04465-12180	3314
04465-12240	3402
04465-12320	3710
04465-12510	3953
04465-12540	3554
04465-12540	3651
04465-12592	3769
04465-12593	3554
04465-12593	3651
04465-12610	3953
04465-13020	3769
04465-13050	3769
04465-14220	3314
04465-16120	3402
04465-17100	3769
04465-17101	3769
04465-17140	3769
04465-20150	3714
04465-20180	3402
04465-20480	3769
04465-20550	3822
04465-20550	3822
04465-21010	3402
04465-22070	3418
04465-22080	3418
04465-22140	3418
04465-22300	4117
04465-24010	4086
04465-25040	3777
04465-25040	3777
04465-25060	3777
04465-26020	3777
04465-26020	3777
04465-26050	3379
04465-26070	3777
04465-26090	3777

OE	BESER
NO	NO
04465-26100	3714
04465-26130	3777
04465-26170	3777
04465-26210	3714
04465-26250	3777
04465-26260	3777
04465-26280	3714
04465-26300	3777
04465-26301	3777
04465-26310	3777
04465-26310	3777
04465-26320	3777
04465-26320	3777
04465-26330	3714
04465-26340	3777
04465-26350	3777
04465-26370	3777
04465-26390	3777
04465-28040	4088
04465-28090	4088
04465-28130	4088
04465-28230	4088
04465-28240	4088
04465-28340	4071
04465-28350	4071
04465-28370	4071
04465-28380	4071
04465-28381	4071
04465-28420	4071
04465-28470	4071
04465-28510	4003
04465-30021	3369
04465-30320	3915
04465-30340	3910
04465-33040	3554
04465-33040	3651
04465-33050	3554
04465-33050	3651
04465-33070	4086
04465-33070	4086
04465-33120	3822
04465-33120	3822
04465-33130	3822
04465-33130	3822
04465-33150	3822
04465-33150	3822
04465-33180	3822
04465-33180	3822
04465-33230	3822
04465-33230	3822
04465-33240	3910
04465-33250	3910
04465-33260	3910
04465-33270	4003
04465-33280	4003
04465-33320	3910
04465-33340	3910
04465-33440	3948
04465-33445	3948
04465-33450	3948
04465-33470	3948
04465-35031	3560
04465-35040	3560
04465-35040	3560
04465-35050	3379
04465-35080	3560
04465-35080	3560
04465-35160	3379
04465-35170	3371
04465-35250	3891
04465-35290	3891
04465-35320	3714
04465-36010	3379
04465-36010	3930
04465-36050	3379
04465-36090	3930
04465-42010	3554
04465-42010	3651
04465-42011	3554
04465-42011	3651

OE	BESER
NO	NO
04465-42012	3554
04465-42012	3651
04465-42050	3554
04465-42050	3651
04465-42060	3554
04465-42060	3651
04465-42070	4158
04465-42071	4158
04465-42080	4158
04465-42110	4158
04465-42130	4158
04465-42140	4077
04465-42150	4077
04465-42160	3953
04465-42170	4077
04465-42180	4077
04465-42190	4077
04465-44060	4013
04465-44090	4013
04465-44100	4013
04465-47030	3769
04465-47050	3769
04465-48020	4082
04465-48030	4082
04465-48080	4105
04465-48090	4082
04465-48100	4105
04465-48110	4105
04465-48150	4255
04465-48150	4255
04465-48160	4255
04465-48160	4255
04465-50060	4274
04465-50220	4274
04465-52010	3769
04465-52011	3769
04465-52021	3769
04465-52022	3769
04465-52070	3768
04465-52070	3768
04465-52090	3768
04465-52090	3768
04465-52100	3769
04465-52130	3768
04465-52130	3768
04465-52140	3768
04465-52140	3768
04465-52180	3958
04465-52200	3958
04465-52260	3958
04465-53010	3915
04465-60010	3693
04465-60020	3673
04465-60030	3560
04465-60110	3673
04465-60120	3829
04465-60140	3829
04465-60150	3829
04465-60150	3829
04465-60151	3829
04465-60160	3829
04465-60170	3829
04465-60170	3829
04465-60210	3891
04465-60220	3829
04465-60220	3829
04465-60230	3829
04465-60230	3829
04465-60240	3829
04465-60240	3829
04465-60250	3829
04465-60270	3891
04465-60280	3996
04465-60280	3996
04465-60300	3996
04465-60320	3891
04465-60340	3829
04465-65021	4003
04465-68010	3910
04465-B1020	3928

OE	BESER
NO	NO
04465-B1040	3928
04465-B1110	3928
04465-B1120	4122
04465-B1190	4122
04465-B1320	4122
04465-B2050	3928
04465-BZ010	3927
04465-BZ131	4199
04465-YZZ50	3402
04465-YZZ56	3714
04465-YZZ57	3560
04465-YZZAA	3402
04465-YZZAB	3554
04465-YZZAB	3651
04465-YZZAD	3777
04465-YZZAD	3777
04465-YZZAF	3560
04465-YZZAF	3560
04465-YZZAJ	3714
04465-YZZAL	3673
04465-YZZAM	4086
04465-YZZAM	4086
04465-YZZAU	3634
04465-YZZAV	4088
04465-YZZAY	4088
04465-YZZBD	3560
04465-YZZCA	3371
04465-YZZCH	4071
04465-YZZCJ	3768
04465-YZZCJ	3768
04465-YZZCL	3822
04465-YZZCM	3829
04465-YZZCN	4158
04465-YZZDB	3891
04465-YZZDC	3817
04465-YZZDR	3953
04465-YZZDY	4077
04465-YZZEA	4003
04465-YZZEC	3956
04465-YZZEC	3956
04466 06080	4202
04466 14010	3701
04466 14030	3701
04466 22040	3701
04466 22070	3701
04466 22090	3701
04466 22110	3701
04466 30010	3701
04466 40010	3701
04466 40020	3701
04466 40030	3701
04466-02020	3825
04466-02070	3825
04466-02110	3825
04466-02160	3825
04466-02170	4037
04466-02170	4037
04466-02180	4037
04466-02180	4037
04466-02181	4037
04466-02181	4037
04466-02182	4037
04466-02190	3954
04466-02191	4037
04466-02191	4037
04466-02210	3954
04466-02280	4037
04466-02280	4037
04466-05010	4153
04466-05020	4153
04466-05040	4146
04466-05041	4146
04466-06060	3949
04466-06070	3949
04466-06080	3949
04466-06090	3949
04466-06100	3949
04466-0C010	3997
04466-0C010	3997
04466-0E010	4256

OE	BESER
NO	NO
04466-0W010	4277
04466-0W020	4277
04466-12130	3954
04466-12150	3954
04466-20090	3788
04466-22150	4114
04466-22170	4114
04466-22190	4113
04466-28010	4072
04466-28011	4072
04466-28020	4072
04466-28090	4072
04466-28110	4153
04466-30030	4099
04466-30120	4085
04466-30122	4085
04466-30161	4085
04466-30170	4085
04466-30190	4085
04466-30240	4113
04466-33090	3911
04466-33100	3911
04466-33130	3911
04466-33160	3949
04466-33180	3949
04466-42010	4153
04466-42020	4153
04466-42030	4153
04466-42040	4153
04466-42050	4153
04466-42060	3949
04466-47080	3954
04466-48020	3911
04466-48030	4111
04466-48040	4111
04466-48060	4111
04466-48090	4111
0446648120	4254
04466-48140	4256
04466-50130	4277
04466-50150	4277
04466-50170	4277
04466-50180	4277
04466-50190	4277
04466-52010	3788
04466-52020	3788
04466-52030	3788
04466-52040	3788
04466-52050	3788
04466-52060	3788
04466-52120	3954
04466-52121	3954
04466-52140	3954
04466-52141	3954
04466-52150	3954
04466-52151	3954
04466-52170	3954
04466-53010	4113
04466-60010	3693
04466-60020	3693
04466-60030	3830
04466-60030	3830
04466-60070	3830
04466-60070	3830
04466-60080	3693
04466-60090	3693
04466-60120	3997
04466-60140	3693
04466-60160	3997
04466-60280	3997
04466-60280	3997
04466E020	4254
04466-YZZC2	4275
04466-YZZC4	3830
04466-YZZC4	3830
04466-YZZC6	3776
04466-YZZC8	3693
04466-YZZD5	3788
04466-YZZD9	3825
04491-05010	3554

OE	BESER
NO	NO
04491-05010	3651
04491-12030	3314
04491-12031	3314
04491-12032	3314
04491-12081	3710
04491-12092	3314
04491-12093	3314
04491-12094	3314
04491-12142	3709
04491-12142	3709
04491-12440	3402
04491-12650	3554
04491-12650	3651
04491-14010	3314
04491-14011	3314
04491-14030	3314
04491-14031	3314
04491-14032	3314
04491-14033	3314
04491-14090	3314
04491-14090	3314
04491-20030	3314
04491-20031	3314
04491-20032	3314
04491-20040	3314
04491-20050	3314
04491-20051	3314
04491-20110	3314
04491-20111	3314
04491-20880	3554
04491-20880	3651
04491-20890	3554
04491-20890	3651
04491-21010	3314
04491-22130	3418
04491-22140	3418
04491-22150	3418
04491-22160	3418
04491-22161	3418
04491-22162	3418
04491-22163	3418
04491-22170	3418
04491-22171	3418
04491-22172	3418
04491-22173	3418
04491-22180	3418
04491-22181	3418
04491-22190	3418
04491-22200	3418
04491-22220	3418
04491-22230	3418
04491-22250	3418
04491-22370	3554
04491-22370	3651
04491-26061	3379
04491-26100	3777
04491-26110	3777
04491-26111	3777
04491-26160	3777
04491-26170	3777
04491-26180	3777
04491-26210	3777
04491-26261	3777
04491-26262	3777
04491-26270	3777
04491-26270	3777
04491-26320	3777
04491-26320	3777
04491-26340	3777
04491-26340	3777
04491-28010	3314
04491-28020	3634
04491-28080	4088
04491-28081	4088
04491-28083	4088
04491-28120	4088
04491-28170	4088
04491-2B010	3554
04491-2B010	3651
04491-2B060	4086

OE	BESER
NO	NO
04491-2B060	4086
04491-30101	3369
04491-30341	3915
04491-32020	3402
04491-32030	3402
04491-32031	3402
04491-32032	3402
04491-32050	3402
04491-32080	3402
04491-32081	3402
04491-32090	3402
04491-32100	3402
04491-32180	3402
04491-33010	3554
04491-33010	3651
04491-33011	3554
04491-33011	3651
04491-33030	3554
04491-33030	3651
04491-33040	4086
04491-33040	4086
04491-33041	4086
04491-33041	4086
04491-33042	4086
04491-33042	4086
04491-33060	3554
04491-33060	3651
04491-33080	3554
04491-33080	3651
04491-35010	3379
04491-35020	3379
04491-35021	3379
04491-35022	3379
04491-35061	3714
04491-35063	3714
04491-35063	3714
04491-35070	3371
04491-35070	3371
04491-35071	3371
04491-35071	3371
04491-35080	3371
04491-35080	3371
04491-35090	3418
04491-35120	3371
04491-35160	3560
04491-35160	3560
04491-35170	3371
04491-35171	3371
04491-35180	3371
04491-35181	3371
04491-35190	3560
04491-35200	3714
04491-35200	3714
04491-35220	3418
04491-35240	3560
04491-35260	3560
04491-36010	3379
04491-36010	3930
04491-36030	3930
04491-50020	4086
04491-50060	3402
04491-60010	3371
04491-60010	3371
04491-60011	3371
04491-60020	3436
04491-60020	3436
04491-60030	3371
04491-60040	3371
04491-60040	3371
04491-60050	3371
04491-60050	3371
04491-60060	3436
04491-60070	3560
04491-60080	3560
04491-60080	3560
04491-60150	3673
04491-60160	3673
04491-60170	3673
04491-60180	3673
04491-87203	3746

OE	BESER
NO	NO
04491-87203	3746
04491-87211	3746
04491-87222	3746
04491-87223	3746
04491-87227	3746
04491-87501	3746
04491-87501	3746
04491-87503	3746
04491-87503	3746
04491-87504	3746
04491-87510	3746
04491-87510	3746
04491-87601	3436
04491-87603	3436
04491-87607	3436
04491-87610	3436
04491-87613	3436
04491-87613	3436
04491-87702	3620
04491-87710	3600
04491-87716	3620
04491-87722	3600
04491-87724	3898
04491-87725	3898
04491-87727	3898
04491-87728	3898
04491-87731	3898
04491-87Z01	3927
04491-87Z01-001	3927
04491-97201	3901
04491-97205	3901
04491-97212	3901
04491-97217	3928
04491-97401	3901
04491-97402	3928
04491-97403	3901
04491-97404	3928
04492 14090	3701
04492 14100	3701
04492 14110	3701
04492 17040	3701
04492 22030	3701
04492 22040	3701
04492 22041	3701
04492 22042	3701
04492 22043	3701
04492 22050	3701
04492 22070	3701
04492 22080	3701
04492 22100	3701
04492 22140	3701
04492 22141	3701
04492 30080	3701
04492 30100	3701
04492 30101	3701
04492 40101	3701
04492-20010	3776
04492-20051	3776
04492-28010	4072
04492-28020	4072
04492-32060	3776
04492-50030	4275
04492-60010	3693
04492-60020	3693
04728 124	4197
04762 682	4197
04773 264	4197
04882 106	4197
04882 107	4197
04883344AC	4182
04897 664AA	4197
04897 665AA	4197
05011 743AA	4197
05011067AA	4197
05011969AA	4011
05014438AA	4197
05014527AA	4197
05014527AA	4197
05018592AA	4011
05018595AA	4197

OE	BESER
NO	NO
05018595AA	4197
05019984AA	4012
05019984AA	4012
05066427AA	4012
05066427AA	4012
05080563AB	4329
05080563AC	4329
05080563AD	4329
05080563AD	4329
05080868AA	4016
05080868AC	4016
05093183AA	4031
05093183AB	4031
05093260AA	4031
05093706AA	4329
05096349AA	4012
05102061AA	4327
05114555AA	3863
05137666AA	4198
05139191AA	4018
05139218AA	3863
05142555AA	4006
05142558AA	4198
05142558AB	4198
05142558AB	4198
05142559AA	4198
05142559AB	4198
05142560AA	4018
05142561AA	4018
05142561AB	4018
05142566AA	4018
05142566AB	4018
05142566AB	4018
05143350AA	4328
05143350AB	4328
05143350AB	4328
05143350AB	4328
05143350AC	4328
05143350AC	4328
05143350AC	4328
05143350AC	4328
05174001AA	4006
05175208AA	4198
05175818AA	4018
05191217AA	3955
05191217AA	3955
05191217AA	3955
05191229AA	3955
05191244AA	3955
05191271AA	4106
05191271AA	4106
05191271AA	4106
05191271AC	4106
06430-S0K-J01	4148
06430-SAA-J50	4212
06450-S0A-J00	3704
06450-S2G-000	3686
06450-S5A-E50	3686
06450-S5T-E00	4110
06450-S5T-E51	4110
06450-S7A-E00	4109
06450-S7A-E00	4232
06450-S9A-A00	3831
068071076AB	4329
0690-52940	3397
0690-52940	3397
0690-52941	3537
0K045-33-23Z	4009
0K060A-33-28ZA	3574
0K20A-33-23Z	3740
0K20H-33-23Z	3545
0K239-33-23Z	3740
0K2A-33-323ZB	3740
0K2A3-33-23ZB	3740
0K2A4-3323Z	3740
0K2A4-3323Z	3740
0K2JA-33-28Z	4028
0K2JA-33-28ZA	4028
0K2N1-33-28Z	4269
0K2N1-33-28ZA	4269

OE	BESER
NO	NO
0K30A-33-28Z	3522
0K56A-33-23Z	3802
0K56A-33-23Z	3802
0K60A-33-28ZA	3574
0K60B-33-28Z	3574
0K60B-33-28ZA	3574
0K70Y-33-28Z	3463
0K71E-33-28Z	3463
0K71F-33-28Z	3463
0K72A-33-28Z	3653
0K75A-33-28Z	3802
0K75B-33-28Z	3802
0K75B-33-28Z	3802
0K9B6-33-28Z	4269
0K9D0-33-28Z	4269
1 541 678	3313
105142205230.	3318
110 698 151A	3444
110 698 151A	3444
111 698 151	3325
111 698 151 A	3325
111 698 151 B	3328
111 698 151 C	3325
111 698 151 D	3328
113430282R	3406
113430282R	3406
113430282R	3406
113430282R	3406
115 430 261	3419
115 430 261	3731
115 430 261	3731
115 430 280	3419
115 430 281	3419
115 430 284	3419
115 430 284	3731
115 430 284	3731
115 430 285	3419
115 430 285	3419
115 430 285	3731
115 430 285	3731
115 430 287	3419
115 430 287	3419
11600220520330.	3318
13.0460-2981.2	3555
140 698 151B	3637
14208220	3471
1431V002000000	4281
1431V003000000	4281
1579 2633	4184
1579 2633	4184
1579 2633	4184
1594 5636	4184
1594 5636	4184
1594 5636	4184
16 05 036	3665
16 05 140	4014
16 05 912	3665
16 05 912	3665
16 05 966	3665
163 420 00 20	4126
163 420 03 20	4126
163 420 04 20	4069
163 420 06 20	4102
163 420 07 20	4103
163 420 09 20	4103
163 420 10 20	4102
163 420 10 20 41	4102
163 420 11 20	4103
164 420 08 20	4210
164 420 18 20	4210
168 420 00 20	4125
168 420 01 20	4125
168 420 07 20	4125
168 420 08 20	4125
168 420 11 20	4125
168 420 12 20	4125
168 420 13 20	4125
168 420 14 20	4125
168 420 15 20	4125
17 77 990	3665

OE	BESER
NO	NO
171 615 115A	3486
171 698 151B	3343
171 698 151B	3343
171 698 151B	3483
171 698 151B	3483
171 698 151C	3343
171 698 151C	3343
171 698 151C	3483
171 698 151C	3483
171 698 151D	3343
171 698 151D	3343
171 698 151D	3483
171 698 151D	3483
171 698 151E	3327
171 698 151E	3327
171 698 151E	3327
171 698 151F	3444
171 698 151F	3444
171 698 151G	3444
171 698 151G	3444
171 698 151H	3343
171 698 151H	3343
171 698 151H	3483
171 698 151H	3483
171 698 151K	3343
171 698 151K	3343
171 698 151K	3483
171 698 151K	3483
171 698 525B	3918
17D883M	4219
19 149 111	4219
190 698 151	3782
190 698 151	3782
191 698 151	3441
191 698 151	3441
191 698 151A	3441
191 698 151A	3441
191 698 151B	3486
191 698 151C	3444
191 698 151C	3444
191 698 151D	3444
191 698 151D	3444
191 698 151E	3441
191 698 151E	3441
191 698 151F	3441
191 698 151G	3486
191 698 151H	3444
191 698 151H	3444
191 698 151J	3444
191 698 151K	3444
191 698 151K	3444
191 698 151L	3486
191 698 451	3529
191 698 451A	3529
191 698 451C	3529
191 698 451D	3529
1915 9252	4184
1932 9677	4184
1C1J2K021AA	3921
1C1J2K021AB	3921
1C1J2K021AC	3921
1E0 698 451	3529
1E0 698 451	3529
1E0 698 451	3529
1E0 698 451	3529
1E0 698 451	3529
1E0 698 451A	3529
1E0 698 451E	3529
1E0 698 451E	3529
1E0 698 451G	3529
1E0 698 451G	3529
1E0 698 451G	3529
1E0 698 451G	3529
1E0 698 451G	3529
1E0 698 451G	3529
1E06-33-23Z	3570
1E06-33-23Z	3594
1E06-33-23ZA	3570
1E06-33-23ZA	3594
1E06-33-23ZB	3570

OE	BESER
NO	NO
1E06-33-23ZB	3594
1E10-33-23X	3877
1E10-33-23Z	3877
1GD 698 151	3444
1GD 698 151	3444
1GD 6981 51	3444
1H0 698 151	3444
1H0 698 151	3444
1H0 698 151A	3538
1H0 698 151A	3538
1H0 698 151B	3637
1H0 698 151B	3637
1H0 698 451	3529
1H0 698 451	3529
1H0 698 451	3529
1H0 698 451	3529
1H0 698 451	3529
1H0 698 451A	3529
1H0 698 451A	3529
1H0 698 451A	3529
1H0 698 451A	3529
1H0 698 451A	3529
1H0 698 451B	3529
1H0 698 451C	3529
1H0 698 451D	3529
1H0 698 451D	3529
1H0 698 451D	3529
1H0 698 451D	3529
1H0 698 451D	3529
1H0 698 451E	3529
1H0 698 451F	3529
1H0 698 451H	3529
1H0 698 451H	3529
1HM 698 151	3896
1HM 698 151	3896
1HM 698 151	3896
1HM 698 151	3896
1HM 698 151A	3896
1HM 698 151A	3896
1HM 698 151A	3896
1HM 698 151A	3896
1J0 698 151	3682
1J0 698 151	3682
1J0 698 151	3682
1J0 698 151	3682
1J0 698 151A	3782
1J0 698 151A	3782
1J0 698 151A	3782
1J0 698 151A	3782
1J0 698 151A	3782
1J0 698 151A	3782
1J0 698 151B	3782
1J0 698 151B	3782
1J0 698 151B	3782
1J0 698 151B	3782
1J0 698 151B	3782
1J0 698 151B	3782
1J0 698 151C	3782
1J0 698 151C	3782
1J0 698 151D	3782
1J0 698 151D	3782
1J0 698 151D	3782
1J0 698 151D	3782
1J0 698 151D	3782
1J0 698 151D	3782
1J0 698 151E	3782
1J0 698 151E	3782
1J0 698 151E	3782
1J0 698 151E	3782
1J0 698 151E	3782
1J0 698 151F	3782
1J0 698 151F	3782
1J0 698 151F	3782
1J0 698 151F	3782
1J0 698 151F	3782
1J0 698 151F	3782
1J0 698 151G	3782
1J0 698 151G	3782
1J0 698 151G	3782

OE	BESER
NO	NO
1J0 698 151G	3782
1J0 698 151G	3782
1J0 698 151G	3782
1J0 698 151H	3782
1J0 698 151H	3782
1J0 698 151J	3782
1J0 698 151J	3782
1J0 698 151J	3782
1J0 698 151J	3782
1J0 698 151J	3782
1J0 698 151J	3782
1J0 698 151K	3590
1J0 698 151K	3590
1J0 698 151K	3590
1J0 698 151K	3590
1J0 698 151M	3590
1J0 698 151M	3590
1J0 698 151M	3590
1J0 698 151M	3590
1J0 698 451	3529
1J0 698 451	3529
1J0 698 451	3529
1J0 698 451	3529
1J0 698 451	3529
1J0 698 451B	3529
1J0 698 451B	3529
1J0 698 451B	3529
1J0 698 451B	3529
1J0 698 451B	3529
1J0 698 451C	3529
1J0 698 451C	3529
1J0 698 451D	3529
1J0 698 451D	3529
1J0 698 451D	3529
1J0 698 451D	3529
1J0 698 451D	3529
1J0 698 451E	3529
1J0 698 451E	3529
1J0 698 451E	3529
1J0 698 451E	3529
1J0 698 451E	3529
1J0 698 451F	3529
1J0 698 451F	3529
1J0 698 451F	3529
1J0 698 451F	3529
1J0 698 451F	3529
1J0 698 451G	3529
1J0 698 451G	3529
1J0 698 451G	3529
1J0 698 451G	3529
1J0 698 451G	3529
1J0 698 451J	3529
1J0 698 451J	3529
1J0 698 451J	3529
1J0 698 451J	3529
1J0 698 451J	3529
1J0 698 451K	3529
1J0 698 451K	3529
1J0 698 451L	3529
1J0 698 451L	3529
1J0 698 451L	3529
1J0 698 451L	3529
1J0 698 451L	3529
1J0 698 451L	3529
1J0 698 451M	3529
1J0 698 451M	3529
1J0 698 451M	3529
1J0 698 451M	3529
1J0 698 451M	3529
1J0 698 451N	3529
1J0 698 451N	3529
1J0 698 451P	3529
1J0 698 451P	3529
1J0 698 451P	3529
1J0 698 451P	3529
1J0 698 451P	3529
1J0 698 451P	3529
1J0 698 451S	3529
1J0 698 451S	3529
1J0 698 451S	3529
1J0 698 451S	3529

OE	BESER
NO	NO
1J0 698 451S	3529
1J0 698 451S	3529
1K0 698 151	3904
1K0 698 151	3904
1K0 698 151	3904
1K0 698 151	3904
1K0 698 151	3904
1K0 698 151	3904
1K0 698 151A	3782
1K0 698 151A	3782
1K0 698 151A	3782
1K0 698 151A	3782
1K0 698 151A	3782
1K0 698 151A	3782
1K0 698 151C	3904
1K0 698 151C	3904
1K0 698 151C	3904
1K0 698 151C	3904
1K0 698 151C	3904
1K0 698 151C	3904
1K0 698 151D	3782
1K0 698 151E	3904
1K0 698 151E	3904
1K0 698 151E	3904
1K0 698 151E	3904
1K0 698 151E	3904
1K0 698 151E	3904
1K0 698 151F	3782
1K0 698 151F	3782
1K0 698 151F	3782
1K0 698 151F	3782
1K0 698 151F	3782
1K0 698 151K	3782
1K0 698 451	3905
1K0 698 451	3905
1K0 698 451	3905
1K0 698 451	3905
1K0 698 451	3905
1K0 698 451B	3905
1K0 698 451B	3905
1K0 698 451B	3905
1K0 698 451B	3905
1K0 698 451B	3905
1K0 698 451C	3529
1K0 698 451C	3529
1K0 698 451C	3529
1K0 698 451C	3529
1K0 698 451C	3529
1K0 698 451D	3905
1K0 698 451D	3905
1K0 698 451D	3905
1K0 698 451D	3905
1K0 698 451D	3905
1K0 698 451E	3905
1K0 698 451E	3905
1K0 698 451E	3905
1K0 698 451E	3905
1K0 698 451E	3905
1K0 698 451F	3905
1K0 698 451F	3905
1K0 698 451F	3905
1K0 698 451F	3905
1K0 698 451F	3905
1K0 698 451G	3905
1K0 698 451G	3905
1K0 698 451G	3905
1K0 698 451G	3905
1K0 698 451G	3905
1K0 698 451H	3905
1K0 698 451H	3905
1K0 698 451H	3905
1K0 698 451H	3905
1K0 698 451H	3905
1K0 698 451J	3529
1K0 698 451J	3529
1K0 698 451J	3529
1K0 698 451J	3529
1K0 698 451J	3529

OE	BESER
NO	NO
1K0 698 451K	3905
1K0 698 451K	3905
1K0 698 451K	3905
1K0 698 451K	3905
1K0 698 451K	3905
1K0 698 451M	3529
1K0 698 451M	3529
1N08-33-28Z	3797
1S4Z2200BA	3755
1S712M008AE	4093
1S7J2K021AA	4100
2101-3501089	3393
2101-3501090	3393
2108-3501080	3552
2108-3501089	3422
2108-3501090	3422
2110-3501080	3422
2121-33501090	3421
2121-3501090	3421
2311 2025	4184
251 698 151	3350
251 698 151A	3350
251 698 151B	3350
251 698 151C	3605
251 698 151D	3350
251 698 151E	3350
251 698 151F	3605
25193-GA130	3395
2594 9454	4184
2594 9454	4184
2594 9454	4184
26296-AA00	3426
26296-AA040	4078
26296-AA041	4078
26296-AA050	3760
26296-AA051	3760
26296-AA061	4080
26296-AA062	4080
26296-AA080	4080
26296-AA081	4080
26296-AA082	4080
26296-AA120	3426
26296-AA121	3426
26296-AA142	3426
26296-AA143	3426
26296-AC010	3764
26296-AC011	3764
26296-AC020	3764
26296-AC021	3764
26296-AC040	4079
26296-AC041	4079
26296-AC050	4079
26296-AE020	4079
26296-AE160	3912
26296-AE190	4036
26296-AE200	4036
26296-AE210	4079
26296-AG000	4081
26296-AG030	4081
26296-AG040	3912
26296-AG050	4081
26296-AJ000	4081
26296-AJ001	4081
26296-AJ010	4081
26296-FA000	3426
26296-FA001	3426
26296-FA040	4078
26296-FA041	4078
26296-FC002	3913
26296-FE000	3912
26296-FE020	3912
26296-FE080	3912
26296-FE081	3912
26296-FG001	4036
26296-PA040	4080
26296-PA060	4080
26296-SA000	3912
26296-SA010	3912
26296-SA011	3912
26296-SA020	3912

OE	BESER
NO	NO
26296-SA030	3912
26296-SA031	3912
26296-SG010	4081
26296-XA000	4081
26296-XA010	4081
26696-AG010	4213
26696-AG020	4213
26696-AG030	4213
26696-AG031	4213
26696-AG051	4213
26696-CA000	4258
26696-FA010	3913
26696-FC000	3913
26696-FC001	3913
26696-FC002	3913
26696-FC020	3913
26696-FJ000	4213
26696-SG000	4213
26696-XA000	4258
26696-XA010	4258
26696-XA011	4258
270987	3471
291 698 151	3513
291 698 151A	3513
29296-PA060	4080
2D0 698 151	3567
2D0 698 151A	3614
2D0 698 151B	3614
2D0 698 151C	3567
2D0 698 451	3670
2D0 698 451A	3678
2D0 698 451B	3804
2D0 698 451C	3678
2D0 698 451D	3678
2D0 698151C	3567
2E0 698 151	3925
2E0 698 151A	3962
2E0 698 151B	3925
2E0 698 151C	3962
2E0 698 151E	3925
2E0 698 451	3926
2E0 698 451	3926
2E0 698 451A	3963
2E0 698 451B	3963
2H0 698 151	3906
2H0 698 151A	3906
2K5 698 151	4228
2K5 698 151	4228
2K5 698 151	4228
2K5 698 151	4228
2K5 698 151A	4228
2K5 698 151A	4228
2K5 698 151A	4228
2K5 698 151A	4228
2K5 698 151B	4228
2K5 698 451 A	4336
2K5 698 451 B	4336
2L2Z2200AA	4186
2M3420014EA	3767
2M342001EA	3767
2M342001FA	3767
2M5Z2001AB	3801
2M5Z2001AB	3801
2Q0 698 451 A	4336
2T142M008AA	3853
3 057 0085 00	4243
305 698 1515	3458
311 698 151C	3318
321 698 151	3444
321 698 151 1	3343
321 698 151 1	3483
321 698 151B	3486
321 698 151C	3444
321 698 151D	3486
321 698 151E	3486
321 698 151F	3444
321 698 151G	3444
321 698 151H	3486
34 11 1 103 207	3331
34 11 1 103 321	3331

OE	BESER
NO	NO
34 11 1 103 726	3331
34 11 1 103 744	3331
34 11 1 111 649	3331
34 11 1 116 619	3318
34 11 1 117 002	3365
34 11 1 117 352	3365
34 11 1 117 979	3331
34 11 1 118 517	3365
34 11 1 150 523	3365
34 11 1 150 524	3365
34 11 1 150 527	3365
34 11 1 152 655	3365
34 11 1 153 910	3564
34 11 1 154 442	3609
34 11 1 154 443	3609
34 11 1 154 611	3573
34 11 1 157 561	3573
34 11 1 157 562	3573
34 11 1 157 569	3564
34 11 1 157 570	3564
34 11 1 157 747	3609
34 11 1 157 748	3609
34 11 1 157 923	3573
34 11 1 157 924	3573
34 11 1 158 265	3564
34 11 1 158 270	3365
34 11 1 159 249	3365
34 11 1 159 251	3365
34 11 1 159 257	3331
34 11 1 159 259	3564
34 11 1 159 279	3564
34 11 1 159 415	3573
34 11 1 159 416	3573
34 11 1 160 356	3563
34 11 1 160 357	3563
34 11 1 160 450	3564
34 11 1 160 459	3564
34 11 1 160 532	3563
34 11 1 161 057	3609
34 11 1 161 347	3609
34 11 1 161 349	3430
34 11 1 161 437	3563
34 11 1 161 438	3563
34 11 1 161 445	3563
34 11 1 161 446	3563
34 11 1 161 717	3573
34 11 1 161 975	3909
34 11 1 162 210	3909
34 11 1 162 481	3609
34 11 1 162 535	3564
34 11 1 162 900	3909
34 11 1 162 922	3909
34 11 1 163 227	3881
34 11 1 163 307	3881
34 11 1 163 850	3563
34 11 1 163 921	3909
34 11 1 163 922	3909
34 11 1 164 737	3563
34 11 1 165 227	3881
34 11 1 165 556	3563
34 11 2 228 248	3564
34 11 2 229 031	3881
34 11 2 229 935	3564
34 11 2 282 090	3881
34 11 2 282 166	3881
34 11 2 282 554	3564
34 11 2 282 555	3564
34 11 2 282 556	3881
34 11 2 283 365	4208
34 11 2 283 865	4180
34 11 3 404 362	4347
34 11 3 427 303	3881
34 11 3 427 503	3881
34 11 4 074 370	4207
34 11 6 750 148	4347
34 11 6 753 668	4180
34 11 6 754 705	4347
34 11 6 76 1249	3909
34 11 6 761 237	3563
34 11 6 761 243	4347

OE	BESER
NO	NO
34 11 6 761 249	3909
34 11 6 761 252	3881
34 11 6 761 283	4180
34 11 6 763 089	4180
34 11 6 763 305	4179
34 11 6 763 591	4180
34 11 6 763 617	4346
34 11 6 763 618	4346
34 11 6 763 652	4208
34 11 6 764 312	4208
34 11 6 764 437	4180
34 11 6 764 438	4180
34 11 6 764 540	4180
34 11 6 767 191	4180
34 11 6 767 580	4180
34 11 6 768 287	4208
34 11 6 770 575	4208
34 11 6 774 258	4208
34 11 6 776 161	4180
34 11 6 778 403	4207
34 11 6 779 293	4207
34 11 6 779 652	4347
34 11 6 781 873	4180
34 11 6 852 253	4207
34 11 9 058 982	3609
34 11 9 058 989	3609
34 20 6 877 648	4325
34 20 6 879 857	4325
34 21 1 117 981	3326
34 21 1 150 524	3365
34 21 1 150 556	3326
34 21 1 153 196	3572
34 21 1 157 044	3578
34 21 1 157 334	3578
34 21 1 157 563	3578
34 21 1 157 925	3572
34 21 1 157 926	3572
34 21 1 158 136	3578
34 21 1 158 221	3578
34 21 1 158 266	3578
34 21 1 158 270	3578
34 21 1 158 562	3578
34 21 1 158 912	3572
34 21 1 159 003	3572
34 21 1 159 252	3706
34 21 1 159 253	3706
34 21 1 159 255	3706
34 21 1 159 265	3326
34 21 1 159 273	3572
34 21 1 159 276	3572
34 21 1 159 912	3572
34 21 1 160 198	3578
34 21 1 160 708	3564
34 21 1 163 324	3879
34 21 1 163 395	3656
34 21 1 163 833	3879
34 21 1 164 582	3879
34 21 2 226 013	3572
34 21 2 227 325	3879
34 21 2 284 296	4179
34 21 2 284 685	4179
34 21 2 788 284	4325
34 21 3 403 241	3879
34 21 6 750 160	3879
34 21 6 757 536	4179
34 21 6 761 240	3879
34 21 6 761 247	3879
34 21 6 761 248	3879
34 21 6 761 250	3879
34 21 6 761 281	3656
34 21 6 761 286	4179
34 21 6 763 012	4179
34 21 6 763 043	4181
34 21 6 763 044	4181
34 21 6 763 305	4179
34 21 6 768 471	4179
34 21 6 788 284	4325
34 21 6 790 071	3879
34 21 6 796 741	4325
34 21 6 798 193	4325

OE	BESER
NO	NO
34 21 6 861 543	4325
34 21 6 862 202	4325
34 21 6 870 558	4325
34 21 6 870 565	4325
34 21 6 885 451	4325
34 21 6 885 452	4325
3501140G08	3958
3502150K00	3887
357 615 115A	3551
357 615 115A	3551
357 615 115B	3551
357 615 115B	3551
357 698 151	3551
357 698 151	3551
357 698 151A	3531
357 698 151B	3551
357 698 151B	3551
357 698 151D	3531
357 698 151E	3896
357 698 151E	3896
357 698 151E	3896
357 698 151E	3896
357 698 151H	3531
374 698 151	3458
374 698 151A	3458
3B0 698 451A	3529
3B0 698 451A	3529
3C0 698 151	3904
3C0 698 151	3904
3C0 698 151A	3904
3C0 698 151A	3904
3C0 698 151B	3904
3C0 698 151B	3904
3C0 698 151C	3904
3C0 698 151C	3904
3C0 698 151C	3904
3C0 698 151D	3904
3C0 698 451	3905
3C0 698 451	3905
3C0 698 451A	3905
3C0 698 451A	3905
3C0 698 451D	3905
3L2Z2200BA	4186
3M342001CA	3988
3M352001BA	3988
3M512K021AB	3885
3M512K021AB	3885
3M512M008AA	3853
3M512M008AB	3853
3M512M008AC	3853
41 06 000 11R	4134
41 06 000 12R	3950
41 06 000 23R	4143
41 06 001 11R	4134
41 06 012 41R	3849
41 06 013 34R	3966
41 06 014 08R	3933
41 06 021 92R	3503
41 06 030 72R	4143
41 06 037 50R	3966
41 06 040 76R	3983
41 06 043 86R	4056
41 06 047 75R	3983
41 06 04E A0A	4282
41 06 056 12R	4140
41 06 056 12R	4140
41 06 056 12R	4140
41 06 059 61R	3964
41 06 066 78R	3529
41 06 071 15R	3964
41 06 071 15R	3964
41 06 071 15R	3964
41 06 071 25R	3539
41 06 075 85R	4134
41 06 076 13R	3852
41 06 076 90R	3950
41 06 084 81R	3983
41 06 084 81R	3983
41 06 084 81R	3983
41 06 086 38R	4227

OE	BESER
NO	NO
41 06 087 13R	3849
41 06 091 92R	3850
41 06 096 46R	4140
41 06 096 46R	4140
41 06 096 46R	4140
41000-10G08	3760
41060 18W25	3375
41060 B9500	3375
41060 B9525	3375
41060 B9526	3375
41060 B9527	3375
41060 D8593	3375
41060 M3025	3375
41060 N3000	3375
41060 N3025	3375
41060 N3026	3375
41060 N3027	3375
41060 N3028	3375
41060 N4425	3375
41060 N4426	3375
41060 N4427	3375
41060 N4428	3375
41060 N8525	3375
41060 R1000	3375
41060 R1025	3375
41060 R5225	3375
41060 R5725	3375
41060 R5726	3375
41060 R5727	3375
41060 S0128	3375
41060 S0425	3375
41060 S0426	3375
41060 S3426	3375
41060 S3427	3375
41060 S5025	3375
41060 S6025	3375
41060 S6085	3375
41060 U3425	3375
41060 U3426	3375
41060 U8725	3375
41060 U8925	3375
41060-00Q0L	4056
41060-00Q0L	4056
41060-00QAD	3856
41060-00QAE	3848
41060-08N90	3760
41060-08N91	3760
41060-08N92	3760
41060-09G90	3760
41060-09W25	3397
41060-0M891	3598
41060-0M892	3598
41060-0M8XC	3577
41060-0V090	3779
41060-0V790	4143
410601073R	4227
41060-1N060	3577
41060-1N090	3577
41060-1W385	3932
41060-1W387	3932
41060-1W388	3932
41060-23C90	3760
41060-23C91	3760
41060-23C92	3760
41060-23C93	3760
41060-23C94	3760
41060-25N25	3760
41060-2F025	3562
41060-2F026	3562
41060-2F027	3562
41060-2N290	4010
41060-2N390	4010
41060-2S790	3760
41060-2S790	3760
41060-2X825	3888
41060-2X825	3888
41060-2Y990	3779
41060-31E93	3397
41060-31E93	3397
41060-32G91	3760

OE	BESER
NO	NO
41060-32G92	3760
41060-32G94	3760
41060-32R94	3632
410603407R	4280
41060-37J91	3667
41060-37J93	3667
41060-37JX1	3667
41060-38U90	3697
41060-3N390	4010
41060-3S590	3760
41060-3S590	3760
41060-3S591	3760
41060-40F90	4010
41060-40U90	3779
41060-40V92	3779
41060-44F92	3632
41060-48R91	3700
41060-4A00B	3928
41060-4M490	3797
41060-4M526	3562
41060-4U125	4115
41060-4U126	4115
41060-4U127	4115
41060-50Y90	3766
41060-50Y94	3766
41060-51E85	4104
410605536R	4253
410605536R	4253
41060-55F90	3779
41060-57G90	3760
41060-57GX0	3760
41060-5DA0B	4326
41060-62C90	3598
41060-63C90	3766
41060-6F625	4128
41060-6F626	4128
41060-6N091	3797
41060-6N0X1	3797
41060-71J25	3562
41060-71J26	3562
41060-72J25	4104
41060-75J25	4104
41060-7Z025	4017
41060-80N90	3632
410608638R	4227
41060-89E90	3779
41060-89E91	3779
41060-95F0A	3797
41060-99B25	4128
41060-99B26	4128
41060-9C125	3888
41060-9C525	3888
41060-9C525	3888
41060-9C526	3888
41060-9C526	3888
41060-9G125	3888
41060-9X129	3942
41060-AV125	4115
41060-AV126	4115
41060-AX085	4015
41060-AX601	3983
41060-AX625	3983
41060-C7194	3415
41060-C7892	3415
41060-C8186	3415
41060-CA090	4074
41060-CA092	4074
41060-CA093	4074
41060-CC090	4143
41060-CC093	4143
41060-CG00J	4074
41060-EA025	3952
41060-EB325	4143
41060-EB326	3952
41060-EE30J	4015
41060-F1725	3562
41060-F6494	3758
41060-G9800	3415
41060-HG00B	4326
41060HJ00A	4244

OE	BESER
NO	NO
41060-R9025	3369
41060-R9025	3369
41060-T7893	3415
41060-V6786	3758
41060-V6786	3758
41060-V6791	3397
41060-V6791	3397
41060-V7085	3760
41060-V7085	3760
41060-V7090	3760
41060-VB290	3859
41060-VC091	3859
41060-VH385	3932
41060-VJ490	3760
41060-VJ490	3760
41060-VK190	4017
41060-VW085	4002
41060-VW0X5	4002
41060-W2285	3370
41060-ZA525	4074
41060-ZP00B	3952
41060-ZP025	3952
41080-09G27	3692
41080-09G27	3692
41080-41L27	3692
41080-41L27	3692
411 698 151	3318
411 698 151B	3318
411 698 151C	3318
411 698 151E	3343
411 698 151E	3483
415 421 03 10	3966
415 421 03 10	3966
415 421 04 10	3967
415 421 04 10	3967
415 421 06 10	3966
415 421 06 10	3966
4245.11	3405
4245.16	3405
4245.57	3323
4245.57	3323
4245.74	3366
4245.84	3405
4248.18	3405
4248.33	3440
4248.34	3405
4248.35	3405
4248.58	3405
4248.62	3380
4248.62	3380
4248.82	3405
4248.93	3311
4250.05	3318
4250.06	3321
4250.12	3366
4250.16	3405
4250.16	3405
4250.19	3366
4250.20	3405
4250.20	3405
4250.22	3405
4250.24	3405
4250.25	3442
4250.26	3405
4250.28	3440
4250.30	3366
4250.32	3380
4250.32	3380
4250.37	3474
4250.37	3474
4250.40	3405
4250.41	3503
4250.42	3496
4250.42	3496
4250.50	3380
4250.50	3380
4250.51	3380
4250.51	3380
4250.54	3440
4250.55	3457

OE	BESER
NO	NO
4250.56	3529
4250.58	3543
4250.70	3503
4250.71	3496
4250.71	3496
4250.72	3380
4250.72	3380
4250.73	3323
4250.81	3680
4250.85	3366
4250.88	3380
4250.88	3380
4250.93	3457
4250.95	3457
4250.96	3321
4250.97	3380
4250.97	3380
4250.99	3440
4251.02	3487
4251.03	3528
4251.04	3496
4251.04	3496
4251.05	3543
4251.06	3440
4251.06	3440
4251.07	3610
4251.08	3529
4251.13	3878
4251.16	3595
4251.17	3595
4251.18	3559
4251.19	3559
4251.22	3528
4251.25	3799
4251.25	3799
4251.25	3799
4251.25	3799
4251.26	3799
4251.26	3799
4251.26	3799
4251.26	3799
4251.31	3750
4251.35	3457
4251.40	3380
4251.46	3496
4251.46	3496
4251.48	3496
4251.48	3496
4251.50	3799
4251.50	3799
4251.50	3799
4251.50	3799
4251.51	3799
4251.51	3799
4251.51	3799
4251.51	3799
4251.54	3636
4251.54	3636
4251.54	3636
4251.54	3636
4251.55	3644
4251.55	3644
4251.55	3644
4251.55	3644
4251.56	3819
4251.57	3878
4251.66	3938
4251.69	3659
4251.79	3318
4251.83	3873
4251.88	3528
4251.91	3938
4251.96	3496
4251.96	3496
4251.97	3496
4251.97	3496
4252.04	3938
4252.05	3659
4252.09	3938
4252.12	3938

OE	BESER
NO	NO
4252.48	3935
4252.49	3934
4252.50	3800
4252.50	3800
4252.50	3800
4252.50	3800
4252.52	3800
4252.52	3800
4252.52	3800
4252.52	3800
4252.53	3800
4252.53	3800
4252.53	3800
4252.53	3800
4252.56	3496
4252.56	3496
4252.57	3496
4252.57	3496
4252.58	3854
4252.58	3854
4252.59	3820
4252.59	3820
4252.59	3820
4252.59	3820
4252.59	3820
4252.61	3380
4252.62	3380
4252.68	3750
4252.70	3457
4252.71	3496
4252.71	3496
4252.74	3496
4252.74	3496
4252.76	3820
4252.76	3820
4252.76	3820
4252.76	3820
4252.76	3820
4252.77	3939
4252.78	3940
4252.79	3946
4252.79	3946
4252.88	3935
4252.89	3934
4252.91	3819
4252.92	3878
4252.94	3940
4252.97	3940
4252-04	3759
4252-12	3759
4252-28	3759
4253.08	3442
4253.10	3503
4253.11	3496
4253.12	3366
4253.16	3528
4253.22	3984
4253.25	3984
4253.25	3984
4253.25	3984
4253.26	3946
4253.26	3946
4253.27	3987
4253.28	3987
4253.30	3820
4253.30	3820
4253.30	3820
4253.30	3820
4253.30	3820
4253.31	3800
4253.31	3800
4253.31	3800
4253.31	3800
4253.32	3939
4253.33	3644
4253.33	3644
4253.33	3644
4253.33	3644
4253.35	3939
4253.36	3940

OE	BESER
NO	NO
4253.37	3940
4253.38	3820
4253.38	3820
4253.38	3820
4253.38	3820
4253.38	3820
4253.38	3820
4253.39	3800
4253.39	3800
4253.39	3800
4253.39	3800
4253.40	3984
4253.41	3820
4253.41	3820
4253.41	3820
4253.41	3820
4253.41	3820
4253.42	3820
4253.42	3820
4253.42	3820
4253.42	3820
4253.42	3820
4253.45	3854
4253.45	3854
4253.46	3935
4253.47	3939
4253.48	3940
4253.54	3981
4253.55	3981
4253.56	3981
4253.57	3981
4253.58	3981
4253.59	3820
4253.60	3820
4253.61	3964
4253.61	3964
4253.61	3964
4253.61	3964
4253.61	3964
4253.63	3972
4253.63	3972
4253.64	3972
4253.64	3972
4253.65	3972
4253.65	3972
4253.65	3972
4253.65	3972
4253.66	3972
4253.66	3972
4253.66	3972
4253.66	3972
4253.67	4151
4253.68	4151
4253.69	3854
4253.70	3800
4253.70	3800
4253.70	3800
4253.70	3800
4253.72	3931
4253.73	3922
4253.74	3922
4253.75	3922
4253.76	3922
4253.78	3644
4253.79	3644
4253.80	3644
4253.83	3940
4253.84	3854
4253.85	3800
4253.87	3685
4253.87	3685
4253.88	3685
4253.93	3970
4253.93	3970
4253.95	3972
4253.96	3529
4253.96	3529
4253.96	3529
4253.96	3529
4253.96	3529
4253.98	3984

OE	BESER
NO	NO
4253.99	3984
4253-02	3759
4253-03	3759
4253-20	3759
4254.01	3984
4254.04	3946
4254.04	3946
4254.05	3853
4254.06	3826
4254.07	3826
4254.08	3800
4254.09	3800
4254.10	3940
4254.11	3940
4254.11	3940
4254.12	3964
4254.12	3964
4254.12	3964
4254.12	3964
4254.12	3964
4254.13	3964
4254.13	3964
4254.13	3964
4254.13	3964
4254.13	3964
4254.14	3971
4254.14	3971
4254.14	3971
4254.14	3971
4254.15	3971
4254.15	3971
4254.18	3800
4254.19	3984
4254.20	3529
4254.20	3529
4254.20	3529
4254.20	3529
4254.20	3529
4254.21	3946
4254.21	3946
4254.22	3939
4254.23	3820
4254.23	3820
4254.23	3820
4254.23	3820
4254.23	3820
4254.25	3964
4254.25	3964
4254.25	3964
4254.25	3964
4254.25	3964
4254.26	3970
4254.26	3970
4254.28	3529
4254.28	3529
4254.28	3529
4254.28	3529
4254.28	3529
4254.29	3971
4254.29	3971
4254.29	3971
4254.29	3971
4254.30	3685
4254.40	3984
4254.40	3984
4254.42	3496
4254.42	3496
4254.42	3496
4254.48	3893
4254.48	3893
4254.51	3595
4254.51	3595
4254.52	3559
4254.52	3559
4254.58	3834
4254.58	3834
4254.59	3835
4254.59	3835
4254.61	3981
4254.61	3981

OE	BESER
NO	NO
4254.62	3981
4254.62	3981
4254.63	3922
4254.63	3922
4254.63	3922
4254.63	3922
4254.63	4171
4254.63	4171
4254.63	4171
4254.63	4171
4254.64	3922
4254.64	3922
4254.64	3922
4254.64	3922
4254.64	4171
4254.64	4171
4254.64	4171
4254.64	4171
4254.65	3964
4254.65	3964
4254.65	3964
4254.67	3529
4254.67	3529
4254.67	3529
4254.67	3529
4254.67	3529
4254.68	3914
4254.68	3914
4254.69	3820
4254.69	3820
4254.74	3987
4254.74	3987
4254.75	3820
4254.75	3820
4254.75	3820
4254.76	3984
4254.83	3380
4254.85	3636
4254.85	3636
4254.86	3820
4254.90	3496
4254.91	3946
4254.96	3826
4254.96	3826
4254.97	4151
4254.97	4151
4254.99	3380
4254.99	3380
4254.A1	3972
4254.A1	3972
4254.A2	3972
4254.A2	3972
4254.A9	4145
4254.C0	3964
4254.C0	3964
4254.C1	3529
4254.C1	3529
4254.C8	3826
4254.C8	3826
4254-94	3759
43022-S1A-E02	4155
43022-S1A-E03	4155
43022-S1A-E30	4155
43022-S1A-E50	4155
43022-S3N-000	4148
43022-S3N-E50	4148
43022-S5A-J00	4148
43022-S6D-000	4148
43022-S6D-E50	4148
43022-S7S-010	4148
43022-S9A-E52	4148
43022-SE0-000	4212
43022-SE0-930	4212
43022-SE0-931	4212
43022-SE0-S00	4212
43022-SEA-E01	4155
43022-SEA-E10	4155
43022-SED-000	4148
43022-SF1-S00	4212
43022-SF1-S01	4212

OE	BESER
NO	NO
43022-SH3-G01	4212
43022-SL5-000	4148
43022-SL5-525	4148
43022-SM4-505	4148
43022-SM4-525	4148
43022-SM4-G00	4148
43022-SN7-000	4148
43022-SN7-E50	4148
43022-SP0-000	4148
43022-SP0-020	4148
43022-SR3-G01	4212
43022-ST3-E00	4212
43022-ST3-E50	4212
43022-SV4-A00	4148
43022-SV4-A02	4148
43022-SV4-A20	4148
43022-SV4-A22	4148
43022-SV4-E50	4148
43022-SV4-G00	4148
43022-SV4-G02	4148
43022-SV4-G22	4148
43022-SWW-G00	4156
43022-SWW-G01	4156
43022-SWW-G02	4156
43022-SX0-A50	4148
43022-SX0-A51	4148
43022-SY8-E50	4148
43022-SZ3-A01	4148
43022T7JH01	4279
43022T8MG00	4279
43022T8MG01	4279
43022-TM8-G01	4148
431 698 151C	3378
431 698 151D	3650
431 698 151E	3378
431 698 151F	3650
431 698 151G	3650
431 698 151H	3378
4353.26	3987
437 698 151	3650
437 698 451	3536
44 06 000 02R	3853
44 06 002 64R	4057
44 06 002 95R	3529
44 06 003 64R	3529
44 06 008 66R	4132
44 06 008 66R	4172
44 06 011 47R	4057
44 06 014 16R	4142
44 06 016 89R	3853
44 06 024 66R	3529
44 06 035 11R	3529
44 06 035 30R	3529
44 06 035 58R	4142
44 06 037 34R	4142
44 06 039 05R	3964
44 06 046 94R	4142
44 06 057 13R	3529
44 06 061 33R	3529
44 06 062 67R	3967
44 06 066 33R	4283
44 06 070 91R	3795
44 06 071 15R	3964
44 06 071 15R	3964
44 06 071 15R	3964
44 06 079 60R	3529
44 06 080 61R	4142
44 06 082 35R	4287
44 06 086 97R	4132
44 06 086 97R	4172
44 06 0BA 00F	3853
44 78 254	3665
440 615 116B	3650
44060-00Q0G	4057
44060-00Q0G	4057
44060-00Q0H	4057
44060-00Q0H	4057
44060-00Q0M	4057
44060-00Q0M	4057
44060-00QAE	3855

OE	BESER
NO	NO
44060-00QAF	3795
44060-0295R	3529
44060-08E91	4087
440603558R	4287
44060-3F025	3660
44060-3F085	3660
44060-4U092	4303
44060-61E90	4087
44060-61E91	4087
44060-65E90	4087
44060-70J26	3660
440608061R	4287
44060-8H385	3933
44060-90E90	4087
44060-AL585	3933
44060-AL586	3933
44060-AU090	4303
44060-AV625	3853
44060-AV725	3853
44060-BM425	3660
44060-BM426	3660
44060-D3590	4087
44060-D3591	4087
44060-EG00J	3933
44060-VC090	4010
44060-VC290	4010
440834627R	4287
443 698 151	3650
443 698 151A	3619
443 698 151C	3619
443 698 151D	3619
443 698 151F	3619
443 698 151G	3619
443 698 151H	3619
443 698 151J	3650
443 698 151K	3619
443 698 451B	3536
4448.82	3381
447 698 451A	3536
447 698 451AA	3536
45022-1SK-3E01	3683
45022-692-670	3705
45022-692-671	3705
45022-692-672	3705
45022692N50	3705
45022-692-N50	3705
45022692N51	3705
45022693 600	3705
45022-693-601	3705
45022693N50	3705
45022-S04-602	3686
45022-S04-G00	3686
45022-S04-G02	3686
45022-S04-J00	3686
45022-S04-V10	3607
45022-S04-V10	3607
45022-S04-V11	3607
45022-S04-V11	3607
45022-S04-V12	3607
45022-S04-V12	3607
45022-S0A-942	4110
45022-S10-A00	3704
45022-S10-A02	3704
45022-S10-G00	3704
45022-S2A-E01	4110
45022-S2A-E50	4110
45022-S30-A00	3704
45022-S30-A02	3704
45022-S30-E50	3704
45022-S5A-E50	3607
45022-S5A-J00	3607
45022-S5T-E00	4110
45022-S5T-E51	4110
45022-S6D-E01	3683
45022-S6E-E50	4109
45022-S6E-E50	4232
45022-S7A-E00	4109
45022-S7A-E00	4232
45022-S7A-E50	4109
45022-S7A-E50	4232

OE	BESER
NO	NO
45022-S7E-E50	4109
45022-S7E-E50	4232
45022-S9A-A00	3831
45022-S9A-A01	3831
45022-S9A-E00	3831
45022-S9A-E50	3831
45022-S9A-E60	3831
45022-S9V-A01	3831
45022-SA0-505	3633
45022-SA0-660	3509
45022-SA0-670	3509
45022-SA0-680	3646
45022-SA0-681	3633
45022-SA0-N50	3509
45022-SA0-N51	3509
45022-SA0-N60	3633
45022-SA0-N61	3633
45022-SA3-31126	3691
45022-SA3-670	3324
45022-SA3-G10	3691
45022-SA3-N50	3324
45022-SA6-600	3691
45022-SA6-670	3691
45022-SA6-671	3691
45022-SA6-672	3691
45022-SA6-N50	3691
45022-SAA-E51	3686
45022-SAA-G00	3686
45022-SAG-600	3691
45022-SB2-780	3582
45022-SDA-A00	3831
45022-SDC-A00	3831
45022-SDC-A10	3831
45022-SDD-A00	4109
45022-SDD-A00	4232
45022-SE0-G00	3582
45022-SE0-G10	3631
45022-SEA-E00	4159
45022-SEA-E01	4159
45022-SEA-EZ1	4159
45022-SG0-000	3631
45022-SG0-010	3631
45022-SG0-020	3631
45022-SG0-335	3631
45022-SG0-507	3631
45022-SG0-517	3631
45022-SG0-527	3631
45022-SG0-G10	3631
45022-SG0-G11	3631
45022-SG0-G12	3631
45022-SG0-G13	3631
45022-SH3-526	3752
45022-SH3-A01	3691
45022-SH3-A02	3691
45022-SH3-G10	3691
45022-SH3-G11	3691
45022-SH3-G12	3691
45022-SH3-G13	3691
45022-SH3-G14	3691
45022-SH3-G50	3501
45022-SH3-N30	3752
45022-SJF-E00	4109
45022-SJF-E00	4232
45022-SK3-E00	3683
45022-SL0-G00	3704
45022-SLR-G01	3704
45022-SLR-G02	3704
45022-SM2-000	3695
45022-SM4-A00	3696
45022-SM4-A01	3696
45022-SM5-A00	3704
45022-SMT-E00	4110
45022-SMT-E50	4110
45022-SN7-E50	3704
45022-SN7-G50	3704
45022-SR3-910	3752
45022-SR3-G00	3686
45022-SR3-G01	3686
45022-SR3-V00	3607
45022-SR3-V01	3607

OE	BESER
NO	NO
45022-SR3-V02	3607
45022-SR3-V10	3607
45022-SR3-V11	3607
45022-SR3-V12	3607
45022-SS0-G00	3704
45022-SS0-G01	3704
45022-SS0-G02	3704
45022-ST3-E00	3683
45022-ST3-E01	3683
45022-SWW-G00	4160
45022-SWW-G01	4160
45022-SWW-G02	4160
45022-T2G-A00	4312
45022-T2G-A01	4312
45022-T2M-T00	4312
45022-T3V-A00	4312
45022-T3Z-A01	4312
45022-T8M-G00	4312
45033-S10-A00	3704
460 420 00 20	3513
460 420 01 20	3611
4605A041	3892
4605A198	3975
4605A261	3955
4605A261	3955
4605A284	3975
4605A317	3955
4605A336	4106
4605A337	4106
4605A364	3955
4605A458	3693
4605A471	3892
4605A472	3891
4605A481	3891
4605A486	3955
4605A491	3955
4605A492	3685
4605A502	3893
4605A530	3955
4605A557	3955
4605A658	4059
4605A730	3685
4605B233	3975
47 78 254	3665
4728 124	4197
4728 124	4197
4762 682	4197
4773 264	4197
47746-0W050	4105
47746-0W070	4105
4778058AB	4182
4778058AB	4182
48 05 468	4330
48 05 468	4330
48 05 468	4330
48 05 468	4330
48 08 814	4330
48 08 814	4330
48 08 814	4330
481 300 50 11	3632
481 300 5011	3632
481 3A2 11 00	3976
484 130 51 00	3895
484 130 80 50	3895
484 130 80 51	3895
484 130 90 A0	3895
484 130 90 A1	3895
484 133 41 A0	4061
484 133 50 B0	4311
4882 106	4197
4882 106	4197
4882 107	4197
4882 107	4197
4897 664AA	4197
4897 665AA	4197
4897664AA	4197
49 07 739	3665
4A0 698 151	3590
4A0 698 151A	3590
4A0 698 151C	3590

OE	BESER
NO	NO
45022-SR3-V02	3607
45022-SR3-V10	3607
45022-SR3-V11	3607
45022-SR3-V12	3607
45022-SS0-G00	3704
45022-SS0-G01	3704
45022-SS0-G02	3704
45022-ST3-E00	3683
45022-ST3-E01	3683
45022-SWW-G00	4160
45022-SWW-G01	4160
45022-SWW-G02	4160
45022-T2G-A00	4312
45022-T2G-A01	4312
45022-T2M-T00	4312
45022-T3V-A00	4312
45022-T3Z-A01	4312
45022-T8M-G00	4312
45033-S10-A00	3704
460 420 00 20	3513
460 420 01 20	3611
4605A041	3892
4605A198	3975
4605A261	3955
4605A261	3955
4605A284	3975
4605A317	3955
4605A336	4106
4605A337	4106
4605A364	3955
4605A458	3693
4605A471	3892
4605A472	3891
4605A481	3891
4605A486	3955
4605A491	3955
4605A492	3685
4605A502	3893
4605A530	3955
4605A557	3955
4605A658	4059
4605A730	3685
4605B233	3975
47 78 254	3665
4728 124	4197
4728 124	4197
4762 682	4197
4773 264	4197
47746-0W050	4105
47746-0W070	4105
4778058AB	4182
4778058AB	4182
48 05 468	4330
48 05 468	4330
48 05 468	4330
48 05 468	4330
48 08 814	4330
48 08 814	4330
48 08 814	4330
481 300 50 11	3632
481 300 5011	3632
481 3A2 11 00	3976
484 130 51 00	3895
484 130 80 50	3895
484 130 80 51	3895
484 130 90 A0	3895
484 130 90 A1	3895
484 133 41 A0	4061
484 133 50 B0	4311
4882 106	4197
4882 106	4197
4882 107	4197
4882 107	4197
4897 664AA	4197
4897 665AA	4197
4897664AA	4197
49 07 739	3665
4A0 698 151	3590
4A0 698 151A	3590
4A0 698 151C	3590

OE	BESER
NO	NO
4A0 698 451	3536
4B0 698 151P	4222
4B0 698 451	3529
4B0 698 451	3529
4B0 698 451	3529
4B0 698 451	3529
4B0 698 451	3529
4B0 698 451B	3529
4B0 698 451B	3529
4B0 698 451B	3529
4B0 698 451B	3529
4B0 698 451B	3529
4B0 698 451E	3529
4B0 698 451E	3529
4B0 698 451E	3529
4B0 698 451E	3529
4B0 698 451E	3529
4D0 698 151K	4222
4D0 698 151M	4222
4D0 698 151N	4222
4D0 698 151P	4222
4D0 698 151R	4222
4D0 698 151S	4222
4D0 698 451A	3536
4D0 698 451B	3536
4D0 698 451C	3529
4D0 698 451C	3529
4D0 698 451C	3529
4D0 698 451C	3529
4D0 698 451C	3529
4D0 698 451D	3529
4D0 698 451D	3529
4D0 698 451E	3529
4D0 698 451F	3536
4D0 698 451G	3536
4D0 698 647	3529
4D0 698 647	3529
4D0 698 647	3529
4D0 698 647	3529
4D0 698 647	3529
4E0 698 151F	4096
4E0 698 151M	4096
4F0 698 151A	4096
4F0 698 151D	4096
4F0 698 151K	4096
4F0 698 451A	3905
4F0 698 451D	3905
4F0 698 451D	3905
4F0 698 451D	3905
4F0 698 451D	3905
4G43-2D007-AA	3945
4L3Z2200AB200AB	4320
4R332001AB	4332
4R3Z2001BA	4332
4R3Z2001BA	4332
4R3Z-2001-BA	4332
4S712M008AA	4058
5 018 904	3313
50 01 000 478	3526
50 01 868 606	3965
50 62 203	3665
5000 814 345	3707
5001 823 557	3707
5011 067AA	4197
5011 743AA	4197
5014 438AA	4197
5014 527AA	4197
5014 527AA	4197
5018 595AA	4197
5018 595AA	4197

OE	BESER
NO	NO
5019984AA	4012
5080556AA	4327
5080563AB	4329
5080563AC	4329
5080563AD	4329
5080868AA	4016
5093260AA	4031
5093706AA	4329
5093796AA	4327
5126300AA	3676
5139733AA	4327
5139733AB	4327
5139902AA	3676
5142558AB	4198
5142559AB	4198
5143350AB	4328
5143350AB	4328
5143350AC	4328
5143350AC	4328
5174001AC	4006
5191229AA	3955
5191231AA	3955
5191271AC	4106
5191955AA	4182
5191955AA	4182
52 32 350	3665
533 698 151A	3531
55120-78460	3509
55200-50FA0	4034
55200-50J01	4000
55200-50J02	4000
55200-56830	3883
55200-56831	3883
55200-56870	3883
55200-56B41	3883
55200-60810	3882
55200-60811	3882
55200-60821	3882
55200-60860	4034
55200-60A41	3882
55200-61832	3745
55200-61870	3882
55200-62874	4034
55200-63810	3882
55200-65D00	3883
55200-65D01	3883
55200-65D10	3884
55200-65D11	3884
55200-65D21	3883
55200-65D30	3884
55200-65D31	3884
55200-65D50	3884
55200-65J00	3929
55200-65J01	3929
55200-65J10	3929
55200-65J11	3929
55200-65J22	3929
55200-65J23	4118
55200-67D11	3929
55200-70820	3509
55200-70820	3509
55200-70820	3509
55200-70860	3509
55200-70861	3509
55200-70862	3509
55200-77E00	3884
55200-84A00	3883
55200-85Z00	3687
55210-50E20	3511
55210-50E20	3511
55210-56A50	3509
55210-60B50	3745
55210-62B50	3745
55210-70820	3509
55210-78450	3509
55210-78450	3509
55210-78450	3509
55210-78460	3509
55210-78460	3509
55210-78460	3509

OE	BESER
NO	NO
55210-82Z00	3952
55210-84500	3509
55210-84500	3509
55210-84500	3509
55210-85000	3509
55210-M84500	3509
55210-M84500	3509
55210-M84500	3509
55500-85Z00	3894
55800-57L00	4148
55800-57L50	4148
55800-57L51	4148
55800-60G60	3602
55800-60J00	4303
55800-60J10	4303
55800-61G50	3602
55800-61G60	3602
55800-61G70	3602
55800-77K00	3933
55800-80J00	4148
55800-80J01	4148
55800-80J02	4148
55800-80J03	4148
55810-54G11	3899
55810-57L00	4038
55810-57L50	4038
55810-62J00	3983
55810-62J01	3983
55810-62J20	3983
55810-68L00	4122
55810-75F00	4027
55810-75F10	4027
55810-75F12	4027
55810-75F32	4027
55810-76A01	3928
55810-76A01	3928
55810-76A01	3928
55810-76A10	3928
55810-80G01	3928
55810-80G01	3928
55810-80G01	3928
55810-80G02	3928
55810-80G02	3928
55810-80G02	3928
55810-80G10	3928
55810-80G10	3928
55810-80G10	3928
55810-80G12	3928
55810-80G12	3928
55810-80G12	3928
55810-80G13	3928
55810-80G13	3928
55810-80G13	3928
55810-84M00	3928
55810-M69P50	4122
55860-60B90	3745
58101-02A00	3778
58101-02A10	3985
58101-05A10	3778
58101-07A00	3968
58101-07A10	3968
58101-07A10	3968
58101-07A20	3968
58101-07A20	3968
58101-0WA00	3960
58101-0XA01	3968
58101-0XA10	3968
58101-0XA10	3968
58101-0ZA00	4039
58101-0ZA00	4039
58101-17A10	3961
58101-1CA00	3502
58101-1CA10	3502
58101-1DA00	4039
58101-1DE00	4039
58101-1FA00	3959
58101-1FE00	3959
58101-1GA00	3880
58101-1GA00	3880
58101-1GE00	3880

OE	BESER
NO	NO
58101-1GE00	3880
58101-1HA00	4028
58101-1HA10	4028
58101-1HA20	4028
58101-1HA20	4028
58101-1JA10	3880
58101-1KA00	4049
58101-1MA00	4028
58101-1MA00	4028
58101-1MA20	4028
58101-1MA20	4028
58101-1RA00	4136
58101-1RA01	4136
58101-1RA01	4136
58101-1RA05	4136
58101-1WA05	4136
58101-1WA35	4136
58101-20A00	3632
58101-22A00	3502
58101-22A10	3502
58101-24A00	3502
58101-24B00	3502
58101-24C00	3502
58101-25A00	3502
58101-25A10	3502
58101-25A20	3502
58101-26A00	3843
58101-26A10	3843
58101-26A20	3843
58101-26A30	3843
58101-26A30	3843
58101-26A30AT	3843
58101-26A40	3843
58101-28A00	3632
58101-28A10	3502
58101-28A20	3632
58101-29A00	3632
58101-29A10	3632
58101-29A20	3632
58101-29A40	3632
58101-29B00	3632
58101-2BA00	3960
58101-2BA10	3960
58101-2CA10	3959
58101-2CA20	3959
58101-2DA20	3632
58101-2DA30	3961
58101-2DA31	3961
58101-2DA40	3961
58101-2DA40	3961
58101-2DA40AT	3961
58101-2DA60	3961
58101-2EA10	3959
58101-2EA11	3959
58101-2EA20	3959
58101-2EA21	3959
58101-2FA10	4001
58101-2FA20	4001
58101-2FA21	4001
58101-2HA10	3959
58101-2KA10	3959
58101-2PA70	3960
58101-2SA00	4049
58101-2SA30	4049
58101-2SA50	4039
58101-2SA70	4039
581012TA00	4041
58101-2TA00	4233
58101-2TA50	4233
58101-2VA00	4166
58101-2VA00	4342
58101-2VA50	4166
58101-2VA50	4342
58101-2VA60	4342
58101-2WA70	3960
58101-2WA90	3960
58101-2YA50	4039
58101-32300	3504
58101-32B00	3504
58101-33A00	3632

OE	BESER
NO	NO
58101-33C00	3632
58101-34A21	3632
58101-38A40	3632
58101-38A60	3632
58101-38A81	3959
58101-38A90	3959
58101-39A20	3843
58101-39A30	3843
58101-39A40	3843
58101-39A40	3843
58101-39A60	3976
58101-3AA10	3843
58101-3AA20	3843
58101-3AA20	3843
58101-3AA20AT	3843
58101-3BA02	3976
58101-3CA20	3632
58101-3CA70	3959
58101-3CA80	3959
58101-3ED00	3978
58101-3EE00	3978
58101-3EU00	3978
58101-3FA00	3976
58101-3FA10	3976
58101-3KA01	3959
58101-3KA40	3959
58101-3KA61	3959
58101-3MA00	3960
58101-3MA01	3960
58101-3NA50	4342
58101-3QA10	4233
58101-3QA50	4233
58101-3SA20	4049
58101-3SA21	4049
58101-3SA25	4049
58101-3SA26	4049
58101-3VA50	4233
58101-3XA00	4166
58101-3XA00	4342
58101-3XA10	4342
58101-3XA20	4166
58101-3XA20	4342
58101-3ZA10	4039
58101-3ZA70	4039
58101-3ZA70	4039
58101-43A00	3507
58101-44A00	3507
58101-44A10	3507
58101-4AA00	3648
58101-4AA00	3648
58101-4AA10	3648
58101-4AA10	3648
58101-4AA26	3843
58101-4AA26	3843
58101-4AA30	3648
58101-4AA30	3648
58101-4AA60	3648
58101-4AA60	3648
58101-4AA61	3648
58101-4AA61	3648
58101-4AA80	3648
58101-4AA80	3648
58101-4BA00	3507
58101-4BA10	3507
58101-4DE00	4035
58101-4DE00	4035
58101-4DU00	3960
58101-4HA00	4035
58101-4HA50	4035
58101-4HA50	4035
58101-4LA00	4136
5810159A00	4251
58101-A5A00	4342
58101-A6A00	4166
58101-A6A00	4166
58101-A6A00	4342
58101-A6A01	4166
58101-A6A01	4166
58101-A6A01	4342
58101-A6A02	4342

OE	BESER
NO	NO
58101-A6A03	4342
58101-A6A73	4342
58101-A7A00	4166
58101-A7A00	4342
58101-A7A01	4342
58101-B2A60	4039
58101-C8A50	4136
58101-D7A00	4039
58101-D7A50	4039
58101-E4A10	4039
58101-H1A80	3976
58101-M2A01	3622
58103-31000	3312
58103-31010	3312
58115-11100	3709
58115-F0A00	3957
58115-FDA00	4269
58115-FDC00	4269
58302-07A00	3969
58302-07A00	3969
58302-07A10	3969
58302-07A10	3969
58302-0XA00	3969
58302-0XA00	3969
58302-0ZA00	3980
58302-0ZA00	3980
58302-17A00	3993
58302-1CA00	3993
58302-1CA10	3993
58302-1DA00	4165
58302-1DE00	4165
58302-1FE00	3993
58302-1GA00	3980
58302-1GA00	3980
58302-1HA00	3980
58302-1HA00	3980
58302-1HA10	3980
58302-1HA10	3980
58302-1JA30	3980
58302-1KA30	3980
58302-1MA00	3980
58302-1MA00	3980
58302-1MA40	3980
58302-1MA40	3980
58302-1RA30	4311
58302-1RA30	4311
58302-1WA35	4311
58302-25830	3993
58302-26A00	3993
58302-26A10	3993
58302-26A20	3993
58302-26A30	3993
58302-28A00	4087
58302-29A00	4087
58302-29A10	4087
58302-2BA00	3989
58302-2BA20	3989
58302-2DA00	4087
58302-2DA10	4087
58302-2EA00	3993
58302-2EA30	3993
58302-2EA31	4061
58302-2FA10	4087
58302-2GA00	3993
58302-2GA00	3993
58302-2HA00	3993
58302-2JA00	4060
58302-2KA00	4061
58302-2KA10	4061
58302-2LA00	3980
58302-2MA00	4060
58302-2MA90	4060
58302-2PA70	4060
58302-2PA70	4060
58302-2SA10	3980
58302-2SA10	3980
58302-2SA30	3980
58302-2SA35	3980
58302-2SA70	3980
58302-2TA60	4061

OE	BESER
NO	NO
58302-2VA30	4311
58302-2VA30	4311
58302-2VA50	4311
58302-2WA70	4060
58302-2WA90	4060
58302-2YA31	3980
58302-38A10	3993
58302-38A20	3993
58302-38A30	3993
58302-38A40	3993
58302-39A40	3993
58302-3AA20	3993
58302-3CA10	3993
58302-3ED00	3979
58302-3EE00	3979
58302-3EU00	3979
58302-3FA00	3993
58302-3FA00	3993
58302-3FA01	4061
58302-3FA11	4061
58302-3KA30	3993
58302-3KA31	4061
58302-3KA51	3993
58302-3KA52	4061
58302-3KA62	4061
58302-3KA63	4061
58302-3LA10	4311
58302-3LA20	4311
58302-3MA00	4060
58302-3MA01	4060
58302-3QA10	4311
58302-3XA30	4061
58302-3ZA10	4311
58302-3ZA70	4311
58302-4BA10	4311
58302-4BA60	4311
58302-4DU02	4060
58302-A4B10	4311
58302-A4B60	4311
58302-A6A20	4311
58302-A6A20	4311
58302-A6A30	4311
58302-A6A30	4311
58302-A6A31	4311
58302-A6A31	4311
58302-B2A20	4343
58302-B4A30	4311
58302-C8A30	4311
58302-D3A00	4061
58302-D3A70	4311
58302-D7A00	3980
58302-D7A70	4311
58302-E4A10	4311
58302-G2A40	4311
58302-M2A00	4108
5C0 698 151	3904
5C0 698 151	3904
5C0 698 151	3904
5C0 698 151A	3904
5C0 698 151A	3904
5C0 698 151A	3904
5H103-31000	3484
5K0 698 151	3904
5K0 698 151	3904
5K0 698 151	3904
5K0 698 151A	3904
5K0 698 451	4135
5K0 698 451	4135
5K0 698 451	4135
5K0 698 451	4135
5K0 698 451	4135
5K0 698 451A	4135
5K0 698 451A	4135
5Q0 698 151C	4295
5Q0 698 151C	4295
5Q0 698 151C	4295
5Q0 698 151D	4228
5Q0 698 151D	4228
5Q0 698 151D	4228

OE	BESER
NO	NO
5Q0 698 151D	4228
5Q0 698 151E	4295
5Q0 698 151E	4295
5Q0 698 151E	4295
5Q0 698 151E	4295
5Q0 698 151F	4241
5Q0 698 151F	4241
5Q0 698 451 B	4336
5Q0 698 451 F	4336
5Q0 698 451 L	4336
5Q0 698 451A	3529
5Q0 698 451A	3529
5Q0 698 451C	4241
5Q0 698 451C	4241
5Q0 698 451N	4241
5R3Z2001AA	4333
5R3Z2200AA	4333
5R3Z2200B	4333
5U2Z2V200G	4215
60 00 008 126	3503
60 00 008 126	3503
60 00 008 895	3539
60 00 061 026	3442
60 01 547 619	3503
60 01 547 619	3503
60 01 547 619	3503
60 01 547 911	3503
60 01 547 911	3503
60 01 547 911	3503
60 01 549 803	4141
60 01 551 623	3333
60 1586 00 42	3513
60 25 070 807	3503
60 25 071 042	3503
60 25 308 186	3596
60 25 371 279	3848
60 25 371 279	3848
60 25 371 650	3529
601 420 87 20	3513
601 420 87 20	3513
601 421 02 08	3513
601 421 04 08	3513
601 421 06 08	3513
638 421 00 10	3681
638 423 01 10	3680
638 423 01 10	3680
669 420 00 20	3679
669 420 00 20	3679
669 420 01 20	3679
669 420 01 20	3679
669 420 15 20	3679
669 420 15 20	3679
669 421 00 08	3513
670 420 28 20	3679
670 420 28 20	3679
68003701AA	4005
68003701AA	4005
68003701AB	4005
68003776AA	4004
68003776AA	4004
68028671AA	3893
68028671AA	3893
68028671AA	3893
68028671AA	3893
68033078AA	3893
68033078AA	3893
68033078AA	3893
68052386AA	4339
68052387AA	4339
68071076AA	4329
68071076AB	4329
68093323AB	4005
68211493AA	4286
68230095AA	4224
6C0 698 151	4200
6C0 698 151	4200
6C112K021AB	3906
6C112K021AB	3906
6C112K021AC	3906
6C112K021AC	3906

OE	BESER
NO	NO
6C112K021AD	3906
6C112K021AD	3906
6C112K021AE	3906
6C112K021AE	3906
6C112K021BB	3920
6C112K021BB	3920
6C112K021BC	3920
6C112K021BC	3920
6C112K021BD	3920
6C112K021BD	3920
6C112M008AB	3907
6C112M008AB	3907
6C112M008AC	3907
6C112M008AC	3907
6C112M008AD	3907
6C112M008AD	3907
6G065	3748
6G912M008GB	4157
6G912M008GC	4157
6L065	3748
6L2Z2200A	4186
6L2Z2200B	4186
6L3Z2200CD	4320
6L8Z2001A	4220
6L8Z2200B	4215
6N0 698 151	3566
6N0 698 151	3566
6N0 698 151	3566
6N0 698 151	3566
6N0 698 151A	3896
6N0 698 151A	3896
6N0 698 151A	3896
6N0 698 151A	3896
6N0 698 151B	3896
6N0 698 151B	3896
6N0 698 151B	3896
6N0 698 151B	3896
6N0 698 151C	3566
6N0 698 151C	3566
6N0 698 151C	3566
6N0 698 151C	3566
6Q0 698 151	3782
6Q0 698 151	3782
6Q0 698 151	3782
6Q0 698 151	3782
6Q0 698 151	3782
6Q0 698 151	3782
6Q0 698 151A	4138
6Q0 698 151A	4138
6Q0 698 151A	4138
6Q0 698 151C	4138
6Q0 698 151C	4138
6Q0 698 151C	4138
6Q0 698 451	4152
6Q0 698 451	4152
6Q0 698 451	4152
6Q0 698 451B	4152
6Q0 698 451B	4152
6Q0 698 451B	4152
6R0 698 151A	3782
6R0 698 151A	3782
6R0 698 151A	3782
6R0 698 151A	3782
6R332001AA	4332
6R3Z2001A	4332
6R3Z2001A	4332
6R3Z2001A	4332
6R3Z-2001-A	4332
6RU 698 151	4200
6RU 698 151	4200
6RU 698 151A	4200
6RU 698 151A	4200
6U0 698 151	3419
6U0 698 151	3419
6U0 698 151	3419
6U0 698 151	3731
6U0 698 151 A	3731
6U0 698 151 B	3731
6U0 698 151 C	3731
6U0 698 151 D	3731

OE	BESER
NO	NO
6U0 698 151 E	3731
6U0 698 151 E	3731
6U0 698 151 F	3731
6U0 698 151 F	3731
6U0 698 151A	3419
6U0 698 151B	3419
6U0 698 151B	3419
6U0 698 151C	3419
6U0 698 151C	3419
6U0 698 151C	3419
6U0 698 151D	3419
6U0 698 151D	3419
6U0 698 151D	3419
6U0 698 151E	3419
6U0 698 151E	3419
6U0 698 151F	3419
6U0 698 151G	3419
6U7 615 105	3419
6X0 698 451	3529
6X0 698 451	3529
6X0 698 451	3529
6X0 698 451	3529
6X0 698 451A	3529
6X0 698 451A	3529
6X0 698 451A	3529
6X0 698 451A	3529
6X0 698 451A	3529
701 698 151D	3553
701 698 151E	3553
701 698 151F	4020
701 698 151G	4020
701 698 151H	4020
701 698 151J	3553
701 698 451	3671
7251-91083	3579
7251-91990	3394
74 10 604 386	4056
74 85 116 333	3965
74 85 121 748	4056
74 85 133 241	4057
74 85 185 244	4132
74 85 185 244	4172
77 01 035 895	3539
77 01 050 914	3848
77 01 050 914	3848
77 01 050 918	3795
77 01 054 771	3848
77 01 054 771	3848
77 01 054 772	3795
77 01 130 036	3503
77 01 130 036	3503
77 01 200 320	3333
77 01 200 734	3374
77 01 200 884	3482
77 01 201 044	3482
77 01 201 059	3374
77 01 201 159	3374
77 01 201 159	3374
77 01 201 183	3374
77 01 201 542	3380
77 01 201 669	3503
77 01 201 773	3503
77 01 201 774	3503
77 01 201 775	3503
77 01 202 050	3539
77 01 202 210	3496
77 01 202 213	3495
77 01 202 213	3495
77 01 202 227	3495
77 01 202 227	3495
77 01 202 285	3503
77 01 202 285	3503
77 01 202 289	3503
77 01 202 302	3380
77 01 202 516	3503
77 01 202 539	3503
77 01 202 540	3503
77 01 202 709	3527
77 01 202 709	3527

OE	BESER
NO	NO
77 01 202 710	3495
77 01 202 710	3495
77 01 202 711	3380
77 01 202 711	3380
77 01 202 712	3503
77 01 202 713	3482
77 01 202 815	3428
77 01 202 848	3503
77 01 202 890	3329
77 01 202 891	3495
77 01 202 891	3495
77 01 202 892	3380
77 01 202 892	3380
77 01 202 893	3374
77 01 202 893	3374
77 01 202 894	3503
77 01 202 895	3503
77 01 202 896	3539
77 01 202 954	3333
77 01 202 956	3482
77 01 202 973	3539
77 01 203 069	3428
77 01 203 070	3546
77 01 203 071	3526
77 01 203 124	3596
77 01 203 129	3503
77 01 203 282	3503
77 01 203 633	3596
77 01 203 726	3596
77 01 203 730	3539
77 01 203 775	3503
77 01 203 795	3503
77 01 203 796	3503
77 01 203 797	3503
77 01 203 913	3482
77 01 203 917	3482
77 01 203 918	3482
77 01 203 968	3539
77 01 203 969	3496
77 01 204 066	3503
77 01 204 066	3503
77 01 204 087	3428
77 01 204 220	3539
77 01 204 357	3503
77 01 204 530	3380
77 01 204 530	3380
77 01 204 626	3496
77 01 204 777	3380
77 01 204 833	3503
77 01 205 014	3527
77 01 205 015	3596
77 01 205 355	3503
77 01 205 513	3659
77 01 205 513	3659
77 01 206 044	3849
77 01 206 044	3849
77 01 206 085	3503
77 01 206 288	3539
77 01 206 343	3529
77 01 206 343	3529
77 01 206 379	3539
77 01 206 598	3950
77 01 206 599	3852
77 01 206 609	3853
77 01 206 727	3856
77 01 206 763	3855
77 01 206 784	3529
77 01 206 784	3529
77 01 206 811	3659
77 01 207 034	3496
77 01 207 066	3503
77 01 207 066	3503
77 01 207 066	3503
77 01 207 066	3503
77 01 207 184	3849
77 01 207 184	3849
77 01 207 187	4093
77 01 207 187	4093
77 01 207 339	3856
77 01 207 484	3529

OE	BESER
NO	NO
77 01 207 484	3529
77 01 207 672	3849
77 01 207 672	3849
77 01 207 673	3850
77 01 207 695	3529
77 01 207 695	3529
77 01 207 968	3853
77 01 207 996	3853
77 01 208 122	3849
77 01 208 122	3849
77 01 208 142	3659
77 01 208 142	3659
77 01 208 182	3852
77 01 208 213	3529
77 01 208 213	3529
77 01 208 218	4137
77 01 208 265	3503
77 01 208 416	3529
77 01 208 416	3529
77 01 208 421	3529
77 01 208 421	3529
77 01 208 422	3983
77 01 208 422	3983
77 01 209 077	3539
77 01 209 164	3983
77 01 209 380	3539
77 01 209 444	3849
77 01 209 639	3503
77 01 209 735	3529
77 01 209 735	3529
77 01 209 808	3950
77 01 209 809	3852
77 01 209 841	3529
77 01 209 864	3966
77 01 209 864	3966
77 01 209 869	3967
77 01 209 869	3967
77 01 210 110	3966
77 01 210 130	3503
77 01 210 142	3503
77 01 210 142	3503
77 01 210 142	3503
77 01 210 174	3966
77 01 348 478	3527
77 01 348 478	3527
77 01 348 681	3806
77 01 348 682	3527
77 01 348 682	3527
77 01 348 684	3333
77 01 348 863	3333
77 01 349 255	3526
77 01 349 973	3503
77 01 349 973	3503
77 01 484 478	3966
77 01 484 478	3966
77 01 486 681	3967
77 01 486 681	3967
77 11 130 034	3380
77 11 130 034	3380
77 11 130 036	3503
77 11 130 036	3503
77 11 130 071	3503
77 11 130 071	3503
77 11 130 071A	3503
77 11 130 078	3503
77 11 130 078	3503
77010-50914	3848
77010-50914	3848
77010-54771	3848
77010-54771	3848
7D0 698 151	3606
7D0 698 151B	3553
7D0 698 151D	3794
7D0 698 151E	3606
7D0 698 151F	3794
7D0 698 151G	3553
7D0 698 451	3671
7D0 698 451 D	3671
7D0 698 451A	3671
7D0 698 451E	3671

OE	BESER
NO	NO
7D0 698 451J	4345
7E0 698 151	4162
7E0 698 151B	4162
7H0 698 151	3841
7H0 698 151A	3841
7H0 698 451	3842
7H0 698 451B	3842
7L0 698 151 D	4075
7L0 698 151 F	4075
7L0 698 151 H	4075
7L0 698 151 Q	4075
7L0 698 151M	4309
7L0 698 151N	4309
7L0 698 451	4076
7L0 698 451A	4076
7L0 698 451B	4076
7L0 698 451G	4076
7L0 698 451H	4076
7L6 698 151	4075
7L6 698 151 C	4075
7L6 698 151E	3945
7L6 698 151G	3945
7L6 698 451A	4076
7L6 698 451D	4076
7M0 698 151	3506
7M0 698 151	3506
7M0 698 151A	3506
7M0 698 151A	3506
7M0 698 151B	3506
7M0 698 151B	3506
7M0 698 451	3529
7M0 698 451	3529
7M0 698 451	3529
7M3 698 151	3590
7M3 698 151	3590
7M3 698 151A	4095
7M3 698 151A	4095
7M3 698 151A	4095
7N0 698 451 A	4336
7P0 698 451	4310
7P6 698 151	4309
7P6 698 151C	3945
7R332001AA	4332
7R3Z2001B	4332
7R3Z2200A	4333
803 698 151 E	3313
803 698 151C	3318
810 698 151B	3318
811 698 151A	3378
811 698 151B	3378
815 698 151 B	3313
823 698 151	3327
823 698 151	3327
823 698 151	3327
839 698 151	3343
839 698 151	3343
839 698 151	3483
839 698 151	3483
853 698 151A	3649
855 698 151	3490
855 698 151B	3490
857 698 451	3536
8-58612907-2	4002
86 71 016 178	3950
86 71 016 582	3529
86 71 016 635	3852
861 698 151	3327
861 698 151	3327
861 698 151	3327
861 698 151A	3327
861 698 151A	3327
861 698 151A	3327
867 615 109A	3585
867 615 109A	3585
867 615 109A	3585
867 698 151	3585
867 698 151	3585
867 698 151	3585
88 935 752	4219
88 983 915	4219

OE	BESER
NO	NO
891 698 151	3327
891 698 151	3327
891 698 151	3327
8-97047526-0	3674
8-97047526-0	3674
8-97049429	3757
8-97049429	3857
8-97078457-0	3462
8-97318669-0	3886
8-97329333-0	3886
8-97368252-0	3886
8-97947571-0	4124
8-98079104-0	4124
89VX2K021BA	3423
89VX2K021BA	3423
8A0 698 151	3619
8A0 698 151A	3650
8A0 698 151B	3619
8A0 698 151C	3650
8A0 698 151L	3650
8D0 698 151	3650
8D0 698 151 E	3650
8D0 698 151L	3650
8E0 615 115B	3896
8E0 698 151	3896
8E0 698 151	3896
8E0 698 151	3896
8E0 698 151A	3896
8E0 698 151A	3896
8E0 698 151A	3896
8E0 698 151B	3896
8E0 698 151B	3896
8E0 698 151B	3896
8E0 698 151C	4096
8E0 698 151G	4096
8E0 698 151L	4096
8E0 698 151L	4096
8E0 698 151M	3896
8E0 698 151M	3896
8E0 698 151M	3896
8E0 698 151N	3896
8E0 698 451	3529
8E0 698 451	3529
8E0 698 451A	3529
8E0 698 451A	3529
8E0 698 451A	3529
8E0 698 451A	3529
8E0 698 451B	3529
8E0 698 451B	3529
8E0 698 451B	3529
8E0 698 451B	3529
8E0 698 451D	3529
8E0 698 451D	3529
8E0 698 451D	3529
8E0 698 451D	3529
8E0 698 451D	3529
8E0 698 451E	3529
8E0 698 451E	3529
8E0 698 451F	3905
8E0 698 451J	3905
8E0 698 451J	3905
8E0 698 451J	3905
8E0 698 451J	3905
8E0 698 451K	3529
8E0 698 451K	3529
8E0 698 451K	3529
8E0 698 451K	3529
8E0 698 451K	3529
8E0 698 451K	3529
8E0 698 451L	3529
8E0 698 451L	3529
8J0 698 151	3904
8J0 698 151C	3904
8J0 698 151D	3945
8J0 698 151E	3945
8J0 698 151G	3945
8J0 698 151H	3945

OE	BESER
NO	NO
8J0 698 151K	3945
8K0 698 151E	4259
8K0 698 451	4260
8K0 698 451A	4260
8K0 698 451B	4260
8K0 698 451C	4260
8K0 698 451D	4260
8K0 698 451E	4260
8L2Z2200A	4186
8L2Z2200AB	4186
8L3Z2200A	4320
8N0 698 151A	3590
8N0 698 151A	3590
8N0 698 151A	3590
8N0 698 151A	3590
8R332001CA	4332
8R3Z2001A	4332
8R3Z2200A	4333
8U0 698 151 F	3731
8U0 698 151 F	3731
8U0 698 451 F	4336
8V0 698 451	4241
8V0 698 451	4241
8V0 698 451B	4241
8V0 698 451F	4241
8V512K021AA	4122
8V512K021AA	4122
8V512K021AB	4122
8V512K021AB	4122
8X0 698 151	3904
8X0 698 151	3904
8X0 698 151	3904
90 512 037	3665
90 544 439	3665
902 423 05 10	3670
902 423 05 10	3670
905 420 00 20	3679
906 421 04 00	3925
91 951 46	3665
91 986 88	3665
91AB2K021BB	3464
91AB2K021JA	3464
91AB2M008BC	3545
91AB2M008BD	3545
9215 5977	4189
92VB2K021BC	3445
93 191 802	3665
93BB2K021EB	3558
95 658 557	3555
955 351 939 00	4075
955 351 939 01	4075
955 351 939 02	4075
955 351 939 03	4075
955 351 939 04	4075
955 351 939 05	4075
96101972S	3510
9668 2858	4337
97BG2K021BA	3558
97BG2K021BB	3558
97FB2K021BA	3570
97FB2K021BA	3594
98AB2M008BA	3755
98AX2K021AF	3887
9C112K021BA	3920
9H0M013	4107
9H0M015	3955
9R331001AA	4332
9R3Z-2001-A	4332
9R3Z-2001-B	4332
A 003 420 65 20	4097
A 003 420 99 20	4097
A000 420 59 20	3339
A000 420 59 20	3339
A000 420 59 20	3514
A000 420 59 20	3514
A000 420 60 20	3339
A000 420 60 20	3514
A000 420 63 20	3515
A000 420 63 20	3515
A000 420 64 20	3515

OE	BESER
NO	NO
A000 420 64 20	3515
A000 420 65 20	3515
A000 420 65 20	3515
A000 420 68 20	3515
A000 420 68 20	3515
A000 420 78 20	3339
A000 420 78 20	3514
A000 420 82 00	4349
A000 420 94 20	3339
A000 420 94 20	3514
A000 420 95 20	3339
A000 420 95 20	3514
A000 420 97 20	3804
A000 420 97 20	3804
A000 421 42 10	3861
A000 421 61 10	3923
A000 421 61 10	3923
A000 586 55 42	3339
A000 586 55 42	3514
A000 586 75 42	3515
A000 586 75 42	3515
A0004206920	3455
A0004206920	3471
A0004210008	3455
A0004210008	3471
A0005860442	3455
A0005860442	3471
A0005861042	3455
A0005861042	3471
A0005862042	3455
A0005862042	3471
A0005862742	3455
A0005864042	3455
A0005864042	3471
A0005864342	3455
A0005864342	3471
A0005864542	3455
A0005864542	3471
A001 420 05 20	3339
A001 420 05 20	3514
A001 420 09 20	3515
A001 420 75 20	3339
A001 420 75 20	3514
A001 420 78 20	3515
A001 420 78 20	3515
A001 420 92 20	3515
A001 420 92 20	3515
A001 420 99 20	3339
A001 420 99 20	3339
A001 420 99 20	3514
A001 420 99 20	3514
A001 421 09 10	3923
A001 421 09 10	3923
A001 586 18 42	3515
A001 586 32 42	3515
A001 586 33 42	3515
A001 586 36 42	3515
A001 586 63 42	3515
A001 586 63 42	3515
A0014208220	3455
A0014208220	3471
A002 420 43 20	3339
A002 420 43 20	3339
A002 420 43 20	3514
A002 420 43 20	3514
A002 420 45 20	3863
A002 420 50 20	3863
A002 420 52 20	3821
A002 420 75 20	3339
A002 420 75 20	3514
A002 586 45 42	3339
A002 586 45 42	3339
A002 586 45 42	3514
A002 586 45 42	3514

OE	BESER
NO	NO
A002 586 46 42	3339
A002 586 46 42	3339
A002 586 46 42	3514
A002 586 46 42	3514
A0024200420	3627
A0024201220	3627
A0024202620	3627
A003 420 02 20	3861
A003 420 02 20	3861
A003 420 05 20	4102
A003 420 06 20	4101
A003 420 06 20	4209
A003 420 08 20	4102
A003 420 18 20	4102
A003 420 19 20	4101
A003 420 19 20	4209
A003 420 24 20	3804
A003 420 24 20	3804
A003 420 25 20	3836
A003 420 26 20	3836
A003 420 28 20	3821
A003 420 29 20	3863
A003 420 42 20	4102
A003 420 45 20	3836
A003 420 52 20	3821
A003 420 59 20	3836
A003 420 60 20	3836
A003 420 74 20	3515
A003 420 74 20	3515
A003 420 78 20	3923
A003 420 78 20	3923
A003 420 79 10	3923
A003 420 79 10	3923
A003 420 87 20	3804
A003 420 87 20	3804
A003 420 95 20	3836
A004 420 03 20	3863
A004 420 04 20	4102
A004 420 05 20	4102
A004 420 08 20	4102
A004 420 25 20	3804
A004 420 40 20	4210
A004 420 62 20	4240
A004 420 67 20	3925
A004 420 68 20	3962
A004 420 69 20	3926
A004 420 80 20	4240
A004 420 81 20	3963
A004 420 81 20	3963
A004 420 82 20	3962
A004 420 82 20	3962
A004 420 83 20	3925
A004 420 94 20	4101
A004 420 94 20	4209
A005 420 07 20	4247
A005 420 08 20	4248
A005 420 09 20	4248
A005 420 10 20	4249
A005 420 12 20	4248
A005 420 13 20	4249
A005 420 15 20	4248
A005 420 16 20	4249
A005 420 19 20	3821
A005 420 21 20	3925
A005 420 43 20	4247
A005 420 52 20	3925
A005 420 53 20	3962
A005 420 70 20	3925
A005 420 74 20	3963
A005 420 78 20	4240
A005 420 81 20	4247
A006 420 13 20	4247

OE	BESER
NO	NO
A006 420 22 20	3963
A006 420 28 20	4249
A006 420 43 20	3923
A006 420 45 20	3963
A006 420 61 20	4247
A006 420 61 20S1	4247
A006 420 62 20	3836
A006 420 71 20	4248
A007 420 56 20	4248
A007 420 58 20	4249
A007 420 75 20	4249
A008 420 13 20	4349
A008 420 14 20	4349
A113501080	3551
A163 420 00 20	4126
A163 420 03 20	4126
A163 420 04 20	4069
A163 420 06 20	4102
A163 420 07 20	4103
A163 420 09 20	4103
A163 420 10 20	4102
A163 420 10 20 41	4102
A163 420 11 20	4103
A164 420 08 20	4210
A164 420 18 20	4210
A168 420 00 20	4125
A168 420 01 20	4125
A168 420 07 20	4125
A168 420 08 20	4125
A168 420 11 20	4125
A168 420 12 20	4125
A168 420 13 20	4125
A168 420 14 20	4125
A168 420 15 20	4125
A415 421 03 10	3966
A415 421 03 10	3966
A415 421 04 10	3967
A415 421 04 10	3967
A415 421 06 10	3966
A415 421 06 10	3966
A906 421 04 00	3925
AV612M008AA	3853
AY040-NS058	4143
AY040-NS079	4143
AY040-NS091	4143
AY040-NS098	4143
AY040-NS100	3797
AY040-NS105	4002
AY040-NS108	3797
AY040-NS110	4015
AY040-NS122	4143
AY040-NS130	3952
AY040-NS934	4143
AY112K021BA	4204
AY112K021BA	4204
AY112K021BB	4204
AY112K021BB	4204
AY112K021BC	4204
AY112K021BC	4204
AY112K021BD	4204
AY112K021BD	4204
AY112K021CA	4204
AY112K021CA	4204
B2YD-33-23Z	3780
B2YD-33-28Z	3780
B3YH-33-23Z	3885
B45533292	3522
B4Y0-26-48ZA	4318
B4Y0-33-28ZA	4317
B4Y0-33-28ZB	4317
B4Y6-33-23	3522
B4Y6-33-23Z	3522
B4Y6-33-23ZA	3522
B5Y6-33-23Z	3640
B5Y6-33-28Z	3522
B5Y8-33-23Z	3522
B5Y8-33-23ZA	3522
B5Y8-33-28Z	3522
B5Y8-33-28ZA	3723
B6Y8-26-43Z	3875

OE	BESER
NO	NO
BBU8177	3433
BBU8178	3433
BCYC-33-23Z	3640
BCYW-33-23Z	3640
BCYW-33-23ZC	3640
BG34-49-280	3449
BG34-49-280A	3449
BG35-49-280	3449
BHY1-33-28ZA	4317
BHY3-33-29Z	4317
BJYD-33-23Z	3780
BJYD-33-28Z	3780
BJYM-33-23Z	3780
BJYM-33-28Z	3780
BL5-33-328Z	3449
BL53-33-28Z	3449
BL5-33-328Z9A	3449
BL53-33-28Z9A	3449
BPYK-26-48Z	3853
BPYK-26-48ZA	3853
BPYK-26-48ZA9C	3853
BPYK-26-48ZB	3853
BPYK-33-23Z	3885
BPYK-33-23ZA	3885
BPYK-33-23ZA9C	3885
BRY4-33-23Z	3640
BRY5-33-23Z	3640
BRY6-33-23Z	3640
BV612K021AC	4226
BV612K021AC	4226
C0001431V002000000	4281
C0001431V003000000	4281
C2C27271	3853
C2D23143	3853
C2P17595	3853
C2S17129	4100
C2S17362	4093
C2S20893	4093
C2S33408	4093
C2S38068	4058
C2S48022	4100
C2S48024	4058
C2S52079	4100
C2S52080	4093
C2S52081	4058
C2Y3-26-48ZA	3853
C2Y3-33-23ZA	3885
C39136	3455
C39136	3471
C8G8834	3319
C8G8834	3319
CS25820893	4093
CV6Z2001A	3885
CV6Z2200A	3853
CW650649	3955
CW650653	3955
D1060-11P86	3758
D1060-11P86	3758
D1060-11P87	3758
D1060-11P87	3758
D1060-11P92	3397
D1060-11P92	3397
D1060-11P93	3397
D1060-11P93	3397
D1060-1BN0A	4143
D1060-1HA0A	3983
D1060-1HA0B	3983
D1060-1LB0A	4324
D1060-1LB2A	4324
D1060-1LB2B	4324
D1060-1MF0A	4143
D1060-1N090	3577
D1060-2S790	3760
D1060-2S790	3760
D1060-2X80A	3888
D1060-32E25	3758
D1060-38U90	3697
D10603TA0A	4319
D10603TS0A	4319
D1060-3WU0A	4308

OE NO	BESER NO
D1060-4BA0A	4282
D1060-4CA0A	4282
D1060-4CC0A	4308
D1060-4EA0A	4282
D1060-4GA0A	4308
D1060-4GA0J	4308
D1060-4GA5A	4308
D1060-4GA5A	4308
D10604JA0A	4307
D1060-4JA0A	4307
D10604KH0C	4307
D1060-4KH0C	4307
D10604KJ1A	4307
D1060-4KJ1A	4307
D1060-5X00A	4143
D1060-88E87	3779
D1060-88E89	3779
D1060-88E90	3779
D1060-88E91	3779
D1060-9N00A	4038
D1060-AX60A	3983
D1060-AX61A	3983
D1060-AX61F	3983
D1060-C7192	3415
D1060-D4690	3397
D1060-D4690	3397
D1060-JD00A	4038
D1060-JD00J	4038
D1060-JE00A	4038
D1060-MB200	3965
D1060-MB600	3965
D1060-MB60A	3965
D1060-V6794	3397
D1060-V6794	3397
D1060-V7090	3692
D1060-V7090	3692
D1060-V7092	3760
D1060-VB2X0	3859
D1060-VC091	3859
D1060-VK190	4017
D1060-ZP00C	3952
D1080-JE00A	4038
D1M604JA0A	4307
D1M60-4JA0A	4307
D1M60-CY70B	3952
D1MFM4KJ1J	4307
D4060-1GZ0C	3933
D4060-1MB0A	3933
D4060-4CA0A	4283
D4060-4CA0A	4283
D4060-4EA0A	4283
D4060-8H385	3933
D4060-9FE0A	4030
D4060-9N00A	3933
D4060-CB10J	3933
D4060-CY025	3933
D4060-EM11A	3933
D4060-J400A	3933
D4060-JA00A	3933
D4060-JA00J	3933
D4M60-1BN0A	3933
D4M60-9N00A	3933
D4M60-9N00B	3933
DA060 B9525	3375
DA060-31E86	3397
DA060-31E86	3397
DA060-EB326	3952
DA060-T7890	3415
DA060-W2290	3370
DA19-33-28	3723
DA19-33-28Z	3723
DA19-33-28ZA	3723
DA19-33-28ZA9A	3723
DCY0-33-23ZB	3522
DCY0-33-28ZB	3522
DCY1-33-23	3522
DCY1-33-23Z	3522
DCY5-33-23Z	3522
DCY9-33-23Z	3522
DDY2-33-28Z	3877

OE NO	BESER NO
DFY1-33-28ZA	4122
DFY1-33-29ZA	4122
DG9C2M007BB	4270
DG9C2M007DB	4270
DG9C2M007HA	4270
DG9Z2200B	4270
DG9Z2200C	4270
DG9Z2200H	4270
DG9Z2200K	4270
E0TZ-2001-B	3544
E172240	3946
E172240	3946
E8TA-2018-BA	3544
E8TA-2019-BA	3544
E8TA-2B11-4BA	3544
E8TA-2B30-0VA	3544
E8TZ-2001-C	3544
EC25-33-23ZA	4119
EC25-33-23ZB	4119
EC25-33-23ZD	4119
EFY1-33-23Z	4119
EFY5-26-23Z	4215
EFY5-26-23ZA	4215
EFY5-33-23Z	4220
EFY5-33-23ZA	4220
EFY5-33-23ZB	4220
EJP1437	4212
F0T-2001-A	3544
F0TZ-2001-A	3544
F1Y1-26-43Z	4303
F1YA-23-43Z	4303
F1YA-23-48Z	4303
F1YA-26-43Z	4303
F1YA-26-48Z	4303
F32Z2001C	3832
F57Z2001A	3781
F57Z2001AA	3781
FA67-49-280	3875
FB71-26-28Z	3875
FDB163	3332
FDY1-26-43Z	3875
FDY1-26-43ZA	3875
G2YD-33-23Z	4118
G2YD-33-28Z	4118
G2YS-33-23Z	3889
G4YA-33-28Z	4315
G4YA-33-28ZB	4315
G4YA-33-28ZC	4315
G5Y5-26-43Z	3833
G5Y6-26-43ZA	3833
G5Y6-26-43ZC	3833
G5Y6-33-23ZA	3832
GAYE-26-43ZB	3833
GAYR-33-23Z	3832
GAYR-33-23ZA	3832
GBP 106	3481
GBP184	3455
GBP184	3471
GBP202	3319
GBP202	3319
GBP202	3319
GBP208	3455
GBP208	3471
GBP256	3319
GBP256	3319
GBP266	3661
GBP267	3423
GBP270	3423
GBP271	3661
GBP5220	3455
GBP5220	3471
GBP635	3705
GBP656	3624
GBP656	3624
GBP656AF	3624
GBP656AF	3624
GBP90202	3319
GBP90256	3319
GBP90296	3624
GBP90296	3624

OE NO	BESER NO
GBP90296AF	3624
GBP90296AF	3624
GBP90315	3683
GBP90315AF	3683
GBP90316	4212
GBP90316AF	4212
GBP90324	3683
GBP90325	3683
GBP90325AF	3683
GBP90329	3704
GBP90331AF	4148
GBP90336	3683
GBP90336AF	3683
GBP90339AF	4148
GBP90340	3683
GBP90340AF	3683
GBP90342AF	3943
GBP90347AF	4148
GBYH-33-23Z	3832
GCYD-33-23Z	3832
GCYD-33-28Z	3832
GJ21-33-28ZA	3437
GJ21-33-28ZB	3437
GJY1-33-28Z	3437
GJY1-33-28Z9A	3437
GJYA-33-23ZB	4118
GJYA-33-23ZC	4118
GJYA-33-23ZD	4118
GJYA-33-28ZA	4118
GJYA-33-29ZA	4118
GJYA-33-29ZB	4118
GJYB-33-23ZB	4118
GJYB-33-23ZC	4118
GJYB-33-23ZD	4118
GJYC-33-23Z	4118
GJYC-33-28Z9C	4118
GJYE-33-23ZB	3889
GJYE-33-23ZC	3889
GJYE-33-28ZC	3889
GJYF-33-23ZA	3889
GJYF-33-23ZB	3889
GJYF-33-23ZC	3889
GJYF-33-23ZD	3889
GJYF-33-23ZE	3889
GJYG-33-23ZA	3889
GJYG-33-28Z9C	3889
GN51-33-28Z	3437
GN51-33-28Z9A	3437
GPB106	3481
GPYA2648ZC	4242
GPYA2648ZD	4242
GPYB2643Z	4242
GPYB2648Z	4242
GPYB-33-23D	4029
GPYB-33-23ZD	4029
GPYB-33-23ZE	4029
GPYB-33-23ZG	4029
GPYB-33-28ZD	4029
GS39-26-43Z	3875
GSYD-33-23Z	4029
GSYD-33-23ZA	4029
GSYD-33-28Z	4029
GSYD-33-28ZA	4029
HE21-33-28Z	3666
HE21-33-28ZA	3666
HE21-33-28ZB	3666
J04 465 35020	3714
J04 465 35040	3560
J04 465 35320	3714
J04 491 35160	3560
J04 491 35200	3714
J04 665 35040	3560
J0446535020	3714
J0446535040	3560
J0449135160	3560
J0449135200	3714
J0466535040	3560
JLM11903	3623
JLM1829	3584
JLM20702	3584

OE NO	BESER NO
JLM21222	3584
JLM21344	3623
JZW 698 151	3782
JZW 698 151	3782
JZW 698 151	3782
JZW 698 151	3782
JZW 698 151A	3782
JZW 698 151A	3782
JZW 698 151A	3782
JZW 698 151A	3782
JZW 698 151A	3782
JZW 698 151B	3904
JZW 698 151B	3904
JZW 698 151B	3904
JZW 698 151B	3904
JZW 698 151B	3904
JZW 698 451	3529
JZW 698 451	3529
JZW 698 451	3529
JZW 698 451	3529
JZW 698 451	3529
JZW 698 451A	3529
JZW 698 451A	3529
JZW 698 451A	3529
JZW 698 451A	3529
JZW 698 451A	3529
JZW 698 451C	3529
JZW 698 451C	3529
K05011969AA	4011
K05142558AB	4198
K05142561AA	4018
K05142566AB	4018
K068071076AB	4329
K0BA2-33-28Z	3522
K2JA-33-28ZA	4028
K60A-33-28ZA	3574
K68028671AA	3893
K68028671AA	3893
K68033078AA	3893
K68071076AB	4329
KK150-33-23Z	3723
KK150-33-28Z	3723
LAY-33-328Z	3892
LAY3-33-28Z	3892
LBZ3-33-23Z	3874
LCY1-33-23Z	3874
LCY4-33-23ZD	3874
LDY5-33-23Z	3874
LDY5-33-28Z	3874
LEY5-33-23Z	3874
LEY5-33-28Z	3874
LEY9-33-23ZA	3874
LR003655	4157
LR003657	4157
LR004936	4161
LR015519	3944
LR016684	4291
LR016808	3944
LR019618	4293
LR019627	3944
LR021316	3944
LR021899	4094
LR023888	4157
LR026221	4314
LR032063	4314
LR039526	4291
LR051626	4314
LR055454	3944
LR064181	4291
LR083935	4291
LU793444940	3539
M850976	4059
M850978	4062
MB058197	3376
MB058916	3376
MB081588	3376
MB082418	3376
MB082439	3376
MB082440	3376
MB134729	3376

OE	BESER
NO	NO
MB134815	3407
MB150673	3376
MB151323	3407
MB151324	3407
MB193216	3407
MB193295	3376
MB193296	3376
MB193299	3376
MB238509	3376
MB377821	3407
MB377823	3376
MB389532	3622
MB407659	4108
MB500812	3448
MB500813	3448
MB500813	3448
MB500814	3448
MB500815	3448
MB500815	3448
MB500816	3448
MB500816	3448
MB500819	3448
MB500819	3448
MB500960	3401
MB534483	3401
MB534583	3400
MB534587	3400
MB534653	4108
MB534712	3401
MB587016	3376
MB587053	3401
MB587054	3401
MB587056	3401
MB587061	3401
MB587284	3401
MB597721	3376
MB618116	3401
MB618576	3400
MB668399	3401
MB668722	3400
MB699174	3622
MB699174	3622
MB699266	3622
MB699266	3622
MB699452	3685
MB699453	3685
MB699577	4033
MB857336	4108
MB857837	3685
MB857987	3685
MB858375	3622
MB858375	3622
MB858380	4108
MB858400	3685
MB858463	3688
MB858583	3622
MB858583	3622
MB895072	3622
MB895072	3622
MB895096	4033
MB895168	3401
MB928049	3685
MB950350	4108
MC894601	4216
MC894601	4216
ME3M5J2M008AA	3853
ME4S7J2M008AB	4058
ME6C1J2K021AA	3906
ME6C1J2K021AA	3906
ME6C1J2K021BA	3920
ME6C1J2K021BA	3920
ME6G9J2M008GA	4157
ME9S5J2K021AB	4173
ME9S5J2K021AB	4173
MEAV6J2K021AA	3885
MEAV6J2K021AA	3885
MJE2001AA	3584
MJE2001AB	3584
MK328619	4216
MK328619	4216

OE	BESER
NO	NO
MK499872	4216
MK499872	4216
MK528944	4054
MK528944	4054
MK528945	4054
MK528945	4054
MK529908	4054
MK529908	4054
MK585740	4170
MK585782	4244
ML252415	4170
MN102615	4271
MN102618	3955
MN102622	3900
MN102626	4084
MN116151	3916
MN116445	3892
MN116604	3765
MN116929	4106
MN125772	4062
MR128312	3685
MR129103	3685
MR129104	3685
MR129433	4108
MR129592	3622
MR162521	3400
MR162522	3401
MR162523	3448
MR162524	3448
MR162524	3448
MR205144	4108
MR205256	3809
MR205256	3809
MR205257	3809
MR205257	3809
MR205269	3688
MR249240	3675
MR290240	3675
MR389508	3603
MR389508	3603
MR389508	3604
MR389508	3604
MR389516	3685
MR389518	3685
MR389523	3448
MR389523	3448
MR389524	3448
MR389526	3448
MR389526	3448
MR389531	3401
MR389537	3622
MR389541	3622
MR389541	3622
MR389543	3685
MR389544	3685
MR389545	3685
MR389546	3685
MR389547	3809
MR389547	3809
MR389548	3685
MR389549	3685
MR389550	3809
MR389550	3809
MR389571	3688
MR389575	4084
MR389576	4108
MR389577	4108
MR389578	4108
MR389580	3688
MR407127	4107
MR407422	3892
MR407944	3675
MR475453	4271
MR510539	3892
MR510619	3892
MR510680	3809
MR510680	3809
MR527656	4059
MR527674	3955
MR527675	3955

OE	BESER
NO	NO
MR527868	3892
MR569224	3765
MR569225	3765
MR569233	3765
MR569403	3955
MR569592	3685
MR569597	3685
MR569780	4108
MR727674	3955
MR913846	4062
MR955068	4106
MR955351	4059
MR977365	3900
MZ390010	4108
MZ690000	3603
MZ690000	3603
MZ690000	3604
MZ690000	3604
MZ690001	3622
MZ690001	3622
MZ690007	3685
MZ690009	3688
MZ690010	4108
MZ690020	4107
MZ690040	4107
MZ690186	3955
MZ690187	4106
MZ690188	3916
MZ690330	3603
MZ690330	3604
MZ690335	3401
MZ690337	3400
MZ690339	4059
MZ690340	3892
MZ690341	4108
MZ690348	3955
MZ690349	3685
MZ690350	4106
MZ690356	3975
MZ690574	3893
O446650100	4083
P96245178	3687
P96273708	3744
PW890084	4062
RB913311261	3574
RTC3163	3423
RTC3164	3661
RTC3348	3413
RTC3348	3413
RTC4519	3771
RTC5574	3453
RTC5762	3771
RTC6781	3662
S083-49-280	3463
S083-49-280A	3463
S216CJ3501080	4027
S231-49-280	3463
S231-49-280A	3463
S2YA-33-23Z	3463
S2YA-33-28Z	3463
S4510004	3744
S4510004	3744
S4510004	3744
S4510011	3687
S4510019	3687
S4510019	3687
S4Y9-33-28Z	3892
S4Y9-33-28ZA	3892
S4YR-33-23Z	3892
S4YR-33-23ZA	3892
S58101-A6A02	4342
S58101-A6A03	4342
SA4107754	3423
SA83-49-280A	3463
SA94-49-2809A	3463
SE127165005A	3316
SE141165081A	3424
SE141165081A	3424
SE141165081B	3424
SE96-33-28Z	3499

OE	BESER
NO	NO
SE96-33-28Z9A	3463
SEE500020	4293
SF04-33-28Z	3463
SF04-33-28Z9A	3463
SFP000010	4094
SFP000020	4094
SFP000080	4148
SFP000120	3879
SFP000140	3816
SFP000150	3661
SFP000160	3512
SFP000260	3453
SFP000260	3816
SFP000270	3661
SFP000280	3512
SFP000390	3683
SFP000410	3683
SFP100140	3704
SFP100140EVA	3704
SFP100210	3631
SFP100210EVA	3631
SFP100220EVA	4148
SFP100260	3683
SFP100360	3872
SFP100511	3943
SFP500010	4293
SFP500020	3944
SFP500021	3944
SFP500022	3944
SFP500100	4094
SFP500140	3944
SFP500210	3879
SHY6-33-23Z	3892
SHY6-33-28Z	3892
STC1275	3453
STC-1275	3816
STC1276	3661
STC1601	3512
STC2952	3412
STC2953	3661
STC8569	3661
STC8571	3662
STC8572	3662
STC9147	3661
STC9188	3771
STC9189	3771
STC9190	3662
SU001-A1065	4151
SU001-A1065	4151
SU001-A1066	3972
SU001-A1066	3972
SU001-A1067	3972
SU001-A1067	3972
SU003-04096	4213
SU003-04097	4213
SU003-04325	4258
T11BJ3501080	4153
TT0029999	3872
UDMY4-33-23Z	3988
UDMY4-33-23Z	3988
UH1-33-23ZB	3767
UH1-33-23ZD	3767
UHY1-33-23ZA	3767
UHY1-33-23ZA	3767
UHY1-33-23ZB	3767
UHY1-33-23ZD	3767
UHY1-33-28ZA	3767
UHY1-33-28ZB	3767
UHY1-33-28ZD	3767
UHY6-33-23Z	3767
UHY6-33-28Z	3767
UJY6-33-23Z	3767
UJY6-33-23Z	3767
UJY6-33-28Z	3767
UJY6-33-28Z	3767
UMY1-33-23ZA	3988
UMY1-33-28ZA	3988
UMY4-33-23Z	3988
UMY4-33-23Z	3988
UMY4-33-28Z	3988

OE	BESER
NO	NO
V9118-A89	4003
V9118-A90	3910
V9118-A94	4003
VBP178	3377
VBP227	3706
VBP277	3705
X3511002	3622
X3511002	3622
X3511003	3685
X3511004	3675
X3511005	3448
X3511006	3401
X3511008	3400
X3511009	3809
X3511010	4059
X3511011	3892
X3516001	4108
X3516004	3688
X3516005	4062
X3B3485453	3632
YC152K021AC	3784
YC152K021AC	3784
YC1J2K021AA	3784
YC1J2K021AA	3784
YC1J2K021AB	3784
YC1J2K021AB	3784
YC1J2K021AC	3784
YC1J2K021AC	3784
YL8Z2001BA	4119
YM21K021BA	4095
YM2J2K021BA	4095
YM2J2K021BA	4095
YS612K021CA	3877
ZF09937786	3440
ZF09938205	3440
ZZM0-49-280	3781
ZZM0-49-280	3781
ZZM0-49-280A	3781

OPEN PARTS	BESER
NO	NO
BPA0002.20	3350
BPA0010.40	3339
BPA0010.40	3514
BPA0014.40	4103
BPA0017.00	3327
BPA0022.00	3316
BPA0025.30	3425
BPA0042.00	3373
BPA0044.02	3526
BPA0047.30	3513
BPA0052.10	3661
BPA0056.00	3423
BPA0056.12	3423
BPA0058.10	3416
BPA0061.02	3527
BPA0101.20	3410
BPA0102.10	3873
BPA0109.00	3579
BPA0109.12	3579
BPA0109.22	3579
BPA0114.00	3625
BPA0119.10	3570
BPA0119.10	3594
BPA0119.20	3417
BPA0119.22	3417
BPA0119.22	3417
BPA0119.32	3417
BPA0119.32	3417
BPA0129.00	3415
BPA0132.00	3371
BPA0134.00	3650
BPA0134.40	3551
BPA0134.50	3531
BPA0135.20	3536
BPA0135.40	3536
BPA0141.20	3503
BPA0141.30	3503
BPA0141.32	3503
BPA0142.20	3689
BPA0143.02	3440
BPA0144.06	3496
BPA0144.14	3493
BPA0144.24	3493
BPA0144.32	3495
BPA0144.50	3496
BPA0146.14	3466
BPA0148.34	3666
BPA0149.02	3394
BPA0155.00	3572
BPA0155.10	3583
BPA0157.00	3611
BPA0157.10	3550
BPA0157.20	3630
BPA0168.00	3621
BPA0170.14	3474
BPA0171.00	3486
BPA0171.10	3444
BPA0171.20	3441
BPA0171.60	3585
BPA0172.10	3790
BPA0172.30	3790
BPA0172.32	4141
BPA0172.35	3549
BPA0184.02	3758
BPA0184.12	3758
BPA0189.00	3408
BPA0191.12	3426
BPA0192.12	3380
BPA0192.22	3580
BPA0192.34	3487
BPA0202.02	3482
BPA0206.00	3603
BPA0208.00	3539
BPA0208.02	3546
BPA0208.12	3539
BPA0211.22	3523
BPA0212.42	3522
BPA0222.00	3661
BPA0222.01	3771
BPA0222.10	3661

OPEN PARTS	BESER
NO	NO
BPA0223.00	3605
BPA0224.02	3502
BPA0224.22	3502
BPA0233.00	4212
BPA0233.02	4212
BPA0233.12	4212
BPA0233.64	4212
BPA0236.02	3760
BPA0238.04	3757
BPA0238.04	3857
BPA0239.00	3717
BPA0239.40	3717
BPA0261.02	3543
BPA0262.02	3457
BPA0263.01	3529
BPA0263.03	3529
BPA0263.10	3529
BPA0263.41	4152
BPA0263.50	3529
BPA0264.02	3432
BPA0265.00	3578
BPA0265.15	3656
BPA0266.00	3412
BPA0266.10	3453
BPA0267.11	3662
BPA0270.00	3564
BPA0281.00	3459
BPA0281.40	3569
BPA0281.42	3568
BPA0284.00	3430
BPA0285.10	3589
BPA0286.30	3470
BPA0286.50	3505
BPA0286.50	3615
BPA0289.02	3882
BPA0291.02	4108
BPA0294.22	4087
BPA0294.32	4087
BPA0296.00	3609
BPA0301.00	3458
BPA0311.00	3873
BPA0315.04	3560
BPA0317.12	4010
BPA0318.12	3632
BPA0318.22	3632
BPA0318.32	3632
BPA0318.82	3632
BPA0318.92	3632
BPA0320.00	3562
BPA0321.02	3680
BPA0321.22	3680
BPA0325.02	4148
BPA0325.12	4148
BPA0325.22	4148
BPA0325.32	4148
BPA0331.00	3464
BPA0331.04	3722
BPA0337.02	3683
BPA0337.10	3872
BPA0342.02	4080
BPA0343.00	3660
BPA0344.00	4104
BPA0345.10	3596
BPA0351.32	3704
BPA0354.02	3685
BPA0354.22	3685
BPA0354.32	3685
BPA0372.00	3424
BPA0372.02	3424
BPA0372.30	3424
BPA0379.00	3628
BPA0379.20	3629
BPA0381.00	3879
BPA0381.20	3879
BPA0381.30	3879
BPA0381.60	4181
BPA0382.00	3733
BPA0384.00	3563
BPA0385.10	4020
BPA0389.12	3883

OPEN PARTS	BESER
NO	NO
BPA0390.00	3506
BPA0390.02	3590
BPA0390.11	3590
BPA0390.41	3590
BPA0391.00	3473
BPA0392.00	3445
BPA0393.00	3623
BPA0396.10	3892
BPA0397.22	3874
BPA0402.02	3554
BPA0402.02	3651
BPA0402.42	3554
BPA0402.42	3651
BPA0405.02	3688
BPA0407.00	3581
BPA0413.04	3693
BPA0414.01	3608
BPA0414.20	3643
BPA0415.32	4269
BPA0418.02	3607
BPA0419.02	3686
BPA0425.22	3674
BPA0426.02	3887
BPA0429.04	3673
BPA0431.10	4128
BPA0432.00	3558
BPA0432.02	3593
BPA0433.00	4214
BPA0438.04	3819
BPA0439.04	3878
BPA0445.00	3658
BPA0456.14	3915
BPA0457.00	4275
BPA0460.02	3622
BPA0461.02	3528
BPA0462.00	3888
BPA0467.00	4182
BPA0467.20	4182
BPA0468.00	3736
BPA0480.00	3553
BPA0480.21	3553
BPA0486.02	3595
BPA0487.02	3559
BPA0490.02	3683
BPA0578.00	3567
BPA0579.00	3678
BPA0580.00	3670
BPA0582.00	3675
BPA0583.00	3809
BPA0584.00	3512
BPA0586.00	3677
BPA0587.12	3618
BPA0587.22	3618
BPA0588.10	3897
BPA0589.02	3617
BPA0589.22	3617
BPA0589.42	3617
BPA0591.30	3795
BPA0592.02	3577
BPA0592.12	3598
BPA0594.02	3884
BPA0595.02	3602
BPA0596.00	3881
BPA0596.10	3881
BPA0596.20	3881
BPA0601.00	3863
BPA0602.02	3799
BPA0603.04	3750
BPA0605.02	4062
BPA0605.12	4062
BPA0609.00	3538
BPA0609.10	3566
BPA0609.20	3637
BPA0614.00	3614
BPA0618.00	3606
BPA0618.01	3794
BPA0620.20	3419
BPA0630.00	3663
BPA0631.00	3896
BPA0631.10	3896

OPEN PARTS	BESER
NO	NO
BPA0631.12	3896
BPA0633.00	3682
BPA0633.20	3782
BPA0633.21	3782
BPA0633.41	3782
BPA0634.00	3644
BPA0634.04	3636
BPA0643.00	3659
BPA0643.10	3938
BPA0643.20	3938
BPA0645.02	3687
BPA0647.02	3764
BPA0650.00	4125
BPA0651.00	3575
BPA0651.10	3575
BPA0651.86	3942
BPA0655.02	4079
BPA0674.12	3932
BPA0675.02	3778
BPA0678.00	3676
BPA0684.02	3762
BPA0685.02	3763
BPA0685.22	3763
BPA0691.00	3754
BPA0693.00	3755
BPA0695.02	4155
BPA0696.00	3744
BPA0697.01	4126
BPA0698.01	4069
BPA0701.00	3681
BPA0705.02	4281
BPA0708.02	4059
BPA0709.00	3821
BPA0709.10	3821
BPA0710.02	4027
BPA0711.04	3859
BPA0712.02	3768
BPA0713.00	3919
BPA0714.00	3918
BPA0717.00	3861
BPA0719.00	3943
BPA0720.02	3901
BPA0724.02	3928
BPA0727.10	4123
BPA0727.20	4123
BPA0729.02	3913
BPA0733.00	3804
BPA0735.02	4110
BPA0736.02	4011
BPA0740.02	3769
BPA0741.02	3788
BPA0743.04	4085
BPA0746.02	3993
BPA0746.12	3993
BPA0746.22	3993
BPA0746.62	3895
BPA0747.12	4109
BPA0747.12	4232
BPA0750.02	4084
BPA0766.00	3877
BPA0767.01	4345
BPA0768.00	3836
BPA0769.00	4102
BPA0771.02	3843
BPA0771.12	3843
BPA0772.02	3784
BPA0772.12	3921
BPA0774.02	3846
BPA0774.12	3846
BPA0775.00	4138
BPA0775.01	4138
BPA0776.00	4100
BPA0777.00	4093
BPA0777.10	4093
BPA0800.22	4118
BPA0803.12	3893
BPA0803.22	3893
BPA0804.12	3955
BPA0804.31	3955
BPA0807.02	4012

OPEN PARTS	BESER
NO	NO
BPA0813.00	4158
BPA0819.00	3856
BPA0821.02	3802
BPA0822.00	4094
BPA0822.12	3817
BPA0827.04	3934
BPA0828.04	3935
BPA0833.00	3855
BPA0834.00	3848
BPA0834.10	3848
BPA0836.02	4095
BPA0839.02	4153
BPA0840.10	3820
BPA0840.20	3820
BPA0840.30	3820
BPA0841.00	3800
BPA0842.00	3853
BPA0842.20	3853
BPA0842.30	3853
BPA0843.00	3852
BPA0843.10	3852
BPA0845.01	4271
BPA0849.00	3823
BPA0855.00	4082
BPA0857.00	4180
BPA0858.01	3826
BPA0858.11	3826
BPA0858.32	3826
BPA0859.01	3800
BPA0859.10	3800
BPA0859.11	3800
BPA0859.12	3800
BPA0859.21	3800
BPA0860.12	4301
BPA0874.02	3825
BPA0876.01	3933
BPA0876.31	3933
BPA0876.41	3933
BPA0879.12	3986
BPA0880.00	3931
BPA0881.00	3854
BPA0884.00	3910
BPA0888.00	4211
BPA0888.40	4211
BPA0892.00	4179
BPA0893.02	3961
BPA0897.11	3842
BPA0899.00	3831
BPA0951.02	3912
BPA0951.11	3912
BPA0953.02	3959
BPA0954.00	4013
BPA0958.10	4208
BPA0959.01	3835
BPA0960.01	3834
BPA0961.00	3914
BPA0962.00	3950
BPA0963.00	4347
BPA0964.12	4096
BPA0970.02	3889
BPA0971.02	3769
BPA0973.02	4031
BPA0976.00	3849
BPA0976.10	3849
BPA0976.20	3849
BPA0977.00	3850
BPA0978.02	4112
BPA0984.00	3801
BPA0985.02	4074
BPA0986.00	3951
BPA0987.00	3983
BPA0987.11	3983
BPA0987.22	3983
BPA0988.00	3891
BPA0996.00	4076
BPA1030.01	3904
BPA1031.00	3905
BPA1036.02	4042
BPA1038.02	4028
BPA1038.12	4028

OPEN PARTS	BESER
NO	NO
BPA1039.00	4105
BPA1040.00	4111
BPA1041.02	3978
BPA1041.12	3978
BPA1042.02	3979
BPA1045.01	3841
BPA1046.02	3890
BPA1047.02	4153
BPA1048.00	3894
BPA1051.02	4106
BPA1052.00	4346
BPA1068.02	4159
BPA1069.00	3827
BPA1081.01	4036
BPA1081.11	4036
BPA1082.00	3885
BPA1082.50	3885
BPA1098.14	3886
BPA1100.00	4173
BPA1100.11	4173
BPA1100.21	4173
BPA1101.04	3940
BPA1102.04	3939
BPA1103.00	3946
BPA1109.02	3923
BPA1113.00	4137
BPA1124.00	4220
BPA1125.00	4215
BPA1126.08	4006
BPA1127.08	4018
BPA1128.08	4198
BPA1129.01	3900
BPA1133.02	3968
BPA1134.02	4001
BPA1135.02	3969
BPA1136.01	4213
BPA1136.12	4213
BPA1137.02	4081
BPA1138.00	3984
BPA1139.02	3985
BPA1149.10	4058
BPA1158.00	4293
BPA1159.00	3944
BPA1159.10	3944
BPA1162.01	3952
BPA1166.01	4000
BPA1173.02	4016
BPA1177.00	3987
BPA1179.00	4210
BPA1181.02	4113
BPA1183.01	4121
BPA1196.02	4029
BPA1200.00	3945
BPA1200.30	3945
BPA1202.00	4240
BPA1204.12	3959
BPA1208.02	3880
BPA1209.02	3980
BPA1224.00	3958
BPA1225.02	3929
BPA1226.02	3960
BPA1231.00	3949
BPA1232.00	3953
BPA1234.00	4077
BPA1237.01	3981
BPA1238.00	3820
BPA1239.02	3989
BPA1242.01	3975
BPA1243.00	3962
BPA1245.00	3925
BPA1245.02	3965
BPA1245.10	3965
BPA1246.00	3926
BPA1246.02	3926
BPA1247.00	3963
BPA1248.00	3964
BPA1248.10	3964
BPA1250.02	3906
BPA1250.11	3906
BPA1251.02	3920

OPEN PARTS	BESER
NO	NO
BPA1252.01	3907
BPA1252.02	3907
BPA1256.00	4157
BPA1259.02	4005
BPA1261.12	3976
BPA1264.02	4004
BPA1275.01	3922
BPA1281.02	4122
BPA1281.10	4122
BPA1282.00	4092
BPA1286.02	3954
BPA1289.02	4160
BPA1290.02	4156
BPA1291.02	4035
BPA1292.01	3972
BPA1293.02	4015
BPA1297.00	4207
BPA1299.00	4151
BPA1301.00	4248
BPA1302.02	4039
BPA1302.22	4039
BPA1303.02	4165
BPA1304.00	4249
BPA1304.10	4259
BPA1305.00	4247
BPA1310.02	3956
BPA1318.00	4038
BPA1323.00	3970
BPA1339.00	3995
BPA1343.00	4260
BPA1350.00	4134
BPA1351.00	3966
BPA1352.00	3967
BPA1356.02	4037
BPA1362.02	4061
BPA1362.42	4311
BPA1362.52	4311
BPA1375.12	4149
BPA1379.10	4310
BPA1382.00	3971
BPA1387.00	4142
BPA1387.30	4287
BPA1388.04	4150
BPA1403.02	4146
BPA1407.00	4124
BPA1407.12	4308
BPA1410.00	4291
BPA1420.00	4135
BPA1431.02	4008
BPA1431.12	4230
BPA1432.02	4014
BPA1439.11	4057
BPA1440.01	4162
BPA1442.01	4132
BPA1442.01	4172
BPA1450.12	4286
BPA1468.04	4167
BPA1482.00	4161
BPA1514.00	4204
BPA1516.00	4241
BPA1516.20	4349
BPA1530.00	4201
BPA1538.04	4315
BPA1548.02	4312
BPA1561.02	4176
BPA1582.02	4283
BPA1634.02	4284
BPA1724.08	4280
BPA4310.01	4249
BPA7843.02	3762

PAGID	BESER
NO	NO
8D355014-721	4188
8DB355012-811	4221
8DB355012-821	4219
8DB355020-531	4202
8DB355021-011	4189
C2004	3679
C2014	3994
C2018	3773
C3002	3537
C3006	3537
C3014	3773
C3016	3926
C4020	3433
C4022	3433
C4026	3749
C4028	3614
C4030	3575
C4062	3575
C4064	3823
C4066	3749
C4070	3942
C4074	3575
C4076	3823
C5006	3315
C5006	3515
C6006	3523
C6023	3965
C6024	3925
C6026	3962
C6027	3963
C6028	3995
C6029	4092
C7002	4216
C7008	4054
C9005	3965
T0001	3633
T0004	3758
T0006	3449
T0007	3634
T0008	3752
T0009	3760
T0013	3746
T0015	3446
T0023	3666
T0033	3600
T0034	4212
T0035	3723
T0044	3448
T0047	3661
T0053	3437
T0063	3662
T0082	3413
T0084	3453
T0210	3526
T0213	3419
T0215	3429
T0221	3466
T0230	3311
T0263	3323
T0264	3321
T0290	3440
T0291	3378
T0296	3374
T0303	3320
T0307	3572
T0310	3625
T0311	3513
T0317	3394
T0318	3402
T0324	3646

PAGID	BESER
NO	NO
T0325	3397
T0328	3620
T0331	3714
T0335	3436
T0337	3462
T0348	3603
T0351	3444
T0352	3430
T0353	3432
T0355	3400
T0358	3463
T0359	3401
T0365	3582
T0366	3502
T0370	3631
T0373	3395
T0375	3410
T0381	3423
T0388	3585
T0389	3473
T0390	3445
T0391	4087
T0392	3700
T0393	3776
T0394	4104
T0397	3426
T0398	3622
T0399	3640
T0405	3318
T0412	3572
T0413	3573
T0449	3327
T0451	3343
T0451	3483
T0456	3365
T0465	3335
T0475	3320
T0481	3318
T0571	3416
T0603	3346
T0609	3317
T0616	3316
T0624	3424
T0699	3527
T0810	3393
T0825	3421
T0838	3370
T0841	3410
T0843	3709
T0854	3509
T0859	3415
T0863	3407
T0865	3369
T0882	3371
T1003	3621
T1004	3611
T1005	3549
T1010	3550
T1016	3717
T1021	3470
T1022	3589
T1026	3564
T1027	3578
T1030	3459
T1034	3469
T1035	3590
T1036	3629
T1037	3563
T1038	3680
T1040	3583
T1045	3623
T1050	3581
T1062	3558
T1067	3630
T1075	3528
T1079	3736
T1081	3593
T1082	3505
T1082	3615
T1088	3584

PAGID	BESER
NO	NO
T1091	3677
T1092	3863
T1094	3566
T1097	3538
T1099	3617
T1100	4197
T1101	3682
T1104	3656
T1106	3506
T1107	3606
T1111	3567
T1117	3879
T1123	3545
T1124	3670
T1125	3680
T1126	3628
T1130	3867
T1132	4182
T1133	3740
T1136	3881
T1139	3663
T1140	3618
T1141	3570
T1141	3594
T1142	3678
T1143	3637
T1151	3897
T1152	3821
T1153	3676
T1154	3590
T1160	3569
T1161	3548
T1161	3690
T1163	3782
T1164	3762
T1165	3782
T1167	3754
T1168	3681
T1169	3861
T1170	3804
T1171	4126
T1172	4069
T1174	4102
T1175	4101
T1175	4209
T1176	4281
T1183	4222
T1185	3568
T1188	4103
T1189	3919
T1190	3918
T1191	3717
T1193	3877
T1194	3590
T1195	4095
T1196	3794
T1197	3943
T1198	3676
T1200	3584
T1202	4347
T1206	3717
T1210	4100
T1211	4093
T1212	3950
T1213	3852
T1215	3853
T1216	3790
T1223	4096
T1225	4042
T1230	4180
T1234	4211
T1236	3931
T1239	3822
T1240	4123
T1241	3829
T1242	3648
T1243	3830
T1244	3913
T1245	3938
T1246	3855

PAGID	BESER
NO	NO
T1250	3892
T1252	4071
T1254	4084
T1255	4155
T1257	4271
T1261	3801
T1263	4148
T1265	3802
T1269	3928
T1271	3874
T1273	3932
T1274	3955
T1275	4027
T1277	4009
T1280	4110
T1281	4158
T1282	3767
T1283	4094
T1284	4109
T1284	4232
T1285	3436
T1289	3598
T1293	4179
T1296	4011
T1302	3781
T1303	3653
T1305	3993
T1307	3843
T1310	3856
T1314	4012
T1316	4105
T1320	3764
T1321	3574
T1322	4119
T1323	3915
T1324	3854
T1325	4102
T1331	3912
T1332	4013
T1333	3831
T1334	3933
T1335	4269
T1338	3900
T1345	3790
T1347	4125
T1349	3552
T1351	3529
T1354	3834
T1355	3835
T1356	3914
T1359	3910
T1366	4181
T1367	3961
T1368	3891
T1369	3986
T1370	3859
T1371	4153
T1373	3849
T1374	3850
T1376	3904
T1377	3905
T1378	4028
T1379	4111
T1382	3923
T1384	4017
T1389	4179
T1390	3795
T1392	4152
T1393	4112
T1395	4106
T1397	4159
T1398	3825
T1399	3983
T1400	3976
T1401	3979
T1403	4303
T1404	3769
T1411	4109
T1411	4232
T1412	3959

PAGID	BESER
NO	NO
T1413	3911
T1417	3458
T1420	4088
T1422	3820
T1424	3848
T1425	4074
T1429	3889
T1430	3895
T1431	4082
T1432	3841
T1436	3885
T1438	3892
T1442	4173
T1443	3951
T1449	3800
T1451	4040
T1454	4240
T1457	3841
T1458	3894
T1459	3421
T1461	3939
T1462	3940
T1463	3946
T1468	3820
T1469	3842
T1470	4031
T1474	3667
T1475	4085
T1477	4034
T1487	4096
T1489	3853
T1491	3685
T1492	3905
T1493	3872
T1496	3984
T1499	3945
T1501	3826
T1502	4018
T1503	4198
T1504	4006
T1505	3976
T1508	3978
T1511	4115
T1513	4293
T1514	3944
T1516	4210
T1518	4081
T1519	4001
T1522	3952
T1526	4118
T1527	4016
T1528	3801
T1531	3987
T1532	4137
T1534	4058
T1538	4093
T1543	4213
T1550	4208
T1552	3968
T1553	3969
T1562	3985
T1563	3879
T1565	4059
T1577	3529
T1579	3919
T1580	3953
T1581	4077
T1582	3949
T1590	4000
T1591	3880
T1592	3980
T1593	4113
T1594	3983
T1597	4303
T1600	3929
T1601	3958
T1602	3960
T1603	3988
T1605	3948
T1610	4036

PAGID	BESER
NO	NO
T1613	4186
T1615	3895
T1618	4208
T1619	4207
T1622	4248
T1623	4248
T1624	4249
T1625	3827
T1626	4309
T1629	3503
T1631	4211
T1637	4247
T1638	4248
T1640	3906
T1641	3920
T1642	3907
T1643	3529
T1644	3529
T1648	3826
T1651	3453
T1653	4161
T1655	3820
T1656	3922
T1657	3981
T1660	4039
T1661	4165
T1663	4150
T1668	4149
T1671	3765
T1672	3989
T1676	3976
T1679	4143
T1681	3996
T1684	3982
T1687	4122
T1688	3975
T1689	4274
T1695	3886
T1696	4157
T1701	3964
T1704	3800
T1708	3972
T1710	4151
T1717	3903
T1724	4035
T1726	3956
T1727	4037
T1728	3954
T1729	4156
T1731	4160
T1736	4260
T1743	4029
T1749	4029
T1750	3997
T1751	4038
T1759	3984
T1766	3970
T1772	4141
T1773	3966
T1774	3967
T1775	4134
T1778	4122
T1782	4135
T1788	3971
T1795	3891
T1796	3955
T1798	4309
T1800	3748
T1801	3748
T1807	4005
T1808	4121
T1817	4258
T1820	4015
T1822	4004
T1825	3800
T1832	4173
T1841	3904
T1847	3933
T1848	4061
T1850	4142

PAGID	BESER
NO	NO
T1865	4146
T1874	3797
T1894	3964
T1898	3945
T1905	4147
T1908	3980
T1911	4073
T1913	4215
T1914	4220
T1919	4162
T1926	4346
T1933	3928
T1937	4310
T1956	4014
T1957	4014
T1958	4230
T1959	4008
T1969	4056
T1970	4057
T1971	4132
T1971	4172
T1974	4230
T1975	4008
T1976	4241
T1981	3560
T1987	4256
T1990	3906
T1997	4255
T2003	3826
T2005	4058
T2006	3474
T2012	4314
T2030	4148
T2034	3779
T2050	3853
T2054	3800
T2059	4167
T2061	4039
T2071	3945
T2073	4038
T2075	4145
T2083	4240
T2086	4124
T2087	3983
T2097	3826
T2103	3959
T2105	3952
T2106	3993
T2125	3944
T2127	3944
T2138	3980
T2148	3768
T2167	4049
T2175	4060
T2178	3998
T2198	4161
T2201	3922
T2201	4171
T2204	4200
T2209	4233
T2211	3529
T2215	4173
T2223	4204
T2243	4176
T2244	4201
T2260	4140
T2262	4226
T2264	3981
T2269	4174
T2270	4175
T2284	4315
T2318	4317
T2441	4287
T2449	4284
T2496	4030
T2545	4279
T2649	4301
T2660	4280
T3000	3603
T3000	3604

PAGID	BESER
NO	NO
T3002	3832
T3003	3757
T3003	3857
T3004	3766
T3007	3882
T3009	3779
T3010	4072
T3011	3560
T3013	3554
T3013	3651
T3014	3522
T3016	3704
T3017	4148
T3018	3607
T3019	3688
T3021	4080
T3022	4128
T3023	3696
T3024	3686
T3025	3685
T3031	4108
T3033	3674
T3034	3887
T3036	3507
T3037	3888
T3038	3577
T3039	3675
T3043	3833
T3049	4099
T3052	3875
T3053	4086
T3058	3745
T3064	3693
T3069	3436
T3076	3673
T3077	4078
T3078	3697
T3081	3883
T3083	3777
T3085	3602
T3090	3898
T3091	3511
T3093	3744
T3095	4059
T3096	3778
T3098	3768
T3099	3769
T3103	3901
T3106	3687
T3112	3884
T3115	4010
T3117	3788
T3120	3817
T3123	3809
T3124	3780
T3125	4079
T3129	3890
T3130	4153
T3132	3945
T3135	3916
T3139	4311
T4006	3484
T4017	3417
T4019	3417
T4019	3417
T4023	3312
T4074	3320
T4081	3806
T4099	3405
T4113	3339
T4113	3514
T4116	3350
T4135	3315
T4135	3515
T4150	3441
T4151	3486
T4154	3444
T5003	3490
T5005	3408
T5008	3649

PAGID	BESER
NO	NO
T5009	3619
T5012	3605
T5019	3624
T5021	3650
T5022	3529
T5026	3422
T5027	3457
T5030	3733
T5035	3609
T5037	3467
T5039	3543
T5050	3531
T5051	3551
T5054	3419
T5056	3536
T5061	3642
T5063	3562
T5064	3660
T5065	3683
T5067	3658
T5072	3553
T5074	3556
T5075	3529
T5077	3503
T5078	3595
T5079	3559
T5090	3750
T5091	3909
T5095	3896
T5098	3896
T5099	3636
T5100	4062
T5101	4125
T5110	4125
T5111	3836
T5112	3836
T5115	4020
T5116	3373
T5117	3610
T5118	3755
T5120	3872
T5122	3896
T5128	3846
T5131	3644
T5137	4345
T5140	3553
T5150	4076
T5160	4138
T5161	4138
T5162	3826
T5163	3800
T5166	3820
T5167	3800
T6006	3442
T6008	3366
T6028	3493
T6064	3495
T6065	3496
T6088	3380
T6089	3428
T6112	3546
T9000	3482
T9003	3424
T9008	3873
T9011	3641
T9012	3464
T9017	3425
T9025	3689
T9027	4214
T9028	3487
T9030	3608
T9031	3643
T9033	3539
T9037	3596
T9038	3819
T9039	3878
T9051	3512
T9052	3771
T9054	3799
T9066	3763

PAGID	BESER
NO	NO
T9069	3722
T9073	3659
T9098	3784
T9101	3539
T9103	3935
T9104	3934
T9107	3921

PERMAFUSE	BESER
NO	NO
83.219.1	3417
83.793.2	4345
83.882.0	4293

PEX	BESER
NO	NO
7007	3611
7008	3621
7015	3416
7.020	3374
7022	3378
7023	3806
7024	3513
7028	3410
7.030	3365
7031	3605
7038	3442
7039	3776
7042	3421
7044	3417
7048	3394
7049	3464
7054	3424
7056	3503
7061	3493
7062	3496
7.063	3312
7065	3486
7066	3444
7067	3441
7068	3536
7069	3466
7072	3572
7081	3402
7082	3397
7083	3415
7089	3470
7091	3457
7100	3469
7107	3529
7111	3564
7114	3430
7116	3873
7117	3583
7118	3583
7120	4087
7127	3607
7129	3833
7133	3683
7134	4212
7138	3629
7140	3689
7143	3832
7.144	3343
7144	3483
7145	3603
7145	3604
7150	3760
7154	4104
7155	3562
7158	4086
7.160	3320
7.162	3350
7167	3426
7171	3529
7177	3723
7183	3717
7188	3623
7189	3474
7195	3563
7203	3550
7208	4148
7209	3528
7213	3522
7214	3685
7217	3549
7218	3622
7219	4108
7220	3448
7221	4080
7226	3688
7227	3608
7229	3473
7232	3445
7233	3757
7233	3857

PEX	BESER
NO	NO
7234	3589
7235	3686
7238	3704
7239	3531
7240	3551
7250	3558
7251	3556
7252	3610
7253	3539
7254	3593
7255	3658
7259	3590
7260	4128
7268	3499
7269	3436
7274	3504
7281	3423
7284	3487
7289	3819
7290	3878
7295	3506
7296	3680
7301	3661
7314	3526
7316	3449
7317	3482
7321	3771
7332	3536
7335	3660
7343	3662
7348	3596
7350	3584
7356	4214
7362	3495
7363	3888
7364	3545
7376	4182
7377	3408
7378	3630
7380	3581
7385	3736
7386	3733
7387	3674
7388	3887
7390	3503
7395	3643
7396	3693
7401	3585
7402	3553
7404	3595
7405	3559
7410	3512
7412	3577
7414	3883
7416	3678
7417	3670
7418	3567
7419	3750
7424	3677
7425	3602
7426	3675
7428	3538
7431	3799
7434	3617
7435	3614
7438	3566
7441	3636
7444	3656
7445	3570
7445	3594
7452	3505
7452	3615
7454	3896
7455	3896
7457	3863
7458	4062
7459	3606
7461	4020
7463	3637
7466	3682

PEX	BESER
NO	NO
7470	3659
7471	3575
7472	3554
7472	3651
7478	3659
7482	3722
7484	3872
7485	4125
7487	4059
7491	3762
7492	3938
7494	3754
7495	3755
7496	3778
7499	4281
7500	4126
7501	4069
7504	3618
7506	3861
7508	4155
7509	3681
7510	3804
7516	3918
7518	4010
7519	3768
7521	3552
7522	3780
7523	3663
7524	3676
7525	3821
7528	3529
7529	3419
7530	3884
7531	3794
7535	3943
7538	3898
7539	3877
7541	3897
7542	3782
7544	3795
7546	3846
7550	3763
7552	3921
7554	3836
7555	3511
7557	3744
7558	3687
7559	3764
7560	4079
7562	3539
7563	4100
7564	4093
7565	3590
7568	3644
7569	4211
7570	3853
7571	3993
7573	3856
7574	3590
7.575	3373
7576	3919
7578	4102
7579	4094
7583	3879
7.584	4347
7585	4101
7585	4209
7588	4103
7595	3931
7596	3854
7597	3950
7603	3679
7604	4027
7607	3852
7609	4123
7610	4011
7612	3769
7613	4095
7614	3834
7615	3835

PEX	BESER
NO	NO
7617	3790
7619	3935
7620	3934
7621	3826
7622	3800
7623	3575
7626	3553
7627	3843
7.628	4345
7630	4097
7631	3881
7634	3896
7642	3986
7.643	3311
7645	3855
7647	3800
7650	3784
7651	3820
7655	3628
7657	3909
7659	3914
7661	3983
7664	3714
7668	3790
7672	4096
7674	4180
7680	4152
7681	4042
7682	3961
7683	3841
7685	3842
7686	4110
7688	4112
7690	3749
7691	3801
7692	3817
7693	4115
7697	3904
7698	3905
7699	4158
7700	4153
7702	3830
7703	3910
7705	3892
7708	4076
7710	3939
7711	3946
7712	3940
7714	3859
7717	3767
7722	4173
7723	3826
7724	3800
7725	3984
7726	3850
7727	3849
7728	3826
7734	3890
7735	4153
7737	3825
7738	3889
7739	4118
7750	4222
7751	4138
7752	4138
7754	3529
7755	3923
7756	3924
7764	3983
7771	3945
7773	3885
7781	3822
7782	4119
7783	4159
7784	3901
7785	4012
7786	3955
7789	4072
7792	4271
7795	4009

PEX	BESER
NO	NO
7797	3959
7801	4084
7803	4109
7803	4232
7804	3915
7805	4085
7807	3831
7816	3979
7817	3978
7.818	4293
7819	3944
7820	3962
7821	3925
7822	3963
7823	3926
7825	4058
7828	3952
7830	4001
7839	3894
7843	3987
7847	3913
7850	3928
7856	4115
7862	4106
7863	3821
7867	3920
7868	3907
7869	3906
7870	4074
7872	4137
7874	3933
7879	4161
7880	4173
7.062S	3496
7.066S	3444
7.089S	3470
7.100S	3469
7.129S	3833
7.143S	3832
7.183S	3717
7.188S	3623
7.195S	3563
7.203S	3550
7.213S	3522
7.233S	3757
7.233S	3857
7.240S	3551
7.250S	3558
7.253S	3539
7.254S	3593
7.255S	3658
7.259S	3590
7.284S	3487
7.295S	3506
7.335S	3660
7.356S	4214
7.386S	3733
7.387S	3674
7.388S	3887
7.390S	3503
7.402S	3553
7.416S	3678
7.417S	3670
7.418S	3567
7.424S	3677
7.435S	3614
7.438S	3566
7.441S	3636
7.444S	3656
7.457S	3863
7.458S	4062
7.466S	3682
7.472S	3554
7.472S	3651
7.485S	4125
7.487S	4059
7.491S	3762
7.492S	3938
7.494S	3754
7.495S	3755

PEX	BESER
NO	NO
7.499S	4281
7.510S	3681
7.516S	3918
7.525S	3821
7.529S	3419
7.539S	3877
7.546S	3846
7.550S	3763
7.552S	3921
7.554S	3836
7.563S	4100
7.564S	4093
7.569S	4211
7.570S	3853
7.583S	3879
7.607S	3852
7.631S	3881
7.655S	3628
7.657S	3909
7.659S	3914
7.681S	4042
7.682S	3961
7.708S	4076
7.820S	3962
7.821S	3925
7.822S	3963
7.823S	3926

QHAZELL	BESER
NO	NO
BP1001	3666
BP1002	3548
BP1002	3690
BP1007	3610
BP101	3311
BP102	3312
BP1024	3874
BP1031	4197
BP1036	3667
BP1043	3781
BP1045	3809
BP1047	3618
BP1052	3881
BP1056	3637
BP1060	3822
BP1062	3663
BP1063	3896
BP1067	3659
BP1068	3938
BP1069	3687
BP1073	4125
BP1074	3575
BP1079	3653
BP1081	3932
BP1084	3676
BP1091	3755
BP1093	4155
BP1094	3780
BP1096	3681
BP1098	4281
BP1099	4059
BP110	3373
BP1100	3821
BP1101	4027
BP1102	3859
BP1103	3919
BP1104	3918
BP1114	3744
BP1115	3778
BP1116	3768
BP112	3321
BP1124	3568
BP1131	3897
BP1132	3795
BP1133	3419
BP1134	4126
BP1135	4069
BP1140	3628
BP1142	3782
BP1145	3644
BP1147	3763
BP1149	4094
BP1150	3800
BP1151	3598
BP1164	3915
BP1167	3602
BP1168	3697
BP1169	4099
BP1171	4275
BP1178	3884
BP1179	3764
BP1180	4079
BP1181	4148
BP1182	4034
BP1183	3872
BP1185	3552
BP1187	3511
BP1191	4010
BP1192	3648
BP1193	3830
BP1194	3829
BP1195	4071
BP1196	3901
BP1198	4274
BP1200	3717
BP1207	3928
BP1208	3782
BP1210	3861
BP1211	4010
BP1212	4271

QHAZELL	BESER
NO	NO
BP1215	3767
BP1216	3943
BP1217	4109
BP1217	4232
BP1218	3993
BP1219	4110
BP1222	4123
BP1223	3790
BP1227	3769
BP1228	3539
BP1229	3788
BP1230	4084
BP1233	3913
BP1234	3617
BP1239	3749
BP1243	3590
BP1244	3784
BP1245	3843
BP1246	3804
BP1248	4103
BP125	3316
BP1250	3892
BP1252	4085
BP1258	4115
BP1259	3846
BP126	3318
BP1261	3877
BP1264	4100
BP1265	4011
BP1268	4222
BP1269	3836
BP1271	4158
BP1272	3794
BP1275	3553
BP1278	3820
BP1279	3896
BP1282	4093
BP1283	3921
BP1285	4345
BP1287	4009
BP1288	3935
BP1289	3934
BP129	3335
BP1294	3955
BP1295	4082
BP1297	4102
BP1304	3938
BP1305	3848
BP1306	3802
BP1312	4269
BP1313	4095
BP1314	4101
BP1314	4209
BP1315	3826
BP1318	3800
BP1319	3950
BP1320	3852
BP1322	3853
BP1324	3590
BP1325	3856
BP1326	3855
BP1331	3522
BP1332	4347
BP1333	4153
BP1336	4138
BP1337	3617
BP1341	3834
BP1342	3835
BP1343	3914
BP1344	4012
BP1347	3817
BP135	3343
BP135	3483
BP1350	3854
BP1351	3931
BP1352	3986
BP1353	3618
BP1354	3825
BP1355	3853
BP1357	3879

QHAZELL	BESER
NO	NO
BP1358	3801
BP1359	3951
BP136	3327
BP1362	3912
BP1363	3891
BP1364	4097
BP1366	4211
BP1368	4013
BP1369	4031
BP137	3806
BP1370	4138
BP1371	3933
BP1373	3910
BP1374	3961
BP1376	3831
BP1377	3849
BP1378	3889
BP1379	3823
BP1380	4159
BP1381	3820
BP1384	3985
BP1387	3895
BP1389	3978
BP1390	4017
BP1394	4153
BP1395	3890
BP1397	4109
BP1397	4232
BP1398	4180
BP1399	4179
BP1401	3979
BP1402	3790
BP1404	3900
BP1408	4119
BP141	3410
BP1411	4118
BP1412	3983
BP1415	3850
BP1416	4112
BP1417	4152
BP1419	3904
BP1420	3905
BP1421	4096
BP1423	4347
BP1424	4346
BP1427	3885
BP1433	3923
BP1434	3924
BP1435	4042
BP1437	3939
BP1438	3940
BP1439	3946
BP1443	3894
BP1444	3959
BP1447	4028
BP1448	4106
BP1452	3895
BP1454	3575
BP1455	3841
BP1456	3841
BP1457	3842
BP146	3806
BP1463	4076
BP1465	4111
BP1466	4181
BP1467	4105
BP1472	4303
BP1475	4173
BP1476	3892
BP1477	4074
BP1481	3769
BP1483	4179
BP1492	4208
BP1494	3827
BP1498	3853
BP1499	4058
BP1505	3987
BP1506	3984
BP1510	3976
BP1511	4016

QHAZELL	BESER
NO	NO
BP1514	4001
BP1515	3968
BP1516	3969
BP1517	4293
BP1518	3944
BP1523	3988
BP1524	4210
BP1526	3952
BP1528	3906
BP1529	3920
BP153	3378
BP1530	3907
BP1532	3983
BP1534	4018
BP1535	4006
BP1537	3880
BP1538	3980
BP1540	4113
BP1543	4081
BP1544	4213
BP1545	3929
BP1546	4000
BP1551	3800
BP1553	3963
BP1554	3962
BP1555	3925
BP1556	3926
BP1557	4157
BP1558	4161
BP156	3324
BP1561	3964
BP1565	3975
BP1566	3945
BP1572	3972
BP1573	3981
BP1574	3820
BP1575	3922
BP1577	4173
BP1578	3826
BP1579	3976
BP1581	4240
BP1582	4247
BP1583	4248
BP1586	3958
BP1588	4151
BP1592	4039
BP1593	4165
BP1594	3989
BP1595	3960
BP1596	4038
BP160	3417
BP160	3417
BP1600	3953
BP1601	4077
BP1602	3949
BP1603	4260
BP1604	3903
BP1608	4036
BP161	3417
BP1613	3765
BP1615	3982
BP1618	3954
BP1619	3954
BP1621	4143
BP1624	3965
BP1628	4035
BP163	3423
BP1631	3965
BP1632	4160
BP1633	4156
BP1634	3970
BP1635	3971
BP1637	4122
BP1639	4141
BP1640	3966
BP1641	3967
BP1644	4134
BP1651	4249
BP1652	3956
BP1653	4037

QHAZELL	BESER
NO	NO
BP1655	3964
BP1656	4142
BP1662	4149
BP1663	4150
BP1665	4207
BP1671	4029
BP1672	4092
BP1673	3995
BP1675	3984
BP1677	4122
BP1678	4096
BP1679	4147
BP168	3315
BP168	3515
BP1680	4146
BP1681	3980
BP169	3661
BP1696	3904
BP1699	4255
BP170	3416
BP1700	4256
BP1705	4005
BP1707	4004
BP1717	4198
BP1732	4135
BP1736	3983
BP1737	3996
BP1738	3997
BP175	3650
BP1750	4309
BP1751	4121
BP1754	3826
BP1762	4230
BP1763	4008
BP1764	4014
BP1765	4073
BP1775	4060
BP1777	4311
BP1779	4124
BP1784	3944
BP1795	4015
BP1797	4310
BP1798	4291
BP1799	4056
BP1800	4057
BP1801	4132
BP1801	4172
BP1807	4162
BP1821	4241
BP1823	4140
BP1824	3826
BP1825	4201
BP1837	4174
BP1839	4175
BP1840	4204
BP1841	4295
BP1853	3800
BP1857	4145
BP186	3317
BP191	3509
BP192	3646
BP199	3374
BP200	3503
BP203	3527
BP213	3709
BP215	3320
BP216	3468
BP219	3484
BP220	3365
BP221	3370
BP228	3624
BP234	3419
BP235	3429
BP243	3573
BP244	3572
BP251	3405
BP255	3393
BP256	3421
BP259	3710
BP284	3379

QHAZELL	BESER
NO	NO
BP287	3513
BP291	3350
BP294	3413
BP296	3323
BP310	3381
BP311	3621
BP316	3369
BP318	3536
BP319	3339
BP319	3514
BP326	3440
BP327	3371
BP329	3752
BP335	3402
BP337	3714
BP341	3579
BP342	3611
BP344	3424
BP352	3401
BP353	3466
BP356	3410
BP359	3441
BP360	3486
BP361	3380
BP365	3442
BP366	3397
BP367	3620
BP370	3490
BP371	3482
BP372	3408
BP373	3462
BP374	3444
BP375	3625
BP376	3493
BP377	3474
BP378	3504
BP379	3495
BP398	3366
BP399	3619
BP400	3467
BP401	3400
BP404	3649
BP406	3603
BP414	3771
BP416	3449
BP424	3436
BP425	3582
BP427	3437
BP428	3463
BP436	3760
BP437	3415
BP438	3395
BP445	3589
BP446	3549
BP447	3412
BP448	4212
BP449	3469
BP450	3470
BP452	3683
BP454	3496
BP455	3457
BP456	3529
BP457	3428
BP459	3717
BP462	3583
BP467	3432
BP469	3529
BP470	4212
BP472	3760
BP473	3564
BP474	3873
BP475	3546
BP492	3605
BP496	4087
BP501	3422
BP503	3526
BP512	3634
BP520	3464
BP523	3623
BP531	3563

QHAZELL	BESER
NO	NO
BP532	3578
BP533	3609
BP534	3609
BP537	3487
BP540	3543
BP542	3600
BP544	3425
BP548	3631
BP551	3632
BP552	3502
BP553	3446
BP554	3757
BP554	3857
BP555	3584
BP559	3662
BP564	3723
BP567	3522
BP569	3550
BP570	3408
BP571	3430
BP572	3448
BP575	4087
BP577	3660
BP578	3562
BP579	4104
BP581	3680
BP586	3882
BP589	3560
BP590	4088
BP591	3642
BP593	3641
BP594	3445
BP595	3473
BP596	3491
BP597	3819
BP599	3593
BP600	3558
BP602	3603
BP602	3604
BP603	3598
BP604	3528
BP605	3539
BP606	3531
BP607	3551
BP609	4128
BP610	3878
BP611	3366
BP639	3746
BP647	3679
BP675	3689
BP678	4108
BP680	3779
BP682	3700
BP685	3536
BP691	3590
BP693	3629
BP694	3733
BP696	3596
BP697	3622
BP703	3704
BP704	4148
BP706	3581
BP707	4072
BP717	3640
BP718	3696
BP719	3436
BP721	3426
BP722	4080
BP728	3523
BP733	3607
BP734	3686
BP737	3695
BP739	3685
BP742	3554
BP742	3651
BP744	4078
BP750	3503
BP751	3832
BP754	3556
BP755	3673

QHAZELL	BESER
NO	NO
BP757	3693
BP761	3688
BP762	3833
BP764	3883
BP766	4214
BP768	3658
BP772	3553
BP773	3630
BP778	3635
BP790	3507
BP791	3674
BP792	3887
BP793	3736
BP797	3888
BP799	3608
BP806	3898
BP810	3595
BP811	3559
BP827	3879
BP829	3423
BP833	3545
BP838	3994
BP839	3773
BP840	3512
BP841	3875
BP848	3758
BP852	3583
BP854	3745
BP856	3714
BP862	3617
BP864	3750
BP867	3567
BP868	3678
BP869	3670
BP873	3538
BP874	3505
BP874	3615
BP876	3570
BP876	3594
BP878	3614
BP884	4086
BP891	4182
BP898	3740
BP902	3909
BP903	3799
BP904	3574
BP919	3677
BP920	3863
BP922	3506
BP925	3585
BP927	3656
BP929	3680
BP930	3577
BP956	3867
BP960	3675
BP967	3682
BP968	3636
BP970	3777
BP971	3566
BP973	4062
BP974	3606
BP977	3459
BP978	4020
BP979	3896
BP981	3872
BP982	3722
BP983	3762
BP985	3763
BP992	3754

R BRAKE	BESER
NO	NO
RB0140	3515
RB0164	3709
RB0185	3710
RB0197	3515
RB0224	3806
RB0231	3661
RB0242	3806
RB0257	3527
RB0311	3509
RB0316	3537
RB0323	3339
RB0323	3514
RB0324	3339
RB0324	3514
RB0337	3536
RB0337-700	3536
RB0348	3579
RB0365	3527
RB0388	3646
RB0405	3513
RB0410	3417
RB0417	3493
RB0417-066	3493
RB0420	3611
RB0422	3572
RB0423	3573
RB0444	4087
RB0451	3621
RB0455	3624
RB0455-700	3624
RB0467	3620
RB0473	3625
RB0484	3633
RB0511	3515
RB0517	3550
RB0523	3634
RB0524	3634
RB0542	3603
RB0543	3549
RB0544	3526
RB0557	3546
RB0557-700	3546
RB0611	3449
RB0646	4087
RB0648	3605
RB0648-700	3605
RB0692	3717
RB0697	3529
RB0697-700	3529
RB0697-703	3529
RB0700	3543
RB0700-700	3543
RB0702	3771
RB0722	3679
RB0722-204	3679
RB0725	3746
RB0734	3776
RB0745	3430
RB0745-700	3430
RB0750	3582
RB0751	4212
RB0752	4212
RB0752-701	4212
RB0758	3470
RB0766	3609
RB0766-006	3609
RB0766-6	3609
RB0766-700	3609
RB0771	3622
RB0775	3583
RB0776	3589
RB0778	3583
RB0784	3536
RB0784-700	3536
RB0787	3680
RB0789	3529
RB0789-700	3529
RB0797	3696
RB0798	4148
RB0801	3563

R BRAKE	BESER
NO	NO
RB0804	3660
RB0804-700	3660
RB0809	3649
RB0809-700	3649
RB0812	3873
RB0814	3513
RB0834	3537
RB0835	3650
RB0835-700	3650
RB0836	3619
RB0836-700	3619
RB0837	3641
RB0839	3662
RB0853	3757
RB0853	3857
RB0853-700	3757
RB0853-700	3857
RB0854	3757
RB0854	3857
RB0858	3623
RB0860	3683
RB0860-701	3683
RB0861	3629
RB0861-200	3628
RB0862	3556
RB0862-700	3556
RB0874	3596
RB0875	3603
RB0875	3604
RB0878	4104
RB0879	3640
RB0882	3766
RB0883	3584
RB0884	3692
RB0885	3760
RB0892	3523
RB0892-066	3523
RB0894	3773
RB0894-066	3773
RB0918	4214
RB0920	3819
RB0921	3878
RB0922	4128
RB0924	3608
RB0932	3528
RB0933	3888
RB0933-700	3888
RB0937	3598
RB0938	3545
RB0950	3635
RB0950-700	3635
RB0951	3600
RB0953	3608
RB0958	3686
RB0959	3607
RB0960	4212
RB0962	3631
RB0965	3749
RB0968	4182
RB0969	3723
RB0970	3522
RB0971	3832
RB0973	3658
RB0973-700	3658
RB0974	3630
RB0976	3581
RB0979	3685
RB0980	3688
RB0981	4108
RB0985	3700
RB0988	3736
RB0989	3733
RB0989-700	3733
RB0990	3674
RB0991	3887
RB0999	4078
RB1000	4080
RB1001	3745
RB1002	3882
RB1007	3560

R BRAKE	BESER
NO	NO
RB1018	3643
RB1019	3704
RB1023	3717
RB1026	3673
RB1027	3693
RB1045	4212
RB1051	3578
RB1078	3773
RB1078-110	3773
RB1078-111	3773
RB1078-116	3773
RB1078-117	3773
RB1080-110	3994
RB1080-111	3994
RB1084	3623
RB1090	3512
RB1092	3510
RB1096	3883
RB1101	3779
RB1102	3678
RB1102-046	3678
RB1103	3670
RB1103-046	3670
RB1107	3750
RB1107-700	3750
RB1110	3833
RB1111	3507
RB1111-700	3507
RB1115	3677
RB1116	3602
RB1117	3675
RB1117-700	3675
RB1122	3799
RB1122-700	3799
RB1125	3617
RB1126	3614
RB1126-204	3614
RB1126-700	3614
RB1133	3695
RB1134	3511
RB1134-700	3511
RB1136	3636
RB1136-700	3636
RB1141	3656
RB1142	3570
RB1142	3594
RB1144	4087
RB1152	3505
RB1153	3598
RB1155	3642
RB1155-700	3642
RB1156	3896
RB1156-700	3896
RB1157	3896
RB1157-203	3896
RB1157-700	3896
RB1159	3863
RB1161	3994
RB1161-116	3994
RB1161-117	3994
RB1165	4062
RB1165-700	4062
RB1166	3606
RB1168	4020
RB1170	3777
RB1179	3697
RB1184	3682
RB1185	3740
RB1187	4148

R BRAKE	BESER
NO	NO
RB1204	3659
RB1204-702	3659
RB1208	3575
RB1208-117	3575
RB1208-200	3575
RB1217	3659
RB1217-702	3659
RB1224	3574
RB1228	3781
RB1232	3872
RB1232-701	3872
RB1233	4125
RB1233-701	4125
RB1234	3809
RB1236	4059
RB1236-701	4059
RB1241	3680
RB1243	3618
RB1246	3653
RB1247	4079
RB1249	3762
RB1251	4034
RB1255	3938
RB1255-702	3938
RB1259	3863
RB1260	3687
RB1262	3744
RB1263	3687
RB1264	3754
RB1265	3755
RB1265-700	3755
RB1266	3648
RB1267	3632
RB1268	3778
RB1271	3763
RB1271-702	3763
RB1273	3748
RB1274	4281
RB1274-704	4281
RB1276	4126
RB1277	4069
RB1282	3618
RB1282-700	3618
RB1283	3617
RB1284	3861
RB1287	4155
RB1287-703	4155
RB1288	3681
RB1289	3804
RB1297	3919
RB1298	3918
RB1299	3717
RB1300	4010
RB1304	3768
RB1309	3780
RB1310	3663
RB1311	3676
RB1312	3821
RB1312-202	3821
RB1315	3848
RB1315-701	3848
RB1318	3764
RB1319	3884
RB1320	3794
RB1328	3749
RB1332	3872
RB1335	3943
RB1335-203	3943
RB1338	3782

R BRAKE	BESER
NO	NO
RB1340	3898
RB1342	3901
RB1343	3877
RB1345	3874
RB1348	3897
RB1349	3782
RB1351	3795
RB1351-700	3795
RB1353	3846
RB1353-701	3846
RB1358	3685
RB1363	3763
RB1363-702	3763
RB1366	3470
RB1367	3784
RB1367-701	3784
RB1369	3836
RB1369-701	3836
RB1370	4009
RB1372	3843
RB1374	3892
RB1375-202	3893
RB1380	4100
RB1380-701	4100
RB1381	4093
RB1381-701	4093
RB1386	3769
RB1388	3820
RB1388-701	3820
RB1390	4101
RB1390	4209
RB1391	4103
RB1395	4095
RB1398	4011
RB1406	3934
RB1406-701	3934
RB1419	3935
RB1419-701	3935
RB1428	4094
RB1428-701	4094
RB1429	3800
RB1429-701	3800
RB1431	3950
RB1432	3852
RB1433	3853
RB1436	4197
RB1438	3539
RB1438-700	3539
RB1439	3938
RB1439-702	3938
RB1440	3800
RB1440-203	3800
RB1440-701	3800
RB1441	3790
RB1442	3856
RB1443	4271
RB1444	3826
RB1444-203	3826
RB1444-701	3826
RB1445-208	4301
RB1448	3859
RB1450	3854
RB1450-700	3854
RB1451	3931
RB1451-700	3931
RB1452	3928
RB1455	3802
RB1498	3921
RB1498-701	3921

R BRAKE	BESER
NO	NO
RB1502	4123
RB1502-703	4123
RB1507	3900
RB1508	3790
RB1509	3933
RB1511	3855
RB1511-703	3855
RB1512	4012
RB1513	3817
RB1514	3825
RB1517	4010
RB1518	3548
RB1518	3690
RB1519	4158
RB1520	4153
RB1521	3932
RB1522	3835
RB1522-066	3835
RB1523	3834
RB1523-066	3834
RB1524	3914
RB1524-066	3914
RB1526	3846
RB1526-701	3846
RB1530	3881
RB1532	4119
RB1534	3983
RB1534-700	3983
RB1535	3849
RB1535-701	3849
RB1536	4211
RB1537	3801
RB1540	4028
RB1542	4118
RB1543	4109
RB1543	4232
RB1548	3879
RB1549	3879
RB1550	4347
RB1552	3879
RB1553	3986
RB1553-701	3986
RB1557	3985
RB1558	3831
RB1565	4222
RB1566	3951
RB1567	3904
RB1570	3644
RB1570-700	3644
RB1572	3850
RB1572-701	3850
RB1573	3890
RB1575	4138
RB1575-701	4138
RB1577	4180
RB1578	3889
RB1579	3849
RB1579-701	3849
RB1580	3767
RB1581	4115
RB1583	3769
RB1584	4105
RB1587	4112
RB1589	4027
RB1592	4042
RB1593	4152
RB1593-703	4152
RB1597	4138
RB1597-701	4138
RB1600	3905
RB1600-703	3905
RB1606	3978
RB1607	3788
RB1610	4269
RB1611	4076
RB1614	4345
RB1614-700	4345
RB1617	3885
RB1617-202	3885
RB1617-203	3885

R BRAKE	BESER
NO	NO
RB1618	3765
RB1632	3822
RB1635	3797
RB1640	3823
RB1640-117	3823
RB1643	3961
RB1644	3959
RB1645	3993
RB1646	3895
RB1648	3826
RB1648-701	3826
RB1649	3849
RB1649-701	3849
RB1650	3529
RB1650-703	3529
RB1651	3853
RB1654	4096
RB1656	3939
RB1656-700	3939
RB1657	3940
RB1657-700	3940
RB1658	3946
RB1658-703	3946
RB1659	4173
RB1659-700	4173
RB1660	4293
RB1660-700	4293
RB1661	3944
RB1661-700	3944
RB1665	3891
RB1667	4303
RB1668	4303
RB1673	3800
RB1673-701	3800
RB1674-203	3842
RB1675	3923
RB1675-701	3923
RB1676	3924
RB1679	4137
RB1682	4093
RB1682-701	4093
RB1683	4346
RB1684	4181
RB1687	4179
RB1688	4153
RB1689	3910
RB1695	4159
RB1696	4074
RB1697	4081
RB1702	3987
RB1702-701	3987
RB1703	4017
RB1705	4082
RB1706	3911
RB1708	4001
RB1709	3968
RB1710	3969
RB1711	3880
RB1712	3980
RB1713	4016
RB1714	3976
RB1715	4000
RB1717	3912
RB1719	4084
RB1720	3979
RB1722	4058
RB1722-701	4058
RB1723	3829
RB1727	3894
RB1729	3984
RB1729-701	3984
RB1734	3830
RB1736	3913
RB1743	3853
RB1744	3853

R BRAKE	BESER
NO	NO
RB1746	4106
RB1747	3929
RB1748	3983
RB1751	4111
RB1759	4213
RB1760	3953
RB1761	3949
RB1762	4077
RB1764	3948
RB1765	3984
RB1771	4210
RB1774	3958
RB1775	4161
RB1778	3841
RB1779	3841
RB1784	3975
RB1785	3962
RB1786	3925
RB1787	3926
RB1787-204	3926
RB1789	3945
RB1790	3945
RB1792	3920
RB1793	3906
RB1793-204	3906
RB1794	3907
RB1796	4240
RB1798	3976
RB1800	4036
RB1801	4157
RB1802	3972
RB1803	3981
RB1804	3820
RB1806	3955
RB1809	3800
RB1810-203	3826
RB1813	4002
RB1813-202	4002
RB1817	4072
RB1820	4013
RB1821	4248
RB1822	3988
RB1823	4151
RB1824	3903
RB1825	3853
RB1826	4039
RB1826-201	4039
RB1827	4165
RB1828	3960
RB1829	3989
RB1832	3965
RB1834	4038
RB1835	4260
RB1836	3922
RB1836-203	3922
RB1836-203	4171
RB1837	4092
RB1838	3933
RB1843	4173
RB1843-203	4173
RB1846	3965
RB1849	3963
RB1851	3970
RB1852	3964
RB1854	3966
RB1854-200	3966
RB1855	3967
RB1856	4134
RB1863	4247
RB1865	4249
RB1867	3982
RB1868	4029
RB1869	3956
RB1870	4037
RB1873	3747
RB1874	3996
RB1875	3997
RB1876	4143
RB1880	3995
RB1881	4122

R BRAKE	BESER
NO	NO
RB1881-200	4122
RB1883	3827
RB1887	4160
RB1888	4156
RB1891	4211
RB1892	4147
RB1895	3971
RB1899	3954
RB1901	3933
RB1901-203	3933
RB1903	4121
RB1904	4142
RB1908	4005
RB1909	4004
RB1911	4035
RB1913	4149
RB1915	3964
RB1916	4146
RB1919	4207
RB1921	4309
RB1924	4141
RB1929	4150
RB1939	4008
RB1939-202	4008
RB1942	4230
RB1942-202	4230
RB1943	4014
RB1946	3944
RB1948	3969
RB1953	4162
RB1954	4060
RB1955	3980
RB1956	4291
RB1957-203	4314
RB1958	4169
RB1958-117	4169
RB1967	4135
RB1972	4208
RB1973	4208
RB1974	3886
RB1976	4061
RB1982	4255
RB1983	4256
RB1987	4310
RB1987-200	4310
RB1999	4056
RB2000	4132
RB2000	4172
RB2001	4057
RB2003	3952
RB2003-200	3952
RB2006	4167
RB2019	3983
RB2027	4145
RB2029	4166
RB2030	4220
RB2031	4215
RB2035	4136
RB2036	4311
RB2060	4113
RB2066	3998
RB2067	4006
RB2068	4198
RB2069	4018
RB2074	4015
RB2075	4031
RB2082	4124
RB2088	4258
RB2099	4241
RB2108	4204
RB2110	4200
RB2111-204	4228
RB2115	4140
RB2116	4175
RB2119	4174
RB2126	4315
RB2129	4176
RB2131	4201
RB2133	3748
RB2134	4226

R BRAKE	BESER
NO	NO
RB2136	4233
RB2153	4312
RB2169	4318
RB2170	4286
RB2170-203	4286
RB2171	4317
RB2181	4282
RB2189	4295
RB2202	4308
RB2214	4349
RB2219	4227
RB2222	4287
RB2222-208	4287
RB2223	4284
RB2249	4307
RB2822	4142

RAICAM	BESER
NO	NO
7200	3740
17200	3740
004.0	3320
004.1	3350
015.0	3318
015.3	3318
019.0	3317
020.0	3316
020.1	3346
038.0	3311
044.0	3373
046.0	3321
081.0	3312
081.2	3484
086.3	3333
086.5	3329
095.0	3323
096.0	3709
099.0	3710
1.004.0	3320
1.004.1	3350
1.015.0	3318
1.015.3	3318
1.019.0	3317
1.020.0	3316
1.020.1	3346
1.038.0	3311
1.044.0	3373
1.046.0	3321
1.081.0	3312
1.081.2	3484
1.086.3	3333
1.086.5	3329
1.095.0	3323
1.096.0	3709
1.099.0	3710
1.100.0	3393
1.111.0	3327
1.111.1	3343
1.111.1	3483
1.116.0	3366
1.116.1	3366
1.118.0	3335
1.134.0	3423
1.145.1	3405
1.148.0	3315
1.148.0	3515
1.148.1	3339
1.148.1	3514
1.148.2	3339
1.148.2	3514
1.158.0	3374
1.172.1	3873
1.180.1	3527
1.190.0	3378
1.190.1	3490
1.192.1	3365
1.193.2	3410
1.196.0	3421
1.197.0	3324
1.198.1	3513
1.210.0	3625
1.219.1	3417
1.219.1	3417
1.219.2	3417
1.219.4	3570
1.219.4	3594
1.222.0	3468
1.222.1	3466
1.222.2	3467
1.230.1	3579
1.235.1	3526
1.237.0	3370
1.239.0	3440
1.240.1	3503
1.250.0	3424
1.256.1	3381
1.256.2	3495
1.257.0	3493
1.257.2	3496

RAICAM	BESER
NO	NO
1.258.0	3419
1.259.0	3419
1.259.1	3429
1.279.0	3509
1.280.0	3806
1.280.1	3806
1.285.0	3380
1.285.1	3487
1.285.3	3580
1.290.0	3621
1.291.0	3486
1.291.1	3444
1.291.2	3585
1.292.0	3441
1.293.0	3573
1.296.1	3474
1.296.3	3474
1.297.0	3430
1.297.1	3609
1.306.0	3892
1.307.0	3988
1.309.0	3536
1.309.1	3536
1.309.2	3536
1.310.0	3551
1.310.2	3531
1.311.0	3572
1.311.1	3583
1.311.2	3572
1.312.0	3611
1.312.1	3550
1.314.0	3624
1.317.0	3603
1.318.1	3549
1.318.3	3548
1.318.3	3690
1.318.4	3790
1.322.0	3408
1.322.1	3408
1.324.0	3428
1.329.0	3482
1.330.1	3543
1.331.1	3459
1.331.2	3540
1.331.5	3458
1.331.6	3569
1.331.7	3568
1.339.2	3523
1.340.0	3709
1.341.0	3501
1.341.1	3752
1.344.0	3605
1.345.0	3425
1.346.0	4135
1.347.0	3457
1.347.1	3610
1.348.0	3529
1.348.1	3529
1.348.3	4152
1.348.4	3529
1.348.7	3529
1.349.0	3491
1.349.1	3432
1.350.0	3422
1.353.0	3552
1.384.0	3589
1.387.0	3656
1.388.0	3539
1.388.1	3546
1.388.2	3539
1.388.3	3539
1.389.0	3717
1.390.1	3556
1.393.0	3564
1.394.0	3578
1.395.0	3470
1.395.1	3505
1.395.1	3615
1.395.2	3505
1.395.2	3615

RAICAM	BESER
NO	NO
1.396.0	3469
1.398.0	3464
1.398.1	3722
1.399.0	4160
1.402.0	3430
1.404.0	3609
1.405.0	3433
1.405.1	3433
1.409.1	3423
1.409.2	3423
1.411.0	3886
1.412.0	4104
1.413.0	3562
1.417.0	3641
1.420.0	3978
1.421.0	3979
1.422.0	4124
1.425.0	3976
1.427.0	3623
1.429.0	3590
1.429.3	3590
1.430.1	4020
1.432.0	3462
1.433.0	3446
1.435.0	3748
1.436.0	3563
1.437.0	3746
1.438.0	3819
1.439.0	3878
1.440.0	3646
1.442.0	3600
1.444.0	3436
1.445.0	4173
1.445.1	4173
1.446.0	3608
1.446.0E	3608
1.446.1	3643
1.446.9	3643
1.447.1	3473
1.448.0	3558
1.449.0	3593
1.450.0	4214
1.451.1	4212
1.453.0	4212
1.454.0	3686
1.455.0	3631
1.456.0	4269
1.457.0	3504
1.457.1	3502
1.460.0	4148
1.460.1	4148
1.462.1	3445
1.465.0	3831
1.468.0	3453
1.469.0	3662
1.470.0	3723
1.472.0	3640
1.473.0	3522
1.474.0	4118
1.475.0	3889
1.480.0	3629
1.480.1	3628
1.480.2	3629
1.482.0	3658
1.482.1	3658
1.484.0	3689
1.485.0	3679
1.485.1	3994
1.485.2	3994
1.486.0	3400
1.487.0	4028
1.490.0	3697
1.492.0	3622
1.495.0	3448
1.496.0	3401
1.498.0	3766
1.498.1	3598
1.501.0	3632
1.501.2	3632
1.503.0	3961

RAICAM	BESER
NO	NO
1.504.0	4087
1.505.1	3700
1.506.0	3928
1.506.1	3928
1.510.0	3802
1.510.1	3802
1.511.0	4009
1.512.0	3968
1.513.0	3581
1.514.0	3758
1.514.1	3397
1.515.0	3503
1.515.1	3503
1.516.0	3779
1.517.0	3959
1.519.0	4128
1.525.0	3415
1.526.0	3933
1.526.1	3933
1.527.0	3760
1.527.1	3692
1.528.0	3823
1.530.0	3942
1.530.1	3942
1.531.0	4001
1.532.0	4106
1.535.0	3733
1.537.0	3528
1.539.0	3680
1.539.2	3680
1.541.0	3736
1.542.0	3825
1.543.0	3596
1.545.0	4079
1.546.0	3764
1.547.2	3537
1.548.0	4017
1.551.0	3683
1.552.1	3872
1.554.1	3879
1.554.3	4181
1.556.0	4094
1.557.0	3913
1.558.0	3426
1.559.0	3912
1.560.0	3884
1.564.0	3882
1.565.0	3883
1.567.0	3890
1.568.0	4153
1.569.0	3822
1.570.0	3776
1.574.0	3817
1.575.0	3402
1.576.0	3714
1.578.0	3929
1.579.0	3371
1.580.0	3560
1.580.2	3560
1.581.0	3910
1.586.0	3642
1.589.0	3832
1.591.0	3685
1.591.1	3685
1.592.0	3688
1.594.0	3955
1.597.0	3660
1.600.0	3674
1.601.0	3887
1.608.1	3496
1.611.0	3666
1.612.1	3897
1.613.0	4010
1.614.0	3618
1.615.0	3617
1.617.0	3595
1.618.0	3559
1.619.0	3799
1.621.0	3750
1.623.0	3538

RAICAM	BESER
NO	NO
1.623.1	3566
1.623.2	3637
1.624.0	3554
1.624.0	3651
1.627.0	3567
1.628.0	3678
1.629.0	3670
1.629.1	3670
1.633.0	3677
1.636.0	3603
1.636.0	3604
1.640.0	3740
1.641.0	3545
1.643.0	3778
1.644.0	3744
1.645.0	3687
1.645.1	3687
1.646.0	3687
1.647.0	3951
1.648.0	3395
1.649.0	3511
1.652.0	3659
1.652.1	3938
1.653.0	3682
1.653.1	3782
1.653.2	3782
1.653.3	3782
1.654.0	3863
1.655.0	3636
1.655.1	3644
1.656.0	4125
1.657.0	3577
1.658.0	3598
1.660.0	3675
1.662.0	4062
1.663.0	3762
1.665.0	3763
1.666.0	3614
1.666.1	3614
1.667.0	3575
1.667.1	3575
1.668.0	3553
1.668.1	3553
1.669.0	3606
1.669.1	3794
1.675.0	3994
1.679.0	3768
1.680.0	3754
1.681.0	3755
1.682.0	4281
1.683.0	4027
1.687.1	3841
1.688.0	3804
1.690.2	3795
1.691.0	4093
1.692.0	4271
1.693.0	3919
1.694.0	3918
1.695.0	3896
1.695.1	3896
1.695.2	3896
1.696.0	4059
1.697.0	3943
1.699.0	3704
1.700.0	4123
1.703.0	3888
1.704.0	3790
1.704.1	4141
1.705.0	3749
1.705.1	3749
1.706.0	3809
1.708.0	3877
1.711.0	4100
1.711.1	4100
1.712.0	3846
1.712.2	3846
1.714.0	3681
1.715.0	3861
1.718.1	4197
1.723.0	3820

RAICAM	BESER
NO	NO
1.724.0	3800
1.725.0	3820
1.729.0	3901
1.732.0	3780
1.733.0	3843
1.735.0	4126
1.736.0	4069
1.737.0	3676
1.738.0	3898
1.739.0	3663
1.740.0	3507
1.741.0	4095
1.745.0	3634
1.747.0	3436
1.748.0	3607
1.750.0	3821
1.751.0	3696
1.755.0	3757
1.755.0	3857
1.756.0	3784
1.757.0	3921
1.758.0	3849
1.760.0	3826
1.760.1	3826
1.760.2	3826
1.760.4	3826
1.760.8	3826
1.761.0	3800
1.761.1	3800
1.761.2	3800
1.761.3	3800
1.763.0	3934
1.765.0	3935
1.767.0	4115
1.768.8	3826
1.769.0	3853
1.769.1	3853
1.769.2	3853
1.769.3	3853
1.770.0	3852
1.771.0	3437
1.772.0	3909
1.773.0	3834
1.774.0	3835
1.775.0	3914
1.778.0	4138
1.778.1	4138
1.780.0	4158
1.781.0	4153
1.782.0	3855
1.783.0	3856
1.785.0	3801
1.786.0	3836
1.788.0	3881
1.789.0	4180
1.790.0	4101
1.790.0	4209
1.791.0	4102
1.792.0	4112
1.793.2	4345
1.794.0	3854
1.795.0	3931
1.796.0	3986
1.797.0	4211
1.801.0	4137
1.803.0	3769
1.804.0	3788
1.805.0	3983
1.805.1	3983
1.810.0	4155
1.811.0	4013
1.813.0	3650
1.813.1	3619
1.813.2	3649
1.813.3	3635
1.814.0	3850
1.815.1	4040
1.816.0	4042
1.817.0	3904
1.818.0	3905

RAICAM	BESER
NO	NO
1.818.1	3905
1.819.0	3842
1.820.0	3885
1.821.0	4097
1.823.0	3950
1.823.1	3950
1.824.4	4096
1.828.0	4012
1.833.0	3993
1.835.0	3976
1.836.0	4093
1.838.0	3940
1.839.0	3939
1.840.0	3946
1.841.0	3984
1.844.0	3923
1.844.1	3923
1.845.0	3924
1.856.0	3648
1.857.0	3841
1.858.0	3987
1.863.0	3958
1.864.0	3954
1.866.0	4077
1.867.0	3949
1.869.0	3673
1.871.0	3891
1.874.0	4210
1.876.0	4011
1.878.0	4031
1.879.0	4248
1.880.0	4247
1.881.0	3900
1.882.0	4293
1.883.0	3944
1.885.0	3981
1.885.2	3981
1.886.0	3922
1.886.3	3922
1.886.3	4171
1.887.0	3820
1.889.0	3964
1.892.0	3906
1.892.1	3906
1.893.0	3907
1.894.0	4161
1.895.0	4157
1.897.0	4058
1.900.0	3925
1.901.0	3963
1.902.0	3962
1.903.0	3926
1.905.0	3920
1.906.0	3965
1.906.1	3965
1.907.0	4092
1.911.0	3972
1.912.0	4151
1.913.0	4259
1.914.0	4249
1.914.1	4249
1.915.0	4260
1.917.0	3985
1.919.1	3904
1.920.0	3970
1.923.0	3967
1.924.0	3966
1.924.1	3966
1.925.0	3953
1.926.0	3956
1.928.0	4037
1.930.0	4134
1.931.0	4260
1.933.0	4240
1.939.0	4143
1.940.0	4122
1.940.1	4122
1.941.0	4142
1.942.0	3964
1.943.0	4121

RAICAM	BESER
NO	NO
1.944.0	3995
1.945.0	3971
1.950.0	4038
1.954.0	4146
1.962.0	4004
1.964.0	4150
1.965.0	4159
1.967.0	3827
1.968.0	4008
1.969.0	4230
1.973.0	4014
1.974.0	3880
1.975.0	3975
1.976.0	4029
1.977.0	4213
1.978.0	4036
100.0	3393
111.0	3327
111.1	3343
111.1	3483
116.0	3366
116.1	3366
118.0	3335
134.0	3423
145.1	3405
148.0	3315
148.0	3515
148.1	3339
148.1	3514
148.2	3339
148.2	3514
158.0	3374
172.1	3873
180.1	3527
190.0	3378
190.1	3490
192.1	3365
193.2	3410
196.0	3421
197.0	3324
198.1	3513
210.0	3625
219.1	3417
219.1	3417
219.2	3417
219.4	3570
219.4	3594
222.0	3468
222.1	3466
222.2	3467
230.1	3579
235.1	3526
237.0	3370
239.0	3440
240.1	3503
250.0	3424
256.1	3381
256.2	3495
257.0	3493
257.2	3496
258.0	3419
259.0	3419
259.1	3429
279.0	3509
280.0	3806
280.1	3806
285.0	3380
285.1	3487
285.3	3580
290.0	3621
291.0	3486
291.1	3444
291.2	3585
292.0	3441
293.0	3573
296.1	3474
296.3	3474
297.0	3430
297.1	3609
306.0	3892

RAICAM	BESER
NO	NO
307.0	3988
309.0	3536
309.1	3536
309.2	3536
310.0	3551
310.2	3531
311.0	3572
311.1	3583
311.2	3572
312.0	3611
312.1	3550
314.0	3624
317.0	3603
318.1	3549
318.3	3548
318.3	3690
318.4	3790
322.0	3408
322.1	3408
324.0	3428
329.0	3482
330.1	3543
331.1	3459
331.2	3540
331.5	3458
331.6	3569
331.7	3568
339.2	3523
340.0	3709
341.0	3501
341.1	3752
344.0	3605
345.0	3425
346.0	4135
347.0	3457
347.1	3610
348.0	3529
348.1	3529
348.3	4152
348.4	3529
348.7	3529
349.0	3491
349.1	3432
350.0	3422
353.0	3552
384.0	3589
387.0	3656
388.0	3539
388.1	3546
388.2	3539
388.3	3539
389.0	3717
390.1	3556
393.0	3564
394.0	3578
395.0	3470
395.1	3505
395.1	3615
395.2	3505
395.2	3615
396.0	3469
398.0	3464
398.1	3722
399.0	4160
402.0	3430
404.0	3609
405.0	3433
405.1	3433
409.1	3423
409.2	3423
411.0	3886
412.0	4104
413.0	3562
417.0	3641
420.0	3978
421.0	3979
422.0	4124
425.0	3976
427.0	3623
429.0	3590

RAICAM	BESER
NO	NO
429.3	3590
430.1	4020
432.0	3462
433.0	3446
435.0	3748
436.0	3563
437.0	3746
438.0	3819
439.0	3878
440.0	3646
442.0	3600
444.0	3436
445.0	4173
445.1	4173
446.0	3608
446.0E	3608
446.1	3643
446.9	3643
447.1	3473
448.0	3558
449.0	3593
450.0	4214
451.1	4212
453.0	4212
454.0	3686
455.0	3631
456.0	4269
457.0	3504
457.1	3502
460.0	4148
460.1	4148
462.1	3445
465.0	3831
468.0	3453
469.0	3662
470.0	3723
472.0	3640
473.0	3522
474.0	4118
475.0	3889
480.0	3629
480.1	3628
480.2	3629
482.0	3658
482.1	3658
484.0	3689
485.0	3679
485.1	3994
485.2	3994
486.0	3400
487.0	4028
490.0	3697
492.0	3622
495.0	3448
496.0	3401
498.0	3766
498.1	3598
501.0	3632
501.2	3632
503.0	3961
504.0	4087
505.1	3700
506.0	3928
506.1	3928
510.0	3802
510.1	3802
511.0	4009
512.0	3968
513.0	3581
514.0	3758
514.1	3397
515.0	3503
515.1	3503
516.0	3779
517.0	3959
519.0	4128
525.0	3415
526.0	3933
526.1	3933
527.0	3760

RAICAM	BESER
NO	NO
527.1	3692
528.0	3823
530.0	3942
530.1	3942
531.0	4001
532.0	4106
535.0	3733
537.0	3528
539.0	3680
539.2	3680
541.0	3736
542.0	3825
543.0	3596
545.0	4079
546.0	3764
547.2	3537
548.0	4017
551.0	3683
552.1	3872
554.1	3879
554.3	4181
556.0	4094
557.0	3913
558.0	3426
559.0	3912
560.0	3884
564.0	3882
565.0	3883
567.0	3890
568.0	4153
569.0	3822
570.0	3776
574.0	3817
575.0	3402
576.0	3714
578.0	3929
579.0	3371
580.0	3560
580.2	3560
581.0	3910
586.0	3642
589.0	3832
591.0	3685
591.1	3685
592.0	3688
594.0	3955
597.0	3660
600.0	3674
601.0	3887
608.1	3496
611.0	3666
612.1	3897
613.0	4010
614.0	3618
615.0	3617
617.0	3595
618.0	3559
619.0	3799
621.0	3750
623.0	3538
623.1	3566
623.2	3637
624.0	3554
624.0	3651
627.0	3567
628.0	3678
629.0	3670
629.1	3670
633.0	3677
636.0	3603
636.0	3604
640.0	3740
641.0	3545
643.0	3778
644.0	3744
645.0	3687
645.1	3687
646.0	3687
647.0	3951
648.0	3395

RAICAM	BESER
NO	NO
649.0	3511
652.0	3659
652.1	3938
653.0	3682
653.1	3782
653.2	3782
653.3	3782
654.0	3863
655.0	3636
655.1	3644
656.0	4125
657.0	3577
658.0	3598
660.0	3675
662.0	4062
663.0	3762
665.0	3763
666.0	3614
666.1	3614
667.0	3575
667.1	3575
668.0	3553
668.1	3553
669.0	3606
669.1	3794
675.0	3994
679.0	3768
680.0	3754
681.0	3755
682.0	4281
683.0	4027
687.1	3841
688.0	3804
690.2	3795
691.0	4093
692.0	4271
693.0	3919
694.0	3918
695.0	3896
695.1	3896
695.2	3896
696.0	4059
697.0	3943
699.0	3704
700.0	4123
703.0	3888
704.0	3790
704.1	4141
705.0	3749
705.1	3749
706.0	3809
708.0	3877
711.0	4100
711.1	4100
712.0	3846
712.2	3846
714.0	3681
715.0	3861
718.1	4197
723.0	3820
724.0	3800
725.0	3820
729.0	3901
732.0	3780
733.0	3843
735.0	4126
736.0	4069
737.0	3676
738.0	3898
739.0	3663
740.0	3507
741.0	4095
745.0	3634
747.0	3436
748.0	3607
750.0	3821
751.0	3696
755.0	3757
755.0	3857
756.0	3784

RAICAM	BESER
NO	NO
757.0	3921
758.0	3849
760.0	3826
760.1	3826
760.2	3826
760.4	3826
760.8	3826
761.0	3800
761.1	3800
761.2	3800
761.3	3800
763.0	3934
765.0	3935
767.0	4115
768.8	3826
769.0	3853
769.1	3853
769.2	3853
769.3	3853
770.0	3852
771.0	3437
772.0	3909
773.0	3834
774.0	3835
775.0	3914
778.0	4138
778.1	4138
780.0	4158
781.0	4153
782.0	3855
783.0	3856
785.0	3801
786.0	3836
788.0	3881
789.0	4180
790.0	4101
790.0	4209
791.0	4102
792.0	4112
793.2	4345
794.0	3854
795.0	3931
796.0	3986
797.0	4211
801.0	4137
803.0	3769
804.0	3788
805.0	3983
805.1	3983
810.0	4155
811.0	4013
813.0	3650
813.1	3619
813.2	3649
813.3	3635
814.0	3850
815.1	4040
816.0	4042
817.0	3904
818.0	3905
818.1	3905
819.0	3842
820.0	3885
821.0	4097
823.0	3950
823.1	3950
824.4	4096
828.0	4012
833.0	3993
835.0	3976
836.0	4093
838.0	3940
839.0	3939
840.0	3946
841.0	3984
844.0	3923
844.1	3923
845.0	3924
856.0	3648
857.0	3841

RAICAM	BESER
NO	NO
858.0	3987
863.0	3958
864.0	3954
866.0	4077
867.0	3949
869.0	3673
871.0	3891
874.0	4210
876.0	4011
878.0	4031
879.0	4248
880.0	4247
881.0	3900
882.0	4293
883.0	3944
885.0	3981
885.2	3981
886.0	3922
886.3	3922
886.3	4171
887.0	3820
889.0	3964
892.0	3906
892.1	3906
893.0	3907
894.0	4161
895.0	4157
897.0	4058
900.0	3925
901.0	3963
902.0	3962
903.0	3926
905.0	3920
906.0	3965
906.1	3965
907.0	4092
911.0	3972
912.0	4151
913.0	4259
914.0	4249
914.1	4249
915.0	4260
917.0	3985
919.1	3904
920.0	3970
923.0	3967
924.0	3966
925.0	3953
926.0	3956
928.0	4037
930.0	4134
931.0	4260
933.0	4240
939.0	4143
940.0	4122
940.1	4122
941.0	4142
942.0	3964
943.0	4121
944.0	3995
945.0	3971
950.0	4038
954.0	4146
962.0	4004
964.0	4150
965.0	4159
967.0	3827
968.0	4008
969.0	4230
973.0	4014
974.0	3880
975.0	3975
976.0	4029
977.0	4213
978.0	4036
993.1	4228
RA.0096.0	3709
RA.0099.0	3710
RA.0130.0	4284
RA.0148.0	3515

RAICAM	BESER
NO	NO
RA.0148.1	3339
RA.0148.1	3514
RA.0148.2	3339
RA.0148.2	3514
RA.0172.1	3873
RA.0180.1	3527
RA.0198.1	3513
RA.0210.0	3625
RA.0219.1	3417
RA.0219.4	3570
RA.0219.4	3594
RA.0230.1	3579
RA.0235.1	3526
RA.0257.0	3493
RA.0279.0	3509
RA.0280.0	3806
RA.0280.1	3806
RA.0290.0	3621
RA.0293.0	3573
RA.0297.0	3430
RA.0297.1	3609
RA.0306.0	3892
RA.0307.0	3988
RA.0309.0	3536
RA.0309.1	3536
RA.0309.2	3536
RA.0311.0	3572
RA.0311.1	3583
RA.0311.2	3572
RA.0312.0	3611
RA.0312.1	3550
RA.0314.0	3624
RA.0317.0	3603
RA.0318.1	3549
RA.0318.3	3548
RA.0318.3	3690
RA.0318.4	3790
RA.0330.1	3543
RA.0339.2	3523
RA.0340.0	3709
RA.0344.0	3605
RA.0346.0	4135
RA.0348.0	3529
RA.0348.1	3529
RA.0348.3	4152
RA.0348.4	3529
RA.0348.7	3529
RA.0384.0	3589
RA.0387.0	3656
RA.0388.1	3546
RA.0388.2	3539
RA.0388.3	3539
RA.0389.0	3717
RA.0390.1	3556
RA.0394.0	3578
RA.0395.0	3470
RA.0395.1	3505
RA.0395.2	3505
RA.0399.0	4160
RA.0402.0	3430
RA.0404.0	3609
RA.0411.0	3886
RA.0412.0	4104
RA.0417.0	3641
RA.0420.0	3978
RA.0421.0	3979
RA.0422.0	4124
RA.0423.0	4308
RA.0425.0	3976
RA.0427.0	3623
RA.0430.1	4020
RA.0435.0	3748
RA.0436.0	3563
RA.0437.0	3746
RA.0438.0	3819
RA.0439.0	3878
RA.0440.0	3646
RA.0442.0	3600
RA.0445.0	4173
RA.0445.1	4173

RAICAM	BESER
NO	NO
RA.0446.0	3608
RA.0446.0E	3608
RA.0446.1	3643
RA.0446.9	3643
RA.0450.0	4214
RA.0451.1	4212
RA.0453.0	4212
RA.0454.0	3686
RA.0455.0	3631
RA.0456.0	4269
RA.0460.0	4148
RA.0460.1	4148
RA.0465.0	3831
RA.0469.0	3662
RA.0470.0	3723
RA.0472.0	3640
RA.0473.0	3522
RA.0474.0	4118
RA.0475.0	3889
RA.0480.0	3629
RA.0480.1	3628
RA.0480.2	3629
RA.0482.0	3658
RA.0482.1	3658
RA.0484.0	3689
RA.0485.0	3679
RA.0485.1	3994
RA.0485.2	3994
RA.0487.0	4028
RA.0490.0	3697
RA.0492.0	3622
RA.0498.0	3766
RA.0498.1	3598
RA.0501.0	3632
RA.0501.2	3632
RA.0503.0	3961
RA.0504.0	4087
RA.0505.1	3700
RA.0506.0	3928
RA.0506.1	3928
RA.0510.0	3802
RA.0510.1	3802
RA.0511.0	4009
RA.0512.0	3968
RA.0513.0	3581
RA.0516.0	3779
RA.0517.0	3959
RA.0519.0	4128
RA.0526.0	3933
RA.0526.1	3933
RA.0527.0	3760
RA.0527.1	3692
RA.0528.0	3823
RA.0530.0	3942
RA.0530.1	3942
RA.0531.0	4001
RA.0532.0	4106
RA.0535.0	3733
RA.0537.0	3528
RA.0539.0	3680
RA.0539.2	3680
RA.0541.0	3736
RA.0542.0	3825
RA.0543.0	3596
RA.0545.0	4079
RA.0546.0	3764
RA.0547.2	3537
RA.0548.0	4017
RA.0551.0	3683
RA.0552.1	3872
RA.0554.1	3879
RA.0554.3	4181
RA.0556.0	4094
RA.0557.0	3913
RA.0559.0	3912
RA.0560.0	3884
RA.0564.0	3882
RA.0565.0	3883
RA.0567.0	3890
RA.0568.0	4153

RAICAM	BESER
NO	NO
RA.0569.0	3822
RA.0570.0	3776
RA.0574.0	3817
RA.0578.0	3929
RA.0580.0	3560
RA.0580.2	3560
RA.0581.0	3910
RA.0586.0	3642
RA.0589.0	3832
RA.0591.0	3685
RA.0591.1	3685
RA.0592.0	3688
RA.0594.0	3955
RA.0597.0	3660
RA.0600.0	3674
RA.0601.0	3887
RA.0611.0	3666
RA.0612.1	3897
RA.0613.0	4010
RA.0614.0	3618
RA.0615.0	3617
RA.0619.0	3799
RA.0621.0	3750
RA.0628.0	3678
RA.0629.0	3670
RA.0629.1	3670
RA.0633.0	3677
RA.0636.0	3603
RA.0636.0	3604
RA.0640.0	3740
RA.0641.0	3545
RA.0643.0	3778
RA.0644.0	3744
RA.0645.0	3687
RA.0645.1	3687
RA.0646.0	3687
RA.0647.0	3951
RA.0649.0	3511
RA.0652.0	3659
RA.0652.1	3938
RA.0653.0	3682
RA.0653.1	3782
RA.0653.2	3782
RA.0653.3	3782
RA.0654.0	3863
RA.0655.0	3636
RA.0655.1	3644
RA.0656.0	4125
RA.0658.0	3598
RA.0660.0	3675
RA.0662.0	4062
RA.0663.0	3762
RA.0665.0	3763
RA.0666.0	3614
RA.0666.1	3614
RA.0667.0	3575
RA.0667.1	3575
RA.0669.0	3606
RA.0669.1	3794
RA.0675.0	3994
RA.0679.0	3768
RA.0680.0	3754
RA.0681.0	3755
RA.0682.0	4281
RA.0683.0	4027
RA.0687.1	3841
RA.0688.0	3804
RA.0690.2	3795
RA.0691.0	4093
RA.0692.0	4271
RA.0693.0	3919
RA.0694.0	3918
RA.0695.0	3896
RA.0695.1	3896
RA.0695.2	3896
RA.0696.0	4059
RA.0697.0	3943
RA.0699.0	3704
RA.0700.0	4123
RA.0703.0	3888

RAICAM	BESER
NO	NO
RA.0704.0	3790
RA.0704.1	4141
RA.0705.0	3749
RA.0705.1	3749
RA.0706.0	3809
RA.0708.0	3877
RA.0711.0	4100
RA.0711.1	4100
RA.0712.0	3846
RA.0712.2	3846
RA.0714.0	3681
RA.0715.0	3861
RA.0718.1	4197
RA.07200	3740
RA.0723.0	3820
RA.0724.0	3800
RA.0725.0	3820
RA.0729.0	3901
RA.0732.0	3780
RA.0733.0	3843
RA.0735.0	4126
RA.0736.0	4069
RA.0737.0	3676
RA.0738.0	3898
RA.0739.0	3663
RA.0740.0	3507
RA.0741.0	4095
RA.0745.0	3634
RA.0748.0	3607
RA.0750.0	3821
RA.0751.0	3696
RA.0755.0	3757
RA.0755.0	3857
RA.0756.0	3784
RA.0757.0	3921
RA.0758.0	3849
RA.0760.0	3826
RA.0760.1	3826
RA.0760.2	3826
RA.0760.4	3826
RA.0760.8	3826
RA.0761.0	3800
RA.0761.1	3800
RA.0761.2	3800
RA.0761.3	3800
RA.0762.3	4301
RA.0763.0	3934
RA.0765.0	3935
RA.0767.0	4115
RA.0768.8	3826
RA.0769.0	3853
RA.0769.1	3853
RA.0769.2	3853
RA.0769.3	3853
RA.0770.0	3852
RA.0772.0	3909
RA.0773.0	3834
RA.0774.0	3835
RA.0775.0	3914
RA.0778.0	4138
RA.0778.1	4138
RA.0780.0	4158
RA.0781.0	4153
RA.0782.0	3855
RA.0783.0	3856
RA.0785.0	3801
RA.0786.0	3836
RA.0788.0	3881
RA.0789.0	4180
RA.0790.0	4101
RA.0790.0	4209
RA.0791.0	4102
RA.0792.0	4112
RA.0793.2	4345
RA.0794.0	3854
RA.0795.0	3931
RA.0796.0	3986
RA.0797.0	4211
RA.0801.0	4137
RA.0803.0	3769

RAICAM	BESER
NO	NO
RA.0804.0	3788
RA.0805.0	3983
RA.0805.1	3983
RA.0810.0	4155
RA.0811.0	4013
RA.0813.0	3650
RA.0813.1	3619
RA.0813.2	3649
RA.0813.3	3635
RA.0814.0	3850
RA.0815.1	4040
RA.0816.0	4042
RA.0817.0	3904
RA.0818.0	3905
RA.0818.1	3905
RA.0819.0	3842
RA.0820.0	3885
RA.0821.0	4097
RA.0823.0	3950
RA.0823.1	3950
RA.0824.4	4096
RA.0828.0	4012
RA.0833.0	3993
RA.0835.0	3976
RA.0836.0	4093
RA.0838.0	3940
RA.0839.0	3939
RA.0840.0	3946
RA.0841.0	3984
RA.0844.0	3923
RA.0844.1	3923
RA.0845.0	3924
RA.0856.0	3648
RA.0857.0	3841
RA.0858.0	3987
RA.0863.0	3958
RA.0864.0	3954
RA.0866.0	4077
RA.0867.0	3949
RA.0869.0	3673
RA.0871.0	3891
RA.0874.0	4210
RA.0876.0	4011
RA.0878.0	4031
RA.0879.0	4248
RA.0880.0	4247
RA.0881.0	3900
RA.0882.0	4293
RA.0883.0	3944
RA.0885.0	3981
RA.0885.2	3981
RA.0886.0	3922
RA.0886.3	3922
RA.0886.3	4171
RA.0887.0	3820
RA.0889.0	3964
RA.0892.0	3906
RA.0892.1	3906
RA.0893.0	3907
RA.0894.0	4161
RA.0895.0	4157
RA.0897.0	4058
RA.0900.0	3925
RA.0901.0	3963
RA.0902.0	3962
RA.0903.0	3926
RA.0905.0	3920
RA.0906.0	3965
RA.0906.1	3965
RA.0907.0	4092
RA.0911.0	3972
RA.0912.0	4151
RA.0913.0	4259
RA.0914.0	4249
RA.0914.1	4249
RA.0915.0	4260
RA.0917.0	3985
RA.0919.1	3904
RA.0920.0	3970
RA.0923.0	3967

RAICAM	BESER
NO	NO
RA.0924.0	3966
RA.0925.0	3953
RA.0926.0	3956
RA.0928.0	4037
RA.0930.0	4134
RA.0931.0	4260
RA.0933.0	4240
RA.0939.0	4143
RA.0940.0	4122
RA.0940.1	4122
RA.0941.0	4142
RA.0942.0	3964
RA.0943.0	4121
RA.0944.0	3995
RA.0945.0	3971
RA.0950.0	4038
RA.0954.0	4146
RA.0962.0	4004
RA.0964.0	4150
RA.0965.0	4159
RA.0967.0	3827
RA.0968.0	4008
RA.0969.0	4230
RA.0973.0	4014
RA.0974.0	3880
RA.0975.0	3975
RA.0976.0	4029
RA.0977.0	4213
RA.0978.0	4036
RA.0993.1	4228
RA.1096.0	3709
RA.1099.0	3710
RA.1117.0	4287
RA.1148.0	3515
RA.1148.1	3339
RA.1148.1	3514
RA.1148.2	3339
RA.1148.2	3514
RA.1154.0	4312
RA.1172.1	3873
RA.1180.1	3527
RA.1184.0	4280
RA.1191.0	4279
RA.1198.1	3513
RA.1210.0	3625
RA.1219.1	3417
RA.1219.4	3570
RA.1219.4	3594
RA.1230.1	3579
RA.1235.1	3526
RA.1257.0	3493
RA.1279.0	3509
RA.1280.0	3806
RA.1280.1	3806
RA.1290.0	3621
RA.1293.0	3573
RA.1297.0	3430
RA.1297.1	3609
RA.1306.0	3892
RA.1307.0	3988
RA.1309.0	3536
RA.1309.1	3536
RA.1309.2	3536
RA.1311.0	3572
RA.1311.1	3583
RA.1311.2	3572
RA.1312.0	3611
RA.1312.1	3550
RA.1314.0	3624
RA.1317.0	3603
RA.1318.1	3549
RA.1318.3	3548
RA.1318.3	3690
RA.1318.4	3790
RA.1330.1	3543
RA.1339.2	3523
RA.1340.0	3709
RA.1344.0	3605
RA.1346.0	4135
RA.1348.0	3529

RAICAM	BESER
NO	NO
RA.1348.1	3529
RA.1348.3	4152
RA.1348.4	3529
RA.1348.7	3529
RA.1384.0	3589
RA.1387.0	3656
RA.1388.1	3546
RA.1388.2	3539
RA.1388.3	3539
RA.1389.0	3717
RA.1390.1	3556
RA.1394.0	3578
RA.1395.0	3470
RA.1395.1	3505
RA.1395.2	3505
RA.1399.0	4160
RA.1402.0	3430
RA.1404.0	3609
RA.1411.0	3886
RA.1412.0	4104
RA.1417.0	3641
RA.1420.0	3978
RA.1421.0	3979
RA.1422.0	4124
RA.1425.0	3976
RA.1427.0	3623
RA.1430.1	4020
RA.1435.0	3748
RA.1436.0	3563
RA.1437.0	3746
RA.1438.0	3819
RA.1439.0	3878
RA.1440.0	3646
RA.1442.0	3600
RA.1445.0	4173
RA.1445.1	4173
RA.1446.0	3608
RA.1446.0E	3608
RA.1446.1	3643
RA.1446.9	3643
RA.1450.0	4214
RA.1451.1	4212
RA.1453.0	4212
RA.1454.0	3686
RA.1455.0	3631
RA.1456.0	4269
RA.1460.0	4148
RA.1460.1	4148
RA.1465.0	3831
RA.1469.0	3662
RA.1470.0	3723
RA.1472.0	3640
RA.1473.0	3522
RA.1474.0	4118
RA.1475.0	3889
RA.1480.0	3629
RA.1480.1	3628
RA.1480.2	3629
RA.1482.0	3658
RA.1482.1	3658
RA.1484.0	3689
RA.1485.0	3679
RA.1485.1	3994
RA.1485.2	3994
RA.1487.0	4028
RA.1490.0	3697
RA.1492.0	3622
RA.1498.0	3766
RA.1498.1	3598
RA.1501.0	3632
RA.1501.2	3632
RA.1503.0	3961
RA.1504.0	4087
RA.1505.1	3700
RA.1506.0	3928
RA.1506.1	3928
RA.1510.0	3802
RA.1510.1	3802
RA.1511.0	4009
RA.1512.0	3968

RAICAM	BESER
NO	NO
RA.1513.0	3581
RA.1516.0	3779
RA.1517.0	3959
RA.1519.0	4128
RA.1526.0	3933
RA.1526.1	3933
RA.1527.0	3760
RA.1527.1	3692
RA.1528.0	3823
RA.1530.0	3942
RA.1530.1	3942
RA.1531.0	4001
RA.1532.0	4106
RA.1535.0	3733
RA.1537.0	3528
RA.1539.0	3680
RA.1539.2	3680
RA.1541.0	3736
RA.1542.0	3825
RA.1543.0	3596
RA.1545.0	4079
RA.1546.0	3764
RA.1547.2	3537
RA.1548.0	4017
RA.1551.0	3683
RA.1552.1	3872
RA.1554.1	3879
RA.1554.3	4181
RA.1556.0	4094
RA.1557.0	3913
RA.1559.0	3912
RA.1560.0	3884
RA.1564.0	3882
RA.1565.0	3883
RA.1567.0	3890
RA.1568.0	4153
RA.1569.0	3822
RA.1570.0	3776
RA.1574.0	3817
RA.1578.0	3929
RA.1580.0	3560
RA.1580.2	3560
RA.1581.0	3910
RA.1586.0	3642
RA.1589.0	3832
RA.1591.0	3685
RA.1591.1	3685
RA.1592.0	3688
RA.1594.0	3955
RA.1597.0	3660
RA.1600.0	3674
RA.1601.0	3887
RA.1611.0	3666
RA.1612.1	3897
RA.1613.0	4010
RA.1614.0	3618
RA.1615.0	3617
RA.1619.0	3799
RA.1621.0	3750
RA.1628.0	3678
RA.1629.0	3670
RA.1629.1	3670
RA.1633.0	3677
RA.1636.0	3603
RA.1636.0	3604
RA.1640.0	3740
RA.1641.0	3545
RA.1643.0	3778
RA.1644.0	3744
RA.1645.0	3687
RA.1645.1	3687
RA.1646.0	3687
RA.1647.0	3951
RA.1649.0	3511
RA.1652.0	3659
RA.1652.1	3938
RA.1653.0	3682
RA.1653.1	3782
RA.1653.2	3782
RA.1653.3	3782

RAICAM	BESER
NO	NO
RA.1654.0	3863
RA.1655.0	3636
RA.1655.1	3644
RA.1656.0	4125
RA.1658.0	3598
RA.1660.0	3675
RA.1662.0	4062
RA.1663.0	3762
RA.1665.0	3763
RA.1666.0	3614
RA.1666.1	3614
RA.1667.0	3575
RA.1667.1	3575
RA.1669.0	3606
RA.1669.1	3794
RA.1675.0	3994
RA.1679.0	3768
RA.1680.0	3754
RA.1681.0	3755
RA.1682.0	4281
RA.1683.0	4027
RA.1687.1	3841
RA.1688.0	3804
RA.1690.2	3795
RA.1691.0	4093
RA.1692.0	4271
RA.1693.0	3919
RA.1694.0	3918
RA.1695.0	3896
RA.1695.1	3896
RA.1695.2	3896
RA.1696.0	4059
RA.1697.0	3943
RA.1699.0	3704
RA.1700.0	4123
RA.1703.0	3888
RA.1704.0	3790
RA.1704.1	4141
RA.1705.0	3749
RA.1705.1	3749
RA.1706.0	3809
RA.1708.0	3877
RA.1711.0	4100
RA.1711.1	4100
RA.1712.0	3846
RA.1712.2	3846
RA.1714.0	3681
RA.1715.0	3861
RA.1718.1	4197
RA.17200	3740
RA.1723.0	3820
RA.1724.0	3800
RA.1725.0	3820
RA.1729.0	3901
RA.1732.0	3780
RA.1733.0	3843
RA.1735.0	4126
RA.1736.0	4069
RA.1737.0	3676
RA.1738.0	3898
RA.1739.0	3663
RA.1740.0	3507
RA.1741.0	4095
RA.1745.0	3634
RA.1748.0	3607
RA.1750.0	3821
RA.1751.0	3696
RA.1755.0	3757
RA.1755.0	3857
RA.1756.0	3784
RA.1757.0	3921
RA.1758.0	3849
RA.1760.0	3826
RA.1760.1	3826
RA.1760.2	3826
RA.1760.4	3826
RA.1760.8	3826
RA.1761.0	3800
RA.1761.1	3800
RA.1761.2	3800

RAICAM	BESER
NO	NO
RA.1761.3	3800
RA.1763.0	3934
RA.1765.0	3935
RA.1767.0	4115
RA.1768.8	3826
RA.1769.0	3853
RA.1769.1	3853
RA.1769.2	3853
RA.1769.3	3853
RA.1770.0	3852
RA.1772.0	3909
RA.1773.0	3834
RA.1774.0	3835
RA.1775.0	3914
RA.1778.0	4138
RA.1778.1	4138
RA.1780.0	4158
RA.1781.0	4153
RA.1782.0	3855
RA.1783.0	3856
RA.1785.0	3801
RA.1786.0	3836
RA.1788.0	3881
RA.1789.0	4180
RA.1790.0	4101
RA.1790.0	4209
RA.1791.0	4102
RA.1792.0	4112
RA.1793.2	4345
RA.1794.0	3854
RA.1795.0	3931
RA.1796.0	3986
RA.1797.0	4211
RA.1801.0	4137
RA.1803.0	3769
RA.1804.0	3788
RA.1805.0	3983
RA.1805.1	3983
RA.1810.0	4155
RA.1811.0	4013
RA.1813.0	3650
RA.1813.1	3619
RA.1813.2	3649
RA.1813.3	3635
RA.1814.0	3850
RA.1815.1	4040
RA.1816.0	4042
RA.1817.0	3904
RA.1818.0	3905
RA.1818.1	3905
RA.1819.0	3842
RA.1820.0	3885
RA.1821.0	4097
RA.1823.0	3950
RA.1823.1	3950
RA.1824.4	4096
RA.1828.0	4012
RA.1833.0	3993
RA.1835.0	3976
RA.1836.0	4093
RA.1838.0	3940
RA.1839.0	3939
RA.1840.0	3946
RA.1841.0	3984
RA.1844.0	3923
RA.1844.1	3923
RA.1845.0	3924
RA.1856.0	3648
RA.1857.0	3841
RA.1858.0	3987
RA.1863.0	3958
RA.1864.0	3954
RA.1866.0	4077
RA.1867.0	3949
RA.1869.0	3673
RA.1871.0	3891
RA.1874.0	4210
RA.1876.0	4011
RA.1878.0	4031
RA.1879.0	4248

RAICAM	BESER
NO	NO
RA.1880.0	4247
RA.1881.0	3900
RA.1882.0	4293
RA.1883.0	3944
RA.1885.0	3981
RA.1885.2	3981
RA.1886.0	3922
RA.1886.3	3922
RA.1886.3	4171
RA.1887.0	3820
RA.1889.0	3964
RA.1892.0	3906
RA.1892.1	3906
RA.1893.0	3907
RA.1894.0	4161
RA.1895.0	4157
RA.1897.0	4058
RA.1900.0	3925
RA.1901.0	3963
RA.1902.0	3962
RA.1903.0	3926
RA.1905.0	3920
RA.1906.0	3965
RA.1906.1	3965
RA.1907.0	4092
RA.1911.0	3972
RA.1912.0	4151
RA.1913.0	4259
RA.1914.0	4249
RA.1914.1	4249
RA.1915.0	4260
RA.1917.0	3985
RA.1919.1	3904
RA.1920.0	3970
RA.1923.0	3967
RA.1924.0	3966
RA.1924.1	3966
RA.1925.0	3953
RA.1926.0	3956
RA.1928.0	4037
RA.1930.0	4134
RA.1931.0	4260
RA.1933.0	4240
RA.1939.0	4143
RA.1940.0	4122
RA.1940.1	4122
RA.1941.0	4142
RA.1942.0	3964
RA.1943.0	4121
RA.1944.0	3995
RA.1945.0	3971
RA.1950.0	4038
RA.1954.0	4146
RA.1962.0	4004
RA.1964.0	4150
RA.1965.0	4159
RA.1967.0	3827
RA.1968.0	4008
RA.1969.0	4230
RA.1973.0	4014
RA.1974.0	3880
RA.1975.0	3975
RA.1976.0	4029
RA.1977.0	4213
RA.1978.0	4036

REMSA	BESER
NO	NO
0001.02	3405
0002.00	3320
0002.20	3350
0006.00	3318
0006.30	3318
0006.40	3318
0006.60	3318
0007.40	3326
0008.02	3806
0008.10	3806
0009.00	3325
001.02	3405
0010.00	3315
0010.00	3515
0010.20	3315
0010.20	3515
0010.30	3315
0010.30	3515
0010.40	3339
0010.40	3514
0010.50	3339
0010.50	3514
0010.58	3315
0010.58	3515
0011.20	3331
0014.00	3335
0014.10	3365
0014.12	3365
0014.40	4103
0016.00	3326
0017.00	3327
0017.10	3327
0017.20	3343
0017.20	3483
0017.30	3343
0017.30	3483
002.00	3320
002.20	3350
0021.06	3333
0021.10	3329
0021.12	3329
0021.14	3329
0021.16	3329
0022.00	3316
0022.10	3317
0022.12	3317
0022.20	3346
0022.30	3316
0022.50	3316
0022.60	3317
0023.20	3346
0025.30	3425
0026.02	3366
0026.12	3366
0037.00	3455
0039.00	3311
0039.10	3311
0042.00	3373
0042.10	3373
0042.20	3373
0042.30	3373
0042.40	3373
0042.50	3373
0044.02	3526
0045.00	3340
0045.02	3340
0045.10	3340
0045.22	3340
0045.32	3321
0046.00	3378
0046.10	3378
0046.20	3490
0046.40	3378
0046.50	3490
0047.30	3513
0047.32	3513
0048.00	3537
0048.10	3537
0049.10	3840
0052.10	3661

REMSA	BESER
NO	NO
0052.20	3661
0053.00	3481
0056.00	3423
0056.10	3423
0056.12	3423
0056.20	3423
0058.10	3416
006.00	3318
006.30	3318
006.40	3318
006.60	3318
0060.00	3374
0060.10	3374
0061.02	3527
0062.00	3377
0063.00	3312
0063.02	3484
0066.0	3403
0068.02	3323
0068.12	3322
0069.10	3313
007.40	3326
0075.60	3601
0079.00	3709
0079.10	3709
0079.20	3709
0079.30	3709
008.02	3806
008.10	3806
0080.00	3393
0092.00	3710
0098.00	3324
0098.02	3324
010.00	3315
010.00	3515
010.20	3315
010.20	3515
010.30	3315
010.30	3515
010.40	3339
010.40	3514
010.50	3339
010.50	3514
010.58	3315
010.58	3515
0101.00	3410
0101.03	3410
0101.10	3410
0101.20	3410
0101.40	3410
0102.10	3873
0103.00	3421
0106.00	3407
0109.22	3579
011.20	3332
0110.00	3705
0111.00	3509
0113.00	3706
0114.00	3625
0115.00	3369
0117.00	3370
0119.00	3417
0119.10	3570
0119.10	3594
0119.12	3417
0119.12	3417
0119.15	3417
0119.20	3417
0119.32	3417
0119.32	3417
0120.00	3379
0129.00	3415
0132.00	3371
0134.00	3650
0134.01	3650
0134.02	3619
0134.03	3635
0134.10	3649
0134.11	3649
0134.12	3635

REMSA	BESER
NO	NO
0134.15	3635
0134.20	3650
0134.40	3551
0134.41	3531
0134.50	3531
0134.81	3650
0134.95	3531
0135.00	3536
0135.01	3536
0135.10	3536
0135.11	3536
0135.20	3536
0135.22	3536
0135.40	3536
0135.94	3536
0139.00	3573
0139.02	3573
014.00	3335
014.10	3365
014.12	3365
014.40	4103
0141.01	3503
0141.02	3503
0141.10	3503
0141.11	3503
0141.12	3503
0141.16	3503
0141.18	3503
0141.20	3503
0141.30	3503
0141.32	3503
0141.52	3503
0141.78	3503
0142.20	3689
0143.02	3440
0144.02	3381
0144.06	3496
0144.12	3381
0144.24	3493
0144.32	3495
0144.42	3381
0144.50	3496
0144.60	3496
0146.01	3466
0146.04	3466
0146.11	3466
0146.14	3466
0146.22	3467
0146.23	3467
0146.41	3468
0146.44	3468
0146.60	3466
0146.62	3466
0146.80	3466
0146.84	3466
0147.00	3646
0147.02	3633
0148.14	3666
0149.00	3394
0149.10	3394
0151.02	4087
0151.22	4087
0154.00	3419
0154.01	3419
0154.02	3429
0154.03	3429
0154.10	3419
0154.12	3429
0155.00	3572
0155.02	3572
0155.10	3583
0155.12	3572
0155.20	3583
0157.00	3611
0157.10	3550
0157.20	3630
0159.00	3413
0163.02	3442
0167.04	3402
0167.10	3402

REMSA	BESER
NO	NO
0168.00	3621
0169.01	3624
0169.81	3624
017.00	3327
017.10	3327
017.20	3343
017.20	3483
017.30	3343
017.30	3483
0170.04	3474
0170.14	3474
0170.24	3556
0170.34	3474
0170.76	3474
0171.00	3486
0171.05	3444
0171.10	3444
0171.20	3441
0171.60	3585
0172.00	3549
0172.10	3790
0172.11	3548
0172.11	3690
0172.20	3790
0172.30	3790
0172.32	4141
0175.00	3400
0176.20	3641
0176.22	3641
0177.00	3620
0178.00	3436
0178.10	3436
0178.20	3436
0178.30	3436
0178.50	3436
0179.00	3875
0179.10	3875
018.00	3404
0181.04	3446
0184.00	3397
0184.02	3758
0187.00	3634
0187.02	3634
0188.00	3401
0189.00	3408
0189.02	3408
0189.05	3408
0189.08	3408
0189.10	3408
0189.11	3408
0189.12	3408
0189.24	3408
0191.04	3395
0191.12	3426
0192.02	3380
0192.11	3380
0192.12	3380
0192.22	3580
0192.34	3487
0192.96	3380
0193.00	3501
0193.02	3752
0199.10	3701
0202.02	3482
0204.00	3462
0206.00	3603
0208.00	3539
0208.01	3546
0208.02	3546
0208.12	3539
0208.80	3539
0208.83	3539
021.06	3333
021.10	3329
021.12	3329
021.14	3329
021.16	3329
0211.22	3523
0212.00	3449
0212.02	3449

REMSA	BESER
NO	NO
0212.12	3522
0212.22	3522
0212.32	3522
0212.42	3522
0212.52	3522
0214.14	3776
022.00	3316
022.10	3317
022.12	3317
022.20	3346
022.30	3316
022.50	3316
022.60	3317
0220.02	3428
0221.00	3422
0221.01	3422
0221.02	3552
0222.00	3661
0222.01	3771
0222.11	3771
0223.00	3605
0223.86	3605
0224.00	3504
0224.02	3502
0224.22	3502
0228.02	3582
023.20	3346
0232.00	3746
0233.02	4212
0233.85	4212
0233.86	4212
0236.00	3692
0236.02	3760
0238.04	3757
0238.04	3857
0238.14	3757
0238.14	3857
0238.24	3757
0238.24	3857
0239.00	3717
0239.40	3717
0239.50	3717
0239.60	3717
0244.00	3499
0244.02	3463
0245.00	3679
0245.12	3994
0245.22	3994
0245.32	3994
0245.40	3679
0245.41	3994
0245.42	3994
025.30	3425
0254.02	3600
0254.12	3600
026.02	3366
026.12	3366
0261.02	3543
0261.82	3543
0262.02	3457
0262.12	3610
0262.22	3457
0262.82	3457
0262.83	3610
0263.00	3529
0263.01	3529
0263.03	3529
0263.04	3529
0263.05	3529
0263.06	3529
0263.07	3529
0263.10	3529
0263.12	3529
0263.14	3529
0263.15	3529
0263.16	3529
0263.17	3529
0263.18	3529
0263.19	3529
0263.21	3529

REMSA	BESER
NO	NO
0263.40	3529
0263.41	4152
0263.50	3529
0263.52	3529
0263.53	3529
0263.62	3529
0263.74	3529
0263.87	3529
0263.88	3529
0263.89	3529
0263.92	3529
0264.02	3432
0264.12	3491
0264.13	3432
0264.14	3491
0265.00	3578
0265.02	3578
0265.15	3656
0266.00	3412
0266.10	3453
0267.11	3662
0270.00	3564
0270.10	3584
0271.02	3723
0273.02	3437
0273.12	3437
0275.02	3448
0278.22	3773
0278.32	3773
0278.42	3773
0281.00	3459
0281.02	3461
0281.40	3569
0281.42	3568
0282.00	3469
0282.10	3469
0284.00	3430
0284.02	3430
0284.83	3430
0284.85	3430
0285.10	3589
0286.10	3470
0286.20	3470
0286.30	3470
0286.32	3470
0286.50	3505
0286.50	3615
0287.00	3700
0289.02	3882
0289.12	3882
0291.02	4108
0293.12	3779
0294.00	4087
0294.20	4087
0294.22	4087
0294.32	4087
0296.00	3609
0296.02	3609
0297.00	3642
0297.10	3642
0297.81	3642
0306.00	4088
0306.12	4088
0311.00	3873
0315.04	3560
0317.12	4010
0317.22	4010
0318.02	3632
0318.05	3632
0318.06	3632
0318.12	3632
0318.32	3632
0318.52	3632
0318.82	3632
0318.92	3632
0320.00	3562
0320.20	3562
0320.81	3562
0321.02	3680
0321.22	3680

REMSA	BESER
NO	NO
0323.02	3631
0324.02	3696
0325.02	4148
0325.12	4148
0325.22	4148
0325.32	4148
0325.42	4148
0325.52	4148
0331.00	3464
0331.04	3722
0331.10	3464
0333.02	3640
0337.02	3683
0337.10	3872
0337.22	3872
0337.80	3683
0337.81	3683
0337.90	3872
0341.02	3695
0342.02	4080
0343.00	3660
0343.40	3660
0343.80	3660
0343.81	3660
0344.00	4104
0345.00	3596
0345.10	3596
0351.02	3704
0351.22	3704
0351.32	3704
0351.42	3704
0354.02	3685
0354.22	3685
0354.32	3685
0357.00	3603
0357.00	3604
0357.10	3603
0357.10	3604
0364.00	3598
0364.02	3766
0367.00	4072
0370.00	4086
0370.10	4086
0372.00	3424
0372.02	3424
0372.30	3424
0379.00	3628
0379.12	3628
0379.20	3629
0381.00	3879
0381.20	3879
0381.30	3879
0381.50	3879
0381.60	4181
0382.00	3733
0382.20	3733
0382.81	3733
0384.00	3563
0385.10	4020
0389.02	3883
0389.12	3883
039.00	3311
039.10	3311
0390.00	3506
0390.02	3590
0390.11	3590
0390.41	3590
0391.00	3473
0392.00	3445
0393.00	3623
0393.02	3623
0393.20	3623
0393.22	3623
0396.00	3892
0396.10	3892
0396.20	3892
0397.00	3874
0397.10	3874
0397.22	3874
0402.02	3554

REMSA	BESER
NO	NO
0402.02	3651
0402.22	3554
0402.22	3651
0402.42	3554
0402.42	3651
0402.52	3554
0402.52	3651
0403.02	4078
0405.02	3688
0407.00	3581
0410.00	3745
0412.00	3714
0412.30	3714
0413.00	3693
0413.04	3693
0413.10	3693
0413.12	3693
0414.01	3608
0414.20	3643
0415.04	3832
0415.32	4269
0415.42	4269
0416.00	3833
0417.00	3545
0417.10	3545
0418.02	3607
0418.22	3607
0419.02	3686
0419.12	3686
0419.22	3686
042.00	3373
042.00	3627
042.10	3373
042.20	3373
042.30	3373
042.40	3373
042.50	3373
0421.00	3777
0421.20	3777
0424.04	4099
0425.02	3674
0425.12	3674
0425.22	3674
0426.02	3887
0426.12	3887
0429.04	3673
0431.00	4128
0431.10	4128
0432.00	3558
0432.01	3593
0432.02	3593
0433.00	4214
0438.04	3819
0438.14	3819
0439.04	3878
044.02	3526
0441.00	3909
0445.00	3658
0445.02	3658
0445.03	3658
0445.81	3658
0447.00	4197
045.00	3340
045.02	3340
045.10	3340
045.22	3340
045.32	3321
0456.02	3915
0456.14	3915
0459.00	3511
0459.10	3511
046.00	3378
046.10	3378
046.20	3490
046.40	3378
046.50	3490
0460.02	3622
0460.12	3622
0461.02	3528
0462.00	3888

REMSE	BESER
NO	NO
0462.20	3888
0462.81	3888
0467.00	4182
0467.20	4182
0467.30	4182
0467.40	4182
0468.00	3736
047.30	3513
047.32	3513
048.00	3537
048.10	3537
0480.00	3553
0480.21	3553
0480.80	3553
0480.81	3553
0484.02	3867
0486.02	3595
0486.81	3595
0487.02	3559
0487.81	3559
0494.02	3507
0494.81	3507
0501.02	3898
0502.02	3740
0502.22	3740
0507.00	3667
0510.00	3864
052.10	3661
052.20	3661
0552.02	3868
056.00	3423
056.10	3423
056.12	3423
056.20	3423
0562.00	3544
0571.02	3781
0578.00	3567
0579.00	3678
058.10	3416
0580.00	3670
0580.10	3670
0582.00	3675
0582.80	3675
0583.00	3809
0584.00	3512
0586.00	3677
0586.10	3677
0587.12	3618
0587.22	3618
0588.10	3897
0589.02	3617
0589.12	3617
0589.22	3617
0589.42	3617
0591.30	3795
0591.83	3795
0592.02	3577
0592.12	3598
0592.22	3577
0593.00	4034
0594.00	3884
0594.02	3884
0595.02	3602
0596.00	3881
0596.10	3881
0598.02	3697
060.00	3374
060.10	3374
0601.00	3863
0601.10	3863
0601.20	3863
0601.30	3863
0602.02	3799
0603.04	3750
0603.80	3750
0605.02	4062
0605.12	4062
0605.80	4062
0605.82	4062
0605.83	4062

REMSA	BESER
NO	NO
0609.00	3538
0609.10	3566
0609.20	3637
061.02	3527
0614.00	3614
0614.02	3614
0614.81	3614
0614.82	3614
0618.00	3606
0618.01	3794
0619.02	3574
0620.00	3419
0620.20	3419
0620.80	3419
0620.81	3419
0621.00	3822
0621.20	3822
063.00	3312
063.02	3484
0630.00	3663
0631.00	3896
0631.10	3896
0631.12	3896
0631.20	3896
0631.80	3896
0631.82	3896
0631.90	3896
0633.00	3682
0633.20	3782
0633.21	3782
0633.31	3782
0633.41	3782
0634.00	3644
0634.04	3636
0634.10	3644
0634.80	3644
0634.84	3636
0635.00	3872
0636.04	4071
0636.12	4071
0640.00	3994
0640.40	3994
0643.00	3659
0643.10	3759
0643.10	3938
0643.20	3938
0643.80	3938
0643.81	3659
0643.90	3938
0645.00	3687
0645.02	3687
0645.12	3687
0647.02	3764
0650.00	4125
0650.80	4125
0650.81	4125
0651.00	3575
0651.10	3575
0651.80	3575
0651.81	3575
0651.86	3942
0655.02	4079
0662.02	3653
0674.12	3932
0675.02	3778
0678.00	3676
0678.10	3676
0679.00	4274
068.02	3323
0684.02	3762
0685.02	3763
0685.22	3763
0691.00	3754
0693.00	3755
0693.80	3755
0694.10	4115
0695.02	4155
0695.82	4155
0696.00	3744
0697.01	4126

REMSA	BESER
NO	NO
0698.01	4069
0699.00	3780
0701.00	3681
0703.02	3648
0705.02	4281
0705.81	4281
0706.00	3830
0707.04	3829
0708.02	4059
0708.82	4059
0709.00	3821
0709.10	3821
0710.02	4027
0711.04	3859
0711.11	3859
0712.02	3768
0712.12	3768
0713.00	3919
0714.00	3918
0717.00	3861
0719.00	3943
0720.02	3901
0724.02	3928
0724.11	3928
0725.02	3748
0727.10	4123
0727.20	4123
0729.02	3913
0730.01	3767
0733.00	3804
0735.02	4110
0736.02	4011
0736.12	4011
0736.32	4011
0739.02	4009
0740.00	3769
0740.02	3769
0741.02	3788
0743.04	4085
0746.02	3993
0746.12	3993
0746.22	3993
0746.32	3993
0746.42	3895
0746.62	3895
0747.02	4109
0747.02	4232
0747.12	4109
0747.12	4232
0748.02	4017
0750.02	4084
0752.12	4222
0766.00	3877
0767.01	4345
0768.00	3836
0768.10	3836
0768.81	3836
0769.00	4102
077.20	3375
0770.00	4101
0770.00	4209
0771.02	3843
0771.12	3843
0771.22	3843
0772.02	3784
0772.12	3921
0772.82	3784
0772.83	3921
0774.02	3846
0774.12	3846
0774.82	3846
0775.00	4138
0775.01	4138
0775.80	4138
0775.81	4138
0776.00	4100
0776.10	4100
0776.80	4100
0776.81	4100
0777.00	4093

REMSA	BESER
NO	NO
0777.10	4093
0777.80	4093
079.00	3709
079.10	3709
079.20	3709
079.30	3709
0799.40	4188
080.00	3393
0800.22	4118
0802.00	4119
0803.12	3893
0803.22	3893
0804.02	3955
0804.12	3955
0804.31	3955
0807.00	4012
0807.02	4012
0813.00	4158
0819.00	3856
0821.02	3802
0821.12	3802
0822.00	4094
0822.12	3817
0827.04	3934
0827.84	3934
0828.04	3935
0833.00	3855
0833.80	3855
0834.00	3848
0834.10	3848
0836.02	4095
0837.02	4221
0838.02	4219
0839.02	4153
0840.00	3820
0840.10	3820
0840.20	3820
0840.30	3820
0840.82	3820
0841.00	3800
0841.10	3800
0841.80	3800
0842.00	3853
0842.10	3853
0842.20	3853
0842.30	3853
0842.70	3853
0843.00	3852
0843.10	3852
0845.01	4271
0849.00	3823
0849.10	3823
0852.04	4143
0852.14	4143
0854.00	3911
0855.00	4082
0857.00	4180
0858.01	3826
0858.10	3826
0858.11	3826
0858.30	3826
0858.32	3826
0858.80	3826
0859.01	3800
0859.10	3800
0859.11	3800
0859.12	3800
0859.20	3800
0859.21	3800
0859.80	3800
0860.12	4301
0874.02	3825
0876.01	3933
0876.21	3933
0876.31	3933
0876.41	3933
0879.12	3986
0879.81	3986
0880.00	3931
0880.80	3931

REMSA	BESER
NO	NO
0881.00	3854
0881.80	3854
0883.11	4303
0884.00	3910
0888.00	4211
0888.20	4211
0888.40	4211
0889.00	4083
0890.00	4276
0892.00	4179
0893.02	3961
0897.11	3842
0898.00	4003
0899.00	3831
0899.02	3831
0899.12	3831
092.00	3710
0951.02	3912
0951.11	3912
0953.00	3959
0953.02	3959
0953.12	3959
0953.22	3959
0954.00	4013
0957.00	4040
0958.10	4208
0959.01	3835
0960.01	3834
0961.00	3914
0962.00	3950
0963.00	4347
0964.12	4096
0965.01	3765
0970.02	3889
0971.02	3769
0973.02	4031
0976.00	3849
0976.10	3849
0976.20	3849
0976.80	3849
0976.81	3849
0977.00	3850
0977.80	3850
0978.02	4112
098.00	3324
098.02	3324
0984.00	3801
0985.02	4074
0986.00	3951
0987.00	3983
0987.02	3983
0987.10	3983
0987.11	3983
0988.00	3891
0990.02	4097
0994.00	4075
0996.00	4076
101.00	3410
101.03	3410
101.10	3410
101.20	3410
101.40	3410
102.10	3873
103.00	3421
1030.01	3904
1031.00	3905
1036.02	4042
1037.00	4216
1038.02	4028
1038.12	4028
1039.00	4105
1040.00	4111
1041.02	3978
1041.12	3978
1042.02	3979
1045.01	3841
1045.11	3841
1046.02	3890
1047.02	4153

REMSA	BESER
NO	NO
1048.00	3894
1051.02	4106
1052.00	4346
106.00	3407
1068.02	4159
1069.00	3827
1073.20	3343
1073.20	3483
1081.01	4036
1081.11	4036
1082.00	3885
1085.02	3976
109.22	3579
1098.02	3886
1098.14	3886
1100.00	4173
1100.11	4173
1100.21	4173
1101.04	3940
1102.04	3939
1103.00	3946
1106.02	4030
1109.02	3923
111.00	3509
1113.00	4137
1120.02	4107
1123.02	3797
1126.08	4006
1127.08	4018
1128.08	4198
1129.01	3900
1133.02	3968
1134.02	4001
1135.02	3969
1136.01	4213
1137.02	4081
1138.00	3984
1139.02	3985
114.00	3625
1149.10	4058
115.00	3369
1151.00	3988
1152.00	3747
1158.00	4293
1159.00	3944
1159.10	3944
1162.01	3952
1162.12	3952
1166.01	4000
117.00	3370
1173.02	4016
1177.00	3987
1179.00	4210
1181.02	4113
1183.01	4121
119.00	3417
119.10	3570
119.10	3594
119.12	3417
119.12	3417
119.15	3417
119.20	3417
119.32	3417
119.32	3417
1196.02	4029
120.00	3379
1200.00	3945
1200.30	3945
1202.00	4240
1208.02	3880
1209.02	3980
1223.02	4073
1224.00	3958
1225.02	3929
1226.02	3960
1226.32	4251

REMSA	BESER
NO	NO
1228.01	4258
1231.00	3949
1232.00	3953
1233.00	3948
1234.00	4077
1235.02	3982
1237.01	3981
1237.12	3981
1238.00	3820
1239.02	3989
1242.00	3975
1242.01	3975
1243.00	3962
1245.00	3925
1245.02	3965
1245.10	3965
1246.00	3926
1246.02	3926
1247.00	3963
1248.00	3964
1248.10	3964
1250.00	3906
1250.02	3906
1250.11	3906
1251.02	3920
1252.02	3907
1256.00	4157
1259.02	4005
1261.12	3976
1264.02	4004
1266.00	3903
1271.02	3996
1272.00	3997
1274.02	4060
1275.01	3922
1275.12	3922
1275.12	4171
1281.01	4122
1281.02	4122
1281.10	4122
1282.00	4092
1282.02	4122
1285.12	4202
1286.02	3954
1289.02	4160
129.00	3415
1290.02	4156
1291.02	4035
1292.01	3972
1293.02	4015
1297.00	4207
1299.00	4151
1301.00	4248
1302.02	4039
1302.22	4039
1303.02	4165
1304.00	4249
1304.10	4259
1305.00	4247
1310.02	3956
1312.00	4255
1313.00	4254
1318.00	4038
132.00	3371
1323.00	3970
1337.00	4054
1339.00	3995
134.00	3650
134.01	3650
134.02	3619
134.03	3635
134.10	3649
134.11	3649
134.12	3635
134.15	3635
134.20	3650
134.40	3551
134.41	3531
134.50	3531

REMSA	BESER
NO	NO
134.81	3650
134.95	3531
1343.00	4260
1345.00	4309
135.00	3536
135.01	3536
135.10	3536
135.11	3536
135.20	3536
135.22	3536
135.40	3536
135.94	3536
1350.00	4134
1351.00	3966
1352.00	3967
1356.02	4037
1362.02	4061
1362.42	4311
1362.52	4311
1375.12	4149
1379.10	4310
1382.00	3971
1387.00	4142
1387.30	4287
1388.04	4150
139.00	3573
139.02	3573
1391.00	3529
1391.10	3529
1395.00	4256
1399.00	4169
1403.02	4146
1407.00	4124
1407.12	4308
1409.10	4314
141.01	3503
141.02	3503
141.10	3503
141.11	3503
141.12	3503
141.16	3503
141.18	3503
141.20	3503
141.30	3503
141.32	3503
141.52	3503
141.78	3503
1412.32	4166
142.20	3689
1420.00	4135
1423.02	4233
1426.02	4049
143.02	3440
1431.02	4008
1431.12	4230
1432.02	4014
1432.12	4014
1439.01	4057
1439.11	4057
144.02	3381
144.06	3496
144.12	3381
144.24	3493
144.32	3495
144.42	3381
144.50	3496
144.60	3496
1440.01	4162
1442.01	4132
1442.01	4172
1449.01	4056
146.01	3466
146.04	3466
146.11	3466
146.14	3466
146.22	3467
146.23	3467
146.41	3468
146.44	3468
146.60	3466

REMSA	BESER
NO	NO
146.62	3466
146.80	3466
146.84	3466
1464.08	4145
1466.00	3998
1468.02	4167
1468.04	4167
147.00	3646
147.02	3633
148.14	3666
1482.00	4161
1488.02	4136
149.00	3394
149.10	3394
151.02	4087
151.22	4087
1510.00	4226
1510.10	4226
1514.00	4204
1516.00	4241
1520.02	4174
1521.00	4175
1530.00	4201
1538.04	4315
154.00	3419
154.01	3419
154.02	3429
154.03	3429
154.10	3419
154.12	3429
1540.00	4140
1544.04	4170
1548.02	4312
155.00	3572
155.02	3572
155.10	3583
155.12	3572
155.20	3583
1551.00	4270
1553.00	4200
1558.00	4205
1561.02	4176
1569.02	4317
157.00	3611
157.10	3550
157.20	3630
1570.02	4318
1588.02	4224
159.00	3413
1601.01	4295
1617.08	4227
163.02	3442
1634.02	4284
167.04	3402
167.10	3402
168.00	3621
169.01	3624
169.81	3624
170.04	3474
170.14	3474
170.24	3556
170.34	3474
170.76	3474
1700.02	4246
171.00	3486
171.05	3444
171.10	3444
171.20	3441
171.60	3585
172.00	3549
172.10	3790
172.11	3548
172.11	3690
172.20	3790
172.30	3790
172.32	4141
1724.08	4280
175.00	3400
176.20	3641
176.22	3641

REMSA	BESER
NO	NO
177.00	3620
178.00	3436
178.10	3436
178.20	3436
178.30	3436
178.50	3436
179.00	3875
179.10	3875
181.04	3446
184.00	3397
184.02	3758
187.00	3634
187.02	3634
188.00	3401
189.00	3408
189.02	3408
189.05	3408
189.08	3408
189.10	3408
189.11	3408
189.12	3408
189.24	3408
191.04	3395
191.12	3426
192.02	3380
192.11	3380
192.12	3380
192.22	3580
192.34	3487
192.96	3380
193.00	3501
193.02	3752
197.10	3414
202.02	3482
204.00	3462
206.00	3603
208.00	3539
208.01	3546
208.02	3546
208.12	3539
208.80	3539
208.83	3539
211.22	3523
212.00	3449
212.02	3449
212.12	3522
212.22	3522
212.32	3522
212.42	3522
212.52	3522
214.14	3776
2182.02	3691
220.02	3428
221.00	3422
221.01	3422
221.02	3552
222.00	3661
222.01	3771
222.11	3771
223.00	3605
223.86	3605
224.00	3504
224.02	3502
224.22	3502
228.02	3582
232.00	3746
233.02	4212
233.85	4212
233.86	4212
236.00	3692
236.02	3760
238.04	3757
238.04	3857
238.14	3757
238.14	3857
238.24	3757
238.24	3857
239.00	3717
239.40	3717
239.50	3717

REMSA	BESER
NO	NO
239.60	3717
2390.10	3665
244.00	3499
244.02	3463
245.00	3679
245.12	3994
245.22	3994
245.32	3994
245.40	3679
245.41	3994
245.42	3994
254.02	3600
254.12	3600
261.02	3543
261.82	3543
262.02	3457
262.12	3610
262.22	3457
262.82	3457
262.83	3610
263.00	3529
263.01	3529
263.03	3529
263.04	3529
263.05	3529
263.06	3529
263.07	3529
263.10	3529
263.12	3529
263.14	3529
263.15	3529
263.16	3529
263.17	3529
263.18	3529
263.19	3529
263.21	3529
263.40	3529
263.41	4152
263.50	3529
263.52	3529
263.53	3529
263.62	3529
263.74	3529
263.87	3529
263.88	3529
263.89	3529
263.92	3529
264.02	3432
264.12	3491
264.13	3432
264.14	3491
265.00	3578
265.02	3578
265.15	3656
266.00	3412
266.10	3453
267.11	3662
270.00	3564
270.10	3584
271.02	3723
273.02	3437
273.12	3437
275.02	3448
278.21	3773
278.22	3773
278.32	3773
278.42	3773
281.00	3459
281.40	3569
281.42	3568
282.00	3469
282.10	3469
284.00	3430
284.02	3430
284.83	3430
284.85	3430
285.10	3589
286.10	3470
286.20	3470
286.30	3470

REMSA	BESER
NO	NO
286.32	3470
286.50	3505
286.50	3615
287.00	3700
289.02	3882
289.12	3882
291.02	4108
293.12	3779
294.00	4087
294.20	4087
294.22	4087
294.32	4087
296.00	3609
296.02	3609
297.00	3642
297.10	3642
297.81	3642
306.00	4088
306.12	4088
311.00	3873
315.04	3560
317.12	4010
317.22	4010
318.02	3632
318.05	3632
318.06	3632
318.12	3632
318.32	3632
318.52	3632
318.82	3632
318.92	3632
320.00	3562
320.20	3562
320.81	3562
321.02	3680
321.22	3680
323.02	3631
324.02	3696
325.02	4148
325.12	4148
325.22	4148
325.32	4148
325.42	4148
325.52	4148
331.00	3464
331.04	3722
331.10	3464
333.02	3640
337.02	3683
337.10	3872
337.22	3872
337.80	3683
337.81	3683
337.90	3872
341.02	3695
342.02	4080
343.00	3660
343.40	3660
343.80	3660
343.81	3660
344.00	4104
345.00	3596
345.10	3596
351.02	3704
351.22	3704
351.32	3704
351.42	3704
354.02	3685
354.22	3685
354.32	3685
357.00	3603
357.00	3604
357.10	3603
357.10	3604
364.00	3598
364.02	3766
367.00	4072
370.00	4086
370.10	4086
372.00	3424

REMSA	BESER
NO	NO
372.02	3424
372.30	3424
379.00	3628
379.12	3628
379.20	3629
381.00	3879
381.20	3879
381.30	3879
381.50	3879
381.60	4181
382.00	3733
382.20	3733
382.81	3733
384.00	3563
385.10	4020
389.02	3883
389.12	3883
390.00	3506
390.02	3590
390.11	3590
390.41	3590
391.00	3473
392.00	3445
393.00	3623
393.02	3623
393.20	3623
393.22	3623
396.00	3892
396.10	3892
396.20	3892
397.00	3874
397.10	3874
397.22	3874
402.02	3554
402.02	3651
402.22	3554
402.22	3651
402.42	3554
402.42	3651
402.52	3554
402.52	3651
403.02	4078
405.02	3688
407.00	3581
410.00	3745
412.00	3714
412.30	3714
413.00	3693
413.04	3693
413.10	3693
413.12	3693
414.01	3608
414.20	3643
415.04	3832
415.32	4269
415.42	4269
416.00	3833
417.00	3545
417.10	3545
418.02	3607
418.22	3607
419.02	3686
419.12	3686
419.22	3686
421.00	3777
421.20	3777
424.04	4099
425.02	3674
425.12	3674
425.22	3674
426.02	3887
426.12	3887
429.04	3673
431.00	4128
431.10	4128
4310.01	4249
432.00	3558
432.01	3593
432.02	3593
433.00	4214

REMSA	BESER
NO	NO
436.02	3749
436.12	3749
436.40	3749
436.41	3749
438.04	3819
438.14	3819
439.04	3878
441.00	3909
445.00	3658
445.02	3658
445.03	3658
445.81	3658
447.00	4197
456.02	3915
456.14	3915
459.00	3511
459.10	3511
460.02	3622
460.12	3622
461.02	3528
462.00	3888
462.20	3888
462.81	3888
467.00	4182
467.20	4182
467.30	4182
467.40	4182
468.00	3736
480.00	3553
480.21	3553
480.80	3553
480.81	3553
484.02	3867
486.02	3595
486.81	3595
487.02	3559
487.81	3559
494.02	3507
494.81	3507
501.02	3898
502.02	3740
502.22	3740
507.00	3667
571.02	3781
578.00	3567
579.00	3678
580.00	3670
580.10	3670
582.00	3675
582.80	3675
583.00	3809
584.00	3512
586.00	3677
586.10	3677
587.12	3618
587.22	3618
588.10	3897
589.02	3617
589.12	3617
589.22	3617
589.42	3617
591.00	3671
591.30	3795
591.83	3795
592.02	3577
592.12	3598
592.22	3577
593.00	4034
594.00	3884
594.02	3884
595.02	3602
596.00	3881
596.10	3881
598.02	3697
601.00	3863
601.10	3863
601.20	3863
601.30	3863
602.02	3799
603.04	3750

REMSA	BESER
NO	NO
603.80	3750
605.02	4062
605.12	4062
605.80	4062
605.82	4062
605.83	4062
609.00	3538
609.10	3566
609.20	3637
614.00	3614
614.02	3614
614.81	3614
614.82	3614
618.00	3606
618.01	3794
619.02	3574
620.00	3419
620.20	3419
620.80	3419
620.81	3419
621.00	3822
621.20	3822
630.00	3663
631.00	3896
631.10	3896
631.12	3896
631.20	3896
631.80	3896
631.82	3896
631.90	3896
633.00	3682
633.20	3782
633.21	3782
633.31	3782
633.41	3782
634.00	3644
634.04	3636
634.10	3644
634.80	3644
634.84	3636
635.00	3872
636.04	4071
636.12	4071
640.00	3994
640.40	3994
643.00	3659
643.10	3938
643.20	3938
643.80	3938
643.81	3659
643.90	3938
645.00	3687
645.02	3687
645.12	3687
647.02	3764
650.00	4125
650.80	4125
650.81	4125
651.00	3575
651.10	3575
651.80	3575
651.81	3575
651.86	3942
655.02	4079
662.02	3653
674.12	3932
675.02	3778
678.00	3676
678.10	3676
679.00	4274
684.02	3762
685.02	3763
685.22	3763
691.00	3754

REMSA	BESER
NO	NO
693.00	3755
693.80	3755
694.10	4115
695.02	4155
695.82	4155
696.00	3744
697.01	4126
698.01	4069
699.00	3780
701.00	3681
703.02	3648
705.02	4281
705.81	4281
706.00	3830
707.04	3829
708.02	4059
708.82	4059
709.00	3821
709.10	3821
710.02	4027
711.04	3859
711.11	3859
712.02	3768
712.12	3768
713.00	3919
714.00	3918
717.00	3861
719.00	3943
720.02	3901
724.02	3928
724.11	3928
725.02	3748
727.10	4123
727.20	4123
729.02	3913
730.01	3767
733.00	3804
735.02	4110
736.02	4011
736.12	4011
736.32	4011
739.02	4009
740.00	3769
740.02	3769
741.02	3788
743.04	4085
746.02	3993
746.12	3993
746.22	3993
746.32	3993
746.42	3895
746.62	3895
747.02	4109
747.02	4232
747.12	4109
747.12	4232
748.02	4017
750.02	4084
752.12	4222
766.00	3877
767.01	4345
768.00	3836
768.10	3836
768.81	3836
769.00	4102
771.02	3843
771.12	3843
771.22	3843
772.02	3784
772.12	3921
772.82	3784
772.83	3921
774.02	3846
774.12	3846
774.82	3846
775.00	4138
775.01	4138
775.80	4138
775.81	4138
776.00	4100

REMSA	BESER
NO	NO
776.10	4100
776.80	4100
776.81	4100
777.00	4093
777.10	4093
777.80	4093
7843.02	3762
800.22	4118
802.00	4119
803.12	3893
803.22	3893
804.02	3955
804.12	3955
804.31	3955
807.00	4012
807.02	4012
813.00	4158
819.00	3856
821.02	3802
821.12	3802
822.00	4094
822.12	3817
827.04	3934
827.84	3934
828.04	3935
833.00	3855
833.80	3855
834.00	3848
834.10	3848
836.02	4095
839.02	4153
840.00	3820
840.10	3820
840.20	3820
840.30	3820
840.82	3820
841.00	3800
841.10	3800
841.80	3800
842.00	3853
842.10	3853
842.20	3853
842.30	3853
842.70	3853
843.00	3852
843.10	3852
845.01	4271
849.00	3823
849.10	3823
852.04	4143
852.14	4143
854.00	3911
855.00	4082
857.00	4180
858.01	3826
858.10	3826
858.11	3826
858.30	3826
858.32	3826
858.80	3826
859.01	3800
859.10	3800
859.11	3800
859.12	3800
859.20	3800
859.21	3800
859.80	3800
874.02	3825
876.01	3933
876.21	3933
876.31	3933
876.41	3933
879.12	3986
879.81	3986
880.00	3931
880.80	3931

REMSA	BESER
NO	NO
BPM0017.30	3483
BPM0021.06	3333
BPM0021.10	3329
BPM0021.12	3329
BPM0021.14	3329
BPM0021.16	3329
BPM0022.00	3316
BPM0022.10	3317
BPM0022.12	3317
BPM0022.20	3346
BPM0022.30	3316
BPM0022.50	3316
BPM0022.60	3317
BPM0023.20	3346
BPM0025.30	3425
BPM0026.02	3366
BPM0026.12	3366
BPM0039.00	3311
BPM0039.10	3311
BPM0042.00	3373
BPM0042.10	3373
BPM0042.20	3373
BPM0042.30	3373
BPM0042.40	3373
BPM0042.50	3373
BPM0044.02	3526
BPM0045.00	3340
BPM0045.02	3340
BPM0045.10	3340
BPM0045.22	3340
BPM0045.32	3321
BPM0046.00	3378
BPM0046.10	3378
BPM0046.20	3490
BPM0046.40	3378
BPM0046.50	3490
BPM0047.30	3513
BPM0047.32	3513
BPM0048.00	3537
BPM0048.10	3537
BPM0052.10	3661
BPM0052.20	3661
BPM0056.00	3423
BPM0056.10	3423
BPM0056.12	3423
BPM0056.20	3423
BPM0058.10	3416
BPM0060.00	3374
BPM0060.10	3374
BPM0061.02	3527
BPM0063.00	3312
BPM0063.02	3484
BPM0068.02	3323
BPM0079.00	3709
BPM0079.10	3709
BPM0079.20	3709
BPM0079.30	3709
BPM0080.00	3393
BPM0092.00	3710
BPM0098.00	3324
BPM0098.02	3324
BPM0101.00	3410
BPM0101.03	3410
BPM0101.10	3410
BPM0101.20	3410
BPM0101.40	3410
BPM0102.10	3873
BPM0103.00	3421
BPM0106.00	3407
BPM0109.00	3579
BPM0109.12	3579
BPM0109.22	3579
BPM0111.00	3509
BPM0114.00	3625
BPM0115.00	3369
BPM0117.00	3370
BPM0119.00	3417
BPM0119.10	3570
BPM0119.10	3594
BPM0119.12	3417

REMSA	BESER
NO	NO
BPM0119.12	3417
BPM0119.15	3417
BPM0119.20	3417
BPM0119.32	3417
BPM0119.32	3417
BPM0120.00	3379
BPM0129.00	3415
BPM0132.00	3371
BPM0134.00	3650
BPM0134.01	3650
BPM0134.02	3619
BPM0134.03	3635
BPM0134.10	3649
BPM0134.11	3649
BPM0134.12	3635
BPM0134.15	3635
BPM0134.20	3650
BPM0134.40	3551
BPM0134.41	3531
BPM0134.50	3531
BPM0134.81	3650
BPM0134.95	3531
BPM0135.00	3536
BPM0135.01	3536
BPM0135.10	3536
BPM0135.11	3536
BPM0135.20	3536
BPM0135.22	3536
BPM0135.40	3536
BPM0135.94	3536
BPM0139.00	3573
BPM0139.02	3573
BPM0141.01	3503
BPM0141.02	3503
BPM0141.10	3503
BPM0141.11	3503
BPM0141.12	3503
BPM0141.16	3503
BPM0141.18	3503
BPM0141.20	3503
BPM0141.30	3503
BPM0141.32	3503
BPM0141.52	3503
BPM0141.78	3503
BPM0142.20	3689
BPM0143.02	3440
BPM0144.02	3381
BPM0144.06	3496
BPM0144.12	3381
BPM0144.24	3493
BPM0144.32	3495
BPM0144.42	3381
BPM0144.50	3496
BPM0144.60	3496
BPM0146.01	3466
BPM0146.04	3466
BPM0146.11	3466
BPM0146.14	3466
BPM0146.22	3467
BPM0146.23	3467
BPM0146.41	3468
BPM0146.44	3468
BPM0146.60	3466
BPM0146.62	3466
BPM0146.80	3466
BPM0146.84	3466
BPM0147.00	3646
BPM0147.02	3633
BPM0148.14	3666
BPM0149.00	3394
BPM0149.10	3394
BPM0151.02	4087
BPM0151.22	4087
BPM0154.00	3419
BPM0154.01	3419
BPM0154.02	3429
BPM0154.03	3429
BPM0154.10	3419
BPM0154.12	3429
BPM0155.00	3572

REMSA	BESER
NO	NO
BPM0155.02	3572
BPM0155.10	3583
BPM0155.12	3572
BPM0155.20	3583
BPM0157.00	3611
BPM0157.10	3550
BPM0157.20	3630
BPM0159.00	3413
BPM0163.02	3442
BPM0167.04	3402
BPM0167.10	3402
BPM0168.00	3621
BPM0169.01	3624
BPM0169.81	3624
BPM0170.04	3474
BPM0170.14	3474
BPM0170.24	3556
BPM0170.34	3474
BPM0170.76	3474
BPM0171.00	3486
BPM0171.05	3444
BPM0171.10	3444
BPM0171.20	3441
BPM0171.60	3585
BPM0172.00	3549
BPM0172.10	3790
BPM0172.11	3548
BPM0172.11	3690
BPM0172.20	3790
BPM0172.30	3790
BPM0172.32	4141
BPM0175.00	3400
BPM0176.20	3641
BPM0176.22	3641
BPM0177.00	3620
BPM0178.00	3436
BPM0178.10	3436
BPM0178.20	3436
BPM0178.30	3436
BPM0178.50	3436
BPM0179.00	3875
BPM0179.10	3875
BPM0181.04	3446
BPM0184.00	3397
BPM0184.02	3758
BPM0187.00	3634
BPM0187.02	3634
BPM0188.00	3401
BPM0189.00	3408
BPM0189.02	3408
BPM0189.05	3408
BPM0189.08	3408
BPM0189.10	3408
BPM0189.11	3408
BPM0189.12	3408
BPM0189.24	3408
BPM0191.04	3395
BPM0191.12	3426
BPM0192.02	3380
BPM0192.11	3380
BPM0192.12	3380
BPM0192.22	3580
BPM0192.34	3487
BPM0192.96	3380
BPM0193.00	3501
BPM0193.02	3752
BPM0202.02	3482
BPM0204.00	3462
BPM0206.00	3603
BPM0208.00	3539
BPM0208.01	3546
BPM0208.02	3546
BPM0208.12	3539
BPM0208.80	3539
BPM0208.83	3539
BPM0211.22	3523
BPM0212.00	3449
BPM0212.02	3449
BPM0212.12	3522
BPM0212.22	3522

REMSA	BESER
NO	NO
BPM0212.32	3522
BPM0212.42	3522
BPM0212.52	3522
BPM0214.14	3776
BPM0220.02	3428
BPM0221.00	3422
BPM0221.01	3422
BPM0221.02	3552
BPM0222.00	3661
BPM0222.01	3771
BPM0222.11	3771
BPM0223.00	3605
BPM0223.86	3605
BPM0224.00	3504
BPM0224.02	3502
BPM0224.22	3502
BPM0228.02	3582
BPM0232.00	3746
BPM0233.00	4212
BPM0233.02	4212
BPM0233.85	4212
BPM0233.86	4212
BPM0236.00	3692
BPM0236.02	3760
BPM0238.04	3757
BPM0238.04	3857
BPM0238.14	3757
BPM0238.14	3857
BPM0238.24	3757
BPM0238.24	3857
BPM0239.00	3717
BPM0239.40	3717
BPM0239.50	3717
BPM0239.60	3717
BPM0244.00	3499
BPM0244.02	3463
BPM0254.02	3600
BPM0254.12	3600
BPM0261.02	3543
BPM0261.82	3543
BPM0262.02	3457
BPM0262.12	3610
BPM0262.22	3457
BPM0262.82	3457
BPM0262.83	3610
BPM0263.00	3529
BPM0263.01	3529
BPM0263.03	3529
BPM0263.04	3529
BPM0263.05	3529
BPM0263.06	3529
BPM0263.07	3529
BPM0263.10	3529
BPM0263.12	3529
BPM0263.14	3529
BPM0263.15	3529
BPM0263.16	3529
BPM0263.17	3529
BPM0263.18	3529
BPM0263.19	3529
BPM0263.21	3529
BPM0263.40	3529
BPM0263.41	4152
BPM0263.50	3529
BPM0263.52	3529
BPM0263.53	3529
BPM0263.62	3529
BPM0263.74	3529
BPM0263.87	3529
BPM0263.88	3529
BPM0263.89	3529
BPM0263.92	3529
BPM0264.02	3432
BPM0264.12	3491
BPM0264.13	3432
BPM0264.14	3491
BPM0265.00	3578
BPM0265.02	3578
BPM0265.15	3656
BPM0266.00	3412

REMSA	BESER
NO	NO
BPM0266.10	3453
BPM0267.11	3662
BPM0270.00	3564
BPM0270.10	3584
BPM0271.02	3723
BPM0273.02	3437
BPM0273.12	3437
BPM0275.02	3448
BPM0281.00	3459
BPM0281.40	3569
BPM0281.42	3568
BPM0282.00	3469
BPM0282.10	3469
BPM0284.00	3430
BPM0284.02	3430
BPM0284.83	3430
BPM0284.85	3430
BPM0285.10	3589
BPM0286.10	3470
BPM0286.20	3470
BPM0286.30	3470
BPM0286.32	3470
BPM0286.50	3505
BPM0286.50	3615
BPM0287.00	3700
BPM0289.02	3882
BPM0289.12	3882
BPM0291.02	4108
BPM0293.12	3779
BPM0294.00	4087
BPM0294.20	4087
BPM0294.22	4087
BPM0294.32	4087
BPM0296.00	3609
BPM0296.02	3609
BPM0297.00	3642
BPM0297.10	3642
BPM0297.81	3642
BPM0306.00	4088
BPM0306.12	4088
BPM0311.00	3873
BPM0315.04	3560
BPM0317.12	4010
BPM0317.22	4010
BPM0318.02	3632
BPM0318.05	3632
BPM0318.06	3632
BPM0318.12	3632
BPM0318.32	3632
BPM0318.52	3632
BPM0318.82	3632
BPM0318.92	3632
BPM0320.00	3562
BPM0320.20	3562
BPM0320.81	3562
BPM0321.02	3680
BPM0321.22	3680
BPM0323.02	3631
BPM0324.02	3696
BPM0325.02	4148
BPM0325.12	4148
BPM0325.22	4148
BPM0325.32	4148
BPM0325.42	4148
BPM0325.52	4148
BPM0331.00	3464
BPM0331.04	3722
BPM0331.10	3464
BPM0333.02	3640
BPM0337.02	3683
BPM0337.10	3872
BPM0337.22	3872
BPM0337.80	3683
BPM0337.81	3683
BPM0337.90	3872
BPM0341.02	3695
BPM0342.02	4080
BPM0343.00	3660
BPM0343.40	3660
BPM0343.80	3660

REMSA	BESER
NO	NO
BPM0343.81	3660
BPM0344.00	4104
BPM0345.00	3596
BPM0345.10	3596
BPM0351.02	3704
BPM0351.22	3704
BPM0351.32	3704
BPM0351.42	3704
BPM0354.02	3685
BPM0354.22	3685
BPM0354.32	3685
BPM0357.00	3603
BPM0357.00	3604
BPM0357.10	3603
BPM0357.10	3604
BPM0364.00	3598
BPM0364.02	3766
BPM0367.00	4072
BPM0370.00	4086
BPM0370.10	4086
BPM0372.00	3424
BPM0372.02	3424
BPM0372.30	3424
BPM0379.00	3628
BPM0379.12	3628
BPM0379.20	3629
BPM0381.00	3879
BPM0381.20	3879
BPM0381.30	3879
BPM0381.50	3879
BPM0381.60	4181
BPM0382.00	3733
BPM0382.20	3733
BPM0382.81	3733
BPM0384.00	3563
BPM0385.10	4020
BPM0389.02	3883
BPM0389.12	3883
BPM0390.00	3506
BPM0390.02	3590
BPM0390.11	3590
BPM0390.41	3590
BPM0391.00	3473
BPM0392.00	3445
BPM0393.00	3623
BPM0393.02	3623
BPM0393.20	3623
BPM0393.22	3623
BPM0396.00	3892
BPM0396.10	3892
BPM0396.20	3892
BPM0397.00	3874
BPM0397.10	3874
BPM0397.22	3874
BPM0402.02	3554
BPM0402.02	3651
BPM0402.22	3554
BPM0402.22	3651
BPM0402.42	3554
BPM0402.42	3651
BPM0402.52	3554
BPM0402.52	3651
BPM0403.02	4078
BPM0405.02	3688
BPM0407.00	3581
BPM0410.00	3745
BPM0412.00	3714
BPM0412.30	3714
BPM0413.00	3693
BPM0413.04	3693
BPM0413.10	3693
BPM0413.12	3693
BPM0414.01	3608
BPM0414.20	3643
BPM0415.04	3832
BPM0415.32	4269
BPM0415.42	4269
BPM0416.00	3833
BPM0417.00	3545
BPM0417.10	3545

REMSA	BESER
NO	NO
BPM0418.02	3607
BPM0418.22	3607
BPM0419.02	3686
BPM0419.12	3686
BPM0419.22	3686
BPM0421.00	3777
BPM0421.20	3777
BPM0424.04	4099
BPM0425.02	3674
BPM0425.12	3674
BPM0425.22	3674
BPM0426.02	3887
BPM0426.12	3887
BPM0429.04	3673
BPM0431.00	4128
BPM0431.10	4128
BPM0432.00	3558
BPM0432.01	3593
BPM0432.02	3593
BPM0433.00	4214
BPM0438.04	3819
BPM0438.14	3819
BPM0439.04	3878
BPM0441.00	3909
BPM0445.00	3658
BPM0445.02	3658
BPM0445.03	3658
BPM0445.81	3658
BPM0447.00	4197
BPM0456.02	3915
BPM0456.14	3915
BPM0459.00	3511
BPM0459.10	3511
BPM0460.02	3622
BPM0460.12	3622
BPM0461.02	3528
BPM0462.00	3888
BPM0462.20	3888
BPM0462.81	3888
BPM0467.00	4182
BPM0467.20	4182
BPM0467.30	4182
BPM0467.40	4182
BPM0468.00	3736
BPM0480.00	3553
BPM0480.21	3553
BPM0480.80	3553
BPM0480.81	3553
BPM0484.02	3867
BPM0486.02	3595
BPM0486.81	3595
BPM0487.02	3559
BPM0487.81	3559
BPM0494.02	3507
BPM0494.81	3507
BPM0501.02	3898
BPM0502.02	3740
BPM0502.22	3740
BPM0507.00	3667
BPM0571.02	3781
BPM0578.00	3567
BPM0579.00	3678
BPM0580.00	3670
BPM0580.10	3670
BPM0582.00	3675
BPM0582.80	3675
BPM0583.00	3809
BPM0584.00	3512
BPM0586.00	3677
BPM0586.10	3677
BPM0587.12	3618
BPM0587.22	3618
BPM0588.10	3897
BPM0589.02	3617
BPM0589.12	3617
BPM0589.22	3617
BPM0589.42	3617
BPM0591.30	3795
BPM0591.83	3795
BPM0592.02	3577

REMSA	BESER
NO	NO
BPM0592.12	3598
BPM0592.22	3577
BPM0593.00	4034
BPM0594.00	3884
BPM0594.02	3884
BPM0595.02	3602
BPM0596.00	3881
BPM0596.10	3881
BPM0598.02	3697
BPM0601.00	3863
BPM0601.10	3863
BPM0601.20	3863
BPM0601.30	3863
BPM0602.02	3799
BPM0603.04	3750
BPM0603.80	3750
BPM0605.02	4062
BPM0605.12	4062
BPM0605.80	4062
BPM0605.82	4062
BPM0605.83	4062
BPM0609.00	3538
BPM0609.10	3566
BPM0609.20	3637
BPM0614.00	3614
BPM0614.02	3614
BPM0614.81	3614
BPM0614.82	3614
BPM0618.00	3606
BPM0618.01	3794
BPM0619.02	3574
BPM0620.00	3419
BPM0620.20	3419
BPM0620.80	3419
BPM0620.81	3419
BPM0621.00	3822
BPM0621.20	3822
BPM0630.00	3663
BPM0631.00	3896
BPM0631.10	3896
BPM0631.12	3896
BPM0631.20	3896
BPM0631.80	3896
BPM0631.82	3896
BPM0631.90	3896
BPM0633.00	3682
BPM0633.20	3782
BPM0633.21	3782
BPM0633.31	3782
BPM0633.41	3782
BPM0634.00	3644
BPM0634.04	3636
BPM0634.10	3644
BPM0634.80	3644
BPM0634.84	3636
BPM0635.00	3872
BPM0636.04	4071
BPM0636.12	4071
BPM0643.00	3659
BPM0643.10	3938
BPM0643.20	3938
BPM0643.80	3938
BPM0643.81	3659
BPM0643.90	3938
BPM0645.00	3687
BPM0645.02	3687
BPM0645.12	3687
BPM0647.02	3764
BPM0650.00	4125
BPM0650.80	4125
BPM0650.81	4125
BPM0651.00	3575
BPM0651.10	3575
BPM0651.80	3575
BPM0651.81	3575
BPM0651.86	3942
BPM0655.02	4079
BPM0662.02	3653
BPM0674.12	3932
BPM0675.02	3778

REMSA	BESER
NO	NO
BPM0678.00	3676
BPM0678.10	3676
BPM0679.00	4274
BPM0684.02	3762
BPM0685.02	3763
BPM0685.22	3763
BPM0691.00	3754
BPM0693.00	3755
BPM0693.80	3755
BPM0694.10	4115
BPM0695.02	4155
BPM0695.82	4155
BPM0696.00	3744
BPM0697.01	4126
BPM0698.01	4069
BPM0699.00	3780
BPM0701.00	3681
BPM0703.02	3648
BPM0705.02	4281
BPM0705.81	4281
BPM0706.00	3830
BPM0707.04	3829
BPM0708.02	4059
BPM0708.82	4059
BPM0709.00	3821
BPM0709.10	3821
BPM0710.02	4027
BPM0711.04	3859
BPM0711.11	3859
BPM0712.02	3768
BPM0712.12	3768
BPM0713.00	3919
BPM0714.00	3918
BPM0717.00	3861
BPM0719.00	3943
BPM0720.02	3901
BPM0724.02	3928
BPM0724.11	3928
BPM0725.02	3748
BPM0727.10	4123
BPM0727.20	4123
BPM0729.02	3913
BPM0730.01	3767
BPM0733.00	3804
BPM0735.02	4110
BPM0736.02	4011
BPM0736.12	4011
BPM0736.32	4011
BPM0739.02	4009
BPM0740.00	3769
BPM0740.02	3769
BPM0741.02	3788
BPM0743.04	4085
BPM0746.02	3993
BPM0746.12	3993
BPM0746.22	3993
BPM0746.32	3993
BPM0746.42	3895
BPM0746.62	3895
BPM0747.02	4109
BPM0747.02	4232
BPM0747.12	4109
BPM0747.12	4232
BPM0748.02	4017
BPM0750.02	4084
BPM0752.12	4222
BPM0766.00	3877
BPM0767.01	4345
BPM0768.00	3836
BPM0768.10	3836
BPM0768.81	3836
BPM0769.00	4102
BPM0770.00	4101
BPM0770.00	4209
BPM0771.02	3843
BPM0771.12	3843
BPM0771.22	3843
BPM0772.02	3784
BPM0772.12	3921
BPM0772.82	3784

REMSA	BESER
NO	NO
BPM0772.83	3921
BPM0774.02	3846
BPM0774.12	3846
BPM0774.82	3846
BPM0775.00	4138
BPM0775.01	4138
BPM0775.80	4138
BPM0775.81	4138
BPM0776.00	4100
BPM0776.10	4100
BPM0776.80	4100
BPM0776.81	4100
BPM0777.00	4093
BPM0777.10	4093
BPM0777.80	4093
BPM0800.22	4118
BPM0802.00	4119
BPM0803.12	3893
BPM0803.22	3893
BPM0804.02	3955
BPM0804.12	3955
BPM0804.31	3955
BPM0807.00	4012
BPM0807.02	4012
BPM0813.00	4158
BPM0819.00	3856
BPM0821.02	3802
BPM0821.12	3802
BPM0822.00	4094
BPM0822.12	3817
BPM0827.04	3934
BPM0827.84	3934
BPM0828.04	3935
BPM0833.00	3855
BPM0833.80	3855
BPM0834.00	3848
BPM0834.10	3848
BPM0836.02	4095
BPM0839.02	4153
BPM0840.00	3820
BPM0840.10	3820
BPM0840.20	3820
BPM0840.30	3820
BPM0840.82	3820
BPM0841.00	3800
BPM0841.10	3800
BPM0841.80	3800
BPM0842.00	3853
BPM0842.10	3853
BPM0842.20	3853
BPM0842.30	3853
BPM0842.70	3853
BPM0843.00	3852
BPM0843.10	3852
BPM0845.01	4271
BPM0849.00	3823
BPM0849.10	3823
BPM0852.04	4143
BPM0852.14	4143
BPM0854.00	3911
BPM0855.00	4082
BPM0857.00	4180
BPM0858.01	3826
BPM0858.10	3826
BPM0858.11	3826
BPM0858.30	3826
BPM0858.32	3826
BPM0858.80	3826
BPM0859.01	3800
BPM0859.10	3800
BPM0859.11	3800
BPM0859.12	3800
BPM0859.20	3800
BPM0859.21	3800
BPM0859.80	3800
BPM0860.12	4301
BPM0874.02	3825
BPM0876.01	3933
BPM0876.21	3933
BPM0876.31	3933

REMSA	BESER
NO	NO
BPM0876.41	3933
BPM0879.12	3986
BPM0879.81	3986
BPM0880.00	3931
BPM0880.80	3931
BPM0881.00	3854
BPM0881.80	3854
BPM0883.11	4303
BPM0884.00	3910
BPM0888.00	4211
BPM0888.20	4211
BPM0888.40	4211
BPM0892.00	4179
BPM0893.02	3961
BPM0897.11	3842
BPM0899.00	3831
BPM0899.02	3831
BPM0899.12	3831
BPM0951.02	3912
BPM0951.11	3912
BPM0953.00	3959
BPM0953.02	3959
BPM0953.12	3959
BPM0953.22	3959
BPM0954.00	4013
BPM0957.00	4040
BPM0958.10	4208
BPM0959.01	3835
BPM0960.01	3834
BPM0961.00	3914
BPM0962.00	3950
BPM0963.00	4347
BPM0964.12	4096
BPM0965.01	3765
BPM0970.02	3889
BPM0971.02	3769
BPM0973.02	4031
BPM0976.00	3849
BPM0976.10	3849
BPM0976.20	3849
BPM0976.80	3849
BPM0976.81	3849
BPM0977.00	3850
BPM0977.80	3850
BPM0978.02	4112
BPM0984.00	3801
BPM0985.02	4074
BPM0986.00	3951
BPM0987.00	3983
BPM0987.02	3983
BPM0987.10	3983
BPM0987.11	3983
BPM0988.00	3891
BPM0996.00	4076
BPM1030.01	3904
BPM1031.00	3905
BPM1036.02	4042
BPM1037.00	4216
BPM1038.02	4028
BPM1038.12	4028
BPM1039.00	4105
BPM1040.00	4111
BPM1041.02	3978
BPM1041.12	3978
BPM1042.02	3979
BPM1045.01	3841
BPM1045.11	3841
BPM1046.02	3890
BPM1047.02	4153
BPM1048.00	3894
BPM1051.02	4106
BPM1052.00	4346
BPM1068.02	4159
BPM1069.00	3827
BPM1073.20	3343
BPM1073.20	3483
BPM1081.01	4036
BPM1081.11	4036
BPM1082.00	3885
BPM1085.02	3976

REMSA	BESER
NO	NO
BPM1098.02	3886
BPM1098.14	3886
BPM1100.00	4173
BPM1100.11	4173
BPM1100.21	4173
BPM1101.04	3940
BPM1102.04	3939
BPM1103.00	3946
BPM1109.02	3923
BPM1113.00	4137
BPM1123.02	3797
BPM1126.08	4006
BPM1127.08	4018
BPM1128.08	4198
BPM1129.01	3900
BPM1133.02	3968
BPM1134.02	4001
BPM1135.02	3969
BPM1136.01	4213
BPM1137.02	4081
BPM1138.00	3984
BPM1139.02	3985
BPM1149.10	4058
BPM1151.00	3988
BPM1152.00	3747
BPM1158.00	4293
BPM1159.00	3944
BPM1159.10	3944
BPM1162.01	3952
BPM1162.12	3952
BPM1166.01	4000
BPM1173.02	4016
BPM1177.00	3987
BPM1179.00	4210
BPM1181.02	4113
BPM1183.01	4121
BPM1196.02	4029
BPM1200.00	3945
BPM1200.30	3945
BPM1202.00	4240
BPM1208.02	3880
BPM1209.02	3980
BPM1223.02	4073
BPM1224.00	3958
BPM1225.02	3929
BPM1226.02	3960
BPM1228.01	4258
BPM1231.00	3949
BPM1232.00	3953
BPM1233.00	3948
BPM1234.00	4077
BPM1235.02	3982
BPM1237.01	3981
BPM1237.12	3981
BPM1238.00	3820
BPM1239.02	3989
BPM1242.00	3975
BPM1242.01	3975
BPM1243.00	3962
BPM1245.00	3925
BPM1245.02	3965
BPM1245.10	3965
BPM1246.00	3926
BPM1246.02	3926
BPM1247.00	3963
BPM1248.00	3964
BPM1248.10	3964
BPM1250.00	3906
BPM1250.02	3906
BPM1250.11	3906
BPM1251.02	3920
BPM1252.02	3907
BPM1256.00	4157
BPM1259.02	4005
BPM1261.12	3976
BPM1264.02	4004
BPM1266.00	3903
BPM1271.02	3996
BPM1272.00	3997
BPM1274.02	4060

REMSA	BESER
NO	NO
BPM1275.01	3922
BPM1275.12	3922
BPM1275.12	4171
BPM1281.01	4122
BPM1281.02	4122
BPM1281.10	4122
BPM1282.00	4092
BPM1282.02	4122
BPM1286.02	3954
BPM1289.02	4160
BPM1290.02	4156
BPM1291.02	4035
BPM1292.01	3972
BPM1293..02	4015
BPM1297.00	4207
BPM1299.00	4151
BPM1301.00	4248
BPM1302.02	4039
BPM1302.22	4039
BPM1303.02	4165
BPM1304.00	4249
BPM1304.10	4259
BPM1305.00	4247
BPM1310.02	3956
BPM1312.00	4255
BPM1318.00	4038
BPM1323.00	3970
BPM1337.00	4054
BPM1339.00	3995
BPM1343.00	4260
BPM1345.00	4309
BPM1350.00	4134
BPM1351.00	3966
BPM1352.00	3967
BPM1356.02	4037
BPM1362.02	4061
BPM1362.42	4311
BPM1362.52	4311
BPM1375.12	4149
BPM1379.10	4310
BPM1382.00	3971
BPM1387.00	4142
BPM1387.30	4287
BPM1388.04	4150
BPM1391.00	3529
BPM1391.10	3529
BPM1395.00	4256
BPM1403.02	4146
BPM1407.00	4124
BPM1407.12	4308
BPM1409.10	4314
BPM1412.32	4166
BPM1420.00	4135
BPM1423.02	4233
BPM1426.02	4049
BPM1431.02	4008
BPM1431.12	4230
BPM1432.02	4014
BPM1432.12	4014
BPM1439.01	4057
BPM1439.11	4057
BPM1440.01	4162
BPM1442.01	4132
BPM1442.01	4172
BPM1449.01	4056
BPM1464.08	4145
BPM1466.00	3998
BPM1468.02	4167
BPM1468.04	4167
BPM1482.00	4161
BPM1488.02	4136
BPM1510.00	4226
BPM1510.10	4226
BPM1514.00	4204
BPM1516.00	4241
BPM1520.02	4174
BPM1521.00	4175
BPM1530.00	4201
BPM1538.04	4315
BPM1540.00	4140

REMSA	BESER
NO	NO
BPM1548.02	4312
BPM1553.00	4200
BPM1561.02	4176
BPM1569.02	4317
BPM1570.02	4318
BPM1601.01	4295
BPM1634.02	4284
BPM1724.08	4280
BPM4310.01	4249
BPM7843.02	3762
JCA0245.00	3679
JCA0245.12	3994
JCA0245.22	3994
JCA0245.32	3994
JCA0245.40	3679
JCA0245.41	3994
JCA0245.42	3994
JCA0277.00	3433
JCA0277.10	3433
JCA0277.12	3433
JCA0277.40	3433
JCA0278.21	3773
JCA0278.22	3773
JCA0278.32	3773
JCA0278.42	3773
JCA0436.40	3749
JCA0436.41	3749
JCA0640.00	3994
JCA0640.40	3994
JCA1399.00	4169
JCA245.00	3679
JCA245.12	3994
JCA245.22	3994
JCA245.32	3994
JCA245.40	3679
JCA245.41	3994
JCA245.42	3994
JCA277.00	3433
JCA277.10	3433
JCA277.12	3433
JCA277.40	3433
JCA278.21	3773
JCA278.22	3773
JCA278.32	3773
JCA278.42	3773
JCA436.40	3749
JCA436.41	3749
JCA640.00	3994
JCA640.40	3994

REMSA	BESER
NO	NO
JCA815.00	3908
JCA815.80	3908
JCA823.40	3521
JCA8540	3707
PCA0001.02	3405
PCA0002.00	3320
PCA0002.20	3350
PCA0006.00	3318
PCA0006.30	3318
PCA0006.40	3318
PCA0006.60	3318
PCA0007.40	3326
PCA0008.02	3806
PCA0008.10	3806
PCA0010.00	3315
PCA0010.00	3515
PCA0010.20	3315
PCA0010.20	3515
PCA0010.30	3315
PCA0010.30	3515
PCA0010.40	3339
PCA0010.40	3514
PCA0010.50	3339
PCA0010.50	3514
PCA0010.58	3315
PCA0010.58	3515
PCA0014.00	3335
PCA0014.10	3365
PCA0014.12	3365
PCA0014.40	4103
PCA0017.00	3327
PCA0017.10	3327
PCA0017.20	3343
PCA0017.20	3483
PCA0017.30	3343
PCA0017.30	3483
PCA0021.06	3333
PCA0021.10	3329
PCA0021.12	3329
PCA0021.14	3329
PCA0021.16	3329
PCA0022.00	3316
PCA0022.10	3317
PCA0022.12	3317
PCA0022.20	3346
PCA0022.30	3316
PCA0022.50	3316
PCA0022.60	3317
PCA0023.20	3346
PCA0025.30	3425
PCA0026.02	3366
PCA0026.12	3366
PCA0039.00	3311
PCA0039.10	3311
PCA0042.00	3373
PCA0042.10	3373
PCA0042.20	3373
PCA0042.30	3373
PCA0042.40	3373
PCA0042.50	3373
PCA0044.02	3526
PCA0045.00	3340
PCA0045.02	3340
PCA0045.10	3340
PCA0045.22	3340
PCA0045.32	3321
PCA0046.00	3378
PCA0046.10	3378
PCA0046.20	3490
PCA0046.40	3378
PCA0046.50	3490
PCA0047.30	3513
PCA0047.32	3513
PCA0048.00	3537
PCA0048.10	3537
PCA0052.10	3661
PCA0052.20	3661
PCA0056.00	3423
PCA0056.10	3423
PCA0056.12	3423

REMSA	BESER
NO	NO
PCA0056.20	3423
PCA0058.10	3416
PCA0060.00	3374
PCA0060.10	3374
PCA0061.02	3527
PCA0063.00	3312
PCA0063.02	3484
PCA0068.02	3323
PCA0079.00	3709
PCA0079.10	3709
PCA0079.20	3709
PCA0079.30	3709
PCA0080.00	3393
PCA0092.00	3710
PCA0098.00	3324
PCA0098.02	3324
PCA0101.00	3410
PCA0101.03	3410
PCA0101.10	3410
PCA0101.20	3410
PCA0101.40	3410
PCA0102.10	3873
PCA0103.00	3421
PCA0106.00	3407
PCA0109.12	3579
PCA0109.22	3579
PCA010900	3579
PCA0111.00	3509
PCA0114.00	3625
PCA0115.00	3369
PCA0117.00	3370
PCA0119.00	3417
PCA0119.10	3570
PCA0119.10	3594
PCA0119.12	3417
PCA0119.12	3417
PCA0119.15	3417
PCA0119.20	3417
PCA0119.22	3417
PCA0119.22	3417
PCA0119.32	3417
PCA0119.32	3417
PCA0120.00	3379
PCA0129.00	3415
PCA0132.00	3371
PCA0134.00	3650
PCA0134.01	3650
PCA0134.02	3619
PCA0134.03	3635
PCA0134.10	3649
PCA0134.11	3649
PCA0134.12	3635
PCA0134.15	3635
PCA0134.20	3650
PCA0134.40	3551
PCA0134.41	3531
PCA0134.50	3531
PCA0134.81	3650
PCA0134.95	3531
PCA0135.00	3536
PCA0135.01	3536
PCA0135.10	3536
PCA0135.11	3536
PCA0135.20	3536
PCA0135.22	3536
PCA0135.40	3536
PCA0135.94	3536
PCA0139.00	3573
PCA0139.02	3573
PCA0141.01	3503
PCA0141.02	3503
PCA0141.10	3503
PCA0141.11	3503
PCA0141.12	3503
PCA0141.16	3503
PCA0141.18	3503
PCA0141.20	3503
PCA0141.30	3503
PCA0141.32	3503
PCA0141.52	3503

REMSA	BESER
NO	NO
PCA0141.78	3503
PCA0142.20	3689
PCA0143.02	3440
PCA0144.02	3381
PCA0144.12	3381
PCA0144.24	3493
PCA0144.32	3495
PCA0144.42	3381
PCA0144.50	3496
PCA014406	3496
PCA014414	3493
PCA014460	3496
PCA0146.01	3466
PCA0146.04	3466
PCA0146.11	3466
PCA0146.14	3466
PCA0146.22	3467
PCA0146.23	3467
PCA0146.41	3468
PCA0146.44	3468
PCA0146.60	3466
PCA0146.62	3466
PCA0146.80	3466
PCA0146.84	3466
PCA0147.00	3646
PCA0147.02	3633
PCA0148.14	3666
PCA014834	3666
PCA0149.00	3394
PCA0149.10	3394
PCA014902	3394
PCA0151.02	4087
PCA0151.22	4087
PCA0154.00	3419
PCA0154.01	3419
PCA0154.02	3429
PCA0154.03	3429
PCA0154.10	3419
PCA0154.12	3429
PCA0155.00	3572
PCA0155.02	3572
PCA0155.10	3583
PCA0155.12	3572
PCA0155.20	3583
PCA0157.00	3611
PCA0157.10	3550
PCA0157.20	3630
PCA0159.00	3413
PCA0163.02	3442
PCA0167.04	3402
PCA0167.10	3402
PCA0168.00	3621
PCA0169.01	3624
PCA0169.81	3624
PCA0170.04	3474
PCA0170.14	3474
PCA0170.24	3556
PCA0170.34	3474
PCA0170.76	3474
PCA0171.00	3486
PCA0171.05	3444
PCA0171.10	3444
PCA0171.20	3441
PCA0171.60	3585
PCA0172.00	3549
PCA0172.10	3790
PCA0172.11	3548
PCA0172.11	3690
PCA0172.20	3790
PCA0172.30	3790
PCA0172.32	4141
PCA017235	3549
PCA0175.00	3400
PCA0176.20	3641
PCA0176.22	3641
PCA0177.00	3620
PCA0178.00	3436
PCA0178.10	3436
PCA0178.20	3436
PCA0178.30	3436

REMSA	BESER
NO	NO
PCA0178.50	3436
PCA0179.00	3875
PCA0179.10	3875
PCA0181.04	3446
PCA0184.00	3397
PCA0184.02	3758
PCA0184.12	3758
PCA0187.00	3634
PCA0187.02	3634
PCA0188.00	3401
PCA0189.00	3408
PCA0189.02	3408
PCA0189.05	3408
PCA0189.08	3408
PCA0189.10	3408
PCA0189.11	3408
PCA0189.12	3408
PCA0189.24	3408
PCA0191.04	3395
PCA0191.12	3426
PCA0192.02	3380
PCA0192.11	3380
PCA0192.12	3380
PCA0192.22	3580
PCA0192.34	3487
PCA0192.96	3380
PCA0193.00	3501
PCA0193.02	3752
PCA0197.10	3714
PCA0202.02	3482
PCA0204.00	3462
PCA0206.00	3603
PCA0208.00	3539
PCA0208.01	3546
PCA0208.02	3546
PCA0208.12	3539
PCA0208.80	3539
PCA0208.83	3539
PCA0211.22	3523
PCA0212.00	3449
PCA0212.02	3449
PCA0212.12	3522
PCA0212.22	3522
PCA0212.32	3522
PCA0212.42	3522
PCA0212.52	3522
PCA0214.14	3776
PCA0220.02	3428
PCA0221.00	3422
PCA0221.01	3422
PCA0221.02	3552
PCA0222.00	3661
PCA0222.01	3771
PCA0222.10	3661
PCA0222.11	3771
PCA0223.00	3605
PCA0223.86	3605
PCA0224.00	3504
PCA0224.02	3502
PCA0224.22	3502
PCA0228.02	3582
PCA0232.00	3746
PCA0233.02	4212
PCA0233.12	4212
PCA0233.86	4212
PCA023300	4212
PCA023364	4212
PCA023385	4212
PCA0236.00	3692
PCA0236.02	3760
PCA0238.04	3757
PCA0238.04	3857
PCA0238.14	3757
PCA0238.14	3857
PCA0238.24	3757
PCA0238.24	3857
PCA0239.00	3717
PCA0239.40	3717
PCA0239.50	3717
PCA0239.60	3717

REMSA	BESER
NO	NO
PCA0244.00	3499
PCA0244.02	3463
PCA0254.02	3600
PCA0254.12	3600
PCA0261.02	3543
PCA0261.82	3543
PCA0262.02	3457
PCA0262.12	3610
PCA0262.22	3457
PCA0262.82	3457
PCA0262.83	3610
PCA0263.00	3529
PCA0263.01	3529
PCA0263.03	3529
PCA0263.04	3529
PCA0263.05	3529
PCA0263.06	3529
PCA0263.07	3529
PCA0263.10	3529
PCA0263.12	3529
PCA0263.14	3529
PCA0263.15	3529
PCA0263.16	3529
PCA0263.17	3529
PCA0263.18	3529
PCA0263.19	3529
PCA0263.21	3529
PCA0263.40	3529
PCA0263.41	4152
PCA0263.50	3529
PCA0263.52	3529
PCA0263.53	3529
PCA0263.62	3529
PCA0263.74	3529
PCA0263.87	3529
PCA0263.88	3529
PCA0263.89	3529
PCA0263.92	3529
PCA0264.02	3432
PCA0264.12	3491
PCA0264.13	3432
PCA0264.14	3491
PCA0265.00	3578
PCA0265.02	3578
PCA0265.15	3656
PCA0266.00	3412
PCA0266.10	3453
PCA0267.11	3662
PCA0270.00	3564
PCA0270.10	3584
PCA0271.02	3723
PCA0273.02	3437
PCA0273.12	3437
PCA0275.02	3448
PCA0281.00	3459
PCA0281.40	3569
PCA0281.42	3568
PCA0282.00	3469
PCA0282.10	3469
PCA0284.00	3430
PCA0284.02	3430
PCA0284.83	3430
PCA0284.85	3430
PCA0285.10	3589
PCA0286.10	3470
PCA0286.20	3470
PCA0286.30	3470
PCA0286.32	3470
PCA0286.50	3505
PCA0286.50	3615
PCA0287.00	3700
PCA0289.02	3882
PCA0289.12	3882
PCA0291.02	4108
PCA0293.12	3779
PCA0294.00	4087
PCA0294.20	4087
PCA0294.22	4087
PCA0294.32	4087
PCA0296.00	3609

REMSA	BESER
NO	NO
PCA0296.02	3609
PCA0297.00	3642
PCA0297.10	3642
PCA0297.81	3642
PCA030100	3458
PCA0306.00	4088
PCA0306.12	4088
PCA0311.00	3873
PCA0315.04	3560
PCA0317.12	4010
PCA0317.22	4010
PCA0318.02	3632
PCA0318.05	3632
PCA0318.06	3632
PCA0318.12	3632
PCA0318.22	3632
PCA0318.32	3632
PCA0318.52	3632
PCA0318.82	3632
PCA0318.92	3632
PCA0320.00	3562
PCA0320.20	3562
PCA0320.81	3562
PCA0321.02	3680
PCA0321.22	3680
PCA0323.02	3631
PCA0324.02	3696
PCA0325.02	4148
PCA0325.12	4148
PCA0325.22	4148
PCA0325.32	4148
PCA0325.42	4148
PCA0325.52	4148
PCA0331.00	3464
PCA0331.04	3722
PCA0331.10	3464
PCA0333.02	3640
PCA0337.02	3683
PCA0337.10	3872
PCA0337.22	3872
PCA0337.80	3683
PCA0337.81	3683
PCA0337.90	3872
PCA0341.02	3695
PCA0342.02	4080
PCA0343.00	3660
PCA0343.40	3660
PCA0343.80	3660
PCA0343.81	3660
PCA0344.00	4104
PCA0345.00	3596
PCA0345.10	3596
PCA0351.02	3704
PCA0351.22	3704
PCA0351.32	3704
PCA0351.42	3704
PCA0354.02	3685
PCA0354.22	3685
PCA0354.32	3685
PCA0357.00	3603
PCA0357.00	3604
PCA0357.10	3603
PCA0357.10	3604
PCA0364.00	3598
PCA0364.02	3766
PCA0367.00	4072
PCA0370.00	4086
PCA0370.10	4086
PCA0372.00	3424
PCA0372.02	3424
PCA0372.30	3424
PCA0379.00	3628
PCA0379.12	3628
PCA0379.20	3629
PCA0381.00	3879
PCA0381.20	3879
PCA0381.30	3879
PCA0381.50	3879
PCA0381.60	4181
PCA0382.00	3733

REMSA	BESER
NO	NO
PCA0382.20	3733
PCA0382.81	3733
PCA0384.00	3563
PCA0385.10	4020
PCA0389.02	3883
PCA0389.12	3883
PCA0390.00	3506
PCA0390.02	3590
PCA0390.11	3590
PCA0390.41	3590
PCA0391.00	3473
PCA0392.00	3445
PCA0393.00	3623
PCA0393.02	3623
PCA0393.20	3623
PCA0393.22	3623
PCA0396.00	3892
PCA0396.10	3892
PCA0396.20	3892
PCA0397.00	3874
PCA0397.10	3874
PCA0397.22	3874
PCA0402.02	3554
PCA0402.02	3651
PCA0402.22	3554
PCA0402.22	3651
PCA0402.42	3554
PCA0402.42	3651
PCA0402.52	3554
PCA0402.52	3651
PCA0403.02	4078
PCA0405.02	3688
PCA0407.00	3581
PCA0410.00	3745
PCA0412.00	3714
PCA0412.30	3714
PCA0413.00	3693
PCA0413.04	3693
PCA0413.10	3693
PCA0413.12	3693
PCA0414.01	3608
PCA0414.20	3643
PCA0415.04	3832
PCA0415.32	4269
PCA0415.42	4269
PCA0416.00	3833
PCA0417.00	3545
PCA0417.10	3545
PCA0418.02	3607
PCA0418.22	3607
PCA0419.02	3686
PCA0419.12	3686
PCA0419.22	3686
PCA0421.00	3777
PCA0421.20	3777
PCA0424.04	4099
PCA0425.02	3674
PCA0425.12	3674
PCA0425.22	3674
PCA0426.02	3887
PCA0426.12	3887
PCA0429.04	3673
PCA0431.00	4128
PCA0431.10	4128
PCA0432.00	3558
PCA0432.01	3593
PCA0432.02	3593
PCA0433.00	4214
PCA0438.04	3819
PCA0438.14	3819
PCA0439.04	3878
PCA0441.00	3909
PCA0445.00	3658
PCA0445.02	3658
PCA0445.03	3658
PCA0445.81	3658
PCA0447.00	4197
PCA0456.02	3915
PCA0456.14	3915
PCA045700	4275

REMSA	BESER
NO	NO
PCA0459.00	3511
PCA0459.10	3511
PCA0460.02	3622
PCA0460.12	3622
PCA0461.02	3528
PCA0462.00	3888
PCA0462.20	3888
PCA0462.81	3888
PCA0467.00	4182
PCA0467.20	4182
PCA0467.30	4182
PCA0467.40	4182
PCA0468.00	3736
PCA0480.00	3553
PCA0480.21	3553
PCA0480.80	3553
PCA0480.81	3553
PCA0484.02	3867
PCA0486.02	3595
PCA0486.81	3595
PCA0487.02	3559
PCA0487.81	3559
PCA049002	3683
PCA0494.02	3507
PCA0494.81	3507
PCA0501.02	3898
PCA0502.02	3740
PCA0502.22	3740
PCA0507.00	3667
PCA0571.02	3781
PCA0578.00	3567
PCA0579.00	3678
PCA0580.00	3670
PCA0580.10	3670
PCA0582.00	3675
PCA0582.80	3675
PCA0583.00	3809
PCA0584.00	3512
PCA0586.00	3677
PCA0586.10	3677
PCA0587.12	3618
PCA0587.22	3618
PCA0588.10	3897
PCA0589.02	3617
PCA0589.12	3617
PCA0589.22	3617
PCA0589.42	3617
PCA0591.30	3795
PCA0591.83	3795
PCA0592.02	3577
PCA0592.12	3598
PCA0592.22	3577
PCA0593.00	4034
PCA0594.00	3884
PCA0594.02	3884
PCA0595.02	3602
PCA0596.00	3881
PCA0596.10	3881
PCA059620	3881
PCA0598.02	3697
PCA0601.00	3863
PCA0601.10	3863
PCA0601.20	3863
PCA0601.30	3863
PCA0602.02	3799
PCA0603.04	3750
PCA0603.80	3750
PCA0605.02	4062
PCA0605.12	4062
PCA0605.80	4062
PCA0605.82	4062
PCA0605.83	4062
PCA0609.00	3538
PCA0609.10	3566
PCA0609.20	3637
PCA0614.00	3614
PCA0614.02	3614
PCA0614.81	3614
PCA0614.82	3614
PCA0618.00	3606

REMSA	BESER
NO	NO
PCA0618.01	3794
PCA0619.02	3574
PCA0620.00	3419
PCA0620.20	3419
PCA0620.80	3419
PCA0620.81	3419
PCA0621.00	3822
PCA0621.20	3822
PCA0630.00	3663
PCA0631.00	3896
PCA0631.10	3896
PCA0631.12	3896
PCA0631.20	3896
PCA0631.80	3896
PCA0631.82	3896
PCA0631.90	3896
PCA0633.00	3682
PCA0633.20	3782
PCA0633.21	3782
PCA0633.31	3782
PCA0633.41	3782
PCA0634.00	3644
PCA0634.04	3636
PCA0634.10	3644
PCA0634.80	3644
PCA0634.84	3636
PCA0635.00	3872
PCA0636.04	4071
PCA0636.12	4071
PCA0643.00	3659
PCA0643.10	3938
PCA0643.20	3938
PCA0643.80	3938
PCA0643.81	3659
PCA0643.90	3938
PCA0645.00	3687
PCA0645.02	3687
PCA0645.12	3687
PCA0647.02	3764
PCA0650.00	4125
PCA0650.80	4125
PCA0650.81	4125
PCA0651.00	3575
PCA0651.10	3575
PCA0651.80	3575
PCA0651.81	3575
PCA0651.86	3942
PCA0655.02	4079
PCA0662.02	3653
PCA0674.12	3932
PCA0675.02	3778
PCA0678.00	3676
PCA0678.10	3676
PCA0679.00	4274
PCA068402	3762
PCA0685.02	3763
PCA0685.22	3763
PCA0691.00	3754
PCA0693.00	3755
PCA0693.80	3755
PCA0694.10	4115
PCA0695.02	4155
PCA0695.82	4155
PCA0696.00	3744
PCA0697.01	4126
PCA0698.01	4069
PCA0699.00	3780
PCA0701.00	3681
PCA0703.02	3648
PCA0705.02	4281
PCA0705.81	4281
PCA0706.00	3830
PCA0707.04	3829
PCA0708.02	4059
PCA0708.82	4059
PCA0709.00	3821
PCA0709.10	3821
PCA0710.02	4027
PCA0711.04	3859
PCA0711.11	3859

REMSA	BESER
NO	NO
PCA0712.02	3768
PCA0712.12	3768
PCA0713.00	3919
PCA0714.00	3918
PCA0717.00	3861
PCA0719.00	3943
PCA0720.02	3901
PCA0724.02	3928
PCA0724.11	3928
PCA0725.02	3748
PCA0727.10	4123
PCA0727.20	4123
PCA0729.02	3913
PCA0730.01	3767
PCA0733.00	3804
PCA0735.02	4110
PCA0736.02	4011
PCA0736.12	4011
PCA0736.32	4011
PCA0739.02	4009
PCA0740.00	3769
PCA0740.02	3769
PCA0741.02	3788
PCA0743.04	4085
PCA0746.02	3993
PCA0746.12	3993
PCA0746.22	3993
PCA0746.32	3993
PCA0746.42	3895
PCA0746.62	3895
PCA0747.02	4109
PCA0747.02	4232
PCA0747.12	4109
PCA0747.12	4232
PCA0748.02	4017
PCA0750.02	4084
PCA0752.12	4222
PCA0766.00	3877
PCA0767.01	4345
PCA0768.00	3836
PCA0768.10	3836
PCA0768.81	3836
PCA0769.00	4102
PCA0770.00	4101
PCA0770.00	4209
PCA0771.02	3843
PCA0771.12	3843
PCA0771.22	3843
PCA0772.02	3784
PCA0772.12	3921
PCA0772.82	3784
PCA0772.83	3921
PCA0774.02	3846
PCA0774.12	3846
PCA0774.82	3846
PCA0775.00	4138
PCA0775.01	4138
PCA0775.80	4138
PCA0775.81	4138
PCA0776.00	4100
PCA0776.10	4100
PCA0776.80	4100
PCA0776.81	4100
PCA0777.00	4093
PCA0777.10	4093
PCA0777.80	4093
PCA0800.22	4118
PCA0802.00	4119
PCA0803.12	3893
PCA0803.22	3893
PCA0804.02	3955
PCA0804.12	3955
PCA0804.31	3955
PCA0807.00	4012
PCA0807.02	4012
PCA0813.00	4158
PCA0819.00	3856
PCA0821.02	3802
PCA0821.12	3802
PCA0822.00	4094

REMSA	BESER
NO	NO
PCA0822.12	3817
PCA0827.04	3934
PCA0827.84	3934
PCA0828.04	3935
PCA0833.00	3855
PCA0833.80	3855
PCA0834.00	3848
PCA0834.10	3848
PCA0836.02	4095
PCA0839.02	4153
PCA0840.00	3820
PCA0840.10	3820
PCA0840.20	3820
PCA0840.30	3820
PCA0840.82	3820
PCA0841.00	3800
PCA0841.10	3800
PCA0841.80	3800
PCA0842.00	3853
PCA0842.10	3853
PCA0842.20	3853
PCA0842.30	3853
PCA0842.70	3853
PCA0843.00	3852
PCA0843.10	3852
PCA0845.01	4271
PCA0849.00	3823
PCA0849.10	3823
PCA0852.04	4143
PCA0852.14	4143
PCA0854.00	3911
PCA0855.00	4082
PCA0857.00	4180
PCA0858.01	3826
PCA0858.10	3826
PCA0858.11	3826
PCA0858.30	3826
PCA0858.32	3826
PCA0858.80	3826
PCA0859.01	3800
PCA0859.10	3800
PCA0859.11	3800
PCA0859.12	3800
PCA0859.20	3800
PCA0859.21	3800
PCA0859.80	3800
PCA086012	4301
PCA0874.02	3825
PCA0876.01	3933
PCA0876.21	3933
PCA0876.31	3933
PCA0876.41	3933
PCA0879.12	3986
PCA0879.81	3986
PCA0880.00	3931
PCA0880.80	3931
PCA0881.00	3854
PCA0881.80	3854
PCA0883.11	4303
PCA0884.00	3910
PCA0888.00	4211
PCA0888.20	4211
PCA0888.40	4211
PCA0892.00	4179
PCA0893.02	3961
PCA0897.11	3842
PCA0899.00	3831
PCA0899.02	3831
PCA0899.12	3831
PCA0951.02	3912
PCA0951.11	3912
PCA0953.00	3959
PCA0953.02	3959
PCA0953.12	3959
PCA0953.22	3959
PCA0954.00	4013
PCA0957.00	4040
PCA0958.10	4208
PCA0959.01	3835
PCA0960.01	3834

REMSA	BESER
NO	NO
PCA0961.00	3914
PCA0962.00	3950
PCA0963.00	4347
PCA0964.12	4096
PCA0965.01	3765
PCA0970.02	3889
PCA0971.02	3769
PCA0973.02	4031
PCA0976.00	3849
PCA0976.10	3849
PCA0976.20	3849
PCA0976.80	3849
PCA0976.81	3849
PCA0977.00	3850
PCA0977.80	3850
PCA0978.02	4112
PCA0984.00	3801
PCA0985.02	4074
PCA0986.00	3951
PCA0987.00	3983
PCA0987.02	3983
PCA0987.10	3983
PCA0987.11	3983
PCA0987.22	3983
PCA0988.00	3891
PCA0996.00	4076
PCA1030.01	3904
PCA1031.00	3905
PCA1036.02	4042
PCA1037.00	4216
PCA1038.02	4028
PCA1038.12	4028
PCA1039.00	4105
PCA1040.00	4111
PCA1041.02	3978
PCA1041.12	3978
PCA1042.02	3979
PCA1045.01	3841
PCA1045.11	3841
PCA1046.02	3890
PCA1047.02	4153
PCA1048.00	3894
PCA1051.02	4106
PCA1052.00	4346
PCA1068.02	4159
PCA1069.00	3827
PCA1073.20	3343
PCA1073.20	3483
PCA108101	4036
PCA108111	4036
PCA1082.00	3885
PCA1082.50	3885
PCA1085.02	3976
PCA1098.02	3886
PCA1098.14	3886
PCA1100.00	4173
PCA1100.11	4173
PCA1100.21	4173
PCA1101.04	3940
PCA1102.04	3939
PCA1103.00	3946
PCA1109.02	3923
PCA1113.00	4137
PCA112.500	4215
PCA1123.02	3797
PCA112400	4220
PCA1126.08	4006
PCA1127.08	4018
PCA1128.08	4198
PCA1129.01	3900
PCA1133.02	3968
PCA1134.02	4001
PCA1135.02	3969
PCA1136.01	4213
PCA1136.12	4213
PCA1137.02	4081
PCA1138.00	3984
PCA1139.02	3985
PCA1149.10	4058
PCA1151.00	3988

REMSA	BESER
NO	NO
PCA1152.00	3747
PCA1158.00	4293
PCA1159.00	3944
PCA1159.10	3944
PCA1162.01	3952
PCA1162.12	3952
PCA1166.01	4000
PCA1173.02	4016
PCA1177.00	3987
PCA1179.00	4210
PCA1181.02	4113
PCA1183.01	4121
PCA1196.02	4029
PCA1200.00	3945
PCA1200.30	3945
PCA120030	3945
PCA1202.00	4240
PCA1204.12	3959
PCA1208.02	3880
PCA1209.02	3980
PCA1223.02	4073
PCA1224.00	3958
PCA1225.02	3929
PCA1226.02	3960
PCA1228.01	4258
PCA1231.00	3949
PCA1232.00	3953
PCA1233.00	3948
PCA1234.00	4077
PCA1235.02	3982
PCA1237.01	3981
PCA1237.12	3981
PCA1238.00	3820
PCA1239.02	3989
PCA1242.00	3975
PCA1242.01	3975
PCA1243.00	3962
PCA1245.00	3925
PCA1245.02	3965
PCA1245.10	3965
PCA1246.00	3926
PCA1246.02	3926
PCA1247.00	3963
PCA1248.00	3964
PCA1248.10	3964
PCA1250.00	3906
PCA1250.02	3906
PCA1250.11	3906
PCA1251.02	3920
PCA1252.02	3907
PCA125201	3907
PCA1256.00	4157
PCA1259.02	4005
PCA1261.12	3976
PCA1264.02	4004
PCA1266.00	3903
PCA1271.02	3996
PCA1272.00	3997
PCA1274.02	4060
PCA1275.01	3922
PCA1275.12	3922
PCA1275.12	4171
PCA1281.01	4122
PCA1281.02	4122
PCA1281.10	4122
PCA1282.00	4092
PCA1282.02	4122
PCA1286.02	3954
PCA1289.02	4160
PCA1290.02	4156
PCA1291.02	4035
PCA1292.01	3972
PCA1293.02	4015
PCA1297.00	4207
PCA1299.00	4151
PCA1301.00	4248
PCA1302.02	4039
PCA1302.22	4039
PCA1303.02	4165
PCA1304.10	4259

REMSA	BESER
NO	NO
PCA130400	4249
PCA1305.00	4247
PCA1310.02	3956
PCA1312.00	4255
PCA1318.00	4038
PCA1323.00	3970
PCA1337.00	4054
PCA1339.00	3995
PCA1343.00	4260
PCA1345.00	4309
PCA1350.00	4134
PCA1351.00	3966
PCA1352.00	3967
PCA1356.02	4037
PCA1362.02	4061
PCA1362.42	4311
PCA1362.52	4311
PCA1375.12	4149
PCA1379.10	4310
PCA137910	4310
PCA1382.00	3971
PCA1387.00	4142
PCA138730	4287
PCA1388.04	4150
PCA1391.00	3529
PCA1391.10	3529
PCA1395.00	4256
PCA1403.02	4146
PCA1407.00	4124
PCA140712	4308
PCA1409.10	4314
PCA141000	4291
PCA1412.32	4166
PCA1420.00	4135
PCA1423.02	4233
PCA1426.02	4049
PCA1431.02	4008
PCA1431.12	4230
PCA1432.02	4014
PCA1432.12	4014
PCA1439.01	4057
PCA1439.11	4057
PCA1440.01	4162
PCA1442.01	4132
PCA1442.01	4172
PCA1449.01	4056
PCA1450.12	4286
PCA1464.08	4145
PCA1466.00	3998
PCA1468.02	4167
PCA1468.04	4167
PCA1482.00	4161
PCA148200	4161
PCA1488.02	4136
PCA1510.00	4226
PCA1510.10	4226
PCA1514.00	4204
PCA1516.00	4241
PCA1520.02	4174
PCA1521.00	4175
PCA1530.00	4201
PCA1538.04	4315
PCA1540.00	4140
PCA154802	4312
PCA1553.00	4200
PCA1561.02	4176
PCA1569.02	4317
PCA1570.02	4318
PCA1582.02	4283
PCA1601.01	4295
PCA163402	4284
PCA172408	4280
PCA431001	4249
PCA784302	3762

ROAD HOUSE	BESER
NO	NO
2001.02	3405
2002.00	3320
2002.20	3350
2006.00	3318
2006.30	3318
2006.40	3318
2006.60	3318
2007.40	3326
2008.02	3806
2008.10	3806
2010.00	3315
2010.00	3515
2010.20	3315
2010.20	3515
2010.30	3315
2010.30	3515
2010.40	3339
2010.40	3514
2010.50	3339
2010.50	3514
2010.58	3315
2010.58	3515
20139.02	3573
2014.00	3335
2014.10	3365
2014.12	3365
2014.40	4103
20155.12	3572
2017.00	3327
2017.10	3327
2017.20	3343
2017.20	3483
2017.30	3343
2017.30	3483
2021.06	3333
2021.10	3329
2021.12	3329
2021.14	3329
2021.16	3329
2022.00	3316
2022.10	3317
2022.12	3317
2022.20	3346
2022.30	3316
2022.50	3316
2022.60	3317
2025.30	3425
2026.02	3366
2026.12	3366
20263.14	3529
2039.00	3311
2039.10	3311
2042.00	3373
2042.10	3373
2042.20	3373
2042.30	3373
2042.40	3373
2042.50	3373
2044.02	3526
2045.00	3340
2045.02	3340
2045.10	3340
2045.22	3340
2045.32	3321
2046.00	3378
2046.10	3378
2046.20	3490
2046.40	3378
2046.50	3490
2047.30	3513
2047.32	3513
2048.00	3537
2048.10	3537
2049.10	3840
2052.10	3661
2052.20	3661
2056.00	3423
2056.10	3423
2056.12	3423
2056.20	3423

ROAD HOUSE	BESER
NO	NO
2058.10	3416
2060.00	3374
2060.10	3374
2061.02	3527
2063.00	3312
2063.02	3484
2068.02	3323
2079.00	3709
2079.10	3709
2079.20	3709
2079.30	3709
2080.00	3393
20803.22	3893
20849.10	3823
20858.30	3826
20860.12	4301
20876.21	3933
2092.00	3710
20953.00	3959
20953.12	3959
2098.00	3324
2098.02	3324
2101.00	3410
2101.03	3410
2101.10	3410
2101.20	3410
2101.40	3410
2102.10	3873
2103.00	3421
21030.01	3904
21031.00	3905
21036.02	4042
21037.00	4216
21038.02	4028
21038.12	4028
21039.00	4105
21040.00	4111
21041.02	3978
21041.12	3978
21042.02	3979
21045.01	3841
21045.11	3841
21046.02	3890
21047.02	4153
21048.00	3894
21051.02	4106
21052.00	4346
2106.00	3407
21068.02	4159
21069.00	3827
21081.01	4036
21081.11	4036
21082.00	3885
21082.50	3885
21085.02	3976
2109.00	3579
2109.12	3579
2109.22	3579
21098.02	3886
21098.14	3886
21100.00	4173
21100.11	4173
21100.21	4173
21101.04	3940
21102.04	3939
21103.00	3946
21109.02	3923
2111.00	3509
21113.00	4137
21123.02	3797
21124.00	4220
21125.00	4215
21126.08	4006
21127.08	4018

ROAD HOUSE	BESER
NO	NO
21128.08	4198
21129.01	3900
21133.02	3968
21134.02	4001
21135.02	3969
21136.01	4213
21136.12	4213
21137.02	4081
21138.00	3984
21139.02	3985
2114.00	3625
21149.10	4058
2115.00	3369
21151.00	3988
21152.00	3747
21158.00	4293
21159.00	3944
21159.10	3944
21162.01	3952
21162.12	3952
21166.01	4000
2117.00	3370
21173.02	4016
21177.00	3987
21179.00	4210
21181.02	4113
21183.01	4121
2119.00	3417
2119.10	3570
2119.10	3594
2119.12	3417
2119.12	3417
2119.15	3417
2119.20	3417
2119.22	3417
2119.22	3417
2119.32	3417
2119.32	3417
21196.02	4029
2120.00	3379
21200.00	3945
21200.30	3945
21202.00	4240
21204.12	3959
21208.02	3880
21209.02	3980
21223.02	4073
21224.00	3958
21225.02	3929
21226.02	3960
21231.00	3949
21232.00	3953
21233.00	3948
21234.00	4077
21235.02	3982
21237.01	3981
21237.12	3981
21238.00	3820
21239.02	3989
21242.00	3975
21242.01	3975
21243.00	3962
21245.00	3925
21245.02	3965
21245.10	3965
21246.00	3926
21246.02	3926
21247.00	3963
21248.00	3964
21248.10	3964
21250.00	3906
21250.02	3906
21250.11	3906
21251.02	3920
21252.01	3907
21252.02	3907
21256.00	4157
21259.02	4005
21261.12	3976
21264.02	4004

ROAD HOUSE	BESER
NO	NO
21266.00	3903
21271.02	3996
21272.00	3997
21274.02	4060
21275.01	3922
21275.12	3922
21275.12	4171
21281.01	4122
21281.02	4122
21281.10	4122
21282.00	4092
21282.02	4122
21286.02	3954
21289.02	4160
2129.00	3415
21290.02	4156
21291.02	4035
21292.01	3972
21293.02	4015
21297.00	4207
21299.00	4151
21301.00	4248
21302.02	4039
21302.22	4039
21303.02	4165
21304.00	4249
21304.10	4259
21305.00	4247
21310.02	3956
21312.00	4255
21318.00	4038
2132.00	3371
21321.00	4277
21321.20	4277
21323.00	3970
21337.00	4054
21339.00	3995
2134.00	3650
2134.01	3650
2134.02	3619
2134.03	3635
2134.10	3649
2134.11	3649
2134.12	3635
2134.15	3635
2134.20	3650
2134.40	3551
2134.41	3531
2134.50	3531
2134.81	3650
2134.95	3531
21343.00	4260
21345.00	4309
2135.00	3536
2135.01	3536
2135.10	3536
2135.11	3536
2135.20	3536
2135.22	3536
2135.40	3536
2135.94	3536
21350.00	4134
21351.00	3966
21352.00	3967
21356.02	4037
21362.02	4061
21362.42	4311
21362.52	4311
21362.85	4343
21375.12	4149
21379.10	4310
21382.00	3971
21387.00	4142
21387.30	4287
21388.04	4150
2139.00	3573
21391.00	3529
21391.10	3529
21395.00	4256

ROAD HOUSE	BESER
NO	NO
21399.00	4169
21403.02	4146
21407.00	4124
21407.12	4308
21409.10	4314
2141.01	3503
2141.02	3503
2141.10	3503
2141.11	3503
2141.12	3503
2141.16	3503
2141.18	3503
2141.20	3503
2141.30	3503
2141.32	3503
2141.52	3503
2141.78	3503
21410.00	4291
21412.32	4166
2142.20	3689
21420.00	4135
21421.00	4325
21423.02	4233
21426.02	4049
2143.02	3440
21431.02	4008
21431.12	4230
21432.02	4014
21432.12	4014
21439.01	4057
21439.11	4057
2144.02	3381
2144.06	3496
2144.12	3381
2144.14	3493
2144.24	3493
2144.32	3495
2144.42	3381
2144.50	3496
2144.60	3496
21440.01	4162
21442.01	4132
21442.01	4172
21446.02	4339
21449.01	4056
21450.12	4286
2146.01	3466
2146.04	3466
2146.11	3466
2146.14	3466
2146.22	3467
2146.23	3467
2146.41	3468
2146.44	3468
2146.60	3466
2146.62	3466
2146.80	3466
2146.84	3466
21464.08	4145
21466.00	3998
21467.02	4019
21468.02	4167
21468.04	4167
2147.00	3646
2147.02	3633
21472.02	4337
2148.14	3666
2148.34	3666
21482.00	4161
21485.08	4326
21488.02	4136
2149.00	3394
2149.02	3394
2149.10	3394
21506.02	4324
2151.02	4087
2151.22	4087
21510.10	4226
21514.00	4204
21516.00	4241

ROAD HOUSE	BESER
NO	NO
21530.00	4201
21534.00	4313
21535.00	4335
21538.04	4315
2154.00	3419
2154.01	3419
2154.02	3429
2154.03	3429
2154.10	3419
2154.12	3429
21540.00	4140
21548.02	4312
21549.08	4336
2155.00	3572
2155.02	3572
2155.10	3583
2155.20	3583
21553.00	4200
21561.02	4176
21569.02	4317
2157.00	3611
2157.10	3550
2157.20	3630
21570.02	4318
21582.02	4283
2159.00	3413
21592.08	4334
21601.01	4295
2163.02	3442
21634.02	4284
2167.04	3402
2167.10	3402
2168.00	3621
2169.01	3624
2169.81	3624
2170.04	3474
2170.14	3474
2170.24	3556
2170.34	3474
2170.76	3474
2171.00	3486
2171.05	3444
2171.10	3444
2171.20	3441
2171.60	3585
2172.00	3549
2172.10	3790
2172.11	3548
2172.11	3690
2172.20	3790
2172.30	3790
2172.32	4141
2172.35	3549
21724.08	4280
2175.00	3400
2176.20	3641
2176.22	3641
2177.00	3620
2178.00	3436
2178.10	3436
2178.20	3436
2178.30	3436
2178.50	3436
2179.00	3875
2179.10	3875
2181.04	3446
2184.00	3397
2184.02	3758
2184.12	3758
2187.00	3634
2187.02	3634
2188.00	3401
2189.00	3408
2189.02	3408
2189.05	3408
2189.08	3408
2189.10	3408
2189.11	3408
2189.12	3408
2189.24	3408

ROAD HOUSE	BESER
NO	NO
2191.04	3395
2191.12	3426
2192.02	3380
2192.11	3380
2192.12	3380
2192.22	3580
2192.34	3487
2192.96	3380
2193.00	3501
2193.02	3752
2197.10	3714
2202.02	3482
2204.00	3462
2206.00	3603
2208.00	3539
2208.01	3546
2208.02	3546
2208.12	3539
2208.80	3539
2208.83	3539
2211.22	3523
2212.00	3449
2212.02	3449
2212.12	3522
2212.22	3522
2212.32	3522
2212.42	3522
2212.52	3522
2214.14	3776
2220.02	3428
2221.00	3422
2221.01	3422
2221.02	3552
2222.00	3661
2222.01	3771
2222.10	3661
2222.11	3771
2223.00	3605
2223.86	3605
2224.00	3504
2224.02	3502
2224.22	3502
2228.02	3582
2232.00	3746
2233.00	4212
2233.02	4212
2233.12	4212
2233.64	4212
2233.85	4212
2233.86	4212
2236.00	3692
2236.02	3760
2238.04	3757
2238.04	3857
2238.14	3757
2238.14	3857
2238.24	3757
2238.24	3857
2239.00	3717
2239.40	3717
2239.50	3717
2239.60	3717
2244.00	3499
2244.02	3463
2245.00	3679
2245.12	3994
2245.22	3994
2245.32	3994
2245.40	3679
2245.41	3994
2245.42	3994
2254.02	3600
2254.12	3600
2261.02	3543
2261.82	3543
2262.02	3457
2262.12	3610
2262.22	3457
2262.82	3457
2262.83	3610

ROAD HOUSE	BESER
NO	NO
2263.00	3529
2263.01	3529
2263.03	3529
2263.04	3529
2263.05	3529
2263.06	3529
2263.07	3529
2263.10	3529
2263.12	3529
2263.14	3529
2263.15	3529
2263.16	3529
2263.17	3529
2263.18	3529
2263.19	3529
2263.21	3529
2263.40	3529
2263.41	4152
2263.50	3529
2263.52	3529
2263.53	3529
2263.62	3529
2263.74	3529
2263.87	3529
2263.88	3529
2263.89	3529
2263.92	3529
2264.02	3432
2264.12	3491
2264.13	3432
2264.14	3491
2265.00	3578
2265.02	3578
2265.15	3656
2266.00	3412
2266.10	3453
2267.11	3662
2270.00	3564
2270.10	3584
2271.02	3723
2273.02	3437
2273.12	3437
2275.02	3448
2277.00	3433
2277.10	3433
2277.12	3433
2277.40	3433
2278.21	3773
2278.22	3773
2278.32	3773
2278.42	3773
2281.00	3459
2281.40	3569
2281.42	3568
2282.00	3469
2282.10	3469
2284.00	3430
2284.02	3430
2284.83	3430
2284.85	3430
2285.10	3589
2286.10	3470
2286.20	3470
2286.30	3470
2286.32	3470
2286.50	3505
2286.50	3615
2287.00	3700
2289.02	3882
2289.12	3882
2291.02	4108
2293.12	3779
2294.00	4087
2294.20	4087
2294.22	4087
2294.32	4087
2296.00	3609
2296.02	3609
2297.00	3642
2297.10	3642

ROAD HOUSE	BESER
NO	NO
2297.81	3642
2301.00	3458
2306.00	4088
2306.12	4088
2311.00	3873
2315.04	3560
2317.12	4010
2317.22	4010
2318.02	3632
2318.05	3632
2318.06	3632
2318.12	3632
2318.22	3632
2318.32	3632
2318.52	3632
2318.82	3632
2318.92	3632
2320.00	3562
2320.20	3562
2320.81	3562
2321.02	3680
2321.22	3680
2323.02	3631
2324.02	3696
2325.02	4148
2325.12	4148
2325.22	4148
2325.32	4148
2325.42	4148
2325.52	4148
2331.00	3464
2331.04	3722
2331.10	3464
2333.02	3640
2337.02	3683
2337.10	3872
2337.22	3872
2337.80	3683
2337.81	3683
2337.90	3872
2341.02	3695
2342.02	4080
2343.00	3660
2343.40	3660
2343.80	3660
2343.81	3660
2344.00	4104
2345.00	3596
2345.10	3596
2351.02	3704
2351.22	3704
2351.32	3704
2351.42	3704
2354.02	3685
2354.22	3685
2354.32	3685
2357.00	3603
2357.00	3604
2357.10	3603
2357.10	3604
2364.00	3598
2364.02	3766
2367.00	4072
2370.00	4086
2370.10	4086
2372.00	3424
2372.02	3424
2372.30	3424
2379.00	3628
2379.12	3628
2379.20	3629
2381.00	3879
2381.20	3879
2381.30	3879
2381.50	3879
2381.60	4181
2382.00	3733
2382.20	3733
2382.81	3733
2384.00	3563

ROAD HOUSE	BESER
NO	NO
2385.10	4020
2389.02	3883
2389.12	3883
2390.00	3506
2390.02	3590
2390.11	3590
2390.41	3590
2391.00	3473
2392.00	3445
2393.00	3623
2393.02	3623
2393.20	3623
2393.22	3623
2396.00	3892
2396.10	3892
2396.20	3892
2397.00	3874
2397.10	3874
2397.22	3874
2402.02	3554
2402.02	3651
2402.22	3554
2402.22	3651
2402.42	3554
2402.42	3651
2402.52	3554
2402.52	3651
2403.02	4078
2405.02	3688
2407.00	3581
2410.00	3745
2412.00	3714
2412.30	3714
2413.00	3693
2413.04	3693
2413.10	3693
2413.12	3693
2414.01	3608
2414.20	3643
2415.04	3832
2415.32	4269
2415.42	4269
2416.00	3833
2417.00	3545
2417.10	3545
2418.02	3607
2418.22	3607
2419.02	3686
2419.12	3686
2419.22	3686
2421.00	3777
2421.20	3777
2424.04	4099
2425.02	3674
2425.12	3674
2425.22	3674
2426.02	3887
2426.12	3887
2429.04	3673
2431.00	4128
2431.10	4128
24310.01	4249
2432.00	3558
2432.01	3593
2432.02	3593
2433.00	4214
2436.02	3749
2436.40	3749
2436.41	3749
2438.04	3819
2438.14	3819
2439.04	3878
2441.00	3909
2445.00	3658
2445.02	3658
2445.03	3658
2445.81	3658
2447.00	4197
2456.02	3915
2456.14	3915

ROAD HOUSE	BESER
NO	NO
2457.00	4275
2459.00	3511
2459.10	3511
2460.02	3622
2460.12	3622
2461.02	3528
2462.00	3888
2462.20	3888
2462.81	3888
2467.00	4182
2467.20	4182
2467.30	4182
2467.40	4182
2468.00	3736
2480.00	3553
2480.21	3553
2480.80	3553
2480.81	3553
2484.02	3867
2486.02	3595
2486.81	3595
2487.02	3559
2487.81	3559
2490.02	3683
2494.02	3507
2494.81	3507
2501.02	3898
2502.02	3740
2502.22	3740
2507.00	3667
2571.02	3781
2578.00	3567
2579.00	3678
2580.00	3670
2580.10	3670
2582.00	3675
2582.80	3675
2583.00	3809
2584.00	3512
2586.00	3677
2586.10	3677
2587.12	3618
2587.22	3618
2588.10	3897
2589.02	3617
2589.12	3617
2589.22	3617
2589.42	3617
2591.30	3795
2591.83	3795
2592.02	3577
2592.12	3598
2592.22	3577
2593.00	4034
2594.00	3884
2594.02	3884
2595.02	3602
2596.00	3881
2596.10	3881
2596.20	3881
2598.02	3697
2601.00	3863
2601.10	3863
2601.20	3863
2601.30	3863
2602.02	3799
2603.04	3750
2603.80	3750
2605.02	4062
2605.12	4062
2605.80	4062
2605.82	4062
2605.83	4062
2609.00	3538
2609.10	3566
2609.20	3637
2614.00	3614
2614.02	3614
2614.81	3614
2614.82	3614

ROAD HOUSE	BESER
NO	NO
2618.00	3606
2618.01	3794
2619.02	3574
2620.00	3419
2620.20	3419
2620.80	3419
2620.81	3419
2621.00	3822
2621.20	3822
2630.00	3663
2631.00	3896
2631.10	3896
2631.12	3896
2631.20	3896
2631.80	3896
2631.82	3896
2631.90	3896
2633.00	3682
2633.20	3782
2633.21	3782
2633.31	3782
2633.41	3782
2634.00	3644
2634.04	3636
2634.10	3644
2634.80	3644
2634.84	3636
2635.00	3872
2636.04	4071
2636.12	4071
2640.00	3994
2640.40	3994
2643.00	3659
2643.10	3938
2643.20	3938
2643.80	3938
2643.81	3659
2643.90	3938
2645.00	3687
2645.02	3687
2645.12	3687
2647.02	3764
2650.00	4125
2650.80	4125
2650.81	4125
2651.00	3575
2651.10	3575
2651.80	3575
2651.81	3575
2651.86	3942
2655.02	4079
2662.02	3653
2674.12	3932
2675.02	3778
2678.00	3676
2678.10	3676
2679.00	4274
2684.02	3762
2685.02	3763
2685.22	3763
2691.00	3754
2693.00	3755
2693.80	3755
2694.10	4115
2695.02	4155
2695.82	4155
2696.00	3744
2697.01	4126
2698.01	4069
2699.00	3780
2701.00	3681

ROAD HOUSE	BESER
NO	NO
2703.02	3648
2705.02	4281
2705.81	4281
2706.00	3830
2707.04	3829
2708.02	4059
2708.82	4059
2709.00	3821
2709.10	3821
2710.02	4027
2711.04	3859
2711.11	3859
2712.02	3768
2712.12	3768
2713.00	3919
2714.00	3918
2717.00	3861
2719.00	3943
2720.02	3901
2724.02	3928
2724.11	3928
2725.02	3748
2727.10	4123
2727.20	4123
2729.02	3913
2730.01	3767
2733.00	3804
2735.02	4110
2736.02	4011
2736.12	4011
2736.32	4011
2739.02	4009
2740.00	3769
2740.02	3769
2741.02	3788
2743.04	4085
2746.02	3993
2746.12	3993
2746.22	3993
2746.32	3993
2746.42	3895
2746.62	3895
2747.02	4109
2747.02	4232
2747.12	4109
2747.12	4232
2748.02	4017
2750.02	4084
2752.12	4222
2766.00	3877
2767.01	4345
2768.00	3836
2768.10	3836
2768.81	3836
2769.00	4102
2770.00	4101
2770.00	4209
2771.02	3843
2771.12	3843
2771.22	3843
2772.02	3784
2772.12	3921
2772.82	3784
2772.83	3921
2774.02	3846
2774.12	3846
2774.82	3846
2775.00	4138
2775.01	4138
2775.80	4138
2775.81	4138
2776.00	4100
2776.10	4100
2776.80	4100
2776.81	4100
2777.00	4093
2777.10	4093
2777.80	4093
27843.02	3762
2800.22	4118

ROAD HOUSE	BESER
NO	NO
2802.00	4119
2803.12	3893
2804.02	3955
2804.12	3955
2804.31	3955
2807.00	4012
2807.02	4012
2813.00	4158
2819.00	3856
2821.02	3802
2821.12	3802
2822.00	4094
2822.12	3817
2827.04	3934
2827.84	3934
2828.04	3935
2833.00	3855
2833.80	3855
2834.00	3848
2834.10	3848
2836.02	4095
2839.02	4153
2840.00	3820
2840.10	3820
2840.20	3820
2840.30	3820
2840.82	3820
2841.00	3800
2841.10	3800
2841.80	3800
2842.00	3853
2842.10	3853
2842.20	3853
2842.30	3853
2842.70	3853
2843.00	3852
2843.10	3852
2845.01	4271
2849.00	3823
2852.04	4143
2852.14	4143
2854.00	3911
2855.00	4082
2857.00	4180
2858.01	3826
2858.10	3826
2858.11	3826
2858.32	3826
2858.80	3826
2859.01	3800
2859.10	3800
2859.11	3800
2859.12	3800
2859.20	3800
2859.21	3800
2859.80	3800
2874.02	3825
2876.01	3933
2876.31	3933
2876.41	3933
2879.12	3986
2879.81	3986
2880.00	3931
2880.80	3931
2881.00	3854
2881.80	3854
2883.11	4303
2884.00	3910
2888.00	4211
2888.20	4211
2888.40	4211
2892.00	4179
2893.02	3961
2897.11	3842
2899.00	3831
2899.02	3831

ROAD HOUSE	BESER
NO	NO
2899.12	3831
2951.02	3912
2951.11	3912
2953.00	3959
2953.02	3959
2953.22	3959
2954.00	4013
2957.00	4040
2958.10	4208
2959.01	3835
2960.01	3834
2961.00	3914
2962.00	3950
2963.00	4347
2964.12	4096
2965.01	3765
2970.02	3889
2971.02	3769
2973.02	4031
2976.00	3849
2976.10	3849
2976.20	3849
2976.80	3849
2976.81	3849
2977.00	3850
2977.80	3850
2978.02	4112
2984.00	3801
2985.02	4074
2986.00	3951
2987.00	3983
2987.02	3983
2987.10	3983
2987.11	3983
2987.22	3983
2988.00	3891
2996.00	4076
JSX2436.40	3749
JSX2436.41	3749
P10203.02	4107
PSX21514.00	4204
PSX21516.00	4241

SAMKO	BESER
NO	NO
5SP001	3346
5SP002	3317
5SP003	3316
5SP006	3424
5SP007	3424
5SP010	3625
5SP011	3543
5SP012	3440
5SP014	3423
5SP016	3459
5SP024	3318
5SP026	3350
5SP027	3320
5SP035	3723
5SP036	3437
5SP039	3499
5SP043	4108
5SP047	3395
5SP053	3446
5SP055	3600
5SP056	3746
5SP058	3560
5SP063	4088
5SP072	4212
5SP073	3582
5SP076	3633
5SP090	3779
5SP092	3758
5SP094	3466
5SP095	3425
5SP096	3467
5SP1001	4112
5SP1002	3817
5SP1003	3769
5SP1004	3846
5SP1005	4012
5SP1007	3574
5SP1009	3507
5SP1012	3622
5SP1013	4072
5SP1014	4148
5SP1015	3648
5SP102	3432
5SP1020	3653
5SP1021	4071
5SP1025	3764
5SP1028	4027
5SP1029	4084
5SP1030	3697
5SP1037	4155
5SP1042	3901
5SP1050	3829
5SP1051	4085
5SP1053	4009
5SP1062	3769
5SP1065	4069
5SP1067	3740
5SP1068	3825
5SP1070	4110
5SP1071	4109
5SP1071	4232
5SP1072	3802
5SP1076	3618
5SP1079	3609
5SP1080	3951
5SP1081	3898
5SP1082	3436
5SP1088	3877
5SP109	3327
5SP1091	4119
5SP1096	3674
5SP1097	3632
5SP1100	3680
5SP1101	3598
5SP1106	3659
5SP1107	3503
5SP1108	3380
5SP1109	3942
5SP1109B	3942
5SP111	3318

SAMKO	BESER
NO	NO
5SP1110	3928
5SP1113	4153
5SP1114	3890
5SP1115	3911
5SP1117	3560
5SP112	3318
5SP1124	4097
5SP1129	3609
5SP113	3311
5SP1131	3628
5SP1131A	3628
5SP1132	3874
5SP1133	3662
5SP1134	3680
5SP1138	3502
5SP1142	3433
5SP1143	3433
5SP1164	3994
5SP118	3321
5SP1188	3820
5SP1189	3853
5SP1190	3885
5SP1191	3643
5SP1192	3800
5SP1193	4180
5SP1194	4181
5SP1195	3946
5SP1196	3939
5SP1197	4042
5SP1199	3894
5SP120	3806
5SP1202	3940
5SP1205	3841
5SP1206	3842
5SP1207	3978
5SP1208	3687
5SP1210	3895
5SP1211	4159
5SP1212	3985
5SP1219	3905
5SP1220	3968
5SP1222	3502
5SP1225	3826
5SP1227	3763
5SP1228	3923
5SP1229	3983
5SP1231	3879
5SP1235	3987
5SP1236	3853
5SP1238	3590
5SP1239	4096
5SP1240	4173
5SP125	3484
5SP1251	4347
5SP1253	4210
5SP1255	4161
5SP1256	3842
5SP1258	3953
5SP1259	3920
5SP126	3312
5SP1260	3906
5SP1261	3907
5SP1263	4173
5SP1264	3826
5SP1266	3826
5SP1268	3800
5SP127	3393
5SP1271	4346
5SP1272	4157
5SP1274	4247
5SP1275	3925
5SP1278	3984
5SP1281	3949

SAMKO	BESER
NO	NO
5SP1282	4077
5SP1287	3981
5SP1288	3922
5SP1289	3820
5SP1293	3926
5SP1294	3963
5SP1295	3962
5SP1295K	3962
5SP1296	4092
5SP1296A	4092
5SP1297	3965
5SP1297A	3965
5SP1297B	3965
5SP1301	3536
5SP131	3323
5SP1310	3339
5SP1310	3514
5SP1311	3687
5SP1312	3954
5SP1314	4038
5SP1315	4037
5SP1316	3956
5SP1318	3929
5SP1319	3975
5SP1322	3976
5SP1326	4058
5SP1327	3820
5SP1328	3800
5SP133	3873
5SP1333	3958
5SP1334	3900
5SP1340	4248
5SP1342	4074
5SP1343	4017
5SP1344	3969
5SP1345	3880
5SP1346	3797
5SP1347	3955
5SP1348	3972
5SP1349	4001
5SP135	3343
5SP135	3483
5SP1351	3964
5SP1355	3767
5SP1357	3779
5SP1359	3944
5SP136	3710
5SP1360	4293
5SP1361	3910
5SP1362	4076
5SP1363	3912
5SP1364	3831
5SP1365	4031
5SP1367	4179
5SP1368	4105
5SP1369	3959
5SP137	3335
5SP1370	3979
5SP1372	3886
5SP1373	4106
5SP1374	3961
5SP1375	4028
5SP1376	3945
5SP1376A	3945
5SP1376B	3945
5SP1379	3891
5SP1382	3960
5SP1388	4134
5SP1389	4137
5SP139	3366
5SP1398	3905
5SP1399	4006
5SP140	3423
5SP1400	4018
5SP1401	4198
5SP1402	4081
5SP1403	4016
5SP1406	4143
5SP1407	4113
5SP1408	4213

SAMKO	BESER
NO	NO
5SP141	3315
5SP141	3515
5SP1410	4208
5SP1411	3969
5SP1413	4029
5SP1415	4039
5SP1416	4165
5SP1417	3989
5SP1418	3996
5SP1419	3997
5SP141A	3315
5SP141A	3515
5SP1420	4259
5SP1421	4249
5SP1423	4148
5SP143	3416
5SP1432	4303
5SP1436	4111
5SP1448	3976
5SP1449	3982
5SP1451	4035
5SP1452	3903
5SP1454	4036
5SP1455	4156
5SP1456	4160
5SP146	3405
5SP1460	4151
5SP1461	3995
5SP1461A	3995
5SP1464	4122
5SP1464A	4122
5SP1465	3966
5SP1467	4149
5SP147	3806
5SP1471	3970
5SP1483	4000
5SP1484	4142
5SP1487	3967
5SP1489	4260
5SP1491	3827
5SP1493	3964
5SP1494	4121
5SP1495	3952
5SP1496	4207
5SP1497	4015
5SP1499	3988
5SP1500	3971
5SP1506	4240
5SP151	3374
5SP1516	4082
5SP1522	4146
5SP1536	3841
5SP1548	4005
5SP1551	4162
5SP1555	4004
5SP1558	4061
5SP1562	4008
5SP1563	4008
5SP1570	4132
5SP1570	4172
5SP1574	4054
5SP1575	4014
5SP1577	4258
5SP1578	4057
5SP1579	4056
5SP158	3611
5SP1580	4230
5SP1581	4230
5SP1584	4150
5SP1586	4169
5SP1586A	4169
5SP1589	4147
5SP1593	3948
5SP1608	4135
5SP161	3373
5SP1616	4314
5SP1616A	4314
5SP1616B	4314
5SP1620	4215

SAMKO	BESER
NO	NO
5SP1621	3983
5SP1622	4220
5SP1625	4060
5SP1630	4124
5SP1635	4002
5SP1639	3893
5SP164	3709
5SP1640	3747
5SP1649	3748
5SP1673	4122
5SP1679	3906
5SP1689	4039
5SP169	3709
5SP1710	4311
5SP1718	3998
5SP1721	3922
5SP1721	4171
5SP1727	4303
5SP1733	3916
5SP1736	4233
5SP1740	4145
5SP1744	4136
5SP1753	4166
5SP1754	4309
5SP1755	4310
5SP1757	4049
5SP1784	4176
5SP1786	4174
5SP1787	4175
5SP179	3421
5SP181	3550
5SP183	3324
5SP1835	4241
5SP1836	4295
5SP186	3646
5SP187	3490
5SP1879	4226
5SP188	3378
5SP1882	3853
5SP190	3410
5SP201	3493
5SP202	3371
5SP206	3717
5SP210	3365
5SP211	3339
5SP211	3514
5SP211A	3339
5SP211A	3514
5SP213	3511
5SP215	3536
5SP216	3650
5SP217	3642
5SP220	3503
5SP221	3619
5SP223	3441
5SP224	3486
5SP225	3444
5SP228	3442
5SP230	3381
5SP231	3495
5SP232	3621
5SP233	3417
5SP234	3419
5SP235	3429
5SP236	3624
5SP237	3573
5SP238	3572
5SP242	3417
5SP245	3509
5SP249	3369
5SP250	3379
5SP252	3370
5SP254	3407
5SP257	3620
5SP258	3546
5SP260	3401
5SP261	3413
5SP264	3397
5SP265	3400
5SP266	3714

SAMKO	BESER
NO	NO
5SP268	3402
5SP270	3634
5SP271	3380
5SP274	3474
5SP275	3496
5SP276	3428
5SP277	3603
5SP278	3482
5SP280	3408
5SP284	3462
5SP288	3422
5SP289	3415
5SP293	3457
5SP294	3529
5SP295	3589
5SP296	3564
5SP297	3578
5SP299	3649
5SP300	3635
5SP302	3430
5SP304	3470
5SP306	3583
5SP307	3496
5SP314	3436
5SP315	3448
5SP318	3641
5SP319	3609
5SP322	3752
5SP324	3662
5SP325	3605
5SP327	3417
5SP327	3417
5SP330	3680
5SP331	3563
5SP331A	3563
5SP333	3469
5SP334	3717
5SP335	3463
5SP336	3875
5SP342	3882
5SP346	3799
5SP348	3632
5SP349	3503
5SP352	3700
5SP354	4104
5SP355	3562
5SP360	3679
5SP364	3504
5SP366	3522
5SP372	3526
5SP374	3666
5SP378	3760
5SP379	3692
5SP381	3436
5SP383	3464
5SP384	3487
5SP387	3660
5SP392	3661
5SP396	3883
5SP406	3863
5SP406A	3863
5SP408	3513
5SP408A	3513
5SP409	3677
5SP409A	3677
5SP411	3366
5SP417	3584
5SP420	3675
5SP423	3629
5SP423A	3629
5SP425	3523
5SP427	3596
5SP430	3683
5SP431	3771
5SP435	3580
5SP440	3536
5SP445	3539
5SP449	3733
5SP450	3528
5SP453	3590

SAMKO	BESER
NO	NO
5SP455	3867
5SP457	3898
5SP459	4182
5SP461	3593
5SP462	3608
5SP464	3643
5SP465	3736
5SP467	3579
5SP468	3491
5SP470	3888
5SP471	3558
5SP472	3704
5SP474	3994
5SP477	3581
5SP477A	3581
5SP479	4078
5SP481	3473
5SP482	3445
5SP485	3630
5SP485A	3630
5SP486	3878
5SP487	3819
5SP492	3658
5SP492A	3658
5SP493	3595
5SP494	3559
5SP500	3773
5SP502	3603
5SP502	3604
5SP506	4212
5SP508	4148
5SP510	3640
5SP512	3833
5SP514	3776
5SP517	4080
5SP518	3688
5SP520	3766
5SP522	3745
5SP524	3887
5SP537	3673
5SP539	4128
5SP542	3502
5SP544	3757
5SP544	3857
5SP546	3426
5SP555	3631
5SP558	3686
5SP559	3832
5SP561	3554
5SP561	3651
5SP564	3607
5SP565	3674
5SP566	3696
5SP569	3892
5SP570	3874
5SP571	3695
5SP577	3777
5SP578	3685
5SP582	3496
5SP585	3474
5SP586	3773
5SP587	3449
5SP591	3585
5SP599	3623
5SP600	3551
5SP605	3553
5SP608	3567
5SP608A	3567
5SP609	3678
5SP610	3670
5SP611	3512
5SP612	3506
5SP613	3531
5SP614	3617
5SP617	3577
5SP619	3750
5SP621	4062
5SP623	3680
5SP626	3453
5SP627	3538

SAMKO	BESER
NO	NO
5SP628	3570
5SP628	3594
5SP629	4197
5SP631	4020
5SP633	3614
5SP634	3529
5SP636	3610
5SP638	3566
5SP645	3606
5SP650	3656
5SP651	3419
5SP656	3505
5SP656	3615
5SP658	3674
5SP659	3327
5SP662	3659
5SP665	3602
5SP667	3637
5SP668	3682
5SP670	4125
5SP670A	4125
5SP671	4125
5SP672	3681
5SP676	3468
5SP678	3549
5SP679	3569
5SP680	3568
5SP682	3687
5SP683	3636
5SP684	3575
5SP685	3757
5SP685	3857
5SP686	3809
5SP687	3897
5SP691	3548
5SP691	3690
5SP692	3782
5SP693	3744
5SP695	3778
5SP696	3754
5SP697	3755
5SP698	3762
5SP699	3763
5SP700	3768
5SP701	4086
5SP702	4274
5SP704	3919
5SP705	3918
5SP708	3938
5SP711	4059
5SP712	3822
5SP713	4079
5SP714	4214
5SP717	3722
5SP718	3896
5SP719	3896
5SP720	3617
5SP725	3663
5SP726	3676
5SP729	3687
5SP730	3782
5SP731	3527
5SP737	3740
5SP738	3495
5SP747	3545
5SP749	3693
5SP756	3790
5SP758	3846
5SP759	3577
5SP760	3994
5SP761	4281
5SP763	3826
5SP763A	3826
5SP764	3800
5SP764A	3800
5SP767	3836
5SP771	3881
5SP775	3784
5SP785	3790
5SP786	4345

SAMKO	BESER
NO	NO
5SP787	3794
5SP789	3820
5SP791	3855
5SP793	3935
5SP796	3928
5SP798	3884
5SP799	3934
5SP802	3820
5SP805	3854
5SP806	3931
5SP807	3800
5SP809	4269
5SP813	3780
5SP814	4211
5SP815	3853
5SP816	3539
5SP817	4138
5SP819	4271
5SP823	3828
5SP826	3765
5SP829	3852
5SP830	3823
5SP830A	3823
5SP831	3986
5SP833	4094
5SP835	3830
5SP836	3788
5SP838	3913
5SP840	4011
5SP844	3667
5SP845	3859
5SP846	3932
5SP847	3993
5SP848	3993
5SP849	4102
5SP853	4152
5SP856	4010
5SP857	3933
5SP858	3843
5SP859	3843
5SP860	3843
5SP865	4100
5SP866	3904
5SP867	3983
5SP868	3529
5SP869	3848
5SP870	4214
5SP871	4123
5SP877	4118
5SP878	3889
5SP879	3749
5SP880	3749
5SP884	3856
5SP885	3914
5SP887	3583
5SP893	4216
5SP896	4182
5SP897	4093
5SP898	3950
5SP899A	4102
5SP899B	4102
5SP900	4101
5SP900	4209
5SP901	4103
5SP901A	4103
5SP903	3938
5SP904	4013
5SP905	4101
5SP905	4209
5SP906	3801
5SP907	3853
5SP910	3850
5SP911	3849
5SP913	3801
5SP919	3501
5SP920	3507
5SP922	3872

SAMKO	BESER
NO	NO
5SP932	3603
5SP932	3604
5SP934	3598
5SP936	4034
5SP939	4275
5SP940	4115
5SP946	3795
5SP948	3861
5SP949	3877
5SP950	3644
5SP952	3943
5SP955	3575
5SP956	3804
5SP957	3821
5SP957A	3821
5SP958	4158
5SP961	3537
5SP966	3834
5SP967	3835
5SP969	3590
5SP971	4095
5SP973	4138
5SP977	3553
5SP979	3896
5SP983	4126
5SP986	3408
5SP988	3552
5SP989	3781
5SP994	3921
5SP997	4153

SBS	BESER
NO	NO
150221512	3583
150223440	4039
150223442	4311
150223448	4049
150223525	4136
150223648	4057
150223753	3853
150223965	4132
150223965	4172
150223966	4056
150223969	3964
150224589	4174
150224595	3953
150224599	4176
150229333	4198
1501221017	3618
1501221018	3617
1501221023	4123
1501221207	3624
1501221214	3584
1501221402	3446
1501221403	3462
1501221405	3757
1501221405	3857
1501221407	3757
1501221407	3857
1501221501	3365
1501221506	3573
1501221507	3578
1501221508	3564
1501221509	3572
1501221510	3563
1501221514	3909
1501221515	3879
1501221517	3881
1501221518	3879
1501221520	3656
1501221528	4347
1501221533	4180
1501221534	4208
1501221536	4179
1501221540	4207
1501221812	3806
1501221918	3493
1501221919	3474
1501221923	3873
1501221924	3474
1501221925	3487
1501221926	3503
1501221927	3806
1501221930	3819
1501221931	3878
1501221932	3873
1501221934	3799
1501221937	3636
1501221942	3556
1501221944	3935
1501221945	3934
1501221947	3834
1501221948	3835
1501221949	3914
1501221950	3854
1501221951	3931
1501221952	3986
1501221954	3984
1501221955	3964
1501221959	3981
1501221960	3820
1501221961	3972
1501221962	3922
1501221963	3644
1501221964	4151
1501221965	3685
1501221970	4145
1501221977	4201
1501222205	3369
1501222207	3394

SBS	BESER
NO	NO
1501222212	3397
1501222214	3758
1501222215	3692
1501222219	4104
1501222220	3562
1501222221	3660
1501222222	4087
1501222223	3779
1501222234	3700
1501222236	3598
1501222238	3888
1501222239	4128
1501222244	3577
1501222249	3667
1501222251	3697
1501222252	3632
1501222253	4010
1501222255	3859
1501222256	3932
1501222257	3933
1501222258	3983
1501222260	4017
1501222261	4143
1501222262	3933
1501222264	3952
1501222268	3965
1501222269	4038
1501222305	3316
1501222306	3317
1501222307	3393
1501222310	3421
1501222314	3424
1501222316	3468
1501222319	3625
1501222321	3422
1501222322	3466
1501222325	3432
1501222326	3543
1501222329	3425
1501222334	3608
1501222337	3441
1501222340	3617
1501222343	3523
1501222344	3773
1501222347	3749
1501222353	3994
1501222358	3575
1501222361	3994
1501222362	3790
1501222363	3897
1501222364	3800
1501222365	3826
1501222367	3575
1501222368	3823
1501222374	3643
1501222375	4173
1501222376	3790
1501222377	3800
1501222380	3826
1501222382	3965
1501222383	4092
1501222384	4173
1501222387	3995
1501222388	3826
1501222389	3800
1501222390	4121
1501222392	3569
1501222502	3429
1501222503	3417
1501222503	3417
1501222504	3621
1501222507	3417
1501222507	3417
1501222508	3417
1501222509	3484
1501222512	3419
1501222514	3603

SBS	BESER
NO	NO
1501222519	3593
1501222522	3445
1501222533	3545
1501222534	3558
1501222546	3781
1501222549	3722
1501222550	3755
1501222551	3754
1501222553	4100
1501222554	4093
1501222555	3590
1501222557	3877
1501222558	3921
1501222559	3784
1501222560	3801
1501222561	3885
1501222562	3853
1501222563	4058
1501222564	3920
1501222565	3907
1501222566	3906
1501222567	4157
1501222568	4161
1501222569	4119
1501222573	4122
1501222574	3988
1501222579	4204
1501222602	3324
1501222603	3509
1501222606	3504
1501222607	3582
1501222609	3501
1501222610	4212
1501222612	3631
1501222613	3501
1501222620	3646
1501222621	4148
1501222623	3696
1501222624	3695
1501222625	3686
1501222626	3607
1501222631	4155
1501222632	3704
1501222633	3831
1501222634	4148
1501222635	4148
1501222636	4159
1501222637	4109
1501222637	4232
1501222640	4160
1501222641	4156
1501223001	3407
1501223003	3400
1501223004	3401
1501223006	3448
1501223016	4108
1501223017	3603
1501223017	3604
1501223018	3685
1501223019	3688
1501223020	3622
1501223021	3675
1501223023	3809
1501223026	3892
1501223027	4106
1501223028	3955
1501223029	4271
1501223030	4084
1501223031	3900
1501223033	3975
1501223211	3449
1501223213	3437
1501223214	3463
1501223216	3666
1501223220	3522
1501223221	3640
1501223225	3875
1501223230	3723
1501223232	3832
1501223233	3833

SBS	BESER
NO	NO
1501223238	3874
1501223239	3780
1501223242	3522
1501223244	4118
1501223245	3889
1501223248	4303
1501223250	3767
1501223255	4029
1501223303	3315
1501223303	3515
1501223304	3339
1501223304	3514
1501223306	3611
1501223307	3513
1501223308	3408
1501223309	3550
1501223312	3679
1501223318	3408
1501223319	3628
1501223320	3689
1501223321	3658
1501223322	3630
1501223323	3581
1501223326	3680
1501223327	3567
1501223328	3678
1501223329	3670
1501223330	3677
1501223331	3863
1501223332	3614
1501223333	4125
1501223334	3663
1501223335	3676
1501223338	3804
1501223339	3821
1501223340	3681
1501223341	3861
1501223342	4126
1501223343	4069
1501223344	4281
1501223345	3836
1501223350	4103
1501223351	3923
1501223354	4101
1501223354	4209
1501223360	4210
1501223362	3925
1501223363	3926
1501223364	3962
1501223365	3963
1501223366	4248
1501223367	4249
1501223368	4247
1501223401	3632
1501223403	3502
1501223404	3507
1501223407	3632
1501223408	3778
1501223409	3648
1501223411	3993
1501223412	3632
1501223413	3961
1501223414	3843
1501223415	3993
1501223418	3632
1501223420	3843
1501223421	3993
1501223422	3993
1501223423	3632
1501223424	3502
1501223425	3959
1501223426	3985
1501223427	3960
1501223428	3989
1501223430	4039
1501223431	4165
1501223433	4035
1501223434	4061
1501223435	3959
1501223436	3959

SBS	BESER
NO	NO
1501223437	4049
1501223439	4233
1501223501	3740
1501223504	3802
1501223505	4009
1501223506	4028
1501223507	4269
1501223508	3978
1501223509	3979
1501223511	3653
1501223512	3802
1501223513	3968
1501223514	3969
1501223515	3522
1501223516	4269
1501223517	4001
1501223518	4087
1501223520	3880
1501223521	3980
1501223602	3410
1501223604	3717
1501223606	3410
1501223607	3470
1501223608	3469
1501223609	3623
1501223611	3733
1501223612	3717
1501223614	3623
1501223618	3762
1501223619	3763
1501223620	3887
1501223621	3674
1501223624	3846
1501223625	4040
1501223626	3848
1501223627	3795
1501223628	4211
1501223629	3853
1501223631	3856
1501223632	3855
1501223633	4042
1501223636	3800
1501223638	3976
1501223641	4149
1501223643	4150
1501223644	4230
1501223645	4014
1501223646	4008
1501223647	4014
1501223704	3321
1501223709	3381
1501223710	3442
1501223714	3380
1501223715	3457
1501223716	3529
1501223719	3680
1501223723	3366
1501223724	3366
1501223728	3496
1501223729	3750
1501223733	3610
1501223735	3938
1501223740	3800
1501223741	3820
1501223743	3939
1501223744	3940
1501223745	3946
1501223747	3970
1501223748	3971
1501223911	3374
1501223913	3527
1501223915	3503
1501223917	3495
1501223918	3380
1501223919	3482
1501223920	3380
1501223921	3526
1501223925	3539
1501223926	3596
1501223928	3496

SBS	BESER
NO	NO
1501223929	3503
1501223938	3659
1501223944	3503
1501223946	3539
1501223947	3529
1501223948	3950
1501223949	3852
1501223950	3428
1501223951	3849
1501223952	3850
1501223953	3503
1501223954	3827
1501223955	4137
1501223958	4141
1501223959	3966
1501223960	3967
1501223961	4134
1501223963	4142
1501223970	4140
1501224005	3771
1501224009	3683
1501224010	3413
1501224013	3512
1501224014	3662
1501224016	3433
1501224018	3412
1501224019	3943
1501224022	3872
1501224023	4094
1501224030	4293
1501224031	3944
1501224105	3609
1501224106	3609
1501224303	3419
1501224402	3579
1501224403	3395
1501224406	3426
1501224408	4080
1501224409	3764
1501224410	4079
1501224411	3913
1501224413	3912
1501224414	4213
1501224415	4081
1501224501	3710
1501224507	3379
1501224508	3402
1501224509	3371
1501224510	3714
1501224513	3634
1501224519	4088
1501224523	4072
1501224528	3554
1501224528	3651
1501224534	3777
1501224535	4086
1501224536	3554
1501224536	3651
1501224538	3693
1501224539	3673
1501224543	3915
1501224544	4275
1501224545	4071
1501224547	3768
1501224548	3829
1501224549	3830
1501224550	3822
1501224552	3769
1501224553	4013
1501224555	4158
1501224556	4153
1501224557	3788
1501224558	3769
1501224559	3817
1501224560	3825
1501224562	3890
1501224563	4153
1501224568	3910
1501224569	3891
1501224570	4112

SBS	BESER
NO	NO
1501224572	3987
1501224574	4113
1501224575	4077
1501224576	3958
1501224577	3949
1501224580	3954
1501224582	3954
1501224584	3956
1501224586	4037
1501224587	3903
1501224704	3327
1501224705	3343
1501224705	3483
1501224706	3350
1501224711	3619
1501224712	3536
1501224714	3444
1501224715	3441
1501224716	3486
1501224717	3531
1501224718	3605
1501224719	3529
1501224720	3649
1501224723	3490
1501224725	3650
1501224727	3650
1501224729	3590
1501224731	3553
1501224733	3538
1501224735	3585
1501224736	3606
1501224737	3566
1501224738	4020
1501224739	3896
1501224740	3782
1501224743	3637
1501224745	3782
1501224746	3896
1501224747	4345
1501224750	3794
1501224751	3553
1501224754	4095
1501224756	3896
1501224757	3590
1501224758	4096
1501224759	4345
1501224761	3841
1501224762	3841
1501224764	3842
1501224770	3904
1501224773	4076
1501224774	3782
1501224775	3905
1501224776	4222
1501224779	4138
1501224781	4152
1501224782	4096
1501224788	3945
1501224791	4138
1501224796	4260
1501224797	4259
1501224798	4309
1501224802	3373
1501224808	3641
1501224809	3642
1501224815	4062
1501224820	3919
1501224821	3918
1501224822	4059
1501225001	3511
1501225002	3687
1501225004	3744
1501225007	3951
1501225008	3687
1501225009	3894
1501225011	3895
1501225012	3976
1501225014	4073
1501225102	3620
1501225104	3600

SBS	BESER
NO	NO
1501225106	3436
1501225107	3746
1501225109	3898
1501225110	3436
1501225112	3901
1501225204	3882
1501225207	3602
1501225208	3883
1501225210	4027
1501225213	3928
1501225214	3884
1501225217	3983
1501225219	4000
1501225220	3929
1501225221	3933
1501229306	3867
1501229308	4197
1501229310	4182
1501229311	4197
1501229318	4012
1501229322	4011
1501229325	4006
1501229326	4018
1501229328	4016
1501229906	3318
1501229907	3320
1501229911	3311
1501229922	3416
1501229923	3312
1501229925	3806
1501229926	3709
1501229927	3378
1501229930	3423
1501229935	3840
1501229937	3408
1501229938	3405
1501229940	3440
1501229941	3323
1501229945	3378
1501229946	3572
1501229948	3436
1501229950	3433
1501229952	3536
1501229953	3380
1501229954	3543
1501229955	3496
1501229957	3503
1501229958	3419
1501229959	3583
1501229960	3609
1501229961	3463
1501229962	3560
1501229963	3714
1501229964	3440
1501229967	3504
1501229968	3531
1501229969	3444
1501229970	3529
1501229971	3487
1501229972	4212
1501229974	3595
1501229975	3559
1501229976	3679
1501229978	3736
1501229980	4148
1501229981	3704
1501229982	3466
1501229985	3506
1501229986	3529
1502247101	4135
1502247105	3906
1502247114	4241
15012247102	4162

SIFFERT	BESER
NO	NO
2014	3685
2015	3795
2016	4345
2017	3453
2020	4155
2021	3632
2024	3554
2024	3651
2025	4027
2031	3695
2038	4034
2039	4126
2040	4069
2041	3918
2042	3780
2043	3901
2050	3800
2051	3800
2052	3826
2053	3820
2055	4211
2056	3834
2057	3835
2058	3914
2061	4112
2062	3950
2063	3852
2064	3846
2065	3935
2067	3934
2070	4197
2071	3855
2072	3856
2073	4100
2078	3697
2080	3667
2081	3859
2082	3539
2084	3913
2085	4034
2086	3928
2087	4086
2088	3822
2091	3829
2092	3788
2093	3693
2096	4093
2097	3921
2098	3823
2105	3320
2115	3318
2118	3346
2119	3317
2120	3316
2131	3311
2136	3373
2137	3321
2166	3350
2177	3333
2183	3323
2184	3709
2186	3710
2187	3393
2203	3806
2204	3335
2205	3423
2207	3366
2217	3329
2219	3327
2220	3343
2220	3483
2226	3405
2236	3315
2236	3515
2238	3374
2245	3312
2260	3806
2262	3625
2265	3527
2270	3410

SIFFERT	BESER
NO	NO
2271	3365
2275	3378
2280	3421
2301	3417
2307	3650
2308	3536
2311	3466
2315	3440
2316	3503
2318	3369
2320	3370
2323	3424
2328	3513
2329	3579
2332	3324
2333	3509
2342	3467
2346	3417
2346	3417
2347	3419
2348	3380
2349	3573
2350	3572
2352	3381
2353	3493
2358	3611
2366	3619
2367	3339
2367	3514
2371	3474
2372	3441
2373	3621
2374	3624
2378	3371
2379	3379
2381	3537
2382	3444
2392	3408
2394	3407
2395	3402
2398	3603
2399	3543
2401	3546
2402	3495
2406	3526
2410	3428
2411	3462
2413	3605
2414	3449
2415	3482
2416	3425
2417	3422
2418	3400
2420	3646
2423	3752
2434	3564
2437	3432
2438	3758
2439	3397
2440	3496
2448	3529
2450	3714
2454	3436
2455	3634
2457	3504
2458	3401
2461	3620
2463	3457
2464	3529
2465	3423
2466	3771
2469	3641
2471	3446
2472	3757
2472	3857
2478	3448
2482	3589
2484	3470
2485	3469
2487	4212

SIFFERT	BESER
NO	NO
2489	3717
2490	3436
2491	3882
2495	3395
2497	3692
2498	3760
2500	3633
2501	3600
2503	3746
2506	4212
2512	3582
2520	3666
2521	3875
2522	3723
2524	3437
2525	3499
2527	3463
2539	3700
2542	4087
2546	3779
2558	4088
2566	3430
2568	3563
2569	3459
2571	3484
2574	3679
2575	3490
2577	3550
2578	3609
2583	3442
2586	3453
2588	3583
2592	3662
2594	3578
2595	3873
2596	3773
2604	3523
2609	4108
2616	3881
2617	3879
2620	3491
2623	3464
2632	3562
2633	4104
2639	3632
2640	3640
2641	3522
2642	3560
2643	4182
2648	3426
2649	3623
2651	3635
2657	3660
2659	3590
2662	3631
2667	3584
2668	3642
2669	3502
2670	4010
2671	3696
2672	3683
2674	4080
2677	3766
2678	3469
2683	3733
2684	3539
2685	3473
2686	3445
2687	3366
2696	3607
2698	4214
2700	3558
2701	3593
2702	3559
2703	3595
2707	3531
2708	3551
2711	3433
2712	3596
2713	3528

SIFFERT	BESER
NO	NO
2714	3878
2715	3819
2716	3658
2717	3608
2720	3503
2721	4128
2723	3540
2726	3685
2727	3688
2736	3888
2738	3622
2739	3553
2740	3745
2742	3749
2743	3736
2744	3799
2745	3511
2746	3580
2748	3832
2751	3689
2753	3618
2754	3617
2755	3740
2758	3538
2763	3883
2766	3750
2767	3567
2768	3670
2769	3678
2775	3603
2775	3604
2776	4078
2781	3677
2782	3863
2784	3686
2785	3830
2789	3674
2791	3575
2794	3585
2796	3673
2797	3777
2798	3776
2800	3874
2802	3887
2803	3704
2804	4148
2805	3602
2807	3687
2808	3545
2817	3682
2819	3614
2821	3577
2823	3680
2827	3570
2827	3594
2830	3636
2831	3872
2842	3656
2845	4125
2847	3675
2848	3512
2850	3884
2853	3606
2855	3898
2860	4072
2861	3581
2864	3833
2877	3994
2880	4062
2881	4281
2884	3659
2885	3687
2888	3909
2895	3744
2899	4079
2900	3764
2903	3762
2904	3663
2905	3763
2912	3722

SIFFERT	BESER
NO	NO
2914	3754
2915	3659
2916	3507
2924	3653
2925	3681
2926	3804
2934	3778
2937	3768
2938	3896
2939	3896
2940	4059
2947	3574
2956	3809
2958	4123
2959	3676
2960	3821
2966	3749
2967	3938
2969	3755
2970	3861
2972	3877
2973	3648
2975	3919
2976	3943
2980	3687
2981	3790
2982	3836
2983	4009
2986	3846
2987	3843
2988	3892
2990	3896
2992	3769
2993	3784
2997	3790
3001	4094
3004	4011
3005	3853
3006	4095
3008	4271
3013	3854
3014	3931
3017	4125
3018	4269
3019	3802
3021	3614
3028	4152
3030	3817
3031	3825
3037	4012
3046	4158
3047	4103
3049	4180
3054	3986
3056	4110
3057	3831
3058	4109
3058	4232
3059	3961
3060	3993
3061	3993
3062	3843
3064	3843
3070	4119
3074	4084
3077	3933
3081	3850
3082	3849
3083	4138
3084	4138
3085	3912
3086	4013
3089	4071
3090	4153
3091	4097
3092	3877
3094	3983
3095	3767
3097	3632

SIFFERT	BESER
NO	NO
3100	4173
3101	3900
3102	4087
3107	3904
3108	3905
3111	3951
3113	3801
3115	3502
3116	4118
3117	3889
3121	4101
3121	4209
3123	3955
3124	4042
3130	4076
3132	3978
3133	3979
3135	3890
3136	4153
3138	3842
3147	4345
3149	4216
3155	3987
3162	3931
3170	4346
3171	3800
3172	3885
3173	4181
3174	3841
3177	3959
3180	4210
3183	4240
3184	4028
3185	4017
3187	3923
3188	3924
3190	4106
3192	4096
3193	3891
3194	4303
3196	4074
3197	3894
3199	4031
3201	3940
3202	3939
3203	3946
3204	3853
3206	3984
3207	4137
3208	4293
3209	3944
3210	4159
3211	3985
3212	4001
3213	3968
3214	3969
3215	4081
3216	4180
3218	3841
3220	3983
100013	3433
100016	3433
100021	3994
100023	3773
100042	3773
100062	3994
100063	3942
2347.1	3429
2347/S	3429

SIFERT	BESER
NO	NO
2347/S	3429
2348.2	3487
2348/B	3487
2366/A	3649
2380.1	3415
2380/B	3415
2382.1	3486
2382/A	3486
2417.1	3552
2417/A	3552
2484.1	3505
2484.1	3615
2484/A	3505
2484/A	3615
2582.1	3680
2582/A	3680
2635.1	4020
2635/A	4020
2659.2	3590
2659/A	3590
2720.1	3503
2739.1	3553
2752.2	3897
2752/B	3897
2753.3	3618
2758.1	3637
2758.2	3566
2758/B	3566
2791.1	3575
2817.1	3782
2817.2	3782
2817/A	3782
2817/S	3782
2818.1	4347
2853.1	3794
2938/A	3896
2952.1	3568
2953.1	3569
2967.1	3938

SIMER	BESER
NO	NO
84	3320
91	3318
94	3317
95	3316
96	3346
108	3311
113	3373
114	3321
147	3329
153	3323
154	3709
157	3710
158	3393
161	3315
161	3515
165	3327
166	3343
166	3483
168	3366
170	3335
173	3806
180	3423
184	3416
189	3405
191	3315
191	3515
196	3339
196	3514
198	3374
205	3350
210	3513
211	3806
212	3625
213	3421
219	3440
222	3312
225	3379
229	3365
230	3468
233	3378
235	3417
238	3419
239	3429
241	3442
242	3527
245	3424
249	3484
260	3324
270	3369
272	3370
278	3381
279	3493
281	3509
283	3611
284	3503
286	3467
289	3646
291	3666
293	3407
295	3650
296	3536
297	3619
300	3579
303	3402
306	3621
307	3486
308	3444
309	3380
311	3441
312	3415
315	3410
317	3466
318	3495
327	3526
328	3422
329	3573
330	3408

SIMER	BESER
NO	NO
339	3546
340	3428
341	3482
347	3543
348	3425
353	3624
354	3462
355	3413
356	3400
357	3371
358	3449
359	3417
359	3417
360	3605
369	3752
372	3490
374	3620
376	3572
379	3496
382	3457
383	3529
386	3714
390	3401
397	3432
398	3758
399	3436
400	3634
402	3504
403	3395
410	3529
412	3641
416	3564
417	3397
421	3661
425	3679
426	3537
427	3412
435	3757
435	3857
436	3760
442	4212
444	3499
445	3463
454	3589
456	3873
460	3709
478	3717
480	3448
481	3446
485	3609
486	3633
487	3470
488	3469
489	3578
490	3583
492	3600
493	3437
494	3563
495	3680
496	3723
497	3430
498	3882
503	3683
504	3464
505	3623
507	3487
514	3445
516	3473
519	3596
521	3436
523	4104
525	3562
526	3660
527	3491
531	3640
535	3448
537	3766

SIMER	BESER
NO	NO
548	3469
549	3523
550	3642
551	3607
552	3686
558	3629
566	3632
570	3433
572	3433
574	3773
581	3590
585	3603
585	3604
586	4214
587	3539
590	3819
591	3878
601	3528
603	3658
604	3558
605	3593
607	3608
609	3559
610	3595
613	3503
614	4128
615	3685
616	3688
618	3630
619	3740
620	3704
622	3799
623	3545
625	3553
628	4080
629	3554
629	3651
630	3511
631	3745
638	3888
645	3746
648	3617
652	3674
653	3883
654	3736
655	4078
656	3538
657	4182
662	3779
664	3733
666	3560
674	4087
676	4108
680	3696
681	4148
682	4072
688	3567
689	3678
690	3670
691	3675
692	3512
693	3677
696	3577
697	3884
698	3863
699	3750
700	3896
701	4062
706	3614
707	3606
708	4059
709	3575
711	3422
712	3636
713	3682
715	3663
717	3762

SIMER	BESER
NO	NO
722	3659
724	3873
728	3744
729	3754
730	4197
733	3581
734	3673
735	3622
736	3697
740	3778
741	3648
742	3507
743	4088
744	3687
745	4126
746	4069
747	3872
753	3681
754	3804
755	4281
756	3861
757	3755
759	3676
761	3821
762	3768
763	3919
764	3918
769	4123
773	3877
776	3777
777	3822
780	3790
787	3836
788	3943
789	3832
790	3833
791	4010
794	3935
795	3934
797	4100
798	4093
802	3784
804	3887
805	3846
807	3769
808	3820
810	4094
811	3800
812	3826
813	3800
816	3856
817	3780
818	3817
819	4086
821	3932
824	3695
826	4012
831	4009
834	3950
835	3852
836	3853
837	4138
838	4095
839	4158
840	4153
842	4112
843	4211
844	3802
845	3854
846	3931
847	3986
848	3848
849	4027
850	3855
851	4079
852	3764
853	3850
854	3849
855	3849

SIMER	BESER
NO	NO
856	3898
857	3901
860	3809
861	4110
862	3834
863	3835
864	3914
866	4102
867	4101
867	4209
869	4097
870	3801
872	3955
874	3831
875	4109
875	4232
876	3843
877	4269
878	4271
879	3892
880	3928
882	3829
883	4011
884	4103
885	3748
888	3881
889	3879
890	4036
901	3904
902	4042
903	4173
906	4076
907	3889
908	3885
909	3825
910	3765
911	3841
913	3909
914	3905
915	3875
916	3890
917	4153
920	3767
921	3923
922	3924
925	4180
926	4181
927	4179
928	3968
929	3969
930	3912
931	4347
936	3984
937	3940
938	3939
939	3946
942	3951
943	3891
944	3983
945	3987
946	3958
947	3978
948	3979
955	3419
956	3985
957	4213
958	4346
961	3962
962	3925
963	3926
964	4058
966	3920
967	3906
968	3907

SIMER	BESER
NO	NO
970	3963
971	3748
972	3747
974	3748
976	4122
977	3880
978	3953
979	4037
980	4210
984	3981
985	3922
986	3820
987	3959
988	4092
989	4028
990	3980
991	4038
992	3933
993	4248
994	4247
995	3972
996	4151
997	4161
999	4157
1000	3976
1004	4259
1005	4260
1006	4249
1011	3886
1012	4293
1013	3944
1014	4159
1015	4155
1016	4137
1017	4029
1018	3966
1019	3967
1020	3970
1021	3894
1022	3895
1023	3964
1026	3971
1028	3693
1029	3913
1030	3788
1031	3954
1033	4077
1034	3948
1035	3949
1036	3956
1038	4031
1043	4084
1044	4118
1048	3769
1049	3952
1050	3859
1051	3960
1052	3989
1054	4160
1055	4156
1058	3830
1062	3915
1063	4085
1064	4105
1065	4111
1066	3853
1077	4124
1110	3458
145.1	3333
168.1	3366
235.1	3570
235.1	3594
238.1	3419
245.1	3424
245.2	3424
245.3	3424
279.1	3381
283.1	3550
295.1	3649

SIMER	BESER
NO	NO
296.1	3536
297.1	3635
303.1	3402
307.1	3585
309.1	3580
330.1	3408
337.1	3556
339.1	3539
346.1	3459
346.2	3540
346.8	3568
352.1	3549
352.4	3790
358.1	3522
369.1	3501
373.1	3423
382.1	3610
383.1	3529
402.1	3502
416.1	3584
421.1	3771
425.1	3994
425.2	3994
425.3	3994
425.4	3994
427.1	3453
430.1	3662
431.1	3631
436.1	3692
478.2	3717
485.1	3609
487.1	3505
487.1	3615
489.2	3656
495.1	3680
503.1	3872
504.1	3722
526.1	3660
530.1	3689
537.1	3598
540.1	3551
558.1	3628
561.1	4020
565.1	3700
574.1	3773
581.7	3590
581.8	3590
607.1	3643
615.1	3685
624.1	3776
625.1	3553
629.1	3554
629.1	3651
646.2	3897
647.1	3618
656.1	3566
656.2	3637
661.1	3582
681.1	4148
681.2	4148
693.1	3677
696.1	3598
698.1	3863
700.1	3896
700.2	3896
701.1	4062
706.1	3614
707.1	3794
709.1	3575
712.1	3644
713.1	3782
713.2	3782
713.3	3782
715/91	3663
722.1	3938
722.2	3938
744.1	3687
775.1	4345
775.3	4345
802.1	3921

SIMER	BESER
NO	NO
804.1	3887
805.1	3846
808.1	3820
812.1	3826
813.1	3800
813.2	3800
836.1	3853
837.1	4138
868.1	4096
903.1	4173
911.1	3841
912.1	3842
962.1	3965
962.2	3965
976.1	4122

STOP	BESER
NO	NO
571202S	3393
571204S	3311
571206S	3321
571215S	3320
571217S	3366
571218S	3323
571221S	3327
571224S	3333
571226S	3317
571228S	3405
571232S	3343
571232S	3483
571233S	3416
571234S	3373
571236S	3350
571246S	3527
571247S	3312
571248S	3806
571250S	3423
571251S	3374
571262S	3442
571265S	3421
571271S	3365
571272S	3513
571276S	3410
571278S	3339
571278S	3514
571279S	3318
571291S	3417
571291S	3417
571297S	3424
571298S	3484
571300S	3572
571302S	3493
571304S	3440
571305S	3625
571306S	3482
571308S	3429
571309S	3466
571312S	3621
571313S	3546
571315S	3441
571316S	3486
571317S	3444
571319S	3474
571321S	3526
571327S	3503
571330S	3432
571331S	3495
571332S	3380
571333S	3380
571334S	3496
571336S	3603
571339S	3428
571340S	3366
571344S	3611
571346S	3422
571350S	3536
571352S	3609
571353S	3430
571355S	3564
571356S	3619
571357S	3650
571359S	3457
571361S	3529
571363S	3873
571368S	3537
571370S	3641
571372S	3315
571372S	3515
571375S	3490
571376S	3531
571380S	3605
571382S	3408
571387S	3578
571389S	3717
571391S	3505
571391S	3615
571393S	3543
571394S	3584

STOP	BESER
NO	NO
571398S	3680
571400S	4104
571401S	3624
571406S	3556
571407S	3469
571411S	3563
571412S	3589
571413S	3629
571418S	3642
571421S	3660
571422S	3523
571425S	3596
571428S	3583
571429S	3326
571438S	3683
571439S	3662
571440S	3771
571442S	3423
571448S	3459
571452S	3467
571462S	3536
571463S	3316
571464S	3424
571474S	3425
571476S	3539
571491S	3378
571492S	3623
571493S	3733
571509S	3528
571510S	3610
571512S	3590
571513S	3529
571515S	3867
571519S	4182
571522S	3593
571523S	3608
571525S	3487
571526S	3503
571528S	3643
571530S	3736
571536S	3417
571539S	3410
571540S	3419
571542S	3573
571543S	3335
571546S	3578
571552S	3339
571552S	3514
571553S	3315
571553S	3515
571555S	3550
571556S	3611
571557S	3572
571560S	3408
571561S	3609
571722S	3581
571725S	3464
571726S	3464
571743S	3487
571744S	3496
571745S	3473
571746S	3445
571753S	3630
571754S	4214
571756S	3878
571757S	3819
571803S	3661
571822S	3413
571827S	3453
571828S	3658
571832S	3558
571833S	3410
571839S	3595
571840S	3559
571841S	3658
571843S	3799
571844S	3567
571845S	3680
571846S	3678
571847S	3553

STOP	BESER
NO	NO
571848S	3585
571850S	3545
571852S	3909
571868S	3430
571869S	3491
571870S	3346
571873S	3881
571876S	3863
571877S	3677
571879S	3628
571884S	3617
571885S	3537
571888S	3618
571893S	3608
571897S	3750
571900S	3506
571904S	3610
571906S	3529
571910S	3670
571913S	3589
571914S	3570
571914S	3594
571915S	3538
571916S	3569
571918S	3879
571919S	3636
571923S	3566
571924S	3623
571925S	3676
571929S	3682
571930S	3938
571934S	3606
571936S	3656
571939S	3637
571941S	4062
571942S	3675
571944S	4125
571945S	4125
571946S	3681
571947S	3861
571948S	4020
571949S	3897
571950S	3804
571954S	3938
571955S	3896
571961S	4102
571962S	4101
571962S	4209
571964S	3722
571966S	3644
571967S	3754
571968S	3762
571969S	3896
571971S	3782
571974S	3549
571976S	3683
571977S	4212
571980S	3943
571984S	3590
571985S	3682
571986S	3836
571987S	3836
571988S	3821
571990S	4180
571991S	4179
571994S	4347
571995S	4281
571998S	3755
572100S	3723
572118S	3746
572119S	3710
572120S	3709
572127S	4087
572135S	4212
572136S	4212
572138S	4148
572140S	3560
572143S	3449
572144S	3449
572145S	3522

STOP	BESER
NO	NO
C	3640
572161S	3833
572164S	3600
572166S	3882
572177S	3579
572178S	3371
572180S	3646
572181S	3633
572186S	4108
572188S	3776
572193S	3875
572197S	4080
572200S	3688
572205S	3324
572206S	3394
572209S	3400
572210S	3766
572216S	3407
572217S	3745
572221S	3887
572230S	3370
572237S	3501
572238S	3752
572245S	3693
572247S	3883
572250S	3509
572253S	3673
572255S	3402
572257S	4128
572258S	3446
572262S	3620
572267S	3395
572268S	3504
572269S	3502
572271S	3757
572271S	3857
572272S	3757
572272S	3857
572275S	3426
572281S	3448
572288S	3582
572293S	3436
572294S	3436
572295S	3401
572303S	3634
572304S	3634
572309S	3631
572310S	3562
572312S	3397
572313S	3758
572316S	3369
572317S	3437
572318S	3437
572324S	3686
572325S	3832
572326S	3379
572331S	3499
572332S	3463
572333S	3554
572333S	3651
572335S	3462
572338S	3700
572340S	3607
572343S	3700
572345S	3779
572346S	3779
572347S	3632
572348S	3674
572349S	3696
572354S	3695
572355S	3714
572361S	3415
572363S	3714
572367S	3777
572370S	3685
572373S	3760
572375S	3603
572375S	3604
572377S	4078
572380S	3915

STOP	BESER
NO	NO
572381S	3622
572382S	3888
572386S	4072
572388S	3740
572392S	4086
572393S	3704
572396S	3577
572399S	3602
572401S	3778
572402S	3744
572403S	3687
572404S	3768
572405S	3769
572408S	3687
572409S	3898
572411S	3507
572419S	3809
572420S	3884
572423S	4079
572424S	3913
572428S	4115
572432S	4110
572435S	3874
572437S	3780
572442S	3648
572447S	3685
572448S	3859
572449S	4109
572449S	4232
572450S	3788
572451S	4010
572453S	3843
572471S	3928
572477S	3764
572478S	4155
572480S	4159
572482S	3889
572485S	3890
572487S	4158
572488S	4153
572489S	4118
572491S	3817
572492S	3825
572494S	3512
572496S	3632
572497S	3892
572499S	4271
572500S	3900
572501S	3933
572503S	4119
572504S	3831
572510S	4112
572511S	3978
572513S	3961
572514S	3959
572515S	3891
572516S	4153
572518S	3976
572519S	4084
572521S	4293
572522S	3944
572526S	3968
572527S	3969
572528S	3829
572530S	3511
572532S	3802
572536S	4009
572537S	3767
572538S	3822
572539S	3951
572541S	4010
572542S	3598
572543S	3554
572543S	3651
572546S	4013
572547S	4106
572548S	3830
572549S	3979
572550S	3912
572551S	4017

STOP	BESER
NO	NO
572553S	3910
572557S	3993
572560S	4269
572562S	4105
572565S	3901
572566S	3764
572567S	3574
572569S	4077
572570S	3976
572571S	4036
572572S	3988
572573S	3933
572575S	4143
572577S	4028
572578S	3958
572583S	3911
572584S	3929
572585S	4001
572601S	4037
572604S	3980
572605S	4160
572606S	4156
572607S	3960
572608S	3989
572612S	4039
572613S	4165
572617S	3928
572619S	4035
572621S	4111
572627S	4146
572628S	4029
572629S	4061
572636S	4082
572638S	4081
572639S	4060
572641S	3982
572642S	3903
572643S	3886
572649S	4074
572651S	3948
572654S	3933
572655S	4255
572656S	4256
573003S	3919
573005S	3529
573006S	3896
573008S	3539
573010S	3763
573011S	3846
573012S	4093
573013S	4100
573014S	4123
573015S	3784
573016S	3950
573017S	3852
573018S	3853
573021S	3918
573022S	3590
573027S	3935
573029S	3934
573030S	3820
573031S	3800
573032S	3529
573034S	4126
573035S	4069
573039S	4059
573041S	3877
573042S	3617
573047S	4095
573050S	3553
573053S	3663
573055S	3855
573058S	3848
573059S	3795
573068S	3512
573072S	4197
573074S	3826
573075S	3800
573077S	4011
573083S	3854

STOP	BESER
NO	NO
573084S	3931
573085S	3801
573089S	4211
573092S	4102
573093S	3676
573094S	3548
573094S	3690
573096S	3986
573101S	4138
573102S	4094
573106S	3794
573107S	3856
573109S	3568
573110S	3921
573112S	4152
573113S	3834
573114S	3835
573115S	3914
573118S	4012
573120S	4093
573123S	3850
573124S	3849
573125S	3983
573127S	4138
573128S	3904
573130S	3790
573131S	3940
573132S	3939
573133S	3946
573135S	3987
573147S	4103
573150S	4208
573151S	4346
573153S	4042
573158S	3905
573159S	3841
573160S	3841
573161S	4347
573164S	3826
573165S	3800
573168S	4173
573169S	3643
573170S	3826
573171S	3800
573172S	3800
573175S	4210
573178S	4240
573183S	3820
573184S	3800
573186S	3853
573189S	4180
573192S	3964
573196S	4096
573198S	4096
573201S	4161
573203S	3872
573208S	4222
573209S	3885
573216S	3894
573218S	4058
573220S	3842
573221S	3923
573224S	4181
573227S	4076
573235S	3984
573241S	3970
573243S	4134
573247S	4259
573249S	4122
573253S	4137
573255S	3983
573259S	4260
573261S	3922
573266S	4173
573268S	3964
573270S	4149
573272S	3967
573274S	3820
573275S	3906
573276S	3920

STOP	BESER
NO	NO
573277S	3907
573278S	3955
573280S	3972
573281S	4151
573284S	3966
573291S	4249
573295S	4141
573296S	3945
573300S	4207
573306S	3800
573308S	3800
573312S	4135
573313S	4150
573320S	4093
573323S	4004
573325S	4008
573329S	4309
573330S	4162
573332S	4230
573334S	4121
573335S	4014
573340S	4016
573343S	4291
573357S	4056
573358S	4132
573358S	4172
573359S	4057
573363S	4204
573365S	4215
573368S	4136
573369S	4311
573375S	4148
573377S	3895
573379S	4038
573380S	4213
573393S	4113
573395S	4310
573399S	4145
573404S	4198
573406S	4166
573408S	4220
573409S	4241
573414S	3966
573416S	3998
573422S	4140
573430S	3980
573431S	3952
573434S	4175
573435S	4167
573438S	4174
573440S	4176
573444S	4315
573454S	4049
573461S	4201
573504S	3614
573506S	3575
573507S	3926
573508S	3925
573509S	3962
573510S	3963
573511S	3965
573512S	4092
573513S	3749
573514S	3823
573517S	3995
573518S	3679
573519S	3926
573520S	3575
573524S	3575

TEXTAR	BESER
NO	NO
2000201	3463
2000401	3701
2001102	3320
2001104	3350
2001105	3320
2001107	3320
2001108	3350
2002701	3455
2003101	3875
2003402	3318
2007304	3316
2007310	3346
2007404	3317
2008802	3311
2009902	3582
2011201	3395
2015302	3373
2016203	3873
2016603	3393
2016801	3531
2016804	3551
2017301	3318
2018201	3634
2020101	3945
2021703	3945
2022802	3343
2022802	3483
2022803	3327
2026002	3806
2028902	3375
2032301	3335
2032303	3335
2034110	3339
2034110	3514
2034402	3661
2035905	3423
2035908	3423
2036404	3416
2036602	3366
2037501	3625
2038002	3526
2039201	3315
2039201	3515
2039204	3315
2039204	3515
2041001	3596
2041002	3596
2041003	3596
2043602	3326
2043702	3332
2043703	3331
2044201	3482
2045502	3405
2046801	3320
2048002	3374
2048802	3527
2049105	3312
2054701	3623
2057401	3490
2057402	3378
2058702	3706
2058805	3365
2059902	3314
2062801	3369
2062902	3573
2063101	3442
2063503	3493
2066001	3421
2066904	3649
2066921	3650
2066922	3619
2067502	3572
2067602	3590
2068701	3550
2068703	3611
2070302	3709
2071802	3370
2071901	3468
2072902	3379
2073101	3509

TEXTAR	BESER
NO	NO
2073501	3705
2074101	3440
2075303	3417
2076701	3579
2077801	3650
2078001	3746
2078302	3417
2078302	3417
2078401	3513
2083302	3466
2085201	3371
2085702	3621
2086105	3419
2086109	3429
2086301	3415
2087001	3402
2088003	3446
2088707	3486
2088708	3585
2088710	3444
2088902	3441
2089501	3646
2089502	3633
2090401	3413
2090506	3380
2090604	3487
2090802	3549
2092602	3482
2093903	3410
2093904	3410
2094102	3408
2094103	3408
2095005	3424
2095006	3424
2095501	3401
2095802	3394
2095901	3501
2095902	3752
2096101	3529
2096102	3529
2096104	3529
2096108	3529
2096110	3529
2096801	3564
2097401	3496
2097904	3605
2098901	3474
2099501	3578
2101202	3502
2101204	3504
2101602	3428
2105001	3717
2105002	3717
2105503	3430
2105505	3430
2108401	3624
2108902	3583
2109601	3495
2109901	3397
2109902	3758
2110005	3432
2110701	3425
2110704	3425
2111501	3462
2112601	3400
2114001	3469
2114103	3603
2114401	3536
2115305	3628
2115307	3629
2115801	3414
2115801	3714
2115902	3620
2117002	3422
2117105	3464
2117302	3609
2117303	3609
2119003	3470
2119301	3459
2119501	3461

TEXTAR	BESER
NO	NO
2120203	3589
2120501	3543
2120909	3457
2123302	3641
2123701	3771
2124801	3634
2124901	3634
2127702	3449
2127801	3680
2127803	3680
2128002	4104
2128201	3879
2130103	3630
2130104	3630
2130304	3627
2130501	3581
2130503	3581
2130504	3581
2130581	3581
2130591	3581
2131201	4212
2133001	3691
2133801	3600
2134702	3760
2135501	3723
2136301	3685
2136801	3733
2136901	4088
2137001	3685
2137301	3448
2137801	3437
2138501	3642
2138802	3539
2139408	3558
2141101	3736
2143001	3528
2143602	3643
2143905	3658
2143906	3658
2144601	3631
2145902	3662
2146303	3503
2146304	3503
2146306	3503
2146801	3777
2146901	3445
2146902	3445
2147001	3473
2147002	3473
2147102	3909
2147103	3909
2147902	3553
2147903	3553
2148101	3888
2148201	4078
2148602	3881
2148604	3881
2148681	3881
2148701	3879
2148702	3879
2148703	3879
2148781	3879
2149001	3915
2149101	4099
2149501	3426
2149701	3696
2150001	3882
2151503	3683
2151504	3872
2151901	3453
2151901	3816
2151902	3453
2151902	3816
2153702	3666
2153901	3640
2154302	3757
2154302	3857
2154501	3660
2154601	3562
2155301	4087

TEXTAR	BESER
NO	NO
2156101	3779
2157302	3689
2157601	3567
2158601	4214
2159201	3670
2160101	3554
2160101	3651
2160901	3487
2161403	3556
2162102	3678
2162601	4128
2163102	3819
2163201	3878
2163301	3779
2163501	4020
2163602	3617
2164302	3563
2164701	3622
2165001	3603
2165001	3604
2165101	3704
2165404	3522
2165701	3766
2166201	3419
2166201	3731
2166404	3677
2166481	3677
2167001	3863
2167081	3863
2167901	3560
2167904	3560
2168801	4072
2169103	3656
2169181	3656
2169401	3607
2169701	3686
2170001	3695
2170301	4080
2170602	4108
2171201	3436
2171202	3436
2171901	4148
2172001	4148
2172402	3750
2172501	3632
2173001	3745
2175401	3832
2176603	3833
2177501	3673
2178601	4275
2179101	4086
2179701	3595
2179901	3559
2181201	3867
2182202	4182
2182901	3665
2183201	3545
2183301	3776
2184002	3688
2184501	3674
2184802	3506
2184903	3590
2186102	4062
2186201	3505
2186201	3615
2186601	3637
2186602	3566
2186603	3538
2187501	3887
2188302	3606
2188501	3794
2189801	3821
2189803	3821
2189881	3821
2190003	3663
2190403	3680
2190701	3883
2191901	3676
2191903	3676
2191981	3676

TEXTAR	BESER
NO	NO
2192901	3618
2194502	3896
2194503	3896
2194504	3896
2194701	3693
2195202	3898
2196202	3458
2198004	3659
2198302	4059
2198304	4059
2199901	4281
2203101	4334
2203102	4334
2206501	4282
2206503	4282
2208701	4227
2210301	4287
2211701	4308
2214301	4284
2222001	4286
2239701	4234
2242101	4251
2243901	4307
2247601	4301
2252501	4253
2261001	4280
2300401	3577
2300501	3598
2302001	3861
2302101	3804
2302170	3804
2302201	3681
2302270	3681
2303201	4071
2304201	3799
2306101	3511
2306302	3762
2307003	4125
2307004	4125
2307104	3593
2307303	3919
2307381	3919
2307401	3919
2307602	3918
2307681	3918
2307801	4101
2307801	4209
2307881	4101
2307881	4209
2308001	3675
2308101	3507
2308601	3697
2309102	3717
2309501	4115
2309902	3848
2310301	3570
2310301	3594
2311203	3943
2311502	3665
2311901	4222
2312401	3636
2312601	3584
2313001	3782
2313081	3682
2313101	3782
2313181	3782
2314401	3836
2314402	3836
2314481	3836
2314482	3836
2315402	3754
2315702	4103
2315781	4103
2316901	3610
2317203	3539
2317801	4110
2318101	3897
2318302	4347
2318381	4347
2318902	4069

TEXTAR	BESER
NO	NO
2319303	4126
2319701	3695
2320201	3877
2321502	3950
2321901	3569
2322416	4345
2322501	3846
2322702	3548
2322702	3690
2323401	3687
2323802	3778
2324102	3744
2324502	3852
2325803	3763
2326903	4095
2327102	4102
2327181	4102
2327301	3934
2327701	3935
2327904	4100
2328781	3563
2328902	3617
2329002	3809
2330002	3722
2330301	4034
2330902	4179
2331204	4180
2331207	4180
2331281	4180
2331401	3884
2332602	3842
2333102	4276
2334001	4112
2334602	3644
2334803	3768
2334901	3768
2335301	3755
2338401	3740
2339201	3590
2340001	3602
2340203	4211
2340702	3854
2340902	3931
2341702	4040
2342001	3932
2342901	4085
2343401	3921
2344004	3801
2344007	3801
2344201	4009
2347101	3512
2347201	3781
2348202	3853
2348401	3653
2348701	4271
2348801	3892
2349002	3780
2349701	3901
2349901	4274
2350201	4010
2350701	3928
2350801	3928
2351002	3769
2351302	3822
2351501	3874
2351703	4123
2352101	3788
2352402	3829
2352701	4155
2353601	3648
2353902	3830
2354001	3767
2354301	3993
2354304	3993
2354901	4062
2355202	3790
2355401	3529
2355402	3529
2355406	3529
2355481	3529

TEXTAR	BESER
NO	NO
2355482	3529
2355701	4093
2355702	4093
2355802	4079
2356501	3667
2356901	3843
2357202	3913
2357701	3784
2358101	4138
2358102	4138
2358401	3955
2358403	3955
2358501	4158
2358701	3904
2358704	3904
2358781	3904
2359301	4084
2359901	3820
2360001	3800
2360406	3877
2361101	3859
2361301	3856
2361501	4094
2362002	4153
2363101	4011
2363801	4012
2364901	3802
2365201	4148
2365601	4153
2366201	4027
2366901	3855
2367101	3552
2367301	3895
2369202	4075
2369402	4076
2369801	4143
2370201	3911
2370301	4082
2370502	3826
2370503	3826
2370601	3826
2370802	3800
2370803	3800
2370804	3800
2370901	3800
2372001	4159
2372301	3885
2372601	3976
2372901	4109
2372901	4232
2373001	4179
2373081	4179
2373201	4181
2373281	4181
2373401	4105
2373807	4211
2374303	4097
2374381	4097
2374601	3841
2374602	3841
2376302	4096
2376601	3817
2376802	3890
2377501	3569
2377601	3568
2378001	3764
2378401	3574
2378701	4119
2379101	4208
2379301	4346
2379381	4346
2380401	4083
2381601	3825
2382301	4152
2383201	4042
2383281	4042
2383601	4013
2384201	3790
2385501	4003
2386501	3912

TEXTAR	BESER
NO	NO
2386801	3831
2387101	3933
2387301	4269
2387902	3900
2389101	3959
2389105	3959
2391401	3905
2391402	3905
2391481	3905
2391482	3905
2391701	3834
2391901	3835
2392101	3914
2392201	4210
2392281	4210
2392801	3910
2393001	3849
2393401	3850
2395081	4096
2395401	3820
2395901	3987
2396001	4240
2396004	4240
2396081	4240
2396601	4028
2396701	4111
2397001	4017
2397301	3983
2397302	3983
2397401	3951
2397601	3421
2397901	3826
2397903	3826
2398001	3795
2398101	3800
2398201	3826
2400701	3923
2401401	4106
2402401	3891
2402403	3891
2403101	3961
2403901	4303
2404001	4303
2404601	3889
2405001	3895
2405301	4109
2405301	4232
2405601	4074
2405801	3979
2406601	3892
2407101	3894
2407201	4173
2407202	4173
2408301	4031
2409201	3978
2409801	3945
2409802	3945
2409803	3945
2410101	3820
2411103	4030
2412201	3956
2412301	4161
2412305	4161
2413301	3940
2413401	3939
2413501	3946
2413701	3853
2415001	3984
2415501	4211
2416201	4137
2416301	4018
2416401	4198
2416601	4006
2416701	3976
2417001	4207
2417081	4207
2419101	4293
2419201	3944
2419202	3944
2419204	3944

TEXTAR	BESER
NO	NO
2419206	3944
2421801	4001
2422201	4081
2422701	3952
2422704	3952
2424401	4277
2424601	4118
2425001	4016
2425301	4247
2425381	4247
2426001	4058
2427101	4213
2427501	3968
2427601	3969
2427701	3985
2428302	4122
2428303	4122
2428801	3826
2429101	3765
2429501	4309
2430101	4000
2430601	4248
2430602	4248
2430603	4248
2430681	4248
2430682	4248
2431001	4249
2431081	4249
2431701	3880
2432001	3980
2432301	4113
2432801	4208
2433601	3953
2433701	4077
2433801	3949
2434601	3929
2434701	3958
2435001	3948
2435101	3960
2435301	3988
2437001	3886
2437201	4036
2438101	4186
2438601	3996
2439301	3827
2440301	3983
2441201	4149
2441204	4149
2442101	4150
2442102	4150
2443801	4220
2443901	4220
2444501	4219
2444801	4221
2445201	4255
2446501	3820
2446601	3922
2446602	3922
2446701	3922
2446701	4171
2446703	3922
2446703	4171
2446801	3981
2446802	3981
2446901	3981
2448401	3906
2448404	3906
2448501	3920
2448601	3907
2448801	3989
2449101	4165
2450101	4039
2451001	3976
2452301	3982
2452901	3975
2453701	4157
2453702	4157
2453703	4157
2453801	3964
2455301	4309

TEXTAR	BESER
NO	NO
2456101	4325
2456102	4325
2456181	4325
2456301	4135
2456701	3903
2457801	4151
2458101	4242
2458201	4029
2458202	4029
2459501	3972
2459502	3972
2459701	4035
2460201	4004
2460402	4005
2460601	4260
2460602	4260
2461001	3954
2462301	4162
2463201	4038
2463501	4156
2463801	4160
2464701	3797
2465301	3997
2465901	4291
2466001	3970
2466401	4037
2466801	4147
2467001	4215
2467301	4141
2468201	4015
2469201	3967
2469301	3966
2469302	3966
2470901	4134
2472101	4310
2472701	4121
2473001	3748
2473401	3748
2473701	3984
2476401	4173
2476501	3971
2481801	4188
2482001	4142
2482002	4142
2483001	3899
2484401	4098
2485401	4258
2486401	4073
2486901	4326
2487101	3933
2488501	4146
2491401	3964
2491801	4256
2493401	4061
2494901	3980
2500801	4241
2502201	4314
2503101	4230
2503401	4008
2507101	4335
2507103	4335
2507601	4230
2507901	4008
2509501	3826
2509601	4014
2509602	4014
2511001	4336
2511003	4336
2511201	4057
2513402	4204
2514701	4056
2514901	4124
2517201	4132
2517201	4172
2517901	4313
2517903	4313
2518701	4049
2519601	4339
2520201	4038
2520501	4039

TEXTAR	BESER
NO	NO
2520901	4167
2521201	3853
2522001	4145
2524001	4324
2524601	3998
2525001	4201
2526801	4337
2529201	3980
2530901	3916
2533701	4311
2534801	4136
2535301	4349
2548101	4254
2552001	4060
2559901	4202
2560201	4174
2560301	4175
2561001	4019
2561003	4019
2564401	4233
2568101	4200
2569801	4176
2570201	4140
2570801	4166
2570801	4342
2572501	4315
2573601	4226
2579201	4312
2582301	4205
2587501	4317
2587801	4318
2594701	4279
2596501	4283
2598701	4224
2900102	3749
2901703	3433
2904101	3523
2904402	3707
2905902	3664
2906705	3773
2906772	3773
2907101	3537
2907102	3537
2907604	3614
2908711	3664
2908773	3664
2909006	3770
2909009	3770
2909071	3770
2909504	3789
2909507	3789
2909518	3789
2909519	3789
2909520	3789
2909522	3789
2909570	3789
2909571	3789
2910004	3837
2910701	3749
2911701	3770
2912111	3575
2912112	3575
2912170	3575
2912172	3575
2912204	3994
2912271	3994
2912272	3994
2912303	3823
2912307	3823
2913103	3828
2913105	3828
2913111	3828
2913171	3828
2913172	3828
2913172	3828
2914811	3908
2914815	3908
2915801	4243
2916002	3942
2916070	3942

TEXTAR	BESER
NO	NO
2919001	3926
2919070	3926
2919201	3925
2919202	3925
2920001	3962
2920002	3962
2920070	3962
2921701	3963
2921702	3963
2921770	3963
2922901	3965
2922902	3965
2923101	3995
2923201	4092
2924001	4054
2924201	4216
2925601	4169
2932401	3521
2932403	3521
2958101	3315
2958101	3515
2958104	3315
2958104	3515
2958301	3955
2970601	3537
2970602	3537
2983506	3679
2983571	3679
2900120005	3749
2910720005	3749
2919019015	3926
2919220914	3925
2920020714	3962
2921720814	3963
2922921414	3965
2922921415	3965
2923122814	3995
2923221014	4092
2924017315	4054
2924219505	4216
20002 15,0 05	3463
20011 15,0 04	3320
20011 18,5 04	3350
20011 19,0 04	3350
20031 13,0 04	3875
20034 15,0 04	3318
20073 12,5 04	3346
20073 17,3 04	3316
20074 10,0 04	3317
20088 14,4 04	3311
20099 15,0 05	3582
20112 18,0 05	3395
20145 17,0 05	3321
20153 16,0 04	3373
20162 15,4 04	3873
20166 16,0 04	3393
20168 16,2 14	3531
20168 19,6 14	3551
20173 14,5 04	3318
20182 15,5 05	3634
20228 15,2 04	3327

TEXTAR	BESER
NO	NO
20228 18,5 04	3343
20228 18,5 04	3483
20253 16,4 05	3323
20260 15,2 05	3806
20260 16,5 04	3806
20261 19,3 15	3986
20323 16,5 04	3335
20341 17,5 04	3339
20341 17,5 04	3514
20344 15,0 04	3661
20359 18,0 14	3423
20364 15,0 25	3416
20366 15,0 05	3366
20375 16,0 04	3625
20380 15,6 05	3526
20392 15,0 04	3315
20392 15,0 04	3515
20410 15,0 05	3596
20455 19,0 05	3405
20480 15,5 04	3374
20488 18,5 05	3527
20491 15,1 04	3312
20491 15,1 05	3484
20494 14,0 05	3333
20535 14,2 04	3324
20547 16,8 05	3623
20574 15,3 14	3490
20574 19,6 14	3378
20588 16,5 04	3365
20628 16,5 04	3369
20629 20,0 05	3573
20631 18,0 05	3442
20635 18,0 05	3493
20660 15,6 04	3421
20669 16,2 14	3649
20669 19,6 14	3650
20669 19,6 15	3619
20675 17,0 05	3572
20676 19,6 05	3590
20687 13,5 04	3611
20687 15,5 04	3550
20703 14,5 14	3709
20718 14,3 04	3370
20719 19,6 25	3468
20724 15,5 04	3407
20729 15,0 05	3379
20731 15,2 04	3509
20741 19,2 15	3440
20753 18,0 05	3417
20778 19,6 14	3650
20780 13,4 04	3746
20783 18,0 05	3417
20783 18,0 05	3417
20784 18,0 04	3513
20833 17,1 25	3466
20836 17,2 25	3467
20852 15,5 04	3371
20854 15,0 05	3579
20857 17,5 05	3621
20861 17,7 14	3419
20861 17,7 15	3429
20863 17,2 04	3415
20870 15,0 04	3402
20880 15,5 05	3446
20887 15,3 25	3486
20887 17,3 25	3585
20887 19,7 25	3444
20889 17,3 24	3441
20895 14,5 05	3633
20905 18,0 05	3380
20906 18,0 45	3487
20908 18,0 05	3549
20919 18,3 15	3546
20926 18,5 05	3482
20939 15,4 04	3410
20941 19,3 14	3408
20950 18,0 04	3424
20950 18,0 05	3424
20955 15,0 04	3401
20958 16,0 04	3394

TEXTAR	BESER
NO	NO
20959 15,0 04	3501
20959 15,0 05	3752
20961 15,2 14	3529
20961 17,2 14	3529
20961 17,4 14	3529
20968 20,3 05	3564
20973 11,0 05	3496
20974 11,0 04	3496
20979 19,7 14	3605
20989 17,7 05	3474
20995 17,3 05	3578
21012 14,8 04	3504
21012 14,8 05	3502
21016 17,0 05	3428
21050 15,2 04	3717
21050 15,7 04	3717
21055 17,9 14	3430
21084 17,5 15	3624
21089 15,0 05	3583
21096 15,0 05	3495
21099 17,0 04	3397
21099 17,0 05	3758
21100 17,0 25	3432
21107 12,0 04	3425
21115 15,5 04	3462
21126 15,0 04	3400
21140 15,7 04	3469
21141 18,0 04	3603
21144 16,6 14	3536
21153 16,0 04	3628
21153 17,5 04	3629
21158 15,6 04	3714
21159 14,0 04	3620
21170 17,0 14	3422
21171 18,0 04	3464
21173 17,0 14	3609
21190 17,5 05	3470
21193 18,0 05	3459
21202 17,8 05	3589
21205 19,4 15	3543
21209 19,0 15	3457
21209 19,4 15	3457
21233 16,7 14	3641
21237 15,0 05	3771
21243 13,8 04	3436
21249 15,5 05	4088
21277 15,0 05	3449
21278 17,0 05	3680
21280 16,0 04	4104
21301 15,5 04	3630
21305 15,5 04	3581
21305 16,0 04	3581
21312 13,0 05	4212
21338 14,0 05	3600
21347 17,0 05	3760
21355 14,5 05	3723
21363 15,7 05	3685
21368 18,3 14	3733
21373 16,5 05	3448
21378 15,0 05	3437
21385 13,9 14	3642
21388 18,3 25	3539
21394 18,5 05	3558
21411 17,5 05	3736
21430 17,3 05	3528
21436 17,0 04	3643
21436 17,0 05	3608
21439 20,3 24	3658
21446 17,5 05	3631
21459 18,5 05	3662
21463 18,2 24	3503
21463 18,2 34	3503
21468 15,5 04	3777
21469 19,0 04	3445
21470 19,0 04	3473
21471 18,0 04	3909
21471 18,0 05	3909
21479 19,2 14	3553
21479 19,2 15	3553
21480 18,0 15	3423

TEXTAR	BESER
NO	NO
21481 15,7 14	3888
21482 17,0 05	4078
21486 19,3 05	3881
21487 17,2 05	3879
21487 17,3 05	3879
21487 17,3 15	3879
21490 17,1 05	3915
21495 17,0 05	3426
21497 18,0 05	3696
21500 14,8 05	3882
21515 18,0 05	3683
21519 170 0 4	3816
21519 18,0 04	3453
21519 180 0 4	3816
21519 180 0 4 T4047	3816
21537 15,0 05	3666
21539 15,0 05	3640
21543 16,5 05	3757
21543 16,5 05	3857
21545 15,6 14	3660
21546 17,5 04	3562
21553 14,0 05	4087
21561 17,0 05	3779
21573 14,0 15	3689
21576 20,7 05	3567
21586 15,7 04	4214
21592 18,8 05	3670
21601 17,6 05	3554
21601 17,6 05	3651
21609 18,0 05	3487
21614 18,0 05	3556
21621 17,3 05	3678
21626 15,8 04	4128
21631 17,0 14	3819
21632 16,0 14	3878
21635 18,2 15	4020
21636 19,3 05	3617
21643 17,8 05	3563
21647 16,0 05	3622
21650 15,0 04	3603
21650 15,0 04	3604
21651 17,3 05	3704
21654 15,0 05	3522
21657 16,5 05	3766
21662 17,8 14	3419
21664 19,8 05	3677
21670 20,3 05	3863
21679 15,0 05	3560
21688 15,3 04	4072
21691 17,3 05	3656
21694 17,3 05	3607
21697 15,8 05	3686
21700 18,5 05	3695
21703 15,0 05	4080
21706 15,5 05	4108
21712 14,0 04	3436
21719 14,6 05	4148
21724 19,3 15	3750
21725 17,0 05	3632
21730 14,0 04	3745
21754 16,5 05	3832
21766 14,8 04	3833
21775 15,0 05	3673
21780 15,5 05	4088
21791 17,0 04	4086
21797 19,7 25	3595
21799 19,7 25	3559
21822 17,2 05	4182
21829 203 0 5 T4083	3665
21832 15,0 04	3545
21833 15,5 05	3776
21840 14,0 05	3688
21845 16,5 05	3674
21848 19,7 05	3506
21849 20,6 05	3590
21861 16,8 15	4062
21862 18,3 05	3505
21862 18,3 05	3615
21866 15,3 05	3637
21866 17,2 05	3566

TEXTAR	BESER
NO	NO
21866 19,7 05	3538
21875 15,8 05	3887
21883 19,6 05	3606
21885 20,6 05	3794
21898 15,7 05	3821
21900 15,8 04	3663
21904 16,9 05	3680
21907 15,4 05	3883
21919 15,3 04	3676
21919 15,7 04	3676
21929 17,9 05	3618
21945 16,2 14	3896
21945 19,6 14	3896
21945 19,6 15	3896
21947 15,0 04	3693
21952 15,6 05	3898
21980 18,0 25	3659
21983 17,3 14	4059
21999 15,8 15	4281
22031 193 0 5	4334
22031 193 1 5	4334
23004 15,5 05	3577
23005 15,5 05	3598
23020 17,9 04	3861
23021 18,9 04	3804
23022 20,9 04	3681
23032 15,5 05	4071
23042 19,0 14	3799
23043 18,6 05	4197
23061 14,0 04	3511
23063 17,3 05	3762
23070 17,0 14	4125
23070 17,0 24	4125
23071 18,5 15	3593
23073 18,9 05	3919
23076 17,5 05	3918
23078 15,9 04	4101
23078 15,9 04	4209
23080 15,1 14	3675
23081 19,0 05	3507
23086 17,0 05	3697
23091 15,2 14	3717
23095 17,0 04	4115
23099 18,4 04	3848
23103 17,5 05	3570
23103 17,5 05	3594
23112 19,1 05	3943
23124 19,3 15	3636
23126 17,5 05	3584
23130 19,7 05	3782
23131 19,7 05	3782
23144 19,4 15	3836
23144 19,4 25	3836
23154 19,3 05	3754
23157 16,0 04	4103
23169 19,4 15	3610
23172 18,3 14	3539
23178 16,0 05	4110
23181 17,9 05	3897
23183 20,3 05	4347
23189 16,7 15	4069
23193 16,3 15	4126
23215 18,3 15	3950
23224 17,3 15	4345
23225 17,0 15	3846
23227 18,0 05	3548
23227 18,0 05	3690
23234 16,9 05	3687
23238 16,0 05	3778
23241 16,5 04	3744
23245 18,3 15	3852
23258 16,9 25	3763
23269 20,1 05	4095
23271 17,7 05	4102
23273 18,0 14	3934
23277 17,7 14	3935
23279 18,4 04	4100
23289 19,0 05	3617
23290 15,5 14	3809
23300 18,0 05	3722

TEXTAR	BESER
NO	NO
23303 15,2 05	4034
23312 20,3 05	4180
23314 14,5 14	3884
23326 17,7 24	3842
23340 16,8 15	4112
23346 19,3 14	3644
23347 20,3 05	4180
23348 16,5 05	3768
23353 14,0 14	3755
23384 18,0 05	3740
23392 20,6 05	3590
23400 16,5 14	3602
23402 20,6 05	4211
23407 19,3 15	3854
23409 19,3 15	3931
23417 15,2 14	4040
23420 16,5 05	3932
23434 18,5 15	3921
23440 17,6 05	3801
23442 16,0 05	4009
23471 15,0 04	3512
23482 16,8 05	3853
23484 17,0 05	3653
23487 15,5 04	4271
23488 16,0 14	3892
23490 15,0 14	3780
23497 15,5 05	3901
23502 16,0 05	4010
23507 15,0 05	3928
23510 15,5 05	3769
23513 17,0 14	3822
23515 16,0 14	3874
23517 16,5 04	4123
23521 14,0 05	3788
23524 17,7 05	3829
23527 15,0 14	4155
23536 15,5 05	3648
23539 17,5 04	3830
23540 16,5 14	3767
23543 15,0 05	3993
23552 18,0 05	3790
23554 15,2 14	3529
23557 17,2 14	4093
23558 17,0 05	4079
23565 17,9 04	3667
23569 17,0 05	3843
23572 13,8 05	3913
23577 18,5 15	3784
23581 19,0 14	4138
23581 19,0 15	4138
23584 16,0 14	3955
23585 17,0 05	4158
23587 20,3 05	3904
23593 15,0 05	4084
23597 18,0 15	3938
23599 19,0 14	3820
23600 19,0 14	3800
23604 18,8 05	3877
23611 19,0 05	3859
23613 17,8 04	3856
23615 17,5 04	4094
23620 16,6 05	4153
23631 17,8 05	4011
23638 17,5 05	4012
23649 16,2 05	3802
23652 14,8 05	4148
23656 14,0 05	4153
23662 15,0 14	4027
23669 16,8 14	3855
23671 17,0 14	3552
23694 16,7 04	4076
23703 18,5 14	4082
23705 17,0 15	3826
23708 18,2 14	3800
23708 18,2 15	3800
23723 18,2 05	3885
23726 16,5 05	3976
23729 17,0 05	4109
23729 17,0 05	4232
23732 17,3 05	4181

TEXTAR	BESER
NO	NO
23734 17,0 04	4105
23738 20,6 05	4211
23746 18,0 05	3841
23746 20,1 05	3841
23763 20,3 05	4096
23766 17,8 05	3817
23768 19,2 15	3890
23775 18,0 05	3569
23776 18,0 05	3568
23780 17,0 05	3764
23784 15,5 05	3574
23787 18,3 05	4119
23793 20,3 05	4346
23816 15,8 14	3825
23823 17,2 15	4152
23832 19,6 05	4042
23836 16,7 14	4013
23842 18,0 05	3790
23865 16,4 05	3912
23868 16,9 05	3831
23871 13,8 05	3933
23873 15,0 05	4269
23879 15,5 05	3900
23891 16,9 05	3959
23904 16,6 05	3769
23914 17,2 14	3905
23914 17,2 24	3905
23917 19,1 15	3834
23919 19,1 15	3835
23921 20,1 14	3914
23930 18,1 14	3849
23934 18,1 14	3850
23950 20,3 05	4096
23966 16,4 05	4028
23967 15,2 04	4111
23970 17,0 05	4017
23973 17,3 14	3983
23974 17,8 04	3951
23980 17,0 14	3795
24007 20,2 04	3923
24024 17,8 05	3891
24031 16,8 05	3961
24045 13,0 04	3875
24046 18,2 05	3889
24050 15,2 05	3895
24058 15,8 05	3979
24066 15,4 04	3892
24071 14,6 04	3894
24072 17,7 14	4173
24083 19,2 14	4031
24092 17,3 05	3978
24101 19,0 14	3820
24133 17,7 15	3940
24134 18,7 15	3939
24135 17,8 14	3946
24150 17,6 14	3984
24167 17,2 05	3976
24244 185 0 5 T4146	4277
24561 180 1 5	4325
24561 180 1 5 T4689	4325
24561 180 1 5 T4789	4325
24869 190 1 4	4326
25071 188 1 5	4335
25071 188 2 5	4335
25110 175 1 4	4336
25110 175 2 4	4336
25179 175 0 4	4313
25179 175 1 4	4313
25179 178 0 4	4313
25196 180 0 5	4339
25240 178 1 5	4324
25268 179 0 5	4337
25610 187 1 5	4019
25708 178 1 5	4342
29001 20,0 05	3749
29017 23,0 04	3433
29017 23,0 05	3433
29041 18,0 05	3523
29046 30,0 04	3664
29061 32,0 04	3664

TEXTAR	BESER
NO	NO
29067 22,0 04	3773
29076 20,0 04	3614
29076 20,0 14	3614
29105 30,0 14	
29107 20,0 05	3749
29121 18,3 04	3575
29121 20,3 04	3575
29122 22,0 04	3994
29123 20,3 04	3823
29160 19,9 04	3942
29706 17,0 05	3537
29835 22,0 04	3679
40109 17,6 04	3935
40110 17,8 04	3934
40112 19,0 04	3820
40118 16,9 14	4093
40119 18,1 24	3850
40120 18,1 24	3849
41100 19,3 25	3834
41101 19,3 25	3835
41102 20,3 24	3914
41103 18,1 05	3790
41104 17,1 05	3826
41105 18,4 05	3800
41107 19,4 14	3800
41111 16,5 05	3918
41118 19,3 05	3986
41119 17,7 14	3983
41120 17,0 05	4112
42 123	3826
42100 18,0 05	3568
42102 18,0 05	3569
42103 19,0 05	3617
42123 18,0 15	3826
507.4146.48	3523
507.5944.11	3575
507.5944.19	3575
507.5944.32	3575
507.7304.18	3942
J3600308 16,6	4269
J3600309 15,5	4009
J3600513 19,0	3507
J3600525 15,0	3502
J3600526 16,5	3843
J3600529 16,0	3632
J3600535 16,0	3632
J3601056 15,5	3888
J3601060 16,0	4010
J3601062 15,5	3577
J3602055 15,0	3673
J3602096 16,0	4013
J3603035 14,5	3640
J3603038 15,5	3832
J3605035 16,0	3809
J3605037 15,0	3675
J3606001 14,0	3436
J3606019 15,5	3901
J3608009 15,5	3883
J3608016 15,0	3602
J3608017 14,5	3884
J3610304 15,5	3993
J3610507 15,5	3993
J3610509 15,5	3993
J3612010 15,5	3693
J3612011 15,5	4072
J3612013 15,0	3776
J3612018 14,0	3788
J3612020 13,5	4153
J3613007 13,5	3833
J3614007 13,0	4212
J3614008 14,5	4148
J3615003 15,5	4108

TEXTAR	BESER
NO	NO
J3615005 13,9	3688
J3617001 15,0	4080

TRANSTEC	BESER
NO	NO
GDB2040	3529

TRW	BESER
NO	NO
GDB100	3320
GDB1003	3779
GDB1005	4104
GDB1009	4010
GDB101	3318
GDB1012	3766
GDB1017	3760
GDB1023	4108
GDB1024	3522
GDB1026	3666
GDB1027	3875
GDB1029	3640
GDB103	3325
GDB1030	3539
GDB1033	3487
GDB1039	3610
GDB1040	3623
GDB1041	3596
GDB1043	4088
GDB1044	3551
GDB1048	3531
GDB1049	3590
GDB105	3346
GDB1050	3536
GDB1055	3529
GDB1059	4128
GDB106	3316
GDB1062	3704
GDB1063	4148
GDB1064	3584
GDB1068	3583
GDB107	3317
GDB1078	3487
GDB1079	3580
GDB1080	3445
GDB1082	3683
GDB1084	3473
GDB1086	3464
GDB1092	3553
GDB1093	3662
GDB1094	3658
GDB1100	3563
GDB1101	3819
GDB1102	3878
GDB1104	3528
GDB1105	3595
GDB1106	3559
GDB1107	3558
GDB1108	3593
GDB1113	3888
GDB1114	3689
GDB1115	3608
GDB1121	3529
GDB1123	3581
GDB1124	3545
GDB1126	3685
GDB1127	3688
GDB1128	3622
GDB1129	3603
GDB1129	3604
GDB113	3627
GDB1130	3630
GDB1134	3436
GDB1135	3436
GDB1138	4072
GDB1139	3832
GDB1140	3833
GDB1142	4086
GDB1143	3554
GDB1143	3651
GDB1153	4182
GDB1154	3673
GDB1158	3867
GDB1163	3536
GDB1164	3686
GDB1166	3736
GDB1168	3776
GDB1170	3598
GDB1174	3883
GDB1176	3892

TRW	BESER
NO	NO
GDB1177	3874
GDB1179	4078
GDB1181	3714
GDB1182	3693
GDB1183	3607
GDB1185	4099
GDB1186	3674
GDB1187	3887
GDB1193	3750
GDB1196	3529
GDB1197	3675
GDB1204	3506
GDB1205	3677
GDB1209	3512
GDB1212	3617
GDB1215	3863
GDB1216	3799
GDB1217	3496
GDB1218	3538
GDB1219	3585
GDB1220	3567
GDB1222	3570
GDB1222	3594
GDB1223	3466
GDB1239	3915
GDB1240	4275
GDB1244	4197
GDB1247	3873
GDB1249	3749
GDB1260	3636
GDB1261	3881
GDB1262	3678
GDB1263	3670
GDB1265	3656
GDB1266	3896
GDB1267	3529
GDB1269	3909
GDB1271	3665
GDB1273	3868
GDB1274	3566
GDB1280	3419
GDB1282	3606
GDB1283	3663
GDB1286	3809
GDB1287	3682
GDB1288	3614
GDB1289	3680
GDB1292	4125
GDB1293	4125
GDB1294	3896
GDB1295	3644
GDB1297	3424
GDB1299	3643
GDB1300	3505
GDB1300	3615
GDB1302	3717
GDB1304	3879
GDB1305	3496
GDB1306	3637
GDB1310	3536
GDB1311	3529
GDB1312	3896
GDB1313	4059
GDB1314	4062
GDB1318	3628
GDB1319	3872
GDB1321	3659
GDB1328	3529
GDB1330	3529
GDB1332	3503
GDB1334	3821
GDB1335	3676
GDB1338	3617
GDB1339	3897
GDB1341	3548
GDB1341	3690
GDB1345	3575
GDB1346	3717
GDB1347	3540
GDB1349	3722

TRW	BESER
NO	NO
GDB1351	3762
GDB1352	3763
GDB1354	3755
GDB1357	3782
GDB1358	3754
GDB136	3313
GDB1360	3529
GDB1361	3759
GDB1361	3938
GDB1364	3618
GDB1365	4281
GDB1366	3896
GDB1367	3553
GDB1369	4345
GDB137	3709
GDB1371	4222
GDB1372	3529
GDB1373	3681
GDB1374	3943
GDB1377	3642
GDB1378	4126
GDB1379	4069
GDB138	3710
GDB1383	3790
GDB1386	3782
GDB1387	3618
GDB1388	3919
GDB1389	3918
GDB1390	3644
GDB1391	3794
GDB1393	3568
GDB1396	4123
GDB1397	3782
GDB1399	3804
GDB140	3393
GDB1403	3590
GDB1404	4347
GDB1405	3539
GDB1407	3482
GDB1408	3861
GDB1411	3846
GDB1413	3836
GDB1414	4138
GDB1416	3529
GDB1419	3877
GDB1421	3821
GDB1422	3782
GDB1424	3784
GDB1427	3617
GDB1428	3503
GDB1434	4100
GDB1435	4093
GDB1437	3896
GDB1438	3782
GDB1439	3529
GDB1440	3590
GDB1442	3856
GDB1443	3790
GDB1445	3617
GDB1446	3552
GDB1448	3935
GDB1449	3934
GDB1452	3453
GDB1454	4102
GDB1455	4101
GDB1455	4209
GDB1457	4103
GDB1458	3529
GDB1460	4095
GDB1461	3921
GDB1462	3820
GDB1463	3820
GDB1464	3800
GDB1465	3503
GDB1467	3529
GDB1468	3852
GDB1469	3853
GDB147	3329
GDB1470	3855
GDB1471	3763

TRW	BESER
NO	NO
GDB1472	4138
GDB1473	4094
GDB1475	4152
GDB1478	3848
GDB1479	3795
GDB148	3333
GDB1482	3826
GDB1483	3800
GDB1486	3618
GDB1492	4211
GDB1495	3854
GDB1496	3931
GDB1497	4119
GDB1498	4180
GDB1500	3938
GDB1502	4179
GDB1503	3986
GDB1504	3529
GDB1509	4093
GDB151	3321
GDB1514	3836
GDB1517	3834
GDB1518	3835
GDB152	3327
GDB1520	4123
GDB1521	3914
GDB1522	3496
GDB1524	3849
GDB1525	4093
GDB1527	3879
GDB1530	3879
GDB1531	4347
GDB1532	3801
GDB1533	3569
GDB1534	3575
GDB1535	3823
GDB1540	3950
GDB1545	3676
GDB1549	4076
GDB1550	3904
GDB1551	3905
GDB1552	3849
GDB1554	4096
GDB1555	3841
GDB1556	3841
GDB1557	3842
GDB1558	4208
GDB1559	4346
GDB156	3323
GDB1562	4042
GDB1563	3820
GDB1570	3846
GDB1571	3850
GDB1579	3826
GDB1582	3820
GDB1583	3885
GDB1587	3529
GDB1588	3790
GDB1589	4173
GDB1590	3826
GDB1591	3800
GDB1594	3939
GDB1595	3940
GDB1596	3946
GDB1597	3849
GDB1600	3923
GDB1604	4123
GDB1606	4137
GDB1613	4211
GDB1614	3983
GDB1617	4096
GDB1619	3584
GDB1620	3984
GDB1621	3853
GDB1622	3905
GDB1623	3820
GDB1624	3800
GDB1631	4293
GDB1632	3944
GDB1633	3987

TRW	BESER
NO	NO
GDB1634	3503
GDB1635	3503
GDB1639	3545
GDB164	3366
GDB1642	4210
GDB1646	4123
GDB1653	4076
GDB1654	3826
GDB1655	3800
GDB1657	4211
GDB1658	3782
GDB1659	4096
GDB1663	3940
GDB1665	4058
GDB1667	4240
GDB1668	4042
GDB1669	3800
GDB1670	3945
GDB1676	3800
GDB1677	3820
GDB1678	3984
GDB1679	3748
GDB1680	3747
GDB1681	3981
GDB1682	3820
GDB1683	4161
GDB1686	4211
GDB1690	3964
GDB1695	3679
GDB1696	3962
GDB1697	3926
GDB1698	3925
GDB1699	3963
GDB1701	3800
GDB1702	3881
GDB1703	3922
GDB1704	3820
GDB1708	4157
GDB1709	4157
GDB1715	3976
GDB1718	3972
GDB1719	3972
GDB1720	4075
GDB1723	3920
GDB1724	3906
GDB1725	3907
GDB1726	4207
GDB1727	4181
GDB173	3405
GDB1732	4157
GDB1733	4240
GDB1736	4248
GDB1737	4249
GDB1738	4247
GDB1740	4151
GDB1741	3981
GDB1746	4173
GDB1747	3965
GDB1748	4092
GDB1749	4141
GDB175	3324
GDB1750	3800
GDB1752	4220
GDB1753	4119
GDB1754	4215
GDB1761	3970
GDB1765	4260
GDB1774	4309
GDB1780	3995
GDB1783	4149
GDB1784	4150
GDB1785	3966
GDB1786	3967
GDB1787	3950
GDB1789	3964
GDB179	3314
GDB1791	4142
GDB1799	3971
GDB1807	3904
GDB1808	4134

TRW	BESER
NO	NO
GDB1813	3529
GDB1829	3800
GDB1831	4040
GDB1832	4096
GDB1834	4291
GDB1840	4325
GDB1841	4135
GDB1842	3826
GDB1843	4230
GDB1844	4014
GDB1847	4008
GDB1853	3826
GDB186	3601
GDB1864	4121
GDB1875	4310
GDB1878	3800
GDB1879	3826
GDB188	3371
GDB1885	4132
GDB1885	4172
GDB1887	4162
GDB1891	3826
GDB1893	4122
GDB1896	4134
GDB1898	4314
GDB190	3369
GDB1901	3823
GDB1903	4057
GDB1910	4056
GDB1912	3945
GDB1917	4145
GDB1923	4148
GDB1925	4161
GDB1927	4014
GDB1932	4326
GDB1938	3853
GDB1939	3885
GDB194	3407
GDB1959	4204
GDB1960	4161
GDB1967	4174
GDB1968	4175
GDB197	3370
GDB1973	3529
GDB1978	3976
GDB1982	3922
GDB1982	4171
GDB1984	3782
GDB1988	4058
GDB199	3410
GDB1992	4201
GDB2000	4260
GDB2001	3800
GDB2006	3784
GDB2008	3827
GDB2009	4226
GDB2011	3885
GDB2012	3546
GDB2014	4335
GDB2016	4140
GDB2017	3983
GDB2019	4313
GDB2027	4200
GDB2032	4286
GDB2033	3853
GDB2039	4173
GDB2042	4336
GDB2051	4247
GDB2056	4248
GDB2064	3750
GDB2070	4334
GDB2071	4349
GDB2072	3922
GDB2072	4171
GDB2076	3926
GDB2080	4295
GDB2082	4287
GDB2083	3905
GDB2086	3853
GDB2091	4285

TRW	BESER
NO	NO
GDB2093	4286
GDB2096	4227
GDB2096	4227
GDB2099	4284
GDB2106	4224
GDB2107	4260
GDB2108	3782
GDB211	3579
GDB2115	4270
GDB2124	3975
GDB2144	4313
GDB2173	4343
GDB232	3375
GDB233	3379
GDB238	3417
GDB238	3417
GDB242	3315
GDB242	3515
GDB243	3527
GDB247	3706
GDB251	3415
GDB254	3509
GDB255	3417
GDB261	3331
GDB264	3339
GDB264	3514
GDB265	3421
GDB269	3806
GDB284	3646
GDB288	3394
GDB294	3611
GDB295	3709
GDB297	3424
GDB298	3573
GDB299	3572
GDB3017	3667
GDB3034	3631
GDB3071	3898
GDB308	3381
GDB3089	3507
GDB3091	3602
GDB3092	3660
GDB3096	3740
GDB3101	3632
GDB3108	3511
GDB311	3621
GDB3110	3693
GDB3114	3577
GDB3116	3470
GDB3124	3697
GDB313	3493
GDB3130	4088
GDB3132	3884
GDB3133	3622
GDB3145	3574
GDB3147	3554
GDB3147	3651
GDB3148	3872
GDB3152	3822
GDB3154	4148
GDB3155	4086
GDB3156	3598
GDB3157	4071
GDB3161	3757
GDB3161	3857
GDB3162	3674
GDB3165	3778
GDB3166	3600
GDB3167	3932
GDB317	3513
GDB3170	4087
GDB3171	3687
GDB3175	4148
GDB3176	3686
GDB3177	3704
GDB3178	3417
GDB318	3397
GDB3180	3577
GDB3182	3883
GDB3183	3882

TRW	BESER
NO	NO
GDB3184	3402
GDB3187	4155
GDB3188	3704
GDB3190	4155
GDB3191	4148
GDB3193	3780
GDB3195	3744
GDB3196	3704
GDB3197	3829
GDB3198	3830
GDB3200	3685
GDB3201	3648
GDB3205	3764
GDB3206	3522
GDB3207	3554
GDB3207	3651
GDB3208	4010
GDB321	3423
GDB3211	3632
GDB3212	3686
GDB3216	3687
GDB3217	4079
GDB3218	3768
GDB3220	3901
GDB3221	4027
GDB3222	3859
GDB3223	3913
GDB3224	3740
GDB3226	4274
GDB3227	4115
GDB323	3402
GDB3233	4085
GDB3234	4034
GDB3235	3915
GDB3236	3928
GDB3237	3745
GDB3238	3767
GDB3239	4084
GDB3240	4109
GDB3240	4232
GDB3241	4009
GDB3242	3769
GDB3243	3788
GDB3244	3843
GDB3245	4269
GDB3246	3892
GDB325	3752
GDB3250	4110
GDB3251	4158
GDB3252	3522
GDB3254	3874
GDB3255	3874
GDB3256	3632
GDB3257	3843
GDB3258	3993
GDB3259	3632
GDB3261	3802
GDB3262	3522
GDB3263	3653
GDB3265	3687
GDB3266	3901
GDB3267	3683
GDB3268	4109
GDB3268	4232
GDB3269	4148
GDB327	3380
GDB3270	4271
GDB3271	3562
GDB3276	3928
GDB3277	3822
GDB3279	4153
GDB328	3495
GDB3280	3693
GDB3282	3993
GDB3283	3632
GDB3284	3993
GDB3285	4269
GDB3286	4082
GDB3287	3955
GDB3288	3817

TRW	BESER
NO	NO
GDB3289	3825
GDB3291	4115
GDB3292	3853
GDB3294	3933
GDB3295	3932
GDB3297	3843
GDB3298	3993
GDB330	3410
GDB3300	3554
GDB3300	3651
GDB3301	3802
GDB3309	4118
GDB3310	3889
GDB3312	3932
GDB3313	3888
GDB3314	3910
GDB3315	4013
GDB3322	4276
GDB3323	4083
GDB3324	4112
GDB3325	3831
GDB3326	3874
GDB3328	3912
GDB333	3840
GDB3330	3951
GDB3331	3502
GDB3332	3983
GDB3336	3890
GDB3337	4153
GDB3338	4105
GDB3339	4111
GDB3340	4017
GDB3341	4106
GDB3342	4028
GDB3343	3978
GDB3344	3979
GDB3347	3687
GDB3348	3894
GDB335	3416
GDB3352	3959
GDB3353	3767
GDB3355	4159
GDB3357	4303
GDB3359	3928
GDB3360	3976
GDB3361	3859
GDB3364	3891
GDB3366	3895
GDB3367	4001
GDB3368	4087
GDB3369	3968
GDB3370	3969
GDB3371	3912
GDB3372	4081
GDB3373	4213
GDB3374	3911
GDB3375	3607
GDB3377	3985
GDB3378	3961
GDB3380	3900
GDB3382	3895
GDB3385	3942
GDB3386	3959
GDB3387	3993
GDB3388	4216
GDB3389	4059
GDB3391	3598
GDB3392	4143
GDB3393	3933
GDB3394	3667
GDB3396	3983
GDB3397	4105
GDB3399	4113
GDB340	3416
GDB3403	3988
GDB3404	3952
GDB341	3423
GDB3412	3976
GDB3416	4074
GDB3418	3960

TRW	BESER
NO	NO
GDB3419	3989
GDB3420	3880
GDB3421	3980
GDB3422	3959
GDB3424	4077
GDB3425	3953
GDB3426	3949
GDB3427	3982
GDB3429	3948
GDB3432	3993
GDB3434	3574
GDB3435	3975
GDB3436	3883
GDB3437	4122
GDB3439	3965
GDB344	3482
GDB3442	4258
GDB3443	3929
GDB3445	4160
GDB3446	4156
GDB3447	4148
GDB3448	4035
GDB345	3462
GDB3450	4028
GDB3451	3980
GDB3452	3978
GDB3454	3954
GDB3456	4153
GDB3459	3958
GDB3461	4039
GDB3462	4165
GDB3464	3693
GDB3465	3976
GDB3466	3886
GDB3467	4038
GDB3469	4036
GDB3474	3980
GDB3475	4277
GDB3479	4147
GDB3480	4037
GDB3481	3956
GDB3483	3960
GDB3484	4255
GDB3486	4054
GDB349	3603
GDB3490	4000
GDB3491	3997
GDB3494	4061
GDB3495	4061
GDB3497	4256
GDB3499	4060
GDB3500	3903
GDB3501	4029
GDB3507	3933
GDB3508	3933
GDB351	3414
GDB351	3714
GDB3516	4148
GDB3517	4242
GDB352	3371
GDB3520	3952
GDB3521	4038
GDB3523	4028
GDB3524	3996
GDB3528	4167
GDB3530	4039
GDB3532	3998
GDB3534	4167
GDB3537	4311
GDB3540	4233
GDB3545	4124
GDB3546	3983
GDB3548	4136
GDB355	3401
GDB3552	4166
GDB3552	4342
GDB3553	4049
GDB356	3433
GDB3560	4324
GDB3563	3797

TRW	BESER
NO	NO
GDB3567	3942
GDB3568	4213
GDB3569	4061
GDB3576	4156
GDB3577	4015
GDB358	3501
GDB3580	4315
GDB359	3625
GDB3592	4317
GDB3593	4318
GDB3594	4311
GDB3595	3893
GDB3598	4176
GDB360	3425
GDB3610	4003
GDB3611	4170
GDB3614	4019
GDB3617	4283
GDB365	3400
GDB366	3620
GDB367	3758
GDB371	3549
GDB373	3504
GDB374	3449
GDB378	3875
GDB380	3395
GDB386	3442
GDB388	3634
GDB392	3583
GDB395	3412
GDB397	3366
GDB399	3605
GDB400	3503
GDB4010	3781
GDB403	3490
GDB404	3619
GDB4049	3544
GDB405	3374
GDB407	3350
GDB4084	4214
GDB4091	4197
GDB4104	4182
GDB4120	4011
GDB4126	4012
GDB4132	4186
GDB4133	4031
GDB4134	4198
GDB4135	4018
GDB4136	4016
GDB4140	4006
GDB4143	4106
GDB4144	4005
GDB4145	4004
GDB4174	4256
GDB4175	4146
GDB4179	4073
GDB425	3546
GDB428	3624
GDB429	3773
GDB430	3649
GDB440	3429
GDB442	3642
GDB443	3526
GDB4448	4339
GDB445	3408
GDB4455	4219
GDB446	3474
GDB447	3543
GDB453	3773
GDB454	3444
GDB457	3467
GDB458	3466
GDB459	3486
GDB4600	3893
GDB4605	4005
GDB4606	4337
GDB463	3441
GDB469	3422
GDB473	3419
GDB478	3523

TRW	BESER
NO	NO
GDB481	3679
GDB496	3683
GDB499	4212
GDB5050	3679
GDB5053	3433
GDB5054	3433
GDB5058	3773
GDB5062	3749
GDB5063	3749
GDB5066	3707
GDB5068	3994
GDB5074	3390
GDB5074	3521
GDB5090	3956
GDB5113	4169
GDB533	3311
GDB576	3373
GDB611	3335
GDB628	3378
GDB648	3327
GDB654	3365
GDB656	3318
GDB660	3312
GDB663	3343
GDB663	3483
GDB668	3321
GDB693	3484
GDB695	3440
GDB698	3468
GDB7020	3974
GDB7043	3797
GDB729	3448
GDB736	3746
GDB737	3463
GDB742	3864
GDB747	3415
GDB749	3446
GDB750	3633
GDB759	3423
GDB760	3413
GDB764	3691
GDB765	3700
GDB7656	3927
GDB766	3760
GDB770	3777
GDB773	3723
GDB774	4148
GDB775	4212
GDB7763	3996
GDB779	3423
GDB788	3474
GDB790	3556
GDB791	4020
GDB792	3539
GDB793	3457
GDB797	3560
GDB807	3503
GDB809	3503
GDB814	3536
GDB817	3430
GDB818	3408
GDB820	3609
GDB823	3529
GDB826	3650
GDB829	3536
GDB833	3432
GDB836	3491
GDB842	3994
GDB848	3562
GDB850	3609
GDB854	3650
GDB863	3378

TRW	BESER
NO	NO
GDB870	3757
GDB870	3857
GDB872	3701
GDB885	3882
GDB886	3600
GDB893	3502
GDB894	3696
GDB895	3632
GDB897	3464
GDB903	3428
GDB905	3496
GDB908	3329
GDB911	3550
GDB915	3717
GDB916	3564
GDB917	3578
GDB925	3582
GDB939	3404
GDB951	3470
GDB952	3469
GDB953	3589
GDB957	3733
GDB958	3459
GDB960	3461
GDB962	3629
GDB970	3641
GDB974	3661
GDB976	3771
GDB980	3436
GDB981	3437
GDB983	3499
GDB985	3680
GDB986	3873
GDB989	3426
GDB990	4080
GDB995	3704
GDB996	3695

VALEO	BESER
NO	NO
301482	3671
540101	3526
540107	3440
540125	3366
540143	3503
540144	3496
540148	3457
540149	3529
540161	3315
540161	3515
540162	3339
540162	3514
540301	3327
540309	3380
540312	3374
540314	3474
540315	3333
540405	3578
540406	3432
540407	3603
540418	3527
540420	3495
540421	3482
540422	3417
540422	3417
540428	3873
540429	3680
540434	3543
540437	3423
540446	3464
540449	3470
540454	3596
540460	3397
540461	4104
540464	3425
540476	3503
540477	3380
540478	3474
540479	3410
540481	3428
540482	3424
540483	3467
540489	3563
540492	3528
540493	3623
540497	3590
540500	3487
540502	3373
540503	3487
540504	3474
540537	3683
540540	3819
540541	3878
540547	3559
540548	3595
540555	3593
540556	3558
540557	3473
540558	3445
540559	3658
540561	3469
540564	4128
540741	3750
540750	3618
540751	3617
540754	3799
540792	3567
540793	3678
540794	3670
540795	3636
540797	3506
540799	3677
540805	3680
540806	3562
540807	3589
540852	3659
540856	3570
540856	3594
540866	3316
540887	3759

VALEO	BESER
NO	NO
540891	4125
540892	4125
540937	3681
540938	3861
540941	3762
540944	3754
540964	3769
540966	4281
540971	3531
540972	3896
540978	3943
541611	3537
541612	3773
541614	3433
541615	3707
541620	3773
541622	3994
541641	3749
541643	3433
541654	3994
541655	3679
541656	3773
541662	3575
541664	3614
541705	3823
541708	3390
541716	3521
541717	3575
541728	3926
541734	3965
541735	4092
541736	3907
541737	3965
548654	3994
551005	3649
551020	3536
551024	3441
551025	3444
551027	3486
551039	3408
551427	3350
551447	3421
551616	3650
551659	3746
551662	3371
551665	3419
551671	3585
551698	3583
551772	3704
598000	3689
598002	3503
598004	3649
598011	3608

VALEO	BESER
NO	NO
598012	3643
598013	3658
598014	4128
598016	3635
598017	3619
598018	3563
598020	3757
598020	3857
598022	3683
598023	3882
598024	4104
598027	3605
598031	3819
598032	3603
598033	3593
598034	3558
598036	3473
598037	3445
598038	3528
598039	3623
598041	3618
598042	3570
598042	3594
598044	3567
598045	3678
598046	3670
598047	3752
598049	3590
598050	3736
598051	3632
598052	3502
598053	4212
598054	3562
598055	3596
598057	3660
598061	3539
598062	3680
598065	3617
598066	3538
598067	3506
598068	3750
598070	3595
598071	3577
598073	3799
598076	3374
598077	3333
598078	3329
598079	3333
598080	3495
598081	3380
598082	3428
598084	3503
598085	3333
598086	3482
598088	3317
598091	3424
598099	3327
598103	3572
598104	3573
598105	3611
598106	3350
598108	3365
598109	3315
598109	3515
598110	3339
598110	3514
598111	3320
598112	3537
598118	3624
598119	3474
598122	3415
598123	3397
598124	3486
598125	3536
598127	3441
598128	3444
598133	3467
598138	3543
598139	3523
598151	3493

VALEO	BESER
NO	NO
598153	3440
598155	3487
598157	3474
598159	3311
598166	3417
598166	3417
598167	3621
598168	3484
598169	3429
598172	3464
598174	3321
598175	3442
598177	3381
598178	3405
598179	3457
598180	3529
598182	3410
598183	3717
598184	3505
598184	3615
598185	3509
598193	3323
598205	3378
598212	3417
598214	3490
598217	3419
598219	3466
598220	3401
598223	3509
598224	3400
598225	3408
598231	3564
598237	3609
598241	3430
598242	3529
598244	3505
598244	3615
598250	3437
598252	3551
598253	3469
598256	3733
598257	3641
598258	3585
598259	3578
598260	3909
598266	3402
598268	3723
598274	3522
598286	4212
598290	3833
598291	3583
598292	3873
598293	3449
598295	3680
598298	3682
598299	3681
598300	3804
598301	3861
598302	3566
598305	3665
598311	3656
598315	3408
598316	3744
598317	3754
598319	4062
598320	3675
598322	3762
598324	3938
598325	3659
598326	3636
598329	4281
598330	3896
598332	3782
598334	3417
598334	3417
598335	3549
598337	3373
598338	3311
598345	3550
598346	3496

VALEO	BESER
NO	NO
598353	3610
598356	3623
598357	3677
598361	3687
598366	3527
598371	3625
598374	3526
598375	3806
598379	3370
598380	3423
598383	3878
598389	3421
598393	3560
598396	3496
598398	3644
598399	3722
598402	3414
598402	3714
598403	3637
598405	3393
598406	3422
598408	3782
598410	4180
598412	3881
598416	3934
598419	3935
598421	3820
598422	3790
598425	4123
598426	3826
598427	3800
598430	3559
598431	3755
598432	3784
598433	4100
598434	4093
598440	3584
598442	4126
598443	4069
598444	3676
598445	4102
598446	4101
598446	4209
598447	3821
598448	3836
598451	4115
598455	3763
598456	3846
598461	3938
598463	3529
598464	3820
598465	3800
598471	3950
598472	3853
598473	3539
598474	3529
598479	3919
598480	3918
598484	3896
598485	3529
598487	3782
598488	3566
598489	3590
598491	4182
598492	4062
598494	3607
598495	3686
598497	3771
598498	3662
598500	3854
598501	3931
598505	3843
598507	3887
598510	4011
598511	4009
598512	3872
598514	4094
598515	3892
598517	3685
598518	3892

VALEO	BESER
NO	NO
598519	3688
598521	4271
598522	3809
598524	3859
598526	3849
598527	4093
598530	4079
598533	3883
598534	3884
598535	3829
598536	4158
598537	3856
598538	3855
598539	4062
598545	3848
598546	3795
598547	3921
598548	3780
598549	4125
598551	3554
598551	3651
598553	3986
598556	4012
598557	3850
598558	3849
598559	3529
598560	3848
598564	3877
598565	4095
598566	3852
598568	3834
598569	3835
598570	3914
598574	3632
598575	3778
598576	3768
598577	3788
598578	3554
598578	3651
598580	3879
598593	3366
598594	3366
598597	3448
598601	3628
598602	3888
598603	3316
598606	3769
598607	3897
598611	3618
598613	3513
598614	3379
598615	3446
598617	3581
598618	3760
598621	3642
598622	3553
598623	3453
598625	3622
598626	3603
598626	3604
598627	3704
598628	3766
598629	3832
598632	3943
598634	3507
598635	3904
598636	3863
598639	3801
598640	4346
598641	3983
598644	3951
598646	3640
598648	3889
598649	3885
598651	3841
598652	3841
598654	3978
598655	4075
598660	3552
598662	3939

VALEO	BESER
NO	NO
598663	3940
598664	3946
598665	3890
598667	4138
598670	3826
598671	3842
598672	3933
598673	4153
598674	4152
598675	3606
598676	3794
598678	4211
598679	3817
598680	3825
598682	4148
598685	3436
598691	3426
598692	3545
598696	4173
598698	3800
598702	3984
598705	4001
598706	3969
598707	3968
598708	3985
598714	3474
598718	3987
598719	4103
598720	4138
598721	3800
598728	4210
598731	3877
598732	3755
598733	3928
598736	4112
598737	3769
598738	3952
598740	4058
598741	4293
598742	3944
598743	4198
598744	3959
598748	3993
598749	4042
598752	3905
598754	4181
598757	3831
598758	4155
598759	3843
598760	3686
598762	3512
598763	3663
598764	3923
598769	3905
598770	4076
598773	3827
598775	3503
598777	3693
598778	4084
598779	4096
598781	3961
598783	3853
598784	3767
598787	3779
598788	3696
598800	3559
598806	4010
598811	4347
598812	4153
598814	3553
598816	3906
598817	4087
598818	3920
598819	3949
598820	4179
598821	3802
598823	3979
598824	4159
598828	4080
598830	3602

VALEO	BESER
NO	NO
598831	4303
598832	3928
598833	4031
598834	4108
598839	3800
598842	4028
598843	4027
598847	3983
598850	3898
598852	4106
598853	3912
598855	3900
598856	3901
598857	3891
598860	4042
598861	4137
598862	3910
598864	3765
598865	3830
598867	3980
598868	3880
598869	4303
598872	4016
598874	3894
598876	3926
598877	3929
598878	4000
598879	4161
598881	3962
598882	3925
598884	3853
598886	3955
598887	4109
598887	4232
598888	4113
598889	4017
598890	3948
598891	3981
598892	3820
598893	3975
598894	3982
598895	3913
598896	3958
598897	3560
598899	3972
598901	4160
598906	3781
598907	4110
598908	3648
598909	4269
598910	4269
598911	4148
598913	3826
598915	3764
598917	3769
598918	4074
598921	3371
598924	4005
598926	3763
598927	3970
598929	4213
598932	3989
598933	3954
598934	4039
598935	4157
598937	3960
598938	3954
598942	3976
598943	3953
598944	4082
598945	4165
598947	3777
598966	3614
598968	3782
598969	3529
598971	3762
598972	3495
598973	3608
598974	3539
598975	3529

VALEO	BESER
NO	NO
598976	3754
598977	3464
598978	3466
598979	3493
598981	3412
598986	3745
598989	3740
598990	3617
598994	3945
598995	4240
598997	3964
598999	4122
601000	4142
601002	4010
601005	3853
601008	3853
601009	3933
601010	3966
601011	3967
601014	4121
601015	4173
601017	4141
601018	3522
601019	3568
601020	3685
601022	4099
601025	4085
601037	4077
601038	4156
601039	4151
601040	3956
601042	3971
601044	3853
601045	3964
601046	4149
601049	4150
601051	4247
601055	4014
601057	4146
601062	3826
601065	4029
601066	4134
601067	4038
601069	3800
601072	3940
601094	3800
601095	3938
601098	3717
601099	3826
601100	4128
601106	4042
601107	3846
601108	4100
601109	3905
601111	3907
601114	3853
601116	3983
601118	4211
601121	3762
601124	4162
601129	4035
601130	4207
601132	3954
601134	4060
601135	3980
601137	4135
601139	4061
601146	3906
601148	3933
601150	4056
601151	4057
601152	4132
601152	4172
601276	3922
601278	3945
601280	4309
601283	4167
601287	3983
601291	4337
601293	4145

VALEO	BESER
NO	NO
601294	4166
601294	4342
601295	4220
601296	4215
601300	4136
601301	4061
601305	3951
601312	4256
601321	3893
601322	4039
601324	4314
601331	3933
601332	4124
601333	4019
601337	4143
601338	4015
601339	3996
601340	3997
601345	4140
601346	3826
601347	4339
601362	4176
601364	4204
601366	3949
601367	3885
601371	4201
601373	4226
601374	4233
601377	4037
601378	4260
601387	4310
601388	4249
601399	4286
601400	4324
601402	4317
601411	3630
601415	4282
601416	4283
601420	4308
601423	4336
601426	4295
601478	4286
601482	4284
601484	4287
601489	4349
601509	4334
601535	4335
601536	4313
872007	3923
872008	3924
872020	3861
872021	3804
872042	3799
872099	3848
872112	4057
872123	3823
872137	3853
872147	4056
872172	4132
872172	4172
872190	3926
872192	3925
872200	3962
872225	3846
872229	3965
872230	3965
872231	3995
872232	4092
872240	4054
872242	4216
872261	3986
872326	3842
872440	3801
872465	3820
872466	3922
872468	3981
872482	3853
872486	3907
872538	3964
872557	4093

VALEO	BESER
NO	NO
872569	3843
872577	3784
872578	4151
872587	3904
872595	3972
872597	4035
872599	3820
872600	3800
872613	3856
872623	4162
872669	3855
872692	3967
872693	3966
872705	3826
872708	3800
872746	3841
872748	3795
872765	3971
872816	3906
872818	3920
872832	4042
872914	3905
872918	3834
872919	3835
872921	3914
872930	3849
872973	3983
873190	3963
873466	3922
873466	4171
873468	3981
873569	3843
873577	3921
873746	3841

WAGNER	BESER
NO	NO
WBP20011B	3350
WBP20034A	3318
WBP20073A	3316
WBP20140A	3329
WBP20153A	3373
WBP20162A	3873
WBP20168A	3650
WBP20168B	3531
WBP20228A	3327
WBP20261A	3986
WBP20328A	3875
WBP20341A	3339
WBP20341A	3514
WBP20359A	3423
WBP20380A	3526
WBP20392A	3315
WBP20392A	3515
WBP20410A	3596
WBP20480A	3374
WBP20488A	3527
WBP20547A	3623
WBP20635A	3493
WBP20640A	3417
WBP20652A	4020
WBP20660A	3421
WBP20669A	3619
WBP20675A	3572
WBP20676C	3590
WBP20676D	3590
WBP20687A	3550
WBP20687B	3611
WBP20731A	3509
WBP20741A	3440
WBP20759A	3423
WBP20775A	3424
WBP20780A	3746
WBP20833A	3466
WBP20835A	3679
WBP20841A	3425
WBP20852A	3371
WBP20857A	3621
WBP20861A	3419
WBP20863A	3415
WBP20870A	3402
WBP20887A	3444
WBP20887B	3585
WBP20887C	3486
WBP20889A	3441
WBP20904A	3413
WBP20905A	3380
WBP20907A	3548
WBP20907A	3690
WBP20926A	3482
WBP20939A	3410
WBP20941A	3408
WBP20950A	3424
WBP20958A	3394
WBP20959A	3501
WBP20961A	3529
WBP20961B	3529
WBP20961C	3529
WBP20961D	3529
WBP20961F	4152
WBP20961G	3529
WBP20961H	3529
WBP20968A	3564
WBP20968B	3584
WBP20979A	3605
WBP20995A	3578
WBP21012A	3502
WBP21012B	3502
WBP21016A	3428
WBP21050A	3717
WBP21050B	3717
WBP21050C	3717
WBP21055A	3430
WBP21089A	3583
WBP21089B	3583
WBP21096A	3495
WBP21099A	3397

WAGNER	BESER
NO	NO
WBP21100A	3432
WBP21140A	3469
WBP21141A	3603
WBP21144A	3536
WBP21153A	3628
WBP21153B	3629
WBP21158A	3414
WBP21158A	3714
WBP21171A	3464
WBP21173A	3609
WBP21190A	3470
WBP21193A	3459
WBP21202A	3589
WBP21205A	3543
WBP21209A	3457
WBP21232A	3641
WBP21237A	3771
WBP21238A	3661
WBP21243A	3436
WBP21278A	3680
WBP21278C	3680
WBP21280A	4104
WBP21282A	3879
WBP21292A	3563
WBP21301A	3630
WBP21305A	3581
WBP21312A	4212
WBP21347A	3760
WBP21355A	3723
WBP21363A	3685
WBP21363B	3685
WBP21368A	3733
WBP21373A	3448
WBP21385A	3642
WBP21388A	3539
WBP21394A	3558
WBP21395A	3593
WBP21411A	3736
WBP21430B	3528
WBP21436A	3608
WBP21436B	3643
WBP21439A	3658
WBP21459A	3662
WBP21463A	3503
WBP21463B	3503
WBP21467A	3757
WBP21467A	3857
WBP21468A	3777
WBP21469A	3445
WBP21470A	3473
WBP21471A	3909
WBP21479A	3553
WBP21479B	3553
WBP21480A	3423
WBP21481A	3888
WBP21486A	3881
WBP21490A	3915
WBP21495A	3426
WBP21500A	3882
WBP21515A	3683
WBP21515B	3872
WBP21519A	3453
WBP21545A	3660
WBP21546A	3562
WBP21553A	4087
WBP21576A	3567
WBP21601A	3554
WBP21601A	3651
WBP21610A	3487
WBP21614A	3556
WBP21621A	3678
WBP21626A	4128
WBP21631A	3819
WBP21632A	3878
WBP21637A	3617
WBP21647A	3622
WBP21650A	3603
WBP21650A	3604
WBP21651A	3704
WBP21651B	3704

WAGNER	BESER
NO	NO
WBP21654A	3522
WBP21657A	3598
WBP21662A	3419
WBP21664A	3677
WBP21670A	3863
WBP21679A	3560
WBP21691A	3656
WBP21694A	3607
WBP21697A	3686
WBP21703A	4080
WBP21706A	4108
WBP21719A	4148
WBP21724A	3750
WBP21725A	3632
WBP21754A	3832
WBP21766A	3833
WBP21775A	3673
WBP21797A	3595
WBP21799A	3559
WBP21822A	4182
WBP21822B	4182
WBP21833A	3776
WBP21840A	3688
WBP21845A	3674
WBP21848A	3506
WBP21848B	3590
WBP21861A	4062
WBP21862A	3505
WBP21862A	3615
WBP21866A	3566
WBP21866B	3637
WBP21866C	3538
WBP21875A	3887
WBP21883A	3794
WBP21883B	3606
WBP21898A	3821
WBP21900A	3663
WBP21907A	3883
WBP21919A	3676
WBP21925A	3563
WBP21927C	3618
WBP21930A	3897
WBP21945A	3896
WBP21945B	3896
WBP21945C	3896
WBP21947A	3693
WBP21980A	3659
WBP21983A	4059
WBP21998A	4281
WBP23003A	3799
WBP23004A	3577
WBP23020A	3861
WBP23021A	3804
WBP23022A	3681
WBP23052A	3763
WBP23063A	3762
WBP23070A	4125
WBP23070B	4125
WBP23073A	3919
WBP23075A	3918
WBP23078A	4101
WBP23078A	4209
WBP23080A	3675
WBP23094A	4115
WBP23099A	3848
WBP23103A	3570
WBP23103A	3594
WBP23112A	3943
WBP23119A	4222
WBP23124A	3636
WBP23130A	3782
WBP23130B	3682
WBP23130C	3782
WBP23144A	3836
WBP23144B	3836
WBP23154A	3754
WBP23157A	4103
WBP23172A	3539
WBP23178A	4110
WBP23189A	4069

WAGNER	BESER
NO	NO
WBP23193A	4126
WBP23202A	3877
WBP23215A	3950
WBP23225A	3846
WBP23234A	3687
WBP23234B	3687
WBP23238A	3778
WBP23241A	3744
WBP23245A	3852
WBP23269B	4095
WBP23271A	4102
WBP23273A	3934
WBP23277A	3935
WBP23279A	4100
WBP23290A	3809
WBP23300A	3722
WBP23309A	4179
WBP23312A	4180
WBP23314A	3884
WBP23326A	3842
WBP23336A	4011
WBP23340A	4112
WBP23346A	3644
WBP23348A	3768
WBP23353A	3755
WBP23384A	3740
WBP23402A	4211
WBP23407A	3854
WBP23409A	3931
WBP23420A	3932
WBP23429A	4085
WBP23434A	3784
WBP23440A	3801
WBP23442A	4009
WBP23471A	3512
WBP23482A	3853
WBP23487A	4271
WBP23488A	3892
WBP23490A	3780
WBP23497A	3901
WBP23502A	4010
WBP23507A	3928
WBP23510A	3769
WBP23515A	3874
WBP23517A	4123
WBP23521A	3788
WBP23524A	3829
WBP23527A	4155
WBP23536A	3648
WBP23539A	3830
WBP23540A	3767
WBP23543A	3993
WBP23552A	3790
WBP23554A	3529
WBP23554B	3529
WBP23557A	4093
WBP23557B	4093
WBP23558A	4079
WBP23569A	3843
WBP23572A	3913
WBP23581A	4138
WBP23581B	4138
WBP23584A	3955
WBP23585A	4158
WBP23587A	3904
WBP23593A	4084
WBP23597A	3938
WBP23599A	3820
WBP23600A	3800
WBP23611A	3859
WBP23613A	3856
WBP23615A	4094
WBP23620A	4153
WBP23638A	4012
WBP23649A	3802
WBP23652A	4148
WBP23656A	4153
WBP23662A	4027
WBP23669A	3855
WBP23671A	3552

WAGNER	BESER
NO	NO
WBP23673A	3895
WBP23694A	4076
WBP23698A	4143
WBP23705A	3826
WBP23705B	3826
WBP23705C	3826
WBP23708A	3800
WBP23719A	4159
WBP23723A	3885
WBP23729A	4109
WBP23729A	4232
WBP23732A	4181
WBP23746A	3841
WBP23746B	3841
WBP23762A	4096
WBP23763A	4096
WBP23766A	3817
WBP23768A	3890
WBP23780A	3764
WBP23791A	4208
WBP23794A	4346
WBP23816A	3825
WBP23832A	4042
WBP23836A	4013
WBP23840A	3921
WBP23865A	3912
WBP23868A	3831
WBP23871A	3933
WBP23873A	4269
WBP23879A	3900
WBP23891A	3959
WBP23914A	3905
WBP23917A	3834
WBP23919A	3835
WBP23921A	3914
WBP23922A	4210
WBP23930A	3849
WBP23934A	3850
WBP23954A	3820
WBP23959A	3987
WBP23960A	4240
WBP23966A	4028
WBP23967A	4111
WBP23970A	4017
WBP23973A	3983
WBP23973B	3983
WBP23974A	3951
WBP23980A	3795
WBP23981A	3800
WBP23989A	4105
WBP24007A	3923
WBP24014A	4106
WBP24024A	3891
WBP24031A	3961
WBP24046A	3889
WBP24056A	4074
WBP24058A	3979
WBP24071A	3894
WBP24072A	4173
WBP24072B	4173
WBP24083A	4031
WBP24092A	3978
WBP24098A	3945
WBP24122A	3956
WBP24123A	4161
WBP24133A	3940
WBP24134A	3939
WBP24135A	3946
WBP24136A	3853
WBP24137A	3853
WBP24150A	3984
WBP24162A	4137
WBP24163A	4018
WBP24164A	4198
WBP24166A	4006
WBP24167A	3976
WBP24170A	4207
WBP24191A	4293
WBP24192A	3944
WBP24218A	4001

WAGNER	BESER
NO	NO
WBP24222A	4081
WBP24227A	3952
WBP24246A	4118
WBP24250A	4016
WBP24253A	4247
WBP24260A	4058
WBP24271A	4213
WBP24275A	3968
WBP24276A	3969
WBP24277A	3985
WBP24283A	4122
WBP24283B	4122
WBP24291A	3765
WBP24301A	4000
WBP24306A	4248
WBP24310A	4249
WBP24317A	3880
WBP24320A	3980
WBP24336A	3953
WBP24337A	4077
WBP24338A	3949
WBP24343A	4216
WBP24346A	3929
WBP24351A	3960
WBP24370A	3886
WBP24372A	4036
WBP24386A	3996
WBP24412A	4149
WBP24421A	4150
WBP24421B	4150
WBP24465A	3820
WBP24466A	3922
WBP24467A	3922
WBP24468A	3981
WBP24468B	3981
WBP24484A	3906
WBP24485A	3920
WBP24486A	3907
WBP24510A	3976
WBP24529A	3975
WBP24537A	4157
WBP24537B	4157
WBP24537C	4157
WBP24538A	3964
WBP24578A	4151
WBP24582A	4029
WBP24595A	3972
WBP24597A	4035
WBP24606A	4260
WBP24610A	3954
WBP24632A	4038
WBP24653A	3997
WBP24660A	3970
WBP24664A	4037
WBP24673A	4141
WBP24692A	3967
WBP24693A	3966
WBP24693B	3966
WBP24709A	4134
WBP24727A	4121
WBP24765A	3971
WBP24820A	4142
WBP24914A	3964
WBP24949A	3980
WBP29001A	3749
WBP29041A	3523
WBP29121A	3575
WBP29121B	3575
WBP29122A	3994
WBP29123A	3823
WBP29123B	3823
WBP29160C	3942
WBP29190A	3926
WBP29192A	3925
WBP29200A	3962
WBP29217A	3963
WBP29229A	3965
WBP29230A	3965
WBP29231A	3995
WBP29232A	4092

WAGNER	BESER
NO	NO
WBP29784A	3513
WBP29835A	3679
WBP80001A	4143

WARTBURG	BESER
NO	NO
5301253104	3404
A670960000	3404

WOKING	BESER
NO	NO
P0013.00	3410
P0013.10	3410
P0013.20	3410
P0013.40	3410
P001300	3410
P001310	3410
P001320	3410
P001340	3410
P0023.10	3873
P002310	3873
P0033.00	3421
P003300	3421
P0063.00	3407
P006300	3407
P0093.22	3579
P009322	3579
P0113.00	3509
P011300	3509
P0143.00	3625
P014300	3625
P0153.00	3369
P015300	3369
P0173.00	3370
P017300	3370
P0193.00	3417
P0193.10	3570
P0193.10	3594
P0193.15	3417
P0193.20	3417
P0193.32	3417
P0193.32	3417
P019300	3417
P019310	3570
P019310	3594
P019315	3417
P019320	3417
P019332	3417
P019332	3417
P0203.00	3379
P020300	3379
P0293.00	3415
P029300	3415
P0323.00	3371
P032300	3371
P0343.00	3650
P0343.02	3619
P0343.10	3649
P0343.12	3635
P0343.20	3650
P0343.40	3551
P0343.50	3531
P034300	3650
P034302	3619
P034310	3649
P034312	3635
P034320	3650
P034340	3551
P034350	3531
P0353.00	3536
P0353.10	3536
P0353.20	3536
P0353.40	3536
P035300	3536
P035310	3536
P035320	3536
P035340	3536
P0393.00	3573
P0393.02	3573
P039300	3573
P039302	3573
P0413.02	3503
P0413.10	3503
P0413.12	3503
P0413.20	3503
P0413.30	3503
P0413.32	3503
P041302	3503
P041310	3503

WOKING	BESER
NO	NO
P041312	3503
P041320	3503
P041330	3503
P041332	3503
P0423.20	3689
P042320	3689
P0433.02	3440
P043302	3440
P0443.02	3381
P0443.06	3496
P0443.12	3381
P0443.24	3493
P0443.32	3495
P0443.42	3381
P0443.50	3496
P0443.60	3496
P044302	3381
P044306	3496
P044312	3381
P044324	3493
P044332	3495
P044342	3381
P044350	3496
P044360	3496
P0463.04	3466
P0463.14	3466
P0463.22	3467
P0463.44	3468
P0463.62	3466
P0463.80	3466
P046304	3466
P046314	3466
P046322	3467
P046344	3468
P046362	3466
P046380	3466
P0473.00	3646
P0473.02	3633
P047300	3646
P047302	3633
P0483.14	3666
P048314	3666
P0493.00	3394
P0493.10	3394
P049300	3394
P049310	3394
P0513.02	4087
P0513.22	4087
P051302	4087
P051322	4087
P0543.00	3419
P0543.02	3429
P054300	3419
P054302	3429
P0553.00	3572
P0553.02	3572
P0553.10	3583
P0553.12	3572
P0553.20	3583
P055300	3572
P055302	3572
P055310	3583
P055312	3572
P055320	3583
P0573.00	3611
P0573.10	3550
P0573.20	3630
P057300	3611
P057310	3550
P057320	3630
P0593.00	3413
P059300	3413
P0633.02	3442
P063302	3442
P0673.04	3402
P067304	3402
P0683.00	3621
P068300	3621
P0693.01	3624
P069301	3624

WOKING	BESER
NO	NO
P0703.04	3474
P0703.14	3474
P0703.24	3556
P0703.34	3474
P070304	3474
P070314	3474
P070324	3556
P070334	3474
P0713.00	3486
P0713.05	3444
P0713.10	3444
P0713.20	3441
P0713.60	3585
P071300	3486
P071305	3444
P071310	3444
P071320	3441
P071360	3585
P0723.00	3549
P0723.10	3790
P0723.11	3548
P0723.11	3690
P0723.30	3790
P0723.32	4141
P072300	3549
P072310	3790
P072311	3548
P072311	3690
P072330	3790
P072332	4141
P0753.00	3400
P075300	3400
P0763.20	3641
P076320	3641
P0773.00	3620
P077300	3620
P0783.10	3436
P0783.20	3436
P0783.30	3436
P078310	3436
P078320	3436
P078330	3436
P0793.10	3875
P079310	3875
P0813.04	3446
P081304	3446
P0843.00	3397
P0843.02	3758
P084300	3397
P084302	3758
P0873.00	3634
P0873.02	3634
P087300	3634
P087302	3634
P0883.00	3401
P088300	3401
P0893.00	3408
P0893.02	3408
P0893.10	3408
P089300	3408
P089302	3408
P089310	3408
P0913.04	3395
P0913.12	3426
P091304	3395
P091312	3426
P0923.12	3380
P0923.22	3580
P0923.34	3487
P0923.96	3380
P092312	3380
P092322	3580
P092334	3487
P092396	3380
P0933.00	3501
P0933.02	3752
P093300	3501
P093302	3752
P0973.10	3714
P097310	3714

WOKING	BESER
NO	NO
P10003.00	4173
P10003.11	4173
P1000300	4173
P1000311	4173
P10013.04	3940
P1001304	3940
P10023.04	3939
P1002304	3939
P10033.00	3946
P1003300	3946
P10093.02	3923
P1009302	3923
P1013.02	3405
P101302	3405
P10133.00	4137
P1013300	4137
P1023.00	3320
P1023.20	3350
P102300	3320
P102320	3350
P10233.02	3797
P1023302	3797
P10263.08	4006
P1026308	4006
P10273.08	4018
P1027308	4018
P10283.08	4198
P1028308	4198
P10293.01	3900
P1029301	3900
P10333.02	3968
P1033302	3968
P10343.02	4001
P1034302	4001
P10353.02	3969
P1035302	3969
P10363.01	4213
P1036301	4213
P10373.02	4081
P1037302	4081
P10383.00	3984
P1038300	3984
P10393.02	3985
P1039302	3985
P10493.10	4058
P1049310	4058
P10513.00	3988
P1051300	3988
P10523.00	3747
P1052300	3747
P10583.00	4293
P1058300	4293
P10593.00	3944
P10593.10	3944
P1059300	3944
P1059310	3944
P10623.01	3952
P10623.12	3952
P1062301	3952
P1062312	3952
P1063.00	3318
P1063.30	3318
P1063.60	3318
P106300	3318
P106330	3318
P106360	3318
P10663.01	4000
P1066301	4000
P10733.02	4016
P1073302	4016
P10773.00	3987
P1077300	3987
P10793.00	4210
P1079300	4210
P10813.02	4113
P1081302	4113
P1083.02	3806
P1083.10	3806
P108302	3806
P108310	3806

WOKING	BESER
NO	NO
P10833.01	4121
P1083301	4121
P10963.02	4029
P1096302	4029
P1103.00	3315
P1103.00	3515
P1103.20	3315
P1103.20	3515
P1103.40	3339
P1103.40	3514
P110300	3315
P110300	3515
P110320	3315
P110320	3515
P110340	3339
P110340	3514
P11303.01	3904
P1130301	3904
P11313.00	3905
P1131300	3905
P11363.02	4042
P1136302	4042
P11373.00	4216
P1137300	4216
P11383.02	4028
P11383.12	4028
P1138302	4028
P1138312	4028
P11393.00	4105
P1139300	4105
P11403.00	4111
P1140300	4111
P11413.02	3978
P11413.12	3978
P1141302	3978
P1141312	3978
P11423.02	3979
P1142302	3979
P1143.00	3335
P1143.10	3365
P1143.12	3365
P1143.40	4103
P114300	3335
P114310	3365
P114312	3365
P114340	4103
P11453.01	3841
P11453.11	3841
P1145301	3841
P1145311	3841
P11463.02	3890
P1146302	3890
P11473.02	4153
P1147302	4153
P11483.00	3894
P1148300	3894
P11513.02	4106
P1151302	4106
P11523.00	4346
P1152300	4346
P11683.02	4159
P1168302	4159
P11693.00	3827
P1169300	3827
P1173.20	3343
P1173.20	3483
P117320	3343
P117320	3483
P11813.11	4036
P1181311	4036
P11823.00	3885
P1182300	3885
P11853.02	3976
P1185302	3976
P11983.14	3886
P1198314	3886
P12013.00	4248
P1201300	4248
P12023.02	4039
P1202302	4039

WOKING	BESER
NO	NO
P12033.02	4165
P1203302	4165
P12043.00	4249
P12043.10	4259
P1204300	4249
P1204310	4259
P12053.00	4247
P1205300	4247
P12103.02	3956
P1210302	3956
P12123.00	4255
P1213.06	3333
P1213.16	3329
P121306	3333
P121316	3329
P12183.00	4038
P1218300	4038
P1223.00	3316
P1223.20	3346
P122300	3316
P122320	3346
P12233.00	3970
P1223300	3970
P12373.00	4054
P1237300	4054
P12393.00	3995
P1239300	3995
P12433.00	4260
P1243300	4260
P12453.00	4309
P12503.00	4134
P1250300	4134
P12513.00	3966
P1251300	3966
P12523.00	3967
P1252300	3967
P1253.30	3425
P125330	3425
P12563.02	4037
P1256302	4037
P12623.02	4061
P12623.42	4311
P1262302	4061
P1263.02	3366
P1263.12	3366
P126302	3366
P126312	3366
P12753.12	4149
P1275312	4149
P12793.10	4310
P12823.00	3971
P1282300	3971
P12873.00	4142
P12873.30	4287
P1287300	4142
P12883.04	4150
P1288304	4150
P12913.00	3529
P12913.10	3529
P1291300	3529
P1291310	3529
P12953.00	4256
P13003.00	3945
P1300300	3945
P13023.00	4240
P1302300	4240
P13083.02	3880
P1308302	3880
P13093.02	3980
P1309302	3980
P13233.02	4073
P1323302	4073
P13243.00	3958
P1324300	3958
P13253.02	3929
P1325302	3929
P13263.02	3960
P1326302	3960
P13283.01	4258
P1328301	4258

WOKING	BESER
NO	NO
P13313.00	3949
P1331300	3949
P13323.00	3953
P1332300	3953
P13333.00	3948
P1333300	3948
P13343.00	4077
P1334300	4077
P13353.02	3982
P1335302	3982
P13373.01	3981
P13373.12	3981
P1337301	3981
P13383.00	3820
P1338300	3820
P13393.02	3989
P1339302	3989
P13423.00	3975
P13423.01	3975
P1342300	3975
P1342301	3975
P13433.00	3962
P1343300	3962
P13453.00	3925
P13453.02	3965
P13453.10	3965
P1345300	3925
P1345302	3965
P1345310	3965
P13463.00	3926
P1346300	3926
P13473.00	3963
P1347300	3963
P13483.00	3964
P13483.10	3964
P1348300	3964
P1348310	3964
P13503.00	3906
P13503.02	3906
P1350300	3906
P1350302	3906
P13513.02	3920
P1351302	3920
P13523.02	3907
P1352302	3907
P13563.00	4157
P1356300	4157
P13593.02	4005
P1359302	4005
P13613.12	3976
P1361312	3976
P13643.02	4004
P1364302	4004
P13663.00	3903
P1366300	3903
P13713.02	3996
P1371302	3996
P13723.00	3997
P1372300	3997
P13743.02	4060
P1374302	4060
P13753.01	3922
P13753.12	3922
P13753.12	4171
P1375301	3922
P13813.02	4122
P1381302	4122
P13823.00	4092
P1382300	4092
P13863.02	3954
P1386302	3954
P13893.02	4160
P1389302	4160
P13903.02	4156
P1390302	4156
P13913.02	4035
P1391302	4035
P13923.01	3972
P1392301	3972
P1393.00	3311

WOKING	BESER
NO	NO
P139300	3311
P13933.02	4015
P1393302	4015
P13973.00	4207
P1397300	4207
P13993.00	4151
P1399300	4151
P14103.10	4226
P14143.00	4204
P1423.00	3373
P1423.30	3373
P1423.50	3373
P142300	3373
P142330	3373
P142350	3373
P14303.00	4201
P1443.02	3526
P144302	3526
P14483.02	4312
P1453.00	3340
P1453.02	3340
P1453.32	3321
P145300	3340
P145302	3340
P145332	3321
P1463.00	3378
P1463.10	3378
P1463.20	3490
P146300	3378
P146310	3378
P146320	3490
P14693.02	4317
P14703.02	4318
P1473.30	3513
P147330	3513
P1483.00	3537
P1483.10	3537
P148300	3537
P148310	3537
P14883.02	4224
P1493.10	3840
P15033.02	4146
P1503302	4146
P15073.00	4124
P15073.12	4308
P1507300	4124
P15093.10	4314
P1509310	4314
P15123.32	4166
P15203.00	4135
P1520300	4135
P1523.10	3661
P152310	3661
P15233.02	4233
P15263.02	4049
P15313.02	4008
P15313.12	4230
P1531302	4008
P1531312	4230
P15323.02	4014
P15323.12	4014
P1532302	4014
P1532312	4014
P15393.01	4057
P1539301	4057
P15403.01	4162
P1540301	4162
P15423.01	4132
P15423.01	4172
P1542301	4132
P1542301	4172
P15493.01	4056
P1549301	4056
P1563.00	3423
P1563.12	3423
P156300	3423
P156312	3423
P15643.08	4145
P15663.00	3998
P15683.02	4167

WOKING	BESER
NO	NO
P1583.10	3416
P158310	3416
P15883.02	4136
P1603.00	3374
P160300	3374
P1613.02	3527
P161302	3527
P16243.08	4280
P1633.00	3312
P1633.02	3484
P163300	3312
P163302	3484
P1683.02	3323
P168302	3323
P1753.60	3601
P1793.00	3709
P1793.20	3709
P1793.30	3709
P179300	3709
P179320	3709
P179330	3709
P1803.00	3393
P180300	3393
P1923.00	3710
P192300	3710
P1983.00	3324
P198300	3324
P2063.00	4088
P2063.12	4088
P206300	4088
P206312	4088
P2113.00	3873
P211300	3873
P2153.04	3560
P215304	3560
P2173.12	4010
P217312	4010
P2183.05	3632
P2183.06	3632
P2183.12	3632
P2183.32	3632
P2183.52	3632
P2183.82	3632
P2183.92	3632
P218305	3632
P218306	3632
P218312	3632
P218332	3632
P218352	3632
P218382	3632
P218392	3632
P2203.00	3562
P2203.20	3562
P220300	3562
P220320	3562
P2213.02	3680
P2213.22	3680
P221302	3680
P221322	3680
P2233.02	3631
P223302	3631
P2243.02	3696
P224302	3696
P2253.02	4148
P2253.12	4148
P2253.22	4148
P2253.42	4148
P2253.52	4148
P225312	4148
P225322	4148
P225342	4148
P225352	4148
P2313.00	3464
P2313.04	3722
P231300	3464
P231304	3722
P2333.02	3640
P233302	3640
P2373.10	3872
P237302	3683

WOKING	BESER
NO	NO
P237310	3872
P2413.02	3695
P241302	3695
P2423.02	4080
P242302	4080
P2433.00	3660
P2433.40	3660
P243300	3660
P243340	3660
P244300	4104
P2453.00	3596
P2453.10	3596
P245310	3596
P2513.02	3704
P2513.32	3704
P2513.42	3704
P251302	3704
P251332	3704
P251342	3704
P2543.02	3685
P2543.22	3685
P2543.32	3685
P254302	3685
P254322	3685
P254332	3685
P2573.00	3603
P2573.00	3604
P2573.10	3603
P2573.10	3604
P257300	3603
P257300	3604
P257310	3603
P257310	3604
P2643.00	3598
P2643.02	3766
P264300	3598
P264302	3766
P2673.00	4072
P267300	4072
P2703.00	4086
P270300	4086
P2723.02	3424
P272302	3424
P2793.00	3628
P2793.12	3628
P2793.20	3629
P279300	3628
P279312	3628
P279320	3629
P2813.00	3879
P2813.20	3879
P2813.30	3879
P2813.60	4181
P281300	3879
P281320	3879
P281330	3879
P281360	4181
P2823.00	3733
P282300	3733
P2843.00	3563
P284300	3563
P2853.10	4020
P285310	4020
P2893.02	3883
P2893.12	3883
P289302	3883
P289312	3883
P2903.00	3506
P2903.02	3590
P2903.11	3590
P2903.41	3590
P290300	3506
P290302	3590
P290311	3590
P290341	3590
P2913.00	3473
P291300	3473
P2923.00	3445
P292300	3445
P2933.00	3623

WOKING	BESER
NO	NO
P2933.02	3623
P2933.20	3623
P2933.22	3623
P293300	3623
P293302	3623
P293320	3623
P293322	3623
P2963.00	3892
P2963.10	3892
P296300	3892
P296310	3892
P2973.00	3874
P2973.22	3874
P297300	3874
P297322	3874
P3023.02	3482
P302302	3482
P3043.00	3462
P304300	3462
P3063.00	3603
P306300	3603
P3083.00	3539
P3083.02	3546
P3083.12	3539
P308300	3539
P308302	3546
P308312	3539
P3113.22	3523
P311322	3523
P3123.02	3449
P3123.12	3522
P3123.32	3522
P3123.42	3522
P312302	3449
P312312	3522
P312332	3522
P312342	3522
P3143.14	3776
P314314	3776
P3203.02	3428
P320302	3428
P3213.00	3422
P3213.02	3552
P321300	3422
P321302	3552
P3223.00	3661
P3223.01	3771
P322300	3661
P322301	3771
P3233.00	3605
P323300	3605
P3243.00	3504
P3243.02	3502
P3243.22	3502
P324300	3504
P324302	3502
P324322	3502
P3283.02	3582
P328302	3582
P3323.00	3746
P332300	3746
P3333.02	4212
P3363.00	3692
P3363.02	3760
P336300	3692
P336302	3760
P3383.04	3757
P3383.04	3857
P3383.14	3757
P3383.14	3857
P3383.24	3757
P3383.24	3857
P338304	3757
P338304	3857
P338314	3757
P338314	3857
P338324	3757
P338324	3857
P3393.00	3717
P3393.40	3717

WOKING	BESER
NO	NO
P3393.50	3717
P3393.60	3717
P339300	3717
P339340	3717
P339350	3717
P339360	3717
P3443.00	3499
P3443.02	3463
P344300	3499
P344302	3463
P3453.00	3679
P3453.12	3994
P3453.22	3994
P3453.32	3994
P345300	3679
P345312	3994
P345322	3994
P345332	3994
P3543.02	3600
P3543.12	3600
P354302	3600
P354312	3600
P3613.02	3543
P361302	3543
P3623.02	3457
P3623.12	3610
P362302	3457
P362312	3610
P3633.00	3529
P3633.01	3529
P3633.03	3529
P3633.05	3529
P3633.10	3529
P3633.14	3529
P3633.15	3529
P3633.16	3529
P3633.41	4152
P3633.50	3529
P3633.74	3529
P3633.92	3529
P363300	3529
P363301	3529
P363303	3529
P363305	3529
P363310	3529
P363314	3529
P363315	3529
P363316	3529
P363341	4152
P363350	3529
P363374	3529
P363392	3529
P3643.02	3432
P3643.12	3491
P364302	3432
P364312	3491
P3653.00	3578
P3653.15	3656
P365300	3578
P365315	3656
P3663.00	3412
P3663.10	3453
P366300	3412
P366310	3453
P367311	3662
P3703.00	3564
P3703.10	3584
P370300	3564
P370310	3584
P3713.02	3723
P371302	3723
P3733.02	3437
P373302	3437
P3753.02	3448
P375302	3448
P3783.22	3773
P3783.32	3773
P378322	3773
P378332	3773
P3813.00	3459

WOKING	BESER
NO	NO
P3813.40	3569
P381300	3459
P381340	3569
P3823.00	3469
P3823.10	3469
P382300	3469
P382310	3469
P3843.00	3430
P3843.02	3430
P384300	3430
P384302	3430
P3853.10	3589
P385310	3589
P3863.10	3470
P3863.20	3470
P3863.30	3470
P3863.50	3505
P3863.50	3615
P386310	3470
P386320	3470
P386330	3470
P386350	3505
P386350	3615
P3873.00	3700
P387300	3700
P3893.02	3882
P3893.12	3882
P389302	3882
P389312	3882
P3913.02	4108
P391302	4108
P3933.12	3779
P393312	3779
P3943.22	4087
P3943.32	4087
P394322	4087
P394332	4087
P3963.00	3609
P3963.02	3609
P396300	3609
P396302	3609
P3973.00	3642
P3973.10	3642
P397300	3642
P397310	3642
P4013.02	3898
P401302	3898
P4023.02	3740
P4023.22	3740
P402302	3740
P402322	3740
P4073.00	3667
P407300	3667
P4713.02	3781
P471302	3781
P4783.00	3567
P478300	3567
P4793.00	3678
P479300	3678
P4803.00	3670
P4803.10	3670
P480300	3670
P480310	3670
P4823.00	3675
P482300	3675
P4833.00	3809
P483300	3809
P4843.00	3512
P484300	3512
P4863.00	3677
P4863.10	3677
P486300	3677
P486310	3677
P4873.12	3618
P4873.22	3618
P487312	3618
P487322	3618
P4883.10	3897
P488310	3897
P4893.02	3617

WOKING	BESER
NO	NO
P4893.12	3617
P4893.22	3617
P4893.42	3617
P489302	3617
P489312	3617
P489322	3617
P489342	3617
P4913.00	3671
P4913.30	3795
P491330	3795
P4923.02	3577
P4923.12	3598
P4923.22	3577
P492302	3577
P492312	3598
P492322	3577
P4933.00	4034
P493300	4034
P4943.02	3884
P494302	3884
P4953.02	3602
P495302	3602
P4963.00	3881
P4963.10	3881
P496300	3881
P496310	3881
P4983.02	3697
P498302	3697
P5023.02	3554
P5023.02	3651
P5023.22	3554
P5023.22	3651
P5023.42	3554
P5023.42	3651
P502302	3554
P502302	3651
P502322	3554
P502322	3651
P502342	3554
P502342	3651
P5033.02	4078
P503302	4078
P5053.02	3688
P505302	3688
P5073.00	3581
P507300	3581
P5103.00	3745
P510300	3745
P5123.00	3714
P512300	3714
P5133.00	3693
P5133.04	3693
P513300	3693
P513304	3693
P5143.01	3608
P5143.20	3643
P514301	3608
P514320	3643
P5153.04	3832
P5153.32	4269
P5153.42	4269
P515304	3832
P515332	4269
P515342	4269
P5163.00	3833
P516300	3833
P5173.00	3545
P5173.10	3545
P517300	3545
P517310	3545
P5183.02	3607
P518302	3607
P5193.02	3686
P5193.22	3686
P519302	3686
P519322	3686
P5213.00	3777
P5213.20	3777
P521300	3777
P521320	3777

WOKING	BESER
NO	NO
P5243.04	4099
P524304	4099
P5253.02	3674
P5253.22	3674
P525302	3674
P525322	3674
P5263.02	3887
P5263.12	3887
P526302	3887
P526312	3887
P5293.04	3673
P529304	3673
P5313.10	4128
P531310	4128
P5323.00	3558
P5323.02	3593
P532300	3558
P532302	3593
P5333.00	4214
P533300	4214
P5383.04	3819
P538304	3819
P5393.04	3878
P539304	3878
P5413.00	3909
P541300	3909
P5453.00	3658
P5453.02	3658
P545300	3658
P545302	3658
P5473.00	4197
P547300	4197
P5563.02	3915
P5563.14	3915
P556302	3915
P556314	3915
P5593.00	3511
P559300	3511
P5603.02	3622
P5603.12	3622
P560302	3622
P560312	3622
P5613.02	3528
P561302	3528
P5623.00	3888
P562300	3888
P5673.00	4182
P5673.20	4182
P5673.40	4182
P567300	4182
P567320	4182
P567340	4182
P5683.00	3736
P568300	3736
P5803.21	3553
P580300	3553
P5843.02	3867
P584302	3867
P5863.02	3595
P586302	3595
P5873.02	3559
P587302	3559
P5943.02	3507
P594302	3507
P6013.00	3681
P601300	3681
P6033.02	3648
P603302	3648
P6053.02	4281
P605302	4281
P6063.00	3830
P606300	3830
P6073.04	3829
P607304	3829
P6083.02	4059
P608302	4059
P6093.00	3821
P6093.10	3821
P609300	3821
P609310	3821

WOKING	BESER
NO	NO
P6103.02	4027
P610302	4027
P6113.04	3859
P611304	3859
P6123.02	3768
P612302	3768
P6133.00	3919
P613300	3919
P6143.00	3918
P614300	3918
P6173.00	3861
P617300	3861
P6193.00	3943
P619300	3943
P6203.02	3901
P620302	3901
P6243.02	3928
P6243.11	3928
P624302	3928
P624311	3928
P6253.02	3748
P625302	3748
P6273.10	4123
P6273.20	4123
P627310	4123
P627320	4123
P6293.02	3913
P629302	3913
P6303.01	3767
P630301	3767
P6333.00	3804
P633300	3804
P6353.02	4110
P635302	4110
P6363.02	4011
P6363.12	4011
P636302	4011
P636312	4011
P6393.02	4009
P639302	4009
P6403.02	3769
P640302	3769
P6413.02	3788
P641302	3788
P6433.04	4085
P643304	4085
P6463.02	3993
P6463.12	3993
P6463.22	3993
P6463.32	3993
P6463.42	3895
P6463.62	3895
P646302	3993
P646312	3993
P646322	3993
P646332	3993
P646342	3895
P646362	3895
P6473.12	4109
P6473.12	4232
P647312	4109
P647312	4232
P6483.02	4017
P648302	4017
P6503.02	4084
P650302	4084
P6523.12	4222
P652312	4222
P6663.00	3877
P666300	3877
P6673.01	4345
P667301	4345
P6683.00	3836
P668300	3836
P6693.00	4102
P669300	4102
P6703.00	4101
P6703.00	4209
P670300	4101
P670300	4209

WOKING	BESER
NO	NO
P6713.02	3843
P6713.12	3843
P6713.22	3843
P671302	3843
P671312	3843
P671322	3843
P6723.02	3784
P6723.12	3921
P672302	3784
P672312	3921
P6743.02	3846
P6743.12	3846
P674302	3846
P674312	3846
P6753.00	4138
P6753.01	4138
P675300	4138
P675301	4138
P6763.00	4100
P676300	4100
P6773.00	4093
P6773.10	4093
P677300	4093
P677310	4093
P7013.00	3863
P7013.20	3863
P7013.30	3863
P701300	3863
P701320	3863
P701330	3863
P7023.02	3799
P702302	3799
P7033.04	3750
P703304	3750
P7053.02	4062
P7053.12	4062
P705302	4062
P705312	4062
P7093.00	3538
P7093.10	3566
P7093.20	3637
P709300	3538
P709310	3566
P709320	3637
P7143.00	3614
P7143.02	3614
P714300	3614
P714302	3614
P7183.00	3606
P7183.01	3794
P718300	3606
P718301	3794
P7193.02	3574
P719302	3574
P7203.00	3419
P7203.20	3419
P720300	3419
P720320	3419
P7213.00	3822
P721300	3822
P7303.00	3663
P730300	3663
P7313.00	3896
P7313.10	3896
P7313.12	3896
P731300	3896
P731310	3896
P731312	3896
P7333.00	3682
P7333.20	3782
P7333.21	3782
P7333.31	3782
P7333.41	3782
P733300	3682
P733320	3782
P733321	3782
P733331	3782
P733341	3782
P7343.00	3644
P7343.04	3636

WOKING	BESER
NO	NO
P734300	3644
P734304	3636
P7353.00	3872
P735300	3872
P7363.04	4071
P736304	4071
P7433.00	3659
P7433.10	3938
P7433.20	3938
P743300	3659
P743310	3938
P743320	3938
P7453.02	3687
P7453.12	3687
P745302	3687
P745312	3687
P7473.02	3764
P747302	3764
P7503.00	4125
P750300	4125
P7513.00	3575
P7513.10	3575
P7513.86	3942
P751300	3575
P751310	3575
P751386	3942
P7553.02	4079
P755302	4079
P7623.02	3653
P762302	3653
P7743.12	3932
P774312	3932
P7753.02	3778
P775302	3778
P7783.00	3676
P778300	3676
P7793.00	4274
P779300	4274
P7843.02	3762
P784302	3762
P7853.02	3763
P7853.22	3763
P785302	3763
P785322	3763
P7913.00	3754
P791300	3754
P7933.00	3755
P793300	3755
P7943.10	4115
P794310	4115
P7953.02	4155
P795302	4155
P7963.00	3744
P796300	3744
P7973.01	4126
P797301	4126
P7983.01	4069
P798301	4069
P7993.00	3780
P799300	3780
P8513.02	3912
P8513.11	3912
P851302	3912
P851311	3912
P8533.02	3959
P8533.12	3959
P8533.22	3959
P853302	3959
P853312	3959
P853322	3959
P8543.00	4013
P854300	4013
P8583.10	4208
P858310	4208
P8593.01	3835
P859301	3835
P8603.01	3834
P860301	3834
P8613.00	3914
P861300	3914

WOKING	BESER
NO	NO
P8623.00	3950
P862300	3950
P8633.00	4347
P863300	4347
P8643.12	4096
P864312	4096
P8653.01	3765
P865301	3765
P8703.02	3889
P870302	3889
P8713.02	3769
P871302	3769
P8733.02	4031
P873302	4031
P8763.00	3849
P8763.10	3849
P8763.20	3849
P876300	3849
P876310	3849
P876320	3849
P8773.00	3850
P877300	3850
P8783.02	4112
P878302	4112
P8843.00	3801
P884300	3801
P8853.02	4074
P885302	4074
P8863.00	3951
P886300	3951
P8873.00	3983
P8873.02	3983
P8873.11	3983
P887300	3983
P887302	3983
P887311	3983
P8883.00	3891
P888300	3891
P8963.00	4076
P896300	4076
P9003.22	4118
P900322	4118
P9023.00	4119
P902300	4119
P9033.12	3893
P9033.22	3893
P903312	3893
P903322	3893
P9043.02	3955
P9043.12	3955
P9043.31	3955
P904302	3955
P904312	3955
P904331	3955
P9073.02	4012
P907302	4012
P9133.00	4158
P913300	4158
P9193.00	3856
P919300	3856
P9213.02	3802
P9213.12	3802
P921302	3802
P921312	3802
P9223.00	4094
P9223.12	3817
P922300	4094
P922312	3817
P9273.04	3934
P927304	3934
P9283.04	3935
P928304	3935
P9333.00	3855
P933300	3855
P9343.00	3848
P9343.10	3848
P934300	3848
P934310	3848
P9363.02	4095
P936302	4095

WOKING	BESER
NO	NO
P9393.02	4153
P939302	4153
P9403.10	3820
P9403.20	3820
P9403.30	3820
P940310	3820
P940320	3820
P940330	3820
P9413.00	3800
P941300	3800
P9423.00	3853
P9423.20	3853
P9423.30	3853
P942300	3853
P942320	3853
P942330	3853
P9433.00	3852
P9433.10	3852
P943300	3852
P943310	3852
P9453.01	4271
P945301	4271
P9493.00	3823
P9493.10	3823
P949300	3823
P949310	3823
P9543.00	3911
P954300	3911
P9553.00	4082
P955300	4082
P9573.00	4180
P957300	4180
P9583.01	3826
P9583.10	3826
P9583.11	3826
P9583.30	3826
P9583.32	3826
P958301	3826
P958310	3826
P958311	3826
P958330	3826
P958332	3826
P9593.01	3800
P9593.10	3800
P9593.11	3800
P9593.12	3800
P9593.21	3800
P959301	3800
P959310	3800
P959311	3800
P959312	3800
P959321	3800
P9603.12	4301
P9743.02	3825
P974302	3825
P9763.01	3933
P9763.21	3933
P9763.31	3933
P9763.41	3933
P976301	3933
P976321	3933
P976331	3933
P976341	3933
P9793.12	3986
P979312	3986
P9803.00	3931
P980300	3931
P9813.00	3854
P981300	3854
P9833.11	4303
P983311	4303
P9843.00	3910
P984300	3910
P9883.00	4211
P9883.40	4211
P988300	4211
P988340	4211
P9923.00	4179
P992300	4179
P9933.02	3961

WOKING	BESER
NO	NO
P993302	3961
P9973.11	3842
P997311	3842
P9993.00	3831
P9993.02	3831
P999300	3831
P999302	3831
PSA1414300	4204

WVA	BESER
NO	NO
20002	3463
20002	3499
20004	3701
20009	3326
20011	3320
20011	3350
20027	3455
20027	3471
20031	3875
20034	3318
20037	3319
20039	3449
20041	3449
20073	3316
20073	3346
20074	3317
20075	3325
20088	3311
20092	3331
20099	3582
20104	3582
20107	3318
20108	3582
20112	3395
20113	3395
20140	3329
20143	3322
20145	3321
20145	3340
20146	3321
20151	3377
20153	3373
20161	3403
20162	3873
20166	3393
20168	3531
20168	3551
20182	3634
20186	3634
20191	3463
20192	3463
20193	3752
20194	3752
20197	3733
20202	3610
20228	3327
20228	3343
20228	3483
20252	3313
20253	3323
20260	3806
20260	3806
20261	3986
20267	3986
20271	3323
20286	3328
20289	3375
20302	3710
20323	3335
20334	3329
20335	3329
20341	3339
20341	3514
20344	3661
20347	3333
20348	3333
20359	3423
20359	3423
20364	3416
20365	3416
20366	3366
20367	3366
20375	3625
20380	3526
20392	3315
20392	3315
20392	3515
20407	3313

WVA	BESER
NO	NO
20410	3596
20417	3322
20423	3596
20436	3326
20437	3332
20454	3405
20455	3405
20476	3376
20480	3374
20487	3330
20488	3527
20489	3527
20491	3312
20491	3484
20494	3333
20495	3333
20506	3806
20535	3324
20547	3623
20561	3404
20570	3527
20571	3527
20574	3378
20574	3490
20576	3406
20578	3480
20587	3706
20588	3365
20592	3340
20599	3314
20628	3369
20629	3573
20631	3442
20632	3442
20633	3442
20634	3381
20634	3495
20635	3381
20635	3493
20636	3381
20636	3493
20640	3417
20640	3417
20640	3417
20652	4020
20660	3421
20668	3536
20669	3619
20669	3635
20669	3649
20669	3650
20670	3330
20671	3330
20672	3330
20675	3572
20676	3590
20676	3590
20676	3665
20678	3590
20687	3550
20687	3611
20699	3376
20703	3709
20706	3537
20718	3370
20719	3468
20720	3468
20724	3407
20729	3379
20730	3379
20731	3509
20735	3705
20741	3440
20753	3417
20756	3572
20757	3573
20758	3611
20767	3579
20768	3579
20772	3503

WVA	BESER
NO	NO
20772	3503
20775	3424
20778	3650
20780	3746
20783	3417
20783	3417
20784	3513
20787	3440
20793	3484
20833	3466
20834	3466
20836	3467
20837	3467
20838	3466
20838	3467
20852	3371
20854	3579
20857	3621
20858	3621
20859	3493
20860	3493
20861	3419
20861	3429
20862	3429
20863	3415
20870	3402
20880	3446
20881	3446
20882	3446
20887	3444
20887	3444
20887	3486
20887	3486
20887	3585
20887	3585
20888	3444
20888	3444
20888	3486
20888	3486
20888	3585
20888	3585
20889	3441
20889	3441
20890	3430
20895	3633
20895	3646
20901	3619
20901	3635
20904	3413
20905	3380
20905	3487
20905	3580
20906	3380
20906	3487
20906	3580
20907	3548
20907	3549
20907	3690
20907	3790
20907	3790
20908	3549
20919	3539
20919	3546
20920	3546
20921	3546
20923	3474
20924	3474
20926	3482
20928	3482
20929	3482
20934	3689
20935	3372
20936	3372
20937	3372
20937	3503
20937	3503
20938	3372
20938	3503
20938	3503
20939	3410

WVA	BESER
NO	NO
20940	3408
20941	3408
20947	3537
20950	3424
20950	3424
20951	3424
20952	3424
20955	3401
20958	3394
20959	3501
20959	3752
20961	3529
20961	3529
20961	3529
20968	3564
20968	3584
20973	3496
20974	3496
20974	3496
20979	3605
20986	3380
20987	3380
20989	3474
20995	3578
20996	3578
21012	3502
21012	3504
21016	3428
21022	3474
21023	3474
21042	3418
21048	3523
21049	3523
21050	3717
21050	3717
21055	3430
21057	3510
21064	3564
21084	3624
21085	3624
21086	3428
21087	3428
21089	3583
21090	3583
21096	3495
21097	3495
21099	3397
21100	3432
21100	3491
21105	3432
21107	3425
21110	3526
21115	3462
21119	3758
21126	3400
21130	3758
21140	3469
21141	3603
21144	3536
21153	3628
21153	3629
21158	3414
21158	3714
21159	3620
21160	3423
21170	3422
21171	3464
21173	3609
21190	3470
21190	3505
21190	3615
21193	3458
21193	3459
21193	3461
21193	3540
21194	3458
21194	3459
21195	3461
21201	3470
21202	3589

WVA	BESER
NO	NO
21203	3589
21205	3543
21206	3543
21209	3457
21210	3457
21229	3758
21233	3641
21237	3661
21237	3771
21238	3661
21238	3771
21243	3436
21248	3634
21249	3634
21277	3449
21278	3680
21279	3680
21280	4104
21282	3879
21292	3563
21301	3630
21303	3627
21304	3626
21305	3581
21311	3623
21312	4212
21312	4212
21313	4212
21314	4212
21326	3633
21327	3633
21331	3691
21331	3691
21332	3691
21338	3600
21339	3600
21340	3600
21347	3692
21347	3760
21348	3760
21349	3760
21355	3723
21356	3723
21357	3723
21363	3685
21368	3733
21373	3448
21374	3448
21375	3448
21378	3437
21379	3437
21380	3437
21385	3642
21388	3539
21394	3558
21395	3558
21396	3558
21396	3593
21400	3555
21404	3503
21410	3888
21411	3736
21413	3736
21430	3528
21432	3528
21436	3608
21436	3643
21437	3608
21439	3658
21446	3631
21447	3631
21448	3631
21459	3662
21460	3555
21463	3503
21463	3503
21467	3757
21467	3857
21468	3777
21469	3445

WVA	BESER
NO	NO
21470	3473
21471	3909
21479	3553
21479	3553
21481	3888
21482	4078
21486	3881
21487	3879
21490	3915
21491	4099
21495	3426
21496	3426
21497	3696
21498	3696
21499	3696
21500	3882
21501	3882
21502	3882
21503	3426
21514	3771
21515	3683
21516	3683
21517	3683
21519	3412
21519	3453
21519	3816
21526	3700
21533	3491
21537	3666
21538	3666
21539	3640
21540	3640
21541	3640
21543	3757
21543	3857
21544	3757
21544	3857
21545	3660
21546	3562
21553	4087
21561	3779
21562	3779
21572	3680
21573	3689
21576	3567
21577	3567
21581	3593
21582	3593
21586	4214
21592	3670
21593	3670
21601	3554
21601	3651
21602	3554
21602	3651
21603	3554
21603	3651
21613	3555
21614	3556
21615	3556
21616	3556
21621	3678
21622	3678
21626	4128
21631	3819
21632	3878
21633	3779
21634	4020
21636	3617
21637	3617
21642	3881
21643	3563
21644	3563
21647	3622
21648	3622
21649	3622
21650	3603
21650	3604
21651	3704
21652	3704

WVA	BESER
NO	NO
21653	3704
21654	3522
21655	3522
21656	3522
21657	3598
21657	3766
21658	3766
21659	3766
21664	3677
21670	3863
21671	3863
21676	4347
21679	3560
21680	3560
21681	3560
21688	4072
21691	3656
21694	3607
21695	3607
21696	3607
21697	3686
21698	3686
21699	3686
21700	3695
21701	3695
21702	3695
21703	4080
21704	4080
21705	4080
21706	4108
21707	4108
21708	4108
21712	3436
21719	4148
21720	4148
21721	4148
21724	3750
21725	3632
21726	3632
21727	3632
21730	3745
21749	3750
21754	3832
21755	3832
21756	3832
21757	3832
21766	3833
21768	3685
21769	3685
21773	3502
21774	3502
21775	3673
21776	3673
21780	4088
21781	4088
21786	4275
21787	4275
21791	4086
21794	3863
21795	3677
21797	3595
21798	3595
21799	3559
21800	3559
21812	3867
21813	3867
21814	3867
21822	4182
21823	4182
21824	4182
21825	4182
21828	3665
21829	3665
21832	3545
21833	3776
21834	3776
21835	4088
21840	3688
21841	3688
21842	3688

WVA	BESER
NO	NO
21845	3674
21846	3674
21847	3674
21848	3506
21848	3590
21849	3506
21849	3590
21861	4062
21862	3505
21862	3615
21866	3538
21866	3566
21866	3637
21868	3538
21868	3566
21868	3637
21875	3887
21876	3887
21877	3887
21882	3671
21883	3606
21883	3794
21885	3606
21885	3794
21891	3656
21897	3662
21898	3821
21899	3821
21900	3663
21904	3680
21907	3883
21908	3883
21909	3883
21911	3590
21915	4079
21919	3676
21927	3618
21929	3618
21930	3897
21945	3896
21945	3896
21945	3896
21947	3693
21952	3898
21953	3898
21954	3898
21974	3682
21974	3782
21974	3782
21978	3659
21979	3659
21980	3659
21980	3759
21981	3659
21982	4059
21983	4059
21999	4281
22031	4334
22032	4334
22035	4295
22036	4295
22037	4295
22065	4282
22087	4227
22103	4287
22104	4287
22117	4308
22118	4308
22119	4308
22123	4285
22124	4285
22125	4285
22143	4284
22144	4284
22356	4287
22397	4234
22398	4234
22399	4234
22420	4251
22421	4251

WVA	BESER
NO	NO
22422	4251
22439	4307
22440	4307
22449	4246
22450	4246
22451	4246
22476	4301
22477	4301
22525	4253
22526	4253
22531	4270
22610	4280
23002	4281
23003	3799
23004	3577
23005	3577
23006	3577
23020	3861
23021	3804
23022	3681
23032	4071
23033	4071
23037	4088
23038	4088
23040	3799
23041	3799
23042	3799
23043	4197
23044	4197
23052	3763
23053	3763
23054	3763
23055	3763
23061	3511
23063	3762
23064	3762
23066	3762
23067	3762
23070	4125
23073	3919
23074	3919
23076	3918
23077	3918
23078	4101
23078	4209
23080	3675
23081	3507
23082	3507
23083	3507
23086	3697
23091	3717
23094	4115
23099	3848
23103	3570
23103	3594
23104	3570
23104	3594
23112	3943
23114	3943
23119	4222
23124	3636
23125	3636
23126	3584
23130	3682
23130	3782
23130	3782
23131	3782
23131	3782
23144	3836
23145	3836
23154	3754
23155	3754
23157	4103
23158	3872
23163	3794
23169	3610
23170	3610
23172	3539
23178	4110
23179	4110

WVA	BESER
NO	NO
23181	3897
23183	4347
23187	3782
23189	4069
23190	4069
23191	4069
23192	4069
23193	4126
23194	4126
23195	4126
23196	4126
23202	3877
23203	3877
23205	3759
23205	3938
23215	3950
23217	3950
23218	3568
23218	3569
23224	4345
23225	3846
23226	3846
23227	3548
23227	3690
23227	3790
23228	3548
23228	3690
23234	3687
23234	3687
23235	3687
23236	3687
23238	3778
23239	3778
23240	3778
23241	3744
23245	3852
23247	3852
23269	4095
23270	4095
23271	4102
23273	3934
23277	3935
23278	4100
23279	4100
23280	4222
23290	3809
23300	3722
23301	3722
23303	4034
23304	4034
23306	3930
23309	4179
23310	4179
23312	4180
23314	3884
23316	3697
23317	3697
23324	3590
23326	3842
23331	4276
23340	4112
23341	4112
23342	4112
23346	3644
23347	4180
23348	3768
23349	3768
23350	3768
23353	3755
23384	3740
23385	3740
23386	3740
23392	3590
23393	3896
23400	3602
23402	4211
23403	4211
23407	3854
23409	3931
23417	4040

WVA	BESER
NO	NO
23420	3932
23421	3932
23429	4085
23434	3921
23435	3921
23440	3801
23441	3801
23442	4009
23443	4009
23444	4009
23445	3553
23446	4345
23467	3841
23471	3512
23472	3781
23473	3781
23479	3890
23480	3890
23481	3890
23482	3853
23482	3853
23483	3853
23484	3653
23485	3653
23486	3653
23487	4271
23488	3892
23490	3780
23497	3901
23498	3901
23499	4274
23502	4010
23503	4010
23504	4010
23505	4071
23506	4071
23507	3928
23508	3928
23509	3928
23510	3769
23511	3769
23512	3769
23513	3822
23515	3874
23517	4123
23521	3788
23522	3788
23523	3788
23524	3829
23525	3829
23527	4155
23530	4110
23531	4110
23536	3648
23537	3648
23538	3648
23539	3830
23540	3767
23543	3993
23544	3993
23545	3993
23552	3790
23554	4152
23557	4093
23558	4079
23559	4079
23560	4079
23565	3667
23569	3843
23570	3843
23571	3843
23572	3913
23573	3913
23574	3913
23577	3784
23578	3784
23579	3784
23580	3784
23581	4138
23581	4138

WVA	BESER
NO	NO
23582	3893
23583	3893
23584	3955
23585	4158
23586	4158
23587	3904
23587	3904
23588	3904
23589	3904
23589	3904
23593	4084
23594	4084
23595	4084
23597	3938
23598	3938
23599	3820
23600	3800
23604	3877
23611	3859
23612	3859
23613	3856
23615	4094
23620	4153
23621	4153
23622	4153
23631	4011
23632	4011
23633	4011
23636	3781
23638	4012
23649	3802
23650	3802
23651	3802
23656	4153
23657	4153
23658	4153
23662	4027
23669	3855
23671	3552
23673	3895
23674	3895
23675	3895
23692	4075
23694	4076
23698	4143
23699	4143
23702	3911
23703	4082
23705	3826
23705	3826
23705	3826
23706	3826
23706	3826
23708	3800
23708	3800
23708	3800
23709	3800
23709	3800
23710	3800
23713	4301
23720	4159
23722	4109
23722	4232
23723	3885
23724	3885
23729	4109
23729	4232
23732	4181
23734	4105
23737	4181
23738	4211
23743	4097
23744	4097
23746	3841
23747	3841
23748	3841
23749	3841
23763	4096
23766	3817
23767	3817

WVA	BESER
NO	NO
23768	3890
23775	3569
23776	3568
23780	3764
23781	3764
23782	3764
23784	3574
23785	3574
23786	3574
23787	4119
23788	4119
23791	4208
23792	4208
23793	4346
23794	4346
23801	4096
23812	4276
23814	3933
23816	3825
23818	3817
23819	3817
23820	4208
23823	4152
23828	4222
23832	4042
23833	4042
23834	4074
23835	3841
23836	4013
23840	3921
23841	3921
23842	3790
23843	4138
23844	4042
23848	3915
23849	3915
23855	4003
23865	3912
23866	3912
23867	3912
23868	3831
23869	3831
23870	3831
23871	3933
23872	3933
23873	4269
23874	4269
23875	4269
23879	3900
23880	3900
23882	3842
23891	3959
23892	3959
23893	3959
23914	3905
23917	3834
23918	3834
23919	3835
23920	3835
23921	3914
23922	4210
23925	4210
23928	3910
23930	3849
23934	3850
23954	3820
23959	3987
23960	4240
23966	4028
23967	4111
23970	4017
23971	4017
23972	4017
23973	3983
23973	3983
23973	3983
23974	3951
23980	3795
23982	3826
23982	3826

WVA	BESER
NO	NO
23987	4028
23988	4028
23989	4105
23993	3979
23997	3979
24007	3923
24007	3923
24008	3924
24014	4106
24015	4106
24024	3891
24025	3891
24026	3891
24031	3961
24032	3961
24033	3961
24039	4303
24040	4303
24041	4303
24045	3875
24046	3889
24047	3889
24048	3889
24056	4074
24057	4074
24058	3979
24066	3892
24071	3894
24072	4173
24072	4173
24072	4173
24083	4031
24088	3933
24089	3598
24090	4109
24090	4232
24091	4109
24091	4232
24092	3978
24098	3945
24101	3820
24111	4030
24113	4030
24115	4030
24121	3956
24122	3956
24123	4161
24124	4161
24130	4099
24131	4099
24133	3940
24134	3939
24135	3946
24137	3853
24138	4173
24138	4173
24150	3984
24162	4137
24163	4018
24164	4198
24166	4006
24167	3976
24170	4207
24171	4207
24174	3940
24175	3939
24178	3978
24179	3978
24182	3886
24191	4293
24192	3944
24208	4249
24213	4159
24214	4159
24218	4001
24219	4001
24220	4001
24222	4081
24223	4081
24224	4081

WVA	BESER
NO	NO
24225	4081
24227	3952
24228	3952
24234	3976
24235	3976
24244	4277
24246	4118
24248	4118
24249	4118
24250	4016
24251	4016
24252	4016
24253	4247
24254	4247
24260	4058
24271	4213
24272	4213
24275	3968
24276	3969
24277	3985
24283	4122
24283	4122
24283	4122
24284	4122
24284	4122
24285	4122
24288	3826
24291	3765
24295	4309
24301	4000
24306	4248
24310	4249
24311	4249
24317	3880
24318	3880
24319	3880
24320	3980
24321	3980
24322	3980
24323	4113
24324	4113
24325	4113
24336	3953
24337	4077
24338	3949
24346	3929
24347	3958
24350	3948
24351	3960
24353	3988
24354	3988
24370	3886
24372	4036
24381	4186
24382	4186
24383	4186
24384	4186
24386	3996
24389	4078
24390	4078
24393	3827
24394	3996
24395	3996
24403	3983
24403	3983
24408	4259
24409	4259
24410	3968
24411	3968
24412	4149
24413	4149
24414	4149
24421	4150
24422	4150
24438	4220
24439	4220
24445	4219
24446	4219
24451	3958
24452	4255

WVA	BESER
NO	NO
24456	4249
24465	3820
24466	3922
24466	3922
24466	4171
24467	3922
24467	3922
24467	4171
24468	3981
24468	3981
24469	3981
24469	3981
24479	3969
24480	3969
24484	3906
24484	3906
24485	3920
24486	3907
24488	3989
24489	3989
24490	3989
24491	4165
24492	4165
24493	4165
24501	4039
24501	4039
24502	4039
24503	4039
24510	3976
24511	3976
24512	3976
24523	3982
24529	3975
24530	3975
24537	4157
24538	3964
24538	3964
24539	3964
24549	3800
24552	4310
24553	4309
24561	4325
24562	4325
24563	4135
24567	3903
24568	3960
24569	3960
24578	4151
24581	4242
24582	4029
24590	3956
24591	3956
24594	3886
24595	3886
24595	3972
24596	3972
24597	4035
24598	4035
24602	4004
24603	4004
24604	4005
24605	4005
24606	4260
24608	3972
24609	4035
24610	3954
24611	3954
24612	3954
24623	4162
24624	4162
24625	4162
24626	4022
24626	4190
24627	4022
24627	4190
24629	4029
24630	4029
24632	4038
24635	4156
24636	4156

WVA	BESER
NO	NO
24637	4156
24638	4160
24639	4160
24640	4160
24647	3797
24648	3797
24649	3797
24653	3997
24659	4291
24660	3970
24664	4037
24665	4037
24666	4037
24668	4147
24669	4147
24670	4215
24671	4215
24673	4141
24674	4141
24682	4015
24683	4015
24684	4015
24692	3967
24693	3966
24709	4134
24710	4134
24721	4310
24727	4121
24728	4121
24729	4121
24730	3748
24731	3748
24732	3748
24737	3984
24764	4173
24764	4173
24765	3971
24792	4022
24792	4190
24815	4189
24815	4189
24818	4188
24819	4188
24820	4142
24830	3899
24831	3899
24832	4033
24833	4033
24834	4033
24835	4032
24844	4098
24845	4098
24846	4098
24854	4258
24855	4258
24864	4073
24865	4073
24866	4073
24869	4326
24885	4146
24886	4146
24887	4146
24914	3964
24918	4256
24929	4147
24934	4061
24935	4061
24936	4061
24955	3816
25007	4309
25008	4241
25010	4241
25021	4314
25022	4314
25030	4107
25031	4230
25032	4230
25033	4230
25034	4008
25035	4008

WVA	BESER
NO	NO
25036	4008
25060	3927
25071	4335
25072	4335
25086	4228
25093	4220
25095	3826
25096	4014
25097	4014
25098	4014
25109	4336
25110	4336
25112	4057
25112	4242
25113	4057
25116	4233
25134	4204
25135	4204
25147	4056
25148	4056
25149	4124
25150	4124
25151	4124
25153	4060
25154	4060
25155	4060
25165	4056
25172	4132
25172	4172
25173	4132
25173	4172
25187	4049
25188	4049
25189	4049
25196	4339
25197	4339
25198	4339
25202	4038
25203	4314
25204	4314
25205	4039
25206	4039
25209	4167
25210	4167
25212	3853
25213	3853
25220	4145
25221	4145
25237	4123
25240	4324
25241	4324
25242	4324
25246	3998
25250	4201
25251	4201
25254	3952
25261	3983
25268	4337
25269	4337
25270	4337
25309	3916
25310	3916
25337	4311
25337	4343
25338	4311
25338	4343
25339	4311
25339	4343
25348	4136
25349	4136
25350	4136
25353	4349
25354	4349
25481	4254
25534	4334
25535	4334
25539	3949
25602	4174
25603	4175
25604	4175

WVA	BESER
NO	NO
25610	4019
25611	4019
25612	4019
25644	4233
25645	4233
25646	4233
25681	4200
25682	4200
25683	4228
25692	4342
25693	4342
25694	4342
25698	4176
25699	4176
25700	4176
25701	4309
25702	4140
25703	4140
25706	4313
25708	4166
25708	4342
25709	4166
25709	4342
25710	4166
25710	4342
25711	4335
25725	4315
25728	4140
25729	3983
25729	3983
25729	3983
25736	4226
25737	4226
25792	4312
25793	4312
25794	4312
25798	4270
25799	4270
25818	4286
25819	4286
25820	4286
25870	4002
25871	4002
25872	4002
25875	4317
25876	4317
25877	4317
25878	4318
25879	4318
25880	4318
25910	4308
25911	4308
25912	4308
25947	4279
25948	4279
25949	4279
25965	4283
25966	4283
25967	4283
25970	4282
25987	4224
25988	4224
29001	3749
29001	3749
29003	3749
29017	3433
29017	3433
29024	3433
29041	3523
29044	3707
29067	3773
29076	3614

WVA	BESER
NO	NO
29107	3749
29121	3575
29121	3575
29122	3994
29123	3823
29160	3942
29160	3942
29190	3926
29192	3925
29200	3962
29217	3963
29229	3965
29229	3965
29230	3965
29231	3995
29232	4092
29240	4054
29241	4054
29242	4216
29243	4216
29256	4169
29324	3390
29324	3521
29325	3390
29325	3390
29581	3315
29581	3515
29764	3521
29784	3513
29835	3679
29947	3537
20171	3481
20172	3481
25757	4041
25758	4041
25759	4041

ZIMMERMANN	BESER
NO	NO
200021502	3463
200111501	3320
200111851	3350
201621501	3873
201681601	3531
201681901	3551
202281501	3327
202611901	3986
202611902	3986
203411751	3339
203411751	3514
203441451	3661
203591801	3423
203801552	3526
203921501	3315
203921501	3515
204101501	3596
205471701	3623
205881651	3365
206291951	3573
206311801	3442
206691601	3649
206691901	3619
206751701	3572
206762001	3590
206871351	3611
206871551	3550
207411901	3440
207531801	3417
207721801	3503
207781961	3650
207801351	3746
207831801	3417
207831801	3417
208331751	3466
208611801	3419
208701501	3402
208871501	3486
208871502	3486
208871701	3585
208871702	3585
208871951	3444
208871952	3444
208891731	3441
208891752	3441
209051801	3380
209051803	3580
209061801	3487
209081801	3549
209261851	3482
209391501	3410
209411901	3408
209501802	3424
209611521	3529
209611601	3529
209611721	3529
209681751	3584
209681951	3564
209681952	3564
209731101	3496
209741101	3496
209791951	3605
209891751	3474
209951701	3578
210121501	3504
210121502	3502
210501551	3717
210501751	3717
210551801	3430
210891501	3583
210961501	3495
211001701	3432
211071201	3425
211401551	3469
211441651	3536
211531601	3628
211531751	3629
211711851	3464
211731701	3609
211901801	3470

ZIMMERMANN	BESER
NO	NO
211931802	3459
212021801	3589
212051901	3543
212091901	3457
212331651	3641
212771501	3449
212801601	4104
213011501	3630
213051551	3581
213121301	4212
213121302	4212
213471701	3760
213631601	3685
213681851	3733
213731701	3448
213851301	3642
213881801	3539
213941801	3558
213961801	3593
214111701	3736
214301701	3528
214361701	3608
214361702	3643
214361704	3643
214392001	3658
214461751	3631
214631802	3503
214681551	3777
214691901	3445
214701901	3473
214711751	3909
214711752	3909
214791901	3553
214791902	3553
214811551	3888
214821701	4078
214861901	3881
214861902	3881
214871701	3879
214871702	3879
214871709	3879
214951701	3426
214971801	3696
215001501	3882
215151751	3683
215191801	3453
215431601	3757
215431601	3857
215451551	3660
215461651	3562
215531401	4087
215611701	3779
215731401	3689
215762051	3567
215861501	4214
215921851	3670
216011751	3554
216011751	3651
216141751	3556
216211701	3678
216261551	4128
216311701	3819
216321601	3878
216341801	4020
216361901	3617
216471501	3622
216501501	3603
216501501	3604
216511751	3704
216541501	3522
216571652	3766
216641951	3677
216702001	3863
216702002	3863
216791501	3560
216911701	3656
216941651	3607
216971501	3686
217031501	4080
217061551	4108

ZIMMERMANN	BESER
NO	NO
217191501	4148
217241901	3750
217251701	3632
217541651	3832
217661351	3833
217911701	4086
217971951	3595
217991951	3559
218221801	4182
218401451	3688
218451651	3674
218482001	3506
218492001	3590
218611701	4062
218621801	3505
218621801	3615
218661501	3637
218661701	3566
218661951	3538
218751551	3887
218831951	3606
218851951	3794
218981551	3821
218981552	3821
219001551	3663
219041691	3680
219151701	4079
219191501	3676
219291751	3618
219451601	3896
219451951	3896
219451952	3896
219471551	3693
219741951	3682
219801801	3659
219821701	4059
219991601	4281
230031901	3799
230031902	3799
230041601	3577
230201801	3861
230211901	3804
230211902	3804
230222051	3681
230222052	3681
230431851	4197
230521651	3763
230611401	3511
230631731	3762
230701701	4125
230701702	4125
230701703	4125
230731901	3919
230761751	3918
230781601	4101
230781601	4209
230801501	3675
230941651	4115
230991801	3848
231031801	3570
231031801	3594
231241901	3636
231301951	3782
231311951	3782
231441951	3836
231541901	3754
231571601	4103
231571602	4103
231721801	3539
231781601	4110
231811751	3897
231831951	4347
231831959	4347
231891651	4069
231931651	4126
232021851	3877
232151801	3950
232241652	4345
232241653	4345
232251701	3846

ZIMMERMANN	BESER
NO	NO
232271801	3548
232271801	3690
232341701	3687
232381601	3778
232411601	3744
232451801	3852
232451802	3852
232691951	4095
232711751	4102
232711752	4102
232731801	3934
232771801	3935
232791851	4100
233001851	3722
233091701	4179
233122001	4180
233122002	4180
233122009	4180
233261751	3842
233261752	3842
233401701	4112
233461901	3644
233481651	3768
233531501	3755
233922001	3590
234001501	3602
234022001	4211
234022002	4211
234022003	4211
234071901	3854
234091901	3931
234171502	4040
234341851	3921
234401751	3801
234421651	4009
234821651	3853
234841701	3653
234881551	3892
234901501	3780
234971551	3901
235021601	4010
235071501	3928
235101601	3769
235151551	3874
235171601	4123
235211401	3788
235241751	3829
235271501	4155
235361601	3648
235431551	3993
235431552	3993
235521801	3790
235541501	3529
235571701	4093
235691701	3843
235691702	3843
235721401	3913
235771851	3921
235811901	4138
235811902	4138
235841601	3955
235851701	4158
235872001	3904
235931501	4084
235971801	3938
235991901	3820
235991902	3820
236001901	3800
236001902	3800
236131801	3856
236151751	4094
236201651	4153
236381851	4012
236491651	3802
236561401	4153
236691701	3855
236731501	3895
236941651	4076
236941652	4076
236941659	4076

ZIMMERMANN	BESER
NO	NO
236981701	4143
237051801	3826
237051802	3826
237061802	3826
237061803	3826
237081901	3800
237081902	3800
237091901	3800
237091902	3800
237201751	4159
237231801	3885
237291551	4109
237291551	4232
237321701	4181
237321709	4181
237341701	4105
237432001	4097
237461751	3841
237461851	3841
237632001	4096
237661751	3817
237681851	3890
237751801	3569
237761801	3568
237801701	3764
237912051	4208
237932001	4346
237932002	4346
237932009	4346
238161601	3825
238291701	4152
238322001	4042
238322002	4042
238361701	4013
238651801	3912
238681701	3831
238681702	3831
238711381	3933
238731601	4269
238791601	3900
238911701	3959
239141701	3905
239141702	3905
239171951	3834
239171952	3834
239191951	3835
239212001	3914
239252101	4210
239301801	3849
239301802	3849
239341801	3850
239541901	3820
239591751	3987
239591752	3987
239601751	4240
239661651	4028
239671551	4111
239701701	4017
239731651	3983
239731751	3983
239741751	3951
239801701	3795
239811901	3800
240072101	3923
240072102	3923
240072103	3923
240081851	3924
240101659	4076
240141551	4106
240241701	3891
240311751	3961
240461851	3889
240581551	3979
240581552	3979
240711451	3894
240721751	4173
240721752	4173
240721753	4173
240831901	4031
240921651	3978

ZIMMERMANN	BESER
NO	NO
240981701	3945
240981703	3945
241221901	3956
241221902	3956
241232001	4161
241331851	3940
241331852	3940
241342001	3939
241351801	3946
241371681	3853
241501751	3984
241501752	3984
241621501	4137
241701951	4207
241921751	3944
242221751	4081
242271601	3952
242461701	4118
242531751	4247
242601652	4058
242751651	3968
242761501	3969
242761502	3969
242771601	3985
242771602	3985
242831651	4122
242831751	4122
243062051	4248
243062052	4248
243062053	4248
243101901	4249
243171751	3880
243201551	3980
243201552	3980
243361751	3953
243371751	4077
243381551	3949
243461701	3929
243471801	3958
243511701	3960
244031751	3983
244121901	4149
244121902	4149
244211701	4150
244211702	4150
244211703	4150
244651901	3820
244651902	3820
244661901	3922
244661902	3922
244661903	3922
244661903	4171
244681901	3981
244681902	3981
244681903	3981
244841901	3906
244841902	3906
244851901	3920
244861701	3907
244881551	3989
245011701	4039
245101701	3976
245371601	4157
245371602	4157
245381851	3964
245531601	4309
245631651	4135
245702101	4092
245781651	4151
245781652	4151
245821851	4029
245951851	3972
245951852	3972
245971751	4035
246061751	4260
246101551	3954
246231802	4162
246321701	4038
246351601	4156
246381901	4160

ZIMMERMANN	BESER
NO	NO
246601801	3970
246601802	3970
246641601	4037
246641602	4037
246681901	4147
246921601	3967
246931851	3966
246931852	3966
247211701	4310
247272002	4121
247431901	4259
247651651	3971
247651652	3971
248201601	4142
248201602	4142
248851651	4146
249141801	3964
250081651	4241
250311851	4230
250311852	4230
250341851	4008
250341852	4008
250961651	4014
250961652	4014
251121801	4057
251341701	4204
251471801	4056
251531551	4060
251721801	4132
251721801	4172
252201851	4145
253371601	4311
253371602	4311
253481801	4136
253481802	4136
256021702	4174
256021703	4174
256031751	4175
256031752	4175
256821802	4200
256921802	4166
257021801	4140
257361801	4226
290012001	3749
290172301	3433
290172302	3433
290411851	3523
290672201	3773
290762001	3614
291212001	3575
291222201	3994
291232001	3823
291602001	3942
291901951	3926
291901952	3926
291922101	3925
292002051	3962
292172051	3963
292292101	3965
292292103	3965
292312301	3995
295811501	3315
295811501	3515
297841801	3513
298352201	3679
22087.185.1	4227
22103.160.2	4287
22117.160.1	4308
23692.165.1	4075
29044.200.1	3707