CATALOGUE/CATALOGO/КАТАЛОГ/قائمة مبوبة/KATALOG

Disk Fren Balata Disc Brake Pads

дисковых тормозные колодки Plaquettes De Freins

Bremsbelage Pastillas De Freno تيل فرامل

brake linings disc brake pads



DISK BRAKE PADS

DİSK BALATA PLAQUETTE

CERTIFIED IATF 16949:2016 COMPANY

ECE R90 APPROVED

BEŞER®

BEŞER®

Balatacılık San. ve Tic. A.Ş.

CATALOGUE/CATALOGO/КАТАЛОГ/قائمة مبوبة/KATALOG

BRAKE PAD ILLUSTRATIONS

CONTENTS

VEHICLE APPLICATION 1

BRAKE PAD ILLUSTRATIONS 625

MANUFACTURERS CROSS REFERENCE TABLE 673

CROSS REFERENCE 1165

VEHICLE APPLICATION

MAKE & MODEL   		KW	YEAR		
ABARTH					
RITMO (138A_)	125 TC 2.0	92	11/81 – 12/87	3329/1	
RITMO (138A_)	125 TC 2.0	92	11/81 – 12/87	3466	
RITMO (138A_)	125 TC 2.0	92	11/81 – 12/87	3468	
RITMO (138A_)	130 TC 2.0	96	04/83 – 12/87	3329/1	
RITMO (138A_)	130 TC 2.0	96	04/83 – 12/87	3466	
RITMO (138A_)	130 TC 2.0	96	04/83 – 12/87	3468	
ACURA					
INTEGRA Coupe	1.5	63	01/85 – 12/90	3582	4212
INTEGRA Coupe	1.6	74	01/85 – 12/90	3582	4212
INTEGRA Coupe	1.6 i	88	01/85 – 12/90	3582	4212
INTEGRA Hatchback	1.5	63	01/85 – 12/90	3582	4212
INTEGRA Hatchback	1.6	74	01/85 – 12/90	3582	4212
INTEGRA Hatchback	1.6 i	88	01/85 – 12/90	3582	4212
INTEGRA Saloon	1.5	63	01/85 – 12/90	3582	4212
INTEGRA Saloon	1.6	74	01/85 – 12/90	3582	4212
INTEGRA Saloon	1.6 i	88	01/85 – 12/90	3582	4212
LEGEND	2.0	107	01/88 – 08/91	3631	4148
LEGEND	2.0 Turbo	140	01/88 – 08/91	3631	4148
LEGEND	2.5	122	01/86 – 12/87	3631	4148
LEGEND	2.7	130	01/87 – 08/91	3631	4148
LEGEND Coupe	2.7	130	01/87 – 08/91	3631	4148
LEGEND II	3.2	151	08/91 – 08/96	3704	
LEGEND II Coupe	3.2	151	08/91 – 08/96	3704	
LEGEND III	3.5	151	08/96 -	3704	4148
MDX (YD1)	3.5 All-wheel Drive	179	03/01 – 12/05	3932	
MDX (YD1)	3.5 All-wheel Drive	186	08/05 – 09/06	3932	
MDX (YD1)	3.5 All-wheel Drive	193	08/00 – 12/05	3932	
MDX (YD2)	3.7 AWD	220	10/06 -	3932	
MDX (YD2)	3.7 AWD	224	10/06 -	3932	
MDX (YD2)	3.7 AWD	227	10/06 -	3932	
MDX (YD3)	3.5	216	11/13 -		4148
NSX	3.0	201	01/90 – 08/97	3704	
NSX	3.2	206	08/97 -	3704	
NSX	R 3.0	188	01/92 – 08/97	3704	
NSX Targa (NA1)	3.0	201	01/95 – 12/96	3704	
NSX Targa (NA1)	T 3.0	188	01/95 – 12/97	3704	
SLX	3.2 4WD	140	11/95 – 09/99	3743	3887
SLX	3.2 4WD	140	11/95 – 09/99	3674	
SLX	3.5 4WD	151	11/97 – 09/99	3743	3887
SLX	3.5 4WD	151	11/97 – 09/99	3674	
TL	3.2	168	10/98 – 09/03	4109	4148
TL	3.2	168	10/98 – 09/03	4232	
TL	3.2 Type S	191	06/01 – 09/03	4109	4148
TL	3.2 Type S	191	06/01 – 09/03	4232	
TL (UC_)	3.2	190	08/05 – 12/08	4109	
TL (UC_)	3.2	190	08/05 – 12/08	4232	
TL (UC_)	3.2 S	198	10/03 – 12/08	4109	
TL (UC_)	3.2 S	198	10/03 – 12/08	4232	
TL (UC_)	3.5	210	11/06 – 11/12	4109	
TL (UC_)	3.5	210	11/06 – 11/12	4232	
VIGOR	2.5	131	09/91 – 09/94		4148
VIGOR	2.5	140	09/91 – 09/94		4148
AIXAM					
400	0.4	4	06/00 – 08/02	3748	
500	0.5 (LGW 523)	15	09/03 – 07/05	3748	
500	0.5 (LWG 523)	15	09/03 – 07/05	3748	
A.721	0.4 D	4	01/05 -	3748	
A.741	0.4 D	4	01/05 -	3748	
A.751	0.5 (LGW 523)	15	07/05 – 03/10	3748	
A.751	0.5 (LWG 523)	15	07/05 – 03/10	3748	
A.751	0.5 D (Z 482)	10	01/05 -	3748	
ALFA ROMEO					
145 (930_)	1.4 i.e.	66	07/94 – 12/96	3466	
145 (930_)	1.4 i.e.	66	07/94 – 12/96	3468	
145 (930_)	1.6 i.e.	76	10/94 – 12/96	3466	
145 (930_)	1.6 i.e.	76	10/94 – 12/96	3468	
145 (930_)	1.7 i.e. 16V	95	10/94 – 12/96	3466	
145 (930_)	1.7 i.e. 16V	95	10/94 – 12/96	3468	
145 (930_)	1.8 i.e. 16V T.S.	103	12/96 – 12/98	3466	
145 (930_)	1.8 i.e. 16V T.S.	103	12/96 – 12/98	3468	
145 (930_)	1.9 JTD	77	02/99 – 01/01	3618	
145 (930_)	1.9 TD	66	10/94 – 02/99	3466	
145 (930_)	1.9 TD	66	10/94 – 02/99	3468	
146 (930_)	1.4 i.e.	66	12/94 – 12/96	3466	

MAKE & MODEL		KW	YEAR		
ALFA ROMEO					
146 (930_)	1.4 i.e.	66	12/94 – 12/96	3468	
146 (930_)	1.6 i.e.	76	12/94 – 12/96	3466	
146 (930_)	1.6 i.e.	76	12/94 – 12/96	3468	
146 (930_)	1.7 i.e. 16V	95	12/94 – 12/96	3466	
146 (930_)	1.7 i.e. 16V	95	12/94 – 12/96	3468	
146 (930_)	1.9 JTD	77	02/99 – 01/01	3618	
146 (930_)	1.9 TD	66	12/94 – 02/99	3466	
146 (930_)	1.9 TD	66	12/94 – 02/99	3468	
147 (937_)	1.6 16V T.SPARK (937AXB1A)	88	01/01 – 03/10		4123
147 (937_)	1.6 16V T.SPARK ECO (937AXA1A)	77	01/01 – 03/10		4123
147 (937_)	1.9 JTD	74	06/03 – 03/10		4123
147 (937_)	1.9 JTD (937AXD1A)	85	04/01 – 03/10		4123
147 (937_)	1.9 JTD 16V	93	09/03 – 09/04		4123
147 (937_)	1.9 JTD 16V	100	10/04 – 03/10		4123
147 (937_)	1.9 JTD 16V	103	11/02 – 03/10		4123
147 (937_)	1.9 JTDM	85	10/04 – 03/10		4123
147 (937_)	1.9 JTDM 16V	110	09/04 – 03/10		4123
147 (937_)	1.9 JTDM 16V	125	06/08 – 03/10		4123
147 (937_)	1.9 JTDM 8V	88	07/05 – 03/10		4123
147 (937_)	2.0	121	07/02 – 05/05		4123
147 (937_)	2.0 16V T.SPARK (937AXC1_)	110	01/01 – 03/10		4123
147 (937_)	3.2 GTA	184	02/03 – 03/10		4123
155 (167_)	1.6 16V T.S.	88	05/96 – 12/97	3466	
155 (167_)	1.6 16V T.S.	88	05/96 – 12/97	3468	
155 (167_)	1.7 T.S.	83	04/93 – 04/96	3466	
155 (167_)	1.7 T.S.	83	04/93 – 04/96	3468	
155 (167_)	1.7 T.S. (167.A4D, 167.A4H)	85	04/93 – 04/96	3466	
155 (167_)	1.7 T.S. (167.A4D, 167.A4H)	85	04/93 – 04/96	3468	
155 (167_)	1.7 T.S. 16V	103	05/96 – 12/97	3466	
155 (167_)	1.7 T.S. 16V	103	05/96 – 12/97	3468	
155 (167_)	1.8 T.S.	77	02/92 – 12/97	3466	
155 (167_)	1.8 T.S.	77	02/92 – 12/97	3468	
155 (167_)	1.8 T.S.	95	02/92 – 06/93	3466	
155 (167_)	1.8 T.S.	95	02/92 – 06/93	3468	
155 (167_)	1.8 T.S. Sport (167.A4A, 167.A4C, 167.A4E)	93	01/92 – 12/96	3466	
155 (167_)	1.8 T.S. Sport (167.A4A, 167.A4C, 167.A4E)	93	01/92 – 12/96	3468	
155 (167_)	1.9 TD (167.A3)	66	04/93 – 12/97	3466	
155 (167_)	1.9 TD (167.A3)	66	04/93 – 12/97	3468	
155 (167_)	2.0 T.S. (167.A2)	106	02/92 – 04/93	3466	
155 (167_)	2.0 T.S. (167.A2)	106	02/92 – 04/93	3468	
155 (167_)	2.0 T.S. (167.A2A)	104	02/92 – 02/95	3466	
155 (167_)	2.0 T.S. (167.A2A)	104	02/92 – 02/95	3468	
155 (167_)	2.0 T.S. 16V (167.A2G)	110	03/95 – 12/97	3466	
155 (167_)	2.0 T.S. 16V (167.A2G)	110	03/95 – 12/97	3468	
156 (932_)	1.6 16V T.SPARK	82	09/97 – 09/05		4123
156 (932_)	1.6 16V T.SPARK (932A4)	88	09/97 – 09/05		4123
156 (932_)	1.8 16V T.SPARK (932A31)	103	10/00 – 09/05		4123
156 (932_)	1.9 JTD	93	11/03 – 09/05		4123
156 (932_)	1.9 JTD	100	11/02 – 11/04		4123
156 (932_)	1.9 JTD	110	07/04 – 09/05		4123
156 (932_)	1.9 JTD (932A2B, 932A2C)	85	05/01 – 09/05		4123
156 (932_)	1.9 JTD 16V	103	11/02 – 09/05		4123
156 (932_)	2.0 16V T.SPARK (932A21)	110	10/00 – 03/02		4123
156 (932_)	2.0 JTS (932AXA)	122	03/02 – 09/05		4123
156 (932_)	2.4 JTD	120	06/03 – 09/05		4123
156 (932_)	2.4 JTD	129	10/03 – 09/05		4123
156 (932_)	2.4 JTD (932A1B)	103	10/00 – 09/05		4123
156 (932_)	2.4 JTD (932AXC)	110	03/02 – 09/05		4123
156 (932_)	2.5 V6 24V (932A11_)	141	10/00 – 09/05		4123
156 (932_)	3.2 GTA (932AXB)	184	03/02 – 09/05		4123
156 Sportwagon (932_)	1.6 16V T.SPARK	82	01/00 – 09/05		4123
156 Sportwagon (932_)	1.6 16V T.SPARK. (932A4)	88	05/00 – 05/06		4123
156 Sportwagon (932_)	1.8 16V T.SPARK (932B31)	103	10/00 – 05/06		4123
156 Sportwagon (932_)	1.9 JTD	93	11/03 – 05/06		4123
156 Sportwagon (932_)	1.9 JTD	100	11/02 – 11/04		4123
156 Sportwagon (932_)	1.9 JTD	110	03/05 – 05/06		4123
156 Sportwagon (932_)	1.9 JTD (932B2B, 932B2C)	85	05/01 – 05/06		4123
156 Sportwagon (932_)	1.9 JTD 16V	103	11/02 – 05/06		4123
156 Sportwagon (932_)	1.9 JTD 16V Q4	110	07/04 – 05/06		4123
156 Sportwagon (932_)	2.0 16V T.SPARK (932B21)	110	10/00 – 03/02		4123
156 Sportwagon (932_)	2.0 JTS	119	03/02 – 05/06		4123
156 Sportwagon (932_)	2.0 JTS (932BXA)	122	03/02 – 05/06		4123
156 Sportwagon (932_)	2.4 JTD	120	06/03 – 05/06		4123
156 Sportwagon (932_)	2.4 JTD	129	10/03 – 05/06		4123
156 Sportwagon (932_)	2.4 JTD (932B1B)	103	10/00 – 05/06		4123
156 Sportwagon (932_)	2.4 JTD (932BXC)	110	03/02 – 05/06		4123

MAKE & MODEL		KW	YEAR		
ALFA ROMEO					
156 Sportwagon (932_)	2.5 V6 24V (932B11_)	141	10/00 – 05/06		4123
156 Sportwagon (932_)	3.2 GTA (932BXB)	184	03/02 – 05/06		4123
164 (164_)	2.0	102	06/87 – 09/98		3536
164 (164_)	2.0	105	11/87 – 10/92		3536
164 (164_)	2.0 T.S. (164.A2C, 164.A2L)	170	03/95 – 08/97		3536
164 (164_)	2.0 T.S. (164.A2H)	109	06/87 – 12/90		3536
164 (164_)	2.0 T.S. (164.H3)	106	09/92 – 09/98		3536
164 (164_)	2.0 Turbo	128	10/87 – 09/98		3536
164 (164_)	2.0 Turbo	129	02/88 – 10/92		3536
164 (164_)	2.0 Turbo	152	07/90 – 10/92		3536
164 (164_)	2.0 Twin Spark	105	07/90 – 10/92		3536
164 (164_)	2.0 Twin Spark	109	06/87 – 06/90		3536
164 (164_)	2.0 V6 Turbo (164.A2G, 164.A2F)	150	03/91 – 09/92		3536
164 (164_)	2.0 V6 Turbo (164.K3)	148	09/92 – 09/98		3536
164 (164_)	2.5 TD (164.A1A)	84	06/87 – 09/92		3536
164 (164_)	2.5 TD (164.K2A, 164.K2B)	92	09/92 – 09/98		3536
164 (164_)	2.5 V6	120	09/92 – 09/98		3536
164 (164_)	3.0	105	06/87 – 09/92		3536
164 (164_)	3.0	138	11/87 – 09/91		3536
164 (164_)	3.0	145	10/94 – 08/97		3536
164 (164_)	3.0	156	09/93 – 12/95		3536
164 (164_)	3.0	157	03/95 – 10/97		3536
164 (164_)	3.0	168	04/93 – 02/95		3536
164 (164_)	3.0 24V	154	03/95 – 10/97		3536
164 (164_)	3.0 24V (164.K1)	155	09/92 – 09/98		3536
164 (164_)	3.0 24V QV (164.H1)	171	09/92 – 09/98		3536
164 (164_)	3.0 i.e. QV (164.AG)	147	09/90 – 09/92		3536
164 (164_)	3.0 V6 (164.A)	141	06/87 – 09/92		3536
164 (164_)	3.0 V6 (164.AD, 164.AH,164.AB)	135	06/87 – 09/92		3536
164 (164_)	3.0 V6 (164.H1A, 164.H1B,164.K1P)	132	09/92 – 09/98		3536
166 (936_)	2.0 T.Spark (936A3A_)	114	09/98 – 10/00	3617	
166 (936_)	2.0 T.Spark (936A3B_)	110	10/00 – 06/07	3617	
166 (936_)	2.4 JTD	110	04/02 – 06/07	3617	
166 (936_)	2.4 JTD	120	10/03 – 06/07	3617	
166 (936_)	2.4 JTD (936A2A_)	100	09/98 – 10/00	3617	
166 (936_)	2.4 JTD (936A2B_)	103	10/00 – 06/07	3617	
6 (119_)	2.0	99	07/81 – 12/86	3331/1	
6 (119_)	2.5 i.e.	116	04/79 – 06/84	3331/1	
6 (119_)	2.5 i.e. (119.AA, 119.AB)	110	10/83 – 12/86	3331/1	
6 (119_)	2.5 TD	77	07/81 – 05/86	3331/1	
ALFASUD (902.A)	1.3 (AR 30184)	55	09/76 – 12/81	3325	
ALFASUD (902.A)	1.4 (AR 30164)	55	05/78 – 02/80	3325	
ALFASUD (902.A)	1.4 (AR 30168)	63	07/79 – 12/89	3325	
ALFASUD (902.A)	1.5 (AR 30124)	61	05/78 – 12/81	3325	
ALFASUD (902.A)	1.5 (AR 30128)	70	07/79 – 01/87	3325	
ALFASUD (902.A)	1.5 (AR 30146)	77	01/83 – 12/88	3325	
ALFASUD (902.A)	1.5 Veloce (AR 30146)	75	01/80 – 12/89	3325	
ALFETTA (116_)	1.6 (116.B1A)	79	01/75 – 12/84	3318	
ALFETTA (116_)	1.8	85	07/74 – 12/77	3318	
ALFETTA (116_)	1.8	89	10/79 – 12/84	3318	
ALFETTA (116_)	1.8 (116.B2)	90	10/79 – 12/84	3318	
ALFETTA (116_)	2.0 (116.55F, 116.56F,116.55N, 116.56N)	97	07/78 – 12/84	3318	
ALFETTA (116_)	2.0 (116.55G, 116.56G)	89	03/77 – 02/80	3318	
ALFETTA (116_)	2.0 TD (116.BA)	60	10/79 – 03/83	3318	
ALFETTA GT (116_)	1.6	79	01/76 – 09/82	3318	
ALFETTA GT (116_)	1.8	85	01/74 – 12/76	3318	
ALFETTA GT (116_)	1.8	89	01/74 – 12/76	3318	
ALFETTA GT (116_)	2.0	89	07/78 – 01/86	3318	
ALFETTA GT (116_)	2.0	96	06/77 – 12/84	3318	
AR 6 Box (280_)	1.9 D	51	04/85 – 12/89	3440	
AR 6 Box (280_)	2.4 D	53	04/78 – 08/86	3423	
AR 6 Box (280_)	2.4 D	53	04/85 – 02/86	3440	
AR 6 Bus (280_)	2.4 TD	68	09/86 – 12/89	3440	
AR 8 Box (280_)	2.4 TD	68	04/85 – 12/89	3423	
AR 8 Box (280_)	2.4 TD	68	04/85 – 12/89	3423/1	
AR 8 Box (280_)	2.4 TD	68	04/85 – 12/89	3523	
AR 8 Box (280_)	2.4 TD	68	04/85 – 12/89	3524	
AR 8 Box (280_)	2.5 D	55	03/86 – 12/89	3440	
AR 8 Box (280_)	2.5 D	55	09/86 – 12/89	3423	
AR 8 Box (280_)	2.5 D	55	09/86 – 12/89	3423/1	
AR 8 Box (280_)	2.5 D	55	09/86 – 12/89	3523	
AR 8 Box (280_)	2.5 D	55	09/86 – 12/89	3524	
AR 8 Platform/Chassis (280_)	2.4 D	53	04/78 – 08/86	3423	
AR 8 Platform/Chassis (280_)	2.4 TD	68	04/85 – 12/88	3423	
AR 8 Platform/Chassis (280_)	2.5 D	55	09/86 – 12/89	3423	
AR 8 Platform/Chassis (280_)	2.5 D	55	09/86 – 12/89	3423/1	

MAKE & MODEL   		KW	YEAR		
ALFA ROMEO					
AR 8 Platform/Chassis (280_)	2.5 D	55	09/86 – 12/89	3523	
AR 8 Platform/Chassis (280_)	2.5 D	55	09/86 – 12/89	3524	
GIULIA (105_)	1.8 D	38	06/76 – 12/78	3318	3326
GIULIA (105_)	1300 Super (115)	64	01/74 – 12/78	3318	3326
GIULIA (105_)	1300 TI (105,39)	62	04/69 – 07/75	3318	3326
GIULIA (105_)	1600 Super (105,14)	71	06/64 – 08/69	3318	3326
GIULIA (105_)	1600 Super (115)	76	01/74 – 12/78	3318	3326
GIULIETTA (116_)	1.3 (116.44A)	66	10/77 – 06/83	3318	
GIULIETTA (116_)	1.6 (116.50B)	79	10/77 – 04/85	3318	
GIULIETTA (116_)	1.8 (116.AA, 116.AB)	90	04/79 – 04/85	3318	
GIULIETTA (116_)	2.0 (116.A1A)	96	06/80 – 04/85	3318	
GIULIETTA (116_)	2.0 TD	61	01/83 – 12/85	3318	
GT (105_)	1300 Junior (105)	64	01/66 – 12/77	3318	3326
GT (105_)	1600 (105)	75	03/63 – 12/66	3318	3326
GT (105_)	1600 (105)	80	01/66 – 12/68	3318	3326
GT (105_)	1600 (115)	76	09/72 – 12/77	3318	3326
GT (105_)	1600 (115)	80	06/71 – 12/77	3318	3326
GT (105_)	A 1600 (105)	83	01/65 – 12/70	3318	3326
GT (105_)	V 1750 (105)	83	01/67 – 12/72	3318	3326
GT (105_)	V 2000 (105)	96	01/71 - 12/77	3320	3326
GT (105_)	V 2000 (105)	96	01/71 – 12/77	3350	
GT (937_)	1.8 TS	103	11/03 – 09/10		4123
GT (937_)	1.9 JTD	110	11/03 – 09/10		4123
GT (937_)	1.9 JTD	125	05/08 – 09/10		4123
GT (937_)	2.0 JTS	119	12/06 – 09/10		4123
GT (937_)	2.0 JTS	121	11/03 – 09/10		4123
GT (937_)	3.2 GTA	176	11/03 – 09/10		4123
GTV (116_)	2.0	96	07/78 – 01/86	3318	
MONTREAL (105_)	2.6 (105,64)	143	12/72 – 03/79	3320	3326
MONTREAL (105_)	2.6 (105,64)	143	12/72 – 03/79	3350	
SPIDER (105_)	1300	64	01/68 – 12/77	3318	3326
SPIDER (105_)	1750	83	01/67 – 12/71	3320	3326
SPIDER (105_)	1750	83	01/67 – 12/71	3350	
SPIDER (105_)	2000	96	01/71 – 12/77	3320	3326
SPIDER (105_)	2000	96	01/71 – 12/77	3350	
SPIDER (115_)	1600	76	03/76 – 12/90	3318	3326
SPIDER (115_)	1600	79	01/90 – 12/93	3318	3326
SPIDER (115_)	1600	80	03/71 – 12/79	3318	3326
SPIDER (115_)	2000	85	08/86 – 12/90	3320	3326
SPIDER (115_)	2000	85	08/86 – 12/90	3350	
SPIDER (115_)	2000	88	01/90 – 12/93	3320	3326
SPIDER (115_)	2000	88	01/90 – 12/93	3350	
SPIDER (115_)	2000	92	08/86 – 12/90	3320	3326
SPIDER (115_)	2000	92	08/86 – 12/90	3350	
SPIDER (115_)	2000 Veloce	93	01/77 – 12/93	3320	3326
SPIDER (115_)	2000 Veloce	93	01/77 – 12/93	3350	
SPIDER (916_)	2.0 T.SPARK 16V (916S2C00)	110	06/95 – 04/05	3466	
SPIDER (916_)	2.0 T.SPARK 16V (916S2C00)	110	06/95 – 04/05	3468	
ALPINA					
610	3.0 TURBO	184	01/91 – 04/95	3492	
610	3.0 TURBO	184	01/91 – 04/95	3493	
B7 III (E65)	4.4 (N62B44A19)	368	12/03 – 06/08		4179
ALPINE					
A610	3.0 TURBO	184	01/91 – 04/95	3431	
A610	3.0 TURBO	184	01/91 – 04/95	3503	
A610	3.0 TURBO	184	01/91 – 04/95	3587	
A610	3.0 TURBO	184	01/91 – 04/95	3494	
B10 (E39)	4.6 V8	250	12/96 – 10/98	3881	3656
B10 (E39)	4.6 V8	255	10/98 – 09/02	3881	3656
B10 Estate (E39)	4.6 V8	250	01/97 – 10/98	3881	3656
B10 Estate (E39)	4.6 V8	255	10/98 – 09/02	3881	3656
ROADSTER (Z8)	4.8 V8	280	06/02 – 10/03		3879
V6	2.5 TURBO	136	01/85 – 12/90	3431	
V6	2.5 TURBO	136	01/85 – 12/90	3442	
V6	2.5 TURBO	136	01/85 – 12/90	3503	
V6	2.5 TURBO	147	01/88 – 12/90	3431	
V6	2.5 TURBO	147	01/88 – 12/90	3503	
V6	2.9 GT	116	01/85 – 12/90	3431	
V6	2.9 GT	116	01/85 – 12/90	3442	
V6	2.9 GT	116	01/85 – 12/90	3503	
V6	TURBO	147	01.1988 - 12.1990	3503/1	
V6	GT	116	01.1985 - 12.1990	3503/1	
V6	TURBO	136	01.1985 - 12.1990	3503/1	

MAKE & MODEL		KW	YEAR		
ASIA MOTORS					
MOTORS LCV Hi-Topic (AM715) 44379 D RWD	SS	55	06/1993 - 12/1999	3914/1	
HI-TOPIC AM 725	2.7 15 STD	51	01/98 – 12/99	3574	
HI-TOPIC AM 725	2.7 D Rear Wheel Drive	55	06/93 – 12/99	3574	
RETONA Closed Off-Road Vehicle	2.0	94	06/95 – 06/00	4009	
RETONA Closed Off-Road Vehicle	2.0	100	06/95 – 06/00	4009	
RETONA Closed Off-Road Vehicle	2.0 TD	61	06/95 – 06/00	4009	
TOWNER Box (AS_)	0.8	33	07/92 – 12/02	3746	
TOWNER Bus (AS_)	0.8	33	07/92 – 12/02	3746	
ASTON MARTIN					
CYGNET	1.3	72	04/11 – 10/13		3954
DBS II	5.9 V12	380	09/07-	3370	
LAGONDA I	5.3	250	01/76 – 12/97	3455	
LAGONDA I	5.3	250	01/76 – 12/97	3471	
LAGONDA I Estate	5.3	228	01/76 – 12/97	3455	
LAGONDA I Estate	5.3	228	01/76 – 12/97	3471	
V8 Convertible	5.3	250	01/78 – 12/89	3455	
V8 Convertible	5.3	250	01/78 – 12/89	3471	
V8 Convertible	5.3	276	01/78 – 12/89	3455	
V8 Convertible	5.3	276	01/78 – 12/89	3471	
V8 Coupe	5.3	250	01/69 – 12/89	3455	
V8 Coupe	5.3	250	01/69 – 12/89	3471	
V8 Coupe	5.3	376	01/69 – 12/89	3455	
V8 Coupe	5.3	376	01/69 – 12/89	3471	
VIRAGE Convertible	5.3	246	09/90 – 12/95	3455	
VIRAGE Convertible	5.3	246	09/90 – 12/95	3471	
VIRAGE Convertible	5.3	261	01/97 – 12/00	3455	
VIRAGE Convertible	5.3	261	01/97 – 12/00	3471	
VIRAGE Coupe	5.3	246	01/88 – 12/92	3455	
VIRAGE Coupe	5.3	246	01/88 – 12/92	3471	
VIRAGE Coupe	5.3	410	10/92 – 10/00	3455	
VIRAGE Coupe	5.3	410	10/92 – 10/00	3471	
VIRAGE Estate	5.3	246	01/93 – 12/95	3455	
VIRAGE Estate	5.3	246	01/93 – 12/95	3471	
VIRAGE Limited Edition	5.3	246	01/95 – 12/95	3455	
VIRAGE Limited Edition	5.3	246	01/95 – 12/95	3471	
VIRAGE Saloon	5.3	246	01/94 – 12/95	3455	
VIRAGE Saloon	5.3	246	01/94 – 12/95	3471	
AUDI					
(FAW) A3 (85S, 85M) 35 TFSI	CSS	110	09/2014 -	4228/1	
(FAW) A3 Sportback (85A, 85F) 35 TFSI	CSSA, DBW	110	09/2014 -	4228/1	
100 (43, C2)	1.6	63	08/76 – 07/82	3378	
100 (43, C2)	1.6	63	08/76 – 07/82	3490	
100 (43, C2)	1.9	74	08/80 – 07/82	3378	
100 (43, C2)	1.9	74	08/80 – 07/82	3490	
100 (43, C2)	2.0	85	06/76 – 08/78	3378	
100 (43, C2)	2.0	85	06/76 – 08/78	3490	
100 (43, C2)	2.0 D	51	08/78 – 07/82	3378	
100 (43, C2)	2.0 D	51	08/78 – 07/82	3490	
100 (43, C2)	2.1	85	10/77 – 07/82	3378	
100 (43, C2)	2.1	85	10/77 – 07/82	3490	
100 (44, 44Q, C3)	1.8	55	08/82 – 12/87	3619	3536
100 (44, 44Q, C3)	1.8	65	02/86 – 07/88	3619	3536
100 (44, 44Q, C3)	1.8	66	08/83 – 07/89	3619	3536
100 (44, 44Q, C3)	1.8 CAT	66	03/85 – 11/90	3619	3536
100 (44, 44Q, C3)	1.8 quattro	65	08/86 – 07/90	3619	3536
100 (44, 44Q, C3)	1.8 quattro	66	10/84 – 07/88	3619	3536
100 (44, 44Q, C3)	1.8 quattro CAT	66	08/85 – 11/90	3619	3536
100 (44, 44Q, C3)	1.9	74	08/82 – 07/84	3619	3536
100 (44, 44Q, C3)	2.0	83	08/86 – 11/87	3619	3536
100 (44, 44Q, C3)	2.0	85	08/84 – 12/87	3619	3536
100 (44, 44Q, C3)	2.0 CAT	85	01/88 – 11/90	3619	3536
100 (44, 44Q, C3)	2.0 D	51	08/82 – 07/88	3619	3536
100 (44, 44Q, C3)	2.0 D Turbo	64	08/82 – 02/88	3619	3536
100 (44, 44Q, C3)	2.0 D Turbo	74	03/88 – 11/90	3619	3536
100 (44, 44Q, C3)	2.1	100	08/82 – 07/84	3619	3536
100 (44, 44Q, C3)	2.2	79	08/82 – 07/84	3619	3536
100 (44, 44Q, C3)	2.2	85	10/84 – 09/86	3619	3536
100 (44, 44Q, C3)	2.2	96	08/82 – 07/84	3619	3536
100 (44, 44Q, C3)	2.2	101	08/84 – 12/88	3619	3536
100 (44, 44Q, C3)	2.2 CAT	101	06/89 – 11/90	3619	3536
100 (44, 44Q, C3)	2.2 E quattro	88	08/85 – 07/86	3619	3536
100 (44, 44Q, C3)	2.2 E Turbo quattro	121	08/86 – 11/90		3536
100 (44, 44Q, C3)	2.2 quattro	101	08/84 – 12/88	3619	3536
100 (44, 44Q, C3)	2.2 quattro CAT	101	06/89 – 11/90	3619	3536

MAKE & MODEL		KW	YEAR		
AUDI					
100 (44, 44Q, C3)	2.2 Turbo	121	08/86 – 11/90		3536
100 (44, 44Q, C3)	2.3 E	98	01/90 – 11/90	3619	3536
100 (44, 44Q, C3)	2.3 E	100	10/86 – 11/90	3619	3536
100 (44, 44Q, C3)	2.3 E quattro	100	08/86 – 11/90	3619	3536
100 (44, 44Q, C3)	2.3 quattro	98	01/90 – 11/90	3619	3536
100 (44, 44Q, C3)	2.4 D	60	08/89 – 07/91	3619	3536
100 (44, 44Q, C3)	2.5 TDI	88	01/90 – 11/90		3536
100 (4A, C4)	2.0	74	12/90 – 06/94		3536
100 (4A, C4)	2.0 E	85	12/90 – 06/94		3536
100 (4A, C4)	2.0 E 16V	103	01/92 – 06/94		3536
100 (4A, C4)	2.0 E 16V quattro	103	07/92 – 06/94		3536
100 (4A, C4)	2.0 E quattro	85	12/90 – 07/92		3536
100 (4A, C4)	2.3 E	98	12/90 – 06/94		3536
100 (4A, C4)	2.3 E quattro	98	12/90 – 06/94		3536
100 (4A, C4)	2.4 D	60	12/90 – 06/94		3536
100 (4A, C4)	2.5 TDI	85	12/90 – 06/94		3536
100 (4A, C4)	2.6	102	07/93 – 06/94		3536
100 (4A, C4)	2.6	110	03/92 – 06/94		3536
100 (4A, C4)	2.6 quattro	110	04/92 – 06/94		3536
100 (4A, C4)	2.8 E	128	12/90 – 06/94		3536
100 (4A, C4)	2.8 E quattro	128	12/90 – 06/94		3536
100 (4A, C4)	S4 Turbo quattro	169	08/91 – 06/94		3536
100 (4A, C4)	S4 V8 quattro	206	10/92 – 06/94		3536
100 (C1)	1.6	63	01/75 – 07/76	3327	
100 (C1)	1.6	63	01/75 – 07/76	3483	
100 (C1)	1.6	63	09/71 – 07/74	3343	
100 (C1)	1.6 (YM)	63	01.75 – 07.76	3344	
100 (C1)	1.8	63	01/75 – 07/76	3343	
100 (C1)	1.8	63	09/71 – 07/74	3327	
100 (C1)	1.8	63	09/71 – 07/74	3483	
100 (C1)	1.8	74	10/70 – 07/76	3327	
100 (C1)	1.8	74	10/70 – 07/76	3343	
100 (C1)	1.8	74	10/70 – 07/76	3483	
100 (C1)	1.8 (ZU)	63	09/71 – 07/74	3344	
100 (C1)	1.8 (ZV)	59	11/68 – 11/71	3344	
100 (C1)	1.8 (ZX)	66	11/68 – 11/71	3344	
100 (C1)	1.8 (ZZ)	74	10/70 – 07/76	3344	
100 (C1)	1.9		09/70 -	3344	
100 (C1)	1.9 (ZJ)	82	08/71 – 12/76	3344	
100 (C1)	1.9 (ZJ)	82	09/71 – 07/76	3344	
100 (C1)	1.9 (ZP)	85	07/70 – 07/71	3344	
100 (C1) Coupe	1.9 (ZJ)	82	08/71 – 12/76	3313	
100 (C1) Coupe	1.9 (ZP)	85	07/70 – 07/71	3313	
100 (C1) Sedan	1.6 (YM)	63	01/75 – 07/76	3313	
100 (C1) Sedan	1.8 (ZZ)	74	10/70 – 07/76	3313	
100 (C1) Sedan	1.8 (ZU)	63	09/71 – 07/74	3313	
100 (C1) Sedan	1.8 (ZV)	59	11/68 – 11/71	3313	
100 (C1) Sedan	1.8 (ZX)	66	11/68 – 11/71	3313	
100 (C1) Sedan	1.9		09/70 -	3313	
100 (C1) Sedan	1.9 (ZJ)	82	09/71 – 07/76	3313	
100 Avant (43, C2)	1.6	63	07/77 – 02/83	3378	
100 Avant (43, C2)	1.6	63	07/77 – 02/83	3490	
100 Avant (43, C2)	1.9	74	08/80 – 07/82	3378	
100 Avant (43, C2)	1.9	74	08/80 – 07/82	3490	
100 Avant (43, C2)	2.0	85	08/77 – 07/80	3378	
100 Avant (43, C2)	2.0	85	08/77 – 07/80	3490	
100 Avant (43, C2)	2.0 D	51	08/78 – 02/83	3378	
100 Avant (43, C2)	2.0 D	51	08/78 – 02/83	3490	
100 Avant (43, C2)	2.1	85	07/77 – 02/83	3378	
100 Avant (43, C2)	2.1	85	07/77 – 02/83	3490	
100 Avant (44, 44Q, C3)	1.8	55	08/82 – 12/87	3619	3536
100 Avant (44, 44Q, C3)	1.8	65	02/86 – 07/90	3619	3536
100 Avant (44, 44Q, C3)	1.8	66	08/83 – 07/89	3619	3536
100 Avant (44, 44Q, C3)	1.8 CAT	66	03/85 – 11/90	3619	3536
100 Avant (44, 44Q, C3)	1.8 quattro	65	08/86 – 07/90	3619	3536
100 Avant (44, 44Q, C3)	1.8 quattro	66	10/84 – 07/88	3619	3536
100 Avant (44, 44Q, C3)	1.8 quattro CAT	66	08/85 – 10/90	3619	3536
100 Avant (44, 44Q, C3)	1.9	74	02/83 – 07/84	3619	3536
100 Avant (44, 44Q, C3)	2.0	83	09/86 – 11/87	3619	3536
100 Avant (44, 44Q, C3)	2.0 D	51	03/83 – 11/90	3619	3536
100 Avant (44, 44Q, C3)	2.0 E	85	01/85 – 12/87	3619	3536
100 Avant (44, 44Q, C3)	2.0 E CAT	85	01/88 – 11/90	3619	3536
100 Avant (44, 44Q, C3)	2.0 TD	64	03/83 – 10/87	3619	3536
100 Avant (44, 44Q, C3)	2.0 TD	74	03/88 – 11/90	3619	3536
100 Avant (44, 44Q, C3)	2.1	96	08/82 – 07/84	3619	3536
100 Avant (44, 44Q, C3)	2.1	100	08/82 – 07/84	3619	3536

MAKE & MODEL			KW	YEAR		
AUDI						
100 Avant (44, 44Q, C3)	2.2		85	10/84 – 09/86	3619	3536
100 Avant (44, 44Q, C3)	2.2		101	08/84 – 12/88	3619	3536
100 Avant (44, 44Q, C3)	2.2 CAT		101	06/89 – 11/90	3619	3536
100 Avant (44, 44Q, C3)	2.2 E quattro		88	08/85 – 07/86	3619	3536
100 Avant (44, 44Q, C3)	2.2 quattro		101	08/84 – 12/88	3619	3536
100 Avant (44, 44Q, C3)	2.2 quattro CAT		101	06/89 – 11/90	3619	3536
100 Avant (44, 44Q, C3)	2.2 Turbo		121	08/86 – 11/90		3536
100 Avant (44, 44Q, C3)	2.2 Turbo quattro		121	08/86 – 11/90		3536
100 Avant (44, 44Q, C3)	2.3		98	03/90 – 11/90	3619	3536
100 Avant (44, 44Q, C3)	2.3		100	08/86 – 11/90	3619	3536
100 Avant (44, 44Q, C3)	2.3 E quattro		100	08/86 – 11/90	3619	3536
100 Avant (44, 44Q, C3)	2.3 quattro		98	01/90 – 11/90	3619	3536
100 Avant (44, 44Q, C3)	2.4 D		60	08/89 – 11/90	3619	3536
100 Avant (44, 44Q, C3)	2.5 TDI		88	01/90 – 11/90		3536
100 Avant (4A, C4)	2.0 E		74	09/91 – 06/94		3536
100 Avant (4A, C4)	2.0 E		85	09/91 – 06/94		3536
100 Avant (4A, C4)	2.0 E 16V		103	07/92 – 06/94		3536
100 Avant (4A, C4)	2.0 E 16V quattro		103	07/92 – 06/94		3536
100 Avant (4A, C4)	2.0 E quattro		85	12/90 – 07/92		3536
100 Avant (4A, C4)	2.3 E		98	09/91 – 06/94		3536
100 Avant (4A, C4)	2.3 E quattro		98	09/91 – 06/94		3536
100 Avant (4A, C4)	2.4 D		60	12/90 – 06/94		3536
100 Avant (4A, C4)	2.5 TDI		85	12/90 – 06/94		3536
100 Avant (4A, C4)	2.6		102	07/93 – 06/94		3536
100 Avant (4A, C4)	2.6		110	03/92 – 06/94		3536
100 Avant (4A, C4)	2.6 E quattro		102	08/93 – 07/94		3536
100 Avant (4A, C4)	2.6 quattro		110	07/92 – 06/94		3536
100 Avant (4A, C4)	2.8 E		128	09/91 – 06/94		3536
100 Avant (4A, C4)	2.8 E quattro		128	09/91 – 06/94		3536
100 Avant (4A, C4)	S4 Turbo quattro		169	09/91 – 06/94		3536
100 Avant (4A, C4)	S4 V8 quattro		206	10/92 – 06/94		3536
100 II (43, C2) 44198	WC (10.79-07.82), WG, WK		100	03/1977 - 07/1982	3650	
100 II Avant (43, C2) 44198	WC (10.79-02.83), WG		100	07/1977 - 02/1983	3650	
200 (43)	2.1 5E		100	10/79 – 09/82	3619	3536
200 (43)	2.1 5T		125	10/79 – 08/82	3619	3536
200 (44, 44Q)	2.1 5E		100	08/83 – 07/84	3619	3536
200 (44, 44Q)	2.1 Turbo		134	08/83 – 01/88	3619	3536
200 (44, 44Q)	2.1 Turbo quattro		134	08/83 – 09/86	3619	3536
200 (44, 44Q)	2.2		101	08/84 – 07/85	3619	3536
200 (44, 44Q)	2.2 20V Turbo quattro		162	03/89 – 12/90		3536
200 (44, 44Q)	2.2 Turbo		121	08/85 – 09/91	3619	3536
200 (44, 44Q)	2.2 Turbo		140	02/88 – 12/90		3536
200 (44, 44Q)	2.2 Turbo		147	02/88 – 12/90		3536
200 (44, 44Q)	2.2 Turbo quattro		121	01/85 – 12/91	3619	3536
200 (44, 44Q)	2.2 Turbo quattro		147	02/88 – 11/90		3536
200 (44, 44Q)	2.3		100	11/86 – 09/91		3536
200 Avant (44, 44Q)	2.1 Turbo quattro		134	09/83 – 01/88	3619	3536
200 Avant (44, 44Q)	2.2 20V Turbo quattro		162	07/89 – 12/90		3536
200 Avant (44, 44Q)	2.2 Turbo		121	08/85 – 09/91	3619	3536
200 Avant (44, 44Q)	2.2 Turbo quattro		121	09/83 – 12/90	3619	3536
200 Avant (44, 44Q)	2.2 Turbo quattro		147	02/88 – 12/91		3536
200 Avant (44, 44Q)	2.3		100	11/86 – 09/91		3536
50 (86)	0.8		25	01/76 – 07/78	3327	
50 (86)	0.8		25	01/76 – 07/78	3343	
50 (86)	0.8		25	01/76 – 07/78	3483	
50 (86)	1.1		37	08/74 – 07/78	3327	
50 (86)	1.1		37	08/74 – 07/78	3343	
50 (86)	1.1		37	08/74 – 07/78	3483	
50 (86)	1.1		44	08/74 – 07/77	3327	
50 (86)	1.1		44	08/74 – 07/77	3343	
50 (86)	1.1		44	08/74 – 07/77	3483	
50 (86)	1.3		43	01/77 – 07/78	3327	
50 (86)	1.3		43	01/77 – 07/78	3343	
50 (86)	1.3		43	01/77 – 07/78	3483	
50 (86)	1.3		44	08/77 – 07/78	3327	
50 (86)	1.3		44	08/77 – 07/78	3343	
50 (86)	1.3		44	08/77 – 07/78	3483	
80 (80, 82, B1)	1.3		40	05/72 – 07/78	3327	
80 (80, 82, B1)	1.3		40	05/72 – 07/78	3343	
80 (80, 82, B1)	1.3		40	05/72 – 07/78	3483	
80 (80, 82, B1)	1.5		55	05/72 – 08/75	3327	
80 (80, 82, B1)	1.5		55	05/72 – 08/75	3343	
80 (80, 82, B1)	1.5		55	05/72 – 08/75	3483	
80 (80, 82, B1)	1.5		63	05/72 – 07/76	3327	
80 (80, 82, B1)	1.5		63	05/72 – 07/76	3343	
80 (80, 82, B1)	1.5		63	05/72 – 07/76	3483	

MAKE & MODEL		KW	YEAR		
AUDI					
80 (80, 82, B1)	1.6	55	09/75 – 07/78	3327	
80 (80, 82, B1)	1.6	55	09/75 – 07/78	3343	
80 (80, 82, B1)	1.6	55	09/75 – 07/78	3483	
80 (81, 85, B2)	1.3	40	09/78 – 07/81	3327	
80 (81, 85, B2)	1.3	40	09/78 – 07/81	3343	
80 (81, 85, B2)	1.3	40	09/78 – 07/81	3483	
80 (81, 85, B2)	1.3	44	09/78 – 07/81	3378	
80 (81, 85, B2)	1.3	44	09/78 – 07/81	3490	
80 (81, 85, B2)	1.3	44	09/78 – 07/86	3327	
80 (81, 85, B2)	1.3	44	09/78 – 07/86	3343	
80 (81, 85, B2)	1.3	44	09/78 – 07/86	3378	
80 (81, 85, B2)	1.3	44	09/78 – 07/86	3483	
80 (81, 85, B2)	1.3	44	09/78 – 07/86	3490	
80 (81, 85, B2)	1.6	51	08/78 – 07/81	3378	
80 (81, 85, B2)	1.6	51	08/78 – 07/81	3490	
80 (81, 85, B2)	1.6	54	02/86 – 07/86	3378	
80 (81, 85, B2)	1.6	54	02/86 – 07/86	3490	
80 (81, 85, B2)	1.6	55	08/78 – 07/86	3327	
80 (81, 85, B2)	1.6	55	08/78 – 07/86	3343	
80 (81, 85, B2)	1.6	55	08/78 – 07/86	3378	
80 (81, 85, B2)	1.6	55	08/78 – 07/86	3483	
80 (81, 85, B2)	1.6	55	08/78 – 07/86	3490	
80 (81, 85, B2)	1.6	63	08/78 – 02/83	3327	
80 (81, 85, B2)	1.6	63	08/78 – 02/83	3343	
80 (81, 85, B2)	1.6	63	08/78 – 02/83	3378	
80 (81, 85, B2)	1.6	63	08/78 – 02/83	3483	
80 (81, 85, B2)	1.6	63	08/78 – 02/83	3490	
80 (81, 85, B2)	1.6 D	40	08/80 – 08/86	3327	
80 (81, 85, B2)	1.6 D	40	08/80 – 08/86	3343	
80 (81, 85, B2)	1.6 D	40	08/80 – 08/86	3378	
80 (81, 85, B2)	1.6 D	40	08/80 – 08/86	3483	
80 (81, 85, B2)	1.6 D	40	08/80 – 08/86	3490	
80 (81, 85, B2)	1.6 GLE	81	08/78 – 07/82	3327	
80 (81, 85, B2)	1.6 GLE	81	08/78 – 07/82	3343	
80 (81, 85, B2)	1.6 GLE	81	08/78 – 07/82	3378	
80 (81, 85, B2)	1.6 GLE	81	08/78 – 07/82	3483	
80 (81, 85, B2)	1.6 GLE	81	08/78 – 07/82	3490	
80 (81, 85, B2)	1.6 TD	51	08/81 – 05/86	3327	
80 (81, 85, B2)	1.6 TD	51	08/81 – 05/86	3343	
80 (81, 85, B2)	1.6 TD	51	08/81 – 05/86	3378	
80 (81, 85, B2)	1.6 TD	51	08/81 – 05/86	3483	
80 (81, 85, B2)	1.6 TD	51	08/81 – 05/86	3490	
80 (81, 85, B2)	1.8	65	02/86 – 07/86	3378	
80 (81, 85, B2)	1.8	65	02/86 – 07/86	3490	
80 (81, 85, B2)	1.8	66	01/83 – 08/86	3378	
80 (81, 85, B2)	1.8	66	01/83 – 08/86	3490	
80 (81, 85, B2)	1.8	68	08/83 – 08/86	3378	
80 (81, 85, B2)	1.8	68	08/83 – 08/86	3490	
80 (81, 85, B2)	1.8 CC quattro (85Q)	66	08/84 – 08/86	3378	
80 (81, 85, B2)	1.8 CC quattro (85Q)	66	08/84 – 08/86	3490	
80 (81, 85, B2)	1.8 CC quattro (85Q)	68	08/85 – 08/86	3635	3536
80 (81, 85, B2)	1.8 CC quattro (85Q)	68	08/85 – 08/86	3378	
80 (81, 85, B2)	1.8 CC quattro (85Q)	68	08/85 – 08/86	3490	
80 (81, 85, B2)	1.8 CC quattro (85Q)	68	08/85 – 08/86	3649	
80 (81, 85, B2)	1.8 GTE	82	10/84 – 08/86	3378	
80 (81, 85, B2)	1.8 GTE	82	10/84 – 08/86	3490	
80 (81, 85, B2)	1.8 GTE quattro (85Q)	81	03/85 – 08/86	3635	3536
80 (81, 85, B2)	1.8 GTE quattro (85Q)	81	03/85 – 08/86	3649	
80 (81, 85, B2)	1.8 GTE quattro (85Q)	82	08/84 – 08/86	3378	
80 (81, 85, B2)	1.8 GTE quattro (85Q)	82	08/84 – 08/86	3490	
80 (81, 85, B2)	1.9 CD-5S	85	09/81 – 07/83	3378	
80 (81, 85, B2)	1.9 CD-5S	85	09/81 – 07/83	3490	
80 (81, 85, B2)	2.0	85	10/83 – 09/84	3378	
80 (81, 85, B2)	2.0	85	10/83 – 09/84	3490	
80 (81, 85, B2)	2.0 quattro (85Q)	85	10/83 – 09/84	3635	3536
80 (81, 85, B2)	2.0 quattro (85Q)	85	10/83 – 09/84	3378	
80 (81, 85, B2)	2.0 quattro (85Q)	85	10/83 – 09/84	3490	
80 (81, 85, B2)	2.0 quattro (85Q)	85	10/83 – 09/84	3649	
80 (81, 85, B2)	2.2	85	10/80 – 07/83	3378	
80 (81, 85, B2)	2.2	85	10/80 – 07/83	3490	
80 (81, 85, B2)	2.2 quattro	96	08/82 – 07/84	3635	3536
80 (81, 85, B2)	2.2 quattro	96	08/82 – 07/84	3649	
80 (81, 85, B2)	2.2 quattro	100	08/82 – 07/84	3635	3536
80 (81, 85, B2)	2.2 quattro	100	08/82 – 07/84	3649	
80 (81, 85, B2)	2.2 quattro (85Q)	100	08/82 – 07/84	3635	3536
80 (81, 85, B2)	2.2 quattro (85Q)	100	08/82 – 07/84	3649	

MAKE & MODEL			KW	YEAR		
AUDI						
80 (89, 89Q, 8A, B3)	1.6		75	08/90 – 10/91		3536
80 (89, 89Q, 8A, B3)	1.8		83	09/86 – 07/88		3536
80 (89, 89Q, 8A, B3)	1.8 E		82	06/86 – 08/91		3536
80 (89, 89Q, 8A, B3)	1.8 E quattro		82	09/86 – 08/91	3619	3536
80 (89, 89Q, 8A, B3)	1.8 quattro		83	09/86 – 08/90	3619	3536
80 (89, 89Q, 8A, B3)	1.8 S quattro		65	09/86 – 07/90	3619	3536
80 (89, 89Q, 8A, B3)	1.8 S quattro		66	09/86 – 09/91	3619	3536
80 (89, 89Q, 8A, B3)	2.0		82	10/90 – 08/91		3536
80 (89, 89Q, 8A, B3)	2.0 E		83	08/88 – 10/90		3536
80 (89, 89Q, 8A, B3)	2.0 E 16V		101	03/90 – 09/91		3536
80 (89, 89Q, 8A, B3)	2.0 E 16V quattro		101	03/90 – 08/91	3619	3536
80 (89, 89Q, 8A, B3)	2.0 E quattro		83	08/88 – 09/90	3619	3536
80 (89, 89Q, 8A, B3)	2.0 quattro		82	08/88 – 07/90	3619	3536
80 (89, 89Q, 8A, B3)	2.0 quattro		85	10/90 – 08/91	3619	3536
80 (89, 89Q, 8A, B3)	2.0 quattro		85	10/90 – 08/91	3378	
80 (89, 89Q, 8A, B3)	2.0 quattro		85	10/90 – 08/91	3490	
80 (8C, B4)	1.6		52	09/91 – 12/94		3536
80 (8C, B4)	1.6 E		74	06/93 – 12/94		3536
80 (8C, B4)	1.9 TD		55	09/91 – 12/94		3536
80 (8C, B4)	1.9 TDI		66	09/91 – 12/94		3536
80 (8C, B4)	2.0		66	09/91 – 12/94		3536
80 (8C, B4)	2.0 E		85	09/91 – 12/94		3536
80 (8C, B4)	2.0 E 16V		103	08/92 – 12/94		3536
80 (8C, B4)	2.0 E 16V quattro		103	04/92 – 12/94		3536
80 (8C, B4)	2.0 E quattro		85	09/91 – 12/94		3536
80 (8C, B4)	2.3 E		98	09/91 – 12/94		3536
80 (8C, B4)	2.3 E quattro		98	09/91 – 12/94		3536
80 (8C, B4)	2.6		110	07/92 – 12/94		3536
80 (8C, B4)	2.6 quattro		110	06/92 – 12/94		3536
80 (8C, B4)	2.8		128	09/91 – 12/94		3536
80 (8C, B4)	2.8 quattro		128	09/91 – 12/94		3536
80 (8C, B4)	S2 quattro		169	02/93 – 12/94		3536
80 Avant (8C, B4)	1.6 E		74	06/93 – 01/96		3536
80 Avant (8C, B4)	1.9 TD		55	09/91 – 12/94		3536
80 Avant (8C, B4)	1.9 TDI		66	07/92 – 01/96		3536
80 Avant (8C, B4)	2.0		66	07/92 - 01/96		3536
80 Avant (8C, B4)	2.0 E		85	07/92 – 01/96		3536
80 Avant (8C, B4)	2.0 E 16V		103	02/93 – 01/96		3536
80 Avant (8C, B4)	2.0 E 16V quattro		103	12/92 – 07/95		3536
80 Avant (8C, B4)	2.0 quattro		79	11/93 – 01/96		3536
80 Avant (8C, B4)	2.3 E		98	07/92 – 01/96		3536
80 Avant (8C, B4)	2.3 E quattro		98	09/91 – 11/94		3536
80 Avant (8C, B4)	2.6		110	07/92 – 01/96		3536
80 Avant (8C, B4)	2.6 quattro		110	07/92 – 07/95		3536
80 Avant (8C, B4)	2.8		128	09/91 – 01/96		3536
80 Avant (8C, B4)	2.8 quattro		128	08/92 – 07/95		3536
80 Avant (8C, B4)	S2 quattro		169	02/93 – 07/95		3536
80 IV (89, 89Q, 8A, B3) 2.0	AAD (12.90-08.91)		82	10/1990 - 08/1991	3650	
80 IV (89, 89Q, 8A, B3) 2.0 E	3A (08.88-10.90)		83	08/1988 - 10/1990	3650	
80 IV (89, 89Q, 8A, B3) 2.0 E 16V	6A (03.90-08.91)		101	03/1990 - 09/1991	3650	
80 IV (89, 89Q, 8A, B3) 44287	SE		48	08/1986 - 07/1988	3650	
80 IV (89, 89Q, 8A, B3) 44348	ABB		75	08/1990 - 10/1991	3650	
80 IV (89, 89Q, 8A, B3) 44348	PP (08.87-09.91)		51	08/1987 - 09/1991	3650	
80 IV (89, 89Q, 8A, B3) 44348	RN (09.86-08.91)		55	09/1986 - 08/1991	3650	
80 IV (89, 89Q, 8A, B3) 44348 D	JK		40	02/1987 - 07/1989	3650	
80 IV (89, 89Q, 8A, B3) 44348 TD	RA (09.86-07.89), SB (08.89-08.91)		59	09/1986 - 08/1991	3650	
80 IV (89, 89Q, 8A, B3) 44409	RU (10.86-01.90)		55	10/1986 - 01/1990	3650	
80 IV (89, 89Q, 8A, B3) 44409	SD (09.86-07.88)		83	09/1986 - 07/1988	3650	
80 IV (89, 89Q, 8A, B3) 44409 E	DZ (09.86-08.91)		82	06/1986 - 08/1991	3650	
80 IV (89, 89Q, 8A, B3) 44409 S	JN (09.86-06.88), JV, NE (09.86-10.91), PM (03.88-		66	09/1986 - 10/1991	3650	
80 IV (89, 89Q, 8A, B3) 44409 S	SF		65	08/1986 - 01/1990	3650	
80 IV (89, 89Q, 8A, B3) 44440	-			09/1986 - 09/1991	3650	
80 IV (89, 89Q, 8A, B3) 44440 D	1Y (08.89-08.91)		50	08/1989 - 08/1991	3650	
80 V (8C2, B4) 2.0	ABT (09.91-12.94)		66	09/1991 - 12/1994	3650	
80 V (8C2, B4) 2.0 E	ABK (09.91-.)		85	09/1991 - 12/1994	3650	
80 V (8C2, B4) 2.0 E 16V	ACE (08.92-.)		103	08/1992 - 12/1994	3650	
80 V (8C2, B4) 2.0 E 16V quattro	ACE (04.92-.)		103	04/1992 - 12/1994	3650	
80 V (8C2, B4) 2.0 E quattro	ABK (09.91-.)		85	09/1991 - 12/1994	3650	
80 V (8C2, B4) 2.0 quattro	ADW		79	11/1993 - 07/1994	3650	
80 V (8C2, B4) 44257 E	NG (09.91-.)		98	09/1991 - 12/1994	3650	
80 V (8C2, B4) 44257 E quattro	NG (09.91-.)		98	09/1991 - 12/1994	3650	
80 V (8C2, B4) 44348	ABM (09.91-12.94)		52	09/1991 - 12/1994	3650	
80 V (8C2, B4) 44348 E	ADA (06.93-.)		74	06/1993 - 12/1994	3650	
80 V (8C2, B4) 44349	ABC (07.92-.)		110	07/1992 - 12/1994	3650	
80 V (8C2, B4) 44440 TD	AAZ (09.91-12.94)		55	09/1991 - 12/1994	3650	
80 V (8C2, B4) 44440 TDI	1Z (09.91-.)		66	09/1991 - 12/1994	3650	

MAKE & MODEL		KW	YEAR		
AUDI					
80 V Avant (8C5, B4) 2.0	ABT (07.92-12.94)	66	07/1992 - 01/1996	3650	
80 V Avant (8C5, B4) 2.0 E	ABK (07.92-.)	85	07/1992 - 01/1996	3650	
80 V Avant (8C5, B4) 2.0 E 16V	ACE (02.93-.)	103	02/1993 - 01/1996	3650	
80 V Avant (8C5, B4) 2.0 E 16V quattro	ACE (12.92-.)	103	12/1992 - 07/1995	3650	
80 V Avant (8C5, B4) 2.0 quattro	ADW	79	11/1993 - 01/1996	3650	
80 V Avant (8C5, B4) 44257 E	NG (07.92-.)	98	07/1992 - 01/1996	3650	
80 V Avant (8C5, B4) 44257 E quattro	NG (09.91-.)	98	09/1991 - 11/1994	3650	
80 V Avant (8C5, B4) 44348 E	ADA (06.93-.)	74	06/1993 - 01/1996	3650	
80 V Avant (8C5, B4) 44349	ABC (07.92-.)	110	07/1992 - 01/1996	3650	
80 V Avant (8C5, B4) 44409	-	65	09/1991 - 07/1992	3650	
80 V Avant (8C5, B4) 44409 E	DZ	82	09/1991 - 07/1992	3650	
80 V Avant (8C5, B4) 44440 TD	AAZ	55	09/1991 - 12/1994	3650	
80 V Avant (8C5, B4) 44440 TDI	1Z (07.92-.)	66	07/1992 - 01/1996	3650	
90 (81, 85, B2)	2.0	83	03/86 – 03/87	3635	
90 (81, 85, B2)	2.0	83	03/86 – 03/87	3649	
90 (81, 85, B2)	2.0	85	10/84 – 03/87	3635	
90 (81, 85, B2)	2.0	85	10/84 – 03/87	3649	
90 (81, 85, B2)	2.2	85	01/85 – 03/87	3635	
90 (81, 85, B2)	2.2	85	01/85 – 03/87	3649	
90 (81, 85, B2)	2.2	100	10/84 – 03/87	3635	3536
90 (81, 85, B2)	2.2	100	10/84 – 03/87	3649	
90 (81, 85, B2)	2.2 E quattro	88	08/85 – 03/87	3635	3536
90 (81, 85, B2)	2.2 E quattro	88	08/85 – 03/87	3649	
90 (81, 85, B2)	2.2 E quattro	100	11/84 – 03/87	3635	3536
90 (81, 85, B2)	2.2 E quattro	100	11/84 – 03/87	3649	
90 (89, 89Q, 8A, B3)	2.0	85	07/88 – 09/91		3536
90 (89, 89Q, 8A, B3)	2.0 20 V	118	08/89 – 07/91		3536
90 (89, 89Q, 8A, B3)	2.0 20 V quattro	118	08/88 – 09/91	3619	3536
90 (89, 89Q, 8A, B3)	2.0 quattro	101	08/89 – 07/90	3619	3536
90 (89, 89Q, 8A, B3)	2.2 E	100	04/87 – 07/91		3536
90 (89, 89Q, 8A, B3)	2.2 E quattro	100	04/87 – 09/91	3619	3536
90 (89, 89Q, 8A, B3)	2.3 E	98	04/87 – 09/91		3536
90 (89, 89Q, 8A, B3)	2.3 E	100	04/87 – 07/91		3536
90 (89, 89Q, 8A, B3)	2.3 E 20V	123	04/90 – 07/91		3536
90 (89, 89Q, 8A, B3)	2.3 E 20V	125	08/88 – 07/91		3536
90 (89, 89Q, 8A, B3)	2.3 E 20V quattro	123	04/90 – 9/91		3536
90 (89, 89Q, 8A, B3)	2.3 E 20V quattro	125	06/88 – 09/91		3536
90 (89, 89Q, 8A, B3)	2.3 E quattro	98	04/87 – 09/91	3619	3536
90 (89, 89Q, 8A, B3)	2.3 E quattro	100	04/87 – 07/91	3619	3536
90 II (89, 89Q, 8A, B3) 2.0	PS	85	07/1988 - 09/1991	3650	
90 II (89, 89Q, 8A, B3) 2.0 20 V	NM	118	08/1989 - 07/1991	3650	
90 II (89, 89Q, 8A, B3) 2.0 20 V quattro	NM	118	08/1988 - 09/1991	3650	
90 II (89, 89Q, 8A, B3) 2.0 quattro	PS	85	07/1988 - 09/1991	3650	
90 II (89, 89Q, 8A, B3) 44229 E	KV (04.87-07.91)	100	04/1987 - 07/1991	3650	
90 II (89, 89Q, 8A, B3) 44229 E quattro	KV (04.87-07.91)	100	04/1987 - 09/1991	3650	
90 II (89, 89Q, 8A, B3) 44257 E	NG	100	04/1987 - 07/1991	3650	
90 II (89, 89Q, 8A, B3) 44257 E	NG (03.90-.)	98	04/1987 - 09/1991	3650	
90 II (89, 89Q, 8A, B3) 44257 E quattro	NG (04.90-.)	98	04/1987 - 09/1991	3650	
90 II (89, 89Q, 8A, B3) 44257 E quattro	NG (08.89-.)	100	04/1987 - 07/1991	3650	
90 II (89, 89Q, 8A, B3) 44348 TD	RA (.-06.89), SB (06.89-.)	59	04/1987 - 09/1991	3650	
A1 (8X1, 8XK)	1.0 TFSI	60	01/16 -	3782/1	3529/1
A1 (8X1, 8XK)	1.0 TFSI	60	01/16 -	3904	
A1 (8X1, 8XK)	1.0 TFSI	70	03/15 -	3782/1	3529/1
A1 (8X1, 8XK)	1.2 TFSI	63	05/10 -	3782/1	3529/1
A1 (8X1, 8XK)	1.2 TFSI	63	05/10 -		4135
A1 (8X1, 8XK)	1.4 TDI	66	11/14 -	3782/1	3529/1
A1 (8X1, 8XK)	1.4 TFSI	90	05/10 -	3782/1	3529/1
A1 (8X1, 8XK)	1.4 TFSI	90	05/10 -		4135
A1 (8X1, 8XK)	1.4 TFSI	92	11/14 -	3782/1	3529/1
A1 (8X1, 8XK)	1.4 TFSI	103	04/12 -	3782/1	3529/1
A1 (8X1, 8XK)	1.4 TFSI	103	04/12 -	3904	4135
A1 (8X1, 8XK)	1.4 TFSI	110	11/14 -	3782/1	3529/1
A1 (8X1, 8XK)	1.4 TFSI	136	01/11 -	3782/1	3529/1
A1 (8X1, 8XK)	1.4 TFSI	136	01/11 -	3904	4135
A1 (8X1, 8XK)	1.6 TDI	66	03/11 -	3782/1	3529/1
A1 (8X1, 8XK)	1.6 TDI	66	03/11 -		4135
A1 (8X1, 8XK)	1.6 TDI	77	05/10 -	3782/1	3529/1
A1 (8X1, 8XK)	1.6 TDI	77	05/10 -		4135
A1 (8X1, 8XK)	1.6 TDI	85	11/14 -	3782/1	3529/1
A1 (8X1, 8XK)	1.8 TFSI	141	02/15 -	3782/1	3529/1
A1 (8X1, 8XK)	2.0 TDI	100	05/12 -	3782/1	3529/1
A1 (8X1, 8XK)	2.0 TDI	100	05/12 -	3904	4135
A1 (8X1, 8XK)	2.0 TDI	105	09/11 -	3782/1	3529/1
A1 (8X1, 8XK)	2.0 TDI	105	09/11 -	3904	4135
A1 (8X1, 8XK)	2.0 TFSI quattro	188	03/12 -	3782/1	3529/1
A1 (8X1, 8XK)	2.0 TFSI quattro	188	03/12 -		4135

MAKE & MODEL		KW	YEAR		
AUDI					
A1 (8X1, 8XK)	S1 quattro	170	03/14 -		4135
A1 I (8X1, 8XK) 1.0 TFSI	CHZB, DKLD	70	03/2015 - 10/2018	3782/1	
A1 I (8X1, 8XK) 1.0 TFSI	CHZE	60	01/2016 - 10/2018	3782/1	
A1 I (8X1, 8XK) 2.0 TFSI quattro	CDLH	188	03/2012 - 11/2012		4336
A1 I (8X1, 8XK) 44228 TFSI	CBZA	63	05/2010 - 04/2015	3782/1	
A1 I (8X1, 8XK) 44287 TDI	CUSB	66	11/2014 - 10/2018	3782/1	
A1 I (8X1, 8XK) 44348 TDI	CAYB	66	03/2011 - 04/2015	3782/1	
A1 I (8X1, 8XK) S1 quattro	CWZA	170	03/2014 - 10/2018		4336
A1 I Sportback (8XA, 8XF) 1.0 TFSI	CHZB, DKLD	70	03/2015 - 10/2018	3782/1	
A1 I Sportback (8XA, 8XF) 1.0 TFSI	CHZE	60	01/2016 - 10/2018	3782/1	
A1 I Sportback (8XA, 8XF) 44228 TFSI	CBZA	63	01/2012 - 04/2015	3782/1	
A1 I Sportback (8XA, 8XF) 44287 TDI	CUSB	66	11/2014 - 10/2018	3782/1	
A1 I Sportback (8XA, 8XF) 44348 TDI	CAYB	66	11/2011 - 04/2015	3782/1	
A1 I Sportback (8XA, 8XF) S1 quattro	CWZA	170	03/2014 - 10/2018		4336
A1 II City Carver (GBH) 25 TFSI	DKLA	70	07/2019 -	3782/1	
A1 II Sportback (GBA) 25 TFSI	DKLA (11.18-.), DLAC (09.20-.)	70	11/2018 -	3782/1	
A1 II Sportback (GBA) 40 TFSI	CZPC, DKZC	147	09/2018 -	4228/1	4336
A1 Sportback (8XA, 8XF)	1.0 TFSI	60	01/16 -	3782/1	3529/1
A1 Sportback (8XA, 8XF)	1.0 TFSI	60	01/16 -	3904	
A1 Sportback (8XA, 8XF)	1.0 TFSI	70	03/15 -	3782/1	3529/1
A1 Sportback (8XA, 8XF)	1.2 TFSI	63	01/12 -	3782/1	3529/1
A1 Sportback (8XA, 8XF)	1.2 TFSI	63	01/12 -		4135
A1 Sportback (8XA, 8XF)	1.4 TDI	66	11/14 -	3782/1	3529/1
A1 Sportback (8XA, 8XF)	1.4 TFSI	90	11/11 -	3782/1	3529/1
A1 Sportback (8XA, 8XF)	1.4 TFSI	90	11/11 -		4135
A1 Sportback (8XA, 8XF)	1.4 TFSI	92	11/14 -	3782/1	3529/1
A1 Sportback (8XA, 8XF)	1.4 TFSI	103	04/12 -	3782/1	3529/1
A1 Sportback (8XA, 8XF)	1.4 TFSI	103	04/12 -	4135	3904
A1 Sportback (8XA, 8XF)	1.4 TFSI	110	11/14 -	3782/1	3529/1
A1 Sportback (8XA, 8XF)	1.4 TFSI	136	11/11 -	3782/1	3529/1
A1 Sportback (8XA, 8XF)	1.4 TFSI	136	11/11 -	3904	4135
A1 Sportback (8XA, 8XF)	1.6 TDI	66	11/11 -	3782/1	3529/1
A1 Sportback (8XA, 8XF)	1.6 TDI	66	11/11 -		4135
A1 Sportback (8XA, 8XF)	1.6 TDI	77	11/11 -	3782/1	3529/1
A1 Sportback (8XA, 8XF)	1.6 TDI	77	11/11 -		4135
A1 Sportback (8XA, 8XF)	1.6 TDI	85	11/14 -	3782/1	3529/1
A1 Sportback (8XA, 8XF)	1.8 TFSI	141	02/15 -	3782/1	3529/1
A1 Sportback (8XA, 8XF)	2.0 TDI	100	05/12 -	3782/1	3529/1
A1 Sportback (8XA, 8XF)	2.0 TDI	100	05/12 -	3904	4135
A1 Sportback (8XA, 8XF)	2.0 TDI	105	09/11 -	3782/1	3529/1
A1 Sportback (8XA, 8XF)	2.0 TDI	105	09/11 -	3904	4135
A1 Sportback (8XA, 8XF)	S1 quattro	170	03/14 -		4135
A2 (8Z0)	1.4	55	02/00 – 08/05	3782	
A2 (8Z0)	1.4 TDI	55	02/00 – 08/05	3782	
A2 (8Z0)	1.4 TDI	66	11/03 – 08/05	3782	3529/1
A2 (8Z0)	1.6 FSI	81	05/02 – 08/05	3782	3529/1
A3 III (8V7, 8VE)	1.4 TFSI (CPTA)	103	10/13 -	4228	4241
A3 III (8V7, 8VE)	1.4 TFSI (CXSB)	92	02/14 -	4228	4241
A3 III (8V7, 8VE)	1.4 TFSI (CZCC)	85	02/16 -		4241
A3 III (8V7, 8VE)	1.4 TFSI (CZEA)	110	05/14 -	4228	4241
A3 III (8V7, 8VE)	1.6 TDI (CRKB)	81	02/14 -	4228	4241
A3 III (8V7, 8VE)	1.8 TFSI (CJSA)	132	10/13 -	4228	4241
A3 III (8V7, 8VE)	1.8 TFSI (CJSB)	132	03/14 -	4228	4241
A3 III (8V7, 8VE)	1.8 TFSI (CNSB)	125	05/14 -	4228	4241
A3 III (8V7, 8VE)	2.0 TDI (CRLB)	110	03/14 -	4228	
A3 III (8V7, 8VE)	2.0 TDI (CRLB)	110	10/13 -	4228	4241
A3 III (8V7, 8VE)	2.0 TDI (CRLC)	100	10/13 -	4228	4241
A3 III (8V7, 8VE)	2.0 TDI (CUNA)	135	05/14 -	4228	4241
A3 III (8V7, 8VE)	2.0 TFSI (CNTC)	162	05/14 -		4241
A3 III (8V7, 8VE)	2.0 TFSI (CZPB)	140	05/16 -	4228	4241
A3 III (8V7, 8VE)	S3 (CJXC)	221	04/14 -	4228	4241
A3 III (8V7, 8VE)	S3 (CJXF)	210	03/14 -	4228	
A3 III (8V7, 8VE)	S3 (CJXG)	228	07/16 -	4228	4241
A3 III (8V7, 8VE)	S3 (DJHA)	228	07/16 -	4228	
A3 III (8V7, 8VE)	S3 (DJHB)	213	07/16 -	4228	4241
A3 III (8VS, 8VM)	1.0 TFSI (CHZD)	85	07/16 -	4228	
A3 III (8VS, 8VM)	1.0 TFSI (CHZD)	85	07/16 -		4241
A3 III (8VS, 8VM)	1.2 TFSI (CJZA)	77	10/13 -	4228	4241
A3 III (8VS, 8VM)	1.2 TFSI (CYVB)	81	05/14 -	4228	4241
A3 III (8VS, 8VM)	1.4 TFSI (CPTA)	103	05/13 -	4228	4241
A3 III (8VS, 8VM)	1.4 TFSI (CXSA)	90	09/13 -	4228	4241
A3 III (8VS, 8VM)	1.4 TFSI (CXSB)	92	09/13 -	4228	4241
A3 III (8VS, 8VM)	1.4 TFSI (CZEA)	110	05/14 -	4228	4241
A3 III (8VS, 8VM)	1.6 TDI (CLHA)	77	09/13 -	4228	4241
A3 III (8VS, 8VM)	1.6 TDI (CRKB)	81	05/14 -	4228	4241
A3 III (8VS, 8VM)	1.6 TDI (CXXB)	81	05/14 -	4228	4241

MAKE & MODEL		KW	YEAR		
AUDI					
A3 III (8VS, 8VM)	1.6 TDI (DBKA)	81	05/14 -	4228	4241
A3 III (8VS, 8VM)	1.8 TFSI (CJSA)	132	05/13 -	4228	4241
A3 III (8VS, 8VM)	1.8 TFSI (CJSB)	132	11/13 -	4228	4241
A3 III (8VS, 8VM)	1.8 TFSI (CNSB)	125	11/13 -	4228	4241
A3 III (8VS, 8VM)	2.0 TDI (CRBC)	110	05/13 -	4228	4241
A3 III (8VS, 8VM)	2.0 TDI (CRBD)	100	09/13 -	4228	4241
A3 III (8VS, 8VM)	2.0 TDI (CRFA)	81	05/13 -	4228	4241
A3 III (8VS, 8VM)	2.0 TDI (CRFC)	105	10/13 -	4228	4241
A3 III (8VS, 8VM)	2.0 TDI (CRLB)	110	05/13 -	4228	4241
A3 III (8VS, 8VM)	2.0 TDI (CUNA)	135	05/14 -	4228	4241
A3 III (8VS, 8VM)	2.0 TFSI (CZPB)	140	05/16 -	4228	4241
A3 III (8VS, 8VM)	S3 (CJXB)	206	10/13 -	4228	4241
A3 III (8VS, 8VM)	S3 (CJXC)	221	10/13 -	4228	
A3 III (8VS, 8VM)	S3 (CJXD)	213	08/16 -	4228	4241
A3 III (8VS, 8VM)	S3 (CJXG)	228	06/16 -	4228	4241
A3 III (8VS, 8VM)	S3 (CYFB)	215	05/14 -	4228	4241
A3 III (8VS, 8VM)	S3 (DJHA)	228	06/16 -	4228	4241
A3 III (8VS, 8VM)	S3 (DJHB)	213	08/16 -	4228	4241
A3 III (8VS, 8VM)	S3 (CJXF)	210	05/14 -	4228	4241
A3 III (8VS, 8VM)	S3 (CJXC)	221	10/13 -		4241
A3 (8L1)	1.6	74	09/96 – 05/03	3782	3529/1
A3 (8L1)	1.6	74	09/96 – 05/03	3782/1	
A3 (8L1)	1.6	75	08/00 – 05/03	3782	3529/1
A3 (8L1)	1.6	75	08/00 – 05/03	3782/1	
A3 (8L1)	1.8	92	09/96 – 05/03	3782	3529/1
A3 (8L1)	1.8	92	09/96 – 05/03	3782/1	
A3 (8L1)	1.8 T	110	12/96 – 05/03	3590/1	3529/1
A3 (8L1)	1.8 T	132	12/98 – 05/03	3590/1	3529/1
A3 (8L1)	1.8 T quattro	110	12/96 – 05/03	3590/1	3529/1
A3 (8L1)	1.8 T quattro	132	10/98 – 05/03	3590/1	3529/1
A3 (8L1)	1.9 TDI	66	09/96 – 07/01	3782	3529/1
A3 (8L1)	1.9 TDI	66	09/96 – 07/01	3782/1	
A3 (8L1)	1.9 TDI	74	10/00 – 05/03	3782	3529/1
A3 (8L1)	1.9 TDI	74	10/00 – 05/03	3782/1	
A3 (8L1)	1.9 TDI	81	08/97 – 07/01	3782	3529/1
A3 (8L1)	1.9 TDI	96	08/00 – 05/03	3590/1	3529/1
A3 (8L1)	1.9 TDI quattro	96	08/00 – 05/03	3590/1	3529/1
A3 (8L1)	S3 quattro	154	03/99 – 04/02	3590/1	3529/1
A3 (8L1)	S3 quattro	165	10/01 – 05/03	3590/1	3529/1
A3 (8L1)	1.6 (AEH)	74	09/96 – 05/03	3682	
A3 (8L1)	1.6 (AKL)	74	09/96 – 05/03	3682	
A3 (8L1)	1.6 (APF)	74	09/96 – 05/03	3682	
A3 (8P1)	1.2 TSI	77	04/10 – 08/12	3782	3529/1
A3 (8P1)	1.2 TSI	77	04/10 – 08/12		3905
A3 (8P1)	1.2 TSI	77	04/10 – 08/12		4135
A3 (8P1)	1.4 TFSI	92	09/07 – 08/12	3782	3529/1
A3 (8P1)	1.4 TFSI	92	09/07 – 08/12	3904	3905
A3 (8P1)	1.4 TFSI	92	09/07 – 08/12		4135
A3 (8P1)	1.6	75	05/03 – 08/12	3782	3529/1
A3 (8P1)	1.6	75	05/03 – 08/12	3904	3905
A3 (8P1)	1.6	75	05/03 – 08/12		4135
A3 (8P1)	1.6 E-Power	75	01/11 – 08/12	3782	3529/1
A3 (8P1)	1.6 E-Power	75	01/11 – 08/12	3904	3905
A3 (8P1)	1.6 E-Power	75	01/11 – 08/12		4135
A3 (8P1)	1.6 FSI	85	08/03 – 09/07	3782	3529/1
A3 (8P1)	1.6 FSI	85	08/03 – 09/07	3904	3905
A3 (8P1)	1.6 FSI	85	08/03 – 09/07		4135
A3 (8P1)	1.6 TDI	66	05/09 – 08/12	3782	3529/1
A3 (8P1)	1.6 TDI	66	05/09 – 08/12	3904	3905
A3 (8P1)	1.6 TDI	66	05/09 – 08/12		4135
A3 (8P1)	1.6 TDI	77	05/09 – 08/12	3782	3529/1
A3 (8P1)	1.6 TDI	77	05/09 – 08/12	3904	3905
A3 (8P1)	1.6 TDI	77	05/09 – 08/12		4135
A3 (8P1)	1.8 T	110	08/06 – 08/12	3904	3529/1
A3 (8P1)	1.8 T	110	08/06 – 08/12		3905
A3 (8P1)	1.8 T	110	08/06 – 08/12		4135
A3 (8P1)	1.8 TFSI	118	11/06 – 08/12	3904	3905
A3 (8P1)	1.8 TFSI	118	11/06 – 08/12		3529/1
A3 (8P1)	1.8 TFSI	118	11/06 – 08/12		4135
A3 (8P1)	1.8 TFSI quattro	118	07/08 – 08/12	3904	3529/1
A3 (8P1)	1.8 TFSI quattro	118	07/08 – 08/12		3905
A3 (8P1)	1.8 TFSI quattro	118	07/08 – 08/12		4135
A3 (8P1)	1.9 TDI	77	05/03 – 05/10	3782	3529/1
A3 (8P1)	1.9 TDI	77	05/03 – 05/10	3904	3905
A3 (8P1)	1.9 TDI	77	05/03 – 05/10		4135
A3 (8P1)	2.0	120	06/06 – 08/12	3904	3529/1

MAKE & MODEL		KW	YEAR		
AUDI					
A3 (8P1)	2.0	120	06/06 – 08/12		3905
A3 (8P1)	2.0	120	06/06 – 08/12		4135
A3 (8P1)	2.0 FSI	110	05/03 – 06/08	3904	3529/1
A3 (8P1)	2.0 FSI	110	05/03 – 06/08		3905
A3 (8P1)	2.0 FSI	110	05/03 – 06/08		4135
A3 (8P1)	2.0 TDI	100	05/03 – 08/12	3904	3529/1
A3 (8P1)	2.0 TDI	100	05/03 – 08/12		3905
A3 (8P1)	2.0 TDI	100	05/03 – 08/12		4135
A3 (8P1)	2.0 TDI	103	06/05 – 06/08	3904	3529/1
A3 (8P1)	2.0 TDI	103	06/05 – 06/08		3905
A3 (8P1)	2.0 TDI	103	06/05 – 06/08		4135
A3 (8P1)	2.0 TDI	120	06/06 – 06/08	3904	3529/1
A3 (8P1)	2.0 TDI	120	06/06 – 06/08		3905
A3 (8P1)	2.0 TDI	120	06/06 – 06/08		4135
A3 (8P1)	2.0 TDI	125	03/06 – 08/12	3904	3529/1
A3 (8P1)	2.0 TDI	125	03/06 – 08/12		3905
A3 (8P1)	2.0 TDI	125	03/06 – 08/12		4135
A3 (8P1)	2.0 TDI 16V	103	05/03 – 08/12	3904	3529/1
A3 (8P1)	2.0 TDI 16V	103	05/03 – 08/12		3905
A3 (8P1)	2.0 TDI 16V	103	05/03 – 08/12		4135
A3 (8P1)	2.0 TDI 16V quattro	103	08/04 – 08/12	3904	3529/1
A3 (8P1)	2.0 TDI 16V quattro	103	08/04 – 08/12		3905
A3 (8P1)	2.0 TDI 16V quattro	103	08/04 – 08/12		4135
A3 (8P1)	2.0 TDI quattro	100	05/03 – 06/08	3904	3529/1
A3 (8P1)	2.0 TDI quattro	100	05/03 – 06/08		3905
A3 (8P1)	2.0 TDI quattro	100	05/03 – 06/08		4135
A3 (8P1)	2.0 TDI quattro	103	01/06 – 06/08	3904	3529/1
A3 (8P1)	2.0 TDI quattro	103	01/06 – 06/08		3905
A3 (8P1)	2.0 TDI quattro	103	01/06 – 06/08		4135
A3 (8P1)	2.0 TDI quattro	125	03/06 – 08/12	3904	3529/1
A3 (8P1)	2.0 TDI quattro	125	03/06 – 08/12		3905
A3 (8P1)	2.0 TDI quattro	125	03/06 – 08/12		4135
A3 (8P1)	2.0 TFSI	147	09/04 – 08/12	3904	3529/1
A3 (8P1)	2.0 TFSI	147	09/04 – 08/12		3905
A3 (8P1)	2.0 TFSI	147	09/04 – 08/12		4135
A3 (8P1)	2.0 TFSI quattro	147	09/04 – 08/12	3904	3529/1
A3 (8P1)	2.0 TFSI quattro	147	09/04 – 08/12		3905
A3 (8P1)	2.0 TFSI quattro	147	09/04 – 08/12		4135
A3 Convertible (8P7)	1.2 TFSI	77	03/10 – 05/13	3782	3529/1
A3 Convertible (8P7)	1.2 TFSI	77	03/10 – 05/13		3905
A3 Convertible (8P7)	1.2 TFSI	77	03/10 – 05/13		4135
A3 Convertible (8P7)	1.4 TFSI	92	02/11 – 05/13	3904	3529/1
A3 Convertible (8P7)	1.4 TFSI	92	02/11 – 05/13		3905
A3 Convertible (8P7)	1.4 TFSI	92	02/11 – 05/13		4135
A3 Convertible (8P7)	1.6	75	09/08 – 05/10	3782	3529/1
A3 Convertible (8P7)	1.6	75	09/08 – 05/10		3905
A3 Convertible (8P7)	1.6	75	09/08 – 05/10		4135
A3 Convertible (8P7)	1.6 TDI	77	05/09 – 05/13	3782	3529/1
A3 Convertible (8P7)	1.6 TDI	77	05/09 – 05/13		3905
A3 Convertible (8P7)	1.6 TDI	77	05/09 – 05/13		4135
A3 Convertible (8P7)	1.8 TFSI	118	04/08 – 05/13	3904	3529/1
A3 Convertible (8P7)	1.8 TFSI	118	04/08 – 05/13		3905
A3 Convertible (8P7)	1.8 TFSI	118	04/08 – 05/13		4135
A3 Convertible (8P7)	1.9 TDI	77	04/08 – 10/09	3782	3529/1
A3 Convertible (8P7)	1.9 TDI	77	04/08 – 10/09		3905
A3 Convertible (8P7)	1.9 TDI	77	04/08 – 10/09		4135
A3 Convertible (8P7)	2.0 TDI	100	04/08 – 05/13	3904	3529/1
A3 Convertible (8P7)	2.0 TDI	100	04/08 – 05/13		3905
A3 Convertible (8P7)	2.0 TDI	100	04/08 – 05/13		4135
A3 Convertible (8P7)	2.0 TDI	103	04/08 – 05/13	3904	3529/1
A3 Convertible (8P7)	2.0 TDI	103	04/08 – 05/13		3905
A3 Convertible (8P7)	2.0 TDI	103	04/08 – 05/13		4135
A3 Convertible (8P7)	2.0 TFSI	147	04/08 – 05/13	3904	3529/1
A3 Convertible (8P7)	2.0 TFSI	147	04/08 – 05/13		3905
A3 Convertible (8P7)	2.0 TFSI	147	04/08 – 05/13		4135
A3 Convertible (8V7, 8VE)	1.4 TFSI	85	02/16 -	4295	
A3 Convertible (8V7, 8VE)	2.0 TFSI quattro	162	05/14 -	4295	
A3 I (8L1) 44348	AEH, AKL (08.97-.), APF (08.98-.)	74	09/1996 - 05/2003	3782/1	
A3 I (8L1) 44409	AGN, APG (08.98-.)	92	09/1996 - 05/2003	3782/1	
A3 I (8L1) 44440 TDI	AGR, ALH (08.97-07.98)	66	09/1996 - 07/2001	3782/1	
A3 I (8L1) 44440 TDI	AHF (08.97-.), ASV	81	08/1997 - 07/2001	3782/1	
A3 III (8V1)	1.0 TFSI (CHZD)	85	07/16 -	4228	4241
A3 III (8V1)	1.2 TFSI (CJZA)	77	02/13 -	4228	4241
A3 III (8V1)	1.2 TFSI (CYVB)	81	05/14 -	4228	4241
A3 III (8V1)	1.4 TFSI (CPTA)	103	03/13 -	4228	4241
A3 III (8V1)	1.4 TFSI (CXSA)	90	04/12 -	4228	4241

MAKE & MODEL		KW	YEAR		
AUDI					
A3 III (8V1)	1.4 TFSI (CXSB)	92	05/14 -	4228	4241
A3 III (8V1)	1.4 TFSI (CZCA)	92	05/14 -	4228	4241
A3 III (8V1)	1.4 TFSI (CZEA)	110	05/14 -	4228	4241
A3 III (8V1)	1.4 TFSI (CMBA)	90	04/12 -	4228	4241
A3 III (8V1)	1.6 TDI (CLHA)	77	10/12 -	4228	
A3 III (8V1)	1.6 TDI (CRKB)	81	09/13 -	4228	4241
A3 III (8V1)	1.6 TDI (CLHA)	77	10/12 -		4241
A3 III (8V1)	1.8 TFSI (CJSA)	132	04/12 -	4228	4241
A3 III (8V1)	1.8 TFSI (CJSB)	132	08/12 -	4228	4241
A3 III (8V1)	2.0 TDI (CRBC)	110	04/12 -	4228	4241
A3 III (8V1)	2.0 TDI (CRBD)	100	05/13 -	4228	4241
A3 III (8V1)	2.0 TDI (CRFA)	81	01/13 -	4228	4241
A3 III (8V1)	2.0 TDI (CRFC)	105	09/12 -	4228	4241
A3 III (8V1)	2.0 TDI (CRLB)	110	04/12 -	4228	4241
A3 III (8V1)	2.0 TDI (CUNA)	135	05/13 -	4228	4241
A3 III (8V1)	2.0 TFSI (CZPB)	140	05/16 -	4228	4241
A3 III (8V1)	S3 (CJXB)	206	02/13 -	4228	4241
A3 III (8V1)	S3 (CJXC)	221	11/12 -	4228	4241
A3 III (8V1)	S3 (CJXD)	213	07/16 -	4228	4241
A3 III (8V1)	S3 (CJXG)	228	06/16 -	4228	4241
A3 III (8V1)	S3 (DJHA)	228	06/16 -	4228	4241
A3 III (8V1)	S3 (DJHB)	213	07/16 -	4228	4241
A3 III (8V1)	S3 (CJXF)	210	05/14 -	4228	4241
A3 III (8V1, 8VK) 1.0 TFSI	CHZD	85	07/2016 -	4228/1	
A3 III (8V1, 8VK) 2.0 TDI	CRBC, CRLB, CRUA, DBGA, DCYA, DEJA	110	04/2012 -	4228/1	
A3 III (8V1, 8VK) 2.0 TDI	CRBD, CRLC	100	05/2013 -	4228/1	
A3 III (8V1, 8VK) 2.0 TDI	CRFA	81	01/2013 -	4228/1	
A3 III (8V1, 8VK) 2.0 TDI	CRFC	105	09/2012 - 08/2016	4228/1	
A3 III (8V1, 8VK) 2.0 TDI	CUNA	135	05/2013 -	4228/1	
A3 III (8V1, 8VK) 2.0 TDI quattro	CRBC, CRLB, DCYA	110	10/2012 - 08/2016	4228/1	
A3 III (8V1, 8VK) 2.0 TDI quattro	CUNA, DGCA	135	12/2012 -	4228/1	
A3 III (8V1, 8VK) 2.0 TFSI	CZPB	140	05/2016 -	4228/1	
A3 III (8V1, 8VK) 2.0 TFSI quattro	CZPB	140	05/2016 -	4228/1	
A3 III (8V1, 8VK) 44228 TFSI	CJZA	77	02/2013 -	4228/1	
A3 III (8V1, 8VK) 44228 TFSI	CYVB	81	05/2014 -	4228/1	
A3 III (8V1, 8VK) 44287 TFSI	CMBA, CXSA	90	04/2012 -	4228/1	
A3 III (8V1, 8VK) 44287 TFSI	CPTA	103	03/2013 -	4228/1	
A3 III (8V1, 8VK) 44287 TFSI	CXSB, CZCA	92	05/2014 -	4228/1	
A3 III (8V1, 8VK) 44287 TSI	CZEA	110	05/2014 -	4228/1	
A3 III (8V1, 8VK) 44348 TDI	CLHA	77	10/2012 -	4228/1	
A3 III (8V1, 8VK) 44348 TDI	CRKB, CXXB, DBKA	81	09/2013 -	4228/1	
A3 III (8V1, 8VK) 44348 TDI	DDYA	85	02/2017 -	4228/1	
A3 III (8V1, 8VK) 44409 TFSI	CJSA	132	04/2012 -	4228/1	
A3 III (8V1, 8VK) 44409 TFSI quattro	CJSB	132	08/2012 -	4228/1	
A3 III Cabrio (8V7, 8VE) 2.0 40 TFSI	DKZA	140	11/2018 -	4228/1	
A3 III Cabrio (8V7, 8VE) 2.0 TDI	CRLB, DCYA	110	10/2013 -	4228/1	
A3 III Cabrio (8V7, 8VE) 2.0 TDI	CRLC	100	10/2013 -	4228/1	
A3 III Cabrio (8V7, 8VE) 2.0 TDI	CUNA	135	05/2014 -	4228/1	
A3 III Cabrio (8V7, 8VE) 2.0 TDI quattro	CRLB, DCYA	110	03/2014 -	4228/1	
A3 III Cabrio (8V7, 8VE) 2.0 TDI quattro	CUNA, DGCA	135	05/2014 -	4228/1	
A3 III Cabrio (8V7, 8VE) 2.0 TFSI	CZPB	140	05/2016 -	4228/1	
A3 III Cabrio (8V7, 8VE) 2.0 TFSI quattro	CNTC	162	05/2014 -	4228/1	
A3 III Cabrio (8V7, 8VE) 2.0 TFSI quattro	CZPB	140	05/2016 -	4228/1	
A3 III Cabrio (8V7, 8VE) 35 TFSI	DADA, DPCA	110	10/2018 -	4228/1	
A3 III Cabrio (8V7, 8VE) 44287 TFSI	CPTA	103	10/2013 -	4228/1	
A3 III Cabrio (8V7, 8VE) 44287 TFSI	CXSB, CZCA	92	02/2014 -	4228/1	
A3 III Cabrio (8V7, 8VE) 44287 TFSI	CZCC	85	02/2016 -	4228/1	
A3 III Cabrio (8V7, 8VE) 44287 TSI	CZEA	110	05/2014 -	4228/1	
A3 III Cabrio (8V7, 8VE) 44317 TFSI	DADA	110	05/2017 - 10/2018	4228/1	
A3 III Cabrio (8V7, 8VE) 44348 TDI	CRKB, CXXB	81	02/2014 -	4228/1	
A3 III Cabrio (8V7, 8VE) 44348 TDI	DDYA	85	04/2017 -	4228/1	
A3 III Cabrio (8V7, 8VE) 44409 TFSI	CJSA, CJSB	132	10/2013 -	4228/1	
A3 III Cabrio (8V7, 8VE) 44409 TFSI	CNSB	125	05/2014 -	4228/1	
A3 III Cabrio (8V7, 8VE) 44409 TFSI quattro	CJSB	132	03/2014 -	4228/1	
A3 III Limousine (8VS, 8VM) 1.0 TFSI	CHZD	85	07/2016 - 10/2018	4228/1	
A3 III Limousine (8VS, 8VM) 2.0 35 TDI	DFGA	110	07/2018 -	4228/1	
A3 III Limousine (8VS, 8VM) 2.0 40 TFSI	DKZA	140	07/2018 -	4228/1	
A3 III Limousine (8VS, 8VM) 2.0 TDI	CRBC, CRLB, CRUA, DBGA, DCYA, DEJA, DFGA (07.18-.)	110	05/2013 -	4228/1	
A3 III Limousine (8VS, 8VM) 2.0 TDI	CRBD, CRLC	100	09/2013 -	4228/1	
A3 III Limousine (8VS, 8VM) 2.0 TDI	CRFA, DEJB	81	05/2013 -	4228/1	
A3 III Limousine (8VS, 8VM) 2.0 TDI	CRFC	105	10/2013 -	4228/1	
A3 III Limousine (8VS, 8VM) 2.0 TDI	CUNA	135	05/2014 -	4228/1	
A3 III Limousine (8VS, 8VM) 2.0 TDI quattro	CRBC, CRLB, DCYA	110	10/2013 -	4228/1	
A3 III Limousine (8VS, 8VM) 2.0 TDI quattro	CUNA, DGCA	135	05/2014 - 07/2018	4228/1	
A3 III Limousine (8VS, 8VM) 2.0 TFSI	CHHB, CNTC	162	11/2015 -	4228/1	
A3 III Limousine (8VS, 8VM) 2.0 TFSI	CZPB, DKZA (07.18-.)	140	05/2016 -	4228/1	

MAKE & MODEL   		KW	YEAR		
AUDI					
A3 III Limousine (8VS, 8VM) 2.0 TFSI quattro	CZPB, DKZA (07.18-.)	140	05/2016 -	4228/1	
A3 III Limousine (8VS, 8VM) 30 TDI	DGTE	85	07/2018 -	4228/1	
A3 III Limousine (8VS, 8VM) 30 TFSI	DKRF	85	07/2018 -	4228/1	
A3 III Limousine (8VS, 8VM) 35 TFSI	-	110	10/2018 -	4228/1	
A3 III Limousine (8VS, 8VM) 35 TFSI	DADA, DPCA	110	10/2018 -	4228/1	
A3 III Limousine (8VS, 8VM) 44228 TFSI	CJZA	77	10/2013 -	4228/1	
A3 III Limousine (8VS, 8VM) 44228 TFSI	CYVB	81	05/2014 -	4228/1	
A3 III Limousine (8VS, 8VM) 44287 TFSI	CPTA	103	05/2013 -	4228/1	
A3 III Limousine (8VS, 8VM) 44287 TFSI	CXSA	90	09/2013 -	4228/1	
A3 III Limousine (8VS, 8VM) 44287 TFSI	CXSB, CZCA	92	09/2013 -	4228/1	
A3 III Limousine (8VS, 8VM) 44287 TSI	CZEA	110	05/2014 -	4228/1	
A3 III Limousine (8VS, 8VM) 44317 TFSI	DADA	110	05/2017 - 10/2018	4228/1	
A3 III Limousine (8VS, 8VM) 44348 TDI	CLHA	77	09/2013 -	4228/1	
A3 III Limousine (8VS, 8VM) 44348 TDI	CRKB, CXXB, DBKA	81	05/2014 -	4228/1	
A3 III Limousine (8VS, 8VM) 44348 TDI	DDYA	85	03/2017 -	4228/1	
A3 III Limousine (8VS, 8VM) 44348 TDI quattro	CXXB	81	05/2015 -	4228/1	
A3 III Limousine (8VS, 8VM) 44409 TFSI	CJSA, CJSB	132	05/2013 -	4228/1	
A3 III Limousine (8VS, 8VM) 44409 TFSI	CNSB	125	11/2013 -	4228/1	
A3 III Limousine (8VS, 8VM) 44409 TFSI quattro	CJSB	132	11/2013 -	4228/1	
A3 III Sportback (8VA, 8VF)	2.0 TDI (CRFA)	81	05/13 -	4228	4241
A3 III Sportback (8VA, 8VF)	2.0 TDI (CRFC)	105	03/13 -	4228	4241
A3 III Sportback (8VA, 8VF)	2.0 TDI (CRLB)	110	09/12 -	4228	4241
A3 III Sportback (8VA, 8VF)	2.0 TDI (CUNA)	135	05/13 -	4228	4241
A3 III Sportback (8VA, 8VF)	2.0 TFSI (CHHB)	162	02/15 -	4228	4241
A3 III Sportback (8VA, 8VF)	2.0 TFSI (CZPB)	140	05/16 -	4228	4241
A3 III Sportback (8VA, 8VF)	2.0 TFSI (CZPB)	140	05/16 -		4241
A3 III Sportback (8VA, 8VF)	S3 (CJXB)	206	05/13 -	4228	4241
A3 III Sportback (8VA, 8VF)	S3 (CJXC)	221	11/12 -	4228	4241
A3 III Sportback (8VA, 8VF)	S3 (CJXD)	213	07/16 -	4228	4241
A3 III Sportback (8VA, 8VF)	S3 (CJXG)	228	06/16 -	4228	4241
A3 III Sportback (8VA, 8VF)	S3 (DJHA)	228	06/16 -	4228	4241
A3 III Sportback (8VA, 8VF)	S3 (DJHB)	213	07/16 -	4228	4241
A3 III Sportback (8VA, 8VF)	S3 (CJXF)	210	05/14 -		4241
A3 III Sportback (8VA, 8VF)	1.0 TFSI (CHZD)	85	07/16 -	4228	4241
A3 III Sportback (8VA, 8VF)	1.2 TFSI (CJZA)	77	05/13 -	4228	4241
A3 III Sportback (8VA, 8VF)	1.2 TFSI (CYVB)	81	05/14 -		4241
A3 III Sportback (8VA, 8VF)	1.4 TFSI (CPTA)	103	03/13 -	4228	4241
A3 III Sportback (8VA, 8VF)	1.4 TFSI (CXSB)	92	05/14 -		4241
A3 III Sportback (8VA, 8VF)	1.4 TFSI (CZCA)	92	05/14 -		4241
A3 III Sportback (8VA, 8VF)	1.4 TFSI (CZEA)	110	05/14 -		4241
A3 III Sportback (8VA, 8VF)	1.4 TFSI (CMBA)	90	09/12 -	4228	4241
A3 III Sportback (8VA, 8VF)	1.4 TFSI (CMBA)	90	09/12 -		4241
A3 III Sportback (8VA, 8VF)	1.4 TFSI e-tron (CUKB)	110	05/14 -	4228	4241
A3 III Sportback (8VA, 8VF)	1.4 TFSI e-tron (CXUA)	110	05/14 -	4228	4241
A3 III Sportback (8VA, 8VF)	1.4 TFSI g-tron (CPWA)	81	11/13 -	4228	4241
A3 III Sportback (8VA, 8VF)	1.6 TDI (CLHA)	77	10/12 -	4228	4241
A3 III Sportback (8VA, 8VF)	1.6 TDI (CRKB)	81	09/13 -	4228	4241
A3 III Sportback (8VA, 8VF)	1.6 TDI (CXXB)	81	05/15 -	4228	4241
A3 III Sportback (8VA, 8VF)	1.8 TFSI (CJSA)	132	09/12 -	4228	4241
A3 III Sportback (8VA, 8VF)	1.8 TFSI (CJSB)	132	05/13 -	4228	4241
A3 III Sportback (8VA, 8VF)	2.0 TDI (CRBC)	110	09/12 -	4228	4241
A3 III Sportback (8VA, 8VF)	2.0 TDI (CRBD)	100	05/13 -	4228	4241
A3 III Sportback (8VA, 8VF) 1.0 TFSI	CHZD, DKRF	85	07/2016 -	4228/1	
A3 III Sportback (8VA, 8VF) 2.0 35 TDI	DFGA	110	07/2018 -	4228/1	
A3 III Sportback (8VA, 8VF) 2.0 40 TFSI	DKZA	140	07/2018 -	4228/1	
A3 III Sportback (8VA, 8VF) 2.0 TDI	CRBC, CRLB, CRUA, DBGA, DCYA, DEJA, DFGA (07.18-.)	110	09/2012 -	4228/1	
A3 III Sportback (8VA, 8VF) 2.0 TDI	CRBD, CRLC	100	05/2013 - 08/2016	4228/1	
A3 III Sportback (8VA, 8VF) 2.0 TDI	CRFA, DEJB	81	05/2013 - 08/2016	4228/1	
A3 III Sportback (8VA, 8VF) 2.0 TDI	CRFC	105	03/2013 - 08/2016	4228/1	
A3 III Sportback (8VA, 8VF) 2.0 TDI	CUNA	135	05/2013 - 08/2016	4228/1	
A3 III Sportback (8VA, 8VF) 2.0 TDI quattro	CRBC, CRLB, DCYA	110	02/2013 - 08/2016	4228/1	
A3 III Sportback (8VA, 8VF) 2.0 TDI quattro	CUNA, DGCA	135	05/2013 - 07/2018	4228/1	
A3 III Sportback (8VA, 8VF) 2.0 TFSI	CHHB	162	02/2015 - 08/2016	4228/1	
A3 III Sportback (8VA, 8VF) 2.0 TFSI	CZPB, DKZA (07.18-.)	140	05/2016 -	4228/1	
A3 III Sportback (8VA, 8VF) 2.0 TFSI quattro	CZPB, DKZA (07.18-.)	140	05/2016 -	4228/1	
A3 III Sportback (8VA, 8VF) 30 g-tron	DHFA	96	11/2018 -	4228/1	
A3 III Sportback (8VA, 8VF) 30 TDI	DGTE	85	07/2018 -	4228/1	
A3 III Sportback (8VA, 8VF) 30 TFSI	DKRF	85	07/2018 -	4228/1	
A3 III Sportback (8VA, 8VF) 35 TFSI	DADA, DPCA	110	10/2018 -	4228/1	
A3 III Sportback (8VA, 8VF) 44228 TFSI	CJZA	77	05/2013 -	4228/1	
A3 III Sportback (8VA, 8VF) 44228 TFSI	CYVB	81	05/2014 - 08/2016	4228/1	
A3 III Sportback (8VA, 8VF) 44287 TFSI	CMBA, CXSA	90	09/2012 -	4228/1	
A3 III Sportback (8VA, 8VF) 44287 TFSI	CPTA	103	03/2013 -	4228/1	
A3 III Sportback (8VA, 8VF) 44287 TFSI	CXSB, CZCA	92	05/2014 - 08/2016	4228/1	
A3 III Sportback (8VA, 8VF) 44287 TFSI e-tron	-	185	11/2017 -	4228/1	
A3 III Sportback (8VA, 8VF) 44287 TFSI e-tron	CUKB, CXUA	110	05/2014 -	4228/1	

MAKE & MODEL		KW	YEAR		
AUDI					
A3 III Sportback (8VA, 8VF) 44287 TFSI e-tron	CXUA	150	05/2014 -	4228/1	
A3 III Sportback (8VA, 8VF) 44287 TFSI g-tron	CPWA	81	11/2013 -	4228/1	
A3 III Sportback (8VA, 8VF) 44287 TSI	CZEA	110	05/2014 - 08/2016	4228/1	
A3 III Sportback (8VA, 8VF) 44317 TFSI	DADA	110	05/2017 -	4228/1	
A3 III Sportback (8VA, 8VF) 44348 TDI	CLHA	77	10/2012 -	4228/1	
A3 III Sportback (8VA, 8VF) 44348 TDI	CRKB, CXXB, DBKA	81	09/2013 -	4228/1	
A3 III Sportback (8VA, 8VF) 44348 TDI	DDYA	85	02/2017 -	4228/1	
A3 III Sportback (8VA, 8VF) 44348 TDI quattro	CXXB	81	05/2015 - 08/2016	4228/1	
A3 III Sportback (8VA, 8VF) 44409 TFSI	CJSA, CJSB	132	09/2012 -	4228/1	
A3 III Sportback (8VA, 8VF) 44409 TFSI quattro	CJSB	132	05/2013 -	4228/1	
A3 IV Limousine (8YS) 30 TDI	DSUD	85	06/2020 -	4228/1	
A3 IV Limousine (8YS) 30 TFSI	DLAA	81	06/2020 -	4228/1	
A3 IV Limousine (8YS) 30 TFSI Mild Hybrid	DLAA	81	06/2020 -	4228/1	
A3 IV Limousine (8YS) 35 TDI	DSRB	110	04/2020 -	4228/1	
A3 IV Limousine (8YS) 35 TFSI	DPCA	110	04/2020 -	4228/1	
A3 IV Limousine (8YS) 35 TFSI Mild Hybrid	DFYA	110	04/2020 -	4228/1	
A3 IV Sportback (8YA) 30 g-tron	DHFA	96	07/2020 -	4228/1	
A3 IV Sportback (8YA) 30 TDI	DSUD	85	03/2020 -	4228/1	
A3 IV Sportback (8YA) 30 TFSI	DLAA	81	06/2020 -	4228/1	
A3 IV Sportback (8YA) 30 TFSI Mild Hybrid	DLAA	81	06/2020 -	4228/1	
A3 IV Sportback (8YA) 35 TDI	DSRB	110	03/2020 -	4228/1	
A3 IV Sportback (8YA) 35 TFSI	DPCA	110	03/2020 -	4228/1	
A3 IV Sportback (8YA) 35 TFSI Mild Hybrid	DFYA	110	04/2020 -	4228/1	
A3 IV Sportback (8YA) 40 TFSIe	DGEA	110	06/2020 -	4228/1	
A3 Limousine (8VS, 8VM)	1.6 TDI quattro	81	05/15 -	4295	
A3 Sportback (8PA)	1.2 TSI	77	04/10 – 03/13	3782	3529/1
A3 Sportback (8PA)	1.2 TSI	77	04/10 – 03/13		3905
A3 Sportback (8PA)	1.2 TSI	77	04/10 – 03/13		4135
A3 Sportback (8PA)	1.4 TFSI	92	09/07 – 03/13	3782	3529/1
A3 Sportback (8PA)	1.4 TFSI	92	09/07 – 03/13	3904	3905
A3 Sportback (8PA)	1.4 TFSI	92	09/07 – 03/13		4135
A3 Sportback (8PA)	1.6	75	09/04 – 03/13	3782	3529/1
A3 Sportback (8PA)	1.6	75	09/04 – 03/13		3905
A3 Sportback (8PA)	1.6	75	09/04 – 03/13		4135
A3 Sportback (8PA)	1.6 E-Power	75	01/11 – 03/13	3782	3529/1
A3 Sportback (8PA)	1.6 E-Power	75	01/11 – 03/13	3904	3905
A3 Sportback (8PA)	1.6 E-Power	75	01/11 – 03/13		4135
A3 Sportback (8PA)	1.6 FSI	85	09/04 – 09/07	3782	3529/1
A3 Sportback (8PA)	1.6 FSI	85	09/04 – 09/07		3905
A3 Sportback (8PA)	1.6 FSI	85	09/04 – 09/07		4135
A3 Sportback (8PA)	1.6 TDI	66	05/09 – 03/13	3782	3529/1
A3 Sportback (8PA)	1.6 TDI	66	05/09 – 03/13		3905
A3 Sportback (8PA)	1.6 TDI	66	05/09 – 03/13		4135
A3 Sportback (8PA)	1.6 TDI	77	05/09 – 03/13	3782	3529/1
A3 Sportback (8PA)	1.6 TDI	77	05/09 – 03/13		3905
A3 Sportback (8PA)	1.6 TDI	77	05/09 – 03/13		4135
A3 Sportback (8PA)	1.8 TFSI	118	11/06 – 03/13	3904	3529/1
A3 Sportback (8PA)	1.8 TFSI	118	11/06 – 03/13		3905
A3 Sportback (8PA)	1.8 TFSI	118	11/06 – 03/13		4135
A3 Sportback (8PA)	1.8 TFSI quattro	118	07/08 – 03/13	3904	3529/1
A3 Sportback (8PA)	1.8 TFSI quattro	118	07/08 – 03/13		3905
A3 Sportback (8PA)	1.8 TFSI quattro	118	07/08 – 03/13		4135
A3 Sportback (8PA)	1.9 TDI	77	09/04 – 05/10	3782	3529/1
A3 Sportback (8PA)	1.9 TDI	77	09/04 – 05/10		3905
A3 Sportback (8PA)	1.9 TDI	77	09/04 – 05/10		4135
A3 Sportback (8PA)	2.0	120	06/06 – 03/13	3904	3529/1
A3 Sportback (8PA)	2.0	120	06/06 – 03/13		3905
A3 Sportback (8PA)	2.0	120	06/06 – 03/13		4135
A3 Sportback (8PA)	2.0 FSI	110	09/04 – 06/08	3904	3529/1
A3 Sportback (8PA)	2.0 FSI	110	09/04 – 06/08		3905
A3 Sportback (8PA)	2.0 FSI	110	09/04 – 06/08		4135
A3 Sportback (8PA)	2.0 TDI	100	09/04 – 03/13	3904	3529/1
A3 Sportback (8PA)	2.0 TDI	100	09/04 – 03/13		3905
A3 Sportback (8PA)	2.0 TDI	100	09/04 – 03/13		4135
A3 Sportback (8PA)	2.0 TDI	103	06/05 – 06/08	3904	3529/1
A3 Sportback (8PA)	2.0 TDI	103	06/05 – 06/08		3905
A3 Sportback (8PA)	2.0 TDI	103	06/05 – 06/08		4135
A3 Sportback (8PA)	2.0 TDI	120	06/06 – 06/08	3904	3529/1
A3 Sportback (8PA)	2.0 TDI	120	06/06 – 06/08		3905
A3 Sportback (8PA)	2.0 TDI	120	06/06 – 06/08		4135
A3 Sportback (8PA)	2.0 TDI	125	03/06 – 03/13	3904	3529/1
A3 Sportback (8PA)	2.0 TDI	125	03/06 – 03/13		3905
A3 Sportback (8PA)	2.0 TDI	125	03/06 – 03/13		4135
A3 Sportback (8PA)	2.0 TDI 16V	103	09/04 – 03/13	3904	3529/1
A3 Sportback (8PA)	2.0 TDI 16V	103	09/04 – 03/13		3905
A3 Sportback (8PA)	2.0 TDI 16V	103	09/04 – 03/13		4135

MAKE & MODEL		KW	YEAR		
AUDI					
A3 Sportback (8PA)	2.0 TDI 16V quattro	103	11/05 – 03/13	3904	3529/1
A3 Sportback (8PA)	2.0 TDI 16V quattro	103	11/05 – 03/13		3905
A3 Sportback (8PA)	2.0 TDI 16V quattro	103	11/05 – 03/13		4135
A3 Sportback (8PA)	2.0 TDI quattro	103	01/06 – 06/08	3904	3905
A3 Sportback (8PA)	2.0 TDI quattro	103	01/06 – 06/08		3905
A3 Sportback (8PA)	2.0 TDI quattro	103	01/06 – 06/08		4135
A3 Sportback (8PA)	2.0 TDI quattro	125	03/06 – 03/13	3904	3905
A3 Sportback (8PA)	2.0 TDI quattro	125	03/06 – 03/13		4135
A3 Sportback (8PA)	2.0 TFSI	147	09/04 – 03/13	3904	3529/1
A3 Sportback (8PA)	2.0 TFSI	147	09/04 – 03/13		3905
A3 Sportback (8PA)	2.0 TFSI	147	09/04 – 03/13		4135
A3 Sportback (8PA)	2.0 TFSI quattro	147	09/04 – 03/13	3904	3905
A3 Sportback (8PA)	2.0 TFSI quattro	147	09/04 – 03/13		4135
A3 Sportback (8VA, 8VF)	1.6 TDI quattro	81	05/15 -	4295	
A3 Sportback (8VA, 8VF)	2.0 TFSI	162	02/15 -	4295	
A4 (8D2, B5)	1.6	74	11/94 – 10/00	3896	3536
A4 (8D2, B5)	1.6	74	11/94 – 10/00		3529/1
A4 (8D2, B5)	1.6	75	07/00 – 11/00	3896	3536
A4 (8D2, B5)	1.6	75	07/00 – 11/00		3529/1
A4 (8D2, B5)	1.8	85	04/95 – 11/00	3590	3536
A4 (8D2, B5)	1.8	85	04/95 – 11/00	3896	3529/1
A4 (8D2, B5)	1.8	92	11/94 – 11/00	3590	3529/1
A4 (8D2, B5)	1.8	92	11/94 – 11/00	3896	3536
A4 (8D2, B5)	1.8	125	05/00 – 09/00	3590	3529/1
A4 (8D2, B5)	1.8	125	05/00 – 09/00	3590/2	3536
A4 (8D2, B5)	1.8 quattro	85	07/95 – 11/00	3590	3529/1
A4 (8D2, B5)	1.8 quattro	85	07/95 – 11/00	3896	3536
A4 (8D2, B5)	1.8 quattro	92	01/95 – 11/00	3590	3529/1
A4 (8D2, B5)	1.8 quattro	92	01/95 – 11/00	3896	3536
A4 (8D2, B5)	1.8 T	110	01/95 – 11/00	3590	3529/1
A4 (8D2, B5)	1.8 T	110	01/95 – 11/00	3590/2	3536
A4 (8D2, B5)	1.8 T	132	12/97 – 11/00	3590	3529/1
A4 (8D2, B5)	1.8 T	132	12/97 – 11/00	3590/2	3536
A4 (8D2, B5)	1.8 T quattro	110	01/95 – 11/00	3590	3529/1
A4 (8D2, B5)	1.8 T quattro	110	01/95 – 11/00	3590/2	3536
A4 (8D2, B5)	1.8 T quattro	132	12/97 – 11/00	3590	3529/1
A4 (8D2, B5)	1.8 T quattro	132	12/97 – 11/00	3590/2	3536
A4 (8D2, B5)	1.9 TDI	55	12/95 – 11/00	3896	3536
A4 (8D2, B5)	1.9 TDI	55	12/95 – 11/00		3529/1
A4 (8D2, B5)	1.9 TDI	66	01/95 – 11/00	3896	3536
A4 (8D2, B5)	1.9 TDI	66	01/95 – 11/00		3529/1
A4 (8D2, B5)	1.9 TDI	81	10/95 – 11/00	3590	3529/1
A4 (8D2, B5)	1.9 TDI	81	10/95 – 11/00	3590/2	3536
A4 (8D2, B5)	1.9 TDI	85	03/00 – 11/00	3590	3529/1
A4 (8D2, B5)	1.9 TDI	85	03/00 – 11/00	3590/2	3536
A4 (8D2, B5)	1.9 TDI quattro	81	09/96 – 11/00	3590	3529/1
A4 (8D2, B5)	1.9 TDI quattro	81	09/96 – 11/00	3590/2	3536
A4 (8D2, B5)	1.9 TDI quattro	85	03/00 – 11/00	3590	3529/1
A4 (8D2, B5)	1.9 TDI quattro	85	03/00 – 11/00	3590/2	3536
A4 (8D2, B5)	2.4	110	07/95 – 07/97	3590	3529/1
A4 (8D2, B5)	2.4	110	07/95 – 07/97	3590/2	3536
A4 (8D2, B5)	2.4	120	08/97 – 11/00	3590	3529/1
A4 (8D2, B5)	2.4	120	08/97 – 11/00	3590/2	3536
A4 (8D2, B5)	2.4	121	03/97 – 11/00	3590	3529/1
A4 (8D2, B5)	2.4	121	03/97 – 11/00	3590/2	3536
A4 (8D2, B5)	2.4 quattro	120	08/97 – 11/00	3590	3529/1
A4 (8D2, B5)	2.4 quattro	120	08/97 – 11/00	3590/2	3536
A4 (8D2, B5)	2.4 quattro	121	03/97 – 11/00	3590	3529/1
A4 (8D2, B5)	2.4 quattro	121	03/97 – 11/00	3590/2	3536
A4 (8D2, B5)	2.5 TDI	110	09/97 – 11/00	3590	3529/1
A4 (8D2, B5)	2.5 TDI	110	09/97 – 11/00	3590/2	3536
A4 (8D2, B5)	2.5 TDI quattro	110	09/97 – 11/00	3590	3529/1
A4 (8D2, B5)	2.5 TDI quattro	110	09/97 – 11/00	3590/2	3536
A4 (8D2, B5)	2.6	102	01/96 – 07/97	3590	3529/1
A4 (8D2, B5)	2.6	102	01/96 – 07/97	3590/2	3536
A4 (8D2, B5)	2.6	110	01/95 – 11/00	3590	3529/1
A4 (8D2, B5)	2.6	110	01/95 – 11/00	3590/2	3536
A4 (8D2, B5)	2.6 quattro	110	01/95 – 11/00	3590	3529/1
A4 (8D2, B5)	2.6 quattro	110	01/95 – 11/00	3590/2	3536
A4 (8D2, B5)	2.7 Turbo quattro	169	02/99 – 09/00		3529/1
A4 (8D2, B5)	2.8	128	09/95 – 07/97	3590	3529/1
A4 (8D2, B5)	2.8	128	09/95 – 07/97	3590/2	3536
A4 (8D2, B5)	2.8	142	10/96 – 11/00	3590	3529/1
A4 (8D2, B5)	2.8	142	10/96 – 11/00	3590/2	3536
A4 (8D2, B5)	2.8 quattro	128	01/95 – 07/97	3590	3529/1
A4 (8D2, B5)	2.8 quattro	128	01/95 – 07/97	3590/2	3536

MAKE & MODEL		KW	YEAR		
AUDI					
A4 (8D2, B5)	2.8 quattro	142	10/96 – 08/01	3590	3529/1
A4 (8D2, B5)	2.8 quattro	142	10/96 – 08/01	3590/2	3536
A4 (8D2, B5)	S4 quattro	187	10/97 – 12/98		3529/1
A4 (8D2, B5)	S4 quattro	195	09/97 – 09/01		3529/1
A4 (8E2, B6)	1.6	75	11/00 – 12/04	3590/2	3529/1
A4 (8E2, B6)	1.6	75	11/00 – 12/04	3896	
A4 (8E2, B6)	1.8 T	110	11/00 – 07/02	3590/2	3529/1
A4 (8E2, B6)	1.8 T	120	07/02 – 12/04	3590/2	3529/1
A4 (8E2, B6)	1.8 T	125	07/01 – 12/04	3590/2	3529/1
A4 (8E2, B6)	1.8 T	140	11/02 – 12/04	3590/2	3529/1
A4 (8E2, B6)	1.8 T quattro	110	11/00 – 07/02	3590/2	3529/1
A4 (8E2, B6)	1.8 T quattro	120	07/02 – 12/04	3590/2	3529/1
A4 (8E2, B6)	1.8 T quattro	125	07/01 – 12/04	3590/2	3529/1
A4 (8E2, B6)	1.8 T quattro	140	11/02 – 12/04	3590/2	3529/1
A4 (8E2, B6)	1.9 TDI	74	05/01 – 12/04	3590/2	3529/1
A4 (8E2, B6)	1.9 TDI	74	05/01 – 12/04	3896	
A4 (8E2, B6)	1.9 TDI	85	06/04 – 12/04	3590/2	3529/1
A4 (8E2, B6)	1.9 TDI	85	06/04 – 12/04	3896	
A4 (8E2, B6)	1.9 TDI	96	11/00 – 12/04	3590/2	3529/1
A4 (8E2, B6)	1.9 TDI quattro	96	11/01 – 12/04	3590/2	3529/1
A4 (8E2, B6)	2.0	96	11/00 – 12/04	3590/2	3529/1
A4 (8E2, B6)	2.0 FSI	110	07/02 – 12/04	3590/2	3529/1
A4 (8E2, B6)	2.4	120	09/01 – 12/04	3590/2	3529/1
A4 (8E2, B6)	2.4	125	09/01 – 12/04	3590/2	3529/1
A4 (8E2, B6)	2.5 TDI	114	08/01 – 07/02	3590/2	3529/1
A4 (8E2, B6)	2.5 TDI	120	07/02 – 12/04	3590/2	3529/1
A4 (8E2, B6)	2.5 TDI quattro	132	11/00 – 12/04	3590/2	3529/1
A4 (8E2, B6)	3.0	160	04/01 – 12/04	3590/2	3529/1
A4 (8E2, B6)	3.0	162	11/00 – 12/04	3590/2	3529/1
A4 (8E2, B6)	3.0 quattro	160	04/01 – 12/04	3590/2	3529/1
A4 (8E2, B6)	3.0 quattro	162	11/00 – 12/04	3590/2	3529/1
A4 (8EC, B7)	1.6	75	11/04 – 06/08	3590/2	3529
A4 (8EC, B7)	1.6	75	11/04 – 06/08	3896	
A4 (8EC, B7)	1.8 T	120	11/04 – 06/08	3529	3529
A4 (8EC, B7)	1.8 T quattro	120	11/04 – 06/08	3590/2	3529
A4 (8EC, B7)	1.9 TDI	85	11/04 – 06/08	3590/2	3529
A4 (8EC, B7)	1.9 TDI	85	11/04 – 06/08	3896	
A4 (8EC, B7)	2.0	96	11/04 – 06/08	3590/2	3529
A4 (8EC, B7)	2.0 TDI	89	09/05 – 09/06	3590/2	3529
A4 (8EC, B7)	2.0 TDI	89	09/05 – 09/06	3896	
A4 (8EC, B7)	2.0 TDI	93	11/05 – 11/06	3590/2	3529
A4 (8EC, B7)	2.0 TDI	93	11/05 – 11/06	3896	
A4 (8EC, B7)	2.0 TDI	100	11/04 – 06/08	3590/2	3529
A4 (8EC, B7)	2.0 TDI	103	11/04 – 06/08	3590/2	3529
A4 (8EC, B7)	2.0 TDI	120	06/06 – 06/08	3590/2	3529
A4 (8EC, B7)	2.0 TDI	125	06/06 – 06/08	3590/2	3529
A4 (8EC, B7)	2.0 TDI 16V	103	11/04 – 06/08	3590/2	3529
A4 (8EC, B7)	2.0 TDI quattro	103	01/06 – 06/08	3590/2	3529
A4 (8EC, B7)	2.0 TDI quattro	120	06/06 – 06/08	3590/2	3529
A4 (8EC, B7)	2.0 TDI quattro	125	06/06 – 06/08	3590/2	3529
A4 (8EC, B7)	2.0 TFSI	125	10/06 – 06/08	3590/2	3529
A4 (8EC, B7)	2.0 TFSI	147	11/04 – 06/08		3905
A4 (8EC, B7)	2.0 TFSI	162	06/05 – 06/08		3905
A4 (8EC, B7)	2.0 TFSI quattro	147	11/04 – 06/08		3905
A4 (8EC, B7)	2.0 TFSI quattro	162	06/05 – 06/08		3905
A4 (8EC, B7)	2.5 TDI	120	11/04 – 05/06		3905
A4 (8EC, B7)	2.7 TDI	120	11/05 – 06/08		3905
A4 (8EC, B7)	2.7 TDI	132	01/06 – 06/08		3905
A4 (8EC, B7)	3.0	160	11/04 – 05/06		3905
A4 (8EC, B7)	3.0 quattro	160	11/04 – 07/06		3905
A4 (8EC, B7)	3.0 TDI quattro	150	11/04 – 06/08		3905
A4 (8EC, B7)	3.0 TDI quattro	171	01/06 – 06/08		3905
A4 (8EC, B7)	3.2 FSI	188	01/05 – 06/08		3905
A4 (8EC, B7)	3.2 FSI quattro	188	01/05 – 06/08		3905
A4 Allroad B9 (8WH, 8WJ)	2.0 TDI quattro	100	11.2016 - 07.2018	4364	
A4 Allroad B9 (8WH, 8WJ)	2.0 TDI quattro	110	11.2016 - 10.2019	4364	
A4 Allroad B9 (8WH, 8WJ)	2.0 TDI quattro	120	05.2016 - 10.2019	4364	
A4 Allroad B9 (8WH, 8WJ)	2.0 TDI quattro	140	01.2016 -	4364	
A4 Allroad B9 (8WH, 8WJ)	2.0 TFSI Mild Hybrid quattro	185	11.2018 - 10.2019	4364	
A4 Allroad B9 (8WH, 8WJ)	2.0 TFSI quattro	183	05.2016 - 10.2019	4364	
A4 Allroad B9 (8WH, 8WJ)	2.0 TFSI quattro	185	01.2016 -	4364	
A4 Allroad B9 (8WH, 8WJ)	3.0 TDI quattro	160	01.2016 - 08.2018	4364	
A4 Allroad B9 (8WH, 8WJ)	3.0 TDI quattro	200	01.2016 - 08.2018	4364	
A4 Allroad B9 (8WH, 8WJ)	3.0 TDI quattro	210	07.2018 - 10.2019	4364	
A4 Allroad B9 (8WH, 8WJ)	40 TDI Mild Hybrid quattro	150	09.2020 -	4364	
A4 Allroad B9 (8WH, 8WJ)	40 TDI quattro	140	01.2020 -	4364	

MAKE & MODEL   		KW	YEAR		
AUDI					
A4 Allroad B9 (8WH, 8WJ)	45 TDI quattro	170	07.2018 -	4364	
A4 Allroad B9 (8WH, 8WJ)	45 TFSI Mild Hybrid quattro	180	07.2018 -	4364	
A4 Allroad B9 (8WH, 8WJ)	45 TFSI Mild Hybrid quattro	195	08.2020 -	4364	
A4 Allroad B9 (8WH, 8WJ)	50 TDI quattro	210	11.2019 -	4364	
A4 Avant (8D5, B5)	1.6	74	11/94 – 09/01	3896	3536
A4 Avant (8D5, B5)	1.6	74	11/94 – 09/01		3529/1
A4 Avant (8D5, B5)	1.6	75	07/00 – 09/01	3896	3536
A4 Avant (8D5, B5)	1.6	75	07/00 – 09/01		3529/1
A4 Avant (8D5, B5)	1.8	85	07/95 – 09/01	3590	3529/1
A4 Avant (8D5, B5)	1.8	85	07/95 – 09/01	3896	3536
A4 Avant (8D5, B5)	1.8	92	02/96 – 09/01	3590	3529/1
A4 Avant (8D5, B5)	1.8	92	02/96 – 09/01	3896	3536
A4 Avant (8D5, B5)	1.8 quattro	85	07/95 – 09/01	3590	3529/1
A4 Avant (8D5, B5)	1.8 quattro	85	07/95 – 09/01	3896	3536
A4 Avant (8D5, B5)	1.8 quattro	92	01/96 – 09/01	3590	3529/1
A4 Avant (8D5, B5)	1.8 quattro	92	01/96 – 09/01	3896	3536
A4 Avant (8D5, B5)	1.8 T	110	03/96 – 09/01	3590	3529/1
A4 Avant (8D5, B5)	1.8 T	110	03/96 – 09/01	3590/2	3536
A4 Avant (8D5, B5)	1.8 T	132	12/97 – 09/01	3590	3529/1
A4 Avant (8D5, B5)	1.8 T	132	12/97 – 09/01	3590/2	3536
A4 Avant (8D5, B5)	1.8 T quattro	110	01/96 – 09/01	3590	3529/1
A4 Avant (8D5, B5)	1.8 T quattro	110	01/96 – 09/01	3590/2	3536
A4 Avant (8D5, B5)	1.8 T quattro	132	12/97 – 09/01	3590	3529/1
A4 Avant (8D5, B5)	1.8 T quattro	132	12/97 – 09/01	3590/2	3536
A4 Avant (8D5, B5)	1.9 DUO	66	03/98 – 09/01	3896	3529/1
A4 Avant (8D5, B5)	1.9 DUO	66	03/98 – 09/01		3536
A4 Avant (8D5, B5)	1.9 TDI	55	03/96 – 09/01	3896	3536
A4 Avant (8D5, B5)	1.9 TDI	55	03/96 – 09/01		3896
A4 Avant (8D5, B5)	1.9 TDI	66	02/96 – 09/01	3896	3536
A4 Avant (8D5, B5)	1.9 TDI	66	02/96 – 09/01		3529/1
A4 Avant (8D5, B5)	1.9 TDI	81	02/96 – 09/01	3590	3529/1
A4 Avant (8D5, B5)	1.9 TDI	81	02/96 – 09/01	3590/2	3536
A4 Avant (8D5, B5)	1.9 TDI	85	03/00 – 09/01	3590	3529/1
A4 Avant (8D5, B5)	1.9 TDI	85	03/00 – 09/01	3590/2	3536
A4 Avant (8D5, B5)	1.9 TDI quattro	81	09/96 – 09/01	3590	3529/1
A4 Avant (8D5, B5)	1.9 TDI quattro	81	09/96 – 09/01	3590/2	3536
A4 Avant (8D5, B5)	1.9 TDI quattro	85	03/00 – 09/01	3590	3529/1
A4 Avant (8D5, B5)	1.9 TDI quattro	85	03/00 – 09/01	3590/2	3536
A4 Avant (8D5, B5)	2.4	110	07/95 – 07/97	3590	3529/1
A4 Avant (8D5, B5)	2.4	110	07/95 – 07/97	3590/2	3536
A4 Avant (8D5, B5)	2.4	120	08/97 – 09/01	3590	3529/1
A4 Avant (8D5, B5)	2.4	120	08/97 – 09/01	3590/2	3536
A4 Avant (8D5, B5)	2.4	121	03/97 – 09/01	3590	3529/1
A4 Avant (8D5, B5)	2.4	121	03/97 – 09/01	3590/2	3536
A4 Avant (8D5, B5)	2.4 quattro	120	08/97 – 09/01	3590	3529/1
A4 Avant (8D5, B5)	2.4 quattro	120	08/97 – 09/01	3590/2	3536
A4 Avant (8D5, B5)	2.4 quattro	121	03/97 – 09/01	3590	3529/1
A4 Avant (8D5, B5)	2.4 quattro	121	03/97 – 09/01	3590/2	3536
A4 Avant (8D5, B5)	2.5 TDI	110	09/97 – 09/01	3590	3529/1
A4 Avant (8D5, B5)	2.5 TDI	110	09/97 – 09/01	3590/2	3536
A4 Avant (8D5, B5)	2.5 TDI quattro	110	09/97 – 09/01	3590	3529/1
A4 Avant (8D5, B5)	2.5 TDI quattro	110	09/97 – 09/01	3590/2	3536
A4 Avant (8D5, B5)	2.6	110	02/96 – 09/01	3590	3529/1
A4 Avant (8D5, B5)	2.6	110	02/96 – 09/01	3590/2	3536
A4 Avant (8D5, B5)	2.6 quattro	110	01/96 – 09/01	3590	3529/1
A4 Avant (8D5, B5)	2.6 quattro	110	01/96 – 09/01	3590/2	3536
A4 Avant (8D5, B5)	2.8	128	03/96 – 09/96	3590	3529/1
A4 Avant (8D5, B5)	2.8	128	03/96 – 09/96	3590/2	3536
A4 Avant (8D5, B5)	2.8	140	03/99 – 09/00	3590	3529/1
A4 Avant (8D5, B5)	2.8	140	03/99 – 09/00	3590/2	3536
A4 Avant (8D5, B5)	2.8	142	10/96 – 09/01	3590	3529/1
A4 Avant (8D5, B5)	2.8	142	10/96 – 09/01	3590/2	3536
A4 Avant (8D5, B5)	2.8 quattro	128	01/96 – 09/96	3590	3529/1
A4 Avant (8D5, B5)	2.8 quattro	128	01/96 – 09/96	3590/2	3536
A4 Avant (8D5, B5)	2.8 quattro	140	03/99 – 09/00	3590	3529/1
A4 Avant (8D5, B5)	2.8 quattro	140	03/99 – 09/00	3590/2	3536
A4 Avant (8D5, B5)	2.8 quattro	142	10/96 – 09/01	3590	3529/1
A4 Avant (8D5, B5)	2.8 quattro	142	10/96 – 09/01	3590/2	3536
A4 Avant (8D5, B5)	S4 quattro	195	09/97 – 09/01	3590/2	3529/1
A4 Avant (8E5, B6)	1.6	75	09/01 – 12/04	3896	3529/1
A4 Avant (8E5, B6)	1.8 T	110	09/01 – 07/02	3590/2	3529/1
A4 Avant (8E5, B6)	1.8 T	120	07/02 – 12/04	3590/2	3529/1
A4 Avant (8E5, B6)	1.8 T	140	11/02 – 12/04	3590/2	3529/1
A4 Avant (8E5, B6)	1.8 T quattro	110	09/01 – 07/02	3590/2	3529/1
A4 Avant (8E5, B6)	1.8 T quattro	120	07/02 – 12/04	3590/2	3529/1
A4 Avant (8E5, B6)	1.8 T quattro	125	09/01 – 12/04	3590/2	3529/1

MAKE & MODEL		KW	YEAR		
AUDI					
A4 Avant (8E5, B6)	1.8 T quattro	140	11/02 – 12/04	3590/2	3529/1
A4 Avant (8E5, B6)	1.9 TDI	74	11/01 – 12/04	3590/2	3529/1
A4 Avant (8E5, B6)	1.9 TDI	74	11/01 – 12/04	3896	
A4 Avant (8E5, B6)	1.9 TDI	85	06/04 – 12/04	3590/2	3529/1
A4 Avant (8E5, B6)	1.9 TDI	85	06/04 – 12/04	3896	
A4 Avant (8E5, B6)	1.9 TDI	96	09/01 – 12/04	3590/2	3529/1
A4 Avant (8E5, B6)	1.9 TDI quattro	96	11/01 – 12/04	3590/2	3529/1
A4 Avant (8E5, B6)	2.0	96	09/01 – 12/04	3590/2	3529/1
A4 Avant (8E5, B6)	2.0 FSI	110	07/02 – 12/04	3590/2	3529/1
A4 Avant (8E5, B6)	2.4	120	09/01 – 12/04	3590/2	3529/1
A4 Avant (8E5, B6)	2.4	125	09/01 – 12/04	3590/2	3529/1
A4 Avant (8E5, B6)	2.5 TDI	114	09/01 – 07/02	3590/2	3529/1
A4 Avant (8E5, B6)	2.5 TDI	120	07/02 – 12/04	3590/2	3529/1
A4 Avant (8E5, B6)	2.5 TDI quattro	132	09/01 – 12/04	3590/2	3529/1
A4 Avant (8E5, B6)	3.0	160	04/01 – 12/04	3590/2	3529/1
A4 Avant (8E5, B6)	3.0	162	09/01 – 12/04	3590/2	3529/1
A4 Avant (8E5, B6)	3.0 quattro	160	04/01 – 12/04	3590/2	3529/1
A4 Avant (8E5, B6)	3.0 quattro	162	09/01 – 12/04	3590/2	3529/1
A4 Avant (8ED, B7)	1.6	75	11/04 – 06/08	3590/2	3529
A4 Avant (8ED, B7)	1.6	75	11/04 – 06/08	3896	
A4 Avant (8ED, B7)	1.8 T	120	11/04 – 06/08	3590/2	3529
A4 Avant (8ED, B7)	1.8 T quattro	120	11/04 – 06/08	3590/2	3529
A4 Avant (8ED, B7)	1.9 TDI	85	11/04 – 06/08	3590/2	3529
A4 Avant (8ED, B7)	1.9 TDI	85	11/04 – 06/08	3896	
A4 Avant (8ED, B7)	2.0	96	11/04 – 06/08	3590/2	3529
A4 Avant (8ED, B7)	2.0 TDI	89	09/05 – 09/06	3590/2	3529
A4 Avant (8ED, B7)	2.0 TDI	89	09/05 – 09/06	3896	
A4 Avant (8ED, B7)	2.0 TDI	93	11/05 – 11/06	3590/2	3529
A4 Avant (8ED, B7)	2.0 TDI	93	11/05 – 11/06	3896	
A4 Avant (8ED, B7)	2.0 TDI	100	11/04 – 06/08	3590/2	3529
A4 Avant (8ED, B7)	2.0 TDI	103	11/04 – 06/08	3590/2	3529
A4 Avant (8ED, B7)	2.0 TDI	120	06/06 – 06/08	3590/2	3529
A4 Avant (8ED, B7)	2.0 TDI	125	06/06 – 06/08	3590/2	3529
A4 Avant (8ED, B7)	2.0 TDI 16V	103	11/04 – 06/08	3590/2	3529
A4 Avant (8ED, B7)	2.0 TDI quattro	103	01/06 – 06/08	3590/2	3529
A4 Avant (8ED, B7)	2.0 TDI quattro	120	06/06 – 06/08	3590/2	3529
A4 Avant (8ED, B7)	2.0 TDI quattro	125	06/06 – 06/08	3590/2	3529
A4 Avant (8ED, B7)	2.0 TFSI	125	10/06 – 06/08	3590/2	3529
A4 Avant (8ED, B7)	2.0 TFSI	147	11/04 – 06/08		3905
A4 Avant (8ED, B7)	2.0 TFSI	162	06/05 – 06/08		3905
A4 Avant (8ED, B7)	2.0 TFSI quattro	147	11/04 – 06/08		3905
A4 Avant (8ED, B7)	2.0 TFSI quattro	162	06/05 – 06/08		3905
A4 Avant (8ED, B7)	2.5 TDI	120	11/04 – 05/06		3905
A4 Avant (8ED, B7)	2.7 TDI	120	11/05 – 03/08		3905
A4 Avant (8ED, B7)	2.7 TDi	132	01/06 – 06/08		3905
A4 Avant (8ED, B7)	3.0	160	11/04 – 05/06		3905
A4 Avant (8ED, B7)	3.0 quattro	160	11/04 – 07/06		3905
A4 Avant (8ED, B7)	3.0 TDI quattro	150	11/04 – 06/08		3905
A4 Avant (8ED, B7)	3.0 TDI quattro	171	01/06 – 06/08		3905
A4 Avant (8ED, B7)	3.2 FSI	188	01/05 – 06/08		3905
A4 Avant (8ED, B7)	3.2 FSI quattro	188	01/05 – 06/08		3905
A4 B9 (8W2, 8WC)	1.4 TFSI	110	08.2015 - 11.2019	4364	
A4 B9 (8W2, 8WC)	2.0 TDI	90	05.2016 - 11.2019	4364	
A4 B9 (8W2, 8WC)	2.0 TDI	100	05.2015 - 11.2019	4364	
A4 B9 (8W2, 8WC)	2.0 TDI	110	05.2015 - 11.2019	4364	
A4 B9 (8W2, 8WC)	2.0 TDI	140	05.2015 -	4364	
A4 B9 (8W2, 8WC)	2.0 TDI quattro	110	09.2016 - 11.2019	4364	
A4 B9 (8W2, 8WC)	2.0 TDI quattro	120	09.2016 - 11.2019	4364	
A4 B9 (8W2, 8WC)	2.0 TDI quattro	140	09.2015 - 11.2019	4364	
A4 B9 (8W2, 8WC)	2.0 TFSI	140	05.2015 -	4364	
A4 B9 (8W2, 8WC)	2.0 TFSI	183	11.2015 - 11.2019	4364	
A4 B9 (8W2, 8WC)	2.0 TFSI	185	05.2015 - 11.2019	4364	
A4 B9 (8W2, 8WC)	2.0 TFSI quattro	183	11.2015 - 11.2019	4364	
A4 B9 (8W2, 8WC)	2.0 TFSI quattro	185	05.2015 -	4364	
A4 B9 (8W2, 8WC)	3.0 TDI	160	09.2015 - 08.2018	4364	
A4 B9 (8W2, 8WC)	3.0 TDI quattro	160	09.2015 - 08.2018	4364	
A4 B9 (8W2, 8WC)	3.0 TDI quattro	200	05.2015 - 08.2018	4364	
A4 B9 (8W2, 8WC)	30 TDI	90	05.2016 - 11.2019	4364	
A4 B9 (8W2, 8WC)	30 TDI Mild Hybrid	100	07.2019 -	4364	
A4 B9 (8W2, 8WC)	35 TDI	110	08.2015 - 11.2019	4364	
A4 B9 (8W2, 8WC)	35 TDI Mild Hybrid	120	03.2019 -	4364	
A4 B9 (8W2, 8WC)	35 TFSI Mild Hybrid	110	12.2018 - 11.2019	4364	
A4 B9 (8W2, 8WC)	40 TDI Mild Hybrid quattro	150	05.2020 -	4364	
A4 B9 (8W2, 8WC)	40 TFSI Mild Hybrid	150	06.2020 -	4364	
A4 B9 (8W2, 8WC)	40 TFSI Mild Hybrid quattro	150	06.2020 -	4364	
A4 B9 (8W2, 8WC)	45 TDI quattro	170	07.2018 - 11.2019	4364	

MAKE & MODEL   		KW	YEAR		
AUDI					
A4 B9 (8W2, 8WC)	45 TFSI Mild Hybrid	180	07.2018 - 11.2019	4364	
A4 B9 (8W2, 8WC)	45 TFSI Mild Hybrid quattro	180	07.2018 - 11.2019	4364	
A4 B9 (8W2, 8WC)	45 TFSI Mild Hybrid quattro	195	08.2020 -	4364	
A4 B9 (8W2, 8WC)	50 TDI quattro	210	07.2018 - 11.2019	4364	
A4 B9 (8W2, 8WC)	S4 quattro	260	05.2016 - 11.2019	4364	
A4 B9 (8W2, 8WC)	S4 TDI Mild Hybrid quattro	255	05.2019 -	4364	
A4 B9 Avant (8W5, 8WD)	1.4 TFSI	110	02.2016 - 10.2019	4364	
A4 B9 Avant (8W5, 8WD)	2.0 TDI	90	04.2016 - 09.2018	4364	
A4 B9 Avant (8W5, 8WD)	2.0 TDI	100	08.2015 - 10.2019	4364	
A4 B9 Avant (8W5, 8WD)	2.0 TDI	110	08.2015 - 09.2018	4364	
A4 B9 Avant (8W5, 8WD)	2.0 TDI	140	08.2015 - 09.2018	4364	
A4 B9 Avant (8W5, 8WD)	2.0 TDI quattro	110	09.2016 - 10.2019	4364	
A4 B9 Avant (8W5, 8WD)	2.0 TDI quattro	120	09.2016 - 09.2018	4364	
A4 B9 Avant (8W5, 8WD)	2.0 TDI quattro	140	10.2015 - 09.2018	4364	
A4 B9 Avant (8W5, 8WD)	2.0 TFSI	140	08.2015 -	4364	
A4 B9 Avant (8W5, 8WD)	2.0 TFSI	183	05.2016 - 10.2019	4364	
A4 B9 Avant (8W5, 8WD)	2.0 TFSI	185	05.2016 - 10.2019	4364	
A4 B9 Avant (8W5, 8WD)	2.0 TFSI g-tron	125	11.2016 - 10.2019	4364	
A4 B9 Avant (8W5, 8WD)	2.0 TFSI quattro	183	11.2015 - 10.2019	4364	
A4 B9 Avant (8W5, 8WD)	2.0 TFSI quattro	185	08.2015 - 10.2019	4364	
A4 B9 Avant (8W5, 8WD)	3.0 TDI	160	10.2015 - 08.2018	4364	
A4 B9 Avant (8W5, 8WD)	3.0 TDI quattro	160	11.2015 - 08.2018	4364	
A4 B9 Avant (8W5, 8WD)	3.0 TDI quattro	200	08.2015 - 08.2018	4364	
A4 B9 Avant (8W5, 8WD)	30 TDI	90	10.2018 - 10.2019	4364	
A4 B9 Avant (8W5, 8WD)	30 TDI Mild Hybrid	100	07.2019 -	4364	
A4 B9 Avant (8W5, 8WD)	35 TDI	110	10.2018 - 10.2019	4364	
A4 B9 Avant (8W5, 8WD)	35 TDI Mild Hybrid	120	07.2019 -	4364	
A4 B9 Avant (8W5, 8WD)	35 TFSI Mild Hybrid	110	12.2018 - 10.2019	4364	
A4 B9 Avant (8W5, 8WD)	40 TDI Mild Hybrid quattro	150	05.2020 -	4364	
A4 B9 Avant (8W5, 8WD)	40 TFSI Mild Hybrid	150	06.2020 -	4364	
A4 B9 Avant (8W5, 8WD)	40 TFSI Mild Hybrid quattro	150	06.2020 -	4364	
A4 B9 Avant (8W5, 8WD)	45 TDI quattro	170	07.2018 - 10.2019	4364	
A4 B9 Avant (8W5, 8WD)	45 TFSI Mild Hybrid	180	07.2018 - 10.2019	4364	
A4 B9 Avant (8W5, 8WD)	45 TFSI Mild Hybrid quattro	180	07.2018 - 10.2019	4364	
A4 B9 Avant (8W5, 8WD)	45 TFSI Mild Hybrid quattro	195	08.2020 -	4364	
A4 B9 Avant (8W5, 8WD)	50 TDI quattro	210	07.2018 - 10.2019	4364	
A4 B9 Avant (8W5, 8WD)	S4 quattro	260	05.2016 - 10.2019	4364	
A4 Convertible (8H7, B6, 8HE, B7)	1.8 T	120	07/02 – 03/09	3590/2	3529/1
A4 Convertible (8H7, B6, 8HE, B7)	1.8 T	125	10/02 – 10/05	3590/2	3529/1
A4 Convertible (8H7, B6, 8HE, B7)	1.8 T quattro	120	05/03 – 03/09	3590/2	3529/1
A4 Convertible (8H7, B6, 8HE, B7)	2.0	96	09/04 – 12/05	3590/2	3529/1
A4 Convertible (8H7, B6, 8HE, B7)	2.0 TDI	100	01/06 – 03/09	3590/2	3529/1
A4 Convertible (8H7, B6, 8HE, B7)	2.0 TDI	103	01/06 – 03/09	3590/2	3529/1
A4 Convertible (8H7, B6, 8HE, B7)	2.0 TFSI 16V	147	01/06 – 03/09		3529/1
A4 Convertible (8H7, B6, 8HE, B7)	2.0 TFSI quattro	147	11/05 – 03/09		3529/1
A4 Convertible (8H7, B6, 8HE, B7)	2.4	120	04/02 – 12/05	3590/2	3529/1
A4 Convertible (8H7, B6, 8HE, B7)	2.4	125	04/02 – 12/05	3590/2	3529/1
A4 Convertible (8H7, B6, 8HE, B7)	2.5 TDI	120	08/02 – 12/05	3590/2	3529/1
A4 Convertible (8H7, B6, 8HE, B7)	2.7 TDI	132	06/06 – 03/09		3529/1
A4 Convertible (8H7, B6, 8HE, B7)	3.0	160	04/02 – 12/05	3590/2	3529/1
A4 Convertible (8H7, B6, 8HE, B7)	3.0	160	04/02 – 12/05		3905
A4 Convertible (8H7, B6, 8HE, B7)	3.0	162	04/02 – 12/05	3590/2	3529/1
A4 Convertible (8H7, B6, 8HE, B7)	3.0 quattro	162	05/03 – 12/05	3590/2	3529/1
A4 Convertible (8H7, B6, 8HE, B7)	3.0 TDI quattro	150	01/06 – 03/09		3529/1
A4 Convertible (8H7, B6, 8HE, B7)	3.0 TDI quattro	171	01/06 – 03/09		3529/1
A4 Convertible (8H7, B6, 8HE, B7)	3.2 FSI	188	01/06 – 03/09		3529/1
A4 Convertible (8H7, B6, 8HE, B7)	3.2 FSI quattro	188	01/06 – 03/09		3529/1
A4 I (8D2, B5) 44348	ADP (.-10.96), AHL (10.96-.), ANA (08.98-.), ARM (	74	11/1994 - 10/2000	3650	
A4 I (8D2, B5) 44440 TDI	1Z (01.95-07.96), AHH, AHU (08.96-.)	66	01/1995 - 11/2000	3650	
A4 I (8D2, B5) 44440 TDI	AFF	55	12/1995 - 11/2000	3650	
A4 I Avant (8D5, B5) 44348	ADP (.-10.96), AHL (10.96-.), ANA, ARM	74	11/1994 - 09/2001	3650	
A4 I Avant (8D5, B5) 44440 TDI	1Z (02.96-07.96), AHH, AHU (08.96-.)	66	02/1996 - 09/2001	3650	
A4 I Avant (8D5, B5) 44440 TDI	AFF	55	03/1996 - 09/2001	3650	
A5 (F53, F5P)	1.4 TFSI	110	11.2016 - 02.2020	4364	
A5 (F53, F5P)	2.0 TDI	110	05.2017 - 02.2020	4364	
A5 (F53, F5P)	2.0 TDI	140	07.2016 -	4364	
A5 (F53, F5P)	2.0 TDI quattro	140	10.2016 -	4364	
A5 (F53, F5P)	2.0 TFSI	140	09.2016 -	4364	
A5 (F53, F5P)	2.0 TFSI	185	11.2016 - 02.2020	4364	
A5 (F53, F5P)	2.0 TFSI Mild Hybrid quattro	185	05.2017 - 02.2020	4364	
A5 (F53, F5P)	2.0 TFSI quattro	183	06.2016 - 02.2020	4364	
A5 (F53, F5P)	2.0 TFSI quattro	185	06.2016 -	4364	
A5 (F53, F5P)	3.0 TDI	160	11.2016 - 08.2018	4364	
A5 (F53, F5P)	3.0 TDI quattro	160	07.2016 - 08.2018	4364	
A5 (F53, F5P)	3.0 TDI quattro	200	02.2017 - 12.2017	4364	
A5 (F53, F5P)	3.0 TDI quattro	210	01.2017 - 02.2020	4364	

MAKE & MODEL		KW	YEAR		
AUDI					
A5 (F53, F5P)	30 TDI Mild Hybrid	100	10.2019 -	4364	
A5 (F53, F5P)	35 TDI	110	05.2017 - 02.2020	4364	
A5 (F53, F5P)	35 TDI Mild Hybrid	120	10.2019 -	4364	
A5 (F53, F5P)	35 TFSI Mild Hybrid	110	02.2019 - 02.2020	4364	
A5 (F53, F5P)	40 TDI	140	06.2016 - 02.2020	4364	
A5 (F53, F5P)	40 TDI Mild Hybrid quattro	150	09.2020 -	4364	
A5 (F53, F5P)	40 TDI quattro	140	10.2016 - 02.2020	4364	
A5 (F53, F5P)	40 TFSI Mild Hybrid	150	06.2020 -	4364	
A5 (F53, F5P)	40 TFSI Mild Hybrid quattro	150	05.2020 -	4364	
A5 (F53, F5P)	45 TDI quattro	170	07.2018 - 02.2020	4364	
A5 (F53, F5P)	45 TFSI Mild Hybrid	180	07.2018 - 02.2020	4364	
A5 (F53, F5P)	45 TFSI Mild Hybrid quattro	180	07.2018 - 02.2020	4364	
A5 (F53, F5P)	45 TFSI Mild Hybrid quattro	195	05.2020 -	4364	
A5 (F53, F5P)	S5 quattro	260	07.2016 -	4364	
A5 (F53, F5P)	S5 TDI Mild Hybrid quattro	255	12.2018 - 02.2020	4364	
A5 Cabrio (F57, F5E)	2.0 TDI	110	08.2017 - 12.2019	4364	
A5 Cabrio (F57, F5E)	2.0 TDI	140	11.2016 - 12.2019	4364	
A5 Cabrio (F57, F5E)	2.0 TDI quattro	140	03.2017 -	4364	
A5 Cabrio (F57, F5E)	2.0 TFSI	140	03.2017 - 12.2019	4364	
A5 Cabrio (F57, F5E)	2.0 TFSI	185	03.2017 - 12.2019	4364	
A5 Cabrio (F57, F5E)	2.0 TFSI quattro	185	11.2016 - 12.2019	4364	
A5 Cabrio (F57, F5E)	3.0 TDI	160	03.2017 - 08.2018	4364	
A5 Cabrio (F57, F5E)	3.0 TDI quattro	160	12.2016 - 08.2018	4364	
A5 Cabrio (F57, F5E)	3.0 TDI quattro	210	11.2016 - 12.2019	4364	
A5 Cabrio (F57, F5E)	35 TDI Mild Hybrid	120	10.2019 -	4364	
A5 Cabrio (F57, F5E)	35 TFSI Mild Hybrid	110	05.2020 -	4364	
A5 Cabrio (F57, F5E)	40 TDI Mild Hybrid quattro	150	09.2020 -	4364	
A5 Cabrio (F57, F5E)	40 TFSI Mild Hybrid	150	05.2020 -	4364	
A5 Cabrio (F57, F5E)	40 TFSI Mild Hybrid quattro	150	05.2020 -	4364	
A5 Cabrio (F57, F5E)	45 TFSI Mild Hybrid	180	07.2018 - 12.2019	4364	
A5 Cabrio (F57, F5E)	45 TFSI Mild Hybrid quattro	180	07.2018 - 12.2019	4364	
A5 Cabrio (F57, F5E)	45 TFSI Mild Hybrid quattro	195	05.2020 -	4364	
A5 Sportback (F5A, F5F)	1.4 TFSI	110	01.2017 - 02.2020	4364	
A5 Sportback (F5A, F5F)	2.0 TDI	100	05.2017 - 08.2018	4364	
A5 Sportback (F5A, F5F)	2.0 TDI	110	01.2017 - 02.2020	4364	
A5 Sportback (F5A, F5F)	2.0 TDI	140	09.2016 -	4364	
A5 Sportback (F5A, F5F)	2.0 TDI quattro	110	05.2017 - 02.2020	4364	
A5 Sportback (F5A, F5F)	2.0 TDI quattro	140	10.2016 -	4364	
A5 Sportback (F5A, F5F)	2.0 TFSI	140	01.2017 -	4364	
A5 Sportback (F5A, F5F)	2.0 TFSI	185	11.2016 - 02.2020	4364	
A5 Sportback (F5A, F5F)	2.0 TFSI g-tron	125	02.2017 - 02.2020	4364	
A5 Sportback (F5A, F5F)	2.0 TFSI quattro	183	09.2016 - 02.2020	4364	
A5 Sportback (F5A, F5F)	2.0 TFSI quattro	185	09.2016 -	4364	
A5 Sportback (F5A, F5F)	3.0 TDI	160	03.2017 - 08.2018	4364	
A5 Sportback (F5A, F5F)	3.0 TDI quattro	160	09.2016 -	4364	
A5 Sportback (F5A, F5F)	3.0 TDI quattro	200	02.2017 - 12.2017	4364	
A5 Sportback (F5A, F5F)	3.0 TDI quattro	210	01.2017 - 02.2020	4364	
A5 Sportback (F5A, F5F)	30 TDI Mild Hybrid	100	10.2019 -	4364	
A5 Sportback (F5A, F5F)	35 TDI	110	01.2017 - 02.2020	4364	
A5 Sportback (F5A, F5F)	35 TDI Mild Hybrid	120	10.2019 -	4364	
A5 Sportback (F5A, F5F)	35 TFSI Mild Hybrid	110	08.2018 - 02.2020	4364	
A5 Sportback (F5A, F5F)	40 TDI	140	09.2016 - 02.2020	4364	
A5 Sportback (F5A, F5F)	40 TDI Mild Hybrid quattro	150	09.2020 -	4364	
A5 Sportback (F5A, F5F)	40 TDI quattro	140	08.2016 - 02.2020	4364	
A5 Sportback (F5A, F5F)	40 TFSI Mild Hybrid	150	05.2020 -	4364	
A5 Sportback (F5A, F5F)	40 TFSI Mild Hybrid quattro	150	05.2020 -	4364	
A5 Sportback (F5A, F5F)	45 TDI quattro	170	07.2018 - 02.2020	4364	
A5 Sportback (F5A, F5F)	45 TFSI Mild Hybrid	180	07.2018 - 02.2020	4364	
A5 Sportback (F5A, F5F)	45 TFSI Mild Hybrid quattro	180	02.2019 - 02.2020	4364	
A5 Sportback (F5A, F5F)	45 TFSI Mild Hybrid quattrov	195	05.2020 -	4364	
A5 Sportback (F5A, F5F)	RS5 quattro	331	06.2018 -	4364	
A5 Sportback (F5A, F5F)	S5 TDI Mild Hybrid quattro	255	12.2018 - 02.2020	4364	
A6 IV (4G2, C7, 4GC)	1.8 TFSI (CYGA)	140	09/14 -	4259	
A6 IV (4G2, C7, 4GC)	2.0 TDI (CGLC)	130	03/11 -	4259	
A6 IV (4G2, C7, 4GC)	2.0 TDI (CGLD)	120	03/11 -	4259	
A6 IV (4G2, C7, 4GC)	2.0 TDI (CGLE)	100	01/12 -	4259	
A6 IV (4G2, C7, 4GC)	2.0 TDI (CMGB)	130	03/11 -	4259	
A6 IV (4G2, C7, 4GC)	2.0 TDI (CNHA)	140	11/13 -	4259	
A6 IV (4G2, C7, 4GC)	2.0 TDI (CSUD)	110	09/14 -	4259	
A6 IV (4G2, C7, 4GC)	2.0 TDI (DDDA)	140	04/15 -	4259	
A6 IV (4G2, C7, 4GC)	2.0 TFSI (CAEB)	155	05/12 – 05/13	4259	
A6 IV (4G2, C7, 4GC)	2.0 TFSI (CAED)	162	05/13 -	4259	
A6 IV (4G2, C7, 4GC)	2.0 TFSI (CDNB)	132	05/11 -	4259	
A6 IV (4G2, C7, 4GC)	2.0 TFSI (CYNB)	185	09/14 -	4259	
A6 IV (4G2, C7, 4GC)	2.0 TFSI (CYPA)	185	05/14 -	4259	
A6 IV (4G2, C7, 4GC)	2.0 TFSI (CYPB)	183	05/15 -	4259	

MAKE & MODEL   		KW	YEAR		
AUDI					
A6 IV (4G2, C7, 4GC)	2.0 TFSI hybrid (CHJA)	155	11/11 -	4259	
A6 IV (4G2, C7, 4GC)	2.8 FS (CHVA)	150	11/10 – 04/15	4259	
A6 IV (4G2, C7, 4GC)	2.8 FSI (CVPA)	162	09/14 -	4259	
A6 IV (4G2, C7, 4GC)	3.0	213	11/11 -	4259	
A6 IV (4G2, C7, 4GC)	3.0 TDI (CDUC)	180	03/11 -	4259	
A6 IV (4G2, C7, 4GC)	3.0 TDI (CDUD)	180	03/11 -	4259	
A6 IV (4G2, C7, 4GC)	3.0 TDI (CGQB)	230	11/11 -	4259	
A6 IV (4G2, C7, 4GC)	3.0 TDI (CKVB)	180	03/11 -	4259	
A6 IV (4G2, C7, 4GC)	3.0 TDI (CKVC)	180	03/11 -	4259	
A6 IV (4G2, C7, 4GC)	3.0 TDI (CLAA)	150	03/11 -	4259	
A6 IV (4G2, C7, 4GC)	3.0 TDI (CLAB)	150	11/10 -	4259	
A6 IV (4G2, C7, 4GC)	3.0 TDI (CPNB)	176	05/13 -	4259	
A6 IV (4G2, C7, 4GC)	3.0 TDI (CRTD)	200	09/14 -	4259	
A6 IV (4G2, C7, 4GC)	3.0 TDI (CRTE)	160	09/14 -	4259	
A6 IV (4G2, C7, 4GC)	3.0 TDI (CRTF)	155	09/14 -	4259	
A6 IV (4G2, C7, 4GC)	3.0 TDI (CTCB)	155	09/14 -	4259	
A6 IV (4G2, C7, 4GC)	3.0 TDI (CTCC)	160	09/14 -	4259	
A6 IV (4G2, C7, 4GC)	3.0 TDI (CVUA)	235	09/14 -	4259	
A6 IV (4G2, C7, 4GC)	3.0 TDI (CVUB)	240	09/14 -	4259	
A6 IV (4G2, C7, 4GC)	3.0 TDI (CZVA)	160	09/14 -	4259	
A6 IV (4G2, C7, 4GC)	3.0 TDI (CZVB)	160	09/14 -	4259	
A6 IV (4G2, C7, 4GC)	3.0 TDI (CZVC)	155	09/14 -	4259	
A6 IV (4G2, C7, 4GC)	3.0 TDI (CZVD)	155	09/14 -	4259	
A6 IV (4G2, C7, 4GC)	3.0 TFSI (CGWB)	220	11/10 – 05/12	4259	
A6 IV (4G2, C7, 4GC)	3.0 TFSI (CGWD)	228	03/11 -	4259	
A6 IV (4G2, C7, 4GC)	3.0 TFSI (CGXB)	228	03/11 -	4259	
A6 IV (4G2, C7, 4GC)	3.0 TFSI (CREC)	245	09/14 -	4259	
A6 IV (4G2, C7, 4GC)	3.0 TFSI (CTUA)	228	03/11 -	4259	
A6 IV (4G2, C7, 4GC)	4.0 S6 (CEUC)	309	02/12 -	4259	
A6 IV (4G2, C7, 4GC)	S6 (CTGE)	331	10/14 -	4259	
A6 IV Allroad (4GH, 4GJ C7)	3.0 TDI (CDUD)	180	01/12 -	4259	
A6 IV Allroad (4GH, 4GJ C7)	3.0 TDI (CGQB)	230	01/12 -	4259	
A6 IV Allroad (4GH, 4GJ C7)	3.0 TDI (CKVC)	180	01/12 -	4259	
A6 IV Allroad (4GH, 4GJ C7)	3.0 TDI (CLAA)	150	01/12 -	4259	
A6 IV Allroad (4GH, 4GJ C7)	3.0 TDI (CRTD)	200	09/14 -	4259	
A6 IV Allroad (4GH, 4GJ C7)	3.0 TDI (CRTE)	160	09/14 -	4259	
A6 IV Allroad (4GH, 4GJ C7)	3.0 TDI (CRTF)	155	09/14 -	4259	
A6 IV Allroad (4GH, 4GJ C7)	3.0 TDI (CVUA)	235	01/12 -	4259	
A6 IV Allroad (4GH, 4GJ C7)	3.0 TDI (CZVA)	160	09/14 -	4259	
A6 IV Allroad (4GH, 4GJ C7)	3.0 TDI (CZVC)	155	09/14 -	4259	
A6 IV Allroad (4GH, 4GJ C7)	3.0 TDI (CZVF)	140	11/15 -	4259	
A6 IV Allroad (4GH, 4GJ C7)	3.0 TFSI (CGWD)	228	01/12 -	4259	
A6 IV Allroad (4GH, 4GJ C7)	3.0 TFSI (CREC)	245	09/14 -	4259	
A6 (4A, C4)	1.8	92	12/95 – 10/97		3536
A6 (4A, C4)	1.8 quattro	92	12/95 – 10/97		3536
A6 (4A, C4)	1.9 TDI	66	06/94 – 10/97		3536
A6 (4A, C4)	2.0	74	06/94 – 10/97		3536
A6 (4A, C4)	2.0	79	08/95 – 07/96		3536
A6 (4A, C4)	2.0	85	06/94 – 10/97		3536
A6 (4A, C4)	2.0 16V	103	06/94 – 10/97		3536
A6 (4A, C4)	2.0 16V quattro	103	06/94 – 10/97		3536
A6 (4A, C4)	2.3	98	06/94 – 12/95		3536
A6 (4A, C4)	2.3 quattro	98	06/94 – 12/95		3536
A6 (4A, C4)	2.4	110	07/95 – 06/96		3536
A6 (4A, C4)	2.5 TDI	84	01/95 – 10/97		3536
A6 (4A, C4)	2.5 TDI	85	06/94 – 10/97		3536
A6 (4A, C4)	2.5 TDI	103	08/94 – 10/97		3536
A6 (4A, C4)	2.5 TDI quattro	103	10/95 – 10/97		3536
A6 (4A, C4)	2.6	102	06/94 – 10/97		3536
A6 (4A, C4)	2.6	110	06/94 – 10/97		3536
A6 (4A, C4)	2.6 quattro	110	06/94 – 10/97		3536
A6 (4A, C4)	2.8	120	08/95 – 07/96		3536
A6 (4A, C4)	2.8	128	06/94 – 10/97		3536
A6 (4A, C4)	2.8	142	12/95 – 10/97		3536
A6 (4A, C4)	2.8 quattro	128	06/94 – 10/97		3536
A6 (4A, C4)	2.8 quattro	142	12/95 – 10/97		3536
A6 (4A, C4)	S6 4.2 quattro	213	06/94 – 10/97		3536
A6 (4A, C4)	S6 Plus quattro	240	04/96 – 10/97		3536
A6 (4A, C4)	S6 Turbo quattro	169	06/94 – 10/97		3536
A6 (4B2, C5)	1.8	85	05/97 – 01/05	3590/2	3529/1
A6 (4B2, C5)	1.8	85	05/97 – 01/05		3529
A6 (4B2, C5)	1.8	92	07/97 – 01/05	3590/2	3529/1
A6 (4B2, C5)	1.8	92	07/97 – 01/05		3529
A6 (4B2, C5)	1.8 T	110	01/97 – 01/05	3590/2	3529/1
A6 (4B2, C5)	1.8 T	110	01/97 – 01/05		3529
A6 (4B2, C5)	1.8 T	132	12/97 – 01/05	3590/2	3529/1

MAKE & MODEL		KW	YEAR		
AUDI					
A6 (4B2, C5)	1.8 T	132	12/97 – 01/05		3529
A6 (4B2, C5)	1.8 T quattro	110	02/97 – 01/05	3590/2	3529/1
A6 (4B2, C5)	1.8 T quattro	110	02/97 – 01/05		3529
A6 (4B2, C5)	1.8 T quattro	132	12/97 – 01/05	3590/2	3529/1
A6 (4B2, C5)	1.8 T quattro	132	12/97 – 01/05		3529
A6 (4B2, C5)	1.9 TDI	81	04/97 – 10/00	3590/2	3529/1
A6 (4B2, C5)	1.9 TDI	85	07/00 – 01/05	3590/2	3529/1
A6 (4B2, C5)	1.9 TDI	85	07/00 – 01/05		3529
A6 (4B2, C5)	1.9 TDI	96	08/01 – 01/05	3590/2	3529/1
A6 (4B2, C5)	1.9 TDI	96	08/01 – 01/05		3529
A6 (4B2, C5)	2.0	96	08/01 – 01/05	3590/2	3529/1
A6 (4B2, C5)	2.0	96	08/01 – 01/05		3529
A6 (4B2, C5)	2.4	100	07/98 – 01/05	3590/2	3529/1
A6 (4B2, C5)	2.4	100	07/98 – 01/05		3529
A6 (4B2, C5)	2.4	115	02/97 – 01/05	3590/2	3529/1
A6 (4B2, C5)	2.4	115	02/97 – 01/05		3529
A6 (4B2, C5)	2.4	120	02/97 – 01/05	3590/2	3529/1
A6 (4B2, C5)	2.4	120	02/97 – 01/05		3529
A6 (4B2, C5)	2.4	121	02/97 – 01/05	3590/2	3529/1
A6 (4B2, C5)	2.4	121	02/97 – 01/05		3529
A6 (4B2, C5)	2.4	125	08/01 – 01/05	3590/2	3529/1
A6 (4B2, C5)	2.4	125	08/01 – 01/05		3529
A6 (4B2, C5)	2.4 quattro	115	08/98 – 07/99	3590/2	3529/1
A6 (4B2, C5)	2.4 quattro	120	02/97 – 01/05	3590/2	3529/1
A6 (4B2, C5)	2.4 quattro	120	02/97 – 01/05		3529
A6 (4B2, C5)	2.4 quattro	121	02/97 – 01/05	3590/2	3529/1
A6 (4B2, C5)	2.4 quattro	121	02/97 – 01/05		3529
A6 (4B2, C5)	2.4 quattro	125	08/01 – 01/05	3590/2	3529/1
A6 (4B2, C5)	2.4 quattro	125	08/01 – 01/05		3529
A6 (4B2, C5)	2.5 TDI	110	07/97 – 01/05	3590/2	3529
A6 (4B2, C5)	2.5 TDI	110	07/97 – 01/05	4096	3529/1
A6 (4B2, C5)	2.5 TDI	114	08/01 – 01/05	3590/2	3529
A6 (4B2, C5)	2.5 TDI	114	08/01 – 01/05	4096	3529/1
A6 (4B2, C5)	2.5 TDI	120	07/02 – 01/05	3590/2	3529
A6 (4B2, C5)	2.5 TDI	120	07/02 – 01/05	4096	3529/1
A6 (4B2, C5)	2.5 TDI	132	02/00 – 01/05	3590/2	3529
A6 (4B2, C5)	2.5 TDI	132	02/00 – 01/05	4096	3529/1
A6 (4B2, C5)	2.5 TDI quattro	110	07/97 – 01/05	3590/2	3529
A6 (4B2, C5)	2.5 TDI quattro	110	07/97 – 01/05	4096	3529/1
A6 (4B2, C5)	2.5 TDI quattro	132	02/00 – 01/05	3590/2	3529
A6 (4B2, C5)	2.5 TDI quattro	132	02/00 – 01/05	4096	3529/1
A6 (4B2, C5)	2.7	187	05/01 – 07/04	4096	3529/1
A6 (4B2, C5)	2.7	187	05/01 – 07/04		3529
A6 (4B2, C5)	2.7 quattro	187	05/01 – 07/04	4096	3529/1
A6 (4B2, C5)	2.7 quattro	187	05/01 – 07/04		3529
A6 (4B2, C5)	2.7 quattro	195	11/03 – 07/04	4096	3529/1
A6 (4B2, C5)	2.7 quattro	195	11/03 – 07/04		3529
A6 (4B2, C5)	2.7 T	169	02/99 – 01/05	4096	3529/1
A6 (4B2, C5)	2.7 T	169	02/99 – 01/05		3529
A6 (4B2, C5)	2.7 T quattro	169	12/97 – 01/05	4096	3529/1
A6 (4B2, C5)	2.7 T quattro	169	12/97 – 01/05		3529
A6 (4B2, C5)	2.7 T quattro	184	08/01 – 01/05	4096	3529/1
A6 (4B2, C5)	2.7 T quattro	184	08/01 – 01/05		3529
A6 (4B2, C5)	2.8	132	10/97 – 05/00	3590/2	3529/1
A6 (4B2, C5)	2.8	140	07/99 – 01/05	3590/2	3529/1
A6 (4B2, C5)	2.8	140	07/99 – 01/05		3529
A6 (4B2, C5)	2.8	142	02/97 – 01/05	3590/2	3529/1
A6 (4B2, C5)	2.8	142	02/97 – 01/05		3529
A6 (4B2, C5)	2.8 quattro	132	01/98 – 04/00	3590/2	3529/1
A6 (4B2, C5)	2.8 quattro	140	07/99 – 05/01	3590/2	3529/1
A6 (4B2, C5)	2.8 quattro	142	02/97 – 01/05	3590/2	3529/1
A6 (4B2, C5)	2.8 quattro	142	02/97 – 01/05		3529
A6 (4B2, C5)	3.0	162	08/01 – 01/05	4096	3529/1
A6 (4B2, C5)	3.0	162	08/01 – 01/05		3529
A6 (4B2, C5)	3.0 quattro	160	06/01 – 07/04	4096	3529/1
A6 (4B2, C5)	3.0 quattro	160	06/01 – 07/04		3529
A6 (4B2, C5)	3.0 quattro	162	08/01 - 01/05	4096	3529/1
A6 (4B2, C5)	3.0 quattro	162	08/01 – 01/05		3529
A6 (4B2, C5)	3.7	191	03/99 – 01/05	4096	3529/1
A6 (4B2, C5)	3.7	191	03/99 – 01/05		3529
A6 (4B2, C5)	3.7 quattro	191	03/99 – 01/05	4096	3529/1
A6 (4B2, C5)	3.7 quattro	191	03/99 – 01/05		3529
A6 (4B2, C5)	4.2 quattro	220	11/98 – 01/05	4096	3529/1
A6 (4B2, C5)	4.2 quattro	220	11/98 – 01/05		3529
A6 (4B2, C5)	S6 quattro	250	09/99 – 01/05	4096	3529/1
A6 (4B2, C5)	S6 quattro	250	09/99 – 01/05		3529

MAKE & MODEL		KW	YEAR		
AUDI					
A6 (4F2, C6)	2.0 TDI	89	09/05 – 06/06		3905
A6 (4F2, C6)	2.0 TDI	100	07/04 – 03/11		3905
A6 (4F2, C6)	2.0 TDI	103	07/04 – 10/08		3905
A6 (4F2, C6)	2.0 TDI	120	04/09 – 03/11		3905
A6 (4F2, C6)	2.0 TDI	125	11/08 – 03/11		3905
A6 (4F2, C6)	2.0 TFSI	125	06/05 – 03/11		3905
A6 (4F2, C6)	2.4	130	05/04 – 10/08		3905
A6 (4F2, C6)	2.4 quattro	130	01/05 – 10/08		3905
A6 (4F2, C6)	2.7 TDI	120	11/04 – 03/11		3905
A6 (4F2, C6)	2.7 TDI	132	11/04 – 10/08		3905
A6 (4F2, C6)	2.7 TDI	140	10/08 – 03/11		3905
A6 (4F2, C6)	2.7 TDI quattro	120	06/05 – 03/11		3905
A6 (4F2, C6)	2.7 TDI quattro	132	11/04 – 10/08		3905
A6 (4F2, C6)	2.7 TDI quattro	140	10/08 – 03/11		3905
A6 (4F2, C6)	2.8 FSI	140	10/08 – 03/11		3905
A6 (4F2, C6)	2.8 FSI	154	11/06 – 10/08		3905
A6 (4F2, C6)	2.8 FSI	162	10/08 – 03/11		3905
A6 (4F2, C6)	2.8 FSI quattro	140	10/08 – 03/11		3905
A6 (4F2, C6)	2.8 FSI quattro	154	06/07 – 10/08		3905
A6 (4F2, C6)	2.8 FSI quattro	162	10/08 – 03/11		3905
A6 (4F2, C6)	3.0	160	08/04 – 05/06		3905
A6 (4F2, C6)	3.0 quattro	160	05/04 – 05/06		3905
A6 (4F2, C6)	3.0 TDI quattro	155	05/04 – 03/11		3905
A6 (4F2, C6)	3.0 TDI quattro	165	05/04 – 05/06		3905
A6 (4F2, C6)	3.0 TDI quattro	171	06/06 – 10/08		3905
A6 (4F2, C6)	3.0 TDI quattro	176	10/08 – 03/11		3905
A6 (4F2, C6)	3.0 TFSI quattro	213	10/08 – 03/11		3905
A6 (4F2, C6)	3.0 TFSI quattro	220	10/08 – 03/11		3905
A6 (4F2, C6)	3.2 FSI	188	05/04 – 05/09		3905
A6 (4F2, C6)	3.2 FSI	195	05/09 – 03/11		3905
A6 (4F2, C6)	3.2 FSI quattro	183	09/06 – 10/08		3905
A6 (4F2, C6)	3.2 FSI quattro	188	05/04 – 10/08		3905
A6 (4G2, C7, 4GC)	1.8 TFSI	140	09/14 -		4260
A6 (4G2, C7, 4GC)	2.0 TDI	100	01/12 -		4260
A6 (4G2, C7, 4GC)	2.0 TDI	110	09/14 -		4260
A6 (4G2, C7, 4GC)	2.0 TDI	120	03/11 -		4260
A6 (4G2, C7, 4GC)	2.0 TDI	130	03/11 -		4260
A6 (4G2, C7, 4GC)	2.0 TDI	140	11/13 -		4260
A6 (4G2, C7, 4GC)	2.0 TDI quattro	140	04/15 -		4260
A6 (4G2, C7, 4GC)	2.0 TFSI	132	05/11 -		4260
A6 (4G2, C7, 4GC)	2.0 TFSI	155	03/11 – 05/13		4260
A6 (4G2, C7, 4GC)	2.0 TFSI	162	05/13 -		4260
A6 (4G2, C7, 4GC)	2.0 TFSI	185	09/14 -		4260
A6 (4G2, C7, 4GC)	2.0 TFSI hybrid	155	11/11 -		4260
A6 (4G2, C7, 4GC)	2.0 TFSI quattro	155	05/12 – 05/13		4260
A6 (4G2, C7, 4GC)	2.0 TFSI quattro	162	05/13 -		4260
A6 (4G2, C7, 4GC)	2.0 TFSI quattro	183	05/15 -		4260
A6 (4G2, C7, 4GC)	2.0 TFSI quattro	185	05/14 -		4260
A6 (4G2, C7, 4GC)	2.8 FSI	150	11/10 – 04/15		4260
A6 (4G2, C7, 4GC)	2.8 FSI quattro	150	11/10 – 04/15		4260
A6 (4G2, C7, 4GC)	2.8 FSI quattro	162	09/14 -		4260
A6 (4G2, C7, 4GC)	3.0 TDI	150	11/10 -		4260
A6 (4G2, C7, 4GC)	3.0 TDI	155	09/14 -		4260
A6 (4G2, C7, 4GC)	3.0 TDI	160	09/14 -		4260
A6 (4G2, C7, 4GC)	3.0 TDI quattro	150	03/11 -		4260
A6 (4G2, C7, 4GC)	3.0 TDI quattro	155	09/14 -		4260
A6 (4G2, C7, 4GC)	3.0 TDI quattro	160	09/14 -		4260
A6 (4G2, C7, 4GC)	3.0 TDI quattro	176	05/13 -		4260
A6 (4G2, C7, 4GC)	3.0 TDI quattro	180	03/11 -		4260
A6 (4G2, C7, 4GC)	3.0 TDI quattro	200	09/14 -		4260
A6 (4G2, C7, 4GC)	3.0 TDI quattro	230	11/11 -		4260
A6 (4G2, C7, 4GC)	3.0 TDI quattro	235	09/14 -		4260
A6 (4G2, C7, 4GC)	3.0 TDI quattro	240	09/14 -		4260
A6 (4G2, C7, 4GC)	3.0 TFSI quattro	220	11/10 – 05/12		4260
A6 (4G2, C7, 4GC)	3.0 TFSI quattro	228	03/11 -		4260
A6 (4G2, C7, 4GC)	3.0 TFSI quattro	245	09/14 -		4260
A6 (4G2, C7, 4GC)	S6 quattro	331	10/14 -		4260
A6 Allroad (4FH, C6)	2.7 TDI quattro	120	05/06 – 08/11		3905
A6 Allroad (4FH, C6)	2.7 TDI quattro	132	05/06 – 10/08		3905
A6 Allroad (4FH, C6)	2.7 TDI quattro	140	10/08 – 08/11		3905
A6 Allroad (4FH, C6)	3.0 TDI quattro	155	05/06 – 08/11		3905
A6 Allroad (4FH, C6)	3.0 TDI quattro	171	05/06 – 10/08		3905
A6 Allroad (4FH, C6)	3.0 TDI quattro	176	10/08 – 08/11		3905
A6 Allroad (4FH, C6)	3.0 TFSI quattro	213	10/08 – 08/11		3905
A6 Allroad (4FH, C6)	3.2 FSI quattro	188	05/06 – 10/08		3905
A6 Avant (4A, C4)	1.8	92	12/95 – 12/97		3536

MAKE & MODEL		KW	YEAR		
AUDI					
A6 Avant (4A, C4)	1.8 quattro	92	12/95 – 12/97		3536
A6 Avant (4A, C4)	1.9 TDI	66	06/94 – 12/97		3536
A6 Avant (4A, C4)	2.0	74	06/94 – 12/97		3536
A6 Avant (4A, C4)	2.0	85	06/94 – 12/97		3536
A6 Avant (4A, C4)	2.0 16V	103	06/94 – 12/97		3536
A6 Avant (4A, C4)	2.0 16V quattro	103	06/94 – 12/97		3536
A6 Avant (4A, C4)	2.3	98	06/94 – 12/95		3536
A6 Avant (4A, C4)	2.3 quattro	98	06/94 – 12/95		3536
A6 Avant (4A, C4)	2.4	110	07/96 – 12/97		3536
A6 Avant (4A, C4)	2.5 TDI	84	01/95 – 12/97		3536
A6 Avant (4A, C4)	2.5 TDI	85	06/94 – 12/97		3536
A6 Avant (4A, C4)	2.5 TDI	103	08/94 – 12/97		3536
A6 Avant (4A, C4)	2.5 TDI quattro	103	07/95 – 12/97		3536
A6 Avant (4A, C4)	2.6	102	06/94 – 02/97		3536
A6 Avant (4A, C4)	2.6	110	06/94 – 12/97		3536
A6 Avant (4A, C4)	2.6 quattro	110	06/94 – 12/97		3536
A6 Avant (4A, C4)	2.8	128	06/94 – 12/97		3536
A6 Avant (4A, C4)	2.8	142	12/95 – 12/97		3536
A6 Avant (4A, C4)	2.8 quattro	128	06/94 – 12/97		3536
A6 Avant (4A, C4)	2.8 quattro	142	12/95 – 12/97		3536
A6 Avant (4A, C4)	S6 4.2 quattro	213	06/94 – 12/97		3536
A6 Avant (4A, C4)	S6 Plus quattro	240	04/96 – 12/97		3536
A6 Avant (4A, C4)	S6 Turbo quattro	169	06/94 – 12/97		3536
A6 Avant (4B5, C5)	1.8	85	02/98 – 01/05	3590/2	3529/1
A6 Avant (4B5, C5)	1.8	85	02/98 – 01/05		3529
A6 Avant (4B5, C5)	1.8	92	12/97 – 01/05	3590/2	3529/1
A6 Avant (4B5, C5)	1.8	92	12/97 – 01/05		3529
A6 Avant (4B5, C5)	1.8 T	110	12/97 – 01/05	3590/2	3529/1
A6 Avant (4B5, C5)	1.8 T	110	12/97 – 01/05		3529
A6 Avant (4B5, C5)	1.8 T	132	04/99 – 01/05	3590/2	3529/1
A6 Avant (4B5, C5)	1.8 T	132	04/99 – 01/05		3529
A6 Avant (4B5, C5)	1.8 T quattro	110	12/97 – 01/05	3590/2	3529/1
A6 Avant (4B5, C5)	1.8 T quattro	110	12/97 – 01/05		3529
A6 Avant (4B5, C5)	1.8 T quattro	132	12/97 – 01/05	3590/2	3529/1
A6 Avant (4B5, C5)	1.8 T quattro	132	12/97 – 01/05		3529
A6 Avant (4B5, C5)	1.9 TDI	81	02/98 – 04/01	3590/2	3529/1
A6 Avant (4B5, C5)	1.9 TDI	85	07/00 – 01/05	3590/2	3529/1
A6 Avant (4B5, C5)	1.9 TDI	85	07/00 – 01/05		3529
A6 Avant (4B5, C5)	1.9 TDI	96	08/01 – 01/05	3590/2	3529/1
A6 Avant (4B5, C5)	1.9 TDI	96	08/01 – 01/05		3529
A6 Avant (4B5, C5)	2.0	96	08/01 – 01/05	3590/2	3529/1
A6 Avant (4B5, C5)	2.0	96	08/01 – 01/05		3529
A6 Avant (4B5, C5)	2.4	100	07/98 – 01/05	3590/2	3529/1
A6 Avant (4B5, C5)	2.4	100	07/98 – 01/05		3529
A6 Avant (4B5, C5)	2.4	115	12/97 – 01/05	3590/2	3529/1
A6 Avant (4B5, C5)	2.4	115	12/97 – 01/05		3529
A6 Avant (4B5, C5)	2.4	120	12/97 – 01/05	3590/2	3529/1
A6 Avant (4B5, C5)	2.4	120	12/97 – 01/05		3529
A6 Avant (4B5, C5)	2.4	121	12/97 – 01/05	3590/2	3529/1
A6 Avant (4B5, C5)	2.4	121	12/97 – 01/05		3529
A6 Avant (4B5, C5)	2.4	125	08/01 – 01/05	3590/2	3529/1
A6 Avant (4B5, C5)	2.4	125	08/01 – 01/05		3529
A6 Avant (4B5, C5)	2.4 quattro	115	08/98 – 05/01	3590/2	3529/1
A6 Avant (4B5, C5)	2.4 quattro	115	08/98 – 05/01		3529
A6 Avant (4B5, C5)	2.4 quattro	120	12/97 – 01/05	3590/2	3529/1
A6 Avant (4B5, C5)	2.4 quattro	120	12/97 – 01/05		3529
A6 Avant (4B5, C5)	2.4 quattro	121	12/97 – 01/05	3590/2	3529/1
A6 Avant (4B5, C5)	2.4 quattro	121	12/97 – 01/05		3529
A6 Avant (4B5, C5)	2.4 quattro	125	08/01 – 01/05	3590/2	3529/1
A6 Avant (4B5, C5)	2.4 quattro	125	08/01 – 01/05		3529
A6 Avant (4B5, C5)	2.5 TDI	110	12/97 – 01/05	3590/2	3529
A6 Avant (4B5, C5)	2.5 TDI	110	12/97 – 01/05	4096	3529/1
A6 Avant (4B5, C5)	2.5 TDI	114	08/01 – 01/05	3590/2	3529
A6 Avant (4B5, C5)	2.5 TDI	114	08/01 – 01/05	4096	3529/1
A6 Avant (4B5, C5)	2.5 TDI	120	07/02 – 01/05	3590/2	3529
A6 Avant (4B5, C5)	2.5 TDI	120	07/02 – 01/05	4096	3529/1
A6 Avant (4B5, C5)	2.5 TDI	132	02/00 – 01/05	3590/2	3529
A6 Avant (4B5, C5)	2.5 TDI	132	02/00 – 01/05	4096	3529/1
A6 Avant (4B5, C5)	2.5 TDI quattro	110	12/97 – 01/05	3590/2	3529
A6 Avant (4B5, C5)	2.5 TDI quattro	110	12/97 – 01/05	4096	3529/1
A6 Avant (4B5, C5)	2.5 TDI quattro	132	02/00 – 01/05	3590/2	3529
A6 Avant (4B5, C5)	2.5 TDI quattro	132	02/00 – 01/05	4096	3529/1
A6 Avant (4B5, C5)	2.7 T	169	02/99 – 01/05	4096	3529/1
A6 Avant (4B5, C5)	2.7 T	169	02/99 – 01/05		3529
A6 Avant (4B5, C5)	2.7 T quattro	169	12/97 – 01/05	4096	3529/1
A6 Avant (4B5, C5)	2.7 T quattro	169	12/97 – 01/05		3529

MAKE & MODEL		KW	YEAR		
AUDI					
A6 Avant (4B5, C5)	2.7 T quattro	184	08/01 – 01/05	4096	3529/1
A6 Avant (4B5, C5)	2.7 T quattro	184	08/01 – 01/05		3529
A6 Avant (4B5, C5)	2.8	132	12/97 – 05/00	3590/2	3529/1
A6 Avant (4B5, C5)	2.8	132	12/97 – 05/00		3529
A6 Avant (4B5, C5)	2.8	140	07/99 – 01/05	3590/2	3529/1
A6 Avant (4B5, C5)	2.8	140	07/99 – 01/05		3529
A6 Avant (4B5, C5)	2.8	142	12/97 – 01/05	3590/2	3529/1
A6 Avant (4B5, C5)	2.8	142	12/97 – 01/05		3529
A6 Avant (4B5, C5)	2.8 quattro	142	12/97 – 01/05	3590/2	3529/1
A6 Avant (4B5, C5)	2.8 quattro	142	12/97 – 01/05		3529
A6 Avant (4B5, C5)	3.0	162	08/01 – 01/05	4096	3529/1
A6 Avant (4B5, C5)	3.0	162	08/01 – 01/05		3529
A6 Avant (4B5, C5)	3.0 quattro	162	08/01 – 01/05	4096	3529/1
A6 Avant (4B5, C5)	3.0 quattro	162	08/01 – 01/05		3529
A6 Avant (4B5, C5)	3.7	191	03/99 – 01/05	4096	3529/1
A6 Avant (4B5, C5)	3.7	191	03/99 – 01/05		3529
A6 Avant (4B5, C5)	3.7 quattro	191	03/99 – 01/05	4096	3529/1
A6 Avant (4B5, C5)	3.7 quattro	191	03/99 – 01/05		3529
A6 Avant (4B5, C5)	4.2 quattro	220	11/98 – 01/05	4096	3529/1
A6 Avant (4B5, C5)	4.2 quattro	220	11/98 – 01/05		3529
A6 Avant (4B5, C5)	S6 quattro	250	09/99 – 01/05	4096	3529/1
A6 Avant (4B5, C5)	S6 quattro	250	09/99 – 01/05		3529
A6 Avant (4F5, C6)	2.0 TDI	89	09/05 – 06/06		3905
A6 Avant (4F5, C6)	2.0 TDI	100	06/05 – 08/11		3905
A6 Avant (4F5, C6)	2.0 TDI	103	06/05 – 10/08		3905
A6 Avant (4F5, C6)	2.0 TDI	120	04/09 – 08/11		3905
A6 Avant (4F5, C6)	2.0 TDI	125	10/08 – 08/11		3905
A6 Avant (4F5, C6)	2.0 TFSI	125	06/05 – 08/11		3905
A6 Avant (4F5, C6)	2.4	130	03/05 – 10/08		3905
A6 Avant (4F5, C6)	2.4 quattro	130	03/05 – 10/08		3905
A6 Avant (4F5, C6)	2.7 TDI	120	03/05 – 08/11		3905
A6 Avant (4F5, C6)	2.7 TDI	132	03/05 – 10/08		3905
A6 Avant (4F5, C6)	2.7 TDI	140	10/08 – 08/11		3905
A6 Avant (4F5, C6)	2.7 TDI quattro	120	06/05 – 08/11		3905
A6 Avant (4F5, C6)	2.7 TDI quattro	132	03/05 – 10/08		3905
A6 Avant (4F5, C6)	2.7 TDI quattro	140	10/08 – 08/11		3905
A6 Avant (4F5, C6)	2.8 FSI	140	10/08 – 08/11		3905
A6 Avant (4F5, C6)	2.8 FSI	154	11/06 – 10/08		3905
A6 Avant (4F5, C6)	2.8 FSI	162	10/08 – 08/11		3905
A6 Avant (4F5, C6)	2.8 FSI quattro	140	10/08 – 08/11		3905
A6 Avant (4F5, C6)	2.8 FSI quattro	154	06/07 – 10/08		3905
A6 Avant (4F5, C6)	2.8 FSI quattro	162	10/08 – 08/11		3905
A6 Avant (4F5, C6)	3.0	160	03/05 – 05/06		3905
A6 Avant (4F5, C6)	3.0 quattro	160	03/05 – 05/06		3905
A6 Avant (4F5, C6)	3.0 TDI quattro	155	03/05 – 08/11		3905
A6 Avant (4F5, C6)	3.0 TDI quattro	165	03/05 – 05/06		3905
A6 Avant (4F5, C6)	3.0 TDI quattro	171	06/06 – 10/08		3905
A6 Avant (4F5, C6)	3.0 TDI quattro	176	10/08 – 08/11		3905
A6 Avant (4F5, C6)	3.0 TDi	171	06/06 – 08/11		3905
A6 Avant (4F5, C6)	3.0 TFSI quattro	213	10/08 – 08/11		3905
A6 Avant (4F5, C6)	3.0 TFSI quattro	220	10/08 – 08/11		3905
A6 Avant (4F5, C6)	3.2 FSI	188	03/05 – 10/08		3905
A6 Avant (4F5, C6)	3.2 FSI quattro	188	03/05 – 10/08		3905
A6 Avant (4G5, C7, 4GD)	1.8 TFSI	140	09/14 -		4260
A6 Avant (4G5, C7, 4GD)	2.0 TDI	100	01/12 -		4260
A6 Avant (4G5, C7, 4GD)	2.0 TDI	110	09/14 -		4260
A6 Avant (4G5, C7, 4GD)	2.0 TDI	120	05/11 -		4260
A6 Avant (4G5, C7, 4GD)	2.0 TDI	130	05/11 -		4260
A6 Avant (4G5, C7, 4GD)	2.0 TDI	140	11/13 -		4260
A6 Avant (4G5, C7, 4GD)	2.0 TDI quattro	140	04/15 -		4260
A6 Avant (4G5, C7, 4GD)	2.0 TFSI	132	06/11 -		4260
A6 Avant (4G5, C7, 4GD)	2.0 TFSI	185	09/14 -		4260
A6 Avant (4G5, C7, 4GD)	2.0 TFSI quattro	183	05/15 -		4260
A6 Avant (4G5, C7, 4GD)	2.0 TFSI quattro	185	05/15 -		4260
A6 Avant (4G5, C7, 4GD)	2.8 FSI	150	05/11 – 04/15		4260
A6 Avant (4G5, C7, 4GD)	2.8 FSI quattro	150	05/11 – 04/15		4260
A6 Avant (4G5, C7, 4GD)	2.8 FSI quattro	162	09/14 -		4260
A6 Avant (4G5, C7, 4GD)	3.0 TDI	150	05/11 -		4260
A6 Avant (4G5, C7, 4GD)	3.0 TDI	155	09/14 -		4260
A6 Avant (4G5, C7, 4GD)	3.0 TDI	160	09/14 -		4260
A6 Avant (4G5, C7, 4GD)	3.0 TDI quattro	150	05/11 -		4260
A6 Avant (4G5, C7, 4GD)	3.0 TDI quattro	155	09/14 -		4260
A6 Avant (4G5, C7, 4GD)	3.0 TDI quattro	160	09/14 -		4260
A6 Avant (4G5, C7, 4GD)	3.0 TDI quattro	180	05/11 -		4260
A6 Avant (4G5, C7, 4GD)	3.0 TDI quattro	200	09/14 -		4260
A6 Avant (4G5, C7, 4GD)	3.0 TDI quattro	230	11/11 -		4260

MAKE & MODEL		KW	YEAR		
AUDI					
A6 Avant (4G5, C7, 4GD)	3.0 TDI quattro	235	09/14 -		4260
A6 Avant (4G5, C7, 4GD)	3.0 TDI quattro	240	09/14 -		4260
A6 Avant (4G5, C7, 4GD)	3.0 TFSI quattro	220	05/11 – 05/12		4260
A6 Avant (4G5, C7, 4GD)	3.0 TFSI quattro	228	11/11 -		4260
A6 Avant (4G5, C7, 4GD)	3.0 TFSI quattro	245	09/14 -		4260
A6 Avant (4G5, C7, 4GD)	S6 quattro	331	10/14 -		4260
A6 IV Avant (4G5, C7, 4GD)	1.8 TFSI (CYGA)	140	09/14 -	4259	
A6 IV Avant (4G5, C7, 4GD)	2.0 TDI (CGLC)	130	05/11 -	4259	
A6 IV Avant (4G5, C7, 4GD)	2.0 TDI (CGLD)	120	05/11 -	4259	
A6 IV Avant (4G5, C7, 4GD)	2.0 TDI (CGLE)	100	01/12 -	4259	
A6 IV Avant (4G5, C7, 4GD)	2.0 TDI (CMGB)	130	05/11 -	4259	
A6 IV Avant (4G5, C7, 4GD)	2.0 TDI (CNHA)	140	11/13 -	4259	
A6 IV Avant (4G5, C7, 4GD)	2.0 TDI (CSUD)	110	09/14 -	4259	
A6 IV Avant (4G5, C7, 4GD)	2.0 TDI (DDDA)	140	04/15 -	4259	
A6 IV Avant (4G5, C7, 4GD)	2.0 TFSI (CDNB)	132	06/11 -	4259	
A6 IV Avant (4G5, C7, 4GD)	2.0 TFSI (CYNB)	185	09/14 -	4259	
A6 IV Avant (4G5, C7, 4GD)	2.0 TFSI (CYPA)	185	09/14 -	4259	
A6 IV Avant (4G5, C7, 4GD)	2.0 TFSI (CYPB)	183	05/15 -	4259	
A6 IV Avant (4G5, C7, 4GD)	2.8 FSI (CHVA)	150	05/11 – 04/15	4259	
A6 IV Avant (4G5, C7, 4GD)	2.8 FSI (CVPA)	162	09/14 -	4259	
A6 IV Avant (4G5, C7, 4GD)	3.0 TDI (CDUC)	180	05/11 -	4259	
A6 IV Avant (4G5, C7, 4GD)	3.0 TDI (CDUD)	180	05/11 -	4259	
A6 IV Avant (4G5, C7, 4GD)	3.0 TDI (CGQB)	230	11/11 -	4259	
A6 IV Avant (4G5, C7, 4GD)	3.0 TDI (CKVB)	180	05/11 -	4259	
A6 IV Avant (4G5, C7, 4GD)	3.0 TDI (CKVC)	180	05/11 -	4259	
A6 IV Avant (4G5, C7, 4GD)	3.0 TDI (CLAA)	150	05/11 -	4259	
A6 IV Avant (4G5, C7, 4GD)	3.0 TDI (CLAB)	150	05/11 -	4259	
A6 IV Avant (4G5, C7, 4GD)	3.0 TDI (CRTD)	200	09/14 -	4259	
A6 IV Avant (4G5, C7, 4GD)	3.0 TDI (CRTE)	160	09/14 -	4259	
A6 IV Avant (4G5, C7, 4GD)	3.0 TDI (CRTF)	155	09/14 -	4259	
A6 IV Avant (4G5, C7, 4GD)	3.0 TDI (CTCB)	155	09/14 -	4259	
A6 IV Avant (4G5, C7, 4GD)	3.0 TDI (CTCC)	160	09/14 -	4259	
A6 IV Avant (4G5, C7, 4GD)	3.0 TDI (CVUA)	235	09/14 -	4259	
A6 IV Avant (4G5, C7, 4GD)	3.0 TDI (CVUB)	240	09/14 -	4259	
A6 IV Avant (4G5, C7, 4GD)	3.0 TDI (CZVA)	160	09/14 -	4259	
A6 IV Avant (4G5, C7, 4GD)	3.0 TDI (CZVB)	160	09/14 -	4259	
A6 IV Avant (4G5, C7, 4GD)	3.0 TDI (CZVC)	155	09/14 -	4259	
A6 IV Avant (4G5, C7, 4GD)	3.0 TDI (CZVD)	155	09/14 -	4259	
A6 IV Avant (4G5, C7, 4GD)	3.0 TFSI (CGWB)	220	05/11 – 05/12	4259	
A6 IV Avant (4G5, C7, 4GD)	3.0 TFSI (CGWD)	228	11/11 -	4259	
A6 IV Avant (4G5, C7, 4GD)	3.0 TFSI (CREC)	245	09/14 -	4259	
A6 IV Avant (4G5, C7, 4GD)	4.0 S6 (CEUC)	309	02/12 -	4259	
A6 IV Avant (4G5, C7, 4GD)	S6 (CTGE)	331	10/14 -	4259	
A7 Sportback (4GA, 4GF)	3.0 TDI (CZVD)	155	11/15 -	4259	
A7 Sportback (4GA, 4GF)	3.0 TDI (CZVE)	140	11/15 -	4259	
A7 Sportback (4GA, 4GF)	3.0 TDI quattro	140	11/15 -		4260
A7 Sportback (4GA, 4GF)	3.0 TDI quattro	150	12/10 -		4260
A7 Sportback (4GA, 4GF)	3.0 TDI quattro	155	07/14 -		4260
A7 Sportback (4GA, 4GF)	3.0 TDI quattro	160	07/14 -		4260
A7 Sportback (4GA, 4GF)	3.0 TDI quattro	176	05/13 -		4260
A7 Sportback (4GA, 4GF)	3.0 TDI quattro	180	10/10 -		4260
A7 Sportback (4GA, 4GF)	3.0 TDI quattro	200	05/14 -		4260
A7 Sportback (4GA, 4GF)	3.0 TDI quattro	230	11/11 -		4260
A7 Sportback (4GA, 4GF)	3.0 TDI quattro	235	05/14 -		4260
A7 Sportback (4GA, 4GF)	3.0 TDI quattro	240	09/14 -		4260
A7 Sportback (4GA, 4GF)	3.0 TFSI (CGWB)	220	10/10 -	4259	
A7 Sportback (4GA, 4GF)	3.0 TFSI (CGWD)	228	01/11 -	4259	
A7 Sportback (4GA, 4GF)	3.0 TFSI (CGXB)	228	01/11 -	4259	
A7 Sportback (4GA, 4GF)	3.0 TFSI (CHMA)	220	10/10 -	4259	
A7 Sportback (4GA, 4GF)	3.0 TFSI (CREC)	245	05/14 -	4259	
A7 Sportback (4GA, 4GF)	3.0 TFSI (CTTA)	228	01/11 -	4259	
A7 Sportback (4GA, 4GF)	3.0 TFSI (CTUA)	228	01/11 -	4259	
A7 Sportback (4GA, 4GF)	3.0 TFSI quattro	220	10/10 -		4260
A7 Sportback (4GA, 4GF)	3.0 TFSI quattro	228	01/11 -		4260
A7 Sportback (4GA, 4GF)	3.0 TFSI quattro	245	05/14 -		4260
A7 Sportback (4GA, 4GF)	4.0 S7 (CEUC)	309	02/12 -	4259	
A7 Sportback (4GA, 4GF)	RS7 performance quattro	445	11/15 -		4260
A7 Sportback (4GA, 4GF)	RS7 quattro	412	10/13 -		4260
A7 Sportback (4GA, 4GF)	S7 (CTGE)	331	07/14 -	4259	
A7 Sportback (4GA, 4GF)	1.8 TFSI	140	04/15 -		4260
A7 Sportback (4GA, 4GF)	1.8 TFSI (CYGA)	140	04/15 -	4259	
A7 Sportback (4GA, 4GF)	2.0 TFSI	185	09/14 -		4260
A7 Sportback (4GA, 4GF)	2.0 TFSI (CYNB)	185	05/15 -	4259	
A7 Sportback (4GA, 4GF)	2.0 TFSI (CYPA)	185	09/14 -	4259	
A7 Sportback (4GA, 4GF)	2.0 TFSI (CYPB)	183	05/15 -	4259	
A7 Sportback (4GA, 4GF)	2.0 TFSI quattro	183	05/15 -		4260

BESER®

MAKE & MODEL   		KW	YEAR		
AUDI					
A7 Sportback (4GA, 4GF)	2.0 TFSI quattro	185	05/15 -		4260
A7 Sportback (4GA, 4GF)	2.5 FSI	150	02/14 -		4260
A7 Sportback (4GA, 4GF)	2.8 FSI	150	02/11 -		4260
A7 Sportback (4GA, 4GF)	2.8 FSI (CHVA)	150	10/10 -	4259	
A7 Sportback (4GA, 4GF)	2.8 FSI (CNYA)	150	10/10 -	4259	
A7 Sportback (4GA, 4GF)	2.8 FSI quattro	150	10/10 -		4260
A7 Sportback (4GA, 4GF)	3.0 TDI	140	11/15 -		4260
A7 Sportback (4GA, 4GF)	3.0 TDI	150	11/10 -		4260
A7 Sportback (4GA, 4GF)	3.0 TDI	155	11/15 -		4260
A7 Sportback (4GA, 4GF)	3.0 TDI	160	07/14 -		4260
A7 Sportback (4GA, 4GF)	3.0 TDI (CDUC)	180	10/10 -	4259	
A7 Sportback (4GA, 4GF)	3.0 TDI (CDUD)	180	10/10 -	4259	
A7 Sportback (4GA, 4GF)	3.0 TDI (CKVC)	180	10/10 -	4259	
A7 Sportback (4GA, 4GF)	3.0 TDI (CZVF)	140	11/15 -	4259	
A7 Sportback (4GA, 4GF)	3.0 TDI (CGQB)	230	11/11 -	4259	
A7 Sportback (4GA, 4GF)	3.0 TDI (CKVB)	180	10/10 -	4259	
A7 Sportback (4GA, 4GF)	3.0 TDI (CLAA)	150	12/10 -	4259	
A7 Sportback (4GA, 4GF)	3.0 TDI (CLAB)	150	11/10 -	4259	
A7 Sportback (4GA, 4GF)	3.0 TDI (CPNB)	176	05/13 -	4259	
A7 Sportback (4GA, 4GF)	3.0 TDI (CRTD)	200	05/14 -	4259	
A7 Sportback (4GA, 4GF)	3.0 TDI (CRTE)	160	07/14 -	4259	
A7 Sportback (4GA, 4GF)	3.0 TDI (CRTF)	155	07/14 -	4259	
A7 Sportback (4GA, 4GF)	3.0 TDI (CTCB)	155	07/14 -	4259	
A7 Sportback (4GA, 4GF)	3.0 TDI (CTCC)	160	07/14 -	4259	
A7 Sportback (4GA, 4GF)	3.0 TDI (CVUA)	235	05/14 -	4259	
A7 Sportback (4GA, 4GF)	3.0 TDI (CVUB)	240	09/14 -	4259	
A8 (4D2, 4D8)	2.5 TDI	110	01/97 – 04/00	4222	3536
A8 (4D2, 4D8)	2.5 TDI	110	01/97 – 04/00		3529/1
A8 (4D2, 4D8)	2.5 TDI	132	09/00 – 09/02	4222	3529/1
A8 (4D2, 4D8)	2.5 TDI quattro	110	07/97 – 04/00	4222	3536
A8 (4D2, 4D8)	2.5 TDI quattro	110	07/97 – 04/00		3529/1
A8 (4D2, 4D8)	2.5 TDI quattro	132	09/00 – 09/02	4222	3529/1
A8 (4D2, 4D8)	2.8	120	07/95 – 03/96		3536
A8 (4D2, 4D8)	2.8	128	03/94 – 03/96		3536
A8 (4D2, 4D8)	2.8	142	04/96 – 09/02	4222	3536
A8 (4D2, 4D8)	2.8	142	04/96 – 09/02		3529/1
A8 (4D2, 4D8)	2.8 quattro	120	07/95 – 03/96		3536
A8 (4D2, 4D8)	2.8 quattro	128	03/94 – 03/96		3536
A8 (4D2, 4D8)	2.8 quattro	142	04/96 – 09/02	4222	3536
A8 (4D2, 4D8)	2.8 quattro	142	04/96 – 09/02		3529/1
A8 (4D2, 4D8)	3.3 TDI quattro	165	06/00 – 09/02	4222	3529/1
A8 (4D2, 4D8)	3.7	169	07/95 – 12/98	4222	3536
A8 (4D2, 4D8)	3.7	169	07/95 – 12/98		3529/1
A8 (4D2, 4D8)	3.7	191	11/98 – 09/02	4222	3536
A8 (4D2, 4D8)	3.7	191	11/98 – 09/02		3529/1
A8 (4D2, 4D8)	3.7 quattro	169	07/95 – 11/98		3536
A8 (4D2, 4D8)	3.7 quattro	191	11/98 – 09/02	4222	3529/1
A8 (4D2, 4D8)	4.2 quattro	175	02/99 – 04/00	4222	3529/1
A8 (4D2, 4D8)	4.2 quattro	180	03/94 – 07/96		3536
A8 (4D2, 4D8)	4.2 quattro	210	07/95 – 09/98		3536
A8 (4D2, 4D8)	4.2 quattro	220	03/94 – 11/98		3536
A8 (4D2, 4D8)	4.2 quattro	228	11/98 – 09/02	4222	3529/1
A8 (4D2, 4D8)	6.0 W12 quattro	309	01/01 – 09/02		3529/1
A8 (4D2, 4D8)	S 8 quattro	250	07/96 – 06/99	4222	3536
A8 (4D2, 4D8)	S 8 quattro	250	07/96 – 06/99		3529/1
A8 (4D2, 4D8)	S8 quattro	265	06/99 – 09/02	4222	3529/1
ALLROAD (4BH, C5)	2.5 TDI quattro	120	05/03 – 08/05	4096	3529/1
ALLROAD (4BH, C5)	2.5 TDI quattro	132	05/00 – 08/05	4096	3529/1
ALLROAD (4BH, C5)	2.7 quattro	187	09/00 – 08/05	4096	3529/1
ALLROAD (4BH, C5)	2.7 T quattro	184	05/00 – 08/05	4096	3529/1
ALLROAD (4BH, C5)	4.2 V8 quattro	220	07/02 – 08/05	4096	3529/1
CABRIOLET (8G7, B4)	1.8	92	01/97 – 08/00		3536
CABRIOLET (8G7, B4)	1.9 TDI	66	06/95 – 08/00		3536
CABRIOLET (8G7, B4)	2.0 16V	103	06/95 – 07/96		3536
CABRIOLET (8G7, B4)	2.0 E	85	01/93 – 07/98		3536
CABRIOLET (8G7, B4)	2.3 E	98	05/91 – 07/94		3536
CABRIOLET (8G7, B4)	2.6	102	05/95 – 08/00		3536
CABRIOLET (8G7, B4)	2.6	110	06/93 – 08/00		3536
CABRIOLET (8G7, B4)	2.8	128	11/92 – 08/00		3536
Cabrio (8G7, B4) 2.0 16V	ACE (06.95-.)	103	06/1995 - 07/1996	3650	
Cabrio (8G7, B4) 2.0 E	ABK (01.93-.)	85	01/1993 - 07/1998	3650	
Cabrio (8G7, B4) 44257 E	NG (05.91-.)	98	05/1991 - 07/1994	3650	
Cabrio (8G7, B4) 44409	ADR (01.97-.)	92	01/1997 - 08/2000	3650	
Cabrio (8G7, B4) 44440 TDI	1Z (06.95-07.96), AHU (07.96-.)	66	06/1995 - 08/2000	3650	
COUPE (81, 85)	1.6	55	07/80 – 08/81	3378	
COUPE (81, 85)	1.6	55	07/80 – 08/81	3490	

MAKE & MODEL		KW	YEAR		
AUDI					
COUPE (81, 85)	1.8	55	08/81 – 07/83	3378	
COUPE (81, 85)	1.8	55	08/81 – 07/83	3490	
COUPE (81, 85)	1.8 GT	66	09/82 – 10/88	3378	
COUPE (81, 85)	1.8 GT	66	09/82 – 10/88	3490	
COUPE (81, 85)	1.8 GT	68	01/85 – 07/88	3378	
COUPE (81, 85)	1.8 GT	68	01/85 – 07/88	3490	
COUPE (81, 85)	1.9	85	08/80 – 07/83	3378	
COUPE (81, 85)	1.9	85	08/80 – 07/83	3490	
COUPE (81, 85)	2.0	83	03/86 – 04/88	3635	
COUPE (81, 85)	2.0	83	03/86 – 04/88	3649	
COUPE (81, 85)	2.0	85	09/83 – 07/86	3378	
COUPE (81, 85)	2.0	85	09/83 – 07/86	3490	
COUPE (81, 85)	2.0	85	09/83 – 07/86	3635	
COUPE (81, 85)	2.0	85	09/83 – 07/86	3649	
COUPE (81, 85)	2.1 GT	96	09/82 – 10/87	3378	
COUPE (81, 85)	2.1 GT	96	09/82 – 10/87	3490	
COUPE (81, 85)	2.2 GT	85	07/81 – 10/87	3378	
COUPE (81, 85)	2.2 GT	85	07/81 – 10/87	3490	
COUPE (81, 85)	2.2 GT	100	09/84 – 10/88	3635	3536
COUPE (81, 85)	2.2 GT	100	09/84 – 10/88	3649	
COUPE (81, 85)	2.2 quattro	88	08/85 – 10/88	3635	3536
COUPE (81, 85)	2.2 quattro	88	08/85 – 10/88	3649	
COUPE (81, 85)	2.2 quattro	100	10/84 – 10/88	3635	3536
COUPE (81, 85)	2.2 quattro	100	10/84 – 10/88	3649	
COUPE (81, 85)	2.3	100	01/87 – 10/88	3635	3536
COUPE (81, 85)	2.3 quattro	100	01/87 – 10/88	3649	3536
COUPE (89, 8B)	1.8	82	08/89 – 07/91	3619	3536
COUPE (89, 8B)	2.0	82	03/90 – 07/90	3619	3536
COUPE (89, 8B)	2.0	83	05/89 – 03/90	3619	3536
COUPE (89, 8B)	2.0	85	05/89 – 12/96	3619	3536
COUPE (89, 8B)	2.0 16 V	101	01/92 – 07/92	3619	3536
COUPE (89, 8B)	2.0 16 V	103	08/92 – 12/96	3619	3536
COUPE (89, 8B)	2.0 20 V	118	08/89 – 07/91	3619	3536
COUPE (89, 8B)	2.0 20 V quattro	118	08/89 – 07/91		3536
COUPE (89, 8B)	2.2 quattro	100	11/88 – 07/91	3619	3536
COUPE (89, 8B)	2.3	98	03/90 – 12/96	3619	3536
COUPE (89, 8B)	2.3	100	10/88 – 07/94	3619	3536
COUPE (89, 8B)	2.3 20V	123	08/90 – 07/91		3536
COUPE (89, 8B)	2.3 20V	125	08/89 – 07/91		3536
COUPE (89, 8B)	2.3 20V quattro	123	05/90 – 12/96		3536
COUPE (89, 8B)	2.3 20V quattro	125	11/88 – 07/91		3536
COUPE (89, 8B)	2.3 quattro	98	05/90 – 12/96	3619	3536
COUPE (89, 8B)	2.3 quattro	100	11/88 – 12/92	3619	3536
COUPE (89, 8B)	2.6	110	08/92 – 12/96		3536
COUPE (89, 8B)	2.6 quattro	110	08/92 – 12/96	3619	3536
COUPE (89, 8B)	2.8	128	09/91 – 12/96		3536
COUPE (89, 8B)	2.8 quattro	128	08/91 – 12/96		3536
COUPE (89, 8B)	S2 quattro	162	09/90 – 09/92		3536
COUPE (89, 8B)	S2 quattro	169	10/92 – 12/96		3536
Coupe I (81, 85 B2) 44229 GT	HY, KV (10.84-10.88)	100	09/1984 - 10/1988	3650	
Coupe I (81, 85 B2) 44229 quattro	KV (10.84-10.88)	100	10/1984 - 10/1988	3650	
Coupe I (81, 85 B2) 44257 quattro	NG	100	01/1987 - 10/1988	3650	
Q2 (GA)	1.0 TFSI (CHZJ)	85	09/16 -	4228	
Q2 (GA)	1.4 TFSI	110	09/16 -	4228	
Q2 (GA)	1.4 TFSI (CZEA)	110	06/16 -	4228	
Q2 (GA)	1.6 TDI (DDYA)	85	06/16 -	4228	
Q2 (GA)	2.0 TDI (DCYA)	110	09/16 -	4228	
Q2 (GA)	2.0 TDI (DFGA)	110	10/16 -	4228	
Q2 (GA)	2.0 TDI (DFHA)	140	07/16 -	4228	
Q2 (GA)	2.0 TFSI	140	09/16 -	4228	
Q2 (GAB) 1.0 TFSI	CHZJ	85	10/2016 -	4228/1	
Q2 (GAB) 2.0 TDI	DFGA	110	09/2016 -	4228/1	
Q2 (GAB) 2.0 TDI quattro	DFGA	110	09/2016 -	4228/1	
Q2 (GAB) 2.0 TDI quattro	DFHA	140	07/2016 -	4228/1	
Q2 (GAB) 2.0 TFSI quattro	CZPB, DKZA	140	05/2017 -	4228/1	
Q2 (GAB) 44287 TSI	CZEA	110	06/2016 -	4228/1	
Q2 (GAB) 44348 TDI	DDYA	85	06/2016 - 10/2018	4228/1	
Q3 I (8UB, 8UG) 1.4 TSI	CHPB, CZDA, CZEA	110	10/2013 - 10/2018		4390
Q3 I (8UB, 8UG) 2.0 TDI	CFFA, CUVB, DFTB	100	09/2011 - 10/2018		4336
Q3 I (8UB, 8UG) 2.0 TDI	CFFB, CLJA	103	09/2011 - 10/2018		4336
Q3 I (8UB, 8UG) 2.0 TDI	CFGC	130	06/2011 - 04/2015		4336
Q3 I (8UB, 8UG) 2.0 TDI	CUVC, DBBA, DFTA	110	11/2014 - 10/2018		4336
Q3 I (8UB, 8UG) 2.0 TDI	CUVD, DFTC	88	03/2015 - 10/2018		4336
Q3 I (8UB, 8UG) 2.0 TDI	CUWA, DFUA	135	05/2015 - 10/2018		4336
Q3 I (8UB, 8UG) 2.0 TDI	CFFA, CUVB, DFTB	100	09/2011 - 10/2018		4390
Q3 I (8UB, 8UG) 2.0 TDI	CFFB, CLJA	103	09/2011 - 10/2018		4390

BESER®

MAKE & MODEL   		KW	YEAR		
AUDI					
Q3 I (8UB, 8UG) 2.0 TDI	CFGC	130	06/2011 - 04/2015		4390
Q3 I (8UB, 8UG) 2.0 TDI quattro	CFFB	103	01/2012 - 10/2018		4336
Q3 I (8UB, 8UG) 2.0 TDI quattro	CFGC, CLLB	130	06/2011 - 10/2018		4336
Q3 I (8UB, 8UG) 2.0 TDI quattro	CFGD	120	06/2011 - 04/2015		4336
Q3 I (8UB, 8UG) 2.0 TDI quattro	CUVC, DFTA	110	11/2014 - 10/2018		4336
Q3 I (8UB, 8UG) 2.0 TDI quattro	CUWA, CYLA, DFUA	135	11/2014 - 10/2018		4336
Q3 I (8UB, 8UG) 2.0 TDI quattro	CFFB	103	01/2012 - 10/2018		4390
Q3 I (8UB, 8UG) 2.0 TDI quattro	CFGC, CLLB	130	06/2011 - 10/2018		4390
Q3 I (8UB, 8UG) 2.0 TDI quattro	CFGD	120	06/2011 - 04/2015		4390
Q3 I (8UB, 8UG) 2.0 TFSI	CULB	132	05/2015 - 10/2018		4336
Q3 I (8UB, 8UG) 2.0 TFSI quattro	CCZC	125	06/2011 - 04/2015		4336
Q3 I (8UB, 8UG) 2.0 TFSI quattro	CPSA	155	06/2011 - 04/2015		4336
Q3 I (8UB, 8UG) 2.0 TFSI quattro	CULB	132	11/2014 - 10/2018		4336
Q3 I (8UB, 8UG) 2.0 TFSI quattro	CULC	162	11/2014 - 10/2018		4336
Q3 I (8UB, 8UG) 2.0 TFSI quattro	CCZC	125	06/2011 - 04/2015		4390
Q3 I (8UB, 8UG) 2.0 TFSI quattro	CPSA	155	06/2011 - 04/2015		4390
Q3 I (8UB, 8UG) 44287 TSI	CHPB, CZDA, CZEA	110	10/2013 - 10/2018		4336
Q5 (8R)	2.0 TDI (CAGA)	105	08/09 -	4259	
Q5 (8R)	2.0 TDI (CAGB)	100	08/09 -	4259	
Q5 (8R)	2.0 TDI (CAHA)	125	11/08 -	4259	
Q5 (8R)	2.0 TDI (CAHB)	120	11/08 -	4259	
Q5 (8R)	2.0 TDI (CGLA)	120	11/08 -	4259	
Q5 (8R)	2.0 TDI (CGLB)	125	11/08 -	4259	
Q5 (8R)	2.0 TDI (CGLC)	130	06/12 -	4259	
Q5 (8R)	2.0 TDI (CGLD)	120	11/08 -	4259	
Q5 (8R)	2.0 TDI (CJCA)	105	08/09 -	4259	
Q5 (8R)	2.0 TDI (CJCA)	105	11/10 -	4259	
Q5 (8R)	2.0 TDI (CJCB)	100	08/09 -	4259	
Q5 (8R)	2.0 TDI (CJCD)	110	05/13 -	4259	
Q5 (8R)	2.0 TDI (CMGA)	125	11/08 -	4259	
Q5 (8R)	2.0 TDI (CMGB)	130	06/12 -	4259	
Q5 (8R)	2.0 TDI (CNHA)	140	11/13 -	4259	
Q5 (8R)	2.0 TFSI (CAEB)	155	11/08 -	4259	
Q5 (8R)	2.0 TFSI (CDNB)	132	08/09 -	4259	
Q5 (8R)	2.0 TFSI (CDNC)	155	11/08 -	4259	
Q5 (8R)	2.0 TFSI (CNCB)	132	08/09 -	4259	
Q5 (8R)	2.0 TFSI (CNCD)	165	06/12 -	4259	
Q5 (8R)	2.0 TFSI (CNCE)	169	08/15 -	4259	
Q5 (8R)	2.0 TFSI (CPMA)	155	11/08 -	4259	
Q5 (8R)	2.0 TFSI (CPMB)	162	05/13 -	4259	
Q5 (8R)	2.0 TFSI hybrid (CHJA)	155	06/11 -	4259	
Q5 (8R)	3.0 TDI (CCWA)	176	11/08 -	4259	
Q5 (8R)	3.0 TDI (CCWB)	155	11/08 -	4259	
Q5 (8R)	3.0 TDI (CDUD)	180	06/12 -	4259	
Q5 (8R)	3.0 TDI (CTBC)	184	06/12 -	4259	
Q5 (8R)	3.0 TDI (CTBA)	190	11/13 -	4259	
Q5 (8R)	3.0 TFSI (CTUC)	200	06/12 -	4259	
Q5 (8R)	3.0 TFSI (CTVA)	200	06/12 -	4259	
Q5 (8R)	3.2 FSI (CALB)	199	11/08 -	4259	
Q5 (8R)	SQ5 TFSI	264	03/14 -	4259	
Q5 (8R)	SQ5 TFSI (CTUD)	260	05/13 -	4259	
Q5 (8R)	SQ5 TFSI (CTXA)	260	05/13 -	4259	
Q7 (4L)	3.0 TDI quattro	150	05/10 – 08/15	4075	4076
Q7 (4L)	3.0 TDI quattro	155	03/06 – 05/10	4075	4076
Q7 (4L)	3.0 TDI quattro	165	06/09 – 05/12	4075	4076
Q7 (4L)	3.0 TDI quattro	171	03/06 – 05/08	4075	4076
Q7 (4L)	3.0 TDI quattro	176	11/07 – 08/15	4075	4076
Q7 (4L)	3.0 TDI quattro	180	05/11 – 08/15	4075	4076
Q7 (4L)	3.0 TFSI quattro	200	05/10 – 08/15	4075	4076
Q7 (4L)	3.0 TFSI quattro	206	05/11 – 08/15	4075	4076
Q7 (4L)	3.0 TFSI quattro	245	05/10 – 08/15	4075	4076
Q7 (4L)	3.6 FSI quattro	206	08/06 – 05/10	4075	
Q7 (4L)	4.2 FSI quattro	240	03/07 – 06/09	4075	
Q7 (4L)	4.2 TDI quattro	250	05/09 – 08/15	4075	
Q7 (4L)	4.2 TDI quattro	257	03/06 – 05/10	4075	
Q7 (4L)	6.0 TDI quattro	368	09/08 – 05/14	4075	
Q7 I (4LB) 3.0 TDI quattro	BUG	171	03/2006 - 05/2008	4075/1	
Q7 I (4LB) 3.0 TDI quattro	BUN, CASB	155	03/2006 - 05/2010	4075/1	
Q7 I (4LB) 3.0 TDI quattro	CASA, CCMA, CJGA, CNRB	176	11/2007 - 08/2015	4075/1	
Q7 I (4LB) 3.0 TDI quattro	CATA	165	06/2009 - 05/2012	4075/1	
Q7 I (4LB) 3.0 TDI quattro	CJGC, CJMA	150	05/2010 - 08/2015	4075/1	
Q7 I (4LB) 3.0 TDI quattro	CJGD, CLZB, CRCA	180	05/2011 - 08/2015	4075/1	
Q7 I (4LB) 3.0 TFSI quattro	CJTB, CJWB, CNAA, CTWA	245	05/2010 - 08/2015	4075/1	
Q7 I (4LB) 3.0 TFSI quattro	CJTC, CJWC	200	05/2010 - 08/2015	4075/1	
Q7 I (4LB) 3.0 TFSI quattro	CJWE, CTWB	206	05/2011 - 08/2015	4075/1	
Q7 I (4LB) 44231 FSI quattro	BAR	257	03/2006 - 05/2010	4075/1	

MAKE & MODEL		KW	YEAR		
AUDI					
Q7 I (4LB) 44231 quattro	BAR	231	03/2006 - 12/2010	4075/1	
Q7 I (4LB) 44231 TDI quattro	BTR	240	03/2007 - 06/2009	4075/1	
Q7 I (4LB) 44231 TDI quattro	CCFA, CCFC	250	05/2009 - 08/2015	4075/1	
Q7 I (4LB) 44350 FSI quattro	BHK	206	08/2006 - 05/2010	4075/1	
QUATTRO (85)	2.1 20 V Turbo	225	05/84 – 07/87	3619	3536
QUATTRO (85)	2.1 Turbo	147	07/80 – 07/87	3619	3536
QUATTRO (85)	2.1 Turbo quattro	119	02/82 – 07/89	3619	3536
QUATTRO (85)	2.2 20V Turbo	162	08/89 – 07/91		3536
QUATTRO (85)	2.2 quattro	89	12/84 – 07/87	3619	3536
QUATTRO (85)	2.2 quattro	100	12/84 – 07/87	3619	3536
QUATTRO (85)	2.2 Turbo	147	08/87 – 07/89		3536
TT III Roadster (FV9 8S)	1.8 TFSI (CJSA)	132	08/15 -	4228	4241
TT III Roadster (FV9 8S)	1.8 TFSI (CJSB)	132	08/15 -	4228	4241
TT III Roadster (FV9 8S)	2.0 TDI (CUNA)	135	11/14 -	4228	4241
TT III Roadster (FV9 8S)	2.0 TFSI (CHHC)	169	11/14 -	4228	4241
TT III Roadster (FV9 8S)	2.0 TFSI (CYFB)	215	07/15 -	4228	4241
TT III Roadster (FV9 8S)	2.0 TTS (CJXF)	210	02/15 -	4228	4241
TT III Roadster (FV9 8S)	2.0 TTS (CJXG)	228	11/14 -	4228	4241
TT III Roadster (FV9 8S)	2.5 RS (DAZA)	294	10/16 -	4228	4241
TT (8J3)	1.8 TFSI	118	06/08 – 06/14		3905
TT (8J3)	2.0 TDI quattro	125	06/08 – 06/14		3905
TT (8J3)	2.0 TFSI	147	08/06 – 06/10		3905
TT (8J3)	2.0 TFSI	155	05/10 – 06/14		3905
TT (8N3)	1.8 T	110	09/02 – 06/06	3590/1	3529/1
TT (8N3)	1.8 T	120	09/05 – 06/06	3590/1	3529/1
TT (8N3)	1.8 T	132	10/98 – 06/06	3590/1	3529/1
TT (8N3)	1.8 T	140	09/05 – 06/06	3590/1	3529/1
TT (8N3)	1.8 T quattro	132	10/98 – 06/06	3590/1	3529/1
TT (8N3)	1.8 T quattro	140	09/05 – 06/06	3590/1	3529/1
TT (8N3)	1.8 T quattro	165	10/98 – 06/06	3590/1	3529/1
TT (8N3)	1.8 T quattro	176	03/05 – 06/06	3590/1	3529/1
TT (8N3)	3.2 VR6 quattro	184	07/03 – 06/06		3529/1
TT III (FV3 8S)	1.8 TFSI (CJSA)	132	08/15 -	4228	4241
TT III (FV3 8S)	1.8 TFSI (CJSB)	132	08/15 -	4228	4241
TT III (FV3 8S)	2.0 TDI (CUNA)	135	07/14 -	4228	4241
TT III (FV3 8S)	2.0 TFSI (CHHC)	169	07/14 -	4228	4241
TT III (FV3 8S)	2.0 TFSI (CYFB)	215	07/15 -	4228	4241
TT III (FV3 8S)	2.0 TTS (CJXF)	210	02/15 -	4228	4241
TT III (FV3 8S)	2.0 TTS (CJXG)	228	11/14 -	4228	4241
TT III (FV3 8S)	2.5 RS (DAZA)	294	10/16 -	4228	4241
TT III (FV3, FVP) 2.0 TDI	CUNA	135	07/2014 -	4228/1	
TT III (FV3, FVP) 2.0 TDI quattro	CUNA	135	01/2017 -	4228/1	
TT III (FV3, FVP) 2.0 TFSI	CHHC	169	07/2014 -	4228/1	
TT III (FV3, FVP) 2.0 TFSI quattro	CHHC	169	07/2014 -	4228/1	
TT III (FV3, FVP) 2.0 TFSI quattro	CNTC	162	04/2015 -	4228/1	
TT III (FV3, FVP) 44409 TFSI	CJSA, CJSB	132	07/2015 - 08/2018	4228/1	
TT III Roadster (FV9, FVR) 2.0 TDI	CUNA	135	11/2014 -	4228/1	
TT III Roadster (FV9, FVR) 2.0 TDI quattro	CUNA	135	01/2017 -	4228/1	
TT III Roadster (FV9, FVR) 2.0 TFSI	CHHC	169	11/2014 -	4228/1	
TT III Roadster (FV9, FVR) 2.0 TFSI quattro	CHHC	169	11/2014 -	4228/1	
TT III Roadster (FV9, FVR) 2.0 TFSI quattro	CNTC	162	04/2015 -	4228/1	
TT III Roadster (FV9, FVR) 44409 TFSI	CJSA, CJSB	132	07/2015 - 08/2018	4228/1	
TT Roadster (8J9)	1.8 TFSI	118	06/08 – 06/14		3905
TT Roadster (8J9)	2.0 TDI quattro	125	06/08 – 06/14		3905
TT Roadster (8J9)	2.0 TFSI	147	03/07 – 06/10		3905
TT Roadster (8J9)	2.0 TFSI	155	05/10 – 06/14		3905
TT Roadster (8N9)	1.8 T	110	01/01 – 06/06	3590/1	3529/1
TT Roadster (8N9)	1.8 T	120	09/05 – 06/06	3590/1	3529/1
TT Roadster (8N9)	1.8 T	132	10/99 – 06/06	3590/1	3529/1
TT Roadster (8N9)	1.8 T	140	09/05 – 06/06	3590/1	3529/1
TT Roadster (8N9)	1.8 T quattro	132	02/00 – 06/06	3590/1	3529/1
TT Roadster (8N9)	1.8 T quattro	140	09/05 – 06/06	3590/1	3529/1
TT Roadster (8N9)	1.8 T quattro	165	10/99 – 06/06	3590/1	3529/1
TT Roadster (8N9)	3.2 VR6 quattro	184	07/03 – 06/06		3529/1
V8 (44_, 4C_)	3.6 quattro	180	04/93 – 02/94		3536
V8 (44_, 4C_)	3.6 quattro	184	10/88 – 02/94		3536
V8 (44_, 4C_)	4.2 quattro	206	10/91 – 02/94		3536
100 (443, 4A2)	1.8	66	08/88 – 12/90		3536
100 (443, 4A2)	2.0	79	11/93 – 07/94		3536
100 (443, 4A2)	2.2	96	08/89 – 12/90		3536
100 (443, 4A2)	2.6	102	01/93 – 06/95		3536
200 (447)	1.8 Turbo	110	05/98 – 09/99	3531	
200 (447)	2.2 Turbo	121	08/88 – 11/90	3531	
200 (447)	2.4	110	09/98 – 09/99	3531	
200 (447)	2.6	102	11/95 – 09/99	3531	
A3 (8VS)	35 TFSI	110	09/14 -	4295	

MAKE & MODEL   		KW	YEAR		
AUDI					
A3 (8VS)	40 TFSI	132	01/15 -	4295	
A3 Sportback (8VA)	35 TFSI	110	09/14 -	4295	
A3 Sportback (8VA)	40 TFSI	132	01/15 -	4295	
A4 Saloon (8E2, B6)	1.8 TURBO	120	02/03 – 07/05		3529/1
A4 Saloon (8E2, B6)	2.4	125	01/04 – 07/05		3529/1
A4 Saloon (8E2, B6)	3.0 quattro	160	02/03 – 07/05		3529/1
A6L Saloon (4F2, C6)	2.4	130	03/05 – 12/11		3905
A6L Saloon (4F2, C6)	2.8	154	11/07 – 12/11		3905
A6L Saloon (4F2, C6)	2.8 quattro	162	06/09 – 12/11		3905
A6L Saloon (4F2, C6)	3.0	160	03/05 – 12/06		3905
A6L Saloon (4F2, C6)	3.0 TFSI quattro	213	01/09 – 12/11		3905
A6L Saloon (4F2, C6)	3.1 FSI	188	09/05 – 12/08		3905
A6L Saloon (4F2, C6)	3.1 FSI quattro	188	09/05 – 12/08		3905
Q5 (8R)	3.5 TSFI (CDZ)	132	04/13 -	4259	
AUSTIN					
MAESTRO (XC)	1.3	46	03/83 – 08/85	3624	
MAESTRO (XC)	1.3	47	01/86 – 09/92	3624	
MAESTRO (XC)	1.3	50	01/86 – 09/92	3624	
MAESTRO (XC)	1.3 LS	49	03/83 – 08/90	3624	
MAESTRO (XC)	1.6	59	03/83 – 10/84	3624	
MAESTRO (XC)	1.6 Mayfair HLS	61	03/83 – 08/90	3624	
MAESTRO (XC)	1.6 MG	72	03/83 – 08/85	3624	
MAESTRO (XC)	1.6 MG	73	03/83 – 08/90	3624	
MAESTRO (XC)	1.9 D	44	01/86 – 09/92	3624	
MAESTRO (XC)	2.0 EFi	83	10/84 – 08/90	3624	
MONTEGO (XE)	1.3	46	04/84 – 12/85	3624	
MONTEGO (XE)	1.3	50	10/84 – 08/88	3624	
MONTEGO (XE)	1.6 LS,HL	61	04/84 – 08/88	3624	
MONTEGO (XE)	2.0	74	04/84 – 08/88	3624	
MONTEGO (XE)	2.0 Mayfair	83	04/84 – 08/88	3624	
MONTEGO (XE)	2.0 Turbo	110	04/84 – 08/88	3624	
MONTEGO Estate (XE)	1.3	51	10/84 – 10/88	3624	
MONTEGO Estate (XE)	1.6 LS	61	10/84 – 08/88	3624	
MONTEGO Estate (XE)	1.9 D	61	12/88 – 09/92	3624	
MONTEGO Estate (XE)	2.0	74	10/84 – 08/91	3624	
MONTEGO Estate (XE)	2.0 HLI	83	10/84 – 08/88	3624	
AUTO UNION					
DKW F12	0.9	29	10/63 – 06/65		3326
DKW F12	0.9	33	01/65 – 08/66		3326
DKW F12 Convertible	0.9	33	11/62 – 06/65		3326
AUTOBIANCHI					
A 112	0.9	32	10/69 – 12/72	3316	
A 112	0.9	32	10/69 – 12/72	3485	
A 112	0.9	33	01/76 – 12/78	3316	
A 112	0.9	33	01/76 – 12/78	3485	
A 112	0.9 E	34	01/73 – 12/77	3316	
A 112	0.9 E	34	01/73 – 12/77	3485	
A 112	0.9 Junior	31	07/75 – 12/85	3316	
A 112	0.9 Junior	31	07/75 – 12/85	3485	
A 112	1.0 Abarth	43	09/71 – 12/75	3316	
A 112	1.0 Abarth	43	09/71 – 12/75	3485	
A 112	1.0 Abarth	51	01/74 – 12/84	3316	
A 112	1.0 Abarth	51	01/74 – 12/84	3485	
A 112	1.0 E,Elite,LX	35	11/77 – 12/85	3316	
A 112	1.0 E,Elite,LX	35	11/77 – 12/85	3485	
Y10	1.0	33	03/85 – 10/95	3424/1	
Y10	1.0	41	03/85 – 10/95	3424/1	
Y10	1.0 4WD	37	12/86 – 10/95	3424/1	
Y10	1.0 CAT	33	10/87 – 10/95	3424/1	
Y10	1.0 Turbo	63	03/85 – 10/95	3466	
Y10	1.0 Turbo	63	03/85 – 10/95	3468	
Y10	1.1	42	06/89 – 10/95	3424/1	
Y10	1.1 4WD	42	06/89 – 10/95	3424/1	
Y10	1.1 i.e. CAT	42	09/90 – 10/95	3424/1	
Y10	1.3 i.e. GT	54	06/89 – 10/95	3466	
Y10	1.3 i.e. GT	54	06/89 – 10/95	3468	
Y10	1.3 i.e. GT	57	06/89 – 10/95	3466	
Y10	1.3 i.e. GT	57	06/89 – 10/95	3468	
Y10 (156)	1.0 (156A2.000)	33	03/85 – 10/95	3439	
Y10 (156)	1.0 (156A3.000)	37	12/86 – 10/95	3439	
Y10 (156)	1.0 (156A.000)	41	03/85 – 10/95	3439	
Y10 (156)	1.0 Cat (156A2.246)	33	10/87 – 10/95	3439	
Y10 (156)	1.0 Turbo (156A1.000)	63	03/85 – 10/95	3439	
Y10 (156)	1.1 (156C.000)	42	06/89 – 10/95	3439	
Y10 (156)	1.1 i.e. Cat (156C.046)	42	09/90 – 10/95	3439	

MAKE & MODEL		KW	YEAR		
BEDFORD					
ASTRA VAN Estate	1.3	34	09/84 – 09/89	3410	
ASTRA VAN Estate	1.3	44	09/84 – 09/89	3410	
ASTRA VAN Estate	1.3	44	09/85 – 06/90	3410	
ASTRA VAN Estate	1.3	55	09/84 – 09/89	3410	
ASTRA VAN Estate	1.4	44	09/89 – 06/90	3410	
ASTRA VAN Estate	1.4	44	09/89 – 08/91	3410	
ASTRA VAN Estate	1.6	66	09/84 – 08/91	3410	
ASTRA VAN Estate	1.6 D	40	07/82 – 08/84	3410	
ASTRA VAN Estate	1.6 D	40	09/85 – 08/88	3410	
ASTRAMAX Estate	1.6 D	40	09/85 – 08/88	3410	
ASTRAMAX Estate	1.6 D	42	09/85 – 08/88	3410	
ASTRAMAX Estate	1.6 D	42	09/87 – 08/89	3410	
ASTRAMAX Estate	1.7 D	42	09/88 – 06/90	3410	
ASTRAMAX Estate	1.7 D	42	09/88 – 08/91	3410	
CHEVANNE	1.3	39	06/76 – 02/80	3318	
CHEVANNE	1.3	40	03/80 – 12/82	3318	
MIDI Box	0.9	30	07/86 – 06/90	3462	
MIDI Box	1.0 All-wheel Drive	34	07/86 – 10/88	3462	
MIDI Box	1.8	63	09/84 – 05/88	3462	
MIDI Box	2.0	62	06/88 – 08/92	3462	
MIDI Box	2.0 4WD	62	06/88 – 08/92	3462	
MIDI Box	2.0 D	42	08/84 – 05/88	3462	
MIDI Box	2.0 TD	51	06/88 – 08/92	3462	
MIDI Box	2.2 D	45	06/88 – 08/92	3462	
MIDI Box	2.2 D 4WD	45	06/88 – 08/92	3462	
MIDI Bus	1.8	63	09/84 – 05/88	3462	
MIDI Bus	2.0	60	09/84 – 08/92	3462	
MIDI Bus	2.0	62	06/88 – 08/92	3462	
MIDI Bus	2.0 4x4	60	09/84 – 08/92	3462	
MIDI Bus	2.0 TD	51	09/84 – 08/92	3462	
MIDI Bus	2.2 D 4WD	45	09/84 – 08/92	3462	
RASCAL Box	1.0	34	07/86 – 06/90	3509	
RASCAL Bus	1.0	34	07/86 – 06/90	3509	
RASCAL Pickup	0.8	30	07/86 – 06/90	3509	
RASCAL Pickup	1.0	34	06/86 – 06/90	3509	
RASCAL Pickup	1.0 All-wheel Drive	34	07/86 – 06/90	3509	
RASCAL Platform/Chassis	0.8	30	07/86 – 06/90	3509	
RASCAL Platform/Chassis	1.0	34	06/86 – 06/90	3509	
RASCAL Platform/Chassis	1.0 All-wheel Drive	34	07/86 – 06/90	3509	
BENTLEY					
ARNAGE (RBS_)	4.4 V8 (M62408S3)	260	04/98 – 01/02		4179
ARNAGE (RBS_)	4.4 V8 (M62448S3)	260	04/98 – 01/02		4179
ARNAGE (RBS_)	6.7 V8 (L 410 IT)	298	09/99 – 10/09		4179
ARNAGE (RBS_)	6.7 V8 T (L 410 M1T5)	336	02/02 – 10/09		4179
AZURE	6.75 V8 (L 410 M1T2)	300	08/99 – 06/06		4179
AZURE	6.75 V8 Mulliner (L 410 M1T3)	313	08/99 – 06/06		4179
AZURE	6.8 V8	286	09/95 – 08/99	3312	
CONTINENTAL	6.75 V8 R	265	10/91 – 08/99	3312	
CONTINENTAL	6.8 V8 S	286	05/94 – 12/95	3312	
CONTINENTAL II	6.75 V8 T Mulline r (L 410 M1T3)	313	08/99 – 10/02		4179
CONTINENTAL III FLYING SPUR (3W_)	6.0 (MTBHT)	412	03/05 -		4179
CONTINENTAL III (3W_)	6.0 (BEB)	412	06/03 – 12/11		4179
BERTONE					
FREECLIMBER 2	1.6 (BMW 161 E1)	74	03/92 – 12/99	3336	
BMC					
LEVENT	2.5 – 3.0		98 -	3443	
LEVENT	2.5 – 3.0		98 -	3456	
LEVENT MEGASTAR (YAYLI)	1.8 – 3.0		2003 -	3708/1	
LEVENT MEGASTAR (YAYSIZ)	1.8 – 3.0		2003 -	3708	
MEGASTAR (ALTTAN FİŞLİ 18.0 mm)				3871	
MEGASTAR (ÜSTTEN FİŞLİ,YAYLI 17.0 mm)				3871/1	
MEGASTAR (ÜSTTEN FİŞLİ,YAYSIZ 17.0 mm)				3871/2	
BMW					
(BRILLIANCE) 3 Series II (E90) 318 i	N46 B20 CC, N46 B20 E	100	01/2009 - 09/2012		4388
(BRILLIANCE) 3 Series II (E90) 320 i	N46 B20 CB	110	01/2005 - 12/2007		4389
(BRILLIANCE) 3 Series II (E90) 320 i	N46 B20 CB, N46 B20 CC	115	12/2007 - 12/2010		4388
(BRILLIANCE) 3 Series II (E90) 320 i	N46 B20 E	112	01/2010 - 09/2012		4388
(BRILLIANCE) 3 Series II (E90) 325 i	N52 B25 BF	160	06/2005 - 09/2012		4388
(BRILLIANCE) 3 Series III (F30, F35) 316 i	N13 B16 A	100	08/2013 -		4388
(BRILLIANCE) 3 Series III (F30, F35) 316 Li	N13 B16 A	100	08/2013 -		4388
(BRILLIANCE) 3 Series III (F30, F35) 320 i	B48 B20 C	135	09/2016 -		4388
(BRILLIANCE) 3 Series III (F30, F35) 320 i	N20 B20 D	135	07/2012 -		4388
(BRILLIANCE) 3 Series III (F30, F35) 320 Li	B48 B20 C	135	01/2017 -		4388
(BRILLIANCE) 3 Series III (F30, F35) 320 Li	N20 B20 A, N20 B20 D	135	07/2012 -		4388

MAKE & MODEL		KW	YEAR		
BMW					
(BRILLIANCE) 3 Series III (F30, F35) 320 Li	N20 B20 D	150	11/2012 - 12/2015		4388
(BRILLIANCE) 3 Series III (F30, F35) 328 i	N20 B20 C	180	07/2012 -		4388
(BRILLIANCE) 3 Series III (F30, F35) 328 i xDrive	N20 B20 C	180	05/2014 -		4388
(BRILLIANCE) 3 Series III (F30, F35) 328 Li	N20 B20 C, N20 B20 D	180	07/2012 -		4388
(BRILLIANCE) 3 Series III (F30, F35) 328 Li xDrive	N20 B20 C	180	05/2014 -	4382	4388
(BRILLIANCE) 5 Series I (E60) 520 i	M 54 B 22	127	05/2004 - 12/2006	4346	
(BRILLIANCE) 5 Series I (E60) 520 Li	N46 B20 CD	115	06/2009 - 09/2010	4346	
(BRILLIANCE) 5 Series I (E60) 523 i	N52 B25 BE	130	07/2003 - 12/2007	4346	
(BRILLIANCE) 5 Series II (F10, F18) 520 Li	N20 B20 B, N20 B20 C	135	09/2013 - 05/2017		4325
(BRILLIANCE) 5 Series II (F10, F18) 520 Li	N20 B20 B, N20 B20 C	135	09/2013 - 05/2017		4325/1
(BRILLIANCE) 5 Series II (F10, F18) 520 Li	N52 B25 AF	130	12/2010 - 12/2012		4325
(BRILLIANCE) 5 Series II (F10, F18) 520 Li	N52 B25 AF	130	12/2010 - 12/2012		4325/1
(BRILLIANCE) 5 Series II (F10, F18) 520 Li	N52 B25 AF	130	12/2010 - 12/2012	4387	
(BRILLIANCE) 5 Series II (F10, F18) 523 Li	N52 B25 AF	150	08/2010 - 12/2012		4325
(BRILLIANCE) 5 Series II (F10, F18) 523 Li	N52 B25 AF	150	08/2010 - 12/2012		4325/1
(BRILLIANCE) 5 Series II (F10, F18) 523 Li	N52 B25 AF	150	08/2010 - 12/2012	4387	
(BRILLIANCE) 5 Series II (F10, F18) 525 Li	N20 B20 A	178	08/2012 - 05/2017		4325
(BRILLIANCE) 5 Series II (F10, F18) 525 Li	N20 B20 A	178	08/2012 - 05/2017		4325/1
(BRILLIANCE) 5 Series II (F10, F18) 525 Li	N20 B20 C	160	06/2013 - 05/2017		4325
(BRILLIANCE) 5 Series II (F10, F18) 525 Li	N20 B20 C	160	06/2013 - 05/2017		4325/1
(BRILLIANCE) 5 Series II (F10, F18) 528 Li	N20 B20 C	180	05/2014 - 05/2017		4325
(BRILLIANCE) 5 Series II (F10, F18) 528 Li	N20 B20 C	180	05/2014 - 05/2017		4325/1
(BRILLIANCE) 5 Series II (F10, F18) 528 Li	N52 B30 AF	190	08/2010 - 11/2011		4325
(BRILLIANCE) 5 Series II (F10, F18) 528 Li	N52 B30 AF	190	08/2010 - 11/2011		4325/1
(BRILLIANCE) 5 Series II (F10, F18) 528 Li	N20 B20 C	180	05/2014 - 05/2017	4387	
(BRILLIANCE) 5 Series II (F10, F18) 528 Li	N52 B30 AF	190	08/2010 - 11/2011	4387	
(BRILLIANCE) 5 Series II (F10, F18) 528 Li xDrive	N20 B20 C	180	05/2014 - 05/2017		4325
(BRILLIANCE) 5 Series II (F10, F18) 528 Li xDrive	N20 B20 C	180	05/2014 - 05/2017		4325/1
(BRILLIANCE) 5 Series II (F10, F18) 528 Li xDrive	N20 B20 C	180	05/2014 - 05/2017	4387	
(BRILLIANCE) 5 Series II (F10, F18) 530 Le Hybrid	N20 B20 C	160	01/2015 - 05/2017		4325
(BRILLIANCE) 5 Series II (F10, F18) 530 Le Hybrid	N20 B20 C	160	01/2015 - 05/2017		4325/1
(BRILLIANCE) 5 Series II (F10, F18) 530 Le Hybrid	N20 B20 C	160	01/2015 - 05/2017	4387	
(BRILLIANCE) 5 Series II (F10, F18) 530 Li	N52 B30 BF	190	11/2011 - 05/2014		4325
(BRILLIANCE) 5 Series II (F10, F18) 530 Li	N52 B30 BF	190	11/2011 - 05/2014		4325/1
(BRILLIANCE) 5 Series II (F10, F18) 535 Li	N55 B30 A	225	08/2010 - 05/2017		4325
(BRILLIANCE) 5 Series II (F10, F18) 535 Li	N55 B30 A	225	08/2010 - 05/2017		4325/1
(BRILLIANCE) 5 Series II (F10, F18) 535 Li	N55 B30 A	225	08/2010 - 05/2017	4387	
(BRILLIANCE) X1 I (E84) sDrive18 i	N20 B20 C	115	06/2014 -		4388
(BRILLIANCE) X1 I (E84) sDrive18 i	N46 B20 CC	110	03/2012 - 12/2014		4388
(BRILLIANCE) X1 I (E84) sDrive20 i	N20 B20 A	135	03/2012 -		4388
(BRILLIANCE) X1 I (E84) xDrive 20 i	N20 B20 C	135	03/2012 -		4388
(BRILLIANCE) X1 I (E84) xDrive 28 i	N20 B20 C	180	03/2012 -		4388
02 (E10)	1502	55	01/75 – 07/77	3318	
02 (E10)	2002 Ti	88	06/68 – 04/72	3331/1	
02 (E10)	2002 Tii	96	05/71 – 07/75	3331/1	
02 (E10)	2002 Turbo	125	01/74 – 07/75	3331/1	
1 Serie (E82)	M 3.0 (N54 B30 A)	250	04/11 – 06/12		4179
1 I (E81) 116 d	N47 D20 A, N47 D20 C	66	01/2011 - 12/2011		4383
1 I (E81) 116 d	N47 D20 A, N47 D20 C	85	11/2008 - 12/2011		4389
1 I (E81) 116 i	N43 B16 A, N43 B16 AA	89	08/2007 - 11/2011		4389
1 I (E81) 116 i	N43 B16 AA	90	03/2007 - 12/2011		4389
1 I (E81) 116 i	N43 B20 A	90	11/2008 - 12/2011		4389
1 I (E81) 116 i	N45 B16 A	85	09/2007 - 12/2011		4389
1 I (E81) 118 d	N47 D20 A, N47 D20 C	100	09/2006 - 12/2011		4388
1 I (E81) 118 d	N47 D20 A, N47 D20 C	105	09/2006 - 12/2011		4388
1 I (E81) 118 i	N43 B20 A	105	09/2006 - 12/2011		4389
1 I (E81) 118 i	N46 B20 B	100	09/2006 - 12/2011		4389
1 I (E81) 120 d	N47 D20 A (.-08.08), N47 D20 C (09.08-.)	120	03/2007 - 12/2011		4388
1 I (E81) 120 d	N47 D20 A, N47 D20 C	130	03/2007 - 12/2011		4388
1 I (E81) 120 d	N47 D20 A, N47 D20 C	145	03/2007 - 12/2011		4388
1 I (E81) 120 i	N43 B20 A	120	03/2007 - 12/2011		4389
1 I (E81) 120 i	N43 B20 A	125	03/2007 - 09/2012		4389
1 I (E81) 120 i	N46 B20 B, N46 B20 C	115	03/2007 - 12/2011		4388
1 I (E81) 123 d	N47 D20 B, N47 D20 D	150	03/2007 - 12/2011		4388
1 I (E81) 130 i	N52 B30 A, N52 B30 B, N52 B30 BF	190	09/2006 - 12/2011		4388
1 I (E81) 130 i	N52 B30 A, N52 B30 B, N52 B30 BF	195	09/2006 - 12/2011		4388
1 I (E87) 116 d	N47 D20 A, N47 D20 C (09.10-.)	85	03/2009 - 06/2011		4389
1 I (E87) 116 d	N47 D20 C	66	01/2011 - 12/2011		4383
1 I (E87) 116 i	N43 B16 A	89	03/2007 - 06/2011		4389
1 I (E87) 116 i	N43 B16 AA	90	09/2007 - 06/2011		4389
1 I (E87) 116 i	N43 B20 A	90	01/2009 - 06/2011		4389
1 I (E87) 116 i	N45 B16 A	85	06/2004 - 06/2011		4389
1 I (E87) 118 d	M47 D20 (204D4)	90	06/2004 - 02/2007		4389
1 I (E87) 118 d	N47 D20 A, N47 D20 C	100	03/2007 - 06/2011		4388
1 I (E87) 118 d	N47 D20 A, N47 D20 C	105	03/2007 - 06/2011		4388
1 I (E87) 118 i	N43 B20 A	105	09/2006 - 06/2011		4389

MAKE & MODEL   		KW	YEAR		
BMW					
1 I (E87) 118 i	N46 B20 B	100	10/2006 - 06/2011		4389
1 I (E87) 118 i	N46 B20 B	95	07/2004 - 02/2007		4389
1 I (E87) 120 d	M47 D20 (204D4)	110	06/2004 - 02/2007		4388
1 I (E87) 120 d	M47 D20 (204D4) (.-02.07), N47 D20 A (03.07-.)	120	06/2004 - 06/2011		4388
1 I (E87) 120 d	N47 D20 A, N47 D20 C	130	03/2007 - 06/2011		4388
1 I (E87) 120 i	N43 B20 A	120	03/2007 - 06/2011		4389
1 I (E87) 120 i	N43 B20 A	125	03/2007 - 06/2011		4389
1 I (E87) 120 i	N46 B20 A, N46 B20 B, N46 B20 BD, N46 B20 C, N46 B	115	03/2007 - 06/2011		4388
1 I (E87) 120 i	N46 B20 B, N46 B20 BD, N46 B20 C, N46 B20 CC	110	06/2004 - 02/2007		4389
1 I (E87) 123 d	N47 D20 B (.-02.09), N47 D20 D (03.09-.)	150	03/2007 - 06/2011		4388
1 I (E87) 130 i	N52 B30 A, N52 B30 AF, N52 B30 B, N52 B30 BF	190	03/2007 - 06/2011		4388
1 I (E87) 130 i	N52 B30 A, N52 B30 AF, N52 B30 BF	195	09/2005 - 02/2007		4388
1 I Cabrio (E88) 118 d	N47 D20 A, N47 D20 C	100	09/2008 - 12/2013		4388
1 I Cabrio (E88) 118 d	N47 D20 A, N47 D20 C	105	09/2008 - 12/2013		4388
1 I Cabrio (E88) 118 i	N43 B20 A	105	03/2008 - 12/2013		4389
1 I Cabrio (E88) 118 i	N46 B20 B	100	09/2008 - 12/2013		4389
1 I Cabrio (E88) 120 d	N47 D20 A, N47 D20 C	120	03/2008 - 12/2013		4388
1 I Cabrio (E88) 120 d	N47 D20 A, N47 D20 C	130	03/2008 - 12/2013		4388
1 I Cabrio (E88) 120 i	N43 B20 A	120	03/2008 - 12/2013		4388
1 I Cabrio (E88) 120 i	N43 B20 A	125	12/2007 - 10/2013		4388
1 I Cabrio (E88) 120 i	N46 B20 B, N46 B20 C, N46 B20 E	115	03/2008 - 12/2013		4388
1 I Cabrio (E88) 123 d	N47 D20 B, N47 D20 D	150	09/2008 - 12/2013		4388
1 I Cabrio (E88) 125 i	N52 B30 A, N52 B30 B, N52 B30 BF	160	12/2007 - 10/2013		4388
1 I Coupe (E82) 118 d	N47 D20 C	100	09/2009 - 10/2013		4388
1 I Coupe (E82) 118 d	N47 D20 C	105	09/2009 - 10/2013		4388
1 I Coupe (E82) 120 d	N47 D20 A, N47 D20 C	120	09/2007 - 10/2013		4388
1 I Coupe (E82) 120 d	N47 D20 A, N47 D20 C	130	09/2007 - 10/2013		4388
1 I Coupe (E82) 120 i	N43 B20 A	125	10/2007 - 10/2013		4388
1 I Coupe (E82) 120 i	N46 B20 B, N46 B20 BD, N46 B20 C, N46 B20 E	115	09/2009 - 10/2013		4388
1 I Coupe (E82) 123 d	N47 D20 B, N47 D20 D	150	10/2007 - 10/2013		4388
1 I Coupe (E82) 125 i	N52 B30 A, N52 B30 B, N52 B30 BF	160	03/2008 - 10/2013		4388
1 II (F20) 114 d	B37 D15 A	70	07/2015 - 06/2019		4383
1 II (F20) 114 d	N47 D16 A	70	11/2012 - 06/2015		4383
1 II (F20) 114 i	N13 B16 A	75	07/2012 - 02/2015		4383
1 II (F20) 116 d	B37 D15 A	85	03/2015 - 06/2019		4383
1 II (F20) 116 d	N47 D16 A	85	03/2012 - 02/2015		4383
1 II (F20) 116 d	N47 D20 C	85	07/2011 - 02/2015		4383
1 II (F20) 116 i	B38 B15 A	80	03/2015 - 06/2019		4383
1 II (F20) 116 i	N13 B16 A	100	07/2011 - 02/2015		4383
1 II (F20) 118 d	B47 D20 A	110	03/2015 - 06/2019		4383
1 II (F20) 118 d	B47 D20 A (03.15-.), N47 D20 C (.-02.15)	100	07/2011 - 06/2019		4383
1 II (F20) 118 d	N47 D20 C	105	07/2011 - 02/2015		4383
1 II (F20) 118 d xDrive	B47 D20 A	110	03/2015 - 06/2019	4381	4383
1 II (F20) 118 d xDrive	N47 D20 C	105	07/2013 - 02/2015	4381	4383
1 II (F20) 118 i	B38 B15 A	100	07/2015 - 06/2019	4381	4383
1 II (F20) 118 i	N13 B16 A	100	03/2015 - 06/2015	4381	4383
1 II (F20) 118 i	N13 B16 A	125	07/2011 - 02/2015	4381	4383
1 II (F20) 120 d	B47 D20 A	140	03/2015 - 06/2019	4381	4383
1 II (F20) 120 d	B47 D20 A, N47 D20 C	120	07/2011 - 06/2019	4381	4383
1 II (F20) 120 d	N47 D20 C	135	07/2011 - 02/2015	4381	4383
1 II (F20) 120 d	N47 D20 C	147	07/2011 - 02/2015	4381	4383
1 II (F20) 120 d xDrive	B47 D20 A	140	03/2015 - 06/2019	4381	4383
1 II (F20) 120 d xDrive	N47 D20 C	135	11/2012 - 02/2015	4381	4383
1 II (F20) 120 d xDrive	N47 D20 C	147	11/2012 - 02/2015	4381	4383
1 II (F20) 120 i	N13 B16 A	130	03/2015 - 06/2016	4381	4383
1 II (F20) 125 d	B47 D20 B	165	03/2015 - 06/2019	4382	4383
1 II (F20) 125 d	B47 D20 B, N47 D20 D	155	03/2012 - 06/2019	4382	4383
1 II (F20) 125 d	N47 D20 D	160	03/2012 - 02/2015	4382	4383
1 II (F20) 125 i	N20 B20 A	160	03/2012 - 11/2017	4382	4383
1 II (F20) 125 i	N20 B20 A	175	03/2012 - 11/2017	4382	4383
1 II (F21) 114 d	B37 D15 A	70	06/2015 -		4383
1 II (F21) 114 d	N47 D16 A	70	07/2012 -		4383
1 II (F21) 114 i	N13 B16 A	75	12/2011 -		4383
1 II (F21) 116 d	B37 D15 A	85	03/2015 -		4383
1 II (F21) 116 d	N47 D16 A	85	12/2011 -		4383
1 II (F21) 116 d	N47 D20 C	85	01/2012 -		4383
1 II (F21) 116 i	B38 B15 A	80	03/2015 -		4383
1 II (F21) 116 i	N13 B16 A	100	12/2011 -		4383
1 II (F21) 118 d	B47 D20 A	110	03/2015 -		4383
1 II (F21) 118 d	N47 D20 C	100	12/2011 - 02/2015		4383
1 II (F21) 118 d	N47 D20 C	105	12/2011 -		4383
1 II (F21) 118 d xDrive	B47 D20 A	110	03/2015 -	4381	4383
1 II (F21) 118 d xDrive	N47 D20 C	105	05/2013 -	4381	4383
1 II (F21) 118 i	B38 B15 A	100	03/2015 -	4381	4383
1 II (F21) 118 i	N13 B16 A	100	03/2015 -	4381	4383
1 II (F21) 118 i	N13 B16 A	125	07/2012 -	4381	4383

MAKE & MODEL   		KW	YEAR		
BMW					
1 II (F21) 120 d	B47 D20 A	140	03/2015 -	4381	4383
1 II (F21) 120 d	N47 D20 C	120	07/2012 -	4381	4383
1 II (F21) 120 d	N47 D20 C	135	07/2012 -	4381	4383
1 II (F21) 120 d	N47 D20 C	147	01/2012 - 02/2015	4381	4383
1 II (F21) 120 d xDrive	B47 D20 A	140	03/2015 -	4381	4383
1 II (F21) 120 d xDrive	N47 D20 C	135	02/2012 - 02/2015	4381	4383
1 II (F21) 120 d xDrive	N47 D20 C	147	01/2012 -	4381	4383
1 II (F21) 120 i	N13 B16 A	130	03/2015 -	4381	4383
1 II (F21) 125 d	B47 D20 B	165	03/2015 -	4382	4383
1 II (F21) 125 d	N47 D20 D	155	12/2011 - 02/2015	4382	4383
1 II (F21) 125 d	N47 D20 D	160	12/2011 -	4382	4383
1 II (F21) 125 i	N20 B20 A	160	12/2011 -	4382	4383
1 II (F21) 125 i	N20 B20 A	175	03/2013 -	4382	4383
2 I Cabrio (F23) 218 d	B47 D20 A	110	07/2015 -	4381	4383
2 I Cabrio (F23) 218 i	B38 B15 A	100	03/2015 -		4383
2 I Cabrio (F23) 220 d	B47 D20 A	140	03/2014 -	4382	4383
2 I Cabrio (F23) 220 i	B48 B20 A	135	09/2015 -	4382	4383
2 I Cabrio (F23) 220 i	N20 B20 A, N20 B20 B	135	04/2014 - 07/2016	4382	4383
2 I Cabrio (F23) 225 d	B47 D20 B	165	07/2015 -	4382	4383
2 I Cabrio (F23) 228 i	N20 B20 A	180	11/2014 -	4382	4383
2 I Coupe (F22, F87) 218 d	B47 D20 A	110	07/2015 -	4381	4383
2 I Coupe (F22, F87) 218 d	N47 D20 C	105	03/2014 - 06/2015	4381	4383
2 I Coupe (F22, F87) 218 i	B38 B15 A	100	03/2015 -		4383
2 I Coupe (F22, F87) 220 d	B47 D20 A	140	03/2014 -	4382	4383
2 I Coupe (F22, F87) 220 d	N47 D20 C	135	10/2012 - 11/2014	4382	4383
2 I Coupe (F22, F87) 220 d	N47 D20 C	147	10/2012 - 11/2014	4382	4383
2 I Coupe (F22, F87) 220 i	B48 B20 A	135	09/2015 -	4382	4383
2 I Coupe (F22, F87) 220 i	N20 B20 A, N20 B20 B	135	10/2013 -	4382	4383
2 I Coupe (F22, F87) 225 d	B47 D20 B	165	07/2015 -	4382	4383
2 I Coupe (F22, F87) 225 d	N47 D20 D	160	01/2014 -	4382	4383
2 I Coupe (F22, F87) 228 i	N20 B20 A, N26 B20 A	180	07/2014 -	4382	4383
3 Serie V (E90)	M3 4.0 (S65 B40 A)	309	03/07 – 12/11		4179
3 Serie V (E92)	M (S65 B40 A)	309	03/07 – 12/13		4179
3 Serie V (E93)	M3 (S65 B40 A)	309	03/07 – 10/13		4179
3 Serie (E21)	1.8 318i (M10 B18)	77	11/79 – 08/82		3706
3 Serie (E21)	2.0 320 (M10 B20)	80	08/75 – 08/77		3706
3 Serie (E21)	2.0 320/6 (M20 B20)	90	09/77 – 08/82		3706
3 Serie (E21)	2.0 320i (M10 B20)	92	06/75 – 08/82		3706
3 Serie (E21)	2.3 323 i	105	06/75 -		3706
3 Serie (E21)	2.3 323 i (M20 B23)	105	01/78 – 08/82		3706
3 (E21)	315	55	03/81 – 3/84	3365	
3 (E21)	316	66	08/75 – 08/80	3365	
3 (E21)	316	66	09/80 – 08/82	3365	
3 (E21)	318	72	08/75 – 08/80	3365	
3 (E21)	320	80	08/75 – 08/77	3365	
3 (E21)	318 i	77	11/79 – 08/82	3365	
3 (E21)	320 i	92	06/75 – 08/82	3365	
3 (E21)	320/6	90	09/77 – 08/82	3365	
3 (E21)	323 i	105	01/78 – 08/82	3365	
3 (E30)	315	55	09/82 – 12/91	3365	
3 (E30)	316	66	09/82 – 12/87	3609	3572
3 (E30)	316 (Ecotronic)	66	09/83 – 12/90	3609	3572
3 (E30)	316 i	73	09/87 – 06/91	3609	3572
3 (E30)	316 i	75	07/88 - 06/91	3609	3572
3 (E30)	316 i	75	08/87 – 08/88	3609	3572
3 (E30)	318 i	75	12/84 – 08/88	3609	3572
3 (E30)	318 i	77	09/82 – 08/87	3609	3572
3 (E30)	318 i	83	09/87 – 06/91	3609	3572
3 (E30)	318 i	85	09/87 – 06/91	3609	3572
3 (E30)	318 is	100	09/89 – 08/91	3609	3572
3 (E30)	320 i	92	09/82 – 12/85	3609	3572
3 (E30)	320 i	95	12/85 – 06/91	3609	3572
3 (E30)	320 i	110	12/85 – 06/90	3609	3572
3 (E30)	320 is	141	05/88 – 12/90	3609	3572
3 (E30)	323 i	102	09/82 – 08/83	3609	3572
3 (E30)	323 i	110	09/83 – 08/86	3609	3572
3 (E30)	324 d	63	09/85 – 08/91	3609	3572
3 (E30)	324 td	85	09/87 – 08/91	3609	3572
3 (E30)	325 e 2.7	90	10/83 – 12/88	3609	3572
3 (E30)	325 e 2.7	95	01/85 – 08/87	3609	3572
3 (E30)	325 i	125	12/86 – 06/91	3609	3572
3 (E30)	325 i	126	09/83 – 11/89	3609	3572
3 (E30)	325 i X	125	12/86 – 08/91	3609	3572
3 (E30)	325 i X	126	03/86 – 12/87	3609	3572
3 (E30)	M3 2.3	143	07/86 – 06/91	3573	3578
3 (E30)	M3 2.3	147	02/87 – 05/89	3573	3578

MAKE & MODEL		KW	YEAR		
BMW					
3 (E30)	M3 2.3	158	06/89 – 06/91	3573	3578
3 (E30)	M3 EVO I 2.3	162	10/88 – 10/90	3573	3578
3 (E30)	M3 EVO II 2.5	175	01/90 – 01/92	3573	3578
3 (E36)	M3 3.0	210	08/94 – 09/95	3564/1	3578
3 (E36)	M3 3.2	236	09/95 – 02/98	3564/1	3578
3 Convertible (E30)	318 i	83	09/90 – 10/93	3609	3572
3 Convertible (E30)	318 i	103	06/88 – 02/92	3609	3572
3 Convertible (E30)	320 i	93	04/86 – 10/93	3609	3572
3 Convertible (E30)	320 i	95	04/86 – 10/93	3609	3572
3 Convertible (E30)	325 i	125	09/87 – 10/93	3609	3572
3 Convertible (E30)	325 i	126	12/85 – 12/87	3609	3572
3 Convertible (E30)	M3 2.3	143	06/88 – 06/91	3573	3578
3 Convertible (E36)	M3 3.0	210	01/94 – 10/95	3564/1	3578
3 Convertible (E36)	M3 3.2	236	10/95 – 04/99	3564/1	3578
3 Convertible (E46)	M3 3.2	252	04/01 – 12/07	3564/1	3879
3 Coupe (E36)	M3 3.0	210	10/92 – 01/95	3564/1	3578
3 Coupe (E36)	M3 3.0	217	01/95 – 10/95	3564/1	3578
3 Coupe (E36)	M3 3.2	236	10/95 – 04/99	3564/1	3578
3 Coupe (E46)	M3	252	06/00 – 07/06	3564/1	3879
3 Coupe (E46)	M3	265	06/03 – 07/06	3564/1	3879
3 Serie II (E30)	1.8 316 (M10 B18)	66	09/82 – 12/87	3430	
3 Serie II (E30)	1.8 316 (Ecotronic) (M10 B18)	66	09/83 – 12/90	3430	
3 Serie II (E30)	1.8 318i (M10 B18)	75	12/84 – 08/88	3430	
3 Serie II (E30)	1.8 318i (M10 B18)	77	09/82 – 08/87	3430	
3 Serie II (E30)	2.0 320i (M20 B20)	92	09/82 – 12/85	3430	
3 Serie II (E30)	2.0 320i (M20 B20)	95	12/85 – 06/91	3430	
3 Serie II (E30)	2.3 323 i (M20 B23)	102	09/82 – 08/83	3430	
3 Serie II (E30)	2.3 323 i (M20 B23)	110	09/83 – 08/86	3430	
3 Serie II (E30)	2.5 325i (M20 B25)	126	09/83 – 11/89	3430	
3 Serie II (E30)	2.7 325 e (M20 B27)	90	10/83 – 12/88	3430	
3 Serie III (E36)	2.5 325i (M50 B25)	141	09/90 – 09/95	3563	
3 Serie III (E36)	1.6 316 i	75	09/93 – 04/99	3563	
3 Serie III (E36)	1.6 316 i (M40 B16)	73	09/90 – 09/93	3563	
3 Serie III (E36)	1.6 316 i (M40 B16)	75	01/96 – 10/99	3563	
3 Serie III (E36)	1.6 316 i (M43 B16)	75	03/94 – 08/00	3563	
3 Serie III (E36)	1.6 316 i (M43 B16)	75	07/93 – 02/98	3563	
3 Serie III (E36)	1.6 316 i (M43 B16)	75	09/90 – 09/93	3563	
3 Serie III (E36)	1.7 318 tds (M41 D18 (INTER.)	66	01/95 – 08/00	3563	
3 Serie III (E36)	1.8 318 is (M42 B18)	103	03/92 – 10/95	3563	
3 Serie III (E36)	1.8 318 is (M42 B18)	103	03/93 – 02/98	3563	
3 Serie III (E36)	1.8 318 ti (M42 B18)	103	11/94 – 08/95	3563	
3 Serie III (E36)	1.8 318i (M40 B18)	83	12/90 – 10/93	3563	
3 Serie III (E36)	1.8 318i (M43 B18)	85	01/94 – 04/99	3563	
3 Serie III (E36)	1.8 318i (M43 B18)	85	07/95 – 10/99	3563	
3 Serie III (E36)	1.8 318i (M43 B18)	85	10/93 – 02/98	3563	
3 Serie III (E36)	1.9 318 is (M44 B19)	103	09/95 – 04/99	3563	
3 Serie III (E36)	1.9 318 ti (M44 B19)	103	07/95 – 08/00	3563	
3 Serie III (E36)	2.0 320i (M50 B(20 6 S1)	110	03/92 – 04/99	3563	
3 Serie III (E36)	2.0 320i (M50 B(20 6 S1)	110	09/90 – 02/98	3563	
3 Serie III (E36)	2.0 320i (M50 B(20 6 S2) VANOS)	110	03/92 – 04/99	3563	
3 Serie III (E36)	2.0 320i (M50 B(20 6 S2) VANOS)	110	09/90 – 02/98	3563	
3 Serie III (E36)	2.0 320i (M50 B(20 6 S2) VANOS)	110	12/93 – 04/99	3563	
3 Serie III (E36)	2.0 320i (M50 B20 TU)	110	03/92 – 04/99	3563	
3 Serie III (E36)	2.0 320i (M50 B20 TU)	110	09/90 – 02/98	3563	
3 Serie III (E36)	2.0 320i (M50 B20 TU)	110	12/93 – 04/99	3563	
3 Serie III (E36)	2.0 320i (M50 B20)	110	01/95 – 10/99	3563	
3 Serie III (E36)	2.0 320i (M50 B20)	110	03/92 – 04/99	3563	
3 Serie III (E36)	2.0 320i (M50 B20)	110	09/90 – 02/98	3563	
3 Serie III (E36)	2.0 320i (M50 B20)	110	12/93 – 04/99	3563	
3 Serie III (E36)	2.0 320i (M52 B(20 6 S3) VANOS)	110	01/95 – 10/99	3563	
3 Serie III (E36)	2.0 320i (M52 B(20 6 S3) VANOS)	110	03/92 – 04/99	3563	
3 Serie III (E36)	2.0 320i (M52 B(20 6 S3) VANOS)	110	09/90 – 02/98	3563	
3 Serie III (E36)	2.0 320i (M52 B(20 6 S3) VANOS)	110	12/93 – 04/99	3563	
3 Serie III (E36)	2.0 320i (M52 B20)	110	01/95 – 10/99	3563	
3 Serie III (E36)	2.0 320i (M52 B20)	110	03/92 – 04/99	3563	
3 Serie III (E36)	2.0 320i (M52 B20)	110	09/90 – 02/98	3563	
3 Serie III (E36)	2.0 320i (M52 B20)	110	12/93 – 04/99	3563	
3 Serie III (E36)	2.5 323 ti (M52 B25 (VANOS)	125	08/97 – 08/00	3563	
3 Serie III (E36)	2.5 323i (M52 B25 (VANOS)	125	03/95 – 02/98	3563	
3 Serie III (E36)	2.5 323i (M52 B25 (VANOS)	125	06/95 – 04/99	3563	
3 Serie III (E36)	2.5 323i (M52 B25 (VANOS)	125	09/95 – 10/99	3563	
3 Serie III (E36)	2.5 325 td (M51 D25)	85	09/91 – 02/98	3563	
3 Serie III (E36)	2.5 325 tds (M51 D25 (INTER.)	105	01/95 – 10/99	3563	
3 Serie III (E36)	2.5 325 tds (M51 D25 (INTER.)	105	05/93 – 02/98	3563	
3 Serie III (E36)	2.5 325i (M50 B25 (VANOS)	141	03/92 – 04/99	3563	
3 Serie III (E36)	2.5 325i (M50 B25 (VANOS)	141	09/90 – 09/95	3563	

MAKE & MODEL   		KW	YEAR		
BMW					
3 Serie III (E36)	2.5 325i (M50 B25 TU)	141	03/92 – 04/99	3563	
3 Serie III (E36)	2.5 325i (M50 B25 TU)	141	09/90 – 09/95	3563	
3 Serie III (E36)	2.5 325i (M50 B25)	141	03/ 93 – 03/95	3563	
3 Serie III (E36)	2.5 325i (M50 B25)	141	03/92 – 04/99	3563	
3 Serie III (E36)	2.8 328 i (M52 B28 TU)	142	01/95 – 02/98	3563	
3 Serie III (E36)	2.8 328 i (M52 B28 TU)	142	01/95 – 04/99	3563	
3 Serie III (E36)	2.8 328 i (M52 B28 TU)	142	01/95 – 10/99	3563	
3 Serie III (E36)	2.8 328 i (M52 B28 TU)	142	03/95 – 04/99	3563	
3 Serie III (E36)	2.8 328 i (M52 B28)	142	01/95 – 02/98	3563	
3 Serie III (E36)	2.8 328 i (M52 B28)	142	01/95 – 04/99	3563	
3 Serie III (E36)	2.8 328 i (M52 B28)	142	01/95 – 10/99	3563	
3 Serie III (E36)	2.8 328 i (M52 B28)	142	03/95 – 04/99	3563	
3 Serie III (E36)	316 g (M43 B16)	75	03/94 – 08/00	3563	
3 Touring (E30)	316 i	73	09/91 – 06/94	3609	3572
3 Touring (E30)	316 i	75	09/91 – 06/94	3609	3572
3 Touring (E30)	318 i	83	04/89 – 06/94	3609	3572
3 Touring (E30)	318 i	85	09/87 – 06/91	3609	3572
3 Touring (E30)	320 i	95	01/88 – 12/91	3609	3572
3 Touring (E30)	324 td	85	01/88 – 06/93	3609	3572
3 Touring (E30)	325 i	125	07/87 – 03/93	3609	3572
3 Touring (E30)	325 i X	125	06/88 – 10/93	3609	3572
3 V (E90) 316 d	N47 D20 C	85	07/2009 - 12/2011		4389
3 V (E90) 316 i	N43 B16 A, N43 B16 AA	90	09/2007 - 10/2011		4389
3 V (E90) 316 i	N45 B16 A, N45 B16 AC	85	09/2005 - 10/2011		4389
3 V (E90) 318 d	M47 D20 (204D4)	90	03/2005 - 08/2007		4388
3 V (E90) 318 d	M47 D20 (204D4)	90	03/2005 - 08/2007		4389
3 V (E90) 318 d	N47 D20 A (.-08.08), N47 D20 C (09.08-.)	100	09/2007 - 10/2011		4388
3 V (E90) 318 d	N47 D20 A, N47 D20 C	105	02/2007 - 10/2011		4388
3 V (E90) 318 i	N43 B20 A	105	09/2007 - 10/2011		4388
3 V (E90) 318 i	N46 B20 B	95	09/2005 - 08/2007		4388
3 V (E90) 318 i	N46 B20 B	95	09/2005 - 08/2007		4389
3 V (E90) 318 i	N46 B20 B, N46 B20 C, N46 B20 CC, N46 B20 CD, N46	100	09/2007 - 10/2011		4388
3 V (E90) 320 d	M47 D20 (204D4)	110	12/2004 - 09/2007		4388
3 V (E90) 320 d	M47 D20 (204D4) (.-08.07), N47 D20 A (09.07-08.08)	120	12/2004 - 10/2011		4388
3 V (E90) 320 d	N47 D20 A, N47 D20 C	130	09/2007 - 02/2010		4388
3 V (E90) 320 d	N47 D20 C	135	03/2010 - 10/2011		4388
3 V (E90) 320 d xDrive	N47 D20 A, N47 D20 C	130	09/2008 - 02/2010		4388
3 V (E90) 320 d xDrive	N47 D20 C	120	09/2008 - 10/2011		4388
3 V (E90) 320 d xDrive	N47 D20 C	135	03/2010 - 10/2011		4388
3 V (E90) 320 i	N43 B20 A	125	09/2007 - 10/2011		4388
3 V (E90) 320 i	N46 B20 B, N46 B20 BD, N46 B20 C, N46 B20 CB	110	12/2004 - 08/2007		4388
3 V (E90) 320 i	N46 B20 B, N46 B20 BD, N46 B20 C, N46 B20 CB	110	12/2004 - 08/2007		4389
3 V (E90) 320 i	N46 B20 B, N46 B20 C, N46 B20 CC, N46 B20 CD, N46	115	02/2007 - 12/2011		4388
3 V (E90) 320 si	N45 B20 A	127	09/2005 - 08/2006		4389
3 V (E90) 323 i	N52 B25 A, N52 B25 B, N52 B25 BE, N52 B25 BF	130	09/2005 - 02/2007		4388
3 V (E90) 323 i	N52 B25 A, N52 B25 BF	140	03/2007 - 12/2011		4388
3 V (E90) 325 i	N52 B25 A	141	09/2007 - 12/2008		4388
3 V (E90) 325 i	N52 B25 A	155	01/2006 - 12/2011		4388
3 V (E90) 325 i	N52 B25 A, N52 B25 B, N52 B25 BF	160	12/2004 - 12/2011		4388
3 V (E90) 325 i	N53 B30 A	160	03/2007 - 12/2011		4388
3 V (E90) 325 i xDrive	N53 B30 A	160	09/2008 - 10/2011		4388
3 V (E90) 325 xi	N52 B25 A	160	09/2005 - 08/2008		4388
3 V (E90) 325 xi	N53 B30 A	160	09/2007 - 08/2008		4388
3 V (E90) 325i	-	224	09/2008 - 12/2010		4388
3 V (E90) 328 i	N51 B30 A	172	09/2006 - 12/2011		4388
3 V (E90) 328i	N52NB30A	187	07/2005 - 11/2007		4388
3 V (E90) 328i xDrive	N51B30A	172	09/2008 - 12/2010		4388
3 V Cabrio (E93) 318 i	N43 B20 A	105	03/2010 - 12/2013		4388
3 V Cabrio (E93) 320 d	N47 D20 A, N47 D20 C	130	03/2008 - 02/2010		4388
3 V Cabrio (E93) 320 d	N47 D20 C	120	01/2008 - 12/2013		4388
3 V Cabrio (E93) 320 d	N47 D20 C	135	03/2010 - 10/2013		4388
3 V Cabrio (E93) 320 i	N43 B20 A	120	09/2006 - 10/2013		4388
3 V Cabrio (E93) 320 i	N43 B20 A	125	03/2007 - 10/2013		4388
3 V Cabrio (E93) 320 i	N46 B20 B	115	01/2007 - 08/2013		4388
3 V Cabrio (E93) 320i	N46NB20B	110	03/2007 - 08/2007		4388
3 V Cabrio (E93) 325 i	N52 B25 A	160	12/2006 - 02/2010		4388
3 V Cabrio (E93) 325 i	N53 B30 A	155	10/2006 - 12/2013		4388
3 V Cabrio (E93) 325 i	N53 B30 A	160	03/2007 - 12/2013		4388
3 V Cabrio (E93) 328 i	N51 B30 A	172	03/2007 - 12/2013		4388
3 V Coupe (E92) 316 i	N43 B16 AA	90	09/2007 - 06/2013		4389
3 V Coupe (E92) 318 i	N43 B20 A	105	03/2010 - 12/2013		4388
3 V Coupe (E92) 320 d	N47 D20 A, N47 D20 C	120	03/2007 - 06/2013		4388
3 V Coupe (E92) 320 d	N47 D20 A, N47 D20 C (09.08-.)	130	09/2006 - 02/2010		4388
3 V Coupe (E92) 320 d	N47 D20 C	135	03/2010 - 06/2013		4388
3 V Coupe (E92) 320 d xDrive	N47 D20 C	120	09/2008 - 06/2013		4388
3 V Coupe (E92) 320 d xDrive	N47 D20 C	130	09/2008 - 02/2010		4388

MAKE & MODEL		KW	YEAR		
BMW					
3 V Coupe (E92) 320 d xDrive	N47 D20 C	135	03/2010 - 06/2013		4388
3 V Coupe (E92) 320 i	N43 B20 A	120	01/2007 - 12/2013		4388
3 V Coupe (E92) 320 i	N43 B20 A	125	03/2007 - 12/2013		4388
3 V Coupe (E92) 320 i	N46 B20 B	115	06/2007 - 12/2013		4388
3 V Coupe (E92) 320 xd	N47 D20 A	130	09/2008 - 02/2010		4388
3 V Coupe (E92) 320 xd	N47 D20 A, N47 D20 C	120	09/2008 - 02/2010		4388
3 V Coupe (E92) 320i	N46B20B	110	11/2006 - 06/2007		4388
3 V Coupe (E92) 325 i	N52 B25 A, N52 B25 AF, N52 B25 BF	155	03/2010 - 06/2013		4388
3 V Coupe (E92) 325 i	N52 B25 A, N52 B25 AF, N52 B25 BF	160	06/2006 - 02/2010		4388
3 V Coupe (E92) 325 i	N53 B30 A	155	03/2010 - 06/2013		4388
3 V Coupe (E92) 325 i	N53 B30 A	160	09/2007 - 06/2013		4388
3 V Coupe (E92) 325 i xDrive	N52 B25 AF	155	03/2010 - 04/2013		4388
3 V Coupe (E92) 325 i xDrive	N53 B30 A	160	09/2008 - 12/2013		4388
3 V Coupe (E92) 325 xi	N52 B25 A	160	09/2006 - 02/2010		4388
3 V Coupe (E92) 325 xi	N53 B30 A	160	09/2007 - 08/2008		4388
3 V Coupe (E92) 328 i	N51 B30 A (09.06-06.13), N52 B30 A (06.06-06.13)	172	06/2006 - 06/2013		4388
3 V Coupe (E92) 328 i xDrive	N51 B30 A (09.08-06.13), N52 B30 A (09.08-06.13)	172	09/2009 - 06/2013		4388
3 V Coupe (E92) 328 xi	N51 B30 A, N52 B30 A	171	03/2006 - 02/2010		4388
3 V Coupe (E92) 328i	N51 B30 A	171	09/2006 - 12/2010		4388
3 V Coupe (E92) 328i	N52NB30A	187	08/2006 - 11/2007		4388
3 V Coupe (E92) 328i xDrive	N51B30A	171	09/2009 - 12/2013		4388
3 V Touring (E91) 316 d	N47 D20 C	85	09/2009 - 06/2012		4388
3 V Touring (E91) 316 i	N43 B16 AA	90	09/2008 - 06/2012		4389
3 V Touring (E91) 318 d	M47 D20 (204D4)	90	09/2005 - 08/2007		4388
3 V Touring (E91) 318 d	N47 D20 A (.-08.08), N47 D20 C (09.08-.)	100	07/2007 - 06/2012		4388
3 V Touring (E91) 318 d	N47 D20 A, N47 D20 C	105	09/2007 - 06/2012		4388
3 V Touring (E91) 318 i	N43 B20 A	105	05/2007 - 05/2012		4388
3 V Touring (E91) 318 i	N46 B20 B	100	09/2007 - 03/2012		4388
3 V Touring (E91) 318 i	N46 B20 B	95	01/2006 - 08/2007		4388
3 V Touring (E91) 320 d	M47 D20 (204D4)	110	12/2004 - 08/2007		4388
3 V Touring (E91) 320 d	M47 D20 (204D4) (.-08.07), N47 D20 A (09.07-02.10)	120	06/2005 - 06/2012		4388
3 V Touring (E91) 320 d	N47 D20 A, N47 D20 C	130	02/2007 - 12/2010		4388
3 V Touring (E91) 320 d	N47 D20 C	135	03/2010 - 05/2012		4388
3 V Touring (E91) 320 d xDrive	N47 D20 C	120	07/2009 - 06/2012		4388
3 V Touring (E91) 320 d xDrive	N47 D20 C	130	09/2008 - 02/2010		4388
3 V Touring (E91) 320 d xDrive	N47 D20 C	135	03/2010 - 06/2012		4388
3 V Touring (E91) 320 i	N43 B20 A	125	02/2007 - 12/2012		4388
3 V Touring (E91) 320 i	N46 B20 B, N46 B20 BD, N46 B20 C	115	09/2005 - 06/2012		4388
3 V Touring (E91) 320 i	N46 B20 B, N46 B20 C	110	09/2005 - 06/2012		4388
3 V Touring (E91) 323 i	N52 B25 A	130	04/2006 - 06/2007		4388
3 V Touring (E91) 323 i	N52 B25 A	140	09/2006 - 07/2008		4388
3 V Touring (E91) 325 i	N52 B25 A	160	12/2004 - 08/2008		4388
3 V Touring (E91) 325 i	N53 B30 A	155	09/2007 - 06/2012		4388
3 V Touring (E91) 325 i	N53 B30 A	160	09/2007 - 06/2012		4388
3 V Touring (E91) 325 i xDrive	N53 B30 A	160	09/2008 - 06/2012		4388
3 V Touring (E91) 325 xi	N52 B25 A	160	08/2005 - 08/2008		4388
3 V Touring (E91) 325 xi	N53 B30 A	160	09/2007 - 08/2008		4388
3 V Touring (E91) 328 i	N51 B30 A, N52 B30 A	171	03/2007 - 06/2012		4388
3 V Touring (E91) 328 i xDrive	N51 B30 A	171	09/2008 - 12/2010		4388
3 V Touring (E91) 328 xi	N51 B30 A	171	03/2007 - 06/2012		4388
3 VI (F30, F80) 316 d	B47 D20 A, N47 D20 C	85	03/2012 - 10/2018	4381	4383
3 VI (F30, F80) 316 i	N13 B16 A	100	07/2012 - 08/2016	4381	4383
3 VI (F30, F80) 318 d	B47 D20 A	110	07/2015 - 10/2018	4381	4383
3 VI (F30, F80) 318 d	B47 D20 A, N47 D20 C	100	03/2012 - 10/2018		4388
3 VI (F30, F80) 318 d	N47 D20 C	105	03/2012 - 06/2015	4381	4383
3 VI (F30, F80) 318 d xDrive	B47 D20 A	110	07/2015 - 02/2018	4381	4383
3 VI (F30, F80) 318 d xDrive	N47 D20 C	105	07/2013 - 06/2015	4381	4383
3 VI (F30, F80) 318 i	B38 B15 A	100	07/2015 - 10/2018	4381	4383
3 VI (F30, F80) 320 d	B47 D20 A	140	07/2015 - 10/2018	4382	4383
3 VI (F30, F80) 320 d	B47 D20 A, N47 D20 C	120	11/2011 - 10/2018	4382	4383
3 VI (F30, F80) 320 d	N47 D20 C	135	11/2011 - 03/2016	4382	4383
3 VI (F30, F80) 320 d	N47 D20 C	147	11/2011 - 03/2016	4382	4383
3 VI (F30, F80) 320 d xDrive	B47 D20 A	140	07/2015 - 10/2018	4382	4383
3 VI (F30, F80) 320 d xDrive	B47 D20 A, N47 D20 C	120	08/2012 - 10/2018	4382	4383
3 VI (F30, F80) 320 d xDrive	N47 D20 C	135	08/2012 - 06/2015	4382	4383
3 VI (F30, F80) 320 d xDrive	N47 D20 C	147	08/2012 - 06/2015	4382	4383
3 VI (F30, F80) 320 i	B48 B20 A	135	07/2015 - 10/2018	4381	4383
3 VI (F30, F80) 320 i	N13 B16 A	125	11/2012 - 06/2016	4381	4383
3 VI (F30, F80) 320 i	N20 B20 A, N20 B20 B, N20 B20 D	135	03/2012 - 10/2018	4381	4383
3 VI (F30, F80) 320 i xDrive	B48 B20 A	135	07/2015 - 10/2018	4381	
3 VI (F30, F80) 320 i xDrive	B48 B20 A	135	07/2015 - 10/2018	4382	
3 VI (F30, F80) 320 i xDrive	B48 B20 A	135	07/2015 - 10/2018		4383
3 VI (F30, F80) 320 i xDrive	B48 B20 A	135	07/2015 - 10/2018	4382	4383
3 VI (F30, F80) 320 i xDrive	N20 B20 A, N20 B20 B	135	07/2012 - 10/2018	4381	
3 VI (F30, F80) 320 i xDrive	N20 B20 A, N20 B20 B	135	07/2012 - 10/2018	4382	
3 VI (F30, F80) 320 i xDrive	N20 B20 A, N20 B20 B	135	07/2012 - 10/2018		4383

MAKE & MODEL		KW	YEAR		
BMW					
3 VI (F30, F80) 320 i xDrive	N20 B20 A, N20 B20 B	135	07/2012 - 10/2018	4382	4383
3 VI (F30, F80) 325 d	B47 D20 B	165	03/2016 - 02/2018	4382	4383
3 VI (F30, F80) 325 d	N47 D20 D	155	03/2013 - 02/2016	4382	4383
3 VI (F30, F80) 325 d	N47 D20 D	160	03/2013 - 02/2016	4382	4383
3 VI (F30, F80) 328 i	N20 B20 A, N20 B20 C (01.13-07.15), N26 B20 A (03.	180	11/2011 - 10/2018	4382	4383
3 VI (F30, F80) 328 i xDrive	N20 B20 A, N26 B20 A	180	07/2012 - 08/2016	4382	4383
3 VI (F30, F80) 330 d	N57 D30 A	190	07/2012 - 10/2018	4382	
3 VI (F30, F80) 330 d	N57 D30 A	210	07/2012 - 10/2018	4382	
3 VI (F30, F80) 330 d xDrive	N57 D30 A	190	03/2013 - 10/2018	4382	
3 VI (F30, F80) 330 d xDrive	N57 D30 A	210	03/2013 - 10/2018	4382	
3 VI (F30, F80) 330 e	B48 B20 A	135	11/2015 - 10/2018	4382	4383
3 VI (F30, F80) 330 e	B48 B20 A	185	11/2015 - 10/2018	4382	4383
3 VI (F30, F80) 330 i	B46 B20 B (07.16-.), B48 B20 B	185	07/2015 - 10/2018	4382	4383
3 VI (F30, F80) 330 i xDrive	B46 B20 B (07.16-.), B48 B20 A, B48 B20 B	185	07/2015 - 10/2018	4382	4383
3 VI (F30, F80) ActiveHybrid	N55 B30 A	225	07/2012 - 06/2015	4382	
3 VI (F30, F80) ActiveHybrid	N55 B30 A	250	07/2012 - 06/2015	4382	
3 VI Gran Turismo (F34) 318 d	B47 D20 A	110	07/2015 -	4381	4383
3 VI Gran Turismo (F34) 318 d	B47 D20 A (07.15-.), N47 D20 C (.-06.15)	100	03/2013 - 06/2015	4381	4383
3 VI Gran Turismo (F34) 318 d	N47 D20 C	105	03/2013 - 06/2015	4381	4383
3 VI Gran Turismo (F34) 320 d	B47 D20 A	140	07/2015 -	4382	4383
3 VI Gran Turismo (F34) 320 d	B47 D20 A (07.15-.), N47 D20 C (.-06.15)	120	03/2013 - 06/2015	4382	4383
3 VI Gran Turismo (F34) 320 d	N47 D20 C	135	03/2013 - 06/2015	4382	4383
3 VI Gran Turismo (F34) 320 d	N47 D20 C	147	03/2013 - 06/2015	4382	4383
3 VI Gran Turismo (F34) 320 d xDrive	B47 D20 A	140	07/2015 -	4382	4383
3 VI Gran Turismo (F34) 320 d xDrive	B47 D20 A (07.15-.), N47 D20 C (.-06.15)	120	07/2013 - 06/2015	4382	4383
3 VI Gran Turismo (F34) 320 d xDrive	N47 D20 C	135	07/2013 - 06/2015	4382	4383
3 VI Gran Turismo (F34) 320 d xDrive	N47 D20 C	147	07/2013 - 06/2015	4382	4383
3 VI Gran Turismo (F34) 320 i	B48 B20 A	135	07/2016 -	4381	4383
3 VI Gran Turismo (F34) 320 i	N20 B20 A, N20 B20 B	120	03/2013 - 06/2016	4381	4383
3 VI Gran Turismo (F34) 320 i	N20 B20 A, N20 B20 B	135	03/2013 - 06/2016	4381	4383
3 VI Gran Turismo (F34) 320 i xDrive	B48 B20 A	135	07/2016 -	4381	4383
3 VI Gran Turismo (F34) 320 i xDrive	N20 B20 A, N20 B20 B	120	07/2013 - 06/2016	4381	4383
3 VI Gran Turismo (F34) 320 i xDrive	N20 B20 A, N20 B20 B	135	11/2012 - 06/2016	4381	4383
3 VI Gran Turismo (F34) 325 d	B47 D20 B	165	07/2016 - 02/2018	4382	4383
3 VI Gran Turismo (F34) 325 d	N47 D20 D	155	07/2013 - 06/2016	4382	4383
3 VI Gran Turismo (F34) 325 d	N47 D20 D	160	07/2013 - 06/2016	4382	4383
3 VI Gran Turismo (F34) 328 i	N20 B20 A, N26 B20 A (07.14-06.15)	180	03/2013 - 06/2016	4382	4383
3 VI Gran Turismo (F34) 328 i xDrive	N20 B20 A, N26 B20 A (07.14-.)	180	07/2013 - 06/2016	4382	4383
3 VI Gran Turismo (F34) 330 d	N57 D30 A	190	03/2014 -	4382	
3 VI Gran Turismo (F34) 330 d	N57 D30 A	210	03/2014 -	4382	
3 VI Gran Turismo (F34) 330 d xDrive	N57 D30 A	190	03/2014 -	4382	
3 VI Gran Turismo (F34) 330 d xDrive	N57 D30 A	210	03/2014 -	4382	
3 VI Gran Turismo (F34) 330 i	B48 B20 B	185	07/2016 -	4382	4383
3 VI Gran Turismo (F34) 330 i xDrive	B46 B20 B (.-06.19), B48 B20 B	185	07/2016 -	4382	4383
3 VI Touring (F31) 316 d	B47 D20 A, N47 D20 C	85	11/2012 - 06/2019	4381	4383
3 VI Touring (F31) 316 i	N13 B16 A	100	03/2013 - 06/2015	4381	4383
3 VI Touring (F31) 318 d	B47 D20 A	110	07/2015 - 06/2019	4381	4383
3 VI Touring (F31) 318 d	B47 D20 A, N47 D20 C	100	11/2012 - 06/2019	4381	4383
3 VI Touring (F31) 318 d	N47 D20 C	105	11/2012 - 06/2015	4381	4383
3 VI Touring (F31) 318 d xDrive	B47 D20 A	110	07/2015 - 02/2018	4381	4383
3 VI Touring (F31) 318 d xDrive	N47 D20 C	105	07/2013 - 06/2015	4381	4383
3 VI Touring (F31) 318 i	B38 B15 A	100	07/2015 - 06/2019	4381	4383
3 VI Touring (F31) 320 d	B47 D20 A	140	07/2015 - 06/2019	4382	4383
3 VI Touring (F31) 320 d	B47 D20 A, N47 D20 C	120	07/2012 - 06/2019	4382	4383
3 VI Touring (F31) 320 d	N47 D20 C	135	07/2012 - 02/2016	4382	4383
3 VI Touring (F31) 320 d	N47 D20 C	147	07/2012 - 02/2016	4382	4383
3 VI Touring (F31) 320 d xDrive	B47 D20 A	140	07/2015 - 06/2019	4382	4383
3 VI Touring (F31) 320 d xDrive	B47 D20 A (07.15-.), N47 D20 C (.-06.15)	120	03/2013 - 06/2019	4382	4383
3 VI Touring (F31) 320 d xDrive	N47 D20 C	135	03/2013 - 06/2015	4382	4383
3 VI Touring (F31) 320 d xDrive	N47 D20 C	147	03/2013 - 06/2015	4382	4383
3 VI Touring (F31) 320 i	B48 B20 A	135	07/2015 - 06/2019	4381	4383
3 VI Touring (F31) 320 i	N20 B20 B	135	11/2012 - 06/2015	4381	4383
3 VI Touring (F31) 320 i xDrive	B48 B20 A	135	07/2015 - 06/2019	4381	4383
3 VI Touring (F31) 320 i xDrive	N20 B20 B	135	03/2013 - 06/2015	4381	4383
3 VI Touring (F31) 325 d	B47 D20 B	165	03/2016 - 02/2018	4382	4383
3 VI Touring (F31) 325 d	N47 D20 D	155	03/2013 - 02/2016	4382	4383
3 VI Touring (F31) 325 d	N47 D20 D	160	03/2013 - 02/2016	4382	4383
3 VI Touring (F31) 328 i	N20 B20 A	180	07/2012 - 06/2015	4382	4383
3 VI Touring (F31) 328 i xDrive	N20 B20 A	180	03/2013 - 06/2016	4382	4383
3 VI Touring (F31) 330 d	N57 D30 A	190	07/2012 - 06/2019	4382	
3 VI Touring (F31) 330 d	N57 D30 A	210	07/2012 - 06/2019	4382	
3 VI Touring (F31) 330 d xDrive	N57 D30 A	190	03/2013 - 06/2019	4382	
3 VI Touring (F31) 330 d xDrive	N57 D30 A	210	03/2013 - 06/2019	4382	
3 VI Touring (F31) 330 i	B48 B20 A	185	07/2015 - 06/2019	4382	4383
3 VI Touring (F31) 330 i xDrive	B48 B20 A, B48 B20 B	185	07/2015 - 06/2019	4382	4383
3 VII (G20) 316 d	B47 D20 B	85	11/2020 -	4381	

MAKE & MODEL   		KW	YEAR		
BMW					
3 VII (G20) 316 d	B47 D20 B	90	03/2020 -	4381	
3 VII (G20) 316 d Mild-Hybrid	B47 D20 B, JA1	85	11/2020 -	4381	
3 VII (G20) 316 d Mild-Hybrid	B47 D20 B, JA1	90	08/2020 -	4381	
3 VII (G20) 318 d	B47 D20 B	100	03/2019 - 03/2020	4381	
3 VII (G20) 318 d	B47 D20 B	110	03/2019 - 03/2020	4381	
3 VII (G20) 318 d Mild-Hybrid	B47 D20 B, JA1	100	04/2020 -	4381	
3 VII (G20) 318 d Mild-Hybrid	B47 D20 B, JA1	110	04/2020 -	4381	
3 VII (G20) 318 i	B48 B20 A	115	03/2020 -	4381	
3 VII Touring (G21) 316 d	B47 D20 B	85	11/2020 -	4381	
3 VII Touring (G21) 316 d	B47 D20 B	90	11/2020 -	4381	
3 VII Touring (G21) 316 d Mild-Hybrid	B47 D20 B, JA1	85	11/2020 -	4381	
3 VII Touring (G21) 316 d Mild-Hybrid	B47 D20 B, JA1	90	07/2020 -	4381	
3 VII Touring (G21) 318 d	B47 D20 B	100	11/2019 - 07/2020	4381	
3 VII Touring (G21) 318 d	B47 D20 B	110	11/2019 - 07/2020	4381	
3 VII Touring (G21) 318 d Mild-Hybrid	B47 D20 B, JA1	100	08/2020 -	4381	
3 VII Touring (G21) 318 d Mild-Hybrid	B47 D20 B, JA1	110	08/2020 -	4381	
3 VII Touring (G21) 318 i	B48 B20 A	115	03/2020 -	4381	
3 VII Touring (G21) 320 E PLUG-IN-HYBRID XDRIVE	B48 B20 A, GC1	120	03/2021 -	4381	
3 VII Touring (G21) 320 e Plug-in-Hybrid	B48 B20 A, GC1	120	07/2020 -	4381	
4 I Cabrio (F33, F83) 420 d	B47 D20 A	140	07/2015 -	4382	4383
4 I Cabrio (F33, F83) 420 d	B47 D20 A (07.15-.), N47 D20 C (.-06.15)	120	11/2013 -	4382	4383
4 I Cabrio (F33, F83) 420 d	N47 D20 C	135	10/2013 - 06/2015	4381	4383
4 I Cabrio (F33, F83) 420 d	N47 D20 C	147	10/2013 - 06/2015	4382	4383
4 I Cabrio (F33, F83) 420 i	B48 B20 A	120	03/2016 -	4381	4383
4 I Cabrio (F33, F83) 420 i	B48 B20 A	135	03/2016 -	4381	4383
4 I Cabrio (F33, F83) 420 i	N20 B20 B	120	07/2014 - 02/2016	4381	4383
4 I Cabrio (F33, F83) 420 i	N20 B20 B	135	07/2014 - 02/2016	4381	4383
4 I Cabrio (F33, F83) 425 d	N47 D20 D	155	07/2014 - 02/2016	4382	4383
4 I Cabrio (F33, F83) 425 d	N47 D20 D	160	07/2014 - 02/2016	4382	4383
4 I Cabrio (F33, F83) 428 i	N20 B20 A (.-02.16), N26 B20 A (.-02.17)	180	11/2013 - 02/2017	4382	4383
4 I Cabrio (F33, F83) 428 i xDrive	N20 B20 A (.-02.16), N26 B20 A	180	03/2014 - 02/2016	4382	4383
4 I Cabrio (F33, F83) 430 d	N57 D30 A	190	07/2014 -	4382	
4 I Cabrio (F33, F83) 430 d	N57 D30 A	210	07/2014 -	4382	
4 I Cabrio (F33, F83) 430 i	B46 B20 B (07.16-.), B48 B20 B (03.16-.)	185	03/2016 -	4382	4383
4 I Cabrio (F33, F83) 430 i xDrive	B46 B20 B (07.16-.), B48 B20 B (03.16-.)	185	03/2016 -	4382	4383
4 I Coupe (F32, F82) 418 d	B47 D20 A	100	03/2015 - 10/2017	4381	4383
4 I Coupe (F32, F82) 418 d	B47 D20 A	110	03/2015 - 10/2017	4381	4383
4 I Coupe (F32, F82) 418 i	B38 B15 A	100	03/2016 -	4381	4383
4 I Coupe (F32, F82) 420 d	B47 D20 A	140	03/2015 -	4382	4383
4 I Coupe (F32, F82) 420 d	B47 D20 A (03.15-.), N47 D20 C (.-02.15)	120	07/2013 - 02/2015	4382	4383
4 I Coupe (F32, F82) 420 d	N47 D20 C	135	07/2013 - 02/2015	4382	4383
4 I Coupe (F32, F82) 420 d	N47 D20 C	147	07/2013 - 03/2015	4382	4383
4 I Coupe (F32, F82) 420 d xDrive	B47 D20 A	140	03/2015 -	4382	4383
4 I Coupe (F32, F82) 420 d xDrive	B47 D20 A (03.15-.), N47 D20 C (.-02.15)	120	11/2013 -	4382	4383
4 I Coupe (F32, F82) 420 d xDrive	N47 D20 C	135	11/2013 - 02/2015	4382	4383
4 I Coupe (F32, F82) 420 d xDrive	N47 D20 C	147	11/2013 - 03/2015	4382	4383
4 I Coupe (F32, F82) 420 i	B48 B20 A	120	03/2016 -	4381	4383
4 I Coupe (F32, F82) 420 i	B48 B20 A	135	03/2016 -	4381	4383
4 I Coupe (F32, F82) 420 i	N20 B20 A, N20 B20 B	120	11/2013 - 02/2017	4381	4383
4 I Coupe (F32, F82) 420 i	N20 B20 A, N20 B20 B	135	11/2013 - 02/2017	4381	4383
4 I Coupe (F32, F82) 420 i xDrive	B48 B20 A	120	03/2016 -	4381	
4 I Coupe (F32, F82) 420 i xDrive	B48 B20 A	120	03/2016 -	4382	
4 I Coupe (F32, F82) 420 i xDrive	B48 B20 A	120	03/2016 -		4383
4 I Coupe (F32, F82) 420 i xDrive	B48 B20 A	120	03/2016 -	4382	4383
4 I Coupe (F32, F82) 420 i xDrive	B48 B20 A	135	03/2016 -	4381	
4 I Coupe (F32, F82) 420 i xDrive	B48 B20 A	135	03/2016 -	4382	
4 I Coupe (F32, F82) 420 i xDrive	B48 B20 A	135	03/2016 -		4383
4 I Coupe (F32, F82) 420 i xDrive	B48 B20 A	135	03/2016 -	4382	4383
4 I Coupe (F32, F82) 420 i xDrive	N20 B20 A, N20 B20 B	120	11/2013 - 02/2016	4381	
4 I Coupe (F32, F82) 420 i xDrive	N20 B20 A, N20 B20 B	120	11/2013 - 02/2016	4382	
4 I Coupe (F32, F82) 420 i xDrive	N20 B20 A, N20 B20 B	120	11/2013 - 02/2016		4383
4 I Coupe (F32, F82) 420 i xDrive	N20 B20 A, N20 B20 B	120	11/2013 - 02/2016	4382	4383
4 I Coupe (F32, F82) 420 i xDrive	N20 B20 A, N20 B20 B	135	11/2013 - 02/2016	4381	
4 I Coupe (F32, F82) 420 i xDrive	N20 B20 A, N20 B20 B	135	11/2013 - 02/2016	4382	
4 I Coupe (F32, F82) 420 i xDrive	N20 B20 A, N20 B20 B	135	11/2013 - 02/2016		4383
4 I Coupe (F32, F82) 420 i xDrive	N20 B20 A, N20 B20 B	135	11/2013 - 02/2016	4382	4383
4 I Coupe (F32, F82) 425 d	N47 D20 D	155	03/2014 - 02/2016	4382	4383
4 I Coupe (F32, F82) 425 d	N47 D20 D	160	03/2014 - 02/2016	4382	4383
4 I Coupe (F32, F82) 428 i	N20 B20 A (.-06.16), N26 B20 A	180	07/2013 - 02/2017	4382	4383
4 I Coupe (F32, F82) 428 i xDrive	N20 B20 A (.-02.16), N26 B20 A	180	07/2013 - 02/2016	4382	4383
4 I Coupe (F32, F82) 430 d	N57 D30 A	190	11/2013 -	4382	
4 I Coupe (F32, F82) 430 d	N57 D30 A	210	11/2013 -	4382	
4 I Coupe (F32, F82) 430 d xDrive	N57 D30 A	190	03/2014 -	4382	
4 I Coupe (F32, F82) 430 d xDrive	N57 D30 A	210	03/2014 -	4382	
4 I Coupe (F32, F82) 430 i	B46 B20 B (07.16-.), B48 B20 B	185	03/2016 -	4382	4383
4 I Coupe (F32, F82) 430 i xDrive	B46 B20 B (07.16-.), B48 B20 B	185	03/2016 -	4382	4383

MAKE & MODEL		KW	YEAR		
BMW					
4 I Gran Coupe (F36) 418 d	B47 D20 A	110	07/2015 -	4381	4383
4 I Gran Coupe (F36) 418 d	B47 D20 A (07.15-.), N47 D20 C (.-06.15)	100	03/2014 - 06/2015	4381	4383
4 I Gran Coupe (F36) 418 d	N47 D20 C	105	03/2014 - 06/2015	4381	4383
4 I Gran Coupe (F36) 418 i	B38 B15 A	100	07/2015 -	4381	4383
4 I Gran Coupe (F36) 420 d	B47 D20 A	140	03/2015 -	4382	4383
4 I Gran Coupe (F36) 420 d	B47 D20 A (03.15-.), N47 D20 C (.-02.15)	120	03/2014 - 02/2015	4382	4383
4 I Gran Coupe (F36) 420 d	N47 D20 C	135	03/2014 - 02/2015	4382	4383
4 I Gran Coupe (F36) 420 d	N47 D20 C	147	03/2014 - 02/2015	4382	4383
4 I Gran Coupe (F36) 420 d xDrive	B47 D20 A	140	03/2015 -	4382	4383
4 I Gran Coupe (F36) 420 d xDrive	B47 D20 A (03.15-.), N47 D20 C (.-02.15)	120	03/2014 - 02/2015	4382	4383
4 I Gran Coupe (F36) 420 d xDrive	N47 D20 C	135	03/2014 - 02/2015	4382	4383
4 I Gran Coupe (F36) 420 d xDrive	N47 D20 C	147	03/2014 - 02/2015	4382	4383
4 I Gran Coupe (F36) 420 i	B48 B20 A	135	03/2016 -	4381	4383
4 I Gran Coupe (F36) 420 i	N20 B20 B	120	03/2014 - 02/2017	4381	4383
4 I Gran Coupe (F36) 420 i	N20 B20 B	135	03/2014 - 02/2017	4381	4383
4 I Gran Coupe (F36) 420 i xDrive	B48 B20 A	135	03/2016 -	4381	
4 I Gran Coupe (F36) 420 i xDrive	B48 B20 A	135	03/2016 -	4382	
4 I Gran Coupe (F36) 420 i xDrive	B48 B20 A	135	03/2016 -		4383
4 I Gran Coupe (F36) 420 i xDrive	B48 B20 A	135	03/2016 -	4382	4383
4 I Gran Coupe (F36) 420 i xDrive	N20 B20 B	120	07/2014 - 02/2016	4381	
4 I Gran Coupe (F36) 420 i xDrive	N20 B20 B	120	07/2014 - 02/2016	4382	
4 I Gran Coupe (F36) 420 i xDrive	N20 B20 B	120	07/2014 - 02/2016		4383
4 I Gran Coupe (F36) 420 i xDrive	N20 B20 B	120	07/2014 - 02/2016	4382	4383
4 I Gran Coupe (F36) 420 i xDrive	N20 B20 B	135	07/2014 - 02/2016	4381	
4 I Gran Coupe (F36) 420 i xDrive	N20 B20 B	135	07/2014 - 02/2016	4382	
4 I Gran Coupe (F36) 425 d	B47 D20 B	155	03/2016 - 02/2018	4382	
4 I Gran Coupe (F36) 425 d	B47 D20 B	165	03/2016 - 02/2018	4382	
4 I Gran Coupe (F36) 428 i	N20 B20 A, N26 B20 A	180	03/2014 - 06/2016	4382	
4 I Gran Coupe (F36) 428 i xDrive	N20 B20 A, N26 B20 A	180	03/2014 - 02/2016	4382	
4 I Gran Coupe (F36) 430 d	N57 D30 A	190	07/2014 -	4382	
4 I Gran Coupe (F36) 430 d	N57 D30 A	210	07/2014 -	4382	
4 I Gran Coupe (F36) 430 d xDrive	N57 D30 A	190	07/2014 -	4382	
4 I Gran Coupe (F36) 430 d xDrive	N57 D30 A	210	07/2014 -	4382	
4 I Gran Coupe (F36) 430 i	B46 B20 B (07.16-.), B48 B20 B	185	03/2016 -	4382	
4 I Gran Coupe (F36) 430 i xDrive	B46 B20 B (07.16-.), B48 B20 B	185	03/2016 -	4382	
5 Serie V (E60)	530 d (M57 D30 (306D3)	155	02/02 – 12/09		4179
5 Serie V (E60)	530 d (M57 D30 (306D3)	173	01/07 – 12/10		4179
5 Serie V (E60)	530 d (M57 D30 (306D3)	173	09/06 – 12/09		4179
5 Serie V (E60)	530 xd (M57 306 D3)	170	07/05 – 12/10		4179
5 Serie V (E60)	530i (N52 B30 A)	200	01/07 – 12/10		4179
5 Serie V (E60)	530i (N52 B30 A)	200	09/06 – 12/09		4179
5 Serie V (E60)	530i (N53 B30 A)	200	01/07 – 12/10		4179
5 Serie V (E60)	530i (N53 B30 A)	200	09/06 – 12/09		4179
5 Serie V (E60)	530i (N52 B30)	190	09/04 – 02/07		4179
5 Serie V (E60)	530i (N52 B30 A)	190	09/04 – 02/07		4179
5 Serie V (E60)	535 d (M57 D30 (306D4)	200	09/04 – 12/10		4179
5 Serie V (E60)	535 d (M57 D30 (306D5)	210	01/07 – 12/10		4179
5 Serie V (E60)	540 i (N54 B30 A)	225	08/05 – 03/10		4179
5 Serie V (E60)	540 i (N62 B40 A)	225	07/05 – 03/10		4179
5 Serie V (E60)	545 i (N62 B44 A)	245	06/04 – 12/10		4179
5 Serie V (E60)	550i (N62 B48 A)	270	07/05 – 12/10		4179
5 Serie V (E60)	550i (N62 B48 B)	270	07/05 – 12/10		4179
5 Serie V (E60)	M (S85 B50 A)	373	09/04 – 03/10		4179
5 Serie V (E60)	M5 (S85 B50 A)	373	02/07 – 12/10		4179
5 Serie V (E61)	523 i (N52 B25 A)	140	01/07 – 03/10		4179
5 Serie V (E61)	523 i (N53 B25 A)	140	01/07 – 03/10		4179
5 Serie V (E61)	525 xd (M57 306 D3)	145	01/07 – 12/10		4179
5 Serie V (E61)	525 xd (M57 306 D3)	145	11/06 – 08/07		4179
5 Serie V (E61)	525d (M57 306 D3)	145	01/07 – 03/10		4179
5 Serie V (E61)	525d (M57 D30 (306D3)	145	01/07 – 12/10		4179
5 Serie V (E61)	525i (N53 B30 A)	160	01/07 – 03/10		4179
5 Serie V (E61)	525i (N53 B30 A)	160	01/07 – 12/10		4179
5 Serie V (E61)	525i (M54 256 S5)	137	09/07 – 12/09		4179
5 Serie V (E61)	525i (N53 B30)	160	01/07 – 03/10		4179
5 Serie V (E61)	525i (N53 B30)	160	01/07 – 12/10		4179
5 Serie V (E61)	530 d (M57 306 D3)	170	02/05 – 02/07		4179
5 Serie V (E61)	530 d (M57 306 D3)	170	07/05 – 12/10		4179
5 Serie V (E61)	530 d (M57 D30 (306D2)	155	02/02 – 12/09		4179
5 Serie V (E61)	530 d (M57 D30 (306D2)	160	02/02 – 09/05		4179
5 Serie V (E61)	530 d (M57 D30 (306D2)	160	06/04 – 12/10		4179
5 (E12)	525	107	08/73 – 10/76	3331/1	3326/1
5 (E12)	525	107	08/73 – 10/76	3332/1	
5 (E12)	528	121	01/75 – 08/77		3326/1
5 (E12)	528	125	01/75 – 08/77		3326/1
5 (E12)	520 i	92	10/75 – 05/77	3331/1	
5 (E12)	520 i	92	10/75 – 05/77	3332/1	

MAKE & MODEL		KW	YEAR		
BMW					
5 (E12)	520 i	96	08/72 – 10/75	3331/1	
5 (E12)	528 i	130	04/77 – 05/81	3332/1	3326/1
5 (E12)	528 i	135	04/77 – 05/81	3332/1	3326/1
5 (E12)	M535 i	160	06/80 – 08/81	3332/1	3326/1
5 (E28)	518	66	06/81 – 08/84	3573	
5 (E28)	518 i	75	05/81 – 12/87	3573	
5 (E28)	518 i	77	05/81 – 12/87	3573	
5 (E28)	520 i	92	06/81 – 12/87	3573	3572
5 (E28)	520 i	95	08/85 – 12/87	3573	3572
5 (E28)	520 i	110	12/86 – 12/87	3573	3572
5 (E28)	524 d	63	03/86 – 12/87	3573	3572
5 (E28)	524 td	85	09/83 – 12/87	3573	3572
5 (E28)	525 e	90	09/81 – 12/87	3573	3572
5 (E28)	525 e	92	05/83 – 12/87	3573	3572
5 (E28)	525 e	95	12/84 – 12/87	3573	3572
5 (E28)	525 i	110	06/81 – 12/87	3573	3572
5 (E28)	528 i	135	06/81 – 12/87	3573	3572
5 (E28)	535 i	210	01/85 – 12/87		3572
5 (E28)	535 i, M 535 i	136	01/85 – 12/87	3573	3572
5 (E28)	535 i, M 535 i	141	01/85 – 12/87	3573	3572
5 (E28)	535 i, M 535 i	160	01/85 – 12/87	3573	3572
5 (E28)	M5	211	08/85 – 12/87	3332/1	3572
5 (E34)	518 i	83	08/89 – 09/95	3564	3578
5 (E34)	518 i	85	08/89 – 09/95	3564	3578
5 (E34)	520 i	95	01/88 – 08/91	3564	3578
5 (E34)	520 i 24V	110	09/89 – 09/95	3564	3578
5 (E34)	524 td	85	03/88 – 09/95	3564	3578
5 (E34)	525 i	125	01/88 – 08/91	3564	3578
5 (E34)	525 i 24V	141	09/89 – 09/95	3564	3578
5 (E34)	525 iX 24V	141	10/91 – 09/95	3564	3578
5 (E34)	525 td	85	04/93 – 09/95	3564	3578
5 (E34)	525 tds	105	09/91 – 09/95	3564	3578
5 (E34)	530 i	138	01/88 – 08/91	3564	3578
5 (E34)	530 i V8	160	09/92 - 09/95	3564	3578
5 (E34)	535 i	155	01/88 – 09/95	3564	3578
5 (E34)	540 i V8	210	09/92 – 09/95	3564	3578
5 (E34)	M5	210	12/87 – 12/88	3564/1	3578
5 (E34)	M5	232	10/88 – 05/92	3564/1	3578
5 (E34)	M5	232	10/88 – 05/92		3879
5 (E34)	M5	250	03/92 – 09/95	3564/1	3578
5 (E34)	M5	250	03/92 – 09/95		3879
5 (E34)	M5 CAT	232	10/88 – 05/92	3564/1	3578
5 (E34)	M5 CAT	232	10/88 – 05/92		3879
5 (E34)	M5 Cat	232	10/88 – 05/92		3656
5 (E39)	520 d	100	02/00 – 06/03	3881	3656
5 (E39)	520 i	110	01/96 – 09/00		3656
5 (E39)	520 i	125	09/00 – 06/03	3881	3656
5 (E39)	523 i	125	11/95 – 09/00		3656
5 (E39)	525 d	120	02/00 – 06/03	3881	3656
5 (E39)	525 i	141	09/00 – 06/03	3881	3656
5 (E39)	525 td	85	01/97 – 06/03		3656
5 (E39)	525 tds	105	01/96 – 06/03		3656
5 (E39)	528 i	142	11/95 – 09/00		3656
5 (E39)	530 d	135	08/98 – 09/00		3656
5 (E39)	530 d	142	09/00 – 06/03	3881	3656
5 (E39)	530 i	170	09/00 – 06/03	3881	3656
5 (E39)	535 i	173	04/96 – 03/99	3881	3656
5 (E39)	535 i	180	04/99 – 06/03	3881	3656
5 (E39)	540 i	210	04/96 – 06/03	3881	3656
5 (E39)	M5	294	10/98 – 06/03	3881	3879
5 (E60)	520 d	110	09/05 – 03/10	4180	4181
5 (E60)	520 d	120	07/05 – 03/10	4180	4181
5 (E60)	520 d	130	09/07 – 03/10	4180	4181
5 (E60)	520 i	115	04/06 – 12/09	4180	4181
5 (E60)	520 i	120	12/06 – 03/10	4180	4181
5 (E60)	520 i	125	07/03 – 03/10	4180	4181
5 (E60)	520 i	125	09/07 – 03/10	4180	4181
5 (E60)	523 i	130	07/05 – 03/10	4180	4181
5 (E60)	523 i	140	01/07 – 03/10	4180	4181
5 (E60)	525 d	120	12/04 – 03/10	4180	4181
5 (E60)	525 d	130	06/04 – 03/10	4180	4181
5 (E60)	525 d	145	01/07 – 03/10	4180	4181
5 (E60)	525 d xDrive	145	09/08 – 03/10	4180	4181
5 (E60)	525 i	141	09/03 – 03/10	4180	4181
5 (E60)	525 i	160	07/05 – 03/10	4180	4181
5 (E60)	525 i xDrive	160	09/08 – 03/10	4180	4181

MAKE & MODEL		KW	YEAR		
BMW					
5 (E60)	525 xd	145	01/07 – 03/10	4180	4181
5 (E60)	525 xi	160	07/05 – 03/10	4180	4181
5 (E60)	530 d	155	07/03 – 03/10	4180	4181
5 (E60)	530 d	160	07/03 – 03/10	4180	4181
5 (E60)	530 d	170	07/03 – 03/10	4180	4181
5 (E60)	530 d	173	01/07 – 03/10	4180	4181
5 (E60)	530 d xDrive	173	09/08 – 03/10	4180	4181
5 (E60)	530 i	170	07/03 – 03/10	4180	4181
5 (E60)	530 i	187	03/05 – 03/10	4180	4181
5 (E60)	530 i	190	07/05 – 03/10	4180	4181
5 (E60)	530 i	200	01/07 – 03/10	4180	
5 (E60)	530 i xDrive	200	09/08 – 03/10	4180	4181
5 (E60)	530 xd	170	07/05 – 03/10	4180	4181
5 (E60)	530 xd	173	01/07 – 03/10	4180	4181
5 (E60)	530 xi	190	07/05 – 03/10	4180	4181
5 (E60)	530 xi	200	01/07 – 03/10	4180	4181
5 (E60)	535 d	200	09/04 – 03/10	4208	
5 (E60)	535 d	210	01/07 – 03/10	4208	
5 (E60)	540 i	225	07/05 – 03/10	4180	
5 (E60)	545 i	245	09/03 – 03/10	4180	
5 (E60)	550 i	270	07/05 – 03/10	4180	
5 (E60)	550 i	270	07/05 – 03/10	4208	
5 (E60)	M5	373	09/04 – 03/10	4208	
5 Touring (E34)	518 g	85	11/95 - 06/96	3564	3578
5 Touring (E34)	518 i	83	03/93 – 09/94	3564	3578
5 Touring (E34)	518 i	85	09/94 – 01/97	3564	3578
5 Touring (E34)	520 i	110	11/91 – 01/97	3564	3578
5 Touring (E34)	525 i	141	11/91 – 01/97	3564	3578
5 Touring (E34)	525 ix	141	02/92 – 01/97	3564	3578
5 Touring (E34)	525 td	85	03/93 – 01/97	3564	3578
5 Touring (E34)	525 tds	105	12/91 – 01/97	3564	3578
5 Touring (E34)	530 i V8	160	09/92 – 01/97	3564	3578
5 Touring (E34)	540 i	210	09/93 – 01/97	3564	3578
5 Touring (E34)	M5	250	09/94 – 01/97		3879
5 Touring (E39)	520 d	100	02/00 – 09/03	3881	3656
5 Touring (E39)	520 i	100	04/99 – 05/04		3656
5 Touring (E39)	520 i	110	01/97 – 09/00		3656
5 Touring (E39)	520 i	125	09/00 – 05/04	3881	3656
5 Touring (E39)	523 i	125	01/97 – 09/00		3656
5 Touring (E39)	525 d	120	02/00 – 05/04	3881	3656
5 Touring (E39)	525 i	141	09/00 – 05/04	3881	3656
5 Touring (E39)	525 tds	105	03/97 – 05/04		3656
5 Touring (E39)	528 i	142	01/97 – 09/00		3656
5 Touring (E39)	530 d	135	08/98 – 09/00		3656
5 Touring (E39)	530 d	142	09/00 – 05/04	3881	3656
5 Touring (E39)	530 i	170	09/00 – 05/04	3881	3656
5 Touring (E39)	540 i	210	01/97 – 05/04	3881	3656
5 Touring (E61)	520 d	110	09/05 – 12/10	4180	4181
5 Touring (E61)	520 d	120	07/05 – 12/10	4180	4181
5 Touring (E61)	520 d	130	09/07 – 12/10	4180	4181
5 Touring (E61)	520 i	120	07/07 – 08/10	4180	4181
5 Touring (E61)	520 i	125	09/07 – 12/10	4180	4181
5 Touring (E61)	523 i	130	07/05 – 12/10	4180	4181
5 Touring (E61)	523 i	140	01/07 – 12/10	4180	4181
5 Touring (E61)	525 d	120	12/04 – 12/10	4180	4181
5 Touring (E61)	525 d	130	06/04 – 12/10	4180	4181
5 Touring (E61)	525 d	145	01/07 – 12/10	4180	4181
5 Touring (E61)	525 d xDrive	145	09/08 – 12/10	4180	4181
5 Touring (E61)	525 i	141	06/04 – 12/10	4180	4181
5 Touring (E61)	525 i	160	07/05 – 12/10	4180	4181
5 Touring (E61)	525 i xDrive	160	09/08 – 12/10	4180	4181
5 Touring (E61)	525 xd	145	01/07 – 12/10	4180	4181
5 Touring (E61)	525 xi	160	07/05 – 12/10	4180	4181
5 Touring (E61)	530 d	155	11/05 – 12/10	4180	4181
5 Touring (E61)	530 d	160	06/04 – 12/10	4180	4181
5 Touring (E61)	530 d	170	07/05 – 12/10	4180	4181
5 Touring (E61)	530 d	173	01/07 – 12/10	4180	4181
5 Touring (E61)	530 d xDrive	173	09/08 – 12/10	4180	4181
5 Touring (E61)	530 i	190	07/05 – 12/10	4180	4181
5 Touring (E61)	530 i	200	01/07 – 12/10	4180	4181
5 Touring (E61)	530 i xDrive	200	09/08 – 12/10	4180	4181
5 Touring (E61)	530 xd	170	07/05 – 12/10	4180	4181
5 Touring (E61)	530 xd	173	01/07 – 12/10	4180	4181
5 Touring (E61)	530 xi	190	07/05 – 12/10	4180	4181
5 Touring (E61)	530 xi	200	01/07 – 12/10	4180	4181
5 Touring (E61)	530 xi	200	01/07 – 12/10		4181

MAKE & MODEL   		KW	YEAR		
BMW					
5 Touring (E61)	535 d	200	09/04 – 12/10	4208	
5 Touring (E61)	535 d	210	01/07 – 12/10	4208	
5 Touring (E61)	545 i	245	06/04 – 12/10	4180	
5 Touring (E61)	550 i	270	07/05 – 12/10	4180	
5 Touring (E61)	550 i	270	07/05 – 12/10	4208	
5 Touring (E61)	M5	373	02/07 – 12/10	4208	
5 V (E60) 520 d	M47 D20 (204D4)	110	09/2005 - 02/2007	4346	
5 V (E60) 520 d	M47 D20 (204D4), N47 D20 C	120	09/2005 - 12/2009	4346	
5 V (E60) 520 d	N47 D20 A, N47 D20 C (09.08-.)	130	09/2007 - 12/2009	4346	
5 V (E60) 520 i	M54 B22 (226S1)	125	07/2003 - 03/2010	4346	
5 V (E60) 520 i	N43 B20 A	120	12/2006 - 03/2010	4346	
5 V (E60) 520 i	N43 B20 A	125	09/2007 - 12/2009	4346	
5 V (E60) 520 i	N46 B20 B	115	09/2007 - 02/2010	4346	
5 V (E60) 523 i	N52 B25 A, N52 B25 B, N52 B25 BE	130	10/2004 - 02/2007	4346	
5 V (E60) 523 i	N52 B25 A, N52 B25 BE	140	03/2007 - 12/2009	4346	
5 V (E60) 523 i	N53 B25 A	140	03/2007 - 12/2009	4346	
5 V (E60) 525 d	M57 D25 (256D2)	120	12/2004 - 03/2010	4346	
5 V (E60) 525 d	M57 D25 (256D2)	130	06/2004 - 03/2010	4346	
5 V Touring (E61) 520 d	M47 D20 (204D4)	110	09/2005 - 02/2007	4346	
5 V Touring (E61) 520 d	M47 D20 (204D4), N47 D20 C	120	04/2005 - 05/2010	4346	
5 V Touring (E61) 520 d	N47 D20 A, N47 D20 C	130	09/2007 - 05/2010	4346	
5 V Touring (E61) 520 i	N43 B20 A	120	07/2007 - 08/2010	4346	
5 V Touring (E61) 520 i	N43 B20 A	125	09/2007 - 12/2010	4346	
5 V Touring (E61) 523 i	N52 B25 A	140	03/2007 - 01/2010	4346	
5 V Touring (E61) 523 i	N52 B25 A, N52 B25 B, N52 B25 BE	130	10/2004 - 02/2007	4346	
5 V Touring (E61) 523 i	N53 B25 A	140	01/2007 - 12/2010	4346	
5 V Touring (E61) 525 d	M57 D25 (256D2)	120	03/2004 - 03/2007	4346	
5 V Touring (E61) 525 d	M57 D25 (256D2)	130	03/2004 - 03/2007	4346	
5 VI (F10) 3.0 Active Hybrid 5	-	250	03/2012 - 12/2016		4379
5 VI (F10) 518 d	B47 D20 A	110	07/2014 - 10/2016		4325
5 VI (F10) 518 d	B47 D20 A	110	07/2014 - 10/2016		4325/1
5 VI (F10) 518 d	N47 D20 C	105	07/2013 - 06/2014		4325
5 VI (F10) 518 d	N47 D20 C	105	07/2013 - 06/2014		4325/1
5 VI (F10) 518 d	B47 D20 A	110	07/2014 - 10/2016	4380	
5 VI (F10) 518 d	N47 D20 C	105	07/2013 - 06/2014	4380	
5 VI (F10) 520 d	B47 D20 A	140	07/2014 - 10/2016		4325
5 VI (F10) 520 d	B47 D20 A	140	07/2014 - 10/2016		4325/1
5 VI (F10) 520 d	N47 D20 C	135	06/2010 - 06/2014		4325
5 VI (F10) 520 d	N47 D20 C	135	06/2010 - 06/2014		4325/1
5 VI (F10) 520 d	B47 D20 A	140	07/2014 - 10/2016	4380	
5 VI (F10) 520 d	N47 D20 C	135	06/2010 - 06/2014	4380	
5 VI (F10) 520 d xDrive	B47 D20 A	140	07/2014 - 10/2016		4325
5 VI (F10) 520 d xDrive	B47 D20 A	140	07/2014 - 10/2016		4325/1
5 VI (F10) 520 d xDrive	N47 D20 C	135	07/2013 - 06/2014		4325
5 VI (F10) 520 d xDrive	N47 D20 C	135	07/2013 - 06/2014		4325/1
5 VI (F10) 520 d xDrive	B47 D20 A	140	07/2014 - 10/2016	4380	
5 VI (F10) 520 d xDrive	N47 D20 C	135	07/2013 - 06/2014	4380	
5 VI (F10) 520 i	N20 B20 A, N20 B20 B	120	09/2011 - 10/2016		4325
5 VI (F10) 520 i	N20 B20 A, N20 B20 B	120	09/2011 - 10/2016		4325/1
5 VI (F10) 520 i	N20 B20 A, N20 B20 B	135	09/2011 - 10/2016		4325
5 VI (F10) 520 i	N20 B20 A, N20 B20 B	135	09/2011 - 10/2016		4325/1
5 VI (F10) 520 i	N20 B20 A, N20 B20 B	120	09/2011 - 10/2016	4380	
5 VI (F10) 520 i	N20 B20 A, N20 B20 B	135	09/2011 - 10/2016	4380	
5 VI (F10) 523 i	N52 B25 A, N52 B25 AF, N52 B25 B, N52 B25 BF	150	01/2010 - 08/2011		4325
5 VI (F10) 523 i	N52 B25 A, N52 B25 AF, N52 B25 B, N52 B25 BF	150	01/2010 - 08/2011		4325/1
5 VI (F10) 523 i	N53 B30 A	150	06/2009 - 08/2011		4325
5 VI (F10) 523 i	N53 B30 A	150	06/2009 - 08/2011		4325/1
5 VI (F10) 523 i	N52 B25 A, N52 B25 AF, N52 B25 B, N52 B25 BF	150	01/2010 - 08/2011	4380	
5 VI (F10) 523 i	N53 B30 A	150	06/2009 - 08/2011	4380	
5 VI (F10) 525 d	N47 D20 D	155	09/2011 - 10/2016		4325
5 VI (F10) 525 d	N47 D20 D	155	09/2011 - 10/2016		4325/1
5 VI (F10) 525 d	N47 D20 D	160	09/2011 - 10/2016		4325
5 VI (F10) 525 d	N47 D20 D	160	09/2011 - 10/2016		4325/1
5 VI (F10) 525 d	N57 D30 A	150	03/2010 - 08/2011		4325
5 VI (F10) 525 d	N57 D30 A	150	03/2010 - 08/2011		4325/1
5 VI (F10) 525 d	N47 D20 D	155	09/2011 - 10/2016	4387	
5 VI (F10) 525 d	N47 D20 D	160	09/2011 - 10/2016	4387	
5 VI (F10) 525 d	N57 D30 A	150	03/2010 - 08/2011	4387	
5 VI (F10) 525 d xDrive	N47 D20 D	155	09/2011 - 10/2016		4325
5 VI (F10) 525 d xDrive	N47 D20 D	155	09/2011 - 10/2016		4325/1
5 VI (F10) 525 d xDrive	N47 D20 D	160	09/2011 - 10/2016		4325
5 VI (F10) 525 d xDrive	N47 D20 D	160	09/2011 - 10/2016		4325/1
5 VI (F10) 525 d xDrive	N47 D20 D	155	09/2011 - 10/2016	4387	
5 VI (F10) 525 d xDrive	N47 D20 D	160	09/2011 - 10/2016	4387	
5 VI (F10) 528 i	N20 B20 A	180	09/2011 - 10/2016		4325
5 VI (F10) 528 i	N20 B20 A	180	09/2011 - 10/2016		4325/1

MAKE & MODEL		KW	YEAR		
BMW					
5 VI (F10) 528 i	N53 B30 A	190	03/2010 - 08/2011		4325
5 VI (F10) 528 i	N53 B30 A	190	03/2010 - 08/2011		4325/1
5 VI (F10) 528 i	N20 B20 A	180	09/2011 - 10/2016	4380	
5 VI (F10) 528 i	N53 B30 A	190	03/2010 - 08/2011	4380	
5 VI (F10) 528 i xDrive	N20 B20 A	180	09/2011 - 10/2016		4325
5 VI (F10) 528 i xDrive	N20 B20 A	180	09/2011 - 10/2016		4325/1
5 VI (F10) 528 i xDrive	N20 B20 A	180	09/2011 - 10/2016	4380	
5 VI (F10) 530 d	N57 D30 A	180	01/2010 - 08/2011		4325
5 VI (F10) 530 d	N57 D30 A	180	01/2010 - 08/2011		4325/1
5 VI (F10) 530 d	N57 D30 A	190	09/2011 - 10/2016		4325
5 VI (F10) 530 d	N57 D30 A	190	09/2011 - 10/2016		4325/1
5 VI (F10) 530 d	N57 D30 A	180	01/2010 - 08/2011	4387	
5 VI (F10) 530 d	N57 D30 A	190	09/2011 - 10/2016	4387	4379
5 VI (F10) 530 d xDrive	N57 D30 A	190	03/2011 - 10/2016		4325
5 VI (F10) 530 d xDrive	N57 D30 A	190	03/2011 - 10/2016		4325/1
5 VI (F10) 530 d xDrive	N57 D30 A	190	03/2011 - 10/2016	4387	4379
5 VI (F10) 530 i	N53 B30 A	200	05/2011 - 06/2013		4325
5 VI (F10) 530 i	N53 B30 A	200	05/2011 - 06/2013		4325/1
5 VI (F10) 530 i	N53 B30 A	200	05/2011 - 06/2013	4387	
5 VI (F10) 535 d	-	175	09/2010 - 12/2016		4379
5 VI (F10) 535 d	N57 D30 B	220	09/2010 - 08/2011		4379
5 VI (F10) 535 d	N57 D30 B	230	09/2011 - 10/2016		4379
5 VI (F10) 535 d xDrive	N57 D30 B	230	09/2011 - 10/2016		4379
5 VI (F10) 535 i	N55 B30 A	225	01/2010 - 10/2016		4379
5 VI (F10) 535 i	N55 B30 A	240	07/2013 - 10/2016		4379
5 VI (F10) 535 i xDrive	N55 B30 A	225	03/2011 - 10/2016		4379
5 VI (F10) 535 i xDrive	N55 B30 A	240	07/2013 - 10/2016		4379
5 VI (F10) 550 i	N63 B44 A	300	03/2010 - 06/2013		4379
5 VI (F10) 550 i	N63 B44 B	330	07/2013 - 10/2016		4379
5 VI (F10) 550 i xDrive	N63 B44 A	300	08/2010 - 06/2013		4379
5 VI (F10) 550 i xDrive	N63 B44 B	330	07/2013 - 10/2016		4379
5 VI (F10) ActiveHybrid	N55 B30 A	225	12/2011 - 10/2016		4379
5 VI (F10) ActiveHybrid	N55 B30 A	250	12/2011 - 10/2016		4379
5 VI (F10) M 550 d xDrive	N57 D30 C	280	03/2012 - 10/2016		4379
5 VI (F10) M5	S63 B44 B	412	09/2011 - 10/2016		4379
5 VI (F10) M5 Competition	S63 B44 B	423	02/2013 - 10/2016		4379
5 VI (F10) M5 Edition 30	S63 B44 B	441	07/2014 - 10/2016		4379
5 VI Touring (F11) 518 d	B47 D20 A	110	07/2014 - 02/2017		4325
5 VI Touring (F11) 518 d	B47 D20 A	110	07/2014 - 02/2017		4325/1
5 VI Touring (F11) 518 d	B47 D20 A	120	07/2014 - 02/2017		4325
5 VI Touring (F11) 518 d	B47 D20 A	120	07/2014 - 02/2017		4325/1
5 VI Touring (F11) 518 d	B47 D20 A (07.14-.), N47 D20 C (.-06.14)	100	07/2013 - 02/2017		4325
5 VI Touring (F11) 518 d	B47 D20 A (07.14-.), N47 D20 C (.-06.14)	100	07/2013 - 02/2017		4325/1
5 VI Touring (F11) 518 d	N47 D20 C	105	07/2013 - 06/2014		4325
5 VI Touring (F11) 518 d	N47 D20 C	105	07/2013 - 06/2014		4325/1
5 VI Touring (F11) 518 d	B47 D20 A	110	07/2014 - 02/2017	4380	
5 VI Touring (F11) 518 d	B47 D20 A	120	07/2014 - 02/2017	4380	
5 VI Touring (F11) 518 d	B47 D20 A (07.14-.), N47 D20 C (.-06.14)	100	07/2013 - 02/2017	4380	
5 VI Touring (F11) 518 d	N47 D20 C	105	07/2013 - 06/2014	4380	
5 VI Touring (F11) 520 d	B47 D20 A	140	07/2014 - 02/2017		4325
5 VI Touring (F11) 520 d	B47 D20 A	140	07/2014 - 02/2017		4325/1
5 VI Touring (F11) 520 d	B47 D20 A	151	07/2014 - 02/2017		4325
5 VI Touring (F11) 520 d	B47 D20 A	151	07/2014 - 02/2017		4325/1
5 VI Touring (F11) 520 d	B47 D20 A	155	07/2014 - 02/2017		4325
5 VI Touring (F11) 520 d	B47 D20 A	155	07/2014 - 02/2017		4325/1
5 VI Touring (F11) 520 d	B47 D20 A, N47 D20 C	120	06/2010 - 02/2017		4325
5 VI Touring (F11) 520 d	B47 D20 A, N47 D20 C	120	06/2010 - 02/2017		4325/1
5 VI Touring (F11) 520 d	N47 D20 C	100	06/2010 - 06/2014		4325
5 VI Touring (F11) 520 d	N47 D20 C	100	06/2010 - 06/2014		4325/1
5 VI Touring (F11) 520 d	N47 D20 C	135	06/2010 - 06/2014		4325
5 VI Touring (F11) 520 d	N47 D20 C	135	06/2010 - 06/2014		4325/1
5 VI Touring (F11) 520 d	N47 D20 C	147	06/2010 - 06/2014		4325
5 VI Touring (F11) 520 d	N47 D20 C	147	06/2010 - 06/2014		4325/1
5 VI Touring (F11) 520 d	B47 D20 A	140	07/2014 - 02/2017	4380	
5 VI Touring (F11) 520 d	B47 D20 A	151	07/2014 - 02/2017	4380	
5 VI Touring (F11) 520 d	B47 D20 A	155	07/2014 - 02/2017	4387	
5 VI Touring (F11) 520 d	B47 D20 A, N47 D20 C	120	06/2010 - 02/2017	4380	
5 VI Touring (F11) 520 d	N47 D20 C	100	06/2010 - 06/2014	4380	
5 VI Touring (F11) 520 d	N47 D20 C	135	06/2010 - 06/2014	4380	
5 VI Touring (F11) 520 d	N47 D20 C	147	06/2010 - 06/2014	4380	
5 VI Touring (F11) 520 d xDrive	B47 D20 A	120	07/2014 - 02/2017		4325
5 VI Touring (F11) 520 d xDrive	B47 D20 A	120	07/2014 - 02/2017		4325/1
5 VI Touring (F11) 520 d xDrive	B47 D20 A	140	07/2014 - 02/2017		4325
5 VI Touring (F11) 520 d xDrive	B47 D20 A	140	07/2014 - 02/2017		4325/1
5 VI Touring (F11) 520 d xDrive	B47 D20 A	151	07/2014 - 02/2017		4325
5 VI Touring (F11) 520 d xDrive	B47 D20 A	151	07/2014 - 02/2017		4325/1

MAKE & MODEL   		KW	YEAR		
BMW					
5 VI Touring (F11) 520 d xDrive	B47 D20 A	155	07/2014 - 02/2017		4325
5 VI Touring (F11) 520 d xDrive	B47 D20 A	155	07/2014 - 02/2017		4325/1
5 VI Touring (F11) 520 d xDrive	N47 D20 C	100	07/2013 - 06/2014		4325
5 VI Touring (F11) 520 d xDrive	N47 D20 C	100	07/2013 - 06/2014		4325/1
5 VI Touring (F11) 520 d xDrive	N47 D20 C	135	07/2013 - 06/2014		4325
5 VI Touring (F11) 520 d xDrive	N47 D20 C	135	07/2013 - 06/2014		4325/1
5 VI Touring (F11) 520 d xDrive	N47 D20 C	147	07/2013 - 06/2014		4325
5 VI Touring (F11) 520 d xDrive	N47 D20 C	147	07/2013 - 06/2014		4325/1
5 VI Touring (F11) 520 d xDrive	B47 D20 A	120	07/2014 - 02/2017	4380	
5 VI Touring (F11) 520 d xDrive	B47 D20 A	140	07/2014 - 02/2017	4380	
5 VI Touring (F11) 520 d xDrive	B47 D20 A	151	07/2014 - 02/2017	4380	
5 VI Touring (F11) 520 d xDrive	B47 D20 A	155	07/2014 - 02/2017	4387	
5 VI Touring (F11) 520 d xDrive	N47 D20 C	100	07/2013 - 06/2014	4380	
5 VI Touring (F11) 520 d xDrive	N47 D20 C	135	07/2013 - 06/2014	4380	
5 VI Touring (F11) 520 d xDrive	N47 D20 C	147	07/2013 - 06/2014	4380	
5 VI Touring (F11) 520 i	N20 B20 A, N20 B20 B	120	09/2011 - 02/2017		4325
5 VI Touring (F11) 520 i	N20 B20 A, N20 B20 B	120	09/2011 - 02/2017		4325/1
5 VI Touring (F11) 520 i	N20 B20 A, N20 B20 B	135	10/2010 - 02/2017		4325
5 VI Touring (F11) 520 i	N20 B20 A, N20 B20 B	135	10/2010 - 02/2017		4325/1
5 VI Touring (F11) 520 i	N20 B20 A, N20 B20 B	120	09/2011 - 02/2017	4380	
5 VI Touring (F11) 520 i	N20 B20 A, N20 B20 B	135	10/2010 - 02/2017	4380	
5 VI Touring (F11) 523 i	N52 B25 A, N52 B25 AF, N52 B25 B	150	11/2009 - 08/2011		4325
5 VI Touring (F11) 523 i	N52 B25 A, N52 B25 AF, N52 B25 B	150	11/2009 - 08/2011		4325/1
5 VI Touring (F11) 523 i	N53 B30 A	150	11/2009 - 08/2011		4325
5 VI Touring (F11) 523 i	N53 B30 A	150	11/2009 - 08/2011		4325/1
5 VI Touring (F11) 523 i	N52 B25 A, N52 B25 AF, N52 B25 B	150	11/2009 - 08/2011	4380	
5 VI Touring (F11) 523 i	N53 B30 A	150	11/2009 - 08/2011	4380	
5 VI Touring (F11) 525 d	N47 D20 D	155	09/2011 - 02/2017		4325
5 VI Touring (F11) 525 d	N47 D20 D	155	09/2011 - 02/2017		4325/1
5 VI Touring (F11) 525 d	N47 D20 D	160	09/2011 - 02/2017		4325
5 VI Touring (F11) 525 d	N47 D20 D	160	09/2011 - 02/2017		4325/1
5 VI Touring (F11) 525 d	N57 D30 A	150	09/2010 - 08/2011		4325
5 VI Touring (F11) 525 d	N57 D30 A	150	09/2010 - 08/2011		4325/1
5 VI Touring (F11) 525 d	N47 D20 D	155	09/2011 - 02/2017	4387	
5 VI Touring (F11) 525 d	N47 D20 D	160	09/2011 - 02/2017	4387	
5 VI Touring (F11) 525 d	N57 D30 A	150	09/2010 - 08/2011	4387	
5 VI Touring (F11) 525 d xDrive	N47 D20 D	155	07/2013 - 02/2017		4325
5 VI Touring (F11) 525 d xDrive	N47 D20 D	155	07/2013 - 02/2017		4325/1
5 VI Touring (F11) 525 d xDrive	N47 D20 D	160	07/2013 - 02/2017		4325
5 VI Touring (F11) 525 d xDrive	N47 D20 D	160	07/2013 - 02/2017		4325/1
5 VI Touring (F11) 525 d xDrive	N47 D20 D	155	07/2013 - 02/2017	4387	
5 VI Touring (F11) 525 d xDrive	N47 D20 D	160	07/2013 - 02/2017	4387	
5 VI Touring (F11) 528 i	N20 B20 A	180	09/2011 - 02/2017		4325
5 VI Touring (F11) 528 i	N20 B20 A	180	09/2011 - 02/2017		4325/1
5 VI Touring (F11) 528 i	N53 B30 A	190	11/2009 - 08/2011		4325
5 VI Touring (F11) 528 i	N53 B30 A	190	11/2009 - 08/2011		4325/1
5 VI Touring (F11) 528 i	N20 B20 A	180	09/2011 - 02/2017	4387	
5 VI Touring (F11) 528 i	N53 B30 A	190	11/2009 - 08/2011	4387	
5 VI Touring (F11) 528 i xDrive	N20 B20 A	180	09/2011 - 02/2017		4325
5 VI Touring (F11) 528 i xDrive	N20 B20 A	180	09/2011 - 02/2017		4325/1
5 VI Touring (F11) 528 i xDrive	N20 B20 A	180	09/2011 - 02/2017	4387	
5 VI Touring (F11) 530 d	N57 D30 A	180	06/2010 - 08/2011		4325
5 VI Touring (F11) 530 d	N57 D30 A	180	06/2010 - 08/2011		4325/1
5 VI Touring (F11) 530 d	N57 D30 A	190	09/2011 - 02/2017		4325
5 VI Touring (F11) 530 d	N57 D30 A	190	09/2011 - 02/2017		4325/1
5 VI Touring (F11) 530 d	N57 D30 A	210	09/2011 - 02/2017		4325
5 VI Touring (F11) 530 d	N57 D30 A	210	09/2011 - 02/2017		4325/1
5 VI Touring (F11) 530 d	N57 D30 A	180	06/2010 - 08/2011	4387	
5 VI Touring (F11) 530 d	N57 D30 A	190	09/2011 - 02/2017	4387	4379
5 VI Touring (F11) 530 d	N57 D30 A	210	09/2011 - 02/2017	4387	4379
5 VI Touring (F11) 530 d xDrive	N57 D30 A	190	03/2011 - 02/2017		4325
5 VI Touring (F11) 530 d xDrive	N57 D30 A	190	03/2011 - 02/2017		4325/1
5 VI Touring (F11) 530 d xDrive	N57 D30 A	210	03/2011 - 02/2017		4325
5 VI Touring (F11) 530 d xDrive	N57 D30 A	210	03/2011 - 02/2017		4325/1
5 VI Touring (F11) 530 d xDrive	N57 D30 A	190	03/2011 - 02/2017	4387	4379
5 VI Touring (F11) 530 d xDrive	N57 D30 A	210	03/2011 - 02/2017	4387	4379
5 VI Touring (F11) 530 i	N52 B30 A, N52 B30 AF	190	03/2010 - 05/2013		4325
5 VI Touring (F11) 530 i	N52 B30 A, N52 B30 AF	190	03/2010 - 05/2013		4325/1
5 VI Touring (F11) 530 i	N53 B30 A	200	07/2011 - 06/2013		4325
5 VI Touring (F11) 530 i	N53 B30 A	200	07/2011 - 06/2013		4325/1
5 VI Touring (F11) 530 i	N52 B30 A, N52 B30 AF	190	03/2010 - 05/2013	4387	
5 VI Touring (F11) 530 i	N53 B30 A	200	07/2011 - 06/2013	4387	
5 VI Touring (F11) 535 d	N57 D30 B	220	09/2010 - 08/2011		4379
5 VI Touring (F11) 535 d	N57 D30 B	230	09/2011 - 02/2017		4379
5 VI Touring (F11) 535 d	N57D30B	225	06/2010 - 08/2011		4379
5 VI Touring (F11) 535 d xDrive	N57 D30 B	230	09/2011 - 02/2017		4379

MAKE & MODEL		KW	YEAR		
BMW					
5 VI Touring (F11) 535 i	N55 B30 A	225	06/2010 - 02/2017		4379
5 VI Touring (F11) 535 i	N55 B30 A	240	07/2013 - 02/2017		4379
5 VI Touring (F11) 535 i xDrive	N55 B30 A	225	09/2011 - 02/2017		4379
5 VI Touring (F11) 535 i xDrive	N55 B30 A	240	07/2013 - 02/2017		4379
5 VI Touring (F11) 550 i	N63 B44 A	300	09/2010 - 06/2013		4379
5 VI Touring (F11) 550 i	N63 B44 B	330	07/2013 - 02/2017		4379
5 VI Touring (F11) M 550 d xDrive	N57 D30 C	280	03/2012 - 02/2017		4379
5 VII (G30, F90) 518 d	B47 D20 B	100	07/2018 -		4325
5 VII (G30, F90) 518 d	B47 D20 B	100	07/2018 -		4325/1
5 VII (G30, F90) 518 d	B47 D20 B	110	07/2018 -		4325
5 VII (G30, F90) 518 d	B47 D20 B	110	07/2018 -		4325/1
5 VII (G30, F90) 520 d	B47 D20 A	120	09/2016 -		4325
5 VII (G30, F90) 520 d	B47 D20 A	120	09/2016 -		4325/1
5 VII (G30, F90) 520 d	B47 D20 A, B47 D20 B	140	09/2016 -		4325
5 VII (G30, F90) 520 d	B47 D20 A, B47 D20 B	140	09/2016 -		4325/1
5 VII (G30, F90) 520 d Mild-Hybrid	B47 D20 B, JA1	120	11/2019 -		4325
5 VII (G30, F90) 520 d Mild-Hybrid	B47 D20 B, JA1	120	11/2019 -		4325/1
5 VII (G30, F90) 520 d Mild-Hybrid	B47 D20 B, JA1	140	11/2019 -		4325
5 VII (G30, F90) 520 d Mild-Hybrid	B47 D20 B, JA1	140	11/2019 -		4325/1
5 VII (G30, F90) 520 d Mild-Hybrid xDrive	B47 D20 B, JA1	140	11/2019 -		4325
5 VII (G30, F90) 520 d Mild-Hybrid xDrive	B47 D20 B, JA1	140	11/2019 -		4325/1
5 VII (G30, F90) 520 d xDrive	B47 D20 A	120	09/2016 -		4325
5 VII (G30, F90) 520 d xDrive	B47 D20 A	120	09/2016 -		4325/1
5 VII (G30, F90) 520 d xDrive	B47 D20 A	140	09/2016 -		4325
5 VII (G30, F90) 520 d xDrive	B47 D20 A	140	09/2016 -		4325/1
5 VII (G30, F90) 520 i	B48 B16 A	125	07/2017 -		4325
5 VII (G30, F90) 520 i	B48 B16 A	125	07/2017 -		4325/1
5 VII (G30, F90) 520 i	B48 B20 A, B48 B20 B (07.18-.)	120	07/2017 -		4325
5 VII (G30, F90) 520 i	B48 B20 A, B48 B20 B (07.18-.)	120	07/2017 -		4325/1
5 VII (G30, F90) 520 i	B48 B20 A, B48 B20 B (07.18-.)	135	07/2017 -		4325
5 VII (G30, F90) 520 i	B48 B20 A, B48 B20 B (07.18-.)	135	07/2017 -		4325/1
5 VII (G30, F90) 520 i	B48 B20 A, B48 B20 B (07.18-.)	155	07/2017 -		4325
5 VII (G30, F90) 520 i	B48 B20 A, B48 B20 B (07.18-.)	155	07/2017 -		4325/1
5 VII (G30, F90) 525 d	B47 D20 B	155	07/2017 -		4379
5 VII (G30, F90) 525 d	B47 D20 B	170	07/2017 -		4379
5 VII (G30, F90) 530 d	B57 D30 A	195	09/2016 -		4379
5 VII (G30, F90) 530 d xDrive	B57 D30 A	183	09/2016 -		4379
5 VII (G30, F90) 530 d xDrive	B57 D30 A	195	09/2016 -		4379
5 VII (G30, F90) 530 e iPerformance	B46 B20 B, B48 B20 A, GC1	135	03/2017 -		4379
5 VII (G30, F90) 530 e iPerformance	B46 B20 B, B48 B20 A, GC1	185	03/2017 -		4379
5 VII (G30, F90) 530 e iPerformance	B48 B20 A, GC1	120	07/2019 -		4379
5 VII (G30, F90) 530 e iPerformance	B48 B20 A, GC1	170	07/2019 -		4379
5 VII (G30, F90) 530 e iPerformance xDrive	B46 B20 B, B48 B20 A (07.19-.), GC1	135	03/2017 -		4379
5 VII (G30, F90) 530 e xDrive iPerformance	B46 B20 B, B48 B20 A (07.19-.), GC1	185	03/2017 -		4379
5 VII (G30, F90) 530 e xDrive iPerformance	B48 B20 A, GC1	120	07/2019 -		4379
5 VII (G30, F90) 530 e xDrive iPerformance	B48 B20 A, GC1	170	07/2019 -		4379
5 VII (G30, F90) 530 i	B46 B20 B, B48 B20 B	185	09/2016 -		4379
5 VII (G30, F90) 530 i xDrive	B46 B20 B, B48 B20 B	185	09/2016 -		4379
5 VII (G30, F90) 530 i xDrive	B48 B20 B	183	09/2016 -		4379
5 VII (G30, F90) 540 d xDrive	B57 D30 A, B57 D30 B	235	07/2017 -		4379
5 VII (G30, F90) 540 i	B58 B30 A	265	09/2016 -		4379
5 VII (G30, F90) 540 i	B58 B30 A, B58 B30 C	250	09/2016 -		4379
5 VII (G30, F90) 540 i xDrive	B58 B30 A	250	09/2016 -		4379
5 VII (G30, F90) 540 i xDrive	B58 B30 A	265	09/2016 -		4379
5 VII (G30, F90) M 550 d xDrive	B57 D30 C	294	06/2017 -		4379
5 VII (G30, F90) M 550 i xDrive	N63 B44 C	340	03/2017 - 06/2019		4379
5 VII (G30, F90) M 550 i xDrive	N63 B44 D	390	07/2019 -		4379
5 VII (G30, F90) M5 Competition M xDrive	S63 B44 B	460	07/2018 -		4379
5 VII (G30, F90) M5 CS	S63 B44 B	467	03/2021 -		4379
5 VII (G30, F90) M5 M xDrive	S63 B44 B	441	09/2017 -		4379
5 VII Touring (G31) 518 d	B47 D20 B	100	07/2018 -		4325
5 VII Touring (G31) 518 d	B47 D20 B	100	07/2018 -		4325/1
5 VII Touring (G31) 518 d	B47 D20 B	110	07/2018 -		4325
5 VII Touring (G31) 518 d	B47 D20 B	110	07/2018 -		4325/1
5 VII Touring (G31) 520 d	B47 D20 A, B47 D20 B (07.18-.)	120	03/2017 -		4325
5 VII Touring (G31) 520 d	B47 D20 A, B47 D20 B (07.18-.)	120	03/2017 -		4325/1
5 VII Touring (G31) 520 d	B47 D20 A, B47 D20 B (07.18-.)	140	03/2017 -		4325
5 VII Touring (G31) 520 d	B47 D20 A, B47 D20 B (07.18-.)	140	03/2017 -		4325/1
5 VII Touring (G31) 520 d Mild-Hybrid	B47 D20 B, JA1	140	11/2019 -		4325
5 VII Touring (G31) 520 d Mild-Hybrid	B47 D20 B, JA1	140	11/2019 -		4325/1
5 VII Touring (G31) 520 d Mild-Hybrid xDrive	B47 D20 B, JA1	140	11/2019 -		4325
5 VII Touring (G31) 520 d Mild-Hybrid xDrive	B47 D20 B, JA1	140	11/2019 -		4325/1
5 VII Touring (G31) 520 d xDrive	B47 D20 A, B47 D20 B (07.18-.)	120	07/2017 -		4325
5 VII Touring (G31) 520 d xDrive	B47 D20 A, B47 D20 B (07.18-.)	120	07/2017 -		4325/1
5 VII Touring (G31) 520 d xDrive	B47 D20 A, B47 D20 B (07.18-.)	140	07/2017 -		4325
5 VII Touring (G31) 520 d xDrive	B47 D20 A, B47 D20 B (07.18-.)	140	07/2017 -		4325/1

MAKE & MODEL   		KW	YEAR		
BMW					
5 VII Touring (G31) 520 i	B48 B20 A	120	07/2017 -		4325
5 VII Touring (G31) 520 i	B48 B20 A	120	07/2017 -		4325/1
5 VII Touring (G31) 520 i	B48 B20 A	135	07/2017 -		4325
5 VII Touring (G31) 520 i	B48 B20 A	135	07/2017 -		4325/1
5 VII Touring (G31) 520 i	B48 B20 A	155	07/2017 -		4325
5 VII Touring (G31) 520 i	B48 B20 A	155	07/2017 -		4325/1
5 VII Touring (G31) 525 d	B47 D20 B	155	07/2017 -		4379
5 VII Touring (G31) 525 d	B47 D20 B	170	07/2017 -		4379
5 VII Touring (G31) 530 d	B57 D30 A	195	03/2017 -		4379
5 VII Touring (G31) 530 d xDrive	B57 D30 A	195	03/2017 -		4379
5 VII Touring (G31) 530 i	B48 B20 B	185	03/2017 -		4379
5 VII Touring (G31) 530 i xDrive	B48 B20 B	185	07/2017 -		4379
5 VII Touring (G31) 540 d xDrive	B57 D30 B	235	07/2017 -		4379
5 VII Touring (G31) 540 i xDrive	B58 B30 A	250	03/2017 -		4379
5 VII Touring (G31) 540 i xDrive	B58 B30 A	265	03/2017 -		4379
5 VII Touring (G31) M 550 d xDrive	B57 D30 C	294	07/2017 -		4379
6 (E24)	628 CSi	135	09/79 – 08/87	3332/1	3326/1
6 (E24)	628 CSi	135	09/79 – 08/87	3573	3572
6 (E24)	630 CS	135	04/76 – 08/79	3331/1	3326/1
6 (E24)	630 CS	135	04/76 – 08/79	3332/1	
6 (E24)	630 CS	136	04/76 – 08/79	3331/1	3326/1
6 (E24)	630 CS	136	04/76 – 08/79	3332/1	
6 (E24)	633 CSi	136	12/77 – 04/89	3573	3572
6 (E24)	633 CSi	141	12/77 – 04/89	3573	3572
6 (E24)	633 CSi	145	09/78 – 08/84	3332/1	3326/1
6 (E24)	635 CSi	147	10/75 – 12/81	3331/1	3326/1
6 (E24)	635 CSi	147	10/75 – 12/81	3332/1	
6 (E24)	635 CSi	155	08/87 – 04/89	3573	3572
6 (E24)	635 CSi	160	06/78 – 08/88	3332/1	3326/1
6 (E24)	635 CSi	160	06/78 – 08/88	3573	3572
6 (E24)	635 CSi	160	11/81 – 04/89	3332/1	3326/1
6 (E24)	635 CSi	160	11/81 – 04/89	3573	3572
6 (E24)	M 635 CSi	191	03/83 – 04/89	3573	3572
6 (E24)	M 635 CSi	191	04/86 – 02/89	3573	3572
6 (E24)	M 635 CSi	210	04/84 – 12/88	3573	3572
6 (E63)	630 i	190	09/04 – 07/10	4180	4181
6 (E63)	630 i	200	07/07 – 07/10	4180	
6 (E63)	635 d	210	07/07 – 07/10	4208	
6 (E63)	645 Ci	245	01/04 – 08/05	4180	
6 (E63)	650 i	270	07/05 – 07/10	4180	
6 (E63)	650 i	270	07/05 – 07/10	4208	
6 (E63)	M	373	09/05 – 07/10	4208	
6 Convertible (E64)	630 i	190	09/04 – 07/10	4180	4181
6 Convertible (E64)	630 i	200	07/07 – 07/10	4180	
6 Convertible (E64)	635 d	210	07/07 – 07/10	4208	
6 Convertible (E64)	645 Ci	245	04/04 – 08/05	4180	
6 Convertible (E64)	650 i	270	07/05 – 07/10	4180	
6 Convertible (E64)	650 i	270	07/05 – 07/10	4208	
6 Convertible (E64)	M	373	07/06 – 07/10	4208	
6 III Cabrio (F12) 640 d	N57 D30 B	230	09/2011 - 06/2018		4379
6 III Cabrio (F12) 640 d xDrive	N57 D30 B	230	03/2012 - 06/2018		4379
6 III Cabrio (F12) 640 i	N55 B30 A	235	09/2011 - 06/2018		4379
6 III Cabrio (F12) 640 i xDrive	N55 B30 A	235	03/2013 - 06/2018		4379
6 III Cabrio (F12) 650 i	N63 B44 A	298	09/2011 - 12/2012		4379
6 III Cabrio (F12) 650 i	N63 B44 A	300	12/2010 - 06/2012		4379
6 III Cabrio (F12) 650 i	N63 B44 A, N63 B44 B	330	07/2012 - 06/2018		4379
6 III Cabrio (F12) 650 i xDrive	N63 B44 A	300	09/2011 - 06/2012		4379
6 III Cabrio (F12) 650 i xDrive	N63 B44 A, N63 B44 B	330	07/2012 - 06/2018		4379
6 III Cabrio (F12) M6	S63 B44 B	412	03/2012 - 06/2018		4379
6 III Cabrio (F12) M6	S63 B44 B	423	07/2013 - 02/2015		4379
6 III Cabrio (F12) M6	S63 B44 B	441	03/2015 - 06/2018		4379
6 III Coupe (F13) 640 d	N57 D30 B	230	09/2011 - 10/2017		4379
6 III Coupe (F13) 640 d xDrive	N57 D30 B	230	03/2012 - 10/2017		4379
6 III Coupe (F13) 640 i	N55 B30 A	235	07/2011 - 10/2017		4379
6 III Coupe (F13) 640 i xDrive	N55 B30 A	235	03/2013 - 10/2017		4379
6 III Coupe (F13) 650 i	N63 B44 A	298	09/2011 - 12/2012		4379
6 III Coupe (F13) 650 i	N63 B44 A	300	07/2011 - 06/2012		4379
6 III Coupe (F13) 650 i	N63 B44 B	330	07/2012 - 10/2017		4379
6 III Coupe (F13) 650 i xDrive	N63 B44 A	300	09/2011 - 02/2015		4379
6 III Coupe (F13) 650 i xDrive	N63 B44 B	330	07/2012 - 10/2017		4379
6 III Coupe (F13) M6	S63 B44 B	412	07/2012 - 10/2017		4379
6 III Coupe (F13) M6	S63 B44 B	423	07/2013 - 02/2015		4379
6 III Coupe (F13) M6	S63 B44 B	441	03/2015 - 10/2017		4379
6 III Gran Coupe (F06) 640 d	N57 D30 B	230	03/2012 - 10/2018		4379
6 III Gran Coupe (F06) 640 d xDrive	N57 D30 B	230	03/2013 - 10/2018		4379
6 III Gran Coupe (F06) 640 i	N55 B30 A	235	03/2012 - 10/2018		4379

MAKE & MODEL		KW	YEAR		
BMW					
6 III Gran Coupe (F06) 640 i xDrive	N55 B30 A	235	03/2013 - 10/2018		4379
6 III Gran Coupe (F06) 650 i	N63 B44 B	330	07/2012 - 10/2018		4379
6 III Gran Coupe (F06) 650 i xDrive	N63 B44 B	330	07/2012 - 10/2018		4379
6 III Gran Coupe (F06) M6	S63 B44 B	412	03/2013 - 10/2018		4379
6 III Gran Coupe (F06) M6	S63 B44 B	423	07/2013 - 02/2015		4379
6 III Gran Coupe (F06) M6	S63 B44 B	441	03/2015 - 10/2018		4379
6 Serie II (E63)	630 i (N52 B30 A)	190	09/04 – 07/10		4179
6 Serie II (E63)	630 i (N52 B30 A)	200	07/07 – 07/10		4179
6 Serie II (E63)	630 i (N52 B30)	190	09/04 – 07/10		4179
6 Serie II (E63)	630 i (N53 B30)	200	07/07 – 07/10		4179
6 Serie II (E63)	635 d (M57 D30 (306D5)	210	07/07 – 07/10		4179
6 Serie II (E63)	645 Ci (N62 B44 A)	245	01/04 – 08/05		4179
6 Serie II (E63)	645 Ci (N62 B44)	245	01/04 – 08/05		4179
6 Serie II (E63)	650 i (N62 B48 B)	270	07/05 – 07/10		4179
6 Serie II (E63)	M (S85 B50 A)	373	09/05 – 07/10		4179
6 Serie II (E64)	630 i (N52 B30 A)	200	07/07 – 07/10		4179
6 Serie II (E64)	630 i (N53 B30)	200	07/07 – 07/10		4179
6 Serie II (E64)	635 d (M57 D30 (306D5)	210	07/07 – 07/10		4179
6 Serie II (E64)	645 Ci (N62 B44 A)	245	04/04 – 08/05		4179
6 Serie II (E64)	645 Ci (N62 B44)	245	04/04 – 08/05		4179
6 Serie II (E64)	650 i (N62 B48 B)	270	07/05 – 07/10		4179
6 Serie II (E64)	M (S85 B50 A)	373	07/06 – 07/10		4179
6 VI Gran Turismo (G32) 620 d	B47 D20 B	120	07/2018 -		4325
6 VI Gran Turismo (G32) 620 d	B47 D20 B	120	07/2018 -		4325/1
6 VI Gran Turismo (G32) 620 d	B47 D20 B	140	07/2018 -		4325
6 VI Gran Turismo (G32) 620 d	B47 D20 B	140	07/2018 -		4325/1
6 VI Gran Turismo (G32) 620 d xDrive	B47 D20 B	120	07/2018 -		4325
6 VI Gran Turismo (G32) 620 d xDrive	B47 D20 B	120	07/2018 -		4325/1
6 VI Gran Turismo (G32) 620 d xDrive	B47 D20 B	140	07/2018 -		4325
6 VI Gran Turismo (G32) 620 d xDrive	B47 D20 B	140	07/2018 -		4325/1
6 VI Gran Turismo (G32) 630 d	B57 D30 A	155	06/2017 -		4379
6 VI Gran Turismo (G32) 630 d	B57 D30 A	195	06/2017 -		4379
6 VI Gran Turismo (G32) 630 d xDrive	B57 D30 A	155	06/2017 -		4379
6 VI Gran Turismo (G32) 630 d xDrive	B57 D30 A	183	06/2017 -		4379
6 VI Gran Turismo (G32) 630 d xDrive	B57 D30 A	195	06/2017 -		4379
6 VI Gran Turismo (G32) 630 i	B48 B20 B	183	06/2017 -		4379
6 VI Gran Turismo (G32) 630 i	B48 B20 B	190	06/2017 -		4379
6 VI Gran Turismo (G32) 630 i xDrive	B58 B30 C	190	07/2019 -		4379
6 VI Gran Turismo (G32) 640 d xDrive	B57 D30 B	235	11/2017 -		4379
6 VI Gran Turismo (G32) 640 i	B58 B30 A (.-06.19), B58 B30 C	265	06/2017 -		4379
6 VI Gran Turismo (G32) 640 i	B58 B30 A (.-06.19), B58 B30 C (07.19-.)	250	06/2017 -		4379
6 VI Gran Turismo (G32) 640 i xDrive	B58 B30 A (.-06.19), B58 B30 C (07.19-.)	250	06/2017 -		4379
6 VI Gran Turismo (G32) 640 i xDrive	B58 B30 A (.-06.19), B58 B30 C (07.19-.)	265	06/2017 -		4379
7 Serie IV (E65, E66, E67)	4.4 745 d (M67 D44 (448D1)	220	03/05 – 08/05		4179
7 Serie IV (E65, E66, E67)	6.0 760	320	02/03 – 08/05		4179
7 Serie IV (E65, E66, E67)	730 Ld (M57 D30 (306D3)	170	07/05 – 12/09		4179
7 Serie IV (E65, E66, E67)	730 Ld (N57N 306 D2)	170	07/05 – 12/09		4179
7 Serie IV (E65, E66, E67)	735 i (N62 B40 A)	225	03/05 – 12/09		4179
7 Serie IV (E65, E66, E67)	740 d (M67 D39 (398D1)	190	10/02 – 02/05		4179
7 Serie IV (E65, E66, E67)	740 i, Li (N62 B40 A)	225	07/05 – 07/08		4179
7 Serie IV (E65, E66, E67)	745 d (N67N 448 D2)	242	07/05 – 07/08		4179
7 Serie IV (E65, E66, E67)	745 d (M67 D44 (448D1)	242	07/05 – 07/08		4179
7 Serie IV (E65, E66, E67)	745 i, Li (N62 B44 A)	245	11/01 – 07/08		4179
7 Serie IV (E65, E66, E67)	745 i, Li (N62 B44)	245	11/01 – 07/08		4179
7 Serie IV (E65, E66, E67)	750 i, Li (N62 B48 B)	270	07/05 – 07/08		4179
7 Serie IV (E65, E66, E67)	760 i, Li (N73 B60 A)	327	01/03 – 07/08		4179
7 (E23)	728	125	05/77 – 08/79	3331/1	
7 (E23)	730	135	05/77 – 08/79	3331/1	
7 (E23)	725 i	110	07/77 – 06/86	3331/1	
7 (E23)	728 i	135	07/78 – 08/86	3331/1	3572
7 (E23)	732 i	145	09/79 – 08/86	3331/1	
7 (E23)	733 i	145	05/77 – 08/86	3331/1	
7 (E23)	735 i	136	01/85 – 08/86	3331/1	3572
7 (E23)	735 i	141	04/85 – 8/86	3331/1	3572
7 (E23)	735 i	160	09/79 – 08/86	3331/1	3572
7 (E23)	745 i	185	04/80 – 04/83	3331/1	3572
7 (E23)	745 i	185	05/83 – 08/86	3331/1	3572
7 (E32)	730 i,iL	138	12/86 – 09/94	3564	3578
7 (E32)	730 i,iL	145	12/86 – 09/94	3564	3578
7 (E32)	730 i,iL V8	160	04/92 – 9/94	3564	3578
7 (E32)	735 i,iL	155	09/86 – 09/92	3564	3578
7 (E32)	735 i,iL	162	09/86 – 12/87	3564	3578
7 (E32)	740 i,iL V8	210	04/92 – 09/94	3564	3578
7 (E32)	750 i,iL V12	220	09/87 – 09/94	3564	3578
7 (E38)	725 tds	105	04/96 – 11/01	3909	3879
7 (E38)	728 i, iL	142	08/95 – 11/01	3909	3879

MAKE & MODEL   		KW	YEAR		
BMW					
7 (E38)	728i X	142	11/95 – 09/01	3909	3879
7 (E38)	730 d	135	08/98 – 04/00	3909	3879
7 (E38)	730 d	142	04/00 – 11/01	3909	3879
7 (E38)	730 i, iL	155	10/94 – 11/01	3909	3879
7 (E38)	730 i, iL	160	10/94 – 11/01	3909	3879
7 (E38)	735 i, iL	173	01/96 – 12/98	3909	3879
7 (E38)	740 d	180	05/99 – 11/01		3879
7 (E38)	740 i, iL	210	10/94 – 11/01	3881	3879
7 (E38)	750 i, iL	240	12/94 – 11/01		3879
7 (E65, E66, E67)	730 d	155	10/02 – 07/08	4180	3879
7 (E65, E66, E67)	730 d	160	10/02 – 07/08	4180	3879
7 (E65, E66, E67)	730 i, Li	170	03/03 – 07/08	4180	3879
7 (E65, E66, E67)	730 i, Li	184	03/05 – 07/08	4180	3879
7 (E65, E66, E67)	730 i, Li	190	03/05 – 07/08	4180	3879
7 (E65, E66, E67)	730 Ld	170	07/05 – 12/09	4180	
7 (E65, E66, E67)	735 i	225	03/05 – 12/09	4180	3879
7 (E65, E66, E67)	735 i, Li	200	11/01 – 02/05	4180	3879
7 (E65, E66, E67)	740 d	190	10/02 – 02/05	4180	
7 (E65, E66, E67)	740 i, Li	225	07/05 – 07/08	4180	
7 (E65, E66, E67)	745 d	220	03/05 – 08/05	4208	
7 (E65, E66, E67)	745 d	242	07/05 – 07/08	4208	
7 (E65, E66, E67)	745 i, Li	245	11/01 – 07/08	4180	
7 (E65, E66, E67)	750 i, Li	270	07/05 – 07/08	4208	
7 (E65, E66, E67)	760 i, Li	327	01/03 – 07/08	4208	
7 V (F01, F02, F03, F04) 730 i, Li	N52 B30 A, N52 B30 AF, N52 B30 BF	190	09/2009 - 06/2015	4387	
7 VI (G11, G12) 725 d, Ld	B47 D20 B	155	07/2016 - 02/2019		4325
7 VI (G11, G12) 725 d, Ld	B47 D20 B	155	07/2016 - 02/2019		4325/1
7 VI (G11, G12) 725 d, Ld	B47 D20 B	170	07/2016 - 02/2019		4325
7 VI (G11, G12) 725 d, Ld	B47 D20 B	170	07/2016 - 02/2019		4325/1
7 VI (G11, G12) 725 d, Ld	B47 D20 B	155	07/2016 - 02/2019		4379
7 VI (G11, G12) 725 d, Ld	B47 D20 B	170	07/2016 - 02/2019		4379
7 VI (G11, G12) 730 d	B57 D30 A	155	07/2015 -		4379
7 VI (G11, G12) 730 d	B57 D30 A	195	09/2015 -		4379
7 VI (G11, G12) 730 d xDrive	B57 D30 A	155	09/2015 -		4379
7 VI (G11, G12) 730 d, Ld xDrive	B57 D30 A	195	09/2015 -		4379
7 VI (G11, G12) 730 i, Li	B48 B20 B	190	11/2015 - 02/2019		4379
7 VI (G11, G12) 740 d, Ld xDrive	B57 D30 B	235	11/2015 -		4379
7 VI (G11, G12) 740 e, Le	B48 B20 B	190	07/2016 - 02/2019		4379
7 VI (G11, G12) 740 e, Le	B48 B20 B	240	07/2016 - 02/2019		4379
7 VI (G11, G12) 740 e, Le xDrive	B48 B20 B	190	07/2016 - 02/2019		4379
7 VI (G11, G12) 740 e, Le xDrive	B48 B20 B	240	07/2016 - 02/2019		4379
7 VI (G11, G12) 740 i, Li	B58 B30 A	240	07/2015 - 02/2019		4379
7 VI (G11, G12) 740 i, Li xDrive	B58 B30 A	240	03/2016 - 02/2019		4379
7 VI (G11, G12) 750 d, Ld xDrive	B57 D30 C	294	07/2016 -		4379
7 VI (G11, G12) 750 i, Li	N63 B44 C	330	11/2015 - 02/2019		4379
7 VI (G11, G12) 750 i, Li xDrive	N63 B44 C	330	09/2015 - 02/2019		4379
7 VI (G11, G12) 750 Li xDrive	N63 B40 B	330	03/2016 -		4379
7 VI (G11, G12) M 760 Li xDrive	N74 B66 B	448	12/2016 - 02/2019		4379
7 VI (G11, G12) M 760 Li xDrive	N74 B66 C	430	03/2019 -		4379
8 (E31)	840 Ci	210	01/96 – 12/99	3909	3879
8 (E31)	840 i	210	02/93 – 02/96	3909	3879
8 (E31)	850 Ci	240	09/94 – 12/99	3909	3879
8 (E31)	850 CSi	280	04/93 – 12/96	3909	3879
8 (E31)	850 i,Ci	220	04/90 – 10/94	3909	3879
8 II Cabrio (G14, F91) 840 d xDrive	B57 D30 B	235	11/2018 -		4379
8 II Cabrio (G14, F91) 840 i	B58 B30 C	250	07/2019 -		4379
8 II Cabrio (G14, F91) 840 i xDrive	B58 B30 C	250	07/2019 -		4379
8 II Cabrio (G14, F91) M 850 i xDrive	N63 B44 D	390	11/2018 -		4379
8 II Cabrio (G14, F91) M8	S63 B44 B	441	07/2019 -		4379
8 II Cabrio (G14, F91) M8 Competition	S63 B44 B	460	07/2019 -		4379
8 II Coupe (G15, F92) 840 d xDrive	B57 D30 B	235	07/2018 -		4379
8 II Coupe (G15, F92) 840 i	B58 B30 C	250	07/2019 -		4379
8 II Coupe (G15, F92) 840 i xDrive	B58 B30 C	250	07/2019 -		4379
8 II Coupe (G15, F92) M 850 i xDrive	N63 B44 D	390	10/2018 -		4379
8 II Coupe (G15, F92) M8	S63 B44 B	441	07/2019 -		4379
8 II Coupe (G15, F92) M8 Competition	S63 B44 B	460	07/2019 -		4379
8 II Gran Coupe (G16, F93) 840 d xDrive	B57 D30 B	235	07/2019 -		4379
8 II Gran Coupe (G16, F93) 840 i	B58 B30 C	250	07/2019 -		4379
8 II Gran Coupe (G16, F93) 840 i xDrive	B58 B30 C	250	07/2019 -		4379
8 II Gran Coupe (G16, F93) M 850 i xDrive	N63 B44 D	390	07/2019 -		4379
8 II Gran Coupe (G16, F93) M8	S63 B44 B	441	11/2019 -		4379
8 II Gran Coupe (G16, F93) M8 Competition	S63 B44 B	460	11/2019 -		4379
i8 (I12) hybrid	B38 K15 A	170	03/2014 -		4325
i8 (I12) hybrid	B38 K15 A	170	03/2014 -		4325/1
i8 (I12) hybrid	B38 K15 A	266	03/2014 - 02/2018		4325
i8 (I12) hybrid	B38 K15 A	266	03/2014 - 02/2018		4325/1

MAKE & MODEL   		KW	YEAR		
BMW					
i8 (I12) hybrid	B38 K15 A	275	03/2018 -		4325
i8 (I12) hybrid	B38 K15 A	275	03/2018 -		4325/1
i8 Roadster (I15) hybrid	B38 K15 A	170	03/2018 -		4325
i8 Roadster (I15) hybrid	B38 K15 A	170	03/2018 -		4325/1
i8 Roadster (I15) hybrid	B38 K15 A	275	03/2018 -		4325
i8 Roadster (I15) hybrid	B38 K15 A	275	03/2018 -		4325/1
M1 (E26)	35	204	05/79 – 05/83	3331/1	
M1 (E26)	35	204	05/79 – 05/83	3365	
X1 I (E84) sDrive 16 d	N47 D20 C	85	04/2012 - 06/2015		4388
X1 I (E84) sDrive 16 i	N20 B16 A	105	03/2013 - 06/2015		4388
X1 I (E84) sDrive 18 d	N47 D20 C	100	03/2009 - 06/2015		4388
X1 I (E84) sDrive 18 d	N47 D20 C	105	12/2009 - 06/2015		4388
X1 I (E84) sDrive 18 i	N46 B20 B, N46 B20 BD	100	03/2010 - 06/2015		4388
X1 I (E84) sDrive 18 i	N46 B20 B, N46 B20 BD, N46 B20 C, N46 B20 CC, N46	110	03/2010 - 06/2015		4388
X1 I (E84) sDrive 20 d	N47 D20 C	120	03/2010 - 06/2015		4388
X1 I (E84) sDrive 20 d	N47 D20 C	130	10/2009 - 06/2015		4388
X1 I (E84) sDrive 20 d	N47 D20 C	135	07/2012 - 06/2015		4388
X1 I (E84) sDrive 20 i	N20 B20 A	135	09/2011 - 06/2015		4388
X1 I (E84) xDrive 18 d	N47 D20 C	100	03/2009 - 06/2015		4388
X1 I (E84) xDrive 18 d	N47 D20 C	105	10/2009 - 06/2015		4388
X1 I (E84) xDrive 20 d	N47 D20 C	120	03/2010 - 06/2015		4388
X1 I (E84) xDrive 20 d	N47 D20 C	130	09/2009 - 06/2012		4388
X1 I (E84) xDrive 20 d	N47 D20 C	135	07/2012 - 06/2015		4388
X1 I (E84) xDrive 20 i	N20 B20 A	135	09/2011 - 06/2015		4388
X1 I (E84) xDrive 23 d	N47 D20 D	150	10/2009 - 06/2015		4388
X1 I (E84) xDrive 25 d	N47 D20 D	160	10/2009 - 06/2015		4388
X3 (E83)	2.5 si xDrive	155	07/06 – 12/08		3879
X3 (E83)	3.0 sd	210	09/06 – 08/08	3881	
X3 (E83)	xDrive 18 d	100	04/09 – 12/11		3879
X3 (E83)	xDrive 35 d	210	09/08 – 08/11	3881	
X3 II (F25) sDrive 18 d	B47 D20 A	110	04/2014 - 08/2017		4325
X3 II (F25) sDrive 18 d	B47 D20 A	110	04/2014 - 08/2017		4325/1
X3 II (F25) sDrive 18 d	N47 D20 C	100	10/2012 - 03/2014		4325
X3 II (F25) sDrive 18 d	N47 D20 C	100	10/2012 - 03/2014		4325/1
X3 II (F25) sDrive 18 d	N47 D20 C	105	10/2012 - 03/2014		4325
X3 II (F25) sDrive 18 d	N47 D20 C	105	10/2012 - 03/2014		4325/1
X3 II (F25) sDrive 18 d	B47 D20 A	110	04/2014 - 08/2017	4382	
X3 II (F25) sDrive 18 d	N47 D20 C	100	10/2012 - 03/2014	4382	
X3 II (F25) sDrive 18 d	N47 D20 C	105	10/2012 - 03/2014	4382	
X3 II (F25) sDrive 20 i	N20 B16 A	125	04/2014 - 08/2017		4325
X3 II (F25) sDrive 20 i	N20 B16 A	125	04/2014 - 08/2017		4325/1
X3 II (F25) sDrive 20 i	N20 B20 A	135	04/2014 - 08/2017		4325
X3 II (F25) sDrive 20 i	N20 B20 A	135	04/2014 - 08/2017		4325/1
X3 II (F25) sDrive 20 i	N20 B16 A	125	04/2014 - 08/2017	4382	
X3 II (F25) sDrive 20 i	N20 B20 A	135	04/2014 - 08/2017	4382	
X3 II (F25) xDrive 20 d	B47 D20 A	140	04/2014 - 08/2017		4325
X3 II (F25) xDrive 20 d	B47 D20 A	140	04/2014 - 08/2017		4325/1
X3 II (F25) xDrive 20 d	N47 D20 C	120	09/2010 - 03/2014		4325
X3 II (F25) xDrive 20 d	N47 D20 C	120	09/2010 - 03/2014		4325/1
X3 II (F25) xDrive 20 d	N47 D20 C	135	09/2010 - 03/2014		4325
X3 II (F25) xDrive 20 d	N47 D20 C	135	09/2010 - 03/2014		4325/1
X3 II (F25) xDrive 20 d	B47 D20 A	140	04/2014 - 08/2017	4382	
X3 II (F25) xDrive 20 d	N47 D20 C	120	09/2010 - 03/2014	4382	
X3 II (F25) xDrive 20 d	N47 D20 C	135	09/2010 - 03/2014	4382	
X3 II (F25) xDrive 20 i	N20 B20 A	135	10/2011 - 08/2017		4325
X3 II (F25) xDrive 20 i	N20 B20 A	135	10/2011 - 08/2017		4325/1
X3 II (F25) xDrive 20 i	N20 B20 A	135	10/2011 - 08/2017	4382	
X3 II (F25) xDrive 28 i	N20 B20 A	180	04/2012 - 08/2017		4325
X3 II (F25) xDrive 28 i	N20 B20 A	180	04/2012 - 08/2017		4325/1
X3 II (F25) xDrive 28 i	N52 B30 A, N52 B30 AF, N52 B30 BF	190	01/2011 - 10/2012		4325
X3 II (F25) xDrive 28 i	N52 B30 A, N52 B30 AF, N52 B30 BF	190	01/2011 - 10/2012		4325/1
X3 II (F25) xDrive 28 i	N20 B20 A	180	04/2012 - 08/2017	4382	
X3 II (F25) xDrive 28 i	N52 B30 A, N52 B30 AF, N52 B30 BF	190	01/2011 - 10/2012	4382	
X3 II (F25) xDrive 28d	N47D20C	134	09/2014 -		4325
X3 II (F25) xDrive 28d	N47D20C	134	09/2014 -		4325/1
X3 II (F25) xDrive 28d	N47D20C	134	09/2014 -	4382	
X3 II (F25) xDrive 30 d	N57 D30 A	155	04/2011 - 08/2017		4325
X3 II (F25) xDrive 30 d	N57 D30 A	155	04/2011 - 08/2017		4325/1
X3 II (F25) xDrive 30 d	N57 D30 A	183	06/2011 - 08/2017		4325
X3 II (F25) xDrive 30 d	N57 D30 A	183	06/2011 - 08/2017		4325/1
X3 II (F25) xDrive 30 d	N57 D30 A	190	04/2011 - 08/2017		4325
X3 II (F25) xDrive 30 d	N57 D30 A	190	04/2011 - 08/2017		4325/1
X3 II (F25) xDrive 30 d	N57 D30 A	204	06/2016 - 08/2017		4325
X3 II (F25) xDrive 30 d	N57 D30 A	204	06/2016 - 08/2017		4325/1
X3 II (F25) xDrive 30 d	N57 D30 A	210	04/2011 - 05/2016		4325
X3 II (F25) xDrive 30 d	N57 D30 A	210	04/2011 - 05/2016		4325/1

MAKE & MODEL		KW	YEAR		
BMW					
X3 II (F25) xDrive 30 d	N57 D30 A	155	04/2011 - 08/2017	4382	
X3 II (F25) xDrive 30 d	N57 D30 A	183	06/2011 - 08/2017	4382	
X3 II (F25) xDrive 30 d	N57 D30 A	190	04/2011 - 08/2017	4382	
X3 II (F25) xDrive 30 d	N57 D30 A	204	06/2016 - 08/2017	4382	
X3 II (F25) xDrive 30 d	N57 D30 A	210	04/2011 - 05/2016	4382	
X3 II (F25) xDrive 35 d	N57 D30 B	230	10/2011 - 08/2017		4325
X3 II (F25) xDrive 35 d	N57 D30 B	230	10/2011 - 08/2017		4325/1
X3 II (F25) xDrive 35 d	N57 D30 B	230	10/2011 - 08/2017	4382	
X3 II (F25) xDrive 35 i	N55 B30 A	225	09/2010 - 08/2017		4325
X3 II (F25) xDrive 35 i	N55 B30 A	225	09/2010 - 08/2017		4325/1
X3 II (F25) xDrive 35 i	N55 B30 A	225	09/2010 - 08/2017	4382	
X3 III (G01, F97) M	S58 B30 A	353	03/2019 -		4379
X3 III (G01, F97) M Competition	S58 B30 A	375	03/2019 -		4379
X3 III (G01, F97) sDrive 18 d	B47 D20 A, B47 D20 B (05.19-.)	100	04/2018 -		4379
X3 III (G01, F97) sDrive 18 d	B47 D20 A, B47 D20 B (05.19-.)	110	04/2018 -		4379
X3 III (G01, F97) sDrive 20 i	B48 B20 A	135	12/2017 -		4379
X3 III (G01, F97) sDrive 20 i 44348	B48 B16 A	125	12/2017 -		4379
X3 III (G01, F97) xDrive 20 d	B47 D20 A (.-04.19), B47 D20 B (05.19-.)	120	08/2017 -		4379
X3 III (G01, F97) xDrive 20 d	B47 D20 A (.-04.19), B47 D20 B (05.19-.)	140	08/2017 -		4379
X3 III (G01, F97) xDrive 20 d Mild-Hybrid	B47 D20 B, JA1	120	04/2020 -		4379
X3 III (G01, F97) xDrive 20 d Mild-Hybrid	B47 D20 B, JA1	140	04/2020 -		4379
X3 III (G01, F97) xDrive 20 i	B48 B20 A, B48 B20 B (09.18-.)	135	12/2017 -		4379
X3 III (G01, F97) xDrive 25 d	B47 D20 B	155	04/2018 -		4379
X3 III (G01, F97) xDrive 25 d	B47 D20 B	170	04/2018 -		4379
X3 III (G01, F97) xDrive 30 e	B46 B20 B, B48 B20 A	120	12/2019 -		4379
X3 III (G01, F97) xDrive 30 e	B46 B20 B, B48 B20 A	135	12/2019 -		4379
X3 III (G01, F97) xDrive 30 e	B46 B20 B, B48 B20 A	170	12/2019 -		4379
X3 III (G01, F97) xDrive 30 e	B46 B20 B, B48 B20 A	185	12/2019 -		4379
X3 III (G01, F97) xDrive 30 i	B46 B20 B, B48 B20 B	185	08/2017 -		4379
X3 III (G01, F97) xDrive 30 i	B48 B20 B	183	08/2017 -		4379
X3 III (G01, F97) xDrive 30d	B57 D30 A	183	12/2017 -		4379
X3 III (G01, F97) xDrive 30d	B57 D30 A	195	08/2017 -		4379
X3 III (G01, F97) xDrive M40 d	B57 D30 B	240	08/2018 -		4379
X3 III (G01, F97) xDrive M40 d Mild-Hybrid	B57 D30 B, JA1	250	08/2018 -		4379
X3 III (G01, F97) xDrive M40 i	B58 B30 A	260	09/2018 - 08/2019		4379
X3 III (G01, F97) xDrive M40 i	B58 B30 A	265	08/2017 - 08/2019		4379
X3 III (G01, F97) xDrive M40 i	B58 B30 B	285	09/2019 -		4379
X4 (F26)	M 40 i	265	12/15 -	4207	
X4 I (F26) xDrive 20 d	B47 D20 A	120	04/2014 - 03/2018		4325
X4 I (F26) xDrive 20 d	B47 D20 A	120	04/2014 - 03/2018		4325/1
X4 I (F26) xDrive 20 d	B47 D20 A	140	04/2014 - 03/2018		4325
X4 I (F26) xDrive 20 d	B47 D20 A	140	04/2014 - 03/2018		4325/1
X4 I (F26) xDrive 20 d	B47 D20 A	120	04/2014 - 03/2018	4382	
X4 I (F26) xDrive 20 d	B47 D20 A	140	04/2014 - 03/2018	4382	
X4 I (F26) xDrive 20 i	N20 B20 A	135	04/2014 - 03/2018		4325
X4 I (F26) xDrive 20 i	N20 B20 A	135	04/2014 - 03/2018		4325/1
X4 I (F26) xDrive 20 i	N20 B20 A	135	04/2014 - 03/2018	4382	
X4 I (F26) xDrive 28 i	N20 B20 A	180	04/2014 - 03/2018		4325
X4 I (F26) xDrive 28 i	N20 B20 A	180	04/2014 - 03/2018		4325/1
X4 I (F26) xDrive 28 i	N20 B20 A	180	04/2014 - 03/2018	4382	
X4 I (F26) xDrive 30 d	N57 D30 A	155	04/2014 - 03/2018		4325
X4 I (F26) xDrive 30 d	N57 D30 A	155	04/2014 - 03/2018		4325/1
X4 I (F26) xDrive 30 d	N57 D30 A	183	04/2015 - 03/2018		4325
X4 I (F26) xDrive 30 d	N57 D30 A	183	04/2015 - 03/2018		4325/1
X4 I (F26) xDrive 30 d	N57 D30 A	190	04/2014 - 03/2018		4325
X4 I (F26) xDrive 30 d	N57 D30 A	190	04/2014 - 03/2018		4325/1
X4 I (F26) xDrive 30 d	N57 D30 A	204	04/2014 - 03/2018		4325
X4 I (F26) xDrive 30 d	N57 D30 A	204	04/2014 - 03/2018		4325/1
X4 I (F26) xDrive 30 d	N57 D30 A	210	04/2014 - 03/2018		4325
X4 I (F26) xDrive 30 d	N57 D30 A	210	04/2014 - 03/2018		4325/1
X4 I (F26) xDrive 30 d	N57 D30 A	155	04/2014 - 03/2018	4382	
X4 I (F26) xDrive 30 d	N57 D30 A	183	04/2015 - 03/2018	4382	
X4 I (F26) xDrive 30 d	N57 D30 A	190	04/2014 - 03/2018	4382	
X4 I (F26) xDrive 30 d	N57 D30 A	204	04/2014 - 03/2018	4382	
X4 I (F26) xDrive 30 d	N57 D30 A	210	04/2014 - 03/2018	4382	
X4 I (F26) xDrive 35 d	N57 D30 B	230	04/2014 - 03/2018		4325
X4 I (F26) xDrive 35 d	N57 D30 B	230	04/2014 - 03/2018		4325/1
X4 I (F26) xDrive 35 d	N57 D30 B	230	04/2014 - 03/2018	4382	
X4 I (F26) xDrive 35 i	N55 B30 A	225	04/2014 - 03/2018		4325
X4 I (F26) xDrive 35 i	N55 B30 A	225	04/2014 - 03/2018		4325/1
X4 I (F26) xDrive 35 i	N55 B30 A	225	04/2014 - 03/2018	4382	
X4 II (G02, F98) M	S58 B30 A	353	03/2019 -		4379
X4 II (G02, F98) M Competition	S58 B30 A	375	03/2019 -		4379
X4 II (G02, F98) M40 d Mild-Hybrid xDrive	B57 D30 B, JA1	250	07/2020 -		4379
X4 II (G02, F98) M40 d xDrive	B57 D30 B	240	04/2018 -		4379
X4 II (G02, F98) M40 i xDrive	B58 B30 A	260	04/2018 -		4379

MAKE & MODEL		KW	YEAR		
BMW					
X4 II (G02, F98) M40 i xDrive	B58 B30 A	265	04/2018 -		4379
X4 II (G02, F98) M40 i xDrive	B58 B30 B	285	09/2019 -		4379
X4 II (G02, F98) xDrive 20 d	B47 D20 A	120	04/2018 -		4325
X4 II (G02, F98) xDrive 20 d	B47 D20 A	120	04/2018 -		4325/1
X4 II (G02, F98) xDrive 20 d	B47 D20 A	140	04/2018 -		4325
X4 II (G02, F98) xDrive 20 d	B47 D20 A	140	04/2018 -		4325/1
X4 II (G02, F98) xDrive 20 d	B47 D20 A	120	04/2018 -		4379
X4 II (G02, F98) xDrive 20 d	B47 D20 A	140	04/2018 -		4379
X4 II (G02, F98) xDrive 20 d Mild-Hybrid	B47 D20 B, JA1	120	04/2020 -		4325
X4 II (G02, F98) xDrive 20 d Mild-Hybrid	B47 D20 B, JA1	120	04/2020 -		4325/1
X4 II (G02, F98) xDrive 20 d Mild-Hybrid	B47 D20 B, JA1	140	04/2020 -		4325
X4 II (G02, F98) xDrive 20 d Mild-Hybrid	B47 D20 B, JA1	140	04/2020 -		4325/1
X4 II (G02, F98) xDrive 20 d Mild-Hybrid	B47 D20 B, JA1	120	04/2020 -		4379
X4 II (G02, F98) xDrive 20 d Mild-Hybrid	B47 D20 B, JA1	140	04/2020 -		4379
X4 II (G02, F98) xDrive 20 i	B48 B20 A	135	04/2018 -		4325
X4 II (G02, F98) xDrive 20 i	B48 B20 A	135	04/2018 -		4325/1
X4 II (G02, F98) xDrive 20 i	B48 B20 A	135	04/2018 -		4379
X4 II (G02, F98) xDrive 25 d	B47 D20 B	155	04/2018 -		4325
X4 II (G02, F98) xDrive 25 d	B47 D20 B	155	04/2018 -		4325/1
X4 II (G02, F98) xDrive 25 d	B47 D20 B	170	04/2018 -		4325
X4 II (G02, F98) xDrive 25 d	B47 D20 B	170	04/2018 -		4325/1
X4 II (G02, F98) xDrive 25 d	B47 D20 B	155	04/2018 -		4379
X4 II (G02, F98) xDrive 25 d	B47 D20 B	170	04/2018 -		4379
X4 II (G02, F98) xDrive 30 d	B57 D30 A	183	09/2018 -		4325
X4 II (G02, F98) xDrive 30 d	B57 D30 A	183	09/2018 -		4325/1
X4 II (G02, F98) xDrive 30 d	B57 D30 A	195	04/2018 -		4325
X4 II (G02, F98) xDrive 30 d	B57 D30 A	195	04/2018 -		4325/1
X4 II (G02, F98) xDrive 30 d	B57 D30 A	183	09/2018 -		4379
X4 II (G02, F98) xDrive 30 d	B57 D30 A	195	04/2018 -		4379
X4 II (G02, F98) xDrive 30 i	B46 B20 B, B48 B20 B	185	04/2018 -		4325
X4 II (G02, F98) xDrive 30 i	B46 B20 B, B48 B20 B	185	04/2018 -		4325/1
X4 II (G02, F98) xDrive 30 i	B48 B20 B	183	04/2018 -		4325
X4 II (G02, F98) xDrive 30 i	B48 B20 B	183	04/2018 -		4325/1
X4 II (G02, F98) xDrive 30 i	B46 B20 B, B48 B20 B	185	04/2018 -		4379
X4 II (G02, F98) xDrive 30 i	B48 B20 B	183	04/2018 -		4379
X5 II (E70)	3.0 D (M57 D30 (306D3)	173	02/07 – 09/08		4179
X5 II (E70)	3.0 sd (M57 D30 (306D5)	210	09/07 – 02/09		4179
X5 II (E70)	4.8 i (N62 B48 B)	261	02/07 – 09/08		4179
X5 II (E70)	M 50 d (N57 D30 C)	280	08/11 – 06/13		4179
X5 II (E70)	xDrive 30 d (N57 D30 A)	173	09/08 – 06/13		4179
X5 II (E70)	xDrive 30 d (N57 D30 A)	180	09/10 – 06/13		4179
X5 II (E70)	xDrive 35 d (M57N 306 D5)	210	09/08 – 06/13		4179
X5 II (E70)	xDrive 48 i (N62 B48 B)	261	09/08 – 06/13		4179
X5 II (E70)	xDrive 50 i (N63 B44 A)	298	09/09 -		4179
X5 II (E70)	xDrive 50 i (N63 B44 A)	300	06/10 – 06/13		4179
X5 (E53)	3.0 d	135	05/01 – 12/03	3881	3879
X5 (E53)	3.0 d	155	09/03 – 12/06	3881	3879
X5 (E53)	3.0 d	160	12/03 – 12/06	3881	3879
X5 (E53)	3.0 i	163	05/00 – 12/06	3881	3879
X5 (E53)	3.0 i	170	05/00 – 12/06	3881	3879
X5 (E53)	4.4 i	210	05/00 – 12/03	3881	3879
X5 (E53)	4.4 i	235	12/03 – 09/06	3881	3879
X5 (E53)	4.6 is	255	02/02 – 12/03		3879
X5 (E53)	4.8 is	265	04/04 – 09/06		3879
X5 (E70)	3.0 d	155	02/07 – 09/08	4207	
X5 (E70)	3.0 d	173	02/07 – 09/08	4207	
X5 (E70)	3.0 si	200	02/06 – 09/08	4207	
X5 (E70)	4.8 i xDrive	261	02/07 – 09/08	4207	
X5 (E70)	xDrive 30 d	155	09/08 – 06/13	4207	
X5 (E70)	xDrive 30 d	173	09/08 – 06/13	4207	
X5 (E70)	xDrive 30 d	180	09/10 – 06/13	4207	
X5 (E70)	xDrive 30 i	200	09/08 – 03/10	4207	
X5 (E70)	xDrive 35 d	210	09/08 – 06/13	4207	
X5 (E70)	xDrive 35 i	225	09/10 – 06/13	4207	
X5 (E70)	xDrive 35 i	235	02/12 – 06/13	4207	
X5 (E70)	xDrive 40 d	225	09/10 – 06/13	4207	
X5 (E70)	xDrive 48 i	261	09/08 – 06/13	4207	
X5 (F15, F85)	sDrive 25 d	160	11/13 -	4207	
X5 (F15, F85)	xDrive 25 d	160	11/13 -	4207	
X5 (F15, F85)	xDrive 25 d	170	07/15 -	4207	
X5 (F15, F85)	xDrive 28 i	180	09/15 -	4207	
X5 (F15, F85)	xDrive 30 d	183	04/15 -	4207	
X5 (F15, F85)	xDrive 30 d	190	07/13 -	4207	
X5 (F15, F85)	xDrive 30 d	204	11/13 -	4207	
X5 (F15, F85)	xDrive 35 i	225	11/13 -	4207	
X5 (F15, F85)	xDrive 35 i	240	11/13 -	4207	

MAKE & MODEL   		KW	YEAR		
BMW					
X5 (F15, F85)	xDrive 40 d	230	12/13 -	4207	
X5 (F15, F85)	xDrive 40e	155	09/15 -	4207	
X5 (F15, F85)	xDrive 40e	180	09/15 -	4207	
X5 (F15, F85)	xDrive 40e	205	09/15 -	4207	
X5 (F15, F85)	xDrive 40e	230	09/15 -	4207	
X5 II (E70) 3.0 d	M57 D30 (306D3)	155	02/2007 - 09/2008		4181/1
X5 II (E70) 3.0 d	M57 D30 (306D3)	173	12/2006 - 09/2008		4181/1
X5 II (E70) 3.0 si	-	171	02/2007 - 09/2008		4181/1
X5 II (E70) 3.0 si	N52 B30 A, N52 B30 AF, N52 B30 BF	200	10/2006 - 09/2008		4181/1
X5 II (E70) xDrive 30 d	M57 D30 (306D3)	173	10/2008 - 03/2010		4181/1
X5 II (E70) xDrive 30 d	M57 D30 (306D3) (.-03.10), N57 D30 A (04.10-.)	155	10/2008 - 07/2013		4181/1
X5 II (E70) xDrive 30 d	N57 D30 A	180	04/2010 - 07/2013		4181/1
X5 II (E70) xDrive 30 i	-	171	09/2008 - 12/2010		4181/1
X5 II (E70) xDrive 30 i	N52 B30 A	200	10/2008 - 03/2010		4181/1
X5 II (E70) xDrive 35 i	N55 B30 A	225	04/2010 - 07/2013		4181/1
X5 II (E70) xDrive 35 i	N55 B30 A	235	02/2012 - 06/2013		4181/1
X5 II (E70) xDrive 40 d	N57 D30 B	225	09/2010 - 06/2013		4181/1
X5 II (E70) xDrive 40 i	N55 B30 A	225	01/2012 - 06/2013		4181/1
X5 III (F15, F85) sDrive 25 d	B47 D20 B	170	08/2015 - 07/2018		4181/1
X5 III (F15, F85) sDrive 25 d	N47 D20 D	160	12/2013 - 07/2015		4181/1
X5 III (F15, F85) xDrive 25 d	B47 D20 B	170	08/2015 - 07/2018		4181/1
X5 III (F15, F85) xDrive 25 d	N47 D20 D	160	12/2013 - 07/2015		4181/1
X5 III (F15, F85) xDrive 25 d	N57 D30 A	160	04/2014 - 07/2018		4181/1
X5 III (F15, F85) xDrive 30 d	N57 D30 A	190	08/2013 - 07/2018		4181/1
X5 III (F15, F85) xDrive 30 d	N57 D30 A	204	08/2013 - 07/2018		4181/1
X5 IV (G05, F95) M	S63 B44 B	441	12/2019 -		4379
X5 IV (G05, F95) M Competition	S63 B44 B	460	12/2019 -		4379
X5 IV (G05, F95) M50 i xDrive	N63 B44 D	390	08/2019 -		4379
X5 IV (G05, F95) xDrive 25 d	B47 D20 B	155	08/2019 -		4379
X5 IV (G05, F95) xDrive 25 d	B47 D20 B	170	08/2019 -		4379
X5 IV (G05, F95) xDrive 30 d	B57 D30 A	183	08/2018 -		4379
X5 IV (G05, F95) xDrive 30 d	B57 D30 A	195	08/2018 -		4379
X5 IV (G05, F95) xDrive 40 d Mild-Hybrid	B57 D30 B, JA1	250	05/2020 -		4379
X5 IV (G05, F95) xDrive 40 i	B58 B30 C	250	08/2018 -		4379
X5 IV (G05, F95) xDrive 45 e iPerformance	B58 B30 C	155	06/2019 -		4379
X5 IV (G05, F95) xDrive 45 e iPerformance	B58 B30 C	210	06/2019 -		4379
X5 IV (G05, F95) xDrive 45 e iPerformance	B58 B30 C	235	06/2019 -		4379
X5 IV (G05, F95) xDrive 45 e iPerformance	B58 B30 C	290	06/2019 -		4379
X5 IV (G05, F95) xDrive M 50 d	B57 D30 C	294	08/2018 -		4379
X6 (E71, E72)	30 d	173	05/08 – 08/08	4207	4179
X6 (E71, E72)	35 d	210	05/08 – 08/08	4207	4179
X6 (E71, E72)	35 i	225	05/08 – 08/08	4207	4179
X6 (E71, E72)	50 i (N63 B44 A)	300	05/08 – 06/14		4179
X6 (E71, E72)	ActiveHybrid (N63 B44 A)	357	01/09 – 10/11		4179
X6 (E71, E72)	M 50 d (N57 D30 C)	280	08/11 – 06/14		4179
X6 (E71, E72)	xDrive 28 i	180	09/15 -	4207	
X6 (E71, E72)	xDrive 30 d	155	07/09 – 06/14	4207	
X6 (E71, E72)	xDrive 30 d	155	08/14 -	4207	
X6 (E71, E72)	xDrive 30 d	160	09/16 -	4207	
X6 (E71, E72)	xDrive 30 d	173	09/07 – 03/10	4207	
X6 (E71, E72)	xDrive 30 d	180	04/09 – 06/14	4207	
X6 (E71, E72)	xDrive 30 d	183	12/15 -	4207	
X6 (E71, E72)	xDrive 30 d	190	08/14 -	4207	
X6 (E71, E72)	xDrive 30 d (M57 D30 (306D3)	180	04/09 – 06/14		4179
X6 (E71, E72)	xDrive 30 d (N57 D30 A)	173	09/07 – 03/10		4179
X6 (E71, E72)	xDrive 30 d (N57 D30 A)	180	04/09 – 06/14		4179
X6 (E71, E72)	xDrive 35 d (M57 D30 (306D5)	210	06/07 – 03/10		4179
X6 (E71, E72)	xDrive 35 i (N54 B30 A)	225	06/07 – 03/10		4179
X6 (E71, E72)	xDrive 35 i (N55 B30 A)	225	06/07 – 03/10		4179
X6 (E71, E72)	xDrive 50 i (N63 B44 A)	300	10/07 – 06/14		4179
X6 (F16, F86)	xDrive 30 d	204	02/15 -	4207	
X6 (F16, F86)	xDrive 35 d	210	06/07 – 03/10	4207	
X6 (F16, F86)	xDrive 35 i	225	06/07 – 03/10	4207	
X6 (F16, F86)	xDrive 35 i	225	12/14 -	4207	
X6 (F16, F86)	xDrive 35 i	235	07/09 – 06/14	4207	
X6 (F16, F86)	xDrive 35 i	240	02/15 -	4207	
X6 (F16, F86)	xDrive 35 i	240	06/07 – 03/10	4207	
X6 (F16, F86)	xDrive 40 d	225	07/09 – 06/14	4207	
X6 (F16, F86)	xDrive 40 d	230	12/14 -	4207	
X6 I (E71, E72) xDrive 30 d	M57 D30 (306D3)	173	04/2008 - 03/2010		4181/1
X6 I (E71, E72) xDrive 30 d	N57 D30 A	155	04/2010 - 07/2014		4181/1
X6 I (E71, E72) xDrive 30 d	N57 D30 A	180	04/2010 - 07/2014		4181/1
X6 I (E71, E72) xDrive 35 d	M57 D30 (306D5)	210	01/2008 - 03/2010		4181/1
X6 I (E71, E72) xDrive 35 i	N54 B30 A	240	06/2007 - 03/2010		4181/1
X6 I (E71, E72) xDrive 35 i	N54 B30 A, N55 B30 A	224	01/2008 - 06/2014		4181/1
X6 I (E71, E72) xDrive 35 i	N54 B30 A, N55 B30 A	225	01/2008 - 07/2014		4181/1

MAKE & MODEL   		KW	YEAR		
BMW					
X6 I (E71, E72) xDrive 35 i	N55 B30 A	235	07/2009 - 06/2014		4181/1
X6 I (E71, E72) xDrive 40 d	N57 D30 B	225	07/2009 - 06/2014		4181/1
X6 II (F16, F86)	M 50 d (N57 D30 C)	280	08/14 -		4179
X6 II (F16, F86)	xDrive 40 d (N57 D30 B)	230	12/14 -		4179
X6 II (F16, F86)	xDrive 50 i (N63 B44 B)	330	08/14 -		4179
X6 II (F16, F86) xDrive 30 d	N57 D30 A	155	08/2014 - 07/2019		4181/1
X6 II (F16, F86) xDrive 30 d	N57 D30 A	183	12/2014 - 07/2019		4181/1
X6 II (F16, F86) xDrive 30 d	N57 D30 A	190	08/2014 - 07/2019		4181/1
X6 II (F16, F86) xDrive 30 d	N57 D30 A	204	08/2014 - 07/2019		4181/1
X6 III (G06, F96) M	S63 B44 B	441	12/2019 -		4379
X6 III (G06, F96) M Competition	S63 B44 B	460	12/2019 -		4379
X6 III (G06, F96) M50 i xDrive	N63 B44 D	390	08/2019 -		4379
X6 III (G06, F96) xDrive 30 d	B57 D30 A	155	08/2019 -		4379
X6 III (G06, F96) xDrive 30 d	B57 D30 A	183	08/2019 -		4379
X6 III (G06, F96) xDrive 30 d	B57 D30 A	195	08/2019 -		4379
X6 III (G06, F96) xDrive 30 d Mild-Hybrid	B57 D30 B, JA1	155	08/2020 -		4379
X6 III (G06, F96) xDrive 30 d Mild-Hybrid	B57 D30 B, JA1	183	08/2020 -		4379
X6 III (G06, F96) xDrive 30 d Mild-Hybrid	B57 D30 B, JA1	210	08/2020 -		4379
X6 III (G06, F96) xDrive 40 d Mild-Hybrid	B57 D30 B, JA1	250	05/2020 -		4379
X6 III (G06, F96) xDrive 40 i	B58 B30 C	250	08/2019 -		4379
X6 III (G06, F96) xDrive M 50 d	B57 D30 C	294	08/2019 -		4379
X7 (G07) xDrive 30 d	B57 D30 A	155	03/2019 -		4379
X7 (G07) xDrive 30 d	B57 D30 A	183	03/2019 -		4379
X7 (G07) xDrive 30 d	B57 D30 A	195	03/2019 -		4379
X7 (G07) xDrive 40 d Mild-Hybrid	B57 D30 B, JA1	155	03/2019 -		4379
X7 (G07) xDrive 40 d Mild-Hybrid	B57 D30 B, JA1	250	03/2019 -		4379
X7 (G07) xDrive 40 i	B58 B30 C	250	03/2019 -		4379
X7 (G07) xDrive M 50 d	B57 D30 C	294	03/2019 -		4379
X7 (G07) xDrive M 50 i	N63 B44 D	390	07/2019 -		4379
Z1	2.5	125	06/88 – 06/91	3609	
Z3 (E36)	1.8 i (M43 B18)	85	10/95 – 10/98	3563	
Z3 (E36)	1.9 i (M44 B19)	103	10/95 – 03/99	3563	
Z3 (E36)	2.8 i (M52 B28 TU)	141	04/97 – 06/00	3563	
Z3 (E36)	2.8 i (M52 B28)	141	04/97 – 06/00	3563	
Z3 (E36)	M 3.2	236	03/97 – 06/01	3564/1	3578
Z3 (E36)	M 3.2	239	06/01 – 01/03	3564/1	3578
Z3 (E36)	M 3.2	252	04/00 – 04/01	3564/1	3578
Z3 Coupe (E36)	M	236	02/98 – 06/01	3564/1	3578
Z3 Coupe (E36)	M	239	06/01 – 06/03	3564/1	3578
Z3 Coupe (E36)	M	252	08/00 – 06/03	3564/1	3578
Z4 (E85)	M	252	03/06 – 02/09	3564/1	3879
Z4 Coupe (E86)	M	252	03/06 – 01/09	3564/1	3879
Z4 II Roadster (E89) sDrive 35 i	N54 B30 A	225	02/2009 - 08/2016		4325
Z4 II Roadster (E89) sDrive 35 i	N54 B30 A	225	02/2009 - 08/2016		4325/1
Z4 II Roadster (E89) sDrive 35 is	N54 B30 A	250	03/2010 - 08/2016		4325
Z4 II Roadster (E89) sDrive 35 is	N54 B30 A	250	03/2010 - 08/2016		4325/1
Z8 (E52)	49	294	06/00 – 06/03		3879
BMW (BRILLIANCE)					
5 SERIES (E60)	520 i	127	05/04 – 12/06		3656
5 SERIES (E60)	520 Li	115	06/09 – 09/10	4180	4181
5 SERIES (E60)	523 i	130	07/03 – 12/07		3656
5 SERIES (E60)	523 Li	120	01/08 – 08/10	4180	4181
5 SERIES (E60)	523 Li	130	10/06 – 12/10		4181
5 SERIES (E60)	525 i	141	04/04 – 02/06	4180	4181
5 SERIES (E60)	525 Li	160	01/07 – 04/10	4180	4181
5 SERIES (E60)	530 i	170	10/03 – 06/05		3656
5 SERIES (E60)	530 Li	190	03/07 – 05/10	4180	4181
BUICK					
CENTURY	Sedan 2.2	82	10.1991 - 09.1996	3866	
CENTURY	Sedan 3.1	130	10.1993 - 09.1996	3866	
CENTURY	Sedan 3.1	130	10.1996 - 02.2005	3866	
CENTURY	Sedan 3.3	119	10.1986 - 12.1990	3866	
CENTURY	Sedan 3.8	94	10.1983 - 09.1986	3866	
CENTURY	Station wagon (4_35) 2.2	82	10.1991 - 09.1996	3866	
CENTURY	Station wagon (4_35) 2.2 Special	87	10.1991 - 12.1996	3866	
CENTURY	Station wagon (4_35) 2.8 Custom	82	09.1983 - 09.1986	3866	
CENTURY	Station wagon (4_35) 3.3	119	10.1986 - 09.1991	3866	
ELECTRA	3.0	81	10.1984 - 09.1985	3840	
ELECTRA	3.0	81	10.1984 - 09.1985	3866	
ELECTRA	3.8	103	10.1984 - 09.1986	3840	
ELECTRA	3.8	103	10.1984 - 09.1986	3866	
ELECTRA	3.8	112	10.1986 - 09.1989	3866	
ELECTRA	3.8	121	10.1986 - 09.1990	3866	
ELECTRA	3.8	123	10.1984 - 09.1990	3866	

MAKE & MODEL		KW	YEAR		
BUICK					
ELECTRA	3.8	127	10.1990 - 09.1991	3866	
ELECTRA	4.1	92	10.1981 - 09.1984	3840	
EXCELLE	1.5	68	04/03 -	3687	3894
EXCELLE	1.6	78	04/03 -	3687	3894
EXCELLE	1.8	88	06/06 -	3687	3894
EXCELLE	1.8	90	08/03 -	3687	3894
LESABRE	3.8	112	10.1986 - 09.1987	3866	
LESABRE	3.8	153	01.1999 -	3840	
ROADMASTER	Station wagon 5.0	127	10.1990 - 09.1992	3840	
BUICK (SGM)					
ENCORE	1.4 T	103	10/12 -	4008	
ENCORE	1.4 T	103	10/12 -	4014	
ENCORE	1.4 T All-wheel Drive	103	10/12 -	4008	
ENCORE	1.4 T All-wheel Drive	103	10/12 -	4014	
EXCELLE GT	1.6	89	01/10 – 12/15	4230	
EXCELLE GT	1.6	89	06/10 – 12/15	4014	
EXCELLE GT	1.6 T	135	06/10 – 12/15	4230	
EXCELLE GT	1.6 T	135	06/10 – 12/15	4014	
EXCELLE GT	1.8	108	06/10 – 12/15	4014	
EXCELLE XT	1.6	89	01/10 – 12/15	4014	
EXCELLE XT	1.6 T	135	01/10 – 12/15	4014	
EXCELLE XT	1.6 T	135	01/10 – 12/15	4230	
EXCELLE XT	1.8	108	01/10 – 12/12	4230	
EXCELLE XT	1.8	108	01/10 – 12/15	4014	
EXCELLE XT	1.8	108	06/10 – 12/15	4230	
BYD					
F3	1.5	78	09/07 – 12/10		3876
F3	1.6	74	09/05 – 12/13		3876
F3	1.8	90	05/07 – 12/08		3876
F3	DM 1.0	50	01/09 -		3876
F3R Hatchback	1.5	75	08/09 – 12/14		3876
F3R Hatchback	1.5	78	04/07 – 08/09		3876
F3R Hatchback	1.6	74	09/07 -		3876
CADILLAC					
ATS	2.0	201	02/13 -	4008	
ATS	2.0	203	02/13 -	4008	
ATS	2.0 AWD	203	02/13 -	4008	
ATS Coupe	2.0	203	02/13 -	4008	
ATS Coupe	2.0 AWD	203	02/13 -	4008	
BLS	1.9 D	110	04/06 -		3853/1
BLS	1.9 D	132	12/07 -		3853/1
BLS	1.9 D (Z 19 DTR)	132	12/07 -	4211	
BLS	1.9 D (Z19DTH)	110	04/06 -	4211	
BLS	1.9 TD 8V	88	04/06 -	4211	
BLS	2.0 T	129	04/06 -		3853/1
BLS	2.0 T	154	04/06 -		3853/1
BLS	2.0 T (LK9)	129	04/06 -	4211	
BLS	2.0 T (LK9)	154	04/06 -	4211	
BLS	2.0 T (B207L)	129	04/06 -	4211	
BLS	2.0 T (B207R)	154	04/06 -	4211	
BLS	2.0 T (Z 20 NER)	154	12/07 -	4211	
BLS	2.0 T (Z 20 NET)	129	12/07 -	4211	
BLS	2.0 T AWD	154	04/06 -		3853/1
BLS	2.0 T Flexpower	147	12/07 -		3853/1
BLS	2.0 T Flexpower (Z 20 LER)	147	12/07 -	4211	
BLS	2.8 T	188	04/06 -		3853/1
BLS	2.8 T	206	12/09 – 12/10		3853/1
BLS	2.8 T (B284L)	188	04/06 -	4211	
BLS	2.8 T (Z 28 NET)	188	12/07 -	4211	
BLS	2.8 T AWD	206	10/08 -		3853/1
BLS Wagon	1.9 D	110	12/07 -		3853/1
BLS Wagon	1.9 D	132	12/07 -		3853/1
BLS Wagon	2.0 T	129	12/07 -		3853/1
BLS Wagon	2.0 T	154	12/07 -		3853/1
BLS Wagon	2.0 T AWD	154	12/07 -		3853/1
BLS Wagon	2.0 T Flexpower	147	12/07 -		3853/1
BLS Wagon	2.8 T	188	12/07 -		3853/1
BLS Wagon	2.8 T	206	08/10 -		3853/1
BLS Wagon	2.8 T AWD	206	10/08 -		3853/1
CATERA Saloon	3.0	149	09/96 – 12/01	3717	
CATERA Saloon	3.0	149	09/96 – 12/01	3733	
DEVILLE	4.6	224	10/99 – 07/04	4021	
DEVILLE	4.6	205	10/99 – 12/05	4021	
ESCALADE	5.7 AWD	190	10.1998 - 10.2006	3868	

MAKE & MODEL   		KW	YEAR		
CADILLAC					
ESCALADE	5.7 AWD	190	10/98 – 10/06	4190	
ESCALADE	5.7 AWD	190	10.1998 - 10.2006	4022	
ESCALADE	6.0	257	06/01 – 09/06	4190	
ESCALADE	6.0	257	06.2001 - 09.2006	4022	
ESCALADE	6.0 AWD	257	10/00 – 09/06	4190	
ESCALADE	6.0 AWD	257	10.2000 - 09.2006	4022	
ESCALADE	6.2 AWD	301	10/06 – 12/14	4190	
ESCALADE	6.2 AWD	301	10.2006 - 12.2014	4022	
CARBODIES					
FX FAIRWAY	2.5 D	59	01/89 – 12/96	3423/1	
FX FAIRWAY	2.5 D	59	01/89 – 12/96	3662	
FX FAIRWAY	2.7 TD	63	01/87 -	3423/1	
FX FAIRWAY	2.7 TD	63	01/87 -	3662	
LIEBAO Closed Off-Road Vehicle	2.4 All-wheel Drive	92	09/04 -	3809	
LIEBAO Closed Off-Road Vehicle	3.0 All-wheel Drive	130	09/04 -		3887
LIEBAO MPV	3.0 All-wheel Drive	133	01/99 – 01/10		3887
PAJERO Closed Off-Road Vehicle	3.0 All-wheel Drive	123	12/04 – 12/06	3685	3887
CHERY					
A5	1.5	80	06/09 – 12/12		3911
A5	1.6 Hybrid	88	01/09 – 12/12		3911
A5	1.6 LPG	87	01/06 – 01/09		3911
A5	1.8	97	09/07 – 12/12		3911
A5	2.0	99	01/06 – 12/12		3911
V5 MPV	2.0	99	06/06 – 06/07		3911
V5 MPV	2.4	95	06/06 – 06/07		3911
CHEVROLET					
ASTRA Hatchback	1.8	81	09/98 – 12/11	3762	4040
ASTRA Hatchback	2.0	82	03/99 – 07/02	3762	4040
ASTRA Hatchback	2.0	85	08/02 – 12/11	3762	4040
ASTRA Hatchback	2.0	94	03/99 – 07/02	3762	4040
ASTRA Hatchback	2.0	100	08/02 – 12/11	3762	4040
ASTRA Hatchback	2.0 DTi	74	08/02 – 12/11	3762	4040
ASTRA Saloon	1.8	81	03/99 – 12/11	3762	4040
ASTRA Saloon	2.0 DTi GLS	74	08/02 – 12/11	3762	4040
ASTRA Saloon	2.0 GL	82	03/99 – 07/02	3762	4040
ASTRA Saloon	2.0 GL	85	08/02 – 12/11	3762	4040
ASTRA Saloon	2.0 GLS	94	03/99 – 07/02	3762	4040
ASTRA Saloon	2.0 GLS	100	08/02 – 12/11	3762	4040
ASTRO	Minibüs/Otobüs 4.3	112	04.1992 - 09.1994	3840	
ASTRO	Minibüs/Otobüs 4.3	142	10.1994 - 05.2005	3840	
ASTRO	Minibüs/Otobüs 4.3 AWD	112	04.1992 - 09.1994	3840	
ASTRO	Minibüs/Otobüs 4.3 AWD	142	10.1994 - 05.2005	3840	
ASTRO	Minibüs/Otobüs 4.3 Luxury	119	10.1986 - 09.1994	3840	
ASTRO	Minibüs/Otobüs 4.3 Luxury AWD	119	10.1989 - 09.1994	3840	
ASTRO	Panelvan/Van 4.3	103	10.1984 - 09.1985	3840	
ASTRO	Panelvan/Van 4.3	119	10.1984 - 09.1994	3840	
ASTRO	Panelvan/Van 4.3	127	10.1994 - 09.1995	3840	
ASTRO	Panelvan/Van 4.3	142	10.1994 - 05.2005	3840	
ASTRO	Panelvan/Van 4.3 AWD	107	10.1989 - 09.1994	3840	
ASTRO	Panelvan/Van 4.3 AWD	119	10.1989 - 09.1994	3840	
ASTRO	Panelvan/Van 4.3 AWD	142	10.1994 - 05.2005	3840	
ASTRO	Standard Cargo Van 4.3	142	09.1994 - 12.2005	3840	
ASTRO Minibüs/Otobüs	4.3	142	10.1994 - 05.2005	4022	
ASTRO Minibüs/Otobüs	4.3 AWD	112	04.1992 - 09.1994	3868	
ASTRO Minibüs/Otobüs	4.3 Luxury AWD	119	10.1989 - 09.1994	3868	
ASTRO Panelvan/Van	4.3	142	10.1994 - 05.2005	4022	
ASTRO Panelvan/Van	4.3 AWD	107	10.1989 - 09.1994	3868	
AVALANCHE	5.3	220	10.2000 - 09.2006	4022	
AVEO Hatchback (T200)	1.2	53	01/04 – 05/08	3687	
AVEO Hatchback (T200)	1.5	62	01/05 – 05/08	3951	
AVEO Hatchback (T250, T255)	1.2	53	10/08 -	3951	
AVEO Hatchback (T250, T255)	1.2	55	04/08 -	3951	
AVEO Hatchback (T250, T255)	1.2	56	01/07 -	3951	
AVEO Hatchback (T250, T255)	1.2	62	04/08 -	3951	
AVEO Hatchback (T250, T255)	1.2 LPG	62	04/08 -	3951	
AVEO Hatchback (T250, T255)	1.4	74	04/08 -	3951	
AVEO Hatchback (T300)	1.2	51	03/11 -	4230	
AVEO Hatchback (T300)	1.2	63	03/11 -	4230	
AVEO Hatchback (T300)	1.2 LPG	63	11/12 -	4230	
AVEO Hatchback (T300)	1.3 D	55	07/11 -	4230	
AVEO Hatchback (T300)	1.3 D	70	07/11 -	4230	
AVEO Hatchback (T300)	1.4	74	03/11 -	4230	
AVEO Hatchback (T300)	1.4	76	12/12 -	4230	
AVEO Hatchback (T300)	1.4 Turbo	103	08/13 -	4230	

MAKE & MODEL		KW	YEAR		
CHEVROLET					
AVEO Hatchback (T300)	1.6	85	03/11 -	4230	
AVEO Hatchback (T300)	1.6	89	12/12 -	4230	
AVEO Saloon (T200)	1.4	69	05/03 – 01/07	3951	
AVEO Saloon (T200)	1.6	77	09/03 – 12/08	3951	
AVEO Saloon (T250, T255)	1.2	53	03/06 – 12/07	3951	
AVEO Saloon (T250, T255)	1.2	55	01/08 -	3951	
AVEO Saloon (T250, T255)	1.2	62	01/08 -	3951	
AVEO Saloon (T250, T255)	1.2 LPG	62	01/09 -	3951	
AVEO Saloon (T250, T255)	1.4	69	03/06 – 12/07	3951	
AVEO Saloon (T250, T255)	1.4	74	09/08 -	3951	
AVEO Saloon (T250, T255)	1.5	62	05/05 -	3951	
AVEO Saloon (T250, T255)	1.6	76	05/05 -	3951	
AVEO Saloon (T300)	1.2	51	03/11 -	4230	
AVEO Saloon (T300)	1.2	63	03/11 -	4230	
AVEO Saloon (T300)	1.2 LPG	63	11/12 -	4230	
AVEO Saloon (T300)	1.3 D	55	07/11 -	4230	
AVEO Saloon (T300)	1.3 D	70	07/11 -	4230	
AVEO Saloon (T300)	1.4	74	07/11 -	4230	
AVEO Saloon (T300)	1.4	76	12/12 -	4230	
AVEO Saloon (T300)	1.6	85	03/11 -	4230	
AVEO Saloon (T300)	1.6	89	12/12 -	4230	
BLAZE	R S10 4.3	115	09.1988 - 08.1994	3840	
BLAZER S10	4.3 AWD	119	10.1994 - 09.1995	3868	
C1500 Pick-up	4.3	119	10.1991 - 09.1996	3868	
C1500 Pick-up	4.3	149	10.1996 - 09.1999	3868	
C1500 Pick-up	6.5 TDiC	135	10.1996 - 12.2000	3868	
C2500 Pick-up	6.5 TDiC	135	10.1996 - 12.2001	3868	
CAMARO	3.6	227	09/09 – 12/10	4149	
CAMARO	3.6	232	01/11 – 12/15	4149	
CAMARO	3.6	241	09/11 – 12/15	4149	
CAMARO	5.0	110	01.1970 - 12.1981	3840	
CAMARO Convertible	3.6	232	01/11 -	4149	
CAPRICE	3.8	82	10.1982 - 09.1984	3840	
CAPRICE	4.3	149	10.1991 - 09.1996	3840	
CAPRICE	5.0	110	10.1986 - 09.1988	3840	
CAPRICE	5.0	127	10.1990 - 09.1993	3840	
CAPRICE	5.0	170	10.1990 - 09.1993	3840	
CAPRICE	5.7	138	10.1990 - 09.1992	3840	
CAPRICE	5.7	194	10.1993 - 09.1996	3840	
CAPRICE	5.7 D	78	10.1979 - 12.1985	3840	
CAPRICE	5.7 LS	183	10.1993 - 09.1996	3840	
CAPRICE Station wagon	5.0	100	10.1987 - 09.1990	3840	
CAPRICE Station wagon	5.0	104	10.1986 - 09.1989	3840	
CAPRICE Station wagon	5.0	112	09.1980 - 12.1984	3840	
CAPRICE Station wagon	5.0	114	10.1982 - 09.1986	3840	
CAPRICE Station wagon	5.0	127	10.1990 - 09.1991	3840	
CAPRICE Station wagon	5.7	138	10.1991 - 09.1993	3840	
CAPRICE Station wagon	5.7	194	10.1993 - 09.1996	3840	
CAPRICE Station wagon	5.7	207	10.1993 - 09.1996	3840	
CAPTIVA (C100, C140)	2.0 D	93	10/06 -	3976	
CAPTIVA (C100, C140)	2.0 D	110	09/07 -	3976	
CAPTIVA (C100, C140)	2.0 D 4WD	93	10/06 -	3976	
CAPTIVA (C100, C140)	2.0 D 4WD	110	10/06 -	3976	
CAPTIVA (C100, C140)	2.2 D	120	03/11 -	3976	
CAPTIVA (C100, C140)	2.2 D 4WD	120	03/11 -	3976	
CAPTIVA (C100, C140)	2.2 D 4WD	135	03/11 -	3976	
CAPTIVA (C100, C140)	2.4	100	06/06 -	3976	
CAPTIVA (C100, C140)	2.4	103	12/06 -	3976	
CAPTIVA (C100, C140)	2.4	123	03/11 -	3976	
CAPTIVA (C100, C140)	2.4 4WD	100	06/06 -	3976	
CAPTIVA (C100, C140)	2.4 4WD	103	12/06 -	3976	
CAPTIVA (C100, C140)	2.4 4WD	123	03/11 -	3976	
CAPTIVA (C100, C140)	2.4 LPG	100	01/07 -	3976	
CAPTIVA (C100, C140)	2.4 LPG 4WD	100	01/07 -	3976	
CAPTIVA (C100, C140)	3.0 4WD	190	01/10 -	3976	
CAPTIVA (C100, C140)	3.2 4WD	169	06/06 -	3976	
COLORADO	2.9	139	10/06 -	3886	
COLORADO	2.9 AWD	139	10/06 -	3886	
COLORADO	3.5	164	05/05 – 09/06	3886	
COLORADO	3.5 AWD	164	05/05 – 09/06	3886	
COLORADO	3.7	181	10/06 -	3886	
COLORADO	3.7 AWD	181	10/06 -	3886	
COMBO	1.6	67	04/01 -	3623	
COMBO	1.7 D	44	04/01 -	3623	
CORSA Estate	1.6 GLS	68	08/97 – 07/02	3623	
CORSA Estate	1.6 GS	75	08/97 – 07/02	3623	

MAKE & MODEL		KW	YEAR		
CHEVROLET					
CORSA Estate	1.7 D	44	08/00 – 07/02	3623	
CRUZE	1.3	61	07/00 – 09/08	3928	
CRUZE	1.3 AWD	61	07/00 – 09/08	3928	
CRUZE	1.5	73	08/03 – 09/08	3928	
CRUZE	1.5 AWD	73	08/03 – 09/08	3928	
CRUZE (J300)	1.4	74	07/13 -	4230	
CRUZE (J300)	1.4	74	07/13 -	4008	
CRUZE (J300)	1.4	74	07/13 -	4014	
CRUZE (J300)	1.4	103	09/10 -	4230	
CRUZE (J300)	1.4	103	09/10 -	4008	
CRUZE (J300)	1.4	103	09/10 -	4014	
CRUZE (J300)	1.6	80	05/09 -	4230	
CRUZE (J300)	1.6	80	05/09 -	4008	
CRUZE (J300)	1.6	80	05/09 -	4014	
CRUZE (J300)	1.6	83	05/09 -	4230	
CRUZE (J300)	1.6	83	05/09 -	4008	
CRUZE (J300)	1.6	83	05/09 -	4014	
CRUZE (J300)	1.6	86	12/12 -	4230	
CRUZE (J300)	1.6	86	12/12 -	4008	
CRUZE (J300)	1.6	86	12/12 -	4014	
CRUZE (J300)	1.6	89	12/12 -	4230	
CRUZE (J300)	1.6	89	12/12 -	4008	
CRUZE (J300)	1.6	89	12/12 -	4014	
CRUZE (J300)	1.6	91	05/09 -	4230	
CRUZE (J300)	1.6	91	05/09 -	4008	
CRUZE (J300)	1.6	91	05/09 -	4014	
CRUZE (J300)	1.6 T	135	12/12 -	4008	
CRUZE (J300)	1.6 T	135	12/12 -	4014	
CRUZE (J300)	1.7 D	96	01/12 -	4230	
CRUZE (J300)	1.7 D	96	01/12 -	4008	
CRUZE (J300)	1.7 D	96	01/12 -	4014	
CRUZE (J300)	1.7 TD	81	11/13 -	4230	
CRUZE (J300)	1.7 TD	81	11/13 -	4008	
CRUZE (J300)	1.7 TD	81	11/13 -	4014	
CRUZE (J300)	1.8	103	11/09 -	4230	
CRUZE (J300)	1.8	103	11/09 -	4008	
CRUZE (J300)	1.8	103	11/09 -	4014	
CRUZE (J300)	1.8	104	05/09 -	4230	
CRUZE (J300)	1.8	104	05/09 -	4008	
CRUZE (J300)	1.8	104	05/09 -	4014	
CRUZE (J300)	1.8	108	12/12 -	4008	
CRUZE (J300)	1.8	108	12/12 -	4014	
CRUZE (J300)	1.8 LPG	104	06/11 -	4230	
CRUZE (J300)	1.8 LPG	104	06/11 -	4008	
CRUZE (J300)	1.8 LPG	104	06/11 -	4014	
CRUZE (J300)	2.0 CDI	90	05/09 -	4230	
CRUZE (J300)	2.0 CDI	90	05/09 -	4008	
CRUZE (J300)	2.0 CDI	90	05/09 -	4014	
CRUZE (J300)	2.0 CDI	92	05/09 -	4230	
CRUZE (J300)	2.0 CDI	92	05/09 -	4008	
CRUZE (J300)	2.0 CDI	92	05/09 -	4014	
CRUZE (J300)	2.0 CDI	110	05/09 -	4008	
CRUZE (J300)	2.0 CDI	110	05/09 -	4014	
CRUZE (J300)	2.0 CDI	120	08/10 -	4230	
CRUZE (J300)	2.0 CDI	120	08/10 -	4008	
CRUZE (J300)	2.0 CDI	120	08/10 -	4014	
CRUZE Hatchback (J305)	1.4	74	07/13 -	4230	
CRUZE Hatchback (J305)	1.4	74	07/13 -	4008	
CRUZE Hatchback (J305)	1.4	74	07/13 -	4014	
CRUZE Hatchback (J305)	1.4	103	06/12 -	4230	
CRUZE Hatchback (J305)	1.4	103	06/12 -	4008	
CRUZE Hatchback (J305)	1.4	103	06/12 -	4014	
CRUZE Hatchback (J305)	1.6	80	01/12 -	4230	
CRUZE Hatchback (J305)	1.6	80	01/12 -	4008	
CRUZE Hatchback (J305)	1.6	80	01/12 -	4014	
CRUZE Hatchback (J305)	1.6	86	12/12 -	4230	
CRUZE Hatchback (J305)	1.6	86	12/12 -	4008	
CRUZE Hatchback (J305)	1.6	86	12/12 -	4014	
CRUZE Hatchback (J305)	1.6	89	12/12 -	4230	
CRUZE Hatchback (J305)	1.6	89	12/12 -	4008	
CRUZE Hatchback (J305)	1.6	89	12/12 -	4014	
CRUZE Hatchback (J305)	1.6	91	06/11 -	4230	
CRUZE Hatchback (J305)	1.6	91	06/11 -	4008	
CRUZE Hatchback (J305)	1.6	91	06/11 -	4014	
CRUZE Hatchback (J305)	1.6 T	135	12/12 -	4008	
CRUZE Hatchback (J305)	1.6 T	135	12/12 -	4014	

MAKE & MODEL		KW	YEAR		
CHEVROLET					
CRUZE Hatchback (J305)	1.7 D	96	01/12 -	4230	
CRUZE Hatchback (J305)	1.7 D	96	01/12 -	4008	
CRUZE Hatchback (J305)	1.7 D	96	01/12 -	4014	
CRUZE Hatchback (J305)	1.7 TD	81	08/13 -	4230	
CRUZE Hatchback (J305)	1.7 TD	81	08/13 -	4008	
CRUZE Hatchback (J305)	1.7 TD	81	08/13 -	4014	
CRUZE Hatchback (J305)	1.8	103	10/11 -	4230	
CRUZE Hatchback (J305)	1.8	103	10/11 -	4008	
CRUZE Hatchback (J305)	1.8	103	10/11 -	4014	
CRUZE Hatchback (J305)	1.8	104	06/11 -	4230	
CRUZE Hatchback (J305)	1.8	104	06/11 -	4008	
CRUZE Hatchback (J305)	1.8	104	06/11 -	4014	
CRUZE Hatchback (J305)	1.8	108	12/12 -	4008	
CRUZE Hatchback (J305)	1.8	108	12/12 -	4014	
CRUZE Hatchback (J305)	1.8 LPG	104	06/11 -	4230	
CRUZE Hatchback (J305)	1.8 LPG	104	06/11 -	4008	
CRUZE Hatchback (J305)	1.8 LPG	104	06/11 -	4014	
CRUZE Hatchback (J305)	2.0 CDI	120	06/11 -	4230	
CRUZE Hatchback (J305)	2.0 CDI	120	06/11 -	4008	
CRUZE Hatchback (J305)	2.0 CDI	120	06/11 -	4014	
CRUZE Station Wagon (J308)	1.4	74	07/13 -	4230	
CRUZE Station Wagon (J308)	1.4	74	07/13 -	4008	
CRUZE Station Wagon (J308)	1.4	74	07/13 -	4014	
CRUZE Station Wagon (J308)	1.4	103	08/12 -	4230	
CRUZE Station Wagon (J308)	1.4	103	08/12 -	4008	
CRUZE Station Wagon (J308)	1.4	103	08/12 -	4014	
CRUZE Station Wagon (J308)	1.6	86	12/12 -	4230	
CRUZE Station Wagon (J308)	1.6	86	12/12 -	4008	
CRUZE Station Wagon (J308)	1.6	86	12/12 -	4014	
CRUZE Station Wagon (J308)	1.6	89	12/12 -	4230	
CRUZE Station Wagon (J308)	1.6	89	12/12 -	4008	
CRUZE Station Wagon (J308)	1.6	89	12/12 -	4014	
CRUZE Station Wagon (J308)	1.6	91	08/12 -	4230	
CRUZE Station Wagon (J308)	1.6	91	08/12 -	4008	
CRUZE Station Wagon (J308)	1.6	91	08/12 -	4014	
CRUZE Station Wagon (J308)	1.6 T	135	12/12 -	4008	
CRUZE Station Wagon (J308)	1.7 TD	81	11/13 -	4230	
CRUZE Station Wagon (J308)	1.7 TD	81	11/13 -	4008	
CRUZE Station Wagon (J308)	1.7 TD	81	11/13 -	4014	
CRUZE Station Wagon (J308)	1.7 TD	96	08/12 -	4230	
CRUZE Station Wagon (J308)	1.7 TD	96	08/12 -	4008	
CRUZE Station Wagon (J308)	1.7 TD	96	08/12 -	4014	
CRUZE Station Wagon (J308)	1.8	104	08/12 -	4230	
CRUZE Station Wagon (J308)	1.8	104	08/12 -	4008	
CRUZE Station Wagon (J308)	1.8	104	08/12 -	4014	
CRUZE Station Wagon (J308)	1.8	108	12/12 -	4008	
CRUZE Station Wagon (J308)	2.0 TD	120	08/12 -	4230	
CRUZE Station Wagon (J308)	2.0 TD	120	08/12 -	4008	
CRUZE Station Wagon (J308)	2.0 TD	120	08/12 -	4014	
EPICA (KL1_)	1.8	90	01/06 -	4073	
EPICA (KL1_)	2.0	85	08/06 -	4073	
EPICA (KL1_)	2.0	94	01/05 – 12/06	4073	
EXPRESS Minibus/Otobus	5.3 Flex-Fuel	216	01/07 -		4191
EXPRESS Panelvan/Van	5.3 AWD	220	01.2005 - 12.2010	4022	
HHR	2.4	125	10.2007 - 12.2011	4330	
IMPALA Sedan	5.7	212	10.1999 - 05.2005	3840	
Lacetti (J200) 2.0 D	LMN	89	01/2007 -	3687/1	
Lacetti (J200) 44287 16V	L14(85CUL4)	70	03/2005 - 03/2013	3687/1	
Lacetti (J200) 44287 LPG	L14(85CUL4)	69	01/2005 - 12/2012	3687/1	
Lacetti (J200) 44348	L44(96CUL4), LXT	80	03/2005 -	3687/1	
Lacetti (J200) 44409	LDA	67	03/2005 - 12/2009	3687/1	
Lacetti (J200) 44409	LDA	89	08/2005 - 12/2011	3687/1	
Lacetti (J200) 44409	LDA	90	03/2005 -	3687/1	
Lacetti Sedan (J200) 44287	L14(85CUL4)	69	03/2005 - 03/2013	3687/1	
Lacetti Sedan (J200) 44348	L44(96CUL4), LXT	80	03/2005 - 03/2013	3687/1	
Lacetti Sedan (J200) 44409	LDA	90	05/2003 - 03/2013	3687/1	
Lacetti SW (J200) 2.0 D	LMN	89	01/2007 -	3687/1	
Lacetti SW (J200) 44348	L44(96CUL4), LXT	80	03/2005 -	3687/1	
Lacetti SW (J200) 44409	LDA	89	08/2003 - 03/2013	3687/1	
Lacetti SW (J200) 44409	LDA	89	08/2005 -	3687/1	
Lanos Sedan 44348 16V	L44(96CUL4)	78	11/2005 - 12/2010	3687/1	
LUMINA APV MPV	3.1	90	08.1989 - 07.1996	3866	
MALIBU (V300)	2.4	123	01/12 -	4149	4150
MALIBU (V300)	2.4	125	01/12 -	4149	4150
MALIBU (V300)	2.4	137	01/12 -	4149	4150
MALIBU (V300)	3.0	196	04/13 -	4149	4150

MAKE & MODEL   		KW	YEAR		
CHEVROLET					
MATIZ / SPARK (M200, M250)	0.8 (F8CV)	38	03/05 -	4211	
MATIZ / SPARK (M200, M250)	0.8 LPG (F8CV)	38	03/05 -	4211	
MATIZ / SPARK (M200, M250)	1.0 (B10S)	47	03/05 -	4211	
MATIZ / SPARK (M200, M250)	1.0 (B10S1)	49	03/05 -	4211	
MATIZ / SPARK (M200, M250)	1.0 (LA2)	48	01/07 -	4211	
MATIZ / SPARK (M200, M250)	1.0 LPG (B10S1)	49	03/05 -	4211	
MATIZ / SPARK (M200, M250)	1.0 LPG (LA2)	44	01/07 -	4211	
Nubira Sedan 2.0	F 20 D2	88	01/2005 - 09/2007	3687/1	
Nubira Sedan 2.0 D	LMN	89	01/2005 - 12/2011	3687/1	
Nubira Sedan 44287	L14(85CUL4)	69	01/2005 - 12/2007	3687/1	
Nubira Sedan 44287	L14(85CUL4)	70	01/2006 - 12/2008	3687/1	
Nubira Sedan 44348	L44(96CUL4), LXT	80	03/2005 - 12/2011	3687/1	
Nubira Sedan 44409	LDA	89	01/2006 - 09/2007	3687/1	
Nubira Sedan 44409	LDA	90	03/2005 - 12/2009	3687/1	
Nubira SW 2.0	-	88	01/2005 - 09/2007	3687/1	
Nubira SW 2.0 D	LMN	89	01/2007 - 12/2011	3687/1	
Nubira SW 44348	L44(96CUL4), LXT	80	03/2005 - 12/2011	3687/1	
Nubira SW 44409	LDA	89	08/2005 - 12/2011	3687/1	
Nubira SW 44409	LDA	90	03/2005 - 12/2009	3687/1	
OPTRA			08 -	4252	
Optra II (1J_) 2.0	L34(122CUL4)	97	08/2003 - 12/2008	3687/1	
Optra II (1J_) 44348	L44(96CUL4), LXT	80	08/2003 - 12/2008	3687/1	
Optra II (1J_) 44409	LDA	90	08/2003 - 12/2008	3687/1	
Optra II SW 44348	L44(96CUL4), LXT	80	06/2006 - 12/2008	3687/1	
REZZO	1.6	79	08/05 -	3687	
REZZO	2.0	89	03/05 -	3687	
REZZO	2.0	90	08/05 -	3687	
SILVERADO 2500	6.0 AWD	224	10.1999 -		4022
SPARK	0.8	37	05/05 -		3744
SPARK	0.8	38	09/00 – 12/04		3744
SPARK	1.0	47	11/02 – 12/04		3744
SPARK	1.0 SX	44	06/09 -		3744
SPARK	1.0 SX	46	05/05 -		3744
SPARK	1.0 SX	49	05/05 -		3744
Spark II (M300) 1.0	B10D1	48	07/2010 -	4337	
Spark II (M300) 1.0	LMT	50	03/2010 -	4337	
Spark II (M300) 1.0 LPG	LMT	48	07/2010 -	4337	
Spark II (M300) 1.0 LPG	LMT	50	03/2010 -	4337	
Spark II (M300) 44228	LLO	64	01/2012 -	4337	
Spark II (M300) 44228	LMU	60	03/2010 -	4337	
Spark II (M300) 44228 LPG	LMU	60	03/2010 -	4337	
Spark II (M300) EV	-	105	09/2013 - 12/2016	4337	
Spark III (M400) 44287	LV7	72	11/2015 -	4337	
Spark III (M400) 44287	LV7	73	11/2015 -	4337	
Spark III (M400) 44287	LV7	74	11/2015 -	4337	
SSR Cabrio	5.3	224	09.2002 - 12.2004		4219
SUBURBAN	6.0 AWD	239	10.2002 - 06.2006	4022	
SUBURBAN	6.0 AWD	239	10.2002 - 06.2006		4022
SUBURBAN 2500 SUV	6.0 4WD	239	09.2000 - 12.2004		4022
TAHOE (B2W)	4.8 V8	205	12.1999 - 12.2006	4022	
TAHOE (B2W)	4.8 VB	206	12/99 – 12/06		4187
TAHOE (B2W)	5.3	201	05.2000 - 09.2002	4022	
TAHOE (B2W)	5.3	213	09.1999 - 12.2006	4022	
TAHOE (B2W)	5.3	220	09.2003 - 12.2006	4022	
TAHOE (B2W)	5.3 AWD	213	10.2002 - 12.2006	4022	
TAHOE (B2W)	5.3 AWD	220	09.2003 - 12.2006	4022	
TAHOE (B2W)	5.3 V8 AWD	201	12.1999 - 12.2006	4022	
TAHOE (B2W)	5.3 va AWD	201	12/99 – 12/06		4187
TAHOE (B2W)	6.0 V8	224	12.1999 - 12.2006	4022	
TAHOE (B2W)	6.0 va	224	12/99 – 12/06		4187
TAHOE (GMT400)	5.7 AWD	184	10.1995 - 09.1996	3868	
TAHOE (GMT400)	5.7 AWD	147	10.1994 - 09.1995	3868	
TAHOE (GMT400)	6.5 TDiC	135	10.1994 - 09.1996	3868	
TAHOE (GMT400)	6.5 TDiC AWD	135	10.1994 - 09.1996	3868	
TRAILBLAZER (KC_)	4.2 AWD	201	09.2001 - 09.2008	4221	4219
TRAILBLAZER (KC_)	4.2 AWD	205	09.2002 - 12.2009		4219
TRAILBLAZER (KC_)	4.2 AWD	217	08.2005 - 09.2008	4221	4219
TRAX	1.4	103	12/12 -	4008	
TRAX	1.4	103	12/12 -	4014	
TRAX	1.4 AWD	103	12/12 -	4008	
TRAX	1.4 AWD	103	12/12 -	4014	
TRAX	1.4 LPG	103	04/13 -	4008	
TRAX	1.4 LPG	103	04/13 -	4014	
TRAX	1.6	85	12/12 -	4008	
TRAX	1.6	85	12/12 -	4014	
TRAX	1.7 TD	96	12/12 -	4008	

MAKE & MODEL		KW	YEAR		
CHEVROLET					
TRAX	1.7 TD	96	12/12 -	4014	
TRAX	1.7 TD AWD	96	12/12 -	4008	
TRAX	1.7 TD AWD	96	12/12 -	4014	
TRAX	1.8	103	03/13 -	4008	
TRAX	1.8	103	03/13 -	4014	
VECTRA	2.0	81	03/96 – 12/05	3470	
VECTRA	2.0	81	03/96 – 12/05	3505	
VECTRA	2.0	81	03/96 – 12/05	3615	
VECTRA	2.0	81	03/96 – 12/05	3665	
VECTRA	2.0	81	03/96 – 12/05	3717	
VECTRA	2.0	100	03/96 – 04/98	3687	
VECTRA	2.2	102	05/98 – 12/05	3665	
VECTRA	2.2	102	05/98 – 12/05	3717	
VECTRA	2.2	108	04/02 – 04/04		3853/1
VECTRA	2.2	114	01/05 – 07/06		3853/1
VECTRA	2.8	184	10/06 -		3853/1
VECTRA	2.8	188	11/05 – 09/06		3853/1
VIVA	1.8	90	09/03 – 03/08	4042	4040
VIVA	1.8	92	09/03 – 03/08	4042	4040
VIVANT	1.6	77	01/05 -	3687	
VIVANT	1.6	78	08/01 -	3687	
VIVANT	1.8	72	05/00 -	3687	
VIVANT	2.0	89	08/00 -	3687	
VIVANT	2.0 CX	89	01/05 -	3687	
VOLT	EV 150	111	11/11 -	4008	
VOLT	EV 150	111	11/11 -	4014	
ZAFIRA	2.2	110	07/05 -	4042	
ZAFIRA (F75)	1.8	92	07/00 – 06/05	4042	4040
ZAFIRA (F75)	2.0	85	04/01 – 07/04	4042	4040
ZAFIRA (F75)	2.0	89	08/04 – 12/06	4042	4040
ZAFIRA (F75)	2.0	100	04/01 – 07/12	4042	4040
EPICA (KL1_)	2.0	96	08/06 -	4073	
EPICA (KL1_)	2.0	98	01/05 – 12/06	4073	
EPICA (KL1_)	2.0	105	06/06 -	4073	
EPICA (KL1_)	2.0 D	110	01/07 -	4073	
EPICA (KL1_)	2.5	115	06/06 -	4073	
EQUINOX	3.4	138	04/03 – 09/09	3976	
EQUINOX	3.4 AWD	138	04/03 – 09/09	3976	
KALOS	1.2	53	03/05 -	3951	
KALOS	1.4	61	03/05 -	3951	
KALOS	1.4 16V	69	03/05 -	3951	
KALOS	1.6	77	06/06 – 05/08	3951	
KALOS Saloon	1.2	53	03/05 -	3951	
KALOS Saloon	1.4	61	03/05 -	3951	
KALOS Saloon	1.4 16V	69	03/05 -	3951	
LACETTI (J200)	1.4 16V	67	03/05 – 12/09		3894
LACETTI (J200)	1.4 16V	70	03/05 -	3687	
LACETTI (J200)	1.6	80	03/05 -	3687	
LACETTI (J200)	1.6	90	03/05 -	3687	
LACETTI (J200)	1.8	67	03/05 – 12/09	3687	
LACETTI (J200)	1.8	70	03/05 -		3894
LACETTI (J200)	1.8	80	03/05 -		3894
LACETTI (J200)	1.8	89	08/05 -	3687	
LACETTI (J200)	1.8	90	03/05 -		3894
LACETTI (J200)	2.0 D	89	08/05 -		3894
LACETTI Estate (J200)	1.4	70	03/05 -	3687	3894
LACETTI Estate (J200)	1.6	80	03/05 -	3687	3894
LACETTI Estate (J200)	1.6 LPG	80	06/09 – 12/11	3687	
LACETTI Estate (J200)	1.8	89	08/05 -	3687	3894
LACETTI Estate (J200)	2.0 D	89	01/07 -	3687	
LACETTI Saloon	1.4	69	03/05 – 03/13	3687	3894
LACETTI Saloon	1.6	80	03/05 – 03/13	3687	3894
LANOS Saloon	1.4	55	11/05 -	3623	
LANOS Saloon	1.5	63	11/05 -	3623	
LANOS Saloon	1.6 16V	78	11/05 -	3470	
LANOS Saloon	1.6 16V	78	11/05 -	3505	
LANOS Saloon	1.6 16V	78	11/05 -	3615	
MALIBU (V300)	1.6 T	135	12/12 -	4149	4150
MALIBU (V300)	2.0	104	02/12 -	4149	4150
MALIBU (V300)	2.0	108	12/12 -	4149	4150
MALIBU (V300)	2.0 D	118	04/12 -	4149	4150
MALIBU (V300)	2.0 LPG	101	02/12 -	4149	4150
MATIZ (M200, M250)	0.8	38	03/05 -		3744
MATIZ (M200, M250)	0.8 LPG	38	03/05 -		3744
MATIZ (M200, M250)	1.0	47	03/05 -		3744
MATIZ (M200, M250)	1.0	48	01/07 -		3744

MAKE & MODEL   		KW	YEAR		
CHEVROLET					
MATIZ (M200, M250)	1.0	49	03/05 -		3744
MATIZ (M200, M250)	1.0 LPG	49	03/05 -		3744
NUBIRA Estate	1.5	78	01/05 -	3687	3894
NUBIRA Estate	1.6	80	03/05 -	3687	3894
NUBIRA Estate	1.8	89	08/05 -	3687	3894
NUBIRA Estate	1.8	90	03/05 -	3687	3894
NUBIRA Estate	2.0	88	01/05 -	3687	3894
NUBIRA Estate	2.0 D	89	01/07 -	3687	
NUBIRA Saloon	1.4	69	01/05 -	3687	3894
NUBIRA Saloon	1.4	70	01/06 -	3687	3894
NUBIRA Saloon	1.5	78	01/05 -	3687	3894
NUBIRA Saloon	1.6	80	03/05 -	3687	3894
NUBIRA Saloon	1.8	89	01/06 -	3687	3894
NUBIRA Saloon	1.8	90	03/05 -	3687	3894
NUBIRA Saloon	2.0	88	01/05 -	3687	3894
NUBIRA Saloon	2.0 D	89	01/05 -	3687	3894
OPTRA (1J_)	1.6	78	08/03 – 12/08	3687	3894
OPTRA (1J_)	1.6	80	08/03 – 12/08	3687	3894
OPTRA (1J_)	1.8	90	08/03 – 12/08	3687	3894
OPTRA (1J_)	2.0	97	08/03 – 12/08	3687	3894
OPTRA Estate	1.6	80	06/06 – 12/08	3687	3894
OPTRA Hatchback	1.8 SRV	90	06/06 -	3687	3894
ORLANDO (J309)	1.4	103	06/12 -	4008	
ORLANDO (J309)	1.4	103	06/12 -	4014	
ORLANDO (J309)	1.8	104	02/11 -	4008	
ORLANDO (J309)	1.8	104	02/11 -	4014	
ORLANDO (J309)	1.8 LPG	104	06/11 -	4008	
ORLANDO (J309)	1.8 LPG	104	06/11 -	4014	
ORLANDO (J309)	2.0 D	96	02/11 -	4008	
ORLANDO (J309)	2.0 D	96	02/11 -	4014	
ORLANDO (J309)	2.0 D	120	02/11 -	4008	
ORLANDO (J309)	2.0 D	120	02/11 -	4014	
ORLANDO (J309)	2.0 LPG	103	02/12 -	4008	
ORLANDO (J309)	2.0 LPG	103	02/12 -	4014	
REZZO	1.6	77	03/05 -	3687	
CHEVROLET (SGM)					
AVEO (T250)	1.2	64	03/08 – 05/10	3951	
AVEO (T250)	1.6	78	03/08 – 05/10	3951	
AVEO Hatchback (T300)	1.4	76	05/11 -	4230	
AVEO Hatchback (T300)	1.6	89	05/11 -	4230	
AVEO Saloon (T300)	1.4	76	05/11 -	4230	
AVEO Saloon (T300)	1.6	89	05/11 -	4230	
CAPTIVA Closed Off-Road Vehicle	2.4 4x4	105	08/07 -	3976	
CAPTIVA Closed Off-Road Vehicle	3.2 4x4	169	01/09 -	3976	
CRUZE Saloon	1.6	89	04/09 – 12/13	4014	
CRUZE Saloon	1.6	89	04/09 – 12/13	4230	
CRUZE Saloon	1.6 T	135	11/10 – 12/13	4014	
CRUZE Saloon	1.6 T	135	11/10 – 12/13	4230	
CRUZE Saloon	1.8	108	04/09 – 12/11	4014	
CRUZE Saloon	1.8	108	04/09 – 12/11	4230	
CHEVROLET EXPRESS					
Minibus/Otobus 5.3 Flex-Fuel		216	01/07 -		4023
CHRYSLER					
300 C	3.0 CRD	176	09/11 -	4006	4018
300 C	3.0 CRD	176	09/11 -	4198	
300 C	3.6	210	09/11 -	4006	4018
300 C	3.6	215	07/11 -	4006	4018
300 C (LX)	2.7	130	01/07 – 11/12	4006	4018
300 C (LX)	2.7	130	01/07 – 11/12	4198	
300 C (LX)	2.7	142	09/04 – 11/12	4006	4018
300 C (LX)	2.7	142	09/04 – 11/12	4198	
300 C (LX)	3.0 CRD	160	09/05 – 11/12	4006	4018
300 C (LX)	3.0 CRD	160	09/05 – 11/12	4198	
300 C (LX)	3.0 V6 CRD	155	11/10 – 11/12	4006	4018
300 C (LX)	3.0 V6 CRD	155	11/10 – 11/12	4198	
300 C (LX)	3.5	183	09/04 – 11/12	4006	4018
300 C (LX)	3.5	183	09/04 – 11/12	4198	
300 C (LX)	3.5	186	01/05 – 12/10	4006	4018
300 C (LX)	3.5	186	01/05 – 12/10	4198	
300 C (LX)	5.7	250	09/04 – 12/08	4198	4018
300 C Touring (LX)	2.7	130	01/07 – 12/10	4006	4018
300 C Touring (LX)	2.7	130	01/07 – 12/10	4198	
300 C Touring (LX)	2.7	142	09/04 – 12/10	4006	4018
300 C Touring (LX)	2.7	142	09/04 – 12/10	4198	

MAKE & MODEL   		KW	YEAR		
CHRYSLER					
300 C Touring (LX)	3.0 CRD	160	09/05 – 12/10	4006	4018
300 C Touring (LX)	3.0 CRD	160	09/05 – 12/10	4198	
300 C Touring (LX)	3.5	183	09/04 – 12/10	4006	4018
300 C Touring (LX)	3.5	183	09/04 – 12/10	4198	
300 C Touring (LX)	3.5 AWD	183	09/04 – 12/10	4006	4018
300 C Touring (LX)	3.5 AWD	183	09/04 – 12/10	4198	
300 C Touring (LX)	5.7	250	09/04 – 12/10	4198	4018
300 C Touring (LX)	5.7 AWD	250	04/05 – 12/10	4198	4018
300 M (LR)	2.7 V6 24V	149	11/98 – 08/00	4197	
300 M (LR)	2.7 V6 24V	150	08/00 – 09/04	4197	
300 M (LR)	3.5 V6 24V	185	08/00 – 09/04	4197	
300 M (LR)	3.5 V6 24V	187	07/98 – 08/00	4197	
ASPEN (HG)	4.7	172	09.2006 - 12.2007	4328	
ASPEN (HG)	4.7	172	09.2006 - 12.2007		4329
CARAVAN	3.8	142	10/07 -	4005	
CIRRUS	2.0	104	09/00 – 04/07		4108
CIRRUS	2.4	112	09/00 – 04/07		4108
CONCORDE	2.7 LX	149	10/97 – 09/03	4197	
CONCORDE	3.3 LX	120	10/92 – 09/97	4197	
CONCORDE	3.5 LX	174	10/97 – 09/03	4197	
CONCORDE	3.5 LX Supercharged	186	10/97 – 09/03	4197	
CROSSFIRE	3.2	160	07/03 – 12/08	3863	3676
CROSSFIRE	SRT-6	246	09/04 – 12/07		3581
CROSSFIRE Roadster	3.2	160	05/04 – 12/08	3863	3676
CROSSFIRE Roadster	SRT-6	246	09/04 – 12/06		3581
DAYTONA Coupe	2.2 i Turbo	130	09/86 – 12/90	3867	
DAYTONA Coupe	2.5 i Turbo	110	01/89 – 10/92	3867	
DELTA	2.0 D Multijet	121	08/11 -	4121	
Delta 2.0 D Multijet	198 A5.000	121	08/2011 -	4121/1	
GALANT IV	GD		04/76 -	3709	
GALANT III (GC)	GC		07/74 -	3709	
GRAND VOYAGER V (RT)	2.8 CRD	120	10/07 -	4005	
GRAND VOYAGER V (RT)	2.8 CRD	132	09/12 -	4005	
GRAND VOYAGER V (RT)	3.3	125	01/08 -	4005	
GRAND VOYAGER V (RT)	3.6	208	02/11 -	4005	
LANCER (LA)	LC, LB, LA All models		09/74 -	3709	
LE BARON Convertible	2.2 i Turbo	109	09/86 – 12/90	3867	
LE BARON Convertible	2.2 i Turbo	130	09/86 – 12/90	3867	
LE BARON Convertible	2.5 i	75	09/86 – 12/93	3867	
LE BARON Convertible	2.5 i Turbo	112	01/89 – 12/93	3867	
LE BARON Convertible	3.0 i V6	105	01/90 – 12/96	3867	
LE BARON Coupe	3.0 i V6	105	01/90 – 12/93	3867	
LE BARON Saloon	2.2 i	69	09/89 – 12/94	3867	
LE BARON Saloon	2.2 i Turbo	130	09/89 – 01/91	3867	
LE BARON Saloon	2.5 i	75	01/89 – 12/94	3867	
LE BARON Saloon	2.5 i Turbo	112	01/89 – 12/94	3867	4108
LE BARON Saloon	3.0 i V6	105	01/90 – 12/94	3867	4108
NEON (PL)	1.8 16V	85	09/97 – 08/99	4197	4108
NEON (PL)	2.0 16V	98	05/94 – 08/99	4197	4108
NEON (PL)	2.0 16V	107	06/94 – 08/99	4197	3893
NEON (PL)	2.0 16V	109	04/96 – 08/99	4197	4106
NEON II	1.6	85	11/01 – 12/06	4197	3893
NEON II	1.8	91	01/00 – 12/01	4197	4106
NEON II	2.0 16V	97	10/02 – 12/06	4197	3893
NEON II	2.0 16V	98	08/99 – 12/06	4197	4106
NEON II	2.0 16V R/T	110	10/01 – 12/06	4197	3893
SEBRING (JS)	2.4 VVT	125	07/07 – 12/10	3955	
VISION	3.5 TSi	155	09/93 – 12/97	4197	
VOYAGER I (AS)	3.0	101	10/87 – 09/90	3867	
VOYAGER I (AS)	3.3	112	10/89 – 09/90	3867	
VOYAGER II (ES)	2.5 i	72	01/91 – 09/95	3867	
VOYAGER II (ES)	2.5 i	74	08/90 – 09/95	3867	
VOYAGER II (ES)	2.5 TD	85	01/92 – 09/95	3867	
VOYAGER II (ES)	2.5 TD	87	01/92 – 09/95	3867	
VOYAGER II (ES)	3.0	104	10/90 – 09/95	3867	
VOYAGER II (ES)	3.0 i	108	01/91 – 09/95	3867	
VOYAGER II (ES)	3.3 i	110	08/90 – 09/95	3867	
VOYAGER II (ES)	3.3 i	120	08/90 – 09/95	3867	
VOYAGER II (ES)	3.3 i AWD	110	08/90 – 09/95	3867	
VOYAGER II (ES)	3.3 i AWD	120	08/90 – 09/95	3867	
VOYAGER III (GS)	2.0 i	98	01/95 – 03/01	4197	
VOYAGER III (GS)	2.4 AWD	111	02/97 – 03/01	4197	
VOYAGER III (GS)	2.4 i	111	01/95 – 03/01	4197	
VOYAGER III (GS)	2.5 TD	85	01/95 – 03/01	4197	
VOYAGER III (GS)	2.5 TDiC AWD	85	10/95 – 03/01	4197	
VOYAGER III (GS)	3.0	112	01/95 – 03/01	4197	

MAKE & MODEL		KW	YEAR		
CHRYSLER					
VOYAGER III (GS)	3.3 i	116	01/95 – 03/01	4197	
VOYAGER III (GS)	3.8 i AWD	122	01/95 – 03/01	4197	
VOYAGER III (GS)	3.8 i AWD	131	01/95 – 03/01	4197	
VOYAGER IV (RG, RS)	2.5 CRD	105	02/00 – 12/08	4012	
VOYAGER IV (RG, RS)	3.3 AWD	128	02/00 – 12/08	4012	
VOYAGER IV (RG, RS)	3.8	160	02/00 – 12/08	4012	
VOYAGER IV (RG, RS)	3.8 AWD	160	02/00 – 12/08	4012	
NEW YORKER	3.3	110	10/89 – 12/93	3867	3893
NEW YORKER	3.5 i 24V	155	04/93 – 09/98	4197	4106
SARATOGA	2.5	72	10/89 – 09/91	3867	4106
SARATOGA	3.0	105	09/89 – 12/95	3867	3893
SCORPION	GE,GH,GJ,GK,GL		01/78 -	3376	4106
SEBRING (JR)	2.0	104	04/01 – 06/07		4108
SEBRING (JR)	2.4	105	04/01 – 06/07		4108
SEBRING (JR)	2.4	112	04/01 – 06/07		4108
SEBRING (JR)	2.7 V6 24V	149	04/01 – 06/07		3893
SEBRING (JS)	2.0 CRD	103	07/07 – 12/10	3955	3893
SEBRING (JS)	2.0 CRD	103	07/07 – 12/10		3893
SEBRING (JS)	2.0 VVT	115	07/07 – 12/10	3955	3893
SEBRING (JS)	2.0 VVT	115	07/07 – 12/10		4108
SEBRING (JS)	2.7 VVT	137	07/07 – 09/10	3955	
SEBRING (JS)	2.7 VVT	141	09/06 – 12/10	3955	
SEBRING (JS)	3.5 AWD	175	11/07 – 12/10	3955	
SEBRING Convertible (JS)	2.0 CRD	103	07/07 – 12/10	3955	
SEBRING Convertible (JS)	2.4 VVT	125	07/07 – 12/10	3955	
SEBRING Convertible (JS)	2.7	137	07/07 – 12/10	3955	
SEBRING Convertible (JS)	2.7 VVT	141	07/07 – 12/10	3955	
SEBRING Coupe (FJ)	2.5 LE	120	05/95 – 12/96	3622	
SIGMA (GE)	GE All models		10/77 -	3709	
CHRYSLER (BBDC)					
300C	2.7	152	10/06 – 12/08		4018
300C	2.7	189	10/06 – 12/08	4198	
300C	3.5	152	10/06 – 12/08	4198	
300C	3.5	252	10/06 – 01/12		4018
300C	5.7	189	10/06 – 12/08		4018
300C	5.7	252	10/06 – 01/12	4198	
SEBRING	2.0	115	03/08 – 12/08	3982	
SEBRING	2.4	127	03/08 – 12/08	3982	
SEBRING	2.7	142	03/08 – 12/08	3982	
CITROEN					
(DF-PSA) C2 (T11) 44348	TU5JP4	78	10/2006 - 12/2014	3820/1	
(DF-PSA) C2 Cross 44348	N6A 10XA3A PSA	78	10/2012 - 12/2014	3820/1	
(DF-PSA) C-Quatre 44348	N6A	78	10/2008 - 12/2013	3820/1	
Ami II (9A_) Electric	Z2CA	6	04/2020 -	3820/1	
Ax (ZA-_) 14	K2A	61	01/1988 - 12/1992	3489	
Ax (ZA-_) 14	K2A, K2B	62	01/1988 - 12/1992	3489	
Ax (ZA-_) 14 (ZA)	KDX (TU3M/Z) (03.89-.), KDY (TU3FM), KDY (TU3M), K	55	04/1987 - 04/1997	3489	
Ax (ZA-_) 14 4x4	KDX (TU3M/Z) (08.91-.), KDY (TU3FM), KDY (TU3M), K	55	08/1991 - 12/1996	3489	
Ax (ZA-_) 14 D	K9A (TUD3) (09.88-.)	38	09/1988 - 06/1992	3489	
Ax (ZA-_) 14 D	K9Y (TUD3Y) (08.91-.)	37	08/1991 - 12/1997	3489	
Ax (ZA-_) 14 GT	KDZ (TU3M/Z)	59	01/1989 - 12/1991	3489	
Ax (ZA-_) 15 D	VJY (TUD5)	40	08/1994 - 12/1997	3489	
Ax (ZA-_) 15 D	VJY (TUD5), VJZ (TUD5)	43	08/1994 - 12/1997	3489	
Ax (ZA-_) 44287	K2A/ D	55	08/1991 - 04/1997	3489	
Ax (ZA-_) 44287 4x4 (ZA)	K2A	62	09/1986 - 07/1992	3489	
Ax (ZA-_) 44287 D 4x4	K9A (TUD3)	39	06/1991 - 07/1992	3489	
Ax (ZA-_) 44287 GTi	KFY (TU3FJ2) (08.91-.)	66	08/1991 - 12/1996	3489	
Ax (ZA-_) 44287 GTi	KFZ (TU3FJ2) (06.91-.)	69	06/1991 - 12/1996	3489	
Ax (ZA-_) 44287 GTi	KFZ (TU3FJ2) (06.91-.)	74	06/1991 - 12/1992	3489	
Berlingo I / First MPV/ Space wagon (MF, GKJ, GFK) 2.0 HDI 90 (MFRHY)	RHY (DW10TD)	66	12/1999 - 10/2005	3820/1	
Berlingo I / First MPV/ Space wagon (MF, GKJ, GFK) 2.0 HDi 4x4 (MFRHY)	RHY (DW10TD)	66	11/2002 - 10/2005	3820/1	
Berlingo I / First MPV/ Space wagon (MF, GKJ, GFK) 44287	KFV(TU3JP)	54	05/2005 - 05/2008	3820/1	
Berlingo I / First MPV/ Space wagon (MF, GKJ, GFK) 44287	KFW (TU3JP)	53	11/2002 - 10/2005	3820/1	
Berlingo I / First MPV/ Space wagon (MF, GKJ, GFK) 44287 bivalent	KFW (TU3JP)	48	11/2002 - 12/2011	3820/1	
Berlingo I / First MPV/ Space wagon (MF, GKJ, GFK) 44287 i (MFKFX, MFKFW, GJKFWB, GJKFWC, GFKFWC)	KFW (TU3JP), KFX (TU3JP)	55	07/1996 - 12/2011	3820/1	
Berlingo I / First MPV/ Space wagon (MF, GKJ, GFK) 44287 i bivalent (MFKFW)	KFW (TU3JP)	55	04/2003 - 10/2008	3820/1	
Berlingo I / First MPV/ Space wagon (MF, GKJ, GFK) 44348 16V (MFNFU)	NFU (TU5JP4)	80	10/2000 - 12/2011	3820/1	
Berlingo I / First MPV/ Space wagon (MF, GKJ, GFK) 44348 HDI 75 (MF9HW, GJ9HWC, GF9HWC, GN9HWC)	9HW (DV6BTED4), DV6B	55	07/2005 - 12/2011	3820/1	
Berlingo I / First MPV/ Space wagon (MF, GKJ, GFK) 44348 HDI 90 (MF9HX)	9HX (DV6ATED4)	66	07/2005 - 05/2008	3820/1	
Berlingo I / First MPV/ Space wagon (MF, GKJ, GFK) 44348 HDi	9HZ(DV6TED4)	80	08/2005 - 05/2008	3820/1	
Berlingo I / First MPV/ Space wagon (MF, GKJ, GFK) 44409 D (MFA9A)	A9A (XUD7)	43	07/1998 - 10/2002	3820/1	
Berlingo I / First MPV/ Space wagon (MF, GKJ, GFK) 44440 D (MFDJY)	D9B (XUD9A/L), DJY (XUD9A)	50	07/1996 - 12/2003	3820/1	
Berlingo I / First MPV/ Space wagon (MF, GKJ, GFK) 44440 D (MFDJY)	DJY (XUD9A)	51	07/1996 - 10/1999	3820/1	
Berlingo I / First MPV/ Space wagon (MF, GKJ, GFK) 44440 D (MFWJZ)	WJY (DW8B), WJZ (DW8)	51	07/1998 - 10/2005	3820/1	

BESER®

MAKE & MODEL		KW	YEAR		
CITROEN					
Berlingo I / First MPV/ Space wagon (MF, GKJ, GFK) 44440 D 4WD (MFWJZ)	WJY (DW8B), WJZ (DW8)	51	07/1998 - 10/2005	3820/1	
Berlingo I / First MPV/ Space wagon (MF, GKJ, GFK) Electric	-	28	01/1998 - 12/2005	3820/1	
Berlingo I / First MPV/ Space wagon (MF, GKJ, GFK) electrique	-	16	01/2000 - 10/2002	3820/1	
Berlingo II (B9) 44348 BlueHDi 100	BHY (DV6FD)	73	12/2014 -	3820/1	
Berlingo II (B9) 44348 BlueHDi 120	BHZ (DV6FC)	88	12/2014 -	3820/1	
Berlingo II (B9) 44348 HDi 110	9HL (DV6C), 9HR (DV6C)	82	07/2010 -	3820/1	
Berlingo II (B9) 44348 HDi 110	9HZ (DV6TED4)	80	04/2008 -	3820/1	
Berlingo II (B9) 44348 HDi 115	9HR (DV6C)	84	07/2010 -	3820/1	
Berlingo II (B9) 44348 HDi 115 4x4	9HR (DV6C)	84	02/2012 -	3820/1	
Berlingo II (B9) 44348 HDi 75 / BlueHDi 75	9HN (DV6ETED), BHW (DV6FE)	55	04/2008 -	3820/1	
Berlingo II (B9) 44348 HDi 75 16V	9HT (DV6BTED4)	55	04/2008 -	3820/1	
Berlingo II (B9) 44348 HDi 90	9HJ (DV6DTEDM), 9HP (DV6DTED)	68	07/2010 -	3820/1	
Berlingo II (B9) 44348 HDi 90	9HV (DV6TED4B), 9HX (DV6ATED4)	66	04/2008 -	3820/1	
Berlingo II (B9) 44348 HDi 90 4x4	9HF (DV6DTED)	66	02/2012 - 12/2014	3820/1	
C2 (JM_) 44348 HDi	9HZ (DV6TED4)	80	09/2005 - 12/2009	3820/1	
C2 (JM_) 44348 VTS	NFS (TU5JP4S)	90	10/2004 - 12/2009	3820/1	
C3 II (SC_) 1.0 VTi 68	ZMZ (EB0)	50	08/2012 -	3820/1	
C3 II (SC_) 44197	HFV (TU1A), HFX (TU1A)	44	11/2009 - 01/2013	3820/1	
C3 II (SC_) 44197 BiFuel	HFX (TU1A)	44	11/2010 -	3820/1	
C3 II (SC_) 44228 THP 110	HNZ (EB2DT)	81	10/2014 -	3820/1	
C3 II (SC_) 44228 VTi 82	HMZ (EB2), HMZ (EB2F)	60	06/2012 - 09/2016	3820/1	
C3 II (SC_) 44287	K6E (TU3A), KFT (TU3AE5)	54	11/2009 - 09/2016	3820/1	
C3 II (SC_) 44287 Flex	-	58	11/2009 - 10/2016	3820/1	
C3 II (SC_) 44287 HDi 70	8HR (DV4C), 8HZ (DV4TD)	50	11/2009 -	3820/1	
C3 II (SC_) 44287 LPG	8FN (EP3)	70	06/2013 -	3820/1	
C3 II (SC_) 44287 LPG	KFT (TU3A)	54	07/2010 -	3820/1	
C3 II (SC_) 44287 VTi 95	8FP (EP3C)	70	11/2009 -	3820/1	
C3 II (SC_) 44348 HDi	9HJ (DV6DTEDM), 9HP (DV6DTED)	68	11/2009 - 09/2016	3820/1	
C3 II (SC_) 44348 HDi 90	9HX (DV6ATED4)	66	11/2009 -	3820/1	
C3 II (SC_) 44348 VTi 120	5FS (EP6C)	88	11/2009 -	3820/1	
C3 III (SX) 44228 GPL	-	60	11/2016 -	3820/1	
C3 III (SX) 44228 PureTech 82	HMR (EB2FA)	61	05/2018 -	3820/1	
C3 III (SX) 44228 PureTech 82 LPG	HMR (EB2FA)	61	05/2018 -	3820/1	
C3 III (SX) 44228 THP 110	HNP (EB2ADT), HNV (EB2DTM), HNZ (EB2DT)	81	07/2016 -	3820/1	
C3 III (SX) 44228 VTi 68	HMM (EB2FAD), HMP (EB2FB)	50	07/2016 -	3820/1	
C3 III (SX) 44228 VTi 82	HMZ (EB2F)	60	07/2016 -	3820/1	
C3 III (SX) 44228 VTi 82 LPG	HMZ (EB2F)	60	07/2016 -	3820/1	
C3 III (SX) 44317 BlueHDi 100	YHY (DV5RD)	75	05/2018 -	3820/1	
C3 III (SX) 44348 BlueHDi 100	BHY (DV6FD)	73	07/2016 -	3820/1	
C3 III (SX) 44348 BlueHDi 75	BHW (DV6FE)	55	07/2016 -	3820/1	
C3 III (SX) 44348 HDi 92	9HJ (DV6DTEDM)	68	11/2017 -	3820/1	
C3 III (SX) 44348 VTi (SXNFPT)	NFP (EC5)	85	02/2017 -	3820/1	
C3 III Aircross (2R_, 2C_) 44228 Puretech 110 (2RHNZB, 2RHNZW, 2RHNPX, 2RHNPJ)	HNP (EB2ADT), HNV (EB2DTM), HNZ (EB2DT)	81	06/2017 -	3820/1	
C3 III Aircross (2R_, 2C_) 44228 Puretech 130 (2RHNYH)	HNS (EB2ADTS), HNY (EB2DTS)	96	07/2017 -	3820/1	
C3 III Aircross (2R_, 2C_) 44228 Puretech 82 (2RHMRC, 2RHMZB)	HMR (EB2FA), HMZ (EB2F)	60	06/2017 -	3820/1	
C3 III Aircross (2R_, 2C_) 44317 BlueHDi 100 (2CYHYJ)	YHY (DV5RD)	73	08/2018 -	3820/1	
C3 III Aircross (2R_, 2C_) 44317 BlueHDi 100 (2CYHYJ)	YHY (DV5RD)	75	08/2018 -	3820/1	
C3 III Aircross (2R_, 2C_) 44317 BlueHDi 120 (2CYHXX)	YHX (DV5RC)	88	08/2018 -	3820/1	
C3 III Aircross (2R_, 2C_) 44348 BlueHDi 100 (2CBHYB)	BHY (DV6FD)	73	07/2017 -	3820/1	
C3 III Aircross (2R_, 2C_) 44348 BlueHDi 115 (2CBHXH)	BHX (DV6FC)	85	06/2017 -	3820/1	
C3 III Aircross (2R_, 2C_) 44348 BlueHDi 120 (2CBHZH)	BHZ (DV6FC)	88	07/2017 -	3820/1	
C3 III Aircross (2R_, 2C_) 44348 HDi 92 (2C9HPA)	9HP (DV6D), 9HP (DV6DTED)	68	10/2017 -	3820/1	
C3 Picasso 44287 VTi 95	8FN (EP3), 8FP (EP3C), 8FS (EP3)	70	02/2009 -	3820/1	
C3 Picasso 44348 BlueHDi 100	BHY (DV6FD)	73	01/2015 -	3820/1	
C3 Picasso 44348 HDI 90	9HP (DV6DTED)	68	07/2010 -	3820/1	
C3 Picasso 44348 HDi	9HX (DV6ATED4)	66	02/2009 -	3820/1	
C4 Cactus 44228 PureTech 130	HNS (EB2ADTS), HNY (EB2DTS)	96	11/2017 -	3820/1	
C4 Cactus 44228 THP 110	HNP (EB2ADT), HNV (EB2DTM), HNZ (EB2DT)	81	09/2014 -	3820/1	
C4 Cactus 44228 VTi 75	HMU (EB2D), HMU (EB2FD)	55	09/2014 -	4201/1	
C4 Cactus 44228 VTi 82	HMZ (EB2F)	60	09/2014 -	4201/1	
C4 Cactus 44317 BlueHDi 100	YHY (DV5RD)	73	06/2018 -	3820/1	
C4 Cactus 44317 BlueHDi 100	YHY (DV5RD)	75	06/2018 -	3820/1	
C4 Cactus 44317 BlueHDi 120	YHX (DV5RC)	88	09/2018 -	3820/1	
C4 Cactus 44348 BlueHDi 100	BHY (DV6FD)	73	09/2014 -	3820/1	
C4 Cactus 44348 HDi 90	9HJ (DV6DTEDM), 9HP (DV6D), 9HP (DV6DTED)	68	09/2014 -	4201/1	
C4 Grand Picasso II 2.0 BlueHDi 150	AHR (DW10FD), AHX (DW10FD)	110	06/2013 -	4373	4374
C4 Grand Picasso II 44348 THP 155	5FV (EP6CDT)	115	09/2013 -	4373	4374
C4 Grand Picasso II 44348 THP 165	5GZ (EP6FDT)	121	07/2014 -	4373	4374
C4 I (LC_) 2.0 16V	RFJ (EW10A)	103	11/2004 - 07/2011		3984/1
C4 I (LC_) 2.0 16V	RFK (EW10J4S)	130	11/2004 - 07/2008		3984/1
C4 I (LC_) 2.0 16V	RFN (EW10J4)	100	11/2004 - 07/2007		3984/1
C4 I (LC_) 2.0 HDi	RHF (DW10BTED4)	103	07/2008 - 07/2011		3984/1
C4 I (LC_) 2.0 HDi	RHR (DW10BTED4)	100	11/2004 - 07/2011		3984/1
C4 I (LC_) 44287 16V	KFU (ET3J4)	65	11/2004 - 07/2011	3820/1	3984/1
C4 I (LC_) 44348 16V	NFU (TU5JP4)	80	11/2004 - 07/2011	3820/1	3984/1
C4 I (LC_) 44348 16V Bio-Flex	NFU (TU5JP4)	80	09/2007 - 07/2008	3820/1	3984/1

MAKE & MODEL   		KW	YEAR		
CITROEN					
C4 I (LC_) 44348 HDi	9HX (DV6ATED4)	66	11/2004 - 07/2011	3820/1	3984/1
C4 I (LC_) 44348 HDi	9HY (DV6TED4), 9HZ (DV6TED4)	80	11/2004 - 07/2011	3820/1	3984/1
C4 I (LC_) 44348 THP 140	5FT (EP6DT)	103	07/2008 - 07/2011		3984/1
C4 I (LC_) 44348 THP 150	5FX (EP6DT)	110	07/2008 - 07/2011		3984/1
C4 I (LC_) 44348 VTi 120	5FW (EP6)	88	07/2008 - 07/2011	3820/1	3984/1
C4 I Coupe (LA_) 2.0 16V	RFK (EW10J4S)	130	11/2004 - 12/2010		3984/1
C4 I Coupe (LA_) 2.0 16V	RFN (EW10J4)	100	11/2004 - 07/2007		3984/1
C4 I Coupe (LA_) 2.0 HDi	RHF (DW10BTED4)	103	07/2008 - 07/2011		3984/1
C4 I Coupe (LA_) 2.0 HDi	RHR (DW10BTED4)	100	11/2004 - 12/2010		3984/1
C4 I Coupe (LA_) 2.0 VTR	RFJ (EW10A)	103	10/2006 - 12/2007		3984/1
C4 I Coupe (LA_) 44287 16V	KFU (ET3J4)	65	11/2004 - 07/2011	3820/1	3984/1
C4 I Coupe (LA_) 44348 16V	NFU (TU5JP4)	80	11/2004 - 07/2011	3820/1	3984/1
C4 I Coupe (LA_) 44348 HDi	9HX (DV6ATED4)	66	11/2004 - 07/2011	3820/1	3984/1
C4 I Coupe (LA_) 44348 HDi	9HY (DV6TED4), 9HZ (DV6TED4)	80	11/2004 - 07/2011	3820/1	3984/1
C4 I Coupe (LA_) 44348 THP 150	5FX (EP6DT)	110	07/2008 - 07/2011		3984/1
C4 I Coupe (LA_) 44348 VTi 120	5FW (EP6)	88	07/2008 - 07/2011	3820/1	3984/1
C4 II Aircross 2.0	4B11	110	04/2012 -		4316
C4 II Aircross 2.0 AWC	4B11	110	04/2012 -		4316
C4 II Aircross 44348	4A92, NKZ (4A92)	86	04/2012 -		4316
C4 II Aircross 44348 GL Flex	NFX (TU5JP4)	81	08/2010 -		4316
C4 II Aircross 44348 HDi 115	9HD (DV6C)	84	04/2012 -		4316
C4 II Aircross 44348 HDi 115 AWC	9HL (DV6C)	84	05/2012 -		4316
C4 II Aircross 44409 HDi 150	4N13	110	04/2012 -		4316
C4 II Aircross 44409 HDi 150 AWC	4N13	110	04/2012 -		4316
C4 II Sedan 2.0 16V	RFJ (EW10A)	103	07/2006 - 07/2011		3984/1
C4 II Sedan 44348 16V	NFU (TU5JP4)	80	07/2006 - 07/2011	3820/1	3984/1
C4 II Sedan 44348 HDi	9HY (DV6TED4), 9HZ (DV6TED4)	80	07/2006 - 07/2011	3820/1	3984/1
C4 Picasso II 2.0 BlueHDI Hybrid	AHS (DW10FD)	100	09/2013 -	4373	4374
C4 Picasso II 2.0 BlueHDi 135	AHV (DW10FD), RHD (DW10CB)	100	09/2013 -	4373	4374
C4 Picasso II 2.0 BlueHDi 150	AHE (DW10FD), AHR (DW10FD), AHX (DW10FD)	110	09/2013 -	4373	4374
C4 Picasso II 44348 THP 150	5FX (EP6DT)	110	09/2014 -	4373	4374
C4 Picasso II 44348 THP 155	5FV (EP6CDT)	115	02/2013 -	4373	4374
C4 Picasso II 44348 THP 165	5GZ (EP6FDT)	121	07/2014 -	4373	4374
C4 Spacetourer (3D_) 2.0 BlueHDi 150	AHX (DW10FD)	110	04/2018 -	4373	4374
C4 Spacetourer (3D_) 2.0 BlueHDi 160	EHY (DW10FCC)	120	04/2018 -	4373	4374
C4 Spacetourer (3D_) 44348 THP 165	5GZ (EP6FDT)	121	04/2018 -	4373	4374
C5 IV Aircross 2.0 BlueHDi 180	EHZ (DW10FC)	130	11/2018 -		4374
C5 IV Aircross 44228 PureTech 130	HNS (EB2ADTS)	96	11/2018 -		4374
C5 IV Aircross 44317 BlueHDi 130	YHZ (DV5RC)	96	11/2018 -		4374
C5 IV Aircross 44348 Hybrid	-	165	04/2020 -		4374
C5 IV Aircross 44348 Hybrid	5GF (EP6FADTXD)	133	04/2020 -		4374
C5 IV Aircross 44348 PureTech 180	5GF (EP6FADTXD)	133	11/2018 -		4374
C5 IV Aircross 44348 THP 150	5GX (EP6FDTMD)	110	09/2019 -		4374
C5 IV Aircross 44348 THP 165	5GY (EP6FDTM)	121	05/2019 -		4374
C-Elysee 44228 PureTech 82	HMR (EB2FA)	61	02/2018 -	3820/1	
C-Elysee 44228 PureTech 82	HMR (EB2FA)	61	02/2018 -	4201/1	
C-Elysee 44228 VTi 72	HMY (EB2M)	53	11/2012 -	3820/1	
C-Elysee 44228 VTi 72	HMY (EB2M)	53	11/2012 -	4201/1	
C-Elysee 44228 VTi 82	HMZ (EB2), HMZ (EB2F)	60	12/2014 -	3820/1	
C-Elysee 44228 VTi 82	HMZ (EB2), HMZ (EB2F)	60	12/2014 -	4201/1	
C-Elysee 44317 BlueHDi 100	YHY (DV5RD)	75	05/2018 -	3820/1	
C-Elysee 44317 BlueHDi 100	YHY (DV5RD)	75	05/2018 -	4201/1	
C-Elysee 44348 BlueHDi 100	BHY (DV6FD)	73	11/2014 -	3820/1	
C-Elysee 44348 BlueHDi 100	BHY (DV6FD)	73	11/2014 -	4201/1	
C-Elysee 44348 HDI 92	9HJ (DV6DTEDM), 9HP (DV6DTED)	68	11/2012 -	3820/1	
C-Elysee 44348 HDI 92	9HJ (DV6DTEDM), 9HP (DV6DTED)	68	11/2012 -	4201/1	
C-Elysee 44348 VTi 115	NFP (EC5)	85	11/2012 -	3820/1	
C-Elysee 44348 VTi 115	NFP (EC5)	85	11/2012 -	4201/1	
DS3 44228 VTi 82	HMZ (EB2), HMZ (EB2F)	60	01/2013 - 03/2015	3820/1	
DS3 44287 HDi 70	8HR (DV4C)	50	04/2010 - 07/2015	3820/1	
DS3 44287 VTi 95	8FP (EP3C)	70	04/2010 - 07/2015	3820/1	
DS3 44287 VTi 95 LPG	8FR (EP3C)	70	08/2012 - 07/2015	3820/1	
DS3 44287 VTi 98	8FR (EP3C)	72	11/2009 - 07/2015	3820/1	
DS3 44348 BlueHDi 100	BHY (DV6FD)	73	07/2014 - 07/2015	3820/1	
DS3 44348 BlueHDi 75	BHW (DV6FE)	55	03/2015 - 07/2015	3820/1	
DS3 44348 HDi 90	9HP (DV6DTED)	68	11/2009 - 07/2015	3820/1	
DS3 Cabrio 44228 VTi 82	HMZ (EB2F)	60	01/2013 - 07/2015	3820/1	
DS3 Cabrio 44348 BlueHDi 100	BHY (DV6FD)	73	07/2014 - 07/2015	3820/1	
DS3 Cabrio 44348 HDi 90	9HP (DV6DTED)	69	01/2013 - 07/2015	3820/1	
Grand C4 Spacetourer (3A_, 3E_) 2.0 BlueHDi 150	AHR (DW10FD), AHX (DW10FD)	110	04/2018 -	4373	4374
Grand C4 Spacetourer (3A_, 3E_) 2.0 BlueHDi 160	EHY (DW10FCC)	120	04/2018 -	4373	4374
Grand C4 Spacetourer (3A_, 3E_) 44348 PureTech 180	5GF (EP6FADTXD)	133	04/2018 -	4373	4374
Grand C4 Spacetourer (3A_, 3E_) 44348 THP 165	5GX (EP6FDTMD)	110	04/2018 -	4373	4374
Grand C4 Spacetourer (3A_, 3E_) 44348 THP 165	5GZ (EP6FDT)	121	04/2018 -	4373	4374
HCV Jumper III Bus / Relay 3.0 HDi	-	133	12/2014 -	4171/1	
HCV Jumper III Bus / Relay 3.0 HDi 155	F1CE0481D (F30DT)	115	07/2010 -	3922/1	

MAKE & MODEL   		KW	YEAR		
CITROEN					
HCV Jumper III Bus / Relay 3.0 HDi 160	F1CE0481D (F30DT)	116	09/2006 -	3922/1	
HCV Jumper III Bus / Relay 3.0 HDi 180	F1CE3481E (F30DTE)	130	07/2011 -	4171/1	
HCV Jumper III Bus / Relay 44229 HDi	-	110	12/2014 -	4171/1	
HCV Jumper III Bus / Relay 44229 HDi	-	96	12/2014 -	4171/1	
HCV Jumper III Bus / Relay 44229 HDi 120	4HU (P22DTE)	88	04/2006 -	3922/1	
HCV Jumper III Bus / Relay 44229 HDi 130	4HH (P22DTE)	96	07/2011 -	4171/1	
HCV Jumper III Bus / Relay 44229 HDi 150	4HJ (P22DTE)	110	07/2011 -	4171/1	
HCV Jumper III Platform/Chassis / Relay 3.0 HDi	-	133	12/2014 -	4171/1	
HCV Jumper III Platform/Chassis / Relay 3.0 HDi 145	F30DTE (F1CE3481N)	107	07/2010 -	3922/1	
HCV Jumper III Platform/Chassis / Relay 3.0 HDi 160	F1CE0481D (F30DT)	116	09/2006 -	3922/1	
HCV Jumper III Platform/Chassis / Relay 3.0 HDi 180	F1CE3481E (F30DTE)	130	07/2011 -	4171/1	
HCV Jumper III Platform/Chassis / Relay 44229 HDi	-	110	12/2014 -	4171/1	
HCV Jumper III Platform/Chassis / Relay 44229 HDi	-	96	12/2014 -	4171/1	
HCV Jumper III Platform/Chassis / Relay 44229 HDi 120	4HU (P22DTE)	88	04/2006 -	3922/1	
HCV Jumper III Platform/Chassis / Relay 44229 HDi 130	4HH (P22DTE)	96	07/2011 -	4171/1	
HCV Jumper III Platform/Chassis / Relay 44229 HDi 150	4HJ (P22DTE)	110	07/2011 -	4171/1	
HCV Jumper III Van / Relay 3.0 Hdi	-	133	12/2014 -	4171/1	
HCV Jumper III Van / Relay 3.0 HDi 145	F30DTE (F1CE3481N)	107	07/2010 -	3922/1	
HCV Jumper III Van / Relay 3.0 HDi 155	F1CE0481D (F30DT)	115	07/2010 -	3922/1	
HCV Jumper III Van / Relay 3.0 HDi 160	F1CE0481D (F30DT)	116	09/2006 -	3922/1	
HCV Jumper III Van / Relay 3.0 HDi 180	F1CE3481E (F30DTE)	130	07/2011 -	4171/1	
HCV Jumper III Van / Relay 44229 Hdi	-	110	12/2014 -	4171/1	
HCV Jumper III Van / Relay 44229 Hdi	-	96	12/2014 -	4171/1	
HCV Jumper III Van / Relay 44229 HDi 120	4HU (P22DTE)	88	04/2006 -	3922/1	
HCV Jumper III Van / Relay 44229 HDi 130	4HH (P22DTE)	96	07/2011 -	4171/1	
HCV Jumper III Van / Relay 44229 HDi 150	4HJ (P22DTE)	110	07/2011 -	4171/1	
Jumpy II (VF7) / Dispatch 2.0 HDi 120	RHK (DW10UTED4)	88	01/2007 -		4151/1
Jumpy II (VF7) / Dispatch 2.0 HDi 120	RHK (DW10UTED4)	88	01/2007 -		4170
Jumpy II (VF7) / Dispatch 2.0 HDi 125	AHZ (DW10CD)	94	07/2011 -		4151/1
Jumpy II (VF7) / Dispatch 2.0 HDi 125	AHZ (DW10CD)	94	07/2011 -		4170
Jumpy II (VF7) / Dispatch 2.0 HDi 140	RHR (DW10BTED4)	100	01/2007 -		4151/1
Jumpy II (VF7) / Dispatch 2.0 HDi 140	RHR (DW10BTED4)	100	01/2007 -		4170
Jumpy II (VF7) / Dispatch 2.0 HDi 165	RHH (DW10CTED4)	120	07/2010 -		4151/1
Jumpy II (VF7) / Dispatch 2.0 HDi 165	RHH (DW10CTED4)	120	07/2010 -		4170
Jumpy II (VF7) / Dispatch 2.0 HDi 95	AHY (DW10CE)	72	07/2011 -		4151/1
Jumpy II (VF7) / Dispatch 2.0 HDi 95	AHY (DW10CE)	72	07/2011 -		4170
Jumpy II (VF7) / Dispatch 2.0 i	RFH (EW10A), RFJ (EW10A)	103	01/2007 -		4151/1
Jumpy II (VF7) / Dispatch 2.0 i	RFH (EW10A), RFJ (EW10A)	103	01/2007 -		4170
Jumpy II (VF7) / Dispatch 44348 HDi 90 16V	9HU (DV6UTED4)	66	01/2007 -		4151/1
Jumpy II (VF7) / Dispatch 44348 HDi 90 16V	9HU (DV6UTED4)	66	01/2007 -		4170
Jumpy II (VF7) / Dispatch 44348 HDi 90 8V	9HH (DV6DUM), 9HM (DV6UC)	66	01/2007 -		4151/1
Jumpy II (VF7) / Dispatch 44348 HDi 90 8V	9HH (DV6DUM), 9HM (DV6UC)	66	01/2007 -		4170
LCV Berlingo I / First Van (M_) 2.0 HDI 90 (MBRHY, MCRHY)	RHY (DW10TD)	66	12/1999 - 12/2011	3820/1	
LCV Berlingo I / First Van (M_) 2.0 HDI 90 4WD (MBRHY, MCRHY)	RHY (DW10TD)	66	11/2000 - 10/2005	3820/1	
LCV Berlingo I / First Van (M_) 44287 BiFuel (MBKFXB, MCKFXB)	KFW (TU3JP)	55	07/1996 - 10/2002	3820/1	
LCV Berlingo I / First Van (M_) 44287 bivalent	KFW (TU3JP)	48	11/2002 - 12/2011	3820/1	
LCV Berlingo I / First Van (M_) 44287 i (MBKFX, MBKFW)	KFW (TU3A), KFW (TU3JP), KFX (TU3JP)	55	07/1996 - 12/2011	3820/1	
LCV Berlingo I / First Van (M_) 44287 i bivalent (MBKFW)	KFW (TU3JP)	55	04/2003 - 10/2005	3820/1	
LCV Berlingo I / First Van (M_) 44348 16V	NFU (TU5JP4)	81	08/2005 - 12/2007	3820/1	
LCV Berlingo I / First Van (M_) 44348 16V (MBNFU)	NFU (TU5JP4)	80	10/2000 - 03/2008	3820/1	
LCV Berlingo I / First Van (M_) 44348 HDI 75 (MB9HW)	9HW (DV6BTED4), DV6B	55	07/2005 - 12/2011	3820/1	
LCV Berlingo I / First Van (M_) 44348 HDI 90 (MB9HX, MC9HX)	9HX (DV6ATED4)	66	07/2005 - 12/2011	3820/1	
LCV Berlingo I / First Van (M_) 44440 D (MBDJY)	DJY (XUD9A)	51	07/1996 - 12/2003	3820/1	
LCV Berlingo I / First Van (M_) 44440 D 70 (MBWJZ, MCWJZ)	WJY (DW8B), WJZ (DW8)	51	04/1999 - 12/2011	3820/1	
LCV Berlingo I / First Van (M_) 44440 D 70 4WD (MBWJZ, MCWJZ)	WJY (DW8B), WJZ (DW8)	51	07/1998 - 03/2006	3820/1	
LCV Berlingo II Platform/Chassis (B9) 44287	KFW(TU3JP)	55	03/2009 -	3820/1	
LCV Berlingo II Platform/Chassis (B9) 44348 BlueHDi 100	BHY (DV6FD)	73	12/2014 -	3820/1	
LCV Berlingo II Platform/Chassis (B9) 44348 HDi 90	9HF (DV6DTED)	66	07/2010 -	3820/1	
LCV Berlingo II Platform/Chassis (B9) 44348 HDi 90 16V	9HX (DV6ATED4)	66	04/2008 -	3820/1	
LCV Berlingo II Platform/Chassis (B9) 44348 HDi 92	9HJ (DV6DTEDM)	68	07/2010 -	3820/1	
LCV Berlingo II Van (B9) 44348 BlueHDi 100	BHY (DV6FD)	73	12/2014 -	3820/1	
LCV Berlingo II Van (B9) 44348 BlueHDi 100 4x4	BHY (DV6FD)	73	12/2014 -	3820/1	
LCV Berlingo II Van (B9) 44348 BlueHDi 120	BHZ (DV6FC)	88	12/2014 -	3820/1	
LCV Berlingo II Van (B9) 44348 HDi / BlueHDi 75	9HN (DV6ETED), BHW (DV6FE)	55	07/2010 -	3820/1	
LCV Berlingo II Van (B9) 44348 HDi 110	9HL (DV6C), 9HR (DV6C)	82	07/2010 -	3820/1	
LCV Berlingo II Van (B9) 44348 HDi 110	9HZ (DV6TED4)	80	04/2008 -	3820/1	
LCV Berlingo II Van (B9) 44348 HDi 115	9HL (DV6C)	84	07/2010 -	3820/1	
LCV Berlingo II Van (B9) 44348 HDi 115 4x4	-	84	02/2012 -	3820/1	
LCV Berlingo II Van (B9) 44348 HDi 75	9HT (DV6BTED4), 9HT (DV6BUTED4)	55	04/2008 -	3820/1	
LCV Berlingo II Van (B9) 44348 HDi 75 4x4	9HN (DV6ETED)	55	02/2012 -	3820/1	
LCV Berlingo II Van (B9) 44348 HDi 90	9HE (DV6DBM), 9HF (DV6DTED)	66	07/2010 -	3820/1	
LCV Berlingo II Van (B9) 44348 HDi 90	9HJ (DV6DTEDM), 9HP (DV6DTED)	68	07/2010 -	3820/1	
LCV Berlingo II Van (B9) 44348 HDi 90 16V	9HS (DV6TED4BU), 9HX (DV6AUTED4)	66	04/2008 -	3820/1	
LCV Berlingo II Van (B9) 44348 HDi 90 4x4	9HF (DV6DTED)	66	02/2012 -	3820/1	
LCV C3 II Box body / Hatchback (SC_) 44287 HDi	8HR (DV4C)	50	06/2010 - 09/2016	3820/1	
LCV C3 III Van 44228	-	60	03/2017 -	3820/1	

MAKE & MODEL		KW	YEAR		
CITROEN					
LCV C3 III Van 44348 D	-	55	03/2017 -	3820/1	
LCV C4 I Box body / Hatchback (LR_) 44348 16v HDi	9HX(DV6ATED4)	66	01/2004 - 10/2010	3820/1	3984/1
LCV Jumpy II Platform/Chassis / Dispatch 2.0 HDi 125	AHZ (DW10CD)	94	07/2011 -		4151/1
LCV Jumpy II Platform/Chassis / Dispatch 2.0 HDi 125	AHZ (DW10CD)	94	07/2011 -		4170
LCV Jumpy II Van / Dispatch 2.0	-	86	10/2010 - 03/2016		4151/1
LCV Jumpy II Van / Dispatch 2.0	-	86	10/2010 - 03/2016		4170
LCV Jumpy II Van / Dispatch 2.0 HDI	-	81	01/2007 - 03/2016		4151/1
LCV Jumpy II Van / Dispatch 2.0 HDI	-	81	01/2007 - 03/2016		4170
LCV Jumpy II Van / Dispatch 2.0 HDi 120	RHK (DW10UTED4)	88	01/2007 -		4151/1
LCV Jumpy II Van / Dispatch 2.0 HDi 120	RHK (DW10UTED4)	88	01/2007 -		4170
LCV Jumpy II Van / Dispatch 2.0 HDi 120 4x4	RHK (DW10UTED4)	88	01/2010 -		4151/1
LCV Jumpy II Van / Dispatch 2.0 HDi 120 4x4	RHK (DW10UTED4)	88	01/2010 -		4170
LCV Jumpy II Van / Dispatch 2.0 HDi 125	AHZ (DW10CD)	94	07/2011 -		4151/1
LCV Jumpy II Van / Dispatch 2.0 HDi 125	AHZ (DW10CD)	94	07/2011 -		4170
LCV Jumpy II Van / Dispatch 2.0 HDi 125 4x4	AHZ (DW10CD)	94	07/2011 -		4151/1
LCV Jumpy II Van / Dispatch 2.0 HDi 125 4x4	AHZ (DW10CD)	94	07/2011 -		4170
LCV Jumpy II Van / Dispatch 2.0 HDi 140	RHR (DW10BTED4)	100	01/2007 -		4151/1
LCV Jumpy II Van / Dispatch 2.0 HDi 140	RHR (DW10BTED4)	100	01/2007 -		4170
LCV Jumpy II Van / Dispatch 2.0 HDi 165	RHH (DW10CTED4)	120	07/2010 -		4151/1
LCV Jumpy II Van / Dispatch 2.0 HDi 165	RHH (DW10CTED4)	120	07/2010 -		4170
LCV Jumpy II Van / Dispatch 2.0 HDi 95	AHY (DW10CE)	72	07/2011 -		4151/1
LCV Jumpy II Van / Dispatch 2.0 HDi 95	AHY (DW10CE)	72	07/2011 -		4170
LCV Jumpy II Van / Dispatch 2.0 i	RFH (EW10A)	103	01/2007 -		4151/1
LCV Jumpy II Van / Dispatch 2.0 i	RFH (EW10A)	103	01/2007 -		4170
LCV Jumpy II Van / Dispatch 44348 HDi 90 16V	9HU (DV6UTED4)	66	01/2007 -		4151/1
LCV Jumpy II Van / Dispatch 44348 HDi 90 16V	9HU (DV6UTED4)	66	01/2007 -		4170
LCV Jumpy II Van / Dispatch 44348 HDi 90 8V	9HH (DV6DUM), 9HM (DV6UC)	66	01/2007 -		4151/1
LCV Jumpy II Van / Dispatch 44348 HDi 90 8V	9HH (DV6DUM), 9HM (DV6UC)	66	01/2007 -		4170
LCV Xsara Box body / Hatchback (N3_) 2.0 HDi	RHY (DW10TD)	66	09/2000 - 03/2005	3820/1	
LCV Xsara Box body / Van / SW Van 2.0 HDi	RHY (DW10TD)	66	09/2000 - 03/2005	3820/1	
LCV Xsara Picasso Van 2.0 HDi	RHY(DW10TD)	66	01/1999 - 03/2005	3820/1	
LCV Xsara Picasso Van 44348 HDi	9HY	80	01/2002 - 12/2008	3820/1	
LCV Xsara Picasso Van 44348 HDi	DV6ATED4	66	01/2002 - 12/2008	3820/1	
LCV ZX Box body / Hatchback (N2) 44440 D	-	50	07/1994 - 06/1997	3489	
Xantia (X1_, X2_) 2.0 HDI 109	RHZ (DW10ATED)	80	02/1999 - 04/2003		3873/1
Xantia (X1_, X2_) 2.0 HDI 90	RHY (DW10TD)	66	03/1999 - 04/2003		3873/1
Xantia (X1_, X2_) 2.0 i	RFX (XU10J2C)	89	03/1993 - 04/2003		3873/1
Xantia (X1_, X2_) 2.0 i 16V	RFT (XU10J4/Z)	110	06/1994 - 01/1998		3873/1
Xantia (X1_, X2_) 2.0 i 16V	RFV (XU10J4R)	97	06/1995 - 04/2003		3873/1
Xantia (X1_, X2_) 2.0 i 16V	RFY (XU10J4/Z)	112	03/1993 - 01/1998		3873/1
Xantia (X1_, X2_) 2.0 Turbo	RGX (XU10J2TE)	108	06/1995 - 04/2003		3873/1
Xantia (X1_, X2_) 3.0 i 24V	XFZ (ES9J4) (01.97-.)	140	01/1997 - 04/2003		3873/1
Xantia (X1_, X2_) 44198 Turbo D 12V	P8C (XUD11BTE)	80	06/1995 - 02/1999		3873/1
Xantia (X1_, X2_) 44348 i	BFZ (XU5JP) (10.93-.)	65	03/1993 - 03/2001		3873/1
Xantia (X1_, X2_) 44409 i	LFX (XU7JB) (05.97-.)	66	04/1997 - 04/2003		3873/1
Xantia (X1_, X2_) 44409 i	LFZ (XU7JP)	74	03/1993 - 01/1998		3873/1
Xantia (X1_, X2_) 44409 i 16V	LFY (XU7JP4)	81	06/1995 - 12/2001		3873/1
Xantia (X1_, X2_) 44440 D	D9B (XUD9A/L)	51	06/1994 - 01/1998		3873/1
Xantia (X1_, X2_) 44440 D	DJZ (XUD9A)	50	06/1994 - 01/1998		3873/1
Xantia (X1_, X2_) 44440 SD	DHW (XUD9SD)	55	02/1996 - 04/2003		3873/1
Xantia (X1_, X2_) 44440 Turbo D	DHX (XUD9TF/BTF), DHY (XUD9TE/Y)	66	05/1993 - 04/2003		3873/1
XM I (Y3) 2.0	-	84	05/1989 - 04/1994		3873/1
XM I (Y3) 2.0 i	RDZ (XU10MZ)	79	05/1989 - 04/1994		3873/1
XM I (Y3) 2.0 i	RFZ (XU10J2)	89	05/1989 - 06/1994		3873/1
XM I (Y3) 2.0 i Turbo	RGY (XU10J2TE/Z)	104	09/1992 - 06/1994		3873/1
XM I (Y3) 3.0	SFZ (ZPJ/Z)	123	05/1989 - 05/1994		3873/1
XM I (Y3) 3.0 (Y3)	-	147	05/1989 - 06/1994		3873/1
XM I (Y3) 3.0 V6	UFZ (ZPJ/Z)	123	05/1989 - 06/1994		3873/1
XM I (Y3) 3.0 V6 24V	SKZ (ZPJ4/Z), UKZ (ZPJ4/Z)	147	07/1990 - 06/1994		3873/1
XM I (Y3) 44198 D 12V	P9A (XUD11A)	60	05/1989 - 06/1994		3873/1
XM I (Y3) 44198 TD 12V	P8A (XUD11ATE), PHZ (XUD11ATE), PJZ (XUD11ATE)	80	05/1989 - 06/1994		3873/1
XM I Break (Y3) 3.0 V6 24V	UKZ (ZPJ4/Z)	147	01/1990 - 07/1994		3873/1
XM II (Y4) 2.0 i 16V	RFV (XU10J4R)	97	05/1994 - 10/2000		3873/1
XM II (Y4) 2.0 Turbo	RGX (XU10J2TE)	108	05/1994 - 10/2000		3873/1
XM II (Y4) 3.0 V6	UFZ (ZPJ/Z)	123	05/1994 - 10/2000		3873/1
XM II (Y4) 3.0 V6	XFZ (ES9J4) (04.97-.)	140	04/1997 - 10/2000		3873/1
XM II (Y4) 3.0 V6 24V	SKZ (ZPJ4/Z), UKZ (ZPJ4/Z)	147	05/1994 - 10/2000		3873/1
XM II (Y4) 44198 D12 VSX	P9A (XUD11A)	60	03/1996 - 08/1996		3873/1
XM II (Y4) 44198 TD 12V	P8A (XUD11ATE), P8C (XUD11BTE), PHZ (XUD11ATE), PJ	80	05/1994 - 10/2000		3873/1
XM II (Y4) 44318 TD	THY (DK5ATE)	95	05/1994 - 10/2000		3873/1
XM II Break (Y4) 3.0 V6	XFZ (ES9J4) (04.97-.)	140	04/1997 - 10/2000		3873/1
Xsara (N1) 2.0 HDi 90	RHY (DW10TD)	66	02/1999 - 03/2005	3820/1	
Xsara (N1) 44287 HDi	8HX (DV4TD)	50	01/2003 - 03/2005	3820/1	
Xsara (N1) 44287 i	KFW (TU3JP) (11.00-.), KFX (TU3JP) (.-11.00)	55	04/1997 - 03/2005	3820/1	
Xsara (N1) 44348 16V	NFU (TU5JP4)	80	09/2000 - 03/2005	3820/1	
Xsara (N1) 44440 D	WJY (DW8B)	52	04/2000 - 04/2005	3820/1	

MAKE & MODEL		KW	YEAR		
CITROEN					
Xsara (N1) 44440 D	WJY (DW8B) (11.00-.), WJZ (DW8) (.-11.00)	51	07/1998 - 03/2005	3820/1	
Xsara Break (N2) 2.0 HDI 90	RHY (DW10TD)	66	02/1999 - 08/2005	3820/1	
Xsara Break (N2) 44287 HDi	8HX (DV4TD)	50	01/2003 - 08/2005	3820/1	
Xsara Break (N2) 44287 i	KFW (TU3JP) (11.00-.), KFX (TU3JP) (.-11.00)	55	10/1997 - 08/2005	3820/1	
Xsara Break (N2) 44348 16V	NFU (TU5JP4)	80	09/2000 - 08/2005	3820/1	
Xsara Break (N2) 44440 D	WJY (DW8B) (11.00-.), WJZ (DW8) (.-11.00)	51	07/1998 - 08/2005	3820/1	
Xsara Coupe (N0) 2.0 HDI 90	RHY (DW10TD)	66	02/1999 - 03/2005	3820/1	
Xsara Coupe (N0) 44287 HDi	8HX (DV4TD)	50	01/2003 - 03/2005	3820/1	
Xsara Coupe (N0) 44287 i	KFW (TU3JP) (11.00-.), KFX (TU3JP) (.-11.00)	55	03/1998 - 03/2005	3820/1	
Xsara Coupe (N0) 44348 16V	NFU (TU5JP4)	80	09/2000 - 03/2005	3820/1	
Xsara Coupe (N0) 44440 D	WJY (DW8B) (11.00-.), WJZ (DW8) (.-11.00)	51	02/1999 - 03/2005	3820/1	
Xsara Picasso (N68) 2.0 HDi	RHY (DW10TD)	66	12/1999 - 12/2011	3820/1	
Xsara Picasso (N68) 2.0 HDi	RHZ(DW10ATED)	80	02/2000 - 12/2012	3820/1	
Xsara Picasso (N68) 44348	NFV (TU5JP)	70	12/1999 - 12/2010	3820/1	
Xsara Picasso (N68) 44348	NFZ (TU5JP)	67	06/2002 - 08/2005	3820/1	
Xsara Picasso (N68) 44348	NFZ (TU5JP) (06.00-.)	65	12/1999 - 09/2001	3820/1	
Xsara Picasso (N68) 44348 16V	NFU (TU5JP4)	80	09/2005 - 12/2011	3820/1	
Xsara Picasso (N68) 44348 16V	NFU (TU5JP4)	81	06/2005 - 09/2006	3820/1	
Xsara Picasso (N68) 44348 16V LPG	-	80	06/2004 - 12/2010	3820/1	
Xsara Picasso (N68) 44348 HDi	9HX (DV6ATED4)	66	09/2005 - 12/2011	3820/1	
Xsara Picasso (N68) 44348 HDi	9HY (DV6TED4), 9HZ (DV6TED4)	80	05/2004 - 12/2011	3820/1	
Xsara Picasso (N68) 44409 16V	6FZ (EW7J4)	85	02/2000 - 08/2005	3820/1	
ZX (N2) 1,1	H1A, H1B	40	03/1991 - 08/1993	3489	
ZX (N2) 44197	HDZ (TU1M)	44	03/1991 - 06/1997	3489	
ZX (N2) 44287	KDZ (TU3M/Z)	55	03/1991 - 06/1997	3489	
ZX (N2) 44287 i	KDX (TU3M/Z) (03.91-.), KDZ (TU3M/Z), KFX (TU3JP)	55	03/1991 - 06/1997	3489	
ZX (N2) 44409 D	161A (XUD7)	44	06/1993 - 06/1997	3489	
ZX (N2) 44440 D	D9B (XUD9A/U), DJY (XUD9A)	50	07/1993 - 06/1997	3489	
ZX (N2) 44440 D	DJZ (XUD9A)	47	03/1991 - 06/1997	3489	
ZX (N2) 44440 DT	DHY (XUD9TE/Y)	68	06/1992 - 06/1994	3489	
ZX Break (N2) 44287 i	KDX (TU3M/Z), KDY (TU3M), KFX (TU3JP)	55	10/1993 - 10/1997	3489	
ZX Break (N2) 44409 D	161A (XUD7)	44	10/1993 - 10/1997	3489	
ZX Break (N2) 44440 D	D9B (XUD9A/U)	50	06/1994 - 10/1997	3489	
ZX Break (N2) 44440 D	DJZ (XUD9A)	47	10/1993 - 10/1997	3489	
AX (ZA-_)	14	51	01.1989 - 12.1991	3487	
AX (ZA-_)	14	62	01.1988 - 12.1992	3487	
AX (ZA-_)	1.4 4x4	48	08.1992 - 04.1994	3487	
AX (ZA-_)	1.4 Allure	48	08.1992 - 04.1994	3487	
AX (ZA-_)	11 4x4	40	06.1991 - 07.1992	3487	
AX (ZA-_)	14 (ZA	55	04.1987 - 04.1997	3487	
AX (ZA-_)	14 4x4	55	08.1991 - 12.1996	3487	
AX (ZA-_)	14 D	37	08.1991 - 12.1997	3487	
AX (ZA-_)	14 D	38	09.1988 - 06.1992	3487	
AX (ZA-_)	15 D	40	08.1994 - 12.1997	3487	
AX (ZA-_)	1.1 4x4	40	06/91 – 07/92	3380	
AX (ZA-_)	1.1 4x4	40	06/91 – 07/92	3381	
AX (ZA-_)	1.4	44	12/86 – 12/88	3380	
AX (ZA-_)	1.4	44	12/86 – 12/88	3381	
AX (ZA-_)	1.4	49	06/88 – 12/89	3380	
AX (ZA-_)	1.4	49	06/88 – 12/89	3381	
AX (ZA-_)	1.4	55	04/87 – 04/97	3380	
AX (ZA-_)	1.4	55	04/87 – 04/97	3381	
AX (ZA-_)	1.4	61	01/88 – 12/92	3380	
AX (ZA-_)	1.4	61	01/88 – 12/92	3381	
AX (ZA-_)	1.4	62	01/88 – 12/92	3380	
AX (ZA-_)	1.4	62	01/88 – 12/92	3381	
AX (ZA-_)	1.4 4x4	48	08/92 – 04/94	3380	
AX (ZA-_)	1.4 4x4	48	08/92 – 04/94	3381	
AX (ZA-_)	1.4 4x4	55	08/91 – 12/96	3380	
AX (ZA-_)	1.4 4x4	55	08/91 – 12/96	3381	
AX (ZA-_)	1.4 4x4	62	09/86 – 07/92	3380	
AX (ZA-_)	1.4 4x4	62	09/86 – 07/92	3381	
AX (ZA-_)	1.4 Allure	48	08/92 – 04/94	3380	
AX (ZA-_)	1.4 Allure	48	08/92 – 04/94	3381	
AX (ZA-_)	1.4 D	38	09/88 – 06/92	3380	
AX (ZA-_)	1.4 D	38	09/88 – 06/92	3381	
AX (ZA-_)	1.4 D 4x4	39	06/91 – 07/92	3380	
AX (ZA-_)	1.4 D 4x4	39	06/91 – 07/92	3381	
AX (ZA-_)	1.4 GTi	66	08/91 – 12/96	3556	
AX (ZA-_)	1.4 GTi	69	06/91 – 12/96	3556	
AX (ZA-_)	1.4 GTi	74	06/91 – 12/92	3556	
AX (ZA-_)	1.5 D	40	08/94 – 12/97	3380	
AX (ZA-_)	1.5 D	40	08/94 – 12/97	3381	
AX (ZA-_)	1.5 D	43	08/94 – 12/97	3380	
AX (ZA-_)	1.5 D	43	08/94 – 12/97	3381	
BERLINGO (B9)	1.2 PureTech 110	81	02/16 -	3964	3971

MAKE & MODEL   		KW	YEAR		
CITROEN					
BERLINGO (B9)	1.6	66	04/08 -	3964	3971
BERLINGO (B9)	1.6	80	04/08 -	3964	3971
BERLINGO (B9)	1.6 BlueHDi 100	73	12/14 -	3964	3971
BERLINGO (B9)	1.6 BlueHDi 120	88	12/14 -	3964	3971
BERLINGO (B9)	1.6 BlueHDi 75	55	04/15 -	3964	3971
BERLINGO (B9)	1.6 HDi 110	80	04/08 -	3964	3971
BERLINGO (B9)	1.6 HDi 110	82	07/10 -	3964	3971
BERLINGO (B9)	1.6 HDi 115	84	07/10 -	3964	3971
BERLINGO (B9)	1.6 HDi 115 4x4	84	02/12 -	3964	3971
BERLINGO (B9)	1.6 HDi 75	55	04/08 -	3964	3971
BERLINGO (B9)	1.6 HDi 90	66	04/08 -	3964	3971
BERLINGO (B9)	1.6 HDi 90	68	07/10 -	3964	3971
BERLINGO (B9)	1.6 HDi 90 4x4	66	02/12 -	3964	3971
BERLINGO (B9)	1.6 VTi 120	88	11/09 -	3964	3971
BERLINGO (B9)	1.6 VTi 95	72	07/10 -	3964	3971
BERLINGO (ER_, EC_)	1.2 PureTech 110	81	06.2018 -	4371	4372
BERLINGO (ER_, EC_)	1.2 PureTech 130	96	07.2019 -	4371	4372
BERLINGO (ER_, EC_)	1.5 BlueHDi 100	75	06.2018 -	4371	4372
BERLINGO (ER_, EC_)	1.5 BlueHDi 130 (ECYHZJ, ECYHZR)	96	06.2018 -	4371	4372
BERLINGO (ER_, EC_)	1.5 BlueHDi 75	56	06.2018 -	4371	4372
BERLINGO (MF)	1.1 i (MFHDZ, MFHFX)	44	07/96 -	3636	
BERLINGO (MF)	1.1 i (MFHDZ, MFHFX)	44	07/96 -	3644	
BERLINGO (MF)	1.1 i (MFHDZ, MFHFX)	44	07/96 -	3820	
BERLINGO (MF)	1.4	53	11/02 – 10/05	3820	
BERLINGO (MF)	1.4 bivalent	48	11/02 -	3820	3529/1
BERLINGO (MF)	1.4 bivalent	53	11/02 – 10/05	3820	
BERLINGO (MF)	1.4 i (MFKFX, MFKFW)	55	07/96 – 10/08	3636	3529/1
BERLINGO (MF)	1.4 i (MFKFX, MFKFW)	55	07/96 – 10/08	3644	
BERLINGO (MF)	1.4 i (MFKFX, MFKFW)	55	07/96 – 10/08	3820	
BERLINGO (MF)	1.4 i bivalent (MFKFW)	55	04/03 -	3820	3529/1
BERLINGO (MF)	1.6 16V (MFNFU)	80	10/00 -	3820	3529/1
BERLINGO (MF)	1.6 16V (MFNFU)	81	11/02 -	3820	
BERLINGO (MF)	1.6 HDI 110	80	08/05 -	3820	3529/1
BERLINGO (MF)	1.6 HDI 75 (MF9HW)	55	07/05 -	3820	3529/1
BERLINGO (MF)	1.6 HDI 90 (MF9HX)	66	07/05 -	3820	3529/1
BERLINGO (MF)	1.8 D (MFA9A)	43	07/98 -	3636	
BERLINGO (MF)	1.8 D (MFA9A)	43	07/98 -	3644	
BERLINGO (MF)	1.8 D (MFA9A)	43	07/98 -	3820	
BERLINGO (MF)	1.8 i (MFLFX)	66	05/97 -	3636	3529/1
BERLINGO (MF)	1.8 i (MFLFX)	66	05/97 -	3644	
BERLINGO (MF)	1.8 i (MFLFX)	66	05/97 -	3820	
BERLINGO (MF)	1.8 i 4WD (MFLFX)	66	04/97 -	3636	3529/1
BERLINGO (MF)	1.8 i 4WD (MFLFX)	66	04/97 -	3644	
BERLINGO (MF)	1.8 i 4WD (MFLFX)	66	04/97 -	3820	
BERLINGO (MF)	1.9 D (MFDJY)	50	07/96 -	3820	3529/1
BERLINGO (MF)	1.9 D (MFDJY)	51	07/96 – 10/99	3820	
BERLINGO (MF)	1.9 D (MFWJZ)	51	07/98 – 10/05	3820	3529/1
BERLINGO (MF)	1.9 D 4WD (MFWJZ)	51	07/98 -	3820	3529/1
BERLINGO (MF)	2.0 HDI 90 (MFRHY)	66	12/99 -	3636	3529/1
BERLINGO (MF)	2.0 HDI 90 (MFRHY)	66	12/99 -	3644	
BERLINGO (MF)	2.0 HDI 90 (MFRHY)	66	12/99 -	3820	
BERLINGO (MF)	2.0 HDi 4x4 (MFRHY)	66	11/02 – 10/05	3820	3529/1
BERLINGO (MF)	Electric	28	01/98 -	3820	
BERLINGO (MF)	electrique	16	01/00 -	3636	
BERLINGO (MF)	electrique	16	01/00 -	3644	
BERLINGO (MF)	electrique	16	01/00 -	3820	
BERLINGO Box (B9)	1.6	66	04/08 -	3964	3971
BERLINGO Box (B9)	1.6	80	04/08 -	3964	3971
BERLINGO Box (B9)	1.6 BlueHDi 100	73	12/14 -	3964	3971
BERLINGO Box (B9)	1.6 BlueHDi 100 4x4	73	12/14 -	3964	3971
BERLINGO Box (B9)	1.6 BlueHDi 120	88	12/14 -	3964	3971
BERLINGO Box (B9)	1.6 HDi / BlueHDi 75	55	07/10 -	3964	3971
BERLINGO Box (B9)	1.6 HDi 110	80	04/08 -	3964	3971
BERLINGO Box (B9)	1.6 HDi 110	82	07/10 -	3964	3971
BERLINGO Box (B9)	1.6 HDi 115	84	07/10 -	3964	3971
BERLINGO Box (B9)	1.6 HDi 115 4x4	84	02/12 -	3964	3971
BERLINGO Box (B9)	1.6 HDi 75	55	04/08 -	3964	3971
BERLINGO Box (B9)	1.6 HDi 75 4x4	55	02/12 -	3964	3971
BERLINGO Box (B9)	1.6 HDi 90	66	07/10 -	3964	3971
BERLINGO Box (B9)	1.6 HDi 90	68	07/10 -	3964	3971
BERLINGO Box (B9)	1.6 HDi 90 16V	66	04/08 -	3964	3971
BERLINGO Box (B9)	1.6 HDi 90 4x4	66	02/12 -	3964	3971
BERLINGO Box (B9)	1.6 VTi 120	88	11/09 -	3964	3971
BERLINGO Box (B9)	1.6 VTi 95	72	07/10 -	3964	3971
BERLINGO Box (B9)	Electric	35	01/13 -	3964	3971
BERLINGO Box (B9)	Electric	42	09/11 -	3964	3971

MAKE & MODEL		KW	YEAR		
CITROEN					
BERLINGO Box (B9)	Electric	49	03/14 -	3964	3971
BERLINGO Box (M_)	1.1 i (MAHDZ, MBHDZ, MBHFX)	44	07/96 -	3636	3529/1
BERLINGO Box (M_)	1.1 i (MAHDZ, MBHDZ, MBHFX)	44	07/96 -	3644	
BERLINGO Box (M_)	1.1 i (MAHDZ, MBHDZ, MBHFX)	44	07/96 -	3820	
BERLINGO Box (M_)	1.4 bivalent	48	11/02 -	3820	3529/1
BERLINGO Box (M_)	1.4 CNG	48	11/02 -	3636	3529/1
BERLINGO Box (M_)	1.4 CNG	48	11/02 -	3644	
BERLINGO Box (M_)	1.4 CNG	48	11/02 -	3820	
BERLINGO Box (M_)	1.4 i (MBKFX, MBKFW)	55	07/96 -	3636	3529/1
BERLINGO Box (M_)	1.4 i (MBKFX, MBKFW)	55	07/96 -	3644	
BERLINGO Box (M_)	1.4 i (MBKFX, MBKFW)	55	07/96 -	3820	
BERLINGO Box (M_)	1.4 i bivalent (MBKFW)	55	04/03 -	3820	3529/1
BERLINGO Box (M_)	1.6 16V	81	08/05 – 12/07	3820	3529/1
BERLINGO Box (M_)	1.6 16V (MBNFU)	80	10/00 -	3820	3529/1
BERLINGO Box (M_)	1.6 HDI 75 (MB9HW)	55	07/05 -	3820	3529/1
BERLINGO Box (M_)	1.6 HDI 90 (MB9HX, MC9HX)	66	07/05 -	3820	3529/1
BERLINGO Box (M_)	1.8 D (MBA9A, MCA9A)	43	07/96 -	3636	
BERLINGO Box (M_)	1.8 D (MBA9A, MCA9A)	43	07/96 -	3644	
BERLINGO Box (M_)	1.8 D (MBA9A, MCA9A)	43	07/96 -	3820	
BERLINGO Box (M_)	1.8 i	66	08/99 – 10/02	3636	
BERLINGO Box (M_)	1.8 i	66	08/99 – 10/02	3644	
BERLINGO Box (M_)	1.8 i	66	08/99 – 10/02	3820	
BERLINGO Box (M_)	1.9 D (MBDJY)	51	07/96 -	3636	3529/1
BERLINGO Box (M_)	1.9 D (MBDJY)	51	07/96 -	3644	
BERLINGO Box (M_)	1.9 D (MBDJY)	51	07/96 -	3820	
BERLINGO Box (M_)	1.9 D 70 (MBWJZ, MCWJZ)	51	04/99 -	3636	3529/1
BERLINGO Box (M_)	1.9 D 70 (MBWJZ, MCWJZ)	51	04/99 -	3644	
BERLINGO Box (M_)	1.9 D 70 (MBWJZ, MCWJZ)	51	04/99 -	3820	
BERLINGO Box (M_)	1.9 D 70 4WD (MBWJZ, MCWJZ)	51	07/98 -	3636	3529/1
BERLINGO Box (M_)	1.9 D 70 4WD (MBWJZ, MCWJZ)	51	07/98 -	3644	
BERLINGO Box (M_)	1.9 D 70 4WD (MBWJZ, MCWJZ)	51	07/98 -	3820	
BERLINGO Box (M_)	2.0 HDI 90 (MBRHY, MCRHY)	66	12/99 -	3644	3529/1
BERLINGO Box (M_)	2.0 HDI 90 (MBRHY, MCRHY)	66	12/99 -	3820	
BERLINGO Box (M_)	2.0 HDI 90 (MBRHY, MCRHY)	66	12/99 -	3636	
BERLINGO Box (M_)	2.0 HDI 90 4WD (MBRHY, MCRHY)	66	12/99 -	3644	3529/1
BERLINGO Box (M_)	2.0 HDI 90 4WD (MBRHY, MCRHY)	66	12/99 -	3636	
BERLINGO Box (M_)	2.0 HDI 90 4WD (MBRHY, MCRHY)	66	11/00 -	3820	
BERLINGO Box (M_)	Electric	27	07/03 -	3820	
BERLINGO Kasa/büyük limuzin (K9)	1.5 BlueHDi 100	75	06.2018 -	4371	4372
BERLINGO Kasa/büyük limuzin (K9)	1.5 BlueHDi 130	96	06.2018 -	4371	4372
BERLINGO Kasa/büyük limuzin (K9)	1.5 BlueHDi 130 4x4	96	06.2018 -	4371	4372
BERLINGO Kasa/büyük limuzin (K9)	1.5 BlueHDi 75	55	10.2019 -	4371	4372
BERLINGO Kasa/büyük limuzin (K9)	1.6 BlueHDi 100	73	06.2018 -	4371	4372
BERLINGO Kasa/büyük limuzin (K9)	1.6 BlueHDi 75	55	06.2018 -	4371	4372
BERLINGO Kasa/büyük limuzin (K9)	PureTech 110	81	06.2018 -	4371	4372
BERLINGO Kasa/büyük limuzin (K9)	PureTech 130	96	10.2019 -	4371	4372
BERLINGO Platform/Chassis (B9)	1.6 BlueHDi 100	73	12/14 -	3964	3971
BERLINGO Platform/Chassis (B9)	1.6 HDi 90	66	04/08 -	3964	3971
BERLINGO Platform/Chassis (B9)	1.6 HDi 92	68	07/10 -	3964	3971
BX (XB-_)	11	40	10/88 – 06/92	3494	
BX (XB-_)	11	42	10/86 – 06/92	3494	
BX (XB-_)	14	47	01/89 – 12/89	3494	
BX (XB-_)	14	55	01/89 – 02/93	3494	
BX (XB-_)	15	59	10/87 – 05/92	3494	
BX (XB-_)	16	53	01/87 – 02/93	3494	
BX (XB-_)	16	55	09/88 – 02/93	3494	
BX (XB-_)	16	58	09/87 – 02/93	3494	
BX (XB-_)	16	64	07/85 – 02/93	3494	
BX (XB-_)	16	66	10/82 – 06/88	3494	
BX (XB-_)	16	68	10/82 – 12/92	3494	
BX (XB-_)	16	76	03/86 – 02/93	3494	
BX (XB-_)	16	85	01/87 – 01/92	3494	
BX (XB-_)	19	70	09/86 – 11/89	3494	
BX (XB-_)	19	75	07/86 – 05/89	3494	
BX (XB-_)	19	77	07/86 – 05/89	3494	
BX (XB-_)	1.1	40	10/88 – 06/92	3492	
BX (XB-_)	1.1	40	10/88 – 06/92	3493	
BX (XB-_)	1.1	40	10/88 – 06/92	3587	
BX (XB-_)	1.1	42	10/86 – 06/92	3492	
BX (XB-_)	1.1	42	10/86 – 06/92	3493	
BX (XB-_)	1.1	42	10/86 – 06/92	3587	
BX (XB-_)	1.4	47	01/89 – 12/89	3492	
BX (XB-_)	1.4	47	01/89 – 12/89	3493	
BX (XB-_)	1.4	47	01/89 – 12/89	3587	
BX (XB-_)	1.4	55	01/89 – 02/93	3492	
BX (XB-_)	1.4	55	01/89 – 02/93	3493	

MAKE & MODEL		KW	YEAR		
CITROEN					
BX (XB-_)	1.4	55	01/89 – 02/93	3587	
BX (XB-_)	1.4 E	45	10/82 – 06/88	3492	
BX (XB-_)	1.4 E	45	10/82 – 06/88	3493	
BX (XB-_)	1.4 E	45	10/82 – 06/88	3587	
BX (XB-_)	1.4 E	49	09/85 – 02/93	3492	
BX (XB-_)	1.4 E	49	09/85 – 02/93	3493	
BX (XB-_)	1.4 E	49	09/85 – 02/93	3587	
BX (XB-_)	1.4 E	52	04/83 – 07/89	3492	
BX (XB-_)	1.4 E	52	04/83 – 07/89	3493	
BX (XB-_)	1.4 E	52	04/83 – 07/89	3587	
BX (XB-_)	1.4 E	53	04/83 – 02/93	3492	
BX (XB-_)	1.4 E	53	04/83 – 02/93	3493	
BX (XB-_)	1.4 E	53	04/83 – 02/93	3587	
BX (XB-_)	1.4 E	59	10/85 – 05/89	3492	
BX (XB-_)	1.4 E	59	10/85 – 05/89	3493	
BX (XB-_)	1.4 E	59	10/85 – 05/89	3587	
BX (XB-_)	1.5	59	10/87 – 05/92	3492	
BX (XB-_)	1.5	59	10/87 – 05/92	3493	
BX (XB-_)	1.5	59	10/87 – 05/92	3587	
BX (XB-_)	1.6	53	01/87 – 02/93	3492	
BX (XB-_)	1.6	53	01/87 – 02/93	3493	
BX (XB-_)	1.6	53	01/87 – 02/93	3587	
BX (XB-_)	1.6	55	09/88 – 02/93	3492	
BX (XB-_)	1.6	55	09/88 – 02/93	3493	
BX (XB-_)	1.6	55	09/88 – 02/93	3587	
BX (XB-_)	1.6	58	09/87 – 02/93	3492	
BX (XB-_)	1.6	58	09/87 – 02/93	3493	
BX (XB-_)	1.6	58	09/87 – 02/93	3587	
BX (XB-_)	1.6	64	07/85 – 02/93	3492	
BX (XB-_)	1.6	64	07/85 – 02/93	3493	
BX (XB-_)	1.6	64	07/85 – 02/93	3587	
BX (XB-_)	1.6	66	10/82 – 06/88	3492	
BX (XB-_)	1.6	66	10/82 – 06/88	3493	
BX (XB-_)	1.6	66	10/82 – 06/88	3587	
BX (XB-_)	1.6	68	10/82 – 12/92	3492	
BX (XB-_)	1.6	68	10/82 – 12/92	3493	
BX (XB-_)	1.6	68	10/82 – 12/92	3587	
BX (XB-_)	1.6	76	03/86 – 02/93	3492	
BX (XB-_)	1.6	76	03/86 – 02/93	3493	
BX (XB-_)	1.6	76	03/86 – 02/93	3587	
BX (XB-_)	1.6	85	01/87 – 01/92	3492	
BX (XB-_)	1.6	85	01/87 – 01/92	3493	
BX (XB-_)	1.6	85	01/87 – 01/92	3587	
BX (XB-_)	1.6 E	65	05/89 – 02/93	3492	
BX (XB-_)	1.6 E	65	05/89 – 02/93	3493	
BX (XB-_)	1.6 E	65	05/89 – 02/93	3587	
BX (XB-_)	1.8 D	44	10/85 – 09/93	3492	
BX (XB-_)	1.8 D	44	10/85 – 09/93	3493	
BX (XB-_)	1.8 D	44	10/85 – 09/93	3587	
BX (XB-_)	1.8 D	44	10/85 – 09/93	3494	
BX (XB-_)	1.9	70	09/86 – 11/89	3492	
BX (XB-_)	1.9	70	09/86 – 11/89	3493	
BX (XB-_)	1.9	70	09/86 – 11/89	3587	
BX (XB-_)	1.9	75	07/86 – 05/89	3492	
BX (XB-_)	1.9	75	07/86 – 05/89	3493	
BX (XB-_)	1.9	75	07/86 – 05/89	3587	
BX (XB-_)	1.9	77	07/86 – 05/89	3492	
BX (XB-_)	1.9	77	07/86 – 05/89	3493	
BX (XB-_)	1.9	77	07/86 – 05/89	3587	
BX (XB-_)	1.9 All-wheel Drive	92	02/92 – 06/94	3492	
BX (XB-_)	1.9 All-wheel Drive	92	02/92 – 06/94	3493	
BX (XB-_)	1.9 All-wheel Drive	92	02/92 – 06/94	3587	
BX (XB-_)	1.9 All-wheel Drive	92	02/92 – 06/94	3494	
BX (XB-_)	1.9 D	47	09/83 – 09/93	3492	
BX (XB-_)	1.9 D	47	09/83 – 09/93	3493	
BX (XB-_)	1.9 D	47	09/83 – 09/93	3587	
BX (XB-_)	1.9 D	51	03/87 – 02/93	3492	
BX (XB-_)	1.9 D	51	03/87 – 02/93	3493	
BX (XB-_)	1.9 D	51	03/87 – 02/93	3587	
BX (XB-_)	1.9 E	80	06/88 – 02/93	3492	
BX (XB-_)	1.9 E	80	06/88 – 02/93	3493	
BX (XB-_)	1.9 E	80	06/88 – 02/93	3587	
BX (XB-_)	1.9 E 4x4	80	04/89 – 02/93	3492	
BX (XB-_)	1.9 E 4x4	80	04/89 – 02/93	3493	
BX (XB-_)	1.9 E 4x4	80	04/89 – 02/93	3587	
BX (XB-_)	1.9 GTi	88	06/88 – 02/93	3492	

MAKE & MODEL		KW	YEAR		
CITROEN					
BX (XB-_)	1.9 GTi	88	06/88 – 02/93	3493	
BX (XB-_)	1.9 GTi	88	06/88 – 02/93	3587	
BX (XB-_)	1.9 GTi	90	07/86 – 02/93	3492	
BX (XB-_)	1.9 GTi	90	07/86 – 02/93	3493	
BX (XB-_)	1.9 GTi	90	07/86 – 02/93	3587	
BX (XB-_)	1.9 GTi	117	01/90 – 01/92	3492	
BX (XB-_)	1.9 GTi	117	01/90 – 01/92	3493	
BX (XB-_)	1.9 GTi	117	01/90 – 01/92	3587	
BX (XB-_)	1.9 GTi	117	01/90 – 01/92	3494	
BX (XB-_)	1.9 GTi 16V	108	03/88 – 02/93	3492	
BX (XB-_)	1.9 GTi 16V	108	03/88 – 02/93	3493	
BX (XB-_)	1.9 GTi 16V	108	03/88 – 02/93	3587	
BX (XB-_)	1.9 GTi 16V	116	09/87 – 12/88	3492	
BX (XB-_)	1.9 GTi 16V	116	09/87 – 12/88	3493	
BX (XB-_)	1.9 GTi 16V	116	09/87 – 12/88	3587	
BX (XB-_)	1.9 GTi 4x4	88	06/88 – 02/93	3492	
BX (XB-_)	1.9 GTi 4x4	88	06/88 – 02/93	3493	
BX (XB-_)	1.9 GTi 4x4	88	06/88 – 02/93	3587	
BX (XB-_)	1.9 RD 4x4	52	01/87 – 01/92	3492	
BX (XB-_)	1.9 RD 4x4	52	01/87 – 01/92	3493	
BX (XB-_)	1.9 RD 4x4	52	01/87 – 01/92	3587	
BX (XB-_)	1.9 RD 4x4	52	01/87 – 01/92	3494	
BX (XB-_)	14 E	45	10/82 – 06/88	3494	
BX (XB-_)	14 E	49	09/85 – 02/93	3494	
BX (XB-_)	14 E	52	04/83 – 07/89	3494	
BX (XB-_)	14 E	53	04/83 – 02/93	3494	
BX (XB-_)	14 E	59	10/85 – 05/89	3494	
BX (XB-_)	16 E	65	05/89 – 02/93	3494	
BX (XB-_)	19 D	47	09/83 – 09/93	3494	
BX (XB-_)	19 D	51	03/87 – 02/93	3494	
BX (XB-_)	19 E	80	06/88 – 02/93	3494	
BX (XB-_)	19 E 4x4	80	04/89 – 02/93	3494	
BX (XB-_)	19 GTi	88	06/88 – 02/93	3494	
BX (XB-_)	19 GTi	90	07/86 – 02/93	3494	
BX (XB-_)	19 GTi 16V	108	03/88 – 02/93	3494	
BX (XB-_)	19 GTi 16V	116	09/87 – 12/88	3494	
BX (XB-_)	19 GTi 4x4	88	06/88 – 02/93	3494	
BX (XB-_)	TRD Turbo	66	03/88 – 02/93	3492	
BX (XB-_)	TRD Turbo	66	03/88 – 02/93	3493	
BX (XB-_)	TRD Turbo	66	03/88 – 02/93	3587	
BX (XB-_)	TRD Turbo	66	03/88 – 02/93	3494	
BX Break (XB-_)	1.4	44	01/87 – 01/92	3494	
BX Break (XB-_)	1.4	44	01/87 – 01/92	3492	
BX Break (XB-_)	1.4	44	01/87 – 01/92	3493	
BX Break (XB-_)	1.4	44	01/87 – 01/92	3587	
BX Break (XB-_)	1.4	47	01/89 – 12/89	3494	
BX Break (XB-_)	1.4	47	01/89 – 12/89	3492	
BX Break (XB-_)	1.4	47	01/89 – 12/89	3493	
BX Break (XB-_)	1.4	47	01/89 – 12/89	3587	
BX Break (XB-_)	1.4	52	01/87 – 01/92	3494	
BX Break (XB-_)	1.4	52	01/87 – 01/92	3492	
BX Break (XB-_)	1.4	52	01/87 – 01/92	3493	
BX Break (XB-_)	1.4	52	01/87 – 01/92	3587	
BX Break (XB-_)	1.4	53	01/86 – 02/93	3494	
BX Break (XB-_)	1.4	53	01/86 – 02/93	3492	
BX Break (XB-_)	1.4	53	01/86 – 02/93	3493	
BX Break (XB-_)	1.4	53	01/86 – 02/93	3587	
BX Break (XB-_)	1.4	55	01/89 – 02/93	3494	
BX Break (XB-_)	1.4	55	01/89 – 02/93	3492	
BX Break (XB-_)	1.4	55	01/89 – 02/93	3493	
BX Break (XB-_)	1.4	55	01/89 – 02/93	3587	
BX Break (XB-_)	1.5	59	10/87 – 05/92	3494	
BX Break (XB-_)	1.5	59	10/87 – 05/92	3492	
BX Break (XB-_)	1.5	59	10/87 – 05/92	3493	
BX Break (XB-_)	1.5	59	10/87 – 05/92	3587	
BX Break (XB-_)	1.6	53	09/88 – 12/94	3494	
BX Break (XB-_)	1.6	53	09/88 – 12/94	3492	
BX Break (XB-_)	1.6	53	09/88 – 12/94	3493	
BX Break (XB-_)	1.6	53	09/88 – 12/94	3587	
BX Break (XB-_)	1.6	55	09/88 – 12/94	3494	
BX Break (XB-_)	1.6	55	09/88 – 12/94	3492	
BX Break (XB-_)	1.6	55	09/88 – 12/94	3493	
BX Break (XB-_)	1.6	55	09/88 – 12/94	3587	
BX Break (XB-_)	1.6	64	07/85 – 12/94	3494	
BX Break (XB-_)	1.6	64	07/85 – 12/94	3492	
BX Break (XB-_)	1.6	64	07/85 – 12/94	3493	

MAKE & MODEL		KW	YEAR		
CITROEN					
BX Break (XB-_)	1.6	64	07/85 – 12/94	3587	
BX Break (XB-_)	1.6	65	05/89 – 12/94	3494	
BX Break (XB-_)	1.6	65	05/89 – 12/94	3492	
BX Break (XB-_)	1.6	65	05/89 – 12/94	3493	
BX Break (XB-_)	1.6	65	05/89 – 12/94	3587	
BX Break (XB-_)	1.6	66	06/85 – 06/88	3494	
BX Break (XB-_)	1.6	66	06/85 – 06/88	3492	
BX Break (XB-_)	1.6	66	06/85 – 06/88	3493	
BX Break (XB-_)	1.6	66	06/85 – 06/88	3587	
BX Break (XB-_)	1.6	76	03/86 – 12/94	3494	
BX Break (XB-_)	1.6	76	03/86 – 12/94	3492	
BX Break (XB-_)	1.6	76	03/86 – 12/94	3493	
BX Break (XB-_)	1.6	76	03/86 – 12/94	3587	
BX Break (XB-_)	1.6	85	01/87 – 01/92	3494	
BX Break (XB-_)	1.6	85	01/87 – 01/92	3492	
BX Break (XB-_)	1.6	85	01/87 – 01/92	3493	
BX Break (XB-_)	1.6	85	01/87 – 01/92	3587	
BX Break (XB-_)	1.8 D	44	10/85 – 09/93	3492	
BX Break (XB-_)	1.8 D	44	10/85 – 09/93	3493	
BX Break (XB-_)	1.8 D	44	10/85 – 09/93	3587	
BX Break (XB-_)	1.9	70	12/87 – 12/89	3494	
BX Break (XB-_)	1.9	70	12/87 – 12/89	3492	
BX Break (XB-_)	1.9	70	12/87 – 12/89	3493	
BX Break (XB-_)	1.9	70	12/87 – 12/89	3587	
BX Break (XB-_)	1.9	75	07/86 – 12/94	3494	
BX Break (XB-_)	1.9	75	07/86 – 12/94	3492	
BX Break (XB-_)	1.9	75	07/86 – 12/94	3493	
BX Break (XB-_)	1.9	75	07/86 – 12/94	3587	
BX Break (XB-_)	1.9	80	06/88 – 12/94	3494	
BX Break (XB-_)	1.9	80	06/88 – 12/94	3492	
BX Break (XB-_)	1.9	80	06/88 – 12/94	3493	
BX Break (XB-_)	1.9	80	06/88 – 12/94	3587	
BX Break (XB-_)	1.9	88	06/88 – 12/94	3494	
BX Break (XB-_)	1.9	88	06/88 – 12/94	3492	
BX Break (XB-_)	1.9	88	06/88 – 12/94	3493	
BX Break (XB-_)	1.9	88	06/88 – 12/94	3587	
BX Break (XB-_)	1.9 4x4	78	06/89 – 05/91	3492	
BX Break (XB-_)	1.9 4x4	78	06/89 – 05/91	3493	
BX Break (XB-_)	1.9 4x4	78	06/89 – 05/91	3587	
BX Break (XB-_)	1.9 4x4	80	10/90 – 05/91	3492	
BX Break (XB-_)	1.9 4x4	80	10/90 – 05/91	3493	
BX Break (XB-_)	1.9 4x4	80	10/90 – 05/91	3587	
BX Break (XB-_)	1.9 CAT	75	07/86 – 12/94	3492	
BX Break (XB-_)	1.9 CAT	75	07/86 – 12/94	3493	
BX Break (XB-_)	1.9 CAT	75	07/86 – 12/94	3587	
BX Break (XB-_)	1.9 D	47	09/83 – 11/94	3492	
BX Break (XB-_)	1.9 D	47	09/83 – 11/94	3493	
BX Break (XB-_)	1.9 D	47	09/83 – 11/94	3587	
BX Break (XB-_)	1.9 D	51	03/87 – 12/94	3492	
BX Break (XB-_)	1.9 D	51	03/87 – 12/94	3493	
BX Break (XB-_)	1.9 D	51	03/87 – 12/94	3587	
BX Break (XB-_)	1.9 D	52	01/87 – 01/92	3494	
BX Break (XB-_)	1.9 D	52	01/87 – 01/92	3492	
BX Break (XB-_)	1.9 D	52	01/87 – 01/92	3493	
BX Break (XB-_)	1.9 D	52	01/87 – 01/92	3587	
BX Break (XB-_)	1.9 DT TXD	66	02/92 – 12/94	3494	
BX Break (XB-_)	1.9 DT TXD	66	02/92 – 12/94	3492	
BX Break (XB-_)	1.9 DT TXD	66	02/92 – 12/94	3493	
BX Break (XB-_)	1.9 DT TXD	66	02/92 – 12/94	3587	
BX Break (XB-_)	1.9 GTi 4x4	92	02/92 – 06/94	3494	
BX Break (XB-_)	1.9 GTi 4x4	92	02/92 – 06/94	3492	
BX Break (XB-_)	1.9 GTi 4x4	92	02/92 – 06/94	3493	
BX Break (XB-_)	1.9 GTi 4x4	92	02/92 – 06/94	3587	
BX Break (XB-_)	1.9 TZi	92	02/92 – 12/94	3494	
BX Break (XB-_)	1.9 TZi	92	02/92 – 12/94	3492	
BX Break (XB-_)	1.9 TZi	92	02/92 – 12/94	3493	
BX Break (XB-_)	1.9 TZi	92	02/92 – 12/94	3587	
BX Break (XB-_)	18 D	44	10/85 – 09/93	3494	
BX Break (XB-_)	19 4x4	78	06/89 – 05/91	3494	
BX Break (XB-_)	19 4x4	80	10/90 – 05/91	3494	
BX Break (XB-_)	19 CAT	75	07/86 – 12/94	3494	
BX Break (XB-_)	19 D	47	09/83 – 11/94	3494	
BX Break (XB-_)	19 D	51	03/87 – 12/94	3494	
BX Break (XB-_)	TRD Turbo	66	03/88 – 12/94	3494	
BX Break (XB-_)	TRD Turbo	66	03/88 – 12/94	3492	
BX Break (XB-_)	TRD Turbo	66	03/88 – 12/94	3493	

MAKE & MODEL		KW	YEAR		
CITROEN					
BX Break (XB-_)	TRD Turbo	66	03/88 – 12/94	3587	
BX Break (XB-_)	TRD Turbo	66	03/88 – 12/94	3587	
C1 (PM_, PN_)	1.0	50	06/05 -	3987	
C1 (PM_, PN_)	1.4 HDi	40	06/05 -	3987	
C1 II	1.0 VTi 68	51	04/14 -	3987	
C1 II	1.2 VTi 82	60	04/14 -	3987	
C15 (VD-_)	1.0	33	10/84 – 12/97	3474	
C15 (VD-_)	1.0 E	37	11/92 – 07/96	3474	
C15 (VD-_)	1.1	35	10/84 – 12/96	3474	
C15 (VD-_)	1.1	40	10/84 – 07/87	3474	
C15 (VD-_)	1.1	40	11/88 – 07/96	3474	
C15 (VD-_)	1.1 i	44	07/88 – 12/96	3474	
C15 (VD-_)	1.3	47	07/87 – 05/88	3474	
C15 (VD-_)	1.4	49	07/87 – 12/96	3474	
C15 (VD-_)	1.4 E	40	07/87 – 12/96	3474	
C15 (VD-_)	1.4 E	44	05/87 – 12/96	3474	
C15 (VD-_)	1.4 i	55	05/91 – 12/96	3474	
C15 (VD-_)	1.8 D	44	07/86 – 12/00	3474	
C15 (VD-_)	1.9 D	44	12/00 – 12/05	3474	
C15 Estate	1.1	40	10/88 – 10/92	3474	
C15 Estate	1.1	44	08/88 – 07/96	3474	
C15 Estate	1.4	44	05/87 – 10/92	3474	
C15 Estate	1.4	49	05/87 – 09/92	3474	
C15 Estate	1.4	55	05/91 – 07/96	3474	
C15 Estate	1.8 D	44	04/87 – 08/00	3474	
C2 (JM_)	1.1	44	09/03 -	3854	3529/1
C2 (JM_)	1.4	54	09/03 -	3854	
C2 (JM_)	1.4	54	09/03 -	3931	
C2 (JM_)	1.4	55	10/06 -	3854	3529/1
C2 (JM_)	1.4	55	10/06 -	3931	
C2 (JM_)	1.4 16V	65	06/06 -	3854	3529/1
C2 (JM_)	1.4 16V	65	06/06 -	3931	
C2 (JM_)	1.4 HDi	50	09/03 -	3854	3529/1
C2 (JM_)	1.4 HDi	50	09/03 -	3931	
C2 (JM_)	1.6	80	09/03 -	3931	3529/1
C2 (JM_)	1.6 HDi	80	09/05 -		3529/1
C2 (JM_)	1.6 VTS	90	01/05 -		3529/1
C2 ENTERPRISE	1.4 HDi	50	04/09 -	3854	3529/1
C25 Box (280_, 290_)	1.8	50	11/81 – 01/94	3440	
C25 Box (280_, 290_)	1.8 E	51	07/87 – 02/94	3440	
C25 Box (280_, 290_)	1.9 D	51	07/87 – 02/94	3440	
C25 Box (280_, 290_)	1.9 D 1400	51	01/88 – 01/94	3440	
C25 Box (280_, 290_)	1.9 TD	60	04/92 – 02/94	3440	
C25 Box (280_, 290_)	2.0	62	02/91 – 03/94	3440	
C25 Box (280_, 290_)	2.0 4x4	62	01/90 – 01/94	3440	
C25 Box (280_, 290_)	2.0 E	58	09/81 – 03/94	3440	
C25 Bus (280_, 290_)	2.5 D	54	10/85 – 02/94	3440	
C25 Bus (280_, 290_)	2.5 D	55	11/81 – 01/94	3440	
C25 Bus (280_, 290_)	2.5 D 4x4	54	01/87 – 02/94	3440	
C25 Bus (280_, 290_)	2.5 D 4x4	55	11/83 – 12/86	3440	
C25 Platform/Chassis (280_, 290_)	1.9 DT	60	10/91 – 01/94	3440	
C25 Platform/Chassis (280_, 290_)	2.0	57	11/81 – 12/86	3440	
C25 Platform/Chassis (280_, 290_)	2.0	62	01/87 – 03/94	3440	
C25 Platform/Chassis (280_, 290_)	2.5 D	55	11/83 – 01/94	3440	
C3 I (FC_)	1.1 i	44	02/02 -	3854	
C3 I (FC_)	1.4 16V	65	12/03 -	3931	3529/1
C3 I (FC_)	1.4 16V HDi	66	02/02 -	3854	3529/1
C3 I (FC_)	1.4 16V HDi	66	02/02 -	3931	
C3 I (FC_)	1.4 HDi	50	02/02 -	3854	
C3 I (FC_)	1.4 HDi	50	02/02 -	3931	
C3 I (FC_)	1.4 HDi	52	07/03 -	3854	
C3 I (FC_)	1.4 HDi	52	07/03 -	3931	
C3 I (FC_)	1.4 HDi	55	05/05 -	3854	
C3 I (FC_)	1.4 HDi	55	05/05 -	3931	
C3 I (FC_)	1.4 i	54	02/02 -	3854	
C3 I (FC_)	1.4 i	54	02/02 -	3931	
C3 I (FC_)	1.4 i Bivalent	54	02/02 -	3931	3529/1
C3 I (FC_)	1.4 i Bivalent	54	02/02 -	3854	
C3 I (FC_)	1.6 16V	80	02/02 -	3800	
C3 I (FC_)	1.6 16V	80	02/02 -	3931	
C3 I (FC_)	1.6 16V	81	05/03 – 09/05	3800	3529/1
C3 I (FC_)	1.6 16V	81	05/03 – 09/05	3931	
C3 I (FC_)	1.6 16V HDi	66	10/05 -	3931	3529/1
C3 I (FC_)	1.6 16V HDi	80	09/05 -	3800	3529/1
C3 I (FC_)	1.6 16V HDi	80	09/05 -	3931	
C3 I (FC_)	1.6 Bioflex	83	06/05 -	3800	3529/1

BESER®

MAKE & MODEL   		KW	YEAR		
CITROEN					
C3 II	1.0 VTi 68	50	08/12 -		3529/1
C3 II	1.1	44	11/09 -		3529/1
C3 II	1.1 BiFuel	44	11/10 -		3529/1
C3 II	1.2 THP 110	81	10/14 -		3529/1
C3 II	1.2 VTi 82	60	06/12 -		3529/1
C3 II	1.4	54	11/09 -		3529/1
C3 II	1.4 HDi 70	50	11/09 -		3529/1
C3 II	1.4 LPG	70	06/13 -	3931	3529/1
C3 II	1.4 VTi 95	70	11/09 -		3529/1
C3 II	1.6 BlueHDi 100	73	07/14 -	3820	3529/1
C3 II	1.6 BlueHDi 75	55	04/15 -	3820	3529/1
C3 II	1.6 HDi	68	11/09 -		3529/1
C3 II	1.6 HDi 110	82	11/09 -		3529/1
C3 II	1.6 HDi 115	84	09/12 -		3529/1
C3 II	1.6 HDi 90	66	11/09 -		3529/1
C3 II	1.6 VTi 120	88	11/09 -		3529/1
C3 Picasso	1.2 THP 110	81	01/15 -		3529/1
C3 Picasso	1.4 VTi 95	70	02/09 -		3529/1
C3 Picasso	1.4 VTi 95 LPG	70	01/12 -		3529/1
C3 Picasso	1.6 BlueHDi 100	73	01/15 -		3529/1
C3 Picasso	1.6 HDI 90	68	07/10 -		3529/1
C3 Picasso	1.6 HDi	66	02/09 -		3529/1
C3 Picasso	1.6 HDi	80	02/09 -		3529/1
C3 Picasso	1.6 HDi 110	82	05/10 -		3529/1
C3 Picasso	1.6 HDi 115	84	01/13 -		3529/1
C3 Picasso	1.6 VTi 120	88	02/09 -		3529/1
C3 Pluriel (HB_)	1.4	54	05/03 -	3931	
C3 Pluriel (HB_)	1.4 HDi	50	04/04 -	3931	
C3 Pluriel (HB_)	1.4 Hybrid	54	05/05 -	3931	
C3 Pluriel (HB_)	1.6	80	05/03 -	3931	3529/1
C4 AIRCROSS	1.6	86	04/12 -		3893
C4 AIRCROSS	1.6 HDi 115	84	04/12 -		3893
C4 AIRCROSS	1.6 HDi 115 AWC	84	05/12 -		3893
C4 AIRCROSS	1.8 HDi 150	110	04/12 -		3893
C4 AIRCROSS	1.8 HDi 150 AWC	110	04/12 -		3893
C4 AIRCROSS	2.0	110	04/12 -		3893
C4 AIRCROSS	2.0 AWC	110	04/12 -		3893
C4 CACTUS	1.2 THP 110	81	09/14 -	4201	3529/1
C4 CACTUS	1.2 VTi 75	55	09/14 -	4201	3529/1
C4 CACTUS	1.2 VTi 82	60	09/14 -	4201	3529/1
C4 CACTUS	1.6 BlueHDi 100	73	09/14 -	4201	3529/1
C4 CACTUS	1.6 HDi 90	68	09/14 -	4201	3529/1
C4 Coupe (LA_)	1.4 16V	65	11/04 – 07/11	3800	3529/1
C4 Coupe (LA_)	1.4 16V	65	11/04 – 07/11		3984
C4 Coupe (LA_)	1.6 16V	80	11/04 – 07/11	3800	3529/1
C4 Coupe (LA_)	1.6 16V	80	11/04 – 07/11		3984
C4 Coupe (LA_)	1.6 HDi	66	11/04 – 07/11	3800	3529/1
C4 Coupe (LA_)	1.6 HDi	66	11/04 – 07/11		3984
C4 Coupe (LA_)	1.6 HDi	80	11/04 – 07/11	3800	3529/1
C4 Coupe (LA_)	1.6 HDi	80	11/04 – 07/11		3984
C4 Coupe (LA_)	1.6 THP 150	110	07/08 – 07/11	3800	3529/1
C4 Coupe (LA_)	1.6 THP 150	110	07/08 – 07/11		3984
C4 Coupe (LA_)	1.6 VTi 120	88	07/08 – 07/11	3800	3529/1
C4 Coupe (LA_)	1.6 VTi 120	88	07/08 – 07/11		3984
C4 Coupe (LA_)	2.0 16V	100	11/04 – 07/07	3800	3529/1
C4 Coupe (LA_)	2.0 16V	100	11/04 – 07/07		3984
C4 Coupe (LA_)	2.0 16V	130	11/04 – 12/10		3529/1
C4 Coupe (LA_)	2.0 16V	130	11/04 – 12/10		3984
C4 Coupe (LA_)	2.0 HDi	100	11/04 – 12/10		3529/1
C4 Coupe (LA_)	2.0 HDi	100	11/04 – 12/10		3984
C4 Coupe (LA_)	2.0 HDi	103	07/08 – 07/11		3529/1
C4 Coupe (LA_)	2.0 HDi	103	07/08 – 07/11		3984
C4 Coupe (LA_)	2.0 VTR	103	10/06 – 12/07	3800	3529/1
C4 GRAND PICASSO II (DA_, DE_)	1.2 THP 130	96	04.2014 -		4372
C4 GRAND PICASSO II (DA_, DE_)	1.2 THP 130	96	04.2014 -		4373
C4 GRAND PICASSO II (DA_, DE_)	1.2 THP 130	96	04.2014 -		4374
C4 GRAND PICASSO II (DA_, DE_)	1.6 BlueHDi 100	73	01.2015 -		4372
C4 GRAND PICASSO II (DA_, DE_)	1.6 BlueHDi 100	73	01.2015 -		4373
C4 GRAND PICASSO II (DA_, DE_)	1.6 BlueHDi 100	73	01.2015 -		4374
C4 GRAND PICASSO II (DA_, DE_)	1.6 BlueHDi 120	88	07.2014 -		4372
C4 GRAND PICASSO II (DA_, DE_)	1.6 BlueHDi 120	88	07.2014 -		4373
C4 GRAND PICASSO II (DA_, DE_)	1.6 BlueHDi 120	88	07.2014 -		4374
C4 GRAND PICASSO II (DA_, DE_)	1.6 HDi / BlueHDi 115	85	09.2013 -		4372
C4 GRAND PICASSO II (DA_, DE_)	1.6 HDi / BlueHDi 115	85	09.2013 -		4373
C4 GRAND PICASSO II (DA_, DE_)	1.6 HDi / BlueHDi 115	85	09.2013 -		4374
C4 GRAND PICASSO II (DA_, DE_)	1.6 HDi 90	68	09.2013 -		4372

MAKE & MODEL		KW	YEAR		
CITROEN					
C4 GRAND PICASSO II (DA_, DE_)	1.6 HDi 90	68	09.2013 -		4373
C4 GRAND PICASSO II (DA_, DE_)	1.6 HDi 90	68	09.2013 -		4374
C4 GRAND PICASSO II (DA_, DE_)	1.6 THP 155	115	09.2013 -		4372
C4 GRAND PICASSO II (DA_, DE_)	1.6 THP 155	115	09.2013 -		4373
C4 GRAND PICASSO II (DA_, DE_)	1.6 THP 155	115	09.2013 -		4374
C4 GRAND PICASSO II (DA_, DE_)	1.6 THP 165	121	07.2014 -		4372
C4 GRAND PICASSO II (DA_, DE_)	1.6 THP 165	121	07.2014 -		4373
C4 GRAND PICASSO II (DA_, DE_)	1.6 THP 165	121	07.2014 -		4374
C4 GRAND PICASSO II (DA_, DE_)	1.6 VTi 120	88	09.2013 -		4372
C4 GRAND PICASSO II (DA_, DE_)	1.6 VTi 120	88	09.2013 -		4373
C4 GRAND PICASSO II (DA_, DE_)	1.6 VTi 120	88	09.2013 -		4374
C4 GRAND PICASSO II (DA_, DE_)	2.0 BlueHDi 150	110	06.2013 -		4372
C4 GRAND PICASSO II (DA_, DE_)	2.0 BlueHDi 150	110	06.2013 -		4373
C4 GRAND PICASSO II (DA_, DE_)	2.0 BlueHDi 150	110	06.2013 -		4374
C4 Grand Picasso I (UA_)	1.6 HDi	80	10/06 -	3964	
C4 Grand Picasso I (UA_)	1.6 HDi 110	82	09/10 -	3964	
C4 Grand Picasso I (UA_)	1.6 VTi 120	88	07/08 -	3964	
C4 Grand Picasso I (UA_)	1.8 i 16V	92	10/06 -	3964	
C4 I (LC_)	1.4 16V	65	11/04 – 07/11	3800	3529/1
C4 I (LC_)	1.4 16V	65	11/04 – 07/11		3984
C4 I (LC_)	1.6 16V	80	11/04 – 07/11	3800	3529/1
C4 I (LC_)	1.6 16V	80	11/04 – 07/11		3984
C4 I (LC_)	1.6 16V Bio-Flex	80	09/07 – 07/08	3800	3529/1
C4 I (LC_)	1.6 16V Bio-Flex	80	09/07 – 07/08		3984
C4 I (LC_)	1.6 Flex	81	02/09 – 07/11	3800	3529/1
C4 I (LC_)	1.6 Flex	81	02/09 – 07/11		3984
C4 I (LC_)	1.6 HDi	66	11/04 – 07/11	3800	3529/1
C4 I (LC_)	1.6 HDi	66	11/04 – 07/11		3984
C4 I (LC_)	1.6 HDi	80	11/04 – 07/11	3800	3529/1
C4 I (LC_)	1.6 HDi	80	11/04 – 07/11		3984
C4 I (LC_)	1.6 THP 140	103	07/08 – 07/11	3800	3529/1
C4 I (LC_)	1.6 THP 140	103	07/08 – 07/11		3984
C4 I (LC_)	1.6 THP 150	110	07/08 – 07/11	3800	3529/1
C4 I (LC_)	1.6 THP 150	110	07/08 – 07/11		3984
C4 I (LC_)	1.6 VTi 120	88	07/08 – 07/11	3800	3984
C4 I (LC_)	1.6 VTi 120	88	07/08 – 07/11		3529/1
C4 I (LC_)	2.0 16V	100	11/04 – 07/07	3800	3529/1
C4 I (LC_)	2.0 16V	100	11/04 – 07/07		3984
C4 I (LC_)	2.0 16V	103	11/04 – 07/11	3800	3984
C4 I (LC_)	2.0 16V	103	11/04 – 07/11		3529/1
C4 I (LC_)	2.0 16V	130	11/04 – 07/08		3529/1
C4 I (LC_)	2.0 16V	130	11/04 – 07/08		3984
C4 I (LC_)	2.0 HDi	100	11/04 – 07/11		3529/1
C4 I (LC_)	2.0 HDi	100	11/04 – 07/11		3984
C4 I (LC_)	2.0 HDi	103	07/08 – 07/11		3529/1
C4 I (LC_)	2.0 HDi	103	07/08 – 07/11		3984
C4 II (B7)	1.2 THP 110	81	02/15 -	4145	3529/1
C4 II (B7)	1.2 THP 130	96	04/14 -	3964	
C4 II (B7)	1.4 VTi 95	70	11/09 -	4145	3529/1
C4 II (B7)	1.6 BlueHDi 100	73	07/14 -	4145	3529/1
C4 II (B7)	1.6 BlueHDi 115	85	08/14 -	3964	
C4 II (B7)	1.6 BlueHDi 120	88	02/15 -	3964	3529/1
C4 II (B7)	1.6 HDi 110	82	11/09 -	3964	3529/1
C4 II (B7)	1.6 HDi 115	84	07/12 -	3964	3529/1
C4 II (B7)	1.6 HDi 90	68	11/09 -	3964	3529/1
C4 II (B7)	1.6 HDi 90	68	11/09 -	4145	
C4 II (B7)	1.6 VTi 120	88	11/09 -	3964	3529/1
C4 II (B7)	1.6 VTi 120 LPG	88	09/11 -	3964	3529/1
C4 II (B7)	2.0 BlueHDi 150	110	11/09 -		3529/1
C4 III (B_)	BLUEHDI 110 (BBYHSA)	81	12.2020 -		4372
C4 PICASSO II	1.2 THP 110	81	04.2016 -		4372
C4 PICASSO II	1.2 THP 110	81	04.2016 -		4373
C4 PICASSO II	1.2 THP 110	81	04.2016 -		4374
C4 PICASSO II	1.2 THP 130	96	04.2014 -		4372
C4 PICASSO II	1.2 THP 130	96	04.2014 -		4373
C4 PICASSO II	1.2 THP 130	96	04.2014 -		4374
C4 PICASSO II	1.6 BlueHDi 100	73	12.2014 -		4372
C4 PICASSO II	1.6 BlueHDi 100	73	12.2014 -		4373
C4 PICASSO II	1.6 BlueHDi 100	73	12.2014 -		4374
C4 PICASSO II	1.6 BlueHDi 120	88	07.2014 -		4372
C4 PICASSO II	1.6 BlueHDi 120	88	07.2014 -		4373
C4 PICASSO II	1.6 BlueHDi 120	88	07.2014 -		4374
C4 PICASSO II	1.6 HDi / BlueHDi 115	85	02.2013 -		4372
C4 PICASSO II	1.6 HDi / BlueHDi 115	85	02.2013 -		4373
C4 PICASSO II	1.6 HDi / BlueHDi 115	85	02.2013 -		4374
C4 PICASSO II	1.6 HDi 90	68	02.2013 -		4372

MAKE & MODEL   		KW	YEAR		
CITROEN					
C4 PICASSO II	1.6 HDi 90	68	02.2013 -		4373
C4 PICASSO II	1.6 HDi 90	68	02.2013 -		4374
C4 PICASSO II	1.6 THP 155	115	02.2013 -		4372
C4 PICASSO II	1.6 THP 155	115	02.2013 -		4373
C4 PICASSO II	1.6 THP 155	115	02.2013 -		4374
C4 PICASSO II	1.6 THP 165	121	07.2014 -		4372
C4 PICASSO II	1.6 THP 165	121	07.2014 -		4373
C4 PICASSO II	1.6 THP 165	121	07.2014 -		4374
C4 PICASSO II	1.6 VTi 120	88	02.2013 -		4372
C4 PICASSO II	1.6 VTi 120	88	02.2013 -		4373
C4 PICASSO II	1.6 VTi 120	88	02.2013 -		4374
C4 PICASSO II	2.0 BlueHDi 135	100	09.2013 -		4372
C4 PICASSO II	2.0 BlueHDi 135	100	09.2013 -		4373
C4 PICASSO II	2.0 BlueHDi 135	100	09.2013 -		4374
C4 PICASSO II	2.0 BlueHDi 150	110	09.2013 -		4372
C4 PICASSO II	2.0 BlueHDi 150	110	09.2013 -		4373
C4 PICASSO II	2.0 BlueHDi 150	110	09.2013 -		4374
C4 PICASSO II	2.0 BlueHDi 150	110	09.2013 -		4374
C4 Picasso I (UD_)	1.6 HDi	80	02/07 – 08/13	3964	
C4 Picasso I (UD_)	1.6 HDi 110	82	09/10 – 08/13	3964	
C4 Picasso I (UD_)	1.6 VTi 120	88	07/08 – 08/13	3964	
C4 Picasso I (UD_)	1.8 Bifule	92	01/09 – 10/12	3964	
C4 Picasso I (UD_)	1.8 i 16V	92	02/07 – 12/11	3964	
C4 Saloon	1.6 16V	80	07/06 – 07/11	3800	3529/1
C4 Saloon	1.6 HDi	80	07/06 – 07/11	3800	3529/1
C4 Saloon	2.0 16V	103	07/06 -	3800	3529/1
C4 SPACETOURER (3D_)	1.2 PureTech 110	81	04.2018 -	4371	4372
C4 SPACETOURER (3D_)	1.2 PureTech 110	81	04.2018 -		4373
C4 SPACETOURER (3D_)	1.2 PureTech 110	81	04.2018 -		4374
C4 SPACETOURER (3D_)	1.2 PureTech 130	96	04.2018 -	4371	4372
C4 SPACETOURER (3D_)	1.2 PureTech 130	96	04.2018 -		4373
C4 SPACETOURER (3D_)	1.2 PureTech 130	96	04.2018 -		4374
C4 SPACETOURER (3D_)	1.5 BlueHDi 130	96	05.2018 -	4371	4372
C4 SPACETOURER (3D_)	1.5 BlueHDi 130	96	05.2018 -		4373
C4 SPACETOURER (3D_)	1.5 BlueHDi 130	96	05.2018 -		4374
C4 SPACETOURER (3D_)	1.6 BlueHDi 100	73	04.2018 -	4371	4372
C4 SPACETOURER (3D_)	1.6 BlueHDi 100	73	04.2018 -		4373
C4 SPACETOURER (3D_)	1.6 BlueHDi 100	73	04.2018 -		4374
C4 SPACETOURER (3D_)	1.6 BlueHDi 120	88	04.2018 -	4371	4372
C4 SPACETOURER (3D_)	1.6 BlueHDi 120	88	04.2018 -		4373
C4 SPACETOURER (3D_)	1.6 BlueHDi 120	88	04.2018 -		4374
C4 SPACETOURER (3D_)	1.6 THP 165	121	04.2018 -	4371	4372
C4 SPACETOURER (3D_)	1.6 THP 165	121	04.2018 -		4373
C4 SPACETOURER (3D_)	1.6 THP 165	121	04.2018 -		4374
C4 SPACETOURER (3D_)	2.0 BlueHDi 150	110	04.2018 -	4371	4372
C4 SPACETOURER (3D_)	2.0 BlueHDi 150	110	04.2018 -		4373
C4 SPACETOURER (3D_)	2.0 BlueHDi 150	110	04.2018 -		4374
C4 SPACETOURER (3D_)	2.0 BlueHDi 160	120	04.2018 -	4371	4372
C4 SPACETOURER (3D_)	2.0 BlueHDi 160	120	04.2018 -		4373
C4 SPACETOURER (3D_)	2.0 BlueHDi 160	120	04.2018 -		4374
C4 SPACETOURER Van (3D_)	BlueHDi 130	96	05.2019 -	4371	4372
C4 SPACETOURER Van (3D_)	BlueHDi 130	96	05.2019 -		4373
C4 SPACETOURER Van (3D_)	BlueHDi 130	96	05.2019 -		4374
C5 (DC_)	2.0 16V (RFJ (EW10A)	103	09/04 -	3935	
C5 (DC_)	2.0 16V (RFN (EW10J4)	100	03/01 – 08/04	3935	
C5 (DC_)	2.0 16V HPi (RLZ (EW10D)	103	03/01 – 08/04	3935	
C5 (DC_)	2.0 Hdi (RHR (DW10BTED4)	100	09/04 -	3934	
C5 (DC_)	2.0 Hdi (RHS (DW10ATED)	79	03/01 – 08/04	3935	
C5 (DC_)	2.0 Hdi (RHY (DW10TD)	66	03/01 – 08/04	3935	
C5 (DC_)	2.0 Hdi (RHZ (DW10ATED)	79	03/01 – 08/04	3935	
C5 (DC_)	2.2 HDi (4HX (DW12TED4/FAP)	98	03/01 – 08/04	3934	
C5 (DC_)	2.2 HDi (4HX (DW12TED4/FAP)	98	09/04 -	3934	
C5 (DC_)	3.0 Carlsson HP	173	08/01 – 08/04	3934	
C5 (DC_)	3.0 Carlsson HP	173	09/04 -	3934	
C5 (DC_)	3.0 V6 (XFV (ES9A)	152	09/04 -	3934	
C5 (DC_)	3.0 V6 (XFX (ES9J4S)	152	03/01 – 08/04	3934	
C5 (DC_)	3.0 V6 (XFX (ES9J4S)	152	09/04 -	3934	
C5 (DE_)	1.8 16V (6FZ (EW7J4)	85	06/01 – 08/04	3935	
C5 (DE_)	2.0 16V (RFJ (EW10A)	103	09/04 -	3935	
C5 (DE_)	2.0 16V (RFN (EW10J4)	100	06/01 – 08/04	3935	
C5 (DE_)	2.0 16V HPi (RLZ (EW10D)	103	06/01 – 08/04	3935	
C5 (DE_)	2.0 Hdi (RHR (DW10BTED4)	100	09/04 -	3935	
C5 (DE_)	2.0 Hdi (RHS (DW10ATED)	79	06/01 – 08/04	3935	
C5 (DE_)	2.0 Hdi (RHY (DW10TD)	66	06/01 – 08/04	3935	
C5 (DE_)	2.0 Hdi (RHZ (DW10ATED)	79	06/01 – 08/04	3935	
C5 (DE_)	2.0 Hdi (RHZ (DW10ATED)	80	06/01 – 08/04	3935	

MAKE & MODEL		KW	YEAR		
CITROEN					
C5 (DE_)	2.2 HDi (4HT (DW12BTED4)	125	04/06 -	3934	
C5 (DE_)	2.2 HDi (4HX (DW12TED4/FAP)	98	06/01 – 08/04	3934	
C5 (DE_)	2.2 HDi (4HX (DW12TED4/FAP)	98	09/04 -	3934	
C5 (DE_)	3.0 (XFX (ES9J4S)	173	09/04 -	3934	
C5 (DE_)	3.0 Carlsson (XFX (ES9J4S)	173	09/03 – 08/04	3934	
C5 (DE_)	3.0 V6 (XFV (ES9A)	152	09/04 -	3934	
C5 (DE_)	3.0 V6 (XFX (ES9J4S)	152	06/01 – 08/04	3934	
C5 AIRCROSS	1.2 PureTech 130	96	11.2018 -	4371	4373
C5 AIRCROSS	1.2 PureTech 130	96	11.2018 -		4374
C5 AIRCROSS	1.5 BlueHDi 130	96	11.2018 -	4371	4373
C5 AIRCROSS	1.5 BlueHDi 130	96	11.2018 -		4374
C5 AIRCROSS	1.6 Hybrid	133	04.2020 -	4371	4373
C5 AIRCROSS	1.6 Hybrid	133	04.2020 -		4374
C5 AIRCROSS	1.6 PureTech 180	133	11.2018 -	4371	4373
C5 AIRCROSS	1.6 PureTech 180	133	11.2018 -		4374
C5 AIRCROSS	1.6 THP 150	110	09.2019 -	4371	4373
C5 AIRCROSS	1.6 THP 150	110	09.2019 -		4374
C5 AIRCROSS	1.6 THP 165	121	05.2019 -	4371	4373
C5 AIRCROSS	1.6 THP 165	121	05.2019 -		4374
C5 AIRCROSS	2.0 BlueHDi 180	130	11.2018 -	4371	4373
C5 AIRCROSS	2.0 BlueHDi 180	130	11.2018 -		4374
C5 III (RD_)	1.6 HDi 110	80	02/08 -		3853/1
C5 III (RD_)	1.6 HDi 110	80	02/08 -		3946
C5 III (RD_)	1.6 HDi 110	82	07/10 -		3853/1
C5 III (RD_)	1.6 HDi 110	82	07/10 -		3946
C5 III (RD_)	1.6 HDi 115	84	01/12 -		3853/1
C5 III (RD_)	1.6 HDi 115	84	01/12 -		3946
C5 III (RD_)	1.6 THP 150	110	07/10 -		3853/1
C5 III (RD_)	1.6 THP 150	110	07/10 -		3946
C5 III (RD_)	1.6 THP 155	115	04/09 -		3853/1
C5 III (RD_)	1.6 THP 155	115	04/09 -		3946
C5 III (RD_)	1.6 VTi 120	88	07/10 -		3853/1
C5 III (RD_)	1.6 VTi 120	88	07/10 -		3946
C5 III (RD_)	1.8 16V	92	02/08 -		3853/1
C5 III (RD_)	1.8 16V	92	02/08 -		3946
C5 III (RD_)	2.0 16V	103	02/08 -		3853/1
C5 III (RD_)	2.0 16V	103	02/08 -		3946
C5 III (RD_)	2.0 16V BioFlex	103	02/08 -		3853/1
C5 III (RD_)	2.0 16V BioFlex	103	02/08 -		3946
C5 III (RD_)	2.0 HDi	100	02/08 -		3853/1
C5 III (RD_)	2.0 HDi	100	02/08 -		3946
C5 III (RD_)	2.0 HDi 140	103	04/09 -		3853/1
C5 III (RD_)	2.0 HDi 140	103	04/09 -		3946
C5 III (RD_)	2.0 HDi 150 / BlueHDi 150	110	04/09 -		3853/1
C5 III (RD_)	2.0 HDi 150 / BlueHDi 150	110	04/09 -		3946
C5 III (RD_)	2.0 HDi 165	120	04/09 -		3853/1
C5 III (RD_)	2.0 HDi 165	120	04/09 -		3946
C5 III (RD_)	2.0 HDi 180	133	03/15 -		3853/1
C5 III (RD_)	2.0 HDi 180	133	03/15 -		3946
C5 III (RD_)	2.2 HDi	125	02/08 -		3853/1
C5 III (RD_)	2.2 HDi	125	02/08 -		3946
C5 III (RD_)	2.2 HDi 200	150	07/10 -	3940	3853/1
C5 III (RD_)	2.2 HDi 200	150	07/10 -		3946
C5 III (RD_)	2.7 HDi	150	02/08 -		3853/1
C5 III (RD_)	2.7 HDi	150	02/08 -		3946
C5 III (RD_)	3.0	152	02/08 -		3853/1
C5 III (RD_)	3.0	152	02/08 -		3946
C5 III (RD_)	3.0 HDi 240	177	04/09 -		3853/1
C5 III (RD_)	3.0 HDi 240	177	04/09 -		3946
C5 III (RD_)	3.0 V6	155	02/08 -		3853/1
C5 III (RD_)	3.0 V6	155	02/08 -		3946
C5 III Break (TD_)	1.6 HDi 110	80	02/08 -		3853/1
C5 III Break (TD_)	1.6 HDi 110	80	02/08 -		3946
C5 III Break (TD_)	1.6 HDi 110	82	07/10 -		3853/1
C5 III Break (TD_)	1.6 HDi 110	82	07/10 -		3946
C5 III Break (TD_)	1.6 HDi 115	84	01/12 -		3853/1
C5 III Break (TD_)	1.6 HDi 115	84	01/12 -		3946
C5 III Break (TD_)	1.6 THP 150	110	04/09 -		3853/1
C5 III Break (TD_)	1.6 THP 150	110	04/09 -		3946
C5 III Break (TD_)	1.6 THP 155	115	04/09 -		3853/1
C5 III Break (TD_)	1.6 THP 155	115	04/09 -		3946
C5 III Break (TD_)	1.6 VTI 120	88	07/10 -		3853/1
C5 III Break (TD_)	1.6 VTI 120	88	07/10 -		3946
C5 III Break (TD_)	1.8 16V	92	02/08 -		3853/1
C5 III Break (TD_)	1.8 16V	92	02/08 -		3946
C5 III Break (TD_)	2.0 16V	103	02/08 -		3853/1

MAKE & MODEL   		KW	YEAR		
CITROEN					
C5 III Break (TD_)	2.0 16V	103	02/08 -		3946
C5 III Break (TD_)	2.0 16V BioFlex	103	02/08 -		3853/1
C5 III Break (TD_)	2.0 16V BioFlex	103	02/08 -		3946
C5 III Break (TD_)	2.0 HDi	100	02/08 -		3853/1
C5 III Break (TD_)	2.0 HDi	100	02/08 -		3946
C5 III Break (TD_)	2.0 HDi 140	103	04/09 -		3853/1
C5 III Break (TD_)	2.0 HDi 140	103	04/09 -		3946
C5 III Break (TD_)	2.0 HDi 150 / BlueHDi 150	110	04/09 -		3853/1
C5 III Break (TD_)	2.0 HDi 150 / BlueHDi 150	110	04/09 -		3946
C5 III Break (TD_)	2.0 HDi 165	120	04/09 -		3853/1
C5 III Break (TD_)	2.0 HDi 165	120	04/09 -		3946
C5 III Break (TD_)	2.0 HDi 180	133	03/15 -		3853/1
C5 III Break (TD_)	2.0 HDi 180	133	03/15 -		3946
C5 III Break (TD_)	2.2 HDi	125	02/08 -		3853/1
C5 III Break (TD_)	2.2 HDi	125	02/08 -		3946
C5 III Break (TD_)	2.2 HDi 165	120	02/08 -	3940	3853/1
C5 III Break (TD_)	2.2 HDi 165	120	02/08 -		3946
C5 III Break (TD_)	2.2 HDi 200	150	07/10 -	3940	3853/1
C5 III Break (TD_)	2.2 HDi 200	150	07/10 -		3946
C5 III Break (TD_)	2.7 HDi	150	02/08 -		3853/1
C5 III Break (TD_)	2.7 HDi	150	02/08 -		3946
C5 III Break (TD_)	3.0	152	02/08 -		3853/1
C5 III Break (TD_)	3.0	152	02/08 -		3946
C5 III Break (TD_)	3.0 HDi 240	177	04/09 -		3853/1
C5 III Break (TD_)	3.0 HDi 240	177	04/09 -		3946
C5 III Break (TD_)	3.0 V6	155	02/08 -		3853/1
C5 III Break (TD_)	3.0 V6	155	02/08 -		3946
C6 (TD_)	2.2 HDi	120	06/06 -	3940	
C8 (EA_, EB_)	2.0	100	07/02 -	3986	
C8 (EA_, EB_)	2.0 16V	103	09/05 -	3986	
C8 (EA_, EB_)	2.0 16V	104	09/05 -	3986	
C8 (EA_, EB_)	2.0 HDi	79	07/02 -	3986	
C8 (EA_, EB_)	2.0 HDi	80	07/02 -	3986	
C8 (EA_, EB_)	2.0 HDi	88	07/06 -	3986	
C8 (EA_, EB_)	2.0 HDi 135	100	03/06 -	3986	
C8 (EA_, EB_)	2.2	116	07/02 -	3986	
C8 (EA_, EB_)	2.2 HDi	94	07/02 -	3986	
C-CROSSER (EP_)	2.0	108	11/10 -	3685	3893
C-CROSSER (EP_)	2.0 All-wheel Drive	108	11/10 -	3685	3893
C-CROSSER (EP_)	2.2 HDi	115	02/07 -	3685	3893
C-CROSSER (EP_)	2.4 16V	125	08/08 -	3685	3893
C-CROSSER ENTERPRISE	2.2 HDi	115	01/09 -	3685	3893
C-CROSSER ENTERPRISE	2.4 16V	125	01/09 -	3685	3893
C-ELYSEE	1.2 VTi 72	53	11/12 -	4201	
C-ELYSEE	1.2 VTi 82	60	12/14 -	4201	
C-ELYSEE	1.6 BlueHDi 100	73	11/14 -	4201	
C-ELYSEE	1.6 HDI 92	68	11/12 -	4201	
C-ELYSEE	1.6 VTi 115	85	11/12 -	4201	
DS3	1.2 VTi 82	60	01/13 – 03/15		3529/1
DS3	1.4 HDi 70	50	04/10 – 07/15		3529/1
DS3	1.4 VTi 95	70	04/10 – 07/15		3529/1
DS3	1.4 VTi 95 LPG	70	08/12 – 07/15		3529/1
DS3	1.4 VTi 98	72	11/09 – 07/15		3529/1
DS3	1.6	120	01/12 – 07/15		3529/1
DS3	1.6 BlueHDi 100	73	07/14 – 07/15		3529/1
DS3	1.6 BlueHDi 120	88	10/13 – 07/15		3529/1
DS3	1.6 BlueHDi 75	55	03/15 – 07/15		3529/1
DS3	1.6 HDi 110	82	11/09 – 07/15		3529/1
DS3	1.6 HDi 115	84	08/12 – 07/15		3529/1
DS3	1.6 HDi 115	85	10/13 – 07/15		3529/1
DS3	1.6 HDi 90	68	11/09 – 07/15		3529/1
DS3	1.6 Racing	147	02/11 – 07/15		3529/1
DS3	1.6 Racing	152	02/11 – 07/15		3529/1
DS3	1.6 THP 150	110	01/10 – 07/15		3529/1
DS3	1.6 THP 155	115	04/10 – 07/15		3529/1
DS3	1.6 THP 165	121	10/14 – 06/15		3529/1
DS3	1.6 VTi 120	88	04/10 – 07/15		3529/1
DS3 Convertible	1.2 THP 110	81	10/14 – 07/15		3529/1
DS3 Convertible	1.2 VTi 82	60	01/13 – 07/15		3529/1
DS3 Convertible	1.6 BlueHDi 100	73	07/14 – 07/15		3529/1
DS3 Convertible	1.6 BlueHDi 120	88	07/14 – 07/15		3529/1
DS3 Convertible	1.6 HDi 90	69	01/13 – 07/15		3529/1
DS3 Convertible	1.6 Racing	152	03/14 -		3529/1
DS3 Convertible	1.6 Racing	152	03/14 – 07/15		3529/1
DS3 Convertible	1.6 THP 150	110	01/13 – 07/15		3529/1
DS3 Convertible	1.6 THP 155	115	01/13 – 07/15		3529/1

MAKE & MODEL		KW	YEAR		
CITROEN					
DS3 Convertible	1.6 THP 165	121	10/14 – 07/15		3529/1
DS3 Convertible	1.6 VTi 120	88	01/13 – 07/15		3529/1
DS4	1.2 THP 130	96	07/14 – 07/15	3964	3529/1
DS4	1.6 BlueHDi 115	85	08/14 – 07/15	3964	
DS4	1.6 BlueHDi 120	88	07/14 – 07/15	3964	3529/1
DS4	1.6 HDi	85	11/13 – 07/15	3964	
DS4	1.6 HDi 110	81	04/11 – 07/15	3964	3529/1
DS4	1.6 HDi 110	81	04/11 – 07/15	4145	
DS4	1.6 HDi 110	82	04/11 – 07/15	3964	3529/1
DS4	1.6 HDi 115	84	08/12 – 07/15	3964	3529/1
DS4	1.6 HDi 90	68	05/11 – 07/15	3964	3529/1
DS4	1.6 HDi 90	68	05/11 – 07/15	4145	
DS4	1.6 THP 155	115	04/11 – 07/15		3529/1
DS4	1.6 THP 160	120	04/12 – 07/15		3529/1
DS4	1.6 THP 200	147	04/11 – 07/15		3529/1
DS4	1.6 THP 210	155	07/15 – 07/15		3529/1
DS4	1.6 VTi 120	88	04/11 – 07/15	3964	3529/1
DS5	2.0 BlueHDi 150	110	07/14 – 07/15	3964	
DS5	2.0 BlueHDi 180	133	07/14 – 07/15		3529/1
DS5	2.0 HDi 165	120	04/11 – 07/15		3529/1
EVASION (22, U6)	1.8	73	05/97 – 07/02	3799	
EVASION (22, U6)	1.8	76	02/96 – 12/96	3799	
GRAND C4 SPACETOURER (3A_, 3E_)	1.2 PureTech 130	96	04.2018 -	4371	
GRAND C4 SPACETOURER (3A_, 3E_)	1.2 PureTech 130	96	04.2018 -		4372
GRAND C4 SPACETOURER (3A_, 3E_)	1.2 PureTech 130	96	04.2018 -		4373
GRAND C4 SPACETOURER (3A_, 3E_)	1.2 PureTech 130	96	04.2018 -		4374
GRAND C4 SPACETOURER (3A_, 3E_)	1.2 PureTech 130	96	04.2018 -	4371	4374
GRAND C4 SPACETOURER (3A_, 3E_)	1.5 BlueHDi 130	96	05.2018 -	4371	
GRAND C4 SPACETOURER (3A_, 3E_)	1.5 BlueHDi 130	96	05.2018 -		4372
GRAND C4 SPACETOURER (3A_, 3E_)	1.5 BlueHDi 130	96	05.2018 -		4373
GRAND C4 SPACETOURER (3A_, 3E_)	1.5 BlueHDi 130	96	05.2018 -		4374
GRAND C4 SPACETOURER (3A_, 3E_)	1.5 BlueHDi 130	96	05.2018 -	4371	4374
GRAND C4 SPACETOURER (3A_, 3E_)	1.6 BlueHDi 100	73	04.2018 -	4371	
GRAND C4 SPACETOURER (3A_, 3E_)	1.6 BlueHDi 100	73	04.2018 -		4372
GRAND C4 SPACETOURER (3A_, 3E_)	1.6 BlueHDi 100	73	04.2018 -		4373
GRAND C4 SPACETOURER (3A_, 3E_)	1.6 BlueHDi 100	73	04.2018 -		4374
GRAND C4 SPACETOURER (3A_, 3E_)	1.6 BlueHDi 100	73	04.2018 -	4371	4374
GRAND C4 SPACETOURER (3A_, 3E_)	1.6 BlueHDi 120	88	04.2018 -	4371	
GRAND C4 SPACETOURER (3A_, 3E_)	1.6 BlueHDi 120	88	04.2018 -		4372
GRAND C4 SPACETOURER (3A_, 3E_)	1.6 BlueHDi 120	88	04.2018 -		4373
GRAND C4 SPACETOURER (3A_, 3E_)	1.6 BlueHDi 120	88	04.2018 -		4374
GRAND C4 SPACETOURER (3A_, 3E_)	1.6 BlueHDi 120	88	04.2018 -	4371	4374
GRAND C4 SPACETOURER (3A_, 3E_)	1.6 HDi 115	85	04.2018 -	4371	
GRAND C4 SPACETOURER (3A_, 3E_)	1.6 HDi 115	85	04.2018 -		4372
GRAND C4 SPACETOURER (3A_, 3E_)	1.6 HDi 115	85	04.2018 -		4373
GRAND C4 SPACETOURER (3A_, 3E_)	1.6 HDi 115	85	04.2018 -		4374
GRAND C4 SPACETOURER (3A_, 3E_)	1.6 HDi 115	85	04.2018 -	4371	4374
GRAND C4 SPACETOURER (3A_, 3E_)	1.6 PureTech 180	133	04.2018 -	4371	
GRAND C4 SPACETOURER (3A_, 3E_)	1.6 PureTech 180	133	04.2018 -		4372
GRAND C4 SPACETOURER (3A_, 3E_)	1.6 PureTech 180	133	04.2018 -		4373
GRAND C4 SPACETOURER (3A_, 3E_)	1.6 PureTech 180	133	04.2018 -		4374
GRAND C4 SPACETOURER (3A_, 3E_)	1.6 PureTech 180	133	04.2018 -	4371	4374
GRAND C4 SPACETOURER (3A_, 3E_)	1.6 THP 165	110	04.2018 -	4371	
GRAND C4 SPACETOURER (3A_, 3E_)	1.6 THP 165	110	04.2018 -		4372
GRAND C4 SPACETOURER (3A_, 3E_)	1.6 THP 165	110	04.2018 -		4373
GRAND C4 SPACETOURER (3A_, 3E_)	1.6 THP 165	110	04.2018 -		4374
GRAND C4 SPACETOURER (3A_, 3E_)	1.6 THP 165	110	04.2018 -	4371	4374
GRAND C4 SPACETOURER (3A_, 3E_)	1.6 THP 165	121	04.2018 -	4371	
GRAND C4 SPACETOURER (3A_, 3E_)	1.6 THP 165	121	04.2018 -		4372
GRAND C4 SPACETOURER (3A_, 3E_)	1.6 THP 165	121	04.2018 -		4373
GRAND C4 SPACETOURER (3A_, 3E_)	1.6 THP 165	121	04.2018 -		4374
GRAND C4 SPACETOURER (3A_, 3E_)	1.6 THP 165	121	04.2018 -	4371	4374
GRAND C4 SPACETOURER (3A_, 3E_)	2.0 BlueHDi 150	110	04.2018 -	4371	
GRAND C4 SPACETOURER (3A_, 3E_)	2.0 BlueHDi 150	110	04.2018 -		4372
GRAND C4 SPACETOURER (3A_, 3E_)	2.0 BlueHDi 150	110	04.2018 -		4373
GRAND C4 SPACETOURER (3A_, 3E_)	2.0 BlueHDi 150	110	04.2018 -		4374
GRAND C4 SPACETOURER (3A_, 3E_)	2.0 BlueHDi 150	110	04.2018 -	4371	4374
GRAND C4 SPACETOURER (3A_, 3E_)	2.0 BlueHDi 160	120	04.2018 -	4371	
GRAND C4 SPACETOURER (3A_, 3E_)	2.0 BlueHDi 160	120	04.2018 -		4372
GRAND C4 SPACETOURER (3A_, 3E_)	2.0 BlueHDi 160	120	04.2018 -		4373
GRAND C4 SPACETOURER (3A_, 3E_)	2.0 BlueHDi 160	120	04.2018 -		4374
GRAND C4 SPACETOURER (3A_, 3E_)	2.0 BlueHDi 160	120	04.2018 -	4371	4374
JUMPER Box (230L) / RELAY Box (230L)	1.9 D	50	07/99 – 04/02	3835	3914
JUMPER Box (230L) / RELAY Box (230L)	1.9 D	50	07/99 – 04/02	3559	
JUMPER Box (230L) / RELAY Box (230L)	1.9 D	50	07/99 – 04/02	3595	
JUMPER Box (230L) / RELAY Box (230L)	1.9 D	50	07/99 – 04/02	3834	

MAKE & MODEL   		KW	YEAR		
CITROEN					
JUMPER Box (230L) / RELAY Box (230L)	1.9 D	51	02/94 – 04/02	3835	3914
JUMPER Box (230L) / RELAY Box (230L)	1.9 D	51	02/94 – 04/02	3559	
JUMPER Box (230L) / RELAY Box (230L)	1.9 D	51	02/94 – 04/02	3595	
JUMPER Box (230L) / RELAY Box (230L)	1.9 D	51	02/94 – 04/02	3834	
JUMPER Box (230L) / RELAY Box (230L)	1.9 TD	66	03/94 – 04/02	3835	3914
JUMPER Box (230L) / RELAY Box (230L)	1.9 TD	66	03/94 – 04/02	3559	
JUMPER Box (230L) / RELAY Box (230L)	1.9 TD	66	03/94 – 04/02	3595	
JUMPER Box (230L) / RELAY Box (230L)	1.9 TD	66	03/94 – 04/02	3834	
JUMPER Box (230L) / RELAY Box (230L)	1.9 TD	68	03/94 – 04/02	3835	3914
JUMPER Box (230L) / RELAY Box (230L)	1.9 TD	68	03/94 – 04/02	3559	
JUMPER Box (230L) / RELAY Box (230L)	1.9 TD	68	03/94 – 04/02	3595	
JUMPER Box (230L) / RELAY Box (230L)	1.9 TD	68	03/94 – 04/02	3834	
JUMPER Box (230L) / RELAY Box (230L)	2.0	80	03/94 – 04/02	3835	3914
JUMPER Box (230L) / RELAY Box (230L)	2.0	80	03/94 – 04/02	3559	
JUMPER Box (230L) / RELAY Box (230L)	2.0	80	03/94 – 04/02	3595	
JUMPER Box (230L) / RELAY Box (230L)	2.0	80	03/94 – 04/02	3834	
JUMPER Box (230L) / RELAY Box (230L)	2.0 4x4	80	10/96 – 01/02	3835	3914
JUMPER Box (230L) / RELAY Box (230L)	2.0 4x4	80	10/96 – 01/02	3559	
JUMPER Box (230L) / RELAY Box (230L)	2.0 4x4	80	10/96 – 01/02	3595	
JUMPER Box (230L) / RELAY Box (230L)	2.0 4x4	80	10/96 – 01/02	3834	
JUMPER Box (230L) / RELAY Box (230L)	2.0 HDI	62	11/01 – 04/02	3835	3914
JUMPER Box (230L) / RELAY Box (230L)	2.0 HDI	62	11/01 – 04/02	3559	
JUMPER Box (230L) / RELAY Box (230L)	2.0 HDI	62	11/01 – 04/02	3595	
JUMPER Box (230L) / RELAY Box (230L)	2.0 HDI	62	11/01 – 04/02	3834	
JUMPER Box (230L) / RELAY Box (230L)	2.5 D	63	03/94 – 04/02	3835	3914
JUMPER Box (230L) / RELAY Box (230L)	2.5 D	63	03/94 – 04/02	3559	
JUMPER Box (230L) / RELAY Box (230L)	2.5 D	63	03/94 – 04/02	3595	
JUMPER Box (230L) / RELAY Box (230L)	2.5 D	63	03/94 – 04/02	3834	
JUMPER Box (230L) / RELAY Box (230L)	2.5 D 4x4	63	03/00 – 04/02	3835	3914
JUMPER Box (230L) / RELAY Box (230L)	2.5 D 4x4	63	03/00 – 04/02	3559	
JUMPER Box (230L) / RELAY Box (230L)	2.5 D 4x4	63	03/00 – 04/02	3595	
JUMPER Box (230L) / RELAY Box (230L)	2.5 D 4x4	63	03/00 – 04/02	3834	
JUMPER Box (230L) / RELAY Box (230L)	2.5 DT 4x4	76	10/96 – 08/97	3595	3914
JUMPER Box (230L) / RELAY Box (230L)	2.5 DT 4x4	76	10/96 – 08/97	3559	
JUMPER Box (230L) / RELAY Box (230L)	2.5 TD	76	03/94 – 04/02	3835	3914
JUMPER Box (230L) / RELAY Box (230L)	2.5 TD	76	03/94 – 04/02	3559	
JUMPER Box (230L) / RELAY Box (230L)	2.5 TD	76	03/94 – 04/02	3595	
JUMPER Box (230L) / RELAY Box (230L)	2.5 TD	76	03/94 – 04/02	3834	
JUMPER Box (230L) / RELAY Box (230L)	2.5 TDi	79	12/96 – 11/00	3595	3914
JUMPER Box (230L) / RELAY Box (230L)	2.5 TDi	79	12/96 – 11/00	3559	
JUMPER Box (230L) / RELAY Box (230L)	2.5 TDi 4x4	79	03/00 – 11/00	3835	3914
JUMPER Box (230L) / RELAY Box (230L)	2.5 TDi 4x4	79	03/00 – 11/00	3559	
JUMPER Box (230L) / RELAY Box (230L)	2.5 TDi 4x4	79	03/00 – 11/00	3595	
JUMPER Box (230L) / RELAY Box (230L)	2.5 TDi 4x4	79	03/00 – 11/00	3834	
JUMPER Box (230L) / RELAY Box (230L)	2.8 D	64	01/99 – 02/02	3835	3914
JUMPER Box (230L) / RELAY Box (230L)	2.8 D	64	01/99 – 02/02	3559	
JUMPER Box (230L) / RELAY Box (230L)	2.8 D	64	01/99 – 02/02	3595	
JUMPER Box (230L) / RELAY Box (230L)	2.8 D	64	01/99 – 02/02	3834	
JUMPER Box (230L) / RELAY Box (230L)	2.8 HDi	94	09/00 – 04/02	3835	3914
JUMPER Box (230L) / RELAY Box (230L)	2.8 HDi	94	09/00 – 04/02	3559	
JUMPER Box (230L) / RELAY Box (230L)	2.8 HDi	94	09/00 – 04/02	3595	
JUMPER Box (230L) / RELAY Box (230L)	2.8 HDi	94	09/00 – 04/02	3834	
JUMPER Box (230L) / RELAY Box (230L)	2.8 HDi 4x4	94	09/00 – 04/02	3835	3914
JUMPER Box (230L) / RELAY Box (230L)	2.8 HDi 4x4	94	09/00 – 04/02	3559	
JUMPER Box (230L) / RELAY Box (230L)	2.8 HDi 4x4	94	09/00 – 04/02	3595	
JUMPER Box (230L) / RELAY Box (230L)	2.8 HDi 4x4	94	09/00 – 04/02	3834	
JUMPER Box (244) / RELAY Box (244)	2.0	81	04/02 -	3835	3914
JUMPER Box (244) / RELAY Box (244)	2.0	81	04/02 -	3834	
JUMPER Box (244) / RELAY Box (244)	2.0 bivalent	81	02/03 -	3835	3914
JUMPER Box (244) / RELAY Box (244)	2.0 bivalent	81	02/03 -	3834	
JUMPER Box (244) / RELAY Box (244)	2.0 HDi	62	04/02 -	3835	3914
JUMPER Box (244) / RELAY Box (244)	2.0 HDi	62	04/02 -	3834	
JUMPER Box (244) / RELAY Box (244)	2.2 HDi	74	04/02 -	3835	3914
JUMPER Box (244) / RELAY Box (244)	2.2 HDi	74	04/02 -	3834	
JUMPER Box (244) / RELAY Box (244)	2.8 HDi	94	04/02 -	3835	3914
JUMPER Box (244) / RELAY Box (244)	2.8 HDi	94	04/02 -	3834	
JUMPER Box (244) / RELAY Box (244)	2.8 HDi	107	05/04 -	3835	3914
JUMPER Box (244) / RELAY Box (244)	2.8 HDi	107	05/04 -	3834	
JUMPER Box (244) / RELAY Box (244)	2.8 HDi 4x4	94	04/02 -	3835	3914
JUMPER Box (244) / RELAY Box (244)	2.8 HDi 4x4	94	04/02 -	3834	
JUMPER Box / RELAY Box	2.0 BlueHDi 110	81	04/16 -	3922	
JUMPER Box / RELAY Box	2.0 BlueHDi 110	81	04/16 -	3981	
JUMPER Box / RELAY Box	2.0 BlueHDi 110	81	04/16 -	4171	
JUMPER Box / RELAY Box	2.0 BlueHDi 130	96	04/16 -	3922	
JUMPER Box / RELAY Box	2.0 BlueHDi 130	96	04/16 -	3981	
JUMPER Box / RELAY Box	2.0 BlueHDi 130	96	04/16 -	4171	

MAKE & MODEL   		KW	YEAR		
CITROEN					
JUMPER Box / RELAY Box	2.0 BlueHDi 160	120	04/16 -	3922	
JUMPER Box / RELAY Box	2.0 BlueHDi 160	120	04/16 -	3981	
JUMPER Box / RELAY Box	2.0 BlueHDi 160	120	04/16 -	4171	
JUMPER Box / RELAY Box	2.0 BlueHDi 160 4x4	120	04/16 -	3922	
JUMPER Box / RELAY Box	2.0 BlueHDi 160 4x4	120	04/16 -	3981	
JUMPER Box / RELAY Box	2.0 BlueHDi 160 4x4	120	04/16 -	4171	
JUMPER Box / RELAY Box	2.2 HDi 100	74	04/06 -	3922	
JUMPER Box / RELAY Box	2.2 HDi 100	74	04/06 -	3981	
JUMPER Box / RELAY Box	2.2 HDi 100	74	04/06 -	4171	
JUMPER Box / RELAY Box	2.2 HDi 110	81	07/11 -	3922	
JUMPER Box / RELAY Box	2.2 HDi 110	81	07/11 -	3981	
JUMPER Box / RELAY Box	2.2 HDi 110	81	07/11 -	4171	
JUMPER Box / RELAY Box	2.2 HDi 120	88	04/06 -	3922	
JUMPER Box / RELAY Box	2.2 HDi 120	88	04/06 -	3981	
JUMPER Box / RELAY Box	2.2 HDi 120	88	04/06 -	4171	
JUMPER Box / RELAY Box	2.2 HDi 130	96	07/11 -	3922	
JUMPER Box / RELAY Box	2.2 HDi 130	96	07/11 -	3981	
JUMPER Box / RELAY Box	2.2 HDi 130	96	07/11 -	4171	
JUMPER Box / RELAY Box	2.2 HDi 150	110	07/11 -	3922	
JUMPER Box / RELAY Box	2.2 HDi 150	110	07/11 -	3981	
JUMPER Box / RELAY Box	2.2 HDi 150	110	07/11 -	4171	
JUMPER Box / RELAY Box	3.0 HDi 145	107	07/10 -	3922	
JUMPER Box / RELAY Box	3.0 HDi 145	107	07/10 -	3981	
JUMPER Box / RELAY Box	3.0 HDi 145	107	07/10 -	4171	
JUMPER Box / RELAY Box	3.0 HDi 155	115	07/10 -	3922	
JUMPER Box / RELAY Box	3.0 HDi 155	115	07/10 -	3981	
JUMPER Box / RELAY Box	3.0 HDi 155	115	07/10 -	4171	
JUMPER Box / RELAY Box	3.0 HDi 160	116	09/06 -	3922	
JUMPER Box / RELAY Box	3.0 HDi 160	116	09/06 -	3981	
JUMPER Box / RELAY Box	3.0 HDi 160	116	09/06 -	4171	
JUMPER Box / RELAY Box	3.0 HDi 180	130	07/11 -	3922	
JUMPER Box / RELAY Box	3.0 HDi 180	130	07/11 -	3981	
JUMPER Box / RELAY Box	3.0 HDi 180	130	07/11 -	4171	
JUMPER Bus (230P) / RELAY Bus (230P)	1.9 D	51	01/99 – 04/02	3835	3914
JUMPER Bus (230P) / RELAY Bus (230P)	1.9 D	51	01/99 – 04/02	3559	
JUMPER Bus (230P) / RELAY Bus (230P)	1.9 D	51	01/99 – 04/02	3595	
JUMPER Bus (230P) / RELAY Bus (230P)	1.9 D	51	01/99 – 04/02	3834	
JUMPER Bus (230P) / RELAY Bus (230P)	1.9 TD	66	08/94 – 04/02	3835	3914
JUMPER Bus (230P) / RELAY Bus (230P)	1.9 TD	66	08/94 – 04/02	3559	
JUMPER Bus (230P) / RELAY Bus (230P)	1.9 TD	66	08/94 – 04/02	3595	
JUMPER Bus (230P) / RELAY Bus (230P)	1.9 TD	66	08/94 – 04/02	3834	
JUMPER Bus (230P) / RELAY Bus (230P)	1.9 TD	68	02/94 – 04/02	3835	3914
JUMPER Bus (230P) / RELAY Bus (230P)	1.9 TD	68	02/94 – 04/02	3559	
JUMPER Bus (230P) / RELAY Bus (230P)	1.9 TD	68	02/94 – 04/02	3595	
JUMPER Bus (230P) / RELAY Bus (230P)	1.9 TD	68	02/94 – 04/02	3834	
JUMPER Bus (230P) / RELAY Bus (230P)	1.9 TD 4x4	68	08/96 – 04/02	3835	3914
JUMPER Bus (230P) / RELAY Bus (230P)	1.9 TD 4x4	68	08/96 – 04/02	3559	
JUMPER Bus (230P) / RELAY Bus (230P)	1.9 TD 4x4	68	08/96 – 04/02	3595	
JUMPER Bus (230P) / RELAY Bus (230P)	1.9 TD 4x4	68	08/96 – 04/02	3834	
JUMPER Bus (230P) / RELAY Bus (230P)	2.0	80	02/94 – 04/02	3835	3914
JUMPER Bus (230P) / RELAY Bus (230P)	2.0	80	02/94 – 04/02	3559	
JUMPER Bus (230P) / RELAY Bus (230P)	2.0	80	02/94 – 04/02	3595	
JUMPER Bus (230P) / RELAY Bus (230P)	2.0	80	02/94 – 04/02	3834	
JUMPER Bus (230P) / RELAY Bus (230P)	2.0 4x4	80	08/96 – 04/02	3835	3914
JUMPER Bus (230P) / RELAY Bus (230P)	2.0 4x4	80	08/96 – 04/02	3559	
JUMPER Bus (230P) / RELAY Bus (230P)	2.0 4x4	80	08/96 – 04/02	3595	
JUMPER Bus (230P) / RELAY Bus (230P)	2.0 4x4	80	08/96 – 04/02	3834	
JUMPER Bus (230P) / RELAY Bus (230P)	2.5 D	63	08/94 – 04/02	3835	3914
JUMPER Bus (230P) / RELAY Bus (230P)	2.5 D	63	08/94 – 04/02	3559	
JUMPER Bus (230P) / RELAY Bus (230P)	2.5 D	63	08/94 – 04/02	3595	
JUMPER Bus (230P) / RELAY Bus (230P)	2.5 D	63	08/94 – 04/02	3834	
JUMPER Bus (230P) / RELAY Bus (230P)	2.5 D 4x4	63	08/96 – 04/02	3835	3914
JUMPER Bus (230P) / RELAY Bus (230P)	2.5 D 4x4	63	08/96 – 04/02	3559	
JUMPER Bus (230P) / RELAY Bus (230P)	2.5 D 4x4	63	08/96 – 04/02	3595	
JUMPER Bus (230P) / RELAY Bus (230P)	2.5 D 4x4	63	08/96 – 04/02	3834	
JUMPER Bus (230P) / RELAY Bus (230P)	2.5 TD	76	08/94 – 04/02	3835	3914
JUMPER Bus (230P) / RELAY Bus (230P)	2.5 TD	76	08/94 – 04/02	3559	
JUMPER Bus (230P) / RELAY Bus (230P)	2.5 TD	76	08/94 – 04/02	3595	
JUMPER Bus (230P) / RELAY Bus (230P)	2.5 TD	76	08/94 – 04/02	3834	
JUMPER Bus (230P) / RELAY Bus (230P)	2.5 TD 4x4	76	08/96 – 04/02	3835	3914
JUMPER Bus (230P) / RELAY Bus (230P)	2.5 TD 4x4	76	08/96 – 04/02	3559	
JUMPER Bus (230P) / RELAY Bus (230P)	2.5 TD 4x4	76	08/96 – 04/02	3595	
JUMPER Bus (230P) / RELAY Bus (230P)	2.5 TD 4x4	76	08/96 – 04/02	3834	
JUMPER Bus (230P) / RELAY Bus (230P)	2.5 TDI 4x4	79	12/96 – 11/00	3835	3914
JUMPER Bus (230P) / RELAY Bus (230P)	2.5 TDI 4x4	79	12/96 – 11/00	3559	
JUMPER Bus (230P) / RELAY Bus (230P)	2.5 TDI 4x4	79	12/96 – 11/00	3595	

MAKE & MODEL   		KW	YEAR		
CITROEN					
JUMPER Bus (230P) / RELAY Bus (230P)	2.5 TDI 4x4	79	12/96 – 11/00	3834	
JUMPER Bus (230P) / RELAY Bus (230P)	2.5 TDi	79	12/96 – 11/00	3835	3914
JUMPER Bus (230P) / RELAY Bus (230P)	2.5 TDi	79	12/96 – 11/00	3559	
JUMPER Bus (230P) / RELAY Bus (230P)	2.5 TDi	79	12/96 – 11/00	3595	
JUMPER Bus (230P) / RELAY Bus (230P)	2.5 TDi	79	12/96 – 11/00	3834	
JUMPER Bus (230P) / RELAY Bus (230P)	2.8 D	64	01/99 – 02/02	3835	3914
JUMPER Bus (230P) / RELAY Bus (230P)	2.8 D	64	01/99 – 02/02	3559	
JUMPER Bus (230P) / RELAY Bus (230P)	2.8 D	64	01/99 – 02/02	3595	
JUMPER Bus (230P) / RELAY Bus (230P)	2.8 D	64	01/99 – 02/02	3834	
JUMPER Bus (230P) / RELAY Bus (230P)	2.8 HDi	94	09/00 – 04/02	3835	3914
JUMPER Bus (230P) / RELAY Bus (230P)	2.8 HDi	94	09/00 – 04/02	3559	
JUMPER Bus (230P) / RELAY Bus (230P)	2.8 HDi	94	09/00 – 04/02	3595	
JUMPER Bus (230P) / RELAY Bus (230P)	2.8 HDi	94	09/00 – 04/02	3834	
JUMPER Bus (230P) / RELAY Bus (230P)	2.8 HDi 4x4	94	09/00 – 04/02	3835	3914
JUMPER Bus (230P) / RELAY Bus (230P)	2.8 HDi 4x4	94	09/00 – 04/02	3559	
JUMPER Bus (230P) / RELAY Bus (230P)	2.8 HDi 4x4	94	09/00 – 04/02	3595	
JUMPER Bus (230P) / RELAY Bus (230P)	2.8 HDi 4x4	94	09/00 – 04/02	3834	
JUMPER Bus (244, Z_) / RELAY Bus (244, Z_)	2.0	81	04/02 -	3835	3914
JUMPER Bus (244, Z_) / RELAY Bus (244, Z_)	2.0	81	04/02 -	3834	
JUMPER Bus (244, Z_) / RELAY Bus (244, Z_)	2.0 bivalent	81	02/03 -	3835	3914
JUMPER Bus (244, Z_) / RELAY Bus (244, Z_)	2.0 bivalent	81	02/03 -	3834	
JUMPER Bus (244, Z_) / RELAY Bus (244, Z_)	2.0 HDi	62	04/02 -	3835	3914
JUMPER Bus (244, Z_) / RELAY Bus (244, Z_)	2.0 HDi	62	04/02 -	3834	
JUMPER Bus (244, Z_) / RELAY Bus (244, Z_)	2.2 HDi	74	04/02 -	3835	3914
JUMPER Bus (244, Z_) / RELAY Bus (244, Z_)	2.2 HDi	74	04/02 -	3834	
JUMPER Bus (244, Z_) / RELAY Bus (244, Z_)	2.8 HDi	94	04/02 -	3835	3914
JUMPER Bus (244, Z_) / RELAY Bus (244, Z_)	2.8 HDi	94	04/02 -	3834	
JUMPER Bus (244, Z_) / RELAY Bus (244, Z_)	2.8 HDi All-wheel Drive	94	04/02 -	3834	3914
JUMPER Bus (244, Z_) / RELAY Bus (244, Z_)	2.8 HDi All-wheel Drive	94	04/02 -	3835	
JUMPER Bus / RELAY Bus	2.0 BlueHDi 110	81	07/15 -	3922	4224
JUMPER Bus / RELAY Bus	2.0 BlueHDi 110	81	07/15 -	3981	
JUMPER Bus / RELAY Bus	2.0 BlueHDi 110	81	07/15 -	4171	
JUMPER Bus / RELAY Bus	2.0 BlueHDi 130	96	07/15 -	3922	4224
JUMPER Bus / RELAY Bus	2.0 BlueHDi 130	96	07/15 -	3981	
JUMPER Bus / RELAY Bus	2.0 BlueHDi 130	96	07/15 -	4171	
JUMPER Bus / RELAY Bus	2.0 BlueHDi 160	120	07/15 -	3922	4224
JUMPER Bus / RELAY Bus	2.0 BlueHDi 160	120	07/15 -	3981	
JUMPER Bus / RELAY Bus	2.0 BlueHDi 160	120	07/15 -	4171	
JUMPER Bus / RELAY Bus	2.2 HDi 100	74	04/06 -	3922	
JUMPER Bus / RELAY Bus	2.2 HDi 100	74	04/06 -	3981	
JUMPER Bus / RELAY Bus	2.2 HDi 100	74	04/06 -	4171	
JUMPER Bus / RELAY Bus	2.2 HDi 110	81	07/11 -	3922	
JUMPER Bus / RELAY Bus	2.2 HDi 110	81	07/11 -	3981	
JUMPER Bus / RELAY Bus	2.2 HDi 110	81	07/11 -	4171	
JUMPER Bus / RELAY Bus	2.2 HDi 120	88	04/06 -	3922	
JUMPER Bus / RELAY Bus	2.2 HDi 120	88	04/06 -	3981	
JUMPER Bus / RELAY Bus	2.2 HDi 120	88	04/06 -	4171	
JUMPER Bus / RELAY Bus	2.2 HDi 130	96	07/11 -	3922	
JUMPER Bus / RELAY Bus	2.2 HDi 130	96	07/11 -	3981	
JUMPER Bus / RELAY Bus	2.2 HDi 130	96	07/11 -	4171	
JUMPER Bus / RELAY Bus	2.2 HDi 150	110	07/11 -	3922	
JUMPER Bus / RELAY Bus	2.2 HDi 150	110	07/11 -	3981	
JUMPER Bus / RELAY Bus	2.2 HDi 150	110	07/11 -	4171	
JUMPER Bus / RELAY Bus	3.0 HDi 155	115	07/10 -	3922	
JUMPER Bus / RELAY Bus	3.0 HDi 155	115	07/10 -	3981	
JUMPER Bus / RELAY Bus	3.0 HDi 155	115	07/10 -	4171	
JUMPER Bus / RELAY Bus	3.0 HDi 160	116	09/06 -	3922	
JUMPER Bus / RELAY Bus	3.0 HDi 160	116	09/06 -	3981	
JUMPER Bus / RELAY Bus	3.0 HDi 160	116	09/06 -	4171	
JUMPER Bus / RELAY Bus	3.0 HDi 180	130	07/11 -	3922	
JUMPER Bus / RELAY Bus	3.0 HDi 180	130	07/11 -	3981	
JUMPER Bus / RELAY Bus	3.0 HDi 180	130	07/11 -	4171	
JUMPER Platform/Chassis (230) / RELAY Platform/Chassis (230)	1.9 TD	66	03/94 – 04/02	3834	
JUMPER Platform/Chassis (230) / RELAY Platform/Chassis (230)	1.9 TD	66	03/94 – 04/02	3595	
JUMPER Platform/Chassis (230) / RELAY Platform/Chassis (230)	1.9 TD	66	03/94 – 04/02	3559	
JUMPER Platform/Chassis (230) / RELAY Platform/Chassis (230)	1.9 TD	66	03/94 – 04/02	3835	
JUMPER Platform/Chassis (230) / RELAY Platform/Chassis (230)	1.9 TD	68	03/94 – 04/02	3834	
JUMPER Platform/Chassis (230) / RELAY Platform/Chassis (230)	1.9 TD	68	03/94 – 04/02	3595	
JUMPER Platform/Chassis (230) / RELAY Platform/Chassis (230)	1.9 TD	68	03/94 – 04/02	3559	3914
JUMPER Platform/Chassis (230) / RELAY Platform/Chassis (230)	1.9 TD	68	03/94 – 04/02	3835	
JUMPER Platform/Chassis (230) / RELAY Platform/Chassis (230)	2.0	80	03/94 – 04/02	3595	3914
JUMPER Platform/Chassis (230) / RELAY Platform/Chassis (230)	2.0	80	03/94 – 04/02	3834	
JUMPER Platform/Chassis (230) / RELAY Platform/Chassis (230)	2.0	80	03/94 – 04/02	3835	
JUMPER Platform/Chassis (230) / RELAY Platform/Chassis (230)	2.0	80	03/94 – 04/02	3559	
JUMPER Platform/Chassis (230) / RELAY Platform/Chassis (230)	2.0 HDi	62	04/02 -	3834	3914
JUMPER Platform/Chassis (230) / RELAY Platform/Chassis (230)	2.0 HDi	62	04/02 -	3835	

MAKE & MODEL   		KW	YEAR		
CITROEN					
JUMPER Platform/Chassis (230) / RELAY Platform/Chassis (230)	2.2 HDi	74	02/02 – 06/06	3834	3914
JUMPER Platform/Chassis (230) / RELAY Platform/Chassis (230)	2.2 HDi	74	04/02 -	3834	3914
JUMPER Platform/Chassis (230) / RELAY Platform/Chassis (230)	2.2 HDi	74	02/02 – 06/06	3835	
JUMPER Platform/Chassis (230) / RELAY Platform/Chassis (230)	2.2 HDi	74	04/02 -	3835	
JUMPER Platform/Chassis (230) / RELAY Platform/Chassis (230)	2.5 D	63	03/94 – 04/02	3595	
JUMPER Platform/Chassis (230) / RELAY Platform/Chassis (230)	2.5 D	63	03/94 – 04/02	3834	
JUMPER Platform/Chassis (230) / RELAY Platform/Chassis (230)	2.5 D	63	03/94 – 04/02	3559	
JUMPER Platform/Chassis (230) / RELAY Platform/Chassis (230)	2.5 D	63	03/94 – 04/02	3835	3914
JUMPER Platform/Chassis (230) / RELAY Platform/Chassis (230)	2.5 D 4x4	63	03/00 – 04/02	3834	3914
JUMPER Platform/Chassis (230) / RELAY Platform/Chassis (230)	2.5 D 4x4	63	03/00 – 04/02	3595	
JUMPER Platform/Chassis (230) / RELAY Platform/Chassis (230)	2.5 D 4x4	63	03/00 – 04/02	3559	
JUMPER Platform/Chassis (230) / RELAY Platform/Chassis (230)	2.5 D 4x4	63	03/00 – 04/02	3835	
JUMPER Platform/Chassis (230) / RELAY Platform/Chassis (230)	2.5 TD	76	03/94 – 04/02	3595	3914
JUMPER Platform/Chassis (230) / RELAY Platform/Chassis (230)	2.5 TD	76	03/94 – 04/02	3835	
JUMPER Platform/Chassis (230) / RELAY Platform/Chassis (230)	2.5 TD	76	03/94 – 04/02	3834	
JUMPER Platform/Chassis (230) / RELAY Platform/Chassis (230)	2.5 TD	76	03/94 – 04/02	3559	
JUMPER Platform/Chassis (230) / RELAY Platform/Chassis (230)	2.5 TDi	79	12/96 – 04/02	3595	
JUMPER Platform/Chassis (230) / RELAY Platform/Chassis (230)	2.5 TDi	79	12/96 – 04/02	3834	
JUMPER Platform/Chassis (230) / RELAY Platform/Chassis (230)	2.5 TDi	79	12/96 – 04/02	3559	
JUMPER Platform/Chassis (230) / RELAY Platform/Chassis (230)	2.5 TDi	79	12/96 – 04/02	3835	3914
JUMPER Platform/Chassis (230) / RELAY Platform/Chassis (230)	2.5 TDi 4x4	79	03/00 – 04/02	3835	
JUMPER Platform/Chassis (230) / RELAYPlatform/Chassis (230)	2.5 TDi 4x4	79	03/00 – 04/02	3834	3914
JUMPER Platform/Chassis (230) / RELAYPlatform/Chassis (230)	2.5 TDi 4x4	79	03/00 – 04/02	3559	
JUMPER Platform/Chassis (230) / RELAYPlatform/Chassis (230)	2.5 TDi 4x4	79	03/00 – 04/02	3595	
JUMPER Platform/Chassis (230) / RELAYPlatform/Chassis (230)	2.8 D	64	01/99 – 02/02	3834	3914
JUMPER Platform/Chassis (230) / RELAYPlatform/Chassis (230)	2.8 D	64	01/99 – 02/02	3559	
JUMPER Platform/Chassis (230) / RELAYPlatform/Chassis (230)	2.8 D	64	01/99 – 02/02	3595	
JUMPER Platform/Chassis (230) / RELAYPlatform/Chassis (230)	2.8 D	64	01/99 – 02/02	3835	
JUMPER Platform/Chassis (230) / RELAYPlatform/Chassis (230)	2.8 HDi	93	10/00 – 01/02	3559	3914
JUMPER Platform/Chassis (230) / RELAYPlatform/Chassis (230)	2.8 HDi	93	10/00 – 01/02	3834	
JUMPER Platform/Chassis (230) / RELAYPlatform/Chassis (230)	2.8 HDi	93	10/00 – 01/02	3595	
JUMPER Platform/Chassis (230) / RELAYPlatform/Chassis (230)	2.8 HDi	94	04/02 -	3834	
JUMPER Platform/Chassis (230) / RELAYPlatform/Chassis (230)	2.8 HDi	94	09/00 – 04/02	3835	3914
JUMPER Platform/Chassis (230) / RELAYPlatform/Chassis (230)	2.8 HDi	94	09/00 – 04/02	3834	
JUMPER Platform/Chassis (230) / RELAYPlatform/Chassis (230)	2.8 HDi	93	10/00 – 01/02	3835	
JUMPER Platform/Chassis (230) / RELAYPlatform/Chassis (230)	2.8 HDi	94	04/02 -	3835	3914
JUMPER Platform/Chassis (230) / RELAYPlatform/Chassis (230)	2.8 HDi	94	09/00 – 04/02	3559	
JUMPER Platform/Chassis (230) / RELAYPlatform/Chassis (230)	2.8 HDi	94	09/00 – 04/02	3595	
JUMPER Platform/Chassis (230) / RELAYPlatform/Chassis (230)	2.8 Hdi	107	05/04 -	3834	3914
JUMPER Platform/Chassis (230) / RELAYPlatform/Chassis (230)	2.8 HDi	107	05/04 -	3835	
JUMPER Platform/Chassis (230) / RELAYPlatform/Chassis (230)	2.8 HDi 4x4	94	02/02 – 06/06	3834	3914
JUMPER Platform/Chassis (230) / RELAYPlatform/Chassis (230)	2.8 HDi 4x4	94	02/02 – 06/06	3835	
JUMPER Platform/Chassis / RELAY Platform/Chassis	2.0 BlueHDi 110	81	04/16 -	3922	
JUMPER Platform/Chassis / RELAY Platform/Chassis	2.0 BlueHDi 110	81	04/16 -	3981	
JUMPER Platform/Chassis / RELAY Platform/Chassis	2.0 BlueHDi 110	81	04/16 -	4171	
JUMPER Platform/Chassis / RELAY Platform/Chassis	2.0 BlueHDi 130	96	04/16 -	3922	
JUMPER Platform/Chassis / RELAY Platform/Chassis	2.0 BlueHDi 130	96	04/16 -	3981	
JUMPER Platform/Chassis / RELAY Platform/Chassis	2.0 BlueHDi 130	96	04/16 -	4171	
JUMPER Platform/Chassis / RELAY Platform/Chassis	2.0 BlueHDi 130 4x4	96	04/16 -	3922	
JUMPER Platform/Chassis / RELAY Platform/Chassis	2.0 BlueHDi 130 4x4	96	04/16 -	3981	
JUMPER Platform/Chassis / RELAY Platform/Chassis	2.0 BlueHDi 130 4x4	96	04/16 -	4171	
JUMPER Platform/Chassis / RELAY Platform/Chassis	2.0 BlueHDi 160	120	04/16 -	3922	
JUMPER Platform/Chassis / RELAY Platform/Chassis	2.0 BlueHDi 160	120	04/16 -	3981	
JUMPER Platform/Chassis / RELAY Platform/Chassis	2.0 BlueHDi 160	120	04/16 -	4171	
JUMPER Platform/Chassis / RELAY Platform/Chassis	2.0 BlueHDi 160 4x4	120	04/16 -	3922	
JUMPER Platform/Chassis / RELAY Platform/Chassis	2.0 BlueHDi 160 4x4	120	04/16 -	3981	
JUMPER Platform/Chassis / RELAY Platform/Chassis	2.0 BlueHDi 160 4x4	120	04/16 -	4171	
JUMPER Platform/Chassis / RELAY Platform/Chassis	2.0 BlueHDi 160 4x4	120	04/16 -	4171	
JUMPER Platform/Chassis / RELAY Platform/Chassis	2.2 HDi 100	74	04/06 -	3922	
JUMPER Platform/Chassis / RELAY Platform/Chassis	2.2 HDi 100	74	04/06 -	3981	
JUMPER Platform/Chassis / RELAY Platform/Chassis	2.2 HDi 100	74	04/06 -	4171	
JUMPER Platform/Chassis / RELAY Platform/Chassis	2.2 HDi 110	81	07/11 -	3922	
JUMPER Platform/Chassis / RELAY Platform/Chassis	2.2 HDi 110	81	07/11 -	3981	
JUMPER Platform/Chassis / RELAY Platform/Chassis	2.2 HDi 110	81	07/11 -	4171	
JUMPER Platform/Chassis / RELAY Platform/Chassis	2.2 HDi 120	88	04/06 -	3922	
JUMPER Platform/Chassis / RELAY Platform/Chassis	2.2 HDi 120	88	04/06 -	3981	
JUMPER Platform/Chassis / RELAY Platform/Chassis	2.2 HDi 120	88	04/06 -	4171	
JUMPER Platform/Chassis / RELAY Platform/Chassis	2.2 HDi 130	96	07/11 -	3922	
JUMPER Platform/Chassis / RELAY Platform/Chassis	2.2 HDi 130	96	07/11 -	3981	
JUMPER Platform/Chassis / RELAY Platform/Chassis	2.2 HDi 130	96	07/11 -	4171	
JUMPER Platform/Chassis / RELAY Platform/Chassis	2.2 HDi 150	110	07/11 -	3922	
JUMPER Platform/Chassis / RELAY Platform/Chassis	2.2 HDi 150	110	07/11 -	3981	
JUMPER Platform/Chassis / RELAY Platform/Chassis	2.2 HDi 150	110	07/11 -	4171	
JUMPER Platform/Chassis / RELAY Platform/Chassis	3.0 HDi 145	107	07/10 -	3922	
JUMPER Platform/Chassis / RELAY Platform/Chassis	3.0 HDi 145	107	07/10 -	3981	
JUMPER Platform/Chassis / RELAY Platform/Chassis	3.0 HDi 145	107	07/10 -	4171	

MAKE & MODEL   		KW	YEAR		
CITROEN					
JUMPER Platform/Chassis / RELAY Platform/Chassis	3.0 HDi 160	116	09/06 -	3922	
JUMPER Platform/Chassis / RELAY Platform/Chassis	3.0 HDi 160	116	09/06 -	3981	
JUMPER Platform/Chassis / RELAY Platform/Chassis	3.0 HDi 160	116	09/06 -	4171	
JUMPER Platform/Chassis / RELAY Platform/Chassis	3.0 HDi 180	130	07/11 -	3922	
JUMPER Platform/Chassis / RELAY Platform/Chassis	3.0 HDi 180	130	07/11 -	3981	
JUMPER Platform/Chassis / RELAY Platform/Chassis	3.0 HDi 180	130	07/11 -	4171	
JUMPY	1.6 HDi 90 16V	66	01/07 -	3972	4151
JUMPY	1.6 HDi 90 8V	66	01/07 -	3972	4151
JUMPY	2.0 HDi 120	88	01/07 -	3972	4151
JUMPY	2.0 HDi 140	100	01/07 -	3972	4151
JUMPY	2.0 HDi 165	120	07/10 -	3972	4151
JUMPY	2.0 HDi 95	72	07/11 -	3972	4151
JUMPY	2.0 i	103	01/07 -	3972	4151
JUMPY (U6U)	1.6	58	10/95 -	3799	
JUMPY (U6U)	1.6	58	10/95 -	3986	
JUMPY (U6U)	1.6	59	10/95 – 08/00	3799	
JUMPY (U6U)	1.6	59	10/95 – 08/00	3986	
JUMPY (U6U)	1.9 D	51	10/95 – 04/98	3799	
JUMPY (U6U)	1.9 D	51	10/95 – 04/98	3986	
JUMPY (U6U)	1.9 D 70	51	04/98 -	3799	
JUMPY (U6U)	1.9 D 70	51	04/98 -	3986	
JUMPY (U6U)	1.9 TD	66	10/95 -	3799	
JUMPY (U6U)	1.9 TD	66	10/95 -	3986	
JUMPY (U6U)	1.9 TD	68	04/96 -	3799	
JUMPY (U6U)	1.9 TD	68	04/96 -	3986	
JUMPY (U6U)	2.0	100	04/00 – 12/06	3799	
JUMPY (U6U)	2.0	100	04/00 – 12/06	3986	
JUMPY (U6U)	2.0 HDi 110	80	03/00 -	3799	
JUMPY (U6U)	2.0 HDi 110	80	03/00 -	3986	
JUMPY (U6U)	2.0 HDi 95	69	10/99 -	3799	
JUMPY (U6U)	2.0 HDi 95	69	10/99 -	3986	
JUMPY (U6U)	2.0 i 16V	102	03/00 -	3799	
JUMPY (U6U)	2.0 i 16V	102	03/00 -	3986	
JUMPY Box	1.6 HDi 90 16V	66	01/07 -	3972	4151
JUMPY Box	1.6 HDi 90 8V	66	01/07 -	3972	4151
JUMPY Box	2.0 HDi 120	88	01/07 -	3972	4151
JUMPY Box	2.0 HDi 120 4x4	88	01/10 -	3972	4151
JUMPY Box	2.0 HDi 125	94	07/11 -	3972	4151
JUMPY Box	2.0 HDi 140	100	01/07 -	3972	4151
JUMPY Box	2.0 HDi 165	120	07/10 -	3972	4151
JUMPY Box	2.0 HDi 95	72	07/11 -	3972	4151
JUMPY Box	2.0 i	103	01/07 -	3972	4151
JUMPY Box (BS_, BT_, BY_, BZ_)	1.6	59	10/95 – 08/00	3799	
JUMPY Box (BS_, BT_, BY_, BZ_)	1.6	59	10/95 – 08/00	3986	
JUMPY Box (BS_, BT_, BY_, BZ_)	1.6 i	58	10/95 -	3799	
JUMPY Box (BS_, BT_, BY_, BZ_)	1.6 i	58	10/95 -	3986	
JUMPY Box (BS_, BT_, BY_, BZ_)	1.9 D	51	10/95 – 08/98	3799	
JUMPY Box (BS_, BT_, BY_, BZ_)	1.9 D	51	10/95 – 08/98	3986	
JUMPY Box (BS_, BT_, BY_, BZ_)	1.9 D 70	51	04/98 -	3799	
JUMPY Box (BS_, BT_, BY_, BZ_)	1.9 D 70	51	04/98 -	3986	
JUMPY Box (BS_, BT_, BY_, BZ_)	1.9 DT	65	10/95 – 08/00	3799	
JUMPY Box (BS_, BT_, BY_, BZ_)	1.9 DT	65	10/95 – 08/00	3986	
JUMPY Box (BS_, BT_, BY_, BZ_)	1.9 TD	66	10/95 -	3799	
JUMPY Box (BS_, BT_, BY_, BZ_)	1.9 TD	66	10/95 -	3986	
JUMPY Box (BS_, BT_, BY_, BZ_)	2.0 HDi 110	80	01/02 -	3799	
JUMPY Box (BS_, BT_, BY_, BZ_)	2.0 HDi 110	80	01/02 -	3986	
JUMPY Box (BS_, BT_, BY_, BZ_)	2.0 HDi 95	69	10/99 -	3799	
JUMPY Box (BS_, BT_, BY_, BZ_)	2.0 HDi 95	69	10/99 -	3986	
JUMPY Box (BS_, BT_, BY_, BZ_)	2.0 i 16V	102	03/00 -	3799	
JUMPY Box (BS_, BT_, BY_, BZ_)	2.0 i 16V	102	03/00 -	3986	
JUMPY Minibüs/Otobüs (V_)	1.5 BlueHDi 100	75	06.2018 -	4369	4370
JUMPY Minibüs/Otobüs (V_)	1.5 BlueHDi 120	88	06.2018 -	4369	4370
JUMPY Minibüs/Otobüs (V_)	1.6 BlueHDi 115	85	04.2016 -	4369	4370
JUMPY Minibüs/Otobüs (V_)	1.6 BlueHDi 95	70	04.2016 -	4369	4370
JUMPY Minibüs/Otobüs (V_)	2.0 BlueHDi 120	90	12.2019 -	4369	4370
JUMPY Minibüs/Otobüs (V_)	2.0 BlueHDi 150	110	04.2016 -	4369	4370
JUMPY Minibüs/Otobüs (V_)	2.0 BlueHDi 180	130	04.2016 -	4369	4370
JUMPY Panelvan/Van (V_)	1.5 BlueHDi 100	75	06.2018 -	4369	4370
JUMPY Panelvan/Van (V_)	1.5 BlueHDi 120	88	06.2018 -	4369	4370
JUMPY Panelvan/Van (V_)	1.6 BlueHDi 115	85	04.2016 -	4369	4370
JUMPY Panelvan/Van (V_)	1.6 BlueHDi 90	66	09.2018 -	4369	4370
JUMPY Panelvan/Van (V_)	1.6 BlueHDi 95	70	04.2016 -	4369	4370
JUMPY Panelvan/Van (V_)	2.0 BlueHDi 120	90	04.2016 -	4369	4370
JUMPY Panelvan/Van (V_)	2.0 BlueHDi 150	110	04.2016 -	4369	4370
JUMPY Panelvan/Van (V_)	2.0 BlueHDi 180	130	04.2016 -	4369	4370
JUMPY Panelvan/Van (V_)	E-JUMPY	100	09.2020 -	4369	4370

MAKE & MODEL   		KW	YEAR		
CITROEN					
JUMPY Platform şasi (V_)	1.6 BlueHDi 95	70	09.2016 -	4369	
JUMPY Platform şasi (V_)	2.0 BlueHDi 120	90	09.2016 -	4369	
JUMPY Platform şasi (V_)	2.0 BlueHDi 150	110	09.2016 -	4369	
JUMPY Platform şasi (V_)	1.6 BlueHDi 95	70	09.2016 -		4370
JUMPY Platform şasi (V_)	2.0 BlueHDi 120	90	09.2016 -		4370
JUMPY Platform şasi (V_)	2.0 BlueHDi 150	110	09.2016 -		4370
JUMPY Platform/Chassis	2.0 HDi 125	94	07/11 -	3972	4151
JUMPY Platform/Chassis (BU_, BV_, BW_, BX_)	1.9 TD	68	10/99 -	3986	
JUMPY Platform/Chassis (BU_, BV_, BW_, BX_)	2.0	100	12/03 – 10/06	3986	
JUMPY Platform/Chassis (BU_, BV_, BW_, BX_)	2.0 HDi 110	80	12/03 – 10/06	3986	
JUMPY Platform/Chassis (BU_, BV_, BW_, BX_)	2.0 HDi 110 16V	80	12/03 – 10/06	3986	
JUMPY Platform/Chassis (BU_, BV_, BW_, BX_)	2.0 HDi 95	69	10/99 -	3986	
LNA	0.6	24	11/76 – 07/79	3329	
NEMO Box (AA_)	1.3 HDi 75	55	10/10 -	3826/3	
NEMO Estate	1.3 HDi 75	55	10/10 -	3826/3	
SAXO (S0, S1	1.1 X,SX	44	05.1996 - 09.2003	3488	
SAXO (S0, S1)	1.0 X	33	05.1996 - 11.1998	3487	
SAXO (S0, S1)	1.0 X	37	05.1998 - 06.2003	3487	
SAXO (S0, S1)	1.1 X,SX	40	05.1996 - 09.2003	3487	
SAXO (S0, S1)	1.4 VTS	55	05.1996 - 06.2003	3487	
SAXO (S0, S1)	1.5 D	40	09.1996 - 09.2003	3487	
SAXO (S0, S1)	1.5 D	42	09.1996 - 06.2001	3487	
SAXO (S0, S1)	1.5 D	43	07.2001 - 04.2004	3487	
SAXO (S0, S1)	1.6	66	02.1996 - 06.2003	3487	
SAXO (S0, S1)	1.6	74	02.2001 - 04.2004	3487	
SAXO (S0, S1)	1.6	88	02.1996 - 04.2004	3487	
SAXO (S0, S1)	1.6 VTL,VTR	65	05.1996 - 06.2003	3487	
SAXO (S0, S1)	1.6 VTS	72	09.2000 - 09.2003	3487	
SAXO (S0, S1)	1.6 VTS	87	06.1996 - 09.2003	3487	
SAXO (S0, S1)	Electric	20	11.1996 - 06.2003	3487	
SAXO (S0, S1)	1.0 X	33	05/96 – 11/98	3380	
SAXO (S0, S1)	1.0 X	33	05/96 – 11/98	3381	
SAXO (S0, S1)	1.0 X	37	05/98 – 06/03	3380	
SAXO (S0, S1)	1.0 X	37	05/98 – 06/03	3381	
SAXO (S0, S1)	1.1 X,SX	40	05/96 – 09/03	3380	
SAXO (S0, S1)	1.1 X,SX	40	05/96 – 09/03	3381	
SAXO (S0, S1)	1.1 X,SX	44	05/96 – 09/03	3580	
SAXO (S0, S1)	1.4 VTS	55	05/96 – 06/03	3380	
SAXO (S0, S1)	1.4 VTS	55	05/96 – 06/03	3381	
SAXO (S0, S1)	1.5 D	40	09/96 – 09/03	3380	
SAXO (S0, S1)	1.5 D	40	09/96 – 09/03	3381	
SAXO (S0, S1)	1.5 D	42	09/96 – 06/01	3380	
SAXO (S0, S1)	1.5 D	42	09/96 – 06/01	3381	
SAXO (S0, S1)	1.5 D	43	07/01 – 04/04	3380	
SAXO (S0, S1)	1.5 D	43	07/01 – 04/04	3381	
SAXO (S0, S1)	1.6	66	02/96 – 06/03	3528	3496
SAXO (S0, S1)	1.6	74	02/01 – 04/04	3528	3496
SAXO (S0, S1)	1.6	88	02/96 – 04/04	3528	3496
SAXO (S0, S1)	1.6 VTL,VTR	65	05/96 – 06/03	3528	3496
SAXO (S0, S1)	1.6 VTR	80	05/96 – 07/99	3528	3496
SAXO (S0, S1)	1.6 VTS	72	09/00 – 09/03	3528	3496
SAXO (S0, S1)	1.6 VTS	87	06/96 – 09/03	3528	3496
SAXO (S0, S1)	Electric	20	11/96 – 06/03	3380	
SAXO (S0, S1)	Electric	20	11/96 – 06/03	3381	
SAXO Hatchback van (S3_)	1.0	33	10.1997 - 06.2003	3487	
SAXO Hatchback van (S3_)	1.0	37	08.1999 - 06.2003	3487	
SAXO Hatchback van (S3_)	1.5 D	42	08.1999 - 06.2001	3487	
SAXO Hatchback van (S3_)	1.5 D	43	07.2001 - 06.2003	3487	
SPACETOURER Minibüs/Otobüs (V_)	1.5 BlueHDi 100	75	06.2018 -	4369	4370
SPACETOURER Minibüs/Otobüs (V_)	1.5 BlueHDi 120	88	06.2018 -	4369	4370
SPACETOURER Minibüs/Otobüs (V_)	1.6 BlueHDi 115	85	04.2016 -	4369	4370
SPACETOURER Minibüs/Otobüs (V_)	1.6 BlueHDi 95	70	04.2016 -	4369	4370
SPACETOURER Minibüs/Otobüs (V_)	1.6 HDi 90	66	07.2018 -	4369	4370
SPACETOURER Minibüs/Otobüs (V_)	2.0 BlueHDi 120	90	12.2019 -	4369	4370
SPACETOURER Minibüs/Otobüs (V_)	2.0 BlueHDi 145	106	09.2020 -	4369	4370
SPACETOURER Minibüs/Otobüs (V_)	2.0 BlueHDi 150	110	04.2016 -	4369	4370
SPACETOURER Minibüs/Otobüs (V_)	2.0 BlueHDi 180	130	04.2016 -	4369	4370
SPACETOURER Minibüs/Otobüs (V_)	E-SPACETOURER	100	09.2020 -	4369	4370
VISA	0.6	24	07/82 – 03/91	3329	
VISA	0.6	25	09/78 – 06/88	3329	
VISA	1.0	33	09/84 – 06/88	3329	
VISA	1.1 E	35	09/78 – 06/88	3329	
VISA	1.1 E	37	07/82 – 03/91	3329	
VISA	1.1 E	42	09/78 – 03/91	3329	
VISA	1.6 GTI	76	01/85 – 06/86	3474	
VISA	1.6 GTI	83	06/86 – 03/91	3474	

MAKE & MODEL   		KW	YEAR		
CITROEN					
VISA	1.7 D	44	04/84 – 03/91	3474	
VISA	II Super X	47	07/80 – 06/82	3329	
VISA Convertible	1.1 RE	37	03/83 – 10/88	3329	
XANTIA (X1)	1.6 i	65	03/93 – 01/98	3819	3873
XANTIA (X1)	1.6 i SX	65	01/98 – 03/01	3819	3873
XANTIA (X1)	1.8 i	66	01/98 – 04/03	3819	3873
XANTIA (X1)	1.8 i	66	04/97 – 01/98	3819	3873
XANTIA (X1)	1.8 i	74	03/93 – 01/98	3819	3873
XANTIA (X1)	1.8 i 16V	81	01/98 – 04/03	3819	3873
XANTIA (X1)	1.8 i 16V	81	06/95 – 01/98	3819	3873
XANTIA (X1)	1.9 D	50	06/94 – 01/98	3819	3873
XANTIA (X1)	1.9 D	51	06/94 – 01/98	3819	3873
XANTIA (X1)	1.9 SD	55	01/98 – 04/03	3819	3873
XANTIA (X1)	1.9 SD	55	02/96 – 01/98	3819	3873
XANTIA (X1)	1.9 Turbo D	66	01/98 – 04/03	3819	3873
XANTIA (X1)	1.9 Turbo D	66	10/94 – 01/98	3819	3873
XANTIA (X1)	1.9 Turbo D	66	10/94 – 01/98	3878	
XANTIA (X1)	2.0	95	03/93 – 05/95	3819	3873
XANTIA (X1)	2.0 HDI 109	80	02/99 – 04/03		3873
XANTIA (X1)	2.0 HDI 90	66	03/99 – 04/03		3873
XANTIA (X2)	2.0 i	89	01/98 – 04/03	3819	3873
XANTIA (X2)	2.0 i	89	01/98 – 04/03	3878	
XANTIA (X2)	2.0 i	89	03/93 – 01/98	3819	3873
XANTIA (X2)	2.0 i	89	03/93 – 01/98	3878	
XANTIA (X2)	2.0 i 16V	97	01/98 – 04/03	3878	3873
XANTIA (X2)	2.0 i 16V	97	06/95 – 01/98	3878	3873
XANTIA (X2)	2.0 i 16V	110	06/94 – 01/98	3878	3873
XANTIA (X2)	2.0 i 16V	112	03/93 – 01/98	3878	3873
XANTIA (X2)	2.0 Turbo	108	01/98 – 04/03		3873
XANTIA (X2)	2.0 Turbo	108	06/95 – 01/98		3873
XANTIA (X2)	2.1 Turbo D 12V	80	01/98 – 02/99		3873
XANTIA (X2)	2.1 Turbo D 12V	80	06/95 – 01/98		3873
XANTIA (X2)	3.0 i 24V	140	01/97 – 01/98		3873
XANTIA (X2)	3.0 V6	140	01/98 – 04/03		3873
XANTIA Break (X1)	1.8 i	66	04/97 – 01/98	3819	
XANTIA Break (X1)	1.8 i	66	04/97 – 01/98	3878	
XANTIA Break (X1)	1.8 i	74	06/95 – 01/98	3819	
XANTIA Break (X1)	1.8 i	74	06/95 – 01/98	3878	
XANTIA Break (X1)	1.8 i 16V	81	06/95 – 01/98	3819	
XANTIA Break (X1)	1.8 i 16V	81	06/95 – 01/98	3878	
XANTIA Break (X1)	1.9 SD	55	04/97 – 01/98	3878	
XANTIA Break (X1)	1.9 Turbo D	66	06/95 – 01/98	3878	
XANTIA Break (X1)	2.0 i	89	06/95 – 01/98	3878	
XANTIA Break (X1)	2.0 i 16V	97	06/95 – 01/98	3878	
XANTIA Break (X2)	1.8 i	66	01/98 – 04/03	3819	
XANTIA Break (X2)	1.8 i	66	01/98 – 04/03	3878	
XANTIA Break (X2)	1.8 i 16V	81	01/98 – 04/03	3819	
XANTIA Break (X2)	1.8 i 16V	81	01/98 – 04/03	3878	
XANTIA Break (X2)	1.9 SD	55	01/98 – 04/03	3878	
XANTIA Break (X2)	1.9 Turbo D	66	01/98 – 04/03	3878	
XANTIA Break (X2)	2.0 i	89	01/98 – 04/03	3878	
XANTIA Break (X2)	2.0 i 16V	97	01/98 – 04/03	3878	
XM (Y3)	2.0	84	05/89 – 04/94		3873
XM (Y3)	2.0	94	05/89 – 06/94		3873
XM (Y3)	2.0 i	79	05/89 – 04/94		3873
XM (Y3)	2.0 i	89	05/89 – 06/94		3873
XM (Y3)	2.0 i Turbo	104	09/92 – 06/94		3873
XM (Y3)	2.1 D 12V	60	05/89 – 06/94		3873
XM (Y3)	2.1 TD 12V	80	05/89 – 06/94		3873
XM (Y3)	3.0	123	05/89 – 05/94		3873
XM (Y3)	3.0	147	05/89 – 06/94		3873
XM (Y3)	3.0 V6	123	05/89 – 06/94		3873
XM (Y3)	3.0 V6 24V	147	07/90 – 06/94		3873
XM (Y4)	2.0 i 16V	97	05/94 – 10/00		3873
XM (Y4)	2.0 Turbo	108	05/94 – 10/00		3873
XM (Y4)	2.1 D12 VSX	60	03/96 – 08/96		3873
XM (Y4)	2.1 TD 12V	80	05/94 – 10/00		3873
XM (Y4)	2.5 TD	95	05/94 – 10/00		3873
XM (Y4)	3.0 V6	123	05/94 – 10/00		3873
XM (Y4)	3.0 V6	140	04/97 – 10/00		3873
XM (Y4)	3.0 V6 24V	147	05/94 – 10/00		3873
XM Break (Y3)	2.0	94	05/89 – 06/94		3873
XSARA (N0)	1.4 i (KFW (TU3JP)	55	03/98 – 03/05	3659	
XSARA (N0)	1.4 i (KFX (TU3JP)	55	03/98 – 03/05	3659	
XSARA (N1)	1.4 HDi	50	01/03 – 03/05		3496
XSARA (N1)	1.4 i	55	04/97 – 03/05	3938	3496

MAKE & MODEL		KW	YEAR		
CITROEN					
XSARA (N1)	1.4 i (KFW (TU3JP)	55	04/97 – 03/05	3659	
XSARA (N1)	1.4 i (KFX (TU3JP)	55	04/97 – 03/05	3659	
XSARA (N1)	1.5 D	42	04/97 – 09/00	3938	3496
XSARA (N1)	1.5 D (VJZ (TUD5)	42	04/97 – 09/00	3659	
XSARA (N1)	1.6 16V	80	09/00 – 03/05		3496
XSARA (N1)	1.6 i	65	04/97 – 09/00		3496
XSARA (N1)	1.8 D	43	04/97 – 09/00		3496
XSARA (N1)	1.8 i	66	04/97 – 09/00		3496
XSARA (N1)	1.8 i 16V	81	04/97 – 09/00	3636	3496
XSARA (N1)	1.8 i 16V	81	04/97 – 09/00	3644	
XSARA (N1)	1.8 i Aut.	74	04/97 – 09/00		3496
XSARA (N1)	1.8 VTS	85	09/00 – 10/04		3496
XSARA (N1)	1.8 VTS	85	09/00 – 10/04	3636	
XSARA (N1)	1.8 VTS	85	09/00 – 10/04	3644	
XSARA (N1)	1.8 VTS	85	09/00 – 10/04		3496
XSARA (N1)	1.9 D	50	04/97 – 09/00		3496
XSARA (N1)	1.9 D	51	07/98 – 03/05		3496
XSARA (N1)	1.9 SD	55	01/98 – 09/00		3496
XSARA (N1)	1.9 TD	66	04/97 – 09/00		3496
XSARA (N1)	2.0 16V	97	07/98 – 09/00	3636	3496
XSARA (N1)	2.0 16V	97	07/98 – 09/00	3644	
XSARA (N1)	2.0 16V	100	09/00 – 03/05	3800	3496
XSARA (N1)	2.0 16V	120	04/97 – 09/00		3496
XSARA (N1)	2.0 HDi 109	80	05/01 – 03/05	3800	3496
XSARA (N1)	2.0 HDi 90	66	02/99 – 03/05	3636	3496
XSARA (N1)	2.0 HDi 90	66	02/99 – 03/05	3644	
XSARA Box	2.0 HDi	66	09/00 – 03/05		3496
XSARA Break (N2)	1.4 i	55	10/97 – 08/05	3636	
XSARA Break (N2)	1.4 i	55	10/97 – 08/05	3644	
XSARA Break (N2)	1.5 D	42	10/97 – 09/00	3636	
XSARA Break (N2)	1.5 D	42	10/97 – 09/00	3644	
XSARA Break (N2)	1.6 16V	80	09/00 – 08/05		3496
XSARA Break (N2)	1.6 i	65	10/97 – 09/00	3636	
XSARA Break (N2)	1.6 i	65	10/97 – 09/00	3644	
XSARA Break (N2)	1.8 D	43	10/97 – 09/00	3636	
XSARA Break (N2)	1.8 D	43	10/97 – 09/00	3644	
XSARA Break (N2)	1.8 i	66	10/97 – 09/00	3636	3496
XSARA Break (N2)	1.8 i	66	10/97 – 09/00	3644	
XSARA Break (N2)	1.8 i 16V	81	10/97 – 09/00	3636	3496
XSARA Break (N2)	1.8 i 16V	81	10/97 – 09/00	3644	
XSARA Break (N2)	1.8 i Aut.	74	10/97 – 09/00	3636	3496
XSARA Break (N2)	1.8 i Aut.	74	10/97 – 09/00	3644	
XSARA Break (N2)	1.8 LPG	81	05/98 – 08/00	3636	3496
XSARA Break (N2)	1.8 LPG	81	05/98 – 08/00	3644	
XSARA Break (N2)	1.9 D	50	10/97 – 09/00	3636	
XSARA Break (N2)	1.9 D	50	10/97 – 09/00	3644	
XSARA Break (N2)	1.9 D	51	07/98 – 08/05	3636	
XSARA Break (N2)	1.9 D	51	07/98 – 08/05	3644	
XSARA Break (N2)	1.9 D	55	01/98 – 09/00	3636	
XSARA Break (N2)	1.9 D	55	01/98 – 09/00	3644	
XSARA Break (N2)	1.9 TD	66	10/97 – 09/00	3636	3496
XSARA Break (N2)	1.9 TD	66	10/97 – 09/00	3644	
XSARA Break (N2)	2.0 16V	97	07/98 – 09/00	3636	3496
XSARA Break (N2)	2.0 16V	97	07/98 – 09/00	3644	
XSARA Break (N2)	2.0 16V	100	09/00 – 08/05	3800	3496
XSARA Break (N2)	2.0 HDI 90	66	02/99 – 08/05	3636	3496
XSARA Break (N2)	2.0 HDI 90	66	02/99 – 08/05	3644	
XSARA Break (N2)	2.0 HDi 109	80	05/01 – 08/05	3800	3496
XSARA Coupe (N0)	1.4 HDi	50	01/03 – 03/05		3496
XSARA Coupe (N0)	1.4 i	55	03/98 – 03/05	3759	3496
XSARA Coupe (N0)	1.6 16V	80	09/00 – 03/05		3496
XSARA Coupe (N0)	1.6 i	65	02/98 – 09/00		3496
XSARA Coupe (N0)	1.8 i	66	02/98 – 09/00		3496
XSARA Coupe (N0)	1.8 i	74	02/98 – 09/00		3496
XSARA Coupe (N0)	1.8 i 16V	81	02/98 – 09/00	3636	3496
XSARA Coupe (N0)	1.8 i 16V	81	02/98 – 09/00	3644	
XSARA Coupe (N0)	1.8 VTS	85	09/00 – 10/04	3636	3496
XSARA Coupe (N0)	1.8 VTS	85	09/00 – 10/04	3644	
XSARA Coupe (N0)	1.9 D	50	02/98 – 09/00		3496
XSARA Coupe (N0)	1.9 D	51	02/99 – 03/05		3496
XSARA Coupe (N0)	1.9 TD	66	02/98 – 09/00		3496
XSARA Coupe (N0)	2.0	97	08/98 – 08/00		3496
XSARA Coupe (N0)	2.0 16V	100	09/00 – 03/05	3800	3496
XSARA Coupe (N0)	2.0 HDI 90	66	02/99 – 03/05	3636	3496
XSARA Coupe (N0)	2.0 HDI 90	66	02/99 – 03/05	3644	
XSARA Coupe (N0)	2.0 HDi 109	80	05/01 – 03/05	3800	3496

MAKE & MODEL		KW	YEAR		
CITROEN					
XSARA Coupe (N0)	2.0 i 16V	120	02/98 – 03/05	3800	3496
XSARA PICASSO (N68)	1.6	65	12/99 -	3800	3529/1
XSARA PICASSO (N68)	1.6	67	06/02 -	3800	3529/1
XSARA PICASSO (N68)	1.6	70	12/99 -	3800	3529/1
XSARA PICASSO (N68)	1.6 16V	80	09/05 -	3800	3529/1
XSARA PICASSO (N68)	1.6 16V	81	06/05 – 09/06	3800	3529/1
XSARA PICASSO (N68)	1.6 Chrono	74	04/01 – 10/04	3800	3529/1
XSARA PICASSO (N68)	1.6 HDi	66	09/05 -	3800	3529/1
XSARA PICASSO (N68)	1.6 HDi	80	05/04 -	3800	3529/1
XSARA PICASSO (N68)	1.8 16V	85	02/00 -	3800	3529/1
XSARA PICASSO (N68)	1.8 SX	76	06/00 – 08/05	3800	3529/1
XSARA PICASSO (N68)	2.0 16V	100	01/03 -	3800	3529/1
XSARA PICASSO (N68)	2.0 HDi	66	12/99 -	3800	3529/1
XSARA PICASSO (N68)	2.0 HDi	80	12/99 -	3800	3529/1
ZX (N2)	1.6	66	07/94 – 10/97	3555	3496
ZX (N2)	1.6 i	65	03/91 – 06/97	3555	3496
ZX (N2)	1.8	76	07/94 – 10/97	3555	3496
ZX (N2)	1.8	82	04/96 – 10/97	3555	3496
ZX (N2)	1.8 D	44	06/93 – 06/97	3556	
ZX (N2)	1.8 i	74	07/92 – 06/97	3555	3496
ZX (N2)	1.8 i 16V	81	01/96 – 06/97	3555	3496
ZX (N2)	1.9	93	03/91 – 06/97	3555	3496
ZX (N2)	1.9	96	03/91 – 09/93	3555	3496
ZX (N2)	1.9 D	47	03/91 – 06/97	3556	
ZX (N2)	1.9 D	50	07/93 – 06/97	3556	
ZX (N2)	1.9 DT	65	07/94 – 10/97	3555	3496
ZX (N2)	1.9 DT	68	06/92 – 06/94	3555	3496
ZX (N2)	1.9 i	88	03/91 – 06/97	3555	3496
ZX (N2)	1.9 TD	66	07/92 – 06/97	3555	3496
ZX (N2)	2.0	90	07/94 – 10/97	3555	3496
ZX (N2)	2.0	122	09/96 – 10/97		3496
ZX (N2)	2.0 i	89	07/92 – 06/97	3555	3496
ZX (N2)	2.0 i 16V	110	06/94 – 06/97	3610	3496
ZX (N2)	2.0 i 16V	112	07/92 – 10/94	3610	3496
ZX (N2)	2.0 i 16V	120	05/96 – 06/97		3496
ZX Break (N2)	1.6 i	65	10/93 – 10/97	3555	3496
ZX Break (N2)	1.8 D	44	10/93 – 10/97	3555	
ZX Break (N2)	1.8 i	74	10/93 – 10/97	3555	3496
ZX Break (N2)	1.8 i 16V	81	01/96 – 02/98	3555	3496
ZX Break (N2)	1.9 D	47	10/93 – 10/97	3555	
ZX Break (N2)	1.9 D	50	06/94 – 10/97	3555	
ZX Break (N2)	1.9 TD	66	10/93 – 10/97	3555	3496
CITROEN (DF-PSA)					
C2 (T11)	1.4	56	10/06 – 12/14	3938	
C2 (T11)	1.6	78	10/06 – 12/14	3820	
C-QUATRE - SHI JIA	1.6	78	10/08 – 12/13	3800	3529/1
C-QUATRE - SHI JIA	2.0	108	10/08 – 12/13	3800	3529/1
C-QUATRE - SHI JIA Saloon	1.6	78	06/09 – 12/15	3800	3529/1
C-QUATRE - SHI JIA Saloon	2.0	108	06/09 – 12/15	3800	3529/1
C-TRIOMPHE	2.0 Exclusive Limousine	103	05/06 – 12/12		3529/1
C-TRIOMPHE	2.0 Exclusive Limousine	108	05/06 – 12/12	3800	
XSARA PICASSO MPV (N68)	1.6 Chrono	65	09/01 – 03/07		3496
XSARA PICASSO MPV (N68)	2.0	85	04/02 – 03/07	3800	
XSARA PICASSO MPV (N68)	2.0	99	03/04 – 03/07	3800	
XSARA Saloon	2.0	97	05/03 – 12/05	3800	3496
CUPRA					
Formentor (KM7) 44317 TSI	DPCA	110	11/2020 -	4228/1	
DACIA					
1300	1.3	40	12/72 – 05/83	3329	
1300 Estate	1.3	40	12/72 – 05/83	3329	
1310 Estate	1.3	40	05/83 – 07/04	3329	
1310 Estate	1.4	46	01/95 – 07/04	3329	
1310 Saloon (U, X)	1.3	40	05/83 – 07/04	3329	
1310 Saloon (U, X)	1.4	48	09/85 – 12/94	3329	
1310 Saloon (U, X)	1.4 Classic	46	01/95 – 07/04	3329	
1310 Saloon (U, X)	1.5	46	01/95 – 07/04	3329	
1410 Estate	1.4	48	06/94 – 12/98	3329	
1410 Estate	1.4	48	09/85 – 12/98	3329	
1410 Saloon	1.4	48	09/85 – 12/98	3329	
DOKKER	1.2 TCe	85	11/12 -	3964/1	
DOKKER	1.2 TCe	85	11/12 -	3983	
DOKKER	1.5 dCi	55	11/12 -	3964/1	
DOKKER	1.5 dCi	55	11/12 -	3983	
DOKKER	1.5 dCi	66	11/12 -	3964/1	

MAKE & MODEL		KW	YEAR		
DACIA					
DOKKER	1.5 dCi	66	11/12 -	3983	
DOKKER	1.6	61	11/12 -	3964/1	
DOKKER	1.6	61	11/12 -	3983	
DOKKER	1.6	75	04/15 -	3964/1	
DOKKER	1.6	75	04/15 -	3983	
DOKKER	1.6 LPG	61	11/13 -	3964/1	
DOKKER	1.6 LPG	61	11/13 -	3983	
DOKKER	1.6 LPG	75	04/15 -	3964/1	
DOKKER	1.6 LPG	75	04/15 -	3983	
DOKKER Express	1.2 TCe 115	84	12/12 -	3964/1	
DOKKER Express	1.2 TCe 115	84	12/12 -	3983	
DOKKER Express	1.2 TCe 115	85	07/15 -	3964/1	
DOKKER Express	1.2 TCe 115	85	07/15 -	3983	
DOKKER Express	1.2 TCe 125	92	10/13 -	3964/1	
DOKKER Express	1.5 dCi	55	12/12 -	3964/1	
DOKKER Express	1.5 dCi	55	12/12 -	3983	
DOKKER Express	1.5 dCi	66	12/12 -	3964/1	
DOKKER Express	1.5 dCi	66	12/12 -	3983	
DOKKER Express	1.6	61	12/12 -	3964/1	
DOKKER Express	1.6	61	12/12 -	3983	
DOKKER Express	1.6	75	04/15 -	3964/1	
DOKKER Express	1.6	75	04/15 -	3983	
DOKKER Express	1.6 LPG	61	11/13 -	3964/1	
DOKKER Express	1.6 LPG	75	04/15 -	3964/1	
DOKKER Express	1.6 LPG	75	04/15 -	3983	
DUSTER	1.2 TCe 125 4x4	92	06/15 -	3964/1	
DUSTER	1.5 dCi	63	04/10 -	3964/1	
DUSTER	1.5 dCi	63	04/10 -	3983	
DUSTER	1.5 dCi	66	10/10 -	3964/1	
DUSTER	1.5 dCi	66	10/10 -	3983	
DUSTER	1.5 dCi	79	06/10 -	3964/1	
DUSTER	1.5 dCi	79	06/10 -	3983	
DUSTER	1.5 dCi	80	08/13 -	3964/1	
DUSTER	1.5 dCi	80	08/13 -	3983	
DUSTER	1.5 dCi 4x4	66	10/10 -	3964/1	
DUSTER	1.5 dCi 4x4	66	10/10 -	3983	
DUSTER	1.5 dCi 4x4	79	06/10 -	3964/1	
DUSTER	1.5 dCi 4x4	79	06/10 -	3983	
DUSTER	1.5 dCi 4x4	80	08/13 -	3964/1	
DUSTER	1.5 dCi 4x4	80	08/13 -	3983	
DUSTER	1.5 dCi 4x4	81	10/10 -	3964/1	
DUSTER	1.5 dCi 4x4	81	10/10 -	3983	
DUSTER	1.6 16V	77	04/10 -	3964/1	
DUSTER	1.6 16V	77	04/10 -	3983	
DUSTER	1.6 16V 4x4	77	06/10 -	3964/1	
DUSTER	1.6 16V 4x4	77	06/10 -	3983	
DUSTER	1.6 16V Hi-Flex	77	08/10 -	3964/1	
DUSTER	1.6 16V Hi-Flex	77	08/10 -	3983	
DUSTER	1.6 16V LPG	77	04/11 -	3964/1	
DUSTER	1.6 16V LPG	77	04/11 -	3983	
DUSTER	1.6 LPG	61	11/13 -	3983	
DUSTER	1.6 SCe 115	84	06/15 -	3964/1	
DUSTER	1.6 SCe 115 4x4	84	06/15 -	3964/1	
DUSTER	1.6 SCe 115 LPG	84	06/15 -	3964/1	
DUSTER Box	1.2 TCe 125 4x4	92	10/13 -	3964/1	
DUSTER Box	1.2 TCe 125 4x4	92	10/13 -	3983	
DUSTER Box	1.5 dCi	66	04/11 -	3964/1	
DUSTER Box	1.5 dCi	66	04/11 -	3983	
DUSTER Box	1.5 dCi	80	04/13 -	3964/1	
DUSTER Box	1.5 dCi	80	04/13 -	3983	
DUSTER Box	1.5 dCi 4x4	66	04/11 -	3964/1	
DUSTER Box	1.5 dCi 4x4	66	04/11 -	3983	
DUSTER Box	1.5 dCi 4x4	80	04/13 -	3983	
DUSTER Box	1.6 16V 4x4	77	04/11 -	3964/1	
DUSTER Box	1.6 16V 4x4	77	04/11 -	3983	
DUSTER Box	1.6 16V Hi-Flex	77	04/11 -	3964/1	
DUSTER Box	1.6 16V Hi-Flex	77	04/11 -	3983	
DUSTER Box	1.6 SCe 115	84	06/15 -	3964/1	
DUSTER Box	1.6 SCe 115 4x4	84	06/15 -	3964/1	
LODGY	1.2 TCe	85	03/12 -	3964/1	
LODGY	1.2 TCe	85	03/12 -	3983	
LODGY	1.5 dCi	66	03/12 -	3964/1	
LODGY	1.5 dCi	66	03/12 -	3983	
LODGY	1.5 dCi	79	01/13 -	3964/1	
LODGY	1.5 dCi	79	01/13 -	3983	
LODGY	1.5 dCi	80	06/15 -	3983	

MAKE & MODEL		KW	YEAR		
DACIA					
LODGY	1.5 dCi	81	03/12 -	3964/1	
LODGY	1.5 dCi	81	03/12 -	3983	
LODGY	1.6	61	03/12 -	3964/1	
LODGY	1.6	61	03/12 -	3983	
LODGY	1.6 LPG	61	11/13 -	3964/1	
LODGY	1.6 LPG	61	11/13 -	3983	
LODGY	1.6 LPG	75	04/15 -	3983	
LODGY	1.6 SCe 115	75	06/15 -	3983	
LOGAN II MCV (K52)	1.5 DCI (K9K 612)	55	02/13 -	4253	
LOGAN II MCV (K52)	1.5 DCI (K9K 612)	66	02/13 -	4253	
LOGAN II MCV (K52)	1.5 DCI (K9K 830)	63	02/13 -	4253	
LOGAN II MCV (K52)	TCe 90 (H4B 400)	66	02/13 -	4253	
LOGAN II MCV (K52)	TCe 90 LPG	66	09/15 -	4253	
LOGAN II (L52)	1.5 DCI (K9K 612)	55	10/12 -	4253	
LOGAN II (L52)	1.5 DCI (K9K 612)	66	10/12 -	4253	
LOGAN II (L52)	1.5 DCI (K9K 830)	63	01/13 -	4253	
LOGAN II (L52)	1.6 16V	75	04/15 -	4253	
LOGAN II (L52)	1.6 16V (K4M 842)	77	01/13 -	4253	
LOGAN II (L52)	TCe 90 (H4B 400)	66	10/12 -	4253	
LOGAN (LS_)	1.2 16V	55	02/06 -	3431	
LOGAN (LS_)	1.2 16V	55	02/06 -	3503	
LOGAN (LS_)	1.2 16V LPG	55	02/06 -	3431	
LOGAN (LS_)	1.2 16V LPG	55	02/06 -	3503	
LOGAN (LS_)	1.4 (LSOA, LSOC, LSOE,LSOG)	55	09/04 -	3503	
LOGAN (LS_)	1.4 (LSOA, LSOC, LSOE,LSOG)	55	09/04 -	3431	
LOGAN (LS_)	1.4 MPI LPG (LS0C)	55	02/06 -	3503	
LOGAN (LS_)	1.4 MPI LPG (LS0C)	55	02/06 -	3431	
LOGAN (LS_)	1.5 dCi (LS04)	55	05/10 -	3431	
LOGAN (LS_)	1.5 dCi (LS04)	55	05/10 -	3503	
LOGAN (LS_)	1.5 dCi (LS04)	65	05/10 -	3431	
LOGAN (LS_)	1.5 dCi (LS04)	65	05/10 -	3503	
LOGAN (LS_)	1.5 dCi (LS0J, LS0Y)	48	09/05 -	3431	
LOGAN (LS_)	1.5 dCi (LS0J, LS0Y)	48	09/05 -	3503	
LOGAN (LS_)	1.5 dCi (LS0K)	50	01/06 -	3431	
LOGAN (LS_)	1.5 dCi (LS0K)	50	01/06 -	3503	
LOGAN (LS_)	1.5 dCi (LS0W)	63	09/07 -	3431	
LOGAN (LS_)	1.5 dCi (LS0W)	63	09/07 -	3503	
LOGAN (LS_)	1.6 (LSOB, LSOD, LSOF, LSOH)	64	09/04 -	3431	
LOGAN (LS_)	1.6 (LSOB, LSOD, LSOF, LSOH)	64	09/04 -	3503	
LOGAN (LS_)	1.6 16V (LS0M)	77	02/06 -	3431	
LOGAN (LS_)	1.6 16V (LS0M)	77	02/06 -	3503	
LOGAN (LS_)	1.6 16V Flexifuel	77	07/10 -	3431	
LOGAN (LS_)	1.6 16V Flexifuel	77	07/10 -	3503	
LOGAN (LS_)	1.6 Bifuel	62	05/10 -	3431	
LOGAN (LS_)	1.6 Bifuel	62	05/10 -	3503	
LOGAN (LS_)	1.6 MPI 85	62	05/10 -	3431	
LOGAN (LS_)	1.6 MPI 85	62	05/10 -	3503	
LOGAN EXPRESS (FS_)	1.4	55	03/09 -	3983	
LOGAN EXPRESS (FS_)	1.4	55	03/09 -	4141/1	
LOGAN EXPRESS (FS_)	1.5 dCi	55	05/10 -	3983	
LOGAN EXPRESS (FS_)	1.5 dCi	55	05/10 -	4141/1	
LOGAN EXPRESS (FS_)	1.5 dCi	65	05/10 -	3983	
LOGAN EXPRESS (FS_)	1.5 dCi	65	05/10 -	4141/1	
LOGAN EXPRESS (FS_)	1.5 dCi (FS0K)	50	03/09 -	3983	
LOGAN EXPRESS (FS_)	1.5 dCi (FS0K)	50	03/09 -	4141/1	
LOGAN EXPRESS (FS_)	1.5 dCi (FS0W)	63	03/09 -	3983	
LOGAN EXPRESS (FS_)	1.5 dCi (FS0W)	63	03/09 -	4141/1	
LOGAN EXPRESS (FS_)	1.6	64	03/09 -	3983	
LOGAN EXPRESS (FS_)	1.6	64	03/09 -	4141/1	
LOGAN EXPRESS (FS_)	1.6 MPI 85	62	05/10 -	3983	
LOGAN EXPRESS (FS_)	1.6 MPI 85	62	05/10 -	4141/1	
Logan I MCV (KS_) 44287	K7J 710	55	02/2007 -	4141	
Logan I MCV (KS_) 44317 dCi (KS0K)	K9K 792	50	02/2007 -	4141	
Logan I MCV (KS_) 44317 dCi (KS0W)	K9K 796	63	09/2007 - 12/2012	4141	
Logan I MCV (KS_) 44348	K7M 710	64	02/2007 -	4141	
Logan I MCV (KS_) 44348 16V (KS0L, KS0M, KS0P, KS1S)	K4M 690, K4M 696, K4M 697	77	02/2007 -	4141	
LOGAN II	1.2 LPG	55	10/12 -	4140	
LOGAN II	1.5 dCi	55	10/12 -	4140	
LOGAN II	1.5 dCi	63	01/13 -	4140	
LOGAN II	1.5 dCi	66	10/12 -	4140	
LOGAN II	1.6 16V	77	01/13 -	4140	
LOGAN II	TCe 90	66	10/12 -	4140	
Logan II 44228	D4F 732	55	10/2012 -	4140/1	
Logan II 44228 LPG	D4F 734	55	10/2012 -	4140/1	
Logan II MCV 44228	D4F 732	55	02/2013 -	4140/1	
Logan II MCV 44228 LPG	D4F 734	55	02/2013 -	4140/1	

MAKE & MODEL		KW	YEAR		
DACIA					
LOGAN MCV (KS_)	1.6 Bifuel	62	05.2010 -	3503/1	
LOGAN MCV (KS_)	1.6 Bifuel	62	05.2010 -	3503/1	
LOGAN MCV (KS_)	1.6 MPI 85	62	05.2010 -	3503/1	
LOGAN MCV (KS_)	1.6 MPI 85	62	05.2010 -	3503/1	
LOGAN MCV (KS_)	1.4	55	02/07 -	3983	
LOGAN MCV (KS_)	1.4	55	02/07 -	4141/1	
LOGAN MCV (KS_)	1.5 dCi (KS04)	55	05/10 -	3983	
LOGAN MCV (KS_)	1.5 dCi (KS04)	55	05/10 -	4141/1	
LOGAN MCV (KS_)	1.5 dCi (KS04)	65	05/10 -	3983	
LOGAN MCV (KS_)	1.5 dCi (KS04)	65	05/10 -	4141/1	
LOGAN MCV (KS_)	1.5 dCi (KS0K)	50	02/07 -	3983	
LOGAN MCV (KS_)	1.5 dCi (KS0K)	50	02/07 -	4141/1	
LOGAN MCV (KS_)	1.5 dCi (KS0W)	63	09/07 -	3983	
LOGAN MCV (KS_)	1.5 dCi (KS0W)	63	09/07 -	4141/1	
LOGAN MCV (KS_)	1.6	64	02/07 -	3983	
LOGAN MCV (KS_)	1.6	64	02/07 -	4141/1	
LOGAN MCV (KS_)	1.6 16V	77	02/07 -	3983	
LOGAN MCV (KS_)	1.6 16V	77	02/07 -	4141/1	
LOGAN MCV (KS_)	1.6 16V Hi-Flex	77	11/09 -	3983	
LOGAN MCV (KS_)	1.6 16V Hi-Flex	77	11/09 -	4141/1	
LOGAN MCV (KS_)	1.6 Bifuel	64	02/07 -	4141/1	
LOGAN MCV (KS_)	1.6 Bifuel	64	11/08 -	3983	
LOGAN MCV (KS_)	1.6 MPI 85	62	05/10 -	3983	
LOGAN MCV (KS_)	1.6 MPI 85	62	05/10 -	4141/1	
LOGAN MCV II	1.2	55	02/13 -	4140	
LOGAN MCV II	1.2 LPG	55	02/13 -	4140	
LOGAN MCV II	1.5 dCi	55	02/13 -	4140	
LOGAN MCV II	1.5 dCi	63	02/13 -	4140	
LOGAN MCV II	1.5 dCi	66	02/13 -	4140	
LOGAN MCV II	TCe 90	66	02/13 -	4140	
LOGAN Pickup (US_)	1.4	55	01/09 -	3983	
LOGAN Pickup (US_)	1.4	55	01/09 -	4141/1	
LOGAN Pickup (US_)	1.5 dCi	55	05/10 -	3983	
LOGAN Pickup (US_)	1.5 dCi	55	05/10 -	4141/1	
LOGAN Pickup (US_)	1.5 dCi	65	05/10 -	3983	
LOGAN Pickup (US_)	1.5 dCi	65	05/10 -	4141/1	
LOGAN Pickup (US_)	1.5 dCi (US0K)	50	03/08 -	3983	
LOGAN Pickup (US_)	1.5 dCi (US0K)	50	03/08 -	4141/1	
LOGAN Pickup (US_)	1.5 dCi (US0W)	63	03/08 -	3983	
LOGAN Pickup (US_)	1.5 dCi (US0W)	63	03/08 -	4141/1	
LOGAN Pickup (US_)	1.6	64	03/08 -	3983	
LOGAN Pickup (US_)	1.6	64	03/08 -	4141/1	
LOGAN Pickup (US_)	1.6 Bifuel	62	05/10 -	3983	
LOGAN Pickup (US_)	1.6 Bifuel	62	05/10 -	4141/1	
LOGAN Pickup (US_)	1.6 MPI 85	62	05/10 -	3983	
LOGAN Pickup (US_)	1.6 MPI 85	62	05/10 -	4141/1	
LOGAN Pick-up (US_)	1.4	55	01.2009 -	3503/1	
LOGAN Pick-up (US_)	1.5 dCi (US0K)	50	03.2008 -	3503/1	
LOGAN Pick-up (US_)	1.5 dCi (US0W)	63	03.2008 -	3503/1	
LOGAN Pick-up (US_)	1.6	64	03.2008 -	3503/1	
NOVA	1.4	48	04/96 – 03/01	3329/1	
NOVA	1.6	53	04/96 – 03/03	3329/1	
SANDERO	1.5 dCi	50	11.2008 -	3503/1	
SANDERO	1.2 16V	55	11/08 -	3431	
SANDERO	1.2 16V	55	11/08 -	3503	
SANDERO	1.2 16V LPG	55	11/08 -	3431	
SANDERO	1.2 16V LPG	55	11/08 -	3503	
SANDERO	1.4	55	06/08 -	3431	
SANDERO	1.4	55	06/08 -	3503	
SANDERO	1.4 MPI LPG	53	01/09 -	3431	
SANDERO	1.4 MPI LPG	53	01/09 -	3503	
SANDERO	1.5 dCi	50	11/08 -	3431	
SANDERO	1.5 dCi	50	11/08 -	3503	
SANDERO	1.5 dCi	55	05/10 -	3431	
SANDERO	1.5 dCi	55	05/10 -	3503	
SANDERO	1.5 dCi	63	11/08 -	3431	
SANDERO	1.5 dCi	63	11/08 -	3503	
SANDERO	1.5 dCi	65	05/10 -	3431	
SANDERO	1.5 dCi	65	05/10 -	3503	
SANDERO	1.6	64	06/08 -	3431	
SANDERO	1.6	64	06/08 -	3503	
SANDERO	1.6 16V	77	07/11 -	3431	
SANDERO	1.6 16V	77	07/11 -	3503	
SANDERO	1.6 16V Bifuel	77	01/11 -	3431	
SANDERO	1.6 16V Bifuel	77	01/11 -	3503	
SANDERO	1.6 MPI 85	62	05/10 -	3431	

MAKE & MODEL   		KW	YEAR		
DACIA					
SANDERO	1.6 MPI 85	62	05/10 -	3503	
SANDERO	1.4 MPI LPG	53	01.2009 -	3503/1	
SANDERO	1.5 dCi	48	11.2008 -	3503/1	
SANDERO	1.5 dCi	63	11.2008 -	3503/1	
SANDERO	1.5 dCi	65	05.2010 -	3503/1	
SANDERO	1.6	64	06.2008 -	3503/1	
SANDERO	1.6 16V	77	07.2011 -	3503/1	
SANDERO	1.6 MPI 85	62	05.2010 -	3503/1	
SANDERO II (B52)	1.5 DCI (K9K 612)	55	10/12 -	4253	
SANDERO II (B52)	1.5 DCI (K9K 612)	66	10/12 -	4253	
SANDERO II (B52)	1.5 DCI (K9K 830)	63	01/13 -	4253	
SANDERO II (B52)	1.6 16V	75	04/15 -	4253	
SANDERO II (B52)	1.6 16V (K4M 694)	77	01/13 -	4253	
SANDERO II (B52)	1.6 16V (K4M 842)	77	01/13 -	4253	
SANDERO II (B52)	1.6 16V (K4M 845)	77	01/13 -	4253	
SANDERO 1.2 16V		55	11.2008 -	3503/1	
SANDERO 1.2 16V LPG		55	11.2008 -	3503/1	
SANDERO 1.4		55	06.2008 -	3503/1	
SANDERO II	1.2	54	05/15 -	3431	
SANDERO II	1.2	54	05/15 -	3503	
SANDERO II	1.2	55	10/12 -	3431	
SANDERO II	1.2	55	10/12 -	3503	
SANDERO II	1.2	55	10/12 -	4140	
SANDERO II	1.2 LPG	55	10/12 -	3431	
SANDERO II	1.2 LPG	55	10/12 -	3503	
SANDERO II	1.5 dCi	55	10/12 -	3431	
SANDERO II	1.5 dCi	55	10/12 -	3503	
SANDERO II	1.5 dCi	63	01/13 -	4140	
SANDERO II	1.5 dCi	66	10/12 -	3431	
SANDERO II	1.5 dCi	66	10/12 -	3503	
SANDERO II	TCe 90	66	10/12 -	4140	
SANDERO II	TCe 90 LPG	66	09/15 -	4140	
Sandero II 44228	D4F 732	55	10/2012 -	4140/1	
Sandero II 44228 LPG	D4F 734	55	10/2012 -	4140/1	
SOLENZA (B41)	1.4 (B41A, B41B, B41C)	55	02.2003 - 10.2005	3503/1	
SOLENZA (B41)	1.9 D (B41E, B41F, B41G)	46	02.2003 -	3503/1	
SOLENZA (B41_)	1.4 (B41A, B41B, B41C)	55	02/03 -	3431	
SOLENZA (B41_)	1.4 (B41A, B41B, B41C)	55	02/03 -	3503	
SOLENZA (B41_)	1.9 D (B41E, B41F, B41G)	46	02/03 -	3431	
SOLENZA (B41_)	1.9 D (B41E, B41F, B41G)	46	02/03 -	3503	
DAEWOO					
ARANOS	1.5	66	01/95 – 11/97	3470	
ARANOS	1.5	66	01/95 – 11/97	3505	
ARANOS	1.5	66	01/95 – 11/97	3615	
ARANOS	1.8	70	01/95 – 11/97	3470	
ARANOS	1.8	70	01/95 – 11/97	3505	
ARANOS	1.8	70	01/95 – 11/97	3615	
ARANOS	1.8 (Y18L)	70	01/95 – 11/97	3510	
ARANOS	2.0	77	01/95 – 11/97	3470	
ARANOS	2.0	77	01/95 – 11/97	3505	
ARANOS	2.0	77	01/95 – 11/97	3615	
CIELO	1.5	55	04/95 – 07/97	3470	
CIELO	1.5	55	04/95 – 07/97	3505	
CIELO	1.5	55	04/95 – 07/97	3615	
CIELO	1.5	66	06/94 – 07/98	3470	
CIELO	1.5	66	06/94 – 07/98	3505	
CIELO	1.5	66	06/94 – 07/98	3615	
CIELO	1.5 (V15L)	66	06/94 – 07/98	3510	
CIELO	1.5 (Y15L)	55	04/95 – 07/97	3510	
ESPERO (KLEJ)	1.5 16V	65	10/93 – 09/94	3470	
ESPERO (KLEJ)	1.5 16V	65	10/93 – 09/94	3505	
ESPERO (KLEJ)	1.5 16V	65	10/93 – 09/94	3615	
ESPERO (KLEJ)	1.5 16V	66	02/95 – 06/99	3470	
ESPERO (KLEJ)	1.5 16V	66	02/95 – 06/99	3505	
ESPERO (KLEJ)	1.5 16V	66	02/95 – 06/99	3615	
ESPERO (KLEJ)	1.5 16V	66	02/95 – 06/99	3687	
ESPERO (KLEJ)	1.8	66	02/95 – 09/99	3470	
ESPERO (KLEJ)	1.8	66	02/95 – 09/99	3505	
ESPERO (KLEJ)	1.8	66	02/95 – 09/99	3615	
ESPERO (KLEJ)	1.8	66	02/95 – 09/99	3687	
ESPERO (KLEJ)	1.8	70	02/95 – 06/99	3470	
ESPERO (KLEJ)	1.8	70	02/95 – 06/99	3505	
ESPERO (KLEJ)	1.8	70	02/95 – 06/99	3615	
ESPERO (KLEJ)	1.8	70	02/95 – 06/99	3687	
ESPERO (KLEJ)	2.0	74	10/91 – 09/93	3470	

MAKE & MODEL		KW	YEAR		
DAEWOO					
ESPERO (KLEJ)	2.0	74	10/91 – 09/93	3505	
ESPERO (KLEJ)	2.0	74	10/91 – 09/93	3615	
ESPERO (KLEJ)	2.0	77	02/95 – 06/99	3470	
ESPERO (KLEJ)	2.0	77	02/95 – 06/99	3505	
ESPERO (KLEJ)	2.0	77	02/95 – 06/99	3615	
ESPERO (KLEJ)	2.0	77	02/95 – 06/99	3687	
ESPERO (KLEJ)	2.0	81	10/93 – 09/94	3470	
ESPERO (KLEJ)	2.0	81	10/93 – 09/94	3505	
ESPERO (KLEJ)	2.0	81	10/93 – 09/94	3615	
ESPERO (KLEJ)	1.5 i	55	10/91 -	3510	
EVANDA (KLAL)	2.0	96	08/02 -	3687	
GENTRA Saloon	1.5	79	06/13 -	3687	
KALOS (KLAS)	1.2	53	04/03 -	3951	
KALOS (KLAS)	1.4	61	09/02 -	3951	
KALOS (KLAS)	1.4 16V	69	04/03 -	3951	
KALOS (KLAS)	1.5	62	11/02 – 12/04	3951	
KALOS Saloon (KLAS)	1.4	61	11/02 – 12/04	3951	
KALOS Saloon (KLAS)	1.4	69	05/03 – 12/04	3951	
KALOS Saloon (KLAS)	1.5	62	11/02 – 12/04	3951	
LACETTI Hatchback (KLAN)	1.4	70	02/04 -	3687	3894
LACETTI Hatchback (KLAN)	1.6	80	02/04 -	3687	3894
LACETTI Hatchback (KLAN)	1.8	90	02/04 -	3687	3894
LACETTI Saloon	1.6	78	06/99 – 07/03	3687	3894
LACETTI Saloon (J200)	1.8 CDX	90	08/03 – 12/04	3687	3894
LACETTI Saloon (J200)	1.8 CDX (J200)	67	08/03 – 12/04	3687	3894
Lacetti II Sedan (J200) 44409 CDX	F18D2	67	08/2003 - 12/2004	3687/1	
Lacetti III Hatchback (KLAN) 44287	F14D3	69	06/2002 - 12/2004	3687/1	
Lacetti III Hatchback (KLAN) 44287	F14D3	70	02/2004 -	3687/1	
Lacetti III Hatchback (KLAN) 44348	F16D3	80	02/2004 -	3687/1	
Lacetti III Hatchback (KLAN) 44409	T18SED	90	02/2004 -	3687/1	
LANOS (KLAT)	1.3	55	05/97 -	3623	3744
LANOS (KLAT)	1.5	63	05/97 -	3623	3744
LANOS (KLAT)	1.5	73	10/97 – 06/99	3623	3744
LANOS (KLAT)	1.6 16V	78	05/97 -	3470	
LANOS (KLAT)	1.6 16V	78	05/97 -	3505	
LANOS (KLAT)	1.6 16V	78	05/97 -	3615	
LANOS (KLAT)	1.6 16V	78	05/97 -	3687	
Lanos (KLAT) / Sens 44348 16V	L44(98CUL4)	78	05/1997 -	3687/1	
LANOS / SENS (KLAT)	1.5		05/97 -	3510	
LANOS Saloon (KLAT)	1.3	55	05/97 -	3623	3744
LANOS Saloon (KLAT)	1.5	63	05/97 -	3623	3744
LANOS Saloon (KLAT)	1.5	73	10/97 – 06/99	3623	3744
LANOS Saloon (KLAT)	1.6 16V	78	02/97 -	3470	
LANOS Saloon (KLAT)	1.6 16V	78	02/97 -	3505	
LANOS Saloon (KLAT)	1.6 16V	78	02/97 -	3615	
LANOS Saloon (KLAT)	1.6 16V	78	02/97 -	3687	
Lanos Sedan (KLAT) / Sens 44348 16V	L44(98CUL4)	78	02/1997 -	3687/1	
LEGANZA (KLAV)	2.0	85	06/97 – 12/02	3687	
LEGANZA (KLAV)	2.0 16V	93	07/00 – 04/04	3687	
LEGANZA (KLAV)	2.0 16V	98	06/97 – 12/02	3687	
LEGANZA (KLAV)	2.2 16V	100	04/99 – 12/02	3687	
Leganza (KLAV) / Kondor 2.0	T20SED	133	01/2001 - 12/2002	3687/1	
Leganza (KLAV) / Kondor 2.0 16V	T20SED	93	07/2000 - 04/2004	3687/1	
Leganza (KLAV) / Kondor 2.0 16V	X 20 SED (06.97-.)	98	06/1997 - 12/2002	3687/1	
Leganza (KLAV) / Kondor 44229 16V	T22SED	100	04/1999 - 12/2002	3687/1	
LUBLIN II Box	2.4 D (3302)	52	04/97 -	3539	
LUBLIN II Box	2.4 D (3302)	52	04/97 -	3546	
LUBLIN II Box	2.4 TD (3304)	66	04/97 -	3539	
LUBLIN II Box	2.4 TD (3304)	66	04/97 -	3546	
LUBLIN II Platform/Chassis	2.4 D (3352)	52	04/97 -	3539	
LUBLIN II Platform/Chassis	2.4 D (3352)	52	04/97 -	3546	
LUBLIN II Platform/Chassis	2.4 TD (3354)	66	04/97 -	3539	
LUBLIN II Platform/Chassis	2.4 TD (3354)	66	04/97 -	3546	
MATIZ (KLYA)	0.8	38	09/98 -		3744
MATIZ (KLYA)	1.0	47	01/03 -		3744
NEXIA (KLETN)	1.5	44	08/96 – 08/97	3623	
NEXIA (KLETN)	1.5	52	02/95 – 08/97	3623	
NEXIA (KLETN)	1.5	55	02/95 – 08/97	3623	
NEXIA (KLETN)	1.5 16V	66	02/95 – 08/97	3470	
NEXIA (KLETN)	1.5 16V	66	02/95 – 08/97	3505	
NEXIA (KLETN)	1.5 16V	66	02/95 – 08/97	3615	
NEXIA / CIELO (KLETN)	1.5 (G15MF)	55	02/95 – 08/97	3510	
NEXIA / CIELO (KLETN)	1.5 16V (A15MF)	66	02/95 – 08/97	3510	
NEXIA Saloon (KLETN)	1.5	44	08/96 – 08/97	3623	
NEXIA Saloon (KLETN)	1.5	52	02/95 – 08/97	3623	
NEXIA Saloon (KLETN)	1.5	55	02/95 – 08/97	3623	

MAKE & MODEL   		KW	YEAR		
DAEWOO					
NEXIA Saloon (KLETN)	1.5 16V	66	02/95 – 08/97	3470	
NEXIA Saloon (KLETN)	1.5 16V	66	02/95 – 08/97	3505	
NEXIA Saloon (KLETN)	1.5 16V	66	02/95 – 08/97	3615	
NUBIRA (KLAJ)	1.6	76	08/02 – 07/03	3687	3894
NUBIRA (KLAJ)	1.6 16V	78	05/97 -	3687	3894
NUBIRA (KLAJ)	2.0 16V	98	05/97 -	3687	3894
NUBIRA (KLAJ)	2.0 CDX	93	08/02 – 07/03	3687	3894
NUBIRA Saloon (KLAJ)	1.4	69	10/03 – 12/04	3687	3894
NUBIRA Saloon (KLAJ)	1.5 SE	81	06/99 – 07/03	3687	3894
NUBIRA Saloon (KLAJ)	1.6	80	07/03 -	3687	3894
NUBIRA Saloon (KLAJ)	1.6 16V	66	06/97 -	3687	3894
NUBIRA Saloon (KLAJ)	1.6 16V	76	07/00 -	3687	3894
NUBIRA Saloon (KLAN)	1.6 16V	76	12/00 -	3687	3894
NUBIRA Saloon (KLAN)	1.6 16V	78	05/97 -	3687	3894
NUBIRA Wagon (KLAJ)	1.8	70	06/04 -	3687	3894
NUBIRA Wagon (KLAJ)	1.8	90	07/03 -	3687	3894
NUBIRA Wagon (KLAJ)	2.0	81	06/99 – 07/03	3687	3894
NUBIRA Wagon (KLAJ)	2.0 16V	93	12/00 -	3687	3894
NUBIRA Wagon (KLAN)	2.0 16V	93	12/00 -	3687	3894
NUBIRA Wagon (KLAN)	2.0 16V	98	05/97 -	3687	3894
Nubira I (J100) / Orion 2.0 16V	Z20L	98	05/1997 -	3687/1	
Nubira I (J100) / Orion 2.0 CDX	T20SED	93	08/2002 - 07/2003	3687/1	
Nubira I (J100) / Orion 44348 16V	A16DMS	78	05/1997 - 07/2002	3687/1	
Nubira I Sedan (J100) 2.0	C20SED	81	06/1999 - 07/2003	3687/1	
Nubira I Sedan (J100) 2.0 16V	T20SED	93	12/2000 -	3687/1	
Nubira I Sedan (J100) 2.0 16V	X 20 SED (05.97-.)	98	05/1997 -	3687/1	
Nubira I Sedan (J100) 44348 16V	A16DMS (05.97-.)	78	05/1997 -	3687/1	
Nubira I Wagon (J100) / Orion 2.0 16V	T20SED	93	12/2000 -	3687/1	
Nubira I Wagon (J100) / Orion 2.0 16V	X 20 SED (05.97-.)	98	05/1997 -	3687/1	
Nubira I Wagon (J100) / Orion 44348 16V	A16DMS	66	06/1997 -	3687/1	
Nubira I Wagon (J100) / Orion 44348 16V	A16DMS (05.97-.)	78	05/1997 -	3687/1	
Nubira II (J150) / Orion 2.0 16V	X 20 SED	98	06/1999 - 07/2002	3687/1	
Nubira II (J150) / Orion 44348 16V	A16DMS	78	06/1999 - 07/2002	3687/1	
Nubira II Sedan (J150) 2.0 16V	X 20 SED	98	06/1999 - 07/2002	3687/1	
Nubira II Sedan (J150) 44348 16V	A16DMS	78	06/1999 - 07/2002	3687/1	
Nubira II SW (J150) 2.0 16V	X 20 SED	98	06/1999 - 07/2002	3687/1	
Nubira II SW (J150) 44348 16V	A16DMS	78	06/1999 - 12/2002	3687/1	
Nubira III Sedan (J200) 44348	F16D3	80	07/2003 -	3687/1	
Nubira III Sedan (J200) 44409	T18SED	90	07/2003 -	3687/1	
Nubira III Wagon (J200) 44348	F16D3	80	07/2003 -	3687/1	
Nubira III Wagon (J200) 44409	T18SED	90	07/2003 -	3687/1	
RACER	1.5 (G15MF)	52	03/95 – 12/97	3510	
REXTON (GAB_)	2.3 RX230 4x4	110	05/02 -	3843	3895
REXTON (GAB_)	2.7 D All-wheel Drive	137	05/06 -	3843	3895
REXTON (GAB_)	2.8 RX280 4x4	142	03/03 -	3843	3895
REXTON (GAB_)	2.9 TD	88	04/02 -	3843	3895
REXTON (GAB_)	3.2 V6	162	04/02 -	3843	3895
REZZO (KLAU)	1.6	77	09/00 -	3687	
REZZO (KLAU)	1.6 SX	66	08/01 – 12/04	3687	
REZZO (KLAU)	1.8	67	09/00 -	3687	
REZZO (KLAU)	1.8	72	09/00 -	3687	
REZZO (KLAU)	1.8	74	09/00 -	3687	
REZZO (KLAU)	2.0	89	09/01 -	3687	
REZZO (KLAU)	2.0	94	09/00 -	3687	
TICO (KLY3)	0.8	35	02/95 – 12/00	3511	
TICO (KLY3)	0.8	38	01/96 – 12/00	3511	
WINSTORM	2.4	104	12/06 -	3976	
WINSTORM	2.4 4x4	104	12/06 -	3976	
WINSTORM	2.4 LS	103	12/06 -	3976	
WINSTORM	2.4 LT 4x4	103	12/06 -	3976	
WINSTORM	3.2 Executive 4x4	167	12/06 -	3976	
DAF					
45	FA 45.120-035 (CD 85)	85	05/91 – 12/00	3433	
45	FA 45.120-06 (CD 85)	85	05/91 – 12/00	3433	
45	FA 45.130 B06,FA 45.130 C06 (CS 97 M)	97	05/91 – 12/00	3433	
45	FA 45.130 B06,FA 45.130 C06 (CT 97)	97	05/91 – 12/00	3433	
45	FA 45.130 B08,FA 45.130 C08 (CN 96)	96	05/91 – 12/00	3433	
45	FA 45.130 B08,FA 45.130 C08 (CS 97 M)	96	05/91 – 12/00	3433	
45	FA 45.130 B08,FA 45.130 C08 (CT 97)	96	05/91 – 12/00	3433	
45	FA 45.150 B08,FA 45.150 C08 (CB 108)	107	05/91 – 12/00	3433	
45	FA 45.150 B08,FA 45.150 C08 (CS 107 M)	107	05/91 – 12/00	3433	
45	FA 45.150 B08,FA 45.150 C08 (CT 108)	107	05/91 – 12/00	3433	
45	FA 45.150 B11,FA 45.150 C11 (CB 108)	107	05/91 – 12/00	3433	
45	FA 45.150 B11,FA 45.150 C11 (CS 107 M)	107	05/91 – 12/00	3433	
45	FA 45.150 B11,FA 45.150 C11 (CT 108)	107	05/91 – 12/00	3433	

MAKE & MODEL		KW	YEAR		
DAF					
45	FA 45.150 C09 (CT 108)	108	05/91 – 12/00	3433	
45	FA 45.150-10,FA 45.150 B10 (CB 108)	107	05/91 – 12/00	3433	
45	FA 45.150-10,FA 45.150 B10 (CS 107 M)	107	05/91 – 12/00	3433	
45	FA 45.160 -10 (CT 119)	119	05/91 – 12/00	3433	
45	FA 45.160 C08 (CS 119)	119	05/91 – 12/00	3433	
45	FA 45.160 C08 (CT 119)	119	05/91 – 12/00	3433	
45	FA 45.160 C09 (CS 119)	119	05/91 – 12/00	3433	
45	FA 45.160 C11 (CS 119)	119	05/91 – 12/00	3433	
45	FA 45.160 C11 (CT 119)	119	05/91 – 12/00	3433	
45	FA 45.180 B08 (CS 133 M)	133	05/95 – 12/00	3433	
45	FA 45.180 B10 (CS 133 M)	133	05/95 – 12/00	3433	
45	FA 45.180 B11 (CS 133 M)	133	05/95 – 12/00	3433	
45	FA 45.210 B11 (CS 158 M)	158	05/95 – 12/00	3433	
55	1.1	33	10/67 – 09/72		3326
55	1.1 MARATHON	40	12/71 – 09/72		3326
66	1.1	35	10/72 – 08/75		3326
66	1.1 SL	40	10/72 – 08/75		3326
66	1300 MARATHON	42	09/73 – 08/75		3326
45 FA 45.120	35	85	05.1991 - 12.2000	3433/1	
45 FA 45.120	6	85	05.1991 - 12.2000	3433/1	
45 FA 45.130 B06,FA 45.130	C06	97	05.1991 - 12.2000	3433/1	
45 FA 45.130 B08,FA 45.130	C08	96	05.1991 - 12.2000	3433/1	
45 FA 45.150	C09	108	05.1991 - 12.2000	3433/1	
45 FA 45.150 ,FA 45.150	10 - B10	107	05.1991 - 12.2000	3433/1	
45 FA 45.150 B08,FA 45.150	C08	107	05.1991 - 12.2000	3433/1	
45 FA 45.150 B11,FA 45.150	C11	107	05.1991 - 12.2000	3433/1	
45 FA 45.160	10	119	05.1991 - 12.2000	3433/1	
45 FA 45.160	C08	119	05.1991 - 12.2000	3433/1	
45 FA 45.160	C09	119	05.1991 - 12.2000	3433/1	
45 FA 45.160	C11	119	05.1991 - 12.2000	3433/1	
45 FA 45.180	B08	133	05.1995 - 12.2000	3433/1	
45 FA 45.180	B10	133	05.1995 - 12.2000	3433/1	
45 FA 45.180	B11	133	05.1995 - 12.2000	3433/1	
45 FA 45.210	B11	158	05.1995 - 12.2000	3433/1	
55 Coupe	1.1	33	05/68 – 09/72		3326
55 Coupe	1.1 MARATHON	40	12/71 – 09/72		3326
55 Estate	1.1	33	10/68 – 09/72		3326
66 Coupe	1.1	35	10/72 – 08/75		3326
66 Estate	1.1 MARATHON	40	10/72 – 08/75		3326
66 Estate	1300 MARATHON	42	09/73 – 08/75		3326
66 Estate	1300 MARATHON	42	09/73 – 08/75		3326
DAIHATSU					
55 WIDE Box	0.5 (S60)	20	09/77 – 04/83	3746	
55 WIDE Pickup	0.5 (S60)	20	04/80 – 04/83	3746	
55 WIDE Platform/Chassis	0.5 (S60)	20	04/80 – 04/83	3746	
APPLAUSE I (A101, A111)	1.6 16V (A101)	66	06/89 – 07/97	3600	
APPLAUSE I (A101, A111)	1.6 16V (A101)	77	06/89 – 07/97	3600	
APPLAUSE I (A101, A111)	1.6 16V 4WD (A111)	77	06/89 – 07/97	3600	
BEGO	1.3 DVVT 4x4	63	11/05 -	3604	
CHARADE	1.33 16V	73	05/11 -	3958	
CHARADE (L2_)	1.0 (L251S)	43	03/03 -	3928	
CHARADE II (G11, G30)	1.0 (G11)	38	10/83 – 03/87	3620	
CHARADE II (G11, G30)	1.0 D (G30)	27	10/83 – 03/87	3620	
CHARADE II (G11, G30)	1.0 TD (G30)	34	02/85 – 03/87	3620	
CHARADE II (G11, G30)	1.0 Turbo (G11)	50	10/83 – 03/87	3620	
CHARADE III (G100, G101, G102)	1.0 (G100)	38	03/87 – 12/92	3600	
CHARADE III (G100, G101, G102)	1.0 (G100)	40	11/90 – 12/92	3600	
CHARADE III (G100, G101, G102)	1.0 (G100)	41	04/89 – 12/92	3600	
CHARADE III (G100, G101, G102)	1.0 D (G101)	27	03/87 – 12/92	3600	
CHARADE III (G100, G101, G102)	1.0 GTi (G100)	74	03/87 – 12/92	3600	
CHARADE III (G100, G101, G102)	1.0 TD (G101)	35	03/87 – 12/92	3600	
CHARADE III (G100, G101, G102)	1.0 Turbo (G100)	50	03/87 – 10/90	3600	
CHARADE III (G100, G101, G102)	1.3 i (G102)	66	06/88 – 12/92	3600	
CHARADE III (G100, G101, G102)	1.3 i 4WD (G102)	66	06/88 – 01/93	3600	
CHARADE III Saloon (G102)	1.3	66	11/90 – 02/93	3600	
CHARADE IV (G200, G202)	1.0	38	09/94 – 03/96	3898	
CHARADE IV (G200, G202)	1.0 i	42	03/93 – 03/96	3898	
CHARADE IV (G200, G202)	1.3	44	09/96 – 11/99	3898	
CHARADE IV (G200, G202)	1.3 16V	55	05/96 – 11/99	3898	
CHARADE IV (G200, G202)	1.3 i 16V	62	01/93 – 09/00	3898	
CHARADE IV (G200, G202)	1.5 HG	55	06/94 – 03/96	3898	
CHARADE IV (G200, G202)	1.5 i 16V	66	01/97 – 11/99	3898	
CHARADE IV (G200, G202)	1.6 GTi	77	03/93 – 11/99	3898	
CHARADE IV Saloon (G203)	1.5 16V	55	10/94 – 01/01	3898	
CHARADE IV Saloon (G203)	1.5 i 16V	66	06/94 – 11/99	3898	

MAKE & MODEL   		KW	YEAR		
DAIHATSU					
CHARADE IV Saloon (G203)	1.6 GS	77	03/93 – 03/96	3898	
CHARMANT	1.2	40	01/74 -	3601	
CHARMANT	1.4	61	01/74 -	3314	
CHARMANT	1.4	61	01/74 -	3336	
CHARMANT II (A)	1.3 (4K)	48	11/81 – 07/87	3709	
CHARMANT II (A)	1.6 Altair	61	10/81 -	3709	
CHARMANT II (A)	1.6 LE, LC, LD, LX	27	10/81 -	3314	
CHARMANT II (A)	1.6 LE, LC, LD, LX	57	10/81 -	3336	
CHARMANT II (A)	1.6 (2T)	55	12/81 – 09/84	3709	
COO	15	76	10/06 -	3928	
COO	1.0	40	10/06 -	3928	
COO	1.0	43	10/06 -	3928	
COO	1.3	67	10/06 -	3928	
COO	1.3 Turbo	95	10/06 -	3928	
COO	1.5 4x4	76	10/06 -	3928	
COPEN (L880_, L881_)	13	64	03/06 – 09/12	3928	
COPEN (L880_, L881_)	0.7	47	09/03 – 09/12	3928	
COPEN (L880_, L881_)	0.7 (L880)	50	09/03 – 12/07	3928	
CUORE II (L80, L81)	0.7	30	10/87 – 08/90	3746	
CUORE II (L80, L81)	0.8 (L80)	29	11/89 – 12/90	3746	
CUORE II (L80, L81)	0.8 (L80)	32	09/85 – 06/90	3746	
CUORE II (L80, L81)	0.8 4WD (L81)	32	09/86 – 10/88	3746	
CUORE IV (L501)	0.7	32	12/94 – 10/98	3746	
CUORE VI (L251, L250_, L260_)	0.7	35	03/03 -	3928	
CUORE VI (L251, L250_, L260_)	0.7	43	03/03 -	3928	
CUORE VI (L251, L250_, L260_)	0.7	47	03/03 -	3928	
CUORE VI (L251, L250_, L260_)	0.7 All-wheel Drive	43	03/03 -	3928	
CUORE VI (L251, L250_, L260_)	0.7 Turbo Avy All-wheel Drive	47	03/03 -	3928	
CUORE VI (L251, L250_, L260_)	1.0	43	05/03 -	3928	
CUORE VII (L275_, L285_, L276_)	1.0	51	04/07 -	3928	
EXTOL Bus (S22_, S23_)	1.3	63	07/00 – 11/11	3604	
FEROZA Hard Top / SPORTRAK (F300)	0.7 DX	47	09/96 – 12/97	3436	
FEROZA Hard Top / SPORTRAK (F300)	1.6 16V (HDC)	63	10/88 – 12/99	3436	
FEROZA Hard Top / SPORTRAK (F300)	1.6 i 16V (HD-E)	70	10/88 – 12/99	3436	
FEROZA Soft Top / SPORTRAK (F300)	1.6 16V (HDC)	63	10/88 – 12/99	3436	
FEROZA Soft Top / SPORTRAK (F300)	1.6 i 16V (HD-E)	70	10/88 – 12/99	3436	
GRAN MOVE (G3)	1.5 16V (G303)	66	10/96 – 07/98	3898	
GRAN MOVE (G3)	1.5 GLX	71	10/96 – 08/98	3898	
GRAN MOVE (G3)	1.5 GX	55	10/96 – 08/98	3898	
GRAN MOVE (G3)	1.6 16V (G301)	67	05/98 -	3898	
GRAN MOVE (G3)	1.6 GLX	77	06/98 – 07/02	3898	
GRAN MOVE (G3)	1.6 GX	67	06/98 – 07/02	3898	
HIJET Box	0.8	29	06/86 – 12/89	3746	
HIJET Box	1.0	33	06/86 – 12/89	3746	
HIJET Box (S85)	1.0	33	12/92 – 05/98	3746	
HIJET Box (S85)	1.0 i	35	07/94 – 05/98	3746	
HIJET Box (S85)	1.2 D	26	05/95 – 03/98	3746	
HIJET Box (S85)	1.3 i 16V	48	05/98 -	3746	
HIJET Box (S85)	1.4 D	28	03/98 -	3746	
HIJET Bus	0.8	29	06/86 – 12/89	3746	
HIJET Bus	1.0	33	06/86 – 12/89	3746	
HIJET Bus (S85)	1.0 i	35	07/94 – 05/98	3746	
HIJET Pickup	1.3	48	06/98 -	3746	
HIJET Pickup	1.4 D	28	04/98 – 12/99	3746	
HIJET Pickup (_U60)	1.0	35	10/94 – 05/98	3746	
HIJET Pickup (_U60)	1.2 D	27	01/96 – 03/98	3746	
MATERIA (M4_)	1.0	40	10/06 -	4122	
MATERIA (M4_)	1.0 DVVT	43	10/06 -	4122	
MATERIA (M4_)	1.3	67	10/06 -	4122	
MATERIA (M4_)	1.3 DVVT Turbo	95	10/06 -	4122	
MATERIA (M4_)	1.5	76	10/06 -	4122	
MATERIA (M4_)	1.5 ECO 4WD	76	10/06 -	4122	
MOVE (L6_, L9_)	1.0 i	41	10/98 – 09/02	3746	
ROCKY Hard Top / FOURTRAK (F7, F8)	2.0 (3Y)	65	02/85 – 04/93	3436	
ROCKY Hard Top / FOURTRAK (F7, F8)	2.8 D (DL)	54	02/85 – 12/98	3436	
ROCKY Hard Top / FOURTRAK (F7, F8)	2.8 TD (DL 51)	67	12/87 – 04/93	3436	
ROCKY Soft Top / FOURTRAK (F7, F8)	2.0 (3Y)	65	02/85 – 04/93	3436	
ROCKY Soft Top / FOURTRAK (F7, F8)	2.8 D (DL)	54	02/85 – 12/98	3436	
RUGGER / FOURTRAK	2.0	67	10/87 – 12/89	3436	
RUGGER / FOURTRAK	2.0 (3Y)	65	04/84 – 10/88	3436	
RUGGER / FOURTRAK	2.8 D (DL)	54	04/84 – 04/93	3436	
RUGGER / FOURTRAK	2.8 TDiC (DLT)	67	04/84 – 04/93	3436	
RUSH	1.3	63	11/05 -	3604	
RUSH	1.5	77	11/05 -	3604	
RUSH	1.5 4x4	77	11/05 -	3604	
SIRION (M1)	0.7 Turbo 4WD	88	09/98 – 01/05	3901	

MAKE & MODEL		KW	YEAR		
DAIHATSU					
SIRION (M1)	1.0	40	04/98 – 10/00	3901	
SIRION (M1)	1.0 i	43	09/00 – 01/05	3901	
SIRION (M1)	1.0 i (M100)	41	04/98 – 09/00	3901	
SIRION (M1)	1.0 i 4WD	41	04/99 – 09/00	3901	
SIRION (M1)	1.0 i 4WD	43	09/00 – 01/05	3901	
SIRION (M1)	1.3 Rally	81	06/02 – 03/05	3901	
SIRION (M1)	1.3 Rally 4WD	81	06/02 – 03/05	3901	
SIRION (M1)	1.3 Sport	75	08/00 – 01/05	3901	
SIRION (M1)	1.3 Sport 4WD	75	08/00 – 03/05	3901	
SIRION (M3_)	1.0	51	01/05 -	3928	
SIRION (M3_)	1.0	51	01/05 -	4122	
SIRION (M3_)	1.0 DVVT 4WD	51	04/05 -	3928	
SIRION (M3_)	1.0 DVVT 4WD	51	04/05 -	4122	
SIRION (M3_)	1.3	64	01/05 -	3928	
SIRION (M3_)	1.3	64	01/05 -	4122	
SIRION (M3_)	1.3	67	03/08 -	3928	
SIRION (M3_)	1.3 4WD	64	04/05 -	3928	
SIRION (M3_)	1.3 4WD	67	03/08 -	3928	
SIRION (M3_)	1.5	76	03/08 -	3928	
SIRION (M3_)	1.5	76	03/08 -	4122	
SIRION (M3_)	1.5 4WD	76	05/06 – 10/08	3928	
SPARCAR Box (S7_)	0.8	29	09/83 – 05/86	3746	
SPARCAR Bus (S7_)	1.0	33	09/83 – 05/86	3746	
TERIOS (J1_)	1.3	63	09/01 – 10/05	3604	
TERIOS (J1_)	1.3 4WD	61	10/97 – 10/00	3604	
TERIOS (J1_)	1.3 4WD	63	10/00 – 10/05	3604	
TERIOS (J1_)	1.3 VVT-i FWD	63	10/02 – 10/05	3604	
TERIOS (J1_)	1.3 VVT-i Turbo 4WD	103	10/02 – 10/05	3604	
TERIOS (J1_)	1.5	63	05/99 – 10/05	3604	
TERIOS (J1_)	1.6	66	05/99 – 10/05	3604	
TERIOS (J2_)	1.3 VVT-i	63	11/05 -	3604	
TERIOS (J2_)	1.3 VVT-i 4x4	63	11/05 -	3604	
TERIOS (J2_)	1.5 4x4	77	05/06 -	3604	
TERIOS (J2_)	1.5 VVT-i	75	09/10 -	3604	
TERIOS (J2_)	1.5 VVT-i	77	11/05 -	3604	
TERIOS (J2_)	1.5 VVT-i [RWD]	75	09/10 -	3604	
TERIOS (J2_)	1.5 VVT-i [RWD]	77	11/05 -	3604	
TERIOS (J2_)	1.5 VVT-i 4x4	75	09/10 -	3604	
TERIOS KID (J11_, J13_)	0.7	44	09/00 – 10/05	3604	
TERIOS KID (J11_, J13_)	0.7	47	09/00 – 05/12	3604	
TERIOS KID (J11_, J13_)	0.7 4WD	44	10/98 – 10/05	3604	
TERIOS KID (J11_, J13_)	0.7 4WD	47	05/97 – 08/00	3604	
TREVIS	1.0	43	06/06 -	3928	
Xenia 1.0	EJDE	46	06/2007 -	3927	
Xenia 44256	K3VE	68	06/2007 -	3927	
Xenia 44317	3SZVE	80	06/2007 -	3927	
YRV (M2)	1.0	43	02/01 -	3901	
YRV (M2)	1.3	64	02/01 -	3901	
YRV (M2)	1.3 4WD	64	02/01 -	3901	
YRV (M2)	1.3 GTti	95	07/02 -	3901	
DAIMLER					
2.8 - 5.3	3.6	156	10/86 – 09/89	3526	
2.8 - 5.3	Double Six / Vanden 5.3	186	09/73 – 05/75	3526	
2.8 - 5.3	Double Six / Vanden 5.3	198	07/72 – 09/73	3526	
2.8 - 5.3	Double Six 5.3	194	10/86 – 02/93	3526	
2.8 - 5.3	Double Six 5.3	197	07/81 – 02/93	3526	
2.8 - 5.3	Double Six 5.3	211	05/75 – 07/81	3526	
2.8 - 5.3	Double Six H.E. 5.3	217	07/81 – 10/86	3526	
2.8 - 5.3	Sovereign 2.8	110	10/69 – 05/75	3526	
2.8 - 5.3	Sovereign 3.4	120	05/75 – 12/78	3526	
2.8 - 5.3	Sovereign 4.2	124	06/76 – 03/79	3526	
2.8 - 5.3	Sovereign 4.2	127	09/73 – 03/79	3526	
2.8 - 5.3	Sovereign 4.2	137	10/69 – 09/73	3526	
2.8 - 5.3	Sovereign 4.2	151	03/79 – 10/86	3526	
COUPE	Double Six 5.3	213	05/75 – 12/77	3526	
COUPE	Sovereign 4.2	127	09/73 – 12/77	3526	
DAIMLER (XJ4_)	4.0	163	10/89 – 09/94	3584	
DAIMLER (XJ4_)	4.0 Super	183	09/92 – 09/94	3584	
DAIMLER XJ (X30_)	4.0 Long	216	10/97 – 06/03	3584	
DAIMLER XJ (X30_)	Double Six 6.0	229	10/94 – 06/03	3584	
DAIMLER XJ (X30_)	Six 4.0	177	10/94 – 06/03	3584	
DAIMLER XJ (X30_)	Six 4.0	209	07/97 – 12/02	3584	
LANDAULETTE	4.2	123	03/74 – 12/91	3526	
LANDAULETTE	4.2	131	01/88 – 12/91	3526	
LIMOUSINE	4.2	123	06/68 – 12/91	3526	

MAKE & MODEL		KW	YEAR		
DAIMLER					
LIMOUSINE	4.2	131	01/88 – 12/91	3526	
XJ 40, 81	Sovereign 3.6	136	10/86 – 09/89	3526	
XJ 40, 81	Sovereign 3.6	145	10/86 – 07/89	3526	
XJ 40, 81	Sovereign 4.0	163	09/89 – 09/94	3584	
DALLAS					
FUN	1.4 i	55	01/94 -	3474	
FUN	1.4 i	55	01/94 -	3580	
FUN	1.8 D	43	01/94 -	3474	
FUN	1.8 D	43	01/94 -	3580	
DEFENDER					
Cabrio (L316)	2.2 Td4 4x4 (L317)	122	13972	3453/1	
Cabrio (L316)	2.4 Td4 4x4 (L317)	122	29982	3453/1	
Cabrio (L316)	2.5 D 4x4 (L316)	69	32081	3453/1	
Cabrio (L316)	2.5 Td5 4x4 (L316)	122	17474	3453/1	
Cabrio (L316)	2.5 TDI 4x4 (L316)	113	5338	3453/1	
Pick Up (L316)	2.2 Td4 4x4 (L317)	122	13973	3453/1	
Pick Up (L316)	2.4 Td4 4x4 (L317)	122	29984	3453/1	
Pick Up (L316)	2.5 Td5 4x4 (L316)	122	17473	3453/1	
Station Wagon (L316)	2.2 Td4 4x4 (L317)	122	13971	3453/1	
Station Wagon (L316)	2.2 Td4 4x4 (L317)	150	112181	3453/1	
Station Wagon (L316)	2.4 Td4 4x4 (L316)	122	29983	3453/1	
Station Wagon (L316)	2.5 4x4	83	20797	3453/1	
Station Wagon (L316)	2.5 D 4x4 (L316)	69	32080	3453/1	
Station Wagon (L316)	2.5 Td5 4x4 (L316)	122	11626	3453/1	
Station Wagon (L316)	2.5 TDI 4x4 (L316)	113	5337	3453/1	
Station Wagon (L316)	3.5 4x4	117	20798	3453/1	
Station Wagon (L316)	3.9 V8 4x4 (L316)	185	11244	3453/1	
DODGE					
AVENGER	2.0	115	06/07 -	3955	3893
AVENGER	2.0	115	06/07 -		4106
AVENGER	2.0 CRD	103	06/07 -	3955	3893
AVENGER	2.0 CRD	103	06/07 -		4106
AVENGER	2.4	125	06/07 -	3955	3893
AVENGER	2.4	125	06/07 -		4106
AVENGER	2.4	129	06/07 -	3955	3893
AVENGER	2.4	129	06/07 -		4106
AVENGER	2.7	137	06/07 -	3955	3893
AVENGER	2.7	137	06/07 -		4106
AVENGER	2.7 Flex-Fuel	139	06/07 -	3955	3893
AVENGER	2.7 Flex-Fuel	139	06/07 -	3955	4106
CALIBER	1.8	110	06/06 -		4106
CALIBER	2.0	115	06/06 -	3955	3893
CALIBER	2.0	115	06/06 -		4106
CALIBER	2.0 CRD	103	06/06 -	3955	4106
CALIBER	2.2 CRD	120	07/10 -	3955	4106
CALIBER	2.4	125	10/06 -	3955	4106
CALIBER	2.4	126	10/06 -	3955	4106
CALIBER	2.4 AWD	125	10/06 -	3955	3893
CALIBER	2.4 AWD	125	10/06 -		4106
CALIBER	2.4 Turbo	217	12/07 -	3955	4106
CARAVAN	2.0 i	98	01/95 – 03/01	4197	
CARAVAN	2.4 i	111	01/95 – 03/01	4197	
CARAVAN	2.5 TD	85	01/95 – 03/01	4197	
CARAVAN	2.8 CRD	120	01/09 -	4005	
CARAVAN	3.0	112	01/95 – 03/01	4197	
CARAVAN	3.3	131	01/08 -	4005	
CARAVAN	3.3 i	116	01/95 – 03/01	4197	
CARAVAN	3.6	208	01/12 -	4005	
CARAVAN	3.8	142	01/08 -	4005	
CARAVAN	3.8 i	122	01/95 – 03/01	4197	
CARAVAN	3.8 i	131	01/95 – 03/01	4197	
CARAVAN	3.8 i AWD	122	01/95 – 03/01	4197	
CARAVAN	3.8 i AWD	131	01/95 – 03/01	4197	
CARAVAN	4.0	189	01/09 -	4005	
CARAVAN (RG_)	2.4	111	02/00 – 12/07	4012	
CARAVAN (RG_)	3.3	128	02/00 – 12/07	4012	
CARAVAN (RG_)	3.3	132	04/01 – 05/07	4012	
CARAVAN (RG_)	3.3 AWD	128	02/00 – 12/07	4012	
CARAVAN (RG_)	3.8	154	04/01 – 05/07	4012	
CARAVAN (RG_)	3.8	160	02/00 – 12/07	4012	
CARAVAN (RG_)	3.8 AWD	154	04/01 – 05/07	4012	
CARAVAN (RG_)	3.8 AWD	160	02/00 – 12/07	4012	
CARAVAN (RG_)	3.8 Turbo AWD	153	04/01 – 12/07	4012	
CHALLENGER II (U.S.A.)	1.6		09/77 -	3376	

MAKE & MODEL		KW	YEAR		
DODGE					
CHALLENGER Coupe	3.5	186	09/08 – 12/10	4006	4018
CHALLENGER Coupe	3.5	186	09/08 – 12/10	4198	
CHALLENGER Coupe	3.6	227	01/11 -	4006	4018
CHALLENGER Coupe	3.6	227	01/11 -	4198	
CHALLENGER Coupe	5.7	277	09/08 -	4006	4018
CHALLENGER Coupe	5.7	277	09/08 -	4198	
CHALLENGER Coupe	5.7	280	01/10 -	4006	4018
CHALLENGER Coupe	5.7	280	01/10 -	4198	
CHARGER	2.7	141	04/06 – 12/10	4006	4018
CHARGER	2.7	141	04/06 – 12/10	4198	
CHARGER	3.5	186	06/05 – 12/10	4006	4018
CHARGER	3.5	186	06/05 – 12/10	4198	
CHARGER	3.6	218	09/11 – 12/14		4018
CHARGER	5.7 Flexfuel AWD	276	11/11 -		4018
CHARGER	5.7 R/T	254	06/05 – 12/08	4006	4018
CHARGER	5.7 R/T	254	06/05 – 12/08	4198	
CHARGER	5.7 R/T	276	09/11 -		4018
CHARGER	5.7 R/T AWD	276	09/11 -		4018
GRAND CARAVAN	3.3	127	06/07 -	4005	
GRAND CARAVAN	3.3	131	06/07 – 12/08	4005	
GRAND CARAVAN	3.8	148	06/07 -	4005	
GRAND CARAVAN	4.0	173	06/07 -	4005	
INTREPID	2.7	149	10/97 – 09/04	4197	
INTREPID	3.2	168	04/98 – 09/04	4197	
INTREPID	3.3	110	10/92 – 12/94	4197	
INTREPID	3.3	120	01/95 – 12/98	4197	
INTREPID	3.5	160	10/92 – 12/98	4197	
INTREPID	3.5 ES	187	04/98 – 09/04	4197	
JOURNEY	2.0 CRD	103	06/08 -	4005	
JOURNEY	2.4	125	01/09 -	4005	
JOURNEY	2.4	129	09/08 -	4005	
JOURNEY	2.4 ECO+	125	03/09 -	4005	
JOURNEY	2.7	136	01/09 -	4005	
JOURNEY	2.7 FLEXFUEL	136	01/09 -	4005	
JOURNEY	3.5	173	06/08 -	4005	
JOURNEY	3.5 AWD	173	06/08 -	4005	
JOURNEY	3.6	211	01/12 -	4005	
NEON	2.0 16V	98	05/94 – 08/99	4197	
NEON	2.0 16V	107	06/94 – 08/99	4197	
NEON	2.0 16V	109	04/96 – 08/99	4197	
NEON	2.0 16V	112	04/96 – 08/99	4197	
NEON Coupe	2.0 Highline	98	01/94 – 09/99	4197	
NEON II	2.0 16V	98	08/99 -	4197	
NEON II	2.0 16V	112	08/99 -	4197	
NITRO	2.8 CRD	130	06/07 – 12/12		4004
NITRO	2.8 CRD 4WD	130	06/07 – 12/12		4004
NITRO	3.7	157	09/06 – 12/12		4004
NITRO	3.7 4WD	157	09/06 – 12/12		4004
NITRO	3.7 V6	154	06/07 – 12/12		4004
NITRO	3.7 V6 4WD	151	06/07 – 12/12		4004
NITRO	4.0 4WD	191	09/06 – 12/07		4004
RAM 1500 Crew Cab Pickup	5.7 4WD	291	09.2008 - 12.2010	4328	4329
RAM 1500 Extended Cab Pickup	5.7 4WD	291	09.2008 - 12.2010	4328	4329
RAM 1500 Standard Cab Pickup	5.7 4WD	291	09.2008 - 12.2010	4328	4329
SPRINTER (U.S.A.) Furgón (LCVs-N1 Segment)	2.5 2500		01/03 -	3670	
DR					
DR 1	1.0	50	03/10 -	4027	
DR 1	1.0 Bifuel	50	03/10 -	4027	
DR 1	1.0 LPG	50	03/10 -	4027	
DR 1	1.3	61	03/10 -	4027	
DR 1	1.3 Bifuel	61	03/10 -	4027	
DR 1	1.3 LPG	61	03/10 -	4027	
DR 2	1.3	61	09/10 -	4027	
DR 2	1.3 Bifuel	61	09/10 -	4027	
DR 2	1.3 LPG	61	09/10 -	4027	
DR 5	1.6	80	01/11 -		4153
DR 5	1.6	87	01/11 -		4153
DR 5	1.6 Bifuel	80	01/11 -		4153
DR 5	1.6 LPG	80	01/11 -		4153
DR 5	1.8	97	01/11 -		4153
DR 5	1.9 D	88	01/11 -		4153
DR 5	2.0	94	01/11 -		4153
DR 5	2.0	102	01/11 -		4153
DR 5	2.0 4WD	102	01/11 -		4153
DR 5	2.0 Bifuel	94	01/11 -		4153
DR 5	2.0 LPG	94	01/11 -		4153

MAKE & MODEL   		KW	YEAR		
DS					
DS 3	1.2 VTi 110	81	04/15 -		3529/1
DS 3	1.6 BlueHDi 100	73	04/15 -		3529/1
DS 3	1.6 BlueHDi 120	88	07/15 -		3529/1
DS 3	1.6 THP 165	121	07/15 -		3529/1
DS 3 Convertible	1.2 VTi 110	81	07/15 -		3529/1
DS 3 Convertible	1.6 BlueHDi 100	73	07/15 -		3529/1
DS 3 Convertible	1.6 BlueHDi 120	88	07/15 -		3529/1
DS 3 Convertible	1.6 THP 165	121	07/15 -		3529/1
DS 4 / DS 4 CROSSBACK	1.2 THP 130	96	07/15 -	3964	
DS 4 / DS 4 CROSSBACK	1.6 BlueHDi 120	88	07/15 -	3964	3529/1
DS 4 / DS 4 CROSSBACK	1.6 THP 210	155	07/15 -		3529/1
DS 4 / DS 4 CROSSBACK	2.0 BlueHDi 150	110	07/15 -	3964	
DS 4 / DS 4 CROSSBACK	2.0 BlueHDi 180	133	07/15 -		3529/1
DS 7 Crossback (J_)	1.5 BlueHDi 130	96	09.2017 -	4371	4373
DS 7 Crossback (J_)	1.5 BlueHDi 130	96	09.2017 -		4374
DS 7 Crossback (J_)	1.6 PureTech 180	133	04.2018 -	4371	4373
DS 7 Crossback (J_)	1.6 PureTech 180	133	04.2018 -		4374
DS 7 Crossback (J_)	1.6 PureTech 225	165	09.2017 -	4371	4373
DS 7 Crossback (J_)	1.6 PureTech 225	165	09.2017 -		4374
DS 7 Crossback (J_)	2.0 BlueHDi 180	130	09.2017 -	4371	4373
DS 7 Crossback (J_)	2.0 BlueHDi 180	130	09.2017 -		4374
DS 7 Crossback (J_)	E-TENSE	133	10.2019 -	4371	4373
DS 7 Crossback (J_)	E-TENSE	133	10.2019 -		4374
DS 7 Crossback (J_)	E-TENSE 4x4	147	05.2019 -	4371	
DS 7 Crossback (J_)	E-TENSE 4x4	147	05.2019 -		4373
DS 7 Crossback (J_)	E-TENSE 4x4	147	05.2019 -		4374
DS 7 Crossback (J_)	E-TENSE 4x4	147	05.2019 -	4371	4374
DS 7 Crossback (J_)	E-TENSE 4x4	221	05.2019 -	4371	4373
DS 7 Crossback (J_)	E-TENSE 4x4	221	05.2019 -		4374
DS 7 Crossback (J_)	PureTech 130	96	10.2018 -	4371	4373
DS 7 Crossback (J_)	PureTech 130	96	10.2018 -		4374
DS3 44228 VTi 82	HMZ (EB2), HMZ (EB2F)	60	04/2015 - 07/2019	3820/1	
DS3 44348 BlueHDi 100	BHY (DV6FD)	73	04/2015 - 07/2019	3820/1	
DS3 44348 BlueHDi 75	BHW (DV6FE)	55	07/2015 - 07/2019	3820/1	
DS3 Cabrio 44228 VTi 82	HMZ (EB2F)	60	07/2015 - 07/2019	3820/1	
DS3 Cabrio 44348 BlueHDi 100	BHY (DV6FD)	73	07/2015 - 07/2019	3820/1	
DS7 Crossback (J_) 2.0 BlueHDi 180	EHZ (DW10FC)	130	09/2017 -		4374
DS7 Crossback (J_) 2.0 HDi 180	EHZ (DW10FC)	132	07/2018 -		4374
DS7 Crossback (J_) 44317 BlueHDi 130	YHZ (DV5RC)	96	09/2017 -		4374
DS7 Crossback (J_) 44348 PureTech 165	5GY (EP6FDTM)	121	07/2018 -		4374
DS7 Crossback (J_) 44348 PureTech 180	5GF (EP6FADTXD)	133	04/2018 -		4374
DS7 Crossback (J_) 44348 PureTech 225	5GC (EP6FADTX)	165	09/2017 -		4374
DS7 Crossback (J_) E-TENSE	5GQ (EP6FADTXHP)	132	10/2019 -		4374
DS7 Crossback (J_) E-TENSE	5GQ (EP6FADTXHP)	147	10/2019 -		4374
DS7 Crossback (J_) E-TENSE 4x4	5GB (EP6FADTXHP)	147	05/2019 -		4374
DS7 Crossback (J_) E-TENSE 4x4	5GB (EP6FADTXHP)	221	05/2019 -		4374
DS7 Crossback (J_) PureTech 130	HNS (EB2ADTS)	96	10/2018 -		4374
ERNST					
AUWARTER BUS Microstar VW T4 All models	-		01/1998 - 12/2003		4345
EUNOS					
500 Saloon	2.0	105	01/92 – 10/99	3832	
500 Saloon	2.0	105	01/92 – 10/99	3833	
FENGXING (DONGFENG)					
FUTURE MPV	1.8	103	12/07 -	3809	
FUTURE MPV	1.8	118	12/07 -	3809	
FUTURE MPV	2.0	93	03/01 -	3809	
FUTURE MPV	2.4	97	03/01 -	3809	
FERRARI					
208/308	208 Turbo	162	06/82 – 10/89	3320	
208/308	208 Turbo	162	06/82 – 10/89	3350	
208/308	308 GTB	188	09/75 – 06/80	3320	
208/308	308 GTB	188	09/75 – 06/80	3350	
208/308	308 GTB Qv	177	09/82 – 06/85	3320	
208/308	308 GTB Qv	177	09/82 – 06/85	3350	
208/308	308 GTS	188	09/77 – 06/80	3320	
208/308	308 GTS	188	09/77 – 06/80	3350	
208/308	308 GTS Qv	177	09/82 – 06/85	3320	
208/308	308 GTS Qv	177	09/82 – 06/85	3350	
400 i	4.8	232	05/79 – 03/85	3331/1	
412 i	4.9	250	04/85 – 12/88	3331/1	
512 BB	4.9	237	07/81 – 08/84	3331/1	
512 BB	4.9	250	08/76 – 12/81	3331/1	
DINO GT (206/246)	206	132	02/69 – 10/69	3320	
DINO GT (206/246)	206	132	02/69 – 10/69	3350	

MAKE & MODEL		KW	YEAR		
FERRARI					
DINO GT (206/246)	246	143	10/69 – 10/73	3320	
DINO GT (206/246)	246	143	10/69 – 10/73	3350	
DINO GT4 (208/308)	208	125	02/75 – 06/80	3320	
DINO GT4 (208/308)	208	125	02/75 – 06/80	3350	
DINO GT4 (208/308)	308	188	02/74 – 06/80	3320	
DINO GT4 (208/308)	308	188	02/74 – 06/80	3350	
DINO GTS (206/246)	246	143	04/72 – 10/73	3320	
DINO GTS (206/246)	246	143	04/72 – 10/73	3350	
TESTAROSSA	50	272	08/86 – 10/91	3331/1	
TESTAROSSA	50	287	05/84 – 12/91	3331/1	
FIAT					
147	1.0	37	10/76 – 12/95	3625	
147	1.3	41	07/80 – 07/83	3625	
147	1.3	45	01/82 – 12/86	3625	
147	1.3	45	07/80 – 08/84	3625	
147	1.3 D	33	07/82 – 06/84	3625	
147	1.3 D	36	07/84 – 12/86	3625	
147	1.3 D	36	10/80 – 10/95	3625	
147	1.3 Rallye	53	07/80 – 07/83	3625	
147	1.4	46	10/80 – 10/96	3625	
850	0.8 (100 G.000)	25	07/64 – 10/72	3346	
850	0.8 (100 G.002)	27	07/64 – 10/72	3346	
850	0.8 (126G100)	36	10/65 – 10/68	3346	
850	0.8 Special (100 GB.000)	35	03/68 – 10/72	3346	
850	0.9 Sport (100 GL.040)	38	03/68 – 12/72	3346	
124 (124_)	1.2 1200 (124 A.000)	44	07/66 – 10/73	3346	
124 (124_)	1.4 1500 Sport (124 AC.000)	66	01/66 – 12/72	3346	
125 (125_)	1.6 Special (125 B.000)	74	05/69 – 10/73	3346	
127 (127_)	0.9	29	06/71 – 05/83	3316	
127 (127_)	0.9	29	06/71 – 05/83	3485	
127 (127_)	0.9	33	06/71 – 12/86	3316	
127 (127_)	0.9	33	06/71 – 12/86	3485	
127 (127_)	1.0	37	04/77 – 12/86	3316	
127 (127_)	1.0	37	04/77 – 12/86	3485	
127 (127_)	1.0 Sport	51	07/78 – 02/82	3316	
127 (127_)	1.0 Sport	51	07/78 – 02/82	3485	
127 (127_)	1.3 Diesel	33	04/81 – 12/86	3485	
127 (127_)	1.3 Sport	55	12/81 – 05/83	3485	
127 Panorama (127_)	1.0	37	01/77 – 12/86	3316	
127 Panorama (127_)	1.0	37	01/77 – 12/86	3625	
127 Panorama (127_)	1.3 D	33	06/81 – 12/86	3316	
127 Panorama (127_)	1.3 D	33	06/81 – 12/86	3625	
128 (128_)	1.1	33	02/75 – 09/81	3316	
128 (128_)	1.1	40	03/69 – 12/84	3316	
128 (128_)	1.1 (128 A.000)	40	03.69 – 12.84	3346	
128 (128_)	1.3 Rally (AR)	49	09/71 – 02/76	3316	
128 (128_)	1.3 Sport	44	08/74 – 12/84	3316	
128 Coupe (128_)	1.1 (AC 5)	47	03/72 – 02/81	3316	
128 Coupe (128_)	1.1 (AC 5)	48	08/75 – 02/81	3316	
128 Coupe (128_)	1.3 (AC)	55	03/72 – 12/79	3316	
128 Coupe (128_)	1.3 Berlinetta (AC)	54	06/75 – 12/79	3316	
128 Familiare (128_)	1.1 (AF)	33	02/75 – 02/81	3316	
128 Familiare (128_)	1.1 (AF)	40	10/69 – 10/82	3316	
128 Familiare (128_)	1.3 (AF1)	44	12/74 – 10/82	3316	
131 (131_)	1.3 Mirafiori	40	10/74 – 09/81	3316	
131 (131_)	1.3 Mirafiori	40	10/74 – 09/81	3485	
131 (131_)	1.3 Mirafiori	48	10/74 – 12/82	3316	
131 (131_)	1.3 Mirafiori	48	10/74 – 12/82	3424/1	
131 (131_)	1.3 Mirafiori	48	10/74 – 12/82	3485	
131 (131_)	1.3 Super Mirafiori	57	03/78 – 12/80	3316	
131 (131_)	1.3 Super Mirafiori	57	03/78 – 12/80	3485	
131 (131_)	1.4 Mirafiori	51	11/80 – 01/84	3424/1	
131 (131_)	1.4 Mirafiori	51	11/80 – 01/84	3485	
131 (131_)	1.4 Super Mirafiori	55	04/81 – 12/83	3424/1	
131 (131_)	1.4 Super Mirafiori	55	04/81 – 12/83	3485	
131 (131_)	1.6	63	11/76 – 12/84	3316	
131 (131_)	1.6	63	11/76 – 12/84	3424/1	
131 (131_)	1.6	63	11/76 – 12/84	3485	
131 (131_)	1.6 (S)	55	10/74 – 09/81	3316	
131 (131_)	1.6 (S)	55	10/74 – 09/81	3485	
131 (131_)	1.6 Super	71	03/78 – 01/84	3316	
131 (131_)	1.6 Super	71	03/78 – 01/84	3424/1	
131 (131_)	1.6 Super	71	03/78 – 01/84	3485	
131 (131_)	1.6 Super Mirafiori (A)	72	03/79 – 03/82	3316	
131 (131_)	1.6 Super Mirafiori (A)	72	03/79 – 03/82	3485	

MAKE & MODEL		KW	YEAR		
FIAT					
131 (131_)	2.0 Abarth Rally	103	01/76 – 07/80	3316	
131 (131_)	2.0 Abarth Rally	103	01/76 – 07/80	3485	
131 (131_)	2.0 D	44	07/78 – 08/84	3316	
131 (131_)	2.0 D	44	07/78 – 08/84	3424/1	
131 (131_)	2.0 D	44	07/78 – 08/84	3485	
131 (131_)	2.0 Racing	85	06/78 – 12/81	3316	
131 (131_)	2.0 Racing	85	06/78 – 12/81	3485	
131 (131_)	2.0 Super	83	01/81 – 12/84	3424/1	
131 (131_)	2.0 Super	83	01/81 – 12/84	3485	
131 (131_)	2.5 D	53	06/78 – 02/84	3316	
131 (131_)	2.5 D	53	06/78 – 02/84	3424/1	
131 (131_)	2.5 D	53	06/78 – 02/84	3485	
131 Familiare/Panorama (131_)	1.3 Mirafiori (AF)	40	03/75 – 12/78	3316	
131 Familiare/Panorama (131_)	1.3 Mirafiori (AF)	48	03/75 – 03/82	3316	
131 Familiare/Panorama (131_)	1.3 Mirafiori (AF)	48	03/75 – 03/82	3485	
131 Familiare/Panorama (131_)	1.4 Mirafiori	51	11/81 – 01/84	3424/1	
131 Familiare/Panorama (131_)	1.4 Mirafiori	51	11/81 – 01/84	3485	
131 Familiare/Panorama (131_)	1.6	63	11/80 – 12/84	3424/1	
131 Familiare/Panorama (131_)	1.6	63	11/80 – 12/84	3485	
131 Familiare/Panorama (131_)	1.6 CL (AF1)	55	03/75 – 12/78	3316	
131 Familiare/Panorama (131_)	1.6 Super	72	12/79 – 12/81	3485	
131 Familiare/Panorama (131_)	2.0 D	44	07/78 – 08/84	3316	
131 Familiare/Panorama (131_)	2.0 D	44	07/78 – 08/84	3424/1	
131 Familiare/Panorama (131_)	2.0 D	44	07/78 – 08/84	3485	
131 Familiare/Panorama (131_)	2.0 Super	83	01/81 – 12/84	3424/1	
131 Familiare/Panorama (131_)	2.0 Super	83	01/81 – 12/84	3485	
131 Familiare/Panorama (131_)	2.5 Super Diesel (AF)	53	03/79 – 12/84	3316	
131 Familiare/Panorama (131_)	2.5 Super Diesel (AF)	53	03/79 – 12/84	3424/1	
131 Familiare/Panorama (131_)	2.5 Super Diesel (AF)	53	03/79 – 12/84	3485	
131 Familiare/Panorama (131_)	2.5 Super Diesel (AF)	53	03/79 – 12/84	3485	
132 (132_)	1.6	65	05/77 – 09/82	3316	3317
132 (132_)	1.6	65	05/77 – 09/82	3485	
132 (132_)	1.6	66	03/77 – 12/81	3316	3317
132 (132_)	1.6	72	01/76 – 12/82	3316	3317
132 (132_)	1.6	72	01/76 – 12/82	3485	
132 (132_)	1.6	72	04/72 – 01/76	3316	3317
132 (132_)	1.7 GLS (A1)	79	04/74 – 12/75	3316	3317
132 (132_)	1.7 GLS (A1)	82	11/75 – 01/77	3316	3317
132 (132_)	1.7 Special (A1)	77	04/72 – 01/74	3316	3317
132 (132_)	2.0	82	05/77 – 06/81	3316	3317
132 (132_)	2.0	82	05/77 – 06/81	3485	
132 (132_)	2.0 D	44	07/78 – 07/82	3485	
132 (132_)	2.0 i.e.	90	01/80 – 12/82	3485	
132 (132_)	2.5 D	53	07/78 – 07/82	3485	
500 (312_)	0.9	59	12/13 -	3826/3	
500 (312_)	0.9	77	10/13 -	3826/3	
500 (312_)	1.2	51	10/07 -	4173	
500 C (312_)	1.2 LPG	51	12/10 -	4173	
500 C (312_)	1.3 D Multijet	55	09/09 -	4173	
500 C (312_)	1.3 D Multijet	55	10/07 -	4173	
500 II (312_) 44228	169 A4.000	51	07/2007 -	4173/1	
500 II (312_) 44256 D Multijet	169 A1.000	55	10/2007 -	4173/1	
500 II C (312_) 44228	169 A4.000	51	09/2009 -	4173/1	
500 II C (312_) 44228	169 A4.000	51	09/2009 -	4173/1	
500 II C (312_) 44256 D Multijet	169 A1.000	55	09/2009 -	4173/1	
850 (100_)	0.9 Sport (100 GL.040)	38	02/68 – 10/72	3346	
850 Spider	0.8	36	10/65 – 10/68	3316	
900 T/E Panorama (200_)	0.9	26	01/78 – 01/86	3316	
900 T/E Panorama (200_)	0.9	26	01/78 – 01/86	3424/1	
900 T/E Pulmino (200_)	0.9	26	01/78 – 01/86	3316	
900 T/E Pulmino (200_)	0.9	26	01/78 – 01/86	3424/1	
ARGENTA (132_)	1600	72	04/81 – 12/85		3317
ARGENTA (132_)	1600	72	04/81 – 12/85	3466	
ARGENTA (132_)	1600	72	04/81 – 12/85	3468	
ARGENTA (132_)	1600	72	04/81 – 12/85	3468	3317
ARGENTA (132_)	2000	83	06/78 – 12/85		3317
ARGENTA (132_)	2000	83	06/78 – 12/85	3466	
ARGENTA (132_)	2000	83	06/78 – 12/85	3468	
ARGENTA (132_)	2000	83	06/78 – 12/85	3468	3317
ARGENTA (132_)	1600 i.e	66	04/81 – 12/85		3317
ARGENTA (132_)	1600 i.e	66	04/81 – 12/85	3466	
ARGENTA (132_)	1600 i.e	66	04/81 – 12/85	3468	
ARGENTA (132_)	1600 i.e	66	04/81 – 12/85	3468	3317
ARGENTA (132_)	2000 i.e.	90	06/81 – 07/86		3317
ARGENTA (132_)	2000 i.e.	90	06/81 – 07/86	3466	
ARGENTA (132_)	2000 i.e.	90	06/81 – 07/86	3468	

MAKE & MODEL		KW	YEAR		
FIAT					
ARGENTA (132_)	2000 i.e.	90	06/81 – 07/86	3468	3317
ARGENTA (132_)	2000 Volumex	99	06/84 – 07/85		3317
ARGENTA (132_)	2000 Volumex	99	06/84 – 07/85	3466	
ARGENTA (132_)	2000 Volumex	99	06/84 – 07/85	3468	
ARGENTA (132_)	2000 Volumex	99	06/84 – 07/85	3468	3317
ARGENTA (132_)	2500 Diesel	53	06/81 – 11/85		3317
ARGENTA (132_)	2500 Diesel	53	06/81 – 11/85	3466	
ARGENTA (132_)	2500 Diesel	53	06/81 – 11/85	3468	
ARGENTA (132_)	2500 Diesel	53	06/81 – 11/85	3468	3317
ARGENTA (132_)	2500 Turbodiesel	66	07/83 – 08/85		3317
ARGENTA (132_)	2500 Turbodiesel	66	07/83 – 08/85	3466	
ARGENTA (132_)	2500 Turbodiesel	66	07/83 – 08/85	3468	
ARGENTA (132_)	2500 Turbodiesel	66	07/83 – 08/85		3317
BARCHETTA (183_)	1.8 16V	96	04/95 – 05/05	3466	
BARCHETTA (183_)	1.8 16V	96	04/95 – 05/05	3468	
Barchetta (183_) 44409 16V	183 A1.000, 188 A6.000 (05.98-.)	96	04/1995 - 05/2005	3618/1	
BRAVA (182_)	1.6 16V (182.BB)	76	02/96 – 10/01	3618	
BRAVA (182_)	1.6 16V (182.BH)	66	10/95 – 10/01	3618	
BRAVA (182_)	1.6 16V (182.BU)	76	01/99 – 12/02	3618	
BRAVA (182_)	1.8 GT 16V (182.BC)	83	10/95 – 10/01	3618	
BRAVA (182_)	1.9 JTD	74	09/00 – 10/01	3618	
BRAVA (182_)	1.9 JTD	79	01/01 – 12/02	3618	
BRAVA (182_)	1.9 JTD 105	77	12/98 – 10/01	3618	
BRAVA (182_)	1.9 TD 100 S (182.BF)	74	03/96 – 10/01	3618	
Brava (182_) 44409 GT 16V (182.BC)	182 A2.000	83	10/1995 - 08/2001	3618/1	
Brava (182_) 44440 JTD	182 B4.000	79	01/2001 - 12/2002	3618/1	
Brava (182_) 44440 JTD	182 B9.000	74	09/2000 - 10/2001	3618/1	
Brava (182_) 44440 JTD 105	182 B4.000	77	12/1998 - 10/2001	3618/1	
Brava (182_) 44440 TD 100 S (182.BF)	182 A7.000	74	03/1996 - 10/2001	3618/1	
BRAVO I (182_)	1.6	76	09/00 – 10/01	3618	
BRAVO I (182_)	1.6 16V (182.AB)	76	03/96 – 10/01	3618	
BRAVO I (182_)	1.6 16V (182.AH)	66	10/95 – 10/01	3618	
BRAVO I (182_)	1.8 GT (182.AC)	83	10/95 – 10/01	3618	
BRAVO I (182_)	1.9 JTD	74	09/00 – 10/01	3618	
BRAVO I (182_)	1.9 JTD 105	77	12/98 – 10/01	3618	
BRAVO I (182_)	1.9 TD 100 S (182.AF)	74	03/96 – 10/01	3618	
Bravo I (182_) 44409 GT (182.AC)	182 A2.000	83	10/1995 - 10/2001	3618/1	
Bravo I (182_) 44440 JTD	182 B9.000	74	09/2000 - 10/2001	3618/1	
Bravo I (182_) 44440 JTD 105	182 B4.000	77	12/1998 - 10/2001	3618/1	
Bravo I (182_) 44440 TD 100 S (182.AF)	182 A7.000	74	03/1996 - 10/2001	3618/1	
BRAVO II (198_)	1.4	66	04/07 -	3826/1	
BRAVO II (198_)	1.4 16V	103	03/08 -	3826/1	
BRAVO II (198_)	1.4 LPG	66	12/08 – 12/14	3826/1	
BRAVO II (198_)	1.4 T-Jet	110	09/07 -	3826/1	
BRAVO II (198_)	1.9 D Multijet	110	04/07 -	3826/1	
BRAVO II (198_)	2.0 D Multijet	120	09/08 -	3826/1	
BRAVO II (198_)	2.0 D Multijet	121	09/08 -	3826/1	
CROMA II (194)	1.8 16V (939 A4.000)	103	12/05 -	4211	
CROMA II (194)	1.9 D Multijet (939 A1.000)	88	06/05 -	4211	
CROMA II (194)	1.9 D Multijet (939 A7.000)	85	06/05 -	4211	
CROMA II (194)	1.9 D Multijet (939 A8.000)	136	12/05 -	4211	
CROMA II (194)	2.2 16V (194 A1.000)	108	06/05 -	4211	
CROMA (154_)	1600	61	12/85 – 12/90	3425	3425
CROMA (154_)	1600	61	12/85 – 12/90	3467	3536
CROMA (154_)	1900 Turbo D i.d.	69	11/92 – 12/96	3425	3425
CROMA (154_)	1900 Turbo D i.d.	69	11/92 – 12/96		3536
CROMA (154_)	1900 Turbo D i.d. (154.LL,154.PL)	66	05/89 – 10/92	3425	3425
CROMA (154_)	1900 Turbo D i.d. (154.LL,154.PL)	66	05/89 – 10/92		3536
CROMA (154_)	2000 16V	101	08/92 – 08/96	3425	3425
CROMA (154_)	2000 16V	101	08/92 – 08/96		3536
CROMA (154_)	2000 CHT	74	01/91 – 09/92	3425	3425
CROMA (154_)	2000 CHT	74	01/91 – 09/92		3536
CROMA (154_)	2000 CHT (154.AC)	66	12/85 – 02/89	3425	3425
CROMA (154_)	2000 CHT (154.AC)	66	12/85 – 02/89	3467	3536
CROMA (154_)	2000 i.e. (154.AD)	88	03/87 – 09/92	3425	3425
CROMA (154_)	2000 i.e. (154.AD)	88	03/87 – 09/92	3467	3536
CROMA (154_)	2000 i.e. (154.AM)	83	03/86 – 09/90	3425	3425
CROMA (154_)	2000 i.e. (154.AM)	83	03/86 – 09/90	3467	3536
CROMA (154_)	2000 i.e. (154.AM, 154.LM)	85	10/87 – 08/96	3425	3425
CROMA (154_)	2000 i.e. (154.AM, 154.LM)	85	10/87 – 08/96	3467	3536
CROMA (154_)	2000 i.e. Turbo	111	11/86 – 11/88	3425	3425
CROMA (154_)	2000 i.e. Turbo	111	11/86 – 11/88	3467	3536
CROMA (154_)	2000 i.e. Turbo (154.AM)	114	12/85 – 06/90	3425	3425
CROMA (154_)	2000 i.e. Turbo (154.AM)	114	12/85 – 06/90	3467	3536
CROMA (154_)	2000 i.e. Turbo (154.AM,154.LM)	110	06/87 – 08/96	3425	3425
CROMA (154_)	2000 i.e. Turbo (154.AM,154.LM)	110	06/87 – 08/96	3467	3536

MAKE & MODEL   		KW	YEAR		
FIAT					
CROMA (154_)	2500 D	55	12/85 – 12/89	3425	3425
CROMA (154_)	2500 D	55	12/85 – 12/89	3467	3536
CROMA (154_)	2500 TD (154.AE)	74	12/85 – 08/89	3425	3425
CROMA (154_)	2500 TD (154.AE)	74	12/85 – 08/89	3467	3536
CROMA (154_)	2500 TD (154.LL, 154.PL)	85	05/89 – 08/96	3425	3425
CROMA (154_)	2500 TD (154.LL, 154.PL)	85	05/89 – 08/96		3536
CROMA (154_)	2500 TDE	77	12/91 – 08/96	3425	3425
CROMA (154_)	2500 TDE	77	12/91 – 08/96		3536
CROMA (154_)	2500 V6	119	06/93 – 08/96	3425	3425
CROMA (154_)	2500 V6	119	06/93 – 08/96		3536
CROMA (194_)	1.8 16V	103	12/05 -	3986	
CROMA (194_)	1.9 D Multijet	85	06/05 -	3986	
CROMA (194_)	1.9 D Multijet	88	06/05 -	3986	
CROMA (194_)	1.9 D Multijet	100	12/05 -	3986	
CROMA (194_)	1.9 D Multijet	110	06/05 -	3986	
CROMA (194_)	2.2 16V	108	06/05 -	3986	
CROMA (194_)	2.4 D Multijet	147	06/05 -	3986	
DOBLO Box Body / Estate (263_)	1.3 D Multijet	66	02/10 -	4121	
DOBLO Box Body / Estate (263_)	1.4	70	02/10 -	4121	
DOBLO Box Body / Estate (263_)	1.4	88	10/11 -	4121	
DOBLO Box Body / Estate (263_)	1.4 Natural Power	88	06/10 -	4121	
DOBLO Box Body / Estate (263_)	1.6 D Multijet	66	02/10 -	4121	
DOBLO Box Body / Estate (263_)	1.6 D Multijet	74	02/10 -	4121	
DOBLO Box Body / Estate (263_)	1.6 D Multijet	77	02/10 -	4121	
DOBLO Box Body / Estate (263_)	2.0 D Multijet	99	02/10 -	4121	
DOBLO Cargo (223_)	1.2 (223ZXA1A)	48	03/01 -	3790/1	
DOBLO Cargo (223_)	1.3 D Multijet	55	10/05 – 01/10	3790/1	
DOBLO Cargo (223_)	1.3 JTD 16V	51	05/04 – 12/06	3790/1	
DOBLO Cargo (223_)	1.3 JTD 16V Multijet	62	08/06 -	3790/1	
DOBLO Cargo (223_)	1.4	57	10/05 -	3790/1	
DOBLO Cargo (223_)	1.6 16V (223ZXD1A)	76	10/01 -	3790/1	
DOBLO Cargo (223_)	1.6 Natural Power	76	09/02 -	3790/1	
DOBLO Cargo (223_)	1.9 D (223ZXB1A)	46	03/01 -	3790/1	
DOBLO Cargo (223_)	1.9 JTD	77	07/03 -	3790/1	
DOBLO Cargo (223_)	1.9 JTD (223ZXE1A)	74	10/01 -	3790/1	
DOBLO Cargo (223_)	1.9 JTD Multijet	88	12/06 -	3790/1	
Doblo I MPV / Space wagon (119_, 223_) 44228 (223AXA1A)	223 A5.000	48	03/2001 -	3790/1	
Doblo I MPV / Space wagon (119_, 223_) 44256 JTD 16V	188 A9.000	51	12/2004 - 05/2005	3790/1	
Doblo I MPV / Space wagon (119_, 223_) 44348 16v	182B6.000	68	10/2001 - 04/2005	3790/1	
Doblo I MPV / Space wagon (119_, 223_) 44348 Natural Power	182 B6.000	76	09/2002 -	3790/1	
Doblo I MPV / Space wagon (119_, 223_) 44440 D (223AXB1A)	223 A6.000	46	03/2001 -	3790/1	
Doblo I MPV / Space wagon (119_, 223_) 44440 JTD	223 A7.000, 223 B1.000	77	07/2003 -	3790/1	
Doblo I MPV / Space wagon (119_, 223_) 44440 JTD (223AXE1A)	182 B9.000, 223 B2.000	74	10/2001 -	3790/1	
Doblo II MPV / Space wagon (263_) 2.0 D Multijet (263AXF1B)	263 A1.000	99	01/2010 -	4121/1	
Doblo II MPV / Space wagon (263_) 44256 D Multijet	199 A3.000, 263 A2.000	66	02/2010 -	4121/1	
Doblo II MPV / Space wagon (263_) 44287	198 A4.000	88	10/2011 -	4121/1	
Doblo II MPV / Space wagon (263_) 44287 (263AXA1A)	843 A1.000	70	02/2010 -	4121/1	
Doblo II MPV / Space wagon (263_) 44348 D Multijet	198 A3.000, 263 A8.000	77	01/2010 -	4121/1	
Doblo II MPV / Space wagon (263_) 44348 D Multijet	263 A3.000, 263 A9.000	74	03/2016 -	4121/1	
Doblo II MPV / Space wagon (263_) 44348 D Multijet	263 A4.000	66	02/2010 -	4121/1	
Doblo II MPV / Space wagon (263_) 44348 D Multijet	263 A7.000	70	03/2015 -	4121/1	
Doblo II MPV / Space wagon (263_) 44348 D Multijet	940 C1.000	88	03/2015 -	4121/1	
Doblo II MPV / Space wagon (263_) 44409 MPi Flex	370 A0.011	96	08/2010 -	4121/1	
DOBLO MPV (119_, 223_)	1.2 (223AXA1A)	48	03/01 -	3790/1	
DOBLO MPV (119_, 223_)	1.3 D Multijet	62	10/05 -	3790/1	
DOBLO MPV (119_, 223_)	1.3 JTD	55	05/05 -	3790/1	
DOBLO MPV (119_, 223_)	1.4	57	10/05 -	3790/1	
DOBLO MPV (119_, 223_)	1.6	68	09/02 -	3790/1	
DOBLO MPV (119_, 223_)	1.6 16V (223AXD1A)	76	10/01 -	3790/1	
DOBLO MPV (119_, 223_)	1.6 Natural Power	76	09/02 -	3790/1	
DOBLO MPV (119_, 223_)	1.9 D (223AXB1A)	46	03/01 -	3790/1	
DOBLO MPV (119_, 223_)	1.9 D Multijet	88	10/05 -	3790/1	
DOBLO MPV (119_, 223_)	1.9 JTD	77	07/03 -	3790/1	
DOBLO MPV (119_, 223_)	1.9 JTD (223AXE1A)	74	10/01 -	3790/1	
DOBLO MPV (263_)	1.3 D Multijet	66	02/10 -	4121	
DOBLO MPV (263_)	1.4	70	02/10 -	4121	
DOBLO MPV (263_)	1.4 Natural Power	88	02/10 -	4121	
DOBLO MPV (263_)	1.6 D Multijet	70	03/015 -	4121	
DOBLO MPV (263_)	1.6 D Multijet	77	02/10 -	4121	
DOBLO MPV (263_)	2.0 D Multijet	99	02/10 -	4121	
DOBLO Platform/Chassis (263_)	1.3 D Multijet	55	11/13 -	4121	
DOBLO Platform/Chassis (263_)	1.3 D Multijet	66	02/10 -	4121	
DOBLO Platform/Chassis (263_)	1.4	70	04/10 -	4121	
DOBLO Platform/Chassis (263_)	1.6 D Multijet	66	02/10 -	4121	
DOBLO Platform/Chassis (263_)	1.6 D Multijet	74	02/11 -	4121	
DOBLO Platform/Chassis (263_)	1.6 D Multijet	77	02/10 -	4121	

MAKE & MODEL		KW	YEAR		
FIAT					
DOBLO Platform/Chassis (263_)	2.0 D Multijet	99	02/10 -	4121	
DUCATO Box (230_)	1.9 D	50	03/94 – 04/02	3834	
DUCATO Box (230_)	1.9 D	50	04/98 – 04/02	3835	3914
DUCATO Box (230_)	1.9 D	50	04/98 – 04/02	3559	
DUCATO Box (230_)	1.9 D	50	04/98 – 04/02	3595	
DUCATO Box (230_)	1.9 D	51	03/94 – 04/02	3835	3914
DUCATO Box (230_)	1.9 D	51	03/94 – 04/02	3559	
DUCATO Box (230_)	1.9 D	51	03/94 – 04/02	3595	
DUCATO Box (230_)	1.9 D	51	03/94 – 04/02	3834	
DUCATO Box (230_)	1.9 TD	59	05/98 – 11/01	3835	3914
DUCATO Box (230_)	1.9 TD	59	05/98 – 11/01	3559	
DUCATO Box (230_)	1.9 TD	59	05/98 – 11/01	3595	
DUCATO Box (230_)	1.9 TD	59	05/98 – 11/01	3834	
DUCATO Box (230_)	1.9 TD	60	03/94 – 02/04	3834	
DUCATO Box (230_)	1.9 TD	60	03/94 – 04/02	3835	3914
DUCATO Box (230_)	1.9 TD	60	03/94 – 04/02	3559	
DUCATO Box (230_)	1.9 TD	60	03/94 – 04/02	3595	
DUCATO Box (230_)	1.9 TD	66	04/98 – 04/02	3835	3914
DUCATO Box (230_)	1.9 TD	66	04/98 – 04/02	3559	
DUCATO Box (230_)	1.9 TD	66	04/98 – 04/02	3595	
DUCATO Box (230_)	1.9 TD	66	04/98 – 04/02	3834	
DUCATO Box (230_)	1.9 TD CAT	59	08/94 – 04/02	3835	3914
DUCATO Box (230_)	1.9 TD CAT	59	08/94 – 04/02	3559	
DUCATO Box (230_)	1.9 TD CAT	59	08/94 – 04/02	3595	
DUCATO Box (230_)	1.9 TD CAT	59	08/94 – 04/02	3834	
DUCATO Box (230_)	2.0	80	03/94 – 04/02	3835	3914
DUCATO Box (230_)	2.0	80	03/94 – 04/02	3559	
DUCATO Box (230_)	2.0	80	03/94 – 04/02	3595	
DUCATO Box (230_)	2.0	80	03/94 – 04/02	3834	
DUCATO Box (230_)	2.0	81	04/02 -	3834	
DUCATO Box (230_)	2.0 4x4	80	11/94 – 04/02	3835	3914
DUCATO Box (230_)	2.0 4x4	80	11/94 – 04/02	3559	
DUCATO Box (230_)	2.0 4x4	80	11/94 – 04/02	3595	
DUCATO Box (230_)	2.0 4x4	80	11/94 – 04/02	3834	
DUCATO Box (230_)	2.0 4x4	81	05/02 – 07/06	3834	
DUCATO Box (230_)	2.0 Bipower	81	11/02 -	3834	
DUCATO Box (230_)	2.0 JTD	62	04/02 -	3834	
DUCATO Box (230_)	2.0 JTD	62	10/01 – 04/02	3835	3914
DUCATO Box (230_)	2.0 JTD	62	10/01 – 04/02	3834	
DUCATO Box (230_)	2.3 JTD	81	04/02 -	3834	
DUCATO Box (230_)	2.5 D	62	03/94 – 04/02	3835	3914
DUCATO Box (230_)	2.5 D	62	03/94 – 04/02	3559	
DUCATO Box (230_)	2.5 D	62	03/94 – 04/02	3595	
DUCATO Box (230_)	2.5 D	62	03/94 – 04/02	3834	
DUCATO Box (230_)	2.5 TD	80	06/94 – 08/98	3559	
DUCATO Box (230_)	2.5 TD	80	06/94 – 08/98	3595	
DUCATO Box (230_)	2.5 TD 4x4	80	11/94 – 04/98	3559	
DUCATO Box (230_)	2.5 TD 4x4	80	11/94 – 04/98	3595	
DUCATO Box (230_)	2.5 TD 4x4	85	11/94 – 04/98	3559	
DUCATO Box (230_)	2.5 TD 4x4	85	11/94 – 04/98	3595	
DUCATO Box (230_)	2.5 TDI	80	03/94 – 04/02	3835	3914
DUCATO Box (230_)	2.5 TDI	80	03/94 – 04/02	3559	
DUCATO Box (230_)	2.5 TDI	80	03/94 – 04/02	3595	
DUCATO Box (230_)	2.5 TDI	80	03/94 – 04/02	3834	
DUCATO Box (230_)	2.5 TDI	85	03/94 – 04/02	3835	3914
DUCATO Box (230_)	2.5 TDI	85	03/94 – 04/02	3559	
DUCATO Box (230_)	2.5 TDI	85	03/94 – 04/02	3595	
DUCATO Box (230_)	2.5 TDI	85	03/94 – 04/02	3834	
DUCATO Box (230_)	2.5 TDI 4x4	85	05/98 – 04/02	3835	3914
DUCATO Box (230_)	2.5 TDI 4x4	85	05/98 – 04/02	3559	
DUCATO Box (230_)	2.5 TDI 4x4	85	05/98 – 04/02	3595	
DUCATO Box (230_)	2.5 TDI 4x4	85	05/98 – 04/02	3834	
DUCATO Box (230_)	2.8 D	64	05/98 – 04/02	3835	3914
DUCATO Box (230_)	2.8 D	64	05/98 – 04/02	3559	
DUCATO Box (230_)	2.8 D	64	05/98 – 04/02	3595	
DUCATO Box (230_)	2.8 D	64	05/98 – 04/02	3834	
DUCATO Box (230_)	2.8 D 4x4	64	08/98 – 04/02	3835	3914
DUCATO Box (230_)	2.8 D 4x4	64	08/98 – 04/02	3559	
DUCATO Box (230_)	2.8 D 4x4	64	08/98 – 04/02	3595	
DUCATO Box (230_)	2.8 D 4x4	64	08/98 – 04/02	3834	
DUCATO Box (230_)	2.8 JTD	94	11/00 – 04/02	3835	3914
DUCATO Box (230_)	2.8 JTD	94	11/00 – 04/02	3559	
DUCATO Box (230_)	2.8 JTD	94	11/00 – 04/02	3595	
DUCATO Box (230_)	2.8 JTD	94	11/00 – 04/02	3834	
DUCATO Box (230_)	2.8 JTD 4x4	90	05/98 – 09/01	3559	
DUCATO Box (230_)	2.8 JTD 4x4	90	05/98 – 09/01	3595	

MAKE & MODEL		KW	YEAR		
FIAT					
DUCATO Box (230_)	2.8 JTD 4x4	94	11/00 – 04/02	3559	
DUCATO Box (230_)	2.8 JTD 4x4	94	11/00 – 04/02	3595	
DUCATO Box (230_)	2.8 JTD 4x4	94	11/00 – 04/02	3834	
DUCATO Box (230_)	2.8 TD 4x4	94	11/00 – 04/02	3835	3914
DUCATO Box (230_)	2.8 TDI	90	10/97 – 04/02	3835	3914
DUCATO Box (230_)	2.8 TDI	90	10/97 – 04/02	3559	
DUCATO Box (230_)	2.8 TDI	90	10/97 – 04/02	3595	
DUCATO Box (230_)	2.8 TDI	90	10/97 – 04/02	3834	
DUCATO Box (230_)	2.8 TDI 4x4	90	06/99 – 04/02	3835	3914
DUCATO Box (230_)	2.8 TDI 4x4	90	06/99 – 04/02	3559	
DUCATO Box (230_)	2.8 TDI 4x4	90	06/99 – 04/02	3595	
DUCATO Box (230_)	2.8 TDI 4x4	90	06/99 – 04/02	3834	
DUCATO Box (244_)	2.0	81	04/02 -	3835	3914
DUCATO Box (244_)	2.0 4x4	81	05/02 – 07/06	3835	3914
DUCATO Box (244_)	2.0 Bipower	81	11/02 -	3835	3914
DUCATO Box (244_)	2.0 JTD	62	04/02 -	3835	3914
DUCATO Box (244_)	2.3 JTD	81	04/02 -	3835	3914
DUCATO Box (244_)	2.8 JTD	94	04/02 -	3835	3914
DUCATO Box (244_)	2.8 JTD	94	04/02 -	3834	
DUCATO Box (244_)	2.8 JTD 4x4	94	07/02 -	3835	3914
DUCATO Box (244_)	2.8 JTD 4x4	94	07/02 -	3834	
DUCATO Box (244_)	2.8 JTD Power	107	05/04 -	3835	3914
DUCATO Box (244_)	2.8 JTD Power	107	05/04 -	3834	
DUCATO Box (244_)	2.8 TD	90	04/02 – 07/06	3835	3914
DUCATO Box (244_)	2.8 TD	90	04/02 – 07/06	3834	
DUCATO Box (244_)	2.8 TD 4x4	90	11/03 – 07/06	3835	3914
DUCATO Box (244_)	2.8 TD 4x4	90	11/03 – 07/06	3834	
DUCATO Box (250_, 290_)	100 Multijet 2,2 D	74	07/06 -	3922	
DUCATO Box (250_, 290_)	100 Multijet 2,2 D	74	07/06 -	3981	
DUCATO Box (250_, 290_)	100 Multijet 2,2 D	74	07/06 -	4171	
DUCATO Box (250_, 290_)	110 Multijet 2,3 D	83	10/11 -	3922	
DUCATO Box (250_, 290_)	110 Multijet 2,3 D	83	10/11 -	3981	
DUCATO Box (250_, 290_)	110 Multijet 2,3 D	83	10/11 -	4171	
DUCATO Box (250_, 290_)	115 Multijet 2,0 D	85	06/11 -	3922	
DUCATO Box (250_, 290_)	115 Multijet 2,0 D	85	06/11 -	3981	
DUCATO Box (250_, 290_)	115 Multijet 2,0 D	85	06/11 -	4171	
DUCATO Box (250_, 290_)	120 Multijet 2,3 D	88	07/06 -	3922	
DUCATO Box (250_, 290_)	120 Multijet 2,3 D	88	07/06 -	3981	
DUCATO Box (250_, 290_)	120 Multijet 2,3 D	88	07/06 -	4171	
DUCATO Box (250_, 290_)	120 Multijet 2,3 D 4x4	88	03/10 -	3922	
DUCATO Box (250_, 290_)	120 Multijet 2,3 D 4x4	88	03/10 -	3981	
DUCATO Box (250_, 290_)	120 Multijet 2,3 D 4x4	88	03/10 -	4171	
DUCATO Box (250_, 290_)	130 Multijet 2,3 D	93	08/06 -	3922	
DUCATO Box (250_, 290_)	130 Multijet 2,3 D	93	08/06 -	3981	
DUCATO Box (250_, 290_)	130 Multijet 2,3 D	93	08/06 -	4171	
DUCATO Box (250_, 290_)	130 Multijet 2,3 D	96	01/07 -	3922	
DUCATO Box (250_, 290_)	130 Multijet 2,3 D	96	01/07 -	3981	
DUCATO Box (250_, 290_)	130 Multijet 2,3 D	96	01/07 -	4171	
DUCATO Box (250_, 290_)	140 Natural Power	100	04/09 -	3922	
DUCATO Box (250_, 290_)	140 Natural Power	100	04/09 -	3981	
DUCATO Box (250_, 290_)	140 Natural Power	100	04/09 -	4171	
DUCATO Box (250_, 290_)	150 Multijet 2,3 D	109	06/11 -	3922	
DUCATO Box (250_, 290_)	150 Multijet 2,3 D	109	06/11 -	3981	
DUCATO Box (250_, 290_)	150 Multijet 2,3 D	109	06/11 -	4171	
DUCATO Box (250_, 290_)	150 Multijet 3,0 D	107	04/10 -	3922	
DUCATO Box (250_, 290_)	150 Multijet 3,0 D	107	04/10 -	3981	
DUCATO Box (250_, 290_)	150 Multijet 3,0 D	107	04/10 -	4171	
DUCATO Box (250_, 290_)	160 Multijet 3,0 D	115	07/06 – 12/11	3922	
DUCATO Box (250_, 290_)	160 Multijet 3,0 D	115	07/06 – 12/11	3981	
DUCATO Box (250_, 290_)	160 Multijet 3,0 D	115	07/06 – 12/11	4171	
DUCATO Box (250_, 290_)	160 Multijet 3,0 D	116	07/06 -	3922	
DUCATO Box (250_, 290_)	160 Multijet 3,0 D	116	07/06 -	3981	
DUCATO Box (250_, 290_)	160 Multijet 3,0 D	116	07/06 -	4171	
DUCATO Box (250_, 290_)	180 Multijet 3,0 D	130	06/11 -	3922	
DUCATO Box (250_, 290_)	180 Multijet 3,0 D	130	06/11 -	3981	
DUCATO Box (250_, 290_)	180 Multijet 3,0 D	130	06/11 -	4171	
DUCATO Box (280_)	1.8	49	01/82 – 10/88	3440	
DUCATO Box (280_)	1.9 D	52	01/88 – 08/90	3440	
DUCATO Box (280_)	1.9 TD	60	03/89 – 08/90	3440	
DUCATO Box (280_)	2.0	55	07/85 – 08/90	3440	
DUCATO Box (280_)	2.0	58	01/82 – 08/90	3440	
DUCATO Box (280_)	2.0	62	03/89 – 08/90	3440	
DUCATO Box (280_)	2.4 D	53	01/82 – 08/90	3440	
DUCATO Box (280_)	2.5 D	55	01/82 – 08/90	3440	
DUCATO Box (280_)	2.5 D 4x4	53	09/86 – 10/87	3440	
DUCATO Box (280_)	2.5 D 4x4	55	09/86 – 05/90	3440	

MAKE & MODEL		KW	YEAR		
FIAT					
DUCATO Box (290_)	1.9 D	52	07/90 – 03/94	3440	
DUCATO Box (290_)	1.9 TD	60	03/89 – 03/94	3440	
DUCATO Box (290_)	2.0	63	06/90 – 05/94	3440	
DUCATO Box (290_)	2.5 D	55	06/90 – 05/94	3440	
DUCATO Box (290_)	2.5 D 4x4	55	07/90 – 03/94	3440	
DUCATO Bus (230_)	1.9 D	50	04/98 – 04/02	3835	3914
DUCATO Bus (230_)	1.9 D	50	04/98 – 04/02	3559	
DUCATO Bus (230_)	1.9 D	50	04/98 – 04/02	3595	
DUCATO Bus (230_)	1.9 D	50	04/98 – 04/02	3834	
DUCATO Bus (230_)	1.9 D Combinato	51	06/95 – 04/02	3835	3914
DUCATO Bus (230_)	1.9 D Combinato	51	06/95 – 04/02	3559	
DUCATO Bus (230_)	1.9 D Combinato	51	06/95 – 04/02	3595	
DUCATO Bus (230_)	1.9 D Combinato	51	06/95 – 04/02	3834	
DUCATO Bus (230_)	1.9 TD	66	04/98 – 04/02	3835	3914
DUCATO Bus (230_)	1.9 TD	66	04/98 – 04/02	3559	
DUCATO Bus (230_)	1.9 TD	66	04/98 – 04/02	3595	
DUCATO Bus (230_)	1.9 TD	66	04/98 – 04/02	3834	
DUCATO Bus (230_)	1.9 TD Combinato	59	08/94 – 04/02	3835	3914
DUCATO Bus (230_)	1.9 TD Combinato	59	08/94 – 04/02	3559	
DUCATO Bus (230_)	1.9 TD Combinato	59	08/94 – 04/02	3595	
DUCATO Bus (230_)	1.9 TD Combinato	59	08/94 – 04/02	3834	
DUCATO Bus (230_)	1.9 TD Panorama/Combinato	60	03/94 – 04/02	3835	3914
DUCATO Bus (230_)	1.9 TD Panorama/Combinato	60	03/94 – 04/02	3559	
DUCATO Bus (230_)	1.9 TD Panorama/Combinato	60	03/94 – 04/02	3595	
DUCATO Bus (230_)	1.9 TD Panorama/Combinato	60	03/94 – 04/02	3834	
DUCATO Bus (230_)	2.0 4x4	80	11/94 – 11/01	3835	3914
DUCATO Bus (230_)	2.0 4x4	80	11/94 – 11/01	3559	
DUCATO Bus (230_)	2.0 4x4	80	11/94 – 11/01	3595	
DUCATO Bus (230_)	2.0 4x4	80	11/94 – 11/01	3834	
DUCATO Bus (230_)	2.0 JTD	62	10/01 – 04/02	3835	3914
DUCATO Bus (230_)	2.0 JTD	62	10/01 – 04/02	3834	
DUCATO Bus (230_)	2.0 Panorama/Combinato	80	03/94 – 04/02	3835	3914
DUCATO Bus (230_)	2.0 Panorama/Combinato	80	03/94 – 04/02	3559	
DUCATO Bus (230_)	2.0 Panorama/Combinato	80	03/94 – 04/02	3595	
DUCATO Bus (230_)	2.0 Panorama/Combinato	80	03/94 – 04/02	3834	
DUCATO Bus (230_)	2.5 D Combinato	62	08/94 – 04/02	3835	3914
DUCATO Bus (230_)	2.5 D Combinato	62	08/94 – 04/02	3559	
DUCATO Bus (230_)	2.5 D Combinato	62	08/94 – 04/02	3595	
DUCATO Bus (230_)	2.5 D Combinato	62	08/94 – 04/02	3834	
DUCATO Bus (230_)	2.5 TD	80	06/94 – 08/98	3559	
DUCATO Bus (230_)	2.5 TD	80	06/94 – 08/98	3595	
DUCATO Bus (230_)	2.5 TD 4x4	80	11/94 – 04/98	3559	
DUCATO Bus (230_)	2.5 TD 4x4	80	11/94 – 04/98	3595	
DUCATO Bus (230_)	2.5 TDI 4x4	85	04/97 – 04/02	3835	3914
DUCATO Bus (230_)	2.5 TDI 4x4	85	04/97 – 04/02	3559	
DUCATO Bus (230_)	2.5 TDI 4x4	85	04/97 – 04/02	3595	
DUCATO Bus (230_)	2.5 TDI 4x4	85	04/97 – 04/02	3834	
DUCATO Bus (230_)	2.5 TDI Panorama/Combinato	80	07/94 – 04/02	3835	3914
DUCATO Bus (230_)	2.5 TDI Panorama/Combinato	80	07/94 – 04/02	3559	
DUCATO Bus (230_)	2.5 TDI Panorama/Combinato	80	07/94 – 04/02	3595	
DUCATO Bus (230_)	2.5 TDI Panorama/Combinato	80	07/94 – 04/02	3834	
DUCATO Bus (230_)	2.5 TDI Panorama/Combinato	85	03/94 – 04/02	3835	3914
DUCATO Bus (230_)	2.5 TDI Panorama/Combinato	85	03/94 – 04/02	3559	
DUCATO Bus (230_)	2.5 TDI Panorama/Combinato	85	03/94 – 04/02	3595	
DUCATO Bus (230_)	2.5 TDI Panorama/Combinato	85	03/94 – 04/02	3834	
DUCATO Bus (230_)	2.8 D	64	02/98 – 04/02	3835	3914
DUCATO Bus (230_)	2.8 D	64	02/98 – 04/02	3559	
DUCATO Bus (230_)	2.8 D	64	02/98 – 04/02	3595	
DUCATO Bus (230_)	2.8 D	64	02/98 – 04/02	3834	
DUCATO Bus (230_)	2.8 JTD	94	11/00 – 04/02	3835	3914
DUCATO Bus (230_)	2.8 JTD	94	11/00 – 04/02	3559	
DUCATO Bus (230_)	2.8 JTD	94	11/00 – 04/02	3595	
DUCATO Bus (230_)	2.8 JTD	94	11/00 – 04/02	3834	
DUCATO Bus (230_)	2.8 JTD 4x4	94	11/00 – 04/02	3835	3914
DUCATO Bus (230_)	2.8 JTD 4x4	94	11/00 – 04/02	3559	
DUCATO Bus (230_)	2.8 JTD 4x4	94	11/00 – 04/02	3595	
DUCATO Bus (230_)	2.8 JTD 4x4	94	11/00 – 04/02	3834	
DUCATO Bus (230_)	2.8 TDI	90	10/97 – 04/02	3835	3914
DUCATO Bus (230_)	2.8 TDI	90	10/97 – 04/02	3559	
DUCATO Bus (230_)	2.8 TDI	90	10/97 – 04/02	3595	
DUCATO Bus (230_)	2.8 TDI	90	10/97 – 04/02	3834	
DUCATO Bus (230_)	2.8 TDI 4x4	90	07/99 – 04/02	3835	3914
DUCATO Bus (230_)	2.8 TDI 4x4	90	07/99 – 04/02	3559	
DUCATO Bus (230_)	2.8 TDI 4x4	90	07/99 – 04/02	3595	
DUCATO Bus (230_)	2.8 TDI 4x4	90	07/99 – 04/02	3834	
DUCATO Bus (244_)	2.0	81	04/02 -	3835	3914

MAKE & MODEL   		KW	YEAR		
FIAT					
DUCATO Bus (244_)	2.0	81	04/02 -	3834	
DUCATO Bus (244_)	2.0 4x4	81	05/02 – 07/06	3835	3914
DUCATO Bus (244_)	2.0 4x4	81	05/02 – 07/06	3834	
DUCATO Bus (244_)	2.0 Bipower	81	11/02 -	3835	3914
DUCATO Bus (244_)	2.0 Bipower	81	11/02 -	3834	
DUCATO Bus (244_)	2.0 JTD	62	04/02 -	3835	3914
DUCATO Bus (244_)	2.0 JTD	62	04/02 -	3834	
DUCATO Bus (244_)	2.3 JTD	81	04/02 -	3835	3914
DUCATO Bus (244_)	2.3 JTD	81	04/02 -	3834	
DUCATO Bus (244_)	2.8 JTD	94	04/02 -	3835	3914
DUCATO Bus (244_)	2.8 JTD	94	04/02 -	3834	
DUCATO Bus (244_)	2.8 JTD	107	04/04 – 07/06	3835	3914
DUCATO Bus (244_)	2.8 JTD	107	04/04 – 07/06	3834	
DUCATO Bus (244_)	2.8 JTD 4x4	94	07/02 -	3835	3914
DUCATO Bus (244_)	2.8 JTD 4x4	94	07/02 -	3834	
DUCATO Bus (244_)	2.8 TD	90	11/03 – 07/06	3835	3914
DUCATO Bus (244_)	2.8 TD	90	11/03 – 07/06	3834	
DUCATO Bus (244_)	2.8 TD 4x4	90	11/03 – 07/06	3835	3914
DUCATO Bus (244_)	2.8 TD 4x4	90	11/03 – 07/06	3834	
DUCATO Bus (250_, 290_)	100 Multijet 2,2 D	74	07/06 -	3922	
DUCATO Bus (250_, 290_)	100 Multijet 2,2 D	74	07/06 -	3981	
DUCATO Bus (250_, 290_)	100 Multijet 2,2 D	74	07/06 -	4171	
DUCATO Bus (250_, 290_)	110 Multijet 2,3 D	83	10/11 -	3922	
DUCATO Bus (250_, 290_)	110 Multijet 2,3 D	83	10/11 -	3981	
DUCATO Bus (250_, 290_)	110 Multijet 2,3 D	83	10/11 -	4171	
DUCATO Bus (250_, 290_)	115 Multijet 2,0 D	85	06/11 -	3922	
DUCATO Bus (250_, 290_)	115 Multijet 2,0 D	85	06/11 -	3981	
DUCATO Bus (250_, 290_)	115 Multijet 2,0 D	85	06/11 -	4171	
DUCATO Bus (250_, 290_)	120 Multijet 2,3 D	88	07/06 -	3922	
DUCATO Bus (250_, 290_)	120 Multijet 2,3 D	88	07/06 -	3981	
DUCATO Bus (250_, 290_)	120 Multijet 2,3 D	88	07/06 -	4171	
DUCATO Bus (250_, 290_)	130 Multijet 2,3 D	93	01/10 -	3922	
DUCATO Bus (250_, 290_)	130 Multijet 2,3 D	93	01/10 -	3981	
DUCATO Bus (250_, 290_)	130 Multijet 2,3 D	93	01/10 -	4171	
DUCATO Bus (250_, 290_)	130 Multijet 2,3 D	96	01/07 -	3922	
DUCATO Bus (250_, 290_)	130 Multijet 2,3 D	96	01/07 -	3981	
DUCATO Bus (250_, 290_)	130 Multijet 2,3 D	96	01/07 -	4171	
DUCATO Bus (250_, 290_)	140 Natural Power	100	04/09 -	3922	
DUCATO Bus (250_, 290_)	140 Natural Power	100	04/09 -	3981	
DUCATO Bus (250_, 290_)	140 Natural Power	100	04/09 -	4171	
DUCATO Bus (250_, 290_)	150 Multijet 2,3 D	109	06/11 -	3922	
DUCATO Bus (250_, 290_)	150 Multijet 2,3 D	109	06/11 -	3981	
DUCATO Bus (250_, 290_)	150 Multijet 2,3 D	109	06/11 -	4171	
DUCATO Bus (250_, 290_)	150 Multijet 2,3 D	110	04/15 -	3922	
DUCATO Bus (250_, 290_)	150 Multijet 2,3 D	110	04/15 -	3981	
DUCATO Bus (250_, 290_)	150 Multijet 2,3 D	110	04/15 -	4171	
DUCATO Bus (250_, 290_)	150 Multijet 3,0 D	107	04/10 -	3922	
DUCATO Bus (250_, 290_)	150 Multijet 3,0 D	107	04/10 -	3981	
DUCATO Bus (250_, 290_)	150 Multijet 3,0 D	107	04/10 -	4171	
DUCATO Bus (250_, 290_)	160 Multijet 3,0 D	115	10/06 -	3922	
DUCATO Bus (250_, 290_)	160 Multijet 3,0 D	115	10/06 -	3981	
DUCATO Bus (250_, 290_)	160 Multijet 3,0 D	115	10/06 -	4171	
DUCATO Bus (250_, 290_)	160 Multijet 3,0 D	116	07/06 -	3922	
DUCATO Bus (250_, 290_)	160 Multijet 3,0 D	116	07/06 -	3981	
DUCATO Bus (250_, 290_)	160 Multijet 3,0 D	116	07/06 -	4171	
DUCATO Bus (250_, 290_)	180 Multijet 3,0 D	130	06/11 -	3922	
DUCATO Bus (250_, 290_)	180 Multijet 3,0 D	130	06/11 -	3981	
DUCATO Bus (250_, 290_)	180 Multijet 3,0 D	130	06/11 -	4171	
DUCATO Panorama (280_)	1.8	51	07/82 – 12/88	3440	
DUCATO Panorama (280_)	1.9 D	52	02/87 – 08/90	3440	
DUCATO Panorama (280_)	1.9 TD	60	03/89 – 08/90	3440	
DUCATO Panorama (280_)	2.0	55	01/86 – 08/90	3440	
DUCATO Panorama (280_)	2.0	58	07/82 – 05/85	3440	
DUCATO Panorama (280_)	2.0	62	09/88 – 08/90	3440	
DUCATO Panorama (280_)	2.4 D	53	07/82 – 12/85	3440	
DUCATO Panorama (280_)	2.5 D	55	01/86 – 08/90	3440	
DUCATO Panorama (280_)	2.5 D 4x4	55	01/87 – 08/90	3440	
DUCATO Panorama (290_)	1.9 D	52	07/90 – 03/94	3440	
DUCATO Panorama (290_)	1.9 TD	60	07/90 – 03/94	3440	
DUCATO Panorama (290_)	2.0	62	07/90 – 03/94	3440	
DUCATO Panorama (290_)	2.0 4x4	63	06/90 – 05/94	3440	
DUCATO Panorama (290_)	2.5 D	55	07/90 – 03/94	3440	
DUCATO Panorama (290_)	2.5 D 4x4	55	07/90 – 03/94	3440	
DUCATO Platform/Chassis (230_)	1.9 D	50	04/98 – 04/02	3835	3914
DUCATO Platform/Chassis (230_)	1.9 D	50	04/98 – 04/02	3559	
DUCATO Platform/Chassis (230_)	1.9 D	50	04/98 – 04/02	3595	

MAKE & MODEL		KW	YEAR		
FIAT					
DUCATO Platform/Chassis (230_)	1.9 D	50	04/98 – 04/02	3834	
DUCATO Platform/Chassis (230_)	1.9 D	51	03/94 – 04/02	3835	3914
DUCATO Platform/Chassis (230_)	1.9 D	51	03/94 – 04/02	3559	
DUCATO Platform/Chassis (230_)	1.9 D	51	03/94 – 04/02	3595	
DUCATO Platform/Chassis (230_)	1.9 D	51	03/94 – 04/02	3834	
DUCATO Platform/Chassis (230_)	1.9 TD	60	03/94 – 04/02	3835	3914
DUCATO Platform/Chassis (230_)	1.9 TD	60	03/94 – 04/02	3559	
DUCATO Platform/Chassis (230_)	1.9 TD	60	03/94 – 04/02	3595	
DUCATO Platform/Chassis (230_)	1.9 TD	60	03/94 – 04/02	3834	
DUCATO Platform/Chassis (230_)	1.9 TD	66	04/98 – 04/02	3835	3914
DUCATO Platform/Chassis (230_)	1.9 TD	66	04/98 – 04/02	3559	
DUCATO Platform/Chassis (230_)	1.9 TD	66	04/98 – 04/02	3595	
DUCATO Platform/Chassis (230_)	1.9 TD	66	04/98 – 04/02	3834	
DUCATO Platform/Chassis (230_)	1.9 TD CAT	59	08/94 – 04/02	3835	3914
DUCATO Platform/Chassis (230_)	1.9 TD CAT	59	08/94 – 04/02	3559	
DUCATO Platform/Chassis (230_)	1.9 TD CAT	59	08/94 – 04/02	3595	
DUCATO Platform/Chassis (230_)	1.9 TD CAT	59	08/94 – 04/02	3834	
DUCATO Platform/Chassis (230_)	2.0	80	03/94 – 04/02	3835	3914
DUCATO Platform/Chassis (230_)	2.0	80	03/94 – 04/02	3559	
DUCATO Platform/Chassis (230_)	2.0	80	03/94 – 04/02	3595	
DUCATO Platform/Chassis (230_)	2.0	80	03/94 – 04/02	3834	
DUCATO Platform/Chassis (230_)	2.0 JTD	62	07/01 – 04/02	3835	3914
DUCATO Platform/Chassis (230_)	2.0 JTD	62	07/01 – 04/02	3559	
DUCATO Platform/Chassis (230_)	2.0 JTD	62	07/01 – 04/02	3595	
DUCATO Platform/Chassis (230_)	2.0 JTD	62	07/01 – 04/02	3834	
DUCATO Platform/Chassis (230_)	2.5 D	62	03/94 – 04/02	3835	3914
DUCATO Platform/Chassis (230_)	2.5 D	62	03/94 – 04/02	3559	
DUCATO Platform/Chassis (230_)	2.5 D	62	03/94 – 04/02	3595	
DUCATO Platform/Chassis (230_)	2.5 D	62	03/94 – 04/02	3834	
DUCATO Platform/Chassis (230_)	2.5 D 4x4	62	03/94 – 04/02	3835	3914
DUCATO Platform/Chassis (230_)	2.5 D 4x4	62	03/94 – 04/02	3559	
DUCATO Platform/Chassis (230_)	2.5 D 4x4	62	03/94 – 04/02	3595	
DUCATO Platform/Chassis (230_)	2.5 D 4x4	62	03/94 – 04/02	3834	
DUCATO Platform/Chassis (230_)	2.5 TD	80	06/94 – 08/98	3559	
DUCATO Platform/Chassis (230_)	2.5 TD	80	06/94 – 08/98	3595	
DUCATO Platform/Chassis (230_)	2.5 TD	85	06/94 – 04/98	3559	
DUCATO Platform/Chassis (230_)	2.5 TD	85	06/94 – 04/98	3595	
DUCATO Platform/Chassis (230_)	2.5 TD 4x4	80	11/94 – 04/98	3559	
DUCATO Platform/Chassis (230_)	2.5 TD 4x4	80	11/94 – 04/98	3595	
DUCATO Platform/Chassis (230_)	2.5 TD 4x4	85	11/94 – 04/98	3559	
DUCATO Platform/Chassis (230_)	2.5 TD 4x4	85	11/94 – 04/98	3595	
DUCATO Platform/Chassis (230_)	2.5 TDI	80	03/94 – 04/02	3835	3914
DUCATO Platform/Chassis (230_)	2.5 TDI	80	03/94 – 04/02	3559	
DUCATO Platform/Chassis (230_)	2.5 TDI	80	03/94 – 04/02	3595	
DUCATO Platform/Chassis (230_)	2.5 TDI	80	03/94 – 04/02	3834	
DUCATO Platform/Chassis (230_)	2.5 TDI	85	03/94 – 04/02	3835	3914
DUCATO Platform/Chassis (230_)	2.5 TDI	85	03/94 – 04/02	3559	
DUCATO Platform/Chassis (230_)	2.5 TDI	85	03/94 – 04/02	3595	
DUCATO Platform/Chassis (230_)	2.5 TDI	85	03/94 – 04/02	3834	
DUCATO Platform/Chassis (230_)	2.5 TDI 4x4	85	06/98 – 04/02	3835	3914
DUCATO Platform/Chassis (230_)	2.5 TDI 4x4	85	06/98 – 04/02	3559	
DUCATO Platform/Chassis (230_)	2.5 TDI 4x4	85	06/98 – 04/02	3595	
DUCATO Platform/Chassis (230_)	2.5 TDI 4x4	85	06/98 – 04/02	3834	
DUCATO Platform/Chassis (230_)	2.8 D	64	02/98 – 04/02	3835	3914
DUCATO Platform/Chassis (230_)	2.8 D	64	02/98 – 04/02	3559	
DUCATO Platform/Chassis (230_)	2.8 D	64	02/98 – 04/02	3595	
DUCATO Platform/Chassis (230_)	2.8 D	64	02/98 – 04/02	3834	
DUCATO Platform/Chassis (230_)	2.8 iDTD 4x4	90	05/98 – 09/01	3559	
DUCATO Platform/Chassis (230_)	2.8 iDTD 4x4	90	05/98 – 09/01	3595	
DUCATO Platform/Chassis (230_)	2.8 JTD	94	11/00 – 04/02	3835	3914
DUCATO Platform/Chassis (230_)	2.8 JTD	94	11/00 – 04/02	3559	
DUCATO Platform/Chassis (230_)	2.8 JTD	94	11/00 – 04/02	3595	
DUCATO Platform/Chassis (230_)	2.8 JTD	94	11/00 – 04/02	3834	
DUCATO Platform/Chassis (230_)	2.8 JTD 4x4	94	10/01 – 04/02	3835	3914
DUCATO Platform/Chassis (230_)	2.8 JTD 4x4	94	10/01 – 04/02	3559	
DUCATO Platform/Chassis (230_)	2.8 JTD 4x4	94	10/01 – 04/02	3595	
DUCATO Platform/Chassis (230_)	2.8 JTD 4x4	94	10/01 – 04/02	3834	
DUCATO Platform/Chassis (230_)	2.8 TD 4x4	64	05/98 – 11/01	3835	3914
DUCATO Platform/Chassis (230_)	2.8 TD 4x4	64	05/98 – 11/01	3559	
DUCATO Platform/Chassis (230_)	2.8 TD 4x4	64	05/98 – 11/01	3595	
DUCATO Platform/Chassis (230_)	2.8 TD 4x4	64	05/98 – 11/01	3834	
DUCATO Platform/Chassis (230_)	2.8 TDI	90	12/98 – 04/02	3835	3914
DUCATO Platform/Chassis (230_)	2.8 TDI	90	12/98 – 04/02	3559	
DUCATO Platform/Chassis (230_)	2.8 TDI	90	12/98 – 04/02	3595	
DUCATO Platform/Chassis (230_)	2.8 TDI	90	12/98 – 04/02	3834	
DUCATO Platform/Chassis (244_)	2.0	81	04/02 – 07/06	3835	3914

MAKE & MODEL		KW	YEAR		
FIAT					
DUCATO Platform/Chassis (244_)	2.0	81	04/02 – 07/06	3834	
DUCATO Platform/Chassis (244_)	2.0 JTD	62	04/02 – 07/06	3835	3914
DUCATO Platform/Chassis (244_)	2.0 JTD	62	04/02 – 07/06	3834	
DUCATO Platform/Chassis (244_)	2.3 JTD	81	04/02 – 07/06	3835	3914
DUCATO Platform/Chassis (244_)	2.3 JTD	81	04/02 – 07/06	3834	
DUCATO Platform/Chassis (244_)	2.8 JTD	90	11/03 – 07/06	3835	3914
DUCATO Platform/Chassis (244_)	2.8 JTD	90	11/03 – 07/06	3834	
DUCATO Platform/Chassis (244_)	2.8 JTD	94	04/02 – 07/06	3835	3914
DUCATO Platform/Chassis (244_)	2.8 JTD	94	04/02 – 07/06	3834	
DUCATO Platform/Chassis (244_)	2.8 JTD 4x4	94	10/02 – 07/06	3835	3914
DUCATO Platform/Chassis (244_)	2.8 JTD 4x4	94	10/02 – 07/06	3834	
DUCATO Platform/Chassis (244_)	2.8 JTD Power	107	05/04 – 07/06	3835	3914
DUCATO Platform/Chassis (244_)	2.8 JTD Power	107	05/04 – 07/06	3834	
DUCATO Platform/Chassis (250_, 290_)	100 Multijet 2,2 D	74	07/06 -	3922	
DUCATO Platform/Chassis (250_, 290_)	100 Multijet 2,2 D	74	07/06 -	3981	
DUCATO Platform/Chassis (250_, 290_)	100 Multijet 2,2 D	74	07/06 -	4171	
DUCATO Platform/Chassis (250_, 290_)	110 Multijet 2,3 D	83	10/11 -	3922	
DUCATO Platform/Chassis (250_, 290_)	110 Multijet 2,3 D	83	10/11 -	3981	
DUCATO Platform/Chassis (250_, 290_)	110 Multijet 2,3 D	83	10/11 -	4171	
DUCATO Platform/Chassis (250_, 290_)	115 Multijet 2,0 D	85	06/11 -	3922	
DUCATO Platform/Chassis (250_, 290_)	115 Multijet 2,0 D	85	06/11 -	3981	
DUCATO Platform/Chassis (250_, 290_)	115 Multijet 2,0 D	85	06/11 -	4171	
DUCATO Platform/Chassis (250_, 290_)	120 Multijet 2,3 D	88	07/06 -	3922	
DUCATO Platform/Chassis (250_, 290_)	120 Multijet 2,3 D	88	07/06 -	3981	
DUCATO Platform/Chassis (250_, 290_)	120 Multijet 2,3 D	88	07/06 -	4171	
DUCATO Platform/Chassis (250_, 290_)	120 Multijet 2,3 D 4x4	88	03/10 -	3922	
DUCATO Platform/Chassis (250_, 290_)	120 Multijet 2,3 D 4x4	88	03/10 -	3981	
DUCATO Platform/Chassis (250_, 290_)	120 Multijet 2,3 D 4x4	88	03/10 -	4171	
DUCATO Platform/Chassis (250_, 290_)	130 Multijet 2,3 D	93	08/06 -	3922	
DUCATO Platform/Chassis (250_, 290_)	130 Multijet 2,3 D	93	08/06 -	3981	
DUCATO Platform/Chassis (250_, 290_)	130 Multijet 2,3 D	93	08/06 -	4171	
DUCATO Platform/Chassis (250_, 290_)	130 Multijet 2,3 D	96	01/07 -	3922	
DUCATO Platform/Chassis (250_, 290_)	130 Multijet 2,3 D	96	01/07 -	3981	
DUCATO Platform/Chassis (250_, 290_)	130 Multijet 2,3 D	96	01/07 -	4171	
DUCATO Platform/Chassis (250_, 290_)	140 Natural Power	100	04/09 -	3922	
DUCATO Platform/Chassis (250_, 290_)	140 Natural Power	100	04/09 -	3981	
DUCATO Platform/Chassis (250_, 290_)	140 Natural Power	100	04/09 -	4171	
DUCATO Platform/Chassis (250_, 290_)	150 Multijet 2,3 D	109	06/11 -	3922	
DUCATO Platform/Chassis (250_, 290_)	150 Multijet 2,3 D	109	06/11 -	3981	
DUCATO Platform/Chassis (250_, 290_)	150 Multijet 2,3 D	109	06/11 -	4171	
DUCATO Platform/Chassis (250_, 290_)	150 Multijet 3,0 D	107	04/10 -	3922	
DUCATO Platform/Chassis (250_, 290_)	150 Multijet 3,0 D	107	04/10 -	3981	
DUCATO Platform/Chassis (250_, 290_)	150 Multijet 3,0 D	107	04/10 -	4171	
DUCATO Platform/Chassis (250_, 290_)	160 Multijet 3,0 D	115	07/06 – 12/11	3922	
DUCATO Platform/Chassis (250_, 290_)	160 Multijet 3,0 D	115	07/06 – 12/11	3981	
DUCATO Platform/Chassis (250_, 290_)	160 Multijet 3,0 D	115	07/06 – 12/11	4171	
DUCATO Platform/Chassis (250_, 290_)	160 Multijet 3,0 D	116	07/06 -	3922	
DUCATO Platform/Chassis (250_, 290_)	160 Multijet 3,0 D	116	07/06 -	3981	
DUCATO Platform/Chassis (250_, 290_)	160 Multijet 3,0 D	116	07/06 -	4171	
DUCATO Platform/Chassis (250_, 290_)	180 Multijet 3,0 D	130	06/11 -	3922	
DUCATO Platform/Chassis (250_, 290_)	180 Multijet 3,0 D	130	06/11 -	3981	
DUCATO Platform/Chassis (250_, 290_)	180 Multijet 3,0 D	130	06/11 -	4171	
DUCATO Platform/Chassis (280_)	1.9 D	52	01/88 – 08/90	3440	
DUCATO Platform/Chassis (280_)	1.9 TD	60	03/89 – 08/90	3440	
DUCATO Platform/Chassis (280_)	2.0	55	07/85 – 08/90	3440	
DUCATO Platform/Chassis (280_)	2.0	62	08/88 – 08/90	3440	
DUCATO Platform/Chassis (280_)	2.5 D	55	07/82 – 08/90	3440	
DUCATO Platform/Chassis (280_)	2.5 D 4x4	55	03/89 – 08/90	3440	
DUCATO Platform/Chassis (290_)	1.9 TD	60	03/89 – 03/94	3440	
DUCATO Platform/Chassis (290_)	2.0	62	07/90 – 03/94	3440	
DUCATO Platform/Chassis (290_)	2.0 4x4	63	06/90 – 05/94	3440	
DUCATO Platform/Chassis (290_)	2.5 D	55	03/89 – 03/94	3440	
DUCATO Platform/Chassis (290_)	2.5 D 4x4	55	07/90 – 03/94	3440	
DUNA (146_)	1.7 DS	44	01/87 – 12/91	3459	
DUNA (146_)	1.7 DS	44	01/87 – 12/91	3461	
DUNA (146_)	60 1.1	43	01/87 – 12/91	3459	
DUNA (146_)	60 1.1	43	01/87 – 12/91	3461	
DUNA (146_)	70 1.3	49	01/87 – 12/91	3459	
DUNA (146_)	70 1.3	49	01/87 – 12/91	3461	
DUNA Weekend (146_)	1.7 DS	44	01/87 – 12/91	3459	
DUNA Weekend (146_)	1.7 DS	44	01/87 – 12/91	3461	
DUNA Weekend (146_)	60 1.1	43	01/87 – 12/91	3459	
DUNA Weekend (146_)	60 1.1	43	01/87 – 12/91	3461	
DUNA Weekend (146_)	70 1.3	49	01/87 – 12/91	3459	
DUNA Weekend (146_)	70 1.3	49	01/87 – 12/91	3461	
EGEA Hatchback (357)	1.4	88	03/16 -	4301	

MAKE & MODEL		KW	YEAR		
FIAT					
EGEA Hatchback (357)	1.6	81	07/16 -	4301	
EGEA Hatchback (357)	1.4 LPG	88	05/16 -	4301	
EGEA Hatchback (357)	1.6 D	84	09/16 -	4301	
EGEA Hatchback (357)	1.6 D	88	03/16 -	4301	
EGEA Sedan (356)	1.4 LPG	88	05/16 -	4301	
EGEA Sedan (356)	1.6 D	88	10/15 -	4301	
EGEA Sedan (356)	1.6 D	84	09/16 -	4301	
EGEA Station Wagon (357)	1.4	88	03/16 -	4301	
EGEA Station Wagon (357)	1.6 D	88	03/16 -	4301	
EGEA Station Wagon (357)	1.4 LPG	88	05/16 -	4301	
EGEA Station Wagon (357)	1.6	81	07/16 -	4301	
EGEA Station Wagon (357)	1.6 D	84	09/16 -	4301	
ELBA (146_)	1.3	43	04/86 – 12/93	3459	
ELBA (146_)	1.3	43	04/86 – 12/93	3461	
ELBA (146_)	1.3 D	33	04/86 – 10/92	3459	
ELBA (146_)	1.3 D	33	04/86 – 10/92	3461	
ELBA (146_)	1.5	49	01/92 – 12/96	3459	
ELBA (146_)	1.5	49	01/92 – 12/96	3461	
ELBA (146_)	1.5	52	04/86 – 10/92	3459	
ELBA (146_)	1.5	52	04/86 – 10/92	3461	
ELBA (146_)	1.7 D	43	04/89 – 12/96	3459	
ELBA (146_)	1.7 D	43	04/89 – 12/96	3461	
FIORINO (127_)	900	33	10/77 – 12/84	3316	
FIORINO (127_)	900	33	10/77 – 12/84	3625	
FIORINO (127_)	1050	37	01/80 – 12/87	3316	
FIORINO (127_)	1050	37	01/80 – 12/87	3625	
FIORINO (147_)	1.0	37	01/80 – 12/87	3316	
FIORINO (147_)	1.0	37	01/80 – 12/87	3625	
FIORINO (147_)	1.0	41	12/86 – 04/88	3316	
FIORINO (147_)	1.0	41	12/86 – 04/88	3625	
FIORINO (147_)	1.1 60	40	11/86 – 04/88	3316	
FIORINO (147_)	1.1 60	40	11/86 – 04/88	3625	
FIORINO (147_)	1.3	49	12/87 – 08/93	3316	
FIORINO (147_)	1.3	49	12/87 – 08/93	3459	
FIORINO (147_)	1.3	49	12/87 – 08/93	3461	
FIORINO (147_)	1.3	49	12/87 – 08/93	3625	
FIORINO (147_)	1.3 D	33	03/82 – 12/87	3316	
FIORINO (147_)	1.3 D	33	03/82 – 12/87	3625	
FIORINO (147_)	1.5	55	01/88 – 08/93	3316	
FIORINO (147_)	1.5	55	01/88 – 08/93	3459	
FIORINO (147_)	1.5	55	01/88 – 08/93	3461	
FIORINO (147_)	1.5	55	01/88 – 08/93	3625	
FIORINO (147_)	1.7 D	42	01/88 – 10/93	3316	
FIORINO (147_)	1.7 D	42	01/88 – 10/93	3458	
FIORINO (147_)	1.7 D	42	01/88 – 10/93	3459	
FIORINO (147_)	1.7 D	42	01/88 – 10/93	3461	
FIORINO (147_)	1.7 D	42	01/88 – 10/93	3625	
FIORINO (147_)	1.7 D	44	12/87 – 12/90	3316	
FIORINO (147_)	1.7 D	44	12/87 – 12/90	3459	
FIORINO (147_)	1.7 D	44	12/87 – 12/90	3461	
FIORINO (147_)	1.7 D	44	12/87 – 12/90	3625	
FIORINO Box (146_)	1.0 iE	33	11/92 – 04/96	3458	
FIORINO Box (146_)	1.0 iE	33	11/92 – 04/96	3459	
FIORINO Box (146_)	1.0 iE	33	11/92 – 04/96	3461	
FIORINO Box (146_)	1.4	52	11/92 – 10/96	3458	
FIORINO Box (146_)	1.4	52	11/92 – 10/96	3459	
FIORINO Box (146_)	1.4	52	11/92 – 10/96	3461	
FIORINO Box (146_)	1.7 D	44	01/88 – 10/99	3316	
FIORINO Box (146_)	1.7 D	44	01/88 – 10/99	3458	
FIORINO Box (146_)	1.7 D	44	01/88 – 10/99	3459	
FIORINO Box (146_)	1.7 D	44	01/88 – 10/99	3461	
FIORINO Box (146_)	1.7 D	44	01/88 – 10/99	3625	
FIORINO Box (146_)	1.7 TD	46	11/96 – 05/00	3458	
FIORINO Box (146_)	60 1.1	40	05/88 – 12/93	3316	
FIORINO Box (146_)	60 1.1	40	05/88 – 12/93	3458	
FIORINO Box (146_)	60 1.1	40	05/88 – 12/93	3459	
FIORINO Box (146_)	60 1.1	40	05/88 – 12/93	3461	
FIORINO Box (146_)	60 1.1	40	05/88 – 12/93	3625	
FIORINO Box (146_)	60 1.7 D	42	05/88 – 10/96	3316	
FIORINO Box (146_)	60 1.7 D	42	05/88 – 10/96	3458	
FIORINO Box (146_)	60 1.7 D	42	05/88 – 10/96	3459	
FIORINO Box (146_)	60 1.7 D	42	05/88 – 10/96	3461	
FIORINO Box (146_)	60 1.7 D	42	05/88 – 10/96	3625	
FIORINO Box (146_)	60 1.7 D	44	05/88 – 05/00	3316	
FIORINO Box (146_)	60 1.7 D	44	05/88 – 05/00	3458	
FIORINO Box (146_)	60 1.7 D	44	05/88 – 05/00	3459	

MAKE & MODEL		KW	YEAR		
FIAT					
FIORINO Box (146_)	60 1.7 D	44	05/88 – 05/00	3461	
FIORINO Box (146_)	60 1.7 D	44	05/88 – 05/00	3625	
FIORINO Box (146_)	65 1.7 TD	46	01/97 – 05/01	3458	
FIORINO Box (146_)	70 1.3	49	01/88 – 12/94	3316	
FIORINO Box (146_)	70 1.3	49	01/88 – 12/94	3458	
FIORINO Box (146_)	70 1.3	49	01/88 – 12/94	3459	
FIORINO Box (146_)	70 1.3	49	01/88 – 12/94	3461	
FIORINO Box (146_)	70 1.3	49	01/88 – 12/94	3625	
FIORINO Box (146_)	70 i.e. 1.4	49	05/94 – 05/01	3458	
FIORINO Box (146_)	75 i.e. 1.5	55	05/88 – 12/93	3316	
FIORINO Box (146_)	75 i.e. 1.5	55	05/88 – 12/93	3458	
FIORINO Box (146_)	75 i.e. 1.5	55	05/88 – 12/93	3459	
FIORINO Box (146_)	75 i.e. 1.5	55	05/88 – 12/93	3461	
FIORINO Box (146_)	75 i.e. 1.5	55	05/88 – 12/93	3625	
FIORINO Box (146_)	75 i.e. 1.6	55	10/93 – 05/01	3458	
FIORINO Pick up (146_)	1.3	49	01/88 – 12/94	3316	
FIORINO Pick up (146_)	1.3	49	01/88 – 12/94	3458	
FIORINO Pick up (146_)	1.3	49	01/88 – 12/94	3459	
FIORINO Pick up (146_)	1.3	49	01/88 – 12/94	3461	
FIORINO Pick up (146_)	1.3	49	01/88 – 12/94	3625	
FIORINO Pick up (146_)	1.4	49	05/94 – 05/01	3458	
FIORINO Pick up (146_)	1.6	55	01/94 – 05/01	3458	
FIORINO Pick up (146_)	1.7 D	42	10/93 – 10/99	3458	
FIORINO Pick up (146_)	1.7 D	44	05/88 – 10/99	3316	
FIORINO Pick up (146_)	1.7 D	44	05/88 – 10/99	3458	
FIORINO Pick up (146_)	1.7 D	44	05/88 – 10/99	3459	
FIORINO Pick up (146_)	1.7 D	44	05/88 – 10/99	3461	
FIORINO Pick up (146_)	1.7 D	44	05/88 – 10/99	3625	
FIORINO Pick up (146_)	1.7 TD	46	01/97 – 05/01	3458	
FIORINO Pick up (147_)	1.0	37	06/82 – 10/87	3316	
FIORINO Pick up (147_)	1.0	37	06/82 – 10/87	3625	
FIORINO Pick up (147_)	1.0	41	12/86 – 10/89	3316	
FIORINO Pick up (147_)	1.0	41	12/86 – 10/89	3459	
FIORINO Pick up (147_)	1.0	41	12/86 – 10/89	3461	
FIORINO Pick up (147_)	1.0	41	12/86 – 10/89	3625	
FIORINO Pick up (147_)	1.3 D	33	05/84 – 12/88	3316	
FIORINO Pick up (147_)	1.3 D	33	05/84 – 12/88	3459	
FIORINO Pick up (147_)	1.3 D	33	05/84 – 12/88	3461	
FIORINO Pick up (147_)	1.3 D	33	05/84 – 12/88	3625	
FREEMONT (JC_, JF_)	2.0 JTD	100	08/11 -	4005	
FREEMONT (JC_, JF_)	2.0 JTD	103	08/11 -	4005	
FREEMONT (JC_, JF_)	2.0 JTD	120	08/11 -	4005	
FREEMONT (JC_, JF_)	2.0 JTD	125	08/11 -	4005	
FREEMONT (JC_, JF_)	2.0 JTD 4x4	120	08/11 -	4005	
FREEMONT (JC_, JF_)	2.0 JTD 4x4	125	08/11 -	4005	
FREEMONT (JC_, JF_)	2.4	125	08/11 -	4005	
FREEMONT (JC_, JF_)	2.4	129	08/12 -	4005	
FREEMONT (JC_, JF_)	3.6	206	08/11 -	4005	
FREEMONT (JC_, JF_)	3.6 4x4	206	08/11 -	4005	
GRANDE PUNTO (199_)	1.2	48	10/05 -	3826/3	
GRANDE PUNTO (199_)	1.3 D Multijet	55	10/05 -	3826/3	
GRANDE PUNTO (199_)	1.4	57	10/05 -	3826/3	
GRANDE PUNTO (199_)	1.4 LPG	57	12/08 -	3826/3	
HCV Ducato V Bus (250_, 290_) 120 Multijet 2,3 D	F1AE0481D	88	07/2006 -	3922/1	
HCV Ducato V Bus (250_, 290_) 130 Multijet 2,3 D	F1AE0481N, F1AE3481D, F1AGL411D	96	06/2011 -	3922/1	
HCV Ducato V Bus (250_, 290_) 130 Multijet 2,3 D	F1AE0481N, F1AE3481D, F1AGL411D	96	06/2011 -	4171/1	
HCV Ducato V Bus (250_, 290_) 130 Multijet 2,3 D	F1AE0481T	93	01/2010 -	3922/1	
HCV Ducato V Bus (250_, 290_) 130 Multijet 2,3 D	F1AE0481T	93	01/2010 -	4171/1	
HCV Ducato V Bus (250_, 290_) 130 Multijet 2,3 D 4x4	F1AE0481N, F1AE3481D, F1AGL411D	96	06/2011 -	3922/1	
HCV Ducato V Bus (250_, 290_) 130 Multijet 2,3 D 4x4	F1AE0481N, F1AE3481D, F1AGL411D	96	06/2011 -	4171/1	
HCV Ducato V Bus (250_, 290_) 140 Natural Power	F1CE0441A, F1CFA401A, F1CFA401C (05.19-.)	100	04/2009 -	3922/1	
HCV Ducato V Bus (250_, 290_) 140 Natural Power	F1CE0441A, F1CFA401A, F1CFA401C (05.19-.)	100	04/2009 -	4171/1	
HCV Ducato V Bus (250_, 290_) 150 Multijet 2,3 D	F1AE3481E	109	06/2011 -	4171/1	
HCV Ducato V Bus (250_, 290_) 150 Multijet 2,3 D	F1AGL411A, F1AGL411C	110	04/2015 -	4171/1	
HCV Ducato V Bus (250_, 290_) 150 Multijet 2,3 D 4x4	F1AGL411A, F1AGL411C	110	04/2015 -	4171/1	
HCV Ducato V Bus (250_, 290_) 150 Multijet 3 D	F1CE3481N	107	04/2010 -	3922/1	
HCV Ducato V Bus (250_, 290_) 150 Multijet 3 D	F1CE3481N	107	04/2010 -	4171/1	
HCV Ducato V Bus (250_, 290_) 160 Multijet 3 D	F1CE0481D	115	10/2006 -	3922/1	
HCV Ducato V Bus (250_, 290_) 160 Multijet 3 D	F1CE0481D, F1CE3481M	116	07/2006 -	3922/1	
HCV Ducato V Bus (250_, 290_) 160 Multijet 3 D 4x4	F1CE0481D, F1CE3481M	116	07/2006 -	3922/1	
HCV Ducato V Bus (250_, 290_) 180 Multijet 3 D	F1CE3481E	130	06/2011 -	4171/1	
HCV Ducato V Platform/Chassis (250_, 290_) 120 Multijet 2,3 D	F1AE0481D, F1AGL4114	88	07/2006 -	3922/1	
HCV Ducato V Platform/Chassis (250_, 290_) 120 Multijet 2,3 D 4x4	F1AE0481D	88	03/2010 -	3922/1	
HCV Ducato V Platform/Chassis (250_, 290_) 130 Multijet 2,3 D	F1AE0481N, F1AE3481D, F1AGL411D	96	07/2006 -	3922/1	
HCV Ducato V Platform/Chassis (250_, 290_) 130 Multijet 2,3 D	F1AE0481N, F1AE3481D, F1AGL411D	96	07/2006 -	4171/1	
HCV Ducato V Platform/Chassis (250_, 290_) 130 Multijet 2,3 D	F1AE0481T	93	08/2006 -	3922/1	

MAKE & MODEL		KW	YEAR		
FIAT					
HCV Ducato V Platform/Chassis (250_, 290_) 130 Multijet 2,3 D	F1AE0481T	93	08/2006 -	4171/1	
HCV Ducato V Platform/Chassis (250_, 290_) 140 Natural Power	F1CE0441A, F1CFA401A, F1CFA401C (05.19-.)	100	04/2009 -	3922/1	
HCV Ducato V Platform/Chassis (250_, 290_) 140 Natural Power	F1CE0441A, F1CFA401A, F1CFA401C (05.19-.)	100	04/2009 -	4171/1	
HCV Ducato V Platform/Chassis (250_, 290_) 150 Multijet 2,3 D	F1AE3481E	109	06/2011 -	4171/1	
HCV Ducato V Platform/Chassis (250_, 290_) 150 Multijet 2,3 D	F1AGL411C	110	12/2015 -	4171/1	
HCV Ducato V Platform/Chassis (250_, 290_) 150 Multijet 3 D	F1CE3481N	107	04/2010 -	3922/1	
HCV Ducato V Platform/Chassis (250_, 290_) 150 Multijet 3 D	F1CE3481N	107	04/2010 -	4171/1	
HCV Ducato V Platform/Chassis (250_, 290_) 160 Multijet 3 D	F1CE0481D	116	07/2006 -	3922/1	
HCV Ducato V Platform/Chassis (250_, 290_) 160 Multijet 3 D	F1CE3481M	115	07/2006 - 12/2011	3922/1	
HCV Ducato V Platform/Chassis (250_, 290_) 180 Multijet 2,3 D	F1AGL4111, F1AGL411B	130	12/2015 -	4171/1	
HCV Ducato V Platform/Chassis (250_, 290_) 180 Multijet 3 D	F1CE3481E	130	06/2011 -	4171/1	
HCV Ducato V Van (250_, 290_) 120 Multijet 2,3 D	F1AE0481D, F1AGL4114	88	07/2006 -	3922/1	
HCV Ducato V Van (250_, 290_) 120 Multijet 2,3 D 4x4	F1AE0481D	88	03/2010 -	3922/1	
HCV Ducato V Van (250_, 290_) 130 Multijet 2,3 D	F1AE0481N, F1AE3481D, F1AGL411D	96	06/2011 -	3922/1	
HCV Ducato V Van (250_, 290_) 130 Multijet 2,3 D	F1AE0481N, F1AE3481D, F1AGL411D	96	06/2011 -	4171/1	
HCV Ducato V Van (250_, 290_) 130 Multijet 2,3 D	F1AE0481T	93	08/2006 - 12/2018	3922/1	
HCV Ducato V Van (250_, 290_) 130 Multijet 2,3 D	F1AE0481T	93	08/2006 - 12/2018	4171/1	
HCV Ducato V Van (250_, 290_) 130 Multijet 2,3 D 4x4	F1AE0481N, F1AE3481D, F1AGL411D	96	06/2011 -	3922/1	
HCV Ducato V Van (250_, 290_) 130 Multijet 2,3 D 4x4	F1AE0481N, F1AE3481D, F1AGL411D	96	06/2011 -	4171/1	
HCV Ducato V Van (250_, 290_) 140 Natural Power	F1CE0441A, F1CFA401A, F1CFA401C (05.19-.)	100	04/2009 -	3922/1	
HCV Ducato V Van (250_, 290_) 140 Natural Power	F1CE0441A, F1CFA401A, F1CFA401C (05.19-.)	100	04/2009 -	4171/1	
HCV Ducato V Van (250_, 290_) 150 Multijet 2,3 D	F1AE3481E	109	06/2011 -	4171/1	
HCV Ducato V Van (250_, 290_) 150 Multijet 2,3 D	F1AGL411A, F1AGL411C	110	12/2015 -	4171/1	
HCV Ducato V Van (250_, 290_) 150 Multijet 2,3 D 4x4	F1AGL411A, F1AGL411C	110	04/2015 -	4171/1	
HCV Ducato V Van (250_, 290_) 150 Multijet 3 D	F1CE3481N	107	04/2010 -	3922/1	
HCV Ducato V Van (250_, 290_) 150 Multijet 3 D	F1CE3481N	107	04/2010 -	4171/1	
HCV Ducato V Van (250_, 290_) 160 Multijet 3 D	F1CE0481D	116	07/2006 -	3922/1	
HCV Ducato V Van (250_, 290_) 160 Multijet 3 D	F1CE3481M	115	07/2006 - 12/2011	3922/1	
HCV Ducato V Van (250_, 290_) 160 Multijet 3 D 4x4	F1CE0481D, F1CE3481M	116	07/2006 -	3922/1	
HCV Ducato V Van (250_, 290_) 180 Multijet 2,3 D	F1AGL4111, F1AGL411B	130	12/2015 -	4171/1	
HCV Ducato V Van (250_, 290_) 180 Multijet 3 D	F1CE3481E	130	06/2011 -	4171/1	
IDEA (350_)	1.2 16V	59	01/04 -	3826	
IDEA (350_)	1.2 16V	59	01/04 -	3826/1	
IDEA (350_)	1.3 D Multijet	51	01/04 -	3826	
IDEA (350_)	1.3 D Multijet	51	01/04 -	3826/1	
IDEA (350_)	1.4	57	10/05 -	3826	
IDEA (350_)	1.4	57	10/05 -	3826/1	
IDEA (350_)	1.4	66	12/03 -	3826/1	
IDEA (350_)	1.4 16V	70	01/04 -	3826	
IDEA (350_)	1.4 16V	70	01/04 -	3826/1	
IDEA (350_)	1.4 LPG	57	03/09 -	3826/1	
LCV Doblo I Cargo (223_) 44228 (223ZXA1A)	223 A5.000	48	03/2001 -	3790/1	
LCV Doblo I Cargo (223_) 44256 JTD 16V	188 A8.000, 188 A9.000	51	05/2004 - 12/2006	3790/1	
LCV Doblo I Cargo (223_) 44348 16V (223ZXD1A)	182 B6.000	76	10/2001 -	3790/1	
LCV Doblo I Cargo (223_) 44348 Natural Power	182 B6.000	76	09/2002 -	3790/1	
LCV Doblo I Cargo (223_) 44440 D (223ZXB1A)	223 A6.000	46	03/2001 -	3790/1	
LCV Doblo I Cargo (223_) 44440 JTD	223 A7.000, 223 B1.000	77	07/2003 -	3790/1	
LCV Doblo I Cargo (223_) 44440 JTD (223ZXE1A)	182 B9.000	74	10/2001 -	3790/1	
LCV Doblo II Box body / Van / SW Van (263_) 2.0 D Multijet	263 A1.000	99	02/2010 -	4121/1	
LCV Doblo II Box body / Van / SW Van (263_) 44256 D Multijet	199 A3.000, 263 A2.000	66	02/2010 -	4121/1	
LCV Doblo II Box body / Van / SW Van (263_) 44256 D Multijet	263 A6.000	55	11/2013 -	4121/1	
LCV Doblo II Box body / Van / SW Van (263_) 44287	198 A4.000	88	10/2011 -	4121/1	
LCV Doblo II Box body / Van / SW Van (263_) 44287	843 A1.000	70	02/2010 -	4121/1	
LCV Doblo II Box body / Van / SW Van (263_) 44287 Natural Power	198 A4.000	88	06/2010 -	4121/1	
LCV Doblo II Box body / Van / SW Van (263_) 44348 D Multijet	198 A3.000, 263 A8.000	77	02/2010 -	4121/1	
LCV Doblo II Box body / Van / SW Van (263_) 44348 D Multijet	263 A3.000, 263 A9.000	74	02/2010 -	4121/1	
LCV Doblo II Box body / Van / SW Van (263_) 44348 D Multijet	263 A4.000, 263 A5.000	66	02/2010 -	4121/1	
LCV Doblo II Box body / Van / SW Van (263_) 44348 D Multijet	940 C1.000	88	02/2016 -	4121/1	
LCV Doblo II Platform/Chassis (263_) / Pratico 2.0 D Multijet	263 A1.000	99	02/2010 -	4121/1	
LCV Doblo II Platform/Chassis (263_) / Pratico 44256 D Multijet	199 A3.000, 263 A2.000	66	02/2010 -	4121/1	
LCV Doblo II Platform/Chassis (263_) / Pratico 44256 D Multijet	263 A6.000	55	11/2013 -	4121/1	
LCV Doblo II Platform/Chassis (263_) / Pratico 44287	198 A4.000	88	10/2011 -	4121/1	
LCV Doblo II Platform/Chassis (263_) / Pratico 44287	843 A1.000	70	04/2010 -	4121/1	
LCV Doblo II Platform/Chassis (263_) / Pratico 44287 Natural Power	198 A4.000	88	06/2010 -	4121/1	
LCV Doblo II Platform/Chassis (263_) / Pratico 44348 D Multijet	198 A3.000, 263 A8.000	77	02/2010 -	4121/1	
LCV Doblo II Platform/Chassis (263_) / Pratico 44348 D Multijet	263 A3.000, 263 A9.000	74	02/2011 -	4121/1	
LCV Doblo II Platform/Chassis (263_) / Pratico 44348 D Multijet	263 A4.000, 263 A5.000	66	02/2010 -	4121/1	
LCV Doblo II Platform/Chassis (263_) / Pratico 44348 D Multijet	940 C1.000	88	02/2016 -	4121/1	
LCV Marengo / Tempra 44440 JTD	182A7.000	74	01/1999 - 12/2001	3618/1	
LCV Marengo / Tempra 44440 JTD	182B4.000	77	01/1999 - 12/2001	3618/1	
LCV Marengo / Tempra 44440 JTD	186A6.000	81	01/1999 - 12/2001	3618/1	
LCV Marengo / Tempra 44440 TD 100	182A7.000	74	01/1996 - 12/2001	3618/1	
LCV Scudo II Platform/Chassis (270_, 272_) 2.0 D Multijet	DW10BTED4, RHR	100	01/2007 -		4151/1
LCV Scudo II Platform/Chassis (270_, 272_) 2.0 D Multijet	DW10BTED4, RHR	100	01/2007 -		4170
LCV Scudo II Platform/Chassis (270_, 272_) 2.0 D Multijet	RH02	94	05/2011 -		4151/1
LCV Scudo II Platform/Chassis (270_, 272_) 2.0 D Multijet	RH02	94	05/2011 -		4170

BESER®

MAKE & MODEL   		KW	YEAR		
FIAT					
LCV Scudo II Platform/Chassis (270_, 272_) 2.0 D Multijet	RH02, RHH	120	07/2010 -		4151/1
LCV Scudo II Platform/Chassis (270_, 272_) 2.0 D Multijet	RH02, RHH	120	07/2010 -		4170
LCV Scudo II Platform/Chassis (270_, 272_) 2.0 D Multijet	RHK	88	01/2007 -		4151/1
LCV Scudo II Platform/Chassis (270_, 272_) 2.0 D Multijet	RHK	88	01/2007 -		4170
LCV Scudo II Platform/Chassis (270_, 272_) 2.0, 4WD	RFH (EW10A)	103	03/2007 - 12/2016		4151/1
LCV Scudo II Platform/Chassis (270_, 272_) 2.0, 4WD	RFH (EW10A)	103	03/2007 - 12/2016		4170
LCV Scudo II Platform/Chassis (270_, 272_) 44348 D Multijet	9H07 (DV6UC), 9HM (DV6UC)	66	01/2007 -		4151/1
LCV Scudo II Platform/Chassis (270_, 272_) 44348 D Multijet	9H07 (DV6UC), 9HM (DV6UC)	66	01/2007 -		4170
LCV Scudo II Platform/Chassis (270_, 272_) 44348 D Multijet	9HU	66	01/2007 -		4151/1
LCV Scudo II Platform/Chassis (270_, 272_) 44348 D Multijet	9HU	66	01/2007 -		4170
LCV Scudo II Van (270_, 272_) 2.0 D Multijet	RH02	94	05/2011 -		4151/1
LCV Scudo II Van (270_, 272_) 2.0 D Multijet	RH02	94	05/2011 -		4170
LCV Scudo II Van (270_, 272_) 2.0 D Multijet	RH02, RHH	120	07/2010 -		4151/1
LCV Scudo II Van (270_, 272_) 2.0 D Multijet	RH02, RHH	120	07/2010 -		4170
LCV Scudo II Van (270_, 272_) 2.0 D Multijet	RHK	88	01/2007 -		4151/1
LCV Scudo II Van (270_, 272_) 2.0 D Multijet	RHK	88	01/2007 -		4170
LCV Scudo II Van (270_, 272_) 2.0 D Multijet	RHR	100	01/2007 -		4151/1
LCV Scudo II Van (270_, 272_) 2.0 D Multijet	RHR	100	01/2007 -		4170
LCV Scudo II Van (270_, 272_) 2.0 D Multijet 4x4	RH02	94	05/2011 -		4151/1
LCV Scudo II Van (270_, 272_) 2.0 D Multijet 4x4	RH02	94	05/2011 -		4170
LCV Scudo II Van (270_, 272_) 2.0 D Multijet 4x4	RHK	88	01/2007 -		4151/1
LCV Scudo II Van (270_, 272_) 2.0 D Multijet 4x4	RHK	88	01/2007 -		4170
LCV Scudo II Van (270_, 272_) 2.0 D Multijet 4x4	RHR	100	01/2007 -		4151/1
LCV Scudo II Van (270_, 272_) 2.0 D Multijet 4x4	RHR	100	01/2007 -		4170
LCV Scudo II Van (270_, 272_) 2.0, 4WD	RFH (EW10A)	103	03/2007 - 12/2016		4151/1
LCV Scudo II Van (270_, 272_) 2.0, 4WD	RFH (EW10A)	103	03/2007 - 12/2016		4170
LCV Scudo II Van (270_, 272_) 44348 D Multijet	9H07 (DV6UC), 9HM (DV6UC)	66	02/2011 -		4151/1
LCV Scudo II Van (270_, 272_) 44348 D Multijet	9H07 (DV6UC), 9HM (DV6UC)	66	02/2011 -		4170
LCV Scudo II Van (270_, 272_) 44348 D Multijet	9HU	66	01/2007 -		4151/1
LCV Scudo II Van (270_, 272_) 44348 D Multijet	9HU	66	01/2007 -		4170
LINEA (323_)	1.3 D Multijet	66	06/07 -	3826/1	
LINEA (323_)	1.3 D Multijet	66	06/07 -	3826/3	
LINEA (323_)	1.3 D Multijet	70	09/09 -	3826/1	
LINEA (323_)	1.4	57	06/07 -	3826/1	
LINEA (323_)	1.4	57	06/07 -	3826/3	
LINEA (323_)	1.4 T-Jet	88	09/07 -		4123
LINEA (323_)	1.6	80	07/08 -		4123
LINEA (323_)	1.6 D Multijet	77	06/09 -		4123
LINEA (323_)	1.9 16V	94	07/08 -		4123
MAREA (185_)	1.6	68	03/99 – 08/00	3618	
MAREA (185_)	1.6	76	09/00 – 08/02	3618	
MAREA (185_)	1.6 100 16V	76	09/96 – 05/02	3618	
MAREA (185_)	1.6 100 16V Bipower	76	04/99 – 05/02	3618	
MAREA (185_)	1.6 16V	75	04/97 – 02/99	3618	
MAREA (185_)	1.6 SX	72	09/00 – 08/02	3618	
MAREA (185_)	1.8 115 16V	83	09/96 – 05/02	3618	
MAREA (185_)	1.9 JTD	79	01/01 – 12/07	3618	
MAREA (185_)	1.9 JTD 105	77	04/99 – 01/01	3618	
MAREA (185_)	1.9 JTD 110	81	01/01 – 05/02	3618	
MAREA (185_)	1.9 TD 100	74	09/96 – 05/02	3618	
Marea (185_) 44348 100 16V	182 A4.000	76	09/1996 - 05/2002	3618/1	
Marea (185_) 44348 100 16V Bipower	185 A3.000 (01.00-.), 186 A4.000	76	04/1999 - 05/2002	3618/1	
Marea (185_) 44348 16V	185 A3.000	75	04/1997 - 02/1999	3618/1	
Marea (185_) 44409 115 16V	182 A2.000	83	09/1996 - 05/2002	3618/1	
Marea (185_) 44440 JTD	182 B4.000, 182 B9.000	79	01/2001 - 12/2007	3618/1	
Marea (185_) 44440 JTD 105 (185AXN1A)	182 B4.000	77	12/1998 - 12/2002	3618/1	
Marea (185_) 44440 JTD 110 (185AXT1A)	186 A6.000	81	09/2000 - 08/2002	3618/1	
Marea (185_) 44440 TD 100 (185AX_)	182 A7.000	74	05/1996 - 12/2002	3618/1	
MAREA Weekend (185_)	1.2 16V	60	10/98 – 05/02	3618	
MAREA Weekend (185_)	1.4 80 12V	59	09/96 – 05/02	3618	
MAREA Weekend (185_)	1.6	76	09/00 – 08/02	3618	
MAREA Weekend (185_)	1.6 100 16V	76	09/96 – 05/02	3618	
MAREA Weekend (185_)	1.8 115 16V	83	09/96 – 05/02	3618	
MAREA Weekend (185_)	1.9 JTD	79	01/01 – 12/07	3618	
MAREA Weekend (185_)	1.9 JTD 105	77	04/99 – 05/02	3618	
MAREA Weekend (185_)	1.9 TD 100	74	09/96 – 05/02	3618	
MAREA Weekend (185_)	1.9 TD 75	55	09/96 – 05/02	3618	
Marea Weekend (185_) 44228 16V	182 B2.000	60	10/1998 - 05/2002	3618/1	
Marea Weekend (185_) 44348 100 16V	182 A4.000	76	09/1996 - 05/2002	3618/1	
Marea Weekend (185_) 44409 115 16V	182 A2.000	83	09/1996 - 05/2002	3618/1	
Marea Weekend (185_) 44440 JTD	182 B4.000, 182 B9.000	79	01/2001 - 12/2007	3618/1	
Marea Weekend (185_) 44440 JTD 105 (185BXN1A)	182 B4.000	77	12/1998 - 12/2002	3618/1	
Marea Weekend (185_) 44440 JTD 110 (185BXT1A)	186 A6.000	81	09/2000 - 08/2002	3618/1	
Marea Weekend (185_) 44440 TD 100 (185BX_)	182 A7.000, 182 B9.000	74	09/1996 - 06/2003	3618/1	
PALIO (178BX)	1.0	45	04/96 -	3568	
PALIO (178BX)	1.0	45	04/96 -	3690	

MAKE & MODEL		KW	YEAR		
FIAT					
PALIO (178BX)	1.0	45	04/96 – 10/03	3790	
PALIO (178BX)	1.1	40	07/97 – 10/03	3568	
PALIO (178BX)	1.1	40	07/97 – 10/03	3690	
PALIO (178BX)	1.1	40	07/97 – 10/03	3790	
PALIO (178BX)	1.2	44	07/97 – 08/02	3568	
PALIO (178BX)	1.2	44	07/97 – 08/02	3690	
PALIO (178BX)	1.2	44	07/97 – 08/02	3790	
PALIO (178BX)	1.2	50	06/99 – 10/00	3690	
PALIO (178BX)	1.2	50	06/99 – 10/00	3790	
PALIO (178BX)	1.2	54	06/98 -	3690	
PALIO (178BX)	1.2	54	06/98 -	3790	
PALIO (178BX)	1.2	59	09/01 -	3690	
PALIO (178BX)	1.2	59	09/01 -	3790	
PALIO (178BX)	1.2 (178 B7.045)	44	07/97 – 08/02	3827	
PALIO (178BX)	1.2 (178 C4.066)	44	07/97 – 08/02	3827	
PALIO (178BX)	1.2 (188 A4.000)	44	07/97 – 08/02	3827	
PALIO (178BX)	1.3 JTD Multijet	51	06/03 -	3690	
PALIO (178BX)	1.3 JTD Multijet	51	06/03 -	3790	
PALIO (178BX)	1.4	51	04/96 -	3568	
PALIO (178BX)	1.4	51	04/96 -	3690	
PALIO (178BX)	1.4	51	04/96 – 10/02	3790	
PALIO (178BX)	1.4 CAT	51	04/96 -	3568	
PALIO (178BX)	1.4 CAT	51	04/96 -	3690	
PALIO (178BX)	1.4 Cat	51	04/96 – 08/01	3790	
PALIO (178BX)	1.6 16V	74	04/96 -	3690	
PALIO (178BX)	1.6 16V	74	04/96 – 10/02	3790	
PALIO (178BX)	1.7 TD	53	09/01 -	3690	
PALIO (178BX)	1.7 TD	53	09/01 -	3790	
PALIO Weekend (178_)	1.2	59	09/01 -	3690	
PALIO Weekend (178_)	1.2	59	09/01 -	3790	
PALIO Weekend (178_)	1.2 (178DX.G1A)	54	04/96 – 02/01	3568	
PALIO Weekend (178_)	1.2 (178DX.G1A)	54	04/96 – 02/01	3690	
PALIO Weekend (178_)	1.2 (178DX.G1A)	54	04/96 – 02/01	3790	
PALIO Weekend (178_)	1.2 (178DYA1A)	44	02/01 -	3690	
PALIO Weekend (178_)	1.2 (178DYA1A)	44	02/01 -	3790	
PALIO Weekend (178_)	1.2 Flex	44	07/97 – 08/02	3690	
PALIO Weekend (178_)	1.2 Flex	44	07/97 – 08/02	3790	
PALIO Weekend (178_)	1.2 LPG	44	07/97 – 08/02	3690	
PALIO Weekend (178_)	1.2 LPG	44	07/97 – 08/02	3790	
PALIO Weekend (178_)	1.5	62	02/02 -	3690	
PALIO Weekend (178_)	1.5	62	02/02 -	3790	
PALIO Weekend (178_)	1.6 16V	68	07/97 – 10/03	3690	
PALIO Weekend (178_)	1.6 16V	68	07/97 – 10/03	3790	
PALIO Weekend (178_)	1.6 16V (178DX.D1A)	74	04/96 – 02/01	3690	
PALIO Weekend (178_)	1.6 16V (178DX.D1A)	74	04/96 – 02/01	3790	
PALIO Weekend (178_)	1.6 16V (178DYC1A06)	76	02/01 -	3690	
PALIO Weekend (178_)	1.6 16V (178DYC1A06)	76	02/01 -	3790	
PALIO Weekend (178_)	1.7 TD (178DX.H1A)	51	04/96 – 03/01	3568	
PALIO Weekend (178_)	1.7 TD (178DX.H1A)	51	04/96 – 03/01	3690	
PALIO Weekend (178_)	1.7 TD (178DX.H1A)	51	04/96 – 03/01	3790	
PALIO Weekend (178_)	1.9 D (178DYD1A07)	46	03/01 -	3690	
PALIO Weekend (178_)	1.9 D (178DYD1A07)	46	03/01 -	3790	
PALIO Weekend (178_)	1.9 JTD	59	09/01 -	3690	
PALIO Weekend (178_)	1.9 JTD	59	09/01 -	3790	
Palio I (178_) 44228	176 A8.000, 178 B5.000, 178 E2.000	54	06/1998 -	3569	
Palio I (178_) 44228	178 B7.045, 178 C4.066, 188 A4.000	44	07/1997 - 08/2002	3569	
Palio I (178_) 44228	178 D6.011	59	03/2000 - 01/2012	3569	
Palio I (178_) 44228	178 E2.000	50	06/1999 - 10/2000	3569	
Palio I (178_) 44228	178 E9.011	52	06/2004 -	3569	
Palio I (178_) 44378 TD	176 A3.000	51	10/2002 - 01/2012	3569	
Palio I (178_) 44378 TD	176 A3.000	51	10/2002 - 01/2012	3790/1	
Palio I (178_) 44378 TD	176 A3.000, 176 A5.000	52	02/1997 - 10/2003	3569	
Palio I (178_) 44378 TD	176 A3.000, 176 A5.000	52	02/1997 - 10/2003	3790/1	
Palio I (178_) 44378 TD	176 A3.000, 176 A5.000	53	09/2001 -	3569	
Palio I (178_) 44378 TD	176 A3.000, 176 A5.000	53	09/2001 -	3790/1	
Palio I Weekend (17_, 37_) 44228	178 B5.000 (04.96-.)	54	04/1996 - 02/2001	3569	
Palio I Weekend (17_, 37_) 44228	178 C4.066, 188 A4.000	44	07/1997 - 10/2004	3569	
Palio I Weekend (17_, 37_) 44228	178 D6.011, 188 A5.000	59	09/2001 -	3569	
Palio I Weekend (17_, 37_) 44228	178 E2.000	50	06/1999 - 10/2002	3569	
Palio I Weekend (17_, 37_) 44378 TD	176 A3.000	51	04/1996 - 03/2001	3569	
Palio I Weekend (17_, 37_) 44378 TD	176A5.000	53	07/1997 - 12/2003	3569	
Palio I Weekend (17_, 37_) 44378 TD	176A5.000	59	07/1997 - 12/2003	3569	
PANDA (141_)	650	22	01/82 – 07/04	3424/1	
PANDA (141_)	650	22	01/82 – 07/04	3466	
PANDA (141_)	650	22	01/82 – 07/04	3468	
PANDA (141_)	750	25	01/86 – 10/03	3424/1	

MAKE & MODEL   	KW	YEAR		
FIAT				
PANDA (141_)	750	25	01/86 – 10/03	3466
PANDA (141_)	750	25	01/86 – 10/03	3468
PANDA (141_)	800	25	02/81 – 12/85	3424/1
PANDA (141_)	800	25	02/81 – 12/85	3466
PANDA (141_)	800	25	02/81 – 12/85	3468
PANDA (141_)	900	29	04/92 – 12/96	3424/1
PANDA (141_)	900	29	04/92 – 12/96	3466
PANDA (141_)	900	29	04/92 – 12/96	3468
PANDA (141_)	900	33	10/80 – 06/94	3424/1
PANDA (141_)	900	33	10/80 – 06/94	3466
PANDA (141_)	900	33	10/80 – 06/94	3468
PANDA (141_)	950	35	09/82 – 08/83	3424/1
PANDA (141_)	950	35	09/82 – 08/83	3466
PANDA (141_)	950	35	09/82 – 08/83	3468
PANDA (141_)	1000	32	01/86 – 04/92	3424/1
PANDA (141_)	1000	32	01/86 – 04/92	3466
PANDA (141_)	1000	32	01/86 – 04/92	3468
PANDA (141_)	1000	37	01/85 – 12/92	3424/1
PANDA (141_)	1000	37	01/85 – 12/92	3466
PANDA (141_)	1000	37	01/85 – 12/92	3468
PANDA (141_)	1100	37	05/91 – 12/99	3424/1
PANDA (141_)	1100	37	05/91 – 12/99	3466
PANDA (141_)	1100	37	05/91 – 12/99	3468
PANDA (141_)	1100	40	02/95 – 09/03	3424/1
PANDA (141_)	1100	40	02/95 – 09/03	3466
PANDA (141_)	1100	40	02/95 – 09/03	3468
PANDA (141_)	0.8 750 (141 B.000)	25	01/86 – 07/92	3439
PANDA (141_)	0.9 Fire S All-wheel Drive	33	10/80 – 04/86	3424/1
PANDA (141_)	0.9 Fire S All-wheel Drive	33	10/80 – 04/86	3466
PANDA (141_)	0.9 Fire S All-wheel Drive	33	10/80 – 04/86	3468
PANDA (141_)	1.0 1000 (156 A2.100)	32	01/86 – 02/92	3439
PANDA (141_)	1.0 1000 (156 A3.100)	32	01/86 – 02/92	3439
PANDA (141_)	1.1 (156 C.046)	37	05/91 – 03/95	3439
PANDA (141_)	1.1 (187 A1.000)	40	09/00 – 02/04	3439
PANDA (141_)	1000 4x4	32	01/86 – 07/89	3424/1
PANDA (141_)	1000 4x4	32	01/86 – 07/89	3466
PANDA (141_)	1000 4x4	32	01/86 – 07/89	3468
PANDA (141_)	1000 4x4	33	05/86 – 12/94	3424/1
PANDA (141_)	1000 4x4	33	05/86 – 12/94	3466
PANDA (141_)	1000 4x4	33	05/86 – 12/94	3468
PANDA (141_)	1000 4x4	37	01/86 – 12/92	3424/1
PANDA (141_)	1000 4x4	37	01/86 – 12/92	3466
PANDA (141_)	1000 4x4	37	01/86 – 12/92	3468
PANDA (141_)	1000 i.e. CAT	33	10/87 – 08/98	3424/1
PANDA (141_)	1000 i.e. CAT	33	10/87 – 08/98	3466
PANDA (141_)	1000 i.e. CAT	33	10/87 – 08/98	3468
PANDA (141_)	1100 4x4	40	02/95 – 07/04	3424/1
PANDA (141_)	1100 4x4	40	02/95 – 07/04	3466
PANDA (141_)	1100 4x4	40	02/95 – 07/04	3468
PANDA (141_)	1100 Trekking 4x4	37	10/91 – 07/04	3424/1
PANDA (141_)	1100 Trekking 4x4	37	10/91 – 07/04	3466
PANDA (141_)	1100 Trekking 4x4	37	10/91 – 07/04	3468
PANDA (141_)	1300 D	27	04/86 – 12/92	3424/1
PANDA (141_)	1300 D	27	04/86 – 12/92	3466
PANDA (141_)	1300 D	27	04/86 – 12/92	3468
PANDA (141_)	750 (141AI)	25	01/86 – 01/95	3424/1
PANDA (141_)	750 (141AI)	25	01/86 – 01/95	3466
PANDA (141_)	750 (141AI)	25	01/86 – 01/95	3468
PANDA (141_)	750 (141AM) CAT	25	01/95 – 10/03	3424/1
PANDA (141_)	750 (141AM) CAT	25	01/95 – 10/03	3466
PANDA (141_)	750 (141AM) CAT	25	01/95 – 10/03	3468
PANDA (141_)	950 4x4	35	09/83 – 12/86	3424/1
PANDA (141_)	950 4x4	35	09/83 – 12/86	3466
PANDA (141_)	950 4x4	35	09/83 – 12/86	3468
PANDA (141A_)	650	22	01/82 – 07/04	3439
PANDA (141A_)	0.7 650 (141 A.000)	22	01/82 – 07/04	3439
PANDA (141A_)	0.9 900 (1170 A1.046)	29	04/92 – 12/96	3439
PANDA (141A_)	0.9 900 (146 A.000)	33	10/80 – 06/94	3439
PANDA (141A_)	0.9 900 (100 GL3.000)	33	10/80 – 06/94	3439
PANDA (141A_)	0.9 Fire S (146 A.048)	33	10/80 – 04/86	3439
PANDA (141A_)	1.0 1000 (141 C2.000)	33	05/86 – 12/94	3439
PANDA (141A_)	1.0 1000 (156 A2.100)	32	01/86 – 04/92	3439
PANDA (141A_)	1.0 1000 (156 A2.246)	33	05/86 – 12/94	3439
PANDA (141A_)	1.0 1000 (156 A3.000)	37	01/85 – 12/92	3439
PANDA (141A_)	1.0 1000 (156 A3.100)	32	01/86 – 07/89	3439
PANDA (141A_)	1.1 1100 (156 C.046)	37	05/91 – 12/99	3439

MAKE & MODEL		KW	YEAR		
FIAT					
PANDA (141A_)	1.1 1100 (176 B2.000)	40	02/95 – 07/04	3439	
PANDA (141A_)	1.1 1100 (187 A1.000)	40	02/95 – 09/03	3439	
PANDA (141A_)	1.1 1100 Trekking (156 C.046)	37	10/91 – 07/04	3439	
PANDA (141A_)	1.3 1300 D (156 A5.000)	27	04/86 – 12/92	3439	
PANDA (141A_)	1000 i.e. Cat (141 C2.000)	33	10/87 – 08/98	3439	
PANDA (141A_)	1000 i.e. Cat (156 A2.246)	33	10/87 – 08/98	3439	
PANDA (141A_)	750 (156 A4.000)	25	01/86 – 10/03	3439	
PANDA (141A_)	750 (141 B.000)	25	01/86 – 01/95	3439	
PANDA (141A_)	800 (100 GL6.000)	25	02/81 – 12/85	3439	
PANDA (169_)	1.1	40	09/03 -	3608	
PANDA (169_)	1.1	40	09/03 -	3643	
PANDA (169_)	1.2	44	09/03 -	3608	
PANDA (169_)	1.2	44	09/03 -	3643	
PANDA (169_)	1.2	51	03/10 -	3608	
PANDA (169_)	1.2	51	03/10 -	3643	
PANDA (169_)	1.2 4x4	44	10/04 -	4173	
PANDA (169_)	1.2 4x4	51	11/09 -	4173	
PANDA (169_)	1.2 LPG	44	04/09 -	3608	
PANDA (169_)	1.2 LPG	44	04/09 -	3643	
PANDA (169_)	1.2 LPG	51	11/10 -	3608	
PANDA (169_)	1.2 LPG	51	11/10 -	3643	
PANDA (169_)	1.2 Natural Power	44	01/07 – 11/09	4173	
PANDA (169_)	1.3 D Multijet	51	09/03 -	4173	
PANDA (169_)	1.3 D Multijet	55	06/06 -	4173	
PANDA (169_)	1.3 D Multijet 4x4	51	10/04 -	3826/1	
PANDA (169_)	1.3 D Multijet 4x4	55	09/10 -	3826/1	
PANDA (169_)	1.4	74	10/06 -	3826/1	
PANDA (169_)	1.4 Natural Power	51	01/10 -	3608	
PANDA (169_)	1.4 Natural Power	51	01/10 -	3643	
PANDA (169_)	1.4 Natural Power	57	09/10 -	4173	
PANDA Van (141_)	750	25	01/86 – 07/92	3424/1	
PANDA Van (141_)	750	25	01/86 – 07/92	3466	
PANDA Van (141_)	750	25	01/86 – 07/92	3468	
PANDA Van (141_)	1000	32	01/86 – 02/92	3424/1	
PANDA Van (141_)	1000	32	01/86 – 02/92	3466	
PANDA Van (141_)	1000	32	01/86 – 02/92	3468	
PANDA Van (141_)	1.1	37	05/91 – 03/95	3424/1	
PANDA Van (141_)	1.1	37	05/91 – 03/95	3466	
PANDA Van (141_)	1.1	37	05/91 – 03/95	3468	
PANDA Van (141_)	1.1	40	09/00 – 02/04	3424/1	
PANDA Van (141_)	1.1	40	09/00 – 02/04	3466	
PANDA Van (141_)	1.1	40	09/00 – 02/04	3468	
PANDA Van (141_)	1.1 4x4	40	09/00 – 02/04	3424/1	
PANDA Van (141_)	1.1 4x4	40	09/00 – 02/04	3466	
PANDA Van (141_)	1.1 4x4	40	09/00 – 02/04	3468	
PANDA Van (141_)	1000 i.e	33	08/92 – 02/04	3424/1	
PANDA Van (141_)	1000 i.e	33	08/92 – 02/04	3466	
PANDA Van (141_)	1000 i.e	33	08/92 – 02/04	3468	
PANDA Van (169_)	1.1	40	09/04 -	3608	
PANDA Van (169_)	1.1	40	09/04 -	3643	
PANDA Van (169_)	1.2	44	09/04 -	3608	
PANDA Van (169_)	1.2	44	09/04 -	3643	
PANDA Van (169_)	1.2	51	09/10 -	3608	
PANDA Van (169_)	1.2	51	09/10 -	3643	
PANDA Van (169_)	1.2 4x4	44	09/04 -	4173	
PANDA Van (169_)	1.2 4x4	51	09/10 -	4173	
PANDA Van (169_)	1.2 LPG	44	04/09 -	3608	
PANDA Van (169_)	1.2 LPG	44	04/09 -	3643	
PANDA Van (169_)	1.2 LPG	51	09/10 -	3608	
PANDA Van (169_)	1.2 LPG	51	09/10 -	3643	
PANDA Van (169_)	1.2 Natural Power	44	01/07 – 11/09	4173	
PANDA Van (169_)	1.3 D Multijet	51	03/04 -	4173	
PANDA Van (169_)	1.3 D Multijet	55	01/06 -	4173	
PANDA Van (169_)	1.3 D Multijet 4x4	51	10/04 – 12/06	4173	
PANDA Van (169_)	1.3 D Multijet 4x4	55	01/06 -	3826/1	
PANDA Van (169_)	1.4 Natural Power	57	10/09 -	3826/1	
PENNY VAN (257_)	1.1	43	01/86 – 12/90	3459	
PENNY VAN (257_)	1.1	43	01/86 – 12/90	3461	
PENNY VAN (257_)	1.3	49	01/86 – 12/90	3459	
PENNY VAN (257_)	1.3	49	01/86 – 12/90	3461	
PENNY VAN (257_)	1.7 D	44	01/86 – 12/90	3459	
PENNY VAN (257_)	1.7 D	44	01/86 – 12/90	3461	
PREMIO	1.3	43	03/85 – 06/92	3459	
PREMIO	1.3	43	03/85 – 06/92	3461	
PREMIO	1.5	49	03/85 – 12/96	3459	
PREMIO	1.5	49	03/85 – 12/96	3461	

MAKE & MODEL		KW	YEAR		
FIAT					
PREMIO	1.5 i.e.	55	06/92 – 12/96	3459	
PREMIO	1.5 i.e.	55	06/92 – 12/96	3461	
PREMIO	1.6	62	03/85 – 12/96	3459	
PREMIO	1.6	62	03/85 – 12/96	3461	
PREMIO	1.6 i.e.	60	08/93 – 12/96	3459	
PREMIO	1.6 i.e.	60	08/93 – 12/96	3461	
PUNTO (176_)	1.2 16V	63	04/97 – 09/99	3466	
PUNTO (176_)	1.2 16V	63	04/97 – 09/99	3468	
PUNTO (176_)	1.2 16V	63	04/97 – 09/99	3897	
PUNTO (176_)	1.4 GT Turbo	96	09/96 – 09/99	3466	
PUNTO (176_)	1.4 GT Turbo	96	09/96 – 09/99	3468	
PUNTO (176_)	1.4 GT Turbo	98	01/94 – 09/96	3466	
PUNTO (176_)	1.4 GT Turbo	98	01/94 – 09/96	3468	
PUNTO (176_)	1.6	65	01/94 – 04/97	3466	
PUNTO (176_)	1.6	65	01/94 – 04/97	3468	
PUNTO (176_)	1.7 D	42	04/94 – 09/97	3466	
PUNTO (176_)	1.7 D	42	04/94 – 09/97	3468	
PUNTO (176_)	1.7 D	42	04/94 – 09/97	3608	
PUNTO (176_)	1.7 D	42	04/94 – 09/97	3643	
PUNTO (176_)	1.7 TD	46	09/96 – 09/99	3466	
PUNTO (176_)	1.7 TD	46	09/96 – 09/99	3468	
PUNTO (176_)	1.7 TD	46	09/96 – 09/99	3897	
PUNTO (176_)	1.7 TD	51	01/94 – 09/99	3466	
PUNTO (176_)	1.7 TD	51	01/94 – 09/99	3468	
PUNTO (176_)	1.7 TD	51	01/94 – 09/99	3897	
PUNTO (176_)	1.7 TD	52	01/94 – 09/99	3466	
PUNTO (176_)	1.7 TD	52	01/94 – 09/99	3468	
PUNTO (176_)	1.7 TD	52	01/94 – 09/99	3897	
PUNTO (176_)	55 1.1	40	09/93 – 09/99	3466	
PUNTO (176_)	55 1.1	40	09/93 – 09/99	3468	
PUNTO (176_)	55 1.1	40	09/93 – 09/99	3608	
PUNTO (176_)	55 1.1	40	09/93 – 09/99	3643	
PUNTO (176_)	60 1.2	43	01/94 – 09/99	3466	
PUNTO (176_)	60 1.2	43	01/94 – 09/99	3468	
PUNTO (176_)	60 1.2	43	01/94 – 09/99	3608	
PUNTO (176_)	60 1.2	43	01/94 – 09/99	3643	
PUNTO (176_)	60 1.2	44	03/94 – 09/99	3466	
PUNTO (176_)	60 1.2	44	03/94 – 09/99	3468	
PUNTO (176_)	60 1.2	44	03/94 – 09/99	3608	
PUNTO (176_)	60 1.2	44	03/94 – 09/99	3643	
PUNTO (176_)	75 1.2	54	10/93 – 09/99	3466	
PUNTO (176_)	75 1.2	54	10/93 – 09/99	3468	
PUNTO (176_)	75 1.2	54	10/93 – 09/99	3608	
PUNTO (176_)	75 1.2	54	10/93 – 09/99	3643	
PUNTO (188_)	1.2 16V 80 (188.233, .235,.253, .255, .333, .353, .639.)	59	09/99 – 12/06	3897	
PUNTO (188_)	1.2 60 (188.030, .050, .130,.150, .230, .250)	44	09/99 – 03/12	3608	
PUNTO (188_)	1.2 60 (188.030, .050, .130,.150, .230, .250)	44	09/99 – 03/12	3643	
PUNTO (188_)	1.2 Bifuel	44	08/07 – 03/12	3608	
PUNTO (188_)	1.2 Bifuel	44	08/07 – 03/12	3643	
PUNTO (188_)	1.2 Natural Power	44	09/03 – 03/12	3608	
PUNTO (188_)	1.2 Natural Power	44	09/03 – 03/12	3643	
PUNTO (188_)	1.8 130 HGT (188.738, .718)	96	09/99 – 03/12	3690	
PUNTO (188_)	1.8 130 HGT (188.738, .718)	96	09/99 – 03/12	3790	
PUNTO Convertible (176_)	60 1.2	43	04/94 – 06/00	3466	
PUNTO Convertible (176_)	60 1.2	43	04/94 – 06/00	3468	
PUNTO Convertible (176_)	60 1.2	43	04/94 – 06/00	3608	
PUNTO Convertible (176_)	60 1.2	43	04/94 – 06/00	3643	
PUNTO Convertible (176_)	60 1.2	44	05/95 – 06/00	3466	
PUNTO Convertible (176_)	60 1.2	44	05/95 – 06/00	3468	
PUNTO Convertible (176_)	60 1.2	44	05/95 – 06/00	3608	
PUNTO Convertible (176_)	60 1.2	44	05/95 – 06/00	3643	
PUNTO Convertible (176_)	85 16V 1.2	63	04/97 – 06/00	3466	
PUNTO Convertible (176_)	85 16V 1.2	63	04/97 – 06/00	3468	
PUNTO Convertible (176_)	85 16V 1.2	63	04/97 – 06/00	3897	
PUNTO Convertible (176_)	90 1.6	65	04/94 – 04/97	3466	
PUNTO Convertible (176_)	90 1.6	65	04/94 – 04/97	3468	
PUNTO EVO (199_)	1.2	48	10/09 – 02/12	3826/3	
PUNTO EVO (199_)	1.3 D Multijet	55	10/09 – 02/12	3826/3	
PUNTO EVO (199_)	1.4	57	10/09 – 02/12	3826/3	
Punto I (176_) 44287 GT Turbo (176AS_)	176 B6.000 (09.96-.)	96	09/1996 - 07/1999	3618/1	
PUNTO Van (176_)	1.1	40	04/96 – 02/00	3466	
PUNTO Van (176_)	1.1	40	04/96 – 02/00	3468	
PUNTO Van (176_)	1.1	40	04/96 – 02/00	3608	
PUNTO Van (176_)	1.1	40	04/96 – 02/00	3643	
PUNTO Van (176_)	1.7 D	42	04/96 – 02/00	3466	
PUNTO Van (176_)	1.7 D	42	04/96 – 02/00	3468	

MAKE & MODEL		KW	YEAR		
FIAT					
PUNTO Van (176_)	1.7 D	42	04/96 – 02/00	3608	
PUNTO Van (176_)	1.7 D	42	04/96 – 02/00	3643	
PUNTO Van (176_)	1.7 TD	46	09/96 – 09/99	3466	
PUNTO Van (176_)	1.7 TD	46	09/96 – 09/99	3468	
PUNTO Van (176_)	1.7 TD	46	09/96 – 09/99	3897	
PUNTO Van (176_)	1.7 TD	52	04/96 – 02/00	3466	
PUNTO Van (176_)	1.7 TD	52	04/96 – 02/00	3468	
PUNTO Van (176_)	1.7 TD	52	04/96 – 02/00	3897	
PUNTO Van (188_)	1.2 60	44	02/00 – 10/09	3608	
PUNTO Van (188_)	1.2 60	44	02/00 – 10/09	3643	
PUNTO Van (188_)	1.3 D Multijet	55	02/05 – 10/09	3618	
PUNTO Van (199_)	1.3 D Multijet	55	04/08 -	3826/3	
PUNTO Van (199_)	1.4	57	02/06 – 06/13	3826/3	
PUNTO Van (199_)	1.4 LPG	57	03/09 -	3826/3	
PUNTO Van (199_)	1.4 Natural Power	57	03/09 -	3826/3	
REGATA (138_)	100 Super 1.6	70	10/83 – 07/89	3424/1	
REGATA (138_)	100 Super 1.6	70	10/83 – 07/89	3466	
REGATA (138_)	100 Super 1.6	70	10/83 – 07/89	3468	
REGATA (138_)	100 Super 1.6	74	10/83 – 12/90	3424/1	
REGATA (138_)	100 Super 1.6	74	10/83 – 12/90	3466	
REGATA (138_)	100 Super 1.6	74	10/83 – 12/90	3468	
REGATA (138_)	60 Diesel 1.7	43	09/83 – 12/86	3424/1	
REGATA (138_)	60 Diesel 1.7	43	09/83 – 12/86	3466	
REGATA (138_)	60 Diesel 1.7	43	09/83 – 12/86	3468	
REGATA (138_)	60 Diesel 1.7	44	05/85 – 03/89	3424/1	
REGATA (138_)	60 Diesel 1.7	44	05/85 – 03/89	3466	
REGATA (138_)	60 Diesel 1.7	44	05/85 – 03/89	3468	
REGATA (138_)	65 Diesel 1.9	48	04/84 – 07/89	3424/1	
REGATA (138_)	65 Diesel 1.9	48	04/84 – 07/89	3466	
REGATA (138_)	65 Diesel 1.9	48	04/84 – 07/89	3468	
REGATA (138_)	70 1.3	48	09/83 – 07/89	3424/1	
REGATA (138_)	70 1.3	50	09/83 – 07/86	3424/1	
REGATA (138_)	75 1.5	55	12/83 – 07/89	3424/1	
REGATA (138_)	75 i.e. 1.5	55	07/85 – 07/89	3424/1	
REGATA (138_)	80 Turbo Diesel 1.9	59	05/86 – 07/89	3424/1	
REGATA (138_)	80 Turbo Diesel 1.9	59	05/86 – 07/89	3466	
REGATA (138_)	80 Turbo Diesel 1.9	59	05/86 – 07/89	3468	
REGATA (138_)	85 1.5	58	05/85 – 12/87	3424/1	
REGATA (138_)	85 1.5	58	05/85 – 12/87	3466	
REGATA (138_)	85 1.5	58	05/85 – 12/87	3468	
REGATA (138_)	85 1.6	60	10/83 – 06/90	3424/1	
REGATA (138_)	85 1.6	60	10/83 – 06/90	3466	
REGATA (138_)	85 1.6	60	10/83 – 06/90	3468	
REGATA (138_)	85 Super 1.5	60	09/83 – 04/85	3424/1	
REGATA (138_)	85 Super 1.5	60	09/83 – 04/85	3466	
REGATA (138_)	85 Super 1.5	60	09/83 – 04/85	3468	
REGATA (138_)	90 i.e. 1.6	66	01/87 – 07/89	3424/1	
REGATA (138_)	90 i.e. 1.6	66	01/87 – 07/89	3466	
REGATA (138_)	90 i.e. 1.6	66	01/87 – 07/89	3468	
REGATA Weekend (138_)	100 1.6 (RF)	74	09/84 – 12/90	3466	
REGATA Weekend (138_)	100 1.6 (RF)	74	09/84 – 12/90	3468	
REGATA Weekend (138_)	100 i.e. 1.6	74	01/87 – 12/90	3466	
REGATA Weekend (138_)	100 i.e. 1.6	74	01/87 – 12/90	3468	
REGATA Weekend (138_)	60 Diesel 1.7	44	01/84 – 12/89	3466	
REGATA Weekend (138_)	60 Diesel 1.7	44	01/84 – 12/89	3468	
REGATA Weekend (138_)	65 Diesel 1.9	48	04/84 – 07/89	3466	
REGATA Weekend (138_)	65 Diesel 1.9	48	04/84 – 07/89	3468	
REGATA Weekend (138_)	70 1.3	50	01/84 – 07/89	3466	
REGATA Weekend (138_)	70 1.3	50	01/84 – 07/89	3468	
REGATA Weekend (138_)	75 1.5	55	09/84 – 07/89	3466	
REGATA Weekend (138_)	75 1.5	55	09/84 – 07/89	3468	
REGATA Weekend (138_)	75 1.5 i.e. CAT	55	12/86 – 07/89	3466	
REGATA Weekend (138_)	75 1.5 i.e. CAT	55	12/86 – 07/89	3468	
REGATA Weekend (138_)	80 Turbo Diesel 1.9	59	05/86 – 07/89	3466	
REGATA Weekend (138_)	80 Turbo Diesel 1.9	59	05/86 – 07/89	3468	
REGATA Weekend (138_)	85 1.5	60	01/84 – 04/89	3466	
REGATA Weekend (138_)	85 1.5	60	01/84 – 04/89	3468	
REGATA Weekend (138_)	90 i.e. 1.6	66	01/87 – 07/89	3466	
REGATA Weekend (138_)	90 i.e. 1.6	66	01/87 – 07/89	3468	
RITMO (138_)	1.0	44	09/78 – 09/82	3316	
RITMO (138_)	1.0	44	09/78 – 09/82	3424/1	
RITMO (138_)	1.1	40	10/82 – 12/87	3424/1	
RITMO (138_)	1.1	43	04/85 – 12/87	3424/1	
RITMO (138_)	1.3	48	01/78 – 08/85	3316	
RITMO (138_)	1.3	48	01/78 – 08/85	3424/1	
RITMO (138_)	1.3	50	01/83 – 04/85	3424/1	

MAKE & MODEL   		KW	YEAR		
FIAT					
RITMO (138_)	1.3	55	01/81 – 09/82	3316	
RITMO (138_)	1.3	55	01/81 – 09/82	3424/1	
RITMO (138_)	1.5	55	01/78 – 12/88	3316	
RITMO (138_)	1.5	55	01/78 – 12/88	3424/1	
RITMO (138_)	1.5	58	08/85 – 05/87	3424/1	
RITMO (138_)	1.5	60	01/83 – 12/87	3329/1	
RITMO (138_)	1.5	60	01/83 – 12/87	3424/1	
RITMO (138_)	1.5	60	01/83 – 12/87	3466	
RITMO (138_)	1.5	60	01/83 – 12/87	3468	
RITMO (138_)	1.5	63	01/81 – 05/87	3316	
RITMO (138_)	1.5	63	01/81 – 05/87	3424/1	
RITMO (138_)	1.6	66	09/85 – 12/87	3424/1	
RITMO (138_)	1.6	74	01/83 – 12/87	3424/1	
RITMO (138_)	1.6	77	05/81 – 12/87	3485	
RITMO (138_)	1.7 Diesel	40	10/79 – 09/82	3316	
RITMO (138_)	1.7 Diesel	40	10/79 – 09/82	3424/1	
RITMO (138_)	1.7 Diesel	43	10/79 – 10/85	3316	
RITMO (138_)	1.7 Diesel	43	10/79 – 10/85	3424/1	
RITMO (138_)	1.7 Diesel	44	05/85 – 12/87	3424/1	
RITMO (138_)	1.9 TD	59	12/85 – 12/87	3466	
RITMO (138_)	1.9 TD	59	12/85 – 12/87	3468	
RITMO (138_)	125 TC Abarth 2.0	92	11/81 – 09/82	3329/1	
RITMO Convertible (138_)	1.3	48	10/79 – 09/83	3466	
RITMO Convertible (138_)	1.3	48	10/79 – 09/83	3468	
RITMO Convertible (138_)	1.3	48	10/79 – 09/83	3485	
RITMO Convertible (138_)	100 1.6	74	10/85 – 12/87	3466	
RITMO Convertible (138_)	100 1.6	74	10/85 – 12/87	3468	
RITMO Convertible (138_)	100 1.6	74	10/85 – 12/87	3485	
RITMO Convertible (138_)	100 1.6	77	10/85 – 12/87	3466	
RITMO Convertible (138_)	100 1.6	77	10/85 – 12/87	3468	
RITMO Convertible (138_)	100 1.6	77	10/85 – 12/87	3485	
RITMO Convertible (138_)	50 1.3	50	10/85 – 12/87	3466	
RITMO Convertible (138_)	50 1.3	50	10/85 – 12/87	3468	
RITMO Convertible (138_)	50 1.3	50	10/85 – 12/87	3485	
RITMO Convertible (138_)	85 1.5	60	03/83 – 12/86	3466	
RITMO Convertible (138_)	85 1.5	60	03/83 – 12/86	3468	
RITMO Convertible (138_)	85 1.5	60	03/83 – 12/86	3485	
RITMO Convertible (138_)	85 1.5	63	01/80 – 07/89	3466	
RITMO Convertible (138_)	85 1.5	63	01/80 – 07/89	3468	
RITMO Convertible (138_)	85 1.5	63	01/80 – 07/89	3485	
RITMO II (138_)	105 1.6	77	01/83 – 12/87	3466	
RITMO II (138_)	105 1.6	77	01/83 – 12/87	3468	
RITMO II (138_)	105 1.6	77	01/83 – 12/87	3485	
RITMO II (138_)	60 Diesel 1.7	43	10/82 – 10/85	3424/1	
RITMO II (138_)	75 1.5	55	09/85 – 12/88	3424/1	
SCUDO (270_, 272_)	1.6 D Multijet	66	01/07 -	3972	4151
SCUDO (270_, 272_)	2.0 D Multijet	88	01/07 -	3972	4151
SCUDO (270_, 272_)	2.0 D Multijet	94	04/11 -	3972	4151
SCUDO (270_, 272_)	2.0 D Multijet	100	01/07 -	3972	4151
SCUDO (270_, 272_)	2.0 D Multijet	120	07/10 -	3972	4151
SCUDO (270_, 272_)	2.0 D Multijet 4x4	88	01/07 -	3972	4151
SCUDO (270_, 272_)	2.0 D Multijet 4x4	94	04/11 -	3972	4151
SCUDO Box (220_)	1.6	58	02/96 – 12/06	3799	
SCUDO Box (220_)	1.6	58	02/96 – 12/06	3986	
SCUDO Box (220_)	1.9 D	51	02/96 – 12/06	3799	
SCUDO Box (220_)	1.9 D	51	02/96 – 12/06	3986	
SCUDO Box (220_)	1.9 D	51	04/98 – 12/06	3986	
SCUDO Box (220_)	1.9 TD	66	02/96 – 12/06	3799	
SCUDO Box (220_)	1.9 TD	66	02/96 – 12/06	3986	
SCUDO Box (220_)	1.9 TD	68	02/98 – 12/06	3799	
SCUDO Box (220_)	1.9 TD	68	02/98 – 12/06	3986	
SCUDO Box (220_)	2.0	100	05/00 – 12/06	3799	
SCUDO Box (220_)	2.0	100	05/00 – 12/06	3986	
SCUDO Box (220_)	2.0 JTD	69	10/99 – 12/06	3799	
SCUDO Box (220_)	2.0 JTD	69	10/99 – 12/06	3986	
SCUDO Box (220_)	2.0 JTD	80	12/02 – 12/06	3799	
SCUDO Box (220_)	2.0 JTD	80	12/02 – 12/06	3986	
SCUDO Box (220_)	2.0 JTD 16V	80	05/99 – 12/06	3799	
SCUDO Box (220_)	2.0 JTD 16V	80	05/99 – 12/06	3986	
SCUDO Box (270_, 272_)	1.6 D Multijet	66	01/07 -	3972	4151
SCUDO Box (270_, 272_)	2.0 D Multijet	88	01/07 -	3972	4151
SCUDO Box (270_, 272_)	2.0 D Multijet	94	05/11 -	3972	4151
SCUDO Box (270_, 272_)	2.0 D Multijet	100	01/07 -	3972	4151
SCUDO Box (270_, 272_)	2.0 D Multijet	120	07/10 -	3972	4151
SCUDO Box (270_, 272_)	2.0 D Multijet 4x4	88	01/07 -	3972	4151
SCUDO Combinato (220_)	1.6	58	02/96 – 12/06	3799	

MAKE & MODEL		KW	YEAR		
FIAT					
SCUDO Combinato (220_)	1.6	58	02/96 – 12/06	3986	
SCUDO Combinato (220_)	1.9 D	51	02/96 – 12/06	3799	
SCUDO Combinato (220_)	1.9 D	51	04/98 – 12/06	3986	
SCUDO Combinato (220_)	1.9 TD	68	02/96 – 12/06	3799	
SCUDO Combinato (220_)	1.9 TD	68	02/96 – 12/06	3986	
SCUDO Combinato (220_)	1.9 TD Eco	66	02/96 – 12/06	3799	
SCUDO Combinato (220_)	1.9 TD Eco	66	02/96 – 12/06	3986	
SCUDO Combinato (220_)	2.0 16V	100	06/00 – 12/06	3799	
SCUDO Combinato (220_)	2.0 16V	100	06/00 – 12/06	3986	
SCUDO Combinato (220_)	2.0 JTD	69	01/04 – 12/06	3799	
SCUDO Combinato (220_)	2.0 JTD	69	01/04 – 12/06	3986	
SCUDO Combinato (220_)	2.0 JTD	80	12/99 – 12/06	3799	
SCUDO Combinato (220_)	2.0 JTD	80	12/99 – 12/06	3986	
SCUDO Combinato (220_)	2.0 JTD 16V	80	05/99 – 12/06	3799	
SCUDO Combinato (220_)	2.0 JTD 16V	80	05/99 – 12/06	3986	
Scudo II (270_, 272_) 2.0 D Multijet	RH02	94	04/2011 -		4151/1
Scudo II (270_, 272_) 2.0 D Multijet	RH02	94	04/2011 -		4170
Scudo II (270_, 272_) 2.0 D Multijet	RH02, RHH	120	07/2010 -		4151/1
Scudo II (270_, 272_) 2.0 D Multijet	RH02, RHH	120	07/2010 -		4170
Scudo II (270_, 272_) 2.0 D Multijet	RHK	88	01/2007 -		4151/1
Scudo II (270_, 272_) 2.0 D Multijet	RHK	88	01/2007 -		4170
Scudo II (270_, 272_) 2.0 D Multijet	RHR	100	01/2007 -		4151/1
Scudo II (270_, 272_) 2.0 D Multijet	RHR	100	01/2007 -		4170
Scudo II (270_, 272_) 2.0 D Multijet 4x4	RH02	94	04/2011 -		4151/1
Scudo II (270_, 272_) 2.0 D Multijet 4x4	RH02	94	04/2011 -		4170
Scudo II (270_, 272_) 2.0 D Multijet 4x4	RHK	88	01/2007 -		4151/1
Scudo II (270_, 272_) 2.0 D Multijet 4x4	RHK	88	01/2007 -		4170
Scudo II (270_, 272_) 2.0 D Multijet 4x4	RHR	100	01/2007 -		4151/1
Scudo II (270_, 272_) 2.0 D Multijet 4x4	RHR	100	01/2007 -		4170
Scudo II (270_, 272_) 2.0, 4WD	RFH (EW10A)	103	03/2007 - 12/2016		4151/1
Scudo II (270_, 272_) 2.0, 4WD	RFH (EW10A)	103	03/2007 - 12/2016		4170
Scudo II (270_, 272_) 44348 D Multijet	9H07 (DV6UC), 9HM (DV6UC)	66	02/2011 -		4151/1
Scudo II (270_, 272_) 44348 D Multijet	9H07 (DV6UC), 9HM (DV6UC)	66	02/2011 -		4170
Scudo II (270_, 272_) 44348 D Multijet	9HU	66	01/2007 -		4151/1
Scudo II (270_, 272_) 44348 D Multijet	9HU	66	01/2007 -		4170
SCUDO Platform/Chassis (270_, 272_)	1.6 D Multijet	66	01/07 -	3972	4151
SCUDO Platform/Chassis (270_, 272_)	2.0 D Multijet	88	01/07 -	3972	4151
SCUDO Platform/Chassis (270_, 272_)	2.0 D Multijet	94	05/11 -	3972	4151
SCUDO Platform/Chassis (270_, 272_)	2.0 D Multijet	100	01/07 -	3972	4151
SCUDO Platform/Chassis (270_, 272_)	2.0 D Multijet	120	07/10 -	3972	4151
SEDICI (FY_)	1.6 16V	79	06/06 – 10/14		4148
SEDICI (FY_)	1.6 16V	88	06/06 – 10/14		4148
SEDICI (FY_)	1.6 16V 4x4	79	06/06 – 10/14		4148
SEDICI (FY_)	1.6 16V 4x4	88	06/06 – 10/14		4148
SEDICI (FY_)	1.9 D Multijet	88	06/06 – 10/14		4148
SEDICI (FY_)	1.9 D Multijet 4x4	88	06/06 – 10/14		4148
SEDICI (FY_)	2.0 D Multijet	99	06/06 – 10/14		4148
SEDICI (FY_)	2.0 D Multijet 4x4	99	06/06 – 10/14		4148
Sedici (FY_, 189_) 2.0 D Multijet	D20AA	99	06/2006 - 10/2014		4148/1
Sedici (FY_, 189_) 2.0 D Multijet 4x4	D20AA	99	06/2006 - 10/2014		4148/1
Sedici (FY_, 189_) 44348 16V	M16A	79	06/2006 - 10/2014		4148/1
Sedici (FY_, 189_) 44348 16V	M16A	88	06/2006 - 10/2014		4148/1
Sedici (FY_, 189_) 44348 16V 4x4	M16A	79	06/2006 - 10/2014		4148/1
Sedici (FY_, 189_) 44348 16V 4x4	M16A	88	06/2006 - 10/2014		4148/1
SEICENTO / 600 (187_)	0.9 (187AXA, 187AXA1A)	29	01/98 – 01/10	3608	
SEICENTO / 600 (187_)	0.9 (187AXA, 187AXA1A)	29	01/98 – 01/10	3643	
SEICENTO / 600 (187_)	1.1 (187AXB, 187AXB1A)	40	01/98 – 01/10	3608	
SEICENTO / 600 (187_)	1.1 (187AXB, 187AXB1A)	40	01/98 – 01/10	3643	
SEICENTO / 600 (187_)	Elektra (187AEA1A, 187BEA1A)	30	01/99 – 01/05	3466	
SEICENTO / 600 (187_)	Elektra (187AEA1A, 187BEA1A)	30	01/99 – 01/05	3468	
SEICENTO / 600 (187_)	Elettrica	21	06/98 – 02/00	3466	
SEICENTO / 600 (187_)	Elettrica	21	06/98 – 02/00	3468	
SEICENTO / 600 (187_)	Elettrica	22	03/00 – 10/02	3466	
SEICENTO / 600 (187_)	Elettrica	22	03/00 – 10/02	3468	
SEICENTO / 600 Van (287_)	0.9 (187AXA)	29	01/98 – 01/10	3608	
SEICENTO / 600 Van (287_)	0.9 (187AXA)	29	01/98 – 01/10	3643	
SEICENTO / 600 Van (287_)	1.1 (187CXB/C)	40	01/98 – 01/10	3608	
SEICENTO / 600 Van (287_)	1.1 (187CXB/C)	40	01/98 – 01/10	3643	
SIENA (172_)	1.3 JTD	51	11/07 -	3690	
SIENA (172_)	1.3 JTD	51	11/07 -	3790	
SIENA (178_)	1.3 JTD	51	09/03 – 12/09	3690	
SIENA (178_)	1.3 JTD	51	09/03 – 12/09	3790	
SIENA (178_)	1.4	51	04/96 – 12/09	3568	
SIENA (178_)	1.4 CAT	51	04/96 – 12/09	3568	
Siena (178_, 172_) / Palio /Albea 44228	178 B5.000 (09.98-.)	54	09/1998 - 12/2002	3569	
Siena (178_, 172_) / Palio /Albea 44228	178 C4.066, 188 A4.000	44	09/2001 - 12/2012	3569	

MAKE & MODEL		KW	YEAR		
FIAT					
Siena (178_, 172_) / Palio /Albea 44228	178 E9.011	52-53	06/2004 - 12/2009	3569	
Siena (178_, 172_) / Palio /Albea 44228	188 A5.000	59	09/2001 - 12/2009	3569	
Siena (178_, 172_) / Palio /Albea 44378 D	176A3.000	52	04/1996 - 03/2001	3569	
STILO (192_)	1.2 16V (192_XA1B)	59	02/02 – 11/06	3826/1	
STILO (192_)	1.4 16V	66	03/05 – 11/06	3826/1	
STILO (192_)	1.4 16V	70	01/04 – 11/06	3826/1	
STILO (192_)	1.6	100	04/05 – 11/06	3826/1	
STILO (192_)	1.6 16V	77	05/05 – 11/06	3826/1	
STILO (192_)	1.6 16V (192_XB1A)	76	10/01 – 11/06	3826/1	
STILO (192_)	1.9 JTD (192AXS1B, 192BXS1B)	66	09/04 – 11/06	3826/1	
STILO Multi Wagon (192_)	1.4 16V	66	03/05 – 08/08	3826/1	
STILO Multi Wagon (192_)	1.4 16V	70	01/04 – 08/08	3826/1	
STILO Multi Wagon (192_)	1.6 16V	76	01/03 – 08/08	3826/1	
STILO Multi Wagon (192_)	1.6 16V	77	03/05 – 12/07	3826/1	
STRADA Pickup (178_)	1.2	44	04/03 -	3690	
STRADA Pickup (178_)	1.2	44	04/03 -	3790	
STRADA Pickup (178_)	1.2	54	06/99 -	3690	
STRADA Pickup (178_)	1.2	54	06/99 – 12/06	3790	
STRADA Pickup (178_)	1.2 Trekking	60	11/05 -	3690	
STRADA Pickup (178_)	1.2 Trekking	60	11/05 -	3790	
STRADA Pickup (178_)	1.3 D Multijet	62	05/06 -	3690	
STRADA Pickup (178_)	1.3 D Multijet	62	05/06 -	3790	
STRADA Pickup (178_)	1.6 Trekking	76	11/05 -	3690	
STRADA Pickup (178_)	1.7 TD	51	06/99 -	3690	
STRADA Pickup (178_)	1.7 TD	51	06/99 – 12/06	3790	
STRADA Pickup (178_)	1.9 D	46	12/00 -	3690	
STRADA Pickup (178_)	1.9 D	46	12/00 -	3790	
STRADA Pickup (178_)	1.9 JTD	59	04/03 -	3690	
STRADA Pickup (178_)	1.9 JTD	59	04/03 -	3790	
STRADA Pickup (278_)	1.3 D Multijet	70	10/10 -	3690	
STRADA Pickup (278_)	1.3 D Multijet	70	10/10 -	3790	
TALENTO Box (290_)	1.9 D (290UEHK)	52	03/89 – 03/94	3440	
TALENTO Box (290_)	1.9 D (290UK)	52	03/89 – 03/94	3440	
TALENTO Bus (290_)	2.0 (290U4)	55	03/89 – 03/94	3440	
TALENTO Bus (290_)	2.0 (290UEH4)	55	03/89 – 03/94	3440	
TALENTO Platform/Chassis (290_)	1.9 D (290UAK, 290UTK)	52	03/89 – 03/94	3440	
TALENTO Platform/Chassis (290_)	2.0 (290UA4)	55	03/89 – 03/94	3440	
TEMPRA (159_)	1.4 i.e. (159.AC)	57	03/91 – 08/96	3432	
TEMPRA (159_)	1.4 i.e. (159.AC)	57	03/91 – 08/96	3466	
TEMPRA (159_)	1.4 i.e. (159.AC)	57	03/91 – 08/96	3468	
TEMPRA (159_)	1.4 i.e. (159.AC)	57	03/91 – 08/96	3491	
TEMPRA (159_)	1.4 i.e. (159.AC, 159.AX)	51	03/92 – 08/96	3432	
TEMPRA (159_)	1.4 i.e. (159.AC, 159.AX)	51	03/92 – 08/96	3466	
TEMPRA (159_)	1.4 i.e. (159.AC, 159.AX)	51	03/92 – 08/96	3468	
TEMPRA (159_)	1.4 i.e. (159.AC, 159.AX)	51	03/92 – 08/96	3491	
TEMPRA (159_)	1.6	51	04/90 – 06/93	3432	
TEMPRA (159_)	1.6	51	04/90 – 06/93	3466	
TEMPRA (159_)	1.6	51	04/90 – 06/93	3468	
TEMPRA (159_)	1.6	51	04/90 – 06/93	3491	
TEMPRA (159_)	1.6 (159.AD)	63	03/90 – 08/96	3432	
TEMPRA (159_)	1.6 (159.AD)	63	03/90 – 08/96	3466	
TEMPRA (159_)	1.6 (159.AD)	63	03/90 – 08/96	3468	
TEMPRA (159_)	1.6 (159.AD)	63	03/90 – 08/96	3491	
TEMPRA (159_)	1.6 i.e. (159.AE)	57	06/90 – 07/92	3432	
TEMPRA (159_)	1.6 i.e. (159.AE)	57	06/90 – 07/92	3466	
TEMPRA (159_)	1.6 i.e. (159.AE)	57	06/90 – 07/92	3468	
TEMPRA (159_)	1.6 i.e. (159.AE)	57	06/90 – 07/92	3491	
TEMPRA (159_)	1.6 i.e. (159.AJ)	63	06/94 – 08/96	3466	
TEMPRA (159_)	1.6 i.e. (159.AJ)	63	06/94 – 08/96	3468	
TEMPRA (159_)	1.6 i.e. (159.AJ)	66	06/94 – 08/96	3466	
TEMPRA (159_)	1.6 i.e. (159.AJ)	66	06/94 – 08/96	3468	
TEMPRA (159_)	1.6 i.e. (159.AS, 159.AT)	55	06/92 – 08/96	3432	
TEMPRA (159_)	1.6 i.e. (159.AS, 159.AT)	55	06/92 – 08/96	3466	
TEMPRA (159_)	1.6 i.e. (159.AS, 159.AT)	55	06/92 – 08/96	3468	
TEMPRA (159_)	1.6 i.e. (159.AS, 159.AT)	55	06/92 – 08/96	3491	
TEMPRA (159_)	1.8 i.e. (159.AN)	77	03/92 – 08/96	3466	
TEMPRA (159_)	1.8 i.e. (159.AN)	77	03/92 – 08/96	3468	
TEMPRA (159_)	1.8 i.e. (159.AN)	81	03/90 – 08/96	3466	
TEMPRA (159_)	1.8 i.e. (159.AN)	81	03/90 – 08/96	3468	
TEMPRA (159_)	1.8 i.e. (159.AV)	76	09/93 – 08/96	3466	
TEMPRA (159_)	1.8 i.e. (159.AV)	76	09/93 – 08/96	3468	
TEMPRA (159_)	1.8 i.e. (159.AZ)	66	09/93 – 08/96	3466	
TEMPRA (159_)	1.8 i.e. (159.AZ)	66	09/93 – 08/96	3468	
TEMPRA (159_)	1.8 i.e. (159.BY)	74	10/94 – 08/96	3466	
TEMPRA (159_)	1.8 i.e. (159.BY)	74	10/94 – 08/96	3468	
TEMPRA (159_)	1.9 D (159.AG)	48	07/91 – 08/96	3466	

MAKE & MODEL		KW	YEAR		
FIAT					
TEMPRA (159_)	1.9 D (159.AG)	48	07/91 – 08/96	3468	
TEMPRA (159_)	1.9 TD (159.AQ)	59	07/92 – 08/96	3466	
TEMPRA (159_)	1.9 TD (159.AQ)	59	07/92 – 08/96	3468	
TEMPRA (159_)	1.9 TD (159.CU, 159.AU,159.AI, 159.BI)	66	05/90 – 08/96	3468	
TEMPRA (159_)	1.9 TD (159.CU, 159.AU,159.AI, 159.BI)	66	05/90 – 08/96	3466	
TEMPRA (159_)	2.0 i.e. (159.AP)	83	10/90 – 08/96	3466	
TEMPRA (159_)	2.0 i.e. (159.AP)	83	10/90 – 08/96	3468	
TEMPRA S.W. (159_)	1.4 i.e. (159.AC)	57	03/91 – 08/96	3466	
TEMPRA S.W. (159_)	1.4 i.e. (159.AC)	57	03/91 – 08/96	3468	
TEMPRA S.W. (159_)	1.4 i.e. (159.AC, 159.AX)	51	10/92 – 08/96	3466	
TEMPRA S.W. (159_)	1.4 i.e. (159.AC, 159.AX)	51	10/92 – 08/96	3468	
TEMPRA S.W. (159_)	1.6	63	12/90 – 04/93	3466	
TEMPRA S.W. (159_)	1.6	63	12/90 – 04/93	3468	
TEMPRA S.W. (159_)	1.6 i.e. (159.AE)	57	10/90 – 08/96	3466	
TEMPRA S.W. (159_)	1.6 i.e. (159.AE)	57	10/90 – 08/96	3468	
TEMPRA S.W. (159_)	1.6 i.e. (159.AJ)	66	06/94 – 08/96	3466	
TEMPRA S.W. (159_)	1.6 i.e. (159.AJ)	66	06/94 – 08/96	3468	
TEMPRA S.W. (159_)	1.6 i.e. (159.AS, 159.AT)	55	10/92 – 08/96	3466	
TEMPRA S.W. (159_)	1.6 i.e. (159.AS, 159.AT)	55	10/92 – 08/96	3468	
TEMPRA S.W. (159_)	1.8 i.e. (159.AN)	77	03/92 – 12/93	3466	
TEMPRA S.W. (159_)	1.8 i.e. (159.AN)	77	03/92 – 12/93	3468	
TEMPRA S.W. (159_)	1.8 i.e. (159.AN)	81	03/90 – 08/96	3466	
TEMPRA S.W. (159_)	1.8 i.e. (159.AN)	81	03/90 – 08/96	3468	
TEMPRA S.W. (159_)	1.8 i.e. (159.AV)	76	09/93 – 08/96	3466	
TEMPRA S.W. (159_)	1.8 i.e. (159.AV)	76	09/93 – 08/96	3468	
TEMPRA S.W. (159_)	1.8 i.e. (159.AZ)	66	09/93 – 08/96	3466	
TEMPRA S.W. (159_)	1.8 i.e. (159.AZ)	66	09/93 – 08/96	3468	
TEMPRA S.W. (159_)	1.8 i.e. (159.BY)	74	10/94 – 08/96	3466	
TEMPRA S.W. (159_)	1.8 i.e. (159.BY)	74	10/94 – 08/96	3468	
TEMPRA S.W. (159_)	1.9 D (159.AG)	48	07/91 – 08/96	3466	
TEMPRA S.W. (159_)	1.9 D (159.AG)	48	07/91 – 08/96	3468	
TEMPRA S.W. (159_)	1.9 TD (159.AI, 159.BI,159.CU, 159.AU)	66	07/91 – 02/95	3466	
TEMPRA S.W. (159_)	1.9 TD (159.AI, 159.BI,159.CU, 159.AU)	66	07/91 – 02/95	3468	
TEMPRA S.W. (159_)	1.9 TD (159.AQ)	59	03/92 – 06/93	3466	
TEMPRA S.W. (159_)	1.9 TD (159.AQ)	59	03/92 – 06/93	3468	
TEMPRA S.W. (159_)	2.0 i.e. (159.AP)	83	01/91 – 03/95	3466	
TEMPRA S.W. (159_)	2.0 i.e. (159.AP)	83	01/91 – 03/95	3468	
TEMPRA S.W. (159_)	2.0 i.e. 4x4 (159.AP)	83	03/92 – 03/95	3466	
TEMPRA S.W. (159_)	2.0 i.e. 4x4 (159.AP)	83	03/92 – 03/95	3468	
TIPO (160_)	1.1 (160.AA)	41	01/88 – 10/91	3432	
TIPO (160_)	1.1 (160.AA)	41	01/88 – 10/91	3466	
TIPO (160_)	1.1 (160.AA)	41	01/88 – 10/91	3468	
TIPO (160_)	1.1 (160.AA)	41	01/88 – 10/91	3491	
TIPO (160_)	1.4 (160.AC)	52	07/87 – 12/89	3432	
TIPO (160_)	1.4 (160.AC)	52	07/87 – 12/89	3466	
TIPO (160_)	1.4 (160.AC)	52	07/87 – 12/89	3468	
TIPO (160_)	1.4 (160.AC)	52	07/87 – 12/89	3491	
TIPO (160_)	1.4 i.e.	57	05/89 – 04/95	3432	
TIPO (160_)	1.4 i.e.	57	05/89 – 04/95	3466	
TIPO (160_)	1.4 i.e.	57	05/89 – 04/95	3468	
TIPO (160_)	1.4 i.e.	57	05/89 – 04/95	3491	
TIPO (160_)	1.4 i.e. (160.AP, 160.AD,160.EA)	51	05/89 – 04/95	3468	
TIPO (160_)	1.4 i.e. (160.AP, 160.AD,160.EA)	51	05/89 – 04/95	3432	
TIPO (160_)	1.4 i.e. (160.AP, 160.AD,160.EA)	51	05/89 – 04/95	3466	
TIPO (160_)	1.4 i.e. (160.AP, 160.AD,160.EA)	51	05/89 – 04/95	3491	
TIPO (160_)	1.6 (160.AE)	61	01/88 – 10/91	3466	
TIPO (160_)	1.6 (160.AE)	61	01/88 – 10/91	3468	
TIPO (160_)	1.6 (160.AE)	61	01/88 – 10/91	3432	
TIPO (160_)	1.6 (160.AE)	61	01/88 – 10/91	3491	
TIPO (160_)	1.6 i.e.	66	02/88 – 05/91	3466	
TIPO (160_)	1.6 i.e.	66	02/88 – 05/91	3468	
TIPO (160_)	1.6 i.e. (160.A1, 160.EC,160.EB)	55	10/92 – 04/95	3468	
TIPO (160_)	1.6 i.e. (160.A1, 160.EC,160.EB)	55	10/92 – 04/95	3466	
TIPO (160_)	1.6 i.e. (160.A1, 160.EC,160.EB)	55	10/92 – 04/95	3432	
TIPO (160_)	1.6 i.e. (160.A1, 160.EC,160.EB)	55	10/92 – 04/95	3491	
TIPO (160_)	1.6 i.e. (160.AF)	57	07/90 – 01/93	3432	
TIPO (160_)	1.6 i.e. (160.AF)	57	07/90 – 01/93	3466	
TIPO (160_)	1.6 i.e. (160.AF)	57	07/90 – 01/93	3468	
TIPO (160_)	1.6 i.e. (160.AF)	57	07/90 – 01/93	3491	
TIPO (160_)	1.6 SX DGT	66	05/89 – 10/95	3466	
TIPO (160_)	1.6 SX DGT	66	05/89 – 10/95	3468	
TIPO (160_)	1.7 D (160.AG)	43	01/88 – 10/94	3432	
TIPO (160_)	1.7 D (160.AG)	43	01/88 – 10/94	3466	
TIPO (160_)	1.7 D (160.AG)	43	01/88 – 10/94	3468	
TIPO (160_)	1.7 D (160.AG)	43	01/88 – 10/94	3491	
TIPO (160_)	1.7 D (160.AG)	45	01/88 – 10/95	3432	

MAKE & MODEL   		KW	YEAR		
FIAT					
TIPO (160_)	1.7 D (160.AG)	45	01/88 – 10/95	3466	
TIPO (160_)	1.7 D (160.AG)	45	01/88 – 10/95	3468	
TIPO (160_)	1.7 D (160.AG)	45	01/88 – 10/95	3491	
TIPO (160_)	1.8 i.e	66	09/93 – 04/95	3466	
TIPO (160_)	1.8 i.e	66	09/93 – 04/95	3468	
TIPO (160_)	1.8 i.e.	71	03/93 – 04/95	3466	
TIPO (160_)	1.8 i.e.	71	03/93 – 04/95	3468	
TIPO (160_)	1.8 i.e.	81	10/90 – 06/93	3466	
TIPO (160_)	1.8 i.e.	81	10/90 – 06/93	3468	
TIPO (160_)	1.8 i.e. (160.AY)	77	10/90 – 06/93	3466	
TIPO (160_)	1.8 i.e. (160.AY)	77	10/90 – 06/93	3468	
TIPO (160_)	1.8 i.e. (160.ED)	76	04/93 – 04/95	3466	
TIPO (160_)	1.8 i.e. (160.ED)	76	04/93 – 04/95	3468	
TIPO (160_)	1.8 i.e. (160.EQ, 160.AM)	74	10/94 – 10/95	3466	
TIPO (160_)	1.8 i.e. (160.EQ, 160.AM)	74	10/94 – 10/95	3468	
TIPO (160_)	1.8 i.e.16V Sport	100	11/89 – 06/92	3466	
TIPO (160_)	1.8 i.e.16V Sport	100	11/89 – 06/92	3468	
TIPO (160_)	1.9 D	48	07/91 – 08/95	3432	
TIPO (160_)	1.9 D	48	07/91 – 08/95	3466	
TIPO (160_)	1.9 D	48	07/91 – 08/95	3468	
TIPO (160_)	1.9 D	48	07/91 – 08/95	3491	
TIPO (160_)	1.9 TD (160.AW)	59	03/92 – 06/93	3466	
TIPO (160_)	1.9 TD (160.AW)	59	03/92 – 06/93	3468	
TIPO (160_)	1.9 TD (160.EL, 160.GL,160.AQ, 160.EI, 160.AR)	66	09/90 – 04/95	3466	
TIPO (160_)	1.9 TD (160.EL, 160.GL,160.AQ, 160.EI, 160.AR)	66	09/90 – 04/95	3468	
TIPO (160_)	2.0 i.e. (160.AJ)	80	06/90 – 03/92	3466	
TIPO (160_)	2.0 i.e. (160.AJ)	80	06/90 – 03/92	3468	
TIPO (160_)	2.0 i.e. (160.AT, 160.AJ)	83	03/90 – 04/95	3466	
TIPO (160_)	2.0 i.e. (160.AT, 160.AJ)	83	03/90 – 04/95	3468	
TIPO / EGEA (356_)	1.3 D (199 B1.000)	70	10/15 -	4234	4246
TIPO / EGEA (356_)	1.3 D (55266963)	70	10/15 -	4234	4246
TIPO / EGEA (356_)	1.4 (843 A1.000)	70	10/15 -	4234	4246
TIPO / EGEA (356_)	1.4 (940 B7.000)	88	03/16 -	4234	4246
TIPO / EGEA (356_)	1.4 LPG (940 B7.000)	88	05/16 -	4234	4246
TIPO / EGEA (356_)	1.6 (55268036)	81	10/15 -	4234	4246
TIPO / EGEA (356_)	1.6 D (55260384)	84	09/16 -	4234	4246
TIPO / EGEA (356_)	1.6 D (55260384)	88	10/15 -	4234	4246
TIPO / EGEA (356_)	1.6 D (940 C1.000)	88	10/15 -	4234	4246
Tipo II Hatchback (357_) / Egea 44287	940 B7.000	88	03/2016 -	4301/1	
Tipo II Hatchback (357_) / Egea 44287 LPG	940 B7.000	88	05/2016 -	4301/1	
Tipo II Sedan (356_) / Egea 44287 LPG	940 B7.000	88	05/2016 -	4301/1	
Tipo II SW (357_) / Egea 44287	940 B7.000	88	03/2016 -	4301/1	
Tipo II SW (357_) / Egea 44287 LPG	940 B7.000	88	05/2016 -	4301/1	
Tipo II SW (357_) / Egea 44348 D	552 60 384, 552 80 444	84	09/2016 -	4301/1	
Tipo II SW (357_) / Egea 44348 D	552 60 384, 552 80 444	88	03/2016 -	4301/1	
ULYSSE (179_)	2.0	100	08/02 – 06/11	3986	
ULYSSE (179_)	2.0 D Multijet	88	05/06 – 06/11	3986	
ULYSSE (179_)	2.0 D Multijet	100	05/06 – 06/11	3986	
ULYSSE (179_)	2.0 JTD	79	05/03 – 08/06	3986	
ULYSSE (179_)	2.0 JTD	80	08/02 – 08/06	3986	
ULYSSE (179_)	2.2 JTD	94	08/02 – 08/06	3986	
ULYSSE (220_)	1.8 (220.BB5)	73	05/97 – 08/02	3799	
ULYSSE (220_)	1.9 TD (220AH5)	66	02/95 – 08/02	3799	
ULYSSE (220_)	2.0 (220.AC5)	89	06/94 – 08/02	3799	
ULYSSE (220_)	2.0 16V	97	05/98 – 09/00	3799	
UNO I-IV (146A/E)	1.0	35	08/90 – 06/01	3439	
UNO I-IV (146A/E)	1.0 iE (156 A2.246)	34	05/98 – 08/00	3439	
UNO IV Mondo (146D/146B)	1.0	33	01/94 -	3439	
UNO (146_)	1.0	31	06/89 – 02/92	3424/1	
UNO (146_)	1.0	35	08/90 – 06/01	3424/1	
UNO (146_)	1.0 iE	34	05/98 – 08/00	3424/1	
UNO (146_)	1.1	41	04/86 – 06/06	3424/1	
UNO (146_)	1.1	43	10/88 – 06/06	3424/1	
UNO (146_)	1.3 Super Diesel	33	06/83 – 03/92	3424/1	
UNO (146_)	1.3 Super Diesel	33	06/83 – 03/92	3466	
UNO (146_)	1.3 Super Diesel	33	06/83 – 03/92	3468	
UNO (146_)	1.3 Turbo i.e.	73	01/87 – 12/87	3466	
UNO (146_)	1.3 Turbo i.e.	73	01/87 – 12/87	3468	
UNO (146_)	1.3 Turbo i.e.	74	09/89 – 03/91	3466	
UNO (146_)	1.3 Turbo i.e.	74	09/89 – 03/91	3468	
UNO (146_)	1.3 Turbo i.e.	77	04/85 – 08/89	3466	
UNO (146_)	1.3 Turbo i.e.	77	04/85 – 08/89	3468	
UNO (146_)	1.4	51	07/91 – 07/96	3424/1	
UNO (146_)	1.4	74	01/89 – 12/91	3466	
UNO (146_)	1.4	74	01/89 – 12/91	3468	
UNO (146_)	1.4 Turbo i.e.	82	09/89 – 09/93	3466	

MAKE & MODEL		KW	YEAR		
FIAT					
UNO (146_)	1.4 Turbo i.e.	82	09/89 – 09/93	3468	
UNO (146_)	1.4 Turbo i.e.	87	12/89 – 12/96	3466	
UNO (146_)	1.4 Turbo i.e.	87	12/89 – 12/96	3468	
UNO (146_)	1.6	65	12/89 – 04/93	3466	
UNO (146_)	1.6	65	12/89 – 04/93	3468	
UNO (146_)	1.6 R	66	12/92 – 12/95	3466	
UNO (146_)	1.6 R	66	12/92 – 12/95	3468	
UNO (146_)	1.7 D	43	11/94 – 08/00	3424/1	
UNO (146_)	1.7 D	43	11/94 – 08/00	3466	
UNO (146_)	1.7 D	43	11/94 – 08/00	3468	
UNO (146_)	1.9 D	44	09/89 – 03/94	3424/1	
UNO (146_)	1.9 D	44	09/89 – 03/94	3466	
UNO (146_)	1.9 D	44	09/89 – 03/94	3468	
UNO (146_)	1.9 D	58	01/89 – 12/91	3424/1	
UNO (146_)	1.9 D	58	01/89 – 12/91	3466	
UNO (146_)	1.9 D	58	01/89 – 12/91	3468	
UNO (146_)	45 0.9	33	03/83 – 09/92	3424/1	
UNO (146_)	45 0.9	34	02/84 – 12/88	3424/1	
UNO (146_)	45 1.0 (146A.ED)	32	06/86 – 12/93	3424/1	
UNO (146_)	45 i.e. 1.0	33	04/84 – 10/95	3424/1	
UNO (146_)	50 1.1	37	01/86 – 12/93	3424/1	
UNO (146_)	50 i.e. 1.1	36	06/92 – 12/93	3424/1	
UNO (146_)	55 1.1	40	01/83 – 08/89	3424/1	
UNO (146_)	60 1.1	42	04/89 – 12/92	3424/1	
UNO (146_)	60 1.1 (146A.EG)	43	05/85 – 08/89	3424/1	
UNO (146_)	60 Diesel 1.7	42	09/89 – 12/93	3424/1	
UNO (146_)	60 Diesel 1.7	42	09/89 – 12/93	3466	
UNO (146_)	60 Diesel 1.7	42	09/89 – 12/93	3468	
UNO (146_)	60 Diesel 1.7	44	07/86 – 08/89	3424/1	
UNO (146_)	60 Diesel 1.7	44	07/86 – 08/89	3466	
UNO (146_)	60 Diesel 1.7	44	07/86 – 08/89	3468	
UNO (146_)	70 1.3	48	05/85 – 08/89	3424/1	
UNO (146_)	70 1.3	50	01/83 – 04/85	3424/1	
UNO (146_)	70 i.e. 1.4	51	09/89 – 07/96	3424/1	
UNO (146_)	70 i.e. 1.4	53	09/89 – 12/93	3424/1	
UNO (146_)	70 S 1.4	52	09/89 – 10/92	3424/1	
UNO (146_)	70 TD 1.4	52	10/86 – 10/90	3424/1	
UNO (146_)	70 TD 1.4	52	10/86 – 10/90	3466	
UNO (146_)	70 TD 1.4	52	10/86 – 10/90	3468	
UNO (146_)	75 i.e. 1.5	55	10/85 – 12/93	3424/1	
X 1/9 (128_)	1.3	54	10/75 – 06/78	3316	3317
X 1/9 (128_)	1.3	55	05/73 – 12/79	3316	3317
X 1/9 (128_)	1.3	55	05/73 – 12/79		3317
X 1/9 (128_)	1.5	56	06/85 – 12/89	3485	
X 1/9 (128_)	1.5	63	11/78 – 12/89	3316	3317
X 1/9 (128_)	1.5	63	11/78 – 12/89	3485	
FIAT (NANJING)					
PALIO Estate	1.3	44	01/02 -	3826	
PALIO Estate	1.3	59	01/02 – 12/05	3690	
PALIO Estate	1.5	59	01/02 -	3826	
PALIO Estate	1.5	59	01/02 – 12/05	3790	
PALIO Hatchback	1.3	63	01/02 -	3690	
PALIO Hatchback	1.3	63	01/02 – 12/07	3790	
PALIO Hatchback	1.5	63	01/02 -	3826	
FORD					
(JMC) LCV Transit II Bus 44257	L3	116	01/2008 - 12/2014	3906/1	
(JMC) LCV Transit II Bus 44257	L3	116	01/2008 - 12/2014	3906/2	
(JMC) LCV Transit II Bus 44257	L3	116	01/2008 - 12/2014	3906/1A	
(JMC) LCV Transit II Bus 44288 D	4D243H, JX4D24D4L	103	01/2007 -	3906/1	
(JMC) LCV Transit II Bus 44288 D	4D243H, JX4D24D4L	103	01/2007 -	3906/2	
(JMC) LCV Transit II Bus 44288 D	4D243H, JX4D24D4L	103	01/2007 -	3906/1A	
(JMC) LCV Transit II Bus 44288 D	4D24A3L, 4D24B3L	74	01/2007 - 12/2014	3906/1	
(JMC) LCV Transit II Bus 44288 D	4D24A3L, 4D24B3L	74	01/2007 - 12/2014	3906/2	
(JMC) LCV Transit II Bus 44288 D	4D24A3L, 4D24B3L	74	01/2007 - 12/2014	3906/1A	
(JMC) LCV Transit II Bus 44288 D	JX4D24A4L	85	01/2007 -	3906/1	
(JMC) LCV Transit II Bus 44288 D	JX4D24A4L	85	01/2007 -	3906/2	
(JMC) LCV Transit II Bus 44288 D	JX4D24A4L	85	01/2007 -	3906/1A	
(JMC) LCV Transit II Van 44257	GZFA	114	03/2008 -	3906/1	
(JMC) LCV Transit II Van 44257	GZFA	114	03/2008 -	3906/2	
(JMC) LCV Transit II Van 44257	GZFA	114	03/2008 -	3906/1A	
AUSTRALIA LCV Ranger II Pick-up (PK) 3.0 TDdi 4x4	WEAT	115	03/2009 - 11/2011	3988/1	
AUSTRALIA LCV Ranger II Pick-up (PK) 3.0 Tdi	WEAT	115	05/2006 - 07/2012	3988/1	
AUSTRALIA LCV Ranger II Pick-up (PK) 3.0 Tdi 4WD	WEAT	115	03/2009 - 11/2011	3988/1	
B-MAX (JK)	1.0 EcoBoost	74	10/12 -	4204	
B-MAX (JK)	1.0 EcoBoost	88	10/12 -	4204	

MAKE & MODEL   		KW	YEAR		
FORD					
B-MAX (JK)	1.0 EcoBoost	92	10/12 -	4204	
B-MAX (JK)	1.0 EcoBoost	103	02/16 -	4204	
B-MAX (JK)	1.4	66	10/12 -	4204	
B-MAX (JK)	1.4 LPG	63	08/13 -	4204	
B-MAX (JK)	1.4 LPG	66	08/13 -	4204	
B-MAX (JK)	1.5 TDCi	55	10/12 -	4204	
B-MAX (JK)	1.5 TDCi	70	04/15 -	4204	
B-MAX (JK)	1.6 TDCi	70	10/12 -	4204	
B-MAX (JK)	1.6 Ti	77	10/12 -	4204	
B-MAX Van	1.0 EcoBoost	74	10/12 -	4204	
B-MAX Van	1.0 EcoBoost	92	10/12 -	4204	
B-MAX Van	1.4	66	10/12 -	4204	
B-MAX Van	1.5 TDCi	55	10/12 -	4204	
B-MAX Van	1.5 TDCi	70	04/15 -	4204	
B-MAX Van	1.6 TDCi	70	10/12 -	4204	
B-MAX Van	1.6 Ti	77	10/12 -	4204	
CAPRI (ECJ)	1500	44	12/68 – 02/74	3484	
CAPRI (ECJ)	1500	44	12/68 – 02/74	3312	
CAPRI (ECJ)	1700	55	12/68 – 08/72	3484	
CAPRI (ECJ)	1700	55	12/68 – 08/72	3312	
CAPRI (ECJ)	2000	66	02/69 – 02/74	3484	
CAPRI (ECJ)	2000	66	02/69 – 02/74	3312	
CAPRI (ECJ)	2300	79	02/69 – 02/74	3484	
CAPRI (ECJ)	2300	79	02/69 – 02/74	3312	
CAPRI (ECJ)	3000	101	01/72 – 12/72	3484	
CAPRI (ECJ)	3000	101	01/72 – 12/72	3312	
CAPRI (ECJ)	3000	103	01/73 – 12/73	3484	
CAPRI (ECJ)	3000	103	01/73 – 12/73	3312	
CAPRI (ECJ)	3000	103	08/72 – 02/74	3484	
CAPRI (ECJ)	3000	103	08/72 – 02/74	3312	
CAPRI II (GECP)	1.3	40	02/74 – 08/77	3484	
CAPRI II (GECP)	1.3	40	02/74 – 08/77	3312	
CAPRI II (GECP)	1.3	42	02/74 – 08/77	3484	
CAPRI II (GECP)	1.3	42	02/74 – 08/77	3312	
CAPRI II (GECP)	1.6	50	09/74 – 12/77	3484	
CAPRI II (GECP)	1.6	50	09/74 – 12/77	3312	
CAPRI II (GECP)	1.6	53	02/74 – 12/77	3484	
CAPRI II (GECP)	1.6	53	02/74 – 12/77	3312	
CAPRI II (GECP)	1.6	65	02/74 – 12/77	3484	
CAPRI II (GECP)	1.6	65	02/74 – 12/77	3312	
CAPRI II (GECP)	2.0	66	04/76 – 12/77	3484	
CAPRI II (GECP)	2.0	66	04/76 – 12/77	3312	
CAPRI II (GECP)	2.0	72	04/74 – 12/77	3484	
CAPRI II (GECP)	2.0	72	04/74 – 12/77	3312	
CAPRI II (GECP)	2.3	79	02/74 – 12/77	3484	
CAPRI II (GECP)	2.3	79	02/74 – 12/77	3312	
CAPRI II (GECP)	3.0	101	02/74 – 12/77	3484	
CAPRI II (GECP)	3.0	101	02/74 – 12/77	3312	
CAPRI III (GECP)	1.3	40	01/78 – 06/85	3484	
CAPRI III (GECP)	1.3	40	01/78 – 06/85	3312	
CAPRI III (GECP)	1.6	54	01/78 – 04/87	3484	
CAPRI III (GECP)	1.6	54	01/78 – 04/87	3312	
CAPRI III (GECP)	2.0	64	01/78 – 12/85	3484	
CAPRI III (GECP)	2.0	64	01/78 – 12/85	3312	
CAPRI III (GECP)	2.0	66	01/78 – 12/82	3484	
CAPRI III (GECP)	2.0	66	01/78 – 12/82	3312	
CAPRI III (GECP)	2.0	74	01/78 – 12/85	3484	
CAPRI III (GECP)	2.0	74	01/78 – 12/85	3312	
CAPRI III (GECP)	2.3 Super	84	06/79 – 12/85	3484	
CAPRI III (GECP)	2.3 Super	84	06/79 – 12/85	3312	
CAPRI III (GECP)	2.8 i Turbo	138	01/82 – 04/87	3484	
CAPRI III (GECP)	2.8 i Turbo	138	01/82 – 04/87	3312	
CAPRI III (GECP)	2.8 Super Injection	118	01/81 – 04/87	3484	
CAPRI III (GECP)	2.8 Super Injection	118	01/81 – 04/87	3312	
CAPRI III (GECP)	3.0	101	01/78 – 12/81	3484	
CAPRI III (GECP)	3.0	101	01/78 – 12/81	3312	
C-MAX (DM2)	1.6	74	02/07 – 09/10	3885	3853/1
C-MAX (DM2)	1.6 TDCi	66	02/07 – 09/10	3885	3853/1
C-MAX (DM2)	1.6 TDCi	74	02/07 – 09/10	3885	3853/1
C-MAX (DM2)	1.6 TDCi	80	02/07 – 09/10	3885	3853/1
C-MAX (DM2)	1.8	90	02/07 – 09/10	3885	3853/1
C-MAX (DM2)	1.8	92	02/07 – 09/10	3885	3853/1
C-MAX (DM2)	1.8 Flexifuel	92	02/07 – 09/10	3885	3853/1
C-MAX (DM2)	1.8 TDCi	85	02/07 – 09/10	3885	3853/1
C-MAX (DM2)	2.0	107	02/07 – 09/10	3885	3853/1
C-MAX (DM2)	2.0 CNG	107	04/09 – 09/10	3885	3853/1

MAKE & MODEL		KW	YEAR		
FORD					
C-MAX (DM2)	2.0 LPG	107	06/08 – 09/10	3885	3853/1
C-MAX (DM2)	2.0 TDCi	81	02/08 – 09/10	3885	3853/1
C-MAX (DM2)	2.0 TDCi	98	02/07 – 09/10	3885	3853/1
C-MAX (DM2)	2.0 TDCi	100	02/07 – 09/10	3885	3853/1
C-MAX II (DXA/CB7, DXA/CEU)	1.0 EcoBoost	74	10/12 -	3885	
C-MAX II (DXA/CB7, DXA/CEU)	1.0 EcoBoost	92	10/12 -	3885	
C-MAX II (DXA/CB7, DXA/CEU)	1.5 EcoBoost	110	03/15 -	3885	
C-MAX II (DXA/CB7, DXA/CEU)	1.5 EcoBoost	134	03/15 -	3885	
C-MAX II (DXA/CB7, DXA/CEU)	1.5 TDCi	70	03/15 -	3885	
C-MAX II (DXA/CB7, DXA/CEU)	1.5 TDCi	88	03/15 -	3885	
C-MAX II (DXA/CB7, DXA/CEU)	1.5 TDCi ECOnetic	77	03/15 -	3885	
C-MAX II (DXA/CB7, DXA/CEU)	1.6 CNG	86	01/13 -	3885	
C-MAX II (DXA/CB7, DXA/CEU)	1.6 EcoBoost	110	12/10 -	3885	
C-MAX II (DXA/CB7, DXA/CEU)	1.6 EcoBoost	134	12/10 -	3885	
C-MAX II (DXA/CB7, DXA/CEU)	1.6 Flexifuel	88	02/11 -	3885	
C-MAX II (DXA/CB7, DXA/CEU)	1.6 LPG	86	02/12 -	3885	
C-MAX II (DXA/CB7, DXA/CEU)	1.6 LPG	88	02/12 -	3885	
C-MAX II (DXA/CB7, DXA/CEU)	1.6 TDCi	70	12/10 -	3885	
C-MAX II (DXA/CB7, DXA/CEU)	1.6 TDCi	85	12/10 -	3885	
C-MAX II (DXA/CB7, DXA/CEU)	1.6 Ti	63	12/10 -	3885	
C-MAX II (DXA/CB7, DXA/CEU)	1.6 Ti	77	12/10 -	3885	
C-MAX II (DXA/CB7, DXA/CEU)	1.6 Ti	88	02/12 -	3885	
C-MAX II (DXA/CB7, DXA/CEU)	1.6 Ti	92	12/10 -	3885	
C-MAX II (DXA/CB7, DXA/CEU)	2.0 TDCi	85	02/11 -	3885	
C-MAX II (DXA/CB7, DXA/CEU)	2.0 TDCi	100	02/11 -	3885	
C-MAX II (DXA/CB7, DXA/CEU)	2.0 TDCi	103	02/11 -	3885	
C-MAX II (DXA/CB7, DXA/CEU)	2.0 TDCi	110	03/15 -	3885	
C-MAX II (DXA/CB7, DXA/CEU)	2.0 TDCi	120	12/10 -	3885	
C-MAX II (DXA/CB7, DXA/CEU)	2.0 TDCi	125	03/15 -	3885	
C-MAX II Van	1.0 EcoBoost	74	10/12 -	3885	
C-MAX II Van	1.0 EcoBoost	92	10/12 -	3885	
C-MAX II Van	1.5 EcoBoost	110	03/15 -	3885	
C-MAX II Van	1.5 EcoBoost	134	03/15 -	3885	
C-MAX II Van	1.5 TDCi	88	03/15 -	3885	
C-MAX II Van	1.5 TDCi ECOnetic	77	03/15 -	3885	
C-MAX II Van	1.6 EcoBoost	110	12/10 -	3885	
C-MAX II Van	1.6 TDCi	70	12/10 -	3885	
C-MAX II Van	1.6 TDCi	85	12/10 -	3885	
C-MAX II Van	2.0 TDCi	85	02/11 -	3885	
C-MAX II Van	2.0 TDCi	103	02/11 -	3885	
C-MAX II Van	2.0 TDCi	110	03/15 -	3885	
C-MAX II Van	2.0 TDCi	120	12/10 -	3885	
C-MAX II Van	2.0 TDCi	125	03/15 -	3885	
CONSUL (GGCL)	3.0 3000 (EV 30 H)	101	01.72 – 12.74	3344	
CONSUL (GGFL)	2000	73	01/72 – 12/75	3484	
CONSUL (GGFL)	2000	73	01/72 – 12/75	3312	
CONSUL (GGFL)	2.5 2500 (EV 25 HRB)	88	01.72 – 12.74	3344	
CONSUL (GGFL)	3.0 3000 (EV 30 H)	101	01.72 – 12.74	3344	
CONSUL (GGNL)	2.5 2500 (EV 25 HRB)	88	01.72 – 12.74	3344	
CONSUL (GGNL)	3.0 3000 (EV 30 H)	101	01.72 – 12.75	3344	
CONSUL Coupe (GGCL)	2000	73	01/72 – 12/75	3484	
CONSUL Coupe (GGCL)	2000	73	01/72 – 12/75	3312	
CONSUL Coupe (GGCL)	3.0 3000	101	01/72 – 12/74	3313	
CONSUL Estate (GGNL)	2.5 2500	88	01/72 – 12/74	3313	
CORTINA	1300	40	10/66 – 03/72	3484	
CORTINA	1300	40	10/66 – 03/72	3312	
CORTINA	2000	72	10/70 – 03/72	3484	
CORTINA	2000	72	10/70 – 03/72	3312	
CORTINA	1600 GT	63	10/70 – 03/72	3484	
CORTINA	1600 GT	63	10/70 – 03/72	3312	
CORTINA Coupe	1300	40	10/66 – 03/72	3484	
CORTINA Coupe	1300	40	10/66 – 03/72	3312	
CORTINA Coupe	2000	72	10/70 – 03/72	3484	
CORTINA Coupe	2000	72	10/70 – 03/72	3312	
CORTINA Coupe	1600 GT	63	10/70 – 03/72	3484	
CORTINA Coupe	1600 GT	63	10/70 – 03/72	3312	
CORTINA Estate	1300	40	10/66 – 03/72	3484	
CORTINA Estate	1300	40	10/66 – 03/72	3312	
CORTINA Estate	2000	72	10/70 – 03/72	3484	
CORTINA Estate	2000	72	10/70 – 03/72	3312	
COUGAR (EC_)	2.0 16V	96	08/98 – 12/01	3558	
COUGAR (EC_)	2.0 16V	96	08/98 – 12/01	3593	
COUGAR (EC_)	2.0 16V (EDBA)	96	08/98 – 12/01		4214
COUGAR (EC_)	2.0 16V (EDBB)	96	08/98 – 12/01		4214
COUGAR (EC_)	2.0 16V (EDBC)	96	08/98 – 12/01		4214
COUGAR (EC_)	2.0 16V (EDBD)	96	08/98 – 12/01		4214

MAKE & MODEL   		KW	YEAR		
FORD					
COUGAR (EC_)	2.5 ST 200	151	01/00 – 12/01	3558	
COUGAR (EC_)	2.5 ST 200	151	01/00 – 12/01	3593	
COUGAR (EC_)	2.5 V6 24V	125	06/00 – 12/01	3558	
COUGAR (EC_)	2.5 V6 24V	125	06/00 – 12/01	3593	
COUGAR (EC_)	2.5 V6 24V	125	08/98 – 12/01	3558	
COUGAR (EC_)	2.5 V6 24V	125	08/98 – 12/01	3593	
ECONOVAN (KBA, KCA)	1.4	48	03/86 – 03/92	3463	
ECONOVAN (KBA, KCA)	1.4	48	03/86 – 03/92	3499	
ECONOVAN (KBA, KCA)	2.0 D	41	03/86 – 03/92	3463	
ECONOVAN (KBA, KCA)	2.0 D	41	03/86 – 03/92	3499	
ECONOVAN Box (KAA)	1.4	48	03/86 – 03/92	3463	
ECONOVAN Box (KAA)	1.4	48	03/86 – 03/92	3499	
ECONOVAN Box (KAA)	1.8	81	08/85 – 10/91	3463	
ECONOVAN Box (KAA)	1.8	81	08/85 – 10/91	3499	
ECONOVAN Box (KAA)	2.0 D	41	03/86 – 03/92	3463	
ECONOVAN Box (KAA)	2.0 D	41	03/86 – 03/92	3499	
ECOSPORT	1.0 EcoBoost	92	10/13 -	3885	
ECOSPORT	1.5 TDCi	66	10/13 -	3885	
ECOSPORT	1.5 TDCi	70	05/15 -	3885	
ECOSPORT	1.5 Ti	82	10/13 -	3885	
ECOSPORT	1.6 Ti-VCT	90	08/12 -	3885	
ECOSPORT	2.0 4x4	103	08/12 -	3885	
ESCORT '81 Express (AVA)	1.1	37	03/81 – 02/86	3570	
ESCORT '81 Express (AVA)	1.3	51	03/81 – 02/86	3570	
ESCORT '81 Express (AVA)	1.6	61	03/81 – 02/86	3570	
ESCORT '81 Express (AVA)	1.6 D	40	02/84 – 02/86	3570	
ESCORT '86 Express (AVF)	1.1	37	05/86 – 07/90	3570	
ESCORT '86 Express (AVF)	1.3	44	02/86 – 07/90	3570	
ESCORT '86 Express (AVF)	1.3	46	07/88 – 07/90	3570	
ESCORT '86 Express (AVF)	1.4 i	54	02/86 – 07/90	3570	
ESCORT '86 Express (AVF)	1.6	60	02/86 – 07/90	3570	
ESCORT '86 Express (AVF)	1.6 D	40	02/86 – 07/90	3570	
ESCORT '86 Express (AVF)	1.8 D	44	07/88 – 07/90	3570	
ESCORT '91 Express (AVL)	1.3	46	07/90 12/94	3465	
ESCORT '91 Express (AVL)	1.4	52	07/90 12/94	3465	
ESCORT '91 Express (AVL)	1.8 D	44	07/90 12/94	3465	
ESCORT '95 Box (AVL)	1.4	54	01/95 -	3465	
ESCORT '95 Box (AVL)	1.4	54	01/95 -	3722	
ESCORT '95 Box (AVL)	1.8 D	44	01/95 -	3465	
ESCORT '95 Box (AVL)	1.8 D	44	01/95 -	3722	
ESCORT '95 Box (AVL)	1.8 TD	66	01/95 -	3465	
ESCORT '95 Box (AVL)	1.8 TD	66	01/95 -	3722	
ESCORT '95 Box (AVL)	1.8 Turbo D	51	12/95 – 06/01	3465	
ESCORT '95 Box (AVL)	1.8 Turbo D	51	12/95 – 06/01	3722	
ESCORT CLASSIC (AAL, ABL)	1.6 16V	66	10/98 – 07/00	3722	3545
ESCORT CLASSIC (AAL, ABL)	1.8 TD	66	10/98 – 07/00	3722	3545
ESCORT CLASSIC Turnier (ANL)	1.6 16V	66	02/99 – 07/00	3722	3545
ESCORT CLASSIC Turnier (ANL)	1.8 TD	66	02/99 – 07/00	3722	3545
Escort I (AFH, ATH) 1100	G1	32	01/1968 - 12/1974	3311	
Escort I (AFH, ATH) 1100	G1	33	06/1968 - 06/1971	3311	
Escort I (AFH, ATH) 1100	G2	35	06/1970 - 02/1976	3311	
Escort I (AFH, ATH) 1100	KL11	29	06/1968 - 06/1971	3311	
Escort I (AFH, ATH) 1300	J1F (09.73-02.76)	40	09/1973 - 02/1976	3311	
Escort I (AFH, ATH) 1300	J2	38	06/1968 - 06/1971	3311	
Escort I (AFH, ATH) 1300	J2	42	06/1970 - 02/1976	3311	
Escort I (AFH, ATH) 1300	J3D (06.70-02.76)	53	06/1970 - 02/1976	3311	
Escort I (AFH, ATH) 1300	KL 13 L	35	06/1968 - 06/1971	3311	
Escort I (AFH, ATH) 1300 GT	KL 13 H	47	06/1968 - 06/1971	3311	
Escort I (AFH, ATH) 950	-	25	08/1968 - 08/1974	3311	
Escort I (AFH, ATH) 950	-	26	08/1968 - 08/1974	3311	
Escort I Turnier (ADH) 1300	J2	47	12/1968 - 12/1975	3311	
ESCORT II (ATH)	1.3	40	12/74 – 08/80	3484	
ESCORT II (ATH)	1.3	40	12/74 – 08/80	3312	
ESCORT II (ATH)	1.3	42	12/74 – 08/80	3484	
ESCORT II (ATH)	1.3	42	12/74 – 08/80	3312	
ESCORT II (ATH)	1.3	51	12/74 – 08/80	3484	
ESCORT II (ATH)	1.3	51	12/74 – 08/80	3312	
ESCORT II (ATH)	1.6 RS	62	12/74 – 08/80	3484	
ESCORT II (ATH)	1.6 RS	62	12/74 – 08/80	3312	
ESCORT III (GAA)	1.1	37	08/83 – 12/85	3570	
ESCORT III (GAA)	1.1	40	09/80 – 08/83	3570	
ESCORT III (GAA)	1.1	43	09/80 – 08/83	3570	
ESCORT III (GAA)	1.3	51	09/80 – 12/85	3570	
ESCORT III (GAA)	1.6	48	05/83 – 07/86	3570	
ESCORT III (GAA)	1.6	58	09/80 – 12/85	3570	
ESCORT III (GAA)	1.6	71	09/80 – 10/82	3570	

MAKE & MODEL		KW	YEAR		
FORD					
ESCORT III (GAA)	1.6 D	40	02/84 – 12/85	3570	
ESCORT III (GAA)	1.6 i (GAA)	66	07/85 – 12/85	3570	
ESCORT III (GAA)	1.6 RS Turbo	97	11/84 – 12/85	3570	
ESCORT III (GAA)	1.6 XR3i	77	10/82 – 12/85	3570	
ESCORT III (GAA)	RS 1600i	85	05/82 – 12/85	3570	
ESCORT III Convertible (ALD)	1.3	51	09/83 – 12/85	3570	
ESCORT III Convertible (ALD)	1.6	58	09/83 – 12/85	3570	
ESCORT III Convertible (ALD)	1.6 i	77	09/83 – 12/85	3570	
ESCORT III Estate (AWA)	1.1	37	08/83 – 12/85	3570	
ESCORT III Estate (AWA)	1.1	40	09/80 – 08/83	3570	
ESCORT III Estate (AWA)	1.3	51	03/81 – 12/85	3570	
ESCORT III Estate (AWA)	1.6	58	09/80 – 12/85	3570	
ESCORT III Estate (AWA)	1.6 D	40	02/84 – 12/85	3570	
ESCORT IV (GAF, AWF, ABFT)	1.1	37	12/85 – 07/90	3570	
ESCORT IV (GAF, AWF, ABFT)	1.3	44	01/86 – 07/90	3570	
ESCORT IV (GAF, AWF, ABFT)	1.3	51	11/86 – 07/88	3570	
ESCORT IV (GAF, AWF, ABFT)	1.3 (GAF)	46	07/88 – 10/90	3570	
ESCORT IV (GAF, AWF, ABFT)	1.4	51	10/85 – 10/90	3570	
ESCORT IV (GAF, AWF, ABFT)	1.4	54	01/86 – 07/90	3570	
ESCORT IV (GAF, AWF, ABFT)	1.4	55	01/86 – 07/90	3570	
ESCORT IV (GAF, AWF, ABFT)	1.6	58	01/86 – 12/88	3570	
ESCORT IV (GAF, AWF, ABFT)	1.6	65	04/89 – 07/90	3570	
ESCORT IV (GAF, AWF, ABFT)	1.6 D	40	01/86 – 01/89	3570	
ESCORT IV (GAF, AWF, ABFT)	1.6 i	66	01/86 – 05/90	3570	
ESCORT IV (GAF, AWF, ABFT)	1.6 i	75	08/89 – 07/90	3570	
ESCORT IV (GAF, AWF, ABFT)	1.6 Turbo RS	97	01/86 – 07/90	3548	
ESCORT IV (GAF, AWF, ABFT)	1.6 Turbo RS	97	01/86 – 07/90	3549	
ESCORT IV (GAF, AWF, ABFT)	1.6 XR3i	77	01/86 – 08/89	3570	
ESCORT IV (GAF, AWF, ABFT)	1.8 D	44	01/89 – 07/90	3570	
ESCORT IV Convertible (ALF)	1.4	54	02/87 – 07/90	3570	
ESCORT IV Convertible (ALF)	1.4	55	01/86 – 07/90	3570	
ESCORT IV Convertible (ALF)	1.6	58	01/86 – 12/87	3570	
ESCORT IV Convertible (ALF)	1.6 i	66	01/86 – 07/90	3570	
ESCORT IV Convertible (ALF)	1.6 i	75	08/89 – 07/90	3570	
ESCORT IV Convertible (ALF)	1.6 XR3i	77	01/86 – 07/90	3570	
ESCORT IV Estate (AWF, AVF)	1.1	37	10/85 – 09/90	3570	
ESCORT IV Estate (AWF, AVF)	1.3	44	01/86 – 07/90	3570	
ESCORT IV Estate (AWF, AVF)	1.3	51	11/86 – 07/88	3570	
ESCORT IV Estate (AWF, AVF)	1.4	51	10/85 – 10/90	3570	
ESCORT IV Estate (AWF, AVF)	1.4	54	01/86 – 07/90	3570	
ESCORT IV Estate (AWF, AVF)	1.4	55	01/86 – 07/90	3570	
ESCORT IV Estate (AWF, AVF)	1.6	58	01/86 – 07/90	3570	
ESCORT IV Estate (AWF, AVF)	1.6 D	40	01/86 – 01/89	3570	
ESCORT IV Estate (AWF, AVF)	1.6 i	66	01/86 – 07/90	3570	
ESCORT IV Estate (AWF, AVF)	1.8 D	44	01/89 – 07/90	3570	
ESCORT V (GAL)	1.3	44	07/90 – 09/92	3465	
ESCORT V (GAL)	1.4	52	07/90 – 09/92	3465	
ESCORT V (GAL)	1.6	66	07/90 – 08/92	3465	3545
ESCORT V (GAL)	1.6	66	07/90 – 08/92	3465	
ESCORT V (GAL)	1.6	77	07/90 – 12/92	3465	3545
ESCORT V (GAL)	1.8 16V XR3i	77	02/92 – 12/92		3545
ESCORT V (GAL)	1.8 16V XR3i	96	02/92 – 12/92	3548	3545
ESCORT V (GAL)	1.8 16V XR3i	96	02/92 – 12/92	3549	
ESCORT V (GAL)	1.8 D	44	07/90 – 12/92	3465	3545
ESCORT V (GAL)	RS 2000	110	05/91 – 12/92	3548	3545
ESCORT V (GAL)	RS 2000	110	05/91 – 12/92	3549	
ESCORT V Convertible (ALL)	1.4	52	07/90 – 12/92	3465	
ESCORT V Convertible (ALL)	1.6	77	07/90 – 12/92	3465	3545
ESCORT V Convertible (ALL)	1.8 16V XR3i	77	02/92 – 12/92	3465	3545
ESCORT V Convertible (ALL)	1.8 16V XR3i	96	02/92 – 12/92	3548	3545
ESCORT V Convertible (ALL)	1.8 16V XR3i	96	02/92 – 12/92	3549	
ESCORT V Estate (GAL, AVL)	1.3	44	09/91 – 09/92	3465	
ESCORT V Estate (GAL, AVL)	1.4	52	07/90 – 09/92	3465	
ESCORT V Estate (GAL, AVL)	1.6	66	07/90 – 08/92	3465	3545
ESCORT V Estate (GAL, AVL)	1.6	77	07/90 – 09/92	3465	3545
ESCORT V Estate (GAL, AVL)	1.8 16V	77	02/92 – 12/92	3465	3545
ESCORT V Estate (GAL, AVL)	1.8 D	44	07/90 – 12/92	3465	3545
ESCORT V Estate (GAL, AVL)	1.8 TD	55	05/91 – 12/92	3465	3545
ESCORT VI (GAL)	1.3	44	09/92 – 01/95	3465	
ESCORT VI (GAL)	1.4	52	09/92 – 01/95	3465	
ESCORT VI (GAL)	1.4	55	01/94 – 01/95	3465	
ESCORT VI (GAL)	1.6 i 16V	65	01/94 – 01/95	3465	3545
ESCORT VI (GAL)	1.6 i 16V	66	09/92 – 01/95	3465	3545
ESCORT VI (GAL)	1.8 16V XR3i	96	09/92 – 01/95	3548	3545
ESCORT VI (GAL)	1.8 16V XR3i	96	09/92 – 01/95	3549	
ESCORT VI (GAL)	1.8 D	44	09/92 – 01/95	3465	3545

MAKE & MODEL   		KW	YEAR		
FORD					
ESCORT VI (GAL)	1.8 i 16V	77	09/92 – 01/95	3465	3545
ESCORT VI (GAL)	1.8 TD	66	02/93 – 01/95	3465	3545
ESCORT VI (GAL)	1.8 XR3i 16V 4x4	77	08/93 – 01/95	3548	3545
ESCORT VI (GAL)	1.8 XR3i 16V 4x4	77	08/93 – 01/95	3549	
ESCORT VI (GAL)	1.8 XR3i 16V 4x4	96	08/93 – 01/95	3548	3545
ESCORT VI (GAL)	1.8 XR3i 16V 4x4	96	08/93 – 01/95	3549	
ESCORT VI (GAL)	RS 2000	110	09/92 – 01/95	3548	3545
ESCORT VI (GAL)	RS 2000	110	09/92 – 01/95	3549	3545
ESCORT VI (GAL)	RS 2000 4x4	110	08/93 – 01/95	3548	
ESCORT VI (GAL)	RS 2000 4x4	110	08/93 – 01/95	3549	
ESCORT VI Convertible (ALL)	1.4	52	12/92 – 04/94	3465	
ESCORT VI Convertible (ALL)	1.4 i	55	07/93 – 01/95	3465	
ESCORT VI Convertible (ALL)	1.6 16V XR3i	66	12/92 – 01/95	3465	3545
ESCORT VI Convertible (ALL)	1.6 i 16V	65	02/94 – 01/95	3465	3545
ESCORT VI Convertible (ALL)	1.8 16V XR3i	77	12/92 – 01/95	3465	3545
ESCORT VI Convertible (ALL)	1.8 16V XR3i	96	12/92 – 01/95	3548	3545
ESCORT VI Convertible (ALL)	1.8 16V XR3i	96	12/92 – 01/95	3549	
ESCORT VI Estate (GAL)	1.3	44	09/92 – 01/95	3465	
ESCORT VI Estate (GAL)	1.4	52	09/92 – 01/95	3465	
ESCORT VI Estate (GAL)	1.4	55	01/94 – 01/95	3465	
ESCORT VI Estate (GAL)	1.6 i 16V	65	01/94 – 01/95	3465	3545
ESCORT VI Estate (GAL)	1.6 i 16V	66	09/92 – 01/95	3465	3545
ESCORT VI Estate (GAL)	1.8 D	44	09/92 – 01/95	3465	3545
ESCORT VI Estate (GAL)	1.8 i 16V	77	01/93 – 01/95	3465	3545
ESCORT VI Estate (GAL)	1.8 i 16V	96	02/93 – 01/95	3548	3545
ESCORT VI Estate (GAL)	1.8 i 16V	96	02/93 – 01/95	3549	
ESCORT VI Estate (GAL)	1.8 TD	66	02/93 – 01/95	3465	3545
ESCORT VI Saloon (GAL)	1.3	44	08/93 – 01/95	3465	
ESCORT VI Saloon (GAL)	1.4	52	08/93 – 04/94	3465	
ESCORT VI Saloon (GAL)	1.4	55	08/93 – 01/95	3465	
ESCORT VI Saloon (GAL)	1.6 i 16V	65	01/94 – 01/95	3465	3545
ESCORT VI Saloon (GAL)	1.6 i 16V	66	08/93 – 01/95	3465	3545
ESCORT VI Saloon (GAL)	1.8 D	44	08/93 – 01/95	3465	3545
ESCORT VI Saloon (GAL)	1.8 i 16V	77	08/93 – 01/95	3465	3545
ESCORT VI Saloon (GAL)	1.8 TD	66	08/93 – 01/95	3465	3545
ESCORT VII (GAL, AAL, ABL)	1.3	44	01/95 – 10/98	3465	
ESCORT VII (GAL, AAL, ABL)	1.3	44	01/95 – 10/98	3722	
ESCORT VII (GAL, AAL, ABL)	1.4	55	01/95 – 10/98	3465	
ESCORT VII (GAL, AAL, ABL)	1.4	55	01/95 – 10/98	3722	
ESCORT VII (GAL, AAL, ABL)	1.6 16V	66	01/95 – 10/98	3465	3545
ESCORT VII (GAL, AAL, ABL)	1.6 16V	66	01/95 – 10/98	3722	
ESCORT VII (GAL, AAL, ABL)	1.6 16V 4x4	66	01/95 – 10/98	3465	3545
ESCORT VII (GAL, AAL, ABL)	1.6 16V 4x4	66	01/95 – 10/98	3722	
ESCORT VII (GAL, AAL, ABL)	1.6 i 16V	65	01/95 – 08/95	3465	3545
ESCORT VII (GAL, AAL, ABL)	1.8 16V	77	01/95 – 08/95	3465	3545
ESCORT VII (GAL, AAL, ABL)	1.8 16V	85	01/95 – 10/98	3465	3545
ESCORT VII (GAL, AAL, ABL)	1.8 16V	85	01/95 – 10/98	3722	
ESCORT VII (GAL, AAL, ABL)	1.8 D	44	01/95 – 12/96	3465	3545
ESCORT VII (GAL, AAL, ABL)	1.8 TD	66	01/95 – 10/98	3465	3545
ESCORT VII (GAL, AAL, ABL)	1.8 TD	66	01/95 – 10/98	3722	
ESCORT VII (GAL, AAL, ABL)	1.8 Turbo D	51	12/95 – 10/98	3465	3545
ESCORT VII (GAL, AAL, ABL)	1.8 Turbo D	51	12/95 – 10/98	3722	
ESCORT VII (GAL, AAL, ABL)	RS 2000	110	02/95 – 02/98	3548	3545
ESCORT VII (GAL, AAL, ABL)	RS 2000	110	02/95 – 02/98	3549	
ESCORT VII (GAL, AAL, ABL)	RS 2000 4x4	110	02/95 – 10/98	3548	3545
ESCORT VII (GAL, AAL, ABL)	RS 2000 4x4	110	02/95 – 10/98	3549	
ESCORT VII Convertible (ALL)	1.4	55	02/95 – 08/98	3465	
ESCORT VII Convertible (ALL)	1.4	55	02/95 – 08/98	3722	
ESCORT VII Convertible (ALL)	1.6 16V XR3i	65	02/95 – 12/96	3465	3545
ESCORT VII Convertible (ALL)	1.6 16V XR3i	66	02/95 – 09/99	3465	3545
ESCORT VII Convertible (ALL)	1.6 16V XR3i	66	02/95 – 09/99	3722	
ESCORT VII Convertible (ALL)	1.8 16V XR3i	77	02/95 – 08/98	3465	3545
ESCORT VII Convertible (ALL)	1.8 16V XR3i	77	02/95 – 08/98	3722	
ESCORT VII Convertible (ALL)	1.8 16V XR3i	85	10/95 – 08/98	3465	3545
ESCORT VII Convertible (ALL)	1.8 16V XR3i	85	10/95 – 08/98	3722	
ESCORT VII Convertible (ALL)	1.8 16V XR3i	96	02/95 – 08/00	3548	3545
ESCORT VII Convertible (ALL)	1.8 16V XR3i	96	02/95 – 08/00	3549	
ESCORT VII Convertible (ALL)	1.8 TD	66	09/95 – 08/98	3465	3545
ESCORT VII Convertible (ALL)	1.8 TD	66	09/95 – 08/98	3722	
ESCORT VII Convertible (ALL)	1.8 Turbo D	51	10/96 – 08/99	3465	3545
ESCORT VII Convertible (ALL)	1.8 Turbo D	51	10/96 – 08/99	3722	
ESCORT VII Estate (GAL, ANL)	1.3	44	01/95 – 01/99	3465	
ESCORT VII Estate (GAL, ANL)	1.3	44	01/95 – 01/99	3722	
ESCORT VII Estate (GAL, ANL)	1.4	55	01/95 – 02/99	3465	
ESCORT VII Estate (GAL, ANL)	1.4	55	01/95 – 02/99	3722	
ESCORT VII Estate (GAL, ANL)	1.6 16V	66	01/95 – 02/99	3465	3545

MAKE & MODEL		KW	YEAR		
FORD					
ESCORT VII Estate (GAL, ANL)	1.6 16V	66	01/95 – 02/99	3722	
ESCORT VII Estate (GAL, ANL)	1.6 i 16V	65	01/95 – 08/95	3465	3545
ESCORT VII Estate (GAL, ANL)	1.8 16V	77	01/95 – 08/95	3465	3545
ESCORT VII Estate (GAL, ANL)	1.8 16V	85	01/95 – 02/99	3465	3545
ESCORT VII Estate (GAL, ANL)	1.8 16V	85	01/95 – 02/99	3722	
ESCORT VII Estate (GAL, ANL)	1.8 D	44	01/95 – 02/99	3465	3545
ESCORT VII Estate (GAL, ANL)	1.8 D	44	01/95 – 02/99	3722	
ESCORT VII Estate (GAL, ANL)	1.8 TD	66	01/95 – 02/99	3465	3545
ESCORT VII Estate (GAL, ANL)	1.8 TD	66	01/95 – 02/99	3722	
ESCORT VII Estate (GAL, ANL)	1.8 Turbo D	51	12/95 – 02/99	3465	3545
ESCORT VII Estate (GAL, ANL)	1.8 Turbo D	51	12/95 – 02/99	3722	
ESCORT VII Saloon (GAL, AFL)	1.3	44	01/95 – 02/99	3465	
ESCORT VII Saloon (GAL, AFL)	1.3	44	01/95 – 02/99	3722	
ESCORT VII Saloon (GAL, AFL)	1.4	55	01/95 – 02/99	3465	
ESCORT VII Saloon (GAL, AFL)	1.4	55	01/95 – 02/99	3722	
ESCORT VII Saloon (GAL, AFL)	1.6 i 16V	65	01/95 – 08/95	3465	3545
ESCORT VII Saloon (GAL, AFL)	1.6 i 16V	66	01/95 – 02/99	3465	3545
ESCORT VII Saloon (GAL, AFL)	1.6 i 16V	66	01/95 – 02/99	3722	
ESCORT VII Saloon (GAL, AFL)	1.8 16V	77	01/95 – 08/95	3465	3545
ESCORT VII Saloon (GAL, AFL)	1.8 16V	85	01/95 – 02/99	3465	3545
ESCORT VII Saloon (GAL, AFL)	1.8 16V	85	01/95 – 02/99	3722	
ESCORT VII Saloon (GAL, AFL)	1.8 D	44	01/95 – 12/96	3465	3545
ESCORT VII Saloon (GAL, AFL)	1.8 TD	66	01/95 – 02/99	3465	3545
ESCORT VII Saloon (GAL, AFL)	1.8 TD	66	01/95 – 02/99	3722	
ESCORT VII Saloon (GAL, AFL)	1.8 Turbo D	51	12/95 – 02/99	3465	3545
ESCORT VII Saloon (GAL, AFL)	1.8 Turbo D	51	12/95 – 02/99	3722	
FIESTA Box (F3L, F5L)	1.3	44	09/91 – 02/96	3570	
FIESTA Box (F3L, F5L)	1.8 D	44	09/91 – 02/96	3570	
FIESTA Box (FVD)	1.0	33	08/83 – 11/89	3621	
FIESTA Box (FVD)	1.8 D (FVJ)	43	03/89 – 12/95	3570	
FIESTA Box (J5_, J3_)	1.3	44	02/96 -	3570	
FIESTA Box (J5_, J3_)	1.3	44	02/96 -	3589	
FIESTA Box (J5_, J3_)	1.3	44	02/96 – 08/03	3877	
FIESTA Box (J5_, J3_)	1.4 i	66	04/96 – 10/99	3570	
FIESTA Box (J5_, J3_)	1.8 D	44	02/96 – 04/02	3570	
FIESTA Box (J5_, J3_)	1.8 D	44	02/96 – 04/02	3589	
FIESTA Box (J5_, J3_)	1.8 D	44	02/96 – 04/02	3877	
FIESTA Box (J5_, J3_)	1.8 DI	55	09/00 – 08/03	3877	
FIESTA Box (JV_)	D 1.8	44	05/98 – 04/02	3570	
FIESTA Box (JV_)	D 1.8	44	05/98 – 04/02	3877	
FIESTA Box (JV_)	TD 1.8	55	03/00 – 08/03	3877	
FIESTA Box (WFVT)	1.0 (WFVT)	29	10/77 – 11/86	3621	
FIESTA Box (WFVT)	1.1 (WFVT)	39	10/77 – 11/86	3621	
FIESTA I (GFBT)	1.6 XR2	71	09/81 – 08/83	3570	
FIESTA II (FBD)	1.0	33	09/83 – 11/89	3621	
FIESTA II (FBD)	1.0 (FBD)	33	09/83 – 02/89	3621	
FIESTA II (FBD)	1.1 (FBD)	36	05/86 – 02/89	3621	
FIESTA II (FBD)	1.1 (FBD)	37	09/83 – 02/89	3621	
FIESTA II (FBD)	1.3 (FBD)	51	09/83 – 01/87	3621	
FIESTA II (FBD)	1.4	51	09/83 – 01/87	3621	
FIESTA II (FBD)	1.4 (FBD)	52	10/86 – 02/89	3621	
FIESTA II (FBD)	1.4 (FBD)	54	02/87 – 02/89	3621	
FIESTA II (FBD)	1.4 (FBD)	55	10/85 – 11/89	3621	
FIESTA II (FBD)	1.6	58	01/85 – 11/89	3621	
FIESTA II (FBD)	1.6 D (FBD)	40	04/84 – 02/89	3621	
FIESTA II (FBD)	1.6 XR2 (FBD)	70	03/84 – 02/89	3570	
FIESTA II (FBD)	1.6 XR2 (FBD)	71	04/84 – 02/89	3570	
FIESTA III (GFJ)	1.0	33	03/89 – 12/95	3570	
FIESTA III (GFJ)	1.1	37	03/89 – 12/95	3570	
FIESTA III (GFJ)	1.1	40	03/89 – 12/95	3570	
FIESTA III (GFJ)	1.3	44	03/89 – 12/92	3570	
FIESTA III (GFJ)	1.3	44	03/89 – 12/95	3570	
FIESTA III (GFJ)	1.3 CAT	44	05/91 – 01/97	3570	
FIESTA III (GFJ)	1.4	52	03/89 – 12/95	3570	
FIESTA III (GFJ)	1.4	54	03/89 – 12/95	3570	
FIESTA III (GFJ)	1.4	55	11/92 – 12/96	3570	
FIESTA III (GFJ)	1.4 CAT	54	03/89 – 12/95	3570	
FIESTA III (GFJ)	1.6	65	01/89 – 01/94	3570	
FIESTA III (GFJ)	1.6	66	03/89 – 12/92	3570	
FIESTA III (GFJ)	1.6 i 16V	65	01/94 – 12/95	3570	
FIESTA III (GFJ)	1.6 Turbo (FBJT)	96	03/90 – 10/92	3570	
FIESTA III (GFJ)	1.6 XR2i	76	03/89 – 03/93	3570	
FIESTA III (GFJ)	1.6 XR2i	81	03/89 – 01/94	3570	
FIESTA III (GFJ)	1.8 16V	77	02/92 – 12/95	3570	
FIESTA III (GFJ)	1.8 D	44	03/89 – 12/95	3570	
FIESTA III (GFJ)	1.8 TD	55	03/93 – 12/95	3570	

MAKE & MODEL		KW	YEAR		
FORD					
FIESTA III (GFJ)	1.8 XR2i 16V	96	02/92 – 12/95	3570	
FIESTA IV (JA_, JB_)	1.0 i	48	09/99 – 01/02	3570	
FIESTA IV (JA_, JB_)	1.0 i	48	09/99 – 01/02	3877	
FIESTA IV (JA_, JB_)	1.25 i 16V	55	08/95 – 01/02	3570	
FIESTA IV (JA_, JB_)	1.25 i 16V	55	08/95 – 01/02	3877	
FIESTA IV (JA_, JB_)	1.3 i	37	08/95 – 01/02	3877	
FIESTA IV (JA_, JB_)	1.3 i	44	08/95 – 01/02	3877	
FIESTA IV (JA_, JB_)	1.4 i 16V	66	04/96 – 01/02	3570	
FIESTA IV (JA_, JB_)	1.4 i 16V	66	04/96 – 01/02	3877	
FIESTA IV (JA_, JB_)	1.6	65	02/00 – 01/02	3877	
FIESTA IV (JA_, JB_)	1.6 16V Sport	76	02/00 – 01/02	3877	
FIESTA IV (JA_, JB_)	1.8 D	44	08/95 – 04/00	3877	
FIESTA IV (JA_, JB_)	1.8 DI	55	04/00 – 01/02	3877	
FIESTA V (JH_, JD_)	1.0	49	05/02 – 03/08	3877	
FIESTA V (JH_, JD_)	1.25 16V	51	03/03 – 06/08	3877	
FIESTA V (JH_, JD_)	1.25 16V	55	05/02 – 06/08	3877	
FIESTA V (JH_, JD_)	1.3	44	11/01 – 06/08	3877	
FIESTA V (JH_, JD_)	1.3	51	11/01 – 06/08	3877	
FIESTA V (JH_, JD_)	1.4 16V	59	11/01 – 06/08	3877	
FIESTA V (JH_, JD_)	1.4 TDCi	50	11/01 – 06/08	3877	
FIESTA V (JH_, JD_)	1.6 16V	74	11/01 – 06/08	3877	
FIESTA V (JH_, JD_)	1.6 TDCi	66	11/04 – 06/08	3877	
FIESTA V (JH_, JD_)	ST150	110	03/05 – 06/08		3755
FIESTA V Van	1.3	51	10/03 – 07/05	3877	
FIESTA V Van	1.4 TDCi	50	10/03 – 12/10	3877	
FIESTA VI	125	44	06/08 -	4204	3755
FIESTA VI	125	60	06/08 -	4204	3755
FIESTA VI	1.0	48	01/13 -	4204	3755
FIESTA VI	1.0	59	10/12 -	4204	3755
FIESTA VI	1.0 EcoBoost	74	01/13 -	4204	3755
FIESTA VI	1.0 EcoBoost	92	09/12 -	4204	3755
FIESTA VI	1.0 Sport	103	05/14 -	4204	3755
FIESTA VI	1.4	71	06/08 -	4204	3755
FIESTA VI	1.4 LPG	68	01/09 -	4204	3755
FIESTA VI	1.4 LPG	71	01/09 -	4204	3755
FIESTA VI	1.4 TDCi	50	01/09 -	4204	3755
FIESTA VI	1.4 TDCi	51	07/10 -	4204	3755
FIESTA VI	1.5 TDCi	55	09/12 -	4204	3755
FIESTA VI	1.5 TDCi	70	05/15 -	4204	3755
FIESTA VI	1.6	70	06/08 -	4204	3755
FIESTA VI	1.6 ST	134	03/13 -	4204	3755
FIESTA VI	1.6 TDCi	55	06/08 -	4204	3755
FIESTA VI	1.6 TDCi	66	06/08 -	4204	3755
FIESTA VI	1.6 TDCi	70	02/10 -	4204	3755
FIESTA VI	1.6 Ti	77	09/12 -	4204	3755
FIESTA VI	1.6 Ti	88	06/08 -	4204	3755
FIESTA VI	1.6 Ti	99	12/10 -	4204	3755
FIESTA VI Van	1.0	48	01/13 -	4204	3755
FIESTA VI Van	1.0	59	10/12 -	4204	3755
FIESTA VI Van	1.0 EcoBoost	74	01/13 -	4204	3755
FIESTA VI Van	1.0 EcoBoost	92	09/12 -	4204	3755
FIESTA VI Van	1.5 TDCi	55	10/12 -	4204	3755
FIESTA VI Van	1.5 TDCi	70	05/15 -	4204	3755
FIESTA VI Van	1.6 ST	134	03/13 -	4204	3755
Fiesta IV (JA_, JB_) 44256	-	42	04/1996 - 08/1999	3594	
Fiesta IV (JA_, JB_) 44256 i	J4C, J4J, J4L, J4Q, J4R, J4T	44	04/1996 - 08/1999	3594	
Fiesta IV (JA_, JB_) 44256 i	J4C, J4J, J4L, J4Q, J4R, J4T, JBC	44	08/1995 - 01/2002	3594	
Fiesta IV (JA_, JB_) 44256 i	JJA, JJC, JJE, JJJ, JJK, JJM	37	08/1995 - 01/2002	3594	
Fiesta IV (JA_, JB_) 44287 i 16V	FHA, FHE	66	04/1996 - 01/2002	3594	
Fiesta IV (JA_, JB_) 44409 D	RTJ, RTK	44	08/1995 - 04/2000	3594	
Fiesta IV (JA_, JB_) 45658 i 16V	DHA, DHB, DHC, DHD, DHE, DHF, DHG	55	08/1995 - 01/2002	3594	
Fiesta IV (JA_, JB_) 45658 i 16V	DHA, DHB, DHC, DHD, DHE, DHF, DHG	55	08/1995 - 01/2002	3594	
FOCUS (DAW, DBW)	1.4 16V	55	10/98 – 11/04	3754	3755
FOCUS (DAW, DBW)	1.6 16V	74	10/98 – 11/04	3754	3755
FOCUS (DAW, DBW)	1.6 16V Flexifuel	75	01/02 – 11/04	3754	3755
FOCUS (DAW, DBW)	1.8 16V	85	10/98 – 11/04	3754	3755
FOCUS (DAW, DBW)	1.8 DI / TDDi	55	08/99 – 11/04	3754	3755
FOCUS (DAW, DBW)	1.8 TDCi	74	08/02 – 11/04	3754	3755
FOCUS (DAW, DBW)	1.8 TDCi	85	03/01 – 11/04	3754	3755
FOCUS (DAW, DBW)	1.8 Turbo DI / TDDi	66	10/98 – 11/04	3754	3755
FOCUS (DAW, DBW)	2.0 16V	96	10/98 – 11/04	3754	3755
FOCUS (DAW, DBW)	RS	158	10/02 – 11/04	3801	3755
FOCUS (DAW, DBW)	ST170	127	03/02 – 11/04	3801	3755
FOCUS C-MAX	1.6	74	10/03 – 03/07	3885	3853/1
FOCUS C-MAX	1.6 TDCi	66	02/05 – 03/07	3885	3853/1
FOCUS C-MAX	1.6 TDCi	80	10/03 – 03/07	3885	3853/1

MAKE & MODEL		KW	YEAR		
FORD					
FOCUS C-MAX	1.6 Ti	85	08/04 – 03/07	3885	3853/1
FOCUS C-MAX	1.8	88	10/03 – 03/07	3885	3853/1
FOCUS C-MAX	1.8	90	09/05 – 03/07	3885	3853/1
FOCUS C-MAX	1.8	92	04/04 – 03/07	3885	3853/1
FOCUS C-MAX	1.8 Flexifuel	92	01/06 – 03/07	3885	3853/1
FOCUS C-MAX	1.8 TDCi	85	01/05 – 03/07	3885	3853/1
FOCUS C-MAX	2.0	107	03/04 – 03/07	3885	3853/1
FOCUS C-MAX	2.0 TDCi	98	10/03 – 03/07	3885	3853/1
FOCUS C-MAX	2.0 TDCi	100	10/03 – 03/07	3885	3853/1
FOCUS Estate (DNW)	1.4 16V	55	02/99 – 11/04	3754	3755
FOCUS Estate (DNW)	1.6 16V	74	02/99 – 11/04	3754	3755
FOCUS Estate (DNW)	1.6 16V Flexifuel	75	01/02 – 11/04	3754	3755
FOCUS Estate (DNW)	1.8 16V	85	02/99 – 11/04	3754	3755
FOCUS Estate (DNW)	1.8 BiFuel	82	02/03 – 01/05	3754	3755
FOCUS Estate (DNW)	1.8 DI / TDDi	55	08/99 – 11/04	3754	3755
FOCUS Estate (DNW)	1.8 TDCi	74	08/02 – 11/04	3754	3755
FOCUS Estate (DNW)	1.8 TDCi	85	03/01 – 11/04	3754	3755
FOCUS Estate (DNW)	1.8 Turbo DI / TDDi	66	02/99 – 11/04	3754	3755
FOCUS Estate (DNW)	2.0 16V	96	02/99 – 11/04	3754	3755
FOCUS Estate (DNW)	ST170	127	08/02 – 11/04	3801	3755
FOCUS II (DA_)	1.4	59	07/04 – 09/12	3885	3853/1
FOCUS II (DA_)	1.6	74	07/04 – 09/12	3885	3853/1
FOCUS II (DA_)	1.6 LPG	85	10/09 – 07/11	3885	3853/1
FOCUS II (DA_)	1.6 TDCi	66	01/05 – 09/12	3885	3853/1
FOCUS II (DA_)	1.6 TDCi	74	07/04 – 09/12	3885	3853/1
FOCUS II (DA_)	1.6 TDCi	80	07/04 – 09/12	3885	3853/1
FOCUS II (DA_)	1.6 Ti	85	07/04 – 09/12	3885	3853/1
FOCUS II (DA_)	1.8	92	03/06 – 09/12	3885	3853/1
FOCUS II (DA_)	1.8 Flexifuel	92	01/06 – 09/12	3885	3853/1
FOCUS II (DA_)	1.8 Flexifuel	96	12/05 – 01/08	3885	3853/1
FOCUS II (DA_)	1.8 TDCi	85	01/05 – 09/12	3885	3853/1
FOCUS II (DA_)	2.0	104	06/05 – 09/08	3885	3853/1
FOCUS II (DA_)	2.0	105	04/10 – 09/12	3885	3853/1
FOCUS II (DA_)	2.0	107	07/04 – 09/12	3885	3853/1
FOCUS II (DA_)	2.0 CNG	107	04/09 – 07/11	3885	3853/1
FOCUS II (DA_)	2.0 LPG	107	06/08 – 07/11	3885	3853/1
FOCUS II (DA_)	2.0 TDCi	81	02/08 – 07/11	3885	3853/1
FOCUS II (DA_)	2.0 TDCi	98	07/04 – 01/08	3885	3853/1
FOCUS II (DA_)	2.0 TDCi	100	07/04 – 09/12	3885	3853/1
FOCUS II (DA_)	2.5 RS	224	01/09 – 07/11		4157
FOCUS II (DA_)	2.5 RS 500	257	05/10 – 07/11		4157
FOCUS II (DA_)	2.5 ST	166	10/05 – 09/12		3853/1
FOCUS II Convertible	1.6	74	10/06 – 07/11	3885	3853/1
FOCUS II Convertible	2.0	107	10/06 – 07/11	3885	3853/1
FOCUS II Convertible	2.0 TDCi	100	10/06 – 07/11	3885	3853/1
FOCUS II Estate (DA_)	1.4	59	07/04 – 09/12	3885	3853/1
FOCUS II Estate (DA_)	1.6	74	07/04 – 07/11	3885	3853/1
FOCUS II Estate (DA_)	1.6 LPG	85	10/09 – 09/12	3885	3853/1
FOCUS II Estate (DA_)	1.6 TDCi	66	07/04 – 09/12	3885	3853/1
FOCUS II Estate (DA_)	1.6 TDCi	74	07/04 – 09/12	3885	3853/1
FOCUS II Estate (DA_)	1.6 TDCi	80	07/04 – 09/12	3885	3853/1
FOCUS II Estate (DA_)	1.6 TDCi	81	12/07 – 09/12	3885	3853/1
FOCUS II Estate (DA_)	1.6 Ti	85	07/04 – 09/12	3885	3853/1
FOCUS II Estate (DA_)	1.8	92	03/06 – 09/12	3885	3853/1
FOCUS II Estate (DA_)	1.8 Flexifuel	92	01/06 – 09/12	3885	3853/1
FOCUS II Estate (DA_)	1.8 Flexifuel	97	12/05 – 01/08	3885	3853/1
FOCUS II Estate (DA_)	1.8 TDCi	85	07/04 – 09/12	3885	3853/1
FOCUS II Estate (DA_)	2.0	107	07/04 – 09/12	3885	3853/1
FOCUS II Estate (DA_)	2.0 LPG	107	06/08 – 07/11	3885	3853/1
FOCUS II Estate (DA_)	2.0 TDCi	81	02/08 – 07/11	3885	3853/1
FOCUS II Estate (DA_)	2.0 TDCi	98	07/04 – 01/08	3885	3853/1
FOCUS II Estate (DA_)	2.0 TDCi	100	07/04 – 09/12	3885	3853/1
FOCUS II Saloon (DA_)	1.4	59	04/05 – 09/12	3885	3853/1
FOCUS II Saloon (DA_)	1.6	74	04/05 – 09/12	3885	3853/1
FOCUS II Saloon (DA_)	1.6 TDCi	66	04/05 – 09/12	3885	3853/1
FOCUS II Saloon (DA_)	1.6 TDCi	74	04/05 – 09/12	3885	3853/1
FOCUS II Saloon (DA_)	1.6 TDCi	80	04/05 – 09/12	3885	3853/1
FOCUS II Saloon (DA_)	1.6 Ti	85	04/05 – 09/12	3885	3853/1
FOCUS II Saloon (DA_)	1.8	92	03/06 – 09/12	3885	3853/1
FOCUS II Saloon (DA_)	1.8 Flexifuel	92	06/06 – 07/11	3885	3853/1
FOCUS II Saloon (DA_)	1.8 Flexifuel	96	12/05 – 01/08	3885	3853/1
FOCUS II Saloon (DA_)	1.8 TDCi	85	04/05 – 09/12	3885	3853/1
FOCUS II Saloon (DA_)	2.0	104	02/08 -	3885	3853/1
FOCUS II Saloon (DA_)	2.0	107	04/05 – 07/11	3885	3853/1
FOCUS II Saloon (DA_)	2.0 TDCi	81	02/08 – 07/11	3885	3853/1
FOCUS II Saloon (DA_)	2.0 TDCi	100	04/05 – 09/12	3885	3853/1

MAKE & MODEL   		KW	YEAR		
FORD					
FOCUS III	1.0 EcoBoost	74	02/12 -	3885	
FOCUS III	1.0 EcoBoost	92	02/12 -	3885	
FOCUS III	1.5 EcoBoost	110	09/14 -	3885	
FOCUS III	1.5 EcoBoost	134	09/14 -	3885	
FOCUS III	1.5 TDCi	70	09/14 -	3885	
FOCUS III	1.5 TDCi	88	09/14 -	3885	
FOCUS III	1.5 TDCi ECOnetic	77	09/14 -	3885	
FOCUS III	1.6 EcoBoost	110	07/10 -	3885	
FOCUS III	1.6 EcoBoost	134	07/10 -	3885	
FOCUS III	1.6 Flexifuel	88	07/10 -	3885	
FOCUS III	1.6 Flexifuel	110	07/13 -	3885	
FOCUS III	1.6 LPG	86	02/12 -	3885	
FOCUS III	1.6 LPG	88	02/12 -	3885	
FOCUS III	1.6 TDCi	70	07/10 -	3885	
FOCUS III	1.6 TDCi	85	07/10 -	3885	
FOCUS III	1.6 TDCi ECOnetic	77	05/12 -	3885	
FOCUS III	1.6 Ti	63	08/11 -	3885	
FOCUS III	1.6 Ti	77	07/10 -	3885	
FOCUS III	1.6 Ti	88	02/12 -	3885	
FOCUS III	1.6 Ti	92	07/10 -	3885	
FOCUS III	2.0	110	10/13 -	3885	3853/1
FOCUS III	2.0 ST	184	07/12 -	4226	
FOCUS III	2.0 TDCi	85	07/10 -	3885	
FOCUS III	2.0 TDCi	100	07/10 -	3885	
FOCUS III	2.0 TDCi	103	07/10 -	3885	
FOCUS III	2.0 TDCi	110	11/14 -	3885	
FOCUS III	2.0 TDCi	120	07/10 -	3885	
FOCUS III	2.0 TDCi ST	136	11/14 -	4226	
FOCUS III	2.0 Ti-GDi	125	08/11 -	3885	
FOCUS III	Electric	107	07/13 -	3885	
FOCUS III Box Body / Estate	1.0 EcoBoost	74	02/12 -	3885	
FOCUS III Box Body / Estate	1.0 EcoBoost	92	02/12 -	3885	
FOCUS III Box Body / Estate	1.5 EcoBoost	110	09/14 -	3885	
FOCUS III Box Body / Estate	1.5 EcoBoost	134	09/14 -	3885	
FOCUS III Box Body / Estate	1.5 TDCi	70	09/14 -	3885	
FOCUS III Box Body / Estate	1.5 TDCi	88	09/14 -	3885	
FOCUS III Box Body / Estate	1.5 TDCi ECOnetic	77	09/14 -	3885	
FOCUS III Box Body / Estate	2.0 TDCi	110	11/14 -	3885	
FOCUS III Box Body / Hatchback	1.0 EcoBoost	74	02/12 -	3885	
FOCUS III Box Body / Hatchback	1.0 EcoBoost	92	02/12 -	3885	
FOCUS III Box Body / Hatchback	1.5 EcoBoost	110	09/14 -	3885	
FOCUS III Box Body / Hatchback	1.5 EcoBoost	134	09/14 -	3885	
FOCUS III Box Body / Hatchback	1.5 TDCi	70	09/14 -	3885	
FOCUS III Box Body / Hatchback	1.5 TDCi	88	09/14 -	3885	
FOCUS III Box Body / Hatchback	1.5 TDCi ECOnetic	77	09/14 -	3885	
FOCUS III Box Body / Hatchback	1.6 TDCi	85	02/12 -	3885	
FOCUS III Box Body / Hatchback	2.0 TDCi	110	11/14 -	3885	
FOCUS III Saloon	1.0 EcoBoost	74	02/12 -	3885	
FOCUS III Saloon	1.0 EcoBoost	92	02/12 -	3885	
FOCUS III Saloon	1.5 EcoBoost	110	11/14 -	3885	
FOCUS III Saloon	1.5 EcoBoost	134	11/14 -	3885	
FOCUS III Saloon	1.5 TDCi	70	11/14 -	3885	
FOCUS III Saloon	1.5 TDCi	88	11/14 -	3885	
FOCUS III Saloon	1.5 TDCi ECOnetic	77	11/14 -	3885	
FOCUS III Saloon	1.6 EcoBoost	110	07/10 -	3885	
FOCUS III Saloon	1.6 EcoBoost	134	07/10 -	3885	
FOCUS III Saloon	1.6 Flexifuel	88	07/10 -	3885	
FOCUS III Saloon	1.6 Flexifuel	110	07/13 -	3885	
FOCUS III Saloon	1.6 TDCi	70	07/10 -	3885	
FOCUS III Saloon	1.6 TDCi	77	05/12 -	3885	
FOCUS III Saloon	1.6 TDCi	85	07/10 -	3885	
FOCUS III Saloon	1.6 Ti	63	08/11 -	3885	
FOCUS III Saloon	1.6 Ti	77	07/10 -	3885	
FOCUS III Saloon	1.6 Ti	92	07/10 -	3885	
FOCUS III Saloon	2.0	110	10/13 -	3885	3853/1
FOCUS III Saloon	2.0 GDi	125	08/11 -	3885	
FOCUS III Saloon	2.0 TDCi	85	07/10 -	3885	
FOCUS III Saloon	2.0 TDCi	100	07/10 -	3885	
FOCUS III Saloon	2.0 TDCi	103	07/10 -	3885	
FOCUS III Saloon	2.0 TDCi	110	11/14 -	3885	
FOCUS III Saloon	2.0 TDCi	120	07/10 -	3885	
FOCUS III Turnier	1.0 EcoBoost	74	02/12 -	3885	
FOCUS III Turnier	1.0 EcoBoost	92	02/12 -	3885	
FOCUS III Turnier	1.5 EcoBoost	110	09/14 -	3885	
FOCUS III Turnier	1.5 EcoBoost	134	09/14 -	3885	
FOCUS III Turnier	1.5 TDCi	70	09/14 -	3885	

MAKE & MODEL		KW	YEAR		
FORD					
FOCUS III Turnier	1.5 TDCi	88	09/14 -	3885	
FOCUS III Turnier	1.5 TDCi ECOnetic	77	09/14 -	3885	
FOCUS III Turnier	1.6 EcoBoost	110	07/10 -	3885	
FOCUS III Turnier	1.6 EcoBoost	134	07/10 -	3885	
FOCUS III Turnier	1.6 Flexifuel	88	07/10 -	3885	
FOCUS III Turnier	1.6 Flexifuel	110	07/13 -	3885	
FOCUS III Turnier	1.6 LPG	86	02/12 -	3885	
FOCUS III Turnier	1.6 LPG	88	02/12 -	3885	
FOCUS III Turnier	1.6 TDCi	70	07/10 -	3885	
FOCUS III Turnier	1.6 TDCi	85	07/10 -	3885	
FOCUS III Turnier	1.6 TDCi ECOnetic	77	05/12 -	3885	
FOCUS III Turnier	1.6 Ti	63	08/11 -	3885	
FOCUS III Turnier	1.6 Ti	77	07/10 -	3885	
FOCUS III Turnier	1.6 Ti	88	02/12 -	3885	
FOCUS III Turnier	1.6 Ti	92	07/10 -	3885	
FOCUS III Turnier	2.0	110	10/13 -	3885	3853/1
FOCUS III Turnier	2.0 ST	184	07/12 -	4226	
FOCUS III Turnier	2.0 TDCi	85	07/10 -	3885	
FOCUS III Turnier	2.0 TDCi	100	07/10 -	3885	
FOCUS III Turnier	2.0 TDCi	103	07/10 -	3885	
FOCUS III Turnier	2.0 TDCi	110	11/14 -	3885	
FOCUS III Turnier	2.0 TDCi	120	07/10 -	3885	
FOCUS III Turnier	2.0 TDCi ST	136	11/14 -	4226	
FOCUS III Turnier	2.0 Ti-GDi	125	07/10 -	3885	
FOCUS Saloon (DFW)	1.4 16V	55	02/99 – 11/04	3754	3755
FOCUS Saloon (DFW)	1.6 16V	74	02/99 – 11/04	3754	3755
FOCUS Saloon (DFW)	1.8 16V	85	02/99 – 11/04	3754	3755
FOCUS Saloon (DFW)	1.8 TDCi	74	08/02 – 11/04	3754	3755
FOCUS Saloon (DFW)	1.8 TDCi	85	03/01 – 11/04	3754	3755
FOCUS Saloon (DFW)	1.8 Turbo DI / TDDi	55	08/01 – 03/05	3754	3755
FOCUS Saloon (DFW)	1.8 Turbo DI / TDDi	66	02/99 – 11/04	3754	3755
FOCUS Saloon (DFW)	2.0 16V	96	02/99 – 11/04	3754	3755
FUSION (JU_)	125	55	08/04 – 12/12	3877	
FUSION (JU_)	1.4	59	08/02 – 12/12	3877	
FUSION (JU_)	1.4 LPG	59	01/10 – 12/12	3877	
FUSION (JU_)	1.4 TDCi	50	08/02 – 12/12	3877	
FUSION (JU_)	1.6	74	08/02 – 11/08	3877	
FUSION (JU_)	1.6 TDCi	66	11/04 – 12/12	3877	
GALAXY (WA6)	1.6 EcoBoost	118	11/10 – 06/15	4161	4157
GALAXY (WA6)	1.6 TDCi	85	02/11 – 06/15	4161	4157
GALAXY (WA6)	1.8 TDCi	74	05/06 – 06/15	4161	4157
GALAXY (WA6)	1.8 TDCi	92	05/06 – 06/15	4161	4157
GALAXY (WA6)	2.0	107	05/06 – 06/15	4161	4157
GALAXY (WA6)	2.0 EcoBoost	146	07/10 – 06/15		4157
GALAXY (WA6)	2.0 EcoBoost	149	03/10 – 06/15		4157
GALAXY (WA6)	2.0 Flexifuel	107	05/06 – 06/15	4161	4157
GALAXY (WA6)	2.0 TDCi	85	11/07 – 06/15	4161	4157
GALAXY (WA6)	2.0 TDCi	96	05/06 – 06/15	4161	4157
GALAXY (WA6)	2.0 TDCi	100	05/06 – 06/15	4161	4157
GALAXY (WA6)	2.0 TDCi	103	05/06 – 06/15	4161	4157
GALAXY (WA6)	2.0 TDCi	120	03/10 – 06/15	4161	4157
GALAXY (WA6)	2.2 TDCi	129	03/08 – 12/12	4161	4157
GALAXY (WA6)	2.2 TDCi	147	11/10 – 06/15	4161	4157
GALAXY (WA6)	2.3	118	09/07 – 06/15	4161	4157
GALAXY (WGR)	1.9 TDI	66	03/95 – 05/06	3506	3529/1
GALAXY (WGR)	1.9 TDI	81	08/97 – 04/00	3506	3529/1
GALAXY (WGR)	1.9 TDI	110	05/05 – 05/06	4095	
GALAXY (WGR)	2.0 i	85	11/95 – 05/06	3506	3529/1
GALAXY (WGR)	2.3 16V	107	01/97 – 05/06	3506	3529/1
GALAXY (WGR)	2.3 4x4	107	09/96 – 04/00	3506	3529/1
GALAXY (WGR)	2.8 i V6	128	11/95 – 04/00	3506	3529/1
GALAXY (WGR)	2.8 i V6 4x4	128	04/96 – 04/00	3506	3529/1
GALAXY (WGR)	2.8 V6	150	04/00 – 05/06	4095	
GALAXY III (CDR)	1.5 EcoBoost (UNCI)	118	01/15 -		4270
GALAXY III (CDR)	1.5 EcoBoost (UNCJ)	118	01/15 -		4270
GALAXY III (CDR)	2.0 EcoBoost (R9CD)	176	01/15 -		4270
GALAXY III (CDR)	2.0 EcoBoost (R9CI)	176	01/15 -		4270
GALAXY III (CDR)	2.0 TDCi (T7CI)	110	01/15 -		4270
GALAXY III (CDR)	2.0 TDCi (T7CJ)	110	01/15 -		4270
GALAXY III (CDR)	2.0 TDCi (T7CK)	110	01/15 -		4270
GALAXY III (CDR)	2.0 TDCi (T7CL)	110	01/15 -		4270
GALAXY III (CDR)	2.0 TDCi (T8CG)	132	01/15 -		4270
GALAXY III (CDR)	2.0 TDCi (T8CH)	132	01/15 -		4270
GALAXY III (CDR)	2.0 TDCi (T8CI)	132	01/15 -		4270
GALAXY III (CDR)	2.0 TDCi (T8CJ)	132	05/15 -		4270
GALAXY III (CDR)	2.0 TDCi (UFCA)	88	01/15 -		4270

MAKE & MODEL   		KW	YEAR		
FORD					
GALAXY III (CDR)	2.0 TDCi (UFCB)	88	01/15 -		4270
GALAXY III (CDR)	2.0 TDCi (T8CJ)	132	01/15 -		4270
GALAXY III (CDR)	2.0 TDCi Bi-Turbo (T9CB)	154	01/15 -		4270
GALAXY III (CDR)	2.0 TDCi Bi-Turbo (T9CC)	154	01/15 -		4270
GRANADA (GGNL)	3.0 (EV 30 H)	101	01/72 – 02/76	3344	
GRANADA (GGTL, GGFL)	1.7	51	12/74 – 08/77	3484	
GRANADA (GGTL, GGFL)	1.7	51	12/74 – 08/77	3312	
GRANADA (GGTL, GGFL)	2.0	66	01/75 – 08/77	3484	
GRANADA (GGTL, GGFL)	2.0	66	01/75 – 08/77	3312	
GRANADA (GGTL, GGFL)	3.0	101	01/72 – 02/76	3484	
GRANADA (GGTL, GGFL)	3.0	101	01/72 – 02/76	3312	
GRANADA (GGTL, GGFL)	3.0 (EV 30 H)	101	01/72 – 02/76	3344	
GRANADA (GU)	1.6	55	07/81 – 08/85	3484	
GRANADA (GU)	1.6	55	07/81 – 08/85	3312	
GRANADA (GU)	1.7	51	08/77 – 05/82	3484	
GRANADA (GU)	1.7	51	08/77 – 05/82	3312	
GRANADA (GU)	1.7	54	08/77 – 07/81	3484	
GRANADA (GU)	1.7	54	08/77 – 07/81	3312	
GRANADA (GU)	1.9 D	40	08/77 – 08/82	3484	
GRANADA (GU)	1.9 D	40	08/77 – 08/82	3312	
GRANADA (GU)	2.0	64	08/77 – 07/79	3484	
GRANADA (GU)	2.0	64	08/77 – 07/79	3312	
GRANADA (GU)	2.0	66	08/77 – 08/85	3484	
GRANADA (GU)	2.0	66	08/77 – 08/85	3312	
GRANADA (GU)	2.0	74	08/79 – 08/85	3484	
GRANADA (GU)	2.0	74	08/79 – 08/85	3312	
GRANADA (GU)	2.0	77	08/81 – 08/85	3484	
GRANADA (GU)	2.0	77	08/81 – 08/85	3312	
GRANADA (GU)	2.1 D	46	08/77 – 08/82	3484	
GRANADA (GU)	2.1 D	46	08/77 – 08/82	3312	
GRANADA (GU)	2.3	79	08/77 – 06/79	3484	
GRANADA (GU)	2.3	79	08/77 – 06/79	3312	
GRANADA (GU)	2.3	82	06/81 – 08/85	3484	
GRANADA (GU)	2.3	82	06/81 – 08/85	3312	
GRANADA (GU)	2.3	84	06/79 – 08/85	3484	
GRANADA (GU)	2.3	84	06/79 – 08/85	3312	
GRANADA (GU)	2.5 D	51	08/82 – 08/85	3484	
GRANADA (GU)	2.5 D	51	08/82 – 08/85	3312	
GRANADA (GU)	2.8 i	118	08/77 – 08/81	3480	
GRANADA Estate (GGNL)	2.0	66	01/75 – 08/77	3484	
GRANADA Estate (GGNL)	2.0	66	01/75 – 08/77	3312	
GRANADA Estate (GGNL)	3.0 (EV 30 H)	101	01/72 – 02/76	3313	
GRANADA Estate (GNU)	1.7	54	08/77 – 07/81	3484	
GRANADA Estate (GNU)	1.7	54	08/77 – 07/81	3312	
GRANADA Estate (GNU)	2.0	64	08/77 – 07/79	3484	
GRANADA Estate (GNU)	2.0	64	08/77 – 07/79	3312	
GRANADA Estate (GNU)	2.0	66	08/77 – 06/85	3484	
GRANADA Estate (GNU)	2.0	66	08/77 – 06/85	3312	
GRANADA Estate (GNU)	2.0	74	08/79 – 08/85	3484	
GRANADA Estate (GNU)	2.0	74	08/79 – 08/85	3312	
GRANADA Estate (GNU)	2.0	77	08/81 – 08/85	3484	
GRANADA Estate (GNU)	2.0	77	08/81 – 08/85	3312	
GRANADA Estate (GNU)	2.3	79	08/77 – 06/79	3484	
GRANADA Estate (GNU)	2.3	79	08/77 – 06/79	3312	
GRANADA Estate (GNU)	2.3	82	06/81 – 06/85	3484	
GRANADA Estate (GNU)	2.3	82	06/81 – 06/85	3312	
GRANADA Estate (GNU)	2.3	84	06/79 – 08/85	3484	
GRAND C-MAX (DXA/CB7, DXA/CEU)	1.0 EcoBoost	74	10/12 -	3885	
GRAND C-MAX (DXA/CB7, DXA/CEU)	1.0 EcoBoost	92	10/12 -	3885	
GRAND C-MAX (DXA/CB7, DXA/CEU)	1.5 EcoBoost	110	03/15 -	3885	
GRAND C-MAX (DXA/CB7, DXA/CEU)	1.5 EcoBoost	134	03/15 -	3885	
GRAND C-MAX (DXA/CB7, DXA/CEU)	1.5 TDCi	70	03/15 -	3885	
GRAND C-MAX (DXA/CB7, DXA/CEU)	1.5 TDCi	88	03/15 -	3885	
GRAND C-MAX (DXA/CB7, DXA/CEU)	1.6 EcoBoost	110	12/10 -	3885	
GRAND C-MAX (DXA/CB7, DXA/CEU)	1.6 EcoBoost	134	12/10 -	3885	
GRAND C-MAX (DXA/CB7, DXA/CEU)	1.6 TDCi	70	12/10 -	3885	
GRAND C-MAX (DXA/CB7, DXA/CEU)	1.6 TDCi	85	12/10 -	3885	
GRAND C-MAX (DXA/CB7, DXA/CEU)	1.6 Ti	77	12/10 -	3885	
GRAND C-MAX (DXA/CB7, DXA/CEU)	1.6 Ti	92	12/10 -	3885	
GRAND C-MAX (DXA/CB7, DXA/CEU)	2.0 TDCi	85	02/11 -	3885	
GRAND C-MAX (DXA/CB7, DXA/CEU)	2.0 TDCi	100	02/11 -	3885	
GRAND C-MAX (DXA/CB7, DXA/CEU)	2.0 TDCi	103	02/11 -	3885	
GRAND C-MAX (DXA/CB7, DXA/CEU)	2.0 TDCi	110	03/15 -	3885	
GRAND C-MAX (DXA/CB7, DXA/CEU)	2.0 TDCi	120	12/10 -	3885	
GRAND C-MAX (DXA/CB7, DXA/CEU)	2.0 TDCi	125	03/15 -	3885	
GRAND C-MAX Van	1.0 EcoBoost	74	10/12 -	3885	

MAKE & MODEL   		KW	YEAR		
FORD					
GRAND C-MAX Van	1.0 EcoBoost	92	10/12 -	3885	
GRAND C-MAX Van	1.5 EcoBoost	110	03/15 -	3885	
GRAND C-MAX Van	1.5 TDCi	88	03/15 -	3885	
GRAND C-MAX Van	1.6 EcoBoost	110	12/10 -	3885	
GRAND C-MAX Van	1.6 TDCi	70	12/10 -	3885	
GRAND C-MAX Van	1.6 TDCi	85	12/10 -	3885	
GRAND C-MAX Van	2.0 TDCI	85	02/11 -	3885	
GRAND C-MAX Van	2.0 TDCi	103	12/10 -	3885	
GRAND C-MAX Van	2.0 TDCi	110	03/15 -	3885	
GRAND C-MAX Van	2.0 TDCi	120	12/10 -	3885	
GRAND C-MAX Van	2.0 TDCi	125	03/15 -	3885	
HCV Transit Custom Bus (F3) 2.0 TDCi	BJFA (05.19-.), BJFB (05.19-.), YLF6, YLFA (05.19-	77	12/2015 -	4174/1	
HCV Transit Custom Bus (F3) 2.0 TDCi	BJFA (05.19-.), BJFB (05.19-.), YLF6, YLFA (05.19-	77	12/2015 -		4175/1
HCV Transit Custom Bus (F3) 2.0 TDCi	BJFA (05.19-.), BJFB (05.19-.), YLF6, YLFA (05.19-	77	12/2015 -	4351	
HCV Transit Custom Bus (F3) 2.0 TDCi	BJFA (05.19-.), BJFB (05.19-.), YLF6, YLFA (05.19-	77	12/2015 -	4351/1	
HCV Transit Custom Bus (F3) 2.0 TDCi	BJFA (05.19-.), BJFB (05.19-.), YLF6, YLFA (05.19-	77	12/2015 -	4174/1	4175/1
HCV Transit Custom Bus (F3) 2.0 TDCi	BKFA (05.19-.), BKFB (05.19-.), YMF6, YMFA (05.19-	96	12/2015 -	4174/1	
HCV Transit Custom Bus (F3) 2.0 TDCi	BKFA (05.19-.), BKFB (05.19-.), YMF6, YMFA (05.19-	96	12/2015 -		4175/1
HCV Transit Custom Bus (F3) 2.0 TDCi	BKFA (05.19-.), BKFB (05.19-.), YMF6, YMFA (05.19-	96	12/2015 -	4351	
HCV Transit Custom Bus (F3) 2.0 TDCi	BKFA (05.19-.), BKFB (05.19-.), YMF6, YMFA (05.19-	96	12/2015 -	4351/1	
HCV Transit Custom Bus (F3) 2.0 TDCi	BKFA (05.19-.), BKFB (05.19-.), YMF6, YMFA (05.19-	96	12/2015 -	4174/1	4175/1
HCV Transit Custom Bus (F3) 2.0 TDCi	BLFA (05.19-.), BLFB (05.19-.), YNF6, YNFA (05.19-	125	12/2015 -	4174/1	
HCV Transit Custom Bus (F3) 2.0 TDCi	BLFA (05.19-.), BLFB (05.19-.), YNF6, YNFA (05.19-	125	12/2015 -		4175/1
HCV Transit Custom Bus (F3) 2.0 TDCi	BLFA (05.19-.), BLFB (05.19-.), YNF6, YNFA (05.19-	125	12/2015 -	4351	
HCV Transit Custom Bus (F3) 2.0 TDCi	BLFA (05.19-.), BLFB (05.19-.), YNF6, YNFA (05.19-	125	12/2015 -	4351/1	
HCV Transit Custom Bus (F3) 2.0 TDCi	BLFA (05.19-.), BLFB (05.19-.), YNF6, YNFA (05.19-	125	12/2015 -	4174/1	4175/1
HCV Transit Custom Bus (F3) 44229 TDCi	CVFF	114	04/2012 -	4174/1	
HCV Transit Custom Bus (F3) 44229 TDCi	CVFF	114	04/2012 -		4175/1
HCV Transit Custom Bus (F3) 44229 TDCi	CVFF	114	04/2012 -	4351	
HCV Transit Custom Bus (F3) 44229 TDCi	CVFF	114	04/2012 -	4351/1	
HCV Transit Custom Bus (F3) 44229 TDCi	CVFF	114	04/2012 -	4174/1	4175/1
HCV Transit Custom Bus (F3) 44229 TDCi	CYF4, CYFF	92	04/2012 -	4174/1	
HCV Transit Custom Bus (F3) 44229 TDCi	CYF4, CYFF	92	04/2012 -		4175/1
HCV Transit Custom Bus (F3) 44229 TDCi	CYF4, CYFF	92	04/2012 -	4351	
HCV Transit Custom Bus (F3) 44229 TDCi	CYF4, CYFF	92	04/2012 -	4351/1	
HCV Transit Custom Bus (F3) 44229 TDCi	CYF4, CYFF	92	04/2012 -	4174/1	4175/1
HCV Transit Custom Bus (F3) 44229 TDCi	DRF4, DRFF, DRFG	74	04/2012 -	4174/1	
HCV Transit Custom Bus (F3) 44229 TDCi	DRF4, DRFF, DRFG	74	04/2012 -		4175/1
HCV Transit Custom Bus (F3) 44229 TDCi	DRF4, DRFF, DRFG	74	04/2012 -	4351	
HCV Transit Custom Bus (F3) 44229 TDCi	DRF4, DRFF, DRFG	74	04/2012 -	4351/1	
HCV Transit Custom Bus (F3) 44229 TDCi	DRF4, DRFF, DRFG	74	04/2012 -	4174/1	4175/1
HCV Transit Custom Van (FY, FZ) 2.0 TDCi	BJFA (05.19-.), BJFB (05.19-.), YLF6, YLFA (05.19-	77	12/2015 -	4174/1	
HCV Transit Custom Van (FY, FZ) 2.0 TDCi	BJFA (05.19-.), BJFB (05.19-.), YLF6, YLFA (05.19-	77	12/2015 -		4175/1
HCV Transit Custom Van (FY, FZ) 2.0 TDCi	BJFA (05.19-.), BJFB (05.19-.), YLF6, YLFA (05.19-	77	12/2015 -	4351	
HCV Transit Custom Van (FY, FZ) 2.0 TDCi	BJFA (05.19-.), BJFB (05.19-.), YLF6, YLFA (05.19-	77	12/2015 -	4351/1	
HCV Transit Custom Van (FY, FZ) 2.0 TDCi	BJFA (05.19-.), BJFB (05.19-.), YLF6, YLFA (05.19-	77	12/2015 -	4174/1	4175/1
HCV Transit Custom Van (FY, FZ) 2.0 TDCi	BKFA (05.19-.), BKFB (05.19-.), YMF6, YMFA (05.19-	96	12/2015 -	4174/1	
HCV Transit Custom Van (FY, FZ) 2.0 TDCi	BKFA (05.19-.), BKFB (05.19-.), YMF6, YMFA (05.19-	96	12/2015 -		4175/1
HCV Transit Custom Van (FY, FZ) 2.0 TDCi	BKFA (05.19-.), BKFB (05.19-.), YMF6, YMFA (05.19-	96	12/2015 -	4351	
HCV Transit Custom Van (FY, FZ) 2.0 TDCi	BKFA (05.19-.), BKFB (05.19-.), YMF6, YMFA (05.19-	96	12/2015 -	4351/1	
HCV Transit Custom Van (FY, FZ) 2.0 TDCi	BKFA (05.19-.), BKFB (05.19-.), YMF6, YMFA (05.19-	96	12/2015 -	4174/1	4175/1
HCV Transit Custom Van (FY, FZ) 2.0 TDCi	BLFA (05.19-.), BLFB (05.19-.), YNF6, YNFA (05.19-	125	12/2015 -	4174/1	
HCV Transit Custom Van (FY, FZ) 2.0 TDCi	BLFA (05.19-.), BLFB (05.19-.), YNF6, YNFA (05.19-	125	12/2015 -		4175/1
HCV Transit Custom Van (FY, FZ) 2.0 TDCi	BLFA (05.19-.), BLFB (05.19-.), YNF6, YNFA (05.19-	125	12/2015 -	4351	
HCV Transit Custom Van (FY, FZ) 2.0 TDCi	BLFA (05.19-.), BLFB (05.19-.), YNF6, YNFA (05.19-	125	12/2015 -	4351/1	
HCV Transit Custom Van (FY, FZ) 2.0 TDCi	BLFA (05.19-.), BLFB (05.19-.), YNF6, YNFA (05.19-	125	12/2015 -	4174/1	4175/1
HCV Transit Custom Van (FY, FZ) 44229 TDCi	CVFF	114	04/2012 -	4174/1	
HCV Transit Custom Van (FY, FZ) 44229 TDCi	CVFF	114	04/2012 -		4175/1
HCV Transit Custom Van (FY, FZ) 44229 TDCi	CVFF	114	04/2012 -	4351	
HCV Transit Custom Van (FY, FZ) 44229 TDCi	CVFF	114	04/2012 -	4351/1	
HCV Transit Custom Van (FY, FZ) 44229 TDCi	CVFF	114	04/2012 -	4174/1	4175/1
HCV Transit Custom Van (FY, FZ) 44229 TDCi	CYF4, CYFF	92	04/2012 -	4174/1	
HCV Transit Custom Van (FY, FZ) 44229 TDCi	CYF4, CYFF	92	04/2012 -		4175/1
HCV Transit Custom Van (FY, FZ) 44229 TDCi	CYF4, CYFF	92	04/2012 -	4351	
HCV Transit Custom Van (FY, FZ) 44229 TDCi	CYF4, CYFF	92	04/2012 -	4351/1	
HCV Transit Custom Van (FY, FZ) 44229 TDCi	CYF4, CYFF	92	04/2012 -	4174/1	4175/1
HCV Transit Custom Van (FY, FZ) 44229 TDCi	DRF4, DRFF, DRFG	74	04/2012 -	4174/1	
HCV Transit Custom Van (FY, FZ) 44229 TDCi	DRF4, DRFF, DRFG	74	04/2012 -		4175/1
HCV Transit Custom Van (FY, FZ) 44229 TDCi	DRF4, DRFF, DRFG	74	04/2012 -	4351	
HCV Transit Custom Van (FY, FZ) 44229 TDCi	DRF4, DRFF, DRFG	74	04/2012 -	4351/1	
HCV Transit Custom Van (FY, FZ) 44229 TDCi	DRF4, DRFF, DRFG	74	04/2012 -	4174/1	4175/1
HCV Transit IX Bus (FAD, FBD) 2.0 EcoBlue mHEV	BKFC, BKFD	96	05/2019 -	4174/1	
HCV Transit IX Bus (FAD, FBD) 2.0 EcoBlue mHEV	BKFC, BKFD	96	05/2019 -		4175/1
HCV Transit IX Bus (FAD, FBD) 2.0 EcoBlue mHEV	BKFC, BKFD	96	05/2019 -	4351	
HCV Transit IX Bus (FAD, FBD) 2.0 EcoBlue mHEV	BKFC, BKFD	96	05/2019 -	4351/1	
HCV Transit IX Bus (FAD, FBD) 2.0 EcoBlue mHEV	BKFC, BKFD	96	05/2019 -	4174/1	4175/1

MAKE & MODEL		KW	YEAR		
FORD					
HCV Transit IX Bus (FAD, FBD) 2.0 EcoBlue mHEV	BLFC, BLFD	125	05/2019 -	4174/1	
HCV Transit IX Bus (FAD, FBD) 2.0 EcoBlue mHEV	BLFC, BLFD	125	05/2019 -		4175/1
HCV Transit IX Bus (FAD, FBD) 2.0 EcoBlue mHEV	BLFC, BLFD	125	05/2019 -	4351	
HCV Transit IX Bus (FAD, FBD) 2.0 EcoBlue mHEV	BLFC, BLFD	125	05/2019 -	4351/1	
HCV Transit IX Bus (FAD, FBD) 2.0 EcoBlue mHEV	BLFC, BLFD	125	05/2019 -	4174/1	4175/1
HCV Transit IX Bus (FAD, FBD) 2.0 TDCi	BJFA (05.19-.), BJFB (05.19-.), YLF6, YLFA (12.18-	77	03/2016 -	4174/1	
HCV Transit IX Bus (FAD, FBD) 2.0 TDCi	BJFA (05.19-.), BJFB (05.19-.), YLF6, YLFA (12.18-	77	03/2016 -		4175/1
HCV Transit IX Bus (FAD, FBD) 2.0 TDCi	BJFA (05.19-.), BJFB (05.19-.), YLF6, YLFA (12.18-	77	03/2016 -	4351	
HCV Transit IX Bus (FAD, FBD) 2.0 TDCi	BJFA (05.19-.), BJFB (05.19-.), YLF6, YLFA (12.18-	77	03/2016 -	4351/1	
HCV Transit IX Bus (FAD, FBD) 2.0 TDCi	BJFA (05.19-.), BJFB (05.19-.), YLF6, YLFA (12.18-	77	03/2016 -	4174/1	4175/1
HCV Transit IX Bus (FAD, FBD) 2.0 TDCi	BKFA (05.19-.), BKFB (05.19-.), YMF6, YMFA (12.18-	96	03/2016 -	4174/1	
HCV Transit IX Bus (FAD, FBD) 2.0 TDCi	BKFA (05.19-.), BKFB (05.19-.), YMF6, YMFA (12.18-	96	03/2016 -		4175/1
HCV Transit IX Bus (FAD, FBD) 2.0 TDCi	BKFA (05.19-.), BKFB (05.19-.), YMF6, YMFA (12.18-	96	03/2016 -	4351	
HCV Transit IX Bus (FAD, FBD) 2.0 TDCi	BKFA (05.19-.), BKFB (05.19-.), YMF6, YMFA (12.18-	96	03/2016 -	4351/1	
HCV Transit IX Bus (FAD, FBD) 2.0 TDCi	BKFA (05.19-.), BKFB (05.19-.), YMF6, YMFA (12.18-	96	03/2016 -	4174/1	4175/1
HCV Transit IX Bus (FAD, FBD) 2.0 TDCi	BLFA (05.19-.), BLFB (05.19-.), YNF6, YNFA (12.18-	125	03/2016 -	4174/1	
HCV Transit IX Bus (FAD, FBD) 2.0 TDCi	BLFA (05.19-.), BLFB (05.19-.), YNF6, YNFA (12.18-	125	03/2016 -		4175/1
HCV Transit IX Bus (FAD, FBD) 2.0 TDCi	BLFA (05.19-.), BLFB (05.19-.), YNF6, YNFA (12.18-	125	03/2016 -	4351	
HCV Transit IX Bus (FAD, FBD) 2.0 TDCi	BLFA (05.19-.), BLFB (05.19-.), YNF6, YNFA (12.18-	125	03/2016 -	4351/1	
HCV Transit IX Bus (FAD, FBD) 2.0 TDCi	BLFA (05.19-.), BLFB (05.19-.), YNF6, YNFA (12.18-	125	03/2016 -	4174/1	4175/1
HCV Transit IX Bus (FAD, FBD) 44229 TDCi	CVF5	114	12/2014 -	4174/1	
HCV Transit IX Bus (FAD, FBD) 44229 TDCi	CVF5	114	12/2014 -		4175/1
HCV Transit IX Bus (FAD, FBD) 44229 TDCi	CVF5	114	12/2014 -	4351	
HCV Transit IX Bus (FAD, FBD) 44229 TDCi	CVF5	114	12/2014 -	4351/1	
HCV Transit IX Bus (FAD, FBD) 44229 TDCi	CVF5	114	12/2014 -	4174/1	4175/1
HCV Transit IX Bus (FAD, FBD) 44229 TDCi	CY14, CYF5, CYFG, USF6	92	08/2013 -	4174/1	
HCV Transit IX Bus (FAD, FBD) 44229 TDCi	CY14, CYF5, CYFG, USF6	92	08/2013 -		4175/1
HCV Transit IX Bus (FAD, FBD) 44229 TDCi	CY14, CYF5, CYFG, USF6	92	08/2013 -	4351	
HCV Transit IX Bus (FAD, FBD) 44229 TDCi	CY14, CYF5, CYFG, USF6	92	08/2013 -	4351/1	
HCV Transit IX Bus (FAD, FBD) 44229 TDCi	CY14, CYF5, CYFG, USF6	92	08/2013 -	4174/1	4175/1
HCV Transit IX Bus (FAD, FBD) 44229 TDCi	DRF5, DRFF, DRFG	74	08/2013 -	4174/1	
HCV Transit IX Bus (FAD, FBD) 44229 TDCi	DRF5, DRFF, DRFG	74	08/2013 -		4175/1
HCV Transit IX Bus (FAD, FBD) 44229 TDCi	DRF5, DRFF, DRFG	74	08/2013 -	4351	
HCV Transit IX Bus (FAD, FBD) 44229 TDCi	DRF5, DRFF, DRFG	74	08/2013 -	4351/1	
HCV Transit IX Bus (FAD, FBD) 44229 TDCi	DRF5, DRFF, DRFG	74	08/2013 -	4174/1	4175/1
HCV Transit IX Bus (FAD, FBD) 44229 TDCi 4WD	CV24, CVR5	114	12/2014 -	4174/1	
HCV Transit IX Bus (FAD, FBD) 44229 TDCi 4WD	CV24, CVR5	114	12/2014 -		4175/1
HCV Transit IX Bus (FAD, FBD) 44229 TDCi 4WD	CV24, CVR5	114	12/2014 -	4351	
HCV Transit IX Bus (FAD, FBD) 44229 TDCi 4WD	CV24, CVR5	114	12/2014 -	4351/1	
HCV Transit IX Bus (FAD, FBD) 44229 TDCi 4WD	CV24, CVR5	114	12/2014 -	4174/1	4175/1
HCV Transit IX Bus (FAD, FBD) 44229 TDCi 4x4	CY24, CYR5	92	08/2013 -	4174/1	
HCV Transit IX Bus (FAD, FBD) 44229 TDCi 4x4	CY24, CYR5	92	08/2013 -		4175/1
HCV Transit IX Bus (FAD, FBD) 44229 TDCi 4x4	CY24, CYR5	92	08/2013 -	4351	
HCV Transit IX Bus (FAD, FBD) 44229 TDCi 4x4	CY24, CYR5	92	08/2013 -	4351/1	
HCV Transit IX Bus (FAD, FBD) 44229 TDCi 4x4	CY24, CYR5	92	08/2013 -	4174/1	4175/1
HCV Transit IX Bus (FAD, FBD) 44229 TDCi RWD	CV24, CVR5, UYR6	114	08/2013 -	4174/1	
HCV Transit IX Bus (FAD, FBD) 44229 TDCi RWD	CV24, CVR5, UYR6	114	08/2013 -		4175/1
HCV Transit IX Bus (FAD, FBD) 44229 TDCi RWD	CV24, CVR5, UYR6	114	08/2013 -	4351	
HCV Transit IX Bus (FAD, FBD) 44229 TDCi RWD	CV24, CVR5, UYR6	114	08/2013 -	4351/1	
HCV Transit IX Bus (FAD, FBD) 44229 TDCi RWD	CV24, CVR5, UYR6	114	08/2013 -	4174/1	4175/1
HCV Transit IX Bus (FAD, FBD) 44229 TDCi RWD	CYR5, USR6	92	08/2013 -	4174/1	
HCV Transit IX Bus (FAD, FBD) 44229 TDCi RWD	CYR5, USR6	92	08/2013 -		4175/1
HCV Transit IX Bus (FAD, FBD) 44229 TDCi RWD	CYR5, USR6	92	08/2013 -	4351	
HCV Transit IX Bus (FAD, FBD) 44229 TDCi RWD	CYR5, USR6	92	08/2013 -	4351/1	
HCV Transit IX Bus (FAD, FBD) 44229 TDCi RWD	CYR5, USR6	92	08/2013 -	4174/1	4175/1
HCV Transit IX Bus (FAD, FBD) 44229 TDCi RWD	DRR5	74	08/2013 -	4174/1	
HCV Transit IX Bus (FAD, FBD) 44229 TDCi RWD	DRR5	74	08/2013 -		4175/1
HCV Transit IX Bus (FAD, FBD) 44229 TDCi RWD	DRR5	74	08/2013 -	4351	
HCV Transit IX Bus (FAD, FBD) 44229 TDCi RWD	DRR5	74	08/2013 -	4351/1	
HCV Transit IX Bus (FAD, FBD) 44229 TDCi RWD	DRR5	74	08/2013 -	4174/1	4175/1
HCV Transit IX Bus (FAD, FBD) 44229 TDCi RWD	UHR5	99	08/2013 -	4174/1	
HCV Transit IX Bus (FAD, FBD) 44229 TDCi RWD	UHR5	99	08/2013 -		4175/1
HCV Transit IX Bus (FAD, FBD) 44229 TDCi RWD	UHR5	99	08/2013 -	4351	
HCV Transit IX Bus (FAD, FBD) 44229 TDCi RWD	UHR5	99	08/2013 -	4351/1	
HCV Transit IX Bus (FAD, FBD) 44229 TDCi RWD	UHR5	99	08/2013 -	4174/1	4175/1
HCV Transit IX Platform/Chassis (FED, FFD) 2.0 EcoBlue	BCFB	136	05/2019 -	4174/1	
HCV Transit IX Platform/Chassis (FED, FFD) 2.0 EcoBlue	BCFB	136	05/2019 -		4175/1
HCV Transit IX Platform/Chassis (FED, FFD) 2.0 EcoBlue	BCFB	136	05/2019 -	4351	
HCV Transit IX Platform/Chassis (FED, FFD) 2.0 EcoBlue	BCFB	136	05/2019 -	4351/1	
HCV Transit IX Platform/Chassis (FED, FFD) 2.0 EcoBlue	BCFB	136	05/2019 -	4174/1	4175/1
HCV Transit IX Platform/Chassis (FED, FFD) 2.0 EcoBlue mHEV	BKFC, BKFD	96	05/2019 -	4174/1	
HCV Transit IX Platform/Chassis (FED, FFD) 2.0 EcoBlue mHEV	BKFC, BKFD	96	05/2019 -		4175/1
HCV Transit IX Platform/Chassis (FED, FFD) 2.0 EcoBlue mHEV	BKFC, BKFD	96	05/2019 -	4351	
HCV Transit IX Platform/Chassis (FED, FFD) 2.0 EcoBlue mHEV	BKFC, BKFD	96	05/2019 -	4351/1	
HCV Transit IX Platform/Chassis (FED, FFD) 2.0 EcoBlue mHEV	BKFC, BKFD	96	05/2019 -	4174/1	4175/1
HCV Transit IX Platform/Chassis (FED, FFD) 2.0 EcoBlue mHEV	BLFC, BLFD	125	05/2019 -	4174/1	

MAKE & MODEL   		KW	YEAR		
FORD					
HCV Transit IX Platform/Chassis (FED, FFD) 2.0 EcoBlue mHEV	BLFC, BLFD	125	05/2019 -		4175/1
HCV Transit IX Platform/Chassis (FED, FFD) 2.0 EcoBlue mHEV	BLFC, BLFD	125	05/2019 -	4351	
HCV Transit IX Platform/Chassis (FED, FFD) 2.0 EcoBlue mHEV	BLFC, BLFD	125	05/2019 -	4351/1	
HCV Transit IX Platform/Chassis (FED, FFD) 2.0 EcoBlue mHEV	BLFC, BLFD	125	05/2019 -	4174/1	4175/1
HCV Transit IX Platform/Chassis (FED, FFD) 2.0 EcoBlue mHEV RWD	BKRB	96	05/2019 -	4174/1	
HCV Transit IX Platform/Chassis (FED, FFD) 2.0 EcoBlue mHEV RWD	BKRB	96	05/2019 -		4175/1
HCV Transit IX Platform/Chassis (FED, FFD) 2.0 EcoBlue mHEV RWD	BKRB	96	05/2019 -	4351	
HCV Transit IX Platform/Chassis (FED, FFD) 2.0 EcoBlue mHEV RWD	BKRB	96	05/2019 -	4351/1	
HCV Transit IX Platform/Chassis (FED, FFD) 2.0 EcoBlue mHEV RWD	BKRB	96	05/2019 -	4174/1	4175/1
HCV Transit IX Platform/Chassis (FED, FFD) 2.0 EcoBlue mHEV RWD	BLRB	125	05/2019 -	4174/1	
HCV Transit IX Platform/Chassis (FED, FFD) 2.0 EcoBlue mHEV RWD	BLRB	125	05/2019 -		4175/1
HCV Transit IX Platform/Chassis (FED, FFD) 2.0 EcoBlue mHEV RWD	BLRB	125	05/2019 -	4351	
HCV Transit IX Platform/Chassis (FED, FFD) 2.0 EcoBlue mHEV RWD	BLRB	125	05/2019 -	4351/1	
HCV Transit IX Platform/Chassis (FED, FFD) 2.0 EcoBlue mHEV RWD	BLRB	125	05/2019 -	4174/1	4175/1
HCV Transit IX Platform/Chassis (FED, FFD) 2.0 EcoBlue RWD	BCRA	136	05/2019 -	4174/1	
HCV Transit IX Platform/Chassis (FED, FFD) 2.0 EcoBlue RWD	BCRA	136	05/2019 -		4175/1
HCV Transit IX Platform/Chassis (FED, FFD) 2.0 EcoBlue RWD	BCRA	136	05/2019 -	4351	
HCV Transit IX Platform/Chassis (FED, FFD) 2.0 EcoBlue RWD	BCRA	136	05/2019 -	4351/1	
HCV Transit IX Platform/Chassis (FED, FFD) 2.0 EcoBlue RWD	BCRA	136	05/2019 -	4174/1	4175/1
HCV Transit IX Platform/Chassis (FED, FFD) 2.0 TDCi	BJFA (05.19-.), BJFB (05.19-.), YLF6, YLFA (12.18-	77	03/2016 -	4174/1	
HCV Transit IX Platform/Chassis (FED, FFD) 2.0 TDCi	BJFA (05.19-.), BJFB (05.19-.), YLF6, YLFA (12.18-	77	03/2016 -		4175/1
HCV Transit IX Platform/Chassis (FED, FFD) 2.0 TDCi	BJFA (05.19-.), BJFB (05.19-.), YLF6, YLFA (12.18-	77	03/2016 -	4351	
HCV Transit IX Platform/Chassis (FED, FFD) 2.0 TDCi	BJFA (05.19-.), BJFB (05.19-.), YLF6, YLFA (12.18-	77	03/2016 -	4351/1	
HCV Transit IX Platform/Chassis (FED, FFD) 2.0 TDCi	BJFA (05.19-.), BJFB (05.19-.), YLF6, YLFA (12.18-	77	03/2016 -	4174/1	4175/1
HCV Transit IX Platform/Chassis (FED, FFD) 2.0 TDCi	BKFA (05.19-.), BKFB (05.19-.), YMF6, YMFA (12.18-	96	03/2016 -	4174/1	
HCV Transit IX Platform/Chassis (FED, FFD) 2.0 TDCi	BKFA (05.19-.), BKFB (05.19-.), YMF6, YMFA (12.18-	96	03/2016 -		4175/1
HCV Transit IX Platform/Chassis (FED, FFD) 2.0 TDCi	BKFA (05.19-.), BKFB (05.19-.), YMF6, YMFA (12.18-	96	03/2016 -	4351	
HCV Transit IX Platform/Chassis (FED, FFD) 2.0 TDCi	BKFA (05.19-.), BKFB (05.19-.), YMF6, YMFA (12.18-	96	03/2016 -	4351/1	
HCV Transit IX Platform/Chassis (FED, FFD) 2.0 TDCi	BKFA (05.19-.), BKFB (05.19-.), YMF6, YMFA (12.18-	96	03/2016 -	4174/1	4175/1
HCV Transit IX Platform/Chassis (FED, FFD) 2.0 TDCi	BLFA (05.19-.), BLFB (05.19-.), YNF6, YNFA (12.18-	125	03/2016 -	4174/1	
HCV Transit IX Platform/Chassis (FED, FFD) 2.0 TDCi	BLFA (05.19-.), BLFB (05.19-.), YNF6, YNFA (12.18-	125	03/2016 -		4175/1
HCV Transit IX Platform/Chassis (FED, FFD) 2.0 TDCi	BLFA (05.19-.), BLFB (05.19-.), YNF6, YNFA (12.18-	125	03/2016 -	4351	
HCV Transit IX Platform/Chassis (FED, FFD) 2.0 TDCi	BLFA (05.19-.), BLFB (05.19-.), YNF6, YNFA (12.18-	125	03/2016 -	4351/1	
HCV Transit IX Platform/Chassis (FED, FFD) 2.0 TDCi	BLFA (05.19-.), BLFB (05.19-.), YNF6, YNFA (12.18-	125	03/2016 -	4174/1	4175/1
HCV Transit IX Platform/Chassis (FED, FFD) 2.0 TDCi 4x4	BKRA (05.19-.), YMR6, YMRA (05.19-.)	96	01/2017 -	4174/1	
HCV Transit IX Platform/Chassis (FED, FFD) 2.0 TDCi 4x4	BKRA (05.19-.), YMR6, YMRA (05.19-.)	96	01/2017 -		4175/1
HCV Transit IX Platform/Chassis (FED, FFD) 2.0 TDCi 4x4	BKRA (05.19-.), YMR6, YMRA (05.19-.)	96	01/2017 -	4351	
HCV Transit IX Platform/Chassis (FED, FFD) 2.0 TDCi 4x4	BKRA (05.19-.), YMR6, YMRA (05.19-.)	96	01/2017 -	4351/1	
HCV Transit IX Platform/Chassis (FED, FFD) 2.0 TDCi 4x4	BKRA (05.19-.), YMR6, YMRA (05.19-.)	96	01/2017 -	4174/1	4175/1
HCV Transit IX Platform/Chassis (FED, FFD) 2.0 TDCi 4x4	BLRA (05.19-.), YNR6, YNRA (05.19-.)	125	01/2017 -	4174/1	
HCV Transit IX Platform/Chassis (FED, FFD) 2.0 TDCi 4x4	BLRA (05.19-.), YNR6, YNRA (05.19-.)	125	01/2017 -		4175/1
HCV Transit IX Platform/Chassis (FED, FFD) 2.0 TDCi 4x4	BLRA (05.19-.), YNR6, YNRA (05.19-.)	125	01/2017 -	4351	
HCV Transit IX Platform/Chassis (FED, FFD) 2.0 TDCi 4x4	BLRA (05.19-.), YNR6, YNRA (05.19-.)	125	01/2017 -	4351/1	
HCV Transit IX Platform/Chassis (FED, FFD) 2.0 TDCi 4x4	BLRA (05.19-.), YNR6, YNRA (05.19-.)	125	01/2017 -	4174/1	4175/1
HCV Transit IX Platform/Chassis (FED, FFD) 2.0 TDCi RWD	BJRA (05.19-.), YLR6, YLRA (05.19-.)	77	03/2016 -	4174/1	
HCV Transit IX Platform/Chassis (FED, FFD) 2.0 TDCi RWD	BJRA (05.19-.), YLR6, YLRA (05.19-.)	77	03/2016 -		4175/1
HCV Transit IX Platform/Chassis (FED, FFD) 2.0 TDCi RWD	BJRA (05.19-.), YLR6, YLRA (05.19-.)	77	03/2016 -	4351	
HCV Transit IX Platform/Chassis (FED, FFD) 2.0 TDCi RWD	BJRA (05.19-.), YLR6, YLRA (05.19-.)	77	03/2016 -	4351/1	
HCV Transit IX Platform/Chassis (FED, FFD) 2.0 TDCi RWD	BJRA (05.19-.), YLR6, YLRA (05.19-.)	77	03/2016 -	4174/1	4175/1
HCV Transit IX Platform/Chassis (FED, FFD) 2.0 TDCi RWD	BKRA, YMHA, YMR6	96	03/2016 -	4174/1	
HCV Transit IX Platform/Chassis (FED, FFD) 2.0 TDCi RWD	BKRA, YMHA, YMR6	96	03/2016 -		4175/1
HCV Transit IX Platform/Chassis (FED, FFD) 2.0 TDCi RWD	BKRA, YMHA, YMR6	96	03/2016 -	4351	
HCV Transit IX Platform/Chassis (FED, FFD) 2.0 TDCi RWD	BKRA, YMHA, YMR6	96	03/2016 -	4351/1	
HCV Transit IX Platform/Chassis (FED, FFD) 2.0 TDCi RWD	BKRA, YMHA, YMR6	96	03/2016 -	4174/1	4175/1
HCV Transit IX Platform/Chassis (FED, FFD) 2.0 TDCi RWD	BLHA, BLRA, YNR6	125	03/2016 -	4174/1	
HCV Transit IX Platform/Chassis (FED, FFD) 2.0 TDCi RWD	BLHA, BLRA, YNR6	125	03/2016 -		4175/1
HCV Transit IX Platform/Chassis (FED, FFD) 2.0 TDCi RWD	BLHA, BLRA, YNR6	125	03/2016 -	4351	
HCV Transit IX Platform/Chassis (FED, FFD) 2.0 TDCi RWD	BLHA, BLRA, YNR6	125	03/2016 -	4351/1	
HCV Transit IX Platform/Chassis (FED, FFD) 2.0 TDCi RWD	BLHA, BLRA, YNR6	125	03/2016 -	4174/1	4175/1
HCV Transit IX Platform/Chassis (FED, FFD) 44229 TDCi	CVF5	114	08/2013 -	4174/1	
HCV Transit IX Platform/Chassis (FED, FFD) 44229 TDCi	CVF5	114	08/2013 -		4175/1
HCV Transit IX Platform/Chassis (FED, FFD) 44229 TDCi	CVF5	114	08/2013 -	4351	
HCV Transit IX Platform/Chassis (FED, FFD) 44229 TDCi	CVF5	114	08/2013 -	4351/1	
HCV Transit IX Platform/Chassis (FED, FFD) 44229 TDCi	CVF5	114	08/2013 -	4174/1	4175/1
HCV Transit IX Platform/Chassis (FED, FFD) 44229 TDCi	CY14, CYF5, CYFG, USF6	92	08/2013 -	4174/1	
HCV Transit IX Platform/Chassis (FED, FFD) 44229 TDCi	CY14, CYF5, CYFG, USF6	92	08/2013 -		4175/1
HCV Transit IX Platform/Chassis (FED, FFD) 44229 TDCi	CY14, CYF5, CYFG, USF6	92	08/2013 -	4351	
HCV Transit IX Platform/Chassis (FED, FFD) 44229 TDCi	CY14, CYF5, CYFG, USF6	92	08/2013 -	4351/1	
HCV Transit IX Platform/Chassis (FED, FFD) 44229 TDCi	CY14, CYF5, CYFG, USF6	92	08/2013 -	4174/1	4175/1
HCV Transit IX Platform/Chassis (FED, FFD) 44229 TDCi	DRF5, DRFF, DRFG	74	08/2013 -	4174/1	
HCV Transit IX Platform/Chassis (FED, FFD) 44229 TDCi	DRF5, DRFF, DRFG	74	08/2013 -		4175/1
HCV Transit IX Platform/Chassis (FED, FFD) 44229 TDCi	DRF5, DRFF, DRFG	74	08/2013 -	4351	
HCV Transit IX Platform/Chassis (FED, FFD) 44229 TDCi	DRF5, DRFF, DRFG	74	08/2013 -	4351/1	
HCV Transit IX Platform/Chassis (FED, FFD) 44229 TDCi	DRF5, DRFF, DRFG	74	08/2013 -	4174/1	4175/1
HCV Transit IX Platform/Chassis (FED, FFD) 44229 TDCi 4x4	CV24, CVR5	114	08/2013 -	4174/1	
HCV Transit IX Platform/Chassis (FED, FFD) 44229 TDCi 4x4	CV24, CVR5	114	08/2013 -		4175/1

MAKE & MODEL   		KW	YEAR		
FORD					
HCV Transit IX Platform/Chassis (FED, FFD) 44229 TDCi 4x4	CV24, CVR5	114	08/2013 -	4351	
HCV Transit IX Platform/Chassis (FED, FFD) 44229 TDCi 4x4	CV24, CVR5	114	08/2013 -	4351/1	
HCV Transit IX Platform/Chassis (FED, FFD) 44229 TDCi 4x4	CV24, CVR5	114	08/2013 -	4174/1	4175/1
HCV Transit IX Platform/Chassis (FED, FFD) 44229 TDCi 4x4	CY24, CYR5	92	08/2013 -	4174/1	
HCV Transit IX Platform/Chassis (FED, FFD) 44229 TDCi 4x4	CY24, CYR5	92	08/2013 -		4175/1
HCV Transit IX Platform/Chassis (FED, FFD) 44229 TDCi 4x4	CY24, CYR5	92	08/2013 -	4351	
HCV Transit IX Platform/Chassis (FED, FFD) 44229 TDCi 4x4	CY24, CYR5	92	08/2013 -	4351/1	
HCV Transit IX Platform/Chassis (FED, FFD) 44229 TDCi 4x4	CY24, CYR5	92	08/2013 -	4174/1	4175/1
HCV Transit IX Platform/Chassis (FED, FFD) 44229 TDCi RWD	CV24, CVR5, UYR6	114	08/2013 -	4174/1	
HCV Transit IX Platform/Chassis (FED, FFD) 44229 TDCi RWD	CV24, CVR5, UYR6	114	08/2013 -		4175/1
HCV Transit IX Platform/Chassis (FED, FFD) 44229 TDCi RWD	CV24, CVR5, UYR6	114	08/2013 -	4351	
HCV Transit IX Platform/Chassis (FED, FFD) 44229 TDCi RWD	CV24, CVR5, UYR6	114	08/2013 -	4351/1	
HCV Transit IX Platform/Chassis (FED, FFD) 44229 TDCi RWD	CV24, CVR5, UYR6	114	08/2013 -	4174/1	4175/1
HCV Transit IX Platform/Chassis (FED, FFD) 44229 TDCi RWD	CYR5, USR6	92	08/2013 -	4174/1	
HCV Transit IX Platform/Chassis (FED, FFD) 44229 TDCi RWD	CYR5, USR6	92	08/2013 -		4175/1
HCV Transit IX Platform/Chassis (FED, FFD) 44229 TDCi RWD	CYR5, USR6	92	08/2013 -	4351	
HCV Transit IX Platform/Chassis (FED, FFD) 44229 TDCi RWD	CYR5, USR6	92	08/2013 -	4351/1	
HCV Transit IX Platform/Chassis (FED, FFD) 44229 TDCi RWD	CYR5, USR6	92	08/2013 -	4174/1	4175/1
HCV Transit IX Platform/Chassis (FED, FFD) 44229 TDCi RWD	DRR5	74	08/2013 -	4174/1	
HCV Transit IX Platform/Chassis (FED, FFD) 44229 TDCi RWD	DRR5	74	08/2013 -		4175/1
HCV Transit IX Platform/Chassis (FED, FFD) 44229 TDCi RWD	DRR5	74	08/2013 -	4351	
HCV Transit IX Platform/Chassis (FED, FFD) 44229 TDCi RWD	DRR5	74	08/2013 -	4351/1	
HCV Transit IX Platform/Chassis (FED, FFD) 44229 TDCi RWD	DRR5	74	08/2013 -	4174/1	4175/1
HCV Transit IX Platform/Chassis (FED, FFD) 44229 TDCi RWD	UHR5	99	08/2013 -	4174/1	
HCV Transit IX Platform/Chassis (FED, FFD) 44229 TDCi RWD	UHR5	99	08/2013 -		4175/1
HCV Transit IX Platform/Chassis (FED, FFD) 44229 TDCi RWD	UHR5	99	08/2013 -	4351	
HCV Transit IX Platform/Chassis (FED, FFD) 44229 TDCi RWD	UHR5	99	08/2013 -	4351/1	
HCV Transit IX Platform/Chassis (FED, FFD) 44229 TDCi RWD	UHR5	99	08/2013 -	4174/1	4175/1
HCV Transit IX Van (FCD, FDD) 2.0 EcoBlue	BCFB	136	05/2019 -	4174/1	
HCV Transit IX Van (FCD, FDD) 2.0 EcoBlue	BCFB	136	05/2019 -		4175/1
HCV Transit IX Van (FCD, FDD) 2.0 EcoBlue	BCFB	136	05/2019 -	4351	
HCV Transit IX Van (FCD, FDD) 2.0 EcoBlue	BCFB	136	05/2019 -	4351/1	
HCV Transit IX Van (FCD, FDD) 2.0 EcoBlue	BCFB	136	05/2019 -	4174/1	4175/1
HCV Transit IX Van (FCD, FDD) 2.0 EcoBlue mHEV	BKFC, BKFD	96	05/2019 -	4174/1	
HCV Transit IX Van (FCD, FDD) 2.0 EcoBlue mHEV	BKFC, BKFD	96	05/2019 -		4175/1
HCV Transit IX Van (FCD, FDD) 2.0 EcoBlue mHEV	BKFC, BKFD	96	05/2019 -	4351	
HCV Transit IX Van (FCD, FDD) 2.0 EcoBlue mHEV	BKFC, BKFD	96	05/2019 -	4351/1	
HCV Transit IX Van (FCD, FDD) 2.0 EcoBlue mHEV	BKFC, BKFD	96	05/2019 -	4174/1	4175/1
HCV Transit IX Van (FCD, FDD) 2.0 EcoBlue mHEV	BLFC, BLFD	125	05/2019 -	4174/1	
HCV Transit IX Van (FCD, FDD) 2.0 EcoBlue mHEV	BLFC, BLFD	125	05/2019 -		4175/1
HCV Transit IX Van (FCD, FDD) 2.0 EcoBlue mHEV	BLFC, BLFD	125	05/2019 -	4351	
HCV Transit IX Van (FCD, FDD) 2.0 EcoBlue mHEV	BLFC, BLFD	125	05/2019 -	4351/1	
HCV Transit IX Van (FCD, FDD) 2.0 EcoBlue mHEV	BLFC, BLFD	125	05/2019 -	4174/1	4175/1
HCV Transit IX Van (FCD, FDD) 2.0 EcoBlue mHEV RWD	BKRB	96	05/2019 -	4174/1	
HCV Transit IX Van (FCD, FDD) 2.0 EcoBlue mHEV RWD	BKRB	96	05/2019 -		4175/1
HCV Transit IX Van (FCD, FDD) 2.0 EcoBlue mHEV RWD	BKRB	96	05/2019 -	4351	
HCV Transit IX Van (FCD, FDD) 2.0 EcoBlue mHEV RWD	BKRB	96	05/2019 -	4351/1	
HCV Transit IX Van (FCD, FDD) 2.0 EcoBlue mHEV RWD	BKRB	96	05/2019 -	4174/1	4175/1
HCV Transit IX Van (FCD, FDD) 2.0 EcoBlue mHEV RWD	BLRB	125	05/2019 -	4174/1	
HCV Transit IX Van (FCD, FDD) 2.0 EcoBlue mHEV RWD	BLRB	125	05/2019 -		4175/1
HCV Transit IX Van (FCD, FDD) 2.0 EcoBlue mHEV RWD	BLRB	125	05/2019 -	4351	
HCV Transit IX Van (FCD, FDD) 2.0 EcoBlue mHEV RWD	BLRB	125	05/2019 -	4351/1	
HCV Transit IX Van (FCD, FDD) 2.0 EcoBlue mHEV RWD	BLRB	125	05/2019 -	4174/1	4175/1
HCV Transit IX Van (FCD, FDD) 2.0 EcoBlue RWD	BCRA	136	05/2019 -	4174/1	
HCV Transit IX Van (FCD, FDD) 2.0 EcoBlue RWD	BCRA	136	05/2019 -		4175/1
HCV Transit IX Van (FCD, FDD) 2.0 EcoBlue RWD	BCRA	136	05/2019 -	4351	
HCV Transit IX Van (FCD, FDD) 2.0 EcoBlue RWD	BCRA	136	05/2019 -	4351/1	
HCV Transit IX Van (FCD, FDD) 2.0 EcoBlue RWD	BCRA	136	05/2019 -	4174/1	4175/1
HCV Transit IX Van (FCD, FDD) 2.0 TDCi	BJFA (05.19-.), BJFB (05.19-.), YLF6, YLFA (12.18-	77	03/2016 -	4174/1	
HCV Transit IX Van (FCD, FDD) 2.0 TDCi	BJFA (05.19-.), BJFB (05.19-.), YLF6, YLFA (12.18-	77	03/2016 -		4175/1
HCV Transit IX Van (FCD, FDD) 2.0 TDCi	BJFA (05.19-.), BJFB (05.19-.), YLF6, YLFA (12.18-	77	03/2016 -	4351	
HCV Transit IX Van (FCD, FDD) 2.0 TDCi	BJFA (05.19-.), BJFB (05.19-.), YLF6, YLFA (12.18-	77	03/2016 -	4351/1	
HCV Transit IX Van (FCD, FDD) 2.0 TDCi	BJFA (05.19-.), BJFB (05.19-.), YLF6, YLFA (12.18-	77	03/2016 -	4174/1	4175/1
HCV Transit IX Van (FCD, FDD) 2.0 TDCi	BKFA (05.19-.), BKFB (05.19-.), YMF6, YMFA (12.18-	96	03/2016 -	4174/1	
HCV Transit IX Van (FCD, FDD) 2.0 TDCi	BKFA (05.19-.), BKFB (05.19-.), YMF6, YMFA (12.18-	96	03/2016 -		4175/1
HCV Transit IX Van (FCD, FDD) 2.0 TDCi	BKFA (05.19-.), BKFB (05.19-.), YMF6, YMFA (12.18-	96	03/2016 -	4351	
HCV Transit IX Van (FCD, FDD) 2.0 TDCi	BKFA (05.19-.), BKFB (05.19-.), YMF6, YMFA (12.18-	96	03/2016 -	4351/1	
HCV Transit IX Van (FCD, FDD) 2.0 TDCi	BKFA (05.19-.), BKFB (05.19-.), YMF6, YMFA (12.18-	96	03/2016 -	4174/1	4175/1
HCV Transit IX Van (FCD, FDD) 2.0 TDCi	BLFA (05.19-.), BLFB (05.19-.), YNF6, YNFA (12.18-	125	03/2016 -	4174/1	
HCV Transit IX Van (FCD, FDD) 2.0 TDCi	BLFA (05.19-.), BLFB (05.19-.), YNF6, YNFA (12.18-	125	03/2016 -		4175/1
HCV Transit IX Van (FCD, FDD) 2.0 TDCi	BLFA (05.19-.), BLFB (05.19-.), YNF6, YNFA (12.18-	125	03/2016 -	4351	
HCV Transit IX Van (FCD, FDD) 2.0 TDCi	BLFA (05.19-.), BLFB (05.19-.), YNF6, YNFA (12.18-	125	03/2016 -	4351/1	
HCV Transit IX Van (FCD, FDD) 2.0 TDCi	BLFA (05.19-.), BLFB (05.19-.), YNF6, YNFA (12.18-	125	03/2016 -	4174/1	4175/1
HCV Transit IX Van (FCD, FDD) 2.0 TDCi 4x4	BKRA (05.19-.), YMR6, YMRA (05.19-.)	96	01/2017 -	4174/1	
HCV Transit IX Van (FCD, FDD) 2.0 TDCi 4x4	BKRA (05.19-.), YMR6, YMRA (05.19-.)	96	01/2017 -		4175/1
HCV Transit IX Van (FCD, FDD) 2.0 TDCi 4x4	BKRA (05.19-.), YMR6, YMRA (05.19-.)	96	01/2017 -	4351	

MAKE & MODEL   		KW	YEAR		
FORD					
HCV Transit IX Van (FCD, FDD) 2.0 TDCi 4x4	BKRA (05.19-.), YMR6, YMRA (05.19-.)	96	01/2017 -	4351/1	
HCV Transit IX Van (FCD, FDD) 2.0 TDCi 4x4	BKRA (05.19-.), YMR6, YMRA (05.19-.)	96	01/2017 -	4174/1	4175/1
HCV Transit IX Van (FCD, FDD) 2.0 TDCi 4x4	BLRA (05.19-.), YNR6, YNRA (05.19-.)	125	01/2017 -	4174/1	
HCV Transit IX Van (FCD, FDD) 2.0 TDCi 4x4	BLRA (05.19-.), YNR6, YNRA (05.19-.)	125	01/2017 -		4175/1
HCV Transit IX Van (FCD, FDD) 2.0 TDCi 4x4	BLRA (05.19-.), YNR6, YNRA (05.19-.)	125	01/2017 -	4351	
HCV Transit IX Van (FCD, FDD) 2.0 TDCi 4x4	BLRA (05.19-.), YNR6, YNRA (05.19-.)	125	01/2017 -	4351/1	
HCV Transit IX Van (FCD, FDD) 2.0 TDCi 4x4	BLRA (05.19-.), YNR6, YNRA (05.19-.)	125	01/2017 -	4174/1	4175/1
HCV Transit IX Van (FCD, FDD) 2.0 TDCi RWD	BJRA (05.19-.), YLR6, YLRA (05.19-.)	77	03/2016 -	4174/1	
HCV Transit IX Van (FCD, FDD) 2.0 TDCi RWD	BJRA (05.19-.), YLR6, YLRA (05.19-.)	77	03/2016 -		4175/1
HCV Transit IX Van (FCD, FDD) 2.0 TDCi RWD	BJRA (05.19-.), YLR6, YLRA (05.19-.)	77	03/2016 -	4351	
HCV Transit IX Van (FCD, FDD) 2.0 TDCi RWD	BJRA (05.19-.), YLR6, YLRA (05.19-.)	77	03/2016 -	4351/1	
HCV Transit IX Van (FCD, FDD) 2.0 TDCi RWD	BJRA (05.19-.), YLR6, YLRA (05.19-.)	77	03/2016 -	4174/1	4175/1
HCV Transit IX Van (FCD, FDD) 2.0 TDCi RWD	BKRA, YMHA, YMR6	96	03/2016 -	4174/1	
HCV Transit IX Van (FCD, FDD) 2.0 TDCi RWD	BKRA, YMHA, YMR6	96	03/2016 -		4175/1
HCV Transit IX Van (FCD, FDD) 2.0 TDCi RWD	BKRA, YMHA, YMR6	96	03/2016 -	4351	
HCV Transit IX Van (FCD, FDD) 2.0 TDCi RWD	BKRA, YMHA, YMR6	96	03/2016 -	4351/1	
HCV Transit IX Van (FCD, FDD) 2.0 TDCi RWD	BKRA, YMHA, YMR6	96	03/2016 -	4174/1	4175/1
HCV Transit IX Van (FCD, FDD) 2.0 TDCi RWD	BLHA, BLRA, YNR6	125	03/2016 -	4174/1	
HCV Transit IX Van (FCD, FDD) 2.0 TDCi RWD	BLHA, BLRA, YNR6	125	03/2016 -		4175/1
HCV Transit IX Van (FCD, FDD) 2.0 TDCi RWD	BLHA, BLRA, YNR6	125	03/2016 -	4351	
HCV Transit IX Van (FCD, FDD) 2.0 TDCi RWD	BLHA, BLRA, YNR6	125	03/2016 -	4351/1	
HCV Transit IX Van (FCD, FDD) 2.0 TDCi RWD	BLHA, BLRA, YNR6	125	03/2016 -	4174/1	4175/1
HCV Transit IX Van (FCD, FDD) 44229 TDCi	CVF5	114	08/2013 -	4174/1	
HCV Transit IX Van (FCD, FDD) 44229 TDCi	CVF5	114	08/2013 -		4175/1
HCV Transit IX Van (FCD, FDD) 44229 TDCi	CVF5	114	08/2013 -	4351	
HCV Transit IX Van (FCD, FDD) 44229 TDCi	CVF5	114	08/2013 -	4351/1	
HCV Transit IX Van (FCD, FDD) 44229 TDCi	CVF5	114	08/2013 -	4174/1	4175/1
HCV Transit IX Van (FCD, FDD) 44229 TDCi	CY14, CYF5, CYFG, USF6	92	08/2013 -	4174/1	
HCV Transit IX Van (FCD, FDD) 44229 TDCi	CY14, CYF5, CYFG, USF6	92	08/2013 -		4175/1
HCV Transit IX Van (FCD, FDD) 44229 TDCi	CY14, CYF5, CYFG, USF6	92	08/2013 -	4351	
HCV Transit IX Van (FCD, FDD) 44229 TDCi	CY14, CYF5, CYFG, USF6	92	08/2013 -	4351/1	
HCV Transit IX Van (FCD, FDD) 44229 TDCi	CY14, CYF5, CYFG, USF6	92	08/2013 -	4174/1	4175/1
HCV Transit IX Van (FCD, FDD) 44229 TDCi	DRF5, DRFF, DRFG	74	08/2013 -	4174/1	
HCV Transit IX Van (FCD, FDD) 44229 TDCi	DRF5, DRFF, DRFG	74	08/2013 -		4175/1
HCV Transit IX Van (FCD, FDD) 44229 TDCi	DRF5, DRFF, DRFG	74	08/2013 -	4351	
HCV Transit IX Van (FCD, FDD) 44229 TDCi	DRF5, DRFF, DRFG	74	08/2013 -	4351/1	
HCV Transit IX Van (FCD, FDD) 44229 TDCi	DRF5, DRFF, DRFG	74	08/2013 -	4174/1	4175/1
HCV Transit IX Van (FCD, FDD) 44229 TDCi 4x4	CV24, CVR5	114	08/2015 -	4174/1	
HCV Transit IX Van (FCD, FDD) 44229 TDCi 4x4	CV24, CVR5	114	08/2015 -		4175/1
HCV Transit IX Van (FCD, FDD) 44229 TDCi 4x4	CV24, CVR5	114	08/2015 -	4351	
HCV Transit IX Van (FCD, FDD) 44229 TDCi 4x4	CV24, CVR5	114	08/2015 -	4351/1	
HCV Transit IX Van (FCD, FDD) 44229 TDCi 4x4	CV24, CVR5	114	08/2015 -	4174/1	4175/1
HCV Transit IX Van (FCD, FDD) 44229 TDCi 4x4	CY24, CYR5	92	08/2013 -	4174/1	
HCV Transit IX Van (FCD, FDD) 44229 TDCi 4x4	CY24, CYR5	92	08/2013 -		4175/1
HCV Transit IX Van (FCD, FDD) 44229 TDCi 4x4	CY24, CYR5	92	08/2013 -	4351	
HCV Transit IX Van (FCD, FDD) 44229 TDCi 4x4	CY24, CYR5	92	08/2013 -	4351/1	
HCV Transit IX Van (FCD, FDD) 44229 TDCi 4x4	CY24, CYR5	92	08/2013 -	4174/1	4175/1
HCV Transit IX Van (FCD, FDD) 44229 TDCi RWD	CV24, CVR5, UYR6	114	08/2013 -	4174/1	
HCV Transit IX Van (FCD, FDD) 44229 TDCi RWD	CV24, CVR5, UYR6	114	08/2013 -		4175/1
HCV Transit IX Van (FCD, FDD) 44229 TDCi RWD	CV24, CVR5, UYR6	114	08/2013 -	4351	
HCV Transit IX Van (FCD, FDD) 44229 TDCi RWD	CV24, CVR5, UYR6	114	08/2013 -	4351/1	
HCV Transit IX Van (FCD, FDD) 44229 TDCi RWD	CV24, CVR5, UYR6	114	08/2013 -	4174/1	4175/1
HCV Transit IX Van (FCD, FDD) 44229 TDCi RWD	CYR5, USR6	92	08/2013 -	4174/1	
HCV Transit IX Van (FCD, FDD) 44229 TDCi RWD	CYR5, USR6	92	08/2013 -		4175/1
HCV Transit IX Van (FCD, FDD) 44229 TDCi RWD	CYR5, USR6	92	08/2013 -	4351	
HCV Transit IX Van (FCD, FDD) 44229 TDCi RWD	CYR5, USR6	92	08/2013 -	4351/1	
HCV Transit IX Van (FCD, FDD) 44229 TDCi RWD	CYR5, USR6	92	08/2013 -	4174/1	4175/1
HCV Transit IX Van (FCD, FDD) 44229 TDCi RWD	DRR5	74	08/2013 -	4174/1	
HCV Transit IX Van (FCD, FDD) 44229 TDCi RWD	DRR5	74	08/2013 -		4175/1
HCV Transit IX Van (FCD, FDD) 44229 TDCi RWD	DRR5	74	08/2013 -	4351	
HCV Transit IX Van (FCD, FDD) 44229 TDCi RWD	DRR5	74	08/2013 -	4351/1	
HCV Transit IX Van (FCD, FDD) 44229 TDCi RWD	DRR5	74	08/2013 -	4174/1	4175/1
HCV Transit VIII Bus (FD_, FB_, FS_, FZ_, FC_) 44229 TDCi	CYFA, CYFB, CYFC, CYFD	92	10/2011 - 08/2014	3906/1	
HCV Transit VIII Bus (FD_, FB_, FS_, FZ_, FC_) 44229 TDCi	CYFA, CYFB, CYFC, CYFD	92	10/2011 - 08/2014	3906/2	
HCV Transit VIII Bus (FD_, FB_, FS_, FZ_, FC_) 44229 TDCi	CYFA, CYFB, CYFC, CYFD	92	10/2011 - 08/2014	3906/1A	
HCV Transit VIII Bus (FD_, FB_, FS_, FZ_, FC_) 44229 TDCi	CYFA, CYFB, CYFC, CYFD	92	10/2011 - 08/2014		3907/1
HCV Transit VIII Bus (FD_, FB_, FS_, FZ_, FC_) 44229 TDCi	CYFA, CYFB, CYFC, CYFD	92	10/2011 - 08/2014		3907/2
HCV Transit VIII Bus (FD_, FB_, FS_, FZ_, FC_) 44229 TDCi	CYFA, CYFB, CYFC, CYFD	92	10/2011 - 08/2014		3907/1A
HCV Transit VIII Bus (FD_, FB_, FS_, FZ_, FC_) 44229 TDCi	CYFA, CYFB, CYFC, CYFD	92	10/2011 - 08/2014	3920/1	
HCV Transit VIII Bus (FD_, FB_, FS_, FZ_, FC_) 44229 TDCi	CYFA, CYFB, CYFC, CYFD	92	10/2011 - 08/2014	3906/1A	3907/1A
HCV Transit VIII Bus (FD_, FB_, FS_, FZ_, FC_) 44229 TDCi	DRFA, DRFB, DRFC, DRFD, DRFE	74	10/2011 - 08/2014	3906/1	
HCV Transit VIII Bus (FD_, FB_, FS_, FZ_, FC_) 44229 TDCi	DRFA, DRFB, DRFC, DRFD, DRFE	74	10/2011 - 08/2014	3906/2	
HCV Transit VIII Bus (FD_, FB_, FS_, FZ_, FC_) 44229 TDCi	DRFA, DRFB, DRFC, DRFD, DRFE	74	10/2011 - 08/2014	3906/1A	
HCV Transit VIII Bus (FD_, FB_, FS_, FZ_, FC_) 44229 TDCi	DRFA, DRFB, DRFC, DRFD, DRFE	74	10/2011 - 08/2014		3907/1
HCV Transit VIII Bus (FD_, FB_, FS_, FZ_, FC_) 44229 TDCi	DRFA, DRFB, DRFC, DRFD, DRFE	74	10/2011 - 08/2014		3907/2
HCV Transit VIII Bus (FD_, FB_, FS_, FZ_, FC_) 44229 TDCi	DRFA, DRFB, DRFC, DRFD, DRFE	74	10/2011 - 08/2014		3907/1A

MAKE & MODEL			KW	YEAR		
FORD						
HCV Transit VIII Bus (FD_, FB_, FS_, FZ_, FC_) 44229 TDCi		DRFA, DRFB, DRFC, DRFD, DRFE	74	10/2011 - 08/2014	3920/1	
HCV Transit VIII Bus (FD_, FB_, FS_, FZ_, FC_) 44229 TDCi		DRFA, DRFB, DRFC, DRFD, DRFE	74	10/2011 - 08/2014	3906/1A	3907/1A
HCV Transit VIII Bus (FD_, FB_, FS_, FZ_, FC_) 44229 TDCi		P8FA, P8FB	63	04/2006 - 08/2014	3906/1	
HCV Transit VIII Bus (FD_, FB_, FS_, FZ_, FC_) 44229 TDCi		P8FA, P8FB	63	04/2006 - 08/2014	3906/2	
HCV Transit VIII Bus (FD_, FB_, FS_, FZ_, FC_) 44229 TDCi		P8FA, P8FB	63	04/2006 - 08/2014	3906/1A	
HCV Transit VIII Bus (FD_, FB_, FS_, FZ_, FC_) 44229 TDCi		P8FA, P8FB	63	04/2006 - 08/2014		3907/1
HCV Transit VIII Bus (FD_, FB_, FS_, FZ_, FC_) 44229 TDCi		P8FA, P8FB	63	04/2006 - 08/2014		3907/2
HCV Transit VIII Bus (FD_, FB_, FS_, FZ_, FC_) 44229 TDCi		P8FA, P8FB	63	04/2006 - 08/2014		3907/1A
HCV Transit VIII Bus (FD_, FB_, FS_, FZ_, FC_) 44229 TDCi		P8FA, P8FB	63	04/2006 - 08/2014	3920/1	
HCV Transit VIII Bus (FD_, FB_, FS_, FZ_, FC_) 44229 TDCi		P8FA, P8FB	63	04/2006 - 08/2014	3906/1A	3907/1A
HCV Transit VIII Bus (FD_, FB_, FS_, FZ_, FC_) 44229 TDCi		PGFA, PGFB, UHFA, UHFB, UHFC	103	10/2007 - 08/2014	3906/1	
HCV Transit VIII Bus (FD_, FB_, FS_, FZ_, FC_) 44229 TDCi		PGFA, PGFB, UHFA, UHFB, UHFC	103	10/2007 - 08/2014	3906/2	
HCV Transit VIII Bus (FD_, FB_, FS_, FZ_, FC_) 44229 TDCi		PGFA, PGFB, UHFA, UHFB, UHFC	103	10/2007 - 08/2014	3906/1A	
HCV Transit VIII Bus (FD_, FB_, FS_, FZ_, FC_) 44229 TDCi		PGFA, PGFB, UHFA, UHFB, UHFC	103	10/2007 - 08/2014		3907/1
HCV Transit VIII Bus (FD_, FB_, FS_, FZ_, FC_) 44229 TDCi		PGFA, PGFB, UHFA, UHFB, UHFC	103	10/2007 - 08/2014		3907/2
HCV Transit VIII Bus (FD_, FB_, FS_, FZ_, FC_) 44229 TDCi		PGFA, PGFB, UHFA, UHFB, UHFC	103	10/2007 - 08/2014		3907/1A
HCV Transit VIII Bus (FD_, FB_, FS_, FZ_, FC_) 44229 TDCi		PGFA, PGFB, UHFA, UHFB, UHFC	103	10/2007 - 08/2014	3920/1	
HCV Transit VIII Bus (FD_, FB_, FS_, FZ_, FC_) 44229 TDCi		PGFA, PGFB, UHFA, UHFB, UHFC	103	10/2007 - 08/2014	3906/1A	3907/1A
HCV Transit VIII Bus (FD_, FB_, FS_, FZ_, FC_) 44229 TDCi		QVFA	81	04/2006 - 08/2014	3906/1	
HCV Transit VIII Bus (FD_, FB_, FS_, FZ_, FC_) 44229 TDCi		QVFA	81	04/2006 - 08/2014	3906/2	
HCV Transit VIII Bus (FD_, FB_, FS_, FZ_, FC_) 44229 TDCi		QVFA	81	04/2006 - 08/2014	3906/1A	
HCV Transit VIII Bus (FD_, FB_, FS_, FZ_, FC_) 44229 TDCi		QVFA	81	04/2006 - 08/2014		3907/1
HCV Transit VIII Bus (FD_, FB_, FS_, FZ_, FC_) 44229 TDCi		QVFA	81	04/2006 - 08/2014		3907/2
HCV Transit VIII Bus (FD_, FB_, FS_, FZ_, FC_) 44229 TDCi		QVFA	81	04/2006 - 08/2014		3907/1A
HCV Transit VIII Bus (FD_, FB_, FS_, FZ_, FC_) 44229 TDCi		QVFA	81	04/2006 - 08/2014	3920/1	
HCV Transit VIII Bus (FD_, FB_, FS_, FZ_, FC_) 44229 TDCi		QVFA	81	04/2006 - 08/2014	3906/1A	3907/1A
HCV Transit VIII Bus (FD_, FB_, FS_, FZ_, FC_) 44229 TDCi		QWFA	96	04/2006 - 08/2014	3906/1	
HCV Transit VIII Bus (FD_, FB_, FS_, FZ_, FC_) 44229 TDCi		QWFA	96	04/2006 - 08/2014	3906/2	
HCV Transit VIII Bus (FD_, FB_, FS_, FZ_, FC_) 44229 TDCi		QWFA	96	04/2006 - 08/2014	3906/1A	
HCV Transit VIII Bus (FD_, FB_, FS_, FZ_, FC_) 44229 TDCi		QWFA	96	04/2006 - 08/2014		3907/1
HCV Transit VIII Bus (FD_, FB_, FS_, FZ_, FC_) 44229 TDCi		QWFA	96	04/2006 - 08/2014		3907/2
HCV Transit VIII Bus (FD_, FB_, FS_, FZ_, FC_) 44229 TDCi		QWFA	96	04/2006 - 08/2014		3907/1A
HCV Transit VIII Bus (FD_, FB_, FS_, FZ_, FC_) 44229 TDCi		QWFA	96	04/2006 - 08/2014	3920/1	
HCV Transit VIII Bus (FD_, FB_, FS_, FZ_, FC_) 44229 TDCi		QWFA	96	04/2006 - 08/2014	3906/1A	3907/1A
HCV Transit VIII Bus (FD_, FB_, FS_, FZ_, FC_) 44229 TDCi		SRFA, SRFB, SRFC, SRFD, SRFE	85	10/2008 - 08/2014	3906/1	
HCV Transit VIII Bus (FD_, FB_, FS_, FZ_, FC_) 44229 TDCi		SRFA, SRFB, SRFC, SRFD, SRFE	85	10/2008 - 08/2014	3906/2	
HCV Transit VIII Bus (FD_, FB_, FS_, FZ_, FC_) 44229 TDCi		SRFA, SRFB, SRFC, SRFD, SRFE	85	10/2008 - 08/2014	3906/1A	
HCV Transit VIII Bus (FD_, FB_, FS_, FZ_, FC_) 44229 TDCi		SRFA, SRFB, SRFC, SRFD, SRFE	85	10/2008 - 08/2014		3907/1
HCV Transit VIII Bus (FD_, FB_, FS_, FZ_, FC_) 44229 TDCi		SRFA, SRFB, SRFC, SRFD, SRFE	85	10/2008 - 08/2014		3907/2
HCV Transit VIII Bus (FD_, FB_, FS_, FZ_, FC_) 44229 TDCi		SRFA, SRFB, SRFC, SRFD, SRFE	85	10/2008 - 08/2014		3907/1A
HCV Transit VIII Bus (FD_, FB_, FS_, FZ_, FC_) 44229 TDCi		SRFA, SRFB, SRFC, SRFD, SRFE	85	10/2008 - 08/2014	3920/1	
HCV Transit VIII Bus (FD_, FB_, FS_, FZ_, FC_) 44229 TDCi		SRFA, SRFB, SRFC, SRFD, SRFE	85	10/2008 - 08/2014	3906/1A	3907/1A
HCV Transit VIII Bus (FD_, FB_, FS_, FZ_, FC_) 44229 TDCi RWD		CYRA	92	09/2011 - 12/2014	3906/1	
HCV Transit VIII Bus (FD_, FB_, FS_, FZ_, FC_) 44229 TDCi RWD		CYRA	92	09/2011 - 12/2014	3906/2	
HCV Transit VIII Bus (FD_, FB_, FS_, FZ_, FC_) 44229 TDCi RWD		CYRA	92	09/2011 - 12/2014	3906/1A	
HCV Transit VIII Bus (FD_, FB_, FS_, FZ_, FC_) 44229 TDCi RWD		CYRA	92	09/2011 - 12/2014		3907/1
HCV Transit VIII Bus (FD_, FB_, FS_, FZ_, FC_) 44229 TDCi RWD		CYRA	92	09/2011 - 12/2014		3907/2
HCV Transit VIII Bus (FD_, FB_, FS_, FZ_, FC_) 44229 TDCi RWD		CYRA	92	09/2011 - 12/2014		3907/1A
HCV Transit VIII Bus (FD_, FB_, FS_, FZ_, FC_) 44229 TDCi RWD		CYRA	92	09/2011 - 12/2014	3920/1	
HCV Transit VIII Bus (FD_, FB_, FS_, FZ_, FC_) 44229 TDCi RWD		CYRA	92	09/2011 - 12/2014	3906/1A	3907/1A
HCV Transit VIII Bus (FD_, FB_, FS_, FZ_, FC_) 44229 TDCi RWD		DRRA, DRRB, DRRC	74	10/2011 - 08/2014	3906/1	
HCV Transit VIII Bus (FD_, FB_, FS_, FZ_, FC_) 44229 TDCi RWD		DRRA, DRRB, DRRC	74	10/2011 - 08/2014	3906/2	
HCV Transit VIII Bus (FD_, FB_, FS_, FZ_, FC_) 44229 TDCi RWD		DRRA, DRRB, DRRC	74	10/2011 - 08/2014	3906/1A	
HCV Transit VIII Bus (FD_, FB_, FS_, FZ_, FC_) 44229 TDCi RWD		DRRA, DRRB, DRRC	74	10/2011 - 08/2014		3907/1
HCV Transit VIII Bus (FD_, FB_, FS_, FZ_, FC_) 44229 TDCi RWD		DRRA, DRRB, DRRC	74	10/2011 - 08/2014		3907/2
HCV Transit VIII Bus (FD_, FB_, FS_, FZ_, FC_) 44229 TDCi RWD		DRRA, DRRB, DRRC	74	10/2011 - 08/2014		3907/1A
HCV Transit VIII Bus (FD_, FB_, FS_, FZ_, FC_) 44229 TDCi RWD		DRRA, DRRB, DRRC	74	10/2011 - 08/2014	3920/1	
HCV Transit VIII Bus (FD_, FB_, FS_, FZ_, FC_) 44229 TDCi RWD		DRRA, DRRB, DRRC	74	10/2011 - 08/2014	3906/1A	3907/1A
HCV Transit VIII Bus (FD_, FB_, FS_, FZ_, FC_) 44229 TDCi RWD		USRA, USRB	100	09/2011 - 08/2014	3906/1	
HCV Transit VIII Bus (FD_, FB_, FS_, FZ_, FC_) 44229 TDCi RWD		USRA, USRB	100	09/2011 - 08/2014	3906/2	
HCV Transit VIII Bus (FD_, FB_, FS_, FZ_, FC_) 44229 TDCi RWD		USRA, USRB	100	09/2011 - 08/2014	3906/1A	
HCV Transit VIII Bus (FD_, FB_, FS_, FZ_, FC_) 44229 TDCi RWD		USRA, USRB	100	09/2011 - 08/2014		3907/1
HCV Transit VIII Bus (FD_, FB_, FS_, FZ_, FC_) 44229 TDCi RWD		USRA, USRB	100	09/2011 - 08/2014		3907/2
HCV Transit VIII Bus (FD_, FB_, FS_, FZ_, FC_) 44229 TDCi RWD		USRA, USRB	100	09/2011 - 08/2014		3907/1A
HCV Transit VIII Bus (FD_, FB_, FS_, FZ_, FC_) 44229 TDCi RWD		USRA, USRB	100	09/2011 - 08/2014	3920/1	
HCV Transit VIII Bus (FD_, FB_, FS_, FZ_, FC_) 44229 TDCi RWD		USRA, USRB	100	09/2011 - 08/2014	3906/1A	3907/1A
HCV Transit VIII Bus (FD_, FB_, FS_, FZ_, FC_) 44230 TDCi		SAFA, SAFB	147	02/2008 - 08/2014	3906/1	
HCV Transit VIII Bus (FD_, FB_, FS_, FZ_, FC_) 44230 TDCi		SAFA, SAFB	147	02/2008 - 08/2014	3906/2	
HCV Transit VIII Bus (FD_, FB_, FS_, FZ_, FC_) 44230 TDCi		SAFA, SAFB	147	02/2008 - 08/2014	3906/1A	
HCV Transit VIII Bus (FD_, FB_, FS_, FZ_, FC_) 44230 TDCi		SAFA, SAFB	147	02/2008 - 08/2014		3907/1
HCV Transit VIII Bus (FD_, FB_, FS_, FZ_, FC_) 44230 TDCi		SAFA, SAFB	147	02/2008 - 08/2014		3907/2
HCV Transit VIII Bus (FD_, FB_, FS_, FZ_, FC_) 44230 TDCi		SAFA, SAFB	147	02/2008 - 08/2014		3907/1A
HCV Transit VIII Bus (FD_, FB_, FS_, FZ_, FC_) 44230 TDCi		SAFA, SAFB	147	02/2008 - 08/2014	3906/1A	3907/1A
HCV Transit VIII Bus (FD_, FB_, FS_, FZ_, FC_) 44288 TDCi		H9FD	103	04/2006 - 08/2014	3920/1	
HCV Transit VIII Bus (FD_, FB_, FS_, FZ_, FC_) 44288 TDCi		JXFA, JXFC	85	04/2006 - 08/2014	3906/1	
HCV Transit VIII Bus (FD_, FB_, FS_, FZ_, FC_) 44288 TDCi		JXFA, JXFC	85	04/2006 - 08/2014	3906/2	

BESER®

MAKE & MODEL			KW	YEAR		
FORD						
HCV Transit VIII Bus (FD_, FB_, FS_, FZ_, FC_) 44288 TDCi		JXFA, JXFC	85	04/2006 - 08/2014	3906/1A	
HCV Transit VIII Bus (FD_, FB_, FS_, FZ_, FC_) 44288 TDCi		JXFA, JXFC	85	04/2006 - 08/2014		3907/1
HCV Transit VIII Bus (FD_, FB_, FS_, FZ_, FC_) 44288 TDCi		JXFA, JXFC	85	04/2006 - 08/2014		3907/2
HCV Transit VIII Bus (FD_, FB_, FS_, FZ_, FC_) 44288 TDCi		JXFA, JXFC	85	04/2006 - 08/2014		3907/1A
HCV Transit VIII Bus (FD_, FB_, FS_, FZ_, FC_) 44288 TDCi		JXFA, JXFC	85	04/2006 - 08/2014	3920/1	
HCV Transit VIII Bus (FD_, FB_, FS_, FZ_, FC_) 44288 TDCi		JXFA, JXFC	85	04/2006 - 08/2014	3906/1A	3907/1A
HCV Transit VIII Bus (FD_, FB_, FS_, FZ_, FC_) 44288 TDCi		PHFA, PHFC	74	04/2006 - 08/2014	3906/1	
HCV Transit VIII Bus (FD_, FB_, FS_, FZ_, FC_) 44288 TDCi		PHFA, PHFC	74	04/2006 - 08/2014	3906/2	
HCV Transit VIII Bus (FD_, FB_, FS_, FZ_, FC_) 44288 TDCi		PHFA, PHFC	74	04/2006 - 08/2014	3906/1A	
HCV Transit VIII Bus (FD_, FB_, FS_, FZ_, FC_) 44288 TDCi		PHFA, PHFC	74	04/2006 - 08/2014		3907/1
HCV Transit VIII Bus (FD_, FB_, FS_, FZ_, FC_) 44288 TDCi		PHFA, PHFC	74	04/2006 - 08/2014		3907/2
HCV Transit VIII Bus (FD_, FB_, FS_, FZ_, FC_) 44288 TDCi		PHFA, PHFC	74	04/2006 - 08/2014		3907/1A
HCV Transit VIII Bus (FD_, FB_, FS_, FZ_, FC_) 44288 TDCi		PHFA, PHFC	74	04/2006 - 08/2014	3920/1	
HCV Transit VIII Bus (FD_, FB_, FS_, FZ_, FC_) 44288 TDCi		PHFA, PHFC	74	04/2006 - 08/2014	3906/1A	3907/1A
HCV Transit VIII Bus (FD_, FB_, FS_, FZ_, FC_) 44288 TDCi 4x4		H9FB	103	11/2006 - 08/2014	3906/1	
HCV Transit VIII Bus (FD_, FB_, FS_, FZ_, FC_) 44288 TDCi 4x4		H9FB	103	11/2006 - 08/2014	3906/2	
HCV Transit VIII Bus (FD_, FB_, FS_, FZ_, FC_) 44288 TDCi 4x4		H9FB	103	11/2006 - 08/2014	3906/1A	
HCV Transit VIII Bus (FD_, FB_, FS_, FZ_, FC_) 44288 TDCi 4x4		H9FB	103	11/2006 - 08/2014		3907/1
HCV Transit VIII Bus (FD_, FB_, FS_, FZ_, FC_) 44288 TDCi 4x4		H9FB	103	11/2006 - 08/2014		3907/2
HCV Transit VIII Bus (FD_, FB_, FS_, FZ_, FC_) 44288 TDCi 4x4		H9FB	103	11/2006 - 08/2014		3907/1A
HCV Transit VIII Bus (FD_, FB_, FS_, FZ_, FC_) 44288 TDCi 4x4		H9FB	103	11/2006 - 08/2014	3920/1	
HCV Transit VIII Bus (FD_, FB_, FS_, FZ_, FC_) 44288 TDCi 4x4		H9FB	103	11/2006 - 08/2014	3906/1A	3907/1A
HCV Transit VIII Platform/Chassis (FM_, FN_) 44229 TDCi		CYFA, CYFB, CYFC, CYFD	92	10/2011 - 08/2014	3906/1	
HCV Transit VIII Platform/Chassis (FM_, FN_) 44229 TDCi		CYFA, CYFB, CYFC, CYFD	92	10/2011 - 08/2014	3906/2	
HCV Transit VIII Platform/Chassis (FM_, FN_) 44229 TDCi		CYFA, CYFB, CYFC, CYFD	92	10/2011 - 08/2014	3906/1A	
HCV Transit VIII Platform/Chassis (FM_, FN_) 44229 TDCi		CYFA, CYFB, CYFC, CYFD	92	10/2011 - 08/2014		3907/1
HCV Transit VIII Platform/Chassis (FM_, FN_) 44229 TDCi		CYFA, CYFB, CYFC, CYFD	92	10/2011 - 08/2014		3907/2
HCV Transit VIII Platform/Chassis (FM_, FN_) 44229 TDCi		CYFA, CYFB, CYFC, CYFD	92	10/2011 - 08/2014		3907/1A
HCV Transit VIII Platform/Chassis (FM_, FN_) 44229 TDCi		CYFA, CYFB, CYFC, CYFD	92	10/2011 - 08/2014	3920/1	
HCV Transit VIII Platform/Chassis (FM_, FN_) 44229 TDCi		CYFA, CYFB, CYFC, CYFD	92	10/2011 - 08/2014	3906/1A	3907/1A
HCV Transit VIII Platform/Chassis (FM_, FN_) 44229 TDCi		DRFA, DRFB, DRFC, DRFD, DRFE	74	10/2011 - 08/2014	3906/1	
HCV Transit VIII Platform/Chassis (FM_, FN_) 44229 TDCi		DRFA, DRFB, DRFC, DRFD, DRFE	74	10/2011 - 08/2014	3906/2	
HCV Transit VIII Platform/Chassis (FM_, FN_) 44229 TDCi		DRFA, DRFB, DRFC, DRFD, DRFE	74	10/2011 - 08/2014	3906/1A	
HCV Transit VIII Platform/Chassis (FM_, FN_) 44229 TDCi		DRFA, DRFB, DRFC, DRFD, DRFE	74	10/2011 - 08/2014		3907/1
HCV Transit VIII Platform/Chassis (FM_, FN_) 44229 TDCi		DRFA, DRFB, DRFC, DRFD, DRFE	74	10/2011 - 08/2014		3907/2
HCV Transit VIII Platform/Chassis (FM_, FN_) 44229 TDCi		DRFA, DRFB, DRFC, DRFD, DRFE	74	10/2011 - 08/2014		3907/1A
HCV Transit VIII Platform/Chassis (FM_, FN_) 44229 TDCi		DRFA, DRFB, DRFC, DRFD, DRFE	74	10/2011 - 08/2014	3920/1	
HCV Transit VIII Platform/Chassis (FM_, FN_) 44229 TDCi		DRFA, DRFB, DRFC, DRFD, DRFE	74	10/2011 - 08/2014	3906/1A	3907/1A
HCV Transit VIII Platform/Chassis (FM_, FN_) 44229 TDCi		P8FA, P8FB	63	04/2006 - 08/2014	3906/1	
HCV Transit VIII Platform/Chassis (FM_, FN_) 44229 TDCi		P8FA, P8FB	63	04/2006 - 08/2014	3906/2	
HCV Transit VIII Platform/Chassis (FM_, FN_) 44229 TDCi		P8FA, P8FB	63	04/2006 - 08/2014	3906/1A	
HCV Transit VIII Platform/Chassis (FM_, FN_) 44229 TDCi		P8FA, P8FB	63	04/2006 - 08/2014		3907/1
HCV Transit VIII Platform/Chassis (FM_, FN_) 44229 TDCi		P8FA, P8FB	63	04/2006 - 08/2014		3907/2
HCV Transit VIII Platform/Chassis (FM_, FN_) 44229 TDCi		P8FA, P8FB	63	04/2006 - 08/2014		3907/1A
HCV Transit VIII Platform/Chassis (FM_, FN_) 44229 TDCi		P8FA, P8FB	63	04/2006 - 08/2014	3920/1	
HCV Transit VIII Platform/Chassis (FM_, FN_) 44229 TDCi		P8FA, P8FB	63	04/2006 - 08/2014	3906/1A	3907/1A
HCV Transit VIII Platform/Chassis (FM_, FN_) 44229 TDCi		PGFA, PGFB, UHFA, UHFB, UHFC	103	10/2007 - 09/2011	3906/1	
HCV Transit VIII Platform/Chassis (FM_, FN_) 44229 TDCi		PGFA, PGFB, UHFA, UHFB, UHFC	103	10/2007 - 09/2011	3906/2	
HCV Transit VIII Platform/Chassis (FM_, FN_) 44229 TDCi		PGFA, PGFB, UHFA, UHFB, UHFC	103	10/2007 - 09/2011	3906/1A	
HCV Transit VIII Platform/Chassis (FM_, FN_) 44229 TDCi		PGFA, PGFB, UHFA, UHFB, UHFC	103	10/2007 - 09/2011		3907/1
HCV Transit VIII Platform/Chassis (FM_, FN_) 44229 TDCi		PGFA, PGFB, UHFA, UHFB, UHFC	103	10/2007 - 09/2011		3907/2
HCV Transit VIII Platform/Chassis (FM_, FN_) 44229 TDCi		PGFA, PGFB, UHFA, UHFB, UHFC	103	10/2007 - 09/2011		3907/1A
HCV Transit VIII Platform/Chassis (FM_, FN_) 44229 TDCi		PGFA, PGFB, UHFA, UHFB, UHFC	103	10/2007 - 09/2011	3920/1	
HCV Transit VIII Platform/Chassis (FM_, FN_) 44229 TDCi		PGFA, PGFB, UHFA, UHFB, UHFC	103	10/2007 - 09/2011	3906/1A	3907/1A
HCV Transit VIII Platform/Chassis (FM_, FN_) 44229 TDCi		QVFA	81	04/2006 - 08/2014	3906/1	
HCV Transit VIII Platform/Chassis (FM_, FN_) 44229 TDCi		QVFA	81	04/2006 - 08/2014	3906/2	
HCV Transit VIII Platform/Chassis (FM_, FN_) 44229 TDCi		QVFA	81	04/2006 - 08/2014	3906/1A	
HCV Transit VIII Platform/Chassis (FM_, FN_) 44229 TDCi		QVFA	81	04/2006 - 08/2014		3907/1
HCV Transit VIII Platform/Chassis (FM_, FN_) 44229 TDCi		QVFA	81	04/2006 - 08/2014		3907/2
HCV Transit VIII Platform/Chassis (FM_, FN_) 44229 TDCi		QVFA	81	04/2006 - 08/2014		3907/1A
HCV Transit VIII Platform/Chassis (FM_, FN_) 44229 TDCi		QVFA	81	04/2006 - 08/2014	3920/1	
HCV Transit VIII Platform/Chassis (FM_, FN_) 44229 TDCi		QVFA	81	04/2006 - 08/2014	3906/1A	3907/1A
HCV Transit VIII Platform/Chassis (FM_, FN_) 44229 TDCi		QWFA	96	04/2006 - 08/2014	3906/1	
HCV Transit VIII Platform/Chassis (FM_, FN_) 44229 TDCi		QWFA	96	04/2006 - 08/2014	3906/2	
HCV Transit VIII Platform/Chassis (FM_, FN_) 44229 TDCi		QWFA	96	04/2006 - 08/2014	3906/1A	
HCV Transit VIII Platform/Chassis (FM_, FN_) 44229 TDCi		QWFA	96	04/2006 - 08/2014		3907/1
HCV Transit VIII Platform/Chassis (FM_, FN_) 44229 TDCi		QWFA	96	04/2006 - 08/2014		3907/2
HCV Transit VIII Platform/Chassis (FM_, FN_) 44229 TDCi		QWFA	96	04/2006 - 08/2014		3907/1A
HCV Transit VIII Platform/Chassis (FM_, FN_) 44229 TDCi		QWFA	96	04/2006 - 08/2014	3920/1	
HCV Transit VIII Platform/Chassis (FM_, FN_) 44229 TDCi		QWFA	96	04/2006 - 08/2014	3906/1A	3907/1A
HCV Transit VIII Platform/Chassis (FM_, FN_) 44229 TDCi		SRFA, SRFB, SRFC, SRFD, SRFE	85	10/2008 - 08/2014	3906/1	
HCV Transit VIII Platform/Chassis (FM_, FN_) 44229 TDCi		SRFA, SRFB, SRFC, SRFD, SRFE	85	10/2008 - 08/2014	3906/2	
HCV Transit VIII Platform/Chassis (FM_, FN_) 44229 TDCi		SRFA, SRFB, SRFC, SRFD, SRFE	85	10/2008 - 08/2014	3906/1A	
HCV Transit VIII Platform/Chassis (FM_, FN_) 44229 TDCi		SRFA, SRFB, SRFC, SRFD, SRFE	85	10/2008 - 08/2014		3907/1
HCV Transit VIII Platform/Chassis (FM_, FN_) 44229 TDCi		SRFA, SRFB, SRFC, SRFD, SRFE	85	10/2008 - 08/2014		3907/2
HCV Transit VIII Platform/Chassis (FM_, FN_) 44229 TDCi		SRFA, SRFB, SRFC, SRFD, SRFE	85	10/2008 - 08/2014		3907/1A

MAKE & MODEL   		KW	YEAR		
FORD					
HCV Transit VIII Platform/Chassis (FM_, FN_) 44229 TDCi	SRFA, SRFB, SRFC, SRFD, SRFE	85	10/2008 - 08/2014	3920/1	
HCV Transit VIII Platform/Chassis (FM_, FN_) 44229 TDCi	SRFA, SRFB, SRFC, SRFD, SRFE	85	10/2008 - 08/2014	3906/1A	3907/1A
HCV Transit VIII Platform/Chassis (FM_, FN_) 44229 TDCi 4x4	CYRB, CYRC	92	10/2011 - 08/2014	3906/1	
HCV Transit VIII Platform/Chassis (FM_, FN_) 44229 TDCi 4x4	CYRB, CYRC	92	10/2011 - 08/2014	3906/2	
HCV Transit VIII Platform/Chassis (FM_, FN_) 44229 TDCi 4x4	CYRB, CYRC	92	10/2011 - 08/2014	3906/1A	
HCV Transit VIII Platform/Chassis (FM_, FN_) 44229 TDCi 4x4	CYRB, CYRC	92	10/2011 - 08/2014		3907/1
HCV Transit VIII Platform/Chassis (FM_, FN_) 44229 TDCi 4x4	CYRB, CYRC	92	10/2011 - 08/2014		3907/2
HCV Transit VIII Platform/Chassis (FM_, FN_) 44229 TDCi 4x4	CYRB, CYRC	92	10/2011 - 08/2014		3907/1A
HCV Transit VIII Platform/Chassis (FM_, FN_) 44229 TDCi 4x4	CYRB, CYRC	92	10/2011 - 08/2014	3920/1	
HCV Transit VIII Platform/Chassis (FM_, FN_) 44229 TDCi 4x4	CYRB, CYRC	92	10/2011 - 08/2014	3906/1A	3907/1A
HCV Transit VIII Platform/Chassis (FM_, FN_) 44229 TDCi RWD	CVRA, CVRB, CVRC	114	10/2011 - 08/2014	3906/1	
HCV Transit VIII Platform/Chassis (FM_, FN_) 44229 TDCi RWD	CVRA, CVRB, CVRC	114	10/2011 - 08/2014	3906/2	
HCV Transit VIII Platform/Chassis (FM_, FN_) 44229 TDCi RWD	CVRA, CVRB, CVRC	114	10/2011 - 08/2014	3906/1A	
HCV Transit VIII Platform/Chassis (FM_, FN_) 44229 TDCi RWD	CVRA, CVRB, CVRC	114	10/2011 - 08/2014		3907/1
HCV Transit VIII Platform/Chassis (FM_, FN_) 44229 TDCi RWD	CVRA, CVRB, CVRC	114	10/2011 - 08/2014		3907/2
HCV Transit VIII Platform/Chassis (FM_, FN_) 44229 TDCi RWD	CVRA, CVRB, CVRC	114	10/2011 - 08/2014		3907/1A
HCV Transit VIII Platform/Chassis (FM_, FN_) 44229 TDCi RWD	CVRA, CVRB, CVRC	114	10/2011 - 08/2014	3920/1	
HCV Transit VIII Platform/Chassis (FM_, FN_) 44229 TDCi RWD	CVRA, CVRB, CVRC	114	10/2011 - 08/2014	3906/1A	3907/1A
HCV Transit VIII Platform/Chassis (FM_, FN_) 44229 TDCi RWD	CYRA	92	10/2011 - 08/2014	3906/1	
HCV Transit VIII Platform/Chassis (FM_, FN_) 44229 TDCi RWD	CYRA	92	10/2011 - 08/2014	3906/2	
HCV Transit VIII Platform/Chassis (FM_, FN_) 44229 TDCi RWD	CYRA	92	10/2011 - 08/2014	3906/1A	
HCV Transit VIII Platform/Chassis (FM_, FN_) 44229 TDCi RWD	CYRA	92	10/2011 - 08/2014		3907/1
HCV Transit VIII Platform/Chassis (FM_, FN_) 44229 TDCi RWD	CYRA	92	10/2011 - 08/2014		3907/2
HCV Transit VIII Platform/Chassis (FM_, FN_) 44229 TDCi RWD	CYRA	92	10/2011 - 08/2014		3907/1A
HCV Transit VIII Platform/Chassis (FM_, FN_) 44229 TDCi RWD	CYRA	92	10/2011 - 08/2014	3920/1	
HCV Transit VIII Platform/Chassis (FM_, FN_) 44229 TDCi RWD	CYRA	92	10/2011 - 08/2014	3906/1A	3907/1A
HCV Transit VIII Platform/Chassis (FM_, FN_) 44229 TDCi RWD	DRRA, DRRB, DRRC	74	10/2011 - 08/2014	3906/1	
HCV Transit VIII Platform/Chassis (FM_, FN_) 44229 TDCi RWD	DRRA, DRRB, DRRC	74	10/2011 - 08/2014	3906/2	
HCV Transit VIII Platform/Chassis (FM_, FN_) 44229 TDCi RWD	DRRA, DRRB, DRRC	74	10/2011 - 08/2014	3906/1A	
HCV Transit VIII Platform/Chassis (FM_, FN_) 44229 TDCi RWD	DRRA, DRRB, DRRC	74	10/2011 - 08/2014		3907/1
HCV Transit VIII Platform/Chassis (FM_, FN_) 44229 TDCi RWD	DRRA, DRRB, DRRC	74	10/2011 - 08/2014		3907/2
HCV Transit VIII Platform/Chassis (FM_, FN_) 44229 TDCi RWD	DRRA, DRRB, DRRC	74	10/2011 - 08/2014		3907/1A
HCV Transit VIII Platform/Chassis (FM_, FN_) 44229 TDCi RWD	DRRA, DRRB, DRRC	74	10/2011 - 08/2014	3920/1	
HCV Transit VIII Platform/Chassis (FM_, FN_) 44229 TDCi RWD	DRRA, DRRB, DRRC	74	10/2011 - 08/2014	3906/1A	3907/1A
HCV Transit VIII Platform/Chassis (FM_, FN_) 44230 TDCi RWD	SAFA, SAFB	147	09/2007 - 08/2014	3906/1	
HCV Transit VIII Platform/Chassis (FM_, FN_) 44230 TDCi RWD	SAFA, SAFB	147	09/2007 - 08/2014	3906/2	
HCV Transit VIII Platform/Chassis (FM_, FN_) 44230 TDCi RWD	SAFA, SAFB	147	09/2007 - 08/2014	3906/1A	
HCV Transit VIII Platform/Chassis (FM_, FN_) 44230 TDCi RWD	SAFA, SAFB	147	09/2007 - 08/2014		3907/1
HCV Transit VIII Platform/Chassis (FM_, FN_) 44230 TDCi RWD	SAFA, SAFB	147	09/2007 - 08/2014		3907/2
HCV Transit VIII Platform/Chassis (FM_, FN_) 44230 TDCi RWD	SAFA, SAFB	147	09/2007 - 08/2014		3907/1A
HCV Transit VIII Platform/Chassis (FM_, FN_) 44230 TDCi RWD	SAFA, SAFB	147	09/2007 - 08/2014	3906/1A	3907/1A
HCV Transit VIII Platform/Chassis (FM_, FN_) 44257 16V CNG RWD	GZFC	100	04/2006 - 08/2014	3906/1	
HCV Transit VIII Platform/Chassis (FM_, FN_) 44257 16V CNG RWD	GZFC	100	04/2006 - 08/2014	3906/2	
HCV Transit VIII Platform/Chassis (FM_, FN_) 44257 16V CNG RWD	GZFC	100	04/2006 - 08/2014	3906/1A	
HCV Transit VIII Platform/Chassis (FM_, FN_) 44257 16V CNG RWD	GZFC	100	04/2006 - 08/2014		3907/1
HCV Transit VIII Platform/Chassis (FM_, FN_) 44257 16V CNG RWD	GZFC	100	04/2006 - 08/2014		3907/2
HCV Transit VIII Platform/Chassis (FM_, FN_) 44257 16V CNG RWD	GZFC	100	04/2006 - 08/2014		3907/1A
HCV Transit VIII Platform/Chassis (FM_, FN_) 44257 16V CNG RWD	GZFC	100	04/2006 - 08/2014	3920/1	
HCV Transit VIII Platform/Chassis (FM_, FN_) 44257 16V CNG RWD	GZFC	100	04/2006 - 08/2014	3906/1A	3907/1A
HCV Transit VIII Platform/Chassis (FM_, FN_) 44257 16V LPG RWD	GZFC	107	04/2006 - 08/2014	3906/1	
HCV Transit VIII Platform/Chassis (FM_, FN_) 44257 16V LPG RWD	GZFC	107	04/2006 - 08/2014	3906/2	
HCV Transit VIII Platform/Chassis (FM_, FN_) 44257 16V LPG RWD	GZFC	107	04/2006 - 08/2014	3906/1A	
HCV Transit VIII Platform/Chassis (FM_, FN_) 44257 16V LPG RWD	GZFC	107	04/2006 - 08/2014		3907/1
HCV Transit VIII Platform/Chassis (FM_, FN_) 44257 16V LPG RWD	GZFC	107	04/2006 - 08/2014		3907/2
HCV Transit VIII Platform/Chassis (FM_, FN_) 44257 16V LPG RWD	GZFC	107	04/2006 - 08/2014		3907/1A
HCV Transit VIII Platform/Chassis (FM_, FN_) 44257 16V LPG RWD	GZFC	107	04/2006 - 08/2014	3920/1	
HCV Transit VIII Platform/Chassis (FM_, FN_) 44257 16V LPG RWD	GZFC	107	04/2006 - 08/2014	3906/1A	3907/1A
HCV Transit VIII Platform/Chassis (FM_, FN_) 44257 16V RWD	GZFA, GZFB, GZFC	107	04/2006 - 08/2014	3906/1	
HCV Transit VIII Platform/Chassis (FM_, FN_) 44257 16V RWD	GZFA, GZFB, GZFC	107	04/2006 - 08/2014	3906/2	
HCV Transit VIII Platform/Chassis (FM_, FN_) 44257 16V RWD	GZFA, GZFB, GZFC	107	04/2006 - 08/2014	3906/1A	
HCV Transit VIII Platform/Chassis (FM_, FN_) 44257 16V RWD	GZFA, GZFB, GZFC	107	04/2006 - 08/2014		3907/1
HCV Transit VIII Platform/Chassis (FM_, FN_) 44257 16V RWD	GZFA, GZFB, GZFC	107	04/2006 - 08/2014		3907/2
HCV Transit VIII Platform/Chassis (FM_, FN_) 44257 16V RWD	GZFA, GZFB, GZFC	107	04/2006 - 08/2014		3907/1A
HCV Transit VIII Platform/Chassis (FM_, FN_) 44257 16V RWD	GZFA, GZFB, GZFC	107	04/2006 - 08/2014	3920/1	
HCV Transit VIII Platform/Chassis (FM_, FN_) 44257 16V RWD	GZFA, GZFB, GZFC	107	04/2006 - 08/2014	3906/1A	3907/1A
HCV Transit VIII Platform/Chassis (FM_, FN_) 44288 TDCi 4x4	H9FB	103	11/2006 - 08/2014	3906/1	
HCV Transit VIII Platform/Chassis (FM_, FN_) 44288 TDCi 4x4	H9FB	103	11/2006 - 08/2014	3906/2	
HCV Transit VIII Platform/Chassis (FM_, FN_) 44288 TDCi 4x4	H9FB	103	11/2006 - 08/2014	3906/1A	
HCV Transit VIII Platform/Chassis (FM_, FN_) 44288 TDCi 4x4	H9FB	103	11/2006 - 08/2014		3907/1
HCV Transit VIII Platform/Chassis (FM_, FN_) 44288 TDCi 4x4	H9FB	103	11/2006 - 08/2014		3907/2
HCV Transit VIII Platform/Chassis (FM_, FN_) 44288 TDCi 4x4	H9FB	103	11/2006 - 08/2014		3907/1A
HCV Transit VIII Platform/Chassis (FM_, FN_) 44288 TDCi 4x4	H9FB	103	11/2006 - 08/2014	3920/1	
HCV Transit VIII Platform/Chassis (FM_, FN_) 44288 TDCi 4x4	H9FB	103	11/2006 - 08/2014	3906/1A	3907/1A
HCV Transit VIII Platform/Chassis (FM_, FN_) 44288 TDCi RWD	H9FD	103	04/2006 - 08/2014	3920/1	
HCV Transit VIII Platform/Chassis (FM_, FN_) 44288 TDCi RWD	JXFA, JXFC	85	04/2006 - 08/2014	3906/1	
HCV Transit VIII Platform/Chassis (FM_, FN_) 44288 TDCi RWD	JXFA, JXFC	85	04/2006 - 08/2014	3906/2	

MAKE & MODEL		KW	YEAR		
FORD					
HCV Transit VIII Platform/Chassis (FM_, FN_) 44288 TDCi RWD	JXFA, JXFC	85	04/2006 - 08/2014	3906/1A	
HCV Transit VIII Platform/Chassis (FM_, FN_) 44288 TDCi RWD	JXFA, JXFC	85	04/2006 - 08/2014		3907/1
HCV Transit VIII Platform/Chassis (FM_, FN_) 44288 TDCi RWD	JXFA, JXFC	85	04/2006 - 08/2014		3907/2
HCV Transit VIII Platform/Chassis (FM_, FN_) 44288 TDCi RWD	JXFA, JXFC	85	04/2006 - 08/2014		3907/1A
HCV Transit VIII Platform/Chassis (FM_, FN_) 44288 TDCi RWD	JXFA, JXFC	85	04/2006 - 08/2014	3920/1	
HCV Transit VIII Platform/Chassis (FM_, FN_) 44288 TDCi RWD	JXFA, JXFC	85	04/2006 - 08/2014	3906/1A	3907/1A
HCV Transit VIII Platform/Chassis (FM_, FN_) 44288 TDCi RWD	PHFA, PHFC	74	04/2006 - 08/2014	3906/1	
HCV Transit VIII Platform/Chassis (FM_, FN_) 44288 TDCi RWD	PHFA, PHFC	74	04/2006 - 08/2014	3906/2	
HCV Transit VIII Platform/Chassis (FM_, FN_) 44288 TDCi RWD	PHFA, PHFC	74	04/2006 - 08/2014	3906/1A	
HCV Transit VIII Platform/Chassis (FM_, FN_) 44288 TDCi RWD	PHFA, PHFC	74	04/2006 - 08/2014		3907/1
HCV Transit VIII Platform/Chassis (FM_, FN_) 44288 TDCi RWD	PHFA, PHFC	74	04/2006 - 08/2014		3907/2
HCV Transit VIII Platform/Chassis (FM_, FN_) 44288 TDCi RWD	PHFA, PHFC	74	04/2006 - 08/2014		3907/1A
HCV Transit VIII Platform/Chassis (FM_, FN_) 44288 TDCi RWD	PHFA, PHFC	74	04/2006 - 08/2014	3920/1	
HCV Transit VIII Platform/Chassis (FM_, FN_) 44288 TDCi RWD	PHFA, PHFC	74	04/2006 - 08/2014	3906/1A	3907/1A
HCV Transit VIII Tourneo 44229 TDCi	PGFA, PGFB, UHFA, UHFB, UHFC	103	10/2007 - 08/2014	3906/1	
HCV Transit VIII Tourneo 44229 TDCi	PGFA, PGFB, UHFA, UHFB, UHFC	103	10/2007 - 08/2014	3906/2	
HCV Transit VIII Tourneo 44229 TDCi	PGFA, PGFB, UHFA, UHFB, UHFC	103	10/2007 - 08/2014	3906/1A	
HCV Transit VIII Tourneo 44229 TDCi	PGFA, PGFB, UHFA, UHFB, UHFC	103	10/2007 - 08/2014		3907/1
HCV Transit VIII Tourneo 44229 TDCi	PGFA, PGFB, UHFA, UHFB, UHFC	103	10/2007 - 08/2014		3907/2
HCV Transit VIII Tourneo 44229 TDCi	PGFA, PGFB, UHFA, UHFB, UHFC	103	10/2007 - 08/2014		3907/1A
HCV Transit VIII Tourneo 44229 TDCi	PGFA, PGFB, UHFA, UHFB, UHFC	103	10/2007 - 08/2014	3920/1	
HCV Transit VIII Tourneo 44229 TDCi	PGFA, PGFB, UHFA, UHFB, UHFC	103	10/2007 - 08/2014	3906/1A	3907/1A
HCV Transit VIII Tourneo 44229 TDCi	QVFA	81	07/2006 - 08/2014	3906/1	
HCV Transit VIII Tourneo 44229 TDCi	QVFA	81	07/2006 - 08/2014	3906/2	
HCV Transit VIII Tourneo 44229 TDCi	QVFA	81	07/2006 - 08/2014	3906/1A	
HCV Transit VIII Tourneo 44229 TDCi	QVFA	81	07/2006 - 08/2014		3907/1
HCV Transit VIII Tourneo 44229 TDCi	QVFA	81	07/2006 - 08/2014		3907/2
HCV Transit VIII Tourneo 44229 TDCi	QVFA	81	07/2006 - 08/2014		3907/1A
HCV Transit VIII Tourneo 44229 TDCi	QVFA	81	07/2006 - 08/2014	3920/1	
HCV Transit VIII Tourneo 44229 TDCi	QVFA	81	07/2006 - 08/2014	3906/1A	3907/1A
HCV Transit VIII Tourneo 44229 TDCi	QWFA	96	07/2006 - 08/2014	3906/1	
HCV Transit VIII Tourneo 44229 TDCi	QWFA	96	07/2006 - 08/2014	3906/2	
HCV Transit VIII Tourneo 44229 TDCi	QWFA	96	07/2006 - 08/2014	3906/1A	
HCV Transit VIII Tourneo 44229 TDCi	QWFA	96	07/2006 - 08/2014		3907/1
HCV Transit VIII Tourneo 44229 TDCi	QWFA	96	07/2006 - 08/2014		3907/2
HCV Transit VIII Tourneo 44229 TDCi	QWFA	96	07/2006 - 08/2014		3907/1A
HCV Transit VIII Tourneo 44229 TDCi	QWFA	96	07/2006 - 08/2014	3920/1	
HCV Transit VIII Tourneo 44229 TDCi	QWFA	96	07/2006 - 08/2014	3906/1A	3907/1A
HCV Transit VIII Tourneo 44229 TDCi	SRFA, SRFB, SRFC, SRFD, SRFE	85	10/2008 - 08/2014	3906/1	
HCV Transit VIII Tourneo 44229 TDCi	SRFA, SRFB, SRFC, SRFD, SRFE	85	10/2008 - 08/2014	3906/2	
HCV Transit VIII Tourneo 44229 TDCi	SRFA, SRFB, SRFC, SRFD, SRFE	85	10/2008 - 08/2014	3906/1A	
HCV Transit VIII Tourneo 44229 TDCi	SRFA, SRFB, SRFC, SRFD, SRFE	85	10/2008 - 08/2014		3907/1
HCV Transit VIII Tourneo 44229 TDCi	SRFA, SRFB, SRFC, SRFD, SRFE	85	10/2008 - 08/2014		3907/2
HCV Transit VIII Tourneo 44229 TDCi	SRFA, SRFB, SRFC, SRFD, SRFE	85	10/2008 - 08/2014		3907/1A
HCV Transit VIII Tourneo 44229 TDCi	SRFA, SRFB, SRFC, SRFD, SRFE	85	10/2008 - 08/2014	3920/1	
HCV Transit VIII Tourneo 44229 TDCi	SRFA, SRFB, SRFC, SRFD, SRFE	85	10/2008 - 08/2014	3906/1A	3907/1A
HCV Transit VIII Van (FA_ _) 44229 TDCi	CYFA, CYFB, CYFC, CYFD	92	10/2011 - 08/2014	3906/1	
HCV Transit VIII Van (FA_ _) 44229 TDCi	CYFA, CYFB, CYFC, CYFD	92	10/2011 - 08/2014	3906/2	
HCV Transit VIII Van (FA_ _) 44229 TDCi	CYFA, CYFB, CYFC, CYFD	92	10/2011 - 08/2014	3906/1A	
HCV Transit VIII Van (FA_ _) 44229 TDCi	CYFA, CYFB, CYFC, CYFD	92	10/2011 - 08/2014		3907/1
HCV Transit VIII Van (FA_ _) 44229 TDCi	CYFA, CYFB, CYFC, CYFD	92	10/2011 - 08/2014		3907/2
HCV Transit VIII Van (FA_ _) 44229 TDCi	CYFA, CYFB, CYFC, CYFD	92	10/2011 - 08/2014		3907/1A
HCV Transit VIII Van (FA_ _) 44229 TDCi	CYFA, CYFB, CYFC, CYFD	92	10/2011 - 08/2014	3920/1	
HCV Transit VIII Van (FA_ _) 44229 TDCi	CYFA, CYFB, CYFC, CYFD	92	10/2011 - 08/2014	3906/1A	3907/1A
HCV Transit VIII Van (FA_ _) 44229 TDCi	DRFA, DRFB, DRFC, DRFD, DRFE	74	10/2011 - 08/2014	3906/1	
HCV Transit VIII Van (FA_ _) 44229 TDCi	DRFA, DRFB, DRFC, DRFD, DRFE	74	10/2011 - 08/2014	3906/2	
HCV Transit VIII Van (FA_ _) 44229 TDCi	DRFA, DRFB, DRFC, DRFD, DRFE	74	10/2011 - 08/2014	3906/1A	
HCV Transit VIII Van (FA_ _) 44229 TDCi	DRFA, DRFB, DRFC, DRFD, DRFE	74	10/2011 - 08/2014		3907/1
HCV Transit VIII Van (FA_ _) 44229 TDCi	DRFA, DRFB, DRFC, DRFD, DRFE	74	10/2011 - 08/2014		3907/2
HCV Transit VIII Van (FA_ _) 44229 TDCi	DRFA, DRFB, DRFC, DRFD, DRFE	74	10/2011 - 08/2014		3907/1A
HCV Transit VIII Van (FA_ _) 44229 TDCi	DRFA, DRFB, DRFC, DRFD, DRFE	74	10/2011 - 08/2014	3920/1	
HCV Transit VIII Van (FA_ _) 44229 TDCi	DRFA, DRFB, DRFC, DRFD, DRFE	74	10/2011 - 08/2014	3906/1A	3907/1A
HCV Transit VIII Van (FA_ _) 44229 TDCi	P8FA, P8FB	63	04/2006 - 08/2014	3906/1	
HCV Transit VIII Van (FA_ _) 44229 TDCi	P8FA, P8FB	63	04/2006 - 08/2014	3906/2	
HCV Transit VIII Van (FA_ _) 44229 TDCi	P8FA, P8FB	63	04/2006 - 08/2014	3906/1A	
HCV Transit VIII Van (FA_ _) 44229 TDCi	P8FA, P8FB	63	04/2006 - 08/2014		3907/1
HCV Transit VIII Van (FA_ _) 44229 TDCi	P8FA, P8FB	63	04/2006 - 08/2014		3907/2
HCV Transit VIII Van (FA_ _) 44229 TDCi	P8FA, P8FB	63	04/2006 - 08/2014		3907/1A
HCV Transit VIII Van (FA_ _) 44229 TDCi	P8FA, P8FB	63	04/2006 - 08/2014	3920/1	
HCV Transit VIII Van (FA_ _) 44229 TDCi	P8FA, P8FB	63	04/2006 - 08/2014	3906/1A	3907/1A
HCV Transit VIII Van (FA_ _) 44229 TDCi	PGFA, PGFB, UHFA, UHFB, UHFC	103	10/2007 - 08/2014	3906/1	
HCV Transit VIII Van (FA_ _) 44229 TDCi	PGFA, PGFB, UHFA, UHFB, UHFC	103	10/2007 - 08/2014	3906/2	
HCV Transit VIII Van (FA_ _) 44229 TDCi	PGFA, PGFB, UHFA, UHFB, UHFC	103	10/2007 - 08/2014	3906/1A	
HCV Transit VIII Van (FA_ _) 44229 TDCi	PGFA, PGFB, UHFA, UHFB, UHFC	103	10/2007 - 08/2014		3907/1
HCV Transit VIII Van (FA_ _) 44229 TDCi	PGFA, PGFB, UHFA, UHFB, UHFC	103	10/2007 - 08/2014		3907/2
HCV Transit VIII Van (FA_ _) 44229 TDCi	PGFA, PGFB, UHFA, UHFB, UHFC	103	10/2007 - 08/2014		3907/1A

MAKE & MODEL			KW	YEAR		
FORD						
HCV Transit VIII Van (FA_ _) 44229 TDCi		PGFA, PGFB, UHFA, UHFB, UHFC	103	10/2007 - 08/2014	3920/1	
HCV Transit VIII Van (FA_ _) 44229 TDCi		PGFA, PGFB, UHFA, UHFB, UHFC	103	10/2007 - 08/2014	3906/1A	3907/1A
HCV Transit VIII Van (FA_ _) 44229 TDCi		QVFA	81	04/2006 - 08/2014	3906/1	
HCV Transit VIII Van (FA_ _) 44229 TDCi		QVFA	81	04/2006 - 08/2014	3906/2	
HCV Transit VIII Van (FA_ _) 44229 TDCi		QVFA	81	04/2006 - 08/2014	3906/1A	
HCV Transit VIII Van (FA_ _) 44229 TDCi		QVFA	81	04/2006 - 08/2014		3907/1
HCV Transit VIII Van (FA_ _) 44229 TDCi		QVFA	81	04/2006 - 08/2014		3907/2
HCV Transit VIII Van (FA_ _) 44229 TDCi		QVFA	81	04/2006 - 08/2014		3907/1A
HCV Transit VIII Van (FA_ _) 44229 TDCi		QVFA	81	04/2006 - 08/2014	3920/1	
HCV Transit VIII Van (FA_ _) 44229 TDCi		QVFA	81	04/2006 - 08/2014	3906/1A	3907/1A
HCV Transit VIII Van (FA_ _) 44229 TDCi		QWFA	96	04/2006 - 08/2014	3906/1	
HCV Transit VIII Van (FA_ _) 44229 TDCi		QWFA	96	04/2006 - 08/2014	3906/2	
HCV Transit VIII Van (FA_ _) 44229 TDCi		QWFA	96	04/2006 - 08/2014	3906/1A	
HCV Transit VIII Van (FA_ _) 44229 TDCi		QWFA	96	04/2006 - 08/2014		3907/1
HCV Transit VIII Van (FA_ _) 44229 TDCi		QWFA	96	04/2006 - 08/2014		3907/2
HCV Transit VIII Van (FA_ _) 44229 TDCi		QWFA	96	04/2006 - 08/2014		3907/1A
HCV Transit VIII Van (FA_ _) 44229 TDCi		QWFA	96	04/2006 - 08/2014	3920/1	
HCV Transit VIII Van (FA_ _) 44229 TDCi		QWFA	96	04/2006 - 08/2014	3906/1A	3907/1A
HCV Transit VIII Van (FA_ _) 44229 TDCi		SRFA, SRFB, SRFC, SRFD, SRFE	85	10/2008 - 08/2014	3906/1	
HCV Transit VIII Van (FA_ _) 44229 TDCi		SRFA, SRFB, SRFC, SRFD, SRFE	85	10/2008 - 08/2014	3906/2	
HCV Transit VIII Van (FA_ _) 44229 TDCi		SRFA, SRFB, SRFC, SRFD, SRFE	85	10/2008 - 08/2014	3906/1A	
HCV Transit VIII Van (FA_ _) 44229 TDCi		SRFA, SRFB, SRFC, SRFD, SRFE	85	10/2008 - 08/2014		3907/1
HCV Transit VIII Van (FA_ _) 44229 TDCi		SRFA, SRFB, SRFC, SRFD, SRFE	85	10/2008 - 08/2014		3907/2
HCV Transit VIII Van (FA_ _) 44229 TDCi		SRFA, SRFB, SRFC, SRFD, SRFE	85	10/2008 - 08/2014		3907/1A
HCV Transit VIII Van (FA_ _) 44229 TDCi		SRFA, SRFB, SRFC, SRFD, SRFE	85	10/2008 - 08/2014	3920/1	
HCV Transit VIII Van (FA_ _) 44229 TDCi		SRFA, SRFB, SRFC, SRFD, SRFE	85	10/2008 - 08/2014	3906/1A	3907/1A
HCV Transit VIII Van (FA_ _) 44229 TDCi 4x4		CYRB, CYRC	92	10/2011 - 08/2014	3906/1	
HCV Transit VIII Van (FA_ _) 44229 TDCi 4x4		CYRB, CYRC	92	10/2011 - 08/2014	3906/2	
HCV Transit VIII Van (FA_ _) 44229 TDCi 4x4		CYRB, CYRC	92	10/2011 - 08/2014	3906/1A	
HCV Transit VIII Van (FA_ _) 44229 TDCi 4x4		CYRB, CYRC	92	10/2011 - 08/2014		3907/1
HCV Transit VIII Van (FA_ _) 44229 TDCi 4x4		CYRB, CYRC	92	10/2011 - 08/2014		3907/2
HCV Transit VIII Van (FA_ _) 44229 TDCi 4x4		CYRB, CYRC	92	10/2011 - 08/2014		3907/1A
HCV Transit VIII Van (FA_ _) 44229 TDCi 4x4		CYRB, CYRC	92	10/2011 - 08/2014	3920/1	
HCV Transit VIII Van (FA_ _) 44229 TDCi 4x4		CYRB, CYRC	92	10/2011 - 08/2014	3906/1A	3907/1A
HCV Transit VIII Van (FA_ _) 44229 TDCi RWD		CVRA, CVRB, CVRC	114	10/2011 - 08/2014	3906/1	
HCV Transit VIII Van (FA_ _) 44229 TDCi RWD		CVRA, CVRB, CVRC	114	10/2011 - 08/2014	3906/2	
HCV Transit VIII Van (FA_ _) 44229 TDCi RWD		CVRA, CVRB, CVRC	114	10/2011 - 08/2014	3906/1A	
HCV Transit VIII Van (FA_ _) 44229 TDCi RWD		CVRA, CVRB, CVRC	114	10/2011 - 08/2014		3907/1
HCV Transit VIII Van (FA_ _) 44229 TDCi RWD		CVRA, CVRB, CVRC	114	10/2011 - 08/2014		3907/2
HCV Transit VIII Van (FA_ _) 44229 TDCi RWD		CVRA, CVRB, CVRC	114	10/2011 - 08/2014		3907/1A
HCV Transit VIII Van (FA_ _) 44229 TDCi RWD		CVRA, CVRB, CVRC	114	10/2011 - 08/2014	3920/1	
HCV Transit VIII Van (FA_ _) 44229 TDCi RWD		CVRA, CVRB, CVRC	114	10/2011 - 08/2014	3906/1A	3907/1A
HCV Transit VIII Van (FA_ _) 44229 TDCi RWD		CYRA	92	09/2011 - 12/2014	3906/1	
HCV Transit VIII Van (FA_ _) 44229 TDCi RWD		CYRA	92	09/2011 - 12/2014	3906/2	
HCV Transit VIII Van (FA_ _) 44229 TDCi RWD		CYRA	92	09/2011 - 12/2014	3906/1A	
HCV Transit VIII Van (FA_ _) 44229 TDCi RWD		CYRA	92	09/2011 - 12/2014		3907/1
HCV Transit VIII Van (FA_ _) 44229 TDCi RWD		CYRA	92	09/2011 - 12/2014		3907/2
HCV Transit VIII Van (FA_ _) 44229 TDCi RWD		CYRA	92	09/2011 - 12/2014		3907/1A
HCV Transit VIII Van (FA_ _) 44229 TDCi RWD		CYRA	92	09/2011 - 12/2014	3920/1	
HCV Transit VIII Van (FA_ _) 44229 TDCi RWD		CYRA	92	09/2011 - 12/2014	3906/1A	3907/1A
HCV Transit VIII Van (FA_ _) 44229 TDCi RWD		DRRA, DRRB, DRRC	74	10/2011 - 08/2014	3906/1	
HCV Transit VIII Van (FA_ _) 44229 TDCi RWD		DRRA, DRRB, DRRC	74	10/2011 - 08/2014	3906/2	
HCV Transit VIII Van (FA_ _) 44229 TDCi RWD		DRRA, DRRB, DRRC	74	10/2011 - 08/2014	3906/1A	
HCV Transit VIII Van (FA_ _) 44229 TDCi RWD		DRRA, DRRB, DRRC	74	10/2011 - 08/2014		3907/1
HCV Transit VIII Van (FA_ _) 44229 TDCi RWD		DRRA, DRRB, DRRC	74	10/2011 - 08/2014		3907/2
HCV Transit VIII Van (FA_ _) 44229 TDCi RWD		DRRA, DRRB, DRRC	74	10/2011 - 08/2014		3907/1A
HCV Transit VIII Van (FA_ _) 44229 TDCi RWD		DRRA, DRRB, DRRC	74	10/2011 - 08/2014	3920/1	
HCV Transit VIII Van (FA_ _) 44229 TDCi RWD		DRRA, DRRB, DRRC	74	10/2011 - 08/2014	3906/1A	3907/1A
HCV Transit VIII Van (FA_ _) 44229 TDCi RWD		USRA, USRB	100	10/2011 - 08/2014	3906/1	
HCV Transit VIII Van (FA_ _) 44229 TDCi RWD		USRA, USRB	100	10/2011 - 08/2014	3906/2	
HCV Transit VIII Van (FA_ _) 44229 TDCi RWD		USRA, USRB	100	10/2011 - 08/2014	3906/1A	
HCV Transit VIII Van (FA_ _) 44229 TDCi RWD		USRA, USRB	100	10/2011 - 08/2014		3907/1
HCV Transit VIII Van (FA_ _) 44229 TDCi RWD		USRA, USRB	100	10/2011 - 08/2014		3907/2
HCV Transit VIII Van (FA_ _) 44229 TDCi RWD		USRA, USRB	100	10/2011 - 08/2014		3907/1A
HCV Transit VIII Van (FA_ _) 44229 TDCi RWD		USRA, USRB	100	10/2011 - 08/2014	3920/1	
HCV Transit VIII Van (FA_ _) 44229 TDCi RWD		USRA, USRB	100	10/2011 - 08/2014	3906/1A	3907/1A
HCV Transit VIII Van (FA_ _) 44230 TDCi RWD		SAFA, SAFB	147	09/2007 - 08/2014	3906/1	
HCV Transit VIII Van (FA_ _) 44230 TDCi RWD		SAFA, SAFB	147	09/2007 - 08/2014	3906/2	
HCV Transit VIII Van (FA_ _) 44230 TDCi RWD		SAFA, SAFB	147	09/2007 - 08/2014	3906/1A	
HCV Transit VIII Van (FA_ _) 44230 TDCi RWD		SAFA, SAFB	147	09/2007 - 08/2014		3907/1
HCV Transit VIII Van (FA_ _) 44230 TDCi RWD		SAFA, SAFB	147	09/2007 - 08/2014		3907/2
HCV Transit VIII Van (FA_ _) 44230 TDCi RWD		SAFA, SAFB	147	09/2007 - 08/2014		3907/1A
HCV Transit VIII Van (FA_ _) 44230 TDCi RWD		SAFA, SAFB	147	09/2007 - 08/2014	3906/1A	3907/1A
HCV Transit VIII Van (FA_ _) 44257 16V CNG RWD		GZFC	100	04/2006 - 08/2014	3906/1	
HCV Transit VIII Van (FA_ _) 44257 16V CNG RWD		GZFC	100	04/2006 - 08/2014	3906/2	
HCV Transit VIII Van (FA_ _) 44257 16V CNG RWD		GZFC	100	04/2006 - 08/2014	3906/1A	

MAKE & MODEL   		KW	YEAR		
FORD					
HCV Transit VIII Van (FA_ _) 44257 16V CNG RWD	GZFC	100	04/2006 - 08/2014		3907/1
HCV Transit VIII Van (FA_ _) 44257 16V CNG RWD	GZFC	100	04/2006 - 08/2014		3907/2
HCV Transit VIII Van (FA_ _) 44257 16V CNG RWD	GZFC	100	04/2006 - 08/2014		3907/1A
HCV Transit VIII Van (FA_ _) 44257 16V CNG RWD	GZFC	100	04/2006 - 08/2014	3920/1	
HCV Transit VIII Van (FA_ _) 44257 16V CNG RWD	GZFC	100	04/2006 - 08/2014	3906/1A	3907/1A
HCV Transit VIII Van (FA_ _) 44257 16V LPG RWD	GZFC	107	04/2006 - 08/2014	3906/1	
HCV Transit VIII Van (FA_ _) 44257 16V LPG RWD	GZFC	107	04/2006 - 08/2014	3906/2	
HCV Transit VIII Van (FA_ _) 44257 16V LPG RWD	GZFC	107	04/2006 - 08/2014	3906/1A	
HCV Transit VIII Van (FA_ _) 44257 16V LPG RWD	GZFC	107	04/2006 - 08/2014		3907/1
HCV Transit VIII Van (FA_ _) 44257 16V LPG RWD	GZFC	107	04/2006 - 08/2014		3907/2
HCV Transit VIII Van (FA_ _) 44257 16V LPG RWD	GZFC	107	04/2006 - 08/2014		3907/1A
HCV Transit VIII Van (FA_ _) 44257 16V LPG RWD	GZFC	107	04/2006 - 08/2014	3920/1	
HCV Transit VIII Van (FA_ _) 44257 16V LPG RWD	GZFC	107	04/2006 - 08/2014	3906/1A	3907/1A
HCV Transit VIII Van (FA_ _) 44257 16V RWD	GZFA, GZFB, GZFC	107	04/2006 - 08/2014	3906/1	
HCV Transit VIII Van (FA_ _) 44257 16V RWD	GZFA, GZFB, GZFC	107	04/2006 - 08/2014	3906/2	
HCV Transit VIII Van (FA_ _) 44257 16V RWD	GZFA, GZFB, GZFC	107	04/2006 - 08/2014	3906/1A	
HCV Transit VIII Van (FA_ _) 44257 16V RWD	GZFA, GZFB, GZFC	107	04/2006 - 08/2014		3907/1
HCV Transit VIII Van (FA_ _) 44257 16V RWD	GZFA, GZFB, GZFC	107	04/2006 - 08/2014		3907/2
HCV Transit VIII Van (FA_ _) 44257 16V RWD	GZFA, GZFB, GZFC	107	04/2006 - 08/2014		3907/1A
HCV Transit VIII Van (FA_ _) 44257 16V RWD	GZFA, GZFB, GZFC	107	04/2006 - 08/2014	3920/1	
HCV Transit VIII Van (FA_ _) 44257 16V RWD	GZFA, GZFB, GZFC	107	04/2006 - 08/2014	3906/1A	3907/1A
HCV Transit VIII Van (FA_ _) 44288 TDCi 4x4	H9FB	103	11/2006 - 08/2014	3906/1	
HCV Transit VIII Van (FA_ _) 44288 TDCi 4x4	H9FB	103	11/2006 - 08/2014	3906/2	
HCV Transit VIII Van (FA_ _) 44288 TDCi 4x4	H9FB	103	11/2006 - 08/2014	3906/1A	
HCV Transit VIII Van (FA_ _) 44288 TDCi 4x4	H9FB	103	11/2006 - 08/2014		3907/1
HCV Transit VIII Van (FA_ _) 44288 TDCi 4x4	H9FB	103	11/2006 - 08/2014		3907/2
HCV Transit VIII Van (FA_ _) 44288 TDCi 4x4	H9FB	103	11/2006 - 08/2014		3907/1A
HCV Transit VIII Van (FA_ _) 44288 TDCi 4x4	H9FB	103	11/2006 - 08/2014	3920/1	
HCV Transit VIII Van (FA_ _) 44288 TDCi 4x4	H9FB	103	11/2006 - 08/2014	3906/1A	3907/1A
HCV Transit VIII Van (FA_ _) 44288 TDCi RWD	H9FB, H9FD	103	04/2006 - 08/2014	3920/1	
HCV Transit VIII Van (FA_ _) 44288 TDCi RWD	JXFA, JXFC	85	04/2006 - 08/2014	3906/1	
HCV Transit VIII Van (FA_ _) 44288 TDCi RWD	JXFA, JXFC	85	04/2006 - 08/2014	3906/2	
HCV Transit VIII Van (FA_ _) 44288 TDCi RWD	JXFA, JXFC	85	04/2006 - 08/2014	3906/1A	
HCV Transit VIII Van (FA_ _) 44288 TDCi RWD	JXFA, JXFC	85	04/2006 - 08/2014		3907/1
HCV Transit VIII Van (FA_ _) 44288 TDCi RWD	JXFA, JXFC	85	04/2006 - 08/2014		3907/2
HCV Transit VIII Van (FA_ _) 44288 TDCi RWD	JXFA, JXFC	85	04/2006 - 08/2014		3907/1A
HCV Transit VIII Van (FA_ _) 44288 TDCi RWD	JXFA, JXFC	85	04/2006 - 08/2014	3920/1	
HCV Transit VIII Van (FA_ _) 44288 TDCi RWD	JXFA, JXFC	85	04/2006 - 08/2014	3906/1A	3907/1A
HCV Transit VIII Van (FA_ _) 44288 TDCi RWD	PHFA, PHFC	74	04/2006 - 08/2014	3906/1	
HCV Transit VIII Van (FA_ _) 44288 TDCi RWD	PHFA, PHFC	74	04/2006 - 08/2014	3906/2	
HCV Transit VIII Van (FA_ _) 44288 TDCi RWD	PHFA, PHFC	74	04/2006 - 08/2014	3906/1A	
HCV Transit VIII Van (FA_ _) 44288 TDCi RWD	PHFA, PHFC	74	04/2006 - 08/2014		3907/1
HCV Transit VIII Van (FA_ _) 44288 TDCi RWD	PHFA, PHFC	74	04/2006 - 08/2014		3907/2
HCV Transit VIII Van (FA_ _) 44288 TDCi RWD	PHFA, PHFC	74	04/2006 - 08/2014		3907/1A
HCV Transit VIII Van (FA_ _) 44288 TDCi RWD	PHFA, PHFC	74	04/2006 - 08/2014	3920/1	
HCV Transit VIII Van (FA_ _) 44288 TDCi RWD	PHFA, PHFC	74	04/2006 - 08/2014	3906/1A	3907/1A
KA (RB_)	1.6	68	10/06 – 12/07	3877	
KA (RB_)	1.6	70	09/00 – 11/08	3877	
KA (RB_)	1.6 i	70	07/03 – 11/08	3877	
KA (RB_)	1.6 i	71	11/05 – 09/08	3877	
KA (RU8)	1.3 TDCi	55	10/08 -	4173	
Ka II (RU8) 44256 TDCi	169A1000, FD4	55	10/2008 -	4173/1	
Ka II (RU8) 44256 TDCi	169A1000, FD4	55	10/2008 -	4173/2	
KUGA I	2.0 TDCi	100	03/08 – 11/12	3885	4157
KUGA I	2.0 TDCi	103	03/10 – 11/12	3885	4157
KUGA I	2.0 TDCi 4x4	100	03/08 – 11/12	3885	4157
KUGA I	2.0 TDCi 4x4	103	03/10 – 11/12	3885	4157
KUGA I	2.0 TDCi 4x4	120	03/10 – 11/12	3885	4157
KUGA I	2.5	147	03/09 – 11/12	3885	4157
KUGA I	2.5 4x4	147	03/09 -	3885	4157
KUGA II (DM2)	1.5 EcoBoost 4x4	134	09/14 -	3885	
KUGA II (DM2)	1.6 EcoBoost	130	01/13 -	4226	
KUGA II (DM2)	1.6 EcoBoost 4x4	110	03/13 -	4226	
KUGA II (DM2)	2.0 TDCi	85	03/13 -	4226	
KUGA II (DM2)	2.0 TDCi	88	09/14 -	4226	
KUGA II (DM2)	2.0 TDCi	100	03/13 -	4226	
KUGA II (DM2)	2.0 TDCi	103	03/13 -	4226	
KUGA II (DM2)	2.0 TDCi	110	09/14 -	4226	
KUGA II (DM2)	2.0 TDCi 4x4	100	03/13 -	4226	
KUGA II (DM2)	2.0 TDCi 4x4	103	03/13 -	4226	
KUGA II (DM2)	2.0 TDCi 4x4	110	09/14 -	3885	
KUGA II (DM2)	2.0 TDCi 4x4	120	03/13 -	4226	
KUGA II (DM2)	2.0 TDCi 4x4	132	09/14 -	4226	
KUGA II Van	1.5 EcoBoost 4x4	134	09/14 -	3885	
KUGA II Van	2.0 TDCi	110	09/14 -	4226	
KUGA II Van	2.0 TDCi 4x4	110	09/14 -	4226	

BESER®

MAKE & MODEL   		KW	YEAR		
FORD					
KUGA II Van	2.0 TDCi 4x4	132	09/14 -	4226	
LCV Courier Pick-up 44409 D	RTK	44	06/1999 - 02/2002	3594	
LCV Fiesta IV Van (J5_, J3_) / Courier 44256	J4C, J4J, J4L, J4Q, J4R, J4T	44	02/1996 - 08/2003	3594	
LCV Fiesta IV Van (J5_, J3_) / Courier 44409 D	RTJ, RTK	44	02/1996 - 04/2002	3594	
LCV Fiesta IV Van (JV_) / Courier D 44409	RTJ, RTK	44	05/1998 - 04/2002	3594	
LCV Ranger I (ER, EQ, R_) 44229	-	78	03/2002 - 09/2005	3988/1	
LCV Ranger I (ER, EQ, R_) 44318 TD	WL-T	62	04/2002 - 06/2006	3988/1	
LCV Ranger I (ER, EQ, R_) 44318 TD 4x4	WL-T	62	04/2002 - 06/2006	3988/1	
LCV Ranger I (ER, EQ, R_) 44318 TD 4x4	WL-T	80	10/1999 - 06/2006	3988/1	
LCV Ranger I (ER, EQ, R_) 44410 D	-	97	09/2001 - 12/2006	3988/1	
LCV Ranger II (ET) 3.0 TDCi	-	115	05/2006 - 07/2012	3988/1	
LCV Ranger II (ET) 3.0 TDCi 4x4	WEC	115	05/2006 - 07/2012	3988/1	
LCV Ranger II (ET) 4.0	-	154	03/2006 - 12/2011	3988/1	
LCV Ranger II (ET) 4.0 4WD	-	154	03/2006 - 12/2011	3988/1	
LCV Ranger II (ET) 44257	-	107	06/2005 - 07/2012	3988/1	
LCV Ranger II (ET) 44318 TDCi 4x4	WLAA	105	05/2006 - 07/2012	3988/1	
LCV Ranger II (ET) 44318 TDdi	WLAA	105	05/2006 - 07/2012	3988/1	
LCV Ranger II (ET) 44318 Tdi	MD25TI, WL-T	80	06/2005 - 11/2011	3988/1	
LCV Ranger II (ET) 44318 Tdi 4WD	-	80	06/2007 - 07/2012	3988/1	
LCV Tourneo Custom Bus (F3) 2.0 TDCi	BJFA (05.19-.), BJFB (05.19-.), YLF6, YLFA (05.19-	77	12/2015 -	4174/1	
LCV Tourneo Custom Bus (F3) 2.0 TDCi	BJFA (05.19-.), BJFB (05.19-.), YLF6, YLFA (05.19-	77	12/2015 -		4175/1
LCV Tourneo Custom Bus (F3) 2.0 TDCi	BJFA (05.19-.), BJFB (05.19-.), YLF6, YLFA (05.19-	77	12/2015 -	4351	
LCV Tourneo Custom Bus (F3) 2.0 TDCi	BJFA (05.19-.), BJFB (05.19-.), YLF6, YLFA (05.19-	77	12/2015 -	4351/1	
LCV Tourneo Custom Bus (F3) 2.0 TDCi	BJFA (05.19-.), BJFB (05.19-.), YLF6, YLFA (05.19-	77	12/2015 -	4174/1	4175/1
LCV Tourneo Custom Bus (F3) 2.0 TDCi	BKFA (05.19-.), BKFB (05.19-.), YMF6, YMFA (05.19-	96	12/2015 -	4174/1	
LCV Tourneo Custom Bus (F3) 2.0 TDCi	BKFA (05.19-.), BKFB (05.19-.), YMF6, YMFA (05.19-	96	12/2015 -		4175/1
LCV Tourneo Custom Bus (F3) 2.0 TDCi	BKFA (05.19-.), BKFB (05.19-.), YMF6, YMFA (05.19-	96	12/2015 -	4351	
LCV Tourneo Custom Bus (F3) 2.0 TDCi	BKFA (05.19-.), BKFB (05.19-.), YMF6, YMFA (05.19-	96	12/2015 -	4351/1	
LCV Tourneo Custom Bus (F3) 2.0 TDCi	BKFA (05.19-.), BKFB (05.19-.), YMF6, YMFA (05.19-	96	12/2015 -	4174/1	4175/1
LCV Tourneo Custom Bus (F3) 2.0 TDCi	BLFA (05.19-.), BLFB (05.19-.), YNF6, YNFA (05.19-	125	12/2015 -	4174/1	
LCV Tourneo Custom Bus (F3) 2.0 TDCi	BLFA (05.19-.), BLFB (05.19-.), YNF6, YNFA (05.19-	125	12/2015 -		4175/1
LCV Tourneo Custom Bus (F3) 2.0 TDCi	BLFA (05.19-.), BLFB (05.19-.), YNF6, YNFA (05.19-	125	12/2015 -	4351	
LCV Tourneo Custom Bus (F3) 2.0 TDCi	BLFA (05.19-.), BLFB (05.19-.), YNF6, YNFA (05.19-	125	12/2015 -	4351/1	
LCV Tourneo Custom Bus (F3) 2.0 TDCi	BLFA (05.19-.), BLFB (05.19-.), YNF6, YNFA (05.19-	125	12/2015 -	4174/1	4175/1
LCV Tourneo Custom Bus (F3) 44229 TDCi	CVFF	114	04/2012 -	4174/1	
LCV Tourneo Custom Bus (F3) 44229 TDCi	CVFF	114	04/2012 -		4175/1
LCV Tourneo Custom Bus (F3) 44229 TDCi	CVFF	114	04/2012 -	4351	
LCV Tourneo Custom Bus (F3) 44229 TDCi	CVFF	114	04/2012 -	4351/1	
LCV Tourneo Custom Bus (F3) 44229 TDCi	CVFF	114	04/2012 -	4174/1	4175/1
LCV Tourneo Custom Bus (F3) 44229 TDCi	CYF4, CYFF	92	04/2012 -	4174/1	
LCV Tourneo Custom Bus (F3) 44229 TDCi	CYF4, CYFF	92	04/2012 -		4175/1
LCV Tourneo Custom Bus (F3) 44229 TDCi	CYF4, CYFF	92	04/2012 -	4351	
LCV Tourneo Custom Bus (F3) 44229 TDCi	CYF4, CYFF	92	04/2012 -	4351/1	
LCV Tourneo Custom Bus (F3) 44229 TDCi	CYF4, CYFF	92	04/2012 -	4174/1	4175/1
LCV Tourneo Custom Bus (F3) 44229 TDCi	DRF4, DRFF, DRFG	74	04/2012 -	4174/1	
LCV Tourneo Custom Bus (F3) 44229 TDCi	DRF4, DRFF, DRFG	74	04/2012 -		4175/1
LCV Tourneo Custom Bus (F3) 44229 TDCi	DRF4, DRFF, DRFG	74	04/2012 -	4351	
LCV Tourneo Custom Bus (F3) 44229 TDCi	DRF4, DRFF, DRFG	74	04/2012 -	4351/1	
LCV Tourneo Custom Bus (F3) 44229 TDCi	DRF4, DRFF, DRFG	74	04/2012 -	4174/1	4175/1
MAVERICK	2.0 16V	91	02/01 -	4119	4215
MAVERICK	2.3 16V	110	03/04 -	4119	4215
MAVERICK	3.0 V6 24V	145	02/01 -	4119	4215
MAVERICK	3.0 V6 24V	149	03/04 -	4119	4215
MAVERICK (UDS, UNS)	2.4 i	87	09/96 – 04/98	3692	
MAVERICK (UDS, UNS)	2.4 i	87	09/96 – 04/98	3760	
MAVERICK (UDS, UNS)	2.4 i	87	09/96 – 04/98	3888	
MAVERICK (UDS, UNS)	2.4 i	91	02/93 – 08/96	3692	
MAVERICK (UDS, UNS)	2.4 i	91	02/93 – 08/96	3760	
MAVERICK (UDS, UNS)	2.4 i	91	02/93 – 08/96	3888	
MAVERICK (UDS, UNS)	2.4 i (UDS)	85	09/96 – 04/98	3692	
MAVERICK (UDS, UNS)	2.4 i (UDS)	85	09/96 – 04/98	3760	
MAVERICK (UDS, UNS)	2.4 i (UDS)	85	09/96 – 04/98	3888	
MAVERICK (UDS, UNS)	2.7 TD	74	02/93 – 08/96	3692	
MAVERICK (UDS, UNS)	2.7 TD	74	02/93 – 08/96	3760	
MAVERICK (UDS, UNS)	2.7 TD	74	02/93 – 08/96	3888	
MAVERICK (UDS, UNS)	2.7 TD	92	09/96 – 04/98	3692	
MAVERICK (UDS, UNS)	2.7 TD	92	09/96 – 04/98	3760	
MAVERICK (UDS, UNS)	2.7 TD	92	09/96 – 04/98	3888	
MAVERICK / ESCAPE	2.0 16V (YF)	91	02/01 -	4220	
MAVERICK / ESCAPE	2.3 16V (GZ)	110	03/04 -	4220	
MAVERICK / ESCAPE	3.0 V6 24V (AJ)	145	02/01 -	4220	
MAVERICK / ESCAPE	3.0 V6 24V (AJ)	149	03/04 -	4220	
MAVERICK VAN	2.7 TD	74	06/96 – 04/98	3692	
MAVERICK VAN	2.7 TD	74	06/96 – 04/98	3760	
MAVERICK VAN	2.7 TD	74	06/96 – 04/98	3888	
MAVERICK VAN	2.7 TD	92	06/96 – 04/98	3692	

MAKE & MODEL   		KW	YEAR		
FORD					
MAVERICK VAN	2.7 TD	92	06/96 – 04/98	3760	
MAVERICK VAN	2.7 TD	92	06/96 – 04/98	3888	
METROSTAR	2.0	107	10/00 – 02/07	4100	4093
METROSTAR	2.0	107	10/00 – 02/07		4058
METROSTAR	2.5	125	10/00 – 02/07	4100	4093
METROSTAR	2.5	125	10/00 – 02/07		4058
MONDEO II (BAP)	1.6 i (L1J)	66	08/96 – 09/00		4214
MONDEO II (BAP)	1.6 i 16V (L1L)	70	05/98 – 09/00		4214
MONDEO II (BAP)	1.6 i 16V (L1N)	70	05/98 – 09/00		4214
MONDEO II (BAP)	1.6 i 16V (L1Q)	70	05/98 – 09/00		4214
MONDEO II (BAP)	1.8 i (RKB)	85	08/96 – 09/00		4214
MONDEO II (BAP)	1.8 i (RKF)	85	08/96 – 09/00		4214
MONDEO II (BAP)	1.8 i (RKH)	85	08/96 – 09/00		4214
MONDEO II (BAP)	1.8 i (RKJ)	85	08/96 – 09/00		4214
MONDEO II (BAP)	1.8 i (RKK)	85	08/96 – 09/00		4214
MONDEO II (BAP)	1.8 TD (RFN)	66	08/96 – 09/00		4214
MONDEO II (BAP)	2.0 i (NGA)	96	08/96 – 09/00		4214
MONDEO II (BAP)	2.0 i (NGB)	96	08/96 – 09/00		4214
MONDEO II (BAP)	2.0 i (NGC)	96	08/96 – 09/00		4214
MONDEO II (BAP)	2.0 i (NGD)	96	08/96 – 09/00		4214
MONDEO II (BAP)	2.5 24V (SEA)	125	08/96 – 09/00		4214
MONDEO II (BAP)	2.5 24V (SEB)	125	06/00 – 09/00		4214
MONDEO II (BAP)	2.5 24V (SEC)	125	06/00 – 09/00		4214
MONDEO II (BAP)	2.5 ST 200 (SGA)	151	05/99 – 09/00		4214
MONDEO II (BNP)	1.6 i (L1J)	66	08/96 – 09/00		4214
MONDEO II (BNP)	1.6 i 16V (L1L)	70	05/98 – 09/00		4214
MONDEO II (BNP)	1.6 i 16V (L1N)	70	05/98 – 09/00		4214
MONDEO II (BNP)	1.6 i 16V (L1Q)	70	05/98 – 09/00		4214
MONDEO II (BNP)	1.8 i (RKB)	85	08/96 – 09/00		4214
MONDEO II (BNP)	1.8 i (RKF)	85	08/96 – 09/00		4214
MONDEO II (BNP)	1.8 i (RKH)	85	08/96 – 09/00		4214
MONDEO II (BNP)	1.8 i (RKJ)	85	08/96 – 09/00		4214
MONDEO II (BNP)	1.8 i (RKK)	85	08/96 – 09/00		4214
MONDEO II (BNP)	1.8 TD (RFN)	66	08/96 – 09/00		4214
MONDEO II (BNP)	2.0 i (NGA)	96	08/96 – 09/00		4214
MONDEO II (BNP)	2.0 i (NGB)	96	08/96 – 09/00		4214
MONDEO II (BNP)	2.0 i (NGC)	96	08/96 – 09/00		4214
MONDEO II (BNP)	2.0 i (NGD)	96	08/96 – 09/00		4214
MONDEO II (BNP)	2.5 24V (SEA)	125	08/96 – 09/00		4214
MONDEO II (BNP)	2.5 24V (SEB)	125	10/99 – 09/00		4214
MONDEO II (BNP)	2.5 24V (SEC)	125	10/99 – 09/00		4214
MONDEO II (BNP)	2.5 ST 200 (SGA)	151	05/99 – 09/00		4214
MONDEO (BNP)	1.6 i 16V (L1F)	66	04/93 – 08/96		4214
MONDEO (BNP)	1.6 i 16V (L1J)	65	07/94 – 08/96		4214
MONDEO (BNP)	1.8 i 16V (RKA)	85	04/93 – 08/96		4214
MONDEO (BNP)	1.8 i 16V (RKB)	82	07/94 – 08/96		4214
MONDEO (BNP)	1.8 TD (RFM)	65	06/93 – 08/96		4214
MONDEO (BNP)	1.8 TD (RFM)	66	11/95 – 08/96		4214
MONDEO (BNP)	1.8 TD (RFN)	65	06/93 – 08/96		4214
MONDEO (BNP)	1.8 TD (RFN)	66	11/95 – 08/96		4214
MONDEO (BNP)	2.0 i 16V (NGA)	97	01/93 – 08/96		4214
MONDEO (BNP)	2.0 i 16V (NGA)	100	04/93 – 08/96		4214
MONDEO (BNP)	2.5 i 24V (SEA)	125	07/94 – 08/96		4214
MONDEO (GBP)	1.6 i 16V (L1F)	66	02/93 – 08/96		4214
MONDEO (GBP)	1.6 i 16V (L1J)	65	07/94 – 08/96		4214
MONDEO (GBP)	1.8 (RKA)	85	02/93 – 08/96		4214
MONDEO (GBP)	1.8 i 16V (RKA)	85	02/93 – 08/96		4214
MONDEO (GBP)	1.8 i 16V (RKB)	82	01/94 – 08/96		4214
MONDEO (GBP)	1.8 i 16V (RKB)	82	07/94 – 08/96		4214
MONDEO (GBP)	1.8 TD (RFM)	65	06/93 – 08/96		4214
MONDEO (GBP)	1.8 TD (RFM)	66	10/95 – 08/96		4214
MONDEO (GBP)	1.8 TD (RFN)	65	06/93 – 08/96		4214
MONDEO (GBP)	1.8 TD (RFN)	66	10/95 – 08/96		4214
MONDEO (GBP)	2.0 i 16V (NGA)	97	12/94 – 08/96		4214
MONDEO (GBP)	2.0 i 16V (NGA)	100	02/93 – 08/96		4214
MONDEO (GBP)	2.5 i 24V (SEA)	125	07/94 – 08/96		4214
MONDEO I (GBP)	1.6 i 16V	65	07/94 – 08/96	3558	
MONDEO I (GBP)	1.6 i 16V	65	07/94 – 08/96	3593	
MONDEO I (GBP)	1.6 i 16V	66	02/93 – 08/96	3558	
MONDEO I (GBP)	1.6 i 16V	66	02/93 – 08/96	3593	
MONDEO I (GBP)	1.8 i 16V	82	07/94 – 08/96	3558	
MONDEO I (GBP)	1.8 i 16V	82	07/94 – 08/96	3593	
MONDEO I (GBP)	1.8 i 16V	85	02/93 – 08/96	3558	
MONDEO I (GBP)	1.8 i 16V	85	02/93 – 08/96	3593	
MONDEO I (GBP)	1.8 TD	65	06/93 – 08/96	3558	
MONDEO I (GBP)	1.8 TD	65	06/93 – 08/96	3593	

MAKE & MODEL   		KW	YEAR		
FORD					
MONDEO I (GBP)	1.8 TD	66	10/95 – 08/96	3558	
MONDEO I (GBP)	1.8 TD	66	10/95 – 08/96	3593	
MONDEO I (GBP)	2.0 i 16V	97	12/94 – 08/96	3558	
MONDEO I (GBP)	2.0 i 16V	97	12/94 – 08/96	3593	
MONDEO I (GBP)	2.0 i 16V	100	02/93 – 08/96	3558	
MONDEO I (GBP)	2.0 i 16V	100	02/93 – 08/96	3593	
MONDEO I (GBP)	2.0 i 16V 4x4	100	04/93 – 08/96	3558	
MONDEO I (GBP)	2.0 i 16V 4x4	100	04/93 – 08/96	3593	
MONDEO I Estate (BNP)	1.6 i 16V	65	07/94 – 08/96	3558	
MONDEO I Estate (BNP)	1.6 i 16V	65	07/94 – 08/96	3593	
MONDEO I Estate (BNP)	1.6 i 16V	66	04/93 – 08/96	3558	
MONDEO I Estate (BNP)	1.6 i 16V	66	04/93 – 08/96	3593	
MONDEO I Estate (BNP)	1.8 i 16V	82	07/94 – 08/96	3558	
MONDEO I Estate (BNP)	1.8 i 16V	82	07/94 – 08/96	3593	
MONDEO I Estate (BNP)	1.8 i 16V	85	04/93 – 08/96	3558	
MONDEO I Estate (BNP)	1.8 i 16V	85	04/93 – 08/96	3593	
MONDEO I Estate (BNP)	1.8 i 16V 4x4	85	04/93 – 08/96	3558	
MONDEO I Estate (BNP)	1.8 i 16V 4x4	85	04/93 – 08/96	3593	
MONDEO I Estate (BNP)	1.8 TD	65	06/93 – 08/96	3558	
MONDEO I Estate (BNP)	1.8 TD	65	06/93 – 08/96	3593	
MONDEO I Estate (BNP)	1.8 TD	66	11/95 – 08/96	3558	
MONDEO I Estate (BNP)	1.8 TD	66	11/95 – 08/96	3593	
MONDEO I Estate (BNP)	2.0 i 16V	97	01/93 – 08/96	3558	
MONDEO I Estate (BNP)	2.0 i 16V	97	01/93 – 08/96	3593	
MONDEO I Estate (BNP)	2.0 i 16V	100	04/93 – 08/96	3558	
MONDEO I Estate (BNP)	2.0 i 16V	100	04/93 – 08/96	3593	
MONDEO I Estate (BNP)	2.0 i 16V 4x4	100	04/93 – 08/96	3558	
MONDEO I Estate (BNP)	2.0 i 16V 4x4	100	04/93 – 08/96	3593	
MONDEO I Saloon (GBP)	1.6 i 16V	65	07/94 – 08/96	3558	
MONDEO I Saloon (GBP)	1.6 i 16V	65	07/94 – 08/96	3593	
MONDEO I Saloon (GBP)	1.6 i 16V	66	02/93 – 08/96	3558	
MONDEO I Saloon (GBP)	1.6 i 16V	66	02/93 – 08/96	3593	
MONDEO I Saloon (GBP)	1.8 i 16V	82	01/94 – 08/96	3558	
MONDEO I Saloon (GBP)	1.8 i 16V	82	01/94 – 08/96	3593	
MONDEO I Saloon (GBP)	1.8 i 16V	85	02/93 – 08/96	3558	
MONDEO I Saloon (GBP)	1.8 i 16V	85	02/93 – 08/96	3593	
MONDEO I Saloon (GBP)	1.8 TD	65	06/93 – 08/96	3558	
MONDEO I Saloon (GBP)	1.8 TD	65	06/93 – 08/96	3593	
MONDEO I Saloon (GBP)	1.8 TD	66	10/95 – 08/96	3558	
MONDEO I Saloon (GBP)	1.8 TD	66	10/95 – 08/96	3593	
MONDEO I Saloon (GBP)	2.0 i 16V	100	02/93 – 08/96	3558	
MONDEO I Saloon (GBP)	2.0 i 16V	100	02/93 – 08/96	3593	
MONDEO I Saloon (GBP)	2.0 i 16V 4x4	100	02/93 – 08/96	3558	
MONDEO I Saloon (GBP)	2.0 i 16V 4x4	100	02/93 – 08/96	3593	
MONDEO II (BAP)	1.6 i	66	08/96 – 09/00	3558	
MONDEO II (BAP)	1.6 i	66	08/96 – 09/00	3593	
MONDEO II (BAP)	1.6 i 16V	70	05/98 – 09/00	3558	
MONDEO II (BAP)	1.6 i 16V	70	05/98 – 09/00	3593	
MONDEO II (BAP)	1.8 i	85	08/96 – 09/00	3558	
MONDEO II (BAP)	1.8 i	85	08/96 – 09/00	3593	
MONDEO II (BAP)	1.8 TD	66	08/96 – 09/00	3558	
MONDEO II (BAP)	1.8 TD	66	08/96 – 09/00	3593	
MONDEO II (BAP)	2.0 i	96	08/96 – 09/00	3558	
MONDEO II (BAP)	2.0 i	96	08/96 – 09/00	3593	
MONDEO II (BAP)	2.5 24V	125	08/96 – 09/00	3558	
MONDEO II (BAP)	2.5 24V	125	08/96 – 09/00	3593	
MONDEO II (BAP)	2.5 ST 200	151	05/99 – 09/00	3558	
MONDEO II (BAP)	2.5 ST 200	151	05/99 – 09/00	3593	
MONDEO II (BFP)	1.6 i (L1J)	66	08/96 – 09/00		4214
MONDEO II (BFP)	1.6 i 16V (L1L)	70	05/98 – 09/00		4214
MONDEO II (BFP)	1.6 i 16V (L1N)	70	05/98 – 09/00		4214
MONDEO II (BFP)	1.6 i 16V (L1Q)	70	05/98 – 09/00		4214
MONDEO II (BFP)	1.8 i (RKB)	85	08/96 – 09/00		4214
MONDEO II (BFP)	1.8 i (RKF)	85	08/96 – 09/00		4214
MONDEO II (BFP)	1.8 i (RKH)	85	08/96 – 09/00		4214
MONDEO II (BFP)	1.8 i (RKJ)	85	08/96 – 09/00		4214
MONDEO II (BFP)	1.8 i (RKK)	85	08/96 – 09/00		4214
MONDEO II (BFP)	1.8 TD (RFN)	66	08/96 – 09/00		4214
MONDEO II (BFP)	2.0 i (NGA)	96	08/96 – 09/00		4214
MONDEO II (BFP)	2.0 i (NGB)	96	08/96 – 09/00		4214
MONDEO II (BFP)	2.0 i (NGC)	96	08/96 – 09/00		4214
MONDEO II (BFP)	2.0 i (NGD)	96	08/96 – 09/00		4214
MONDEO II (BFP)	2.5 24V (LCBD)	125	06/00 – 09/00		4214
MONDEO II (BFP)	2.5 24V (SEA)	125	08/96 – 09/00		4214
MONDEO II (BFP)	2.5 24V (SEB)	125	06/00 – 09/00		4214
MONDEO II (BFP)	2.5 24V (SEC)	125	06/00 – 09/00		4214

MAKE & MODEL		KW	YEAR		
FORD					
MONDEO II (BFP)	2.5 ST 200 (SGA)	151	05/99 – 09/00		4214
MONDEO II Estate (BNP)	1.6 i	66	08/96 – 09/00	3558	
MONDEO II Estate (BNP)	1.6 i	66	08/96 – 09/00	3593	
MONDEO II Estate (BNP)	1.6 i 16V	70	05/98 – 09/00	3558	
MONDEO II Estate (BNP)	1.6 i 16V	70	05/98 – 09/00	3593	
MONDEO II Estate (BNP)	1.8 i	85	08/96 – 09/00	3558	
MONDEO II Estate (BNP)	1.8 i	85	08/96 – 09/00	3593	
MONDEO II Estate (BNP)	1.8 TD	66	08/96 – 09/00	3558	
MONDEO II Estate (BNP)	1.8 TD	66	08/96 – 09/00	3593	
MONDEO II Estate (BNP)	2.0 i	96	08/96 – 09/00	3558	
MONDEO II Estate (BNP)	2.0 i	96	08/96 – 09/00	3593	
MONDEO II Estate (BNP)	2.5 24V	125	08/96 – 09/00	3558	
MONDEO II Estate (BNP)	2.5 24V	125	08/96 – 09/00	3593	
MONDEO II Estate (BNP)	2.5 24V	125	10/99 – 09/00	3558	
MONDEO II Estate (BNP)	2.5 24V	125	10/99 – 09/00	3593	
MONDEO II Estate (BNP)	2.5 ST 200	151	05/99 – 09/00	3558	
MONDEO II Estate (BNP)	2.5 ST 200	151	05/99 – 09/00	3593	
MONDEO II Saloon (BFP)	1.6 i	66	08/96 – 09/00	3558	
MONDEO II Saloon (BFP)	1.6 i	66	08/96 – 09/00	3593	
MONDEO II Saloon (BFP)	1.6 i 16V	70	05/98 – 09/00	3558	
MONDEO II Saloon (BFP)	1.6 i 16V	70	05/98 – 09/00	3593	
MONDEO II Saloon (BFP)	1.8 i	85	08/96 – 09/00	3558	
MONDEO II Saloon (BFP)	1.8 i	85	08/96 – 09/00	3593	
MONDEO II Saloon (BFP)	1.8 TD	66	08/96 – 09/00	3558	
MONDEO II Saloon (BFP)	1.8 TD	66	08/96 – 09/00	3593	
MONDEO II Saloon (BFP)	2.0 i	96	08/96 – 09/00	3558	
MONDEO II Saloon (BFP)	2.0 i	96	08/96 – 09/00	3593	
MONDEO II Saloon (BFP)	2.5 24V	125	08/96 – 09/00	3558	
MONDEO II Saloon (BFP)	2.5 24V	125	08/96 – 09/00	3593	
MONDEO II Saloon (BFP)	2.5 ST 200	151	05/99 – 09/00	3558	
MONDEO II Saloon (BFP)	2.5 ST 200	151	05/99 – 09/00	3593	
MONDEO III (B5Y)	1.8 16V	81	10/00 – 03/07	4100	4093
MONDEO III (B5Y)	1.8 16V	81	10/00 – 03/07		4058
MONDEO III (B5Y)	1.8 16V	92	10/00 – 03/07	4100	4093
MONDEO III (B5Y)	1.8 16V	92	10/00 – 03/07		4058
MONDEO III (B5Y)	1.8 SCi	96	06/03 – 03/07	4100	4093
MONDEO III (B5Y)	1.8 SCi	96	06/03 – 03/07		4058
MONDEO III (B5Y)	2.0 16V	107	10/00 – 03/07	4100	4093
MONDEO III (B5Y)	2.0 16V	107	10/00 – 03/07		4058
MONDEO III (B5Y)	2.0 16V DI / TDDi / TDCi	66	10/00 – 03/07	4100	4093
MONDEO III (B5Y)	2.0 16V DI / TDDi / TDCi	66	10/00 – 03/07		4058
MONDEO III (B5Y)	2.0 16V TDDi / TDCi	85	10/00 – 03/07	4100	4093
MONDEO III (B5Y)	2.0 16V TDDi / TDCi	85	10/00 – 03/07		4058
MONDEO III (B5Y)	2.0 TDCi	92	02/03 – 06/05	4100	4093
MONDEO III (B5Y)	2.0 TDCi	92	02/03 – 06/05		4058
MONDEO III (B5Y)	2.0 TDCi	96	10/01 – 03/07	4100	4093
MONDEO III (B5Y)	2.0 TDCi	96	10/01 – 03/07		4058
MONDEO III (B5Y)	2.2 TDCi	110	09/04 – 03/07	4100	4058
MONDEO III (B5Y)	2.2 TDCi	114	09/04 – 03/07	4100	4058
MONDEO III (B5Y)	2.5 V6 24V	125	10/00 – 03/07	4100	4093
MONDEO III (B5Y)	2.5 V6 24V	125	10/00 – 03/07		4058
MONDEO III (B5Y)	3.0 V6 24V	150	09/04 – 03/07	4100	4058
MONDEO III (B5Y)	ST220	166	04/02 – 03/07	4100	4093
MONDEO III (B5Y)	ST220	166	04/02 – 03/07		4058
Mondeo III (B5Y) 2.0 16V	CJBA, CJBB	107	10/2000 - 03/2007		4058/1
Mondeo III (B5Y) 2.0 16V DI / TDDi / TDCi	D5BA, SDBA	66	10/2000 - 03/2007		4058/1
Mondeo III (B5Y) 2.0 16V TDDi / TDCi	D6BA, HJBA, HJBB, HJBC	85	10/2000 - 03/2007		4058/1
Mondeo III (B5Y) 2.0 TDCi	FMBA, N7BA, N7BB	96	10/2001 - 03/2007		4058/1
Mondeo III (B5Y) 3.0 V6 24V	REBA	150	09/2004 - 03/2007		4058/1
Mondeo III (B5Y) 44229 TDCi	QJBA, QJBB	114	09/2004 - 03/2007		4058/1
Mondeo III (B5Y) 44229 TDCi	QJBC, QJBD	110	09/2004 - 03/2007		4058/1
Mondeo III (B5Y) 44318 V6 24V	LCBD	125	10/2000 - 03/2007		4058/1
Mondeo III (B5Y) 44409 16V	CGBA, CGBB	81	10/2000 - 03/2007		4058/1
Mondeo III (B5Y) 44409 16V	CHBA, CHBB	92	10/2000 - 03/2007		4058/1
Mondeo III (B5Y) 44409 SCi	CFBA	96	06/2003 - 03/2007		4058/1
Mondeo III (B5Y) ST220	MEBA	166	04/2002 - 03/2007		4058/1
MONDEO III Estate (BWY)	1.8 16V	81	10/00 – 03/07	4100	4093
MONDEO III Estate (BWY)	1.8 16V	81	10/00 – 03/07		4058
MONDEO III Estate (BWY)	1.8 16V	92	10/00 – 03/07	4100	4093
MONDEO III Estate (BWY)	1.8 16V	92	10/00 – 03/07		4058
MONDEO III Estate (BWY)	1.8 SCi	96	06/03 – 03/07	4100	4093
MONDEO III Estate (BWY)	1.8 SCi	96	06/03 – 03/07		4058
MONDEO III Estate (BWY)	2.0 16V	107	10/00 – 03/07	4100	4093
MONDEO III Estate (BWY)	2.0 16V	107	10/00 – 03/07		4058
MONDEO III Estate (BWY)	2.0 16V DI / TDDi / TDCi	66	10/00 – 03/07	4100	4093
MONDEO III Estate (BWY)	2.0 16V DI / TDDi / TDCi	66	10/00 – 03/07		4058

MAKE & MODEL		KW	YEAR		
FORD					
MONDEO III Estate (BWY)	2.0 16V TDDi / TDCi	85	10/00 – 03/07	4100	4093
MONDEO III Estate (BWY)	2.0 16V TDDi / TDCi	85	10/00 – 03/07		4058
MONDEO III Estate (BWY)	2.0 TDCi	96	10/01 – 03/07	4100	4093
MONDEO III Estate (BWY)	2.0 TDCi	96	10/01 – 03/07		4058
MONDEO III Estate (BWY)	2.2 TDCi	110	09/04 – 03/07	4100	4058
MONDEO III Estate (BWY)	2.2 TDCi	114	09/04 – 03/07	4100	4058
MONDEO III Estate (BWY)	2.5 V6 24V	125	10/00 – 03/07	4100	4093
MONDEO III Estate (BWY)	2.5 V6 24V	125	10/00 – 03/07		4058
MONDEO III Estate (BWY)	3.0 V6 24V	150	09/04 – 03/07	4100	4058
MONDEO III Estate (BWY)	ST220	166	04/02 – 03/07	4100	4093
MONDEO III Estate (BWY)	ST220	166	04/02 – 03/07		4058
MONDEO III Saloon (B4Y)	1.8 16V	81	10/00 – 03/07	4100	4093
MONDEO III Saloon (B4Y)	1.8 16V	81	10/00 – 03/07		4058
MONDEO III Saloon (B4Y)	1.8 16V	92	10/00 – 03/07	4100	4093
MONDEO III Saloon (B4Y)	1.8 16V	92	10/00 – 03/07		4058
MONDEO III Saloon (B4Y)	1.8 SCi	96	06/03 – 03/07	4100	4093
MONDEO III Saloon (B4Y)	1.8 SCi	96	06/03 – 03/07		4058
MONDEO III Saloon (B4Y)	2.0 16V	107	10/00 – 03/07	4100	4093
MONDEO III Saloon (B4Y)	2.0 16V	107	10/00 – 03/07		4058
MONDEO III Saloon (B4Y)	2.0 16V DI / TDDi / TDCi	66	10/00 – 03/07	4100	4093
MONDEO III Saloon (B4Y)	2.0 16V DI / TDDi / TDCi	66	10/00 – 03/07		4058
MONDEO III Saloon (B4Y)	2.0 16V TDDi / TDCi	85	10/00 – 03/07	4100	4093
MONDEO III Saloon (B4Y)	2.0 16V TDDi / TDCi	85	10/00 – 03/07		4058
MONDEO III Saloon (B4Y)	2.0 TDCi	92	10/00 – 03/07	4100	4093
MONDEO III Saloon (B4Y)	2.0 TDCi	92	10/00 – 03/07		4058
MONDEO III Saloon (B4Y)	2.0 TDCi	96	10/01 – 03/07	4100	4093
MONDEO III Saloon (B4Y)	2.0 TDCi	96	10/01 – 03/07		4058
MONDEO III Saloon (B4Y)	2.2 TDCi	110	09/04 – 03/07	4100	4058
MONDEO III Saloon (B4Y)	2.2 TDCi	114	09/04 – 03/07	4100	4058
MONDEO III Saloon (B4Y)	2.5 V6 24V	125	10/00 – 03/07	4100	4093
MONDEO III Saloon (B4Y)	2.5 V6 24V	125	10/00 – 03/07		4058
MONDEO III Saloon (B4Y)	3.0 V6 24V	150	09/04 – 03/07	4100	4058
MONDEO III Saloon (B4Y)	ST220	166	04/02 – 03/07	4100	4093
MONDEO III Saloon (B4Y)	ST220	166	04/02 – 03/07		4058
Mondeo III Sedan (B4Y) 2.0 16V	CJBA, CJBB	107	10/2000 - 03/2007		4058/1
Mondeo III Sedan (B4Y) 2.0 16V DI / TDDi / TDCi	D5BA, SDBA	66	10/2000 - 03/2007		4058/1
Mondeo III Sedan (B4Y) 2.0 16V TDDi / TDCi	D6BA, HJBA, HJBB, HJBC	85	10/2000 - 03/2007		4058/1
Mondeo III Sedan (B4Y) 2.0 DI	-	92	10/2000 - 03/2007		4058/1
Mondeo III Sedan (B4Y) 2.0 TDCi	FMBA, N7BA, N7BB	96	10/2001 - 03/2007		4058/1
Mondeo III Sedan (B4Y) 44229 TDCi	QJBC, QJBD	110	09/2004 - 03/2007		4058/1
Mondeo III Sedan (B4Y) 44318 V6	-	125	10/2000 - 03/2007		4058/1
Mondeo III Sedan (B4Y) 44409 16V	CGBA, CGBB	81	10/2000 - 03/2007		4058/1
Mondeo III Sedan (B4Y) 44409 16V	CHBA, CHBB	92	10/2000 - 03/2007		4058/1
Mondeo III Sedan (B4Y) 44409 SCi	CFBA	96	06/2003 - 03/2007		4058/1
Mondeo III Sedan (B4Y) ST220	MEBA	166	04/2002 - 03/2007		4058/1
Mondeo III Turnier (BWY) 2.0 16V	CJBA, CJBB	107	10/2000 - 03/2007		4058/1
Mondeo III Turnier (BWY) 2.0 16V DI / TDDi / TDCi	D5BA, SDBA	66	10/2000 - 03/2007		4058/1
Mondeo III Turnier (BWY) 2.0 16V TDDi / TDCi	D6BA, HJBA, HJBB, HJBC	85	10/2000 - 03/2007		4058/1
Mondeo III Turnier (BWY) 2.0 TDCi	FMBA, N7BA, N7BB	96	10/2001 - 03/2007		4058/1
Mondeo III Turnier (BWY) 44229 TDCi	QJBC, QJBD	110	09/2004 - 03/2007		4058/1
Mondeo III Turnier (BWY) 44409 16V	CGBA, CGBB	81	10/2000 - 03/2007		4058/1
Mondeo III Turnier (BWY) 44409 16V	CHBA, CHBB	92	10/2000 - 03/2007		4058/1
Mondeo III Turnier (BWY) ST220	MEBA	166	04/2002 - 03/2007		4058/1
MONDEO IV (BA7)	1.6 EcoBoost	118	02/11 – 09/14	4161	4157
MONDEO IV (BA7)	1.6 TDCi	85	02/11 – 09/14	4161	4157
MONDEO IV (BA7)	1.6 Ti	81	03/07 – 09/14	4161	4157
MONDEO IV (BA7)	1.6 Ti	88	07/10 – 09/14	4161	4157
MONDEO IV (BA7)	1.6 Ti	92	03/07 – 09/14	4161	4157
MONDEO IV (BA7)	1.8 TDCi	74	03/07 – 09/14	4161	4157
MONDEO IV (BA7)	1.8 TDCi	92	06/07 -	4161	4157
MONDEO IV (BA7)	2.0	107	03/07 – 09/14	4161	4157
MONDEO IV (BA7)	2.0 EcoBoost	176	07/10 – 09/14	4161	4157
MONDEO IV (BA7)	2.0 Flexifuel	107	03/09 – 09/14	4161	4157
MONDEO IV (BA7)	2.0 LPG	107	07/09 – 09/14	4161	4157
MONDEO IV (BA7)	2.0 SCTi	149	03/10 – 09/14	4161	4157
MONDEO IV (BA7)	2.0 TDCi	85	11/07 – 09/14	4161	4157
MONDEO IV (BA7)	2.0 TDCi	96	03/07 – 09/14	4161	4157
MONDEO IV (BA7)	2.0 TDCi	100	03/07 – 09/14	4161	4157
MONDEO IV (BA7)	2.0 TDCi	103	03/07 – 09/14	4161	4157
MONDEO IV (BA7)	2.0 TDCi	120	03/10 – 09/14	4161	4157
MONDEO IV (BA7)	2.2 TDCi	129	03/08 – 10/10	4161	4157
MONDEO IV (BA7)	2.2 TDCi	147	07/10 – 09/14	4161	4157
MONDEO IV (BA7)	2.3	118	07/07 – 09/14	4161	4157
MONDEO IV (BA7)	2.5	162	03/07 – 09/14	4161	4157
MONDEO IV Saloon (BA7)	1.6 EcoBoost	118	02/11 – 09/14	4161	4157
MONDEO IV Saloon (BA7)	1.6 TDCi	85	12/10 – 09/14	4161	4157

MAKE & MODEL		KW	YEAR		
FORD					
MONDEO IV Saloon (BA7)	1.6 Ti	81	03/07 – 09/14	4161	4157
MONDEO IV Saloon (BA7)	1.6 Ti	88	07/10 – 09/14	4161	4157
MONDEO IV Saloon (BA7)	1.6 Ti	92	03/07 – 09/14	4161	4157
MONDEO IV Saloon (BA7)	1.8 TDCi	74	03/07 – 09/14	4161	4157
MONDEO IV Saloon (BA7)	2.0	107	03/07 – 09/14	4161	4157
MONDEO IV Saloon (BA7)	2.3	118	07/07 – 09/14	4161	4157
MONDEO IV Saloon (BA7)	2.5	162	03/07 – 09/14	4161	4157
MONDEO IV Turnier (BA7)	1.8 TDCi	74	03/07 – 12/12	4161	4157
MONDEO IV Turnier (BA7)	1.8 TDCi	92	06/07 – 09/14	4161	4157
MONDEO IV Turnier (BA7)	2.0 EcoBoost	176	07/10 – 09/14	4161	4157
MONDEO IV Turnier (BA7)	2.0 Flexifuel	107	03/09 – 09/14	4161	4157
MONDEO IV Turnier (BA7)	2.0 LPG	107	07/09 – 09/14	4161	4157
MONDEO IV Turnier (BA7)	2.0 SCTi	149	03/10 – 09/14	4161	4157
MONDEO IV Turnier (BA7)	2.0 TDCi	85	11/07 – 09/14	4161	4157
MONDEO IV Turnier (BA7)	2.0 TDCi	96	03/07 – 09/14	4161	4157
MONDEO IV Turnier (BA7)	2.0 TDCi	100	03/07 – 09/14	4161	4157
MONDEO IV Turnier (BA7)	2.0 TDCi	103	03/07 – 09/14	4161	4157
MONDEO IV Turnier (BA7)	2.0 TDCi	120	03/10 – 09/14	4161	4157
MONDEO IV Turnier (BA7)	2.2 TDCi	129	03/08 – 10/10	4161	4157
MONDEO IV Turnier (BA7)	2.2 TDCi	147	07/10 – 09/14	4161	4157
MONDEO V	1.0 EcoBoost (M1CA)	92	02/15 -		4270
MONDEO V	1.0 EcoBoost (M1CB)	92	02/15 -		4270
MONDEO V	1.5 EcoBoost (UNCA)	118	09/14 -		4270
MONDEO V	1.5 EcoBoost (UNCB)	118	09/14 -		4270
MONDEO V	1.5 EcoBoost (UNCE)	118	09/14 -		4270
MONDEO V	1.5 EcoBoost (UNCF)	118	09/14 -		4270
MONDEO V	1.5 TDCi (UGCC)	88	03/15 -		4270
MONDEO V	1.5 TDCi (XUCA)	88	03/15 -		4270
MONDEO V	1.6 TDCi (NGCA)	85	09/14 -		4270
MONDEO V	1.6 TDCi (U3CA)	85	09/14 -		4270
MONDEO V	2.0 EcoBoost (R9CB)	176	09/14 -		4270
MONDEO V	2.0 EcoBoost (R9CF)	176	09/14 -		4270
MONDEO V	2.0 EcoBoost (R9CH)	176	09/14 -		4270
MONDEO V	2.0 EcoBoost (TNCD)	149	09/14 -		4270
MONDEO V	2.0 EcoBoost (TNCF)	149	09/14 -		4270
MONDEO V	2.0 TDCi (T7CE)	110	09/14 -		4270
MONDEO V	2.0 TDCi (T8CC)	132	09/14 -		4270
MONDEO V	2.0 TDCi Bi-Turbo (T9CA)	154	03/15 -		4270
MONDEO V / FUSION	2.0 EcoBoost	176	05/15 -		4270
MONDEO V / FUSION	2.0 EcoBoost	179	09/12 – 07/16		4270
MONDEO V / FUSION	2.0 EcoBoost (TNCC)	146	05/15 -		4270
MONDEO V / FUSION	2.0 EcoBoost (TNCD)	149	05/15 -		4270
MONDEO V / FUSION	2.0 EcoBoost (TNCF)	149	05/15 -		4270
MONDEO V / FUSION	2.0 Flex	131	10/13 -		4270
MONDEO V / FUSION	2.0 Hybrid	105	08/14 -		4270
MONDEO V / FUSION	2.0 Hybrid	130	09/14 -		4270
MONDEO V / FUSION	2.0 Hybrid	140	09/14 -		4270
MONDEO V / FUSION	2.0 TDCi	132	05/15 -		4270
MONDEO V / FUSION	2.0 TDCi (T8CC)	132	05/15 -		4270
MONDEO V / FUSION	2.0 TDCi (T9CA)	154	05/15 -		4270
MONDEO V / FUSION	2.5	130	09/13 -		4270
MONDEO V / FUSION	2.5 (S7CB)	110	05/15 -		4270
MONDEO V / FUSION	2.5 Hybrid	116	09/13 -		4270
ORION I (AFD)	1.3	51	07/83 – 03/86	3570	
ORION I (AFD)	1.6	58	07/83 – 03/86	3570	
ORION I (AFD)	1.6 D	40	02/84 – 03/86	3570	
ORION I (AFD)	1.6 i	77	07/83 – 03/86	3570	
ORION II (AFF)	1.3	44	12/85 – 07/90	3570	
ORION II (AFF)	1.3	51	11/86 – 07/88	3570	
ORION II (AFF)	1.4	52	03/86 – 07/90	3570	
ORION II (AFF)	1.4	54	01/86 – 07/90	3570	
ORION II (AFF)	1.4	55	12/85 – 07/90	3570	
ORION II (AFF)	1.4 CAT	54	02/87 – 07/90	3570	
ORION II (AFF)	1.6	58	04/86 – 12/88	3570	
ORION II (AFF)	1.6	66	12/85 – 07/90	3570	
ORION II (AFF)	1.6 D	40	12/85 – 01/89	3570	
ORION II (AFF)	1.6 i	75	08/89 – 07/90	3570	
ORION II (AFF)	1.6 i	77	03/86 – 07/90	3570	
ORION II (AFF)	1.6 i CAT	66	03/86 – 07/90	3570	
ORION II (AFF)	1.8 D	44	01/89 – 07/90	3570	
ORION III (GAL)	1.3	44	07/90 – 12/93	3465	
ORION III (GAL)	1.4	52	07/90 – 12/93	3465	
ORION III (GAL)	1.4	54	07/90 – 12/93	3465	
ORION III (GAL)	1.6	66	07/90 – 12/92	3465	3545
ORION III (GAL)	1.6 i	77	07/90 – 09/92	3465	3545
ORION III (GAL)	1.6 i 16V	66	07/92 – 12/93	3465	3545

MAKE & MODEL	  	KW	YEAR		
FORD					
ORION III (GAL)	1.8 D	44	11/90 – 12/93	3465	3545
ORION III (GAL)	1.8 i 16V	77	02/92 – 12/93	3465	3545
ORION III (GAL)	1.8 i 16V	96	01/92 – 12/93	3548	3545
ORION III (GAL)	1.8 i 16V	96	01/92 – 12/93	3549	
ORION III (GAL)	1.8 TD	66	03/92 – 12/93	3465	3545
P 100 I	1.6	54	04/82 – 09/87	3480	
P 100 II	1.8 TD	55	10/87 – 12/92	3570	
P 100 II	2.0	57	10/87 – 12/92	3570	
PUMA (EC_)	1.4 16V	66	11/97 – 10/00	3570	
PUMA (EC_)	1.4 16V	66	11/97 – 10/00	3877	
PUMA (EC_)	1.6 16V	76	08/00 – 06/02	3877	
PUMA (EC_)	1.7 16V	92	03/97 – 06/02	3570	
PUMA (EC_)	1.7 16V	92	03/97 – 06/02	3877	
PUMA (EC_)	ST 160	118	06/99 – 06/02	3570	
PUMA (EC_)	ST 160	118	06/99 – 06/02	3877	
Puma I (EC_) 44287 16V	FHD, FHF	66	11/1997 - 10/2000	3594	
Puma I (EC_) 44378 16V	MHA (03.97-.), MHB	92	03/1997 - 06/2002	3594	
Puma I (EC_) Racing ST 160	MHA	114	06/1999 - 06/2002	3594	
RANGER (ER, EQ)	1.8	85	06/99 – 02/02	3767	
RANGER (ER, EQ)	2.2	78	03/02 – 09/05	3767	
RANGER (ER, EQ)	2.3	105	10/05 – 06/06	3767	
RANGER (ER, EQ)	2.3	114	10/01 – 09/05	3767	
RANGER (ER, EQ)	2.3 4x4	114	10/01 – 09/05	3767	
RANGER (ER, EQ)	2.3 4x4	114	10/01 – 09/05	3988	
RANGER (ER, EQ)	2.5 D	57	10/99 – 04/02	3767	
RANGER (ER, EQ)	2.5 D 4x4	57	10/99 – 04/02	3767	
RANGER (ER, EQ)	2.5 TD	62	04/02 – 06/06	3767	
RANGER (ER, EQ)	2.5 TD 4x4	62	04/02 – 06/06	3767	
RANGER (ER, EQ)	2.5 TD 4x4	62	04/02 – 06/06	3988	
RANGER (ER, EQ)	2.5 TD 4x4	80	10/99 – 06/06	3767	
RANGER (ER, EQ)	2.5 TD 4x4	80	10/99 – 06/06	3988	
RANGER (ER, EQ)	2.5 TDdi	86	04/02 – 09/05	3767	
RANGER (ER, EQ)	2.5 TDdi 4x4	86	04/02 – 09/05	3767	
RANGER (ER, EQ)	2.5 TDdi 4x4	86	04/02 – 09/05	3988	
RANGER (ER, EQ)	2.6	80	10/02 – 09/04	3767	
RANGER (ER, EQ)	2.9 D	70	06/99 – 02/02	3767	
RANGER (ER, EQ)	3.0	109	06/99 – 06/06	3767	
RANGER (ER, EQ)	3.0 4x4	109	06/99 – 06/06	3988	
RANGER (ER, EQ)	4.0	152	10/05 – 06/06	3767	
RANGER (ER, EQ)	4.0 4x4	152	10/05 – 06/06	3988	
RANGER (ET)	2.5 TDCi 4x4	105	05/06 – 07/12	3988	
RANGER (ET)	2.5 TDdi	105	05/06 – 07/12	3767	
RANGER (ET)	3.0 TDCi	115	05/06 – 07/12	3767	
RANGER (ET)	3.0 TDCi 4x4	115	05/06 – 07/12	3988	
SCORPIO I (GAE, GGE)	1.8	66	04/85 – 02/92	3548	
SCORPIO I (GAE, GGE)	1.8	66	04/85 – 02/92	3549	
SCORPIO I (GAE, GGE)	2.0	77	04/85 – 08/89	3548	
SCORPIO I (GAE, GGE)	2.0	77	04/85 – 08/89	3549	
SCORPIO I (GAE, GGE)	2.0	80	11/88 – 10/92	3548	
SCORPIO I (GAE, GGE)	2.0	80	11/88 – 10/92	3549	
SCORPIO I (GAE, GGE)	2.0	80	11/88 – 10/92	3558	
SCORPIO I (GAE, GGE)	2.0	80	11/88 – 10/92	3593	
SCORPIO I (GAE, GGE)	2.0 i	74	10/85 – 12/90	3548	
SCORPIO I (GAE, GGE)	2.0 i	74	10/85 – 12/90	3549	
SCORPIO I (GAE, GGE)	2.0 i	85	02/92 – 09/94	3548	
SCORPIO I (GAE, GGE)	2.0 i	85	02/92 – 09/94	3549	
SCORPIO I (GAE, GGE)	2.0 i	85	02/92 – 09/94	3558	
SCORPIO I (GAE, GGE)	2.0 i	85	02/92 – 09/94	3593	
SCORPIO I (GAE, GGE)	2.0 i	85	04/85 – 02/92	3548	
SCORPIO I (GAE, GGE)	2.0 i	85	04/85 – 02/92	3549	
SCORPIO I (GAE, GGE)	2.0 i	88	05/89 – 09/94	3548	
SCORPIO I (GAE, GGE)	2.0 i	88	05/89 – 09/94	3549	
SCORPIO I (GAE, GGE)	2.0 i	88	05/89 – 09/94	3558	
SCORPIO I (GAE, GGE)	2.0 i	88	05/89 – 09/94	3593	
SCORPIO I (GAE, GGE)	2.4 i	92	10/88 – 02/92	3548	
SCORPIO I (GAE, GGE)	2.4 i	92	10/88 – 02/92	3549	
SCORPIO I (GAE, GGE)	2.4 i	96	09/86 - 09/88	3548	
SCORPIO I (GAE, GGE)	2.4 i	96	09/86 - 09/88	3549	
SCORPIO I (GAE, GGE)	2.4 i CAT	92	10/88 – 09/94	3548	
SCORPIO I (GAE, GGE)	2.4 i CAT	92	10/88 – 09/94	3549	
SCORPIO I (GAE, GGE)	2.4 i CAT	92	10/88 – 09/94	3558	
SCORPIO I (GAE, GGE)	2.4 i CAT	92	10/88 – 09/94	3593	
SCORPIO I (GAE, GGE)	2.5 D	51	12/85 – 02/92	3548	
SCORPIO I (GAE, GGE)	2.5 D	51	12/85 – 02/92	3549	
SCORPIO I (GAE, GGE)	2.5 TD	68	06/88 – 07/93	3548	
SCORPIO I (GAE, GGE)	2.5 TD	68	06/88 – 07/93	3549	

MAKE & MODEL   		KW	YEAR		
FORD					
SCORPIO I (GAE, GGE)	2.5 TD	68	06/88 – 07/93	3558	
SCORPIO I (GAE, GGE)	2.5 TD	68	06/88 – 07/93	3593	
SCORPIO I (GAE, GGE)	2.5 TD	85	08/93 – 09/94	3558	
SCORPIO I (GAE, GGE)	2.5 TD	85	08/93 – 09/94	3593	
SCORPIO I (GAE, GGE)	2.8 i	110	04/85 – 11/86	3548	
SCORPIO I (GAE, GGE)	2.8 i	110	04/85 – 11/86	3549	
SCORPIO I (GAE, GGE)	2.8 i 4x4	110	10/85 – 11/86	3548	
SCORPIO I (GAE, GGE)	2.8 i 4x4	110	10/85 – 11/86	3549	
SCORPIO I (GAE, GGE)	2.9 i	107	09/86 – 09/94	3548	
SCORPIO I (GAE, GGE)	2.9 i	107	09/86 – 09/94	3549	
SCORPIO I (GAE, GGE)	2.9 i	107	09/86 – 09/94	3558	
SCORPIO I (GAE, GGE)	2.9 i	107	09/86 – 09/94	3593	
SCORPIO I (GAE, GGE)	2.9 i	110	09/86 – 09/94	3548	
SCORPIO I (GAE, GGE)	2.9 i	110	09/86 – 09/94	3549	
SCORPIO I (GAE, GGE)	2.9 i	110	09/86 – 09/94	3558	
SCORPIO I (GAE, GGE)	2.9 i	110	09/86 – 09/94	3593	
SCORPIO I (GAE, GGE)	2.9 i 24V	143	04/91 – 09/94	3548	
SCORPIO I (GAE, GGE)	2.9 i 24V	143	04/91 – 09/94	3549	
SCORPIO I (GAE, GGE)	2.9 i 4x4	107	05/88 – 02/93	3548	
SCORPIO I (GAE, GGE)	2.9 i 4x4	107	05/88 – 02/93	3549	
SCORPIO I (GAE, GGE)	2.9 i 4x4	107	05/88 – 02/93	3558	
SCORPIO I (GAE, GGE)	2.9 i 4x4	107	05/88 – 02/93	3593	
SCORPIO I (GAE, GGE)	2.9 i 4x4	110	09/86 – 09/94	3548	
SCORPIO I (GAE, GGE)	2.9 i 4x4	110	09/86 – 09/94	3549	
SCORPIO I (GAE, GGE)	2.9 i 4x4	110	09/86 – 09/94	3558	
SCORPIO I (GAE, GGE)	2.9 i 4x4	110	09/86 – 09/94	3593	
SCORPIO I (GAE, GGE)	2.9 i CAT	107	10/87 – 09/94	3548	
SCORPIO I (GAE, GGE)	2.9 i CAT	107	10/87 – 09/94	3549	
SCORPIO I (GAE, GGE)	2.9 i CAT	107	10/87 – 09/94	3558	
SCORPIO I (GAE, GGE)	2.9 i CAT	107	10/87 – 09/94	3593	
SCORPIO I Estate (GGE)	2.0 i	85	09/91 – 09/94	3548	
SCORPIO I Estate (GGE)	2.0 i	85	09/91 – 09/94	3549	
SCORPIO I Estate (GGE)	2.0 i	85	09/91 – 09/94	3558	
SCORPIO I Estate (GGE)	2.0 i	85	09/91 – 09/94	3593	
SCORPIO I Estate (GGE)	2.0 i	88	09/91 – 09/94	3548	
SCORPIO I Estate (GGE)	2.0 i	88	09/91 – 09/94	3549	
SCORPIO I Estate (GGE)	2.0 i	88	09/91 – 09/94	3558	
SCORPIO I Estate (GGE)	2.0 i	88	09/91 – 09/94	3593	
SCORPIO I Estate (GGE)	2.4 i	92	09/91 – 09/94	3548	
SCORPIO I Estate (GGE)	2.4 i	92	09/91 – 09/94	3549	
SCORPIO I Estate (GGE)	2.4 i	92	09/91 – 09/94	3558	
SCORPIO I Estate (GGE)	2.4 i	92	09/91 – 09/94	3593	
SCORPIO I Estate (GGE)	2.5 D	51	10/90 – 08/92	3548	
SCORPIO I Estate (GGE)	2.5 D	51	10/90 – 08/92	3549	
SCORPIO I Estate (GGE)	2.5 D	51	10/90 – 08/92	3558	
SCORPIO I Estate (GGE)	2.5 D	51	10/90 – 08/92	3593	
SCORPIO I Estate (GGE)	2.5 TD	68	09/91 – 07/93	3548	
SCORPIO I Estate (GGE)	2.5 TD	68	09/91 – 07/93	3549	
SCORPIO I Estate (GGE)	2.5 TD	68	09/91 – 07/93	3558	
SCORPIO I Estate (GGE)	2.5 TD	68	09/91 – 07/93	3593	
SCORPIO I Estate (GGE)	2.5 TD	85	08/93 – 09/94	3558	
SCORPIO I Estate (GGE)	2.5 TD	85	08/93 – 09/94	3593	
SCORPIO I Estate (GGE)	2.9 i	107	09/91 – 09/94	3548	
SCORPIO I Estate (GGE)	2.9 i	107	09/91 – 09/94	3549	
SCORPIO I Estate (GGE)	2.9 i	107	09/91 – 09/94	3558	
SCORPIO I Estate (GGE)	2.9 i	107	09/91 – 09/94	3593	
SCORPIO I Estate (GGE)	2.9 i 4x4	107	05/88 – 02/93	3548	
SCORPIO I Estate (GGE)	2.9 i 4x4	107	05/88 – 02/93	3549	
SCORPIO I Estate (GGE)	2.9 i 4x4	107	05/88 – 02/93	3558	
SCORPIO I Estate (GGE)	2.9 i 4x4	107	05/88 – 02/93	3593	
SCORPIO I Saloon (GGE)	1.8	66	01/86 – 10/88	3548	
SCORPIO I Saloon (GGE)	1.8	66	01/86 – 10/88	3549	
SCORPIO I Saloon (GGE)	1.9	85	11/92 – 09/93	3558	
SCORPIO I Saloon (GGE)	1.9	85	11/92 – 09/93	3593	
SCORPIO I Saloon (GGE)	2.0	77	03/90 – 08/92	3548	
SCORPIO I Saloon (GGE)	2.0	77	03/90 – 08/92	3549	
SCORPIO I Saloon (GGE)	2.0	77	03/90 – 08/92	3558	
SCORPIO I Saloon (GGE)	2.0	77	03/90 – 08/92	3593	
SCORPIO I Saloon (GGE)	2.0	80	06/89 – 03/93	3548	
SCORPIO I Saloon (GGE)	2.0	80	06/89 – 03/93	3549	
SCORPIO I Saloon (GGE)	2.0	80	06/89 – 03/93	3558	
SCORPIO I Saloon (GGE)	2.0	80	06/89 – 03/93	3593	
SCORPIO I Saloon (GGE)	2.0 i	85	02/92 – 09/94	3548	
SCORPIO I Saloon (GGE)	2.0 i	85	02/92 – 09/94	3549	
SCORPIO I Saloon (GGE)	2.0 i	85	02/92 – 09/94	3558	
SCORPIO I Saloon (GGE)	2.0 i	85	02/92 – 09/94	3593	

MAKE & MODEL	  	KW	YEAR		
FORD					
SCORPIO I Saloon (GGE)	2.0 i	88	05/89 – 09/94	3548	
SCORPIO I Saloon (GGE)	2.0 i	88	05/89 – 09/94	3549	
SCORPIO I Saloon (GGE)	2.0 i	88	05/89 – 09/94	3558	
SCORPIO I Saloon (GGE)	2.0 i	88	05/89 – 09/94	3593	
SCORPIO I Saloon (GGE)	2.0 i	92	05/89 – 02/92	3548	
SCORPIO I Saloon (GGE)	2.0 i	92	05/89 – 02/92	3549	
SCORPIO I Saloon (GGE)	2.4 i	92	10/88 – 10/94	3548	
SCORPIO I Saloon (GGE)	2.4 i	92	10/88 – 10/94	3549	
SCORPIO I Saloon (GGE)	2.4 i	92	10/88 – 10/94	3558	
SCORPIO I Saloon (GGE)	2.4 i	92	10/88 – 10/94	3593	
SCORPIO I Saloon (GGE)	2.5 D	51	12/89 – 12/94	3548	
SCORPIO I Saloon (GGE)	2.5 D	51	12/89 – 12/94	3549	
SCORPIO I Saloon (GGE)	2.5 D	51	12/89 – 12/94	3558	
SCORPIO I Saloon (GGE)	2.5 D	51	12/89 – 12/94	3593	
SCORPIO I Saloon (GGE)	2.5 TD	68	06/88 – 07/93	3548	
SCORPIO I Saloon (GGE)	2.5 TD	68	06/88 – 07/93	3549	
SCORPIO I Saloon (GGE)	2.5 TD	68	06/88 – 07/93	3558	
SCORPIO I Saloon (GGE)	2.5 TD	68	06/88 – 07/93	3593	
SCORPIO I Saloon (GGE)	2.5 TD	85	08/93 – 09/94	3558	
SCORPIO I Saloon (GGE)	2.5 TD	85	08/93 – 09/94	3593	
SCORPIO I Saloon (GGE)	2.9	107	09/92 – 09/94	3558	
SCORPIO I Saloon (GGE)	2.9	107	09/92 – 09/94	3593	
SCORPIO I Saloon (GGE)	2.9 i	107	09/86 – 12/94	3548	
SCORPIO I Saloon (GGE)	2.9 i	107	09/86 – 12/94	3549	
SCORPIO I Saloon (GGE)	2.9 i	107	09/86 – 12/94	3558	
SCORPIO I Saloon (GGE)	2.9 i	107	09/86 – 12/94	3593	
SCORPIO I Saloon (GGE)	2.9 i 24V	143	04/91 – 09/94	3548	
SCORPIO I Saloon (GGE)	2.9 i 24V	143	04/91 – 09/94	3549	
SCORPIO I Saloon (GGE)	2.9 i 4x4	107	12/89 – 10/94	3548	
SCORPIO I Saloon (GGE)	2.9 i 4x4	107	12/89 – 10/94	3549	
SCORPIO I Saloon (GGE)	2.9 i 4x4	107	12/89 – 10/94	3558	
SCORPIO I Saloon (GGE)	2.9 i 4x4	107	12/89 – 10/94	3593	
SCORPIO II (GFR, GGR)	2.0 i	85	10/94 – 08/98	3558	
SCORPIO II (GFR, GGR)	2.0 i	85	10/94 – 08/98	3593	
SCORPIO II (GFR, GGR)	2.0 i 16V	100	10/94 – 08/98	3558	
SCORPIO II (GFR, GGR)	2.0 i 16V	100	10/94 – 08/98	3593	
SCORPIO II (GFR, GGR)	2.3 i 16V	108	06/96 – 08/98	3558	
SCORPIO II (GFR, GGR)	2.3 i 16V	108	06/96 – 08/98	3593	
SCORPIO II (GFR, GGR)	2.5 TD	85	10/94 – 08/98	3558	
SCORPIO II (GFR, GGR)	2.5 TD	85	10/94 – 08/98	3593	
SCORPIO II (GFR, GGR)	2.5 TD	92	09/96 – 08/98	3558	
SCORPIO II (GFR, GGR)	2.5 TD	92	09/96 – 08/98	3593	
SCORPIO II (GFR, GGR)	2.9 i	110	02/95 – 08/98	3558	
SCORPIO II (GFR, GGR)	2.9 i	110	02/95 – 08/98	3593	
SCORPIO II (GFR, GGR)	2.9 i 24V	152	10/94 – 08/98	3558	
SCORPIO II (GFR, GGR)	2.9 i 24V	152	10/94 – 08/98	3593	
SCORPIO II Estate (GNR, GGR)	2.0 i	85	10/94 – 08/98	3558	
SCORPIO II Estate (GNR, GGR)	2.0 i	85	10/94 – 08/98	3593	
SCORPIO II Estate (GNR, GGR)	2.0 i 16V	100	10/94 – 08/98	3558	
SCORPIO II Estate (GNR, GGR)	2.0 i 16V	100	10/94 – 08/98	3593	
SCORPIO II Estate (GNR, GGR)	2.3 i 16V	108	06/96 – 08/98	3558	
SCORPIO II Estate (GNR, GGR)	2.3 i 16V	108	06/96 – 08/98	3593	
SCORPIO II Estate (GNR, GGR)	2.5 TD	85	10/94 – 08/98	3558	
SCORPIO II Estate (GNR, GGR)	2.5 TD	85	10/94 – 08/98	3593	
SCORPIO II Estate (GNR, GGR)	2.5 TD	92	09/96 – 08/98	3558	
SCORPIO II Estate (GNR, GGR)	2.5 TD	92	09/96 – 08/98	3593	
SCORPIO II Estate (GNR, GGR)	2.9 i	110	02/95 – 08/98	3558	
SCORPIO II Estate (GNR, GGR)	2.9 i	110	02/95 – 08/98	3593	
SCORPIO II Estate (GNR, GGR)	2.9 i 24V	152	10/94 – 08/98	3558	
SCORPIO II Estate (GNR, GGR)	2.9 i 24V	152	10/94 – 08/98	3593	
SIERRA (GBG, GB4)	1.6	53	01/88 – 02/93	3548	
SIERRA (GBG, GB4)	1.6	53	01/88 – 02/93	3549	
SIERRA (GBG, GB4)	1.6	53	01/88 – 02/93	3570	
SIERRA (GBG, GB4)	1.6	55	01/87 – 02/93	3548	
SIERRA (GBG, GB4)	1.6	55	01/87 – 02/93	3549	
SIERRA (GBG, GB4)	1.6	55	01/87 – 02/93	3570	
SIERRA (GBG, GB4)	1.6 i	59	10/89 – 02/93	3548	
SIERRA (GBG, GB4)	1.6 i	59	10/89 – 02/93	3549	
SIERRA (GBG, GB4)	1.6 i	59	10/89 – 02/93	3570	
SIERRA (GBG, GB4)	1.8	59	10/87 – 09/89	3548	
SIERRA (GBG, GB4)	1.8	59	10/87 – 09/89	3549	
SIERRA (GBG, GB4)	1.8	59	10/87 – 09/89	3570	
SIERRA (GBG, GB4)	1.8	64	05/88 – 02/93	3548	
SIERRA (GBG, GB4)	1.8	64	05/88 – 02/93	3549	
SIERRA (GBG, GB4)	1.8	64	05/88 – 02/93	3570	
SIERRA (GBG, GB4)	1.8	66	01/87 – 05/88	3548	

MAKE & MODEL		KW	YEAR		
FORD					
SIERRA (GBG, GB4)	1.8	66	01/87 – 05/88	3549	
SIERRA (GBG, GB4)	1.8	66	01/87 – 05/88	3570	
SIERRA (GBG, GB4)	1.8 TD	55	08/88 – 02/93	3548	
SIERRA (GBG, GB4)	1.8 TD	55	08/88 – 02/93	3549	
SIERRA (GBG, GB4)	1.8 TD	55	08/88 – 02/93	3570	
SIERRA (GBG, GB4)	2.0	77	01/87 – 02/93	3548	
SIERRA (GBG, GB4)	2.0	77	01/87 – 02/93	3549	
SIERRA (GBG, GB4)	2.0	77	01/87 – 02/93	3570	
SIERRA (GBG, GB4)	2.0	80	07/89 – 12/92	3548	
SIERRA (GBG, GB4)	2.0	80	07/89 – 12/92	3549	
SIERRA (GBG, GB4)	2.0	80	07/89 – 12/92	3570	
SIERRA (GBG, GB4)	2.0 4x4	88	01/90 – 02/93	3548	
SIERRA (GBG, GB4)	2.0 4x4	88	01/90 – 02/93	3549	
SIERRA (GBG, GB4)	2.0 4x4	88	01/90 – 02/93	3570	
SIERRA (GBG, GB4)	2.0 4x4	92	01/90 – 02/93	3548	
SIERRA (GBG, GB4)	2.0 4x4	92	01/90 – 02/93	3549	
SIERRA (GBG, GB4)	2.0 4x4	92	01/90 – 02/93	3570	
SIERRA (GBG, GB4)	2.0 i	74	01/87 – 12/89	3548	
SIERRA (GBG, GB4)	2.0 i	74	01/87 – 12/89	3549	
SIERRA (GBG, GB4)	2.0 i	74	01/87 – 12/89	3570	
SIERRA (GBG, GB4)	2.0 i	85	01/87 – 02/93	3548	
SIERRA (GBG, GB4)	2.0 i	85	01/87 – 02/93	3549	
SIERRA (GBG, GB4)	2.0 i	85	01/87 – 02/93	3570	
SIERRA (GBG, GB4)	2.0 i	88	01/90 – 02/93	3548	
SIERRA (GBG, GB4)	2.0 i	88	01/90 – 02/93	3549	
SIERRA (GBG, GB4)	2.0 i	88	01/90 – 02/93	3570	
SIERRA (GBG, GB4)	2.0 i	92	01/90 – 02/93	3548	
SIERRA (GBG, GB4)	2.0 i	92	01/90 – 02/93	3549	
SIERRA (GBG, GB4)	2.0 i	92	01/90 – 02/93	3570	
SIERRA (GBG, GB4)	2.0 i CAT	74	01/87 – 02/93	3548	
SIERRA (GBG, GB4)	2.0 i CAT	74	01/87 – 02/93	3549	
SIERRA (GBG, GB4)	2.0 i CAT	74	01/87 – 02/93	3570	
SIERRA (GBG, GB4)	2.0 i DOHC	85	12/91 – 02/93	3548	
SIERRA (GBG, GB4)	2.0 i DOHC	85	12/91 – 02/93	3549	
SIERRA (GBG, GB4)	2.0 i DOHC	85	12/91 – 02/93	3570	
SIERRA (GBG, GB4)	2.3 D	49	01/87 – 09/89	3548	
SIERRA (GBG, GB4)	2.3 D	49	01/87 – 09/89	3549	
SIERRA (GBG, GB4)	2.3 D	49	01/87 – 09/89	3570	
SIERRA (GBG, GB4)	2.8 i	105	08/87 – 02/93	3548	
SIERRA (GBG, GB4)	2.8 i	105	08/87 – 02/93	3549	
SIERRA (GBG, GB4)	2.9 4x4	107	08/88 – 02/93	3548	
SIERRA (GBG, GB4)	2.9 4x4	107	08/88 – 02/93	3549	
SIERRA (GBG, GB4)	2.9 4x4	110	08/88 – 02/93	3548	
SIERRA (GBG, GB4)	2.9 4x4	110	08/88 – 02/93	3549	
SIERRA (GBG, GB4)	2.9 i	107	08/88 – 02/93	3548	
SIERRA (GBG, GB4)	2.9 i	107	08/88 – 02/93	3549	
SIERRA (GBG, GB4)	2.9 i	110	08/88 – 02/93	3548	
SIERRA (GBG, GB4)	2.9 i	110	08/88 – 02/93	3549	
SIERRA Estate (BNC)	1.6	53	01/88 – 02/93	3548	
SIERRA Estate (BNC)	1.6	53	01/88 – 02/93	3549	
SIERRA Estate (BNC)	1.6	53	01/88 – 02/93	3570	
SIERRA Estate (BNC)	1.6	55	01/87 – 02/93	3548	
SIERRA Estate (BNC)	1.6	55	01/87 – 02/93	3549	
SIERRA Estate (BNC)	1.6	55	01/87 – 02/93	3570	
SIERRA Estate (BNC)	1.6	55	08/82 – 12/86	3417/1	
SIERRA Estate (BNC)	1.6	55	08/82 – 12/86	3419	
SIERRA Estate (BNC)	1.6	55	08/82 – 12/86	3429	
SIERRA Estate (BNC)	1.6	55	08/82 – 12/86	3548	
SIERRA Estate (BNC)	1.6	55	08/82 – 12/86	3549	
SIERRA Estate (BNC)	1.6	55	08/82 – 12/86	3570	
SIERRA Estate (BNC)	1.6 i	59	10/89 – 02/93	3548	
SIERRA Estate (BNC)	1.6 i	59	10/89 – 02/93	3549	
SIERRA Estate (BNC)	1.6 i	59	10/89 – 02/93	3570	
SIERRA Estate (BNC)	1.8	59	10/87 – 05/88	3548	
SIERRA Estate (BNC)	1.8	59	10/87 – 05/88	3549	
SIERRA Estate (BNC)	1.8	59	10/87 – 05/88	3570	
SIERRA Estate (BNC)	1.8	64	05/88 – 02/93	3548	
SIERRA Estate (BNC)	1.8	64	05/88 – 02/93	3549	
SIERRA Estate (BNC)	1.8	64	05/88 – 02/93	3570	
SIERRA Estate (BNC)	1.8	66	01/87 – 05/88	3548	
SIERRA Estate (BNC)	1.8	66	01/87 – 05/88	3549	
SIERRA Estate (BNC)	1.8	66	01/87 – 05/88	3570	
SIERRA Estate (BNC)	1.8	66	10/84 – 12/86	3417/1	
SIERRA Estate (BNC)	1.8	66	10/84 – 12/86	3548	
SIERRA Estate (BNC)	1.8	66	10/84 – 12/86	3549	
SIERRA Estate (BNC)	1.8	66	10/84 – 12/86	3570	

MAKE & MODEL   		KW	YEAR		
FORD					
SIERRA Estate (BNC)	1.8 TD	55	08/88 – 02/93	3548	
SIERRA Estate (BNC)	1.8 TD	55	08/88 – 02/93	3549	
SIERRA Estate (BNC)	1.8 TD	55	08/88 – 02/93	3570	
SIERRA Estate (BNC)	1.9	80	10/88 – 09/91	3548	
SIERRA Estate (BNC)	1.9	80	10/88 – 09/91	3549	
SIERRA Estate (BNC)	1.9	80	10/88 – 09/91	3570	
SIERRA Estate (BNC)	2.0	66	08/82 – 10/84	3417/1	
SIERRA Estate (BNC)	2.0	66	08/82 – 10/84	3548	
SIERRA Estate (BNC)	2.0	66	08/82 – 10/84	3549	
SIERRA Estate (BNC)	2.0	66	08/82 – 10/84	3570	
SIERRA Estate (BNC)	2.0	74	10/85 – 12/86	3417/1	
SIERRA Estate (BNC)	2.0	74	10/85 – 12/86	3548	
SIERRA Estate (BNC)	2.0	74	10/85 – 12/86	3549	
SIERRA Estate (BNC)	2.0	74	10/85 – 12/86	3570	
SIERRA Estate (BNC)	2.0	77	08/82 – 12/86	3417/1	
SIERRA Estate (BNC)	2.0	77	08/82 – 12/86	3548	
SIERRA Estate (BNC)	2.0	77	08/82 – 12/86	3549	
SIERRA Estate (BNC)	2.0	77	08/82 – 12/86	3570	
SIERRA Estate (BNG)	2.0	77	01/87 – 02/93	3548	
SIERRA Estate (BNG)	2.0	77	01/87 – 02/93	3549	
SIERRA Estate (BNG)	2.0	77	01/87 – 02/93	3570	
SIERRA Estate (BNG)	2.0	85	03/85 – 12/86	3417/1	
SIERRA Estate (BNG)	2.0	85	03/85 – 12/86	3548	
SIERRA Estate (BNG)	2.0	85	03/85 – 12/86	3549	
SIERRA Estate (BNG)	2.0	85	03/85 – 12/86	3570	
SIERRA Estate (BNG)	2.0 4x4	88	02/90 – 02/93	3549	
SIERRA Estate (BNG)	2.0 4x4	88	02/90 – 02/93	3570	
SIERRA Estate (BNG)	2.0 4x4	92	05/89 – 02/93	3548	
SIERRA Estate (BNG)	2.0 4x4	92	05/89 – 02/93	3549	
SIERRA Estate (BNG)	2.0 4x4	92	05/89 – 02/93	3570	
SIERRA Estate (BNG)	2.0 i	74	01/87 – 02/93	3548	
SIERRA Estate (BNG)	2.0 i	74	01/87 – 02/93	3549	
SIERRA Estate (BNG)	2.0 i	74	01/87 – 02/93	3570	
SIERRA Estate (BNG)	2.0 i	85	01/87 – 02/93	3548	
SIERRA Estate (BNG)	2.0 i	85	01/87 – 02/93	3549	
SIERRA Estate (BNG)	2.0 i	85	01/87 – 02/93	3570	
SIERRA Estate (BNG)	2.0 i	88	05/89 – 02/93	3548	
SIERRA Estate (BNG)	2.0 i	88	05/89 – 02/93	3549	
SIERRA Estate (BNG)	2.0 i	88	05/89 – 02/93	3570	
SIERRA Estate (BNG)	2.0 i	92	05/89 – 02/93	3548	
SIERRA Estate (BNG)	2.0 i	92	05/89 – 02/93	3549	
SIERRA Estate (BNG)	2.0 i	92	05/89 – 02/93	3570	
SIERRA Estate (BNG)	2.0 i CAT	74	01/87 – 02/93	3548	
SIERRA Estate (BNG)	2.0 i CAT	74	01/87 – 02/93	3549	
SIERRA Estate (BNG)	2.0 i CAT	74	01/87 – 02/93	3570	
SIERRA Estate (BNG)	2.0 i DOHC	85	12/91 – 02/93	3548	
SIERRA Estate (BNG)	2.0 i DOHC	85	12/91 – 02/93	3549	
SIERRA Estate (BNG)	2.0 i DOHC	85	12/91 – 02/93	3570	
SIERRA Estate (BNG)	2.3	84	08/82 – 12/86	3417/1	
SIERRA Estate (BNG)	2.3	84	08/82 – 12/86	3548	
SIERRA Estate (BNG)	2.3	84	08/82 – 12/86	3549	
SIERRA Estate (BNG)	2.3	84	08/82 – 12/86	3570	
SIERRA Estate (BNG)	2.3 D	49	01/87 – 02/93	3548	
SIERRA Estate (BNG)	2.3 D	49	01/87 – 02/93	3549	
SIERRA Estate (BNG)	2.3 D	49	01/87 – 02/93	3570	
SIERRA Estate (BNG)	2.3 D	49	08/82 – 12/86	3417/1	
SIERRA Estate (BNG)	2.3 D	49	08/82 – 12/86	3548	
SIERRA Estate (BNG)	2.3 D	49	08/82 – 12/86	3549	
SIERRA Estate (BNG)	2.3 D	49	08/82 – 12/86	3570	
SIERRA Estate (BNG)	2.8 4x4	110	01/87 – 08/88	3548	
SIERRA Estate (BNG)	2.8 4x4	110	01/87 – 08/88	3549	
SIERRA Estate (BNG)	2.8 i	105	01/87 – 02/93	3548	
SIERRA Estate (BNG)	2.8 i	105	01/87 – 02/93	3549	
SIERRA Estate (BNG)	2.8 i	107	01/87 – 02/93	3548	
SIERRA Estate (BNG)	2.8 i	107	01/87 – 02/93	3549	
SIERRA Estate (BNG)	2.8 i 4x4	105	08/82 – 12/86	3548	
SIERRA Estate (BNG)	2.8 i 4x4	105	08/82 – 12/86	3549	
SIERRA Estate (BNG)	2.8 i 4x4	107	01/87 – 02/93	3548	
SIERRA Estate (BNG)	2.8 i 4x4	107	01/87 – 02/93	3549	
SIERRA Estate (BNG)	2.8 i 4x4	107	08/82 – 12/86	3548	
SIERRA Estate (BNG)	2.8 i 4x4	107	08/82 – 12/86	3549	
SIERRA Estate (BNG)	2.8 XR4i	105	08/82 – 12/86	3548	
SIERRA Estate (BNG)	2.8 XR4i	105	08/82 – 12/86	3549	
SIERRA Estate (BNG)	2.8 XR4i	107	08/82 – 12/86	3548	
SIERRA Estate (BNG)	2.8 XR4i	107	08/82 – 12/86	3549	
SIERRA Estate (BNG)	2.9	107	08/88 – 02/93	3548	

MAKE & MODEL		KW	YEAR		
FORD					
SIERRA Estate (BNG)	2.9	107	08/88 – 02/93	3549	
SIERRA Estate (BNG)	2.9 4x4	107	08/88 – 02/93	3548	
SIERRA Estate (BNG)	2.9 4x4	107	08/88 – 02/93	3549	
SIERRA Estate (BNG)	2.9 4x4	110	08/88 – 02/93	3548	
SIERRA Estate (BNG)	2.9 4x4	110	08/88 – 02/93	3549	
SIERRA Estate (BNG)	2.9 i	110	08/88 – 02/93	3548	
SIERRA Estate (BNG)	2.9 i	110	08/88 – 02/93	3549	
SIERRA Hatchback (GBC)	1.3	44	08/82 – 12/86	3419	
SIERRA Hatchback (GBC)	1.3	44	08/82 – 12/86	3429	
SIERRA Hatchback (GBC)	1.3	44	08/82 – 12/86	3548	
SIERRA Hatchback (GBC)	1.3	44	08/82 – 12/86	3549	
SIERRA Hatchback (GBC)	1.6	51	10/82 – 02/87	3429	
SIERRA Hatchback (GBC)	1.6	51	10/82 – 02/87	3548	
SIERRA Hatchback (GBC)	1.6	51	10/82 – 02/87	3549	
SIERRA Hatchback (GBC)	1.6	55	08/82 – 12/86	3419	
SIERRA Hatchback (GBC)	1.6	55	08/82 – 12/86	3429	
SIERRA Hatchback (GBC)	1.6	55	08/82 – 12/86	3548	
SIERRA Hatchback (GBC)	1.6	55	08/82 – 12/86	3549	
SIERRA Hatchback (GBC)	1.6	58	08/84 – 12/86	3417/1	
SIERRA Hatchback (GBC)	1.6	58	08/84 – 12/86	3548	
SIERRA Hatchback (GBC)	1.6	58	08/84 – 12/86	3549	
SIERRA Hatchback (GBC)	1.8	66	10/84 – 12/86	3417/1	
SIERRA Hatchback (GBC)	1.8	66	10/84 – 12/86	3548	
SIERRA Hatchback (GBC)	1.8	66	10/84 – 12/86	3549	
SIERRA Hatchback (GBC)	2.0	66	08/82 – 10/84	3417/1	
SIERRA Hatchback (GBC)	2.0	66	08/82 – 10/84	3548	
SIERRA Hatchback (GBC)	2.0	66	08/82 – 10/84	3549	
SIERRA Hatchback (GBC)	2.0	74	10/85 – 12/86	3417/1	
SIERRA Hatchback (GBC)	2.0	74	10/85 – 12/86	3548	
SIERRA Hatchback (GBC)	2.0	74	10/85 – 12/86	3549	
SIERRA Hatchback (GBC)	2.0	77	08/82 – 12/86	3417/1	
SIERRA Hatchback (GBC)	2.0	77	08/82 – 12/86	3548	
SIERRA Hatchback (GBC)	2.0	77	08/82 – 12/86	3549	
SIERRA Hatchback (GBC)	2.0 i	85	03/85 – 12/86	3417/1	
SIERRA Hatchback (GBC)	2.0 i	85	03/85 – 12/86	3548	
SIERRA Hatchback (GBC)	2.0 i	85	03/85 – 12/86	3549	
SIERRA Hatchback (GBC)	2.3	84	08/82 – 12/86	3417/1	
SIERRA Hatchback (GBC)	2.3	84	08/82 – 12/86	3548	
SIERRA Hatchback (GBC)	2.3	84	08/82 – 12/86	3549	
SIERRA Hatchback (GBC)	2.3 D	49	08/82 – 12/86	3417/1	
SIERRA Hatchback (GBC)	2.3 D	49	08/82 – 12/86	3548	
SIERRA Hatchback (GBC)	2.3 D	49	08/82 – 12/86	3549	
SIERRA Hatchback (GBC)	2.8 i XR 4x4	107	09/83 – 12/86	3548	
SIERRA Hatchback (GBC)	2.8 i XR 4x4	107	09/83 – 12/86	3549	
SIERRA Hatchback (GBC)	2.8 XR 4x4	110	02/85 – 12/86	3548	
SIERRA Hatchback (GBC)	2.8 XR 4x4	110	02/85 – 12/86	3549	
SIERRA Hatchback (GBC)	2.8 XR4i	105	08/82 – 12/86	3548	
SIERRA Hatchback (GBC)	2.8 XR4i	105	08/82 – 12/86	3549	
SIERRA Hatchback (GBC)	2.8 XR4i	107	08/82 – 12/86	3548	
SIERRA Hatchback (GBC)	2.8 XR4i	107	08/82 – 12/86	3549	
SIERRA Hatchback (GBC)	2.8 XR4i	110	08/82 – 12/86	3548	
SIERRA Hatchback (GBC)	2.8 XR4i	110	08/82 – 12/86	3549	
SIERRA Hatchback (GBC, GBG)	1.6	53	01/88 – 02/93	3548	
SIERRA Hatchback (GBC, GBG)	1.6	53	01/88 – 02/93	3549	
SIERRA Hatchback (GBC, GBG)	1.6	53	01/88 – 02/93	3570	
SIERRA Hatchback (GBC, GBG)	1.6	55	01/87 – 02/93	3548	
SIERRA Hatchback (GBC, GBG)	1.6	55	01/87 – 02/93	3549	
SIERRA Hatchback (GBC, GBG)	1.6	55	01/87 – 02/93	3570	
SIERRA Hatchback (GBC, GBG)	1.6 i	59	10/89 – 02/93	3548	
SIERRA Hatchback (GBC, GBG)	1.6 i	59	10/89 – 02/93	3549	
SIERRA Hatchback (GBC, GBG)	1.6 i	59	10/89 – 02/93	3570	
SIERRA Hatchback (GBC, GBG)	1.8	59	10/87 – 05/88	3548	
SIERRA Hatchback (GBC, GBG)	1.8	59	10/87 – 05/88	3549	
SIERRA Hatchback (GBC, GBG)	1.8	59	10/87 – 05/88	3570	
SIERRA Hatchback (GBC, GBG)	1.8	64	05/88 – 02/93	3548	
SIERRA Hatchback (GBC, GBG)	1.8	64	05/88 – 02/93	3549	
SIERRA Hatchback (GBC, GBG)	1.8	64	05/88 – 02/93	3570	
SIERRA Hatchback (GBC, GBG)	1.8	66	01/87 – 05/88	3548	
SIERRA Hatchback (GBC, GBG)	1.8	66	01/87 – 05/88	3549	
SIERRA Hatchback (GBC, GBG)	1.8	66	01/87 – 05/88	3570	
SIERRA Hatchback (GBC, GBG)	1.8 TD	55	08/88 – 02/93	3548	
SIERRA Hatchback (GBC, GBG)	1.8 TD	55	08/88 – 02/93	3549	
SIERRA Hatchback (GBC, GBG)	1.8 TD	55	08/88 – 02/93	3570	
SIERRA Hatchback (GBC, GBG)	2.0	77	01/87 – 02/93	3548	
SIERRA Hatchback (GBC, GBG)	2.0	77	01/87 – 02/93	3549	
SIERRA Hatchback (GBC, GBG)	2.0	77	01/87 – 02/93	3570	

MAKE & MODEL	  	KW	YEAR		
FORD					
SIERRA Hatchback (GBC, GBG)	2.0 4x4	88	10/91 – 03/93	3548	
SIERRA Hatchback (GBC, GBG)	2.0 4x4	88	10/91 – 03/93	3549	
SIERRA Hatchback (GBC, GBG)	2.0 4x4	88	10/91 – 03/93	3570	
SIERRA Hatchback (GBC, GBG)	2.0 i	74	01/87 – 02/93	3548	
SIERRA Hatchback (GBC, GBG)	2.0 i	74	01/87 – 02/93	3549	
SIERRA Hatchback (GBC, GBG)	2.0 i	74	01/87 – 02/93	3570	
SIERRA Hatchback (GBC, GBG)	2.0 i	80	06/89 – 02/93	3548	
SIERRA Hatchback (GBC, GBG)	2.0 i	80	06/89 – 02/93	3549	
SIERRA Hatchback (GBC, GBG)	2.0 i	80	06/89 – 02/93	3570	
SIERRA Hatchback (GBC, GBG)	2.0 i	85	01/87 – 02/93	3548	
SIERRA Hatchback (GBC, GBG)	2.0 i	85	01/87 – 02/93	3549	
SIERRA Hatchback (GBC, GBG)	2.0 i	85	01/87 – 02/93	3570	
SIERRA Hatchback (GBC, GBG)	2.0 i	88	06/89 – 02/93	3548	
SIERRA Hatchback (GBC, GBG)	2.0 i	88	06/89 – 02/93	3549	
SIERRA Hatchback (GBC, GBG)	2.0 i	88	06/89 – 02/93	3570	
SIERRA Hatchback (GBC, GBG)	2.0 i	92	06/89 – 02/93	3548	
SIERRA Hatchback (GBC, GBG)	2.0 i	92	06/89 – 02/93	3549	
SIERRA Hatchback (GBC, GBG)	2.0 i	92	06/89 – 02/93	3570	
SIERRA Hatchback (GBC, GBG)	2.0 i CAT	74	01/87 – 02/93	3548	
SIERRA Hatchback (GBC, GBG)	2.0 i CAT	74	01/87 – 02/93	3549	
SIERRA Hatchback (GBC, GBG)	2.0 i CAT	74	01/87 – 02/93	3570	
SIERRA Hatchback (GBC, GBG)	2.0 i DOHC	85	12/91 – 02/93	3548	
SIERRA Hatchback (GBC, GBG)	2.0 i DOHC	85	12/91 – 02/93	3549	
SIERRA Hatchback (GBC, GBG)	2.0 i DOHC	85	12/91 – 02/93	3570	
SIERRA Hatchback (GBC, GBG)	2.3 D	49	01/87 – 09/89	3548	
SIERRA Hatchback (GBC, GBG)	2.3 D	49	01/87 – 09/89	3549	
SIERRA Hatchback (GBC, GBG)	2.3 D	49	01/87 – 09/89	3570	
SIERRA Hatchback (GBC, GBG)	2.8	110	03/87 – 09/89	3548	
SIERRA Hatchback (GBC, GBG)	2.8	110	03/87 – 09/89	3549	
SIERRA Hatchback (GBC, GBG)	2.8 i	105	01/87 – 02/93	3548	
SIERRA Hatchback (GBC, GBG)	2.8 i	105	01/87 – 02/93	3549	
SIERRA Hatchback (GBC, GBG)	2.8 i XR 4x4	107	01/87 – 02/93	3548	
SIERRA Hatchback (GBC, GBG)	2.8 i XR 4x4	107	01/87 – 02/93	3549	
SIERRA Hatchback (GBC, GBG)	2.8 i XR 4x4	110	01/87 – 08/88	3548	
SIERRA Hatchback (GBC, GBG)	2.8 i XR 4x4	110	01/87 – 08/88	3549	
SIERRA Hatchback (GBC, GBG)	2.9 i	107	08/88 – 02/93	3548	
SIERRA Hatchback (GBC, GBG)	2.9 i	107	08/88 – 02/93	3549	
SIERRA Hatchback (GBC, GBG)	2.9 i XR 4x4	107	08/88 – 02/93	3548	
SIERRA Hatchback (GBC, GBG)	2.9 i XR 4x4	107	08/88 – 02/93	3549	
SIERRA Hatchback (GBC, GBG)	2.9 i XR 4x4	110	08/88 – 02/93	3548	
SIERRA Hatchback (GBC, GBG)	2.9 i XR 4x4	110	08/88 – 02/93	3549	
S-MAX (WA6)	1.6 EcoBoost	118	02/11 – 12/14	4161	4157
S-MAX (WA6)	1.6 TDCi	85	02/11 – 12/14	4161	4157
S-MAX (WA6)	1.8 TDCi	74	01/07 – 12/10	4161	4157
S-MAX (WA6)	1.8 TDCi	92	05/06 – 12/14	4161	4157
S-MAX (WA6)	2.0	107	05/06 – 12/14	4161	4157
S-MAX (WA6)	2.0 EcoBoost	146	07/10 – 12/14	4161	4157
S-MAX (WA6)	2.0 EcoBoost	149	03/10 – 12/14	4161	4157
S-MAX (WA6)	2.0 EcoBoost	176	07/10 – 12/14	4161	4157
S-MAX (WA6)	2.0 Flexifuel	107	05/06 – 12/14	4161	4157
S-MAX (WA6)	2.0 TDCi	85	11/07 – 12/14	4161	4157
S-MAX (WA6)	2.0 TDCi	96	05/06 – 12/14	4161	4157
S-MAX (WA6)	2.0 TDCi	100	05/06 – 12/14	4161	4157
S-MAX (WA6)	2.0 TDCi	103	05/06 – 12/14	4161	4157
S-MAX (WA6)	2.0 TDCi	120	03/10 – 12/14	4161	4157
S-MAX (WA6)	2.2 TDCi	129	03/08 – 12/12	4161	4157
S-MAX (WA6)	2.2 TDCi	147	07/10 – 12/14	4161	4157
S-MAX (WA6)	2.3	118	07/07 – 12/14	4161	4157
S-MAX (WA6)	2.5 ST	162	05/06 – 12/14		4157
S-MAX II (CDR)	1.5 EcoBoost (UNCI)	118	01/15 -		4270
S-MAX II (CDR)	1.5 EcoBoost (UNCJ)	118	01/15 -		4270
S-MAX II (CDR)	1.5 EcoBoost (UNCK)	118	01/15 -		4270
S-MAX II (CDR)	2.0 EcoBoost (R9CI)	176	01/15 -		4270
S-MAX II (CDR)	2.0 EcoBoost (R9CD)	176	01/15 -		4270
S-MAX II (CDR)	2.0 TDCi (T7CI)	110	01/15 -		4270
S-MAX II (CDR)	2.0 TDCi (T7CJ)	110	01/15 -		4270
S-MAX II (CDR)	2.0 TDCi (T7CK)	110	01/15 -		4270
S-MAX II (CDR)	2.0 TDCi (T7CL)	110	01/15 -		4270
S-MAX II (CDR)	2.0 TDCi (T8CG)	132	01/15 -		4270
S-MAX II (CDR)	2.0 TDCi (T8CH)	132	01/15 -		4270
S-MAX II (CDR)	2.0 TDCi (T8CI)	132	01/15 -		4270
S-MAX II (CDR)	2.0 TDCi (T8CJ)	132	01/15 -		4270
S-MAX II (CDR)	2.0 TDCi (UFCA)	88	01/15 -		4270
S-MAX II (CDR)	2.0 TDCi (UFCB)	88	01/15 -		4270
S-MAX II (CDR)	2.0 TDCi Bi-Turbo (T9CB)	154	01/15 -		4270
S-MAX II (CDR)	2.0 TDCi Bi-Turbo (T9CC)	154	01/15 -		4270

MAKE & MODEL		KW	YEAR		
FORD					
STREET KA (RL2)	1.6	70	05/03 – 07/05	3877	
TAUNUS (GBFK)	1600	53	01/70 – 05/75	3484	
TAUNUS (GBFK)	1600	53	01/70 – 05/75	3312	
TAUNUS (GBFK)	1600	53	08/70 – 02/76	3484	
TAUNUS (GBFK)	1600	53	08/70 – 02/76	3312	
TAUNUS (GBTK)	2000 V6	66	08/70 – 02/76	3484	
TAUNUS (GBTK)	2000 V6	66	08/70 – 02/76	3312	
TAUNUS (GBTS, GBFS, CBTS)	1.6	53	05/75 – 07/79	3484	
TAUNUS (GBTS, GBFS, CBTS)	1.6	53	05/75 – 07/79	3312	
TAUNUS (GBTS, GBFS, CBTS)	2.0	66	05/75 – 07/79	3484	
TAUNUS (GBTS, GBFS, CBTS)	2.0	66	05/75 – 07/79	3312	
TAUNUS ´80 Turnier (GBNS)	1.3	46	07/79 – 07/82	3484	
TAUNUS ´80 Turnier (GBNS)	1.3	46	07/79 – 07/82	3312	
TAUNUS ´80 Turnier (GBNS)	1.6	51	07/79 – 07/82	3484	
TAUNUS ´80 Turnier (GBNS)	1.6	51	07/79 – 07/82	3312	
TAUNUS ´80 Turnier (GBNS)	1.6	54	07/79 – 07/82	3484	
TAUNUS ´80 Turnier (GBNS)	1.6	54	07/79 – 07/82	3312	
TAUNUS ´80 Turnier (GBNS)	2.0	66	07/79 – 07/82	3484	
TAUNUS ´80 Turnier (GBNS)	2.0	66	07/79 – 07/82	3312	
TAUNUS ´80 Turnier (GBNS)	2.0	74	07/79 – 07/82	3484	
TAUNUS ´80 Turnier (GBNS)	2.0	74	07/79 – 07/82	3312	
TAUNUS ´80 Turnier (GBNS)	2.3	84	07/79 – 07/82	3484	
TAUNUS ´80 Turnier (GBNS)	2.3	84	07/79 – 07/82	3312	
TAUNUS '80 (GBS, GBNS)	1.3	43	07/79 – 07/82	3484	
TAUNUS '80 (GBS, GBNS)	1.3	43	07/79 – 07/82	3312	
TAUNUS '80 (GBS, GBNS)	1.6	51	07/79 – 07/82	3484	
TAUNUS '80 (GBS, GBNS)	1.6	51	07/79 – 07/82	3312	
TAUNUS '80 (GBS, GBNS)	1.6	54	07/79 – 07/82	3484	
TAUNUS '80 (GBS, GBNS)	1.6	54	07/79 – 07/82	3312	
TAUNUS '80 (GBS, GBNS)	1.6	65	07/79 – 07/82	3484	
TAUNUS '80 (GBS, GBNS)	1.6	65	07/79 – 07/82	3312	
TAUNUS '80 (GBS, GBNS)	2.0	66	07/79 – 07/82	3484	
TAUNUS '80 (GBS, GBNS)	2.0	66	07/79 – 07/82	3312	
TAUNUS '80 (GBS, GBNS)	2.0	74	07/79 – 07/82	3484	
TAUNUS '80 (GBS, GBNS)	2.0	74	07/79 – 07/82	3312	
TAUNUS '80 (GBS, GBNS)	2.3	84	07/79 – 07/82	3484	
TAUNUS '80 (GBS, GBNS)	2.3	84	07/79 – 07/82	3312	
TOURNEO CONNECT	1.8 16V	85	06/02 – 12/13	3801	3853/1
TOURNEO CONNECT	1.8 TDCi	66	06/02 – 12/13	3801	3853/1
TOURNEO CONNECT	1.8 TDCi	81	08/06 – 12/13	3801	3853/1
TOURNEO CONNECT	1.8 TDCi /TDDi /DI	55	06/02 – 12/13	3801	3853/1
TOURNEO CONNECT / GRAND TOURNEO CONNECT Kombi	1.0 EcoBoost	74	11/13 -	4226	
TOURNEO CONNECT / GRAND TOURNEO CONNECT Kombi	1.5 TDCi	55	05/15 -	4226	
TOURNEO CONNECT / GRAND TOURNEO CONNECT Kombi	1.5 TDCi	74	05/15 -	4226	
TOURNEO CONNECT / GRAND TOURNEO CONNECT Kombi	1.5 TDCi	88	05/15 -	4226	
TOURNEO CONNECT / GRAND TOURNEO CONNECT Kombi	1.6 EcoBoost	110	11/13 -	4226	
TOURNEO CONNECT / GRAND TOURNEO CONNECT Kombi	1.6 TDCi	55	09/13 -	4226	
TOURNEO CONNECT / GRAND TOURNEO CONNECT Kombi	1.6 TDCi	70	09/13 -	4226	
TOURNEO CONNECT / GRAND TOURNEO CONNECT Kombi	1.6 TDCi	85	09/13 -	4226	
TOURNEO COURIER Kombi	1.0 EcoBoost	74	02/14 -	4204	
TOURNEO COURIER Kombi	1.5 TDCi	55	02/14 -	4204	
TOURNEO COURIER Kombi	1.5 TDCi	70	05/15 -	4204	
TOURNEO COURIER Kombi	1.6 TDCi	70	02/14 -	4204	
TOURNEO CUSTOM Bus	2.2 TDCi	74	04/12 -	4174	4175
TOURNEO CUSTOM Bus	2.2 TDCi	92	04/12 -	4174	4175
TOURNEO CUSTOM Bus	2.2 TDCi	114	04/12 -	4174	4175
TRANSIT Box	2.0 TDCi	77	03/16 -	4174	4175
TRANSIT Box	2.0 TDCi	96	03/16 -	4174	4175
TRANSIT Box	2.0 TDCi	125	03/16 -	4174	4175
TRANSIT Box	2.0 TDCi [RWD]	77	03/16 -	4174	4175
TRANSIT Box	2.0 TDCi [RWD]	96	03/16 -	4174	4175
TRANSIT Box	2.0 TDCi [RWD]	125	03/16 -	4174	4175
TRANSIT Box	2.2 TDCi	63	04/06 – 08/14	3906	3907
TRANSIT Box	2.2 TDCi	63	04/06 – 08/14	3920	
TRANSIT Box	2.2 TDCi	74	08/13 -	4174	4175
TRANSIT Box	2.2 TDCi	74	10/11 – 08/14	3906	3907
TRANSIT Box	2.2 TDCi	74	10/11 – 08/14	3920	
TRANSIT Box	2.2 TDCi	81	04/06 – 08/14	3906	3907
TRANSIT Box	2.2 TDCi	81	04/06 – 08/14	3920	
TRANSIT Box	2.2 TDCi	85	10/08 – 08/14	3906	3907
TRANSIT Box	2.2 TDCi	85	10/08 – 08/14	3920	
TRANSIT Box	2.2 TDCi	92	08/13 -	4174	4175
TRANSIT Box	2.2 TDCi	92	10/11 – 08/14	3906	3907
TRANSIT Box	2.2 TDCi	92	10/11 – 08/14	3920	
TRANSIT Box	2.2 TDCi	96	04/06 – 08/14	3906	3907
TRANSIT Box	2.2 TDCi	96	04/06 – 08/14	3920	

MAKE & MODEL		KW	YEAR		
FORD					
TRANSIT Box	2.2 TDCi	103	10/07 – 08/14	3906	3907
TRANSIT Box	2.2 TDCi	103	10/07 – 08/14	3920	
TRANSIT Box	2.2 TDCi	114	08/13 -	4174	4175
TRANSIT Box	2.2 TDCi [RWD]	74	08/13 -	4174	4175
TRANSIT Box	2.2 TDCi [RWD]	74	10/11 – 08/14	3906	3907
TRANSIT Box	2.2 TDCi [RWD]	92	08/13 -	4174	4175
TRANSIT Box	2.2 TDCi [RWD]	92	10/11 – 08/14	3906	3907
TRANSIT Box	2.2 TDCi [RWD]	100	10/11 – 08/14	3906	3907
TRANSIT Box	2.2 TDCi [RWD]	114	08/13 -	4174	4175
TRANSIT Box	2.2 TDCi [RWD]	114	10/11 – 08/14	3906	3907
TRANSIT Box	2.2 TDCi 4x4	92	08/13 -	4174	4175
TRANSIT Box	2.2 TDCi 4x4	92	10/11 – 08/14	3906	3907
TRANSIT Box	2.2 TDCi 4x4	114	08/13 -	4174	4175
TRANSIT Box	2.3 16V [RWD]	107	04/06 – 08/14	3906	3907
TRANSIT Box	2.3 16V CNG [RWD]	100	04/06 – 08/14	3906	3907
TRANSIT Box	2.3 16V LPG [RWD]	107	04/06 – 08/14	3906	3907
TRANSIT Box	2.4 TDCi [RWD]	74	04/06 – 08/14	3906	3907
TRANSIT Box	2.4 TDCi [RWD]	85	04/06 – 08/14	3906	3907
TRANSIT Box	2.4 TDCi [RWD]	103	04/06 – 08/14	3906	3907
TRANSIT Box	2.4 TDCi 4x4	103	11/06 – 08/14	3906	3907
TRANSIT Box	3.2 TDCi [RWD]	147	09/07 – 08/14	3906	3907
TRANSIT Box (E_ _)	2.0 (EAL, EAS)	84	06/94 – 03/00	3445	
TRANSIT Box (E_ _)	2.0 (EAL, EAS)	84	06/94 – 03/00	3473	
TRANSIT Box (E_ _)	2.5 DI (EAL, EAS)	51	06/94 – 03/00	3445	
TRANSIT Box (E_ _)	2.5 DI (EAL, EAS)	51	06/94 – 03/00	3473	
TRANSIT Box (E_ _)	2.5 DI (EAL, EAS)	56	06/94 – 03/00	3445	
TRANSIT Box (E_ _)	2.5 DI (EAL, EAS)	56	06/94 – 03/00	3473	
TRANSIT Box (E_ _)	2.5 DI (EAL, EAS)	63	06/94 – 03/00	3445	
TRANSIT Box (E_ _)	2.5 DI (EAL, EAS)	63	06/94 – 03/00	3473	
TRANSIT Box (E_ _)	2.5 TD (EAL, EAS)	85	05/99 – 03/00	3445	
TRANSIT Box (E_ _)	2.5 TD (EAL, EAS)	85	05/99 – 03/00	3473	
TRANSIT Box (E_ _)	2.5 TD (EAS)	55	10/98 – 03/00	3445	
TRANSIT Box (E_ _)	2.5 TD (EAS)	55	10/98 – 03/00	3473	
TRANSIT Box (E_ _)	2.5 TDI (EAL, EAS)	74	06/94 – 03/00	3445	
TRANSIT Box (E_ _)	2.5 TDI (EAL, EAS)	74	06/94 – 03/00	3473	
TRANSIT Box (FA_ _)	2.0 DI (FAE_, FAF_, FAG_)	55	08/00 – 05/06	3784	
TRANSIT Box (FA_ _)	2.0 DI (FAE_, FAF_, FAG_)	55	08/00 – 05/06	3921	
TRANSIT Box (FA_ _)	2.0 DI (FAE_, FAF_, FAG_)	63	08/00 – 05/06	3784	
TRANSIT Box (FA_ _)	2.0 DI (FAE_, FAF_, FAG_)	63	08/00 – 05/06	3921	
TRANSIT Box (FA_ _)	2.0 DI (FAE_, FAF_, FAG_)	74	08/00 – 05/06	3784	
TRANSIT Box (FA_ _)	2.0 DI (FAE_, FAF_, FAG_)	74	08/00 – 05/06	3921	
TRANSIT Box (FA_ _)	2.0 TDCi	92	08/02 – 05/06	3784	
TRANSIT Box (FA_ _)	2.0 TDCi	92	08/02 – 05/06	3921	
TRANSIT Box (FA_ _)	2.3	105	03/01 – 03/06	3921	
TRANSIT Box (FA_ _)	2.3	105	03/01 – 03/06	3784	
TRANSIT Box (FA_ _)	2.3	107	03/01 – 03/06	3921	
TRANSIT Box (FA_ _)	2.3	107	03/01 – 03/06	3784	
TRANSIT Box (FA_ _)	2.3 16V [RWD] (FAA_, FAB_, FAC_)	107	04/01 – 05/06	3784	
TRANSIT Box (FA_ _)	2.4 DI (FAA_, FAB_, FAC_, FAD_)	66	01/00 – 05/06	3784	
TRANSIT Box (FA_ _)	2.4 DI [RWD] (FAA_, FAB_, FAC_, FAD_)	55	01/00 – 05/06	3784	
TRANSIT Box (FA_ _)	2.4 DI [RWD] (FAA_, FAB_, FAC_, FAD_)	88	01/00 – 05/06	3784	
TRANSIT Box (FA_ _)	2.4 TD	55	08/00 – 08/03	3784	
TRANSIT Box (FA_ _)	2.4 TD	55	08/00 – 08/03	3921	
TRANSIT Box (FA_ _)	2.4 TDCi	101	03/04 – 05/06	3784	
TRANSIT Box (FA_ _)	2.4 TDdi	88	08/00 – 08/03	3784	
TRANSIT Box (FA_ _)	2.4 TDdi	88	08/00 – 08/03	3921	
TRANSIT Box (FA_ _)	2.4 TDE	85	03/04 – 05/06	3784	
TRANSIT Box (FA_ _)	2.4 TDE	95	07/01 – 05/06	3784	
TRANSIT Box (T_ _)	1.6 (TAS)	46	09/85 – 09/92	3416	
TRANSIT Box (T_ _)	1.6 (TAS)	46	09/85 – 09/92	3603	
TRANSIT Box (T_ _)	2.0 (TAL, TAS, TGL, TWS)	57	09/85 – 09/92	3416	
TRANSIT Box (T_ _)	2.0 (TAL, TAS, TGL, TWS)	57	09/85 – 09/92	3603	
TRANSIT Box (T_ _)	2.5 D (TAL, TAS, TGL, TWS)	50	01/86 – 09/91	3416	
TRANSIT Box (T_ _)	2.5 D (TAL, TAS, TGL, TWS)	50	01/86 – 09/91	3603	
TRANSIT Box (T_ _)	2.5 D (TAL, TAS, TGL, TWS)	52	10/88 – 09/91	3416	
TRANSIT Box (T_ _)	2.5 D (TAL, TAS, TGL, TWS)	52	10/88 – 09/91	3603	
TRANSIT Box (V_ _)	1.6 (WS)	48	11/77 – 10/86	3416	
TRANSIT Box (V_ _)	2.0 (VHL, VVS)	57	11/77 – 10/86	3416	
TRANSIT Box (V_ _)	2.0 (VVL)	55	11/77 – 10/86	3416	
TRANSIT Box (V_ _)	2.0 (VVS)	43	11/77 – 07/82	3416	
TRANSIT Box (V_ _)	2.4 D (VVS)	46	11/77 – 10/86	3416	
TRANSIT Box (V_ _)	2.5 D (VVL)	50	10/83 – 10/86	3416	
TRANSIT Bus	2.0 TDCi	77	03/16 -	4174	4175
TRANSIT Bus	2.0 TDCi	96	03/16 -	4174	4175
TRANSIT Bus	2.0 TDCi	125	03/16 -	4174	4175
TRANSIT Bus	2.2 TDCi	63	04/06 – 08/14	3906	3907

MAKE & MODEL		KW	YEAR		
FORD					
TRANSIT Bus	2.2 TDCi	63	04/06 – 08/14	3920	
TRANSIT Bus	2.2 TDCi	74	08/13 -	4174	4175
TRANSIT Bus	2.2 TDCi	74	10/11 – 08/14	3906	3907
TRANSIT Bus	2.2 TDCi	74	10/11 – 08/14	3920	
TRANSIT Bus	2.2 TDCi	81	04/06 – 08/14	3906	3907
TRANSIT Bus	2.2 TDCi	81	04/06 – 08/14	3920	
TRANSIT Bus	2.2 TDCi	85	10/08 – 08/14	3906	3907
TRANSIT Bus	2.2 TDCi	85	10/08 – 08/14	3920	
TRANSIT Bus	2.2 TDCi	92	08/13 -	4174	4175
TRANSIT Bus	2.2 TDCi	92	10/11 – 08/14	3906	3907
TRANSIT Bus	2.2 TDCi	92	10/11 – 08/14	3920	
TRANSIT Bus	2.2 TDCi	96	04/06 – 08/14	3906	3907
TRANSIT Bus	2.2 TDCi	96	04/06 – 08/14	3920	
TRANSIT Bus	2.2 TDCi	103	10/07 – 08/14	3906	3907
TRANSIT Bus	2.2 TDCi	103	10/07 – 08/14	3920	
TRANSIT Bus	2.2 TDCi	114	12/14 -	4174	4175
TRANSIT Bus	2.2 TDCi [RWD]	74	08/13 -	4174	4175
TRANSIT Bus	2.2 TDCi [RWD]	74	10/11 – 08/14	3906	3907
TRANSIT Bus	2.2 TDCi [RWD]	92	08/13 -	4174	4175
TRANSIT Bus	2.2 TDCi [RWD]	92	10/11 – 08/14	3906	3907
TRANSIT Bus	2.2 TDCi [RWD]	100	09/11 – 08/14	3906	3907
TRANSIT Bus	2.2 TDCi [RWD]	114	08/13 -	4174	4175
TRANSIT Bus	2.2 TDCi 4x4	92	08/13 -	4174	4175
TRANSIT Bus	2.4 TDCi	74	04/06 – 08/14	3906	3907
TRANSIT Bus	2.4 TDCi	85	04/06 – 08/14	3906	3907
TRANSIT Bus	2.4 TDCi	103	04/06 – 08/14	3906	3907
TRANSIT Bus	2.4 TDCi 4x4	103	11/06 – 08/14	3906	3907
TRANSIT Bus	3.2 TDCi	147	02/08 – 08/14	3906	3907
TRANSIT Bus (E_ _)	2.0 (EBL, EBS, ECL, EDS, EDL, EGL, ESS, ESL, EUS)	84	09/95 – 03/00	3445	
TRANSIT Bus (E_ _)	2.0 (EBL, EBS, ECL, EDS, EDL, EGL, ESS, ESL, EUS)	84	09/95 – 03/00	3473	
TRANSIT Bus (E_ _)	2.0 CNG	84	06/94 – 03/00	3445	
TRANSIT Bus (E_ _)	2.0 CNG	84	06/94 – 03/00	3473	
TRANSIT Bus (E_ _)	2.5 DI (EBL, ECL, EDS, EDL)	56	07/94 – 03/00	3445	
TRANSIT Bus (E_ _)	2.5 DI (EBL, ECL, EDS, EDL)	56	07/94 – 03/00	3473	
TRANSIT Bus (E_ _)	2.5 DI (EBL, EDL, EDS, ESL, ESS)	51	08/09 – 03/00	3445	
TRANSIT Bus (E_ _)	2.5 DI (EBL, EDL, EDS, ESL, ESS)	51	08/94 – 03/00	3473	
TRANSIT Bus (E_ _)	2.5 DI (EBL, EDS, ESL, ESS, EUS)	85	08/97 – 03/00	3445	
TRANSIT Bus (E_ _)	2.5 DI (EBL, EDS, ESL, ESS, EUS)	85	08/97 – 03/00	3473	
TRANSIT Bus (E_ _)	2.5 TD (EB_, ED_, ES_)	55	08/09 – 06/00	3445	
TRANSIT Bus (E_ _)	2.5 TD (EB_, ED_, ES_)	55	08/91 – 06/00	3473	
TRANSIT Bus (E_ _)	2.5 TD (EBL, EDL, EDS, EGL, ESL, ESS, EUS)	63	01/95 – 02/00	3473	
TRANSIT Bus (E_ _)	2.5 TD (EBL, EDL, EDS, EGL, ESL, ESS, EUS)	63	01/95 – 03/00	3445	
TRANSIT Bus (E_ _)	2.5 TD (ECL, EDL, EDS, ESL, ESS, EUS)	74	07/94 – 03/00	3473	
TRANSIT Bus (E_ _)	2.5 TD (ECL, EDL, EDS, ESL, ESS, EUS)	74	07/94 – 03/00	3445	
TRANSIT Bus (FD_ _, FB_ _, FS_ _, FZ_ _, FC_ _)	2.0 DI (F_E_, F_F_, F_G_)	55	08/00 – 05/06	3784	
TRANSIT Bus (FD_ _, FB_ _, FS_ _, FZ_ _, FC_ _)	2.0 DI (F_E_, F_F_, F_G_)	55	08/00 – 05/06	3921	
TRANSIT Bus (FD_ _, FB_ _, FS_ _, FZ_ _, FC_ _)	2.0 DI (F_E_, F_F_, F_G_)	63	08/00 – 05/06	3784	
TRANSIT Bus (FD_ _, FB_ _, FS_ _, FZ_ _, FC_ _)	2.0 DI (F_E_, F_F_, F_G_)	63	08/00 – 05/06	3921	
TRANSIT Bus (FD_ _, FB_ _, FS_ _, FZ_ _, FC_ _)	2.0 DI (F_E_, F_F_, F_G_)	74	08/00 – 05/06	3784	
TRANSIT Bus (FD_ _, FB_ _, FS_ _, FZ_ _, FC_ _)	2.0 DI (F_E_, F_F_, F_G_)	74	08/00 – 05/06	3921	
TRANSIT Bus (FD_ _, FB_ _, FS_ _, FZ_ _, FC_ _)	2.0 TDCi (F_F_, F_E_, F_G_)	92	08/02 – 05/06	3784	
TRANSIT Bus (FD_ _, FB_ _, FS_ _, FZ_ _, FC_ _)	2.0 TDCi (F_F_, F_E_, F_G_)	92	08/02 – 05/06	3921	
TRANSIT Bus (FD_ _, FB_ _, FS_ _, FZ_ _, FC_ _)	2.3	107	08/00 – 03/06	3784	
TRANSIT Bus (FD_ _, FB_ _, FS_ _, FZ_ _, FC_ _)	2.3	107	08/00 – 03/06	3921	
TRANSIT Bus (FD_ _, FB_ _, FS_ _, FZ_ _, FC_ _)	2.3 16V [RWD] (F_B_, F_C_,F_A_)	107	08/00 – 05/06	3784	
TRANSIT Bus (FD_ _, FB_ _, FS_ _, FZ_ _, FC_ _)	2.4 DI (F_B_, F_C_, F_A_)	66	01/00 – 05/06	3784	
TRANSIT Bus (FD_ _, FB_ _, FS_ _, FZ_ _, FC_ _)	2.4 DI [RWD] (F_B_, F_C_)	55	01/00 – 05/06	3784	
TRANSIT Bus (FD_ _, FB_ _, FS_ _, FZ_ _, FC_ _)	2.4 DI [RWD] (F_B_, F_C_, F_A_)	88	01/00 – 05/06	3784	
TRANSIT Bus (FD_ _, FB_ _, FS_ _, FZ_ _, FC_ _)	2.4 TDCi	101	03/04 – 05/06	3784	
TRANSIT Bus (FD_ _, FB_ _, FS_ _, FZ_ _, FC_ _)	2.4 TDdi	66	10/01 – 03/06	3784	
TRANSIT Bus (FD_ _, FB_ _, FS_ _, FZ_ _, FC_ _)	2.4 TDdi	66	10/01 – 03/06	3921	
TRANSIT Bus (FD_ _, FB_ _, FS_ _, FZ_ _, FC_ _)	2.4 TDdi	88	08/00 – 08/03	3784	
TRANSIT Bus (FD_ _, FB_ _, FS_ _, FZ_ _, FC_ _)	2.4 TDdi	88	08/00 – 08/03	3921	
TRANSIT Bus (FD_ _, FB_ _, FS_ _, FZ_ _, FC_ _)	2.4 TDE	85	03/04 – 05/06	3784	
TRANSIT Bus (FD_ _, FB_ _, FS_ _, FZ_ _, FC_ _)	2.4 TDE (F_C_, F_B_, F_A_)	92	07/01 – 05/06	3784	
TRANSIT Bus (T_ _)	1.6 (TBL, TES)	46	12/85 – 01/89	3416	
TRANSIT Bus (T_ _)	1.6 (TBL, TES)	46	12/85 – 01/89	3603	
TRANSIT Bus (T_ _)	2.0 (TBS, TCL, TCS) CAT	57	12/85 – 09/92	3416	
TRANSIT Bus (T_ _)	2.0 (TBS, TCL, TCS) CAT	57	12/85 – 09/92	3603	
TRANSIT Bus (T_ _)	2.0 (TBS, TCL, TCS, TEL, TES)	57	11/85 – 09/92	3416	
TRANSIT Bus (T_ _)	2.0 (TBS, TCL, TCS, TEL, TES)	57	11/85 – 09/92	3603	
TRANSIT Bus (T_ _)	2.5 D (TBS, TCL, TCS, TEL, TES)	50	12/85 – 01/89	3416	
TRANSIT Bus (T_ _)	2.5 D (TBS, TCL, TCS, TEL, TES)	50	12/85 – 01/89	3603	
TRANSIT Bus (T_ _)	2.5 D (TBS, TEL, TES)	52	09/88 – 09/92	3416	
TRANSIT Bus (T_ _)	2.5 D (TBS, TEL, TES)	52	09/88 – 09/92	3603	
TRANSIT Bus (V_ _)	1.6 (VAS, VLS, VZS)	48	12/77 – 10/86	3416	

MAKE & MODEL   		KW	YEAR		
FORD					
TRANSIT Bus (V_ _)	2.0 (VAS, VBLVIL, VLS, VUL, VZS)	43	12/77 – 07/82	3416	
TRANSIT Bus (V_ _)	2.0 (VAS, VIL, VLS, VUL, VZS)	57	11/77 – 10/86	3416	
TRANSIT Bus (V_ _)	2.0 (VAS, VLS, VZS)	55	11/77 – 10/86	3416	
TRANSIT Bus (V_ _)	2.4 D (VAS, VBL, VIL, VUL, VZS)	46	12/77 – 10/86	3416	
TRANSIT Bus (V_ _)	2.5 D (VAS, VBL, VIL, VUL, VZS)	50	10/83 – 10/86	3416	
TRANSIT CONNECT (P65_, P70_, P80_)	1.8 16V	85	06/02 – 12/13	3801	3853/1
TRANSIT CONNECT (P65_, P70_, P80_)	1.8 16V LPG	85	06/02 – 12/13	3801	3853/1
TRANSIT CONNECT (P65_, P70_, P80_)	1.8 Di	55	06/02 – 12/13	3801	3853/1
TRANSIT CONNECT (P65_, P70_, P80_)	1.8 TDCi	66	06/02 – 12/13	3801	3853/1
TRANSIT CONNECT (P65_, P70_, P80_)	1.8 TDCi	81	08/06 – 12/13	3801	3853/1
TRANSIT CONNECT Box	1.0 EcoBoost	74	02/13 -	4226	
TRANSIT CONNECT Box	1.5 TDCi	55	08/15 -	4226	
TRANSIT CONNECT Box	1.5 TDCi	74	05/15 -	4226	
TRANSIT CONNECT Box	1.5 TDCi	88	05/15 -	4226	
TRANSIT CONNECT Box	1.6 EcoBoost	110	11/13 -	4226	
TRANSIT CONNECT Box	1.6 TDCi	55	02/13 -	4226	
TRANSIT CONNECT Box	1.6 TDCi	70	02/13 -	4226	
TRANSIT CONNECT Box	1.6 TDCi	85	02/13 -	4226	
TRANSIT CONNECT Kombi	1.5 TDCi	55	08/15 -	4226	
TRANSIT CONNECT Kombi	1.5 TDCi	74	05/15 -	4226	
TRANSIT CONNECT Kombi	1.5 TDCi	88	05/15 -	4226	
TRANSIT CONNECT Kombi	1.6 EcoBoost	110	02/13 -	4226	
TRANSIT CONNECT Kombi	1.6 TDCi	55	02/13 -	4226	
TRANSIT CONNECT Kombi	1.6 TDCi	70	02/13 -	4226	
TRANSIT CONNECT Kombi	1.6 TDCi	85	02/13 -	4226	
TRANSIT COURIER Box	1.0 EcoBoost	74	02/14 -	4204	
TRANSIT COURIER Box	1.5 TDCi	55	02/14 -	4204	
TRANSIT COURIER Box	1.5 TDCi	70	05/15 -	4204	
TRANSIT COURIER Box	1.6 TDCi	70	02/14 -	4204	
TRANSIT COURIER Kombi	1.0 EcoBoost	74	02/14 -	4204	
TRANSIT COURIER Kombi	1.5 TDCi	55	02/14 -	4204	
TRANSIT COURIER Kombi	1.5 TDCi	70	05/15 -	4204	
TRANSIT COURIER Kombi	1.6 TDCi	70	02/14 -	4204	
TRANSIT CUSTOM Box	2.0 TDCi	77	12/15 -	4174	4175
TRANSIT CUSTOM Box	2.2 TDCi	74	04/12 -	4174	4175
TRANSIT CUSTOM Box	2.2 TDCi	92	04/12 -	4174	4175
TRANSIT CUSTOM Box	2.2 TDCi	114	04/12 -	4174	4175
TRANSIT CUSTOM Bus	2.2 TDCi	74	04/12 -	4174	4175
TRANSIT CUSTOM Bus	2.2 TDCi	92	04/12 -	4174	4175
TRANSIT CUSTOM Bus	2.2 TDCi	114	04/12 -	4174	4175
TRANSIT Platform/Chassis	2.0 TDCi	77	03/16 -	4174	4175
TRANSIT Platform/Chassis	2.0 TDCi	96	03/16 -	4174	4175
TRANSIT Platform/Chassis	2.0 TDCi	125	03/16 -	4174	4175
TRANSIT Platform/Chassis	2.0 TDCi [RWD]	77	03/16 -	4174	4175
TRANSIT Platform/Chassis	2.0 TDCi [RWD]	96	03/16 -	4174	4175
TRANSIT Platform/Chassis	2.0 TDCi [RWD]	125	03/16 -	4174	4175
TRANSIT Platform/Chassis	2.2 TDCi	63	04/06 – 08/14	3906	3907
TRANSIT Platform/Chassis	2.2 TDCi	63	04/06 – 08/14	3920	
TRANSIT Platform/Chassis	2.2 TDCi	74	08/13 -	4174	4175
TRANSIT Platform/Chassis	2.2 TDCi	74	10/11 – 08/14	3906	3907
TRANSIT Platform/Chassis	2.2 TDCi	74	10/11 – 08/14	3920	
TRANSIT Platform/Chassis	2.2 TDCi	81	04/06 – 08/14	3906	3907
TRANSIT Platform/Chassis	2.2 TDCi	81	04/06 – 08/14	3920	
TRANSIT Platform/Chassis	2.2 TDCi	85	10/08 – 08/14	3906	3907
TRANSIT Platform/Chassis	2.2 TDCi	85	10/08 – 08/14	3920	
TRANSIT Platform/Chassis	2.2 TDCi	92	08/13 -	4174	4175
TRANSIT Platform/Chassis	2.2 TDCi	92	10/11 – 08/14	3906	3907
TRANSIT Platform/Chassis	2.2 TDCi	92	10/11 – 08/14	3920	
TRANSIT Platform/Chassis	2.2 TDCi	96	04/06 – 08/14	3906	3907
TRANSIT Platform/Chassis	2.2 TDCi	96	04/06 – 08/14	3920	
TRANSIT Platform/Chassis	2.2 TDCi	103	10/07 – 09/11	3906	3907
TRANSIT Platform/Chassis	2.2 TDCi	103	10/07 – 09/11	3920	
TRANSIT Platform/Chassis	2.2 TDCi	114	08/13 -	4174	4175
TRANSIT Platform/Chassis	2.2 TDCi [RWD]	74	08/13 -	4174	4175
TRANSIT Platform/Chassis	2.2 TDCi [RWD]	74	10/11 – 08/14	3906	3907
TRANSIT Platform/Chassis	2.2 TDCi [RWD]	92	08/13 -	4174	4175
TRANSIT Platform/Chassis	2.2 TDCi [RWD]	92	10/11 – 08/14	3906	3907
TRANSIT Platform/Chassis	2.2 TDCi [RWD]	99	08/13 -	4174	4175
CONSUL Estate (GGNL)	3.0 3000	101	01/72 – 12/75	3313	
CONSUL Sedán (GGFL)	2.5 2500	88	01/72 – 12/74	3313	
CONSUL Sedán (GGFL)	3.0 3000	101	01/72 – 12/74	3313	
CONSUL Turnier (GGNL)	2000	73	01/72 – 12/75	3484	
CONSUL Turnier (GGNL)	2000	73	01/72 – 12/75	3312	
GRANADA Estate (GNU)	2.3	84	06/79 – 08/85	3312	
GRANADA Sedán (GGTL, GGFL)	3.0 (EV 30 H)	101	01/72 – 02/76	3313	
TRANSIT Platform/Chassis	2.2 TDCi [RWD]	114	08/13 -	4174	4175

MAKE & MODEL		KW	YEAR		
FORD					
TRANSIT Platform/Chassis	2.2 TDCi [RWD]	114	10/11 – 08/14	3906	3907
TRANSIT Platform/Chassis	2.2 TDCi 4x4	92	08/13 -	4174	4175
TRANSIT Platform/Chassis	2.2 TDCi 4x4	92	10/11 – 08/14	3906	3907
TRANSIT Platform/Chassis	2.2 TDCi 4x4	114	08/13 -	4174	4175
TRANSIT Platform/Chassis	2.3 16V [RWD]	107	04/06 – 08/14	3906	3907
TRANSIT Platform/Chassis	2.3 16V CNG [RWD]	100	04/06 – 08/14	3906	3907
TRANSIT Platform/Chassis	2.3 16V LPG [RWD]	107	04/06 – 08/14	3906	3907
TRANSIT Platform/Chassis	2.4 TDCi [RWD]	74	04/06 – 08/14	3906	3907
TRANSIT Platform/Chassis	2.4 TDCi [RWD]	85	04/06 – 08/14	3906	3907
TRANSIT Platform/Chassis	2.4 TDCi [RWD]	103	04/06 – 08/14	3906	3907
TRANSIT Platform/Chassis	2.4 TDCi 4x4	103	11/06 – 08/14	3906	3907
TRANSIT Platform/Chassis	3.2 TDCi [RWD]	147	09/07 – 08/14	3906	3907
TRANSIT Platform/Chassis (E_ _)	2.0 (EME/L/S, ENE/L/S)	84	08/94 – 03/00	3445	
TRANSIT Platform/Chassis (E_ _)	2.0 (EME/L/S, ENE/L/S)	84	08/94 – 03/00	3473	
TRANSIT Platform/Chassis (E_ _)	2.5 DI (EME/L/S, ENE/L/S)	56	08/94 – 03/00	3445	
TRANSIT Platform/Chassis (E_ _)	2.5 DI (EME/L/S, ENE/L/S)	56	08/94 – 03/00	3473	
TRANSIT Platform/Chassis (E_ _)	2.5 DI (EML, ENE/L)	85	05/99 – 03/00	3445	
TRANSIT Platform/Chassis (E_ _)	2.5 DI (EML, ENE/L)	85	08/94 – 03/00	3473	
TRANSIT Platform/Chassis (E_ _)	2.5 DI (EML/S, ENL/S)	51	05/99 – 03/00	3473	
TRANSIT Platform/Chassis (E_ _)	2.5 DI (EML/S, ENL/S)	51	08/94 – 03/00	3445	
TRANSIT Platform/Chassis (E_ _)	2.5 TD (EME/L/S, ENE/L/S)	55	08/94 – 03/00	3473	
TRANSIT Platform/Chassis (E_ _)	2.5 TD (EME/L/S, ENE/L/S)	55	10/98 – 07/00	3445	
TRANSIT Platform/Chassis (E_ _)	2.5 TD (EME/L/S, ENE/L/S)	63	08/94 – 03/00	3445	
TRANSIT Platform/Chassis (E_ _)	2.5 TD (EME/L/S, ENE/L/S)	63	08/94 – 03/00	3473	
TRANSIT Platform/Chassis (E_ _)	2.5 TD (EME/L/S, ENE/L/S)	74	08/94 – 03/00	3445	
TRANSIT Platform/Chassis (E_ _)	2.5 TD (EME/L/S, ENE/L/S)	74	08/94 – 03/00	3473	
TRANSIT Platform/Chassis (FM_ _, FN_ _)	2.0 DI (F_E_, F_F_)	55	08/00 – 05/06	3784	
TRANSIT Platform/Chassis (FM_ _, FN_ _)	2.0 DI (F_E_, F_F_)	55	08/00 – 05/06	3921	
TRANSIT Platform/Chassis (FM_ _, FN_ _)	2.0 DI (F_E_, F_F_)	63	08/00 – 05/06	3784	
TRANSIT Platform/Chassis (FM_ _, FN_ _)	2.0 DI (F_E_, F_F_)	63	08/00 – 05/06	3921	
TRANSIT Platform/Chassis (FM_ _, FN_ _)	2.0 DI (F_E_, F_F_)	74	08/00 – 05/06	3784	
TRANSIT Platform/Chassis (FM_ _, FN_ _)	2.0 DI (F_E_, F_F_)	74	08/00 – 05/06	3921	
TRANSIT Platform/Chassis (FM_ _, FN_ _)	2.0 TDCi (F_E_, F_F_)	92	08/02 – 05/06	3784	
TRANSIT Platform/Chassis (FM_ _, FN_ _)	2.0 TDCi (F_E_, F_F_)	92	08/02 – 05/06	3921	
TRANSIT Platform/Chassis (FM_ _, FN_ _)	2.3 16V (F_A_, F_B_, F_C_,F_D_)	107	04/01 – 05/06	3784	
TRANSIT Platform/Chassis (FM_ _, FN_ _)	2.4 DI (F_A_, F_B_, F_C_, F_D_)	55	01/00 – 05/06	3784	
TRANSIT Platform/Chassis (FM_ _, FN_ _)	2.4 DI (F_A_, F_B_, F_C_, F_D_)	66	01/00 – 05/06	3784	
TRANSIT Platform/Chassis (FM_ _, FN_ _)	2.4 DI (F_A_, F_B_, F_C_, F_D_)	88	01/00 – 05/06	3784	
TRANSIT Platform/Chassis (FM_ _, FN_ _)	2.4 TDCi	101	03/04 – 05/06	3784	
TRANSIT Platform/Chassis (FM_ _, FN_ _)	2.4 TDdi	88	08/00 – 08/03	3784	
TRANSIT Platform/Chassis (FM_ _, FN_ _)	2.4 TDdi	88	08/00 – 08/03	3921	
TRANSIT Platform/Chassis (FM_ _, FN_ _)	2.4 TDE	85	03/04 – 05/06	3784	
TRANSIT Platform/Chassis (FM_ _, FN_ _)	2.4 TDE	92	07/01 – 05/06	3784	
TRANSIT Platform/Chassis (T_ _)	2.0 (TTE, TTL, TTS)	57	01/86 – 09/92	3416	
TRANSIT Platform/Chassis (T_ _)	2.0 (TTE, TTL, TTS)	57	01/86 – 09/92	3603	
TRANSIT Platform/Chassis (T_ _)	2.0 (TUL) CAT	57	11/85 – 09/92	3416	
TRANSIT Platform/Chassis (T_ _)	2.0 (TUL) CAT	57	11/85 – 09/92	3603	
TRANSIT Platform/Chassis (T_ _)	2.5 D (TTL, TTS, TUL, TUS, TTE) CAT	50	01/86 – 01/89	3416	
TRANSIT Platform/Chassis (T_ _)	2.5 D (TTL, TTS, TUL, TUS, TTE) CAT	50	01/86 – 01/89	3603	
TRANSIT Platform/Chassis (T_ _)	2.5 DI (TTE, TTL, TTS, TUL)	52	09/88 – 09/92	3416	
TRANSIT Platform/Chassis (T_ _)	2.5 DI (TTE, TTL, TTS, TUL)	52	09/88 – 09/92	3603	
TRANSIT Platform/Chassis (V_ _)	1.6 (VCS, VDS)	48	11/77 – 10/86	3416	
TRANSIT Platform/Chassis (V_ _)	2.0 (VGL, VSL, VTL)	43	11/77 – 07/82	3416	
TRANSIT Platform/Chassis (V_ _)	2.0 (VGL, VSL, VTL, VCS, VDS)	57	11/77 – 10/86	3416	
TRANSIT Platform/Chassis (V_ _)	2.4 D (VGL, VSL, VTL, VCS, VDS)	46	11/77 – 09/85	3416	
TRANSIT Platform/Chassis (V_ _)	2.5 D (VGL, VSL, VTL, VCS, VDS)	50	10/83 – 10/86	3416	
TRANSIT TOURNEO	2.0	84	10/98 – 07/00	3473	
TRANSIT TOURNEO	2.0	84	11/94 – 12/00	3445	
TRANSIT TOURNEO	2.2 TDCi	81	07/06 – 08/14	3906	3907
TRANSIT TOURNEO	2.2 TDCi	81	07/06 – 08/14	3920	
TRANSIT TOURNEO	2.2 TDCi	85	10/08 – 08/14	3906	3907
TRANSIT TOURNEO	2.2 TDCi	85	10/08 – 08/14	3920	
TRANSIT TOURNEO	2.2 TDCi	96	07/06 – 08/14	3906	3907
TRANSIT TOURNEO	2.2 TDCi	96	07/06 – 08/14	3920	
TRANSIT TOURNEO	2.2 TDCi	103	10/07 – 08/14	3906	3907
TRANSIT TOURNEO	2.2 TDCi	103	10/07 – 08/14	3920	
TRANSIT TOURNEO	2.4 D	55	08/94 – 06/00	3445	
TRANSIT TOURNEO	2.4 D	55	11/94 – 12/00	3473	
TRANSIT TOURNEO	2.5 DI	51	08/94 – 06/00	3473	
TRANSIT TOURNEO	2.5 DI	51	11/94 – 12/00	3445	
TRANSIT TOURNEO	2.5 DI	56	11/94 – 12/00	3445	
TRANSIT TOURNEO	2.5 DI	56	11/94 – 12/00	3473	
TRANSIT TOURNEO	2.5 TD	63	04/98 – 12/00	3473	
TRANSIT TOURNEO	2.5 TD	63	11/94 – 12/00	3445	
TRANSIT TOURNEO	2.5 TD	74	04/98 – 12/00	3445	
TRANSIT TOURNEO	2.5 TD	74	11/94 – 12/00	3473	

MAKE & MODEL		KW	YEAR		
FORD (CHANGAN)					
KUGA	1.6 GTDi	130	01/13 -	4226	
KUGA	1.6 GTDi AWD	130	01/13 -	4226	
KUGA	2.0 GTDi AWD	178	01/13 -	4226	
MONDEO	2.0	105	05/03 -	4100	4093
MONDEO	2.0	105	05/03 -		4058
MONDEO	2.0	149	03/11 -	4161	4157
MONDEO	2.0	176	03/11 -	4161	4157
MONDEO	2.3	119	09/07 -	4100	4093
MONDEO	2.3	119	09/07 -		4058
MONDEO	2.5	127	05/03 – 12/07	4100	4093
MONDEO	2.5	127	05/03 – 12/07		4058
S-MAX MPV (BWS)	2.3	118	01/07 – 12/14	4161	4157
S-MAX MPV (BWS)	2.3	119	01/07 -	4161	4157
FORD ASIA / OZEANIA					
COURIER Pickup (UF_, UN_)	0.8	29	06/90 – 09/97	3509	
COURIER Pickup (UF_, UN_)	0.8	29	06/90 – 09/97	4034	
EVEREST (25N_)	1.0	33	04/97 – 10/01	3509	
EVEREST (25N_)	1.0	33	04/97 – 10/01	4034	
EVEREST (25N_)	1.1	40	11/90 – 10/93	3723	
FESTIVA (BA_2, BJ_2)	1.3	54	11/90 – 09/03	3723	
FESTIVA (BA_2, BJ_2)	1.3 GLX	55	05/94 – 08/98	3723	
FESTIVA (BA_2, BJ_2)	2.2	60	02/99 – 10/02	3767	
PRONTO Box (DA_V)	2.5 D All-wheel Drive	63	03/96 – 01/99	3781	
PRONTO Box (DA_V)	2.5 TD	81	05/03 -	3767	
PRONTO Box (DA_V)	2.5 TD	88	05/03 – 08/06	3767	
PRONTO Box (DA_V)	2.5 TD	89	05/03 – 08/06	3767	
PRONTO Bus (DA_H)	2.5 TD All-wheel Drive	80	02/99 -	3767	
PRONTO Bus (DA_H)	2.5 TD All-wheel Drive	81	05/03 -	3767	
PRONTO Bus (DA_H)	2.6 All-wheel Drive	90	07/93 – 01/99	3781	
PRONTO Bus (DA_H)	3.0 TD All-wheel Drive	115	08/06 -	3767	
FORD AUSTRALIA					
CAPRI Convertible (SA II, SC, SE, SA I)	1.6 16V	77	09/89 – 07/94	3449	
CAPRI Convertible (SA II, SC, SE, SA I)	1.6 Turbo	100	09/89 – 07/94	3449	
CAPRI Coupe	1.6	53	08/72 – 03/74	3312	
CAPRI Coupe	1.6	53	08/72 – 03/74	3484	
CAPRI Coupe	1.6	60	01/69 – 03/74	3312	
CAPRI Coupe	1.6	60	01/69 – 03/74	3484	
CAPRI Coupe	3.0	94	01/70 – 03/74	3312	
CAPRI Coupe	3.0	94	01/70 – 03/74	3484	
CAPRI Coupe	3.0 GT	103	01/73 – 03/74	3312	
CAPRI Coupe	3.0 GT	103	01/73 – 03/74	3484	
CAPRI Coupe	3.0 RS3000	101	01/72 – 03/74	3312	
CAPRI Coupe	3.0 RS3000	101	01/72 – 03/74	3484	
CORSAIR Hatchback (UA)	2.4 i	96	10/89 – 09/92	3700	
CORSAIR Hatchback (UA)	2.4 i	96	10/89 – 09/92	4087	
CORSAIR Saloon (UA)	2.4 i	96	10/89 – 09/92	3700	
CORSAIR Saloon (UA)	2.4 i	96	10/89 – 09/92	4087	
CORTINA Estate (TC)	1.6	53	10/72 – 09/74	3312	
CORTINA Estate (TC)	1.6	53	10/72 – 09/74	3484	
CORTINA Estate (TC)	2.0	66	10/72 – 09/74	3312	
CORTINA Estate (TC)	2.0	66	10/72 – 09/74	3484	
CORTINA Estate (TC)	3.3	82	10/72 – 09/74	3312	
CORTINA Estate (TC)	3.3	82	10/72 – 09/74	3484	
CORTINA Estate (TD)	2.0	66	10/74 – 05/77	3312	
CORTINA Estate (TD)	2.0	66	10/74 – 05/77	3484	
CORTINA Estate (TD)	3.3 200ci	82	10/74 – 05/77	3312	
CORTINA Estate (TD)	3.3 200ci	82	10/74 – 05/77	3484	
CORTINA Estate (TD)	4.1 250ci	127	10/74 – 05/77	3312	
CORTINA Estate (TD)	4.1 250ci	127	10/74 – 05/77	3484	
CORTINA Saloon (TC)	3.3 200ci	82	10/72 – 09/74	3312	
CORTINA Saloon (TC)	3.3 200ci	82	10/72 – 09/74	3484	
CORTINA Saloon (TC)	4.1 250ci	127	10/72 – 09/74	3312	
CORTINA Saloon (TC)	4.1 250ci	127	10/72 – 09/74	3484	
CORTINA Saloon (TD)	2.0	66	10/74 – 05/77	3312	
CORTINA Saloon (TD)	2.0	66	10/74 – 05/77	3484	
CORTINA Saloon (TD)	3.3 200ci	82	10/74 – 05/77	3312	
CORTINA Saloon (TD)	3.3 200ci	82	10/74 – 05/77	3484	
CORTINA Saloon (TD)	4.1 250ci	127	10/74 – 05/77	3312	
CORTINA Saloon (TD)	4.1 250ci	127	10/74 – 05/77	3484	
COUGAR Coupe (SW, SX)	2.5	125	10/99 – 03/03	3558	
COUGAR Coupe (SW, SX)	2.5	125	10/99 – 03/03	3593	
COURIER Pickup (PD)	2.5 D All-wheel Drive	63	05/96 – 02/99	3781	
COURIER Pickup (PD)	2.6 i 4x4	92	05/96 – 02/99	3781	
COURIER Pickup (PE)	2.5 TD	86	02/99 – 11/02	3767	
COURIER Pickup (PE)	2.5 TD 4x4	86	02/99 – 11/02	3767	

MAKE & MODEL		KW	YEAR		
FORD AUSTRALIA					
COURIER Pickup (PE)	2.6 i	92	02/99 – 11/02	3767	
COURIER Pickup (PE)	2.6 i 4x4	92	02/99 – 11/02	3767	
COURIER Pickup (PG)	2.5 TD	86	11/02 – 07/04	3767	
COURIER Pickup (PG)	2.5 TD 4x4	86	11/02 – 07/04	3767	
COURIER Pickup (PG)	2.6 i	92	11/02 – 07/04	3767	
COURIER Pickup (PG)	2.6 i 4x4	92	11/02 – 07/04	3767	
COURIER Pickup (PH)	2.5 TD	86	08/04 – 12/06	3767	
COURIER Pickup (PH)	2.5 TD All-wheel Drive	86	08/04 – 12/06	3767	
COURIER Pickup (PH)	2.6 All-wheel Drive	92	08/04 – 02/06	3767	
COURIER Pickup (PH)	2.6 i	92	08/04 – 02/06	3767	
COURIER Pickup (PH)	4.0 i	154	02/05 – 12/06	3767	
COURIER Pickup (PH)	4.0 i 4x4	154	02/05 – 12/06	3767	
COURIER Pickup (PH)	4.0 i 4x4	154	02/05 – 12/06	3988	
COURIER Platform/Chassis (PE)	2.5 TD	86	02/99 – 11/02	3767	
COURIER Platform/Chassis (PE)	2.5 TD 4x4	86	02/99 – 11/02	3767	
COURIER Platform/Chassis (PE)	2.6 i	92	02/99 – 11/02	3767	
COURIER Platform/Chassis (PE)	2.6 i 4x4	92	02/99 – 11/02	3767	
COURIER Platform/Chassis (PG)	2.5 TD	86	11/02 – 07/04	3767	
COURIER Platform/Chassis (PG)	2.5 TD 4x4	86	11/02 – 07/04	3767	
COURIER Platform/Chassis (PG)	2.6 i	92	11/02 – 07/04	3767	
COURIER Platform/Chassis (PG)	2.6 i 4x4	92	11/02 – 07/04	3767	
COURIER Platform/Chassis (PH)	2.5 TD	86	08/04 – 12/06	3767	
COURIER Platform/Chassis (PH)	2.5 TD 4x4	86	08/04 – 12/06	3767	
COURIER Platform/Chassis (PH)	2.5 TD 4x4	86	08/04 – 12/06	3988	
COURIER Platform/Chassis (PH)	2.6 i	92	08/04 – 02/06	3767	
COURIER Platform/Chassis (PH)	2.6 i 4x4	92	08/04 – 02/06	3767	
COURIER Platform/Chassis (PH)	2.6 i 4x4	92	08/04 – 02/06	3988	
ECONOVAN Box (JG)	2.0	63	06/97 – 01/00	3463	
ECONOVAN Box (JG)	2.0	63	06/97 – 01/00	3499	
ECONOVAN Box (JH)	ECONOVAN Box (JH)	63	01/00 – 02/03	3892	
ECONOVAN Box (JH)	ECONOVAN Box (JH)	67	03/03 – 07/06	3892	
ECONOVAN Box (JH)	ECONOVAN Box (JH)	71	03/03 – 07/06	3892	
ECONOVAN Platform/Chassis (JG)	2.0	63	06/97 – 01/00	3463	
ECONOVAN Platform/Chassis (JG)	2.0	63	06/97 – 01/00	3499	
ESCAPE (BA, ZA, ZB, ZC, ZD)	3.0 All-wheel Drive	150	03/01 – 03/04	4119	4215
ESCORT Box	1.3	40	12/74 – 08/80	3312	
ESCORT Box	1.3	40	12/74 – 08/80	3484	
ESCORT Box	1.3	42	06/70 – 02/76	3312	
ESCORT Box	1.3	42	06/70 – 02/76	3484	
ESCORT Box	1.6	62	01/74 – 01/80	3312	
ESCORT Box	1.6	62	01/74 – 01/80	3484	
ESCORT Box	2.0	80	08/75 – 08/80	3312	
ESCORT Box	2.0	80	08/75 – 08/80	3484	
ESCORT Saloon	1.1	32	01/68 – 12/74	3311	
ESCORT Saloon	1.3	40	12/74 – 08/80	3312	
ESCORT Saloon	1.3	40	12/74 – 08/80	3484	
ESCORT Saloon	1.3	42	06/70 – 02/76	3311	
ESCORT Saloon	1.6	62	12/74 – 08/80	3312	
ESCORT Saloon	1.6	62	12/74 – 08/80	3484	
ESCORT Saloon	2.0	80	08/75 – 08/80	3312	
ESCORT Saloon	2.0	80	08/75 – 08/80	3484	
EXPLORER (U_)	4.0 (UN, UP)	119	10/96 – 10/01	3781	
EXPLORER (U_)	4.0 (UN, UP, UQ, US)	152	09/96 – 10/01	3781	
FAIRLANE Saloon (ZB)	3.6 221ci	97	03/68 – 06/69	3312	
FAIRLANE Saloon (ZB)	3.6 221ci	97	03/68 – 06/69	3484	
FAIRLANE Saloon (ZB)	4.9 V8 302ci	157	03/68 – 06/69	3312	
FAIRLANE Saloon (ZB)	4.9 V8 302ci	157	03/68 – 06/69	3484	
FESTIVA (WA)	1.3	46	10/91 – 03/94	3723	
FESTIVA (WB)	1.3 i	47	04/94 – 12/97	3522	
FESTIVA (WD)	1.3 i	47	01/97 – 12/97	3522	
FESTIVA (WD)	1.5 i	67	01/97 – 12/97	3522	
FESTIVA (WF)	1.3 i	47	01/98 – 04/01	3522	
FESTIVA (WF)	1.5 i	56	01/98 – 12/01	3522	
FIESTA Hatchback (WP, WQ)	1.6 i	74	04/04 – 12/08	3877	
FIESTA Hatchback (WP, WQ)	2.0 i XR4	110	06/07 – 03/09		3755
FOCUS Hatchback (LR)	1.8 i	85	09/02 – 04/05		3755
FOCUS Hatchback (LR)	2.0 I ST170	127	04/03 – 04/05	3801	3755
FOCUS Hatchback (LR)	2.0 i	96	09/02 – 04/05		3755
FOCUS Hatchback (LT)	2.0 i	107	05/05 – 03/09	3885	3853/1
FOCUS Hatchback (LT)	2.0 TDCi	100	04/07 – 03/09	3885	3853/1
FOCUS Hatchback (LT)	2.5 i XR5 Turbo	166	04/06 – 05/08		3853/1
FOCUS Hatchback (LV)	2.0 i	107	03/09 – 08/11	3885	3853/1
FOCUS Hatchback (LV)	2.5 i XR5 Turbo	166	03/09 – 08/11		3853/1
FOCUS Saloon (LR)	1.8 i	85	09/02 – 04/05		3755
FOCUS Saloon (LR)	2.0 i	96	09/02 – 04/05		3755
FOCUS Saloon (LS, LT)	2.0 i	107	05/05 – 03/09	3885	3853/1

MAKE & MODEL   		KW	YEAR		
FORD AUSTRALIA					
FOCUS Saloon (LV)	2.0 i	107	03/09 – 08/11	3885	3853/1
FOCUS Saloon (LV)	2.0 TDCi	100	03/09 – 08/11	3885	3853/1
KUGA (TE)	1.6 EcoBoost	110	04/13 – 11/14	3885	
KUGA (TE)	1.6 EcoBoost AWD	134	04/13 – 11/14	3885	
LASER Estate (KE)	1.6	54	03/87 – 12/94	3449	
LASER Estate (KE)	1.6 i	61	10/87 – 04/90	3449	
LASER Hatchback (KF)	1.6	64	03/90 – 09/91	3522	
LASER Hatchback (KF)	1.6	64	03/90 – 09/91	3640	
LASER Hatchback (KF)	1.8 i	76	03/90 – 09/91	3522	
LASER Hatchback (KF)	1.8 i	76	03/90 – 09/91	3640	
LASER Hatchback (KF)	1.8 i TX3	92	03/90 – 09/91	3640	
LASER Hatchback (KF)	1.8 i TX3 Turbo	117	06/90 – 09/91	3522	
LASER Hatchback (KF)	1.8 i TX3 Turbo	117	06/90 – 09/91	3640	
LASER Hatchback (KH)	1.6	64	10/91 – 10/94	3522	
LASER Hatchback (KH)	1.6	64	10/91 – 10/94	3640	
LASER Hatchback (KH)	1.8 i	76	10/91 – 10/94	3522	
LASER Hatchback (KH)	1.8 i	76	10/91 – 10/94	3640	
LASER Hatchback (KH)	1.8 i	92	10/92 – 10/94	3522	
LASER Hatchback (KH)	1.8 i	92	10/92 – 10/94	3640	
LASER Hatchback (KH)	1.8 i TX3 Turbo	117	10/91 – 07/93	3522	
LASER Hatchback (KH)	1.8 i TX3 Turbo	117	10/91 – 07/93	3640	
LASER Hatchback (KJ)	1.6 i	80	10/94 – 03/99	3640	
LASER Hatchback (KJ)	1.8 i	92	10/94 – 03/99	3640	
LASER Hatchback (KN)	1.6 i	78	03/99 – 04/01	3780	
LASER Hatchback (KN)	1.8 i	92	03/99 – 04/01	3832	
LASER Hatchback (KQ, KN III)	1.6 i	78	04/01 – 09/02	3780	
LASER Hatchback (KQ, KN III)	1.8 i	92	04/01 – 09/02	3832	
LASER Hatchback (KQ, KN III)	2.0 i	98	04/01 – 09/02	3832	
LASER Saloon (KF)	1.6	64	03/90 – 09/91	3522	
LASER Saloon (KF)	1.6	64	03/90 – 09/91	3640	
LASER Saloon (KF)	1.8	76	03/90 – 09/91	3522	
LASER Saloon (KF)	1.8	76	03/90 – 09/91	3640	
LASER Saloon (KH)	1.6	64	10/91 – 10/94	3522	
LASER Saloon (KH)	1.6	64	10/91 – 10/94	3640	
LASER Saloon (KH)	1.8 i	76	10/91 – 10/94	3522	
LASER Saloon (KH)	1.8 i	76	10/91 – 10/94	3640	
LASER Saloon (KJ)	1.6 i	80	10/94 – 03/99	3640	
LASER Saloon (KJ)	1.8 i	92	10/94 – 03/99	3640	
LASER Saloon (KN)	1.6 i	78	03/99 – 04/01	3780	
LASER Saloon (KN)	1.8 i	92	03/99 – 04/01	3832	
LASER Saloon (KQ)	1.6 i	78	04/01 – 09/02	3780	
LASER Saloon (KQ)	1.8 i	92	04/01 – 09/02	3832	
MAVERICK Closed Off-Road Vehicle (DA)	4.2	125	02/88 – 03/94	3415	
MAVERICK Closed Off-Road Vehicle (DA)	4.2	125	02/88 – 03/94	3667	
MAVERICK Closed Off-Road Vehicle (DA)	4.2 TD	75	02/88 – 03/94	3415	
MAVERICK Pickup (DA)	4.2 TD	75	02/88 – 03/94	3415	
MAVERICK Platform/Chassis (DA)	4.2 TD	75	02/88 – 03/94	3415	
MONDEO Estate (HB, HC, HD)	2.0 i	96	07/95 – 12/99	3558	
MONDEO Estate (HB, HC, HD)	2.0 i	96	07/95 – 12/99	3593	
MONDEO Estate (MB, MC)	2.0 TDCi	103	03/12 – 01/15	4161	4157
MONDEO Estate (MB, MC)	2.3 i 16 V	118	06/09 – 01/15	4161	4157
MONDEO Hatchback (HA, HB, HC)	2.0	96	07/95 – 02/00	3558	
MONDEO Hatchback (HA, HB, HC)	2.0	96	07/95 – 02/00	3593	
MONDEO Hatchback (HE)	2.0	94	02/00 – 04/01	4100	4093
MONDEO Hatchback (MA, MB, MC)	2.0 i 16V	149	03/12 – 01/15	4161	4157
MONDEO Hatchback (MA, MB, MC)	2.0 TDCi	103	03/07 – 01/15	4161	4157
MONDEO Hatchback (MA, MB, MC)	2.3 i 16V	118	03/07 – 07/10	4161	4157
MONDEO Hatchback (MA, MB, MC)	XR5 Turbo	162	03/07 – 01/15	4161	4157
MONDEO Saloon (HA, HB)	2.0	96	07/95 – 02/00	3593	4093
MONDEO Saloon (HA, HB)	2.0	96	07/95 – 02/00	3558	
MONDEO Saloon (HE)	2.0	94	02/00 – 04/01	4100	
MONDEO Saloon (HE)	2.5	125	02/00 – 04/01	3593	4157
MONDEO Saloon (HE)	2.5	125	02/00 – 04/01	3558	
MONDEO Saloon (MA, MB)	2.0 TDCi	103	03/07 – 01/15	4161	4157
MONDEO Saloon (MA, MB)	2.3 i 16 V	118	03/07 – 01/15	4161	
MUSTANG Coupe	4.6 V8	224	12.2004 - 12.2014	4332	
PROBE (ST, SU, SV)	2.5	120	07/94 – 01/98	3832	3833
RANGER Pickup (PJ)	2.5 TDdi	105	11/06 – 03/09	3767	
RANGER Pickup (PJ)	2.5 TDdi All-wheel Drive	105	11/06 – 03/09	3767	
RANGER Pickup (PJ)	3.0 TD	115	11/06 – 03/09	3988	
RANGER Pickup (PJ)	3.0 TD All-wheel Drive	115	11/06 – 03/09	3988	
RANGER Pickup (PK)	2.5 TDdi	105	03/09 – 11/11	3988	
RANGER Pickup (PK)	3.0 TDdi 4x4	115	03/09 – 11/11	3988	
RANGER Platform/Chassis (PJ)	2.5 TDdi	105	11/06 – 03/09	3767	
RANGER Platform/Chassis (PK)	2.5 TDdi 4x4	105	03/09 – 11/11	3988	
RANGER Platform/Chassis (PK)	3.0 TDdi	115	03/09 – 11/11	3988	

MAKE & MODEL		KW	YEAR		
FORD AUSTRALIA					
SPECTRON Box	1.6	52	01/83 – 05/84	3574	
SPECTRON Box	1.8	59	05/84 – 12/89	3574	
SPECTRON Box	2.0	63	03/86 – 04/90	3574	
SPECTRON Box	2.0 4x4	63	03/86 – 04/90	3574	
TELSTAR Hatchback (AT)	2.0 TX5	70	11/87 – 09/89	3437	
TELSTAR Hatchback (AT)	2.2	85	11/87 – 09/89	3437	
TELSTAR Hatchback (AT)	2.2 TX5 EFi Turbo	100	11/87 – 09/89	3437	
TELSTAR Hatchback (AV)	2.2 TX5 EFi	86	01/90 – 01/92	3437	
TELSTAR Hatchback (AV)	2.2 TX5 EFi Turbo	100	01/90 – 01/92	3437	
TELSTAR Hatchback (AX)	2.0 TX5 EFi	85	01/92 – 08/94	3832	
TELSTAR Hatchback (AX)	2.5	120	01/92 – 08/94	3832	
TELSTAR Hatchback (AX)	2.5	123	01/92 – 08/94	3832	
TELSTAR Hatchback (AY)	2.0 EFi	85	10/94 – 11/96	3832	
TELSTAR Hatchback (AY)	2.5 TX5 EFi	120	10/94 – 11/96	3832	
TELSTAR Saloon (AT)	2.0	70	11/87 – 09/89	3437	
TELSTAR Saloon (AT)	2.2	85	11/87 – 09/89	3437	
TELSTAR Saloon (AX)	2.0	85	01/92 – 08/94	3832	
TELSTAR Saloon (AX)	2.5	120	01/92 – 08/94	3832	
TELSTAR Saloon (AX)	2.5	123	08/94 – 10/95	3832	
TELSTAR Saloon (AY)	2.0 EFi	85	10/94 – 11/96	3832	
TORANA Saloon (LJ)	1.2	51	02/72 – 03/74	3311	
TOURNEO CUSTOM Bus	2.2 TDCi	114	05/14 -	4174	4175
TRANSIT Box (125, 175)	4.1	94	01/77 – 12/83	3416	
TRANSIT Box (VM)	2.2 TD	81	09/06 – 12/14	3920	3907
TRANSIT Box (VM)	2.2 TD	81	09/06 – 12/14	3906	
TRANSIT Box (VM)	2.2 TDCi [RWD]	114	10/11 – 12/14	3906	3907
TRANSIT Box (VM)	2.3 i	104	09/06 – 03/08	3906	3907
TRANSIT Box (VM)	2.4 D	74	07/06 – 12/14	3906	3907
TRANSIT Box (VM)	2.4 D	85	07/06 – 12/14	3906	3907
TRANSIT Box (VM)	2.4 TD	103	07/06 – 09/06	3906	3907
TRANSIT Box (VM)	2.4 TD All-wheel Drive	103	11/06 – 12/14	3906	3907
TRANSIT Box (VO)	2.2 TDCi [RWD]	114	09/14 -	4174	4175
TRANSIT Bus (115)	4.1	94	05/73 – 09/78	3416	
TRANSIT Bus (125)	4.1	94	01/77 – 12/83	3416	
TRANSIT Bus (VF, VG)	2.0	84	06/94 – 03/00	3445	
TRANSIT Bus (VF, VG)	2.0	84	06/94 – 03/00	3473	
TRANSIT Bus (VF, VG)	2.5 D	55	08/94 – 06/00	3445	
TRANSIT Bus (VF, VG)	2.5 D	55	08/94 – 06/00	3473	
TRANSIT Bus (VF, VG)	2.5 TD	63	01/95 – 03/00	3445	
TRANSIT Bus (VF, VG)	2.5 TD	63	01/95 – 03/00	3473	
TRANSIT Bus (VF, VG)	2.5 TD	74	07/94 – 03/00	3445	
TRANSIT Bus (VF, VG)	2.5 TD	74	07/94 – 03/00	3473	
TRANSIT Bus (VF, VG)	2.5 TD	85	08/97 – 03/00	3445	
TRANSIT Bus (VF, VG)	2.5 TD	85	08/97 – 03/00	3473	
TRANSIT Bus (VH, VJ)	2.3	107	08/00 – 09/06	3784	
TRANSIT Bus (VH, VJ)	2.4 D	55	01/00 – 09/06	3784	
TRANSIT Bus (VH, VJ)	2.4 D	66	01/00 – 09/06	3784	
TRANSIT Bus (VH, VJ)	2.4 D	85	03/04 – 09/06	3784	
TRANSIT Bus (VH, VJ)	2.4 D	88	01/00 – 09/06	3784	
TRANSIT Bus (VH, VJ)	2.4 D	92	07/01 – 09/06	3784	
TRANSIT Bus (VH, VJ)	2.4 D	101	03/04 – 09/06	3784	
TRANSIT Bus (VM)	2.2 TDCi [RWD]	114	10/11 – 12/14	3906	3907
TRANSIT Bus (VM)	2.4 D	74	07/06 -	3906	3907
TRANSIT Bus (VM)	2.4 D	85	07/06 -	3906	3907
TRANSIT Bus (VM)	2.4 TD	103	07/06 -	3906	3907
TRANSIT Bus (VM)	2.4 TD All-wheel Drive	103	11/06 -	3906	3907
TRANSIT Platform/Chassis (VF, VG)	2.0	84	08/94 – 03/00	3445	
TRANSIT Platform/Chassis (VF, VG)	2.0	84	08/94 – 03/00	3473	
TRANSIT Platform/Chassis (VF, VG)	2.5 D	52	08/94 – 03/00	3445	
TRANSIT Platform/Chassis (VF, VG)	2.5 D	52	08/94 – 03/00	3473	
TRANSIT Platform/Chassis (VF, VG)	2.5 D	55	10/98 – 03/00	3445	
TRANSIT Platform/Chassis (VF, VG)	2.5 D	55	10/98 – 03/00	3473	
TRANSIT Platform/Chassis (VF, VG)	2.5 D	56	08/94 – 03/00	3445	
TRANSIT Platform/Chassis (VF, VG)	2.5 D	56	08/94 – 03/00	3473	
TRANSIT Platform/Chassis (VF, VG)	2.5 TD	63	08/94 – 03/00	3445	
TRANSIT Platform/Chassis (VF, VG)	2.5 TD	63	08/94 – 03/00	3473	
TRANSIT Platform/Chassis (VF, VG)	2.5 TD	74	08/94 – 03/00	3445	
TRANSIT Platform/Chassis (VF, VG)	2.5 TD	74	08/94 – 03/00	3473	
TRANSIT Platform/Chassis (VF, VG)	2.5 TD	85	05/99 – 03/00	3445	
TRANSIT Platform/Chassis (VF, VG)	2.5 TD	85	05/99 – 03/00	3473	
TRANSIT Platform/Chassis (VH, VJ)	2.4 D	55	01/00 – 09/06	3784	
TRANSIT Platform/Chassis (VH, VJ)	2.4 D	66	01/00 – 09/06	3784	
TRANSIT Platform/Chassis (VH, VJ)	2.4 D	85	03/04 – 07/06	3784	
TRANSIT Platform/Chassis (VH, VJ)	2.4 D	88	01/00 – 09/06	3784	
TRANSIT Platform/Chassis (VH, VJ)	2.4 D	92	07/01 – 09/06	3784	
TRANSIT Platform/Chassis (VH, VJ)	2.4 D	101	03/04 – 09/06	3784	

MAKE & MODEL   		KW	YEAR		
FORD AUSTRALIA					
TRANSIT Platform/Chassis (VM)	2.2 TDCi [RWD]	114	10/11 – 12/14	3906	3907
TRANSIT Platform/Chassis (VM)	2.4 D	74	07/06 – 12/14	3906	3907
TRANSIT Platform/Chassis (VM)	2.4 D	85	07/06 – 12/14	3906	3907
TRANSIT Platform/Chassis (VM)	2.4 TD	103	07/06 – 12/14	3906	3907
TRANSIT Platform/Chassis (VM)	2.4 TD All-wheel Drive	103	11/06 – 12/14	3906	3907
TRANSIT Platform/Chassis (VO)	2.2 TDCi [RWD]	114	09/14 -	4174	4175
FORD USA					
CONTOUR	2.0	96	09/97 – 08/00	3558	
CONTOUR	2.0	96	09/97 – 08/00	3593	
CONTOUR	2.0 S	93	08/93 – 08/96		4214
CONTOUR	2.5	127	09/97 – 08/00	3558	
CONTOUR	2.5	127	09/97 – 08/00	3593	
CONTOUR	2.5 SE	127	08/93 – 08/96		4214
CONTOUR	2.5 SVT	149	09/97 – 08/00	3593	
CONTOUR	2.5 SVT	149	09/97 – 08/00	3558	
E SERIES Box	42	147	01/95 – 12/98	3781	
E SERIES Box	50	149	01/93 – 12/95	3781	
E SERIES Box	58	156	01/93 – 12/98	3781	
E SERIES Box	75	210	01/93 – 12/98	3781	
E SERIES Box	7.3 TD	132	01/93 – 12/98	3781	
E SERIES Bus	49	107	01/93 – 10/96	3781	
E SERIES Bus	7.3 TD	132	01/93 – 12/98	3781	
EDGE (U387)	3.5	198	08/06 -		4270
EDGE (U387)	3.5	213	01/10 -		4270
EDGE II (CD539)	2.0	183	09/14 -		4270
EDGE II (CD539)	2.0 AWD	183	09/14 -		4270
EDGE II (CD539)	2.0 TDCi (T8CC)	132	08/15 -		4270
EDGE II (CD539)	2.0 TDCi (T8CM)	132	08/15 -		4270
EDGE II (CD539)	2.0 TDCi Bi-Turbo (T9CE)	154	08/15 -		4270
EDGE II (CD539)	2.0 TDCi Bi-Turbo (T9CF)	154	08/15 -		4270
EDGE II (CD539)	2.7	239	09/14 -		4270
EDGE II (CD539)	2.7 AWD	239	09/14 -		4270
EDGE II (CD539)	3.5	213	09/14 -		4270
ESCAPE	2.0	91	01/01 – 02/04	4119	4215
ESCAPE	2.3 Hybrid 4x4	95	03/01 – 07/07	4119	4215
ESCAPE	2.3 Hybrid 4x4	110	04/04 – 07/07	4119	4215
ESCAPE	3.0 4x4	145	01/01 – 04/04	4119	4215
ESCAPE II (U.S.A.)	2.3	99	08/07 -		4270
ESCAPE II (U.S.A.)	2.3	110	08/07 -		4270
ESCAPE II (U.S.A.)	2.3	114	09/07 – 12/08		4270
ESCAPE II (U.S.A.)	2.5	114	01/09 – 12/12		4270
ESCAPE II (U.S.A.)	2.5	126	01/09 – 12/12		4270
ESCAPE II (U.S.A.)	2.5	128	09/08 – 12/12		4270
ESCAPE II (U.S.A.)	3.0	149	08/07 -		4270
ESCAPE II (U.S.A.)	3.0	176	01/09 – 12/12		4270
ESCAPE II (U.S.A.)	3.0	179	09/07 – 12/08		4270
EXPLORER (U2)	4.0	115	11/94 – 08/96	3781	
EXPLORER (U2)	4.0	150	10/99 – 12/01	3781	4186
EXPLORER (U2)	4.0	152	09/96 – 12/01	3781	4186
EXPLORER (U2)	4.0 4WD	150	10/99 – 12/01	3781	
EXPLORER (U2)	4.0 V6 4WD	115	03/95 – 12/01	3781	4186
EXPLORER (U2)	4.0 V6 4WD	150	10/98 – 12/01	3781	4186
EXPLORER (U2)	4.0 V6 4WD	152	10/96 – 12/01	3781	
EXPLORER (U2)	5.0 4WD	157	01/96 – 12/01	3781	4186
EXPLORER (UN46)	4.0 V6 4WD	121	01/93 – 12/94	3781	4186
FIVE HUNDRED	3.0	151	08/04 -		4058
FUSION (U.S.A.)	2.3 16V	117	06/05 -		4270
FUSION (U.S.A.)	2.5	127	09/12 -		4270
FUSION (U.S.A.)	3.0	176	08/05 -		4270
FUSION (U.S.A.)	3.0 A las 4 ruedas	179	08/05 -		4270
FUSION (U.S.A.)	3.0 V6 24V	163	06/05 -		4270
FUSION (U.S.A.)	3.5	193	09/06 -		4270
MUSTANG Convertible	4.0 V6	157	12.2005 - 12.2010	4332	
MUSTANG Convertible	4.6 V8	224	09.2005 -	4332	
MUSTANG Coupe	4.0 V6	157	12.2004 - 12.2010	4332	
MUSTANG Coupe	4.6 V8	224	12.2004 -	4332	
MUSTANG Coupe	5.4 V8	355	01.2006 -	4332	
PROBE I	2.2	82	08/88 0 – 7/93	3437	
PROBE I	2.2 GT	108	08/88 – 12/92	3437	
PROBE I	3.0 V6	104	08/88 – 07/93	3437	
PROBE II (ECP)	2.0 16V	85	10/93 – 03/98	3832	3833
PROBE II (ECP)	2.5 V6 24V	119	10/93 – 03/98	3832	3833
PROBE II (ECP)	2.5 V6 24V	120	12/94 – 03/98	3832	3833
RANGER	2.3	72	10/90 – 12/95	3781	
RANGER	3.0	99	10/90 – 12/96	3781	
RANGER	3.0 4x4	99	10/90 – 12/96	3781	

MAKE & MODEL		KW	YEAR		
FORD USA					
RANGER	4.0 4x4	114	10/90 – 12/98	3781	
WINDSTAR (A3)	3.0 V6	108	02/99 – 12/00		4186
WINDSTAR (A3)	3.0 V6	109	03/95 – 02/99		4186
WINDSTAR (A3)	3.8 V6	149	01/95 – 06/98		4186
FSO					
125P	1.3 1300	47	10/67 – 08/92	3316	3317
125P	1.5 1500	55	10/67 – 08/92	3316	3317
125P Estate	1.3	47	10/67 – 08/92	3316	3317
125P Estate	1.5	55	10/67 – 08/92	3316	3317
125P Pickup	1.5	55	06/75 – 12/89	3316	3317
LANOS Hatchback	1.4	55	05/04 – 10/08	3623	
LANOS Hatchback	1.5	63	05/04 – 10/08	3623	
LANOS Hatchback	1.6 16V	78	05/04 – 10/08	3470	
LANOS Hatchback	1.6 16V	78	05/04 – 10/08	3505	
LANOS Hatchback	1.6 16V	78	05/04 – 10/08	3615	
LANOS Saloon	1.4	55	05/04 – 10/08	3623	
LANOS Saloon	1.5	63	05/04 – 10/08	3623	
LANOS Saloon	1.6 16V	78	05/04 – 10/08	3470	
LANOS Saloon	1.6 16V	78	05/04 – 10/08	3505	
LANOS Saloon	1.6 16V	78	05/04 – 10/08	3615	
POLONEZ I	1.3	48	01/78 – 12/80	3316	3317
POLONEZ I	1.5	55	10/77 – 08/88	3316	3317
POLONEZ I	1.5	60	01/78 – 08/88	3316	3317
POLONEZ I	1.5 Turbo	70	01/78 – 12/91	3316	3317
POLONEZ I	1.6	64	08/86 – 08/88	3316	3317
POLONEZ II	1.5	55	08/88 – 08/92	3316	3317
POLONEZ II	1.5 i	55	08/88 – 08/92	3316	3317
POLONEZ II	1.6	64	08/88 – 08/92	3316	3317
POLONEZ II	1.9 D	51	08/88 – 08/92	3316	3317
POLONEZ III	1.4 i 16V	76	09/92 – 03/02	3316	3317
POLONEZ III	1.5	55	05/94 – 12/97	3316	
POLONEZ III	1.6 i	57	09/92 – 03/02	3316	3317
POLONEZ III	1.8	81	02/03 – 01/05	3316	3317
POLONEZ III	1.9 D	51	09/92 – 03/02	3316	3317
POLONEZ III Saloon	1.6 GLi	59	03/96 – 03/02	3316	3317
POLONEZ III Saloon	1.6 i	57	09/92 – 03/02	3316	3317
POLONEZ Pickup	1.4 i 16V	76	04/94 – 09/98	3316	3317
POLONEZ Pickup	1.6 i	57	04/94 – 09/98	3316	3317
POLONEZ Pickup	1.9 D	51	04/94 – 09/98	3316	3317
GAZ					
GAZELLE Next	4.5 T		01.2018 -		4377
GEELY					
VISION	1.5	102	05/09 – 12/13		3876
VISION	1.8	101	12/05 -		3876
VISION	1.8	102	08/06 – 12/12		3876
GEO					
Metro 1.0	3L <6>	41	09/1988 - 12/1998	3721	
Metro 44256 i	G13BA	52	01/1989 - 12/1998	3721	
Metro Cabrio 1.0	3L <6>	41	01/1989 - 12/1998	3721	
Metro Cabrio 44256 i	G13BA	52	01/1989 - 12/1998	3721	
Metro Sedan 44256 i	G13BA	52	01/1989 - 12/1998	3721	
GREAT WALL					
SING	2.2 DN	76	08/03 – 05/10	3714	
SING	2.8 DNX EGR	57	08/03 – 01/08	3714	
SING	2.8 Turbo	70	01/08 – 05/10	3714	
SING Closed Off-Road Vehicle	2.2	75	06/05 – 05/10	3714	
SING Closed Off-Road Vehicle	2.8 Turbo	70	01/09 – 05/10	3714	
HAFEI					
SAIBAO 3 Saloon	1.6	74	04/05 – 12/10	3632	
SAIBAO 5 Saloon	1.6	74	01/07 -	3632	
SAIBAO 5 Saloon	1.8	98	01/07 – 12/08	3632	
HAIMA (FAW)					
3 Saloon	1.6	85	09/09 – 12/12	3832	
3 Saloon	1.8	90	06/07 – 12/10	3832	
FAMILY II	1.6	71	09/06 – 11/10		3875
FAMILY II	1.6	74	03/07 – 11/10		3875
FAMILY II	1.6	85	09/06 – 11/10		3875
FREEMA	1.8	90	09/10 -	3832	
HAPPIN Saloon	1.3	71	07/11 -	3832	
HAPPIN Saloon	1.6	74	06/07 – 05/09	3832	
HAPPIN Saloon	1.6	89	05/09 – 12/09	3832	
HUANDONG	1.6	88	04/09 – 12/13	3832	
HUANDONG	1.8	90	12/08 – 12/10	3832	
PREMACY MPV	1.6	85	10/09 -	3832	
PREMACY MPV	1.8	90	03/07 – 10/09	3832	

MAKE & MODEL   		KW	YEAR		
HAWTAI					
SANTA FE C9	1.8 Turbo	118	09/09 – 12/11	3960	3989
SANTA FE C9	2.0 TDI All-wheel Drive	93	09/09 – 12/10	3960	3989
SANTA FE C9	2.7 All-wheel Drive	132	09/09 – 12/11	3960	3989
TERRACAN T9	2.4	93	11/09 – 12/11	4118	
TERRACAN T9	2.4 All-wheel Drive	93	11/09 – 12/11	4118	
HOLDEN					
ADVENTRA (VY)	3.6 i V6 (H7)	195	05/06 – 07/09	4189	
ADVENTRA (VY)	5.7 i V8 (LS1)	250	11/04 – 12/07	4189	
ADVENTRA (VY)	5.7 i V8 CX8/LX8 (LS1)	235	08/03 – 10/04	4189	
ADVENTRA Estate (VY)	5.7 i V8 CX8/LX8 AWD	235	08/03 – 10/04		4188
ADVENTRA Estate (VZ)	3.6 i V6 AWD	195	05/06 – 07/09		4188
ADVENTRA Estate (VZ)	5.7 i V8 AWD	250	11/04 – 12/07		4188
ADVENTRA Estate (VZ)	5.7 i V8 CX8/LX8 AWD	235	10/04 – 12/07		4188
APOLLO Estate (JK)	2.0	82	08/89 – 08/91		3776
APOLLO Estate (JK)	2.0 i	88	08/89 – 08/91		3776
APOLLO Estate (JL)	2.0 i	88	08/91 – 02/93		3776
APOLLO Estate (JM)	2.2 i	93	03/93 – 05/95	3651	3776
APOLLO Estate (JM)	2.2 i	93	03/93 – 05/95	3554	
APOLLO Estate (JM)	3.0 i	136	03/93 – 05/95	4086	3776
APOLLO Estate (JP)	3.0 i	136	01/95 – 05/97	4086	3776
APOLLO Saloon (JK)	2.0	82	08/89 – 07/91		3776
APOLLO Saloon (JK)	2.0 i	88	08/89 – 08/91		3776
APOLLO Saloon (JM)	2.2 i	93	03/93 – 05/95	3651	3776
APOLLO Saloon (JM)	2.2 i	93	03/93 – 05/95	3554	
APOLLO Saloon (JM)	3.0 i	136	03/93 – 05/95	4086	3776
ASTRA (AH)	1.8 i	92	07/05 – 03/07	4042	
ASTRA (AH)	1.8 i	103	04/07 – 03/10	4042	
ASTRA (AH)	1.9 CDTI	88	06/06 – 03/10	4042	
ASTRA (AH)	1.9 CDTI	110	06/06 – 03/10	4042	
ASTRA (AH)	2.2 i	109	12/06 – 03/08	4042	
ASTRA Convertible (TS)	2.0 i Turbo	147	06/02 – 07/04		4040
ASTRA Convertible (TS)	2.2 i	108	06/02 – 12/06	4042	
ASTRA Estate (AH)	1.8 i	103	04/07 – 03/10	4042	
ASTRA Estate (AH)	1.9 CDTI	88	08/08 – 03/10	4042	
ASTRA Hatchback (TR)	1.6 CD	74	08/95 – 09/98	3470	
ASTRA Hatchback (TR)	1.6 CD	74	08/95 – 09/98	3505	
ASTRA Hatchback (TR)	1.6 CD	74	08/95 – 09/98	3615	
ASTRA Hatchback (TR)	1.8 i	85	09/96 – 09/98	3470	3469
ASTRA Hatchback (TR)	1.8 i	85	09/96 – 09/98	3505	
ASTRA Hatchback (TR)	1.8 i	85	09/96 – 09/98	3615	
ASTRA Hatchback (TR)	2.0 GSi	100	08/95 – 09/98	3470	3469
ASTRA Hatchback (TR)	2.0 GSi	100	08/95 – 09/98	3505	
ASTRA Hatchback (TR)	2.0 GSi	100	08/95 – 09/98	3615	
ASTRA Hatchback (TS)	1.8 i	85	02/98 – 08/00	3762	4040
ASTRA Hatchback (TS)	1.8 i	85	02/98 – 08/00	4042	
ASTRA Hatchback (TS)	1.8 i	92	09/00 – 10/04	3762	4040
ASTRA Hatchback (TS)	1.8 i	92	09/00 – 10/04	4042	
ASTRA Hatchback (TS)	2.0 i Turbo	147	05/03 – 07/04		4040
ASTRA Hatchback (TS)	2.2 i	108	09/00 – 07/04	4042	4040
ASTRA Saloon (TR)	1.6 CD	74	08/95 – 01/98	3470	
ASTRA Saloon (TR)	1.6 CD	74	08/95 – 01/98	3505	
ASTRA Saloon (TR)	1.6 CD	74	08/95 – 01/98	3615	
ASTRA Saloon (TR)	1.8 SRi	85	09/96 – 09/98	3470	3469
ASTRA Saloon (TR)	1.8 SRi	85	09/96 – 09/98	3505	
ASTRA Saloon (TR)	1.8 SRi	85	09/96 – 09/98	3615	
ASTRA Saloon (TS)	1.8 i	92	09/00 – 10/04	3762	4040
ASTRA Saloon (TS)	1.8 i	92	09/00 – 10/04	4042	
ASTRA SPORTSBACK (AH)	1.8 i	92	07/05 – 03/08	4042	
ASTRA SPORTSBACK (AH)	1.8 i	103	04/07 – 03/10	4042	
ASTRA SPORTSBACK (AH)	2.0 i Turbo	147	06/06 – 03/10	4042	
ASTRA SPORTSBACK (AH)	2.2	110	12/06 – 03/08	4042	
ASTRA SPORTSBACK (AH)	2.2 i	110	12/06 – 03/10	4042	
ASTRA TWINTOP (AH)	2.2 i	110	03/08 – 03/10	4042	
BARINA Convertible (SB)	1.4 i	60	11/97 – 11/00	3623	
BARINA Hatchback (SB)	1.2 i	33	04/94 – 07/97	3623	
BARINA Hatchback (SB)	1.4 i	44	04/94 – 07/97	3623	
BARINA Hatchback (SB)	1.4 i	60	09/97 – 02/01	3623	
BARINA Hatchback (SB)	1.6 i	78	04/94 – 08/98	3623	
BARINA Hatchback (TK)	1.6 i	77	03/05 – 06/12	3951	
BARINA Hatchback (XC)	1.4 Efi	66	01/04 – 02/05	3846	4040
BARINA Hatchback (XC)	1.4 Sfi	66	09/00 – 12/05	3846	
BARINA Hatchback (XC)	1.8 SRi	92	09/00 – 02/05	3846	
BARINA Saloon (TK)	1.6 i	77	11/05 – 06/12	3951	
CALIBRA (YE)	2.0 i	85	10/91 – 07/95	3470	3469
CALIBRA (YE)	2.0 i	85	10/91 – 07/95	3505	

MAKE & MODEL		KW	YEAR		
HOLDEN					
CALIBRA (YE)	2.0 i	85	10/91 – 07/95	3615	
CALIBRA (YE)	2.0 i 16V	100	07/95 – 11/97	3470	3469
CALIBRA (YE)	2.0 i 16V	100	07/95 – 11/97	3505	
CALIBRA (YE)	2.0 i 16V	100	07/95 – 11/97	3615	
CALIBRA (YE)	2.0 i 16V	110	10/91 – 07/95	3470	3469
CALIBRA (YE)	2.0 i 16V	110	10/91 – 07/95	3505	
CALIBRA (YE)	2.0 i 16V	110	10/91 – 07/95	3615	
CALIBRA (YE)	2.0 i Turbo AWD	150	03/92 – 11/97	3665	3469
CALIBRA (YE)	2.0 i Turbo AWD	150	03/92 – 11/97	3736	
CALIBRA (YE)	2.5 i V6	125	07/95 – 11/97	3665	3469
CALIBRA (YE)	2.5 i V6	125	07/95 – 11/97	3736	
CAPRICE Saloon (WH)	3.8 i V6	147	06/99 – 08/01		4188
CAPRICE Saloon (WH)	3.8 i V6	152	08/01 – 04/03		4188
CAPRICE Saloon (WH)	3.8 i V6 Supercharged	171	06/99 – 08/01		4188
CAPRICE Saloon (WH)	5.7 i V8	220	06/99 – 10/00		4188
CAPRICE Saloon (WH)	5.7 i V8	225	10/00 – 04/03		4188
CAPRICE Saloon (WK)	3.8 i V6	152	05/03 – 07/04		4188
CAPRICE Saloon (WK)	3.8 i V6 Supercharged	171	05/03 – 07/04		4188
CAPRICE Saloon (WK)	5.7 i V8	245	05/03 – 07/04		4188
CAPRICE Saloon (WL)	3.6 i V6	190	08/04 – 07/06		4188
CAPRICE Saloon (WL)	5.7 i V8	250	08/04 – 01/06		4188
CAPRICE Saloon (WL)	6.0 i V8	260	02/06 – 07/06		4188
CAPTIVA (CG)	2.0 TD	110	08/08 – 12/11	3976	
CAPTIVA (CG)	2.0 TD AWD	110	03/07 – 12/11	3976	
CAPTIVA (CG)	2.4 i	103	12/09 – 12/11	3976	
CAPTIVA (CG)	2.4 i AWD	103	12/09 – 12/11	3976	
CAPTIVA (CG)	3.2 i AWD	167	12/06 – 09/08	3976	
CAPTIVA (CG)	3.2 i AWD	169	12/08 – 12/11	3976	
CAPTIVA 5 (CG5)	2.2 TD 4WD	135	03/11 -	3976	
CAPTIVA 5 (CG5)	2.4 i	123	03/11 -	3976	
CASCADA Convertible (CJ)	1.6	125	12/14 -	4149	
COLORADO Pickup (RC)	3.0 TD (TFS85)	120	03/08 – 06/12	4124	
COLORADO Pickup (RC)	3.0 TD 4x4 (TFR85)	120	03/08 – 06/12	4124	
COLORADO Pickup (RC)	3.6 i V6 (TFR27)	157	03/08 – 06/12	4124	
COLORADO Platform/Chassis (RC)	3.0 TD (TFR85)	120	03/08 – 06/12	4124	
COLORADO Platform/Chassis (RC)	3.0 TD 4x4 (TFS85)	120	03/08 – 06/12	4124	
COLORADO Platform/Chassis (RC)	3.6 i V6 (TFR27)	157	03/08 – 06/12	4124	
COMBO Box (SB)	1.4 i	44	03/96 – 07/97	3623	
COMBO Box (XC)	1.4 i	66	04/05 – 12/12	3846	4040
COMBO Box (XC)	1.4 i	66	04/05 – 12/12	4042	
COMBO Box (XC)	1.6 i	62	09/02 – 04/05	3846	4040
COMBO Box (XC)	1.6 i	62	09/02 – 04/05	4042	
COMMODORE (VT)	3.8 i V6 (L36)	147	09/97 – 08/02	4189	
COMMODORE (VT)	3.8 i V6 (L36)	152	09/02 – 08/04	4189	
COMMODORE (VT)	3.8 i V6 Supercharged (L36)	171	09/97 – 08/02	4189	
COMMODORE (VT)	5.0 i V8	195	04/98 – 08/00	4189	
COMMODORE (VZ)	3.6 i V6 (H7)	190	09/04 – 08/07	4189	
COMMODORE Estate (VT)	3.8 i V6	147	09/97 – 08/02		4188
COMMODORE Estate (VT)	5.0 i V8	179	09/97 – 08/02		4188
COMMODORE Estate (VT)	5.7 i V8	220	06/99 – 08/00		4188
COMMODORE Estate (VX)	3.8 i V6	152	09/00 – 09/02		4188
COMMODORE Estate (VX)	5.7 i V8	225	09/00 – 09/02		4188
COMMODORE Estate (VY)	3.8 i V6	152	09/02 – 08/04		4188
COMMODORE Estate (VY)	5.7 i V8	235	09/02 – 08/03		4188
COMMODORE Estate (VZ)	3.6 i V6	175	09/04 – 07/06		4188
COMMODORE Estate (VZ)	3.6 i V6	180	09/04 – 07/07		4188
COMMODORE Estate (VZ)	3.6 i V6 Dual Fuel LPG	175	09/04 – 07/06		4188
COMMODORE Estate (VZ)	5.7 i V8	235	09/04 – 12/05		4188
COMMODORE Estate (VZ)	6.0 i V8	260	01/06 – 01/07		4188
COMMODORE Pickup (VU)	3.8 i V6	147	12/00 – 09/02		4188
COMMODORE Pickup (VU)	5.7 i V8	225	12/00 – 09/02		4188
COMMODORE Pickup (VY)	3.8 i V6	152	09/02 – 08/04		4188
COMMODORE Pickup (VY)	3.8 i V6 Supercharged	171	09/02 – 08/04		4188
COMMODORE Pickup (VY)	5.7 i V8	225	09/02 – 08/03		4188
COMMODORE Pickup (VY)	5.7 i V8	235	09/02 – 08/04		4188
COMMODORE Pickup (VY)	5.7 i V8	245	09/02 – 08/03		4188
COMMODORE Pickup (VZ)	3.6 i V6	175	09/04 – 07/06		4188
COMMODORE Pickup (VZ)	3.6 i V6 All-wheel Drive	190	09/04 – 08/07		4188
COMMODORE Pickup (VZ)	3.6 i V6 Dual Fuel LPG	175	10/06 – 08/07		4188
COMMODORE Pickup (VZ)	5.7 i V8	250	09/04 – 02/06		4188
COMMODORE Pickup (VZ)	6.0 i V8	260	11/05 – 08/07		4188
COMMODORE Saloon (VE)	3.6 i V6	210	09/09 – 05/13		4188
COMMODORE Saloon (VT)	3.8 i V6	147	09/97 – 08/00		4188
COMMODORE Saloon (VT)	3.8 i V6 Supercharged	171	09/97 – 08/00		4188
COMMODORE Saloon (VT)	5.0 i V8	179	09/97 – 06/99		4188
COMMODORE Saloon (VT)	5.0 i V8	195	04/98 – 08/00		4188

MAKE & MODEL   		KW	YEAR		
HOLDEN					
COMMODORE Saloon (VT)	5.7 i V8	220	06/99 – 08/00		4188
COMMODORE Saloon (VX)	3.8 i V6	152	09/00 – 09/02		4188
COMMODORE Saloon (VX)	3.8 i V6 Supercharged	171	09/00 – 08/02		4188
COMMODORE Saloon (VX)	5.7 i V8	225	09/00 – 09/02		4188
COMMODORE Saloon (VY)	3.8 i V6	152	09/02 – 08/04		4188
COMMODORE Saloon (VY)	3.8 i V6 Supercharched	171	09/02 – 08/04		4188
COMMODORE Saloon (VY)	5.7 i V8	235	09/02 – 08/03		4188
COMMODORE Saloon (VY)	5.7 i V8	245	09/02 – 08/03		4188
COMMODORE Saloon (VZ)	3.6 i V6	175	09/04 – 06/06		4188
COMMODORE Saloon (VZ)	3.6 i V6	190	09/04 – 06/06		4188
COMMODORE Saloon (VZ)	3.6 i V6 Dual Fuel LPG	175	08/05 – 06/06		4188
COMMODORE Saloon (VZ)	5.7 i V8	235	09/04 – 12/05		4188
COMMODORE Saloon (VZ)	5.7 i V8	250	09/04 – 12/05		4188
COMMODORE Saloon (VZ)	6.0 i V8	260	11/05 – 06/06		4188
CREWMAN Pickup (VY)	3.8 i V6	152	09/03 – 07/04		4188
CREWMAN Pickup (VZ)	3.6 i V6	180	09/06 – 12/07		4188
CREWMAN Pickup (VZ)	3.6 i V6 4x4	175	11/05 – 12/07		4188
CREWMAN Pickup (VZ)	5.7 i V8	235	08/04 – 02/06		4188
CREWMAN Pickup (VZ)	5.7 i V8 4x4	235	08/04 – 02/06		4188
CREWMAN Pickup (VZ)	6.0 i V8	270	06/06 – 12/07		4188
CREWMAN Pickup (VZ)	6.0 i V8 4x4	260	11/05 – 07/06		4188
CRUZE Hatchback (YG)	1.5 i AWD	73	08/02 – 06/06	3928	
CRUZE Saloon (JG)	1.8 i	104	06/09 – 03/11	4008	
CRUZE Saloon (JG)	1.8 i	104	06/09 – 03/11	4014	
CRUZE Saloon (JG)	2.0 DTFi	110	06/09 – 03/11	4008	
CRUZE Saloon (JG)	2.0 DTFi	110	06/09 – 03/11	4230	
CRUZE Saloon (JG)	2.0 DTFi	110	06/09 – 03/11	4014	
EPICA Saloon (EP)	2.0 i	105	03/07 – 06/08	4073	
EPICA Saloon (EP)	2.5 i	115	03/07 – 12/11	4073	
EPICA Saloon (EP)	TD	110	07/08 – 12/11	4073	
FRONTERA (UES)	2.0 i 4x4	85	10/95 – 03/99	3743	3887
FRONTERA (UES)	2.0 i 4x4	85	10/95 – 03/99	3674	
FRONTERA (UES)	2.2 i 4x4	96	02/99 – 07/02	3743	3887
FRONTERA (UES)	2.2 i 4x4	96	02/99 – 07/02	3674	
FRONTERA (UES)	3.2 i 4x4	151	08/98 – 04/04	3743	3887
FRONTERA (UES)	3.2 i 4x4	151	08/98 – 04/04	3674	
INSIGNIA Saloon (GA)	2.8 VXR AWD	239	01/15 -		4150
JACKAROO (UBS)	2.6 4x4 (UBS17)	85	10/87 – 09/91	3657	
JACKAROO (UBS)	2.6 4x4 (UBS17)	85	10/87 – 09/91	3757	
JACKAROO (UBS)	2.6 4x4 (UBS17)	85	10/87 – 09/91	3857	
JACKAROO (UBS)	2.8 TD 4x4 (UBS55)	74	10/87 – 09/91	3657	
JACKAROO (UBS)	2.8 TD 4x4 (UBS55)	74	10/87 – 09/91	3757	
JACKAROO (UBS)	2.8 TD 4x4 (UBS55)	74	10/87 – 09/91	3857	
JACKAROO / MONTEREY (UBS)	3.0 TD 4x4 (UBS73)	117	03/98 – 09/04	3743	3887
JACKAROO / MONTEREY (UBS)	3.0 TD 4x4 (UBS73)	117	03/98 – 09/04	3674	
JACKAROO / MONTEREY (UBS)	3.1 TD 4x4 (UBS69)	84	04/92 – 02/98	3743	3887
JACKAROO / MONTEREY (UBS)	3.1 TD 4x4 (UBS69)	84	04/92 – 02/98	3674	
JACKAROO / MONTEREY (UBS)	3.2 i 4x4 (UBS25)	130	04/92 – 02/98	3743	3887
JACKAROO / MONTEREY (UBS)	3.2 i 4x4 (UBS25)	130	04/92 – 02/98	3674	
JACKAROO / MONTEREY (UBS)	3.5 RS 4x4 (UBS26)	158	03/98 – 09/04	3743	3887
JACKAROO / MONTEREY (UBS)	3.5 RS 4x4 (UBS26)	158	03/98 – 09/04	3674	
MONARO (V2)	3.8 (L67)	171	12/01 – 08/03	4189	
MONARO (V2)	5.7 i V8 (LS1)	245	08/03 – 09/04	4189	
MONARO Coupe (V2)	3.8	171	12/01 – 08/03		4188
MONARO Coupe (V2)	5.7 i V8	225	12/01 – 01/03		4188
MONARO Coupe (V2)	5.7 i V8	235	01/03 – 08/03		4188
MONARO Coupe (V2)	5.7 i V8	245	08/03 – 09/04		4188
MONARO Coupe (VZ)	5.7 i V8	260	09/04 – 07/06		4188
NOVA Hatchback (LG)	1.6	78	10/94 – 12/97	3554	
NOVA Hatchback (LG)	1.6	78	10/94 – 12/97	3651	
NOVA Hatchback (LG)	1.8 i	85	10/94 – 12/97	3651	3776
NOVA Hatchback (LG)	1.8 i	85	10/94 – 12/97	3554	
NOVA Saloon (LG)	1.6 i	78	10/94 – 12/97	3554	
NOVA Saloon (LG)	1.6 i	78	10/94 – 12/97	3651	
NOVA Saloon (LG)	1.8 i	85	10/94 – 12/97	3651	3776
NOVA Saloon (LG)	1.8 i	85	10/94 – 12/97	3554	
ONE TONNER Platform/Chassis (VY)	3.6 i V6	175	08/03 – 07/04		4188
ONE TONNER Platform/Chassis (VY)	3.6 i V6	175	11/04 – 12/05		4188
ONE TONNER Platform/Chassis (VY)	3.6 i V6 All-wheel Drive	175	11/04 – 12/05		4188
ONE TONNER Platform/Chassis (VZ)	3.8 i V6	152	06/03 – 12/04		4188
ONE TONNER Platform/Chassis (VZ)	5.7 i V8	235	08/03 – 07/04		4188
ONE TONNER Platform/Chassis (VZ)	5.7 i V8	235	11/04 – 12/05		4188
RANCHO	1.4	59	01/77 – 07/84	3311	
RODEO Pickup (RA)	2.4 i (TFR32)	94	02/03 – 07/08	3886	
RODEO Pickup (RA)	3.0 DiTD (TFR85)	117	01/07 – 10/08	3886	
RODEO Pickup (RA)	3.0 DiTD 4x4 (TFS85)	117	01/07 – 10/08	3886	

MAKE & MODEL		KW	YEAR		
HOLDEN					
RODEO Pickup (RA)	3.0 TD (TFR77)	96	02/03 – 01/07	3886	
RODEO Pickup (RA)	3.0 TD 4x4 (TFS77)	96	02/03 – 01/07	3886	
RODEO Pickup (RA)	3.5 i (TFR26)	147	02/03 – 12/05	3743	3887
RODEO Pickup (RA)	3.5 i (TFR26)	147	02/03 – 12/05	3674	
RODEO Pickup (RA)	3.5 i 4x4 (TFS26)	147	02/03 – 12/05	3743	3887
RODEO Pickup (RA)	3.5 i 4x4 (TFS26)	147	02/03 – 12/05	3674	
RODEO Pickup (RA)	3.6 i (TFR27)	157	01/06 – 06/08	3743	3887
RODEO Pickup (RA)	3.6 i (TFR27)	157	01/06 – 06/08	3674	
RODEO Pickup (RA)	3.6 i 4x4 (TFS27)	157	01/06 – 06/08	3743	3887
RODEO Pickup (RA)	3.6 i 4x4 (TFS27)	157	01/06 – 06/08	3674	
RODEO Pickup (TF)	2.2 i (TFR30)	87	06/98 – 02/03	3657	
RODEO Pickup (TF)	2.2 i (TFR30)	87	06/98 – 02/03	3757	
RODEO Pickup (TF)	2.2 i (TFR30)	87	06/98 – 02/03	3857	
RODEO Pickup (TF)	2.3 i (TFR16)	69	06/91 – 08/03	3657	
RODEO Pickup (TF)	2.3 i (TFR16)	69	06/91 – 08/03	3757	
RODEO Pickup (TF)	2.3 i (TFR16)	69	06/91 – 08/03	3857	
RODEO Pickup (TF)	2.5 D (TFR54)	57	02/88 – 12/92	3657	
RODEO Pickup (TF)	2.5 D (TFR54)	57	02/88 – 12/92	3757	
RODEO Pickup (TF)	2.5 D (TFR54)	57	02/88 – 12/92	3857	
RODEO Pickup (TF)	2.5 D 4x4 (TFS54)	57	02/88 – 12/92	3657	
RODEO Pickup (TF)	2.5 D 4x4 (TFS54)	57	02/88 – 12/92	3757	
RODEO Pickup (TF)	2.5 D 4x4 (TFS54)	57	02/88 – 12/92	3857	
RODEO Pickup (TF)	2.6 i (TFR17)	88	02/88 – 06/98	3657	
RODEO Pickup (TF)	2.6 i (TFR17)	88	02/88 – 06/98	3757	
RODEO Pickup (TF)	2.6 i (TFR17)	88	02/88 – 06/98	3857	
RODEO Pickup (TF)	2.6 i 4x4 (TFS17)	88	02/88 – 06/98	3657	
RODEO Pickup (TF)	2.6 i 4x4 (TFS17)	88	02/88 – 06/98	3757	
RODEO Pickup (TF)	2.6 i 4x4 (TFS17)	88	02/88 – 06/98	3857	
RODEO Pickup (TF)	2.8 TD (TFR55)	74	05/90 – 02/03	3657	
RODEO Pickup (TF)	2.8 TD (TFR55)	74	05/90 – 02/03	3757	
RODEO Pickup (TF)	2.8 TD (TFR55)	74	05/90 – 02/03	3857	
RODEO Pickup (TF)	2.8 TD 4x4 (TFS55)	74	05/90 – 02/03	3657	
RODEO Pickup (TF)	2.8 TD 4x4 (TFS55)	74	05/90 – 02/03	3757	
RODEO Pickup (TF)	2.8 TD 4x4 (TFS55)	74	05/90 – 02/03	3857	
RODEO Pickup (TF)	3.0 TD 4x4 (TFS77)	96	12/01 – 02/03	3657	
RODEO Pickup (TF)	3.0 TD 4x4 (TFS77)	96	12/01 – 02/03	3757	
RODEO Pickup (TF)	3.0 TD 4x4 (TFS77)	96	12/01 – 02/03	3857	
RODEO Pickup (TF)	3.2 4x4 (TFS25)	140	02/98 – 02/03	3743	3887
RODEO Pickup (TF)	3.2 4x4 (TFS25)	140	02/98 – 02/03	3674	
RODEO Pickup (TF)	3.2 i (TFR25)	140	02/98 – 02/03	3743	3887
RODEO Pickup (TF)	3.2 i (TFR25)	140	02/98 – 02/03	3674	
RODEO Platform/Chassis (RA)	2.4 i (TFR32)	94	08/03 – 07/08	3886	
RODEO Platform/Chassis (RA)	3.0 DiTD (TFR85)	117	01/07 – 10/08	3886	
RODEO Platform/Chassis (RA)	3.5 i (TFR26)	147	02/03 – 12/05	3886	
RODEO Platform/Chassis (RA)	3.5 i 4x4 (TFS26)	147	02/03 – 12/05	3886	
RODEO Platform/Chassis (TF)	2.6 i (TFR17)	88	02/88 – 02/98	3657	
RODEO Platform/Chassis (TF)	2.6 i (TFR17)	88	02/88 – 02/98	3757	
RODEO Platform/Chassis (TF)	2.6 i (TFR17)	88	02/88 – 02/98	3857	
RODEO Platform/Chassis (TF)	2.6 i 4x4 (TFS17)	88	02/88 – 06/98	3657	
RODEO Platform/Chassis (TF)	2.6 i 4x4 (TFS17)	88	02/88 – 06/98	3757	
RODEO Platform/Chassis (TF)	2.6 i 4x4 (TFS17)	88	02/88 – 06/98	3857	
RODEO Platform/Chassis (TF)	2.8 TD (TFR55)	74	05/90 – 02/03	3657	
RODEO Platform/Chassis (TF)	2.8 TD (TFR55)	74	05/90 – 02/03	3757	
RODEO Platform/Chassis (TF)	2.8 TD (TFR55)	74	05/90 – 02/03	3857	
RODEO Platform/Chassis (TF)	3.2 i (TFR25)	140	02/98 – 02/03	3674	
RODEO Platform/Chassis (TF)	3.2 i (TFR25)	140	02/98 – 02/03	3743	
RODEO Platform/Chassis (TF)	3.2 i 4x4 (TFS25)	140	03/98 – 02/03	3674	
RODEO Platform/Chassis (TF)	3.2 i 4x4 (TFS25)	140	03/98 – 02/03	3743	
SCURRY Bus (NB)	1.0	33	07/85 – 12/87	3509	
SCURRY Bus (NB)	1.0	33	07/85 – 12/87	4034	
STATESMAN (WH)	3.6 VVT (H7)	190	08/04 – 07/06	4189	
STATESMAN (WH)	3.8 i V6	147	06/99 – 04/03	4189	
STATESMAN (WH)	3.8 i V6 (L36)	152	08/01 – 04/03	4189	
STATESMAN (WH)	3.8 i V6 Supercharged (L67)	171	08/01 – 04/03	4189	
STATESMAN (WH)	5.7 i V8 (LS1)	220	06/99 – 11/02	4189	
STATESMAN (WH)	5.7 i V8 (LS1)	225	11/02 – 04/03	4189	
STATESMAN Saloon (WH)	3.8 i V6	147	06/99 – 04/03		4188
STATESMAN Saloon (WH)	3.8 i V6	152	08/01 – 04/03		4188
STATESMAN Saloon (WH)	3.8 i V6 Supercharged	171	08/01 – 04/03		4188
STATESMAN Saloon (WH)	5.7 i V8	220	06/99 – 11/02		4188
STATESMAN Saloon (WH)	5.7 i V8	225	11/02 – 04/03		4188
STATESMAN Saloon (WK)	3.8 i V6	152	05/03 – 07/04		4188
STATESMAN Saloon (WK)	3.8 i V6 Supercharged	171	05/03 – 07/04		4188
STATESMAN Saloon (WK)	5.7 i V8	245	05/03 – 07/04		4188
STATESMAN Saloon (WL)	3.6 VVT	190	08/04 – 07/06		4188
STATESMAN Saloon (WL)	5.7 i V8	250	08/04 – 07/06		4188

BESER®

MAKE & MODEL   		KW	YEAR		
HOLDEN					
STATESMAN Saloon (WL)	6.0 i V8	260	02/06 – 07/06		4188
TIGRA (XC)	1.8	92	09/05 – 12/07	3846	
TORANA GTR XU1 Saloon (LJ)	3.0	120	06/71 – 01/72	3312	
TORANA GTR XU1 Saloon (LJ)	3.0	120	06/71 – 01/72	3484	
TORANA Saloon (LC)	1.6	60	06/71 – 01/72	3312	
TORANA Saloon (LC)	1.6	60	06/71 – 01/72	3484	
TORANA Saloon (LC)	2.3	71	06/71 – 01/72	3312	
TORANA Saloon (LC)	2.3	71	06/71 – 01/72	3484	
TORANA Saloon (LC)	2.6	85	06/71 – 01/72	3312	
TORANA Saloon (LC)	2.6	85	06/71 – 01/72	3484	
TORANA Saloon (LJ)	1.6	60	02/72 – 03/74	3311	
TORANA Saloon (LJ)	2.6	88	02/72 – 03/74	3312	
TORANA Saloon (LJ)	2.6	88	02/72 – 03/74	3484	
TORANA Saloon (LJ)	3.0	141	02/72 – 03/74	3312	
TORANA Saloon (LJ)	3.0	141	02/72 – 03/74	3484	
TORANA Saloon (TA)	1.3	45	03/74 – 03/75	3311	
TRAX (TJ)	1.4	103	08/14 -	4008	
TRAX (TJ)	1.4	103	08/14 -	4014	
VECTRA (ZC)	2.2 i (Z 22 SE)	108	04/02 – 12/06	4211	
VECTRA Estate (JS)	2.2 i	104	08/98 – 03/03	3665	
VECTRA Estate (JS)	2.2 i	104	08/98 – 03/03	3717	
VECTRA Hatchback (JR)	2.0 i	100	06/97 – 12/98	3665	
VECTRA Hatchback (JR)	2.0 i	100	06/97 – 12/98	3717	
VECTRA Hatchback (JR)	2.5 i	125	06/97 – 12/98	3665	
VECTRA Hatchback (JR)	2.5 i	125	06/97 – 12/98	3717	
VECTRA Hatchback (JS)	2.0 i	100	12/98 – 11/00	3665	
VECTRA Hatchback (JS)	2.0 i	100	12/98 – 11/00	3717	
VECTRA Hatchback (JS)	2.2 i	104	11/00 – 03/03	3665	
VECTRA Hatchback (JS)	2.2 i	104	11/00 – 03/03	3717	
VECTRA Hatchback (JS)	2.5 i	125	08/98 – 12/02	3665	
VECTRA Hatchback (JS)	2.5 i	125	08/98 – 12/02	3717	
VECTRA Hatchback (JS)	2.6 i V6	125	11/00 – 12/02	3665	
VECTRA Hatchback (JS)	2.6 i V6	125	11/00 – 12/02	3717	
VECTRA Hatchback (ZC)	2.2 i	108	04/02 – 12/06		3853/1
VECTRA Hatchback (ZC)	3.2 i	155	08/02 – 12/06		3853/1
VECTRA Saloon (JR)	2.0 i	100	06/97 – 12/98	3665	
VECTRA Saloon (JR)	2.0 i	100	06/97 – 12/98	3717	
VECTRA Saloon (JR)	2.5 i	125	06/97 – 12/98	3665	
VECTRA Saloon (JR)	2.5 i	125	06/97 – 12/98	3717	
VECTRA Saloon (JS)	2.0 i	100	12/98 – 11/00	3665	
VECTRA Saloon (JS)	2.0 i	100	12/98 – 11/00	3717	
VECTRA Saloon (JS)	2.2 i	104	08/98 – 07/02	3665	
VECTRA Saloon (JS)	2.2 i	104	08/98 – 07/02	3717	
VECTRA Saloon (JS)	2.6 i V6	125	07/00 – 07/02	3665	
VECTRA Saloon (JS)	2.6 i V6	125	07/00 – 07/02	3717	
VECTRA Saloon (ZC)	2.2 i	108	04/02 – 12/06		3853/1
VECTRA Saloon (ZC)	3.2 i	155	08/02 – 12/06		3853/1
VIVA Estate (JF)	1.8 i	89	03/05 – 12/09	3687	3894
VIVA Hatchback (JF)	1.8 i	89	03/05 – 12/09	3687	3894
VIVA Saloon (JF)	1.8 i	89	03/05 – 12/09	3687	3894
ZAFIRA (TT)	2.2 i	108	06/01 – 02/06	4042	4040
HONDA					
(DONGFENG) Ciimo 44409	R18A1	103	04/2012 -		4148/1
(DONGFENG) Civic VIII (FA_) 2.0	R20A6	114	10/2011 -		4148/1
(DONGFENG) Civic VIII (FA_) 44256 Hybrid	LDA2	70	01/2007 - 12/2013		4148/1
(DONGFENG) Civic VIII (FA_) 44409	R18A1	103	04/2006 - 12/2012		4148/1
(DONGFENG) Civic VIII (FA_) 44409	R18Z2	104	10/2011 -		4148/1
(GAC) Accord VII (CM_) 2.0	K20A7	110	01/2003 - 12/2007		4148/1
(GAC) Accord VII (CM_) 3.0	J30A4	177	01/2003 - 12/2007		4148/1
(GAC) Accord VII (CM_) 44288	K24A4	119	01/2003 - 12/2007		4148/1
(GAC) Accord VII (CM_) 44288	K24A8	125	01/2003 - 12/2007		4148/1
(GAC) City II (GM_) 44409	R18A1	103	12/2008 - 12/2014		4148/1
(GAC) Crider (GJ_) 44409	R18Z5	102	06/2013 - 12/2015		4148/1
ACCORD			2013 – 2014		4279
ACCORD II (AC, AD)	1.6 EX (EZ)	65	09/83 – 10/85	3691	
ACCORD II (AC, AD)	1.8 EX (ET1)	74	09/83 – 10/85	3691	
ACCORD IV (CB)	2.2 i 16V Automatik (F22A3)	108	01/90 – 03/93	3695	4148
ACCORD IV (CB, CC)	2.0 i 16V (F20A7)	98	01/92 – 09/93	3695	
ACCORD VII / ACCOR EURO (CL)	2.0 (CL7) (K20A6)	114	02/03 – 05/08	4159	
ACCORD VII / ACCOR EURO (CL)	2.0 A las 4 ruedas (CL8) (K20A6)	114	02/03 – 05/08	4159	
ACCORD VII / ACCOR EURO (CL)	2.0 EURO R	160	06/03 – 12/08	4159	
ACCORD VII / ACCOR EURO (CL)	2.2 i-CTDi (N22A1)	103	01/04 – 05/08	4159	
ACCORD VII / ACCOR EURO (CL)	2.4	132	01/08 – 09/12	4159	
ACCORD VII / ACCOR EURO (CL)	2.4 (K24A8)	113	09/06 – 05/08	4159	
ACCORD VII / ACCOR EURO (CL)	2.4 (CL9) (K24A)	140	02/03 – 05/08	4159	

MAKE & MODEL   		KW	YEAR		
HONDA					
ACCORD VII / ACCOR EURO (CL)	2.4 (CL9) (K24A3)	140	02/03 – 05/08	4159	
ACCORD VII / ACCOR EURO (CL)	2.4 Vtec	122	04/06 – 07/08	4159	
ACCORD VII / ACCOR EURO (CL)	2.4 Vtec E	125	06/06 – 01/08	4159	
ACCORD VII / ACCOR EURO (CL)	3.0 (J30A5)	182	04/06 – 05/08	4159	
ACCORD (SJ, SY)	1.6 L/EX (EG)	59	01/78 – 09/83	3705	
ACCORD (SJ, SY)	1.6 L/EX (EL)	59	01/78 – 09/83	3705	
ACCORD (SJ, SY)	1.6 L/EX	59	01/78 – 09/83	3324	
ACCORD (SJ, SY) Fastback	1.6 L/EX	59	01/79 – 09/83	3324	
ACCORD II (AC, AD)	1.6 EX (AC)	65	09/83 – 10/85	3504	
ACCORD II (AC, AD)	1.8 EX (AD)	74	09/83 – 10/85	3504	
ACCORD II Hatchback (AC, AD)	1.6 EX (AC)	65	09/83 – 10/85	3504	
ACCORD II Hatchback (AC, AD)	1.8 EX (AD)	74	09/83 – 10/85	3504	
ACCORD III (CA)	1.6 L (CA4)	65	11/85 – 12/89	3582	
ACCORD III (CA)	2.0 EX (CA5)	75	11/85 – 12/89	3631	4212
ACCORD III (CA)	2.0 EX (CA5)	75	11/85 – 12/89	3582	
ACCORD III (CA)	2.0 EX (CA5)	76	11/85 – 12/89	3631	4212
ACCORD III (CA)	2.0 EX (CA5)	76	11/85 – 12/89	3582	
ACCORD III (CA)	2.0 EX (CA5)	78	11/85 – 05/89	3631	4212
ACCORD III (CA)	2.0 EX (CA5)	78	11/85 – 05/89	3582	
ACCORD III (CA)	2.0 EXi (CA5)	85	01/86 – 12/89	3631	4212
ACCORD III (CA)	2.0 EXi (CA5)	85	01/86 – 12/89	3582	
ACCORD III (CA)	2.0 EXi (CA5)	90	11/85 – 12/87	3582	4212
ACCORD III (CA)	2.0 i 16V (CA5)	98	10/87 – 12/89	3631	4212
ACCORD III (CA)	2.0 i 16V (CA5)	101	01/87 – 12/87	3631	4212
ACCORD III (CA)	2.0 i 16V (CA5)	101	01/87 – 12/87	3582	
ACCORD III Aerodeck (CA)	1.6 L (CA4)	65	11/85 – 12/89	3582	
ACCORD III Aerodeck (CA)	2.0 EX	75	10/87 – 12/89	3631	4212
ACCORD III Aerodeck (CA)	2.0 EX	75	10/87 – 12/89	3582	
ACCORD III Aerodeck (CA)	2.0 EX (CA5)	76	10/87 – 12/89	3631	4212
ACCORD III Aerodeck (CA)	2.0 EX (CA5)	76	10/87 – 12/89	3582	
ACCORD III Aerodeck (CA)	2.0 EX (CA5)	78	11/85 – 05/89	3631	4212
ACCORD III Aerodeck (CA)	2.0 EX (CA5)	78	11/85 – 05/89	3582	
ACCORD III Aerodeck (CA)	2.0 EXi (CA5)	85	10/87 – 12/89	3631	4212
ACCORD III Aerodeck (CA)	2.0 EXi (CA5)	90	11/85 – 12/87	3631	4212
ACCORD III Aerodeck (CA)	2.0 EXi (CA5)	90	11/85 – 12/87	3582	
ACCORD IV (CB)	2.0 16V (CB3)	66	01/90 – 03/93	3696	4148
ACCORD IV (CB)	2.0 16V (CB3)	81	01/90 – 03/93	3696	4148
ACCORD IV (CB)	2.0 i 16V (CB3)	98	01/90 – 03/93	3696	4148
ACCORD IV (CB)	2.2 (CB3, CB7)	103	10/91 – 10/93	3622	4148
ACCORD IV (CB)	2.2 i 16V (CB7)	110	01/90 – 03/93	3695	4148
Accord IV (CB) 2.0 16V (CB3)	F20A2 (01.90-.), F20A3	81	01/1990 - 03/1993		4148/1
Accord IV (CB) 2.0 16V (CB3)	F20A6 (01.90-.)	66	01/1990 - 03/1993		4148/1
Accord IV (CB) 2.0 i 16V (CB3)	F20A4 (01.90-.), F20A8 (01.90-.)	98	01/1990 - 03/1993		4148/1
Accord IV (CB) 44229 (CB3, CB7)	F22A6, F22A9	103	10/1991 - 10/1993		4148/1
Accord IV (CB) 44229 i 16V (CB7)	F22A3 (01.90-.)	110	01/1990 - 03/1993		4148/1
Accord IV (CB) 44229 i 16V Automatik (CB7)	F22A3 (01.90-.)	108	01/1990 - 03/1993		4148/1
ACCORD IV Aerodeck (CB)	2.0 i 16V (CC9)	98	03/93 – 12/93	3704	4148
ACCORD IV Aerodeck (CB)	2.2 (CB8, CB9)	103	05/92 – 12/93	3704	4148
ACCORD IV Aerodeck (CB)	2.2 i 16V (CB8)	108	01/91 – 12/93	3704	4148
ACCORD IV Aerodeck (CB)	2.2 i 16V (CB8)	110	01/91 – 12/93	3704	4148
Accord IV Aerodeck (CB) 2.0 i 16V (CC9)	F20Z3 (03.93-.)	98	03/1993 - 12/1993		4148/1
Accord IV Aerodeck (CB) 44229 (CB8, CB9)	F22A6	103	05/1992 - 12/1993		4148/1
Accord IV Aerodeck (CB) 44229 i 16V (CB8)	F22A7 (01.91-.)	110	01/1991 - 12/1993		4148/1
Accord IV Aerodeck (CB) 44229 i 16V (CB8)	F22A8 (01.91-.)	108	01/1991 - 12/1993		4148/1
ACCORD IV Coupe (CB, CC)	2.0 i 16V (CC1)	98	01/92 – 09/93	3704	4148
ACCORD IV Coupe (CB, CC)	2.0 i 16V (CC1)	98	01/92 – 09/93	3696	
Accord IV Coupe (CB, CC) 2.0 i 16V (CC1)	F20A7 (01.92-.)	98	01/1992 - 09/1993		4148/1
ACCORD V (CC, CD)	2.0 i	85	03/93 – 01/96		4148
ACCORD V (CC, CD)	2.0 i S	96	03/93 – 01/96		4148
ACCORD V (CC, CD)	2.3 i SR	116	03/93 – 01/96	3704	4148
Accord V (CC, CD) 2.0 16v	F20A/ B2/ 4/ 5/ 6	108	01/1993 - 12/1998		4148/1
Accord V (CC, CD) 2.0 i	F20Z2 (03.93-01.96)	85	03/1993 - 01/1996		4148/1
Accord V (CC, CD) 2.0 i S	F20Z1 (03.93-.)	96	03/1993 - 01/1996		4148/1
Accord V (CC, CD) 44257 i SR	H23A3 (03.93-01.96)	116	03/1993 - 01/1996		4148/1
ACCORD V (CE, CF)	1.9 i (CE7)	85	02/96 – 10/98	3704	4148
ACCORD V (CE, CF)	2.0 i LS (CE8)	96	02/96 – 10/98	3704	4148
ACCORD V (CE, CF)	2.0 TDi (CF1)	77	04/96 – 10/98	3704	4148
ACCORD V (CE, CF)	2.2 (CE1)	107	09/95 – 06/96	3622	4148
ACCORD V (CE, CF)	2.2 i VTEC (CE9)	110	02/96 – 10/98	3704	4148
Accord V (CE, CF_) 2.0 i LS (CE8)	F20Z1 (02.96-.)	96	02/1996 - 10/1998		4148/1
Accord V (CE, CF_) 2.0 TDi (CF1)	20T2N (04.96-.)	77	04/1996 - 10/1998		4148/1
Accord V (CE, CF_) 44229 i VTEC (CE9)	F22Z2 (02.96-.)	110	02/1996 - 10/1998		4148/1
Accord V (CE, CF_) 44440 i (CE7)	F18A3 (02.96-.)	85	02/1996 - 10/1998		4148/1
ACCORD V Aerodeck (CE)	2.0 i LS 16V (CE2)	100	09/93 – 02/98	3704	4148
ACCORD V Aerodeck (CE)	2.2 i ES (CE1)	110	09/93 – 02/98	3704	4148
Accord V Aerodeck (CE) 2.0 i LS 16V (CE2)	F20B3 (09.93-.)	100	09/1993 - 02/1998		4148/1

MAKE & MODEL		KW	YEAR		
HONDA					
Accord V Aerodeck (CE) 44229 i ES (CE1)	F22B5 (09.93-.)	110	09/1993 - 02/1998		4148/1
ACCORD V Coupe (CD)	2.0 (CD9)	100	09/93 – 12/97	3704	4148
ACCORD V Coupe (CD)	2.2 i ES (CD7)	110	09/93 – 02/98	3704	4148
Accord V Coupe (CD) 2.0 (CD9)	F20B3 (09.93-.)	100	09/1993 - 12/1997		4148/1
Accord V Coupe (CD) 44229 i ES (CD7)	F22B5 (09.93-.)	110	09/1993 - 02/1998		4148/1
ACCORD VI (CF)	2.4 Vtec E (K24A2)	118	09/03 – 09/05	4159	
ACCORD VI (CG, CK)	2.2 Type-R	156	02/99 – 12/02	3704	
ACCORD VI (CG, CK)	3.0 Vtec (CK1)	147	03/97 – 12/03	3696	
ACCORD VI (CG, CK)	3.0 Vtec (CK1)	147	03/97 – 12/03	3704	
ACCORD VI (CH, CK, CG)	1.8 i (CG8)	100	10/98 – 12/02	4115	4155
ACCORD VI (CH, CK, CG)	2.0 i (CG9)	108	10/98 – 01/01	4115	4155
ACCORD VI (CH, CK, CG)	2.0 Turbo DI (CH2)	77	02/99 – 12/02	4115	4155
ACCORD VI (CH, CK, CG)	2.2 Type-R (CH1)	156	02/99 – 12/02		4155
ACCORD VI (CH, CK, CG)	2.3 (CL3)	113	01/01 – 06/03	4115	4155
ACCORD VI (CH, CK, CG)	3.0 Vtec (CK1)	147	03/97 – 12/03		4148
ACCORD VI Aerodeck (CF)	2.3 16 V	118	02/98 – 12/02	3704	4155
ACCORD VI Coupe (CG)	2.0	107	11/99 – 10/02	3704	4148
ACCORD VI Coupe (CG)	2.0 i 16V	108	02/98 – 06/03	3704	4148
ACCORD VI Coupe (CG)	3.0 V6 24V (CG2)	147	02/98 – 06/03	3704	4148
ACCORD VI Coupe (CG)	3.0 Vtec	152	10/01 – 06/03	3704	4148
Accord VI Coupe (CG) 2.0	F20B7	107	11/1999 - 10/2002		4148/1
Accord VI Coupe (CG) 2.0 i 16V	F20B5, F20B7	108	02/1998 - 06/2003		4148/1
Accord VI Coupe (CG) 3.0 V6 24V (CG2)	J30A1	147	02/1998 - 06/2003		4148/1
ACCORD VI Hatchback (CH, CL)	1.6 (CH5)	85	12/99 – 12/02	4115	4155
ACCORD VI Hatchback (CH, CL)	1.8 i (CH6)	100	12/99 – 12/02	4115	4155
ACCORD VI Hatchback (CH, CL)	2.0 (CH7)	108	12/99- 10/00	4115	4155
ACCORD VI Hatchback (CH, CL)	2.0 TDi (CH8)	77	12/99 – 10/00	4115	4155
ACCORD VI Hatchback (CH, CL)	2.3 (CL4)	113	11/00 – 12/02	4115	4155
ACCORD VII (CL, CN)	2.0 (CL7)	114	02/03 – 05/08	3831	4148
ACCORD VII (CL, CN)	2.0 (CL7)	114	02/03 – 05/08		4155
ACCORD VII (CL, CN)	2.0 All-wheel Drive (CL8)	114	02/03 – 05/08	3831	4148
ACCORD VII (CL, CN)	2.0 All-wheel Drive (CL8)	114	02/03 – 05/08		4155
ACCORD VII (CL, CN)	2.0 R	160	06/03 – 12/08		4155
ACCORD VII (CL, CN)	2.2 i-CTDi (CN1)	103	01/04 – 05/08		4155
ACCORD VII (CL, CN)	2.4	113	09/06 – 05/08	3831	4148
ACCORD VII (CL, CN)	2.4	113	09/06 – 05/08		4155
ACCORD VII (CL, CN)	2.4 (CL9)	140	02/03 – 05/08	3831	4148
ACCORD VII (CL, CN)	2.4 (CL9)	140	02/03 – 05/08		4155
ACCORD VII (CL, CN)	3.0	182	04/06 – 05/08	3831	4148
ACCORD VII (CM)	2.0 (CM1) (K20A6)	114	04/03 – 05/08	4159	
ACCORD VII (CM)	2.2 i-CTDi (N22A1)	103	01/04 – 05/08	4159	
ACCORD VII (CM)	2.4	118	07/03 – 03/06	4159	
ACCORD VII (CM)	2.4	122	04/06 – 07/08	4159	
ACCORD VII (CM)	2.4 (CM2) (K24A)	140	04/03 – 05/08	4159	
ACCORD VII (CM)	2.4 Vtec E (K24A2)	118	09/03 – 09/05	4159	
ACCORD VII (CM)	2.4 Vtec E (CM5)	118	09/02 – 12/05	3831	4148
ACCORD VII (CM)	2.4 Vtec E (CM5)	118	09/02 – 12/05	4159	4155
ACCORD VII (CM)	2.4 Vtec E (CM5) (K24A4)	118	09/02 – 12/05	4159	
ACCORD VII (CM)	2.4 Vtec T (K24A1)	147	09/03 – 09/05	4159	
ACCORD VII (CM)	3.0 (CM6)	177	05/03 – 12/05	3831	4148
ACCORD VII (CM)	3.0 (CM6) (J30A4)	177	09/03 – 09/05	4159	
ACCORD VII (CM)	3.0 VTi- Vtec (J30A5)	177	04/06 -	4159	
ACCORD VII (CM)	3.5	202	01/12 -	4159	
ACCORD VII Tourer (CM, CN)	2.0 (CM1)	103	04/03 – 05/08		4155
ACCORD VII Tourer (CM, CN)	2.0 (CM1)	114	04/03 – 05/08	3831	4148
ACCORD VII Tourer (CM, CN)	2.2 i-CTDi (CN2)	103	01/04 – 05/08		4155
ACCORD VII Tourer (CM, CN)	2.4 (CM2)	140	04/03 – 05/08	3831	4148
ACCORD VII Tourer (CM, CN)	2.4 (CM2)	140	04/03 – 05/08		4155
ACCORD VII Tourer (CM, CN)	2.4 Vtec E	118	09/03 – 09/05	3831	4148
ACCORD VII Tourer (CM, CN)	2.4 Vtec E	118	09/03 – 09/05		4155
ACCORD VII Tourer (CM, CN)	2.4 Vtec T	147	09/03 – 05/08		4155
Accord VII Tourer (CM, CN) 2.0 (CM1)	K20A6	114	04/2003 - 05/2008		4148/1
Accord VII Tourer (CM, CN) 44229 i-CTDi (CN2)	N22A1	103	01/2004 - 05/2008		4148/1
Accord VII Tourer (CM, CN) 44288 (CM2)	K24A3	140	04/2003 - 05/2008		4148/1
Accord VII Tourer (CM, CN) 44288 Vtec T	K24A1	147	09/2003 - 05/2008		4148/1
AIRWAVE	1.5	81	06/04 -	3607	
AIRWAVE	1.5 iDSi MDS 4x4	81	06/04 -	3607	
BEAT (PP_)	0.6	47	01/91 – 12/93		4212
BEAT (PP_)	0.7	47	05/91 – 09/96		4212
CAPA	1.5 16V	72	04/98 – 09/02	3686	
CAPA	1.5 4x4	72	01/98 – 09/02	3686	
CAPA	1.6 Vtec	125	01/98 – 09/02	3686	
CITY Saloon (GM)	1.4 i-V TEC	73	09/08 -	3686	
CITY Saloon (GM)	1.5	88	02/09 -		4212
CIVIC II (WC)	1.3 1300 (EN1)	44	09/79 – 09/83	3709	
CIVIC II Estate (WC)	1.3 1300	44	09/79 – 09/83	3324	

MAKE & MODEL		KW	YEAR		
HONDA					
CIVIC V (EE)	1.4 i 16V (D14A1)	66	01/88 – 12/92	3691	
CIVIC V (EE)	1.5 i 16V (D15B2)	69	01/88 – 11/91	3691	
CIVIC I Saloon (SF)	1300 L	33	09/80 – 09/83	3509	
CIVIC I Saloon (SF)	1300 L	44	09/80 – 09/83	3509	
CIVIC I Saloon (SF)	1300 S	52	10/79 – 12/84	3509	
CIVIC I Shuttle (AN, AR)	1.5 (AN)	63	10/83 – 10/87	3633	
CIVIC I Shuttle (AN, AR)	1.5 (AN)	63	10/83 – 10/87	3646	
CIVIC I Shuttle (AN, AR)	1.5 4WD (AR)	63	01/85 – 10/87	3633	
CIVIC I Shuttle (AN, AR)	1.5 4WD (AR)	63	01/85 – 10/87	3646	
CIVIC II Hatchback (SS, SL)	1300 L (SS)	44	09/79 – 09/83	3509	
CIVIC III Hatchback (AL, AJ, AG, AH)	1.2 (AL)	40	01/84 – 10/87	3633	
CIVIC III Hatchback (AL, AJ, AG, AH)	1.2 (AL)	40	01/84 – 10/87	3646	
CIVIC III Hatchback (AL, AJ, AG, AH)	1.3 (AG)	52	10/83 – 10/87	3633	
CIVIC III Hatchback (AL, AJ, AG, AH)	1.3 (AG)	52	10/83 – 10/87	3646	
CIVIC III Hatchback (AL, AJ, AG, AH)	1.5 GL (AH)	63	10/83 – 10/87	3633	
CIVIC III Hatchback (AL, AJ, AG, AH)	1.5 GL (AH)	63	10/83 – 10/87	3646	
CIVIC III Hatchback (AL, AJ, AG, AH)	1.5 GL (AH)	63	10/83 – 10/87	3752	
CIVIC III Hatchback (AL, AJ, AG, AH)	1.5 GL (AH)	63	10/83 – 10/87	3501	
CIVIC III Hatchback (AL, AJ, AG, AH)	1.5 GT (AH)	74	01/85 – 10/87	3633	
CIVIC III Hatchback (AL, AJ, AG, AH)	1.5 GT (AH)	74	01/85 – 10/87	3646	
CIVIC III Hatchback (AL, AJ, AG, AH)	1.5 GT (AH)	74	01/85 – 10/87	3752	
CIVIC III Hatchback (AL, AJ, AG, AH)	1.5 GT (AH)	74	01/85 – 10/87	3501	
CIVIC III Hatchback (AL, AJ, AG, AH)	1.5 GTI (AH)	66	03/86 – 10/87	3752	
CIVIC III Hatchback (AL, AJ, AG, AH)	1.5 GTI (AH)	66	03/86 – 10/87	3501	
CIVIC III Saloon (AM, AK, AU)	1.2	40	01/85 – 10/87	3633	
CIVIC III Saloon (AM, AK, AU)	1.2	40	01/85 – 10/87	3646	
CIVIC III Saloon (AM, AK, AU)	1.3	52	10/83 – 10/87	3633	
CIVIC III Saloon (AM, AK, AU)	1.3	52	10/83 – 10/87	3646	
CIVIC III Saloon (AM, AK, AU)	1.5 GL	63	10/83 – 10/87	3633	
CIVIC III Saloon (AM, AK, AU)	1.5 GL	63	10/83 – 10/87	3646	
CIVIC III Saloon (AM, AK, AU)	1.5 GL	63	10/83 – 10/87	3752	
CIVIC III Saloon (AM, AK, AU)	1.5 GL	63	10/83 – 10/87	3501	
CIVIC III Saloon (AM, AK, AU)	1.5 GT	74	01/85 – 10/87	3633	
CIVIC III Saloon (AM, AK, AU)	1.5 GT	74	01/85 – 10/87	3646	
CIVIC III Saloon (AM, AK, AU)	1.5 GT	74	01/85 – 10/87	3752	
CIVIC III Saloon (AM, AK, AU)	1.5 GT	74	01/85 – 10/87	3501	
CIVIC III Saloon (AM, AK, AU)	1.5 GTI	66	03/86 – 10/87	3752	
CIVIC III Saloon (AM, AK, AU)	1.5 GTI	66	03/86 – 10/87	3501	
CIVIC IV Hatchback (EC, ED, EE)	1.6 i 16V	96	09/87 – 09/91		4212
CIVIC IV Hatchback (EC, ED, EE)	1.6 i 16V (ED7)	80	10/87 – 09/91		4212
CIVIC IV Hatchback (EC, ED, EE)	1.6 i 16V (ED7)	81	10/87 – 09/91		4212
CIVIC IV Hatchback (EC, ED, EE)	1.6 i 16V Vtec (EE9)	110	10/89 – 09/91		4212
CIVIC IV Saloon (ED)	1.4 L (ED2)	66	10/87 – 12/89	3752	
CIVIC IV Saloon (ED)	1.4 L (ED2)	66	10/87 – 12/89	3501	
CIVIC IV Saloon (ED)	1.6 i 16V	96	09/87 – 09/91		4212
CIVIC IV Saloon (ED)	1.6 i 16V (ED4)	80	11/87 – 09/91		4212
CIVIC IV Saloon (ED)	1.6 i 16V (ED4)	81	10/87 – 09/91		4212
CIVIC IV Saloon (ED)	1.6 i 16V 4x4	80	10/89 – 09/91		4212
CIVIC IX Saloon (FB, FG)	1.8 (FB2)	104	02/12 -	4109	4148
CIVIC IX Saloon (FB, FG)	1.8 (FB2)	104	02/12 -	4232	
CIVIC V Coupe (EJ)	1.5 i LSi (EJ2)	74	08/93 – 11/95	3686	
CIVIC V Coupe (EJ)	1.6 i (EJ6)	77	01/94 – 11/95	3607	
CIVIC V Coupe (EJ)	1.6 i (EJ6)	77	01/94 – 11/95	3686	
CIVIC V Coupe (EJ)	1.6 i Vtec	118	01/94 – 11/95	3607	
CIVIC V Coupe (EJ)	1.6 i Vtec (EJ1)	92	01/94 – 03/96	3607	
CIVIC V Hatchback (EG)	1.3 16V (EG3)	55	10/91 – 11/95	3686	
CIVIC V Hatchback (EG)	1.3 16V (EG3)	55	10/91 – 11/95	3752	
CIVIC V Hatchback (EG)	1.3 16V (EG3)	55	10/91 – 11/95	3501	
CIVIC V Hatchback (EG)	1.5 i 16V (EG4)	66	10/91 – 11/95	3686	
CIVIC V Hatchback (EG)	1.5 i 16V (EG4)	69	10/91 – 11/95	3686	
CIVIC V Hatchback (EG)	1.6	96	10/91 – 09/95	3686	
CIVIC V Hatchback (EG)	1.6 16V Vtec (EG5)	92	10/91 – 11/95	3686	
CIVIC V Hatchback (EG)	1.6 VTi 16V (EG6)	118	10/91 – 11/95	3607	
CIVIC V Saloon (EG, EH)	1.3	55	01/92 – 12/92	3686	
CIVIC V Saloon (EG, EH)	1.5	67	10/93 – 12/95	3686	
CIVIC V Saloon (EG, EH)	1.5 i 16V (EG8)	69	10/91 – 11/95	3686	
CIVIC V Saloon (EG, EH)	1.6 16V Vtec (EH9)	92	10/91 – 11/95	3686	
CIVIC V Saloon (EG, EH)	1.6 VTi (EG9)	118	10/91 – 11/95	3607	
CIVIC VI Aerodeck (MB, MC)	1.4 16V (MB8)	55	04/98 – 02/01	3683	4148
CIVIC VI Aerodeck (MB, MC)	1.4 16V (MB8)	55	04/98 – 02/01	3872	4212
CIVIC VI Aerodeck (MB, MC)	1.4 16V (MB8)	66	04/98 – 02/01	3683	4148
CIVIC VI Aerodeck (MB, MC)	1.4 16V (MB8)	66	04/98 – 02/01	3872	4212
CIVIC VI Aerodeck (MB, MC)	1.5 16V (MB9)	84	04/98 – 02/01	3683	4148
CIVIC VI Aerodeck (MB, MC)	1.5 16V (MB9)	84	04/98 – 02/01	3872	4212
CIVIC VI Aerodeck (MB, MC)	1.6 16V (MC1)	85	04/98 – 02/01	3683	4148
CIVIC VI Aerodeck (MB, MC)	1.6 16V (MC1)	85	04/98 – 02/01	3872	4212

MAKE & MODEL   		KW	YEAR		
HONDA					
CIVIC VI Aerodeck (MB, MC)	1.6 16V (MC1)	92	04/98 – 02/01	3683	4148
CIVIC VI Aerodeck (MB, MC)	1.6 16V (MC1)	92	04/98 – 02/01	3872	4212
CIVIC VI Aerodeck (MB, MC)	1.8 16V (MC2)	124	04/98 – 02/01	3704	4148
CIVIC VI Aerodeck (MB, MC)	2.0 i D (MC3)	74	04/98 – 02/01	3872	4212
CIVIC VI Aerodeck (MB, MC)	2.0 i D (MC3)	74	04/98 – 02/01	3683	
CIVIC VI Aerodeck (MB, MC)	2.0 i D (MC3)	77	04/98 – 02/01	3872	4212
CIVIC VI Aerodeck (MB, MC)	2.0 i D (MC3)	77	04/98 – 02/01	3683	
CIVIC VI Coupe (EJ, EM1)	1.6	79	05/96 – 04/99	3607	
CIVIC VI Coupe (EJ, EM1)	1.6 i	77	03/96 – 03/00	3607	
CIVIC VI Coupe (EJ, EM1)	1.6 i Vtec	92	03/96 – 03/00	3607	
CIVIC VI Coupe (EJ, EM1)	1.6 i Vtec	118	04/99 – 12/00	3607	
CIVIC VI Fastback (MA, MB)	1.4 i (MA8, MB2)	55	09/95 – 02/01	3872	4212
CIVIC VI Fastback (MA, MB)	1.4 i (MA8, MB2)	55	09/95 – 02/01	3683	
CIVIC VI Fastback (MA, MB)	1.4 i (MA8, MB2)	66	09/94 – 02/01	3872	4212
CIVIC VI Fastback (MA, MB)	1.4 i (MA8, MB2)	66	09/94 – 02/01	3683	
CIVIC VI Fastback (MA, MB)	1.5 16V (MB3)	84	01/97 – 02/01	3683	4148
CIVIC VI Fastback (MA, MB)	1.5 16V (MB3)	84	01/97 – 02/01	3872	4212
CIVIC VI Fastback (MA, MB)	1.5 i Vtec-E (MA9)	66	09/94 – 01/97	3872	4212
CIVIC VI Fastback (MA, MB)	1.5 i Vtec-E (MA9)	66	09/94 – 01/97	3683	
CIVIC VI Fastback (MA, MB)	1.6 16V (MB4)	85	01/97 – 02/01	3683	4148
CIVIC VI Fastback (MA, MB)	1.6 16V (MB4)	85	01/97 – 02/01	3872	4212
CIVIC VI Fastback (MA, MB)	1.6 i (MB1)	83	09/94 – 01/97	3872	4212
CIVIC VI Fastback (MA, MB)	1.6 i (MB1)	83	09/94 – 01/97	3683	
CIVIC VI Fastback (MA, MB)	1.6 i Vtec (MB1)	93	09/94 – 01/97	3872	4212
CIVIC VI Fastback (MA, MB)	1.6 i Vtec (MB1)	93	09/94 – 01/97	3683	
CIVIC VI Fastback (MA, MB)	1.6 VTi	118	01/97 – 02/01	3607	4148
CIVIC VI Fastback (MA, MB)	1.6 VTi	118	01/97 – 02/01		4212
CIVIC VI Fastback (MA, MB)	1.8 16V (MB6)	124	01/97 – 02/01	3704	4148
CIVIC VI Fastback (MA, MB)	1.8 16V (MB6)	124	01/97 – 02/01		4212
CIVIC VI Fastback (MA, MB)	2.0 i TD (MB7)	63	01/97 – 02/01	3683	4148
CIVIC VI Fastback (MA, MB)	2.0 i TD (MB7)	63	01/97 – 02/01	3872	4212
CIVIC VI Fastback (MA, MB)	2.0 TDiC	77	11/98 – 10/00	3683	
CIVIC VI Fastback (MA, MB)	2.0 TDiC (MB7)	74	11/98 – 10/00	3872	4148
CIVIC VI Fastback (MA, MB)	2.0 TDiC (MB7)	74	11/98 – 10/00	3683	
CIVIC VI Fastback (MA, MB)	2.0 TDiC (MB7)	77	11/98 – 10/00	3872	4148
CIVIC VI Hatchback (EJ, EK)	1.4 i (EJ9)	55	11/95 – 02/01	3607	
CIVIC VI Hatchback (EJ, EK)	1.4 i (EJ9)	55	11/95 – 02/01	3686	
CIVIC VI Hatchback (EJ, EK)	1.4 i S (EJ9)	66	11/95 – 02/01	3607	
CIVIC VI Hatchback (EJ, EK)	1.4 i S (EJ9)	66	11/95 – 02/01	3686	
CIVIC VI Hatchback (EJ, EK)	1.4 LPG	66	01/97 – 02/01	3607	
CIVIC VI Hatchback (EJ, EK)	1.4 LPG	66	01/97 – 02/01	3686	
CIVIC VI Hatchback (EJ, EK)	1.5	66	11/95 – 12/96	3686	
CIVIC VI Hatchback (EJ, EK)	1.5 i (EK3)	84	11/95 – 02/01	3607	
CIVIC VI Hatchback (EJ, EK)	1.6	92	11/98 – 10/00	3704	4148
CIVIC VI Hatchback (EJ, EK)	1.6	93	10/95 – 09/00	3872	4212
CIVIC VI Hatchback (EJ, EK)	1.6	93	10/95 – 09/00	3683	
CIVIC VI Hatchback (EJ, EK)	1.6 i (EK1)	84	11/95 – 02/01	3607	
CIVIC VI Hatchback (EJ, EK)	1.6 VTi (EK4)	118	11/95 – 02/01	3607	
CIVIC VI Hatchback (EJ, EK)	2.0 TDiC	77	11/98 – 10/00	3872	4212
CIVIC VI Hatchback (EJ, EK)	2.0 TDiC	77	11/98 – 10/00	3683	
CIVIC VI Saloon (EJ, EK)	1.4	55	11/95 – 10/98	3607	
CIVIC VI Saloon (EJ, EK)	1.4	55	11/95 – 10/98	3686	
CIVIC VI Saloon (EJ, EK)	1.4 i (EJ9)	66	11/95 – 02/01	3607	
CIVIC VI Saloon (EJ, EK)	1.4 i (EJ9)	66	11/95 – 02/01	3686	
CIVIC VI Saloon (EJ, EK)	1.5 i (EK3)	84	11/95 – 02/01	3607	4212
CIVIC VI Saloon (EJ, EK)	1.6	93	10/95 – 12/00	3607	4212
CIVIC VI Saloon (EJ, EK)	1.6	118	10/95 – 09/00	3607	4212
CIVIC VI Saloon (EJ, EK)	1.6 i Vtec	92	11/95 – 02/01	3607	4212
CIVIC VI Saloon (EJ, EK)	1.6 VTi (EK4)	118	11/95 – 02/01	3607	4212
CIVIC VII Coupe (EM2)	1.6 i	81	02/01 – 12/05	3607	
CIVIC VII Coupe (EM2)	1.6 i	81	02/01 – 12/05	3683	
CIVIC VII Coupe (EM2)	1.6 i	81	02/01 – 12/05	3872	
CIVIC VII Coupe (EM2)	1.7 i	88	05/01 – 12/05	3607	
CIVIC VII Coupe (EM2)	1.7 i	88	05/01 – 12/05	3683	
CIVIC VII Coupe (EM2)	1.7 i	88	05/01 – 12/05	3872	
CIVIC VII Coupe (EM2)	1.7 i VTEC	92	05/01 – 12/05	3607	
CIVIC VII Coupe (EM2)	1.7 i VTEC	92	05/01 – 12/05	3683	
CIVIC VII Coupe (EM2)	1.7 i VTEC	92	05/01 – 12/05	3872	
CIVIC VII Hatchback (EU, EP, EV)	1.4 i	55	02/01 – 09/05	3607	
CIVIC VII Hatchback (EU, EP, EV)	1.4 i	55	02/01 – 09/05	3683	
CIVIC VII Hatchback (EU, EP, EV)	1.4 i	55	02/01 – 09/05	3872	
CIVIC VII Hatchback (EU, EP, EV)	1.4 iS (EP1)	66	02/01 – 09/05	3607	
CIVIC VII Hatchback (EU, EP, EV)	1.4 iS (EP1)	66	02/01 – 09/05	3683	
CIVIC VII Hatchback (EU, EP, EV)	1.4 iS (EP1)	66	02/01 – 09/05	3872	
CIVIC VII Hatchback (EU, EP, EV)	1.6 i	81	02/01 – 09/05	3872	4148
CIVIC VII Hatchback (EU, EP, EV)	1.6 i	81	02/01 – 09/05	3607	

MAKE & MODEL   		KW	YEAR		
HONDA					
CIVIC VII Hatchback (EU, EP, EV)	1.6 i	81	02/01 – 09/05	3683	
CIVIC VII Hatchback (EU, EP, EV)	1.7 (ES1)	92	01/00 – 08/05	3686	4148
CIVIC VII Hatchback (EU, EP, EV)	1.7 CTDi	74	01/02 – 09/05		4148
CIVIC VII Hatchback (EU, EP, EV)	2.0 i Sport	118	09/01 – 09/05	4109	
CIVIC VII Hatchback (EU, EP, EV)	2.0 i Sport	118	09/01 – 09/05	4232	
CIVIC VII Hatchback (EU, EP, EV)	2.0 Type-R	147	09/01 – 09/05	4110	
CIVIC VII Saloon (ES)	1.2	58	04/01 – 10/04	3607	
CIVIC VII Saloon (ES)	1.2	58	04/01 – 10/04	3683	
CIVIC VII Saloon (ES)	1.2	58	04/01 – 10/04	3872	
CIVIC VII Saloon (ES)	1.3 IMA	61	10/03 – 09/05	3607	
CIVIC VII Saloon (ES)	1.3 IMA	61	10/03 – 09/05	3683	
CIVIC VII Saloon (ES)	1.3 IMA (ES9)	61	10/03 – 09/05	3872	4148
CIVIC VII Saloon (ES)	1.4 (ES4)	66	12/00 – 09/05	3607	
CIVIC VII Saloon (ES)	1.4 (ES4)	66	12/00 – 09/05	3683	
CIVIC VII Saloon (ES)	1.4 (ES4)	66	12/00 – 09/05	3872	
CIVIC VII Saloon (ES)	1.6	81	02/01 – 09/05	3607	
CIVIC VII Saloon (ES)	1.6	81	02/01 – 09/05	3683	
CIVIC VII Saloon (ES)	1.6	81	02/01 – 09/05	3872	
CIVIC VII Saloon (ES)	1.6	84	02/01 – 09/05	3607	
CIVIC VII Saloon (ES)	1.6	84	02/01 – 09/05	4109	
CIVIC VII Saloon (ES)	1.6	84	02/01 – 09/05	4232	
CIVIC VII Saloon (ES)	1.7 (EU3)	85	02/01 – 09/05	3607	
CIVIC VII Saloon (ES)	1.7 (EU3)	85	02/01 – 09/05	3683	
CIVIC VII Saloon (ES)	1.7 (EU3)	85	02/01 – 09/05	3872	
CIVIC VII Saloon (ES)	1.8	103	02/01 – 09/05	4109	
CIVIC VII Saloon (ES)	1.8	103	02/01 – 09/05	4232	
CIVIC VII Saloon (ES)	2.0	118	10/03 – 09/05	3607	4148
CIVIC VIII Hatchback (FN, FK)	Type R (FN2)	148	09/06 -	4110	
CIVIC VIII Saloon (FD, FA)	1.3	85	02/06 -	4109	4148
CIVIC VIII Saloon (FD, FA)	1.3	85	02/06 -	4232	
CIVIC VIII Saloon (FD, FA)	1.3 Hybrid	70	01/06 -	3607	4148
CIVIC VIII Saloon (FD, FA)	1.3 Hybrid (FD3)	85	01/10 – 02/12		4148
CIVIC VIII Saloon (FD, FA)	1.6	84	09/05 -	4109	4148
CIVIC VIII Saloon (FD, FA)	1.6	84	09/05 -	3696	
CIVIC VIII Saloon (FD, FA)	1.6	84	09/05 -	4232	
CIVIC VIII Saloon (FD, FA)	1.6	92	01/12 -	4109	4148
CIVIC VIII Saloon (FD, FA)	1.6	92	01/12 -	3696	
CIVIC VIII Saloon (FD, FA)	1.6	92	01/12 -	4232	
CIVIC VIII Saloon (FD, FA)	1.8	103	09/05 – 02/12	3553/1	
CIVIC VIII Saloon (FD, FA)	1.8	103	09/05 – 02/12	3696	
CIVIC VIII Saloon (FD, FA)	1.8 (FD1)	103	09/05 – 02/12	4109	4148
CIVIC VIII Saloon (FD, FA)	1.8 (FD1)	103	09/05 – 02/12	4232	
CIVIC VIII Saloon (FD, FA)	2.0	114	02/06 – 02/12	4109	4148
CIVIC VIII Saloon (FD, FA)	2.0	114	02/06 – 02/12	4232	
CIVIC VIII Saloon (FD, FA)	2.0 i-VTEC Type R	165	08/07 – 09/10	4109	4148
CIVIC VIII Saloon (FD, FA)	2.0 i-VTEC Type R	165	08/07 – 09/10	4232	
Civic VI Aerodeck (MB, MC) 2.0 i D (MC3)	20T2N	74	04/1998 - 02/2001	3872/1	
Civic VI Aerodeck (MB, MC) 2.0 i D (MC3)	20T2N	77	04/1998 - 02/2001	3872/1	
Civic VI Aerodeck (MB, MC) 44287 16V (MB8)	D14A7 (04.98-.)	55	04/1998 - 02/2001	3872/1	
Civic VI Aerodeck (MB, MC) 44287 16V (MB8)	D14A8 (04.98-.)	66	04/1998 - 02/2001	3872/1	
Civic VI Aerodeck (MB, MC) 44317 16V (MB9)	D15Z8	84	04/1998 - 02/2001	3872/1	
Civic VI Aerodeck (MB, MC) 44348 16V (MC1)	D16B2 (04.98-.)	85	04/1998 - 02/2001	3872/1	
Civic VI Fastback (MA, MB) 2.0 i TD (MB7)	20T2R	63	01/1997 - 02/2001	3872/1	
Civic VI Fastback (MA, MB) 44287 i (MA8, MB2)	D14A2 (09.94-.), D14A6, D14A8 (01.97-.), D14Z4	66	06/1995 - 02/2001	3872/1	
Civic VI Fastback (MA, MB) 44287 i (MA8, MB2)	D14A5 (09.95-.), D14A7 (01.97-.), D14Z3	55	09/1995 - 02/2001	3872/1	
Civic VI Fastback (MA, MB) 44317 16V (MB3)	D15Z8	84	01/1997 - 02/2001	3872/1	
Civic VI Fastback (MA, MB) 44317 i Vtec-E (MA9)	D15Z3 (09.94-.)	66	09/1994 - 01/1997	3872/1	
Civic VI Fastback (MA, MB) 44348 16V (MB4)	D16B2 (01.97-.)	85	01/1997 - 02/2001	3872/1	
Civic VI Fastback (MA, MB) 44348 i (MB1)	D16Y3 (09.94-.)	83	09/1994 - 01/1997	3872/1	
Civic VI Fastback (MA, MB) 44348 i Vtec (MB1)	D16Y2 (09.94-.)	93	09/1994 - 01/1997	3872/1	
Civic VI Hatchback (EJ, EK) 2.0 TDiC	20T2N (11.98-.)	77	11/1998 - 10/2000	3872/1	
Civic VII Coupe (EM2) 44348 i	D16V1	81	02/2001 - 12/2005	3872/1	4148/1
Civic VII Coupe (EM2) 44378 i	D17A8	88	05/2001 - 12/2005		4148/1
Civic VII Coupe (EM2) 44378 i VTEC	D17A5, D17A9	92	05/2001 - 12/2005		4148/1
Civic VII Hatchback (EU, EP, EV) 44287 i	D14Z6	55	02/2001 - 09/2005	3872/1	
Civic VII Hatchback (EU, EP, EV) 44287 iS (EP1)	D14Z5, D14Z6	66	02/2001 - 09/2005	3872/1	
Civic VII Hatchback (EU, EP, EV) 44348 i	D16V1, D16W7	81	02/2001 - 09/2005	3872/1	4148/1
Civic VII Hatchback (EU, EP, EV) 44378 CTDi	4EE-2	74	01/2002 - 09/2005		4148/1
Civic VII Sedan (ES, ET) / Civic Ferio 44287 (ES4)	D14Z5	66	12/2000 - 09/2005	3872/1	
Civic VII Sedan (ES, ET) / Civic Ferio 44348	D16W7	81	02/2001 - 09/2005	3872/1	4148/1
Civic VII Sedan (ES, ET) / Civic Ferio 44378 (EU3)	D17A6, D17Z2	85	02/2001 - 09/2005		4148/1
CONCERTO (HW, MA)	1.4	61	10/89 – 10/92	3683	
CONCERTO (HW, MA)	1.4	61	10/89 – 10/92	3872	
CONCERTO (HW, MA)	1.4	66	08/89 – 10/91	3683	
CONCERTO (HW, MA)	1.4	66	08/89 – 10/91	3872	
CONCERTO (HW, MA)	1.5 i 16V	66	08/89 – 03/95	3683	

MAKE & MODEL		KW	YEAR		
HONDA					
CONCERTO (HW, MA)	1.5 i 16V	66	08/89 – 03/95	3872	
CONCERTO (HW, MA)	1.6	96	10/89 – 10/92	3872	4212
CONCERTO (HW, MA)	1.6	96	10/89 – 10/92	3683	
CONCERTO (HW, MA)	1.6 16V	78	08/89 – 03/95	3872	4212
CONCERTO (HW, MA)	1.6 16V	78	08/89 – 03/95	3683	
CONCERTO (HW, MA)	1.6 i 16V	82	08/89 – 03/95	3872	4212
CONCERTO (HW, MA)	1.6 i 16V	82	08/89 – 03/95	3683	
CONCERTO (HW, MA)	1.6 i 16V	90	08/89 – 03/95	3872	4212
CONCERTO (HW, MA)	1.6 i 16V	90	08/89 – 03/95	3683	
Concerto (HW, MA) 44287	D14A1	61	10/1989 - 10/1992	3872/1	
Concerto (HW, MA) 44287	D14A1, D14A8	66	08/1989 - 10/1991	3872/1	
Concerto (HW, MA) 44317 i 16V	D15B2 (08.89-09.91)	66	08/1989 - 03/1995	3872/1	
Concerto (HW, MA) 44348 16V	D16Z2	78	08/1989 - 03/1995	3872/1	
Concerto (HW, MA) 44348 i 16V	D16A8 (08.89-.), D16Z4	90	08/1989 - 03/1995	3872/1	
Concerto (HW, MA) 44348 i 16V	D16Z2 (08.89-09.91)	82	08/1989 - 03/1995	3872/1	
CONCERTO Saloon (HWW)	1.4	61	10/89 – 10/92	3683	
CONCERTO Saloon (HWW)	1.4	61	10/89 – 10/92	3872	
CONCERTO Saloon (HWW)	1.4	66	08/89 – 10/91	3683	
CONCERTO Saloon (HWW)	1.4	66	08/89 – 10/91	3872	
CONCERTO Saloon (HWW)	1.5 i 16V	66	08/89 – 05/95	3683	
CONCERTO Saloon (HWW)	1.5 i 16V	66	08/89 – 05/95	3872	
CONCERTO Saloon (HWW)	1.6	96	10/89 – 10/92	3872	4212
CONCERTO Saloon (HWW)	1.6	96	10/89 – 10/92	3683	
CONCERTO Saloon (HWW)	1.6 16V	78	08/89 – 03/95	3872	4212
CONCERTO Saloon (HWW)	1.6 16V	78	08/89 – 03/95	3683	
CONCERTO Saloon (HWW)	1.6 i 16V	82	08/89 – 03/95	3872	4212
CONCERTO Saloon (HWW)	1.6 i 16V	82	08/89 – 03/95	3683	
CONCERTO Saloon (HWW)	1.6 i 16V	90	08/89 – 03/95	3872	4212
CONCERTO Saloon (HWW)	1.6 i 16V	90	08/89 – 03/95	3683	
Concerto Sedan (HWW) 44287	D14A1	61	10/1989 - 10/1992	3872/1	
Concerto Sedan (HWW) 44287	D14A1, D14A8	66	08/1989 - 10/1991	3872/1	
Concerto Sedan (HWW) 44317 i 16V	D15B2 (08.89-09.91)	66	08/1989 - 05/1995	3872/1	
Concerto Sedan (HWW) 44348 16V	D16Z2	78	08/1989 - 03/1995	3872/1	
Concerto Sedan (HWW) 44348 i 16V	D16A8 (08.89-.), D16Z4	90	08/1989 - 03/1995	3872/1	
Concerto Sedan (HWW) 44348 i 16V	D16Z2 (08.89-09.91)	82	08/1989 - 03/1995	3872/1	
CROSSROAD (RT_)	1.8 i-VTEC (RT1)	103	02/07 – 08/10	4109	
CROSSROAD (RT_)	1.8 i-VTEC (RT1)	103	02/07 – 08/10	4232	
CR-V I (RD)	2.0	98	04/99 – 02/02	3704	
CR-V I (RD)	2.0 16V 4WD (RD1, RD3)	94	10/95 – 12/01	3704	
CR-V I (RD)	2.0 16V 4WD (RD1, RD3)	108	01/99 – 02/02	3704	
CR-V II (RD_)	2.0 (RD4)	110	09/01 – 09/06	3831	
CR-V II (RD_)	2.2 CTDi (RD9)	103	02/05 – 09/06	3831	
CR-V II (RD_)	2.4 Vtec 4WD (RD7)	118	09/01 – 09/06	3831	
CR-V II (RD_) 2.0 (RD4)	K20A4	110	09/2001 - 03/2007		4148/1
CR-V III (RE)	2.0 i 4WD (RE5)	110	01/07 -	4160	4156
CR-V III (RE)	2.2 i-CTDi 4WD (RE6)	103	01/07 -	4160	4156
CR-V III (RE)	2.2 i-DTEC 4WD (RE6)	110	01/07 -	4160	4156
CR-V III (RE)	2.4	125	04/07 -	4160	4156
CR-V III (RE)	2.4 4WD (RE4)	124	09/06 -	4160	4156
CR-V III (RE)	2.4 i-Vtec 4WD	125	04/07 -	4160	4156
CR-V III (RE)	2.4 i-VTEC 4WD (RE4)	118	10/06 -	4160	4156
CR-V III (RE)	2.4 i-VTEC 4WD (RE7)	122	09/09 -	4160	4156
CR-V IV (RE_)	1.6 i-DTEC (RE6)	88	10/13 -	4160	4156
CR-V IV (RE_)	1.6 i-DTEC 4WD	118	02/15 -	4160	4156
CR-V IV (RE_)	2.0	110	01/12 -	4160	4156
CR-V IV (RE_)	2.0 (RE5)	114	10/12 -	4160	4156
CR-V IV (RE_)	2.0 AWD (RE5)	114	10/12 -	4160	4156
CR-V IV (RE_)	2.2 i-DTEC AWD (RE6)	110	10/12 -		4156
CR-V IV (RE_)	2.4	129	09/12 -		4156
CR-V IV (RE_)	2.4	138	01/12 -		4156
CR-V IV (RE_)	2.4 4WD	129	09/12 -		4156
CR-V IV (RE_)	2.4 AWD	132	01/12 -		4156
CR-V IV (RE_)	2.4 AWD	140	01/12 -		4156
CRX I (AF, AS)	1.3	52	10/83 – 10/87	3633	
CRX I (AF, AS)	1.3	52	10/83 – 10/87	3646	
CRX I (AF, AS)	1.3	52	10/83 – 10/87	3752	
CRX I (AF, AS)	1.3	52	10/83 – 10/87	3501	
CRX I (AF, AS)	1.5 i (AF)	74	10/83 – 11/86	3633	
CRX I (AF, AS)	1.5 i (AF)	74	10/83 – 11/86	3646	
CRX I (AF, AS)	1.5 i (AF)	74	10/83 – 11/86	3752	
CRX I (AF, AS)	1.5 i (AF)	74	10/83 – 11/86	3501	
CRX I (AF, AS)	1.6 i 16V (AS)	92	03/86 – 10/87	3582	
CRX II (ED, EE)	1.6 i 16V	79	10/87 – 05/88		4212
CRX II (ED, EE)	1.6 i 16V (ED9)	91	10/87 – 02/92		4212
CRX II (ED, EE)	1.6 i 16V (ED9)	96	10/87 – 12/89		4212
CRX II (ED, EE)	1.6 i 16V Vtec (EE8)	110	10/89 – 02/92		4212

MAKE & MODEL		KW	YEAR		
HONDA					
CRX III (EH, EG)	1.5	77	01/94 – 04/98	3607	
CRX III (EH, EG)	1.6 ESi (EH6)	92	03/92 – 12/98	3607	
CRX III (EH, EG)	1.6 i VTi (EG2)	118	03/92 – 12/98	3607	
CR-Z (ZF) 44317 Hybrid	LEA1	97	09/2013 -		4148/1
CR-Z (ZF) 44317 Hybrid	LEA1, LEA3	88	12/2013 -		4148/1
CR-Z (ZF) 44317 Hybrid	LEA1, LEA3	89	11/2012 -		4148/1
CR-Z (ZF) 44317 Hybrid	LEA1, LEA3	91	09/2010 - 12/2013		4148/1
CR-Z (ZF) 44317 Hybrid (ZF1)	LEA1	84	06/2010 -		4148/1
ELEMENT (YH)	2.4 Vtec	118	07/02 – 12/11	3831	4148
ELEMENT (YH)	2.4 Vtec 4x4	118	07/02 – 12/11	3831	4148
FR-V (BE) / Edix 2.0 (BE3)	K20A9	110	02/2005 -		4148/1
FR-V (BE) / Edix 44229 i CTDi (BE5)	N22A1	103	07/2005 -		4148/1
FR-V (BE) / Edix 44378 (BE1)	D17A2	92	08/2004 -		4148/1
FR-V (BE) / Edix 44378 Vtec 4x4	D17A2	92	08/2004 - 09/2006		4148/1
HR-V (GH)	1.6 16V	77	03/99 -	3704	
HR-V (GH)	1.6 16V 4WD	77	03/99 -	3704	
HR-V (GH)	1.6 16V 4WD	91	10/99 -	3704	
HR-V (RU)	1.5 (RU1)	96	08/15 -		4279
HR-V (RU) 44317	-	88	01/2015 -	4312	
HR-V (RU) 44317 (RU1)	L15B	96	08/2015 -	4312	
HR-V (RU) 44348 i-DTEC (RU8)	-	88	08/2015 -	4312	
HR-V (RU) 44409	R18ZF, R18ZG	104	11/2014 -	4312	
HR-V (RU) 44409 (RU58)	R18Z9, R18ZF	105	01/2015 -	4312	
HR-V (RU) 44409 AWD	-	104	11/2014 -	4312	
HR-V (RU) 44409 i- VTEC Flexone	R18A1	103	06/2015 -	4312	
INSIGHT (ZE_)	1.3 Hybrid (ZE2)	65	04/09 -		4148
INSIGHT (ZE_)	1.3 Hybrid (ZE2)	73	04/09 -		4148
Insight II (ZE_) 44256 Hybrid (ZE2)	LDA3	73	04/2009 -		4148/1
Insight II (ZE_) 44256 Hybrid (ZE28, ZE2)	LDA3	65	04/2009 -		4148/1
INTEGRA (DA)	1.5	63	10/85 – 08/89	3582	
INTEGRA (DA)	1.6 (DA1, DA3)	88	03/86 – 08/89	3582	
INTEGRA (DA)	1.6 (DA6, DA8)	125	09/89 – 08/93	3631	
INTEGRA (DC5)	2.0	118	02/02 -	3704	
INTEGRA (DC5)	2.0	147	10/04 -	3607	
INTEGRA (DC5)	2.0 16V Type-R	162	02/02 -	3704	
INTEGRA Coupe (DC2, DC4)	1.8	107	07/93 – 11/01	3704	4148
INTEGRA Coupe (DC2, DC4)	1.8 Type-R	140	11/97 – 10/01	3704	4148
INTEGRA Coupe (DC2, DC4)	1.8 Type-R (DC2)	147	09/93 – 08/01	3704	4148
INTEGRA Coupe (DC5)	2.0 16V Type-R	162	02/02 -	3909	4148
INTEGRA Hatchback (DA)	1.5	63	10/85 – 08/89		4212
INTEGRA Hatchback (DA)	1.6 (DA1, DA3)	88	03/86 – 08/89		4212
INTEGRA Hatchback (DA)	1.6 (DA6, DA8)	125	09/89 – 08/93		4212
Integra II Coupe (DC2, DC4) 44409 Type-R	B18C6	140	11/1997 - 10/2001		4148/1
Integra II Coupe (DC2, DC4) 44409 Type-R (DC2)	-	147	09/1993 - 08/2001		4148/1
JAZZ II (GD_, GE3)	1.2	57	03/02 – 07/08	3686	
JAZZ II (GD_, GE3)	1.3	61	03/02 – 07/08	3686	
JAZZ II (GD_, GE3)	1.3 iDSi	63	03/02 – 09/07	3686	
JAZZ II (GD_, GE3)	1.4	65	04/05 – 07/08	3686	
JAZZ II (GD_, GE3)	1.5	81	04/02 – 07/08	3686	
JAZZ II (GD_, GE3)	1.5 FF	79	03/02 – 09/07	3686	
Jazz IV (GE_, GG_, GP_) / Fit 44256 HYBRID (GP1)	LDA3	65	04/2011 -		4148/1
Jazz IV (GE_, GG_, GP_) / Fit 44287 Hybrid	-	72	06/2011 -		4148/1
JAZZ Saloon (GD_)	1.3 (GD6)	63	05/03 – 07/08	3686	
JAZZ Saloon (GD_)	1.5 (GD8)	66	05/03 – 06/06	3686	
JAZZ Saloon (GD_)	1.5 (GD8)	81	10/04 – 07/08	3686	
Jazz V (GK_) / Fit 44228 i-VTEC	L12B4	66	07/2016 -		4148/1
Jazz V (GK_) / Fit 44256	L13B	73	09/2013 -		4148/1
Jazz V (GK_) / Fit 44256	L13B, L13B2	75	09/2015 -		4148/1
Jazz V (GK_) / Fit 44256 4WD	L13B	73	09/2013 -		4148/1
Jazz V (GK_) / Fit 44317	-	94	01/2015 -		4148/1
Jazz V (GK_) / Fit 44317	L15A, L15Z2, L15Z5	88	09/2014 -		4148/1
Jazz V (GK_) / Fit 44317	L15B	97	09/2014 -		4148/1
Jazz V (GK_) / Fit 44317	L15B3	96	01/2015 -		4148/1
Jazz V (GK_) / Fit 44317 4WD	L15B	97	12/2013 -		4148/1
Jazz V (GK_) / Fit 44317 Hybrid	LEB-H1	81	09/2013 -		4148/1
Jazz V (GK_) / Fit 44317 Hybrid 4WD	LEB-H1	81	09/2013 -		4148/1
Jazz V (GK_) / Fit 44317 i-VTEC Flex	L15Z2	88	09/2014 -		4148/1
Jazz V (GK_) / Fit EV	MCF3	92	01/2014 -		4148/1
LEGEND I (HS, KA)	2.5 i (HS)	110	01/86 – 12/87	3631	4148
LEGEND I (HS, KA)	2.5 i (HS)	127	02/87 – 06/88	3631	4148
LEGEND I (HS, KA)	2.7 i 24V (KA4)	124	01/88 – 12/90	3631	4148
Legend I (HS, KA) 44318 i (HS)	C25A1 (01.86-12.87)	110	01/1986 - 12/1987		4148/1
Legend I (HS, KA) 44318 i (HS)	C25A2 (02.87-06.88)	127	02/1987 - 06/1988		4148/1
Legend I (HS, KA) 44379 i 24V (KA4)	C27A1 (01.88-12.90)	124	01/1988 - 12/1990		4148/1
LEGEND I Coupe (KA_)	2.7 i 24V (KA3)	124	10/87 – 12/90	3631	4148
Legend I Coupe (KA_) 44379 i 24V (KA3)	C27A1 (10.87-12.90)	124	10/1987 - 12/1990		4148/1

MAKE & MODEL   		KW	YEAR		
HONDA					
LEGEND II (KA)	3.2 i 24V (KA7)	151	01/91 – 02/96	3704	4148
Legend II (KA) 44230 i 24V (KA7)	C32A2 (01.91-.)	151	01/1991 - 02/1996		4148/1
LEGEND II Coupe (KA)	3.2 i 24V (KA8)	151	01/91 – 02/96	3704	4148
Legend II Coupe (KA) 44230 i 24V (KA8)	C32A2 (01.91-.)	151	01/1991 - 02/1996		4148/1
LEGEND III (KA)	3.5	221	10/04 -		4148
LEGEND III (KA)	3.5 i 24V (KA9)	151	02/96 -		4148
LEGEND III (KA)	3.5 i 24V (KA9)	153	11/97 – 09/04		4148
Legend III (KA) 44319 i 24V (KA9)	C35A2 (02.96-.)	151	02/1996 - 10/1997		4148/1
LEGEND III (KA9)	3.5	221	10/04 -	3704	
LEGEND III (KA9)	3.5 i 24V	151	02/96 -	3704	
LEGEND III (KA9)	3.5 i 24V	153	11/97 – 09/04	3704	
LOGO (GA3)	1.3	48	03/99 – 03/02	3686	
MOBILIO (GB_)	1.5	66	12/01 – 10/08	3607	
MOBILIO (GB_)	1.5	81	12/01 – 10/08	3607	
MOBILIO (GB_)	1.5 4WD	66	12/01 – 10/08	3607	
MOBILIO (GB_)	1.5 4WD	81	12/01 – 10/08	3607	
NSX Convertible (NA)	3.0 24V Vtec	201	03/95 – 09/05	3704	
NSX Convertible (NA)	3.0 24V Vtec Automatic	188	03/95 – 09/05	3704	
NSX Convertible (NA)	3.2 24V Vtec	206	01/97 – 09/05	3704	
NSX Coupe (NA)	3.0 24V Vtec (NA1)	201	06/90 – 09/05	3704	
NSX Coupe (NA)	3.0 24V Vtec Automatik (NA1)	188	06/90 – 09/05	3704	
NSX Coupe (NA)	3.2 24V Vtec (NA2)	206	01/97 – 09/05	3704	
ODYSSEY (RB_)	2.3	110	07/02 – 09/03	3704	4148
ODYSSEY (RB_)	2.3 4x4	110	07/02 – 09/03		4148
ODYSSEY (RB_)	2.4	118	10/03 -	4109	
ODYSSEY (RB_)	2.4	118	10/03 -	4232	
ODYSSEY (RB_)	2.4	140	10/05 -	4109	
ODYSSEY (RB_)	2.4	140	10/05 -	4232	
Odyssey I SW Grande (RA_) 44229	F22B	110	01/1995 - 01/1998		4148/1
PILOT	3.5 4WD	183	01.2011 -		4368
PILOT	3.5 4WD	186	09.2008 -		4368
PILOT	3.5 4WD	189	01.10 - 06.15		4368
PRELUDE (SN)	1.6 (EL14)	59	11/78 – 10/82	3705	
PRELUDE (SN)	1.6 (EL)	59	11/78 – 10/82	3705	
PRELUDE II (AB)	1.8 EX	74	11/85 – 04/87	3752	
PRELUDE II (AB)	1.8 EX	74	11/85 – 04/87	3501	
PRELUDE II (AB)	1.8 EX	77	11/83 – 04/87	3752	
PRELUDE II (AB)	1.8 EX	77	11/83 – 04/87	3501	
PRELUDE III (BA)	2.0 (BA4)	84	08/87 – 01/92		4212
PRELUDE III (BA)	2.0 EX (BA4)	80	04/87 – 01/92		4212
PRELUDE III (BA)	2.0 i EX 16V	101	04/86 – 12/87	3631	4212
PRELUDE III (BA)	2.0 i EX 16V	110	10/87 – 12/90	3631	4212
PRELUDE III (BA)	2.0 i EX 16V (BA2)	101	04/86 – 12/87	3631	4212
PRELUDE III (BA)	2.0 i EX 16V (BA4)	103	04/90 – 01/92	3631	4212
PRELUDE III (BA)	2.0 i EX 16V (BA4) CAT	101	04/87 – 01/92	3631	4212
PRELUDE IV (BB)	2.0 16V (BB9)	98	10/96 – 10/00		4148
PRELUDE IV (BB)	2.0 i 16V (BB3)	98	02/92 – 09/96		4148
PRELUDE IV (BB)	2.2 16V	147	10/96 – 10/00	3704	4148
PRELUDE IV (BB)	2.2 16V (BB6, BB8)	136	10/96 – 10/00	3704	4148
Prelude IV (BB_) 2.0 i 16V (BB3)	F20A4 (02.92-.)	98	02/1992 - 09/1996		4148/1
Prelude IV (BB_) 44229 i 16V Vtec (BB1)	H22A2 (02.93-.)	136	02/1993 - 09/1996		4148/1
Prelude IV (BB_) 44257 i 16V (BB2)	H23A2 (02.92-.)	118	02/1992 - 09/1996		4148/1
PRELUDE V (BB)	2.2 i 16V Vtec (BB1)	136	02/93 – 09/96	3704	4148
PRELUDE V (BB)	2.3 i 16V (BB2)	118	02/92 – 09/96	3704	4148
Prelude V (BB_) 2.0 16V (BB9)	F20A4 (10.96-.)	98	10/1996 - 10/2000		4148/1
Prelude V (BB_) 44229 16V (BB6)	H22A4, H22A5 (10.96-.), H22A6, H22A8, H22Z1	147	10/1996 - 10/2000		4148/1
Prelude V (BB_) 44229 16V (BB6, BB8)	H22A2, H22A5 (10.96-.)	136	10/1996 - 10/2000		4148/1
QUINTET (SU)	1.6 EX (EL)	59	02/80 – 12/84	3705	
S2000 (AP)	2.0 (AP1)	177	06/99	4110	
S2000 (AP)	2.0 Vtec	170	03/99 – 10/03	4110	
S2000 (AP)	2.0 Vtec (AP1)	184	10/03 -	4110	
S2000 (AP)	2.2 Vtec	176	10/03 -	4110	
S2000 (AP) 2.0 (AP1)	F20C VTEC	177	06/1999 -		4148/1
SHUTTLE (RA)	2.2 16V	110	10/94 – 02/98	3704	
SHUTTLE (RA)	2.3 16V	110	10/97 – 06/04	3704	
SHUTTLE (RA)	3.0	154	10/97 – 06/04	4109	
SHUTTLE (RA)	3.0	154	10/97 – 06/04	4232	
Shuttle I (RA) / Odyssey 44229 16V (RA1)	F22B8 (02.95-.)	110	10/1994 - 02/1998		4148/1
Shuttle I (RA) / Odyssey 44257 16V (RA3, RA6)	F23A7	110	10/1997 - 06/2004		4148/1
Shuttle I (RA) / Odyssey 44257 16V 4x4	F23A	110	10/1997 - 06/2002		4148/1
SMX	2.0 Lowdown	103	10/99 – 09/02	3704	
Stream (RN) 2.0 16V (RN3)	K20A1, K20A5	115	05/2001 - 09/2006		4148/1
Stream (RN) 44378 16V (RN1)	D17A2, D17A5	92	05/2001 - 09/2006		4148/1
STEPWGN (DBA-RG_)	2.0	114	10/05 – 09/09	4109	
STEPWGN (DBA-RG_)	2.0	114	10/05 – 09/09	4232	
STEPWGN (DBA-RG_)	2.4 Z FF	119	10/05 – 09/09	4109	

MAKE & MODEL		KW	YEAR		
HONDA					
STEPWGN (DBA-RG_)	2.4 Z FF	119	10/05 – 09/09	4232	
STEPWGN (LA-RF_, UA-RF_)	2.0	118	10/00 – 09/05	3704	4148
STEPWGN (LA-RF_, UA-RF_)	2.0 4WD	118	10/00 – 09/05		4148
STEPWGN (LA-RF_, UA-RF_)	2.4	119	10/00 – 09/05	3704	4148
STREAM	1.8 Vtec	103	10/05 -	4109	4148
STREAM	1.8 Vtec	103	10/05 -	4232	
STREAM	2.0 Vtec	110	10/05 -	4109	4148
STREAM	2.0 Vtec	110	10/05 -	4232	
STREAM (RN)	1.7 16V (RN1)	92	05/01 -	4109	
STREAM (RN)	1.7 16V (RN1)	92	05/01 -	4232	
STREAM (RN)	2.0 16V (RN3)	115	05/01 -	4109	
STREAM (RN)	2.0 16V (RN3)	115	05/01 -	4232	
HONDA (DONGFENG)					
CIVIC VIII	1.3 Hybrid	70	01/09 – 12/13	4109	4148
CIVIC VIII	1.3 Hybrid	70	01/09 – 12/13	4232	
CIVIC VIII	1.8	103	04/06 – 12/12	4109	4148
CIVIC VIII	1.8	103	04/06 – 12/12	4232	
CIVIC VIII	1.8	104	10/11 -	4109	4148
CIVIC VIII	1.8	104	10/11 -	4232	
CIVIC VIII	2.0	114	10/11 -	4109	4148
CIVIC VIII	2.0	114	10/11 -	4232	
CR-V	2.0 All-wheel Drive	110	06/04 – 02/07		4148
CR-V	2.4 All-wheel Drive	118	06/04 – 02/07		4148
SPIRIOR	2.4	133	07/09 – 12/12	4109	
SPIRIOR	2.4	133	07/09 – 12/12	4232	
HONDA (GAC)					
ACCORD VI	2.0	108	01/99 – 12/02		4148
ACCORD VI	2.0	110	01/99 – 12/07	3696	
ACCORD VI	2.0 Vtec	110	01/03 – 12/07		4148
ACCORD VI	2.0 Vtec	110	10/99 – 12/02	3696	
ACCORD VI	2.3 Vtec	110	06/00 – 12/02	3696	4148
ACCORD VI	3.0 Vtec	147	06/00 – 12/02	3704	4148
ACCORD VII	2.0	110	01/03 – 12/07	4109	4148
ACCORD VII	2.0	110	01/03 – 12/07	4232	
ACCORD VII	2.4	119	01/03 – 12/07	4109	4148
ACCORD VII	2.4	119	01/03 – 12/07	4232	
ACCORD VII	2.4	125	01/03 – 12/07	4109	4148
ACCORD VII	2.4	125	01/03 – 12/07	4232	
ACCORD VII	3.0	177	01/03 – 12/07	4109	4148
ACCORD VII	3.0	177	01/03 – 12/07	4232	
ACCORD VIII	2.0	115	03/08 – 12/13	4109	
ACCORD VIII	2.0	115	03/08 – 12/13	4232	
ACCORD VIII	2.4	132	01/08 – 12/13	4109	
ACCORD VIII	2.4	132	01/08 – 12/13	4232	
ACCORD VIII	3.5	206	03/08 – 12/12	4109	
ACCORD VIII	3.5	206	03/08 – 12/12	4232	
CITY	1.3	60	04/06 – 12/08	3686	
CITY	1.5	79	04/06 – 12/08	3686	
CITY (GM)	1.5	88	12/08 – 12/15	3686	
CITY (GM)	1.8	103	12/08 – 12/14		4148
FIT Hatchback	1.3	60	09/04 – 07/08	3686	
FIT Hatchback	1.3	73	07/08 – 12/14	3686	
FIT Hatchback	1.5	79	09/04 – 07/08	3686	
FIT Hatchback	1.5	88	07/08 – 12/14	3686	
FIT Saloon	1.3	60	09/03 – 04/06	3686	
FIT Saloon	1.5	79	06/04 – 04/06	3686	
ODYSSEY MPV	2.4	118	03/05 – 08/09	4109	
ODYSSEY MPV	2.4	118	03/05 – 08/09	4232	
ODYSSEY MPV	2.4	133	08/09 – 12/14	4109	
ODYSSEY MPV	2.4	133	08/09 – 12/14	4232	
HONGQI					
FLAGSHIP (CA7460)	46	158	02/99 – 07/05		3529/1
HQ3	30	170	12/06 – 12/08	3910	
HQ3	43	206	12/06 – 12/08	3910	
MINGSHI (CA7180) Convertible	1.8	70	11/01 -		3529/1
HSV					
AVALANCHE Estate (VY)	5.7 i V8 4x4	260	10/03 – 04/06		4188
CLUBSPORT Saloon (VT)	5.0 i V8	195	01/97 – 06/99		4188
CLUBSPORT Saloon (VT)	5.7 i V8	250	07/99 – 10/00		4188
CLUBSPORT Saloon (VX)	5.7 i V8	255	09/00 – 09/02		4188
CLUBSPORT Saloon (VY)	5.7 i V8	260	10/02 – 08/03		4188
CLUBSPORT Saloon (VY)	5.7 i V8	285	09/03 – 09/04		4188
CLUBSPORT Saloon (VZ)	6.0 i V8	297	10/04 – 12/06		4188
GRANGE Saloon (WH)	3.8 i V6 Supercharged	180	07/99 – 09/00		4188
GRANGE Saloon (WH)	5.7 i V8	250	07/99 – 11/00		4188

MAKE & MODEL		KW	YEAR		
HSV					
GRANGE Saloon (WH)	5.7 i V8	255	10/00 – 09/03		4188
GRANGE Saloon (WK)	5.7 i V8	285	10/03 – 09/04		4188
GRANGE Saloon (WL)	6.0 i V8	297	09/04 – 12/06		4188
SENATOR Saloon (VT)	5.0 i V8	195	09/97 – 06/99		4188
SENATOR Saloon (VT)	5.7 i V8	220	09/97 – 06/99		4188
SENATOR Saloon (VT)	5.7 i V8	230	09/97 – 06/99		4188
SENATOR Saloon (VT)	5.7 i V8	250	09/97 – 06/99		4188
HUALI					
TERIOS	1.3	63	07/04 -	3604	
HUMMER					
HUMMER H2 SUT	6.0 AWD	237	09.2004 -		4022
HMWWV			2009-	4366	4366
HMWWV			2009-	4366	
HYUNDAI					
(BEIJING) Sonata III (YF) 44288	G4KE	127	04/2011 - 02/2015		4343
(BEIJING) Tucson II (TL) 2.0 GDi	G4NC	121	09/2015 -		4343
(BEIJING) Tucson II (TL) 44348 T-GDi	G4FJ	130	09/2015 -		4343
(BEIJING) Tucson II (TL) 44348 T-GDi	G4FJ	130	09/2015 -		4343
ACCENT I (X-3) / SOLARIS I (X-3)	1.3	40	09/95 – 05/98	3502	
ACCENT I (X-3) / SOLARIS I (X-3)	1.3	44	10/94 – 01/00	3502	
ACCENT I (X-3) / SOLARIS I (X-3)	1.3	55	10/94 – 01/00	3502	
ACCENT I (X-3) / SOLARIS I (X-3)	1.3 i 12V	62	10/94 – 01/00	3502	
ACCENT I (X-3) / SOLARIS I (X-3)	1.5 16V	76	10/94 – 01/00	3502	
ACCENT I (X-3) / SOLARIS I (X-3)	1.5 i 12V	65	10/94 – 01/00	3502	
ACCENT I (X-3) / SOLARIS I (X-3)	1.5 i 16V	73	12/95 – 01/00	3502	
ACCENT II (LC) / SOLARIS II (LC)	1.3	55	01/00 – 11/05	3502	
ACCENT II (LC) / SOLARIS II (LC)	1.3	61	01/00 – 11/05	3502	
ACCENT II (LC) / SOLARIS II (LC)	1.3	62	08/02 – 11/05	3502	
ACCENT II (LC) / SOLARIS II (LC)	1.3	63	01/00 – 11/05	3502	
ACCENT II (LC) / SOLARIS II (LC)	1.5	65	09/99 – 10/02	3502	
ACCENT II (LC) / SOLARIS II (LC)	1.5	66	01/00 – 11/05	3502	
ACCENT II (LC) / SOLARIS II (LC)	1.5	75	09/00 – 11/05	3502	
ACCENT II (LC) / SOLARIS II (LC)	1.5 CRDi	60	04/02 – 11/05	3502	
ACCENT II (LC) / SOLARIS II (LC)	1.6	77	12/02 – 11/05	3502	
ACCENT II Saloon (LC) / SOLARIS II Saloon (LC)	1.3	55	01/00 – 11/05	3502	
ACCENT II Saloon (LC) / SOLARIS II Saloon (LC)	1.3	63	01/00 – 11/05	3502	
ACCENT II Saloon (LC) / SOLARIS II Saloon (LC)	1.5	66	01/00 – 11/05	3502	
ACCENT II Saloon (LC) / SOLARIS II Saloon (LC)	1.5	75	09/99 – 10/02	3502	
ACCENT II Saloon (LC) / SOLARIS II Saloon (LC)	1.5 CRDi	60	01/02 – 11/05	3502	
ACCENT II Saloon (LC) / SOLARIS II Saloon (LC)	1.6	77	12/02 – 11/05	3502	
ACCENT III (MC) / SOLARIS III (MC)	1.4 GL	71	11/05 – 11/10	3880	3880
ACCENT III (MC) / SOLARIS III (MC)	1.5 CRDi GLS	81	11/05 – 11/10	3880	3880
ACCENT III (MC) / SOLARIS III (MC)	1.6 GLS	82	11/05 – 11/10	3880	3880
ACCENT III Saloon (MC) / SOLARIS III Saloon (MC)	1.4 GL	71	11/05 – 11/10	3880	3880
ACCENT III Saloon (MC) / SOLARIS III Saloon (MC)	1.5 CRDi GLS	81	11/05 – 11/10	3880	3880
ACCENT III Saloon (MC) / SOLARIS III Saloon (MC)	1.6 GLS	82	11/05 – 11/10	3880	3880
ACCENT IV (RB) / SOLARIS IV (RB)	1.4	79	11/10 -	4136	4061
ACCENT IV (RB) / SOLARIS IV (RB)	1.6	91	11/10 -	4136	4061
Accent IV (RB) / Solaris 44287	G4LC	74	09/2015 -		4343
Accent IV (RB) / Solaris 44348	G4FC	90	12/2010 -		4343
Accent IV (RB) / Solaris 44348 CRDi	D4FB	100	02/2015 -		4343
Accent IV (RB) / Solaris 44348 CRDi	D4FB	94	07/2011 -		4343
Accent IV (RB) / Solaris 44348 GDI	G4FD	103	09/2011 -		4343
ACCENT IV Saloon (RB) / SOLARIS IV Saloon (RB)	1.4	74	11/10 -	3880	3880
ACCENT IV Saloon (RB) / SOLARIS IV Saloon (RB)	1.4	74	11/10 -	4136	4061
ACCENT IV Saloon (RB) / SOLARIS IV Saloon (RB)	1.4	80	11/10 -	4136	4061
ACCENT IV Saloon (RB) / SOLARIS IV Saloon (RB)	1.4 CRDi	66	11/10 -	4136	4061
ACCENT IV Saloon (RB) / SOLARIS IV Saloon (RB)	1.6	90	11/10 -	4136	4061
ACCENT IV Saloon (RB) / SOLARIS IV Saloon (RB)	1.6	91	11/10 -	4136	4061
ACCENT IV Saloon (RB) / SOLARIS IV Saloon (RB)	1.6 CCVT-I	92	11/10 -	4136	4061
ACCENT IV Saloon (RB) / SOLARIS IV Saloon (RB)	1.6 CRDI	100	04/11 -	4136	4061
ACCENT IV Saloon (RB) / SOLARIS IV Saloon (RB)	1.6 CRDi	94	10/11 -	4136	4061
ACCENT IV Saloon (RB) / SOLARIS IV Saloon (RB)	1.6 GDI	103	09/11 -	4136	4061
Accent IV Sedan (RB) / Accent i25 / Solaris 44287	G4FA	80	11/2010 - 12/2017		4343
Accent IV Sedan (RB) / Accent i25 / Solaris 44287	G4LC	74	11/2010 -		4343
Accent IV Sedan (RB) / Accent i25 / Solaris 44287 CRDi	D4FC	66	11/2010 -		4343
Accent IV Sedan (RB) / Accent i25 / Solaris 44348	G4FC	90	11/2010 -		4343
Accent IV Sedan (RB) / Accent i25 / Solaris 44348 CRDI	D4FB	100	04/2011 -		4343
Accent IV Sedan (RB) / Accent i25 / Solaris 44348 CRDi	D4FB	94	11/2010 - 12/2017		4343
Accent IV Sedan (RB) / Accent i25 / Solaris 44348 GDI	G4FD	103	09/2011 -		4343
ACCENT Saloon (X-3) / SOLARIS Saloon (X-3)	1.3	44	10/94 – 01/00	3502	
ACCENT Saloon (X-3) / SOLARIS Saloon (X-3)	1.3	55	10/94 – 01/00	3502	
ACCENT Saloon (X-3) / SOLARIS Saloon (X-3)	1.3 i 12V	62	10/94 – 01/00	3502	
ACCENT Saloon (X-3) / SOLARIS Saloon (X-3)	1.5	63	10/94 – 07/99	3502	
ACCENT Saloon (X-3) / SOLARIS Saloon (X-3)	1.5 i 12V	65	10/94 – 01/00	3502	

MAKE & MODEL   		KW	YEAR		
HYUNDAI					
ACCENT Saloon (X-3) / SOLARIS Saloon (X-3)	1.5 i 16V	73	10/95 – 01/00	3502	
ATOS (MX)	0.8	38	04/99 – 07/03	3778	
ATOS (MX)	0.8	38	04/99 – 07/03	3985	
ATOS (MX)	1.0 i	40	02/98 – 12/14	3778	
ATOS (MX)	1.0 i	40	02/98 – 12/14	3985	
ATOS (MX)	1.0 i	41	02/98 – 03/02	3778	
ATOS (MX)	1.0 i	41	02/98 – 03/02	3985	
ATOS (MX)	1.0 i	43	03/01 – 07/03	3778	
ATOS (MX)	1.0 i	43	03/01 – 07/03	3985	
ATOS (MX)	1.1	43	08/03 – 05/05	3985	
ATOS (MX)	1.1	45	06/03 – 12/10	3985	
ATOS (MX)	1.1	46	01/97 – 12/14	3985	
ATOS PRIME (MX)	1.0 i	40	08/99 -	3778	
ATOS PRIME (MX)	1.0 i	40	08/99 -	3985	
ATOS PRIME (MX)	1.0 i	43	03/01 -	3778	
ATOS PRIME (MX)	1.0 i	43	03/01 -	3985	
ATOS PRIME (MX)	1.1	43	06/03 -	3985	
ATOS PRIME (MX)	1.1	46	09/05 -	3985	
COUPE (GK)	1.6 16V	77	03/02 – 08/09	3959	
COUPE (GK)	1.6 16V	77	03/02 – 08/09	4087	
COUPE (GK)	1.6 16V	79	03/02 – 08/09	3959	
COUPE (GK)	1.6 16V	79	03/02 – 08/09	4087	
COUPE (GK)	2.0	100	08/01 – 08/09	3959	
COUPE (GK)	2.0	100	08/01 – 08/09	4087	
COUPE (GK)	2.0	102	03/02 – 08/09	3959	
COUPE (GK)	2.0	102	03/02 – 08/09	4087	
COUPE (GK)	2.0 GLS	105	02/03 – 08/09	3959	
COUPE (GK)	2.0 GLS	105	02/03 – 08/09	4087	
COUPE (GK)	2.7 V6	121	01/07 – 08/09	3959	
COUPE (GK)	2.7 V6	121	01/07 – 08/09	4087	
COUPE (GK)	2.7 V6	123	03/02 – 08/09	3959	
COUPE (GK)	2.7 V6	123	03/02 – 08/09	4087	
COUPE (RD)	1.6 16V	85	03/98 – 04/02	3632	
COUPE (RD)	1.6 16V	85	03/98 – 04/02	4087	
COUPE (RD)	1.6 i 16V	79	08/00 – 01/02	3632	
COUPE (RD)	1.6 i 16V	79	08/00 – 01/02	4087	
COUPE (RD)	1.6 i 16V	84	12/96 – 04/02	3632	
COUPE (RD)	1.6 i 16V	84	12/96 – 04/02	4087	
COUPE (RD)	1.8 SX	94	07/96 – 04/02	3632	
COUPE (RD)	1.8 SX	94	07/96 – 04/02	4087	
COUPE (RD)	2.0	101	08/99 – 01/02	3632	
COUPE (RD)	2.0	101	08/99 – 01/02	4087	
COUPE (RD)	2.0 16V	99	03/01 – 04/02	3632	
COUPE (RD)	2.0 16V	99	03/01 – 04/02	4087	
COUPE (RD)	2.0 16V	102	08/96 – 04/02	3632	
COUPE (RD)	2.0 16V	102	08/96 – 04/02	4087	
COUPE (RD)	F2 Evolution	115	01/99 – 05/99	3632	
COUPE (RD)	F2 Evolution	115	01/99 – 05/99	4087	
CRETA / ix25 / CANTUS	2.0	110	01/16 -	4028	
ELANTRA IV / AVANTE (HD)	1.6 CVVT (G4FC)	90	06/06 – 06/11	4028	
ELANTRA IV / AVANTE (HD)	2.0 CVVT	103	06/06 – 05/10	4028	
ELANTRA IV / AVANTE (HD)	2.0 CVVT (G4GC)	105	06/06 – 06/11	4028	
ELANTRA (XD)	1.6	66	06/00 – 07/06	3961	
ELANTRA (XD)	1.6	66	06/00 – 07/06	4087	
ELANTRA (XD)	1.6	77	05/03 – 07/06	3961	
ELANTRA (XD)	1.6	77	05/03 – 07/06	4087	
ELANTRA (XD)	1.6	79	06/00 – 07/06	3961	
ELANTRA (XD)	1.6	79	06/00 – 07/06	4087	
ELANTRA (XD)	1.6	82	09/03 – 07/06	4087	
ELANTRA (XD)	1.8	79	06/00 – 07/03	3961	
ELANTRA (XD)	1.8	79	06/00 – 07/03	4087	
ELANTRA (XD)	1.8	97	06/00 – 07/06	3961	
ELANTRA (XD)	1.8	97	06/00 – 07/06	4087	
ELANTRA (XD)	1.8	98	11/02 – 07/06	3961	
ELANTRA (XD)	1.8	98	11/02 – 07/06	4087	
ELANTRA (XD)	2.0	102	06/00 – 07/06	3961	
ELANTRA (XD)	2.0	102	06/00 – 07/06	4087	
ELANTRA (XD)	2.0	104	06/00 – 07/06	3961	
ELANTRA (XD)	2.0	104	06/00 – 07/06	4087	
ELANTRA (XD)	2.0	105	10/03 – 07/06	4087	
ELANTRA (XD)	2.0 CRDi	83	04/01 – 07/06	3961	
ELANTRA (XD)	2.0 CRDi	83	04/01 – 07/06	4087	
ELANTRA (XD)	1.6		00-06	4217	
ELANTRA Saloon (HD)	1.6 CRDi	85	11/05 – 12/11	3959	
ELANTRA Saloon (HD)	1.6 CRDi	85	11/05 – 12/11	3993	
ELANTRA Saloon (HD)	1.6 CVVT	90	06/06 – 06/11	3959	

BESER®

MAKE & MODEL   		KW	YEAR		
HYUNDAI					
ELANTRA Saloon (HD)	2.0 CVVT	103	06/06 – 05/10	3993	
ELANTRA Saloon (HD)	2.0 CVVT	105	06/06 – 06/11	4087	
ELANTRA Saloon (MD, UD)	1.6	94	06/11 -		4061
ELANTRA Saloon (MD, UD)	1.6	97	06/11 – 12/15		4061
ELANTRA Saloon (MD, UD)	1.6 CRDi	94	02/11 – 12/15		4061
ELANTRA Saloon (MD, UD)	1.8	110	09/10 -		4061
ELANTRA Saloon (XD)	1.6	66	06/00 – 07/06	3961	
ELANTRA Saloon (XD)	1.6	66	06/00 – 07/06	4087	
ELANTRA Saloon (XD)	1.6	77	05/03 – 07/06	3961	
ELANTRA Saloon (XD)	1.6	77	05/03 – 07/06	4087	
ELANTRA Saloon (XD)	1.6	79	06/00 – 07/06	3961	
ELANTRA Saloon (XD)	1.6	79	06/00 – 07/06	4087	
ELANTRA Saloon (XD)	1.8	79	06/00 – 07/03	3961	
ELANTRA Saloon (XD)	1.8	79	06/00 – 07/03	4087	
ELANTRA Saloon (XD)	1.8	97	06/00 – 07/06	3961	
ELANTRA Saloon (XD)	1.8	97	06/00 – 07/06	4087	
ELANTRA Saloon (XD)	2.0	102	06/00 – 07/06	3961	
ELANTRA Saloon (XD)	2.0	102	06/00 – 07/06	4087	
ELANTRA Saloon (XD)	2.0	104	06/00 – 07/06	3961	
ELANTRA Saloon (XD)	2.0	104	06/00 – 07/06	4087	
ELANTRA Saloon (XD)	2.0	105	10/03 – 07/06	4087	
ELANTRA Saloon (XD)	2.0 CRDi	83	04/01 – 07/06	3961	
ELANTRA Saloon (XD)	2.0 CRDi	83	04/01 – 07/06	4087	
ELANTRA SEDAN (XD)	1.5 16V		00-06	4217	
EQUUS / CENTENNIAL	3.5	155	10/99 – 03/09	3976/1	
EQUUS / CENTENNIAL	3.8	213	03/09 -	4166	
EQUUS / CENTENNIAL	4.5	195	10/99 – 09/03	3976/1	
EQUUS / CENTENNIAL	4.6 V8	269	03/09 -	4166	
Genesis II (DH) 3.0 GDI	G6DG	183	06/2014 -	4041	
Genesis II (DH) 3.0 GDI	G6DG	189	08/2014 - 07/2017	4041	
Genesis II (DH) 3.0 GDI 4WD	G6DG	183	06/2014 -	4041	
Genesis II (DH) 3.0 GDI 4WD	G6DG	189	08/2014 - 07/2017	4041	
Genesis II (DH) 44258	-	272	10/2016 -	4041	
Genesis II (DH) 44258 4WD	-	272	10/2016 -	4041	
Genesis II (DH) 44258 GDI	G6DH	183	06/2014 - 07/2017	4041	
Genesis II (DH) 44258 GDI	G6DH	207	08/2014 -	4041	
Genesis II (DH) 44258 GDI 4WD	G6DH	207	08/2014 -	4041	
GETZ (TB)	1.1	46	09/02 – 09/05	3502	
GETZ (TB)	1.1	46	09/02 – 09/05	3504	
GETZ (TB)	1.1	46	09/02 – 09/05	3993	
GETZ (TB)	1.1	49	09/05 – 06/09	3502	
GETZ (TB)	1.1	49	09/05 – 06/09	3504	
GETZ (TB)	1.1	49	09/05 – 06/09	3993	
GETZ (TB)	1.3	61	09/04 – 06/09	3504	
GETZ (TB)	1.3	61	09/04 – 06/09	3993	
GETZ (TB)	1.3	63	09/03 – 09/05	3502	
GETZ (TB)	1.3	63	09/03 – 09/05	3504	
GETZ (TB)	1.3	63	09/03 – 09/05	3993	
GETZ (TB)	1.3 i	60	09/02 – 03/04	3502	
GETZ (TB)	1.3 i	60	09/02 – 03/04	3504	
GETZ (TB)	1.3 i	60	09/02 – 03/04	3993	
GETZ (TB)	1.4 i	71	08/05 – 12/10	3502	
GETZ (TB)	1.4 i	71	08/05 – 12/10	3504	
GETZ (TB)	1.4 i	71	08/05 – 12/10	3993	
GETZ (TB)	1.5 CRDi	60	03/03 – 09/05	3502	
GETZ (TB)	1.5 CRDi	60	03/03 – 09/05	3504	
GETZ (TB)	1.5 CRDi	60	03/03 – 09/05	3993	
GETZ (TB)	1.5 CRDi	65	08/05 – 06/09	3502	
GETZ (TB)	1.5 CRDi	65	08/05 – 06/09	3504	
GETZ (TB)	1.5 CRDi	65	08/05 – 06/09	3993	
GETZ (TB)	1.5 CRDi GLS	75	07/04 – 08/05	3502	
GETZ (TB)	1.5 CRDi GLS	75	07/04 – 08/05	3504	
GETZ (TB)	1.5 CRDi GLS	75	07/04 – 08/05	3993	
GETZ (TB)	1.5 CRDi GLS	81	08/05 – 06/09	3502	
GETZ (TB)	1.5 CRDi GLS	81	08/05 – 06/09	3504	
GETZ (TB)	1.5 CRDi GLS	81	08/05 – 06/09	3993	
GETZ (TB)	1.5 i	73	03/03 – 09/05	3502	
GETZ (TB)	1.5 i	73	03/03 – 09/05	3504	
GETZ (TB)	1.5 i	73	03/03 – 09/05	3993	
GETZ (TB)	1.6	77	09/02 – 09/05	3502	
GETZ (TB)	1.6	77	09/02 – 09/05	3504	
GETZ (TB)	1.6	77	09/02 – 09/05	3993	
GETZ (TB)	1.6	78	06/05 – 12/06	3502	
GETZ (TB)	1.6	78	06/05 – 12/06	3504	
GETZ (TB)	1.6	78	06/05 – 12/06	3993	
GRACE Bus	2.5 D	55	07/93 – 06/94	3507	

MAKE & MODEL   		KW	YEAR		
HYUNDAI					
GRACE Bus	2.5 TD	59	06/98 – 10/01	3507	
GRACE Bus	2.6 D	57	10/99 – 10/04	3507	
GRAND SANTA FÉ	2.2 CRDi All-wheel Drive	145	06/13 -	3960	4060
GRAND SANTA FÉ	2.2 CRDi All-wheel Drive	147	10/15 -	3960	4060
GRAND SANTA FÉ	3.3 GDi All-wheel Drive	210	07/13 -	3960	4060
GRAND SANTA FÉ	3.4 All-wheel Drive	199	02/14 -	3960	4060
GRANDEUR (TG)	2.2 CRDi	110	06/06 – 12/11	3993	4061
GRANDEUR (TG)	2.2 CRDi	114	06/06 – 10/10	3993	4061
GRANDEUR (TG)	2.7	141	05/06 – 10/10	3993	4061
GRANDEUR (TG)	3.3	173	04/05 – 12/10	3993	4061
GRANDEUR (TG)	3.3	191	11/10 – 12/11		4061
GRANDEUR (TG)	3.8	195	06/05 – 12/11	3993	4061
Grandeur IV (HG) / Azera 44288	G4KE	132	07/2011 -	4041	
Grandeur IV (HG) / Azera 44288 16V	G4KE	148	01/2011 - 10/2016	4041	
Grandeur V (IG) / Azera 3.0 GDI	-	196	11/2016 -		4343
Grandeur V (IG) / Azera 3.0 GDI	G6DL	192	11/2016 -		4343
H-1 / STAREX	2.4	82	06/97 – 04/04	3648	
H-1 / STAREX	2.4	82	06/97 – 04/04	3843	
H-1 / STAREX	2.4	101	02/03 – 04/04	3843	
H-1 / STAREX	2.4	107	11/01 – 04/04	3648	
H-1 / STAREX	2.4	107	11/01 – 04/04	3843	
H-1 / STAREX	2.4 4WD	82	02/98 – 04/04	3648	
H-1 / STAREX	2.4 4WD	82	02/98 – 04/04	3843	
H-1 / STAREX	2.4 4WD	99	06/01 – 04/04	3648	
H-1 / STAREX	2.4 4WD	99	06/01 – 04/04	3843	
H-1 / STAREX	2.5 CRDi	81	06/06 – 12/07	3648	
H-1 / STAREX	2.5 CRDi	81	06/06 – 12/07	3843	
H-1 / STAREX	2.5 CRDi	85	06/97 – 04/04	4035	
H-1 / STAREX	2.5 CRDi	103	12/02 – 04/04	3843	
H-1 / STAREX	2.5 CRDi	120	12/02 – 04/04	3843	
H-1 / STAREX	2.5 CRDi 4WD	103	12/02 – 04/04	3843	
H-1 / STAREX	2.5 D	57	10/97 – 04/04	3648	
H-1 / STAREX	2.5 D	57	10/97 – 04/04	3843	
H-1 / STAREX	2.5 TCi	73	10/97 – 12/07	3648	
H-1 / STAREX	2.5 TCi	73	10/97 – 12/07	3843	
H-1 / STAREX	2.5 TCi	74	05/04 – 12/07	3843	
H-1 / STAREX	2.5 TD	59	06/97 – 04/04	3648	
H-1 / STAREX	2.5 TD	59	06/97 – 04/04	3843	
H-1 / STAREX	2.5 TD	62	10/97 – 04/04	3843	
H-1 / STAREX	2.5 TD 4WD	59	02/98 – 04/04	3648	
H-1 / STAREX	2.5 TD 4WD	59	02/98 – 04/04	3843	
H-1 / STAREX	2.5 TD 4WD	73	03/01 – 04/04	3648	
H-1 / STAREX	2.5 TD 4WD	73	03/01 – 04/04	3843	
H-1 / STAREX	2.5 TD 4WD	74	11/01 – 04/04	3648	
H-1 / STAREX	2.5 TD 4WD	74	11/01 – 04/04	3843	
H-1 / STAREX	2.6 TDiC	63	10/97 – 04/04	3648	
H-1 / STAREX	2.6 TDiC	63	10/97 – 04/04	3843	
H-1 Box	2.4	82	03/00 – 04/04	3648	
H-1 Box	2.4	82	03/00 – 04/04	3843	
H-1 Box	2.4	107	11/01 – 04/04	3648	
H-1 Box	2.4	107	11/01 – 04/04	3843	
H-1 Box	2.5 CRDi	81	07/01 – 04/04	3843	3989
H-1 Box	2.5 CRDi	103	08/03 – 12/07	3843	
H-1 Box	2.5 TD	59	03/00 – 09/00	3648	3989
H-1 Box	2.5 TD	73	03/00 – 04/04	3648	
H-1 Box	2.5 TD	73	03/00 – 04/04	3843	
H-1 Box	2.5 TD	74	10/01 – 04/04	3648	
H-1 Box	2.5 TD	74	10/01 – 04/04	3843	
H-1 Box	2.6 CRDi	79	10/97 – 12/07	3843	3989
H-1 Cargo (TQ)	2.5 CRDi	81	02/08 -	4035	
H-1 Cargo (TQ)	2.5 CRDi	85	08/11 -	4035	
H-1 Cargo (TQ)	2.5 CRDi	100	08/09 -	4035	
H-1 Cargo (TQ)	2.5 CRDi	103	12/02 – 10/05	3843	
H-1 Cargo (TQ)	2.5 CRDi	120	02/08 -	4035	
H-1 Platform/Chassis	2.5 CRDi	125	02/08 -	4035	
H-1 Platform/Chassis	2.5 D	73	06/00 – 10/05	3648	
H-1 Platform/Chassis	2.5 D	73	06/00 – 10/05	3843	
H-1 Travel (TQ)	2.4 i	126	02/08 -	4035	
H-1 Travel (TQ)	2.4 i	129	02/08 -	4035	
H-1 Travel (TQ)	2.5 CRDI	81	07/10 -	4035	
H-1 Travel (TQ)	2.5 CRDi	85	08/11 -	4035	
H-1 Travel (TQ)	2.5 CRDi	100	07/08 -	4035	
H-1 Travel (TQ)	2.5 CRDi	120	05/08 -	4035	
H-1 Travel (TQ)	2.5 CRDi	125	05/08 -	4035	
H100 Box	2.4	82	10/97 – 12/04	3507	
H100 Box	2.5 D	55	07/93 – 12/94	3507	

MAKE & MODEL   		KW	YEAR		
HYUNDAI					
H100 Box	2.5 D	57	12/94 – 03/00	3507	
H100 Box	2.5 TDiC	59	06/98 – 10/03	3507	
H100 Box	2.6 D	57	10/99 – 12/04	3507	
H100 Bus (P)	2.4	84	01/97 – 03/00	3507	
H100 Bus (P)	2.4	90	07/93 – 03/00	3507	
H100 Bus (P)	2.5 D	55	07/93 – 12/94	3507	
H100 Bus (P)	2.5 D	57	12/94 – 03/00	3507	
H100 Bus (P)	2.5 TD	59	07/93 – 03/00	3507	
H100 Bus (P)	2.6 D	57	10/99 – 10/04	3507	
H100 Pickup	2.5 D	57	05/96 – 10/01	3507	
H100 Platform/Chassis	2.4	84	05/96 – 12/97	3507	
H100 Platform/Chassis	2.5 CRDI	96	01/04 -	3648	
H100 Platform/Chassis	2.5 D	57	07/93 – 12/97	3507	
H100 Platform/Chassis	2.5 D	59	05/96 – 12/97	3507	
H100 Platform/Chassis	2.5 TD	74	11/06 -	3648	
H100 Platform/Chassis	2.6 D	58	01/04 – 10/06	3648	
H350 / SOLATI	2.5 CRDi (D4CB)	110	04/15 -	4251	
H350 / SOLATI	2.5 CRDi (D4CB)	125	04/15 -	4251	
HCV H350 Bus / Solati 44318 CRDI	D4CB	110	04/2015 -	4251/1	
HCV H350 Bus / Solati 44318 CRDI	D4CB	125	04/2015 -	4251/1	
HCV H350 Platform/Chassis / Solati 44318 CRDI	D4CB	110	04/2015 -	4251/1	
HCV H350 Platform/Chassis / Solati 44318 CRDI	D4CB	125	04/2015 -	4251/1	
HCV H350 Van / Solati 44318 CRDI	D4CB	110	04/2015 -	4251/1	
HCV H350 Van / Solati 44318 CRDI	D4CB	125	04/2015 -	4251/1	
HIGHWAY VAN	2.0 16V	100	03/00 – 03/04	3843	
HIGHWAY VAN	2.0 16V	100	03/00 – 03/04	3993	
HIGHWAY VAN	2.7 V6 24V	125	03/00 – 03/04	3843	
HIGHWAY VAN	2.7 V6 24V	125	03/00 – 03/04	3993	
Ioniq (AE) 44348 GDI Hybrid	G4LE	104	03/2016 -		4343
Ioniq (AE) 44348 GDI Hybrid	G4LE	77	03/2016 -		4343
Ioniq (AE) Electric	EM09	88	03/2016 -		4343
Ioniq (AE) Elektro	-	25	03/2016 -		4343
i10 (BA, IA)	1.0	49	08/13 -		3969
i10 (BA, IA)	1.0 LPG	49	02/14 -		3969
i10 (BA, IA)	1.2	64	12/13 -		3969
i10 (PA)	1.0	51	01/11 – 12/13	3968	3969
i10 (PA)	1.1	48	12/07 – 12/13	3968	3969
i10 (PA)	1.1	49	01/08 – 12/13	3968	3969
i10 (PA)	1.1	51	04/11 – 12/13	3968	3969
i10 (PA)	1.1 CRDi	55	01/08 – 12/11	3968	3969
i10 (PA)	1.2	57	11/08 – 12/11	3968	3969
i10 (PA)	1.2	63	04/11 – 12/13	3968	3969
i10 I (PA) 44228	G4LA	64	12/2015 -	4321	4343
i10 II (BA, IA) / Grand i10 1 LPG	B3LA	49	02/2014 -	4321	4343
i10 II (BA, IA) / Grand i10 1.0	G3LA	49	08/2013 -	4321	4343
i10 II (BA, IA) / Grand i10 44228	G4AG	60	12/2013 -	4321	4343
i10 II (BA, IA) / Grand i10 44228	G4AG	61	01/2018 -	4321	4343
i10 II (BA, IA) / Grand i10 44228	G4LA	64	12/2013 -	4321	4343
i10 II Sedan / Grand i10/ Xcent 44228	G4AG	61	12/2013 -	4321	4343
i10 II Sedan / Grand i10/ Xcent 44228	G4LA	64	08/2015 -	4321	4343
i10 II Sedan / Grand i10/ Xcent 44228	G4LA	65	12/2013 -	4321	4343
i10 III (AC3, AI3) 1.0 MPi	G3LA, G3LD	49	09/2019 -	4321	
i10 III (AC3, AI3) 1.0 T-GDi	G3LE	74	02/2020 -	4321	4343
i10 III (AC3, AI3) 44228 MPi	G4LA 11, G4LF	62	09/2019 -	4321	4343
i20 II (GB, IB) / Elite i20 1.0 T-GDI	G3LC	74	01/2016 -		4343
i20 II (GB, IB) / Elite i20 1.0 T-GDI	G3LC	88	01/2016 -		4343
i20 II (GB, IB) / Elite i20 44197 CRDi	D3FA	55	11/2014 -		4343
i20 II (GB, IB) / Elite i20 44228	G4LA	55	11/2014 -		4343
i20 II (GB, IB) / Elite i20 44228	G4LA	62	11/2014 -		4343
i20 II (GB, IB) / Elite i20 44228 LPGI	G4LA	61	11/2014 -		4343
i20 II (GB, IB) / Elite i20 44287	G4LC	74	11/2014 -		4343
i20 II (GB, IB) / Elite i20 44287 CRDi	D4FC	66	11/2014 -		4343
i20 II Active (IB, GB) 1.0 T-GDI	G3LC	74	09/2015 -		4343
i20 II Active (IB, GB) 1.0 T-GDI	G3LC	88	09/2015 -		4343
i20 II Active (IB, GB) 44287	G4LC	74	09/2015 -		4343
i20 II Active (IB, GB) 44287 CRDI	D4FC	66	09/2015 -		4343
i20 II Coupe (GB) 1.0 T-GDI	G3LC	74	01/2016 -		4343
i20 II Coupe (GB) 1.0 T-GDI	G3LC	88	01/2016 -		4343
i20 II Coupe (GB) 44197 CRDi	D3FA	55	05/2015 -		4343
i20 II Coupe (GB) 44228	G4LA	62	05/2015 -		4343
i20 II Coupe (GB) 44287	G4LC	74	05/2015 -		4343
i20 II Coupe (GB) 44287 CRDi	D4FC	66	05/2015 -		4343
i30 (FD)	1.4 (G4FA)	77	10/07 – 11/11	4028	
i30 (FD)	1.4 (G4FA)	80	10/07 – 06/12	4028	
i30 (FD)	1.6 (G4FC)	85	10/07 – 06/12	4028	
i30 (FD)	1.6 (G4FC)	90	10/07 – 06/12	4028	

MAKE & MODEL		KW	YEAR		
HYUNDAI					
i30 (FD)	1.6 (G4FC)	93	02/08 – 06/12	4028	
i30 (FD)	1.6 CRDi (D4FB)	66	10/07 – 06/12	4028	
i30 (FD)	1.6 CRDi (D4FB)	85	10/07 – 06/12	4028	
i30 (FD)	1.6 CRDi Concept	66	10/07 -	4028	
i30 (FD)	1.6 CRDi Emotión	103	10/07 -	4028	
i30 (FD)	2.0 (G4GC)	105	10/07 – 06/12	4028	
i30 (FD)	2.0 (G4GC-G)	105	10/07 – 06/12	4028	
i30 (FD)	2.0 CRDi (D4EA)	103	10/07 – 06/12	4028	
i30 (GD)	1.4	73	12/11 -		4061
i30 (GD)	1.4	74	12/14 -	4166	4061
i30 (GD)	1.4 CRDi	66	12/11 -		4061
i30 (GD)	1.6	88	01/12 -		4061
i30 (GD)	1.6 CRDi	81	12/11 -	4166	4061
i30 (GD)	1.6 CRDi	94	12/11 -		4061
i30 (GD)	1.6 CRDi	100	11/11 -	4166	4061
i30 (GD)	1.6 GDI	95	12/11 -		4061
i30 (GD)	1.6 GDI	99	12/11 -		4061
i30 (GD)	1.6 T-GDI	137	01/15 -	4166	4061
i30 Coupe	1.4	73	05/13 -		4061
i30 Coupe	1.4 CRDi	66	05/13 -		4061
i30 Coupe	1.6 CRDi	94	05/13 -		4061
i30 Coupe	1.6 GDI	99	05/13 -		4061
i30 Coupe	1.6 T-GDI	137	01/15 -	4166	4061
i30 CW (GD)	1.4	73	06/12 -	4166	4061
i30 CW (GD)	1.4	74	01/15 -	4166	4061
i30 CW (GD)	1.4 CRDi	66	06/12 -	4166	4061
i30 CW (GD)	1.6	88	06/12 -	4166	4061
i30 CW (GD)	1.6	95	06/12 -	4166	4061
i30 CW (GD)	1.6 CRDi	81	06/12 -	4166	4061
i30 CW (GD)	1.6 CRDi	94	06/12 -	4166	4061
i30 CW (GD)	1.6 CRDi	100	01/15 -	4166	4061
i30 CW (GD)	1.6 GDI	99	06/12 -	4166	4061
i30 II (GD) 2.0 16V	G4NC	129	09/2013 - 11/2014	4342	4343
i30 II (GD) 44287	G4FA	73	12/2011 - 12/2015	4342	4343
i30 II (GD) 44287	G4LC	74	12/2014 - 12/2016	4342	4343
i30 II (GD) 44287 CRDi	D4FC	66	12/2011 - 12/2016	4342	4343
i30 II (GD) 44287 Econext	-	76	07/2013 - 02/2017	4342	4343
i30 II (GD) 44348	G4FC	88	01/2012 - 12/2016	4342	4343
i30 II (GD) 44348	G4FC	95	12/2011 - 12/2015	4342	4343
i30 II (GD) 44348	G4FC	96	06/2014 -	4342	4343
i30 II (GD) 44348 16V Flex	F4FC	94	11/2011 - 12/2016	4342	4343
i30 II (GD) 44348 CRDi	D4FB	100	11/2011 - 12/2016	4342	4343
i30 II (GD) 44348 CRDi	D4FB	81	12/2011 - 12/2016	4342	4343
i30 II (GD) 44348 GDI	G4FD	103	06/2011 -	4342	4343
i30 II (GD) 44348 GDI	G4FD	99	12/2011 - 12/2016	4342	4343
i30 II (GD) 44348 T-GDI	G4FJ	137	01/2015 -	4342	4343
i30 II (GD) 44409	G4NB	110	01/2012 -	4342	4343
i30 II Coupe 44287	G4FA	73	05/2013 -	4342	4343
i30 II Coupe 44287	G4LC	74	12/2014 -	4342	4343
i30 II Coupe 44287 CRDi	D4FC	66	05/2013 -	4342	4343
i30 II Coupe 44287 Econext	-	76	07/2013 - 02/2017	4342	4343
i30 II Coupe 44348 CRDi	D4FB	100	12/2014 -	4342	4343
i30 II Coupe 44348 CRDi	D4FB	81	11/2015 -	4342	4343
i30 II Coupe 44348 CRDi	D4FB	94	05/2013 -	4342	4343
i30 II Coupe 44348 GDI	G4FD	99	05/2013 -	4342	4343
i30 II Coupe 44348 MPI	G4FC	88	11/2016 -	4342	4343
i30 II Coupe 44348 T-GDI	G4FJ	137	01/2015 -	4342	4343
i30 II SW (GD) 44287	G4FA	73	06/2012 - 12/2015	4342	4343
i30 II SW (GD) 44287	G4LC	74	01/2015 -	4342	4343
i30 II SW (GD) 44287 CRDi	D4FC	66	06/2012 -	4342	4343
i30 II SW (GD) 44287 Econext	-	76	07/2013 - 02/2017	4342	4343
i30 II SW (GD) 44348	G4FC	88	06/2012 -	4342	4343
i30 II SW (GD) 44348	G4FD	95	06/2012 - 12/2015	4342	4343
i30 II SW (GD) 44348 CRDi	D4FB	100	01/2015 -	4342	4343
i30 II SW (GD) 44348 CRDi	D4FB	81	06/2012 -	4342	4343
i30 II SW (GD) 44348 CRDi	D4FB	94	06/2012 - 12/2015	4342	4343
i30 II SW (GD) 44348 GDI	G4FD	99	06/2012 -	4342	4343
i30 III (PDE, PD, PDEN) 1.0 T-GDI	G3LC	88	11/2016 -		4343
i30 III (PDE, PD, PDEN) 1.0 T-GDI hybrid 48V	G3LC	88	03/2020 -		4343
i30 III (PDE, PD, PDEN) 44287 MPI	-	73	11/2016 -		4343
i30 III (PDE, PD, PDEN) 44287 MPI	G4LC	74	11/2016 -		4343
i30 III (PDE, PD, PDEN) 44287 T-GDI	G4LD	103	11/2016 -		4343
i30 III (PDE, PD, PDEN) 44317	G4LG	81	06/2020 -		4343
i30 III (PDE, PD, PDEN) 44317 T-GDI hybrid 48V	G4LH	117	03/2020 -		4343
i30 III (PDE, PD, PDEN) 44348 CRDi	D4FB	100	11/2016 -		4343
i30 III (PDE, PD, PDEN) 44348 CRDi	D4FB	70	11/2016 -		4343

MAKE & MODEL			KW	YEAR		
HYUNDAI						
i30 III (PDE, PD, PDEN) 44348 CRDi	D4FB		81	11/2016 -		4343
i30 III (PDE, PD, PDEN) 44348 CRDi	D4FE		100	08/2018 -		4343
i30 III (PDE, PD, PDEN) 44348 CRDi	D4FE		70	08/2018 -		4343
i30 III (PDE, PD, PDEN) 44348 CRDi	D4FE		81	08/2018 -		4343
i30 III (PDE, PD, PDEN) 44348 CRDi	D4FE		85	08/2018 -		4343
i30 III (PDE, PD, PDEN) 44348 CRDi hybrid 48V	D4FE		100	03/2020 -		4343
i30 III (PDE, PD, PDEN) 44348 T-GDi	G4FJ		150	11/2016 -		4343
i30 III Fastback (PDE, PDEN) 1.0 T-GDI	G3LC		88	06/2017 -		4343
i30 III Fastback (PDE, PDEN) 1.0 T-GDI hybrid 48V	G3LC		88	06/2017 -		4343
i30 III Fastback (PDE, PDEN) 44287 T-GDI	G4LD		103	06/2017 -		4343
i30 III Fastback (PDE, PDEN) 44317 T-GDI Hybrid 48V	G4LH		117	03/2020 -		4343
i30 III Fastback (PDE, PDEN) 44348 CRDi	-		100	09/2018 -		4343
i30 III Fastback (PDE, PDEN) 44348 CRDi	D4FB		100	08/2018 -		4343
i30 III Fastback (PDE, PDEN) 44348 CRDi hybrid 48V	D4FE		100	03/2020 -		4343
i30 III SW (PDE) 1.0 T-GDI	G3LC		88	03/2017 -		4343
i30 III SW (PDE) 1.0 T-GDI hybrid 48V	G3LC		88	03/2020 -		4343
i30 III SW (PDE) 44287 MPI	-		74	03/2017 -		4343
i30 III SW (PDE) 44287 MPI	G4LC		73	05/2017 -		4343
i30 III SW (PDE) 44287 T-GDI	G4LD		103	03/2017 -		4343
i30 III SW (PDE) 44317	G4LG		81	06/2020 -		4343
i30 III SW (PDE) 44317 T-GDI Hybrid 48V	G4LH		117	03/2020 -		4343
i30 III SW (PDE) 44348 CRDi	D4FB		100	03/2017 -		4343
i30 III SW (PDE) 44348 CRDi	D4FB		81	03/2017 -		4343
i30 III SW (PDE) 44348 CRDi	D4FB		94	08/2018 -		4343
i30 III SW (PDE) 44348 CRDi	D4FE		100	08/2018 -		4343
i30 III SW (PDE) 44348 CRDi	D4FE		81	08/2018 -		4343
i30 III SW (PDE) 44348 CRDi	D4FE		85	08/2018 -		4343
i30 III SW (PDE) 44348 CRDi hybrid 48V	D4FE		100	03/2020 -		4343
i40 (VF)	1.6 GDI		99	03/12 -		4061
i40 (VF)	1.7 CRDI		85	03/12 -		4061
i40 (VF)	1.7 CRDi		100	03/12 -		4061
i40 (VF)	1.7 CRDi		104	01/15 -		4061
i40 (VF)	2.0		123	03/12 -		4061
i40 (VF)	2.0 CVVT		110	10/12 -		4061
i40 (VF)	2.0 GDI		121	12/14 -		4061
i40 (VF)	2.0 GDi		131	03/12 -		4061
i40 (VF) 2.0 CVVT	G4NA		110	10/2012 -		4343
i40 (VF) 2.0 GDI	G4NC		130	03/2012 -		4343
i40 (VF) 2.0 GDI	G4NC		131	03/2012 -		4343
i40 (VF) 2.0 GDi	G4NC		121	12/2014 -		4343
i40 (VF) 44348 GDI	G4FD		99	03/2012 -		4343
i40 (VF) 44378 CRDI	D4FD		104	01/2015 -		4343
i40 (VF) 44378 CRDi	D4FD		100	03/2012 -		4343
i40 (VF) 44378 CRDi	D4FD		85	03/2012 -		4343
i40 CW (VF)	1.6 GDI		99	07/11 -		4061
i40 CW (VF)	1.7 CRDi		85	07/11 -		4061
i40 CW (VF)	1.7 CRDi		100	07/11 -		4061
i40 CW (VF)	1.7 CRDi		104	01/15 -		4061
i40 CW (VF)	2.0		122	03/12 -		4061
i40 CW (VF)	2.0 CVVT		110	10/12 -		4061
i40 CW (VF)	2.0 GDI		121	12/14 -		4061
i40 CW (VF)	2.0 GDi		130	07/11 -		4061
i40 CW (VF) 2.0 CVVT	G4NA		110	10/2012 -		4343
i40 CW (VF) 2.0 GDI	G4NC		130	07/2011 -		4343
i40 CW (VF) 2.0 GDi	G4NC		121	12/2014 -		4343
i40 CW (VF) 44348 GDI	G4FD		99	07/2011 -		4343
i40 CW (VF) 44378 CRDi	D4FD		100	07/2011 -		4343
i40 CW (VF) 44378 CRDi	D4FD		104	01/2015 -		4343
i40 CW (VF) 44378 CRDi	D4FD		85	07/2011 -		4343
ix20 (JC)	1.4		66	11/10 -	3959	
ix20 (JC)	1.4		66	11/10 -	4049	
ix20 (JC)	1.4 CRDi		57	06/11 -	3959	
ix20 (JC)	1.4 CRDi		57	06/11 -	4049	
ix20 (JC)	1.4 CRDi		66	11/10 -	3959	
ix20 (JC)	1.4 CRDi		66	11/10 -	4049	
ix20 (JC)	1.6		92	11/10 -	3959	
ix20 (JC)	1.6		92	11/10 -	4049	
ix20 (JC)	1.6 CRDI		85	06/11 -	3959	
ix20 (JC)	1.6 CRDI		85	06/11 -	4049	
ix20 (JC)	1.6 CRDI		94	06/11 -	3959	
ix20 (JC)	1.6 CRDI		94	06/11 -	4049	
ix35 (LM, EL, ELH)	1.6		99	11/10 -		3980
ix35 (LM, EL, ELH)	1.7 CRDi		85	11/10 -		3980
ix35 (LM, EL, ELH)	2.0		120	01/10 -		3980
ix35 (LM, EL, ELH)	2.0 4WD		120	01/10 -		3980
ix35 (LM, EL, ELH)	2.0 CRDi		100	01/10 -		3980

MAKE & MODEL   		KW	YEAR		
HYUNDAI					
ix35 (LM, EL, ELH)	2.0 CRDi	130	01/12 -		3980
ix35 (LM, EL, ELH)	2.0 CRDi	135	01/12 -		3980
ix35 (LM, EL, ELH)	2.0 CRDi 4WD	100	01/10 -		3980
ix35 (LM, EL, ELH)	2.0 CRDi 4WD	135	01/10 -		3980
ix35 (LM, EL, ELH)	2.0 CVVT	110	08/09 -		3980
ix35 (LM, EL, ELH)	2.0 GDi	122	08/13 -		3980
ix35 (LM, EL, ELH)	2.0 GDi 4WD	122	08/13 -		3980
ix35 (LM, EL, ELH)	2.4 DCVVT-I 4WD	128	07/10 – 12/13		3980
ix35 (LM, EL, ELH)	2.4 GDi 4WD	136	01/13 -		3980
ix35 (LM, EL, ELH)	FCEV	53	10/12 -		3980
ix35 (LM, EL, ELH)	Fuel Cell	100	09/14 -		3980
Kona (OS) / Kauai EV	EM	100	04/2018 -		4343
Kona (OS) / Kauai EV	EM16	150	04/2018 -		4343
LANTRA I (J-1)	1.5 i.e.	63	10/90 – 11/95	3502	
LANTRA I (J-1)	1.5 i.e.	63	10/90 – 11/95	4087	
LANTRA I (J-1)	1.6 i.e. 16V	78	10/90 – 11/95	3632	
LANTRA I (J-1)	1.6 i.e. 16V	78	10/90 – 11/95	4087	
LANTRA I (J-1)	1.6 i.e. 16V	84	10/90 – 11/95	3632	
LANTRA I (J-1)	1.6 i.e. 16V	84	10/90 – 11/95	4087	
LANTRA I (J-1)	1.8 i.e. 16V	93	10/90 – 11/95	3632	
LANTRA I (J-1)	1.8 i.e. 16V	93	10/90 – 11/95	4087	
LANTRA II (J-2)	1.5 12V	65	12/96 – 09/00	3632	
LANTRA II (J-2)	1.5 12V	65	12/96 – 09/00	4087	
LANTRA II (J-2)	1.5 16V	76	11/95 – 10/00	3502	
LANTRA II (J-2)	1.5 16V	76	11/95 – 10/00	3632	
LANTRA II (J-2)	1.5 16V	76	11/95 – 10/00	4087	
LANTRA II (J-2)	1.6 16V	76	11/95 - 10/00	3632	
LANTRA II (J-2)	1.6 16V	76	11/95 – 10/00	4087	
LANTRA II (J-2)	1.6 16V	84	11/95 – 09/00	3632	
LANTRA II (J-2)	1.6 16V	84	11/95 – 09/00	4087	
LANTRA II (J-2)	1.6 i	66	11/95 – 09/00	3632	
LANTRA II (J-2)	1.6 i	66	11/95 – 09/00	4087	
LANTRA II (J-2)	1.8 16V	94	11/95 – 09/00	3632	
LANTRA II (J-2)	1.8 16V	94	11/95 – 09/00	4087	
LANTRA II (J-2)	1.9 D	50	03/98 – 09/00	3632	
LANTRA II (J-2)	1.9 D	50	03/98 – 09/00	4087	
LANTRA II (J-2)	2.0	100	04/97 – 05/00	3632	
LANTRA II (J-2)	2.0	100	04/97 – 05/00	4087	
LANTRA II (J-2)	2.0 16V	102	08/96 – 09/00	3632	
LANTRA II (J-2)	2.0 16V	102	08/96 – 09/00	4087	
LANTRA II Wagon (J-2)	1.5 12V	65	04/97 – 10/00	3632	
LANTRA II Wagon (J-2)	1.5 12V	65	04/97 – 10/00	4087	
LANTRA II Wagon (J-2)	1.6 16V	84	02/96 – 10/00	3632	
LANTRA II Wagon (J-2)	1.6 16V	84	02/96 – 10/00	4087	
LANTRA II Wagon (J-2)	1.6 i	66	02/96 – 10/00	3632	
LANTRA II Wagon (J-2)	1.6 i	66	02/96 – 10/00	4087	
LANTRA II Wagon (J-2)	1.8 16V	94	02/96 – 10/00	3632	
LANTRA II Wagon (J-2)	1.8 16V	94	02/96 – 10/00	4087	
LANTRA II Wagon (J-2)	1.9 D	50	03/98 – 10/00	3632	
LANTRA II Wagon (J-2)	1.9 D	50	03/98 – 10/00	4087	
LANTRA II Wagon (J-2)	2.0	100	04/97 – 05/00	3632	
LANTRA II Wagon (J-2)	2.0	100	04/97 – 05/00	4087	
LANTRA II Wagon (J-2)	2.0 16V	102	12/96 – 10/00	3632	
LANTRA II Wagon (J-2)	2.0 16V	102	12/96 – 10/00	4087	
MATRIX (FC)	1.5	75	06/01 – 08/10	3632	
MATRIX (FC)	1.5	75	06/01 – 08/10	3961	
MATRIX (FC)	1.5	75	06/01 – 08/10	3993	
MATRIX (FC)	1.5 CRDi	60	10/01 – 08/10	3632	
MATRIX (FC)	1.5 CRDi	60	10/01 – 08/10	3961	
MATRIX (FC)	1.5 CRDi	60	10/01 – 08/10	3993	
MATRIX (FC)	1.5 CRDi	75	12/04 – 08/10	3961	
MATRIX (FC)	1.5 CRDi	75	12/04 – 08/10	3993	
MATRIX (FC)	1.5 CRDi VGT	81	08/05 – 08/10	3961	
MATRIX (FC)	1.5 CRDi VGT	81	08/05 – 08/10	3993	
MATRIX (FC)	1.6	66	01/02 – 12/05	3961	
MATRIX (FC)	1.6	66	01/02 – 12/05	3993	
MATRIX (FC)	1.6	76	06/01 – 08/10	3632	
MATRIX (FC)	1.6	76	06/01 – 08/10	3961	
MATRIX (FC)	1.6	76	06/01 – 08/10	3993	
MATRIX (FC)	1.8	90	06/01 – 08/10	3632	
MATRIX (FC)	1.8	90	06/01 – 08/10	3961	
MATRIX (FC)	1.8	90	06/01 – 08/10	3993	
PONY (X-2)	1.3	43	10/89 – 01/95	3502	
PONY (X-2)	1.3	43	10/89 – 01/95	3504	
PONY (X-2)	1.3	49	10/89 – 01/95	3502	
PONY (X-2)	1.3	49	10/89 – 01/95	3504	

BESER®

MAKE & MODEL   		KW	YEAR		
HYUNDAI					
PONY (X-2)	1.5	53	10/89 – 01/95	3502	
PONY (X-2)	1.5	53	10/89 – 01/95	3504	
PONY (X-2)	1.5 i	61	10/89 – 01/95	3502	
PONY (X-2)	1.5 i	61	10/89 – 01/95	3504	
PONY (X-2)	1.5 i	62	10/89 – 01/95	3502	
PONY (X-2)	1.5 i	62	10/89 – 01/95	3504	
PONY / EXCEL Saloon (X-2)	1.3	48	12/92 – 09/94	3502	
PONY / EXCEL Saloon (X-2)	1.3	48	12/92 – 09/94	3504	
PONY / EXCEL Saloon (X-2)	1.3	49	01/90 – 01/95	3502	
PONY / EXCEL Saloon (X-2)	1.3	49	01/90 – 01/95	3504	
PONY / EXCEL Saloon (X-2)	1.3	51	09/89 – 08/94	3502	
PONY / EXCEL Saloon (X-2)	1.3	51	09/89 – 08/94	3504	
PONY / EXCEL Saloon (X-2)	1.5	53	01/90 – 01/95	3502	
PONY / EXCEL Saloon (X-2)	1.5	53	01/90 – 01/95	3504	
PONY / EXCEL Saloon (X-2)	1.5 i	61	01/90 – 01/95	3502	
PONY / EXCEL Saloon (X-2)	1.5 i	61	01/90 – 01/95	3504	
PONY / EXCEL Saloon (X-2)	1.5 i	62	01/90 – 01/95	3502	
PONY / EXCEL Saloon (X-2)	1.5 i	62	01/90 – 01/95	3504	
PONY I-II	1.2 (J12G)	40	02/78 – 06/86	3709	
PONY I-II	1.2 (J12G)	40	06/74 – 12/82	3709	
PONY I-II	1.2 1200		06/74 -	3709	
PONY I-II	1.4 (4G33)	50	02/78 – 06/86	3709	
PONY I-II	1.4 (4G33)	50	08/77 – 12/82	3709	
PONY I-II	1.4 1400		06/74 -	3709	
PONY III / EXCEL (X-1)	1.3 (G4DG)	43	10/89 – 01/95	3709	
PONY III / EXCEL (X-1)	1.3 (G4DG)	49	10/89 – 01/95	3709	
PONY III / EXCEL (X-1)	1.3 (G13B)	50	10/85 – 09/89	3709	
PONY III / EXCEL (X-1)	1.5 (G15B)	53	10/85 – 01/95	3709	
PONY III / EXCEL (X-1)	1.5 (G4DJ)	53	10/85 – 01/95	3709	
PONY III / EXCEL (X-1)	1.5 i (G15B)	61	10/89 – 01/95	3709	
PONY III / EXCEL (X-1)	1.5 i (G15B)	62	10/89 – 01/95	3709	
PONY III / EXCEL (X-1)	1.5 i (G4DJ)	61	10/89 – 01/95	3709	
PONY III / EXCEL (X-1)	1.5 i (G4DJ)	62	10/89 – 01/95	3709	
PORTER Box	2.4	82	03/96 – 04/04	3507	
PORTER Box	2.5 CRDi	103	02/03 – 04/04	3507	
PORTER Box	2.5 CRDi	103	05/04 -	3843	
PORTER Box	2.5 TCi	74	05/04 -	3843	
PORTER Box	2.5 TD	57	07/94 – 04/04	3507	
PORTER Box	2.5 TD	63	07/94 – 04/04	3507	
PORTER Box	2.6 TD	73	07/94 – 04/04	3507	
PORTER Bus	2.4	82	03/96 – 04/04	3507	
PORTER Bus	2.5 CRDi	103	02/03 – 04/04	3507	
PORTER Bus	2.5 TD	57	07/94 – 04/04	3507	
PORTER Bus	2.5 TD	73	07/94 – 04/04	3507	
PORTER II ALÇAK KASA			04 -	4231	
PORTER II YÜKSEK KASA			04 -	4231	
PORTER Pickup	2.4	82	03/96 – 04/04	3507	
PORTER Pickup	2.5 CRDi	103	02/03 – 04/04	3507	
PORTER Pickup	2.5 TD	57	07/94 – 04/04	3507	
PORTER Pickup	2.5 TD	73	07/94 – 04/04	3507	
PORTER Pickup	2.6 TD	63	07/94 – 04/04	3507	
S COUPE (SLC)	1.5 GS	57	03/90 – 12/92	3502	
S COUPE (SLC)	1.5 GS	57	03/90 – 12/92	3504	
S COUPE (SLC)	1.5 i	62	02/90 – 05/96	3502	
S COUPE (SLC)	1.5 i	62	02/90 – 05/96	3504	
S COUPE (SLC)	1.5 i	65	04/92 – 05/96	3502	
S COUPE (SLC)	1.5 i Turbo	85	04/91 – 05/96	3502	
S COUPE (SLC)	1.5 i Turbo	85	04/91 – 05/96	3504	
SANTA FÉ I (SM)	2.0	99	08/01 – 03/06	3843	
SANTA FÉ I (SM)	2.0	99	08/01 – 03/06	3993	
SANTA FÉ I (SM)	2.0 CRDi	83	08/01 – 03/06	3843	
SANTA FÉ I (SM)	2.0 CRDi	83	08/01 – 03/06	3993	
SANTA FÉ I (SM)	2.0 CRDi 4x4	83	04/01 – 03/06	3843	
SANTA FÉ I (SM)	2.0 CRDi 4x4	83	04/01 – 03/06	3993	
SANTA FÉ I (SM)	2.0 CRDi 4x4	92	08/03 – 03/06	3843	
SANTA FÉ I (SM)	2.0 CRDi 4x4	92	08/03 – 03/06	3993	
SANTA FÉ I (SM)	2.0 CRDi All-wheel Drive	107	11/03 – 02/06	3843	
SANTA FÉ I (SM)	2.0 CRDi All-wheel Drive	107	11/03 – 02/06	3993	
SANTA FÉ I (SM)	2.4 16V	100	02/01 – 03/06	3843	
SANTA FÉ I (SM)	2.4 16V	100	02/01 – 03/06	3993	
SANTA FÉ I (SM)	2.4 16V	107	02/01 – 03/06	3843	
SANTA FÉ I (SM)	2.4 16V	107	02/01 – 03/06	3993	
SANTA FÉ I (SM)	2.4 16V 4x4	100	02/01 – 03/06	3843	
SANTA FÉ I (SM)	2.4 16V 4x4	100	02/01 – 03/06	3993	
SANTA FÉ I (SM)	2.4 16V 4x4	107	02/01 – 03/06	3843	
SANTA FÉ I (SM)	2.4 16V 4x4	107	02/01 – 03/06	3993	

BESER®

MAKE & MODEL   		KW	YEAR		
HYUNDAI					
SANTA FÉ I (SM)	2.7	129	08/04 – 03/06	3960	3989
SANTA FÉ I (SM)	2.7	129	08/04 – 03/06		4060
SANTA FÉ I (SM)	2.7 4x4	129	09/02 – 12/04	3843	
SANTA FÉ I (SM)	2.7 4x4	129	09/02 – 12/04	3993	
SANTA FÉ I (SM)	2.7 4x4	132	11/00 – 03/06	3843	
SANTA FÉ I (SM)	2.7 4x4	132	11/00 – 03/06	3993	
SANTA FÉ I (SM)	2.7 V6 4x4	127	02/01 – 03/06	3843	
SANTA FÉ I (SM)	2.7 V6 4x4	127	02/01 – 03/06	3993	
SANTA FÉ I (SM)	3.5	147	09/03 – 02/06	3843	
SANTA FÉ I (SM)	3.5	147	09/03 – 02/06	3993	
SANTA FÉ I (SM)	3.5 4x4	147	09/03 – 02/06	3843	
SANTA FÉ I (SM)	3.5 4x4	147	09/03 – 02/06	3993	
SANTA FÉ II (CM)	2.0 CRDi	110	12/10 – 12/12	3960	4060
SANTA FÉ II (CM)	2.0 CRDi 4x4	85	03/06 – 12/12	3960	3989
SANTA FÉ II (CM)	2.0 CRDi 4x4	85	03/06 – 12/12		4060
SANTA FÉ II (CM)	2.0 CRDi 4x4	110	12/10 – 12/12	3960	4060
SANTA FÉ II (CM)	2.0 CRDi 4x4	135	03/06 – 12/12	3960	3989
SANTA FÉ II (CM)	2.0 CRDi 4x4	135	03/06 – 12/12		4060
SANTA FÉ II (CM)	2.2 CRDi	102	03/06 – 12/12	3960	3989
SANTA FÉ II (CM)	2.2 CRDi	102	03/06 – 12/12		4060
SANTA FÉ II (CM)	2.2 CRDi	114	03/06 – 12/09	3960	3989
SANTA FÉ II (CM)	2.2 CRDi	114	03/06 – 12/09		4060
SANTA FÉ II (CM)	2.2 CRDi	145	01/09 – 12/12	3960	3989
SANTA FÉ II (CM)	2.2 CRDi	145	01/09 – 12/12		4060
SANTA FÉ II (CM)	2.2 CRDi 4x4	102	03/06 – 12/12	3960	3989
SANTA FÉ II (CM)	2.2 CRDi 4x4	102	03/06 – 12/12		4060
SANTA FÉ II (CM)	2.2 CRDi 4x4	114	03/06 – 12/09	3960	3989
SANTA FÉ II (CM)	2.2 CRDi 4x4	114	03/06 – 12/09		4060
SANTA FÉ II (CM)	2.2 CRDi 4x4	145	01/09 – 12/12	3960	3989
SANTA FÉ II (CM)	2.2 CRDi 4x4	145	01/09 – 12/12		4060
SANTA FÉ II (CM)	2.2 CRDi GLS	110	03/06 – 12/09	3960	3989
SANTA FÉ II (CM)	2.2 CRDi GLS	110	03/06 – 12/09		4060
SANTA FÉ II (CM)	2.2 CRDi GLS 4x4	110	03/06 – 12/09	3960	3989
SANTA FÉ II (CM)	2.2 CRDi GLS 4x4	110	03/06 – 12/09		4060
SANTA FÉ II (CM)	2.4	128	11/10 – 12/12	3960	4060
SANTA FÉ II (CM)	2.4 4x4	125	03/06 – 12/12	3960	3989
SANTA FÉ II (CM)	2.7	125	03/06 – 12/12	3960	3989
SANTA FÉ II (CM)	2.7	125	03/06 – 12/12		4060
SANTA FÉ II (CM)	2.7 4x4	125	03/06 – 12/12		4060
SANTA FÉ II (CM)	2.7 4x4	128	07/10 – 12/12	3960	4060
SANTA FÉ II (CM)	2.7 V6 GLS	139	03/06 – 12/09	3960	3989
SANTA FÉ II (CM)	2.7 V6 GLS	139	03/06 – 12/09		4060
SANTA FÉ II (CM)	2.7 V6 GLS 4x4	139	03/06 – 12/09	3960	3989
SANTA FÉ II (CM)	2.7 V6 GLS 4x4	139	03/06 – 12/09		4060
SANTA FÉ II (CM)	3.3 Dynamic 4x4	173	03/06 – 12/12	3960	3989
SANTA FÉ II (CM)	3.3 Dynamic 4x4	173	03/06 – 12/12		4060
SANTA FÉ III (DM)	2.0 CRDi	110	09/12 -	3960	4060
SANTA FÉ III (DM)	2.0 CRDi 4WD	110	09/12 -	3960	4060
SANTA FÉ III (DM)	2.2 CRDi	145	09/12 – 12/15	3960	4060
SANTA FÉ III (DM)	2.2 CRDi 4WD	145	09/12 – 12/15	3960	4060
SANTA FÉ III (DM)	2.4	141	09/12 – 12/15	3960	4060
SANTA FÉ III (DM)	2.4 4WD	141	09/12 – 12/15	3960	4060
SANTA FÉ III (DM)	2.4 CCVT	129	09/12 -	3960	4060
SANTA FÉ III (DM)	2.4 CCVT AWD	129	09/12 -	3960	4060
SANTA FÉ III (DM)	3.3 4WD	199	03/14 -	3960	4060
SANTAMO	2.0 16V	102	05/99 – 12/02	3622	4108
SANTAMO	2.0 16V 4x4	102	05/99 – 12/02	3622	4108
SONATA II (Y-2)	1.8 i	70	09/88 – 10/93	3632	
SONATA II (Y-2)	2.0 i	74	09/88 – 08/91	3632	
SONATA II (Y-2)	2.0 i	80	01/91 – 10/93	3632	
SONATA II (Y-2)	2.0 i 16V	96	01/91 – 10/93	3632	
SONATA II (Y-2)	2.4 i	83	09/88 – 08/91	3632	
SONATA II (Y-2)	3.0 i V6	107	01/91 – 10/93	3632	
SONATA III (Y-3)	1.8 i	72	05/93 – 06/98	3632	
SONATA III (Y-3)	2.0 i	70	08/96 – 06/98	3632	
SONATA III (Y-3)	2.0 i	77	06/94 – 08/96	3632	
SONATA III (Y-3)	2.0 i 16V	92	06/96 – 06/98	3632	
SONATA III (Y-3)	2.0 i 16V	102	05/93 – 06/98	3632	
SONATA III (Y-3)	3.0 i V6	107	05/93 – 06/98	3632	
SONATA IV (EF)	2.0	100	04/01 – 11/04	3959	
SONATA IV (EF)	2.0	100	04/01 – 11/04	3993	
SONATA IV (EF)	2.0 16V	96	10/01 – 11/04	3959	
SONATA IV (EF)	2.0 16V	96	10/01 – 11/04	3993	
SONATA IV (EF)	2.0 16V	100	06/98 – 10/01	3632	
SONATA IV (EF)	2.0 16V	100	06/98 – 10/01	3993	
SONATA IV (EF)	2.0 16V	106	10/01 – 11/04	3959	

MAKE & MODEL		KW	YEAR		
HYUNDAI					
SONATA IV (EF)	2.0 16V	106	10/01 – 11/04	3993	
SONATA IV (EF)	2.4 16V	105	03/98 – 10/01	3632	
SONATA IV (EF)	2.4 16V	105	03/98 – 10/01	3993	
SONATA IV (EF)	2.5 V6 24V	118	06/98 – 10/01	3632	
SONATA IV (EF)	2.5 V6 24V	118	06/98 – 10/01	3993	
SONATA IV (EF)	2.7 i V6	132	10/01 – 05/05	3959	
SONATA IV (EF)	2.7 i V6	132	10/01 – 05/05	3993	
SONATA IV (EF)	2.7 V6	127	10/01 – 11/04	3959	
SONATA IV (EF)	2.7 V6	127	10/01 – 11/04	3993	
SONATA IV (EF)	2.7 V6	129	11/02 – 11/04	3959	
SONATA IV (EF)	2.7 V6	129	11/02 – 11/04	3993	
SONATA V (NF)	2.0 CRDi	100	02/06 – 12/10	3993	4061
SONATA V (NF)	2.0 CRDi	103	02/06 – 12/10	3993	4061
SONATA V (NF)	2.0 GLSI	119	07/08 – 12/10	3993	4061
SONATA V (NF)	2.0 VVTi GLS	106	05/05 – 12/10	3993	4061
SONATA V (NF)	2.4	119	01/05 – 12/10	3993	4061
SONATA V (NF)	3.3	171	01/05 – 12/10	3993	4061
SONATA V (NF)	3.3	173	06/05 – 12/10	3993	4061
Sonata VI (YF) 2.0	G4KD	110	01/2009 - 06/2014		4343
Sonata VI (YF) 2.0 i	G4KD	120	09/2012 - 06/2014		4343
Sonata VI (YF) 2.0 i	G4KD	121	01/2011 - 06/2014		4343
Sonata VI (YF) 44288	G4KC	128	01/2009 - 11/2010		4343
Sonata VI (YF) 44288	G4KC	131	01/2010 - 12/2015		4343
Sonata VI (YF) 44288 GDI	G4KC	148	01/2009 - 06/2014		4343
STELLAR (F31_, SF2_)	1.4	50	10/83 – 08/86	3312	
STELLAR (F31_, SF2_)	1.4	50	10/83 – 08/86	3484	
STELLAR (F31_, SF2_)	1.6	56	10/83 – 12/91	3312	
STELLAR (F31_, SF2_)	1.6	56	10/83 – 12/91	3484	
STELLAR (F31_, SF2_)	1.6	56	10/83 – 12/91	3504	
TERRACAN (HP)	2.9 CRDi 4WD	120	11/03 – 12/06	3976/1	
TERRACAN (HP)	3.5 i V6 4WD	143	12/01 – 12/06	3976/1	
TIBURON Coupe	1.6 CVVT	78	10/06 – 12/08	3959	
TIBURON Coupe	1.6 CVVT	78	10/06 – 12/08	4087	
TIBURON Coupe	2.0 CVVT	105	10/06 – 12/08	3959	
TIBURON Coupe	2.0 CVVT	105	10/06 – 12/08	4087	
TRAJET (FO)	2.0	100	03/00 – 07/08	3843	
TRAJET (FO)	2.0	100	03/00 – 07/08	3993	
TRAJET (FO)	2.0	103	01/04 – 07/08	3843	
TRAJET (FO)	2.0	103	01/04 – 07/08	3993	
TRAJET (FO)	2.0	104	11/03 – 07/08	3843	
TRAJET (FO)	2.0	104	11/03 – 07/08	3993	
TRAJET (FO)	2.0 CRDi	83	04/01 – 07/08	3843	
TRAJET (FO)	2.0 CRDi	83	04/01 – 07/08	3993	
TRAJET (FO)	2.0 CRDi	92	08/05 – 07/08	3843	
TRAJET (FO)	2.0 CRDi	92	08/05 – 07/08	3993	
TRAJET (FO)	2.7 V6	127	09/00 – 07/08	3843	
TRAJET (FO)	2.7 V6	127	09/00 – 07/08	3993	
TUCSON (JM)	2.0	104	08/04 – 03/10	3993	4061
TUCSON (JM)	2.0	104	08/04 – 03/10	3959	
TUCSON (JM)	2.0	105	01/10 – 03/10	3993	4061
TUCSON (JM)	2.0	105	01/10 – 03/10	3959	
TUCSON (JM)	2.0 All-wheel Drive	104	08/04 – 03/10	3993	4061
TUCSON (JM)	2.0 All-wheel Drive	104	08/04 – 03/10	3959	
TUCSON (JM)	2.0 CRDi	83	08/04 – 03/10	3993	4061
TUCSON (JM)	2.0 CRDi	83	08/04 – 03/10	3959	
TUCSON (JM)	2.0 CRDi	88	01/07 – 03/10	3993	4061
TUCSON (JM)	2.0 CRDi	88	01/07 – 03/10	3959	
TUCSON (JM)	2.0 CRDi	100	01/06 – 03/10	3993	4061
TUCSON (JM)	2.0 CRDi	100	01/06 – 03/10	3959	
TUCSON (JM)	2.0 CRDi	103	01/06 – 03/10	3993	4061
TUCSON (JM)	2.0 CRDi	103	01/06 – 03/10	3959	
TUCSON (JM)	2.0 CRDi	110	01/09 – 03/10	3993	4061
TUCSON (JM)	2.0 CRDi	110	01/09 – 03/10	3959	
TUCSON (JM)	2.0 CRDi All-wheel Drive	83	08/04 – 03/10	3993	4061
TUCSON (JM)	2.0 CRDi All-wheel Drive	83	08/04 – 03/10	3959	
TUCSON (JM)	2.0 CRDi All-wheel Drive	88	01/07 – 03/10	3993	4061
TUCSON (JM)	2.0 CRDi All-wheel Drive	88	01/07 – 03/10	3959	
TUCSON (JM)	2.0 CRDi All-wheel Drive	100	01/06 – 03/10	3993	4061
TUCSON (JM)	2.0 CRDi All-wheel Drive	100	01/06 – 03/10	3959	
TUCSON (JM)	2.0 CRDi All-wheel Drive	103	01/06 – 03/10	3993	4061
TUCSON (JM)	2.0 CRDi All-wheel Drive	103	01/06 – 03/10	3959	
TUCSON (JM)	2.0 CRDi All-wheel Drive	110	01/09 – 03/10	3993	4061
TUCSON (JM)	2.0 CRDi All-wheel Drive	110	01/09 – 03/10	3959	
TUCSON (JM)	2.7 All-wheel Drive	129	08/04 – 03/10	3993	4061
TUCSON (JM)	2.7 All-wheel Drive	129	08/04 – 03/10	3959	
TUCSON (TLE)	1.6 GDi	97	06/15 -		3980

MAKE & MODEL   		KW	YEAR		
HYUNDAI					
TUCSON (TLE)	1.6 T-GDI	130	06/15 -		3980
TUCSON (TLE)	1.6 T-GDI All-wheel Drive	130	06/15 -		3980
TUCSON (TLE)	1.7 CRDI	85	06/15 -		3980
TUCSON (TLE)	2.0 CRDi	100	06/15 -		3980
TUCSON (TLE)	2.0 CRDi All-wheel Drive	100	06/15 -		3980
TUCSON (TLE)	2.0 CRDi All-wheel Drive	136	06/15 -		3980
Tucson II (TL, TLE) 2.0	-	115	06/2015 -	4353	4343
Tucson II (TL, TLE) 2.0	G4NA	114	06/2015 -	4353	4343
Tucson II (TL, TLE) 2.0 4WD	G4NA	114	06/2015 -	4353	4343
Tucson II (TL, TLE) 2.0 CRDi	D4HA	100	06/2015 -	4353	4343
Tucson II (TL, TLE) 2.0 CRDi	D4HA	131	06/2015 -	4353	4343
Tucson II (TL, TLE) 2.0 CRDi	D4HA	136	06/2015 -	4353	4343
Tucson II (TL, TLE) 2.0 CRDi	D4HA	150	03/2018 -	4353	4343
Tucson II (TL, TLE) 2.0 CRDi 4WD	D4HA	100	06/2015 -	4353	4343
Tucson II (TL, TLE) 2.0 CRDi 4WD	D4HA	136	06/2015 -	4353	4343
Tucson II (TL, TLE) 2.0 CRDi hybrid 48V Trazione integrale	D4HA	136	10/2018 -	4353	4343
Tucson II (TL, TLE) 2.0 CRDi Trazione integrale	D4HA	129	06/2015 -	4353	4343
Tucson II (TL, TLE) 2.0 CRDi Trazione integrale	D4HA	131	06/2015 -	4353	4343
Tucson II (TL, TLE) 2.0 CVVT	G4NA	110	06/2015 -	4353	4343
Tucson II (TL, TLE) 2.0 CVVT Trazione integrale	G4NA	110	06/2015 -	4353	4343
Tucson II (TL, TLE) 2.0 GDi	G4NC	121	06/2015 -	4353	4343
Tucson II (TL, TLE) 2.0 GDi 4WD	G4NC	121	06/2015 -	4353	4343
Tucson II (TL, TLE) 2.0 Trazione integrale	G4NA	114	06/2015 -	4353	4343
Tucson II (TL, TLE) 44288 GDI Trazione integrale	G4KJ	135	07/2019 -	4353	4343
Tucson II (TL, TLE) 44348 CRDi	D4FE	100	08/2018 -	4353	4343
Tucson II (TL, TLE) 44348 CRDi	D4FE	85	08/2018 -	4353	4343
Tucson II (TL, TLE) 44348 CRDi 4WD	D4FE	100	08/2018 -	4353	4343
Tucson II (TL, TLE) 44348 CRDi hybrid 48V	D4FE	100	03/2019 -	4353	4343
Tucson II (TL, TLE) 44348 CRDi hybrid 48V	D4FE	85	03/2019 -	4353	4343
Tucson II (TL, TLE) 44348 CRDi hybrid 48V Trazione integrale	D4FE	100	03/2019 -	4353	4343
Tucson II (TL, TLE) 44348 CRDi Trazione integrale	D4FE	85	08/2018 -	4353	4343
Tucson II (TL, TLE) 44348 GDI	G4FD	96	06/2015 -	4353	4343
Tucson II (TL, TLE) 44348 GDi	G4FD	97	06/2015 -	4353	4343
Tucson II (TL, TLE) 44348 GDi Trazione integrale	G4FD	97	11/2017 -	4353	4343
Tucson II (TL, TLE) 44348 T-GDi	G4FJ	129	01/2016 -	4353	4343
Tucson II (TL, TLE) 44348 T-GDi	G4FJ	130	06/2015 -	4353	4343
Tucson II (TL, TLE) 44348 T-GDi	G4FJ	131	06/2015 -	4353	4343
Tucson II (TL, TLE) 44348 T-GDi	G4FJ	150	03/2018 -	4353	4343
Tucson II (TL, TLE) 44348 T-GDi 4WD	G4FJ	130	06/2015 -	4353	4343
Tucson II (TL, TLE) 44378 CRDi	D4FD	104	06/2015 -	4353	4343
Tucson II (TL, TLE) 44378 CRDi	D4FD	85	06/2015 -	4353	4343
VELOSTER (FS)	1.6	94	06/11 -	4166	
VELOSTER (FS)	1.6	95	10/11 -	4166	
VELOSTER (FS)	1.6 GDI	103	03/11 -	4166	
VELOSTER (FS)	1.6 MPI	97	04/11 -	4166	
Veloster (FS) 44348	G4FC	94	06/2011 -	4342	4343
Veloster (FS) 44348	G4FD	95	10/2011 - 12/2017	4342	
Veloster (FS) 44348 GDI	G4FD	103	03/2011 - 12/2017	4342	4343
Veloster (FS) 44348 MPI	G4FC	97	04/2011 - 12/2017	4342	4343
Veloster (FS) 44348 T-GDI	G4FJ	137	10/2012 - 12/2017		4343
Veloster (JS) 2.0 T-GDi	G4KH	184	02/2019 -		4343
Veloster (JS) 2.0 T-GDi	G4KH	202	02/2019 -		4343
Veloster (JS) 44287 T-GDi	G4LD	103	01/2018 -		4343
Veloster (JS) 44348 T-GDi	G4FJ	150	01/2018 -		4343
VISTO	250	120	12/98 – 12/05	3843	
XG (XG)	250	120	12/98 – 12/05	3993	
XG (XG)	300	145	09/99 – 09/03	3843	
XG (XG)	300	145	09/99 – 09/03	3993	
XG (XG)	350	145	10/02 – 12/05	3976/1	
XG (XG)	350	145	10/02 – 12/05	3993	
XG (XG)	0.8	38	11/97 – 10/00	3778	
XG (XG)	3.0	138	12/98 – 12/05	3843	
XG (XG)	3.0	138	12/98 – 12/05	3993	
HYUNDAI (BEIJING)					
ELANTRA Hatchback	1.6	81	12/03 – 12/10	3961	
ELANTRA Hatchback	1.6	81	12/03 – 12/10	4087	
ELANTRA Saloon	1.6	82	12/03 – 12/14	3961	
ELANTRA Saloon	1.6	82	12/03 – 12/14	4087	
ELANTRA Saloon	1.6 LPG	81	12/03 -	3961	
ELANTRA Saloon	1.6 LPG	81	12/03 -	4087	
ELANTRA Saloon	1.8	96	12/03 – 12/08	3961	
ELANTRA Saloon	1.8	96	12/03 – 12/08	4087	
ix35	2.0	120	04/10 -		3980
ix35	2.0 All-wheel Drive	120	04/10 -		3980
ix35	2.4	128	04/10 -		3980

MAKE & MODEL   		KW	YEAR		
HYUNDAI (BEIJING)					
ix35	2.4 All-wheel Drive	128	04/10 -		3980
MOINCA (MING YU)	1.8	96	08/09 – 12/14	3959	
MOINCA (MING YU)	1.8	96	08/09 – 12/14	3993	
MOINCA (MING YU)	2.0	101	08/09 – 12/15	3959	
MOINCA (MING YU)	2.0	101	08/09 – 12/15	3993	
SONATA (EF)	2.0	101	12/02 – 12/10	3959	
SONATA (EF)	2.0	101	12/02 – 12/10	3993	
SONATA (EF)	2.0	107	09/05 – 12/10	3959	
SONATA (EF)	2.0	107	09/05 – 12/10	3993	
SONATA (EF)	2.0	121	12/08 -	3959	
SONATA (EF)	2.0	121	12/08 -	3993	
SONATA (NF)	2.4	121	09/05 – 12/10	3959	
SONATA (NF)	2.4	121	09/05 – 12/10	3993	
SONATA (NF)	2.4	128	12/08 -	3959	
SONATA (NF)	2.4	128	12/08 -	3993	
SONATA (NFC)	2.5	121	12/02 – 07/07	3959	
SONATA (NFC)	2.5	121	12/02 – 07/07	3993	
SONATA (NFC)	2.7	128	12/02 – 07/07	3959	
SONATA (NFC)	2.7	128	12/02 – 07/07	3993	
TUCSON Closed Off-Road Vehicle	1.8 Turbo	118	10/06 -	3843	
TUCSON Closed Off-Road Vehicle	1.8 Turbo	118	10/06 -	3993	
TUCSON Closed Off-Road Vehicle	2.0	93	11/10 -	3960	3989
TUCSON Closed Off-Road Vehicle	2.0	104	05/05 – 12/15	3959	
TUCSON Closed Off-Road Vehicle	2.0	104	05/05 – 12/15	3993	
HYUNDAI (HUATAI)					
SANTA FE Closed Off-Road Vehicle	2.0 All-wheel Drive	104	05/05 -	3959	
SANTA FE Closed Off-Road Vehicle	2.0 All-wheel Drive	104	05/05 -	3993	
SANTA FE Closed Off-Road Vehicle	2.0 TDI All-wheel Drive	93	10/06 -	3843	
SANTA FE Closed Off-Road Vehicle	2.0 TDI All-wheel Drive	93	10/06 -	3993	
SANTA FE Closed Off-Road Vehicle	2.7 All-wheel Drive	128	10/06 -	3843	
SANTA FE Closed Off-Road Vehicle	2.7 All-wheel Drive	128	10/06 -	3993	
SANTA FE Closed Off-Road Vehicle	2.7 All-wheel Drive	129	05/05 -	3959	
SANTA FE Closed Off-Road Vehicle	2.7 All-wheel Drive	129	05/05 -	3993	
TERRACAN Closed Off-Road Vehicle	2.4	90	10/06 – 11/09	4118	
TERRACAN Closed Off-Road Vehicle	2.5 Turbo	76	03/03 – 12/08	4118	
TERRACAN Closed Off-Road Vehicle	2.5 Turbo 4WD	76	03/03 – 12/08	4118	
TERRACAN Closed Off-Road Vehicle	2.9 Turbo 4WD	120	04/05 – 12/08	4118	
TERRACAN Closed Off-Road Vehicle	3.5 4WD	147	03/03 – 12/08	3993	
INFINITI					
EX	2.5	173	01/10 – 12/11	4143	
EX	2.5 AWD	173	07/12 – 12/13	4143	
EX	3.0d	175	04/10 -	4143	
EX	3.5	206	02/03 – 12/08	4074	3933
EX	3.5	206	02/03 – 12/08	4143	
EX	3.5	226	10/08 – 12/11	4074	3933
FX	3.5 All-wheel Drive	206	01/03 – 12/08	4074	3933
FX	3.5 All-wheel Drive	206	01/03 – 12/08	4143	
FX	3.5 AWD	223	01/12 -	4074	3933
FX	3.5 AWD	234	01/10 – 12/11		3933
FX	3.7	228	10/08 -	4143	
FX	3.7	235	09/10 -	4143	
FX	3.7 AWD	258	01/10 – 12/11	4143	
FX	4.5	232	02/03 – 12/08	4074	3933
FX	4.5	232	02/03 – 12/08	4143	3933
FX	4.5 All-wheel Drive	232	01/03 – 12/08	4074	
FX	4.5 All-wheel Drive	232	01/03 – 12/08	4143	
FX	4.5 AWD	241	10/08 -	4074	3933
G Coupe	2.5	163	01/11 -	4143	
G Coupe	3.5	191	10/02 -	4143	3933
G Saloon	3.5 X	228	01/07 – 12/08	4143	3933
G Saloon	3.7	235	09/10 -	4143	
G Saloon	3.7	245	09/08 – 12/12		3933
G20	2.0	85	01/90 – 12/97	3700	
I30	3.0	142	01/97 -	3699	
I30	3.0	142	01/97 -	3779	
M (Y51)	2.5	173	09/10 – 12/12	4143	
M (Y51)	3.0d	175	03/10 -	4143	
M (Y51)	3.5h	225	04/11 -	4143	
M (Y51)	3.5h	240	04/11 -	4143	
M (Y51)	3.7	235	03/10 -	4143	
M (Y51)	3.7 X	246	09/10 -	4143	
M30 Convertible	3.0	121	01/90 – 12/93	3397	
M30 Coupe	3.0	121	01/89 – 12/93	3397	
M35	3.5	206	01/05 -	4074	3933
M35	3.5	206	01/05 -	4143	

MAKE & MODEL   		KW	YEAR		
INFINITI					
M35	3.5	226	09/08 – 12/10	4143	3933
M35	3.5 X	206	01/05 -	4074	3933
M35	3.5 X	206	01/05 -	4143	
M35	3.5 X	226	09/08 – 12/10	4143	3933
M45	4.5	250	01/05 -	4074	3933
M45	4.5	250	01/05 -	4143	
Q30 2.0 T	-	155	11/2015 -	4326	
Q30 2.0 T AWD	-	155	11/2015 -	4326	
Q30 44229 D	-	125	11/2015 -	4326	
Q30 44229 D AWD	-	125	11/2015 -	4326	
Q30 44317 D	-	80	11/2015 -	4326	
Q30 44348	-	115	11/2015 -	4326	
Q30 44348	-	90	11/2015 -	4326	
Q50 2.0 T	-	153	04/2014 -	4308	
Q50 2.0 T	-	155	04/2014 -	4308	
Q50 3.0 AT S	-	405	11/2016 -	4308	
Q50 44229 T	-	155	10/2015 -	4308	
Q50 44380	VQ37HR	258	04/2014 -	4308	
Q50 50	-	241	06/2013 -	4308	
Q50 50 D	-	125	04/2013 -	4308	
Q50 50 Hybrid	VQ35HR	216	12/2014 -	4308	
Q50 50 Hybrid	VQ35HR	225	04/2013 -	4308	
Q50 50 Hybrid	VQ35HR	268	04/2013 -	4308	
Q50 50 Hybrid AWD	VQ35HR	225	04/2013 -	4308	
Q50 50 Hybrid AWD	VQ35HR	268	04/2013 -	4308	
Q60 Convertible	3.7	235	10/13 -	4143	
Q60 Coupe 2.0 T	M 274	155	09/2016 -	4308	
Q60 Coupe 2.0 T. AWD	-	155	09/2016 -	4308	
Q70 (Y51)	2.2 D	125	10/14 -	4143	
Q70 (Y51)	2.5	163	05/15 -	4143	
Q70 (Y51)	2.5	173	08/13 – 05/15	4143	
Q70 (Y51)	3.7	246	10/13 -	4143	
Q70 (Y51)	3.7 AWD	246	10/13 -	4143	
Q70 (Y51) / Q70L (Y51) 3.0	V9X	175	03/2013 -	4308	
Q70 (Y51) / Q70L (Y51) 44229 D	-	125	10/2014 -	4308	
Q70 (Y51) / Q70L (Y51) 44318	VQ25HR	163	05/2015 -	4308	
Q70 (Y51) / Q70L (Y51) 44318	VQ25HR	173	08/2013 - 05/2015	4308	
Q70 (Y51) / Q70L (Y51) 44319 Hybrid	VQ35HR	219	05/2015 -	4308	
Q70 (Y51) / Q70L (Y51) 44319 Hybrid	VQ35HR	225	03/2013 -	4308	
Q70 (Y51) / Q70L (Y51) 44319 Hybrid	VQ35HR	240	08/2013 - 05/2015	4308	
Q70 (Y51) / Q70L (Y51) 44319 Hybrid	VQ35HR	268	03/2013 -	4308	
QX30 44229 D AWD	-	125	04/2016 -	4326	
QX50 I 30d AWD	V9X	175	08/2013 -	4308	
QX50 I 37	VQ37VHR	242	08/2013 -	4308	
QX50 I 37 AWD	VQ37VHR	235	08/2013 -	4308	
QX50 I 37 AWD	VQ37VHR	240	05/2015 -	4308	
QX50 I 37 AWD	VQ37VHR	242	08/2013 -	4308	
QX50 I 44318	VQ25HR	173	08/2013 -	4308	
QX50 I 44318 AWD	VQ25HR	163	02/2014 -	4308	
QX50 I 44318 AWD	VQ25HR	173	08/2013 -	4308	
QX50 I 44380 AWD	VQ37HR	258	08/2013 -	4308	
INNOCENTI					
ELBA (146)	1.3 (146CW)	49	08/91 – 12/96	3459	
ELBA (146)	1.3 (146CW)	49	08/91 – 12/96	3461	
ELBA (146)	1.4 i.e. (146EN, 146EQ)	49	09/94 – 12/96	3459	
ELBA (146)	1.4 i.e. (146EN, 146EQ)	49	09/94 – 12/96	3461	
ELBA (146)	1.5 i.e. (146C9)	55	08/92 – 09/94	3459	
ELBA (146)	1.5 i.e. (146C9)	55	08/92 – 09/94	3461	
ELBA (146)	1.6 i.e. (146EO, 146ER)	55	09/94 – 12/96	3459	
ELBA (146)	1.6 i.e. (146EO, 146ER)	55	09/94 – 12/96	3461	
ELBA (146)	1.7 D (146DI, 146EI)	42	08/91 – 12/96	3459	
ELBA (146)	1.7 D (146DI, 146EI)	42	08/91 – 12/96	3461	
KORAL	45	33	01/90 – 12/92	3316	
KORAL	55	40	01/90 – 12/92	3316	
INOKOM					
GETZ (TB)	1.4	52	09/06 -	3502	
IRISBUS					
DAILY TOURYS	16, 19	107	11/06 -	3994	3995
DAILY TOURYS	16, 19	130	11/06 -	3994	3995
ISUZU					
ASCENDER	4.2 4WD	217	03.2003 -	4221	4219
ASCENDER	5.3 4WD	224	03.2003 -	4221	4219
CAMPO (KB)	2.0 (KB23)	52	01/83 – 03/88	3657	
CAMPO (KB)	2.0 (KB23)	52	01/83 – 03/88	3757	

MAKE & MODEL		KW	YEAR		
ISUZU					
CAMPO (KB)	2.0 (KB23)	52	01/83 – 03/88	3857	
CAMPO (KB)	2.0 (KB28)	58	06/85 – 12/88	3657	
CAMPO (KB)	2.0 (KB28)	58	06/85 – 12/88	3757	
CAMPO (KB)	2.0 (KB28)	58	06/85 – 12/88	3857	
CAMPO (KB)	2.0 4WD (KB43, KB48)	52	01/83 – 03/88	3657	
CAMPO (KB)	2.0 4WD (KB43, KB48)	52	01/83 – 03/88	3757	
CAMPO (KB)	2.0 4WD (KB43, KB48)	52	01/83 – 03/88	3857	
CAMPO (KB)	2.0 4WD (KB48)	58	06/85 – 12/88	3657	
CAMPO (KB)	2.0 4WD (KB48)	58	06/85 – 12/88	3757	
CAMPO (KB)	2.0 4WD (KB48)	58	06/85 – 12/88	3857	
CAMPO (KB)	2.2 (TFS)	66	01/89 – 12/90	3657	
CAMPO (KB)	2.2 (TFS)	66	01/89 – 12/90	3757	
CAMPO (KB)	2.2 (TFS)	66	01/89 – 12/90	3857	
CAMPO (KB)	2.2 D (KBD27)	39	04/86 – 12/90	3657	
CAMPO (KB)	2.2 D (KBD27)	39	04/86 – 12/90	3757	
CAMPO (KB)	2.2 D (KBD27)	39	04/86 – 12/90	3857	
CAMPO (KB)	2.2 D (KBD27)	45	01/83 – 12/91	3657	
CAMPO (KB)	2.2 D (KBD27)	45	01/83 – 12/91	3757	
CAMPO (KB)	2.2 D (KBD27)	45	01/83 – 12/91	3857	
CAMPO (KB)	2.2 D 4WD (KBD42, KBD47)	39	01/83 – 12/90	3657	
CAMPO (KB)	2.2 D 4WD (KBD42, KBD47)	39	01/83 – 12/90	3757	
CAMPO (KB)	2.2 D 4WD (KBD42, KBD47)	39	01/83 – 12/90	3857	
CAMPO (KB)	2.5 D (KBD27)	55	01/83 – 12/90	3657	
CAMPO (KB)	2.5 D (KBD27)	55	01/83 – 12/90	3757	
CAMPO (KB)	2.5 D (KBD27)	55	01/83 – 12/90	3857	
CAMPO (KB)	2.5 D 4WD (KBD47)	55	01/83 – 12/90	3657	
CAMPO (KB)	2.5 D 4WD (KBD47)	55	01/83 – 12/90	3757	
CAMPO (KB)	2.5 D 4WD (KBD47)	55	01/83 – 12/90	3857	
CAMPO / FASTER (KB)	2.0 (4ZC1)	52	01/83 – 03/88	3436	
CAMPO / FASTER (KB)	2.0 (G200Z)	58	06/85 – 12/88	3436	
D-MAX (8DH)	2.5 DiTD	74	10/02 -	3657	
D-MAX (8DH)	2.5 DiTD	74	10/02 -	3757	
D-MAX (8DH)	3.0 DiTD 4x4	96	05/02 -	3657	
D-MAX (8DH)	3.0 DiTD 4x4	96	05/02 -	3757	
D-MAX I (8DH)	2.5 DiTD	74	10/02 – 06/12	3857	
D-MAX I (8DH)	2.5 DiTD	74	10/02 – 06/12	3886	
D-MAX I (8DH)	2.5 DiTD	100	10/06 – 06/12	3886	
D-MAX I (8DH)	2.5 DiTD	100	10/06 – 06/12	4124	
D-MAX I (8DH)	2.5 DiTD 4x4	74	05/02 – 06/12	3886	
D-MAX I (8DH)	2.5 DiTD 4x4	100	01/07 – 06/12	3886	
D-MAX I (8DH)	2.5 DiTD 4x4	100	01/07 – 06/12	4124	
D-MAX I (8DH)	3.0 DiTD	96	10/02 – 06/12	3886	
D-MAX I (8DH)	3.0 DiTD	120	01/07 – 06/12	3886	
D-MAX I (8DH)	3.0 DiTD	120	01/07 – 06/12	4124	
D-MAX I (8DH)	3.0 DiTD 4x4	96	05/02 – 06/12	3857	
D-MAX I (8DH)	3.0 DiTD 4x4	96	05/02 – 06/12	3886	
D-MAX I (8DH)	3.0 DiTD 4x4	120	01/07 – 06/12	3886	
D-MAX I (8DH)	3.0 DiTD 4x4	120	01/07 – 06/12	4124	
D-MAX I Platform/Chassis (8DH)	3.0 D All-wheel Drive 4x4	120	01/07 – 06/12	3886	
D-MAX I Platform/Chassis (8DH)	3.0 D All-wheel Drive 4x4	120	01/07 – 06/12	4124	
D-MAX II (TFR, TFS)	2.5 CRDi	58	06/12 -	4124	
D-MAX II (TFR, TFS)	2.5 CRDi	80	06/12 -	4124	
D-MAX II (TFR, TFS)	2.5 CRDi	85	06/12 -	4124	
D-MAX II (TFR, TFS)	2.5 CRDi	100	06/12 -	4124	
D-MAX II (TFR, TFS)	2.5 CRDi	120	06/12 -	4124	
D-MAX II (TFR, TFS)	2.5 CRDi 4x4	80	06/12 -	4124	
D-MAX II (TFR, TFS)	2.5 CRDi 4x4	100	06/12 -	4124	
D-MAX II (TFR, TFS)	2.5 CRDi 4x4	120	06/12 -	4124	
D-MAX II Platform/Chassis (TFR, TFS)	2.5 CRDi	58	06/12 -	4124	
D-MAX II Platform/Chassis (TFR, TFS)	2.5 CRDi	85	06/12 -	4124	
D-MAX II Platform/Chassis (TFR, TFS)	2.5 CRDi	120	06/12 -	4124	
D-MAX II Platform/Chassis (TFR, TFS)	2.5 CRDi 4WD	120	06/12 -	4124	
ELF Platform/Chassis (NKR8_, NKQ8_)	3.0 Di	96	10/03 -	3886	
GEMINI (JT)	1.5	52	02/88 – 12/90	3446	
GEMINI (JT)	1.5	52	02/88 – 12/90	3450	
GEMINI (JT)	1.5 D	37	02/88 – 12/90	3446	
GEMINI (JT)	1.5 D	37	02/88 – 12/90	3450	
GEMINI (JT)	1.5 TD	49	02/88 – 12/90	3446	
GEMINI (JT)	1.5 TD	49	02/88 – 12/90	3450	
GEMINI (JT)	1.6 GTI 16V	84	08/88 – 12/90	3446	
GEMINI (JT)	1.6 GTI 16V	84	08/88 – 12/90	3450	
GEMINI Saloon (JT)	1.5	52	02/88 – 12/89	3446	
GEMINI Saloon (JT)	1.5	52	02/88 – 12/89	3450	
GEMINI Saloon (JT)	1.5 D	37	02/88 – 12/89	3446	
GEMINI Saloon (JT)	1.5 D	37	02/88 – 12/89	3450	
GEMINI Saloon (JT)	1.5 TD	49	02/88 – 12/89	3446	

MAKE & MODEL		KW	YEAR		
ISUZU					
GEMINI Saloon (JT)	1.5 TD	49	02/88 – 12/89	3450	
MIDI Box (98000N)	2.0	61	06/88 -	3462	
MIDI Box (98000N)	2.0 4WD	61	09/88 -	3462	
MIDI Box (98000N)	2.2 D	45	01/89 -	3462	
MIDI Box (98000N)	2.2 D 4WD	45	09/88 -	3462	
MIDI Box (98000N)	2.4 TD	56	02/94 -	3462	
MIDI Bus (94000, 98000)	2.0 (98000)	61	01/89 -	3462	
MIDI Bus (94000, 98000)	2.0 4WD (94000)	61	01/89 -	3462	
MIDI Bus (94000, 98000)	2.0 TD (98000)	51	01/89 -	3462	
MIDI Van (94000, 98000)	2.2 D (98000)	45	01/89 -	3462	
MIDI Van (94000, 98000)	2.2 D 4WD (94000)	45	01/89 -	3462	
MIDI Van (94000, 98000)	2.4 D (98000)	56	01/94 -	3462	
MIDI Van (94000, 98000)	2.4 TD (98000)	56	01/94 -	3462	
MU 7 Closed Off-Road Vehicle	3.0 TD	120	01/13 -	4124	
MU-X Closed Off-Road Vehicle	2.5 CRDi	100	11/13 -	4124	
MU-X Closed Off-Road Vehicle	2.5 CRDi 4x4	100	11/13 -	4124	
MU-X Closed Off-Road Vehicle	3.0 CRDi	130	11/13 -	4124	
MU-X Closed Off-Road Vehicle	3.0 CRDi 4x4	130	11/13 -	4124	
RODEO Pickup	2.5 D	94	08/06 – 04/07	3886	
TFR/TFS Pickup (TF_)	2.8 D	74	09/91 – 08/99	3657	
TFR/TFS Pickup (TF_)	2.8 D	74	09/91 – 08/99	3757	
TFR/TFS Pickup (TF_)	2.8 D	74	09/91 – 08/99	3857	
TFR/TFS Pickup (TF_)	2.8 D All-wheel Drive	74	09/91 – 08/99	3657	
TFR/TFS Pickup (TF_)	2.8 D All-wheel Drive	74	09/91 – 08/99	3757	
TFR/TFS Pickup (TF_)	2.8 D All-wheel Drive	74	09/91 – 08/99	3857	
TROOPER	3.0 DTI	118	05/98 -	3674	
TROOPER	3.0 DTI	118	05/98 -	3743	
TROOPER	3.5 V6 24V	158	04/00 -	3674	
TROOPER	3.5 V6 24V	158	04/00 -	3743	
TROOPER (UB)	3.1 TD	84	08/91 – 07/98	3674	
TROOPER (UB)	3.1 TD	84	08/91 – 07/98	3743	
TROOPER (UB)	3.2	130	08/91 – 07/98	3674	
TROOPER (UB)	3.2	130	08/91 – 07/98	3743	
TROOPER (UBS)	2.2 D 4x4	39	05/84 – 12/89	3657	
TROOPER (UBS)	2.2 D 4x4	39	05/84 – 12/89	3757	
TROOPER (UBS)	2.8 TD (UBS55)	71	10/87 – 12/91	3657	
TROOPER (UBS)	2.8 TD (UBS55)	71	10/87 – 12/91	3757	
TROOPER (UBS)	2.8 TD (UBS55)	78	10/88 – 12/91	3657	
TROOPER (UBS)	2.8 TD (UBS55)	78	10/88 – 12/91	3757	
TROOPER I (UBS)	2.2 D 4x4	39	05/84 – 12/89	3857	
TROOPER I (UBS)	2.8 TD (UBS55)	71	10/87 – 12/91	3857	
TROOPER I (UBS)	2.8 TD (UBS55)	78	10/88 – 12/91	3857	
TROOPER I Open Off-Road Vehicle (UBS)	1.9 (UBS13)	58	01/83 – 12/85	3857	
TROOPER I Open Off-Road Vehicle (UBS)	2.2 D (UBS52)	45	01/83 – 12/83	3857	
TROOPER I Open Off-Road Vehicle (UBS)	2.2 D 4x4	39	05/84 – 07/89	3857	
TROOPER I Open Off-Road Vehicle (UBS)	2.2 TD (UBS52)	53	03/84 – 12/91	3857	
TROOPER I Open Off-Road Vehicle (UBS)	2.3 (UBS16)	66	11/85 – 12/91	3857	
TROOPER I Open Off-Road Vehicle (UBS)	2.6 i (UBS17)	85	10/87 – 12/91	3857	
TROOPER II (UB)	3.1 TD	84	08/91 – 07/98		3887
TROOPER II (UB)	3.2	130	08/91 – 07/98		3887
TROOPER II Open Off-Road Vehicle (UB)	3.1 TD	84	08/91 – 07/98		3887
TROOPER II Open Off-Road Vehicle (UB)	3.2	130	08/91 – 07/98		3887
TROOPER III	3.0 DTI	117	05/98 – 08/04		3887
TROOPER III	3.5 V6 24V	158	04/00 – 08/04		3887
TROOPER III Open Off-Road Vehicle	3.0 DTI	118	04/00 -	3674	
TROOPER III Open Off-Road Vehicle	3.0 DTI	118	04/00 – 08/04		3887
TROOPER Open Off-Road Vehicle	3.0 DTI	118	04/00 -	3743	
TROOPER Open Off-Road Vehicle	3.5 V6 24V	158	04/00 -	3674	
TROOPER Open Off-Road Vehicle	3.5 V6 24V	158	04/00 -	3743	
TROOPER Open Off-Road Vehicle	3.5 V6 24V	158	04/00 – 08/04		3887
TROOPER Open Off-Road Vehicle (UB)	3.1 TD	84	08/91 – 07/98	3674	
TROOPER Open Off-Road Vehicle (UB)	3.1 TD	84	08/91 – 07/98	3743	
TROOPER Open Off-Road Vehicle (UB)	3.2	130	08/91 – 07/98	3674	
TROOPER Open Off-Road Vehicle (UB)	3.2	130	08/91 – 07/98	3743	
TROOPER Open Off-Road Vehicle (UBS)	1.9 (UBS13)	58	01/83 – 12/85	3657	
TROOPER Open Off-Road Vehicle (UBS)	1.9 (UBS13)	58	01/83 – 12/85	3757	
TROOPER Open Off-Road Vehicle (UBS)	2.2 D (UBS52)	45	01/83 – 12/83	3657	
TROOPER Open Off-Road Vehicle (UBS)	2.2 D (UBS52)	45	01/83 – 12/83	3757	
TROOPER Open Off-Road Vehicle (UBS)	2.2 D 4x4	39	05/84 – 07/89	3657	
TROOPER Open Off-Road Vehicle (UBS)	2.2 D 4x4	39	05/84 – 07/89	3757	
TROOPER Open Off-Road Vehicle (UBS)	2.2 TD (UBS52)	53	03/84 – 12/91	3657	
TROOPER Open Off-Road Vehicle (UBS)	2.2 TD (UBS52)	53	03/84 – 12/91	3757	
TROOPER Open Off-Road Vehicle (UBS)	2.3 (UBS16)	66	11/85 – 12/91	3657	
TROOPER Open Off-Road Vehicle (UBS)	2.3 (UBS16)	66	11/85 – 12/91	3757	
TROOPER Open Off-Road Vehicle (UBS)	2.6 i (UBS17)	85	10/87 – 12/91	3657	
TROOPER Open Off-Road Vehicle (UBS)	2.6 i (UBS17)	85	10/87 – 12/91	3757	

MAKE & MODEL		KW	YEAR		
ISUZU					
TRUCK ELF Platform/Chassis (NKR7_, NKS7_, NHR6_, NK 44351 DiTD	4HG1	98	10/1999 - 09/2003	4354	
TRUCK ELF Platform/Chassis (NKR7_, NKS7_, NHR6_, NK 44351 DiTD 4x4	4HG1	98	10/1999 - 09/2003	4354	
TRUCK ELF Van (NHR6_, NKR6_, NKR7_, NKS7_) 44351 DiTD	4HG1	98	10/1999 - 09/2003	4354	
TRUCK ELF Van (NHR6_, NKR6_, NKR7_, NKS7_) 44351 DiTD 4x4	4HG1	98	10/1999 - 09/2003	4354	
TRUCK N-Serie (5Th Generation) NKR 66 E	4HF1-II	76	-	4354	
TRUCK N-Serie (5Th Generation) NKR 69S, NPR 69M, NPR 69L	-	61	01/1998 - 12/2001	4354	
TRUCK N-Serie (5Th Generation) NKR 85EA, NLR 85AL, NLR 85L, NNR 85L, NPR 85G, NPR	4JJ1-TC, 4JJ1-X	110	10/2006 -	4354	
TRUCK N-Serie (5Th Generation) NMR 85L, NPR 85L	4JJ1-TC, 4JJ1-X	110	10/2006 -	4354	
TRUCK N-Serie (5Th Generation) NPR 85L, NPR 85P	4JJ1-TC, 4JJ1-X	110	10/2006 -	4354	
VEHICROSS (_U_)	3.2 All-wheel Drive 4x4 (UGS25)	158	04/97 – 12/00	3743	3887
VEHICROSS (_U_)	3.2 All-wheel Drive 4x4 (UGS25)	158	04/97 – 12/00	3674	
IVECO					
DAILY I Box Body / Estate	30-8 (10014131, 10014132,10014137, 10014231,10014232...)	53	01/78 – 12/89	3423	
DAILY I Platform/Chassis	30-8 (10011131, 10011132,10011231, 10011232,10011237...)	53	01/78 – 12/89	3423	
DAILY II Box Body / Estate	30-8 (12914111, 12914112, 12914117, 12914131, 12914137...)	55	01/89 – 08/98	3423/1	
DAILY II Box Body / Estate	30-8 (12914111, 12914112, 12914117, 12914131, 12914137...)	60	01/89 – 08/98	3423/1	
DAILY II Box Body / Estate	35-10 (12974212, 12974217, 13014111, 13014131, 13014204...)	76	01/89 – 08/98	3423/1	
DAILY II Box Body / Estate	35-10 (12974212, 12974217, 13014111, 13014131, 13014204...)	80	01/89 – 08/98	3423/1	
DAILY II Box Body / Estate	35-10 (12974212, 12974217,12974417)	68	09/96 – 08/98	3575	
DAILY II Box Body / Estate	35-10 (12974212, 12974217,12974417)	68	09/96 – 08/98	3645	
DAILY II Box Body / Estate	35-10 (12974212, 12974217,13014111, 13014131,13014204...)	76	01/89 – 08/98	3575	
DAILY II Box Body / Estate	35-10 (12974212, 12974217,13014111, 13014131,13014204...)	76	01/89 – 08/98	3645	
DAILY II Box Body / Estate	35-10 (12974212, 12974217,13014111, 13014131,13014204...)	76	01/89 – 08/98	3523	
DAILY II Box Body / Estate	35-10 (12974212, 12974217,13014111, 13014131,13014204...)	76	01/89 – 08/98	3524	
DAILY II Box Body / Estate	35-10 (12974212, 12974217,13014111, 13014131,13014204...)	80	01/89 – 08/98	3523	
DAILY II Box Body / Estate	35-10 (12974212, 12974217,13014111, 13014131,13014204...)	80	01/89 – 08/98	3524	
DAILY II Box Body / Estate	35-10 (12974212, 12974217,13014111,13014131,13014204...)	80	01/89 – 08/98	3575	
DAILY II Box Body / Estate	35-10 (12974212, 12974217,13014111,13014131,13014204...)	80	01/89 – 08/98	3645	
DAILY II Box Body / Estate	35-10 (15034111, 15034204,15034211, 15034215,15034217...)	76	01/96 – 05/99	3575	
DAILY II Box Body / Estate	35-10 (15034111, 15034204,15034211, 15034215,15034217...)	76	01/96 – 05/99	3645	
DAILY II Box Body / Estate	35-8 (12934104, 12934111, 12934112, 12934117, 12934124...)	55	01/91 – 08/98	3423/1	
DAILY II Box Body / Estate	35-8 (12934104, 12934111,12934112, 12934117,12934124...)	55	01/91 – 08/98	3523	
DAILY II Box Body / Estate	35-8 (12934104, 12934111,12934112, 12934117,12934124...)	55	01/91 – 08/98	3524	
DAILY II Box Body / Estate	35-8 (12934104, 12934111,12934112, 12934117,12934124...)	55	01/91 – 08/98	3575	
DAILY II Box Body / Estate	35-8 (12934104, 12934111,12934112, 12934117,12934124...)	55	01/91 – 08/98	3645	
DAILY II Box Body / Estate	35-8 (12934104, 12934111,12934112, 12934117,12934124...)	60	01/91 – 08/98	3423/1	
DAILY II Box Body / Estate	35-8 (12934104, 12934111,12934112, 12934117,12934124...)	60	01/91 – 08/98	3523	
DAILY II Box Body / Estate	35-8 (12934104, 12934111,12934112, 12934117,12934124...)	60	01/91 – 08/98	3524	
DAILY II Box Body / Estate	35-8 (12934104, 12934111,12934112, 12934117,12934124...)	60	01/91 – 08/98	3575	
DAILY II Box Body / Estate	35-8 (12934104, 12934111,12934112, 12934117,12934124...)	60	01/91 – 08/98	3645	
DAILY II Box Body / Estate	35-8 (14934104, 14934111,14934204, 14934205,14934211...)	62	09/98 – 05/99	3575	
DAILY II Box Body / Estate	35-8 (14934104, 14934111,14934204, 14934205,14934211...)	62	09/98 – 05/99	3645	
DAILY II Box Body / Estate	40-10 V	76	01/90 – 04/96	3423/1	
DAILY II Box Body / Estate	40-10 V	76	01/90 – 04/96	3523	
DAILY II Box Body / Estate	40-10 V	76	01/90 – 04/96	3524	
DAILY II Box Body / Estate	45-10 V (13034204, 13034211,13034212, 13034224...)	76	01/89 – 04/96	3423/1	
DAILY II Box Body / Estate	45-10 V (13034204, 13034211,13034212, 13034224...)	76	01/89 – 04/96	3523	
DAILY II Box Body / Estate	45-10 V (13034204, 13034211,13034212, 13034224...)	76	01/89 – 04/96	3524	
DAILY II Box Body / Estate	59-12 V (13154404, 13154411,13154412, 13154417...)	85	05/91 – 04/96	3749/1	
DAILY II Box Body / Estate	59-12 V (15174404, 15174411,15174415, 15174417)	90	05/96 – 05/99	3749	
DAILY II Bus	A 40-10 (94139111, 94139131, 94139311, 94139315...)	76	01/91 – 12/96	3423/1	
DAILY II Bus	A 40-10 (94139111, 94139131,94139311, 94139315...)	76	01/-1 – 12/96	3523	
DAILY II Bus	A 40-10 (94139111, 94139131,94139311, 94139315...)	76	01/-1 – 12/96	3524	
DAILY II Bus	A 45-10 (94159111, 94159131, 94159211, 94159311...)	76	01/91 – 04/96	3423/1	
DAILY II Bus	A 45-10 (94159111, 94159131,94159211, 94159311...)	76	01/96 – 04/96	3523	
DAILY II Bus	A 45-10 (94159111, 94159131,94159211, 94159311...)	76	01/96 – 04/96	3524	
DAILY II Dumptruck	35-10 K (15030111, 15030211,15030311, 15031111...)	76	01/97 – 05/99	3575	
DAILY II Dumptruck	35-10 K (15030111, 15030211,15030311, 15031111...)	76	01/97 – 05/99	3645	
DAILY II Dumptruck	35-12 K (15130311, 15130411,15131111, 15131204...)	90	09/06 – 08/98	3575	
DAILY II Dumptruck	35-12 K (15130311, 15130411,15131111, 15131204...)	90	09/96 – 08/98	3645	
DAILY II Dumptruck	35-8 K (14930304, 14931104,14931111, 14931115...)	62	09/98 – 05/99	3575	
DAILY II Dumptruck	35-8 K (14930304, 14931104,14931111, 14931115...)	62	09/98 – 05/99	3645	
DAILY II Dumptruck	45-10 (13031204, 13031211, 13031212, 13031224, 13031231...)	76	01/92 – 04/96	3423/1	
DAILY II Dumptruck	45-10 (13031204, 13031211,13031212, 13031224,13031231...)	76	01/92 – 04/96	3523	
DAILY II Dumptruck	45-10 (13031204, 13031211,13031212, 13031224,13031231...)	76	01/92 – 04/96	3524	
DAILY II Dumptruck	59-12 K (13156211, 13156212,13156231, 13156311...)	85	05/91 – 04/96	3749/1	
DAILY II Dumptruck	59-12 K (15176211, 15176304,15176311, 15176315...)	90	05/96 – 05/99	3749	
DAILY II Platform/Chassis	30-8 (12910211, 12911111, 12911112, 12911117, 12911131...)	55	01/92 – 08/98	3423/1	
DAILY II Platform/Chassis	30-8 (12910211, 12911111, 12911112, 12911117, 12911131...)	60	01/92 – 08/98	3423/1	
DAILY II Platform/Chassis	35-10	80	01/89 – 12/96	3423/1	
DAILY II Platform/Chassis	35-10	80	01/89 – 12/96	3523	
DAILY II Platform/Chassis	35-10	80	01/89 – 12/96	3524	
DAILY II Platform/Chassis	35-10	80	01/89 – 12/96	3575	
DAILY II Platform/Chassis	35-10	80	01/89 – 12/96	3645	
DAILY II Platform/Chassis	35-10 (12971112, 12971212,12971312, 12971317, 12976112...)	68	01/89 – 12/96	3423/1	
DAILY II Platform/Chassis	35-10 (12971112, 12971212,12971312, 12971317, 12976112...)	68	01/89 – 12/96	3523	
DAILY II Platform/Chassis	35-10 (12971112, 12971212,12971312, 12971317,12976112...)	68	01/89 – 12/96	3524	

MAKE & MODEL		KW	YEAR		
IVECO					
DAILY II Platform/Chassis	35-10 (12971112, 12971212,12971312, 12971317,12976112...)	68	01/89 – 12/96	3575	
DAILY II Platform/Chassis	35-10 (12971112, 12971212,12971312, 12971317,12976112...)	68	01/89 – 12/96	3645	
DAILY II Platform/Chassis	35-10 (12971112, 12971212,12971312, 12971317,12976112...)	76	01/89 – 12/96	3423/1	
DAILY II Platform/Chassis	35-10 (12971112, 12971212,12971312, 12971317,12976112...)	76	01/89 – 12/96	3523	
DAILY II Platform/Chassis	35-10 (12971112, 12971212,12971312, 12971317,12976112...)	76	01/89 – 12/96	3524	
DAILY II Platform/Chassis	35-10 (15030111, 15030211,15030311, 15031111,15031117...)	76	01/96 – 05/99	3575	
DAILY II Platform/Chassis	35-10 (15030111, 15030211,15030311, 15031111,15031117...)	76	01/96 – 05/99	3645	
DAILY II Platform/Chassis	35-12 (15130311, 15130411,15131111, 15131204,15131211...)	90	05/96 – 05/99	3575	
DAILY II Platform/Chassis	35-12 (15130311, 15130411,15131111, 15131204,15131211...)	90	05/96 – 05/99	3645	
DAILY II Platform/Chassis	35-8 (12931102, 12931104,12931111, 12931112,12931117...)	55	01/89 – 08/98	3423/1	
DAILY II Platform/Chassis	35-8 (12931102, 12931104,12931111, 12931112,12931117...)	55	01/89 – 08/98	3523	
DAILY II Platform/Chassis	35-8 (12931102, 12931104,12931111, 12931112,12931117...)	55	01/89 – 08/98	3524	
DAILY II Platform/Chassis	35-8 (12931102, 12931104,12931111, 12931112,12931117...)	55	01/89 – 08/98	3575	
DAILY II Platform/Chassis	35-8 (12931102, 12931104,12931111, 12931112,12931117...)	55	01/89 – 08/98	3645	
DAILY II Platform/Chassis	35-8 (12931102, 12931104,12931111, 12931112,12931117...)	60	01/89 – 08/98	3423/1	
DAILY II Platform/Chassis	35-8 (12931102, 12931104,12931111, 12931112,12931117...)	60	01/89 – 08/98	3523	
DAILY II Platform/Chassis	35-8 (12931102, 12931104,12931111, 12931112,12931117...)	60	01/89 – 08/98	3524	
DAILY II Platform/Chassis	35-8 (12931102, 12931104,12931111, 12931112,12931117...)	60	01/89 – 08/98	3575	
DAILY II Platform/Chassis	35-8 (12931102, 12931104,12931111, 12931112,12931117...)	60	01/89 – 08/98	3645	
DAILY II Platform/Chassis	35-8 (14930304, 1493110,14931204...)	62	09/98 – 05/99	3645	
DAILY II Platform/Chassis	35-8 (14930304, 14931104,14931111, 14931115,14931204...)	62	09/98 – 05/99	3575	
DAILY II Platform/Chassis	45-10 (13031204, 13031211, 13031212, 13031224,13031231...)	76	01/89 – 04/96	3423/1	
DAILY II Platform/Chassis	45-10 (13031204, 13031211,13031212, 13031224,13031231...)	76	01/89 – 04/96	3523	
DAILY II Platform/Chassis	45-10 (13031204, 13031211,13031212, 13031224,13031231...)	76	01/89 – 04/96	3524	
DAILY II Platform/Chassis	59-12 (13150204, 13150211,13150231, 13150311,13150312...)	85	05/91 – 04/96	3749/1	
DAILY II Platform/Chassis	59-12 (15170211, 15170304,15170311, 15170504,15170511...)	90	05/96 – 05/99	3751	
DAILY III Box Body / Estate	2.8 CNG	78	05/99 – 07/07	3575	
DAILY III Box Body / Estate	2.8 CNG	78	05/99 – 07/07	3645	
DAILY III Box Body / Estate	29 L 10 V (ALJA43A2, ALJA42A2, ALJA41A2)	70	09/02 – 07/07	3575/2	
DAILY III Box Body / Estate	29 L 10 V (ALJA43A2, ALJA42A2, ALJA41A2)	70	09/02 – 07/07	3575	
DAILY III Box Body / Estate	29 L 10 V (ALJA43A2, ALJA42A2, ALJA41A2)	70	09/02 – 07/07	3645	
DAILY III Box Body / Estate	29 L 10 V (ALJA43A2, ALJA42A2, ALJA41A2)	70	09/02 – 07/07	3823	
DAILY III Box Body / Estate	29 L 11 V	78	05/99 – 07/07	3575/2	
DAILY III Box Body / Estate	29 L 11 V	78	05/99 – 07/07	3823	
DAILY III Box Body / Estate	29 L 11 V	78	05/99 – 07/07	3645	
DAILY III Box Body / Estate	29 L 11 V	78	05/99 – 07/07	3575	
DAILY III Box Body / Estate	29 L 12 V (ALKA41A2, ALLA52A2, ALKA42A2)	85	09/02 – 07/07	3645	
DAILY III Box Body / Estate	29 L 12 V (ALKA41A2, ALLA52A2, ALKA42A2)	85	09/02 – 07/07	3575/2	
DAILY III Box Body / Estate	29 L 12 V (ALKA41A2, ALLA52A2, ALKA42A2)	85	09/02 – 07/07	3575	
DAILY III Box Body / Estate	29 L 12 V (ALKA41A2, ALLA52A2, ALKA42A2)	85	09/02 – 07/07	3823	
DAILY III Box Body / Estate	29 L 13	92	05/01 – 07/07	3575	
DAILY III Box Body / Estate	29 L 13	92	05/01 – 07/07	3575/2	
DAILY III Box Body / Estate	29 L 13	92	05/01 – 07/07	3645	
DAILY III Box Body / Estate	29 L 13	92	05/01 – 07/07	3823	
DAILY III Box Body / Estate	29 L 14	100	01/05 – 04/06	3575/2	
DAILY III Box Body / Estate	29 L 14	100	01/05 – 04/06	3823	
DAILY III Box Body / Estate	29 L 9 V	62	05/99 – 07/07	3575	
DAILY III Box Body / Estate	29 L 9 V	62	05/99 – 07/07	3575/2	
DAILY III Box Body / Estate	29 L 9 V	62	05/99 – 07/07	3645	
DAILY III Box Body / Estate	29 L 9 V	62	05/99 – 07/07	3823	
DAILY III Box Body / Estate	29 L 9 V	66	11/01 – 04/06	3575/2	
DAILY III Box Body / Estate	29 L 9 V	66	11/01 – 04/06	3823	
DAILY III Box Body / Estate	35 C 12 V, 35 S 12 V (AGKA43A2, AGKB43A2,AGKB46A2...)	85	09/02 – 07/07	3575	
DAILY III Box Body / Estate	35 C 12 V, 35 S 12 V (AGKA43A2, AGKB43A2,AGKB46A2...)	85	09/02 – 07/07	3575/2	
DAILY III Box Body / Estate	35 C 12 V, 35 S 12 V (AGKA43A2, AGKB43A2,AGKB46A2...)	85	09/02 – 07/07	3823	
DAILY III Box Body / Estate	35 C 12 V, 35 S 12 V(AGKA43A2, AGKB43A2,AGKB46A2...)	85	09/02 – 07/07	3645	
DAILY III Box Body / Estate	35 C 14	100	09/04 – 04/06	3575	
DAILY III Box Body / Estate	35 C 14	100	09/04 – 04/06	3575/2	
DAILY III Box Body / Estate	35 C 14	100	09/04 – 04/06	3645	
DAILY III Box Body / Estate	35 C 14	100	09/04 – 04/06	3823	
DAILY III Box Body / Estate	35 C 14, 35 S 14	100	01/05 – 04/06	3575	
DAILY III Box Body / Estate	35 C 14, 35 S 14	100	01/05 – 04/06	3575/2	
DAILY III Box Body / Estate	35 C 14, 35 S 14	100	01/05 – 04/06	3645	
DAILY III Box Body / Estate	35 C 14, 35 S 14	100	01/05 – 04/06	3823	
DAILY III Box Body / Estate	35 C 17, 35 S 17	122	01/05 – 04/06	3575	
DAILY III Box Body / Estate	35 C 17, 35 S 17	122	01/05 – 04/06	3575/2	
DAILY III Box Body / Estate	35 C 17, 35 S 17	122	01/05 – 04/06	3645	
DAILY III Box Body / Estate	35 C 17, 35 S 17	122	01/05 – 04/06	3823	
DAILY III Box Body / Estate	35 S 10 (ANJA41A1, ANJA42A2, ANJA42AB,ANJA43A, ANJAV1A...)	70	09/02 – 07/07	3575	
DAILY III Box Body / Estate	35 S 10 (ANJA41A1, ANJA42A2, ANJA42AB,ANJA43A, ANJAV1A...)	70	09/02 – 07/07	3575/2	
DAILY III Box Body / Estate	35 S 10 (ANJA41A1, ANJA42A2, ANJA42AB,ANJA43A, ANJAV1A...)	70	09/02 – 07/07	3645	
DAILY III Box Body / Estate	35 S 10 (ANJA41A1, ANJA42A2, ANJA42AB,ANJA43A, ANJAV1A...)	70	09/02 – 07/07	3823	
DAILY III Box Body / Estate	35 S 11 V,35 C 11 V	78	05/99 – 07/07	3575	
DAILY III Box Body / Estate	35 S 11 V,35 C 11 V	78	05/99 – 07/07	3575/2	
DAILY III Box Body / Estate	35 S 11 V,35 C 11 V	78	05/99 – 07/07	3645	
DAILY III Box Body / Estate	35 S 11 V,35 C 11 V	78	05/99 – 07/07	3823	

BESER®

MAKE & MODEL		KW	YEAR		
IVECO					
DAILY III Box Body / Estate	35 S 13 V,35 C 13 V	92	05/99 – 07/07	3575	
DAILY III Box Body / Estate	35 S 13 V,35 C 13 V	92	05/99 – 07/07	3575/2	
DAILY III Box Body / Estate	35 S 13 V,35 C 13 V	92	05/99 – 07/07	3645	
DAILY III Box Body / Estate	35 S 13 V,35 C 13 V	92	05/99 – 07/07	3823	
DAILY III Box Body / Estate	35 S 15 V, 35 C 15 V (A6HCV3B2, A6HBV4B2,A6HC41B2...)	107	11/02 – 07/07	3575	
DAILY III Box Body / Estate	35 S 15 V, 35 C 15 V (A6HCV3B2, A6HBV4B2,A6HC41B2...)	107	11/02 – 07/07	3575/2	
DAILY III Box Body / Estate	35 S 15 V, 35 C 15 V (A6HCV3B2, A6HBV4B2,A6HC41B2...)	107	11/02 – 07/07	3645	
DAILY III Box Body / Estate	35 S 15 V, 35 C 15 V (A6HCV3B2, A6HBV4B2,A6HC41B2...)	107	11/02 – 07/07	3823	
DAILY III Box Body / Estate	35 S 9 V	66	11/01 – 04/06	3575	
DAILY III Box Body / Estate	35 S 9 V	66	11/01 – 04/06	3575/2	
DAILY III Box Body / Estate	35 S 9 V	66	11/01 – 04/06	3645	
DAILY III Box Body / Estate	35 S 9 V	66	11/01 – 04/06	3823	
DAILY III Box Body / Estate	35 S 9 V,35 C 9 V	62	05/99 – 07/07	3575	
DAILY III Box Body / Estate	35 S 9 V,35 C 9 V	62	05/99 – 07/07	3575/2	
DAILY III Box Body / Estate	35 S 9 V,35 C 9 V	62	05/99 – 07/07	3645	
DAILY III Box Body / Estate	35 S 9 V,35 C 9 V	62	05/99 – 07/07	3823	
DAILY III Box Body / Estate	40 C 13	92	05/99 – 04/06	3575	
DAILY III Box Body / Estate	40 C 13	92	05/99 – 04/06	3575/2	
DAILY III Box Body / Estate	40 C 13	92	05/99 – 04/06	3645	
DAILY III Box Body / Estate	40 C 13	92	05/99 – 04/06	3823	
DAILY III Box Body / Estate	40 C 14	100	01/05 – 04/06	3575/2	
DAILY III Box Body / Estate	40 C 14	100	09/04 – 04/06	3575	
DAILY III Box Body / Estate	40 C 14	100	09/04 – 04/06	3575/2	
DAILY III Box Body / Estate	40 C 14	100	09/04 – 04/06	3645	
DAILY III Box Body / Estate	40 C 14	100	09/04 – 04/06	3823	
DAILY III Box Body / Estate	40 C 15	107	11/01 – 04/06	3575	
DAILY III Box Body / Estate	40 C 15	107	11/01 – 04/06	3575/2	
DAILY III Box Body / Estate	40 C 15	107	11/01 – 04/06	3645	
DAILY III Box Body / Estate	40 C 15	107	11/01 – 04/06	3823	
DAILY III Box Body / Estate	40 C 17, 40 S 17	122	01/05 – 04/06	3575	
DAILY III Box Body / Estate	40 C 17, 40 S 17	122	01/05 – 04/06	3575/2	
DAILY III Box Body / Estate	40 C 17, 40 S 17	122	01/05 – 04/06	3645	
DAILY III Box Body / Estate	40 C 17, 40 S 17	122	01/05 – 04/06	3823	
DAILY III Box Body / Estate	45 C 14	100	07/99 – 04/06	3575	
DAILY III Box Body / Estate	45 C 14	100	07/99 – 04/06	3645	
DAILY III Box Body / Estate	50 C 11	78	05/99 – 07/07	3575	
DAILY III Box Body / Estate	50 C 11	78	05/99 – 07/07	3575/2	
DAILY III Box Body / Estate	50 C 11	78	05/99 – 07/07	3645	
DAILY III Box Body / Estate	50 C 11	78	05/99 – 07/07	3823	
DAILY III Box Body / Estate	50 C 13	92	05/99 – 07/07	3575	
DAILY III Box Body / Estate	50 C 13	92	05/99 – 07/07	3575/2	
DAILY III Box Body / Estate	50 C 13	92	05/99 – 07/07	3645	
DAILY III Box Body / Estate	50 C 13	92	05/99 – 07/07	3823	
DAILY III Box Body / Estate	50 C 14	100	09/04 – 04/06	3575	
DAILY III Box Body / Estate	50 C 14	100	09/04 – 04/06	3575/2	
DAILY III Box Body / Estate	50 C 14	100	09/04 – 04/06	3645	
DAILY III Box Body / Estate	50 C 14	100	09/04 – 04/06	3823	
DAILY III Box Body / Estate	50 C 15	107	01/01 – 04/06	3575	
DAILY III Box Body / Estate	50 C 15	107	01/01 – 04/06	3575/2	
DAILY III Box Body / Estate	50 C 15	107	01/01 – 04/06	3645	
DAILY III Box Body / Estate	50 C 15	107	01/01 – 04/06	3823	
DAILY III Box Body / Estate	50 C 17	122	09/04 – 04/06	3575	
DAILY III Box Body / Estate	50 C 17	122	09/04 – 04/06	3645	
DAILY III Box Body / Estate	50 C 17	122	09/04 – 04/06	3823	
DAILY III Box Body / Estate	65 C 14	100	09/04 – 04/06	3575	
DAILY III Box Body / Estate	65 C 14	100	09/04 – 04/06	3645	
DAILY III Box Body / Estate	65 C 15	107	11/01 – 04/06	3575	
DAILY III Box Body / Estate	65 C 15	107	11/01 – 04/06	3645	
DAILY III Box Body / Estate	65 C 17	122	09/04 – 04/06	3575	
DAILY III Box Body / Estate	65 C 17	122	09/04 – 04/06	3645	
DAILY III Platform/Chassis	29 L 10 (ALJAV1A1, ALJA41AA, ALJA41A1,AHJA64A1...)	70	09/02 – 04/06	3575	
DAILY III Platform/Chassis	29 L 10 (ALJAV1A1, ALJA41AA, ALJA41A1,AHJA64A1...)	70	09/02 – 04/06	3575/2	
DAILY III Platform/Chassis	29 L 10 (ALJAV1A1, ALJA41AA, ALJA41A1,AHJA64A1...)	70	09/02 – 04/06	3645	
DAILY III Platform/Chassis	29 L 10 (ALJAV1A1, ALJA41AA, ALJA41A1,AHJA64A1...)	70	09/02 – 04/06	3823	
DAILY III Platform/Chassis	29 L 11	78	05/99 – 04/06	3575	
DAILY III Platform/Chassis	29 L 11	78	05/99 – 04/06	3575/2	
DAILY III Platform/Chassis	29 L 11	78	05/99 – 04/06	3645	
DAILY III Platform/Chassis	29 L 11	78	05/99 – 04/06	3823	
DAILY III Platform/Chassis	29 L 12 (ALKA41A1, AHKA64A1, ALLA51A1)	85	09/02 – 04/06	3575	
DAILY III Platform/Chassis	29 L 12 (ALKA41A1, AHKA64A1, ALLA51A1)	85	09/02 – 04/06	3645	
DAILY III Platform/Chassis	29 L 12 (ALKA41A1, AHKA64A1, ALLA51A1)	85	09/02 – 04/06	3823	
DAILY III Platform/Chassis	29 L 12 (ALKA41A1, AHKA64A1, ALLA51A1)	85	09/02 04/06	3575/2	
DAILY III Platform/Chassis	29 L 13	92	11/01 – 04/06	3823	
DAILY III Platform/Chassis	29 L 13	92	11/01 – 04/06	3575/2	
DAILY III Platform/Chassis	29 L 13	92	11/01 – 04/06	3575	
DAILY III Platform/Chassis	29 L 13	92	11/01 – 04/06	3645	

MAKE & MODEL	  	KW	YEAR		
IVECO					
DAILY III Platform/Chassis	29 L 14 (AHRA11C1B1, AHRA14C1B1, AHRA64C1B1)	100	11/05 – 04/06	3575	
DAILY III Platform/Chassis	29 L 14 (AHRA11C1B1, AHRA14C1B1, AHRA64C1B1)	100	11/05 – 04/06	3823	
DAILY III Platform/Chassis	29 L 14 (AHRA11C1B1, AHRA14C1B1, AHRA64C1B1)	100	11/05 – 04/06	3575/2	
DAILY III Platform/Chassis	29 L 14 (AHRA11C1B1, AHRA14C1B1, AHRA64C1B1)	100	11/05 – 04/06	3645	
DAILY III Platform/Chassis	29 L 9	62	05/99 – 04/06	3575	
DAILY III Platform/Chassis	29 L 9	62	05/99 – 04/06	3575/2	
DAILY III Platform/Chassis	29 L 9	62	05/99 – 04/06	3645	
DAILY III Platform/Chassis	29 L 9	62	05/99 – 04/06	3823	
DAILY III Platform/Chassis	29 L 9	66	11/01 – 04/06	3575/2	
DAILY III Platform/Chassis	29 L 9	66	11/01 – 04/06	3823	
DAILY III Platform/Chassis	35 C 10 V , 35 S 10 V (AMJA14A1, AMJA64A1,AMJA65A1...)	70	09/02 – 04/06	3575	
DAILY III Platform/Chassis	35 C 10 V , 35 S 10 V (AMJA14A1, AMJA64A1,AMJA65A1...)	70	09/02 – 04/06	3575/2	
DAILY III Platform/Chassis	35 C 10 V , 35 S 10 V (AMJA14A1, AMJA64A1,AMJA65A1...)	70	09/02 – 04/06	3645	
DAILY III Platform/Chassis	35 C 10 V , 35 S 10 V (AMJA14A1, AMJA64A1,AMJA65A1...)	70	09/02 – 04/06	3823	
DAILY III Platform/Chassis	35 C 12 , 35 S 12 (AEKA14A1,AEKA14AA, AEKA64A1...)	85	09/02 – 04/06	3645	
DAILY III Platform/Chassis	35 C 12 , 35 S 12 (AEKA14A1,AEKA14AA, AEKA64A1...)	85	09/02 – 04/06	3823	
DAILY III Platform/Chassis	35 C 12 , 35 S 12 (AEKA14A1,AEKA14AA, AEKA64A1...)	85	09/02 – 04/06	3575	
DAILY III Platform/Chassis	35 C 12 , 35 S 12 (AEKA14A1,AEKA14AA, AEKA64A1...)	85	09/02 – 04/06	3575/2	
DAILY III Platform/Chassis	35 C 14	100	09/04 – 04/06	3575	
DAILY III Platform/Chassis	35 C 14	100	09/04 – 04/06	3575/2	
DAILY III Platform/Chassis	35 C 14	100	09/04 – 04/06	3645	
DAILY III Platform/Chassis	35 C 14	100	09/04 – 04/06	3823	
DAILY III Platform/Chassis	35 C 14, 35 S 14	100	01/05 – 04/06	3575	
DAILY III Platform/Chassis	35 C 14, 35 S 14	100	01/05 – 04/06	3575/2	
DAILY III Platform/Chassis	35 C 14, 35 S 14	100	01/05 – 04/06	3645	
DAILY III Platform/Chassis	35 C 14, 35 S 14	100	01/05 – 04/06	3823	
DAILY III Platform/Chassis	35 C 15	107	11/01 – 04/06	3575	
DAILY III Platform/Chassis	35 C 15	107	11/01 – 04/06	3575/2	
DAILY III Platform/Chassis	35 C 15	107	11/01 – 04/06	3645	
DAILY III Platform/Chassis	35 C 15	107	11/01 – 04/06	3823	
DAILY III Platform/Chassis	35 C 17, 35 S 17	122	01/05 – 04/06	3575	
DAILY III Platform/Chassis	35 C 17, 35 S 17	122	01/05 – 04/06	3575/2	
DAILY III Platform/Chassis	35 C 17, 35 S 17	122	01/05 – 04/06	3645	
DAILY III Platform/Chassis	35 C 17, 35 S 17	122	01/05 – 04/06	3823	
DAILY III Platform/Chassis	35 C 9, 35 S 9	66	11/01 – 04/06	3575	
DAILY III Platform/Chassis	35 C 9, 35 S 9	66	11/01 – 04/06	3575/2	
DAILY III Platform/Chassis	35 C 9, 35 S 9	66	11/01 – 04/06	3645	
DAILY III Platform/Chassis	35 C 9, 35 S 9	66	11/01 – 04/06	3823	
DAILY III Platform/Chassis	35 S 11,35 C 11 (A2FC13AA, A6FBU4AB, A2NB14A1,A2ND13A1...)	78	05/99 – 04/06	3575	
DAILY III Platform/Chassis	35 S 11,35 C 11 (A2FC13AA, A6FBU4AB, A2NB14A1,A2ND13A1...)	78	05/99 – 04/06	3575/2	
DAILY III Platform/Chassis	35 S 11,35 C 11 (A2FC13AA, A6FBU4AB, A2NB14A1,A2ND13A1...)	78	05/99 – 04/06	3645	
DAILY III Platform/Chassis	35 S 11,35 C 11 (A2FC13AA, A6FBU4AB, A2NB14A1,A2ND13A1...)	78	05/99 – 04/06	3823	
DAILY III Platform/Chassis	35 S 13,35 C 13	92	05/99 – 04/06	3575	
DAILY III Platform/Chassis	35 S 13,35 C 13	92	05/99 – 04/06	3575/2	
DAILY III Platform/Chassis	35 S 13,35 C 13	92	05/99 – 04/06	3645	
DAILY III Platform/Chassis	35 S 13,35 C 13	92	05/99 – 04/06	3823	
DAILY III Platform/Chassis	35 S 9,35 C 9	62	05/99 – 04/06	3575	
DAILY III Platform/Chassis	35 S 9,35 C 9	62	05/99 – 04/06	3575/2	
DAILY III Platform/Chassis	35 S 9,35 C 9	62	05/99 – 04/06	3645	
DAILY III Platform/Chassis	35 S 9,35 C 9	62	05/99 – 04/06	3823	
DAILY III Platform/Chassis	40 C 13	92	05/99 – 04/06	3575	
DAILY III Platform/Chassis	40 C 13	92	05/99 – 04/06	3575/2	
DAILY III Platform/Chassis	40 C 13	92	05/99 – 04/06	3645	
DAILY III Platform/Chassis	40 C 13	92	05/99 – 04/06	3823	
DAILY III Platform/Chassis	40 C 14	100	01/05 – 04/06	3575/2	
DAILY III Platform/Chassis	40 C 14	100	09/04 – 04/06	3575	
DAILY III Platform/Chassis	40 C 14	100	09/04 – 04/06	3575/2	
DAILY III Platform/Chassis	40 C 14	100	09/04 – 04/06	3645	
DAILY III Platform/Chassis	40 C 14	100	09/04 – 04/06	3823	
DAILY III Platform/Chassis	40 C 15	107	11/01 – 04/06	3575	
DAILY III Platform/Chassis	40 C 15	107	11/01 – 04/06	3575/2	
DAILY III Platform/Chassis	40 C 15	107	11/01 – 04/06	3645	
DAILY III Platform/Chassis	40 C 15	107	11/01 – 04/06	3823	
DAILY III Platform/Chassis	40 C 17, 40 S 17	122	01/05 – 04/06	3575	
DAILY III Platform/Chassis	40 C 17, 40 S 17	122	01/05 – 04/06	3575/2	
DAILY III Platform/Chassis	40 C 17, 40 S 17	122	01/05 – 04/06	3645	
DAILY III Platform/Chassis	40 C 17, 40 S 17	122	01/05 – 04/06	3823	
DAILY III Platform/Chassis	50 C 11	78	05/99 – 04/06	3575	
DAILY III Platform/Chassis	50 C 11	78	05/99 – 04/06	3645	
DAILY III Platform/Chassis	50 C 11	78	05/99 – 04/06	3823	
DAILY III Platform/Chassis	50 C 11	78	05/99 – 4/06	3575/2	
DAILY III Platform/Chassis	50 C 13	92	05/99 – 04/06	3575	
DAILY III Platform/Chassis	50 C 13	92	05/99 – 04/06	3575/2	
DAILY III Platform/Chassis	50 C 13	92	05/99 – 04/06	3645	
DAILY III Platform/Chassis	50 C 13	92	05/99 – 04/06	3823	
DAILY III Platform/Chassis	50 C 14	100	09/04 – 04/06	3575	

BESER®

MAKE & MODEL   		KW	YEAR		
IVECO					
DAILY III Platform/Chassis	50 C 14	100	09/04 – 04/06	3575/2	
DAILY III Platform/Chassis	50 C 14	100	09/04 – 04/06	3645	
DAILY III Platform/Chassis	50 C 14	100	09/04 – 04/06	3823	
DAILY III Platform/Chassis	50 C 15	107	01/01 – 04/06	3575	
DAILY III Platform/Chassis	50 C 15	107	01/01 – 04/06	3575/2	
DAILY III Platform/Chassis	50 C 15	107	01/01 – 04/06	3645	
DAILY III Platform/Chassis	50 C 15	107	01/01 – 04/06	3823	
DAILY III Platform/Chassis	50 C 17	122	09/04 – 04/06	3575	
DAILY III Platform/Chassis	50 C 17	122	09/04 – 04/06	3575/2	
DAILY III Platform/Chassis	50 C 17	122	09/04 – 04/06	3645	
DAILY III Platform/Chassis	50 C 17	122	09/04 – 04/06	3823	
DAILY III Platform/Chassis	65 C 14	100	09/04 – 04/06	3575	
DAILY III Platform/Chassis	65 C 14	100	09/04 – 04/06	3645	
DAILY III Platform/Chassis	65 C 15	107	11/01 – 04/06	3575	
DAILY III Platform/Chassis	65 C 15	107	11/01 – 04/06	3645	
DAILY III Platform/Chassis	65 C 17	122	09/04 – 04/06	3575	
DAILY III Platform/Chassis	65 C 17	122	09/04 – 04/06	3645	
DAILY IV	60C15 (F1CE0481FA)	107	05/06 – 08/11		3995
DAILY IV	60C15 V (F1CE0481FA)	107	05/06 – 08/11		3995
DAILY IV	60C15, 60C15 /P, 60C15 D, 60C15 D/P (F1CE0481FA)	107	05/06 – 08/11		3995
DAILY IV	60C18 (F1CE0481HC)	130	05/06 – 08/11		3995
DAILY IV	65C15 (F1CE0481FA)	107	05/06 – 08/11		3995
DAILY IV	65C15, 65C15 /P, 65C15 D, 65C15 D/P (F1CE0481FA)	107	05/06 – 08/11		3995
DAILY IV	65C18 (F1CE0481HC)	130	05/06 – 08/11		3995
DAILY IV Box Body / Estate	29L10 V	70	05/06 – 08/11	3965	4092
DAILY IV Box Body / Estate	29L10 V	70	05/06 – 08/11	3823	
DAILY IV Box Body / Estate	29L12 V, 29L12 V/P	85	05/06 – 08/11	3965	4092
DAILY IV Box Body / Estate	29L12 V, 29L12 V/P	85	05/06 – 08/11	3823	
DAILY IV Box Body / Estate	29L14 C, 29L14 C/P, 29L14 V,29L14 V/P	100	05/06 – 08/11	3823	4092
DAILY IV Box Body / Estate	29L14 C, 29L14 C/P, 29L14,29L14 V/P	100	05/06 – 08/11	3965	
DAILY IV Box Body / Estate	35C10 K	70	05/06 – 08/11		4092
DAILY IV Box Body / Estate	35C10, 35S10	70	05/06 – 08/11	3965	4092
DAILY IV Box Body / Estate	35C10, 35S10	70	05/06 – 08/11	3823	
DAILY IV Box Body / Estate	35C11 V, 35S11 V	78	07/07 – 08/11	3965	4092
DAILY IV Box Body / Estate	35C11 V, 35S11 V	78	07/07 – 08/11	3823	
DAILY IV Box Body / Estate	35C12 V, 35C12 V/P, 35S12 V,35S12 V/P	85	05/06 – 08/11	3823	
DAILY IV Box Body / Estate	35C12 V, 35C12 V/P, 35S12 V,35S12 V/P	85	05/06 – 08/11	3965	4092
DAILY IV Box Body / Estate	35C13 V, 35C13 V/P, 35S13 V, 35S13 V/P	93	07/07 – 08/11	3965	4092
DAILY IV Box Body / Estate	35C13 V, 35C13 V/P, 35S13 V, 35S13 V/P	93	07/07 – 08/11	3823	
DAILY IV Box Body / Estate	35C14 GV, 35C14 GV/P, 35S14 GV, 35S14 GV/P	100	07/07 – 08/11	3965	4092
DAILY IV Box Body / Estate	35C14 GV, 35C14 GV/P, 35S14 GV, 35S14 GV/P	100	07/07 – 08/11	3823	
DAILY IV Box Body / Estate	35C14 V, 35C14 V/P, 35S14 V, 35S14 V/P	103	07/07 – 08/11	3965	4092
DAILY IV Box Body / Estate	35C14 V, 35C14 V/P, 35S14 V, 35S14 V/P	103	07/07 – 08/11	3823	
DAILY IV Box Body / Estate	35C15 V, 35C15 V/P	107	05/06 – 08/11	3823	
DAILY IV Box Body / Estate	35C15 V, 35C15 V/P	107	05/06 – 08/11	3965	4092
DAILY IV Box Body / Estate	35C17 V, 35C17 V/P, 35S17 V, 35S17 V/P	125	07/07 – 08/11	3965	4092
DAILY IV Box Body / Estate	35C17 V, 35C17 V/P, 35S17 V, 35S17 V/P	125	07/07 – 08/11	3823	
DAILY IV Box Body / Estate	35C18 V, 35C18 V/P, 35S18 V, 35S18 V/P	130	05/06 – 08/11	3965	4092
DAILY IV Box Body / Estate	35C18 V, 35C18 V/P, 35S18 V, 35S18 V/P	130	05/06 – 08/11	3823	
DAILY IV Box Body / Estate	35S14 C, 35S14 C/P, 35S14 V,35S14 V/P, 35C14 V, 35C14	100	05/06 – 08/11	3965	4092
DAILY IV Box Body / Estate	35S14 C, 35S14 C/P, 35S14 V,35S14 V/P, 35C14 V, 35C14V/P	100	05/06 – 08/11	3823	
DAILY IV Box Body / Estate	35S15	110	06/06 – 08/11	3823	
DAILY IV Box Body / Estate	35S15	110	06/06 – 08/11	3965	
DAILY IV Box Body / Estate	40C10 V	70	05/06 – 08/11	3965	4092
DAILY IV Box Body / Estate	40C11 V	78	07/07 – 08/11	3965	4092
DAILY IV Box Body / Estate	40C12 V, 40C14 V/P	85	05/06 – 08/11	3965	4092
DAILY IV Box Body / Estate	40C13 V, 40C13 V/P	93	07/07 – 08/11	3965	4092
DAILY IV Box Body / Estate	40C14 GV, 40C14 GV/P	100	07/07 – 08/11	3965	4092
DAILY IV Box Body / Estate	40C14 V, 40C14 V/P	103	07/07 – 08/11	3965	4092
DAILY IV Box Body / Estate	40C15 V, 40C15 V/P	107	05/06 – 08/11	3965	4092
DAILY IV Box Body / Estate	40C17 V, 40C17 V/P	125	07/07 – 08/11	3965	4092
DAILY IV Box Body / Estate	40C18 V, 40C18 V/P	130	05/06 – 08/11	3965	4092
DAILY IV Box Body / Estate	45C15 V	107	05/06 – 08/11	3965	4092
DAILY IV Box Body / Estate	45C17 V, 45C17 V/P	125	07/07 – 08/11	3965	4092
DAILY IV Box Body / Estate	45C18	130	05/06 – 08/11	3965	4092
DAILY IV Box Body / Estate	50C14 GV, 50C14 GV/P	100	07/07 – 08/11	3965	4092
DAILY IV Box Body / Estate	50C14 V, 50C14 V/P	103	07/07 – 08/11	3965	4092
DAILY IV Box Body / Estate	50C15 V, 50C15 V/P	107	05/06 – 08/11	3965	4092
DAILY IV Box Body / Estate	50C17 V, 50C17 V/P	125	07/07 – 08/11	3965	4092
DAILY IV Box Body / Estate	50C18 V, 50C18 V/P	130	05/06 – 08/11	3965	4092
DAILY IV Box Body / Estate	50C18 V, 50C18 V/P	130	05/06 – 08/11	3575	
DAILY IV Box Body / Estate	50C18 V, 50C18 V/P	130	05/06 – 08/11	3645	
DAILY IV Box Body / Estate	55C17	125	08/07 – 03/12	3965	4092
DAILY IV Box Body / Estate	55C17	125	08/07 – 03/12	3575	
DAILY IV Box Body / Estate	55C17	125	08/07 – 03/12	3645	
DAILY IV Box Body / Estate	60C15 V	107	05/06 – 08/11	3965	4092

MAKE & MODEL	  	KW	YEAR		
IVECO					
DAILY IV Box Body / Estate	60C17 V, 60C17 V/P	125	07/07 – 08/11	3965	4092
DAILY IV Box Body / Estate	60C18	130	05/06 – 08/11	3965	4092
DAILY IV Box Body / Estate	65C14 V, 65C14 V/P	103	07/07 – 08/11	3965	4092
DAILY IV Box Body / Estate	65C15	107	05/06 – 08/11	3965	4092
DAILY IV Box Body / Estate	65C17 V, 65C17 V/P	125	07/07 – 08/11	3965	4092
DAILY IV Box Body / Estate	65C18	130	05/06 – 08/11	3965	4092
DAILY IV Box Body / Estate	70C14 V, 70C14 V/P	103	07/07 – 08/11	3965	4092
DAILY IV Box Body / Estate	70C17V, 70C17 V/P	125	07/07 – 08/11	3965	4092
DAILY IV Bus	35S14 G	100	07/09 – 08/11	3823	
DAILY IV Bus	35S14 G	100	07/09 – 08/11	3965	
DAILY IV Bus	35S14, 35S14 /P	100	05/06 – 08/11	3823	
DAILY IV Bus	35S14, 35S14 /P	100	05/06 – 08/11	3965	
DAILY IV Dumptruck	35C10 K	70	05/06 – 08/11	3965	4092
DAILY IV Dumptruck	35C11 K, 35C11 DK, 35S11 K, 35S11 DK	78	07/07 – 08/11	3823	4092
DAILY IV Dumptruck	35C11 K, 35C11 DK, 35S11 K,35S11 DK	78	07/07 – 08/11	3965	
DAILY IV Dumptruck	35C12	85	05/06 – 08/11	3965	4092
DAILY IV Dumptruck	35C13 K, 35C13 DK, 35S13 K, 35S13 DK	93	07/07 – 08/11	3965	4092
DAILY IV Dumptruck	35C13 K, 35C13 DK, 35S13 K, 35S13 DK	93	07/07 – 08/11	3823	
DAILY IV Dumptruck	35C14 K, 35C14 DK, 35S14 K, 35S14 DK	103	07/07 – 08/11	3965	4092
DAILY IV Dumptruck	35C14 K, 35C14 DK, 35S14 K, 35S14 DK	103	07/07 – 08/11	3823	
DAILY IV Dumptruck	35C15	107	05/06 – 08/11	3965	4092
DAILY IV Dumptruck	35C17 K, 35C17 DK, 35S17 K, 35S17 DK	125	07/07 – 08/11	3965	4092
DAILY IV Dumptruck	35C17 K, 35C17 DK, 35S17 K, 35S17 DK	125	07/07 – 08/11	3823	
DAILY IV Dumptruck	35C18	130	05/06 – 08/11	3965	4092
DAILY IV Dumptruck	35S14 K, 35S14 DK	100	07/07 – 08/11	3965	
DAILY IV Dumptruck	35S14 K, 35S14 DK	100	07/07 – 08/11	3823	
DAILY IV Dumptruck	40C14 K, 40C14 DK	103	07/07 – 08/11	3965	4092
DAILY IV Dumptruck	40C17 K, 40C17 DK	125	07/07 – 08/11	3965	4092
DAILY IV Dumptruck	50C14 K, 50C14 DK	103	07/07 – 08/11	3965	4092
DAILY IV Dumptruck	50C15	107	05/06 – 08/11	3965	4092
DAILY IV Dumptruck	50C17 K, 50C17 DK	125	07/07 – 08/11	3965	4092
DAILY IV Dumptruck	50C18	130	05/06 – 08/11	3965	4092
DAILY IV Dumptruck	50C18	130	05/06 – 08/11	3575	
DAILY IV Dumptruck	50C18	130	05/06 – 08/11	3645	
DAILY IV Dumptruck	60C14 K, 60C14 DK	103	07/07 – 08/11	3965	4092
DAILY IV Dumptruck	60C15	107	05/06 – 08/11	3965	4092
DAILY IV Dumptruck	60C17 K, 60C17 DK	125	07/07 – 08/11	3965	4092
DAILY IV Dumptruck	60C18	130	05/06 – 08/11	3965	4092
DAILY IV Dumptruck	65C14 K, 65C14 DK	103	07/07 – 08/11	3965	4092
DAILY IV Dumptruck	65C17 K, 65C17 DK, 65C17KK	125	07/07 – 08/11	3965	4092
DAILY IV Dumptruck	70C14 K, 70C14 DK, 70C14 KK	103	07/07 – 08/11	3965	4092
DAILY IV Dumptruck	70C17 K, 70C17 DK, 70C17 KK	125	07/07 – 08/11	3965	4092
DAILY IV Platform/Chassis	29L10	70	05/06 – 08/11	3823	
DAILY IV Platform/Chassis	29L10	70	05/06 – 08/11	3965	
DAILY IV Platform/Chassis	29L11 V, 35C11 V, 35S11 V,	78	09/11 – 02/14		4092
DAILY IV Platform/Chassis	29L12	85	05/06 – 08/11	3823	
DAILY IV Platform/Chassis	29L12	85	05/06 – 08/11	3965	
DAILY IV Platform/Chassis	29L14	100	05/06 – 08/11	3823	
DAILY IV Platform/Chassis	29L14	100	05/06 – 08/11	3965	
DAILY IV Platform/Chassis	35C10, 35S10	70	05/06 – 08/11	3823	
DAILY IV Platform/Chassis	35C10, 35S10	70	05/06 – 08/11	3965	
DAILY IV Platform/Chassis	35C11, 35S11, 35S11 D, 35S11 /P	78	07/07 – 08/11	3823	4092
DAILY IV Platform/Chassis	35C11, 35S11, 35S11 D, 35S11 /P	78	07/07 – 08/11	3965	
DAILY IV Platform/Chassis	35C12, 35S12	85	05/06 – 08/11	3965	
DAILY IV Platform/Chassis	35C12, 35S12	85	05/06 – 08/11	3823	4092
DAILY IV Platform/Chassis	35C13, 35C13 /P, 35S13 D, 35S13, 35S13 /P	93	07/07 – 08/11	3823	4092
DAILY IV Platform/Chassis	35C13, 35C13 /P, 35S13 D,35S13, 35S13 /P	93	07/07 – 08/11	3965	
DAILY IV Platform/Chassis	35C14 G, 35C14 G/P, 35S14 G, 35S14 G/P, 35C14 GD, 35S14 GD	100	07/07 – 08/11	3823	
DAILY IV Platform/Chassis	35C14 G, 35C14 G/P, 35S14G, 35S14 G/P, 35C14 GD, 35S14 GD	100	07/07 – 08/11	3965	4092
DAILY IV Platform/Chassis	35C14, 35C14 /P, 35S14,	103	07/07 – 08/11	3965	
DAILY IV Platform/Chassis	35C14, 35C14 /P, 35S14, 35S14 /P, 35S14 D, 35S14 D/P	103	07/07 – 08/11	3823	4092
DAILY IV Platform/Chassis	35C14, 35S14, 35S14 /P	100	05/06 – 08/11	3965	4092
DAILY IV Platform/Chassis	35C14, 35S14, 35S14 /P	100	05/06 – 08/11	3823	
DAILY IV Platform/Chassis	35C15	107	05/06 – 08/11	3965	4092
DAILY IV Platform/Chassis	35C17, 35C17 /P, 35S17, 35S17 /P, 35S17 D	125	07/07 – 08/11	3823	
DAILY IV Platform/Chassis	35C17, 35C17 /P, 35S17,35S17 /P, 35S17 D	125	07/07 – 08/11	3965	4092
DAILY IV Platform/Chassis	35C18, 35S18	130	05/06 - 08/11	3823	
DAILY IV Platform/Chassis	35C18, 35S18	130	05/06 – 08/11	3965	4092
DAILY IV Platform/Chassis	35S17 W, 35S17 WD	125	05/06 - 08/11	3823	
DAILY IV Platform/Chassis	35S17 W, 35S17 WD	125	07/07 – 08/11	3965	
DAILY IV Platform/Chassis	40C10	70	05/06 – 08/11	3965	4092
DAILY IV Platform/Chassis	40C11, 40C11 D	78	07/07 – 08/11	3965	4092
DAILY IV Platform/Chassis	40C12	85	05/06 – 08/11	3965	4092
DAILY IV Platform/Chassis	40C13, 40C13 /P	93	07/07 – 08/11	3965	4092
DAILY IV Platform/Chassis	40C14 G, 40C14 G/P	100	07/07 – 08/11	3965	4092
DAILY IV Platform/Chassis	40C14, 40C14 /P	103	07/07 – 08/11	3965	4092

MAKE & MODEL   		KW	YEAR		
IVECO					
DAILY IV Platform/Chassis	40C15	107	05/06 – 08/11	3965	4092
DAILY IV Platform/Chassis	40C17, 40C17 /P	125	07/07 – 08/11	3965	4092
DAILY IV Platform/Chassis	40C18	130	05/06 – 08/11	3965	4092
DAILY IV Platform/Chassis	45C14, 45C14 /P	103	07/07 – 08/11	3965	4092
DAILY IV Platform/Chassis	45C15	107	05/06 – 08/11	3965	4092
DAILY IV Platform/Chassis	45C17, 45C17 /P	125	07/07 – 08/11	3965	4092
DAILY IV Platform/Chassis	45C18, 45C18 /P, 45C18 D,45C18 D/P	130	05/06 – 08/11	3965	4092
DAILY IV Platform/Chassis	50C14 G, 50C14 G/P, 50C14	100	07/07 – 08/11	3965	4092
DAILY IV Platform/Chassis	50C14, 50C14 /P	103	07/07 – 08/11	3965	4092
DAILY IV Platform/Chassis	50C15	107	05/06 – 08/11	3965	4092
DAILY IV Platform/Chassis	50C17, 50C17 /P	125	07/07 – 08/11	3965	4092
DAILY IV Platform/Chassis	50C18	130	05/06 – 08/11	3965	4092
DAILY IV Platform/Chassis	50C18	130	05/06 – 08/11	3575	
DAILY IV Platform/Chassis	50C18	130	05/06 – 08/11	3645	
DAILY IV Platform/Chassis	55S17 W, 55S17 WD	125	07/07 – 08/11	3823	
DAILY IV Platform/Chassis	55S17 W, 55S17 WD	125	07/07 – 08/11	3965	
DAILY IV Platform/Chassis	60C14, 60C14 /P	103	07/07 – 08/11	3965	4092
DAILY IV Platform/Chassis	60C15, 60C15 /P, 60C15 D,60C15 D/P	107	05/06 – 08/11	3965	4092
DAILY IV Platform/Chassis	60C17, 60C17 /P	125	07/07 – 08/11	3965	4092
DAILY IV Platform/Chassis	60C18	130	05/06 – 08/11	3965	4092
DAILY IV Platform/Chassis	65C14 G, 65C14 G/P, 65C14 GD, 65C14 GD/P	100	07/07 – 08/11	3965	4092
DAILY IV Platform/Chassis	65C14, 65C14 /P	103	07/07 – 08/11	3965	4092
DAILY IV Platform/Chassis	65C15, 65C15 /P, 65C15 D, 65C15 D/P	107	07/07 – 08/11	3965	4092
DAILY IV Platform/Chassis	65C17, 65C17 /P	125	07/07 – 08/11	3965	4092
DAILY IV Platform/Chassis	65C18	130	05/06 – 08/11	3965	4092
DAILY IV Platform/Chassis	70C14, 70C14 /P	103	07/07 – 08/11	3965	4092
DAILY IV Platform/Chassis	70C15	107	07/08 – 08/11	3965	4092
DAILY IV Platform/Chassis	70C17, 70C17 /P	125	07/07 – 08/11	3965	4092
DAILY V Box Body / Estate	29L11 V, 35C11 V, 35S11 V, 40C11 V	78	09/11 – 02/14	3823	
DAILY V Box Body / Estate	29L11 V, 35C11 V, 35S11, 40C11 V	78	09/11 – 02/14	3965	
DAILY V Box Body / Estate	29L13 V, 35C13 V, 35S13 V, 40C13 V, 40S13 V	93	09/11 – 02/14	3823	4092
DAILY V Box Body / Estate	29L13 V, 35C13 V, 35S13 V, 40C13 V, 40S13 V	93	09/11 – 02/14	3965	
DAILY V Box Body / Estate	29L15 V, 35C15L V, 40C15L V, 50C15L V	107	09/11 – 02/14	3823	4092
DAILY V Box Body / Estate	29L15 V, 35C15L V, 40C15L V, 50C15L V	107	09/11 – 02/14	3965	
DAILY V Box Body / Estate	35 S 14	110	04/12 – 02/14	3965	
DAILY V Box Body / Estate	35 S 14	110	04/12 – 02/14	3823	
DAILY V Box Body / Estate	35C11K, 35S11DKP	78	09/11 – 02/14		4092
DAILY V Box Body / Estate	35C15 V, 40C15 V	107	09/11 – 02/14	3965	4092
DAILY V Box Body / Estate	35C17 V, 35S17 V, 40C17 V ,45C17 V, 50C17 V, 60C17 V,	125	09/11 – 02/14	3965	
DAILY V Box Body / Estate	35C17 V, 35S17 V, 40C17 V, 45C17 V, 50C17 V, 60C17 V,	125	09/11 – 02/14		4092
DAILY V Box Body / Estate	35C21 V, 35S21 V, 40C21 V, 45C21 V, 50C21 V	150	09/11 – 02/14	3823	4092
DAILY V Box Body / Estate	35C21 V, 35S21 V, 40C21 V,45C21 V, 50C21 V	150	09/11 – 02/14	3965	
DAILY V Box Body / Estate	50 C Electric	80	09/11 – 02/14	3575	
DAILY V Box Body / Estate	50 C Electric	80	09/11 – 02/14	3645	
DAILY V Box Body / Estate	50 C Electric	80	09/11 – 02/14	3965	
DAILY V Dumptruck	26L11, 26L11D, 35C11D, 35S11, 40C11	78	09/11 – 02/14		4092
DAILY V Dumptruck	35C11K, 35S11DKP	78	09/11 – 02/14	3823	
DAILY V Dumptruck	35C11K, 35S11DKP	78	09/11 – 02/14	3965	
DAILY V Dumptruck	35C13K, 35C13DKP	93	09/11 – 02/14	3965	4092
DAILY V Dumptruck	35C15K, 35S15DKP, 50C15K, 60C15K, 65C15DK, 70C15K	107	09/11 – 02/14	3823	4092
DAILY V Dumptruck	35C15K, 35S15DKP, 50C15K,60C15K, 65C15DK, 70C15K	107	09/11 – 02/14	3965	
DAILY V Dumptruck	35C17K, 35S17DKP, 50C17K, 65C17DK 70C17K	125	09/11 – 02/14	3965	4092
DAILY V Dumptruck	35C17K, 35S17DKP, 50C17K, 65C17DK 70C17K	125	09/11 – 02/14	3823	
DAILY V Dumptruck	35S21DKP	150	09/11 – 02/14	3965	4092
DAILY V Dumptruck	35S21DKP	150	09/11 – 02/14	3823	
DAILY V Platform/Chassis	26L11, 26L11D, 35C11D, 35S11, 40C11	78	09/11 – 02/14	3823	
DAILY V Platform/Chassis	26L11, 26L11D, 35C11D, 35S11, 40C11	78	09/11 – 02/14	3965	
DAILY V Platform/Chassis	29L13, 29L13D, 35C13D, 40C13	93	09/11 – 02/14	3965	4092
DAILY V Platform/Chassis	29L13, 29L13D, 35C13D, 40C13	93	09/11 – 02/14	3823	
DAILY V Platform/Chassis	29L15 V, 35C15L V, 40C15L V, 50C15L V	107	09/11 – 02/14	3823	4092
DAILY V Platform/Chassis	29L15 V, 35C15L V, 40C15L V, 50C15L V	107	09/11 – 02/14	3965	
DAILY V Platform/Chassis	35C15, 35C15D, 35S15,40C15, 45C15, 50C15, 60C15,70C15	107	09/11 – 02/14	3823	4092
DAILY V Platform/Chassis	35C15, 35C15D, 35S15,40C15, 45C15, 50C15, 60C15,70C15	107	09/11 – 02/14	3965	
DAILY V Platform/Chassis	35C17, 35C17D, 35S17,40C17, 45C17, 50C17, 60C17,70C17	125	09/11 – 02/14	3823	4092
DAILY V Platform/Chassis	35C17, 35C17D, 35S17,40C17, 45C17, 50C17, 60C17,70C17	125	09/11 – 02/14	3965	
DAILY V Platform/Chassis	35C21, 35S21, 40C21, 45C21, 50C21, 60C21, 70C21	150	09/11 – 02/14	3823	4092
DAILY V Platform/Chassis	35C21, 35S21, 40C21, 45C21, 50C21, 60C21, 70C21	150	09/11 – 02/14	3965	
DAILY VI Box Body / Estate	33-140, 35-140	100	04/16 -	3994	
DAILY VI Box Body / Estate	33-210, 35-210	150	04/16 -	3965	4092
DAILY VI Box Body / Estate	33-210, 35-210	150	04/16 -	3823	
DAILY VI Box Body / Estate	33S11, 35S11, 35C11	78	03/14 -	3823	
DAILY VI Box Body / Estate	33S11, 35S11, 35C11	78	03/14 -	3965	
DAILY VI Box Body / Estate	33S13, 35S13, 35C13	93	03/14 -	3823	
DAILY VI Box Body / Estate	33S13, 35S13, 35C13	93	03/14 -	3965	
DAILY VI Box Body / Estate	33S15, 35S15, 35C15	107	03/14 -	3823	
DAILY VI Box Body / Estate	33S15, 35S15, 35C15	107	03/14 -	3965	

MAKE & MODEL		KW	YEAR		
IVECO					
DAILY VI Box Body / Estate	35S15, 35C15, 40C15, 50C15, 65C15, 70C15	107	03/14 -	3965	4092
DAILY VI Box Body / Estate	35S17, 35C17, 40C17, 50C17 ,55C17, 65C17, 70C17	125	03/14 -	3823	
DAILY VI Box Body / Estate	35S17, 35C17, 40C17, 50C17, 55C17, 65C17, 70C17	125	03/14 -	3965	4092
DAILY VI Box Body / Estate	35S21, 35C21, 40C21, 50C21, 65C21, 70C21	150	03/14 -	3965	4092
DAILY VI Box Body / Estate	Natural Power 35S14, 35C14, 40C14, 50C14, 65C14, 70C14	100	03/14 -	3965	
DAILY VI Box Body / Estate	Natural Power 35S14, 35C14, 40C14, 50C14, 65C14, 70C14	100	03/14 -	3823	
DAILY VI Bus	45-150, 65-150	110	04/16 -	3994	
DAILY VI Bus	Natural Power 45-140, 65-140	100	04/16 -	3994	
DAILY VI Platform/Chassis	33-140, 35-140	100	04/16 -	3994	
DAILY VI Platform/Chassis	33S11, 35S11, 35C11	78	03/14 -	3823	
DAILY VI Platform/Chassis	33S11, 35S11, 35C11	78	03/14 -	3965	
DAILY VI Platform/Chassis	33S13, 35S13, 35C13	93	03/14 -	3823	
DAILY VI Platform/Chassis	33S13, 35S13, 35C13	93	03/14 -	3965	
DAILY VI Platform/Chassis	33S15, 35S15, 35C15	107	03/14 -	3823	
DAILY VI Platform/Chassis	33S15, 35S15, 35C15	107	03/14 -	3965	
DAILY VI Platform/Chassis	35S15, 35C15, 40C15, 50C1, 65C15, 70C15	107	03/14 -	3965	
DAILY VI Platform/Chassis	35S15, 35C15, 40C15, 50C15, 65C15, 70C15	107	03/14 -	3823	
DAILY VI Platform/Chassis	35S17, 35C17, 40C17, 45C17, 50C17, 55C17, 65C17, 70C17	125	03/14 -	3965	
DAILY VI Platform/Chassis	35S17, 35C17, 40C17, 45C17, 50C17, 55C17, 65C17, 70C17	125	03/14 -	3823	
DAILY VI Platform/Chassis	35S21, 35C21, 40C21, 50C21, 65C21, 70C21	150	03/14 -	3965	
DAILY VI Platform/Chassis	35S21, 35C21, 40C21, 50C21, 65C21, 70C21	150	03/14 -	3823	
DAILY VI Platform/Chassis	Natural Power 35S14, 35C14, 40C14, 50C14, 65C14, 70C14	100	03/14 -	3965	
DAILY VI Platform/Chassis	Natural Power 35S14, 35C14, 40C14, 50C14, 65C14, 70C14	100	03/14 -	3823	
DAILY VI Platform/Chassis	Natural Power 52-140, 60-140,70-140, 72-140	100	04/16 -	3994	
EuroCargo I-III	100 E 15 K (8060.25R.4200 LTC)	105	01/91 – 09/15	3773	3773
EuroCargo I-III	100 E 15, 100 E 15 P (8060.25R.4200 LTC)	105	01/91 – 09/15	3773	3773
EuroCargo I-III	100 E 15, 100 E 15 P (8060.45R.5000)	105	01/91 – 09/15	3773	3773
EuroCargo I-III	100 E 15, 100 E 15 P (8060.45R.5001)	105	01/91 – 09/15	3773	3773
EuroCargo I-III	100 E 15, 100 E 15 P (8060.45R.5003)	105	01/91 – 09/15	3773	3773
EuroCargo I-III	100 E 15, 100 E 15 P (8060.45R.5005)	105	01/91 – 09/15	3773	3773
EuroCargo I-III	100 E 17 K tector, 100 E 17 DK tector	125	09/00 – 09/15	3994	
EuroCargo I-III	100 E 17 K tector, 100 E 17 DK tector (F4AE0481A)	125	09/00 – 09/15	3773	3773
EuroCargo I-III	100 E 17, 100 E 17 DP tector, 100 E 18 tector (F4AE0481A)	125	09/00 – 09/15	3773	3773
EuroCargo I-III	100 E 17, 100 E 17 DP tector, 100 E 18 tector (F4AE3481B)	125	09/00 – 09/15	3773	3773
EuroCargo I-III	100 E 17, 100 E 17 DP tector,100 E 18 tector	125	09/00 – 09/15	3994	
EuroCargo I-III	100 E 18 K (8060.25V.4000)	130	01/91 – 09/15	3773	3773
EuroCargo I-III	100 E 18 K tector (F4AE3481B)	130	09/06 – 09/15	3773	3773
EuroCargo I-III	100 E 18 K tector, 100 E 18 DK tector	134	09/00 – 09/15	3994	
EuroCargo I-III	100 E 18 K tector, 100 E 18 DK tector (F4AE0681E)	134	09/00 – 09/15	3773	3773
EuroCargo I-III	100 E 18 tector, 100 E 18 P tector, 100 E 18 FP tector (F4AE0681D)	134	09/00 – 09/15	3773	3773
EuroCargo I-III	100 E 18 tector, 100 E 18 P tector, 100 E 18 FP tector (F4AE0681E)	134	09/00 – 09/15	3773	3773
EuroCargo I-III	100 E 18 tector, 100 E 18 P tector, 100 E 18 FP tector (F4AE3481B)	130	09/06 – 09/15	3773	3773
EuroCargo I-III	100 E 18 tector, 100 E 18 Ptector, 100 E 18 FP tector	134	09/00 – 09/15	3994	
EuroCargo I-III	100 E 18 W tector, 100 E 18 WS tector	134	09/00 – 09/15	3994	
EuroCargo I-III	100 E 18 W tector, 100 E 18 WS tector (F4AE0681E)	134	09/00 – 09/15	3773	3773
EuroCargo I-III	100 E 18 W tector, 100 E 18 WS tector (F4AE3681C)	134	09/00 – 09/15	3773	3773
EuroCargo I-III	100 E 18, 100 E 18 P (8060.25V.4000)	130	01/91 – 09/15	3773	3773
EuroCargo I-III	100 E 21 K tector, 100 E 21 DK tector	154	09/00 – 09/15	3994	
EuroCargo I-III	100 E 21 K tector, 100 E 21 DK tector (F4AE0681D)	154	09/00 – 09/15	3773	3773
EuroCargo I-III	100 E 21 W tector, 100 E 21 WS tector	154	09/00 – 09/15	3994	
EuroCargo I-III	100 E 21 W tector, 100 E 21 WS tector (F4AE0681D)	154	09/00 – 09/15	3773	3773
EuroCargo I-III	100 E 21, 100 E 21 DP tector, 100 E 22 tector (F4AE0681D)	154	09/00 – 09/15	3773	3773
EuroCargo I-III	100 E 21, 100 E 21 DP tector, 100 E 22 tector (F4AE3681B)	154	09/00 – 09/15	3773	3773
EuroCargo I-III	100 E 21, 100 E 21 DP tector,100 E 22 tector	154	09/00 – 09/15	3994	
EuroCargo I-III	100 E 21, 100 E 21 P (8060.45.4100 TCA)	152	01/91 – 09/15	3773	3773
EuroCargo I-III	100 E 21, 100 E 21 P (8060.45.4180)	152	01/91 – 09/15	3773	3773
EuroCargo I-III	100 E 22 K tector	160	09/06 – 09/15	3994	
EuroCargo I-III	100 E 22 tector, 100 E 22 P tector, 100 E 22 FP tector	160	09/06 – 09/15	3994	
EuroCargo I-III	100 E 22 W tector, 100 E 22 WS tector	134	09/06 – 09/15	3994	
EuroCargo I-III	110 E 18 tector, 110 E 18 P tector, 110 EL 18 P tector	160	09/06 – 09/15	3994	
EuroCargo I-III	110 E 22 tector, 110 E 22 P tector, 110 EL 22 P tector	160	05/06 – 09/15	3994	
EuroCargo I-III	110 E 22 W tector	160	05/06 – 09/15	3994	
EuroCargo I-III	110 E 22 WS tector	160	05/06 – 09/15	3994	
EuroCargo I-III	110 E 25 W tector	185	05/06 – 09/15	3994	
EuroCargo I-III	110 E 25 WS tector	185	05/06 – 09/15	3994	
EuroCargo I-III	120 E 18 K tector, 120 E 18 DK tector	134	09/00 – 09/15	3994	
EuroCargo I-III	120 E 18 tector, 120 E 18 D tector, 120 E 18 DP tector	134	09/00 – 09/15	3994	
EuroCargo I-III	120 E 20 CNG, 120 E 20 P CNG	147	09/06 – 09/15	3994	
EuroCargo I-III	120 E 21 K tector	154	09/00 – 09/15	3994	
EuroCargo I-III	120 E 21 tector, 120 E 21 P tector, 120 E 21 FP tector	154	09/06 – 09/15	3994	
EuroCargo I-III	120 E 22 D tector, 120 E 22 P tector, 120 E 22 FP tector	160	09/09 – 09/15	3994	
EuroCargo I-III	120 E 22 K tector	160	09/06 – 09/15	3994	
EuroCargo I-III	120 E 24 K tector, 120 E 24 DK tector	176	09/00– 09/15	3994	
EuroCargo I-III	120 E 24, 120 E 24 DP tector,120 E 25 FP tector	176	09/00 – 09/15	3994	
EuroCargo I-III	120 E 25 K tector, 120 E 25 DK tector	185	09/06 – 09/15	3994	
EuroCargo I-III	120 E 28 K tector	202	09/00 – 09/15	3994	

BESER®

MAKE & MODEL		KW	YEAR		
IVECO					
EuroCargo I-III	120 E 28 tector, 120 E 28 P tector, 120 E 28 FP tector	202	09/00 – 09/15	3994	
EuroCargo I-III	180 E 21 K tector (F4AE0681D)	154	09/00 – 09/15	3773	3773
EuroCargo I-III	180 E 21 T (8060.45.4100 TCA)	152	01/91 – 09/15	3773	3773
EuroCargo I-III	60 E 13 K tector	95	09/00 – 09/15	3994	
EuroCargo I-III	60 E 13 tector, 60 E 13 P tector	95	09/00 – 09/15	3994	
EuroCargo I-III	60 E 14 K tector	103	09/06 – 09/15	3994	
EuroCargo I-III	60 E 14 tector, 60 E 14 P tector	103	09/06 – 09/15	3994	
EuroCargo I-III	60 E 15 K tector	110	09/00 – 09/15	3994	
EuroCargo I-III	60 E 15 tector, 60 E 15 P tector	110	09/00 – 09/15	3994	
EuroCargo I-III	60 E 16 K tector	118	09/06 – 09/15	3994	
EuroCargo I-III	60 E 16 tector, 60 E 16 P tector	118	09/06 – 09/15	3994	
EuroCargo I-III	65 E 12 K	85	01/91 – 09/15	3994	
EuroCargo I-III	65 E 12, 65 E 12 P	85	01/91 – 09/15	3994	
EuroCargo I-III	65 E 13 K tector	95	09/00 – 09/15	3994	
EuroCargo I-III	65 E 13 tector	95	09/00 – 09/15	3994	
EuroCargo I-III	65 E 14 K	100	01/91 – 09/15	3994	
EuroCargo I-III	65 E 14 K tector	103	09/06 – 09/15	3994	
EuroCargo I-III	65 E 14 tector, 65 E 14 P tector	103	09/06 – 09/15	3994	
EuroCargo I-III	65 E 14, 65 E 14 P	100	01/91 – 09/15	3994	
EuroCargo I-III	65 E 15 tector, 65 E 15 P tector	110	09/00 – 09/15	3994	
EuroCargo I-III	65 E 16 K tector	118	09/06 – 09/15	3994	
EuroCargo I-III	65 E 16 tector, 65 E 16 P tector	118	09/06 – 09/15	3994	
EuroCargo I-III	65 E15 K tector	110	09/00 – 09/15	3994	
EuroCargo I-III	75 E 12 K	85	01/91 – 09/15	3994	
EuroCargo I-III	75 E 12, 75 E 12 P	85	01/91 – 09/15	3994	
EuroCargo I-III	75 E 13 K tector	95	09/00 – 09/15	3994	
EuroCargo I-III	75 E 13 tector, 75 E 13 P tector	95	09/00 – 09/15	3994	
EuroCargo I-III	75 E 14 K	100	01/91 – 09/15	3994	
EuroCargo I-III	75 E 14 K tector	103	09/06 – 09/15	3994	
EuroCargo I-III	75 E 14 K tector (F4AE3481C)	103	09/06 – 09/15	4169	4169
EuroCargo I-III	75 E 14 tector, 75 E 14 P tector	103	09/06 – 09/15	3994	
EuroCargo I-III	75 E 14 tector, 75 E 14 P tector (F4AE3481C)	103	09/06 – 09/15	4169	4169
EuroCargo I-III	75 E 14, 75 E 14 P	100	01/91 – 09/15	3994	
EuroCargo I-III	75 E 15 K	105	01/91 – 09/15	3994	
EuroCargo I-III	75 E 15 K tector	110	09/00 – 09/15	3994	
EuroCargo I-III	75 E 15 tector, 75 E 15 P tector	110	09/00 – 09/15	3994	
EuroCargo I-III	75 E 15, 75 E 15 P, 80 E 15	105	01/91 – 09/15	3994	
EuroCargo I-III	75 E 16 K tector	118	09/06 – 09/15	3994	
EuroCargo I-III	75 E 16 K tector (F4AE3481D)	118	09/06 – 09/15	4169	4169
EuroCargo I-III	75 E 16 tector, 75 E 16 P tector	118	09/06 – 09/15	3994	
EuroCargo I-III	75 E 16 tector, 75 E 16 P tector (F4AE3481D)	118	09/06 – 09/15	4169	4169
EuroCargo I-III	75 E 17 K, 75 E 18 K tector	125	09/00 – 09/15	3994	
EuroCargo I-III	75 E 17, 75 E 17 P, 75 E 18 tector	125	09/00 – 09/15	3994	
EuroCargo I-III	75 E 18 K tector	134	09/00 – 09/15	3994	
EuroCargo I-III	75 E 18 K tector (F4AE0681E)	134	09/06 – 09/15	4169	4169
EuroCargo I-III	75 E 18 tector, 75 E 18 P tector	134	09/00 – 09/15	3994	
EuroCargo I-III	75 E 18 tector, 75 E 18 P tector (F4AE0681D)	134	09/06 – 09/15	4169	4169
EuroCargo I-III	75 E 18 tector, 75 E 18 P tector (F4AE0681E)	134	09/06 – 09/15	4169	4169
EuroCargo I-III	80 E 15 K (8060.25R.4200 LTC)	105	01/91 – 09/15	3773	3773
EuroCargo I-III	80 E 15, 80 E 15 P (8060.25R.4200 LTC)	105	01/91 – 09/15	3773	3773
EuroCargo I-III	80 E 17 K, 80 E 17 DK tector, 80 E 18 K tector (F4AE0481A)	125	09/00 – 09/15	3773	3773
EuroCargo I-III	80 E 17 K, 80 E 17 DK tector, 80 E 18 K tector (F4AE3481B)	125	09/00 – 09/15	3773	3773
EuroCargo I-III	80 E 17 K, 80 E 17 DK tector,80 E 18 K tector	125	09/00 – 09/15	3994	
EuroCargo I-III	80 E 17, 80 E 17 D tector, 80 E 17 DP tector, 80 E18 tector (F4AE0481A)	125	09/00 – 09/15	3773	3773
EuroCargo I-III	80 E 17, 80 E 17 D tector, 80 E 17 DP tector, 80 E18 tector (F4AE3481B)	125	09/00 – 09/15	3773	3773
EuroCargo I-III	80 E 17, 80 E 17 D tector, 80 E17 DP tector, 80 E 18 tector	125	09/00 – 09/15	3994	
EuroCargo I-III	80 E 18 K (8060.25V.4000)	130	01/91 – 09/15	3773	3773
EuroCargo I-III	80 E 18 K tector	130	09/06 – 09/15	3994	
EuroCargo I-III	80 E 18 K tector, 80 E 18 DK tector	134	09/00 – 09/15	3994	
EuroCargo I-III	80 E 18 K tector, 80 E 18 DK tector (F4AE0681E)	134	09/00 – 09/15	3773	3773
EuroCargo I-III	80 E 18 tector, 80 E 18 D tector, 80 E 18 DP tector	134	09/00 – 09/15	3994	
EuroCargo I-III	80 E 18 tector, 80 E 18 D tector, 80 E 18 DP tector (F4AE0681D)	134	09/00 – 09/15	3773	3773
EuroCargo I-III	80 E 18 tector, 80 E 18 D tector, 80 E 18 DP tector (F4AE0681E)	134	09/00 – 09/15	3773	3773
EuroCargo I-III	80 E 18 tector, 80 E 18 P tector, 80 E 18 FP tector	130	09/06 – 09/15	3994	
EuroCargo I-III	80 E 18 tector, 80 E 18 P tector, 80 E 18 FP tector (F4AE3481B)	130	09/06 – 09/15	4169	4169
EuroCargo I-III	80 E 18 tector, 80 E 18 P tector, 80 E 18 FP tector (F4AE3481B)	130	09/06 – 09/15	3773	3773
EuroCargo I-III	80 E 18, 80 E 18 P, 18 E 80 FP (8060.25V.4000)	130	01/91 – 09/15	3773	3773
EuroCargo I-III	80 E 21 K, 80 E 21 DK tector, 80 E 22 K tector (F4AE0681D)	154	09/00 – 09/15	3773	3773
EuroCargo I-III	80 E 21 K, 80 E 21 DK tector, 80 E 22 K tector (F4AE3681B)	154	09/00 – 09/15	3773	3773
EuroCargo I-III	80 E 21 K, 80 E 21 DK tector,80 E 22 K tector	154	09/00 – 09/15	3994	
EuroCargo I-III	80 E 21, 80 E 21 D tector, 80 E 21 DP tector, 80 E 22 tector	154	09/00 – 09/15	3994	
EuroCargo I-III	80 E 21, 80 E 21 D tector, 80 E 21 DP tector, 80 E22 tector (F4AE0681D)	154	09/00 – 09/15	3773	3773
EuroCargo I-III	80 E 21, 80 E 21 D tector, 80 E 21 DP tector, 80 E22 tector (F4AE3681B)	154	09/00 – 09/15	3773	3773
EuroCargo I-III	80 E 21, 80 E 21 P, 21 E 80 FP (8060.45.4100 TCA)	152	01/91 – 09/15	3773	3773
EuroCargo I-III	80 E 21, 80 E 21 P, 21 E 80 FP (8060.45.4180)	152	01/91 – 09/15	3773	3773
EuroCargo I-III	80 E 21, 80 E 21 P, 80 E 21 FP (8060.45.4100 TCA)	152	01/91 – 09/15	3773	3773

BESER®

MAKE & MODEL			KW	YEAR		
IVECO						
EuroCargo I-III	80 E 21, 80 E 21 P, 80 E 21 FP (8060.45.4180)		152	01/91 – 09/15	3773	3773
EuroCargo I-III	80 E 22 tector, 80 E 22 P tector, 80 E 22FP tector		160	09/06 – 09/15	3994	
EuroCargo I-III	80 EL 15 tector		110	09/00 – 09/15	3994	
EuroCargo I-III	80 EL 15 tector (F4AE0481C)		110	09/00 – 09/15	3773	3773
EuroCargo I-III	80 EL 16 tector, 80 EL 16 P tector (F4AE3481D)		118	09/06 – 09/15	3773	3773
EuroCargo I-III	80 EL 17 tector, 80 EL 17 P tector		125	09/00 – 09/15	3994	
EuroCargo I-III	80 EL 18 tector, 80 EL 18 P tector		130	09/06 – 09/15	3994	
EuroCargo I-III	90 E 17 K tector, 90 E 17 DK tector		125	09/00 – 09/15	3994	
EuroCargo I-III	90 E 17 K tector, 90 E 17 DK tector (F4AE0481A)		125	09/00 – 09/15	3773	3773
EuroCargo I-III	90 E 17, 90 E 17D tector, 90 E 17 DP tector, 90 E 18 tector		125	09/00 – 09/15	3994	
EuroCargo I-III	90 E 17, 90 E 17D tector, 90 E 17 DP tector, 90 E 18 tector (F4AE0481A)		125	09/00 – 09/15	3773	3773
EuroCargo I-III	90 E 17, 90 E 17D tector, 90 E 17 DP tector, 90 E 18 tector (F4AE3481B)		125	09/00 – 09/15	3773	3773
EuroCargo I-III	90 E 18 K tector, 90 E 18 DK tector		134	09/00 – 09/15	3994	
EuroCargo I-III	90 E 18 K tector, 90 E 18 DK tector (F4AE0681E)		134	09/00 – 09/15	3773	3773
EuroCargo I-III	90 E 18 tector, 90 E 18 D tector, 90 E 18 DP tector		130	09/00 – 09/15	3994	
EuroCargo I-III	90 E 18 tector, 90 E 18 D tector, 90 E 18 DP tector (F4AE0681E)		130	09/00 – 09/15	3773	3773
EuroCargo I-III	90 E 21 K tector, 90 E 21 D Ktector		154	09/00 – 09/15	3994	
EuroCargo I-III	90 E 21 K tector, 90 E 21 DK tector (F4AE0681D)		154	09/00 – 09/15	3773	3773
EuroCargo I-III	90 E 21, 90 E 21 D tector, 90 E 21 DP tector, 90 E 22 tector		154	09/00 – 09/15	3994	
EuroCargo I-III	90 E 21, 90 E 21 D tector, 90 E 21 DP tector, 90 E22 tector (F4AE0681D)		154	09/00 – 09/15	3773	3773
EuroCargo I-III	90 E 21, 90 E 21 D tector, 90 E 21 DP tector, 90 E22 tector (F4AE3681B)		154	09/00 – 09/15	3773	3773
EuroCargo I-III	90 E 22 K tector		160	09/06 – 09/15	3994	
EuroCargo I-III	95 E 15 W		105	01/91 – 09/15	3994	
EuroCargo I-III	95 E 21 W		152	01/91 – 09/15	3994	
EuroFire	75 E 14		100	01/91 -	3994	
EuroFire	75 E 15 tector		110	09/00 -	3994	
EuroFire	80 E 18 tector		130	09/06 -	3994	
EuroFire	80 E 18 tector (F4AE3481B)		130	09/06-	4169	4169
HCV Daily II Box body / Van / SW Van 35.10		8140.21	68	01/1991 - 01/1999	3575/1	3575/1
HCV Daily II Box body / Van / SW Van 35.12 V, C		8140.61	53	01/1991 - 01/1999	3575/1	3575/1
HCV Daily II Box body / Van / SW Van 35.8		8140.61	53	01/1991 - 01/1999	3575/1	3575/1
HCV Daily II Box body / Van / SW Van 35-10 (15034111, 15034204 15034211 15034215 150		8140.23.00	76	01/1996 - 05/1999	3575/1	3575/1
HCV Daily II Box body / Van / SW Van 35-12		8140.43.00	90	02/1995 - 05/1999	3575/1	3575/1
HCV Daily II Box body / Van / SW Van 35-8 (12934104, 12934111 12934112 12934117 1293		8140.07.00	55	01/1991 - 08/1998	3575/1	3575/1
HCV Daily II Box body / Van / SW Van 35-8 (12934104, 12934111 12934112 12934117 1293		8140.67F.	60	01/1991 - 08/1998	3575/1	3575/1
HCV Daily II Box body / Van / SW Van 35-8 (14934104, 14934111 14934204 14934205 1493		8140.63	62	09/1998 - 05/1999	3575/1	3575/1
HCV Daily II Box body / Van / SW Van 44410 4x4		8140.43.	90	02/1995 - 05/1999	3575/1	
HCV Daily II Box body / Van / SW Van 44410 4x4		8140.43.	90	02/1995 - 05/1999		3575/1
HCV Daily II Box body / Van / SW Van 44410 4x4		8140.43.	90	02/1995 - 05/1999		3575/1
HCV Daily II Box body / Van / SW Van 44410 4x4		8140.43.	90	02/1995 - 05/1999	3575/1	
HCV Daily II Box body / Van / SW Van 44410 4x4		8140.43.	90	02/1995 - 05/1999	3749/1	
HCV Daily II Box body / Van / SW Van 44410 4x4		8140.43.	90	02/1995 - 05/1999	3575/1	3575/1
HCV Daily II Box body / Van / SW Van 49.10 TD		8140.21	68	01/1991 - 01/1999	3575/1	3575/1
HCV Daily II Box body / Van / SW Van 49.12 TD		8140.21	68	01/1991 - 01/1999	3575/1	3575/1
HCV Daily II Box body / Van / SW Van 49-12 V (15154204, 15154211 15154215 15154217,..		8140.43.00	90	05/1996 - 05/1999	3575/1	3575/1
HCV Daily II Box body / Van / SW Van 59.12 TD		8140.21/ .47	85	01/1991 - 01/1999	3749/1	
HCV Daily II Box body / Van / SW Van 59-12 V (13154404, 13154411 13154412 13154417,..		8140.47, 8140.47S	85	05/1991 - 04/1996	3749/1	
HCV Daily II Box body / Van / SW Van 59-12 V (15174404, 15174411 15174415 15174417)		8140.43.00	90	05/1996 - 05/1999	3749/1	
HCV Daily II Bus 35.10		8140.21	68	01/1991 - 01/1999	3575/1	3575/1
HCV Daily II Bus 35.12 V, C		8140.61	53	01/1991 - 01/1999	3575/1	3575/1
HCV Daily II Bus 35.8		8140.61	53	01/1991 - 01/1999	3575/1	3575/1
HCV Daily II Bus 49.10 TD		8140.21	68	01/1991 - 01/1999	3575/1	3575/1
HCV Daily II Bus 49.12 TD		8140.21	68	01/1991 - 01/1999	3575/1	3575/1
HCV Daily II Bus 59.12 TD		8140.21/ .47	85	01/1991 - 01/1999	3749/1	
HCV Daily II Dumper body 35.10		8140.21	68	01/1991 - 01/1999	3575/1	3575/1
HCV Daily II Dumper body 35.12 V, C		8140.61	53	01/1991 - 01/1999	3575/1	3575/1
HCV Daily II Dumper body 35.8		8140.61	53	01/1991 - 01/1999	3575/1	3575/1
HCV Daily II Dumper body 35-10 K (15030111, 15030211 15030311 15031111,..		8140.23.00	76	01/1997 - 05/1999	3575/1	3575/1
HCV Daily II Dumper body 35-12 K (15130311, 15130411 15131111 15131204,..		8140.43.00	90	09/1996 - 08/1998	3575/1	3575/1
HCV Daily II Dumper body 35-8 K (14930304, 14931104 14931111 14931115 14		8140.63	62	09/1998 - 05/1999	3575/1	3575/1
HCV Daily II Dumper body 49.10 TD		8140.21	68	01/1991 - 01/1999	3575/1	3575/1
HCV Daily II Dumper body 49.12 TD		8140.21	68	01/1991 - 01/1999	3575/1	3575/1
HCV Daily II Dumper body 49-10 K (15056204, 15056211 15056304 15056311)		8140.23.00	76	05/1996 - 05/1999	3575/1	3575/1
HCV Daily II Dumper body 49-12 K		8140.43.00	90	05/1996 - 05/1999	3575/1	3575/1
HCV Daily II Dumper body 59.12 TD		8140.21/ .47	85	01/1991 - 01/1999	3749/1	
HCV Daily II Dumper body 59-12 K (13156211, 13156212 13156231 13156311,..		8140.47, 8140.47S	85	05/1991 - 04/1996	3749/1	
HCV Daily II Dumper body 59-12 K (15176211, 15176304 15176311 15176315,..		8140.43.00	90	05/1996 - 05/1999	3749/1	
HCV Daily II Platform/Chassis 35.10		8140.21	68	01/1991 - 01/1999	3575/1	3575/1
HCV Daily II Platform/Chassis 35.12 V, C		8140.61	53	01/1991 - 01/1999	3575/1	3575/1
HCV Daily II Platform/Chassis 35.8		8140.61	53	01/1991 - 01/1999	3575/1	3575/1
HCV Daily II Platform/Chassis 35-10 (15030111, 15030211 15030311 15031111 150		8140.23.00	76	01/1996 - 05/1999	3575/1	3575/1
HCV Daily II Platform/Chassis 35-12 (15130311, 15130411 15131111 15131204 151		8140.43.00	90	05/1996 - 05/1999	3575/1	3575/1
HCV Daily II Platform/Chassis 35-8 (12931102, 12931104 12931111 12931112 1293		8140.07.00	55	01/1989 - 08/1998	3575/1	3575/1
HCV Daily II Platform/Chassis 35-8 (12931102, 12931104 12931111 12931112 1293		8140.67F.	60	01/1989 - 08/1998	3575/1	3575/1
HCV Daily II Platform/Chassis 35-8 (14930304, 14931104 14931111 14931115 1493		8140.63	62	09/1998 - 05/1999	3575/1	3575/1
HCV Daily II Platform/Chassis 44410 4x4		8140.43.	90	02/1995 - 05/1999	3575/1	

MAKE & MODEL   	KW	YEAR		
IVECO				
HCV Daily II Platform/Chassis 44410 4x4	8140.43.	90	02/1995 - 05/1999	3575/1
HCV Daily II Platform/Chassis 44410 4x4	8140.43.	90	02/1995 - 05/1999	3575/1
HCV Daily II Platform/Chassis 44410 4x4	8140.43.	90	02/1995 - 05/1999	3575/1
HCV Daily II Platform/Chassis 44410 4x4	8140.43.	90	02/1995 - 05/1999	3749/1
HCV Daily II Platform/Chassis 44410 4x4	8140.43.	90	02/1995 - 05/1999	3575/1 3575/1
HCV Daily II Platform/Chassis 49.10 TD	8140.21	68	01/1991 - 01/1999	3575/1 3575/1
HCV Daily II Platform/Chassis 49.12 TD	8140.21	68	01/1991 - 01/1999	3575/1 3575/1
HCV Daily II Platform/Chassis 49-10 (15050304, 15050404 15050411 15051204 150	8140.23.00	76	05/1996 - 05/1999	3575/1 3575/1
HCV Daily II Platform/Chassis 49-12 (15150211, 15150311 15150404 15150411 151	8140.43.00	90	05/1996 - 05/1999	3575/1 3575/1
HCV Daily II Platform/Chassis 59.12 TD	8140.21/ .47	85	01/1991 - 01/1999	3749/1
HCV Daily II Platform/Chassis 59-12 (13150204, 13150211 13150231 13150311 131	8140.47, 8140.47S	85	05/1991 - 04/1996	3749/1
HCV Daily II Platform/Chassis 59-12 (15170211, 15170304 15170311 15170504 151	8140.43.00	90	05/1996 - 05/1999	3749/1
HCV Daily III Box body / Van / SW Van 44410 D	8140.23	76	11/1997 - 07/2007	3575/1
HCV Daily III Box body / Van / SW Van 44410 D	8140.23	76	11/1997 - 07/2007	3575/1
HCV Daily III Box body / Van / SW Van 44410 D	8140.23	76	11/1997 - 07/2007	3575/1
HCV Daily III Box body / Van / SW Van 44410 D	8140.23	76	11/1997 - 07/2007	3575/1
HCV Daily III Box body / Van / SW Van 65 C 15	8140.43N	107	11/2001 - 04/2006	3942
HCV Daily III Platform/Chassis 65 C 15	8140.43N	107	11/2001 - 04/2006	3942
HCV Daily IV Box body / Van / SW Van 35C10, 35S10	F1AE0481F	70	05/2006 - 08/2011	4092/1
HCV Daily IV Box body / Van / SW Van 35C11 V, 35S11 V	F1AE0481U	78	07/2007 - 08/2011	4092/1
HCV Daily IV Box body / Van / SW Van 35C12 V, 35C12 V/P, 35S12 V, 35S12 V/P	F1AE0481G, F1AE0481R	85	05/2006 - 08/2011	4092/1
HCV Daily IV Box body / Van / SW Van 35C13 V, 35C13 V/P, 35S13 V, 35S13 V/P	F1AE0481V	93	07/2007 - 08/2011	4092/1
HCV Daily IV Box body / Van / SW Van 35C14 GV, 35C14 GV/P, 35S14 GV, 35S14 GV/P	F1CE0441A	100	07/2007 - 08/2011	4092/1
HCV Daily IV Box body / Van / SW Van 35C15 V, 35C15 V/P	F1CE0481F	107	05/2006 - 08/2011	4092/1
HCV Daily IV Dumper body 35C10 K	F1AE0481F	70	05/2006 - 08/2011	4092/1
HCV Daily IV Dumper body 35C11 K, 35C11 DK, 35S11 K, 35S11 DK	F1AE0481U	78	07/2007 - 08/2011	4092/1
HCV Daily IV Dumper body 35C12	F1AE0481G	85	05/2006 - 08/2011	4092/1
HCV Daily IV Dumper body 35C13 K, 35C13 DK, 35S13 K, 35S13 DK	F1AE0481V	93	07/2007 - 08/2011	4092/1
HCV Daily IV Dumper body 35C15	F1CE0481F	107	05/2006 - 08/2011	4092/1
HCV Daily IV Dumper body 35S14 K, 35S14 DK	F1AE0481H	100	07/2007 - 08/2011	4092/1
HCV Daily IV Platform/Chassis 35C10, 35S10	F1AE0481F	70	05/2006 - 08/2011	4092/1
HCV Daily IV Platform/Chassis 35C11, 35S11, 35S11 D, 35S11 /P	F1AE0481U	78	07/2007 - 08/2011	4092/1
HCV Daily IV Platform/Chassis 35C12, 35S12	F1AE0481G, F1AE0481R	85	05/2006 - 08/2011	4092/1
HCV Daily IV Platform/Chassis 35C13, 35C13 /P, 35S13 D, 35S13, 35S13 /P	F1AE0481V	93	07/2007 - 08/2011	4092/1
HCV Daily IV Platform/Chassis 35C14 G, 35C14 G/P, 35S14 G, 35S14 G/P, 35C14 GD,.	F1CE0441A	100	07/2007 - 08/2011	4092/1
HCV Daily IV Platform/Chassis 35C14, 35S14, 35S14 /P	F1AE0481H	100	05/2006 - 08/2011	4092/1
HCV Daily IV Platform/Chassis 35C15	F1CE0481F	107	05/2006 - 08/2011	4092/1
HCV Daily IV Platform/Chassis 40C10	F1AE0481F	70	05/2006 - 08/2011	4092/1
HCV Daily V Box body / Van / SW Van 29L11 V, 35C11 V, 35S11 V, 40C11 V	F1AE3481A	78	09/2011 - 02/2014	4092/1
HCV Daily V Box body / Van / SW Van 3.0 HPI	-	100	01/2011 - 02/2014	4092/1
HCV Daily V Box body / Van / SW Van 3.0 HPT	-	103	01/2011 - 02/2014	4092/1
HCV Daily V Box body / Van / SW Van 3.0 HPT	-	130	01/2011 - 02/2014	4092/1
HCV Daily V Box body / Van / SW Van 35C15 V, 40C15 V, 50C15 V, 60C15 V	F1CE3481B, F1CE3481J	107	09/2011 - 02/2014	4092/1
HCV Daily V Box body / Van / SW Van 35C17 V, 35S17 V, 40C17 V, 45C17 V, 50C17 V, 60C17	F1CE3481C, F1CE3481K	125	09/2011 - 02/2014	4092/1
HCV Daily V Box body / Van / SW Van 35C21 V, 35S21 V, 40C21 V, 45C21 V, 50C21 V	F1CE3481D	150	09/2011 - 02/2014	4092/1
HCV Daily V Dumper body 3.0 HPI	-	100	01/2011 - 02/2014	4092/1
HCV Daily V Dumper body 3.0 HPT	-	103	01/2011 - 02/2014	4092/1
HCV Daily V Dumper body 3.0 HPT	-	130	01/2011 - 02/2014	4092/1
HCV Daily V Dumper body 35C11K, 35S11DKP	F1AE3481A	78	09/2011 - 02/2014	4092/1
HCV Daily V Dumper body 35C13K, 35C13DKP	F1AE3481B	93	09/2011 - 02/2014	4092/1
HCV Daily V Dumper body 35S21DKP	F1CE3481D	150	09/2011 - 02/2014	4092/1
HCV Daily V Platform/Chassis 26L11, 26L11D, 35C11D, 35S11, 40C11	F1AE3481A	78	09/2011 - 02/2014	4092/1
HCV Daily V Platform/Chassis 29L13, 29L13D, 35C13D, 40C13	F1AE3481B	93	09/2011 - 02/2014	4092/1
HCV Daily V Platform/Chassis 29L15 V, 35C15L V, 40C15L V, 50C15L V	F1AE3481C	107	09/2011 - 02/2014	4092/1
HCV Daily V Platform/Chassis 3.0 HPI	-	100	01/2011 - 02/2014	4092/1
HCV Daily V Platform/Chassis 3.0 HPT	-	103	01/2011 - 02/2014	4092/1
HCV Daily V Platform/Chassis 3.0 HPT	-	130	01/2011 - 02/2014	4092/1
HCV Daily V Platform/Chassis 35C15, 35C15D, 35S15, 40C15, 45C15, 50C15, 60C15,	F1CE3481B, F1CE3481J	107	09/2011 - 02/2014	4092/1
HCV Daily V Platform/Chassis 35C17, 35C17D, 35S17, 40C17, 45C17, 50C17, 60C17,	F1CE3481C, F1CE3481K	125	09/2011 - 02/2014	4092/1
HCV Daily V Platform/Chassis 35C21, 35S21, 40C21, 45C21, 50C21, 60C21, 70C21	F1CE3481D	150	09/2011 - 02/2014	4092/1
HCV Daily VI Box body / Van / SW Van 35S15, 35C15, 40C15, 50C15	-	110	04/2016 -	4092/1
HCV Daily VI Box body / Van / SW Van 35S18, 35C18, 40C18, 50C18	-	132	04/2016 -	4092/1
HCV Daily VI Box body / Van / SW Van Natural Power 35S14, 35C14, 40C14, 50C14	-	100	04/2016 -	4092/1
HCV Daily VI Platform/Chassis 33S11, 35S11, 35C11	F1AFL411A	78	03/2014 - 04/2016	4092/1
HCV Daily VI Platform/Chassis 33S12, 35S12, 35C12	F1AGL411H	85	04/2016 -	4092/1
HCV Daily VI Platform/Chassis 33S13, 35S13, 35C13	F1AFL411B	93	03/2014 - 04/2016	4092/1
HCV Daily VI Platform/Chassis 33S14, 35S14, 35C14	F1AGL411J	100	04/2016 -	4092/1
HCV Daily VI Platform/Chassis 33S15, 35S15, 35C15	F1AFL411C	107	03/2014 - 04/2016	4092/1
HCV Daily VI Platform/Chassis 33S16, 35S16, 35C16	F1AGL411G	115	04/2016 -	4092/1
HCV Daily VI Platform/Chassis 35S14, 35S15, 35C15, 40S14, 40C15, 50C15, 65C15, 7	F1CE3481J, F1CFL411E, F1CFL411J	107	03/2014 - 04/2016	4092/1
HCV Daily VI Platform/Chassis 35S15, 35C15, 40C15, 50C15, 65C15, 70C15, 72C15	-	110	04/2016 -	4092/1
HCV Daily VI Platform/Chassis 35S17, 35C17, 40C17, 45S17,45C17, 50C17, 55C17, 65	F1CFL411F, F1CFL411H	125	03/2014 - 04/2016	4092/1
HCV Daily VI Platform/Chassis 35S18, 35C18, 40C18, 50C18, 65C18, 70C18, 72C18	F1CFL411W, F1CGL411B	132	04/2016 -	4092/1
HCV Daily VI Platform/Chassis 35S21, 35C21, 40C21, 50C21, 65C21, 70C21	F1CFL411G, F1CGL411C	150	03/2014 -	4092/1
HCV Daily VI Platform/Chassis NaturalPower 35S14, 35C14, 40C14, 50C14, 65C14, 70	F1CFA401A	100	03/2014 -	4092/1
HCV Daily VI Van 3.0 Natural Power	-	150	03/2014 -	4092/1

MAKE & MODEL		KW	YEAR		
IVECO					
HCV Daily VI Van 3.0 Natural Power	-	78	03/2014 -		4092/1
HCV Daily VI Van 33S11, 35S11, 35C11	F1AFL411A	78	03/2014 - 04/2016		4092/1
HCV Daily VI Van 33S13, 35S13, 35C13	F1AFL411B	93	03/2014 - 04/2016		4092/1
HCV Daily VI Van 35S15, 35C15, 40C15, 50C15, 65C15, 70C15	F1CE3481J, F1CFL411E, F1CFL411J	107	03/2014 - 04/2016		4092/1
HCV Daily VI Van 35S17, 35C17, 40C17, 50C17, 55C17, 65C17, 70C17	F1CFL411F, F1CFL411H	125	03/2014 - 04/2016		4092/1
HCV Daily VI Van 35S21, 35C21, 40C21, 50C21, 65C21, 70C21	F1CFL411G, F1CGL411C	150	03/2014 -		4092/1
HCV Daily VI Van Natural Power 35S14, 35C14, 40C14, 50C14, 65C14, 7	F1CFA401A, F1CFA401B	100	03/2014 -		4092/1
Zeta	109-14 (8060.05.289)	101	11/85 – 03/91	3773	
Zeta	109-14 H (8060.05.289)	101	11/85 – 03/91	3773	
ZETA	60-11	74	01.1987 - 03.1991	3433/1	
Zeta	60-11 (8040.25.230 R)	74	01/87 – 03/91	3433	
Zeta	60-11 (8040.25.230 R)	74	01/87 – 03/91	3773	
ZETA	60-11 V	74	01.1987 - 03.1991	3433/1	
Zeta	60-11 V (8040.25.230 R)	74	01/87 – 03/91	3433	
Zeta	60-11 V (8040.25.230 R)	74	01/87 – 03/91	3773	
ZETA	65-12	85	01.1987 - 03.1991	3433/1	
Zeta	65-12 (8040.25.200)	85	01/87 – 03/91	3433	
Zeta	65-12 (8040.25.200)	85	01/87 – 03/91	3773	
ZETA	65-12 H	85	01.1987 - 03.1991	3433/1	
Zeta	65-12 H (8040.25.200)	85	01/87 – 03/91	3433	
Zeta	65-12 H (8040.25.200)	85	01/87 – 03/91	3773	
ZETA	65-12 V	85	01.1987 - 03.1991	3433/1	
Zeta	65-12 V (8040.25.200)	85	01/87 – 03/91	3433	
Zeta	65-12 V (8040.25.200)	85	01/87 – 03/91	3773	
ZETA	65-9	65	01.1987 - 03.1991	3433/1	
Zeta	65-9 (04005230)	65	01/87 – 03/91	3433	
Zeta	65-9 (804.005.230)	65	01/87 – 03/91	3773	
ZETA	79-12	85	01.1987 - 03.1991	3433/1	
ZETA	79-12	85	01.1987 - 03.1991	3433/1	
Zeta	79-12 (8040.25.200)	85	01/87 – 03/91	3433	
Zeta	79-12 (8040.25.200)	85	01/87 – 03/91	3773	
ZETA	79-12 H	85	01.1987 - 03.1991	3433/1	
ZETA	79-12 H	85	01.1987 - 03.1991	3433/1	
ZETA	79-12 V	85	01.1987 - 03.1991	3433/1	
ZETA	79-12 V	85	01.1987 - 03.1991	3433/1	
ZETA	79-14	101	12.1985 - 03.1991	3433/1	
ZETA	79-14	101	12.1985 - 03.1991	3433/1	
ZETA	79-14 H	101	12.1985 - 03.1991	3433/1	
ZETA	79-14 H	101	12.1985 - 03.1991	3433/1	
ZETA	79-14 V	101	12.1985 - 03.1991	3433/1	
ZETA	79-14 V	101	12.1985 - 03.1991	3433/1	
Zeta	79-12 (8040.25.220)	85	01/87 – 03/91	3433	
Zeta	79-12 (8040.25.220)	85	01/87 – 03/91	3773	
Zeta	79-12 H (8040.25.200)	85	01/87 – 03/91	3773	
Zeta	79-12 H (8040.25.220)	85	01/87 – 03/91	3433	
Zeta	79-12 H (8040.25.220)	85	01/87 – 03/91	3773	
Zeta	79-12 V (8040.25.200)	85	01/87 – 03/91	3433	
Zeta	79-12 V (8040.25.200)	85	01/87 – 03/91	3773	
Zeta	79-12 V (8040.25.220)	85	01/87 – 03/91	3433	
Zeta	79-12 V (8040.25.220)	85	01/87 – 03/91	3773	
Zeta	79-14 (8060.05.280)	101	12/85 – 03/91	3433	
Zeta	79-14 (8060.05.280)	101	12/85 – 03/91	3773	
Zeta	79-14 H (8060.05.280)	101	12/85 – 03/91	3433	
Zeta	79-14 H (8060.05.280)	101	12/85 – 03/91	3773	
Zeta	79-14 V (8060.05.280)	101	12/85 – 03/91	3433	
Zeta	79-14 V (8060.05.280)	101	12/85 – 03/91	3773	
Zeta	95-14 (8060.04.669)	101	11/85 – 03/91	3773	
Zeta	95-14 H (8060.04.669)	101	11/85 – 03/91	3773	
JAC					
REIN Closed Off-Road Vehicle	1.9 D Turbo	82	09/08 -	3993	
REIN Closed Off-Road Vehicle	2.0	101	06/07 -	3993	
REIN Closed Off-Road Vehicle	2.0 Turbo	130	03/11 -	3993	
REIN Closed Off-Road Vehicle	2.4 AWD	102	12/06 -	3993	
JAGUAR					
S-TYPE (CCX_)	2.5 V6	147	04/02 – 10/07		3853/1
S-TYPE (CCX_)	2.7 D	152	06/04 – 10/07		3853/1
S-TYPE (CCX_)	3.0 V6	175	01/99 – 10/07		3853/1
S-TYPE (CCX_)	4.0 V8	203	01/99 – 04/02		3853/1
S-TYPE (CCX_)	4.0 V8	209	09/99 – 12/02		3853/1
S-TYPE (CCX_)	4.2 Supercharged	298	11/01 – 12/08		3853/1
S-TYPE (CCX_)	4.2 V8	219	04/02 – 10/07		3853/1
S-TYPE (CCX_)	R 4,2 V8	291	04/02 – 10/07		3853/1
XF (CC9_)	2.0	177	06/12 – 04/15		3853/1
XF (CC9_)	2.2 D	120	04/11 – 04/15		3853/1
XF (CC9_)	2.2 D	140	05/11 – 04/15		3853/1

MAKE & MODEL		KW	YEAR		
JAGUAR					
XF (CC9_)	2.2 D	147	03/12 – 04/15		3853/1
XF (CC9_)	2.7 D	152	03/08 – 04/15		3853/1
XF (CC9_)	3.0	175	03/08 – 04/15		3853/1
XF (CC9_)	3.0	179	03/08 – 04/15		3853/1
XF (CC9_)	3.0	250	03/12 – 04/15		3853/1
XF (CC9_)	3.0 AWD	250	10/12 – 04/15		3853/1
XF (CC9_)	3.0 D	155	03/09 – 04/15		3853/1
XF (CC9_)	3.0 D	177	03/09 – 04/15		3853/1
XF (CC9_)	3.0 D	202	03/09 – 04/15		3853/1
XF (CC9_)	4.2	219	03/08 – 04/15		3853/1
XF (CC9_)	4.2 Kompressor	306	03/08 – 04/15		3853/1
XF (CC9_)	5.0	283	03/09 – 04/15		3853/1
XF SPORTBRAKE (CC9_)	2.2 D	120	09/12 – 04/14		3853/1
XF SPORTBRAKE (CC9_)	2.2 D	147	09/12 – 04/14		3853/1
XF SPORTBRAKE (CC9_)	3.0 D	177	09/12 – 04/14		3853/1
XF SPORTBRAKE (CC9_)	3.0 D	202	09/12 – 04/14		3853/1
XJ	12 5.3	186	09/73 – 12/76	3526	
XJ	12 5.3	187	08/86 – 09/89	3526	
XJ	12 5.3	211	05/75 – 12/82	3526	
XJ	12 H.E.	217	09/81 – 12/92	3526	
XJ	6 3.4	119	05/75 – 10/86	3526	
XJ	6 4.2	124	01/75 – 09/79	3526	
XJ	6 4.2	127	01/75 – 12/79	3526	
XJ	6 4.2	130	09/85 – 12/86	3526	
XJ	6 4.2	133	09/85 – 12/86	3526	
XJ	6 4.2	151	09/79 – 12/87	3526	
XJ	Sovereign V12	194	10/86 – 12/92	3526	
XJ	Sovereign V12	197	07/85 – 12/92	3526	
XJ (N3_)	2.7 D	219	05/03 – 03/09		3853/1
XJ (N3_)	3.0	152	10/05 – 03/09		3853/1
XJ (N3_)	3.0	175	05/03 – 03/09		3853/1
XJ (N3_)	3.6	179	04/04 – 01/07		3853/1
XJ (N3_)	4.2	190	05/03 – 03/09		3853/1
XJ (N3_)	R 4.2	291	05/03 – 03/09		3853/1
XJ (NAW_, NBW_)	8 3.2	174	07/97 – 05/03	3584	
XJ (NAW_, NBW_)	8 4.0	209	07/97 – 05/03	3584	
XJ (NAW_, NBW_)	8 4.0	216	10/97 – 04/03	3584	
XJ (NNA_)	2.0	177	05/12 -		3853/1
XJ (NNA_)	3.0	175	01/11 -		3853/1
XJ (NNA_)	3.0	250	03/12 -		3853/1
XJ (NNA_)	3.0 AWD	250	10/12 -		3853/1
XJ (NNA_)	3.0 D	202	10/09 – 12/15		3853/1
XJ (NNA_)	3.0 D	221	04/15 -		3853/1
XJ (NNA_)	5.0 V 8	283	10/09 -		3853/1
XJ (X300_)	12 6.0	229	11/94 – 07/97	3584	
XJ (X300_)	12 6.0	229	11/94 – 07/97	3623	
XJ (X300_)	6 3.2	155	11/94 – 07/97	3584	
XJ (X300_)	6 3.2	155	11/94 – 07/97	3623	
XJ (X300_)	6 Sovereign 4.0	177	11/94 – 07/97	3584	
XJ (X300_)	6 Sovereign 4.0	177	11/94 – 07/97	3623	
XJ (X300_)	R Super Charged 4.0	235	11/94 – 07/97	3584	
XJ (X300_)	R Super Charged 4.0	235	11/94 – 07/97	3623	
XJ (XJ40_)	4.0	166	10/89 – 08/94	3584	
XJ (XJ40_)	4.0	187	10/89 – 08/94	3584	
XJ (XJ40_)	6 2.9	108	10/86 – 08/90	3526	
XJ (XJ40_)	6 2.9	108	10/86 – 08/90	3584	
XJ (XJ40_)	6 2.9	117	10/86 – 08/90	3526	
XJ (XJ40_)	6 2.9	117	10/86 – 08/90	3584	
XJ (XJ40_)	6 2.9	123	10/86 – 08/90	3526	
XJ (XJ40_)	6 2.9	123	10/86 – 08/90	3584	
XJ (XJ40_)	6 3.2 24V	146	09/90 – 11/94	3584	
XJ (XJ40_)	6 3.6	136	10/86 – 08/89	3526	
XJ (XJ40_)	6 3.6	145	10/86 – 08/89	3526	
XJ (XJ40_)	6 3.6	156	10/86 – 08/89	3526	
XJ (XJ40_)	6 4.0	163	09/89 – 11/94	3584	
XJ Coupe	3.6	136	01/88 – 05/92	3584	
XJ Coupe	3.6	146	01/88 – 05/91	3584	
XJ Coupe	3.6	156	08/87 – 12/89	3526	
XJ Coupe	3.6	156	08/87 – 12/89	3584	
XJ Coupe	3.6	162	10/83 – 12/88	3526	
XJ Coupe	4.0	163	05/91 – 09/94	3584	
XJ Coupe	4.0	171	07/94 – 03/96	3584	
XJ Coupe	4.0	175	10/87 – 03/96	3584	
XJ Coupe	5.3	197	01/86 – 12/89	3526	
XJ Coupe	5.3	197	01/86 – 12/89	3584	
XJ Coupe	5.3	202	01/88 – 06/91	3584	

MAKE & MODEL		KW	YEAR		
JAGUAR					
XJ Coupe	5.3	207	05/91 – 08/93	3584	
XJ Coupe	5.3	211	09/73 – 05/92	3584	
XJ Coupe	5.3	213	09/75 – 07/81	3526	
XJ Coupe	5.3 H.E.	194	01/86 – 12/89	3526	
XJ Coupe	5.3 H.E.	194	01/86 – 12/89	3584	
XJ Coupe	5.3 H.E.	217	07/81 – 12/87	3526	
XJ Coupe	6.0	222	05/93 – 03/96	3584	
XJ Coupe	6.0	238	09/89 – 10/91	3584	
XJ Coupe	6.0	248	11/91 – 12/93	3584	
XJSC Convertible	3.6	136	08/87 – 05/91	3526	
XJSC Convertible	3.6	136	08/87 – 05/91	3584	
XJSC Convertible	3.6	146	10/87 – 02/91	3584	
XJSC Convertible	3.6	156	08/87 – 05/91	3526	
XJSC Convertible	3.6	156	08/87 – 05/91	3584	
XJSC Convertible	3.6	162	10/86 – 12/88	3526	
XJSC Convertible	4.0	163	05/91 – 09/94	3584	
XJSC Convertible	4.0	171	07/94 – 03/96	3584	
XJSC Convertible	4.0	175	10/87 – 12/89	3584	
XJSC Convertible	5.3	197	01/86 – 05/88	3526	
XJSC Convertible	5.3	202	01/88 – 09/91	3584	
XJSC Convertible	5.3	207	05/91 – 08/93	3584	
XJSC Convertible	5.3	211	01/88 – 05/92	3584	
XJSC Convertible	5.3 H.E.	194	07/85 – 05/92	3526	
XJSC Convertible	5.3 H.E.	194	07/85 – 05/92	3584	
XJSC Convertible	5.3 H.E.	217	09/85 – 12/90	3526	
XJSC Convertible	5.3 H.E.	217	09/85 – 12/90	3584	
XJSC Convertible	6.0	222	05/93 – 03/96	3584	
XK 8 Convertible (QDV_)	4.0	209	03/96 – 07/05	3584	
XK 8 Convertible (QDV_)	4.0	216	05/96 – 07/99	3584	
XK 8 Convertible (QDV_)	4.0	267	02/98 – 07/05	3584	
XK 8 Convertible (QDV_)	4.0 XKR	276	05/98 – 07/05	3584	
XK 8 Convertible (QDV_)	4.2	219	08/02 – 07/05	3584	
XK 8 Convertible (QDV_)	R 4,2	291	08/02 – 07/05	3584	
XK 8 Coupe (QEV_)	4.0	209	03/96 – 07/05	3584	
XK 8 Coupe (QEV_)	4.0	216	05/96 – 07/05	3584	
XK 8 Coupe (QEV_)	4.0	267	02/98 – 07/05	3584	
XK 8 Coupe (QEV_)	4.0 XKR	276	05/98 – 07/05	3584	
XK 8 Coupe (QEV_)	4.2	219	08/02 – 07/05	3584	
XK 8 Coupe (QEV_)	R 4.2	291	08/02 – 07/05	3584	
XK Convertible (QQ6_)	3.6	190	10/07 – 07/14		3853/1
XK Convertible (QQ6_)	4.2 XK8	219	03/06 – 07/14		3853/1
XK Convertible (QQ6_)	4.2 XKR	306	03/06 – 07/14		3853/1
XK Convertible (QQ6_)	4.2 XKR	313	08/06 – 07/14		3853/1
XK Convertible (QQ6_)	5.0 V8	283	01/09 – 07/14		3853/1
XK Coupe (QQ6_)	3.6	190	07/07 – 07/14		3853/1
XK Coupe (QQ6_)	4.2 XK8	219	03/06 – 07/14		3853/1
XK Coupe (QQ6_)	4.2 XKR	291	03/06 – 07/14		3853/1
XK Coupe (QQ6_)	4.2 XKR	306	03/06 – 07/14		3853/1
XK Coupe (QQ6_)	4.2 XKR	313	08/06 – 07/14		3853/1
XK Coupe (QQ6_)	5.0 V8	283	01/09 – 07/14		3853/1
XK Coupe (QQ6_)	5.0 XKR	390	09/10 – 07/14		3853/1
X-TYPE (CF1_)	2.0 D	96	07/03 – 11/09	4100	4093
X-TYPE (CF1_)	2.0 D	96	07/03 – 11/09		4058
X-TYPE (CF1_)	2.1 V6	115	03/02 – 11/09	4100	4093
X-TYPE (CF1_)	2.1 V6	115	03/02 – 11/09		4058
X-TYPE (CF1_)	2.2 D	107	01/07 – 11/09	4100	4093
X-TYPE (CF1_)	2.2 D	107	01/07 – 11/09		4058
X-TYPE (CF1_)	2.2 D	110	10/05 – 11/09	4100	4093
X-TYPE (CF1_)	2.2 D	110	10/05 – 11/09		4058
X-TYPE (CF1_)	2.2 D	114	10/05 – 11/09	4100	4093
X-TYPE (CF1_)	2.2 D	114	10/05 – 11/09		4058
X-TYPE (CF1_)	2.5 V6 All-wheel Drive	144	06/01 – 11/09	4100	4093
X-TYPE (CF1_)	2.5 V6 All-wheel Drive	144	06/01 – 11/09		4058
X-TYPE (CF1_)	3.0 V6 All-wheel Drive	169	06/01 – 11/07	4100	4093
X-TYPE (CF1_)	3.0 V6 All-wheel Drive	169	06/01 – 11/07		4058
X-Type (X400) 2.0 D	FMBA, FMBB	96	07/2003 - 11/2009		4058/1
X-Type (X400) 3.0 V6 4WD	AJ-V6	169	06/2001 - 12/2008		4058/1
X-Type (X400) 44198 V6	YB (AJ-V6)	115	03/2002 - 11/2009		4058/1
X-Type (X400) 44229 D	QJBA	107	01/2007 - 11/2009		4058/1
X-Type (X400) 44229 D	QJBA	110	10/2005 - 11/2009		4058/1
X-Type (X400) 44229 D	QJBA	114	10/2005 - 11/2009		4058/1
X-Type (X400) 44318 V6 4WD	XB (AJ-V6)	144	06/2001 - 11/2009		4058/1
X-TYPE Estate (CF1_)	2.0 D	96	02/04 – 12/09	4100	4093
X-TYPE Estate (CF1_)	2.0 D	96	02/04 – 12/09		4058
X-TYPE Estate (CF1_)	2.1 V6	115	11/03 – 03/09	4100	4093
X-TYPE Estate (CF1_)	2.1 V6	115	11/03 – 03/09		4058

MAKE & MODEL		KW	YEAR		
JAGUAR					
X-TYPE Estate (CF1_)	2.2 D	107	01/07 – 12/09	4100	4093
X-TYPE Estate (CF1_)	2.2 D	107	01/07 – 12/09		4058
X-TYPE Estate (CF1_)	2.2 D	110	10/05 – 12/09	4100	4093
X-TYPE Estate (CF1_)	2.2 D	110	10/05 – 12/09		4058
X-TYPE Estate (CF1_)	2.2 D	114	10/05 – 12/09	4100	4093
X-TYPE Estate (CF1_)	2.2 D	114	10/05 – 12/09		4058
X-TYPE Estate (CF1_)	2.5	144	02/04 – 12/09	4100	4093
X-TYPE Estate (CF1_)	2.5	144	02/04 – 12/09		4058
X-TYPE Estate (CF1_)	3.0	169	02/04 – 12/09	4100	4093
X-TYPE Estate (CF1_)	3.0	169	02/04 – 12/09		4058
X-Type SW (X400) 2.0 D	FMBA, FMBB	96	02/2004 - 12/2009		4058/1
X-Type SW (X400) 3.0	AJ-V6	169	02/2004 - 12/2009		4058/1
X-Type SW (X400) 3.0 4WD	AJ-V6	169	09/2002 - 12/2008		4058/1
X-Type SW (X400) 44198 V6	YB (AJ-V6)	115	11/2003 - 03/2009		4058/1
X-Type SW (X400) 44229 D	QJBA	107	01/2007 - 12/2009		4058/1
X-Type SW (X400) 44229 D	QJBA	110	10/2005 - 12/2009		4058/1
X-Type SW (X400) 44229 D	QJBA	114	10/2005 - 12/2009		4058/1
X-Type SW (X400) 44318	XB (AJ-V6)	144	02/2004 - 12/2009		4058/1
JEEP					
CHEROKEE (KJ)	2.4 4x4	108	09/01 – 01/08	4012	
CHEROKEE (KJ)	2.4 Laredo	108	10/01 – 09/04	4012	
CHEROKEE (KJ)	2.5 CRD 4x4	105	09/01 – 01/08	4012	
CHEROKEE (KJ)	2.8 CRD 4x4	110	11/02 – 01/08	4012	
CHEROKEE (KJ)	2.8 CRD 4x4	120	11/04 – 01/08	4012	
CHEROKEE (KJ)	3.7 4x4	150	08/03 – 01/08	4012	
CHEROKEE (KJ)	3.7 4x4	155	09/01 – 01/08	4012	
CHEROKEE (KJ)	3.7 Laredo	150	10/01 – 09/04	4012	
CHEROKEE (KK)	2.8 CRD 4x4	130	05/08 -	4005	4004
CHEROKEE (KK)	2.8 CRDi 4x4	147	01/10 -	4005	4004
CHEROKEE (KK)	3.7 V6	157	01/08 -	4005	4004
CHEROKEE (KK)	3.7 V6 4x4	151	01/08 -	4005	4004
CHEROKEE (KK)	3.7 V6 4x4	157	01/08 -	4005	4004
CHEROKEE (SJ	2.5	81	10.1983 - 09.1986	3840	
CHEROKEE (SJ	4.2 4x4	76	09.1979 - 12.1983	3840	
CHEROKEE (SJ	4.2 4x4	81	10.1983 - 09.1986	3840	
CHEROKEE (SJ	5.9 4x4	128	10.1980 - 09.1986	3840	
CHEROKEE (XJ)	2.1 D 4x4	59	10/86 – 09/92	4182	
CHEROKEE (XJ)	2.1 TD	59	06/89 – 03/92	4182	
CHEROKEE (XJ)	2.1 TD	64	10/84 – 09/01	4182	
CHEROKEE (XJ)	2.5	89	10/90 – 09/96	4182	
CHEROKEE (XJ)	2.5	89	10/95 – 09/01	4182	
CHEROKEE (XJ)	2.5	90	10/86 – 09/90	4182	
CHEROKEE (XJ)	2.5 4x4	90	10/86 – 09/90	4182	
CHEROKEE (XJ)	2.5 i 4x4	87	10/84 – 09/01	4182	
CHEROKEE (XJ)	2.5 i 4x4	90	12/91 – 09/01	4182	
CHEROKEE (XJ)	2.5 SE	87	10/96 – 09/99	4182	
CHEROKEE (XJ)	2.5 TD 4x4	85	01/88 – 09/01	4182	
CHEROKEE (XJ)	2.5 Tdi 4x4	85	10/96 – 09/01	4182	
CHEROKEE (XJ)	4.0	131	10/86 – 09/90	4182	
CHEROKEE (XJ)	4.0 4x4	131	10/86 – 09/90	4182	
CHEROKEE (XJ)	4.0 i	127	07/98 – 09/01	4011	
CHEROKEE (XJ)	4.0 i	135	02/99 – 09/01	4011	
CHEROKEE (XJ)	4.0 i	135	12/91 – 09/01	4182	
CHEROKEE (XJ)	4.0 i	136	01/88 – 09/01	4182	
CHEROKEE (XJ)	4.0 i 4x4	131	01/95 – 09/01	4182	
CJ5 - CJ8	2.0	63	01.1983 - 12.1987	3840	
CJ5 - CJ8	2.1 D	44	01.1983 - 12.1987	3840	
CJ5 - CJ8	2.4 D	44	01.1983 - 12.1987	3840	
COMANCHE (MJ)	2.1 D	63	10/86 – 09/90	4182	
COMANCHE (MJ)	2.1 D 4x4	63	01/86 – 09/90	4182	
COMMANDER (XK)	3.0 CRD (EXL)	160	04/06 – 12/10		4030
COMMANDER (XK)	3.0 CRD 4x4	160	04/06 – 12/10	4016	
COMMANDER (XK)	3.7 V6 (EKG)	157	09/05 – 12/10		4030
COMMANDER (XK)	3.7 V6 4x4	157	09/05 – 12/10	4016	
COMMANDER (XK)	4.7 V8 (EVA)	170	09/05 – 12/10		4030
COMMANDER (XK)	4.7 V8 4x4	170	09/05 – 12/10	4016	
COMMANDER (XK)	5.7 V8 (EZB)	240	09/05 – 12/10		4030
COMMANDER (XK)	5.7 V8 4x4	240	09/05 – 12/10	4016	
COMPASS (MK49)	2.0	115	05/11 -		3893
COMPASS (MK49)	2.0	115	05/11 -		4106
COMPASS (MK49)	2.0 CRD	103	08/06 -	3955	3893
COMPASS (MK49)	2.0 CRD	103	08/06 -		4106
COMPASS (MK49)	2.0 CRD 4x4	103	09/06 -	3955	3893
COMPASS (MK49)	2.0 CRD 4x4	103	09/06 -		4106
COMPASS (MK49)	2.2 CRD	100	05/11 -		3893

MAKE & MODEL		KW	YEAR		
JEEP					
COMPASS (MK49)	2.2 CRD	100	05/11 -		4106
COMPASS (MK49)	2.2 CRD 4x4	100	05/11 -		3893
COMPASS (MK49)	2.2 CRD 4x4	100	05/11 -		4106
COMPASS (MK49)	2.2 CRD 4x4	120	12/10 -		3893
COMPASS (MK49)	2.2 CRD 4x4	120	12/10 -		4106
COMPASS (MK49)	2.4	125	08/06 -	3955	4004
COMPASS (MK49)	2.4	125	08/06 -		4106
COMPASS (MK49)	2.4 4x4	125	09/06 -	3955	4106
GRAND CHEROKEE III (WH, WK)	3.7 V6 (EKG)	157	06/05 – 12/10		4030
GRAND CHEROKEE III (WH, WK)	4.7 FLEX (EVE)	228	09/07 – 02/10		4030
GRAND CHEROKEE III (WH, WK)	4.7 V8 (EVA)	170	06/05 – 12/10		4030
GRAND CHEROKEE III (WH, WK)	4.7 V8 (EVA)	223	09/07 – 02/10		4030
GRAND CHEROKEE III (WH, WK)	4.7 V8 (EVE)	223	09/07 – 02/10		4030
GRAND CHEROKEE III (WH, WK)	4.7 V8 (EVE)	228	09/07 – 12/08		4030
GRAND CHEROKEE III (WH, WK)	4.7 V8 4WD	217	06/05 -		4030
GRAND CHEROKEE III (WH, WK)	5.7 V8	265	01/09 – 12/10		4030
GRAND CHEROKEE III (WH, WK)	5.7 V8 (EZB)	240	06/05 – 12/10		4030
GRAND CHEROKEE III (WH, WK)	6.1 SRT8 (ESF)	313	03/06 – 12/10		4030
GRAND CHEROKEE I (ZJ)	2.5 TD 4x4 (Z)	85	10/95 – 04/99	4182	
GRAND CHEROKEE I (ZJ)	2.5 TD Laredo	85	10/96 – 09/98	4182	
GRAND CHEROKEE I (ZJ)	4.0 i 4x4 (Z)	130	10/95 – 04/99	4182	
GRAND CHEROKEE I (ZJ)	4.0 i 4x4 (ZJ)	132	09/91 – 04/99	4182	
GRAND CHEROKEE I (ZJ)	4.0 i 4x4 (ZJ)	135	09/91 – 04/99	4182	
GRAND CHEROKEE I (ZJ)	4.0 Laredo	131	10/96 – 09/98	4182	
GRAND CHEROKEE I (ZJ)	5.2	164	10/96 – 09/98	4182	
GRAND CHEROKEE I (ZJ)	5.2 4x4	164	10/96 – 09/98	4182	
GRAND CHEROKEE I (ZJ)	5.2 4x4 (Z)	156	10/95 – 04/99	4182	
GRAND CHEROKEE I (ZJ)	5.2 i 4x4 (ZJ)	155	01/92 – 04/99	4182	
GRAND CHEROKEE I (ZJ)	5.2 i 4x4 (ZJ)	158	09/92 – 04/99	4182	
GRAND CHEROKEE I (ZJ)	5.2 Limited 4x4	136	10/96 – 09/98	4182	
GRAND CHEROKEE I (ZJ)	5.9 i 4x4	177	08/97 – 04/99	4182	
GRAND CHEROKEE II (WJ, WG)	2.7 CRD 4x4	120	10/01 – 09/05	4011	
GRAND CHEROKEE II (WJ, WG)	2.7 CRD 4x4	120	10/01 – 09/05	4031	
GRAND CHEROKEE II (WJ, WG)	2.7 CRD Laredo	120	10/04 – 09/05	4031	
GRAND CHEROKEE II (WJ, WG)	3.1 TD 4x4	103	04/99 – 12/01	4011	
GRAND CHEROKEE II (WJ, WG)	3.1 TD 4x4	103	04/99 – 12/01	4031	
GRAND CHEROKEE II (WJ, WG)	4.0	140	10/98 – 09/04	4011	
GRAND CHEROKEE II (WJ, WG)	4.0	140	10/98 – 09/04	4031	
GRAND CHEROKEE II (WJ, WG)	4.0 4x4	140	04/99 – 09/05	4011	
GRAND CHEROKEE II (WJ, WG)	4.0 4x4	140	04/99 – 09/05	4031	
GRAND CHEROKEE II (WJ, WG)	4.7 V8	167	10/04 – 09/05	4031	
GRAND CHEROKEE II (WJ, WG)	4.7 V8 4x4	162	04/99 – 08/00	4011	
GRAND CHEROKEE II (WJ, WG)	4.7 V8 4x4	162	04/99 – 08/00	4031	
GRAND CHEROKEE II (WJ, WG)	4.7 V8 4x4	164	04/99 – 09/05	4011	
GRAND CHEROKEE II (WJ, WG)	4.7 V8 4x4	164	04/99 – 09/05	4031	
GRAND CHEROKEE II (WJ, WG)	4.7 V8 4x4	167	06/03 – 09/05	4031	
GRAND CHEROKEE II (WJ, WG)	4.7 V8 4x4	190	10/01 – 09/05	4011	
GRAND CHEROKEE II (WJ, WG)	4.7 V8 4x4	190	10/01 – 09/05	4031	
GRAND CHEROKEE III (WH, WK)	3.0 CRD 4x4	155	05/06 – 12/10	4016	
GRAND CHEROKEE III (WH, WK)	3.0 CRD 4x4	160	06/05 – 12/10	4016	
GRAND CHEROKEE III (WH, WK)	3.7 V6 4x4	148	01/08 – 12/10	4016	
GRAND CHEROKEE III (WH, WK)	3.7 V6 4x4	157	06/05 – 12/10	4016	
GRAND CHEROKEE III (WH, WK)	4.7 V8 4x4	170	06/05 – 12/10	4016	
GRAND CHEROKEE III (WH, WK)	4.7 V8 4x4	223	09/07 – 02/10	4016	
GRAND CHEROKEE III (WH, WK)	5.7 V8 4x4	240	06/05 – 12/10	4016	
GRAND CHEROKEE III (WH, WK)	5.7 V8 4x4	259	01/09 – 12/10	4016	
Grand Cherokee IV (WK, WK2) 3.0 4x4	-	175	09/2014 -	4338	4339
Grand Cherokee IV (WK, WK2) 3.0 CRD	EXF, EXN	179	09/2013 -	4338	4339
Grand Cherokee IV (WK, WK2) 3.0 CRD V6 4x4	EXF, EXN	140	02/2011 -	4338	4339
Grand Cherokee IV (WK, WK2) 3.0 CRD V6 4x4	EXF, EXN	160	01/2011 -	4338	4339
Grand Cherokee IV (WK, WK2) 3.0 CRD V6 4x4	EXF, EXN	177	02/2011 -	4338	4339
Grand Cherokee IV (WK, WK2) 3.0 CRD V6 4x4	EXF, EXN	184	07/2013 -	4338	4339
Grand Cherokee IV (WK, WK2) 3.0 TD V6 4x4	EXF, EXN	179	04/2014 -	4338	4339
Grand Cherokee IV (WK, WK2) 3.0 V6 4x4	EHD	172	06/2013 -	4338	4339
Grand Cherokee IV (WK, WK2) 3.0 V6 MJT	-	198	07/2013 -	4338	4339
Grand Cherokee IV (WK, WK2) 44350 V6	ERB	209	11/2010 -		4339
Grand Cherokee IV (WK, WK2) 44350 V6 4x4	-	207	11/2010 -	4338	4339
Grand Cherokee IV (WK, WK2) 44350 V6 4x4	ERB	210	11/2010 -		4339
Grand Cherokee IV (WK, WK2) 44350 V6 FlexFuel 4x4	ERB	210	11/2010 -		4339
Grand Cherokee IV (WK, WK2) 44350 VVT 4x4	ERB	213	04/2016 -		4339
Grand Cherokee IV (WK, WK2) 44382 V8	-	304	07/2013 -		4339
PATRIOT (MK74)	2.0	115	01/11 -	3955	3893
PATRIOT (MK74)	2.0	115	01/11 -		4106
PATRIOT (MK74)	2.0 CRD	103	02/07 -	3955	3893
PATRIOT (MK74)	2.0 CRD	103	02/07 -		4106
PATRIOT (MK74)	2.0 CRD 4x4	103	02/07 -	3955	3893

MAKE & MODEL   		KW	YEAR		
JEEP					
PATRIOT (MK74)	2.0 CRD 4x4	103	02/07 -		4106
PATRIOT (MK74)	2.2 CRD 4x4	100	01/11 -	3955	3893
PATRIOT (MK74)	2.2 CRD 4x4	100	01/11 -		4106
PATRIOT (MK74)	2.2 CRD 4x4	120	01/11 -	3955	3893
PATRIOT (MK74)	2.2 CRD 4x4	120	01/11 -		4106
PATRIOT (MK74)	2.4	125	06/09 -	3955	3893
PATRIOT (MK74)	2.4	125	06/09 -		4106
PATRIOT (MK74)	2.4 4x4	125	01/08 -	3955	3893
PATRIOT (MK74)	2.4 4x4	125	01/08 -		4106
PATRIOT (MK74)	2.4 Eco + 4x4	125	07/08 -	3955	3893
PATRIOT (MK74)	2.4 Eco + 4x4	125	07/08 -		4106
WRANGLER I (YJ, SJ_)	2.5	76	01/88 – 12/91	4182	
WRANGLER I (YJ, SJ_)	2.5	89	12/91 – 08/96	4182	
WRANGLER I (YJ, SJ_)	4.0	131	12/91 – 08/96	4182	
WRANGLER I (YJ, SJ_)	4.2 2WD	82	10/86 – 09/90	4182	
WRANGLER II (TJ)	2.4	105	11/02 – 04/07	4182	
WRANGLER II (TJ)	2.5	87	08/96 – 04/07	4182	
WRANGLER II (TJ)	2.8 CRDi	130	11/06 – 04/07	4005	
WRANGLER II (TJ)	3.8	153	02/06 – 12/08	4182	
WRANGLER II (TJ)	4.0	124	06/98 – 04/07	4182	
WRANGLER II (TJ)	4.0	130	08/96 – 04/07	4182	
WRANGLER II (TJ)	4.0 Rubicon	128	08/03 – 04/07	4182	
WRANGLER III (JK)	2.8 CRD	130	04/07 -	4005	4004
WRANGLER III (JK)	2.8 CRD	147	11/10 -	4005	4004
WRANGLER III (JK)	3.6 V6	209	10/11 -		4004
WRANGLER III (JK)	3.8	146	04/07 -	4005	4004
JEEP (BJC)					
JEEP 2500	2.4	94	06/03 – 02/06	4182	
JEEP 2500	2.4 All-wheel Drive	94	06/03 – 02/06	4182	
JEEP 2500	2.5	78	06/03 – 12/06	4182	
JEEP 2500	2.5 All-wheel Drive	78	06/03 – 12/06	4182	
KIA					
AVELLA	1.3	55	11/95 – 12/01	3522	
AVELLA	1.5	55	02/97 – 12/01	3522	
AVELLA Hatchback	1.3	55	11/95 – 12/01	3522	
AVELLA Hatchback	1.5	55	02/97 – 12/01	3522	
BESTA Box	2.2 D	48	02/96 – 12/03	3463	
BESTA Box	2.2 D	48	02/96 – 12/03	3499	
BONGO Bus	2.4 TDCi	69	10/03 -	3463	
BONGO Bus	2.4 TDCi	69	10/03 -	3499	
BONGO Bus	2.7 D	59	10/03 -	3463	
BONGO Bus	2.7 D	59	10/03 -	3499	
BONGO Bus	2.9 TDiC	90	10/03 -	3463	
BONGO Bus	2.9 TDiC	90	10/03 -	3499	
BONGO MPV	2.4 TDCi	69	10/03 -	3463	
BONGO MPV	2.4 TDCi	69	10/03 -	3499	
BONGO MPV	2.7 D	59	10/03 -	3463	
BONGO MPV	2.7 D	59	10/03 -	3499	
BONGO MPV	2.9 TDiC	90	10/03 -	3463	
BONGO MPV	2.9 TDiC	90	10/03 -	3499	
BONGO MPV	2.9 TDiC 4WD	90	10/03 -	3463	
BONGO MPV	2.9 TDiC 4WD	90	10/03 -	3499	
BONGO Platform/Chassis	2.4 TDCi	69	10/03 -	3463	
BONGO Platform/Chassis	2.4 TDCi	69	10/03 -	3499	
BONGO Platform/Chassis	2.9 TDiC	90	10/03 -	3463	
BONGO Platform/Chassis	2.9 TDiC	90	10/03 -	3499	
BONGO Platform/Chassis	2.9 TDiC 4WD	90	10/03 -	3463	
BONGO Platform/Chassis	2.9 TDiC 4WD	90	10/03 -	3499	
BORREGO	3.0 CRDi 4WD	184	11/07 -	3960	4060
BORREGO	3.8 4WD	202	06/08 -	3960	4060
CADENZA	2.4	132	01/10 -		4061
CADENZA	2.7	147	01/10 -		4061
CADENZA	2.7 BiFuel	121	01/10 -		4061
CADENZA	3.0 GDI	175	01/10 -		4061
CADENZA	3.0 GDI	199	01/10 -		4061
CADENZA	3.3 GDI	216	01/10 -		4061
CADENZA	3.5 CVVT	213	01/10 -		4061
CARENS (FJ_RS)	1.6 (GA6D)	77	07/02 -	4028	
CARENS (FJ_RS)	1.8 (TB)	93	07/02 -	4028	
CARENS (FJ_RS)	2.0	111	01/09 -	4028	
CARENS (FJ_RS)	2.0 CRDi (D4EA)	83	07/02 -	4028	
CARENS (FJ_RS)	2.0 CRDi (D4EA)	103	11/05 -	4028	
CARENS (FJ_RS)	2.0 CVVT (G4GC)	102	08/04 -	4028	
CARENS I (FC)	1.8 i	81	11/00 – 07/02	4269	
CARENS I (FC)	2.0 GSX	100	10/01 – 06/02	4269	

MAKE & MODEL		KW	YEAR		
KIA					
CARENS III (UN)	1.6 CRDi 110	85	10/10 -	4039	4165
CARENS III (UN)	1.6 CRDi 128	94	10/10 -	4039	4165
CARENS III (UN)	1.6 CVVT	93	10/10 -	4039	4165
CARENS III (UN)	1.6 CVVT	97	08/09 -	4039	4165
CARENS III (UN)	2.0 16V 4WD	104	09/04 -	4039	
CARENS III (UN)	2.0 CRDi	83	02/05 -	4039	
CARENS III (UN)	2.0 CRDi	100	01/06 -	4039	
CARENS III (UN)	2.0 CRDi	103	01/06 -	4039	
CARENS III (UN)	2.0 CRDi 115	85	05/07 -		4165
CARENS III (UN)	2.0 CRDi 135	100	08/09 -		4165
CARENS III (UN)	2.0 CRDi 140	103	09/06 -		4165
CARENS III (UN)	2.0 CVVT	106	09/06 -		4165
CARENS IV	1.6 GDi	99	03/13 -		4061
CARENS IV	1.7 CRDi	85	03/13 -		4061
CARENS IV	1.7 CRDi	100	03/13 -		4061
CARENS IV	2.0 GDi	122	03/13 -		4061
CARENS IV	2.0 GDi	130	03/13 -		4061
Carens IV 2.0 GDi	G4NC	122	03/2013 -	4041	4343
Carens IV 2.0 GDi	G4NC	130	03/2013 -	4041	4343
Carens IV 44348 GDi	G4FD	99	03/2013 -	4041	4343
Carens IV 44378 CRDi	D4FD	100	03/2013 -	4041	4343
Carens IV 44378 CRDi	D4FD	85	03/2013 -	4041	4343
CARNIVAL / GRAND CARNIVAL III (VQ)	2.2 CRDi	110	01/10 -	4035	
CARNIVAL / GRAND CARNIVAL III (VQ)	2.2 CRDi	143	01/10 -	4035	
CARNIVAL / GRAND CARNIVAL III (VQ)	2.7 V6	139	06/06 -	4035	
CARNIVAL / GRAND CARNIVAL III (VQ)	2.9 CRDi	136	06/06 -	4035	
CARNIVAL / GRAND CARNIVAL III (VQ)	2.9 CRDi LX	141	09/06 -	4035	
CARNIVAL / GRAND CARNIVAL III (VQ)	3.5 CVVT	203	06/11 -	4035	
CARNIVAL / GRAND CARNIVAL III (VQ)	3.8	182	01/10 -	4035	
CARNIVAL / GRAND CARNIVAL III (VQ)	3.8	202	06/10 -	4035	
CARNIVAL I (UP)	2.5 i	132	10/00 – 10/01	3802	
CARNIVAL I (UP)	2.5 V6	121	08/99 – 10/01	3802	
CARNIVAL I (UP)	2.5 V6	121	08/99 – 10/01	4182	
CARNIVAL I (UP)	2.9 TD	93	08/99 – 10/01	3802	
CARNIVAL I (UP)	2.9 TD	93	08/99 – 10/01	4182	
CARNIVAL II (GQ)	2.4	109	12/01 – 10/06	3802	
CARNIVAL II (GQ)	2.5 V6	110	10/01 – 06/06	3802	
CARNIVAL II (GQ)	2.9 CRDi	106	10/01 – 06/06	3802	
CARNIVAL II (GQ)	2.9 TD	93	01/99 – 09/07	3802	
CARNIVAL II (GQ)	3.5	143	07/02 – 04/06	3802	
CEE`D Sportswagon (JD)	1.0 T-GDI	74	07/15 -	4166	4061
CEE`D Sportswagon (JD)	1.0 T-GDI	88	07/15 -	4166	4061
CEE`D Sportswagon (JD)	1.4 CRDi 90	66	09/12 -	4166	4061
CEE`D Sportswagon (JD)	1.4 CVVT	73	09/12 -	4166	4061
CEE`D Sportswagon (JD)	1.4 MPI	74	04/15 -	4166	4061
CEE`D Sportswagon (JD)	1.6 CRDi 110	81	03/13 -	4166	4061
CEE`D Sportswagon (JD)	1.6 CRDi 128	94	09/12 -	4166	4061
CEE`D Sportswagon (JD)	1.6 CRDi 136	100	07/15 -	4166	4061
CEE`D Sportswagon (JD)	1.6 GDI	99	09/12 -	4166	4061
CEE'D II (JD)	1.4 CRDi (D4FC)	66	09/12 -	4028	
CEE'D II (JD)	1.4 CRDi 90 (D4FC)	66	05/12 -	4028	
CEE'D II (JD)	1.4 CVVT (G4FA)	73	05/12 -	4028	
CEE'D II (JD)	1.4 CVVT (G4FA-L)	66	05/12 -	4028	
CEE'D II (JD)	1.6 CRDi (D4FB)	94	09/12 -	4028	
CEE'D II (JD)	1.6 CRDi 115 (D4FB)	85	05/12 -	4028	
CEE'D II (JD)	1.6 CRDi 128 (D4FB)	94	05/12 -	4028	
CEE'D II (JD)	1.6 CRDi 90 (D4FB-L)	66	05/12 -	4028	
CEE'D II (JD)	1.6 CVVT (G4FC)	92	05/12 -	4028	
CEE'D II (JD)	1.6 GDI (G4FD)	99	05/12 -	4028	
CEE'D (ED)	1.4 (G4FA)	77	10/10 – 12/12	4028	
CEE'D (ED)	1.4 (G4FA)	80	12/06 – 12/12	4028	
CEE'D (ED)	1.4 CVVT (G4FA-L)	66	07/09 – 12/12	4028	
CEE'D (ED)	1.6 (G4FC)	85	09/07 – 11/12	4028	
CEE'D (ED)	1.6 (G4FC)	90	12/06 – 12/12	4028	
CEE'D (ED)	1.6 (G4FC)	93	09/07 – 12/12	4028	
CEE'D (ED)	1.6 CRDi 115 (D4FB)	85	12/06 – 12/12	4028	
CEE'D (ED)	1.6 CRDi 90 (D4FB-L)	66	09/07 – 12/12	4028	
CEE'D (ED)	1.6 CRDi 90 (D4FB-L)	66	12/06 – 12/12	4028	
CEE'D (ED)	1.6 CVVT (G4FC)	92	06/09 – 12/12	4028	
CEE'D (ED)	2.0 (G4GC)	105	12/06 – 12/12	4028	
CEE'D (ED)	2.0 CRDi 140 (D4EA-F)	103	09/07 – 12/12	4028	
CEE'D (JD)	1.0 T-GDI	74	07/15 -	4166	4061
CEE'D (JD)	1.0 T-GDI	88	07/15 -	4166	4061
CEE'D (JD)	1.4 CRDi 90	66	05/12 -	4166	4061
CEE'D (JD)	1.4 CVVT	66	05/12 -	4166	4061
CEE'D (JD)	1.4 CVVT	73	05/12 -	4166	4061

MAKE & MODEL   		KW	YEAR		
KIA					
CEE'D (JD)	1.4 MPI	74	04/15 -	4166	4061
CEE'D (JD)	1.6 CRDi 115	85	05/12 -	4166	4061
CEE'D (JD)	1.6 CRDi 128	94	05/12 -	4166	4061
CEE'D (JD)	1.6 CRDi 136	100	07/15 -	4166	4061
CEE'D (JD)	1.6 CRDi 90	66	05/12 -	4166	4061
CEE'D (JD)	1.6 CVVT	92	05/12 -	4166	4061
CEE'D (JD)	1.6 GDI	99	05/12 -	4166	4061
CEE'D (JD)	1.6 GT	150	06/13 -	4166	4061
Ceed II (JD) 44287 CRDi 90	D4FC	66	05/2012 -	4342	4343
Ceed II (JD) 44287 CVVT	G4FA	73	05/2012 -	4342	4343
Ceed II (JD) 44287 GPL	-	73	01/2013 -	4342	4343
Ceed II (JD) 44348 CRDI	D4FB	85	07/2012 -	4342	4343
Ceed II (JD) 44348 CRDI	D4FB-L	66	07/2012 -	4342	4343
Ceed II (JD) 44348 CRDi 110	D4FB	81	05/2012 -	4342	4343
Ceed II (JD) 44348 CRDi 128	D4FB	94	05/2012 -	4342	4343
Ceed II (JD) 44348 CRDi 136	D4FB	100	07/2015 -	4342	4343
Ceed II (JD) 44348 CVVT	G4FC	92	05/2012 -	4342	4343
Ceed II (JD) 44348 GDI	G4FD	99	05/2012 -	4342	4343
Ceed II Sportswagon (JD) 44287 CRDi 90	D4FC	66	09/2012 -	4342	4343
Ceed II Sportswagon (JD) 44287 CVVT	G4FA	73	09/2012 -	4342	4343
Ceed II Sportswagon (JD) 44287 GPL	-	73	01/2013 -	4342	4343
Ceed II Sportswagon (JD) 44348 CRDI	D4FB	85	07/2012 -	4342	4343
Ceed II Sportswagon (JD) 44348 CRDI	D4FB-L	66	07/2012 -	4342	4343
Ceed II Sportswagon (JD) 44348 CRDi 110	D4FB	81	03/2013 -	4342	4343
Ceed II Sportswagon (JD) 44348 CRDi 128	D4FB	94	09/2012 -	4342	4343
Ceed II Sportswagon (JD) 44348 CRDi 136	D4FB	100	07/2015 -	4342	4343
Ceed II Sportswagon (JD) 44348 GDI	G4FD	99	09/2012 -	4342	4343
Ceed III (CD) 1.0 T-GDI	G3LC	74	09/2019 -		4343
Ceed III (CD) 1.0 T-GDI	G3LC	88	03/2018 -		4343
Ceed III (CD) 44287	G4LC	73	03/2018 -		4343
Ceed III (CD) 44287 LPG	G4LC	71	12/2018 -		4343
Ceed III (CD) 44287 T-GDI	G4LD	103	03/2018 -		4343
Ceed III (CD) 44348	G4FG	94	03/2018 -		4343
Ceed III (CD) 44348 CRDi 115	D4FE	85	03/2018 -		4343
Ceed III (CD) 44348 CRDi 115 Eco-Dynamics+	D4FE	85	12/2019 -		4343
Ceed III (CD) 44348 CRDi 136	D4FE	100	03/2018 -		4343
Ceed III (CD) 44348 CRDi 136 Eco-Dynamics+	D4FE	100	12/2019 -		4343
Ceed III (CD) 44348 T-GDI GT	G4FJ	150	10/2018 -		4343
Ceed III Sportswagon (CD) 1.0 T-GDI	G3LC	74	09/2019 -		4343
Ceed III Sportswagon (CD) 1.0 T-GDI	G3LC	88	05/2018 -		4343
Ceed III Sportswagon (CD) 44287	G4LC	73	04/2018 -		4343
Ceed III Sportswagon (CD) 44287 LPG	G4LC	71	12/2018 -		4343
Ceed III Sportswagon (CD) 44287 T-GDI	G4LD	103	04/2018 -		4343
Ceed III Sportswagon (CD) 44348	G4FG	94	05/2018 -		4343
Ceed III Sportswagon (CD) 44348 CRDi 115	D4FE	85	05/2018 -		4343
Ceed III Sportswagon (CD) 44348 CRDi 115 Eco-Dynamics+	D4FE	85	12/2019 -		4343
Ceed III Sportswagon (CD) 44348 CRDi 136	D4FE	100	05/2018 -		4343
Ceed III Sportswagon (CD) 44348 CRDi 136 Eco-Dynamics+	D4FE	100	12/2019 -		4343
Ceed III Sportswagon (CD) 44348 GDI Hybrid	G4LE	104	12/2019 -		4343
Ceed III Sportswagon (CD) 44348 GDI Hybrid	G4LE	77	12/2019 -		4343
CERATO II / FORTE II / K3 II (TD)	1.6 CVVT (G4FC)	91	02/09 -	4028	
CERATO II / FORTE II / K3 II (TD)	2.0	115	01/09 -	4028	
CERATO II / FORTE II / K3 II (TD)	2.0 (G4KD)	115	01/09 -	4028	
CERATO II KOUP / FORTE KOUP / K3 (TD)	1.6 CVVT (G4FC)	91	10/09 -	4028	
CERATO II KOUP / FORTE KOUP / K3 (TD)	2.0 (G4KD)	115	01/09 -	4028	
CERATO II KOUP / FORTE KOUP / K3 (TD)	2.4 (G4KE)	129	09/10 – 12/13	4028	
CERATO III / FORTE III / K3	1.6 CVVT	95	11/14 -	4028	
CERATO III / FORTE III / K3	1.6 Flex	94	06/13 -	4028	
CERATO III / FORTE III / K3	1.6 GDI (G4FD)	103	09/12 -	4028	
CERATO III / FORTE III / K3	1.6 MPI (G4FC)	96	06/13 -	4028	
CERATO III / FORTE III / K3	1.6 VGT (D4FB)	94	09/12 -	4028	
CERATO III / FORTE III / K3	2.0 CVVT	118	07/16 -	4028	
CERATO III / FORTE III / K3	2.0 MPi (G4KD)	110	06/13 -	4028	
CERATO III KOUP / K3 KOUP	1.6 GDI (G4FD)	103	12/13 -	4028	
CERATO III KOUP / K3 KOUP	1.6 T-GDI (G4FJ)	150	12/13 -	4028	
CERATO III KOUP / K3 KOUP	1.6 T-GDI (G4FJ)	152	07/16 -	4028	
CERATO III KOUP / K3 KOUP	2.0 MPi	110	12/13 -	4028	
CERATO III KOUP / K3 KOUP	2.0 MPi	118	09/14 -	4028	
CERATO (LD)	1.5 CRDi	75	07/05 -	4001	
CERATO (LD)	1.5 CRDi	75	07/05 -	4087	
CERATO (LD)	1.6	77	07/04 -	4001	
CERATO (LD)	1.6	77	07/04 -	4087	
CERATO (LD)	1.6	90	05/06 -	4001	
CERATO (LD)	1.6	90	05/06 -	4087	
CERATO (LD)	1.6 CRDi	85	06/05 -	4001	
CERATO (LD)	1.6 CRDi	85	06/05 -	4087	

MAKE & MODEL		KW	YEAR		
KIA					
CERATO (LD)	1.8	93	08/05 -	4001	
CERATO (LD)	1.8	93	08/05 -	4087	
CERATO (LD)	2.0	105	04/04 -	4001	
CERATO (LD)	2.0	105	04/04 -	4087	
CERATO (LD)	2.0 CRDi	83	04/04 -	4001	
CERATO (LD)	2.0 CRDi	83	04/04 -	4087	
CERATO Hatchback	1.6 GDI	103	09/12 -	4166	
CERATO II Saloon (TD)	2.0	115	01/09 -		3980
CERATO II Saloon (TD)	2.0	116	07/10 -		3980
CERATO KOUP	1.6 GDI	103	12/13 -	4166	
CERATO KOUP	1.6 T-GDI	150	12/13 -	4166	
CERATO KOUP	2.0 MPi	110	12/13 -	4166	
CERATO KOUP (TD)	1.6 CVVT	91	10/09 -		3980
CERATO KOUP (TD)	1.6 CVVT	150	09/13 -	4166	
CERATO KOUP (TD)	2.0	115	01/09 -		3980
CERATO Saloon	1.6 GDI	103	09/12 -	4166	
CERATO Saloon	1.6 MPi	96	06/13 -	4166	
CERATO Saloon	1.6 VGT	94	09/12 -	4166	
CERATO Saloon	1.8	85	10/01 – 07/04	4269	
CERATO Saloon	2.0 MPi	110	06/13 -	4166	
CERATO Saloon (LD)	1.5 CRDi	75	07/05 -	4001	
CERATO Saloon (LD)	1.5 CRDi	75	07/05 -	4087	
CERATO Saloon (LD)	1.6	77	04/04 -	4001	
CERATO Saloon (LD)	1.6	77	04/04 -	4087	
CERATO Saloon (LD)	1.6	90	05/06 -	4001	
CERATO Saloon (LD)	1.6	90	05/06 -	4087	
CERATO Saloon (LD)	1.6 CRDi	85	06/05 -	4001	
CERATO Saloon (LD)	1.6 CRDi	85	06/05 -	4087	
CERATO Saloon (LD)	1.8 CVVT	93	05/05 -	4001	
CERATO Saloon (LD)	1.8 CVVT	93	05/05 -	4087	
CERATO Saloon (LD)	2.0	105	04/04 -	4001	
CERATO Saloon (LD)	2.0	105	04/04 -	4087	
CERATO Saloon (LD)	2.0 CRDi	83	04/04 -	4001	
CERATO Saloon (LD)	2.0 CRDi	83	04/04 -	4087	
CLARUS (K9A)	1.8 i 16V	85	07/96 -	4269	
CLARUS (K9A)	2.0 i 16V	98	07/96 -	4269	
CLARUS Estate (GC)	1.8 i 16V	85	05/98 -	4269	
CLARUS Estate (GC)	2.0 i 16V	98	05/98 -	4269	
FORTE (U.S.A.)	2.0	116	09/09 -	4028	
FORTE (U.S.A.)	2.4	129	09/09 -	4028	
FORTE (U.S.A.)	2.4 (G4KE)	127	09/09 -	4028	
JOICE	2.0	88	09/01 -	3632	
JOICE	2.0	102	02/00 -	3632	
K2500 (SD)	2.5 CRDi	96	01/10 -	3574	
K2500 (SD)	2.5 D	69	01/03 -	3574	
K2700 (K62W)	2.7 D	61	03/97 – 09/99	3574	
K2700 (SD)	2.7 D	59	10/99 -	3574	
K2900	2.9 D	92	01/08 -	3574	
LCV K2500 (SD)/ Frontier/ Bongo III 44318 D	D4BH	69	01/2003 -	3914/1	
LCV K2900 44441 D	J3(CRDi)	92	01/2008 -	3914/1	
MAGENTIS (GD, MS)	2.0	100	05/01 – 09/05	3959	
MAGENTIS (GD, MS)	2.0	100	05/01 – 09/05	3993	
MAGENTIS (GD, MS)	2.5 V6	124	05/01 -	3959	
MAGENTIS (GD, MS)	2.5 V6	124	05/01 -	3993	
MAGENTIS (GD, MS)	2.7 V6	132	04/04 -	3993	
MAGENTIS (MG)	2.0	106	11/05 -	3993	
MAGENTIS (MG)	2.0	121	07/09 -	3993	
MAGENTIS (MG)	2.0 CRDi	100	11/05 – 12/08	3993	
MAGENTIS (MG)	2.0 CRDi	103	04/06 -	3993	
MAGENTIS (MG)	2.0 CRDi	110	04/06 -	3993	
MAGENTIS (MG)	2.7	138	11/05 -	3993	
MAGENTIS (MG)	2.7 V6	142	07/09 -	3993	
Niro 44348 GDI Hybrid	G4LE	104	09/2016 -		4343
Niro 44348 GDI Hybrid	G4LE	77	09/2016 -		4343
Niro EV	-	100	08/2018 -		4343
Niro EV	EM16	150	08/2018 -		4343
OPIRUS (GH)	2.7	120	10/03 – 09/06	3976/1	
OPIRUS (GH)	2.7	120	10/03 – 09/06	3993	
OPIRUS (GH)	2.7	139	10/06 -	3976/1	
OPIRUS (GH)	2.7	139	10/06 -	3993	
OPIRUS (GH)	3.0 GH300	138	09/03 -	3976/1	
OPIRUS (GH)	3.3	173	10/06 -	3976/1	
OPIRUS (GH)	3.3	173	10/06 -	3993	
OPIRUS (GH)	3.5	149	09/03 -	3976/1	
OPIRUS (GH)	3.5	149	09/03 -	3993	
OPIRUS (GH)	3.8 V6	196	10/06 -	3976/1	

MAKE & MODEL   		KW	YEAR		
KIA					
OPIRUS (GH)	3.8 V6	196	10/06 -	3993	
OPTIMA	1.7 CRDi	100	03/12 -	4233	4061
OPTIMA	2.0	125	03/12 -	4233	4061
OPTIMA	2.0	204	09/10 -	4233	4061
OPTIMA	2.0 CVVL	121	03/12 -	4233	4061
OPTIMA	2.0 CVVT Hybrid	110	03/12 -	4233	4061
OPTIMA	2.0 CVVT Hybrid	140	12/12 -	4233	4061
OPTIMA	2.4	132	03/12 -	4233	4061
OPTIMA	2.4	149	09/10 -	4233	4061
OPTIMA	2.4 Hybrid	154	09/11 -	4233	4061
Optima II / K5 2.0	G4KD	125	03/2012 -		4343
Optima II / K5 2.0	G4KH	204	09/2010 -		4343
Optima II / K5 2.0 CVVL	G4KD	121	03/2012 -		4343
Optima II / K5 2.0 CVVL	G4ND	120	09/2015 -		4343
Optima II / K5 2.0 CVVT Hybrid	-	140	12/2012 -		4343
Optima II / K5 2.0 CVVT Hybrid	G4NE	110	03/2012 -		4343
Optima II / K5 44288	G4KJ	132	03/2012 -		4343
Optima II / K5 44288	G4KJ	149	09/2010 -		4343
Optima II / K5 44288 Hybrid	-	154	09/2011 -		4343
Optima II / K5 44378 CRDi	D4FD	100	03/2012 -		4343
Optima II / K5 44378 CRDi	D4FD	104	11/2015 -		4343
Optima II Sportswagon (JF) 2.0 CVVL	-	120	09/2016 -		4343
Optima II Sportswagon (JF) 2.0 GDI Hybrid	G4NG	151	04/2017 -		4343
Optima II Sportswagon (JF) 2.0 GDi Hybrid	G4NG	115	04/2017 -		4343
Optima II Sportswagon (JF) 2.0 T-GDi	G4KH	180	09/2016 -		4343
Optima II Sportswagon (JF) 2.0 T-GDi GT	G4KH	175	01/2018 -		4343
Optima II Sportswagon (JF) 44348 CRDi	D4FE	100	01/2018 -		4343
Optima II Sportswagon (JF) 44348 T-GDI	G4FJ	132	01/2018 -		4343
Optima II Sportswagon (JF) 44378 CRDi	D4FD	104	09/2016 -		4343
Optima II Sportswagon (JF) 44378 CRDi	D4FD	99	09/2016 -		4343
PICANTO (BA)	1.0	45	04/04 -	3968	3969
PICANTO (BA)	1.0	45	04/04 -	4265	
PICANTO (BA)	1.0	46	09/07 -	3968	3969
PICANTO (BA)	1.0	46	09/07 -	4265	
PICANTO (BA)	1.0	51	05/11 -	3968	3969
PICANTO (BA)	1.0	51	05/11 -	4265	
PICANTO (BA)	1.1	48	04/04 -	3968	3969
PICANTO (BA)	1.1	48	04/04 -	4265	
PICANTO (TA)	1.0 Bi-Fuel	60	05/11 -	3968	3969
PICANTO (TA)	1.0 Bi-Fuel	60	05/11 -	4265	
PICANTO (TA)	1.0 LPG	49	08/13 -	4265	3969
PICANTO (TA)	1.1 CRDi	55	11/05 -	3968	3969
PICANTO (TA)	1.1 CRDi	55	11/05 -	4265	
PICANTO (TA)	1.2	63	09/11 -	3968	3969
PICANTO (TA)	1.2	63	09/11 -	4265	
PREGIO Box (TB)	2.5 TCi D	69	09/02 -	3802	
PREGIO Box (TB)	2.7 D	60	10/97 -	3653	
PREGIO Box (TB)	2.7 D	60	10/97 -	3802	
PREGIO Bus	2.5 D	69	08/95 – 09/04	3653	
PREGIO Bus	2.5 D	69	08/95 – 09/04	3802	
PRIDE (DA)	1.1 i	38	01/91 -	3723	
PRIDE (DA)	1.3	54	05/94 – 05/97	3723	
PRIDE (DA)	1.3 16V	44	01/90 -	3723	
PRIDE (DA)	1.3 16V	47	10/96 -	3723	
PRIDE (DA)	1.3 16V	53	01/90 -	3723	
PRIDE (DA)	1.3 i	51	01/90 -	3723	
PRIDE (DA)	1.4 LX	71	03/05 -	3880	3880
PRIDE (DA)	1.5 CRDi LX	81	03/05 -	3880	3880
PRIDE (DA)	1.6 CVVT LX	82	03/05 -	3880	3880
PRIDE Estate	1.3	47	08/99 -	3723	
PRIDE Van (DA)	1.3 16V	44	04/92 – 10/96	3723	
PRIDE Van (DA)	1.3 16V	47	10/96 – 06/99	3723	
PRO CEE´D (JD)	1.0 T-GDI	74	07/15 -	4166	4061
PRO CEE´D (JD)	1.0 T-GDI	88	07/15 -	4166	4061
PRO CEE´D (JD)	1.4 CRDi 90	66	03/13 -	4166	4061
PRO CEE´D (JD)	1.4 CVVT	73	03/13 -	4166	4061
PRO CEE´D (JD)	1.4 MPI	74	04/15 -	4166	4061
PRO CEE´D (JD)	1.6 CRDi 110	81	03/13 -	4166	4061
PRO CEE´D (JD)	1.6 CRDi 128	94	03/13 -	4166	4061
PRO CEE´D (JD)	1.6 CRDi 136	100	07/15 -	4166	4061
PRO CEE´D (JD)	1.6 GDI	99	03/13 -	4166	4061
PRO CEE´D (JD)	1.6 GT	150	06/13 -	4166	4061
PRO CEE'D (ED)	1.4 (G4FA)	80	02/08 – 09/12	4028	
PRO CEE'D (ED)	1.4 CVVT (G4FA-L)	66	06/10 – 09/12	4028	
PRO CEE'D (ED)	1.6 (G4FC)	90	02/08 – 09/12	4028	
PRO CEE'D (ED)	1.6 (G4FC)	93	02/08 – 09/12	4028	

MAKE & MODEL		KW	YEAR		
KIA					
PRO CEE'D (ED)	1.6 CRDi 115 (D4FB)	85	02/08 – 09/12	4028	
PRO CEE'D (ED)	1.6 CRDi 90 (D4FB-L)	66	02/08 – 09/12	4028	
PRO CEE'D (ED)	2.0 (G4GC)	105	02/08 – 09/12	4028	
PRO CEE'D (ED)	2.0 CRDi 140 (D4EA-F)	103	02/08 – 09/12	4028	
PRO CEE'D (ED)	2.0 LPG (G4GC)	105	01/09 – 12/09	4028	
Pro Ceed II (JD) 44287 CRDi 90	D4FC	66	03/2013 -	4342	4343
Pro Ceed II (JD) 44287 CVVT	G4FA	73	03/2013 -	4342	4343
Pro Ceed II (JD) 44287 MPI	-	73	07/2013 -	4342	4343
Pro Ceed II (JD) 44287 MPI	G4LC	74	04/2015 -	4342	4343
Pro Ceed II (JD) 44348 CRDi 110	D4FB	81	03/2013 -	4342	4343
Pro Ceed II (JD) 44348 CRDi 128	D4FB	94	03/2013 -	4342	4343
Pro Ceed II (JD) 44348 CRDi 136	D4FB	100	07/2015 -	4342	4343
Pro Ceed II (JD) 44348 GDI	G4FD	99	03/2013 -	4342	4343
Pro Ceed III (CD) 1.0 T-GDI	G3LC	88	10/2018 -		4343
Pro Ceed III (CD) 44287 T-GDI	G4LD	103	10/2018 -		4343
Pro Ceed III (CD) 44348 CRDi 136	D4FE	100	10/2018 -		4343
Pro Ceed III (CD) 44348 CRDi 136 Eco-Dynamics+	D4FE	100	12/2019 -		4343
Pro Ceed III (CD) 44348 T-GDI	G4FJ	147	10/2018 -		4343
Pro Ceed III (CD) 44348 T-GDI	G4FJ	150	10/2018 -		4343
RETONA (CE)	2.0 16V	94	05/00 -	4009	
RETONA (CE)	2.0 TD	61	06/99 -	4009	
RIO Estate (DC)	1.3	55	08/00 – 02/05	3522	
RIO Estate (DC)	1.3	55	08/00 – 02/05	4269	
RIO Estate (DC)	1.3	60	08/00 – 02/05	3522	
RIO Estate (DC)	1.3	60	08/00 – 02/05	4269	
RIO Estate (DC)	1.5 16V	71	09/02 – 02/05	4269	
RIO Estate (DC)	1.5 16V	72	08/00 – 02/05	3522	
RIO Estate (DC)	1.5 16V	72	08/00 – 02/05	4269	
RIO II (JB)	1.4 16V	71	03/05 -	3880	3880
RIO II (JB)	1.5 CRDi	65	06/08 -	3880	3880
RIO II (JB)	1.5 CRDi	81	03/05 -	3880	3880
RIO II (JB)	1.6 CVVT	82	03/05 -	3880	3880
RIO II Saloon (JB)	1.4 16V	71	03/05 -	3880	3880
RIO II Saloon (JB)	1.5 CRDi	65	06/08 -	3880	3880
RIO II Saloon (JB)	1.5 CRDi	81	03/05 -	3880	3880
RIO II Saloon (JB)	1.6 16V	82	03/05 -	3880	3880
RIO III (UB)	1.1 CRDi	55	09/11 -	4136	4061
RIO III (UB)	1.2 CVVT	62	11/14 -	4136	4061
RIO III (UB)	1.25 CVVT	63	09/11 -	4136	4061
RIO III (UB)	1.25 CVVT	65	09/11 -	4136	4061
RIO III (UB)	1.25 LPG	63	09/11 -	4136	4061
RIO III (UB)	1.4 CRDi	66	09/11 -	4136	4061
RIO III (UB)	1.4 CVVT	79	09/11 -	4136	4061
RIO III (UB)	1.4 CVVT	80	09/11 -	4136	4061
RIO III (UB)	1.6 CVVT	90	06/12 -	4136	4061
RIO III Saloon (UB)	1.2 CVVT	62	11/14 -	4136	4061
RIO III Saloon (UB)	1.25 CVVT	63	10/11 -	4136	4061
RIO III Saloon (UB)	1.4 CVVT	80	10/11 -	4136	4061
RIO III Saloon (UB)	1.6 CVVT	90	06/12 -	4136	4061
RIO Saloon (DC_)	1.3	55	09/00 – 02/05	3522	
RIO Saloon (DC_)	1.3	55	09/00 – 02/05	4269	
RIO Saloon (DC_)	1.3	60	08/02 – 02/05	4269	
RIO Saloon (DC_)	1.5	70	09/02 – 02/05	4269	
RIO Saloon (DC_)	1.5 16V	71	09/02 – 02/05	4269	
RIO Saloon (DC_)	1.5 16V	72	09/00 – 02/05	3522	
RIO Saloon (DC_)	1.5 16V	72	09/00 – 02/05	4269	
Rio III (UB) / Pride 44197 CRDi	D3FA	55	09/2011 -		4343
Rio III (UB) / Pride 44228	G4LA	51	09/2011 -		4343
Rio III (UB) / Pride 44228 CVVT	G4LA	62	11/2014 -		4343
Rio III (UB) / Pride 44287 CRDi	D4FC	66	09/2011 -		4343
Rio III (UB) / Pride 44287 CVVT	G4FA	78	10/2011 -		4343
Rio III (UB) / Pride 44287 CVVT	G4FA	79	09/2011 -		4343
Rio III (UB) / Pride 44287 CVVT	G4FA	80	09/2011 -		4343
Rio III (UB) / Pride 44348	G4FD	103	09/2012 -		4343
Rio III (UB) / Pride 44348 CVVT	G4FC	90	06/2012 -		4343
Rio III (UB) / Pride 45658	G4LA	64	11/2014 -		4343
Rio III (UB) / Pride 45658 CVVT	G4LA	63	09/2011 -		4343
Rio III (UB) / Pride 45658 CVVT	G4LA	65	09/2011 -		4343
Rio III (UB) / Pride 45658 LPG	G4LA	63	09/2011 -		4343
Rio III Sedan (UB) / Pride 44228 CVVT	G4LA	62	11/2014 -		4343
Rio III Sedan (UB) / Pride 44287 CVVT	G4FA	78	09/2011 -		4343
Rio III Sedan (UB) / Pride 44287 CVVT	G4FA	79	06/2011 -		4343
Rio III Sedan (UB) / Pride 44287 CVVT	G4FA	80	10/2011 -		4343
Rio III Sedan (UB) / Pride 44348	G4FD	103	06/2011 -		4343
Rio III Sedan (UB) / Pride 44348 CVVT	G4FC	90	06/2012 -		4343
Rio III Sedan (UB) / Pride 45658 CVVT	G4LA	61	04/2015 -		4343

MAKE & MODEL   		KW	YEAR		
KIA					
Rio III Sedan (UB) / Pride 45658 CVVT	G4LA	63	10/2011 -		4343
Rio III Sedan (UB) / Pride 45658 CVVT	G4LA	65	06/2011 -		4343
Rio IV (YB, SC, FB) 1.0 T-GDI 100	G3LC, G3LE	74	01/2017 -		4343
Rio IV (YB, SC, FB) 1.0 T-GDI 120	G3LC	88	01/2017 -		4343
Rio IV (YB, SC, FB) 1.0 T-GDI 120 Eco-Dynamics+	G3LF	88	01/2017 -		4343
Rio IV (YB, SC, FB) 44228 Mpi GPL	-	62	07/2017 -		4343
Rio IV (YB, SC, FB) 44287	G4LC	73	01/2017 -		4343
Rio IV (YB, SC, FB) 44287	G4LC	74	01/2017 -		4343
Rio IV (YB, SC, FB) 44287 CRDi 77	D4FC	57	01/2017 -		4343
Rio IV (YB, SC, FB) 44287 CRDi 90	D4FC	66	01/2017 -		4343
Rio IV (YB, SC, FB) 44348	G4FG	90	01/2017 -		4343
Rio IV (YB, SC, FB) 45658	G4LA	62	01/2017 -		4343
Rio IV (YB, SC, FB) 45658 LPG	G4LA	60	07/2020 -		4343
Rio IV Sedan (SC, FB) 44287	G4LC	73	07/2017 -		4343
Rio IV Sedan (SC, FB) 44287	G4LC	74	07/2017 -		4343
Rio IV Sedan (SC, FB) 44348	G4FG	90	07/2017 -		4343
SEPHIA (FA)	1.5 i	59	02/96 – 10/97	3570	3545
SEPHIA (FA)	1.5 i	59	02/96 – 10/97	3740	
SEPHIA (FA)	1.5 i	59	02/96 – 10/97	4269	
SEPHIA (FA)	1.6 i	59	01/95 – 10/97	3570	3545
SEPHIA (FA)	1.6 i	59	01/95 – 10/97	3740	
SEPHIA (FA)	1.6 i	59	01/95 – 10/97	4269	
SEPHIA (FA)	1.8 i 16V	82	01/95 – 10/97	3570	3545
SEPHIA (FA)	1.8 i 16V	82	01/95 – 10/97	3740	
SEPHIA (FA)	1.8 i 16V	82	01/95 – 10/97	4269	
SEPHIA Saloon (FA)	1.5 i	59	02/96 – 10/97	3570	3545
SEPHIA Saloon (FA)	1.5 i	59	02/96 – 10/97	4269	3545
SEPHIA Saloon (FA)	1.5 i	59	02/96 – 10/97	3740	
SEPHIA Saloon (FA)	1.6 i	59	09/93 – 10/97	3570	
SEPHIA Saloon (FA)	1.6 i	59	09/93 – 10/97	3740	
SEPHIA Saloon (FA)	1.6 i	59	09/93 – 10/97	4269	
SEPHIA Saloon (FA)	1.8 i 16V	82	01/95 – 10/97	3570	3545
SEPHIA Saloon (FA)	1.8 i 16V	82	01/95 – 10/97	3740	
SEPHIA Saloon (FA)	1.8 i 16V	82	01/95 – 10/97	4269	
SHUMA (FB) / SEPHIA (FB)	1.5 i 16V	65	10/97 – 03/01	3740	
SHUMA (FB) / SEPHIA (FB)	1.6	75	01/01 – 12/01	3740	
SHUMA (FB) / SEPHIA (FB)	1.8 i 16V	81	10/97 – 03/01	3740	
SHUMA II (FB) / SEPHIA II (FB)	1.6	75	05/01 – 08/04	4269	
SHUMA II (FB) / SEPHIA II (FB)	1.8	81	05/01 – 06/04	4269	
SHUMA II (FB) / SEPHIA II (FB)	1.8	84	04/03 – 08/04	4269	
SHUMA II Saloon (FB) / SEPHIA II Saloon (FB)	1.6	75	05/01 – 05/04	4269	
SHUMA Saloon (FB) / SEPHIA Saloon (FB)	1.5	59	03/96 – 12/98	3740	
SHUMA Saloon (FB) / SEPHIA Saloon (FB)	1.5 i 16V	65	10/97 – 10/01	3740	
SHUMA Saloon (FB) / SEPHIA Saloon (FB)	1.8 GX	85	05/99 – 10/01	3740	
SORENTO I (JC)	2.4	102	08/02 -	3978	3979
SORENTO I (JC)	2.5 CRDi	103	08/02 -	3978	3979
SORENTO I (JC)	2.5 CRDi	120	05/06 -	3978	3979
SORENTO I (JC)	2.5 CRDi	125	12/06 -	3978	3979
SORENTO I (JC)	3.3 V6	177	12/06 -	3978	3979
SORENTO I (JC)	3.3 V6 4WD	143	08/02 -	3978	3979
SORENTO I (JC)	3.5 V6 4WD	182	02/07 -	3978	3979
SORENTO I (JC)	3.8 4WD	196	09/06 -	3978	3979
SORENTO II (XM)	2.0 CRDi	110	11/10 -	3960	4060
SORENTO II (XM)	2.0 CRDi 4WD	110	11/10 -	3960	4060
SORENTO II (XM)	2.2 CRDi	145	11/09 -	3960	4060
SORENTO II (XM)	2.2 CRDi 4WD	145	11/09 -	3960	4060
SORENTO II (XM)	2.4 CVVT	128	11/09 -	3960	4060
SORENTO II (XM)	2.4 CVVT	141	10/12 -	3960	4060
SORENTO II (XM)	2.4 CVVT 4WD	128	11/09 -	3960	4060
SORENTO II (XM)	2.4 CVVT 4WD	141	10/12 -	3960	4060
SORENTO II (XM)	2.4 GDI	141	10/12 -	3960	4060
SORENTO II (XM)	2.4 GDI 4WD	141	10/12 -	3960	4060
SORENTO II (XM)	3.5	204	05/13 -	3960	4060
SORENTO III (UM)	2.4 GDI	138	01/15 -		4060
SOUL (AM)	1.6	91	09/09 – 12/14	3959	
SOUL (AM)	1.6 CRDi 115	85	02/09 -	3959	
SOUL (AM)	1.6 CRDi 128	94	02/09 -	3959	
SOUL (AM)	1.6 CVVT	77	02/09 -	3959	
SOUL (AM)	1.6 CVVT	93	02/09 -	3959	
SOUL (AM)	1.6 CVVT	95	03/12 -	3959	
SOUL (AM)	1.6 GDI	103	06/11 -	3959	
SOUL II (PS)	1.6 CRDi 128	94	02/14 -	4049	4061
SOUL II (PS)	1.6 CRDi 128 (D4FB)	94	02/14 -	4028	
SOUL II (PS)	1.6 CRDi 136	100	04/15 -	4049	
SOUL II (PS)	1.6 CRDi 136 (D4FB)	100	04/15 -	4028	
SOUL II (PS)	1.6 CVVT	95	07/16 -	4028	

MAKE & MODEL		KW	YEAR		
KIA					
SOUL II (PS)	1.6 CVVT (G4FG)	91	02/14 -	4028	
SOUL II (PS)	1.6 CVVT Flex	94	09/14 -	4028	
SOUL II (PS)	1.6 GDI	97	02/14 -	4049	4061
SOUL II (PS)	1.6 GDI (G4FD)	97	02/14 -	4028	
SOUL II (PS)	2.0 CVVT (G4KD)	116	07/16 -	4028	
SOUL II (PS)	2.0 CVVT (G4NA)	113	02/14 -	4028	
SOUL II (PS)	EV Electric	25	09/14 -	4028	
SOUL II (PS)	EV Electric	81	09/14 -	4028	
Soul II (PS) 44348 CRDi 128	D4FB	94	02/2014 -		4343
Soul II (PS) 44348 CRDi 136	D4FB	100	04/2015 -		4343
Soul II (PS) 44348 GDI	G4FD	97	02/2014 -		4343
Soul II (PS) 44348 GPL	-	96	09/2014 -		4343
SPORTAGE (JE_, KM_)	2.0 16V 4WD	104	09/04 -	3959	
SPORTAGE (JE_, KM_)	2.0 16V 4WD	104	09/04 -	3993	
SPORTAGE (JE_, KM_)	2.0 CRDi	83	02/05 -	3959	
SPORTAGE (JE_, KM_)	2.0 CRDi	83	02/05 -	3993	
SPORTAGE (JE_, KM_)	2.0 CRDi	100	01/06 -	3959	
SPORTAGE (JE_, KM_)	2.0 CRDi	100	01/06 -	3993	
SPORTAGE (JE_, KM_)	2.0 CRDi	103	01/06 -	3959	
SPORTAGE (JE_, KM_)	2.0 CRDi	103	01/06 -	3993	
SPORTAGE (JE_, KM_)	2.0 CRDi	110	09/08 -	4039	
SPORTAGE (JE_, KM_)	2.0 CRDi 115	85	05/07 -	4039	
SPORTAGE (JE_, KM_)	2.0 CRDi 135	100	08/09 -	4039	
SPORTAGE (JE_, KM_)	2.0 CRDi 140	103	09/06 -	4039	
SPORTAGE (JE_, KM_)	2.0 CRDi 4WD	83	09/04 -	4039	
SPORTAGE (JE_, KM_)	2.0 CRDi 4WD	83	09/04 -	3959	
SPORTAGE (JE_, KM_)	2.0 CRDi 4WD	83	09/04 -	3993	
SPORTAGE (JE_, KM_)	2.0 CRDi 4WD	100	01/06 -	4039	
SPORTAGE (JE_, KM_)	2.0 CRDi 4WD	100	01/06 -	3959	
SPORTAGE (JE_, KM_)	2.0 CRDi 4WD	100	01/06 -	3993	
SPORTAGE (JE_, KM_)	2.0 CRDi 4WD	103	01/06 -	4039	
SPORTAGE (JE_, KM_)	2.0 CRDi 4WD	103	01/06 -	3959	
SPORTAGE (JE_, KM_)	2.0 CRDi 4WD	103	01/06 -	3993	
SPORTAGE (JE_, KM_)	2.0 CRDi 4WD	110	09/08 -	4039	
SPORTAGE (JE_, KM_)	2.0 CVVT	106	09/06 -	4039	
SPORTAGE (JE_, KM_)	2.0 i 16V	104	09/04 -	4039	
SPORTAGE (JE_, KM_)	2.0 i 16V	104	09/04 -	3959	
SPORTAGE (JE_, KM_)	2.0 i 16V	104	09/04 -	3993	
SPORTAGE (JE_, KM_)	2.7 V6 4WD	129	09/04 -	4039	
SPORTAGE (JE_, KM_)	2.7 V6 4WD	129	09/04 -	3959	
SPORTAGE (JE_, KM_)	2.7 V6 4WD	129	09/04 -	3993	
SPORTAGE (K00)	2.0	87	10/00 – 08/03	4009	
SPORTAGE (K00)	2.0 4WD	87	10/00 – 08/03	4009	
SPORTAGE (K00)	2.0 i 16V	94	10/99 – 08/03	4009	
SPORTAGE (K00)	2.0 i 16V 4WD	94	04/94 – 08/03	3751	
SPORTAGE (K00)	2.0 i 16V 4WD	95	11/98 – 08/04	4009	
SPORTAGE (K00)	2.0 i 4WD	70	04/94 – 08/99	3751	
SPORTAGE (K00)	2.2 D 4WD	52	08/94 – 04/99	3751	
SPORTAGE (SL)	1.6 GDI	99	02/11 -		3980
SPORTAGE (SL)	1.7 CRDi	85	12/10 -		3980
SPORTAGE (SL)	2.0 CRDi	100	07/10 -		3980
SPORTAGE (SL)	2.0 CRDi	135	08/10 -		3980
SPORTAGE (SL)	2.0 CRDi AWD	100	07/10 -		3980
SPORTAGE (SL)	2.0 CRDi AWD	135	08/10 -		3980
SPORTAGE (SL)	2.0 CVVT	120	07/10 -		3980
SPORTAGE (SL)	2.0 CVVT	122	07/10 -		3980
SPORTAGE (SL)	2.0 CVVT AWD	120	07/10 -		3980
SPORTAGE (SL)	2.0 CVVT AWD	122	07/10 -		3980
SPORTAGE (SL)	2.0 GDI	122	02/14 -		3980
SPORTAGE (SL)	2.0 GDI AWD	122	02/14 -		3980
Sportage IV (QL, QLE) 2.0	G4NA	110	12/2015 -	4353	4343
Sportage IV (QL, QLE) 2.0	G4NA	114	12/2015 -	4353	4343
Sportage IV (QL, QLE) 2.0	G4NA	115	12/2015 -	4353	4343
Sportage IV (QL, QLE) 2.0	G4NA	117	12/2015 -	4353	4343
Sportage IV (QL, QLE) 2.0 Alcohol	-	114	12/2015 -	4353	4343
Sportage IV (QL, QLE) 2.0 AWD	G4NA	110	12/2015 -	4353	4343
Sportage IV (QL, QLE) 2.0 AWD	G4NA	114	12/2015 -	4353	4343
Sportage IV (QL, QLE) 2.0 CRDi	D4HA	100	09/2015 -	4353	4343
Sportage IV (QL, QLE) 2.0 CRDi	D4HA	131	09/2015 -	4353	4343
Sportage IV (QL, QLE) 2.0 CRDi	D4HA	136	09/2015 -	4353	4343
Sportage IV (QL, QLE) 2.0 CRDi AWD	D4HA	100	09/2015 -	4353	4343
Sportage IV (QL, QLE) 2.0 CRDi AWD	D4HA	129	09/2015 -	4353	4343
Sportage IV (QL, QLE) 2.0 CRDi AWD	D4HA	131	09/2015 -	4353	4343
Sportage IV (QL, QLE) 2.0 CRDi AWD	D4HA	136	09/2015 -	4353	4343
Sportage IV (QL, QLE) 2.0 CRDi Eco-Dynamics+ AWD	D4HA	136	06/2018 -	4353	4343
Sportage IV (QL, QLE) 44288 GDI	G4KJ	135	05/2016 -	4353	4343

MAKE & MODEL   		KW	YEAR		
KIA					
Sportage IV (QL, QLE) 44288 GDI AWD	-	135	09/2015 -	4353	4343
Sportage IV (QL, QLE) 44348 CRDi	D4FE	100	07/2018 -	4353	4343
Sportage IV (QL, QLE) 44348 CRDi	D4FE	85	07/2018 -	4353	4343
Sportage IV (QL, QLE) 44348 CRDi AWD	D4FE	100	07/2018 -	4353	4343
Sportage IV (QL, QLE) 44348 CRDi Eco-Dynamics+	D4FE	100	03/2019 -	4353	4343
Sportage IV (QL, QLE) 44348 CRDi Eco-Dynamics+	D4FE	85	03/2019 -	4353	4343
Sportage IV (QL, QLE) 44348 CRDi Eco-Dynamics+ AWD	D4FE	100	03/2019 -	4353	4343
Sportage IV (QL, QLE) 44348 GDI	G4FD	103	09/2015 -	4353	4343
Sportage IV (QL, QLE) 44348 GDI	G4FD	97	09/2015 -	4353	4343
Sportage IV (QL, QLE) 44348 GDI	G4FJ	130	09/2015 -	4353	4343
Sportage IV (QL, QLE) 44348 GDI AWD	G4FJ	130	09/2015 -	4353	4343
Sportage IV (QL, QLE) 44348 LPG (QLE)	G4FD	93	07/2020 -	4353	4343
Sportage IV (QL, QLE) 44378 CRDi	D4FD	104	11/2016 -	4353	4343
Sportage IV (QL, QLE) 44378 CRDi	D4FD	85	09/2015 -	4353	4343
Stonic (YB) 1.0 T-GDi	G3LC	74	08/2018 -		4343
Stonic (YB) 1.0 T-GDi	G3LC	88	07/2017 -		4343
Stonic (YB) 44228 CVVT	G4LA	62	07/2017 -		4343
Stonic (YB) 44287 CVVT	G4LC	73	07/2017 -		4343
Stonic (YB) 44287 LPG	G4LC	71	11/2018 -		4343
Stonic (YB) 44287 MPI Bifuel	-	74	03/2018 -		4343
Stonic (YB) 44348 CRDi	D4FB	81	07/2017 -		4343
Stonic (YB) 44348 CRDi	D4FE	100	08/2018 -		4343
Stonic (YB) 44348 CRDi	D4FE	85	08/2018 -		4343
VENGA (YN)	1.4 CRDi 75	55	02/10 -	3959	4040
VENGA (YN)	1.4 CRDi 75	57	02/10 -	3959	4040
VENGA (YN)	1.4 CRDi 90	66	02/10 -	3959	4040
VENGA (YN)	1.4 CVVT	66	02/10 -	3959	4040
VENGA (YN)	1.6 CRDi 115	85	02/10 -	3959	4040
VENGA (YN)	1.6 CRDi 128	94	02/10 -	3959	4040
VENGA (YN)	1.6 CVVT	92	02/10 -	3959	4040
XCeed (CD) 1.0 T-GDI	G3LC	88	06/2019 -		4343
XCeed (CD) 44287 T-GDI	G4LD	103	06/2019 -		4343
XCeed (CD) 44348 CRDi 115	D4FE	85	06/2019 -		4343
XCeed (CD) 44348 CRDi 115 Eco-Dynamics+	D4FE	85	12/2019 -		4343
XCeed (CD) 44348 CRDi 136	D4FE	100	06/2019 -		4343
XCeed (CD) 44348 CRDi 136 Eco-Dynamics+	D4FE	100	12/2019 -		4343
XCeed (CD) 44348 GDI Hybrid	G4LE	104	12/2019 -		4343
XCeed (CD) 44348 GDI Hybrid	G4LE	77	12/2019 -		4343
XCeed (CD) 44348 T-GDI	G4FJ	147	06/2019 -		4343
XCeed (CD) 44348 T-GDI	G4FJ	150	06/2019 -		4343
KIA (DYK)					
CARNIVAL MPV	2.7	124	04/06 – 12/10	3802	
CARNIVAL MPV	3.5	140	07/04 – 12/10	3802	
CERATO	1.6	76	05/05 – 08/06	4001	
CERATO	1.6	76	05/05 – 08/06	4087	
CERATO	1.6	82	08/06 -	4001	
CERATO	1.6	82	08/06 -	4087	
CERATO	1.8	94	05/05 -	4001	
CERATO	1.8	94	05/05 -	4087	
CERATO Hatchback	1.6	82	12/07 -	4001	
CERATO Hatchback	1.6	82	12/07 -	4087	
OPTIMA	1.8	94	08/05 -	3959	
OPTIMA	1.8	94	08/05 -	3993	
OPTIMA	2.0	101	09/04 -	3959	
OPTIMA	2.0	101	09/04 -	3993	
SOUL Hatchback	1.6	91	12/09 -	3959	
SOUL Hatchback	2.0	105	12/09 -	3959	
SPORTAGE Closed Off-Road Vehicle	2.0	101	11/07 -	3959	
SPORTAGE Closed Off-Road Vehicle	2.0	101	11/07 -	3993	
SPORTAGE Closed Off-Road Vehicle	2.0	105	01/09 -	3959	
SPORTAGE Closed Off-Road Vehicle	2.0	105	01/09 -	3993	
SPORTAGE Closed Off-Road Vehicle	2.0 All-wheel Drive	104	11/07 -	3959	
SPORTAGE Closed Off-Road Vehicle	2.0 All-wheel Drive	104	11/07 -	3993	
SPORTAGE Closed Off-Road Vehicle	2.7 All-wheel Drive	127	11/07 -	3959	
SPORTAGE Closed Off-Road Vehicle	2.7 All-wheel Drive	127	11/07 -	3993	
LADA					
110 (2110)	1.5	52	01/95 – 12/05	3422	
110 (2110)	1.5	52	01/95 – 12/05	3552	
110 (2110)	1.5	57	01/95 – 12/05	3422	
110 (2110)	1.5	57	01/95 – 12/05	3552	
110 (2110)	1.5 16V	70	01/95 – 12/05	3422	
110 (2110)	1.5 16V	70	01/95 – 12/05	3552	
111 (2111)	1.5 16V	70	01/95 – 08/02	3422	
111 (2111)	1.5 16V	70	01/95 – 08/02	3552	
112 (2112)	1.5	54	01/95 -	3422	

MAKE & MODEL		KW	YEAR		
LADA					
112 (2112)	1.5	54	01/95 -	3552	
112 (2112)	1.5	57	01/95 – 09/04	3422	
112 (2112)	1.5	57	01/95 – 09/04	3552	
112 (2112)	1.5 16V	70	01/95 – 09/00	3422	
112 (2112)	1.5 16V	70	01/95 – 09/00	3552	
1200-1500 Estate	1200 (VAZ, WAS2102)	44	09/73 – 08/84	3393	
1200-1500 Estate	1300 (VAZ-21021)	49	01/81 – 12/82	3393	
1200-1500 Estate	1500 (VAZ2102)	54	09/73 – 06/85	3393	
1200-1600	1200 L/S (VAZ, WAS2101)	44	01/70 – 06/86	3393	
1200-1600	1300 (VAZ2101)	48	05/78 – 01/87	3393	
1200-1600	1300 (WAS21011)	51	08/74 – 08/84	3393	
1200-1600	1500 (WAS2103, WAS2106)	55	09/72 – 08/84	3393	
1200-1600	1500 N/S (VAZ2103)	55	11/75 – 10/86	3393	
1200-1600	1600 (WAS2106)	58	09/72 – 08/84	3393	
1200-1600	1600 N/L (VAZ2103)	57	03/79 – 10/86	3393	
KALINA Estate (1117)	1.4 16V	66	11/08 – 12/13	3422	
KALINA Estate (1117)	1.4 16V	66	11/08 – 12/13	3552	
KALINA Estate (1117)	1.4 16V LPG	65	11/08 -	3422	
KALINA Estate (1117)	1.4 16V LPG	65	11/08 -	3552	
KALINA Estate (1117)	1.6	60	10/04 – 12/13	3422	
KALINA Estate (1117)	1.6	60	10/04 – 12/13	3552	
KALINA Estate (1117)	1.6	62	01/10 -	3422	
KALINA Estate (1117)	1.6	62	01/10 -	3552	
KALINA Estate (2194)	1.6	64	11/13 -	3422	
KALINA Estate (2194)	1.6	64	11/13 -	3552	
KALINA Estate (2194)	1.6	72	11/13 -	3422	
KALINA Estate (2194)	1.6	72	11/13 -	3552	
KALINA Estate (2194)	1.6	78	11/13 -	3422	
KALINA Estate (2194)	1.6	78	11/13 -	3552	
KALINA Hatchback (1119)	1.4 16V	66	11/08 – 12/13	3422	
KALINA Hatchback (1119)	1.4 16V	66	11/08 – 12/13	3552	
KALINA Hatchback (1119)	1.4 16V LPG	65	11/08 – 12/13	3422	
KALINA Hatchback (1119)	1.4 16V LPG	65	11/08 – 12/13	3552	
KALINA Hatchback (1119)	1.6	60	10/04 – 12/13	3422	
KALINA Hatchback (1119)	1.6	60	10/04 – 12/13	3552	
KALINA Hatchback (1119)	1.6	62	01/10 – 12/13	3422	
KALINA Hatchback (1119)	1.6	62	01/10 – 12/13	3552	
KALINA Hatchback (1119)	1.6 16V	66	10/04 – 12/13	3422	
KALINA Hatchback (1119)	1.6 16V	66	10/04 – 12/13	3552	
KALINA Hatchback (2192)	1.6	64	06/13 -	3422	
KALINA Hatchback (2192)	1.6	64	06/13 -	3552	
KALINA Hatchback (2192)	1.6	72	06/13 -	3422	
KALINA Hatchback (2192)	1.6	72	06/13 -	3552	
KALINA Hatchback (2192)	1.6	78	06/13 -	3422	
KALINA Hatchback (2192)	1.6	78	06/13 -	3552	
KALINA Saloon (1118)	1.4 16V	66	11/08 – 12/09	3422	
KALINA Saloon (1118)	1.4 16V	66	11/08 – 12/09	3552	
KALINA Saloon (1118)	1.4 16V LPG	65	11/08 – 12/13	3422	
KALINA Saloon (1118)	1.4 16V LPG	65	11/08 – 12/13	3552	
KALINA Saloon (1118)	1.6	60	10/04 – 12/09	3422	
KALINA Saloon (1118)	1.6	60	10/04 – 12/09	3552	
KALINA Saloon (1118)	1.6	62	01/10 -	3422	
KALINA Saloon (1118)	1.6	62	01/10 -	3552	
KALINA Saloon (1118)	1.6 16V	66	10/04 -	3422	
KALINA Saloon (1118)	1.6 16V	66	10/04 -	3552	
LARGUS (KS0_, RS0_, KSA_)	CNG (KSA45)	69	11.2018 -	3503/1	
LARGUS Box	1.6	62	03/12 -	3431	
LARGUS Box	1.6	62	03/12 -	3503	
LARGUS Box	1.6	62	03/12 -	3983	
LARGUS Box	1.6	77	03/12 -	3431	
LARGUS Box	1.6	77	03/12 -	3503	
LARGUS Box	1.6	77	03/12 -	3983	
LARGUS Estate	1.6	62	03/12 -	3431	
LARGUS Estate	1.6	62	03/12 -	3503	
LARGUS Estate	1.6	62	03/12 -	4141/1	
LARGUS Estate	1.6	77	03/12 -	3431	
LARGUS Estate	1.6	77	03/12 -	3503	
LARGUS Estate	1.6	77	03/12 -	4141/1	
LARGUS Kombi van (KS0_, RS0_, KSA_)	1.6 CNG (KSA45)	69	11.2018 -	3503/1	
LARGUS Panelvan/Van (FS0_, FSA_)	1.6 CNG (FSA45)	69	11.2018 -	3503/1	
LCV Largus Box Body / Van / SW Van (R90) 44348	K7M	62	03/2012 -	4141	
LCV Largus Van (F90) 44348	K7M	62	03/2012 -	4141	
NADESCHDA (2120)	1.7	60	12/97 – 12/06	3421	
NADESCHDA (2120)	1.7 i	59	12/97 – 12/06	3421	
NADESCHDA (2120)	1.8	60	12/97 – 12/06	3421	
NADESCHDA (2120)	1.8 i	67	12/97 – 12/06	3421	

MAKE & MODEL		KW	YEAR		
LADA					
NIVA (2121)	1600	56	04/80 – 12/87	3421	
NIVA (2121)	1600	56	12/76 – 05/87	3421	
NIVA (2121)	1600 4x4	54	01/87 – 03/95	3421	
NIVA (2121)	1600 4x4	63	10/86 – 12/91	3421	
NIVA (2121)	1700 i	59	06/96 – 12/06	3421	
NIVA (2121)	1700 i 4x4	60	10/00 – 12/10	3421	
NIVA (2121)	1700 i 4x4	61	09/10 -	3421	
NIVA (2121)	1900 Diesel	47	01/93 – 08/99	3421	
NIVA (2121)	1900 Diesel	55	01/99 – 12/06	3421	
NOVA (2105)	1500	49	06/89 – 04/12	3393	
NOVA (2105)	1200 Junior/L (VAZ, WAS2105)	44	09/81 – 04/12	3393	
NOVA (2105)	1300 Spezial/L (VAZ,WAS2105)	48	05/93 – 04/04	3393	
NOVA (2105)	1500 S (WAS21093)	52	03/85 – 04/12	3393	
NOVA (2105)	1500 Special (VAZ2105, WAS21053)	55	01/88 – 10/01	3393	
NOVA (2105)	1600 (WAS21074)	56	06/96 – 04/12	3393	
NOVA (2105)	1700 i Classic (VAZ2107)	62	10/86 – 04/98	3393	
NOVA Estate (2104)	1300	48	09/85 – 12/91	3393	
NOVA Estate (2104)	1500	49	08/94 – 04/12	3393	
NOVA Estate (2104)	1500	55	09/85 – 02/93	3393	
NOVA Estate (2104)	1700	62	08/94 – 04/12	3393	
PRIORA Estate (2171)	1.6	60	10/09 -	3422	
PRIORA Estate (2171)	1.6	60	10/09 -	3552	
PRIORA Estate (2171)	1.6	60	12/08 -	3422	
PRIORA Estate (2171)	1.6	72	10/09 -	3422	
PRIORA Hatchback (2172)	1.6	60	12/08 -	3552	
PRIORA Hatchback (2172)	1.6	72	12/08 -	3422	
PRIORA Hatchback (2172)	1.6	72	12/08 -	3552	
PRIORA Hatchback (2172)	1.6 LPG	71	12/08 -	3422	
PRIORA Hatchback (2172)	1.6 LPG	71	12/08 -	3552	
PRIORA Saloon (2170)	1.6	60	12/08 -	3422	
PRIORA Saloon (2170)	1.6	60	12/08 -	3552	
PRIORA Saloon (2170)	1.6	72	12/08 -	3422	
PRIORA Saloon (2170)	1.6	72	12/08 -	3552	
PRIORA Saloon (2170)	1.6 LPG	71	03/09 -	3422	
PRIORA Saloon (2170)	1.6 LPG	71	03/09 -	3552	
SAMARA (2108, 2109, 2115)	1100	39	02/88 – 12/94	3422	
SAMARA (2108, 2109, 2115)	1100	39	02/88 – 12/94	3552	
SAMARA (2108, 2109, 2115)	1300	45	09/91 – 08/99	3422	
SAMARA (2108, 2109, 2115)	1300	45	09/91 – 08/99	3552	
SAMARA (2108, 2109, 2115)	1300	46	06/87 – 12/96	3422	
SAMARA (2108, 2109, 2115)	1300	46	06/87 – 12/96	3552	
SAMARA (2108, 2109, 2115)	1300	48	01/86 – 12/94	3422	
SAMARA (2108, 2109, 2115)	1300	48	01/86 – 12/94	3552	
SAMARA (2108, 2109, 2115)	1500	50	09/91 – 12/96	3422	
SAMARA (2108, 2109, 2115)	1500	50	09/91 – 12/96	3552	
SAMARA (2108, 2109, 2115)	1500	52	02/95 – 12/06	3422	
SAMARA (2108, 2109, 2115)	1500	52	02/95 – 12/06	3552	
SAMARA (2108, 2109, 2115)	1500	53	09/87 – 12/96	3422	
SAMARA (2108, 2109, 2115)	1500	53	09/87 – 12/96	3552	
SAMARA (2108, 2109, 2115)	1500	55	01/86 – 12/96	3422	
SAMARA (2108, 2109, 2115)	1500	55	01/86 – 12/96	3552	
SAMARA FORMA (21099)	1100	39	07/91 – 08/99	3422	
SAMARA FORMA (21099)	1100	39	07/91 – 08/99	3552	
SAMARA FORMA (21099)	1300	45	07/91 – 08/99	3422	
SAMARA FORMA (21099)	1300	45	07/91 – 08/99	3552	
SAMARA FORMA (21099)	1300	46	05/90 – 08/99	3422	
SAMARA FORMA (21099)	1300	46	05/90 – 08/99	3552	
SAMARA FORMA (21099)	1300	48	05/89 – 07/97	3422	
SAMARA FORMA (21099)	1300	48	05/89 – 07/97	3552	
SAMARA FORMA (21099)	1500	50	07/91 – 12/96	3422	
SAMARA FORMA (21099)	1500	50	07/91 – 12/96	3552	
SAMARA FORMA (21099)	1500	52	11/94 – 12/06	3422	
SAMARA FORMA (21099)	1500	52	11/94 – 12/06	3552	
SAMARA FORMA (21099)	1500	53	09/91 – 12/96	3422	
SAMARA FORMA (21099)	1500	53	09/91 – 12/96	3552	
TOSCANA (2107)	1300	48	12/85 – 05/12	3393	
TOSCANA (2107)	1300	55	09/83 – 02/93	3393	
XRAY	1.6	78	02/16 -	4253	
XRAY	1.6	81	02/16 -	4253	
XRAY	1.8	90	02/16 -	4253	
LANCIA					
A 112	0.9 Junior (A112B/2)	29	03/81 – 06/86	3316	
A 112	0.9 Junior (A112B/2)	29	03/81 – 06/86	3485	
A 112	1.0 Abarth (A112B2/5)	51	03/78 – 02/84	3316	
A 112	1.0 Abarth (A112B2/5)	51	03/78 – 02/84	3485	

MAKE & MODEL		KW	YEAR		
LANCIA					
A 112	1.0 LX	35	03/84 – 12/86	3316	
A 112	1.0 LX	35	03/84 – 12/86	3485	
BETA MONTE CARLO (137_)	2.0	88	09/75 – 05/81	3316	3317
DEDRA (835_)	1.6 16V (835EI)	76	01/96 – 07/99	3425	3466
DEDRA (835_)	1.6 16V (835EI)	76	01/96 – 07/99	3468	
DEDRA (835_)	1.6 i.e. (835AA)	66	08/89 – 06/94	3432	
DEDRA (835_)	1.6 i.e. (835AA)	66	08/89 – 06/94	3466	
DEDRA (835_)	1.6 i.e. (835AA)	66	08/89 – 06/94	3468	
DEDRA (835_)	1.6 i.e. (835AA)	66	08/89 – 06/94	3491	
DEDRA (835_)	1.6 i.e. (835AB)	57	08/89 – 03/93	3432	
DEDRA (835_)	1.6 i.e. (835AB)	57	08/89 – 03/93	3466	
DEDRA (835_)	1.6 i.e. (835AB)	57	08/89 – 03/93	3468	
DEDRA (835_)	1.6 i.e. (835AB)	57	08/89 – 03/93	3491	
DEDRA (835_)	1.6 i.e. (835AN)	55	04/93 – 07/99	3432	
DEDRA (835_)	1.6 i.e. (835AN)	55	04/93 – 07/99	3466	
DEDRA (835_)	1.6 i.e. (835AN)	55	04/93 – 07/99	3468	
DEDRA (835_)	1.6 i.e. (835AN)	55	04/93 – 07/99	3491	
DEDRA (835_)	1.6 LE (835EB) CAT	66	07/94 – 07/99	3432	
DEDRA (835_)	1.6 LE (835EB) CAT	66	07/94 – 07/99	3466	
DEDRA (835_)	1.6 LE (835EB) CAT	66	07/94 – 07/99	3468	
DEDRA (835_)	1.6 LE (835EB) CAT	66	07/94 – 07/99	3491	
DEDRA (835_)	1.8 16V LE (835FG)	83	03/96 – 07/99	3425	3425
DEDRA (835_)	1.8 16V LE (835FG)	83	03/96 – 07/99	3466	
DEDRA (835_)	1.8 16V LE (835FG)	83	03/96 – 07/99	3468	
DEDRA (835_)	1.8 16V LE (835FG)	83	03/96 – 07/99	3618	
DEDRA (835_)	1.8 GT 16V (835EH)	96	03/96 – 07/99	3466	
DEDRA (835_)	1.8 GT 16V (835EH)	96	03/96 – 07/99	3468	
DEDRA (835_)	1.8 i.e. (835AC, 835BC)	80	09/89 – 06/94	3425	3425
DEDRA (835_)	1.8 i.e. (835AC, 835BC)	80	09/89 – 06/94	3466	
DEDRA (835_)	1.8 i.e. (835AC, 835BC)	80	09/89 – 06/94	3468	
DEDRA (835_)	1.8 i.e. (835AT)	66	08/93 – 07/99	3425	3425
DEDRA (835_)	1.8 i.e. (835AT)	66	08/93 – 07/99	3466	
DEDRA (835_)	1.8 i.e. (835AT)	66	08/93 – 07/99	3468	
DEDRA (835_)	1.8 i.e. (835BD, 835AD)	77	09/89 – 07/99	3425	3425
DEDRA (835_)	1.8 i.e. (835BD, 835AD)	77	09/89 – 07/99	3466	
DEDRA (835_)	1.8 i.e. (835BD, 835AD)	77	09/89 – 07/99	3468	
DEDRA (835_)	1.8 i.e. (835FA)	74	07/94 – 07/99	3425	3425
DEDRA (835_)	1.8 i.e. (835FA)	74	07/94 – 07/99	3466	
DEDRA (835_)	1.8 i.e. (835FA)	74	07/94 – 07/99	3468	
DEDRA (835_)	1.9 TDS (835EE, 835EF)	66	04/89 – 07/99	3425	3425
DEDRA (835_)	1.9 TDS (835EE, 835EF)	66	04/89 – 07/99	3466	
DEDRA (835_)	1.9 TDS (835EE, 835EF)	66	04/89 – 07/99	3468	
DEDRA (835_)	2.0 16V (835ED)	102	07/94 – 07/99	3466	
DEDRA (835_)	2.0 16V (835ED)	102	07/94 – 07/99	3468	
DEDRA (835_)	2.0 i.e. (835AI)	86	09/89 – 07/92	3425	3425
DEDRA (835_)	2.0 i.e. (835AI)	86	09/89 – 07/92	3466	
DEDRA (835_)	2.0 i.e. (835AI)	86	09/89 – 07/92	3468	
DEDRA (835_)	2.0 i.e. (835AI)	86	09/89 – 07/92	3618	
DEDRA (835_)	2.0 i.e. (835AL)	83	09/89 – 07/99	3425	3425
DEDRA (835_)	2.0 i.e. (835AL)	83	09/89 – 07/99	3466	
DEDRA (835_)	2.0 i.e. (835AL)	83	09/89 – 07/99	3468	
DEDRA (835_)	2.0 i.e. (835AL)	83	09/89 – 07/99	3618	
Dedra (835_) 44348 16V (835EI)	182 A4.000	76	01/1996 - 07/1999	3618/1	
Dedra (835_) 44409 16V LE (835FG)	182 A2.000 (03.96-.)	83	03/1996 - 07/1999	3618/1	
Dedra (835_) 44409 GT 16V (835EH)	183 A1.000 (03.96-.)	96	03/1996 - 07/1999	3618/1	
Dedra (835_) 44440 TDS (835EE, 835EF)	160 D1.000 (04.89-.), 835 A4.000, 835 A4.046	66	04/1989 - 07/1999	3618/1	
DEDRA SW (835_)	1.6 (835EB)	66	10/94 – 07/99	3466	
DEDRA SW (835_)	1.6 (835EB)	66	10/94 – 07/99	3468	
DEDRA SW (835_)	1.6 16V (835EI)	76	01/96 – 07/99	3466	
DEDRA SW (835_)	1.6 16V (835EI)	76	01/96 – 07/99	3468	
DEDRA SW (835_)	1.8 16V LE (835FG)	83	03/96 – 07/99	3466	
DEDRA SW (835_)	1.8 16V LE (835FG)	83	03/96 – 07/99	3468	
DEDRA SW (835_)	1.8 16V LE (835FG)	83	03/96 – 07/99	3618	
DEDRA SW (835_)	1.8 GT 16V (835EH)	96	03/96 – 07/99	3466	
DEDRA SW (835_)	1.8 GT 16V (835EH)	96	03/96 – 07/99	3468	
DEDRA SW (835_)	1.8 i.e. (835FA)	74	07/94 – 07/99	3466	
DEDRA SW (835_)	1.8 i.e. (835FA)	74	07/94 – 07/99	3468	
DEDRA SW (835_)	1.9 TDS (835EE, 835EF)	66	07/94 – 07/99	3466	
DEDRA SW (835_)	1.9 TDS (835EE, 835EF)	66	07/94 – 07/99	3468	
DEDRA SW (835_)	2.0 16V (835ED)	102	07/94 – 07/99	3466	
DEDRA SW (835_)	2.0 16V (835ED)	102	07/94 – 07/99	3468	
Dedra SW (835_) 44348 16V (835EI)	182 A4.000	76	01/1996 - 07/1999	3618/1	
Dedra SW (835_) 44409 16V LE (835FG)	182 A2.000 (03.96-.)	83	03/1996 - 07/1999	3618/1	
Dedra SW (835_) 44409 GT 16V (835EH)	183 A1.000 (03.96-.)	96	03/1996 - 07/1999	3618/1	
Dedra SW (835_) 44440 TDS (835EE, 835EF)	160 D1.000 (07.94-.), 835 A4.000	66	07/1994 - 07/1999	3618/1	
DELTA I (831_)	1.6 GT	77	11/82 – 04/86	3466	

MAKE & MODEL		KW	YEAR		
LANCIA					
DELTA I (831_)	1.6 GT	77	11/82 – 04/86	3468	
DELTA I (831_)	1.6 GT i.e. (831AB.010)	66	05/87 – 08/92	3425	3425
DELTA I (831_)	1.6 GT i.e. (831AB.010)	66	05/87 – 08/92	3466	
DELTA I (831_)	1.6 GT i.e. (831AB.010)	66	05/87 – 08/92	3468	
DELTA I (831_)	1.6 GT i.e. (831AB.016)	80	08/86 – 08/88	3466	
DELTA I (831_)	1.6 GT i.e. (831AB.016)	80	08/86 – 08/88	3468	
DELTA I (831_)	1.6 HF Turbo	96	10/83 – 12/86	3466	
DELTA I (831_)	1.6 HF Turbo	96	10/83 – 12/86	3468	
DELTA I (831_)	1.6 HF Turbo	122	08/86 – 05/93	3425	3425
DELTA I (831_)	1.6 HF Turbo (831AB.020)	103	08/86 – 08/88	3466	
DELTA I (831_)	1.6 HF Turbo (831AB.020)	103	08/86 – 08/88	3468	
DELTA I (831_)	1.6 HF Turbo (831AB.020S)	97	04/87 – 03/89	3425	3425
DELTA I (831_)	1.6 HF Turbo (831AB.020S)	97	04/87 – 03/89	3466	
DELTA I (831_)	1.6 HF Turbo (831AB.020S)	97	04/87 – 03/89	3468	
DELTA I (831_)	1.9 Turbo DS (831AB.021)	59	10/86 – 12/89	3466	
DELTA I (831_)	1.9 Turbo DS (831AB.021)	59	10/86 – 12/89	3468	
DELTA I (831_)	2.0 16V HF Evo Integrale (831AB.027)	155	06/93 – 01/94	3425	3425
DELTA I (831_)	2.0 16V HF Integrale	144	03/89 – 09/91	3425	3425
DELTA I (831_)	2.0 HF Integrale (831AB.024)	133	10/87 – 02/89	3425	3425
DELTA I (831_)	2.0 HF Integrale (831AB.024S,)	130	12/86 – 12/92	3425	3425
DELTA II (836_)	1.4 i.e. (836AF, 836AH)	51	10/94 – 08/99	3466	
DELTA II (836_)	1.4 i.e. (836AF, 836AH)	51	10/94 – 08/99	3468	
DELTA II (836_)	1.6 i.e. (836AD)	55	06/93 – 08/99	3466	
DELTA II (836_)	1.6 i.e. (836AD)	55	06/93 – 08/99	3468	
DELTA II (836_)	1.6 i.e. (836AP)	66	03/96 – 08/99	3466	
DELTA II (836_)	1.6 i.e. (836AP)	66	03/96 – 08/99	3468	
DELTA II (836_)	1.6 i.e. 16V (836AO)	76	01/96 – 08/99	3466	
DELTA II (836_)	1.6 i.e. 16V (836AO)	76	01/96 – 08/99	3468	
DELTA II (836_)	1.8	66	02/96 – 09/99	3466	
DELTA II (836_)	1.8	66	02/96 – 09/99	3468	
DELTA II (836_)	1.8	66	02/96 – 09/99	3618	
DELTA II (836_)	1.8 i.e. (836AE)	76	06/93 – 08/99	3466	
DELTA II (836_)	1.8 i.e. (836AE)	76	06/93 – 08/99	3468	
DELTA II (836_)	1.8 i.e. (836AE)	76	06/93 – 08/99	3618	
DELTA II (836_)	1.8 i.e. (836AG, 836AL)	66	07/94 – 08/99	3466	
DELTA II (836_)	1.8 i.e. (836AG, 836AL)	66	07/94 – 08/99	3468	
DELTA II (836_)	1.8 i.e. (836AG, 836AL)	66	07/94 – 08/99	3618	
DELTA II (836_)	1.8 i.e. 16V (836AQ)	83	03/96 – 08/99	3466	
DELTA II (836_)	1.8 i.e. 16V (836AQ)	83	03/96 – 08/99	3468	
DELTA II (836_)	1.8 i.e. 16V (836AQ)	83	03/96 – 08/99	3618	
DELTA II (836_)	1.9 TD (836AM, 836AN)	66	10/94 – 08/99	3466	
DELTA II (836_)	1.9 TD (836AM, 836AN)	66	10/94 – 08/99	3468	
DELTA II (836_)	1.9 TD (836AM, 836AN)	66	10/94 – 08/99	3618	
Delta II (836_) 44348 i.e. 16V (836AO)	182 A4.000	76	01/1996 - 08/1999	3618/1	
Delta II (836_) 44409 i.e. 16V (836AQ)	182 A2.000 (03.96-.)	83	03/1996 - 08/1999	3618/1	
Delta II (836_) 44440 TD (836AM, 836AN)	160 D1.000 (10.94-.), 835 A4.000	66	10/1994 - 08/1999	3618/1	
DELTA III (844_)	1.9 D Multijet	140	01/09 – 08/14	4121	
DELTA III (844_)	2.0 D Multijet	120	09/08 – 08/14	4121	
DELTA III (844_)	2.0 D Multijet	121	09/08 – 08/14	4121	
Delta III (844_) 2.0 D Multijet	198 A5.000, 198 A8.000	121	09/2008 - 08/2014	4121/1	
Delta III (844_) 2.0 D Multijet	844 A2.000	120	09/2008 - 08/2014	4121/1	
Delta III (844_) 44440 D Multijet	844 A1.000	140	01/2009 - 08/2014	4121/1	
FLAVIA Convertible (JS_)	2.4	125	03/12 – 12/14		3893
FLAVIA Convertible (JS_)	2.4	129	03/12 – 12/14		3893
LYBRA (839_)	1.6	76	10/00 – 10/05		4123
LYBRA (839_)	1.6 16V (839AXA1A)	76	07/99 – 10/05		4123
LYBRA (839_)	1.8 16V (839AXB1A,839AXG1A)	96	07/99 – 10/05		4123
LYBRA (839_)	1.9 JTD	85	05/01 – 10/05		4123
LYBRA (839_)	1.9 JTD (839AXD1A)	77	07/99 – 09/00		4123
LYBRA (839_)	1.9 JTD (839AXI1A)	81	09/00 – 05/01		4123
LYBRA (839_)	2.0 20V (839AXC11,839AXC1A)	113	07/99 – 09/00		4123
LYBRA (839_)	2.0 20V (839AXH1A)	110	09/00 – 10/05		4123
LYBRA (839_)	2.4 20V	125	10/01 – 10/05		4123
LYBRA (839_)	2.4 JTD	110	05/02 – 10/05		4123
LYBRA (839_)	2.4 JTD (839AXE1A)	99	07/99 – 02/01		4123
LYBRA (839_)	2.4 JTD (839AXL1A)	103	09/00 – 05/02		4123
LYBRA SW (839_)	1.6	76	10/00 – 10/05		4123
LYBRA SW (839_)	1.6 16V (839BXA1A)	76	07/99 – 10/05		4123
LYBRA SW (839_)	1.8 16V (839BXB1A,839BXG1A)	96	07/99 – 10/05		4123
LYBRA SW (839_)	1.9 JTD	85	05/01 – 10/05		4123
LYBRA SW (839_)	1.9 JTD (839BXD1A)	77	07/99 – 09/00		4123
LYBRA SW (839_)	1.9 JTD (839BXI1A)	81	09/00 – 05/01		4123
LYBRA SW (839_)	2.0 20V (839BXC11,839BXC1A)	113	07/99 – 09/00		4123
LYBRA SW (839_)	2.0 20V (839BXH1A)	110	09/00 – 10/05		4123
LYBRA SW (839_)	2.4 JTD	110	05/02 – 10/05		4123
LYBRA SW (839_)	2.4 JTD (839BXE1A)	99	10/99 – 09/00		4123

MAKE & MODEL		KW	YEAR		
LANCIA					
LYBRA SW (839_)	2.4 JTD (839BXL1A)	103	09/00 – 10/05		4123
MUSA (350_)	1.3 D Multijet	51	10/04 – 09/12	3826/1	
MUSA (350_)	1.3 D Multijet	70	03/09 – 09/12	3826/1	
MUSA (350_)	1.4	57	09/05 – 09/12	3826/1	
MUSA (350_)	1.4	66	10/07 – 09/12	3826/1	
MUSA (350_)	1.4	70	10/04 – 09/12	3826/1	
MUSA (350_)	1.4 LPG	57	11/10 – 09/12	3826/1	
PHEDRA (179_)	2.0 (179AXA11)	100	09/02 – 11/10	3986	
PHEDRA (179_)	2.0 D Multijet	100	07/06 – 11/10	3986	
PHEDRA (179_)	2.0 JTD	79	07/03 – 11/10	3986	
PHEDRA (179_)	2.0 JTD	88	06/06 – 11/10	3986	
PHEDRA (179_)	2.0 JTD (179AXB1A)	80	09/02 – 11/10	3986	
PHEDRA (179_)	2.2 JTD (179AXC1A)	94	09/02 – 11/10	3986	
THEMA (834_)	2000 16V (834FA)	112	08/92 – 12/93	3425	3425
THEMA (834_)	2000 16V (834FA)	112	08/92 – 12/93		3536
THEMA (834_)	2000 16V Turbo (834AC)	133	12/88 – 06/90	3425	3425
THEMA (834_)	2000 16V Turbo (834AC)	133	12/88 – 06/90		3536
THEMA (834_)	2000 16V Turbo (834GC,834FC)	148	10/92 – 07/94	3425	3425
THEMA (834_)	2000 16V Turbo (834GC,834FC)	148	10/92 – 07/94		3536
THEMA (834_)	2000 i.e (834AB)	86	09/88 – 05/92	3425	3425
THEMA (834_)	2000 i.e (834AB)	86	09/88 – 05/92	3467	3536
THEMA (834_)	2000 i.e.	83	03/86 – 09/88	3467	3536
THEMA (834_)	2000 i.e. (834B)	88	11/84 – 09/88	3467	3536
THEMA (834_)	2000 i.e. (834BV)	85	09/87 – 05/92	3425	3425
THEMA (834_)	2000 i.e. (834BV)	85	09/87 – 05/92	3467	3536
THEMA (834_)	2000 i.e. 16V (834AA)	108	05/88 – 08/92	3425	3425
THEMA (834_)	2000 i.e. 16V (834AA)	108	05/88 – 08/92	3467	3536
THEMA (834_)	2000 i.e. 16V (834AI)	104	02/89 – 05/92	3425	3425
THEMA (834_)	2000 i.e. 16V (834AI)	104	02/89 – 05/92		3536
THEMA (834_)	2000 i.e. 16V Turbo (834AL)	130	04/89 – 05/92	3425	3425
THEMA (834_)	2000 i.e. 16V Turbo (834AL)	130	04/89 – 05/92		3536
THEMA (834_)	2000 i.e. Turbo (834C)	110	07/86 – 05/90	3425	3425
THEMA (834_)	2000 i.e. Turbo (834C)	110	07/86 – 05/90	3467	3536
THEMA (834_)	2000 i.e.Turbo (834CV)	122	11/84 – 12/87	3467	3536
THEMA (834_)	2500 Turbo D (834D)	74	11/84 – 09/88	3467	3536
THEMA (834_)	2500 Turbo DS (834AE)	85	06/88 – 05/92	3425	3425
THEMA (834_)	2500 Turbo DS (834AE)	85	06/88 – 05/92	3467	3536
THEMA (834_)	2500 Turbo DS (834AM)	77	05/88 – 07/92	3425	3425
THEMA (834_)	2500 Turbo DS (834AM)	77	05/88 – 07/92	3467	3536
THEMA (834_)	2500 Turbo DS (834FE,834LE)	85	05/92 – 07/94	3425	3425
THEMA (834_)	2500 Turbo DS (834FE,834LE)	85	05/92 – 07/94		3536
THEMA (834_)	2850 V6 i.e. (834AD, 834CD,834BD)	108	06/88 – 05/92	3425	3425
THEMA (834_)	2850 V6 i.e. (834AD, 834CD,834BD)	108	06/88 – 05/92	3467	3536
THEMA (834_)	2850 V6 i.e. (834F)	110	11/84 – 09/88	3467	3536
THEMA (834_)	3000 V6 (834GD, 834FD)	126	08/92 – 07/94	3425	3425
THEMA (834_)	3000 V6 (834GD, 834FD)	126	08/92 – 07/94		3536
THEMA (834_)	8.32 (834F)	158	09/87 – 05/89		3536
THEMA (834_)	8.32 (834FS)	151	10/87 – 05/92		3536
THEMA (LX_)	3.0 D	140	09/11 -	4006	4018
THEMA (LX_)	3.0 D	140	09/11 -	4198	
THEMA (LX_)	3.0 D	176	09/11 -	4006	4018
THEMA (LX_)	3.0 D	176	09/11 -	4198	
THEMA (LX_)	3.6	210	09/11 -	4006	4018
THEMA (LX_)	3.6	210	09/11 -	4198	
THEMA (LX_)	3.6 4WD	210	09/11 -	4006	4018
THEMA (LX_)	3.6 4WD	210	09/11 -	4198	
THEMA SW (834_)	2000 16V (834FA)	112	05/92 – 07/94	3425	3425
THEMA SW (834_)	2000 16V (834FA)	112	05/92 – 07/94		3536
THEMA SW (834_)	2000 i.e. 16V (834AA)	108	05/89 – 08/92	3425	3425
THEMA SW (834_)	2000 i.e. 16V (834AA)	108	05/89 – 08/92		3536
THEMA SW (834_)	2000 i.e. 16V (834AI)	104	02/89 – 05/92	3425	3425
THEMA SW (834_)	2000 i.e. 16V (834AI)	104	02/89 – 05/92		3536
THEMA SW (834_)	2000 i.e. 16V Turbo (834AC)	133	12/88 – 06/90	3425	3425
THEMA SW (834_)	2000 i.e. 16V Turbo (834AC)	133	12/88 – 06/90		3536
THEMA SW (834_)	2000 i.e. 16V Turbo (834AL)	130	04/89 – 03/93	3425	3425
THEMA SW (834_)	2000 i.e. 16V Turbo (834AL)	130	04/89 – 03/93		3536
THEMA SW (834_)	2000 Turbo	110	01/89 – 03/92	3425	3425
THEMA SW (834_)	2000 Turbo	110	01/89 – 03/92		3536
THEMA SW (834_)	2000 Turbo 16V (834GC,834FC)	148	11/92 – 07/94	3425	3425
THEMA SW (834_)	2000 Turbo 16V (834GC,834FC)	148	11/92 – 07/94		3536
THEMA SW (834_)	2500 Turbo DS (834AE)	85	06/88 – 05/92	3425	3425
THEMA SW (834_)	2500 Turbo DS (834AE)	85	06/88 – 05/92	3467	3536
THEMA SW (834_)	2500 Turbo DS (834AM)	77	05/88 – 07/92	3425	3425
THEMA SW (834_)	2500 Turbo DS (834AM)	77	05/88 – 07/92	3467	3536
THEMA SW (834_)	2500 Turbo DS (834D)	74	03/87 – 09/90	3425	3425
THEMA SW (834_)	2500 Turbo DS (834D)	74	03/87 – 09/90	3467	3536

MAKE & MODEL   		KW	YEAR		
LANCIA					
THEMA SW (834_)	2500 Turbo DS (834FE,834LE)	85	09/92 – 07/94	3425	3425
THEMA SW (834_)	2500 Turbo DS (834FE,834LE)	85	09/92 – 07/94		3536
THEMA SW (834_)	3000 V6 (834GD, 834FD)	126	09/92 – 07/94	3425	3425
THEMA SW (834_)	3000 V6 (834GD, 834FD)	126	09/92 – 07/94		3536
VOYAGER MPV (RT_)	2.8 CRD	120	09/11 – 12/14	4005	
VOYAGER MPV (RT_)	3.6 V6 VVT	208	09/11 – 12/14	4005	
Y (840_)	1.1 (840AE)	40	11/95 – 09/03	3608	
Y (840_)	1.1 (840AE)	40	11/95 – 09/03	3643	
Y (840_)	1.1 (840AE)	40	11/95 – 09/03	3897	
Y (840_)	1.2 (840AA, 840AF1A)	44	03/96 – 09/03	3608	
Y (840_)	1.2 (840AA, 840AF1A)	44	03/96 – 09/03	3643	
Y (840_)	1.2 (840AA, 840AF1A)	44	03/96 – 09/03	3897	
Y (840_)	1.2 16V (840AD)	63	04/97 – 09/03	3897	
Y (840_)	1.2 16V (840AG1A)	59	10/00 – 09/03	3897	
Y (840_)	1.4 12V (840AB)	59	10/96 – 09/03	3466	
Y (840_)	1.4 12V (840AB)	59	10/96 – 09/03	3468	
Y (840_)	1.4 12V (840AB)	59	10/96 – 09/03	3897	
Y (840_)	1.4 12V (840AC)	55	03/96 – 09/03	3466	
Y (840_)	1.4 12V (840AC)	55	03/96 – 09/03	3468	
Y (840_)	1.4 12V (840AC)	55	03/96 – 09/03	3897	
Y10 (156)	1.0 (156C)	41	03/85 – 07/89	3424/1	
Y10 (156)	1.0 Fire	37	03/85 – 02/90	3424/1	
Y10 (156)	1.0 Fire (156 A.000)	41	03/85 – 07/89	3439	
Y10 (156)	1.0 Fire (156 A2.000)	33	03/85 – 06/89	3439	
Y10 (156)	1.0 Fire (156 A2.000)	37	03/85 – 02/90	3439	
Y10 (156)	1.0 Fire (156 A2.000)	37	12/87 – 02/90	3439	
Y10 (156)	1.0 Fire (156 A2.100)	32	06/85 – 06/91	3439	
Y10 (156)	1.0 Fire (156 A2.100)	32	12/86 – 02/89	3439	
Y10 (156)	1.0 Fire (156 A2.246)	33	12/87 – 02/92	3439	
Y10 (156)	1.0 Fire (156AA)	33	03/85 – 06/89	3424/1	
Y10 (156)	1.0 Fire (156AE) CAT	33	10/87 – 02/92	3424/1	
Y10 (156)	1.0 Fire (156B, 156AD)	32	06/85 – 06/91	3424/1	
Y10 (156)	1.0 Fire All-wheel Drive	32	12/86 – 02/89	3424/1	
Y10 (156)	1.0 Fire All-wheel Drive	37	12/87 – 02/90	3424/1	
Y10 (156)	1.0 Fire All-wheel Drive (156AE)	33	12/87 – 02/92	3424/1	
Y10 (156)	1.0 Fire Catalytic-Conv (156AE) (156 A2.246)	33	10/87 – 02/92	3439	
Y10 (156)	1.0 Turbo (156 A1.000)	62	03/85 – 02/89	3439	
Y10 (156)	1.0 Turbo (156D)	62	03/85 – 02/89	3466	
Y10 (156)	1.0 Turbo (156D)	62	03/85 – 02/89	3468	
Y10 (156)	1.1 Avenue (176 B2.000)	40	01/95 – 12/95	3439	
Y10 (156)	1.1 Fire (156AG)	40	01/95 – 12/95	3466	
Y10 (156)	1.1 Fire (156AG)	40	01/95 – 12/95	3468	
Y10 (156)	1.1 Fire (156AG)	40	01/95 – 12/95	3424/1	
Y10 (156)	1.1 Fire All-wheel Drive (156AG)	40	01/95 – 12/95	3466	
Y10 (156)	1.1 Fire All-wheel Drive (156AG)	40	01/95 – 12/95	3468	
Y10 (156)	1.1 i.e (156 C.000)	42	08/89 – 06/92	3439	
Y10 (156)	1.1 i.e Fire (156AC)	42	08/89 – 06/92	3466	
Y10 (156)	1.1 i.e Fire (156AC)	42	08/89 – 06/92	3468	
Y10 (156)	1.1 i.e Fire (156AC)	42	08/89 – 06/92	3424/1	
Y10 (156)	1.1 i.e Fire All-wheel Drive (156AC)	42	08/89 – 06/92	3466	
Y10 (156)	1.1 i.e Fire All-wheel Drive (156AC)	42	08/89 – 06/92	3468	
Y10 (156)	1.1 i.e. Fire (156 C.046)	37	07/89 – 09/95	3439	
Y10 (156)	1.1 i.e. Fire (156 C.046)	37	09/92 – 12/95	3439	
Y10 (156)	1.1 i.e. Fire (156AG)	37	07/89 – 09/95	3424/1	
Y10 (156)	1.1 i.e. Fire All-wheel Drive (156AG)	37	07/89 – 09/95	3466	
Y10 (156)	1.1 i.e. Fire All-wheel Drive (156AG)	37	07/89 – 09/95	3468	
Y10 (156)	1.3 i.e. (156AB)	56	11/87 – 05/93	3466	
Y10 (156)	1.3 i.e. (156AB)	56	11/87 – 05/93	3468	
Y10 (156)	1.3 i.e. (156AF)	53	02/89 – 12/95	3466	
Y10 (156)	1.3 i.e. (156AF)	53	02/89 – 12/95	3468	
LAND					
ROVER 110/127 (LDH) 44318 4x4	17 H, 17 J	61	10/1985 - 07/1990	3816	
ROVER 110/127 (LDH) 44318 D	12J	49	09/1986 - 07/1990	3816	
ROVER 110/127 (LDH) 44318 TD 4x4	19 J	63	09/1986 - 07/1990	3816	
ROVER 110/127 (LDH) 44319 4x4	15G	98	09/1983 - 07/1990	3816	
ROVER 110/127 (LDH) 44319 4x4	15G, 21 G	100	01/1985 - 07/1990	3816	
ROVER Defender I Cabrio (L316) 44229 Td4 4x4 (L317)	DT224	90	08/2011 - 02/2016	3816	
ROVER Defender I Cabrio (L316) 44288 Td4 4x4 (L317)	DT244	90	05/2007 - 02/2016	3816	
ROVER Defender I Cabrio (L316) 44318 D 4x4 (L316)	12 J	51	09/1990 - 09/2001	3816	3512/1
ROVER Defender I Cabrio (L316) 44318 Td5 4x4 (L316)	10 P, 14 P, 15 P	90	06/1998 - 02/2016	3816	3512/1
ROVER Defender I Cabrio (L316) 44318 TDI 4x4 (L316)	11 L, 16 L, 23 L	83	08/1990 - 12/2001	3816	3512/1
ROVER Defender I Cabrio (L316) 44319 4x4	21 G	86	09/1990 - 08/1993	3816	
ROVER Defender I Cabrio (L316) 44319 4x4	22 D	100	09/1990 - 12/1998	3816	3512/1
ROVER Defender I Cabrio (L316) 44442 4x4	37 L	134	04/1998 - 09/2000	3512/1	
ROVER Defender I Cabrio (L316) 44442 4x4	37 L	134	04/1998 - 09/2000	3816	
ROVER Defender I SW (L316) 44229 Td4 4x4 (L317)	DT224	110	02/2015 - 02/2016	3816	

BESER®

MAKE & MODEL   		KW	YEAR		
LAND					
ROVER Defender I SW (L316) 44229 Td4 4x4 (L317)	DT224	90	08/2011 - 02/2016	3816	
ROVER Defender I SW (L316) 44288 Td4 4x4 (L316)	DT244	90	10/2006 - 02/2016	3816	
ROVER Defender I SW (L316) 44318 4x4	17 H	61	09/1990 - 12/1994	3816	3512/1
ROVER Defender I SW (L316) 44318 D 4x4 (L316)	12 J	51	09/1990 - 09/2001	3816	3512/1
ROVER Defender I SW (L316) 44318 Td5 4x4 (L316)	10 P, 14 P, 15 P	90	06/1998 - 02/2016	3816	3512/1
ROVER Defender I SW (L316) 44318 TDI 4x4 (L316)	11 L, 16 L, 23 L	83	08/1990 - 12/1998	3816	3512/1
ROVER Defender I SW (L316) 44319 4x4	11 D, 21 G	86	09/1990 - 08/1993	3816	
ROVER Defender I SW (L316) 44319 4x4	22 D	100	09/1990 - 12/1998	3816	3512/1
ROVER Defender I SW (L316) 44410 4x4	M52 B28	140	11/1998 - 09/2003	3816	3512/1
ROVER Defender I SW (L316) 44442 4x4 (L316)	37 L	134	01/1993 - 09/2000	3512/1	
ROVER Defender I SW (L316) 44442 4x4 (L316)	37 L	134	01/1993 - 09/2000	3816	
ROVER Defender I SW (L316) 44442 V8 4x4 (L316)	37 L	136	11/1998 - 02/2016	3816	3512/1
ROVER Defender II SW (L663) 2.0 D200 MHEV 4x4	AJ20D4	147	09/2020 -		4323
ROVER Defender II SW (L663) 2.0 D200 SD4 4x4	204DT	147	09/2019 -		4323
ROVER Defender II SW (L663) 2.0 D240 SD4 4x4	204DT	177	09/2019 -		4323
ROVER Defender II SW (L663) 2.0 P300 Si4 4x4	PT204	221	09/2019 -		4323
ROVER Defender II SW (L663) 2.0 P400e Hybrid 4x4	PT204	221	09/2020 -		4323
ROVER Defender II SW (L663) 2.0 P400e Hybrid 4x4	PT204	297	09/2020 -		4323
ROVER Defender II SW (L663) 3.0 D200 MHEV 4x4	AJ20D6	147	09/2019 -		4323
ROVER Defender II SW (L663) 3.0 D250 MHEV 4x4	AJ20D6	183	09/2020 -		4323
ROVER Defender II SW (L663) 3.0 D300 MHEV 4x4	AJ20D6	221	09/2020 -		4323
ROVER Defender II SW (L663) 3.0 P400 I6 MHEV 4x4	PT306	294	09/2019 -		4323
ROVER Discovery IV (L319) 3.0 4x4	306PS	250	08/2013 -	4314	
ROVER Discovery IV (L319) 3.0 SDV6 4x4	306DT	188	11/2009 -	4314	
ROVER Discovery IV (L319) 3.0 TD 4x4	306DT	155	05/2010 -	4314	
ROVER Discovery IV (L319) 3.0 TD 4x4	306DT	180	09/2009 -	4314	
ROVER Discovery IV (L319) 3.0 TD 4x4	306DT	183	07/2012 -	4314	
ROVER Discovery IV (L319) 3.0 TD 4x4	306DT	200	09/2009 -	4314	
ROVER Discovery IV (L319) 5.0 V8	50SD4R	375	09/2009 - 08/2016	4314	
ROVER Discovery IV (L319) 5.0 V8 4x4	508PN	276	09/2009 -	4314	
ROVER Discovery V (L462) 2.0 4x4	PT204	221	09/2017 -	4314	4323
ROVER Discovery V (L462) 2.0 D 4x4	204DTA	177	09/2016 -	4314	4323
ROVER Discovery V (L462) 2.0 D 4x4	204DTD	132	09/2016 -	4314	4323
ROVER Discovery V (L462) 3.0 4x4	306PS	250	09/2016 -	4314	4323
ROVER Discovery V (L462) 3.0 D 4x4	306DT	155	09/2016 -	4314	4323
ROVER Discovery V (L462) 3.0 D 4x4	306DT	183	09/2016 -	4314	4323
ROVER Discovery V (L462) 3.0 D 4x4	306DT	190	09/2016 -	4314	4323
ROVER Discovery V (L462) 3.0 D250 MHEV 4x4	AJ20D6	183	12/2020 -	4314	4323
ROVER Discovery V (L462) 3.0 D300 MHEV 4x4	AJ20D6	221	12/2020 -	4314	4323
ROVER Discovery V (L462) 3.0 P360 MHEV 4x4	AJ20P6	265	12/2020 -		4323
ROVER Discovery V (L462) 3.0 Sd6 4x4	306DT	225	09/2018 -	4314	4323
ROVER Discovery V (L462) 3.0 SDV6	-	225	07/2018 -	4314	4323
ROVER Landrover I 44318	17H	62	01/1985 - 12/1990	3816	
ROVER Landrover I 44318 D	12J	51	01/1983 - 12/1985	3816	
ROVER Landrover I 44319	13D/ 17D/ 18D/ 22D/ 24D/ 25D/ 31D	93-107-120	01/1980 - 12/1990	3816	
ROVER LCV Defender I Pick-up (L316) 4.0 4x4	37 L	134	04/1998 - 09/2000	3512/1	
ROVER LCV Defender I Pick-up (L316) 4.0 4x4	37 L	134	04/1998 - 09/2000	3816	
ROVER LCV Defender I Pick-up (L316) 44229 Td4 4x4 (L317)	DT224	90	08/2011 - 02/2016	3816	
ROVER LCV Defender I Pick-up (L316) 44288 Td4 4x4 (L317)	DT244	90	05/2007 - 02/2016	3816	
ROVER LCV Defender I Pick-up (L316) 44318 Td5 4x4 (L316)	10 P, 15 P	90	06/1998 - 02/2016	3816	3512/1
ROVER LCV Defender I Pick-up (L316) 44410 4x4	M52 B28	140	11/1998 - 09/2003	3816	3512/1
ROVER LCV Defender I Platform/Chassis (L316) 44229 Td4 4x4 (L317)	DT224	90	08/2011 - 02/2016	3816	
ROVER Range Rover III (L322) 44350 D 4x4	368DT	200	04/2006 - 08/2012	4314	
ROVER Range Rover III (L322) 5.0 4x4	508PN	276	09/2009 - 08/2012	4314	
ROVER Range Rover III (L322) 5.0 4x4	508PS	375	09/2009 - 08/2012	4314	
ROVER Range Rover IV (L405) 2.0 P400e PHEV 4x4	PT204	297	10/2017 -	4314	4323
ROVER Range Rover IV (L405) 2.0 PHEV 4x4	PT204	221	10/2017 -	4314	4323
ROVER Range Rover IV (L405) 2.0 Si4	-	297	12/2017 -	4314	4323
ROVER Range Rover IV (L405) 3.0 4x4	306PS	250	10/2013 -	4314	4323
ROVER Range Rover IV (L405) 3.0 4x4	306PS	280	06/2015 -	4314	4323
ROVER Range Rover IV (L405) 3.0 D 4x4	306DT	155	10/2013 -	4314	4323
ROVER Range Rover IV (L405) 3.0 D 4x4	306DT	183	08/2012 -	4314	4323
ROVER Range Rover IV (L405) 3.0 D 4x4	306DT	190	08/2012 -	4314	4323
ROVER Range Rover IV (L405) 3.0 D Hybrid 4x4	306DT	215	06/2015 -	4314	4323
ROVER Range Rover IV (L405) 3.0 D Hybrid 4x4	306DT	225	06/2015 -	4314	4323
ROVER Range Rover IV (L405) 3.0 D Hybrid 4x4	306DT	250	10/2013 -	4314	4323
ROVER Range Rover IV (L405) 3.0 D250 MHEV 4x4	AJ20D6	183	07/2020 -	4314	4323
ROVER Range Rover IV (L405) 3.0 D300 4x4	AJ20D6	221	07/2020 -	4314	4323
ROVER Range Rover IV (L405) 3.0 D300 MHEV 4x4	-	258	11/2020 -	4314	4323
ROVER Range Rover IV (L405) 3.0 D300 MHEV 4x4	AJ20D6	221	07/2020 -	4314	4323
ROVER Range Rover IV (L405) 3.0 D350 4x4	AJ20D6	258	07/2020 -	4314	4323
ROVER Range Rover IV (L405) 3.0 D350 MHEV 4x4	AJ20D6	258	07/2020 -	4314	4323
ROVER Range Rover IV (L405) 3.0 P400 4x4	PT306	294	07/2020 -	4314	4323
ROVER Range Rover IV (L405) 3.0 P400 MHEV 4x4	PT306	294	05/2019 -	4314	4323
ROVER Range Rover IV (L405) 3.0 SD 4x4	306DT	202	10/2018 -	4314	4323
ROVER Range Rover IV (L405) 3.0 SDV6 4x4	306DT	182	12/2014 -	4314	4323

MAKE & MODEL   		KW	YEAR		
LAND					
ROVER Range Rover IV (L405) 3.0 TD6 4x4	306DT	215	10/2012 -	4314	4323
ROVER Range Rover IV (L405) 44290 D 4x4	448DT	230	08/2013 -	4314	4323
ROVER Range Rover IV (L405) 44290 D V8 4x4	448DT	250	08/2012 -	4314	4323
ROVER Range Rover IV (L405) 44290 SDV8 4x4	448DT	253	08/2013 -	4314	4323
ROVER Range Rover IV (L405) 5.0 4x4	508PN	276	12/2013 -		4323
ROVER Range Rover IV (L405) 5.0 4x4	508PS	375	08/2012 -		4323
ROVER Range Rover IV (L405) 5.0 4x4	508PS	386	11/2017 -		4323
ROVER Range Rover IV (L405) 5.0 4x4	508PS	405	06/2015 -		4323
ROVER Range Rover IV (L405) 5.0 4x4	508PS	416	11/2017 -		4323
ROVER Range Rover IV (L405) P360 MHEV 4x4	PT306	265	12/2019 -	4314	4323
ROVER Range Rover IV (L405) SCV8 4x4	508PS	415	01/2019 -		4323
ROVER Range Rover Sport I (L320) 3.0 D 4x4	306DT	155	05/2010 - 03/2013	4314	
ROVER Range Rover Sport I (L320) 3.0 D 4x4	306DT	180	09/2009 - 03/2013	4314	
ROVER Range Rover Sport I (L320) 44231	-	291	11/2009 - 05/2013	4314	
ROVER Range Rover Sport I (L320) 44350 D 4x4	368DT	200	04/2006 - 03/2013	4314	
ROVER Range Rover Sport I (L320) 5.0 4x4	508PN	276	07/2009 - 03/2013	4314	
ROVER Range Rover Sport I (L320) 5.0 4x4	508PS	372	04/2009 - 03/2013	4314	
ROVER Range Rover Sport I (L320) 5.0 4x4	508PS	375	09/2009 - 03/2013	4314	
ROVER Range Rover Sport II (L494) 2.0 4x4	PT204	221	10/2017 -	4314	4323
ROVER Range Rover Sport II (L494) 2.0 D 4x4	204DTA	177	08/2016 -	4314	4323
ROVER Range Rover Sport II (L494) 2.0 PHEV 4x4	PT204	221	10/2017 -	4314	4323
ROVER Range Rover Sport II (L494) 2.0 PHEV 4x4	PT204	297	10/2017 -	4314	4323
ROVER Range Rover Sport II (L494) 2.0 Si4 PHEV	-	297	08/2018 -	4314	4323
ROVER Range Rover Sport II (L494) 3.0 4x4	306PS	250	04/2013 -	4314	4323
ROVER Range Rover Sport II (L494) 3.0 4x4	306PS	280	06/2015 -	4314	4323
ROVER Range Rover Sport II (L494) 3.0 4x4	AJ20P6	265	08/2019 -	4314	4323
ROVER Range Rover Sport II (L494) 3.0 D 4x4	306DT	155	04/2013 -	4314	4323
ROVER Range Rover Sport II (L494) 3.0 D 4x4	306DT	183	04/2013 -	4314	4323
ROVER Range Rover Sport II (L494) 3.0 D 4x4	306DT	190	04/2013 -	4314	4323
ROVER Range Rover Sport II (L494) 3.0 D 4x4	306DT	215	04/2013 -	4314	4323
ROVER Range Rover Sport II (L494) 3.0 D 4x4	306DT	225	09/2014 -	4314	4323
ROVER Range Rover Sport II (L494) 3.0 D Hybrid 4x4	306DT	215	12/2014 -	4314	4323
ROVER Range Rover Sport II (L494) 3.0 D Hybrid 4x4	306DT	225	06/2015 -	4314	4323
ROVER Range Rover Sport II (L494) 3.0 D Hybrid 4x4	306DT	250	10/2013 -	4314	4323
ROVER Range Rover Sport II (L494) 3.0 D250 4x4	AJ20D6	183	07/2020 -	4314	4323
ROVER Range Rover Sport II (L494) 3.0 D250 MHEV 4x4	AJ20D6	183	07/2020 -	4314	4323
ROVER Range Rover Sport II (L494) 3.0 D300 4x4	AJ20D6	221	07/2020 -	4314	4323
ROVER Range Rover Sport II (L494) 3.0 D300 MHEV 4x4	AJ20D6	221	07/2020 -	4314	4323
ROVER Range Rover Sport II (L494) 3.0 D350 4x4	AJ20D6	258	07/2020 -	4314	4323
ROVER Range Rover Sport II (L494) 3.0 D350 MHEV 4x4	AJ20D6	258	07/2020 -	4314	4323
ROVER Range Rover Sport II (L494) 3.0 P400 4x4	AJ20P6	294	08/2019 -	4314	4323
ROVER Range Rover Sport II (L494) 3.0 P400 MHEV 4x4	AJ20P6	294	02/2019 -	4314	4323
ROVER Range Rover Sport II (L494) 44290 D 4x4	448DT	250	10/2013 -	4314	4323
ROVER Range Rover Sport II (L494) 5.0 4x4	508PS	375	04/2013 -		4323
ROVER Range Rover Sport II (L494) 5.0 4x4	508PS	386	11/2017 -		4323
ROVER Range Rover Sport II (L494) 5.0 4x4	508PS	405	01/2014 -		4323
ROVER Range Rover Sport II (L494) 5.0 4x4	508PS	423	11/2017 -		4323
ROVER Range Rover Sport II (L494) P360 MHEV 4x4	PT306	265	06/2019 -	4314	4323
ROVER Range Rover Sport II (L494) SCV6 4x4	204PT	177	10/2015 -	4314	4323
LAND ROVER					
DEFENDER Cabrio (LD_)	2.2 Td4 4x4	90	08/11 -	3412	3512
DEFENDER Cabrio (LD_)	2.2 Td4 4x4	90	08/11 -	3453	3512/2
DEFENDER Cabrio (LD_)	2.2 Td4 4x4	90	08/11 -	3412	
DEFENDER Cabrio (LD_)	2.2 Td4 4x4	90	08/11 -	3453	
DEFENDER Cabrio (LD_)	2.4 Td4 4x4	90	05/07 -	3412	3512
DEFENDER Cabrio (LD_)	2.4 Td4 4x4	90	05/07 -	3453	3512/2
DEFENDER Cabrio (LD_)	2.5 90 TDI 4x4	83	09/90 -	3412	3512
DEFENDER Cabrio (LD_)	2.5 90 TDI 4x4	83	09/90 -	3453	3512/2
DEFENDER Cabrio (LD_)	2.5 D 4x4	51	09/90 – 09/01	3412	3512
DEFENDER Cabrio (LD_)	2.5 D 4x4	51	09/90 – 09/01	3453	3512/2
DEFENDER Cabrio (LD_)	2.5 Td5 4x4	90	06/98 -	3412	3512
DEFENDER Cabrio (LD_)	2.5 Td5 4x4	90	06/98 -	3453	3512/2
DEFENDER Pickup (LD_)	2.5 Td5 4x4	90	06/98 -	3412	3512
DEFENDER Pickup (LD_)	2.5 Td5 4x4	90	06/98 -	3453	3512/2
DEFENDER Pickup (LD_)	2.8 4x4	140	11/98 – 09/03	3412	3512
DEFENDER Pickup (LD_)	2.8 4x4	140	11/98 – 09/03	3453	3512/2
DEFENDER Pickup (LD_)	3.5 4x4	100	09/90 – 12/98	3412	3512
DEFENDER Pickup (LD_)	3.5 4x4	100	09/90 – 12/98	3453	3512/2
DEFENDER Pickup (LD_)	3.9 4x4	134	04/98 – 09/00	3412	3512
DEFENDER Pickup (LD_)	3.9 4x4	134	04/98 – 09/00	3453	3512/2
DEFENDER Pickup (LD_)	4.0 4x4	134	04/98 – 09/00	3412	3512
DEFENDER Pickup (LD_)	4.0 4x4	134	04/98 – 09/00	3453	3512/2
DEFENDER Platform/Chassis (LD_)	2.2 Td4 4x4	90	08/11 -	3412	3512
DEFENDER Platform/Chassis (LD_)	2.2 Td4 4x4	90	08/11 -	3453	3512/2
DEFENDER Station Wagon (LD_)	2.2 Td4 4x4	90	08/11 -	3412	3512
DEFENDER Station Wagon (LD_)	2.2 Td4 4x4	90	08/11 -	3453	3512/2

MAKE & MODEL		KW	YEAR		
LAND ROVER					
DEFENDER Station Wagon (LD_)	2.2 Td4 4x4	110	02/15 -	3453	3512/2
DEFENDER Station Wagon (LD_)	2.2 Td4 4x4	110	02/15 -	3412	
DEFENDER Station Wagon (LD_)	2.4 Td4 4x4	90	05/07 -	3412	3512
DEFENDER Station Wagon (LD_)	2.4 Td4 4x4	90	05/07 -	3453	3512/2
DEFENDER Station Wagon (LD_)	2.5 4x4	61	09/90 – 12/94	3412	3512
DEFENDER Station Wagon (LD_)	2.5 4x4	61	09/90 – 12/94	3453	3512/2
DEFENDER Station Wagon (LD_)	2.5 90,110 TDI 4x4	83	09/90 – 12/98	3412	3512
DEFENDER Station Wagon (LD_)	2.5 90,110 TDI 4x4	83	09/90 – 12/98	3453	3512/2
DEFENDER Station Wagon (LD_)	2.5 D 4x4	51	09/90 – 09/01	3412	3512
DEFENDER Station Wagon (LD_)	2.5 D 4x4	51	09/90 – 09/01	3453	3512/2
DEFENDER Station Wagon (LD_)	2.5 Td5 4x4	90	06/98 -	3412	3512
DEFENDER Station Wagon (LD_)	2.5 Td5 4x4	90	06/98 -	3453	3512/2
DEFENDER Station Wagon (LD_)	3.5 4x4	86	09/90 – 08/93	3412	3512
DEFENDER Station Wagon (LD_)	3.5 4x4	86	09/90 – 08/93	3453	3512/2
DEFENDER Station Wagon (LD_)	3.5 4x4	100	09/90 – 12/98	3412	3512
DEFENDER Station Wagon (LD_)	3.5 4x4	100	09/90 – 12/98	3453	3512/2
DEFENDER Station Wagon (LD_)	3.9 4x4	134	04/98 – 09/00	3412	3512
DEFENDER Station Wagon (LD_)	3.9 4x4	134	04/98 – 09/00	3453	3512/2
DEFENDER Station Wagon (LD_)	3.9 V8 4x4	136	11/98 -	3412	3512
DEFENDER Station Wagon (LD_)	3.9 V8 4x4	136	11/98 -	3453	3512/2
DISCOVERY I (LJ_)	2.0 16 V 4x4	99	06/89 – 10/98	3423/1	3661
DISCOVERY I (LJ_)	2.0 16 V 4x4	99	06/89 – 10/98		3771
DISCOVERY I (LJ_)	2.5 D 4x4	90	06/93 – 10/98		3771
DISCOVERY I (LJ_)	2.5 D 4x4	90	07/94 – 10/98	3423/1	3661
DISCOVERY I (LJ_)	2.5 TDI 4x4	83	10/89 – 10/98	3423/1	3661
DISCOVERY I (LJ_)	2.5 TDI 4x4	83	10/89 – 10/98		3771
DISCOVERY I (LJ_)	3.5 4x4	98	06/89 – 08/90	3423/1	3661
DISCOVERY I (LJ_)	3.5 4x4	98	06/89 – 08/90	3662	3771
DISCOVERY I (LJ_)	3.5 4x4	122	06/89 – 06/94	3423/1	3661
DISCOVERY I (LJ_)	3.5 4x4	122	06/89 – 06/94	3662	3771
DISCOVERY I (LJ_)	3.5 4x4 (SALLJG)	113	06/89 – 06/94	3423/1	3661
DISCOVERY I (LJ_)	3.5 4x4 (SALLJG)	113	06/89 – 06/94	3662	3771
DISCOVERY I (LJ_)	3.9 V8 4x4	134	09/93 – 10/98	3662	
DISCOVERY III (LA_)	2.7 TD 4x4	140	07/04 – 09/09	4293	3944
DISCOVERY III (LA_)	4.0 4x4	160	02/05 – 09/09	4293	3944
DISCOVERY III (LA_)	4.0 4x4	161	02/05 – 09/09	4293	3944
DISCOVERY III (LA_)	4.0 V6 4x4	160	10/04 – 09/09	4293	3944
DISCOVERY III (LA_)	4.4 4x4	220	07/04 – 09/09	4293	3944
DISCOVERY IV (LA_)	2.7 TD 4x4	140	09/09 -	4293	3944
DISCOVERY IV (LA_)	3.0 4x4	250	08/13 -		3944
DISCOVERY IV (LA_)	3.0 SDV6 4x4	188	11/09 -	4293	3944
DISCOVERY IV (LA_)	3.0 TD 4x4	155	05/10 -		3944
DISCOVERY IV (LA_)	3.0 TD 4x4	180	09/09 -		3944
DISCOVERY IV (LA_)	3.0 TD 4x4	183	07/12 -		3944
DISCOVERY IV (LA_)	3.0 TD 4x4	200	09/09 -		3944
DISCOVERY IV (LA_)	4.0 4x4	160	09/09 -	4293	3944
DISCOVERY IV (LA_)	5.0 V8 4x4	276	09/09 -		3944
DISCOVERY SPORT (LC_)	2.0 D	110	08/15 -	4161	
DISCOVERY SPORT (LC_)	2.0 D 4x4	132	06/15 -	4161	
FREELANDER (LN_)	1.8 16V 4x4	86	11/00 – 10/06	3683	
FREELANDER (LN_)	1.8 16V 4x4	86	11/00 – 10/06	3872	
FREELANDER (LN_)	1.8 16V 4x4	86	11/00 – 10/06	4094	
FREELANDER (LN_)	1.8 i 16V 4x4	88	02/98 – 11/00	3683	
FREELANDER (LN_)	1.8 i 16V 4x4	88	02/98 – 11/00	3872	
FREELANDER (LN_)	1.8 i 16V 4x4	88	02/98 – 11/00	4094	
FREELANDER (LN_)	2.0 DI 4x4	72	02/98 – 11/00	3683	
FREELANDER (LN_)	2.0 DI 4x4	72	02/98 – 11/00	3872	
FREELANDER (LN_)	2.0 DI 4x4	72	02/98 – 11/00	4094	
FREELANDER (LN_)	2.0 Td4 4x4	80	03/01 – 10/06	3683	
FREELANDER (LN_)	2.0 Td4 4x4	80	03/01 – 10/06	3872	
FREELANDER (LN_)	2.0 Td4 4x4	80	03/01 – 10/06	4094	
FREELANDER (LN_)	2.0 Td4 4x4	82	11/00 – 10/06	3683	
FREELANDER (LN_)	2.0 Td4 4x4	82	11/00 – 10/06	3872	
FREELANDER (LN_)	2.0 Td4 4x4	82	11/00 – 10/06	4094	
FREELANDER (LN_)	2.5 V6 4x4	130	11/00 – 10/06	3683	
FREELANDER (LN_)	2.5 V6 4x4	130	11/00 – 10/06	3872	
FREELANDER (LN_)	2.5 V6 4x4	130	11/00 – 10/06	4094	
FREELANDER 2 (LF_)	2.0 Si4 4x4	177	10/11 – 10/14	4161	4157
FREELANDER 2 (LF_)	2.2 eD4	110	08/10 – 10/14	4161	4157
FREELANDER 2 (LF_)	2.2 SD4 4x4	140	08/10 – 10/14	4161	4157
FREELANDER 2 (LF_)	2.2 TD4 4x4	110	10/06 – 10/14	4161	4157
FREELANDER 2 (LF_)	2.2 TD4 4x4	112	01/07 – 10/14	4161	4157
FREELANDER 2 (LF_)	2.2 TD4 4x4	115	10/06 – 10/14	4161	4157
FREELANDER 2 (LF_)	2.2 TD4 4x4	118	10/06 – 10/14	4161	4157
FREELANDER 2 (LF_)	3.2 4x4	171	10/06 – 10/14	4161	
FREELANDER Soft Top (LN_)	1.8 i 16V 4x4	88	02/98 – 10/06	3683	

MAKE & MODEL		KW	YEAR		
LAND ROVER					
FREELANDER Soft Top (LN_)	1.8 i 16V 4x4	88	02/98 – 10/06	3872	
FREELANDER Soft Top (LN_)	1.8 i 16V 4x4	88	02/98 – 10/06	4094	
FREELANDER Soft Top (LN_)	2.0 DI 4x4	72	02/98 – 10/06	3683	
FREELANDER Soft Top (LN_)	2.0 DI 4x4	72	02/98 – 10/06	3872	
FREELANDER Soft Top (LN_)	2.0 DI 4x4	72	02/98 – 10/06	4094	
FREELANDER Soft Top (LN_)	2.0 DI 4x4	72	02/98 – 10/06	4094	
RANGE ROVER EVOQUE (LV_)	2.0 4x4	177	06/11 -	4161	
RANGE ROVER EVOQUE (LV_)	2.0 D	110	06/15 -	4161	
RANGE ROVER EVOQUE (LV_)	2.0 D 4x4	110	06/15 -	4161	
RANGE ROVER EVOQUE (LV_)	2.0 D 4x4	132	05/15 -	4161	
RANGE ROVER EVOQUE (LV_)	2.2 D	110	06/11 -	4161	
RANGE ROVER EVOQUE (LV_)	2.2 D 4x4	110	06/11 -	4161	
RANGE ROVER EVOQUE (LV_)	2.2 D 4x4	140	06/11 -	4161	
RANGE ROVER I (AE, AN, HAA, HAB, HAM, HBM, RE,RN)	2.4 TD 4x4	78	04/86 – 12/90	3423/1	3661
RANGE ROVER I (AE, AN, HAA, HAB, HAM, HBM, RE,RN)	2.4 TD 4x4	78	04/86 – 12/90		3771
RANGE ROVER I (AE, AN, HAA, HAB, HAM, HBM, RE,RN)	2.4 TD 4x4	83	04/86 – 07/94	3423/1	3661
RANGE ROVER I (AE, AN, HAA, HAB, HAM, HBM, RE,RN)	2.4 TD 4x4	83	04/86 – 07/94	3662	3771
RANGE ROVER I (AE, AN, HAA, HAB, HAM, HBM, RE,RN)	2.4 TD 4x4	89	10/89 – 02/92	3423/1	3661
RANGE ROVER I (AE, AN, HAA, HAB, HAM, HBM, RE,RN)	2.4 TD 4x4	89	10/89 – 02/92		3771
RANGE ROVER I (AE, AN, HAA, HAB, HAM, HBM, RE,RN)	2.4 TD 4x4	89	10/89 – 04/94	3662	3661
RANGE ROVER I (AE, AN, HAA, HAB, HAM, HBM, RE,RN)	2.5 TD 4x4	83	09/91 – 04/94	3662	3771
RANGE ROVER I (AE, AN, HAA, HAB, HAM, HBM, RE,RN)	2.5 TD 4x4	83	09/91 – 04/94		3661
RANGE ROVER I (AE, AN, HAA, HAB, HAM, HBM, RE,RN)	2.5 TD 4x4	89	10/89 – 04/94	3423/1	
RANGE ROVER I (AE, AN, HAA, HAB, HAM, HBM, RE,RN)	2.5 TDi 4x4	89	10/89 – 04/94	3662	3771
RANGE ROVER I (AE, AN, HAA, HAB, HAM, HBM, RE,RN)	3.5 4x4	96	10/85 – 08/91	3423/1	3771
RANGE ROVER I (AE, AN, HAA, HAB, HAM, HBM, RE,RN)	3.5 4x4	96	10/85 – 08/91		3661
RANGE ROVER I (AE, AN, HAA, HAB, HAM, HBM, RE,RN)	3.5 4x4	97	07/70 – 08/81	3413	
RANGE ROVER I (AE, AN, HAA, HAB, HAM, HBM, RE,RN)	3.5 4x4	107	01/87 – 09/90	3423/1	3661
RANGE ROVER I (AE, AN, HAA, HAB, HAM, HBM, RE,RN)	3.5 4x4	107	01/87 – 09/90		3771
RANGE ROVER I (AE, AN, HAA, HAB, HAM, HBM, RE,RN)	3.5 Vogue 4x4	93	08/81 – 09/90	3413	3661
RANGE ROVER I (AE, AN, HAA, HAB, HAM, HBM, RE,RN)	3.5 Vogue 4x4	93	08/81 – 09/90	3423/1	3771
RANGE ROVER I (AE, AN, HAA, HAB, HAM, HBM, RE,RN)	3.5 Vogue 4x4	120	10/85 – 09/90		3661
RANGE ROVER I (AE, AN, HAA, HAB, HAM, HBM, RE,RN)	3.5 Vogue 4x4	120	10/85 – 09/90	3423/1	3771
RANGE ROVER I (AE, AN, HAA, HAB, HAM, HBM, RE,RN)	3.9 4x4 CAT	127	11/88 – 07/94	3662	3661
RANGE ROVER I (AE, AN, HAA, HAB, HAM, HBM, RE,RN)	3.9 4x4 CAT	127	11/88 – 07/94	3423/1	3771
RANGE ROVER I (AE, AN, HAA, HAB, HAM, HBM, RE,RN)	3.9 Cat 4x4	134	11/88 – 07/94	3423/1	3771
RANGE ROVER I (AE, AN, HAA, HAB, HAM, HBM, RE,RN)	3.9 Vogue SEI 4x4	134	11/88 – 07/94	3662	3661
RANGE ROVER I (AE, AN, HAA, HAB, HAM, HBM, RE,RN)	4.3 Vogue LSE 4x4	149	09/92 – 07/94	3662	3661
RANGE ROVER I (AE, AN, HAA, HAB, HAM, HBM, RE,RN)	4.3 Vogue LSE 4x4	149	09/92 – 07/94		3771
RANGE ROVER III (LM_)	3.0 D 4x4	130	03/02 – 08/12		3879
RANGE ROVER III (LM_)	3.0 D 4x4	130	03/02 – 08/12		3944
RANGE ROVER III (LM_)	3.6 D 4x4	200	04/06 – 08/12		3944
RANGE ROVER III (LM_)	4.2 4x4	291	05/05 – 08/12		3944
RANGE ROVER III (LM_)	4.4 4x4	210	03/02 – 08/05		3944
RANGE ROVER III (LM_)	4.4 4x4	220	08/04 – 08/12		3944
RANGE ROVER III (LM_)	4.4 4x4	225	05/05 – 08/12		3944
RANGE ROVER III (LM_)	4.4 D 4x4	230	07/10 – 08/12	4291	3944
RANGE ROVER III (LM_)	4.4 D 4x4	230	07/10 – 08/12	4291	
RANGE ROVER III (LM_)	5.0 4x4	276	09/09 – 08/12	4291	
RANGE ROVER III (LM_)	5.0 4x4	375	09/09 – 08/12	4291	
RANGE ROVER IV (LG_)	3.0 4x4	250	10/13 -	4291	
RANGE ROVER IV (LG_)	3.0 4x4	280	06/15 -	4291	
RANGE ROVER IV (LG_)	3.0 D 4x4	155	10/13 -	4291	
RANGE ROVER IV (LG_)	3.0 D 4x4	183	08/12 -	4291	
RANGE ROVER IV (LG_)	3.0 D 4x4	190	08/12 -	4291	
RANGE ROVER IV (LG_)	3.0 D Hybrid 4x4	215	06/15 -	4291	
RANGE ROVER IV (LG_)	3.0 D Hybrid 4x4	225	06/15 -	4291	
RANGE ROVER IV (LG_)	3.0 D Hybrid 4x4	250	10/13 -	4291	
RANGE ROVER IV (LG_)	4.4 D V8 4x4	250	08/12 -	4291	
RANGE ROVER IV (LG_)	5.0 4x4	276	12/13 -	4291	
RANGE ROVER IV (LG_)	5.0 4x4	372	04/09 – 03/13	4291	
RANGE ROVER IV (LG_)	5.0 4x4	375	08/12 -	4291	
RANGE ROVER SPORT (LS_)	2.7 D 4x4	140	02/05 – 03/13		3944
RANGE ROVER SPORT (LS_)	3.0 D 4x4	155	05/10 – 03/13		3944
RANGE ROVER SPORT (LS_)	3.0 D 4x4	180	09/09 – 03/13		3944
RANGE ROVER SPORT (LS_)	3.0 D 4x4	183	08/12 – 03/13		3944
RANGE ROVER SPORT (LS_)	3.0 D 4x4	188	06/11 – 03/13		3944
RANGE ROVER SPORT (LS_)	3.6 D 4x4	200	04/06 – 03/13		3944
RANGE ROVER SPORT (LS_)	4.2 4x4	287	02/05 – 03/13		3944
RANGE ROVER SPORT (LS_)	4.4 4x4	220	02/05 – 03/13		3944
RANGE ROVER SPORT (LS_)	5.0 4x4	276	07/09 – 03/13		3944
RANGE ROVER SPORT (LS_)	5.0 4x4	375	09/09 – 03/13	4291	
RANGE ROVER SPORT (LS_)	5.0 4x4	405	06/15 -	4291	
RANGE ROVER SPORT (LW_)	3.0 4x4	280	06/15 -	4291	
RANGE ROVER SPORT (LW_)	3.0 D 4x4	225	09/14 -	4291	
RANGE ROVER SPORT (LW_)	3.0 D Hybrid 4x4	215	02/15 -	4291	

MAKE & MODEL		KW	YEAR		
LANCIA					
RANGE ROVER SPORT (LW_)	3.0 D Hybrid 4x4	225	06/15 -	4291	
RANGE ROVER SPORT (LW_)	3.0 D Hybrid 4x4	250	10/13 -	4291	
RANGE ROVER SPORT (LW_)	4.4 D 4x4	250	10/13 -	4291	
RANGE ROVER SPORT (LW_)	5.0 4x4	375	04/13 -	4291	
RANGE ROVER SPORT (LW_)	5.0 4x4	405	09/14 -	4291	
LANDWIND (JMC)					
X6 Closed Off-Road Vehicle	2.0	84	01/03 -	4118	
X6 Closed Off-Road Vehicle	2.0	84	01/06 -	3657	
X6 Closed Off-Road Vehicle	2.0	84	01/06 -	3757	
X6 Closed Off-Road Vehicle	2.0	84	01/06 -	3857	
X6 Closed Off-Road Vehicle	2.0	84	06/01 -	4118	
X6 Closed Off-Road Vehicle	2.0	84	06/04 -	3657	
X6 Closed Off-Road Vehicle	2.0	84	06/04 -	3757	
X6 Closed Off-Road Vehicle	2.0	84	06/04 -	3857	
X6 Closed Off-Road Vehicle	2.0	92	06/01 -	4118	
X6 Closed Off-Road Vehicle	2.4	92	01/06 -	3657	
X8 Closed Off-Road Vehicle	2.4	92	01/06 -	3757	
X8 Closed Off-Road Vehicle	2.4	92	01/06 -	3857	
X8 Closed Off-Road Vehicle	2.4	92	06/04 -	3657	
X8 Closed Off-Road Vehicle	2.4	92	06/04 -	3757	
X8 Closed Off-Road Vehicle	2.4	92	06/04 -	3857	
X9 Closed Off-Road Vehicle	2.4	98	09/11 -	3693	
X9 Closed Off-Road Vehicle	2.4	118	09/11 -	3693	
X9 Closed Off-Road Vehicle	2.4 4x4	118	09/11 -	3693	
X9 Closed Off-Road Vehicle	2.4 All-wheel Drive	92	06/01 -	4118	
X9 Closed Off-Road Vehicle	2.4 All-wheel Drive	92	06/04 -	3657	
X9 Closed Off-Road Vehicle	2.4 All-wheel Drive	92	06/04 -	3757	
X9 Closed Off-Road Vehicle	2.4 All-wheel Drive	92	06/04 -	3857	
X9 Closed Off-Road Vehicle	2.5 CRDI	105	04/06 -	3657	
X9 Closed Off-Road Vehicle	2.5 CRDI	105	04/06 -	3757	
X9 Closed Off-Road Vehicle	2.5 CRDI	105	04/06 -	3857	
X9 Closed Off-Road Vehicle	2.5 CRDI	105	08/09 – 08/12	3693	
X9 Closed Off-Road Vehicle	2.5 CRDI 4x4	105	08/09 -	3657	
X9 Closed Off-Road Vehicle	2.5 CRDI 4x4	105	08/09 -	3757	
X9 Closed Off-Road Vehicle	2.5 CRDI 4x4	105	08/09 -	3857	
X9 Closed Off-Road Vehicle	2.5 CRDI 4x4	105	08/09 – 08/12	3693	
X9 Closed Off-Road Vehicle	2.5 D	105	07/07 -	4118	
X9 Closed Off-Road Vehicle	2.5 D All-wheel Drive	105	07/07 -	4118	
X9 Closed Off-Road Vehicle	2.8 D	68	01/06 -	3657	
X9 Closed Off-Road Vehicle	2.8 D	68	01/06 -	3757	
X9 Closed Off-Road Vehicle	2.8 D All-wheel Drive	68	01/06 -	3657	
X9 Closed Off-Road Vehicle	2.8 D All-wheel Drive	68	01/06 -	3757	
X9 Closed Off-Road Vehicle	2.8 TD	62	06/01 -	4118	
X9 Closed Off-Road Vehicle	2.8 TD	62	06/04 -	3657	
X9 Closed Off-Road Vehicle	2.8 TD	62	06/04 -	3757	
X9 Closed Off-Road Vehicle	2.8 TD	62	06/04 -	3857	
X9 Closed Off-Road Vehicle	2.8 TD	68	01/03 -	4118	
X9 Closed Off-Road Vehicle	2.8 TD	68	01/06 -	3857	
X9 Closed Off-Road Vehicle	2.8 TD All-wheel Drive	62	06/01 -	4118	
X9 Closed Off-Road Vehicle	2.8 TD All-wheel Drive	62	06/04 -	3657	
X9 Closed Off-Road Vehicle	2.8 TD All-wheel Drive	62	06/04 -	3757	
X9 Closed Off-Road Vehicle	2.8 TD All-wheel Drive	62	06/04 -	3857	
X9 Closed Off-Road Vehicle	2.8 TD All-wheel Drive	68	01/03 -	4118	
X9 Closed Off-Road Vehicle	2.8 TD All-wheel Drive	68	01/06 -	3857	
LDV					
400 Box	2.5 D	51	11/86 – 03/89	3413	
400 Box	2.5 D	53	04/89 – 03/96	3413	
400 Bus	2.5 D	71	04/89 – 03/96	3413	
400 Bus	2.5 TD	71	11/95 – 10/98	3413	
400 Platform/Chassis	2.5 D	51	11/86 – 03/89	3413	
400 Platform/Chassis	2.5 D	53	04/89 – 10/96	3413	
400 Platform/Chassis	2.5 TD	71	11/95 – 10/96	3413	
CONVOY Box	2.4 D	55	03/02 – 04/09	3413	
CONVOY Box	2.4 D	66	03/02 – 04/09	3413	
CONVOY Box	2.5 D	53	04/96 – 09/97	3413	
CONVOY Box	2.5 D	71	04/96 – 06/05	3413	
CONVOY Box	2.5 DI	56	10/98 – 04/09	3413	
CONVOY Box	2.5 TDI	74	10/98 – 04/09	3413	
CONVOY Bus	2.5 D	53	04/96 – 02/02	3413	
CONVOY Bus	2.5 D	56	10/97 – 04/09	3413	
CONVOY Bus	2.5 D	71	04/96 – 02/02	3413	
CONVOY Platform/Chassis	2.5 D	71	04/96 – 06/06	3413	
CONVOY Platform/Chassis	2.5 D	74	10/97 – 04/09	3413	
CONVOY Platform/Chassis	2.5 DI	56	10/98 – 04/09	3413	
CONVOY Platform/Chassis	2.5 TDI	74	10/98 – 04/09	3413	
CUB	2.3 D	53	08/98 – 09/01	3888	

MAKE & MODEL   		KW	YEAR		
LEXUS					
ES (ACV40_, GSV40_)	240 (ACV40_)	123	08/09 – 06/12	3948	3949
ES (ACV40_, GSV40_)	3.5 (GSV40_)	204	05/06 – 06/12	3948	3949
ES (ASV60_, AVV60_, GSV60_)	200	123	08/15 -	3948	3949
ES (ASV60_, AVV60_, GSV60_)	250 (AVV60_, ASV60_)	135	06/12 -	3948	3949
ES (ASV60_, AVV60_, GSV60_)	300h (ASV60_, AVV60_)	118	06/12 -	3948	3949
ES (ASV60_, AVV60_, GSV60_)	350 (GSV60_)	183	01/14 -	3948	3949
ES (ASV60_, AVV60_, GSV60_)	350 (GSV60_)	204	06/12 -	3948	3949
ES (ASV60_, AVV60_, GSV60_)	350 (GSV60_)	204	06/12 -	4255	3776
ES (MCV_, VZV_)	3.0 (MCV20_, MCV30_)	149	10/96 – 07/01	3822	3876
ES (MCV_, VZV_)	3.0 (MCV20_, MCV30_)	157	08/01 – 10/06		3911
ES (MCV_, VZV_)	3.0 (MCV20_, MCV30_)	158	10/01 – 06/08		3911
ES (MCV_, VZV_)	3.0 (MCV30_, MCV20_)	140	10/96 – 07/01	3822	3776
ES (MCV_, VZV_)	3.0 (MCV30_, MCV20_)	140	10/96 – 07/01	4086	3876
ES (MCV_, VZV_)	3.3 (MCV31_)	168	06/03 – 10/06		3911
ES (VCV10_, VZV21_)	300 (MCV10_, VCV10_)	138	09/91 – 12/97	4086	
GS (GRL1_, GWL1_)	200t	180	09/15 -	4276	
GS (GRL1_, GWL1_)	250 (GRL11_)	154	01/12 -	4276	
GS (GRL1_, GWL1_)	250 (GRL11_)	158	01/12 -	4276	
GS (GRL1_, GWL1_)	300h (AWL10_, GRL11_)	133	10/13 -	4276	
GS (GRL1_, GWL1_)	350 (GRL10_, GRL15_, GWL10_)	234	01/12 -	4276	
GS (GRL1_, GWL1_)	350 AWD (GRL10_, GRL15_, GWL10_)	232	09/15 -	4276	
GS (GRL1_, GWL1_)	350 AWD (GRL10_, GRL15_, GWL10_)	234	01/12 -	4276	
GS (GRL1_, GWL1_)	450h (GRL10_, GRL15_, GWL10_)	215	06/12 -	4276	
GS (GRL1_, GWL1_)	450h (GRL10_, GRL15_, GWL10_)	217	01/12 -	4276	
GS (GRS19_, UZS19_, URS19_)	350 (GRS196_, GRS191_)	226	04/08 – 11/11		4113
GS (GRS19_, UZS19_, URS19_)	300 (GRS195_, GRS190_)	170	04/05 – 11/11	4276	4113
GS (GRS19_, UZS19_, URS19_)	300 (GRS195_, GRS190_)	183	04/05 – 11/11	4276	4113
GS (GRS19_, UZS19_, URS19_)	350 (GRS191_)	232	05/08 – 11/11	4276	4113
GS (GRS19_, UZS19_, URS19_)	350 (GRS196_, GRS191_)	226	04/08 – 11/11	4276	
GS (GRS19_, UZS19_, URS19_)	350 AWD (GRS196_, GRS191_)	226	04/08 – 11/11	4276	4113
GS (GRS19_, UZS19_, URS19_)	350 AWD (GRS196_, GRS191_)	232	05/08 – 11/11	4276	4113
GS (GRS19_, UZS19_, URS19_)	4.3 VVTi (UZS190_)	221	04/05 – 11/11	4276	4113
GS (GRS19_, UZS19_, URS19_)	430 (UZS190_)	208	04/05 – 11/11	4276	4113
GS (GRS19_, UZS19_, URS19_)	450h (GRS196_, GRS191_, GWS191_)	218	02/06 – 11/11	4276	4113
GS (GRS19_, UZS19_, URS19_)	450h (GWS191_, GRS196_, GRS191_)	254	02/06 – 11/11	4276	4113
GS (GRS19_, UZS19_, URS19_)	460 (UZS190_, URS190_)	255	01/05 – 11/11	4276	4113
GS (JZS147_)	300 (JZS147_)	156	01/93 – 08/97	3915	4099
GS (JZS160_, UZS161_, UZS160_)	300 (JZS160_)	161	10/00 – 12/04	3915	
GS (JZS160_, UZS161_, UZS160_)	300 (JZS160_)	163	08/97 – 10/00	3915	
GS (JZS160_, UZS161_, UZS160_)	400 (UZS160_)	208	11/00 – 12/04	3915	
GS (JZS160_, UZS161_, UZS160_)	430 (UZS161_)	216	12/97 – 11/00	3915	
GX (_J12_)	470	175	11/01 – 11/09	3693	
GX (_J12_)	470	199	11/01 – 11/09	3693	
GX (URJ15_)	460	218	11/09 -	3693	
GX (URJ15_)	460	218	11/09 -	3891	
GX (URJ15_)	460	225	01/10 -	3693	
GX (URJ15_)	460	225	01/10 -	3891	
GX (URJ15_)	400 4WD	202	09/13 -	3693	
GX (URJ15_)	400 4WD	202	09/13 -	3891	
HS (ANF10)	250h	110	07/09 -	3953	3949
IS C (GSE2_)	250	153	04/09 -		4113
IS C (GSE2_)	250	157	08/10 -		4113
IS C (GSE2_)	300	170	11/10 -	4276	4113
IS C (GSE2_)	350	228	04/09 -	4276	4113
IS C (GSE2_)	350	234	11/10 -	4276	4113
IS I (JCE1_, GXE1_)	200	114	04/99 – 07/05	3915	
IS I (JCE1_, GXE1_)	300	157	09/01 – 07/05	3915	
IS II (GSE2_, ALE2_, USE2_)	250	158	11/10 – 03/13		4113
IS II (GSE2_, ALE2_, USE2_)	350	234	09/10 -03/13		4113
IS II (GSE2_, ALE2_, USE2_)	200d	110	07/10 – 03/13		4113
IS II (GSE2_, ALE2_, USE2_)	220d (ALE20)	130	10/05 – 03/13		4113
IS II (GSE2_, ALE2_, USE2_)	250 (GSE20)	153	10/05 – 03/13		4113
IS II (GSE2_, ALE2_, USE2_)	250 AWD	153	10/05 – 03/13		4113
IS II (GSE2_, ALE2_, USE2_)	250 AWD	158	11/10 – 03/13		4113
IS II (GSE2_, ALE2_, USE2_)	350 (GSE21_)	228	10/05 – 03/13		4113
IS II (GSE2_, ALE2_, USE2_)	350 AWD	228	10/05 – 03/13		4113
IS III (GSE3_, AVE3_)	350	233	04/13 -	4276	
IS III (GSE3_, AVE3_)	200t	180	06/15 -	4276	
IS SportCross	200	114	10/02 – 10/05	3915	
IS SportCross	300	157	10/01 – 10/05	3915	
LS (UCF10)	400	180	12/89 – 12/94	4086	4275
LS (UCF20)	400	194	12/94 – 08/97	4274	4275
LS (UCF20)	400	203	09/98 – 10/00	4274	4275
LS (UCF20)	400	209	09/97 – 10/00	4274	4275
LS (UCF20)	400	216	10/97 – 07/00	4274	4275
LS (UCF30)	430	207	10/00 – 08/06	4276	4083

MAKE & MODEL		KW	YEAR		
LEXUS					
LS (UCF30)	430	207	10/00 – 08/06	4276/1	
LS (UCF30)	430	208	10/00 – 08/06	4276/1	
LS (UVF4_, USF4_)	460	255	05/08 -		4277
LS (UVF4_, USF4_)	460	270	10/09 -		4277
LS (UVF4_, USF4_)	460	280	04/06 -		4277
LS (UVF4_, USF4_)	460	283	12/08 -		4277
LS (UVF4_, USF4_)	460	285	09/12 -		4277
LS (UVF4_, USF4_)	460 AWD	270	12/08 -		4277
LS (UVF4_, USF4_)	460 AWD	272	09/12 -		4277
LS (UVF4_, USF4_)	460 AWD	283	10/09 -		4277
LS (UVF4_, USF4_)	600h	290	08/07 -		4277
LX (URJ201)	460	234	01/12 -	3891	3997
LX (URJ201)	570	270	11/07 -	3891	3997
LX (URJ201)	570	282	11/07 -	3891	3997
LX (URJ201)	570	286	09/09 -	3996	3997
LX (UZJ100)	470	170	05/98 – 03/08	3829	
LX (UZJ100)	470	170	05/98 – 03/08	3830	
LX (UZJ100)	470	173	09/01 – 03/08	3829	
LX (UZJ100)	470	173	09/01 – 03/08	3830	
LX (UZJ100)	470	197	05/98 – 10/02	3829	
LX (UZJ100)	470	197	05/98 – 10/02	3830	
LX (UZJ100)	470	202	08/02 – 03/08	3829	
LX (UZJ100)	470	202	08/02 – 03/08	3830	
NX (ZGZ1_, AGZ1_, AYZ1_)	200	110	11/14 -	4255	
NX (ZGZ1_, AGZ1_, AYZ1_)	200 AWD	110	11/14 -	4255	
NX (ZGZ1_, AGZ1_, AYZ1_)	200t	175	07/14 -	4255	
NX (ZGZ1_, AGZ1_, AYZ1_)	200t AWD	175	07/14 -	4255	
NX (ZGZ1_, AGZ1_, AYZ1_)	300h	114	07/14 -	4255	
NX (ZGZ1_, AGZ1_, AYZ1_)	300h AWD	114	07/14 -	4255	
RC (AVC1_, GSC1_, USC1_)	350	234	08/14 -	4276	
RC (AVC1_, GSC1_, USC1_)	200t	180	08/15 -	4276	
RC (AVC1_, GSC1_, USC1_)	300h	133	08/14 -	4276	
RX (AGL2_, GGL2_)	200t	175	10/15 -	4255	
RX (AGL2_, GGL2_)	200t AWD	175	10/15 -	4255	
RX (AGL2_, GGL2_)	450h AWD	193	11/15 -	4255	
RX (AGL2_, GGL2_)	450h AWD	230	11/15 -	4255	
RX (GGL1_, GYL1_, AGL1_)	270 (AGL10_)	138	12/08 – 10/15	4255	4256
RX (GGL1_, GYL1_, AGL1_)	350 (GYL10_)	206	12/08 – 10/15	4255	4256
RX (GGL1_, GYL1_, AGL1_)	350 AWD (GGL15_)	204	12/08 – 02/12	4255	4256
RX (GGL1_, GYL1_, AGL1_)	350 AWD (GGL15_)	206	03/09 – 02/12	4255	4256
RX (GGL1_, GYL1_, AGL1_)	450h (GYL10_)	183	12/08 – 10/15	4255	4256
RX (GGL1_, GYL1_, AGL1_)	450h (GYL10_)	220	12/08 – 10/15	4255	4256
RX (GGL1_, GYL1_, AGL1_)	450h AWD (GYL15_)	183	12/08 – 10/15	4255	4256
RX (GGL1_, GYL1_, AGL1_)	450h AWD (GYL15_)	220	12/08 – 10/15	4255	4256
RX (MCU15)	300	148	07/00 – 03/03	4082	3776
RX (MCU15)	300 AWD	148	10/00 – 05/03	4082	3776
RX (MCU15)	300 AWD	164	07/00 – 05/03	4082	3776
RX (MHU3_, GSU3_, MCU3_)	300	150	05/03 – 12/08	4105	4111
RX (MHU3_, GSU3_, MCU3_)	330	171	04/03 – 01/06	4105	4111
RX (MHU3_, GSU3_, MCU3_)	350	203	01/06 – 12/08	4105	4111
RX (MHU3_, GSU3_, MCU3_)	330 AWD	171	04/03 – 12/08	4105	4111
RX (MHU3_, GSU3_, MCU3_)	350 AWD	203	02/06 – 12/08	4105	4111
RX (MHU3_, GSU3_, MCU3_)	400h	155	09/05 – 12/08	4105	4111
RX (MHU3_, GSU3_, MCU3_)	400h AWD	155	09/04 – 12/08	4105	4111
SC Convertible (UZZ40_)	430 (UZZ40_)	210	05/01 – 07/10	3915	
SC Convertible (UZZ40_)	430 (UZZ40_)	215	05/01 – 07/10	3915	
SC Convertible (UZZ40_)	430 (UZZ40_)	244	05/01 – 07/10	3915	
SC Coupe (UZZ3_, JZZ3_)	300	168	08/91 – 06/00	4086	4099
SC Coupe (UZZ3_, JZZ3_)	400	187	09/91 – 12/95	4086	4099
SC Coupe (UZZ3_, JZZ3_)	400	194	08/91 – 06/00	4086	
LEYLAND					
ROADRUNNER	10.12, 10.13, 10.15		01/86 -	3433	
LIFAN					
620 Saloon	1.6 TRITEC	85	11/08 -		3876
LINCOLN					
CONTINENTAL IX	2.0	149	10/14 -		4270
MKC	2.0	149	10/14 -		4270
MKC	2.0	179	09/12 -		4270
MKC	2.0	182	10/14 -		4270
MKZ II (U.S.A.)	2.0	183	06/16 -		4270
MKZ II (U.S.A.)	2.0 Hybrid	140	09/12 -		4270
MKZ II (U.S.A.)	3.0	261	06/16 -		4270
MKZ II (U.S.A.)	3.0	298	06/16 -		4270
MKZ II (U.S.A.)	3.7	224	09/12 -		4270
MKZ II (U.S.A.)	4.6	202	06/98 – 12/02		4270

MAKE & MODEL		KW	YEAR		
LOTUS					
ECLAT	2.0	119	10/75 – 05/80	3312	
ECLAT	2.0	119	10/75 – 05/80	3484	
ECLAT	2.2	119	05/80 – 08/86	3312	
ECLAT	2.2	119	05/80 – 08/86	3484	
Elise I 44409	18 K4F	88	08/1995 - 11/2000	3872/1	
ESPRIT S4 (082)	2.0 GT3	179	09/96 – 06/00		3596
ESPRIT S4 (082)	2.2	158	09/90 – 01/92		3596
ESPRIT S4 (082)	2.2	168	09/90 – 10/91		3596
ESPRIT S4 (082)	2.2	209	10/94 – 08/96		3596
ESPRIT S4 (082)	2.2	221	05/93 – 07/96		3596
ESPRIT S4 (082)	2.2	222	11/94 – 07/96		3596
ESPRIT S4 (082)	2.2 16V Turbo SE	197	05/89 – 09/96		3596
ESPRIT S4 (082)	3.5 V8 32V Turbo	260	02/96 – 06/03		3596
LTI					
TX	2.4 TDi	66	10/02 -	3423/1	
TX	2.7 TD	60	01/97 -	3423/1	
MAHINDRA					
CJ 3 Wagon	2.1 D	46	10/88 – 09/92	3513	
CJ 3 Wagon	2.3 D	28	10/88 – 09/92	3513	
CJ 3 Wagon	2.5 D	29	10/88 – 09/92	3513	
MAN					
HCV TGE Bus (UY_) 2.0 TDI	DAUA	103	02/2017 -	4350	
HCV TGE Bus (UY_) 2.0 TDI	DAUA	103	02/2017 -		4350
HCV TGE Bus (UY_) 2.0 TDI	DAUA	103	02/2017 -	4350/1	
HCV TGE Bus (UY_) 2.0 TDI	DAUA	103	02/2017 -		4350/1
HCV TGE Bus (UY_) 2.0 TDI	DAUA	103	02/2017 -	4356	
HCV TGE Bus (UY_) 2.0 TDI	DAUA	103	02/2017 -	4356/1	
HCV TGE Bus (UY_) 2.0 TDI	DAUA	103	02/2017 -	4357	
HCV TGE Bus (UY_) 2.0 TDI	DAUA	103	02/2017 -	4357/1	
HCV TGE Bus (UY_) 2.0 TDI	DAUB	75	02/2017 -	4350	
HCV TGE Bus (UY_) 2.0 TDI	DAUB	75	02/2017 -		4350
HCV TGE Bus (UY_) 2.0 TDI	DAUB	75	02/2017 -	4350/1	
HCV TGE Bus (UY_) 2.0 TDI	DAUB	75	02/2017 -		4350/1
HCV TGE Bus (UY_) 2.0 TDI	DAUB	75	02/2017 -	4356	
HCV TGE Bus (UY_) 2.0 TDI	DAUB	75	02/2017 -	4356/1	
HCV TGE Bus (UY_) 2.0 TDI	DAUB	75	02/2017 -	4357	
HCV TGE Bus (UY_) 2.0 TDI	DAUB	75	02/2017 -	4357/1	
HCV TGE Bus (UY_) 2.0 TDI	DAVA	130	02/2017 -	4350	
HCV TGE Bus (UY_) 2.0 TDI	DAVA	130	02/2017 -		4350
HCV TGE Bus (UY_) 2.0 TDI	DAVA	130	02/2017 -	4350/1	
HCV TGE Bus (UY_) 2.0 TDI	DAVA	130	02/2017 -		4350/1
HCV TGE Bus (UY_) 2.0 TDI	DAVA	130	02/2017 -	4356	
HCV TGE Bus (UY_) 2.0 TDI	DAVA	130	02/2017 -	4356/1	
HCV TGE Bus (UY_) 2.0 TDI	DAVA	130	02/2017 -	4357	
HCV TGE Bus (UY_) 2.0 TDI	DAVA	130	02/2017 -	4357/1	
HCV TGE Bus (UY_) 2.0 TDI AWD	DAUA	103	02/2017 -	4350	
HCV TGE Bus (UY_) 2.0 TDI AWD	DAUA	103	02/2017 -		4350
HCV TGE Bus (UY_) 2.0 TDI AWD	DAUA	103	02/2017 -	4350/1	
HCV TGE Bus (UY_) 2.0 TDI AWD	DAUA	103	02/2017 -		4350/1
HCV TGE Bus (UY_) 2.0 TDI AWD	DAUA	103	02/2017 -	4356	
HCV TGE Bus (UY_) 2.0 TDI AWD	DAUA	103	02/2017 -	4356/1	
HCV TGE Bus (UY_) 2.0 TDI AWD	DAUA	103	02/2017 -	4357	
HCV TGE Bus (UY_) 2.0 TDI AWD	DAUA	103	02/2017 -	4357/1	
HCV TGE Bus (UY_) 2.0 TDI AWD	DAVA	130	02/2017 -	4350	
HCV TGE Bus (UY_) 2.0 TDI AWD	DAVA	130	02/2017 -		4350
HCV TGE Bus (UY_) 2.0 TDI AWD	DAVA	130	02/2017 -	4350/1	
HCV TGE Bus (UY_) 2.0 TDI AWD	DAVA	130	02/2017 -		4350/1
HCV TGE Bus (UY_) 2.0 TDI AWD	DAVA	130	02/2017 -	4356	
HCV TGE Bus (UY_) 2.0 TDI AWD	DAVA	130	02/2017 -	4356/1	
HCV TGE Bus (UY_) 2.0 TDI AWD	DAVA	130	02/2017 -	4357	
HCV TGE Bus (UY_) 2.0 TDI AWD	DAVA	130	02/2017 -	4357/1	
HCV TGE Bus (UY_) 2.0 TDI RWD	-	90	01/2019 -	4350	
HCV TGE Bus (UY_) 2.0 TDI RWD	-	90	01/2019 -		4350
HCV TGE Bus (UY_) 2.0 TDI RWD	-	90	01/2019 -	4350/1	
HCV TGE Bus (UY_) 2.0 TDI RWD	-	90	01/2019 -		4350/1
HCV TGE Bus (UY_) 2.0 TDI RWD	-	90	01/2019 -	4356	
HCV TGE Bus (UY_) 2.0 TDI RWD	-	90	01/2019 -	4356/1	
HCV TGE Bus (UY_) 2.0 TDI RWD	-	90	01/2019 -	4357	
HCV TGE Bus (UY_) 2.0 TDI RWD	-	90	01/2019 -	4357/1	
HCV TGE Bus (UY_) 2.0 TDI RWD	DAVA	130	01/2019 -	4350	
HCV TGE Bus (UY_) 2.0 TDI RWD	DAVA	130	01/2019 -		4350
HCV TGE Bus (UY_) 2.0 TDI RWD	DAVA	130	01/2019 -	4350/1	
HCV TGE Bus (UY_) 2.0 TDI RWD	DAVA	130	01/2019 -		4350/1
HCV TGE Bus (UY_) 2.0 TDI RWD	DAVA	130	01/2019 -	4356	
HCV TGE Bus (UY_) 2.0 TDI RWD	DAVA	130	01/2019 -	4356/1	

MAKE & MODEL   		KW	YEAR		
MAN					
HCV TGE Bus (UY_) 2.0 TDI RWD	DAVA	130	01/2019 -	4357	
HCV TGE Bus (UY_) 2.0 TDI RWD	DAVA	130	01/2019 -	4357/1	
HCV TGE Platform/Chassis (UZ_) 2.0 TDI	DAUA	103	11/2016 -	4350	
HCV TGE Platform/Chassis (UZ_) 2.0 TDI	DAUA	103	11/2016 -		4350
HCV TGE Platform/Chassis (UZ_) 2.0 TDI	DAUA	103	11/2016 -	4350/1	
HCV TGE Platform/Chassis (UZ_) 2.0 TDI	DAUA	103	11/2016 -		4350/1
HCV TGE Platform/Chassis (UZ_) 2.0 TDI	DAUA	103	11/2016 -	4356	
HCV TGE Platform/Chassis (UZ_) 2.0 TDI	DAUA	103	11/2016 -	4356/1	
HCV TGE Platform/Chassis (UZ_) 2.0 TDI	DAUA	103	11/2016 -	4357	
HCV TGE Platform/Chassis (UZ_) 2.0 TDI	DAUA	103	11/2016 -	4357/1	
HCV TGE Platform/Chassis (UZ_) 2.0 TDI	DAUB	75	11/2016 -	4350	
HCV TGE Platform/Chassis (UZ_) 2.0 TDI	DAUB	75	11/2016 -		4350
HCV TGE Platform/Chassis (UZ_) 2.0 TDI	DAUB	75	11/2016 -	4350/1	
HCV TGE Platform/Chassis (UZ_) 2.0 TDI	DAUB	75	11/2016 -		4350/1
HCV TGE Platform/Chassis (UZ_) 2.0 TDI	DAUB	75	11/2016 -	4356	
HCV TGE Platform/Chassis (UZ_) 2.0 TDI	DAUB	75	11/2016 -	4356/1	
HCV TGE Platform/Chassis (UZ_) 2.0 TDI	DAUB	75	11/2016 -	4357	
HCV TGE Platform/Chassis (UZ_) 2.0 TDI	DAUB	75	11/2016 -	4357/1	
HCV TGE Platform/Chassis (UZ_) 2.0 TDI	DAVA	130	11/2016 -	4350	
HCV TGE Platform/Chassis (UZ_) 2.0 TDI	DAVA	130	11/2016 -		4350
HCV TGE Platform/Chassis (UZ_) 2.0 TDI	DAVA	130	11/2016 -	4350/1	
HCV TGE Platform/Chassis (UZ_) 2.0 TDI	DAVA	130	11/2016 -		4350/1
HCV TGE Platform/Chassis (UZ_) 2.0 TDI	DAVA	130	11/2016 -	4356	
HCV TGE Platform/Chassis (UZ_) 2.0 TDI	DAVA	130	11/2016 -	4356/1	
HCV TGE Platform/Chassis (UZ_) 2.0 TDI	DAVA	130	11/2016 -	4357	
HCV TGE Platform/Chassis (UZ_) 2.0 TDI	DAVA	130	11/2016 -	4357/1	
HCV TGE Platform/Chassis (UZ_) 2.0 TDI AWD	DAUA	103	11/2017 -	4350	
HCV TGE Platform/Chassis (UZ_) 2.0 TDI AWD	DAUA	103	11/2017 -		4350
HCV TGE Platform/Chassis (UZ_) 2.0 TDI AWD	DAUA	103	11/2017 -	4350/1	
HCV TGE Platform/Chassis (UZ_) 2.0 TDI AWD	DAUA	103	11/2017 -		4350/1
HCV TGE Platform/Chassis (UZ_) 2.0 TDI AWD	DAUA	103	11/2017 -	4356	
HCV TGE Platform/Chassis (UZ_) 2.0 TDI AWD	DAUA	103	11/2017 -	4356/1	
HCV TGE Platform/Chassis (UZ_) 2.0 TDI AWD	DAUA	103	11/2017 -	4357	
HCV TGE Platform/Chassis (UZ_) 2.0 TDI AWD	DAUA	103	11/2017 -	4357/1	
HCV TGE Platform/Chassis (UZ_) 2.0 TDI AWD	DAVA	130	11/2017 -	4350	
HCV TGE Platform/Chassis (UZ_) 2.0 TDI AWD	DAVA	130	11/2017 -		4350
HCV TGE Platform/Chassis (UZ_) 2.0 TDI AWD	DAVA	130	11/2017 -	4350/1	
HCV TGE Platform/Chassis (UZ_) 2.0 TDI AWD	DAVA	130	11/2017 -		4350/1
HCV TGE Platform/Chassis (UZ_) 2.0 TDI AWD	DAVA	130	11/2017 -	4356	
HCV TGE Platform/Chassis (UZ_) 2.0 TDI AWD	DAVA	130	11/2017 -	4356/1	
HCV TGE Platform/Chassis (UZ_) 2.0 TDI AWD	DAVA	130	11/2017 -	4357	
HCV TGE Platform/Chassis (UZ_) 2.0 TDI AWD	DAVA	130	11/2017 -	4357/1	
HCV TGE Platform/Chassis (UZ_) 2.0 TDI RWD	DASA	90	08/2017 -	4350	
HCV TGE Platform/Chassis (UZ_) 2.0 TDI RWD	DASA	90	08/2017 -		4350
HCV TGE Platform/Chassis (UZ_) 2.0 TDI RWD	DASA	90	08/2017 -	4350/1	
HCV TGE Platform/Chassis (UZ_) 2.0 TDI RWD	DASA	90	08/2017 -		4350/1
HCV TGE Platform/Chassis (UZ_) 2.0 TDI RWD	DASA	90	08/2017 -	4356	
HCV TGE Platform/Chassis (UZ_) 2.0 TDI RWD	DASA	90	08/2017 -	4356/1	
HCV TGE Platform/Chassis (UZ_) 2.0 TDI RWD	DASA	90	08/2017 -	4357	
HCV TGE Platform/Chassis (UZ_) 2.0 TDI RWD	DASA	90	08/2017 -	4357/1	
HCV TGE Platform/Chassis (UZ_) 2.0 TDI RWD	DASB	103	11/2017 -	4350	
HCV TGE Platform/Chassis (UZ_) 2.0 TDI RWD	DASB	103	11/2017 -		4350
HCV TGE Platform/Chassis (UZ_) 2.0 TDI RWD	DASB	103	11/2017 -	4350/1	
HCV TGE Platform/Chassis (UZ_) 2.0 TDI RWD	DASB	103	11/2017 -		4350/1
HCV TGE Platform/Chassis (UZ_) 2.0 TDI RWD	DASB	103	11/2017 -	4356	
HCV TGE Platform/Chassis (UZ_) 2.0 TDI RWD	DASB	103	11/2017 -	4356/1	
HCV TGE Platform/Chassis (UZ_) 2.0 TDI RWD	DASB	103	11/2017 -	4357	
HCV TGE Platform/Chassis (UZ_) 2.0 TDI RWD	DASB	103	11/2017 -	4357/1	
HCV TGE Platform/Chassis (UZ_) 2.0 TDI RWD	DAWA	130	07/2017 -	4350	
HCV TGE Platform/Chassis (UZ_) 2.0 TDI RWD	DAWA	130	07/2017 -		4350
HCV TGE Platform/Chassis (UZ_) 2.0 TDI RWD	DAWA	130	07/2017 -	4350/1	
HCV TGE Platform/Chassis (UZ_) 2.0 TDI RWD	DAWA	130	07/2017 -		4350/1
HCV TGE Platform/Chassis (UZ_) 2.0 TDI RWD	DAWA	130	07/2017 -	4356	
HCV TGE Platform/Chassis (UZ_) 2.0 TDI RWD	DAWA	130	07/2017 -	4356/1	
HCV TGE Platform/Chassis (UZ_) 2.0 TDI RWD	DAWA	130	07/2017 -	4357	
HCV TGE Platform/Chassis (UZ_) 2.0 TDI RWD	DAWA	130	07/2017 -	4357/1	
HCV TGE Van (UY_) 2.0 TDI	DAUA	103	02/2017 -	4350	
HCV TGE Van (UY_) 2.0 TDI	DAUA	103	02/2017 -		4350
HCV TGE Van (UY_) 2.0 TDI	DAUA	103	02/2017 -	4350/1	
HCV TGE Van (UY_) 2.0 TDI	DAUA	103	02/2017 -		4350/1
HCV TGE Van (UY_) 2.0 TDI	DAUA	103	02/2017 -	4356	
HCV TGE Van (UY_) 2.0 TDI	DAUA	103	02/2017 -	4356/1	
HCV TGE Van (UY_) 2.0 TDI	DAUA	103	02/2017 -	4357	
HCV TGE Van (UY_) 2.0 TDI	DAUA	103	02/2017 -	4357/1	
HCV TGE Van (UY_) 2.0 TDI	DAUB	75	02/2017 -	4350	
HCV TGE Van (UY_) 2.0 TDI	DAUB	75	02/2017 -		4350

MAKE & MODEL		KW	YEAR		
MAN					
HCV TGE Van (UY_) 2.0 TDI	DAUB	75	02/2017 -	4350/1	
HCV TGE Van (UY_) 2.0 TDI	DAUB	75	02/2017 -		4350/1
HCV TGE Van (UY_) 2.0 TDI	DAUB	75	02/2017 -	4356	
HCV TGE Van (UY_) 2.0 TDI	DAUB	75	02/2017 -	4356/1	
HCV TGE Van (UY_) 2.0 TDI	DAUB	75	02/2017 -	4357	
HCV TGE Van (UY_) 2.0 TDI	DAUB	75	02/2017 -	4357/1	
HCV TGE Van (UY_) 2.0 TDI	DAVA	130	02/2017 -	4350	
HCV TGE Van (UY_) 2.0 TDI	DAVA	130	02/2017 -		4350
HCV TGE Van (UY_) 2.0 TDI	DAVA	130	02/2017 -	4350/1	
HCV TGE Van (UY_) 2.0 TDI	DAVA	130	02/2017 -		4350/1
HCV TGE Van (UY_) 2.0 TDI	DAVA	130	02/2017 -	4356	
HCV TGE Van (UY_) 2.0 TDI	DAVA	130	02/2017 -	4356/1	
HCV TGE Van (UY_) 2.0 TDI	DAVA	130	02/2017 -	4357	
HCV TGE Van (UY_) 2.0 TDI	DAVA	130	02/2017 -	4357/1	
HCV TGE Van (UY_) 2.0 TDI AWD	DAUA	103	04/2017 -	4350	
HCV TGE Van (UY_) 2.0 TDI AWD	DAUA	103	04/2017 -		4350
HCV TGE Van (UY_) 2.0 TDI AWD	DAUA	103	04/2017 -	4350/1	
HCV TGE Van (UY_) 2.0 TDI AWD	DAUA	103	04/2017 -		4350/1
HCV TGE Van (UY_) 2.0 TDI AWD	DAUA	103	04/2017 -	4356	
HCV TGE Van (UY_) 2.0 TDI AWD	DAUA	103	04/2017 -	4356/1	
HCV TGE Van (UY_) 2.0 TDI AWD	DAUA	103	04/2017 -	4357	
HCV TGE Van (UY_) 2.0 TDI AWD	DAUA	103	04/2017 -	4357/1	
HCV TGE Van (UY_) 2.0 TDI AWD	DAVA	130	03/2017 -	4350	
HCV TGE Van (UY_) 2.0 TDI AWD	DAVA	130	03/2017 -		4350
HCV TGE Van (UY_) 2.0 TDI AWD	DAVA	130	03/2017 -	4350/1	
HCV TGE Van (UY_) 2.0 TDI AWD	DAVA	130	03/2017 -		4350/1
HCV TGE Van (UY_) 2.0 TDI AWD	DAVA	130	03/2017 -	4356	
HCV TGE Van (UY_) 2.0 TDI AWD	DAVA	130	03/2017 -	4356/1	
HCV TGE Van (UY_) 2.0 TDI AWD	DAVA	130	03/2017 -	4357	
HCV TGE Van (UY_) 2.0 TDI AWD	DAVA	130	03/2017 -	4357/1	
HCV TGE Van (UY_) 2.0 TDI RWD	DASA	90	08/2017 -	4350	
HCV TGE Van (UY_) 2.0 TDI RWD	DASA	90	08/2017 -		4350
HCV TGE Van (UY_) 2.0 TDI RWD	DASA	90	08/2017 -	4350/1	
HCV TGE Van (UY_) 2.0 TDI RWD	DASA	90	08/2017 -		4350/1
HCV TGE Van (UY_) 2.0 TDI RWD	DASA	90	08/2017 -	4356	
HCV TGE Van (UY_) 2.0 TDI RWD	DASA	90	08/2017 -	4356/1	
HCV TGE Van (UY_) 2.0 TDI RWD	DASA	90	08/2017 -	4357	
HCV TGE Van (UY_) 2.0 TDI RWD	DASA	90	08/2017 -	4357/1	
HCV TGE Van (UY_) 2.0 TDI RWD	DASB	103	10/2017 -	4350	
HCV TGE Van (UY_) 2.0 TDI RWD	DASB	103	10/2017 -		4350
HCV TGE Van (UY_) 2.0 TDI RWD	DASB	103	10/2017 -	4350/1	
HCV TGE Van (UY_) 2.0 TDI RWD	DASB	103	10/2017 -		4350/1
HCV TGE Van (UY_) 2.0 TDI RWD	DASB	103	10/2017 -	4356	
HCV TGE Van (UY_) 2.0 TDI RWD	DASB	103	10/2017 -	4356/1	
HCV TGE Van (UY_) 2.0 TDI RWD	DASB	103	10/2017 -	4357	
HCV TGE Van (UY_) 2.0 TDI RWD	DASB	103	10/2017 -	4357/1	
HCV TGE Van (UY_) 2.0 TDI RWD	DAWA	130	05/2017 -	4350	
HCV TGE Van (UY_) 2.0 TDI RWD	DAWA	130	05/2017 -		4350
HCV TGE Van (UY_) 2.0 TDI RWD	DAWA	130	05/2017 -	4350/1	
HCV TGE Van (UY_) 2.0 TDI RWD	DAWA	130	05/2017 -		4350/1
HCV TGE Van (UY_) 2.0 TDI RWD	DAWA	130	05/2017 -	4356	
HCV TGE Van (UY_) 2.0 TDI RWD	DAWA	130	05/2017 -	4356/1	
HCV TGE Van (UY_) 2.0 TDI RWD	DAWA	130	05/2017 -	4357	
HCV TGE Van (UY_) 2.0 TDI RWD	DAWA	130	05/2017 -	4357/1	
HCV TGE Van (UY_) eTGE	EBHA	100	07/2018 -	4350	
HCV TGE Van (UY_) eTGE	EBHA	100	07/2018 -		4350
HCV TGE Van (UY_) eTGE	EBHA	100	07/2018 -	4350/1	
HCV TGE Van (UY_) eTGE	EBHA	100	07/2018 -		4350/1
HCV TGE Van (UY_) eTGE	EBHA	100	07/2018 -	4356	
HCV TGE Van (UY_) eTGE	EBHA	100	07/2018 -	4356/1	
HCV TGE Van (UY_) eTGE	EBHA	100	07/2018 -	4357	
HCV TGE Van (UY_) eTGE	EBHA	100	07/2018 -	4357/1	
MARUTI					
800	8	26	01/91 – 12/06	3509	
MASERATI					
GHIBLI II	2.0 24V Biturbo	225	05/92 -		3879
GHIBLI II	2.8 24V Biturbo	209	06/92 -		3879
QUATTROPORTE IV	2.0 Biturbo	211	03/94 -		3879
QUATTROPORTE IV	2.8 Biturbo	209	03/94 -		3879
QUATTROPORTE IV	3.2 V8 32V	247	12/95 -		3879
QUATTROPORTE V	4.2	295	03/04 -		4103
MAZDA					
808	All models		01/72 -	3709	
(CHANGAN) 3 Axela I Hatchback (BM) 2.0	PE	116	05/2014 -	4317	
(CHANGAN) 3 Axela I Hatchback (BM) 44317	P5	86	05/2014 -	4317	

MAKE & MODEL		KW	YEAR		
MAZDA					
(CHANGAN) 3 Axela I Sedan (BM) 2.0	PE	116	05/2014 -	4317	
(CHANGAN) 3 Axela I Sedan (BM) 44317	P5	86	05/2014 -	4317	
121 I (DA)	1.1	42	10/87 – 10/90	3723	
121 I (DA)	1.3	40	04/89 – 10/90	3723	
121 I (DA)	1.3	44	10/87 – 11/90	3723	
121 I (DA)	1.3	48	11/87 – 10/90	3723	
121 I (DA)	1.5	56	11/87 – 03/89	3723	
121 II (DB)	1.1	40	11/90 – 10/93	3522	
121 II (DB)	1.3 16V	39	11/90 – 03/96	3522	
121 II (DB)	1.3 i 16V	53	11/90 – 03/96	3522	
121 II (DB)	1.5 i	62	01/94 – 05/97	3522	
121 III (JASM, JBSM)	125	55	03/96 – 04/03	3570	
121 III (JASM, JBSM)	125	55	03/96 – 04/03	3877	
121 III (JASM, JBSM)	1.3	37	03/96 – 04/03	3570	
121 III (JASM, JBSM)	1.3	37	03/96 – 04/03	3877	
121 III (JASM, JBSM)	1.3	44	03/96 – 04/03	3570	
121 III (JASM, JBSM)	1.3	44	03/96 – 04/03	3877	
121 III (JASM, JBSM)	1.8 D	44	03/96 – 04/03	3570	
121 III (JASM, JBSM)	1.8 D	44	03/96 – 04/03	3877	
121 III (JASM, JBSM) / Soho 44256	J4R, J4T	44	03/1996 - 04/2003	3594	
121 III (JASM, JBSM) / Soho 44256	JJK, JJM	37	03/1996 - 04/2003	3594	
121 III (JASM, JBSM) / Soho 44287	-	44	07/1996 - 10/2002	3594	
121 III (JASM, JBSM) / Soho 44409 D	RTJ, RTK	44	03/1996 - 04/2003	3594	
121 III (JASM, JBSM) / Soho 45658	DHF, DHG	55	03/1996 - 04/2003	3594	
2 (DE)	1.3	55	10/07 – 06/15	4122	
2 (DE)	1.3	63	10/07 – 06/15	4122	
2 (DE)	1.3 MZR	62	01/10 – 06/15	4122	
2 (DE)	1.4 MZR-CD	50	01/08 – 06/15	4122	
2 (DE)	1.5	76	10/07 – 06/15	4122	
2 (DE)	1.5 MZR	75	06/11 – 06/15	4122	
2 (DE)	1.6 MZ-CD	66	10/08 – 06/15	4122	
2 (DE)	1.6 MZ-CD	70	06/11 – 06/15	4122	
2 (DY)	125	55	04/03 -	3877	
2 (DY)	1.2	55	02/03 -	3877	
2 (DY)	1.3 L	67	04/03 – 06/07	3877	
2 (DY)	1.4	59	02/03 -	3877	
2 (DY)	1.4 CD	50	04/03 -	3877	
2 (DY)	1.5	82	04/03 -	3877	
2 (DY)	1.6	74	02/03 -	3877	
2 Saloon (DE)	1.5 i	76	05/10 – 06/15	4122	
3 (BK)	1.4	59	02/04 – 06/09	3885	3853/1
3 (BK)	1.4	62	10/03 – 06/09	3885	3853/1
3 (BK)	1.6	77	10/03 – 06/09	3885	3853/1
3 (BK)	1.6 DI Turbo	80	06/04 – 06/09	3885	3853/1
3 (BK)	1.6 MZ-CD	66	06/06 – 12/09	3885	3853/1
3 (BK)	2.0	110	10/03 – 06/09	3885	3853/1
3 (BK)	2.0 MZR-CD	105	12/06 – 06/09	3885	3853/1
3 (BK)	2.3 DiSi Turbo MPS	184	06/06 – 06/09	3885	3853/1
3 (BK)	2.3 MPS Turbo	191	12/06 – 06/09	3885	3853/1
3 (BK)	2.3 MZR	115	03/04 – 03/09	3885	3853/1
3 (BK)	2.3 MZR Sport	126	10/03 – 06/09	3885	3853/1
3 (BL)	1.6 MZR	77	06/09 -	3885	3853/1
3 (BL)	1.6 MZR	79	01/10 – 12/13	3885	3853/1
3 (BL)	1.6 MZR CD	80	12/08 -	3885	3853/1
3 (BL)	1.6 MZR CD	85	11/10 -	3885	3853/1
3 (BL)	2.0 MZR	108	06/10 -	3885	3853/1
3 (BL)	2.0 MZR	110	06/09 -	3885	3853/1
3 (BL)	2.0 MZR DISI	111	06/09 -	3885	3853/1
3 (BL)	2.2 MZR CD	110	06/09 -	3885	3853/1
3 (BL)	2.2 MZR CD	136	06/09 -	3885	3853/1
3 (BL)	2.3 MPS Turbo	191	06/09 -		3853/1
3 (BL)	2.5	122	06/09 -	3885	3853/1
3 III (BM, BN) / Axela 2.0	PEX2, PEXL, PEY5, PEY7	121	07/2013 -	4317	4318
3 III (BM, BN) / Axela 2.0	PEXL, PEY5, PEY7	88	09/2013 -	4317	4318
3 III (BM, BN) / Axela 2.0	PEY5, PEY7	114	11/2013 -	4317	4318
3 III (BM, BN) / Axela 2.0	PEY7	110	11/2013 -	4317	4318
3 III (BM, BN) / Axela 2.0 Flexfuel	PEX2	121	11/2014 - 05/2016	4317	4318
3 III (BM, BN) / Axela 44229 D	SH-VPTR	129	06/2016 -	4317	4318
3 III (BM, BN) / Axela 44229 D	SHY4 (.-05.16), SHY6 (06.16-.)	110	09/2013 -	4317	4318
3 III (BM, BN) / Axela 44229 D 4WD	SH-VPTR	129	06/2016 -	4317	4318
3 III (BM, BN) / Axela 44317	P5-VPS, P5Y4, P5Y5	82	10/2014 -	4317	4318
3 III (BM, BN) / Axela 44317	P5Y1, P5Y4, P5Y5, P5Z3	74	09/2013 -	4317	4318
3 III (BM, BN) / Axela 44317	P5Y1, P5Y4, P5Y5, P5Z3	88	10/2013 -	4317	4318
3 III (BM, BN) / Axela 44317 4WD	P5-VPS	82	10/2014 -	4317	4318
3 III (BM, BN) / Axela 44317 D	S5Y7 (06.16-.), S5Y8	77	02/2016 -	4317	4318
3 III (BM, BN) / Axela 44348	Z6Y1, Z6Y3 (11.13-.)	77	09/2013 -	4317	4318

BESER®

MAKE & MODEL		KW	YEAR		
MAZDA					
3 III Sedan (BM, BN) / Axela 2.0	PEX2, PEY5, PEY7	121	11/2014 -	4317	4318
3 III Sedan (BM, BN) / Axela 2.0	PEXL, PEY5, PEY7	88	09/2013 -	4317	4318
3 III Sedan (BM, BN) / Axela 2.0	PEY5	112	04/2015 -	4317	4318
3 III Sedan (BM, BN) / Axela 2.0	PEY5, PEY7	114	11/2013 -	4317	4318
3 III Sedan (BM, BN) / Axela 2.0	PEY7	110	11/2013 -	4317	4318
3 III Sedan (BM, BN) / Axela 2.0 Flexfuel	PEX2	121	11/2014 - 05/2016	4317	4318
3 III Sedan (BM, BN) / Axela 2.0 Hybrid	PE-VPH	73	10/2014 -	4317	4318
3 III Sedan (BM, BN) / Axela 44229 D	-	129	10/2014 -	4317	4318
3 III Sedan (BM, BN) / Axela 44229 D	SHY4, SHY6	110	09/2013 -	4317	4318
3 III Sedan (BM, BN) / Axela 44229 D AWD	SH-VPTR	129	09/2016 -	4317	4318
3 III Sedan (BM, BN) / Axela 44317	P5-VPS, P5Y4, P5Y5	82	09/2013 -	4317	4318
3 III Sedan (BM, BN) / Axela 44317	P5Y1, P5Y4, P5Y5, P5Z3	74	10/2014 -	4317	4318
3 III Sedan (BM, BN) / Axela 44317	P5Y1, P5Y4, P5Y5, P5Z3	88	10/2013 -	4317	4318
3 III Sedan (BM, BN) / Axela 44317 4WD	P5-VPS	82	10/2014 -	4317	4318
3 III Sedan (BM, BN) / Axela 44317 D	S5Y7, S5Y8	77	06/2016 -	4317	4318
3 III Sedan (BM, BN) / Axela 44318 (SP25)	PYY1	138	11/2013 -	4317	4318
3 III Sedan (BM, BN) / Axela 44348	Z6Y1, Z6Y3	77	09/2013 -	4317	4318
3 Saloon (BK)	1.6	77	02/04 – 06/09	3885	3853/1
3 Saloon (BK)	1.6 DI Turbo	80	06/04 – 06/09	3885	3853/1
3 Saloon (BK)	2.0	104	04/04 – 06/06	3885	3853/1
3 Saloon (BK)	2.0	110	02/04 – 06/09	3885	3853/1
3 Saloon (BK)	2.0 MZR-CD	105	12/06 – 06/09	3885	3853/1
3 Saloon (BK)	2.3	118	03/04 – 03/09	3885	3853/1
3 Saloon (BK)	2.3	126	06/00 – 03/03	3885	3853/1
3 Saloon (BL)	1.6 MZR	77	06/09 -	3885	3853/1
3 Saloon (BL)	1.6 MZR CD	80	12/08 -	3885	3853/1
3 Saloon (BL)	1.6 MZR CD	85	11/10 -	3885	3853/1
3 Saloon (BL)	2.0 MZR	110	06/09 -	3885	3853/1
3 Saloon (BL)	2.0 MZR DISI	111	06/09 -	3885	3853/1
3 Saloon (BL)	2.2 MZR CD	110	06/09 -	3885	3853/1
3 Saloon (BL)	2.2 MZR CD	136	06/09 -	3885	3853/1
3 Saloon (BL)	2.5	122	06/09 -	3885	3853/1
323 C IV (BG)	1.3	49	09/89 – 07/94	3522	
323 C IV (BG)	1.3 16V	54	09/89 – 07/94	3522	
323 C IV (BG)	1.6	62	09/89 – 06/91	3522	
323 C IV (BG)	1.6	66	09/93 – 09/00	3522	
323 C IV (BG)	1.6 16V	65	03/91 – 10/94	3522	
323 C IV (BG)	1.7 D	41	08/89 – 07/94	3522	
323 C IV (BG)	1.8	96	09/89 – 06/93	3522	
323 C IV (BG)	1.8 16V	103	09/89 – 03/93	3640	
323 C IV (BG)	1.8 16V 4WD	76	11/91 – 12/93	3640	
323 C IV (BG)	1.8 16V GT	94	09/89 – 03/93	3522	
323 C IV (BG)	1.8 16V Turbo 4WD	120	09/90 – 12/92	3640	
323 C IV (BG)	1.8 16V Turbo 4WD	136	01/93 – 07/94	3640	
323 C V (BA)	1.3 16V	54	08/94 – 09/98	3522	
323 C V (BA)	1.5 16V	65	08/94 – 09/98	3522	
323 C V (BA)	1.8 16V	84	08/94 – 09/98	3640	
323 F IV (BG)	1.6	62	09/89 – 06/91	3522	
323 F IV (BG)	1.6	66	04/91 – 04/94	3522	
323 F IV (BG)	1.6	77	04/87 – 08/93	3522	
323 F IV (BG)	1.6 16V	65	03/91 – 10/94	3522	
323 F IV (BG)	1.8 16V	76	08/89 – 07/94	3522	
323 F IV (BG)	1.8 16V	103	09/89 – 03/93	3640	
323 F IV (BG)	1.8 16V GT	94	08/89 – 07/94	3522	
323 F IV (BG)	1.8 4WD	76	01/91 – 04/94	3640	
323 F V (BA)	1.5 16V	65	07/94 – 09/98	3522	
323 F V (BA)	1.8 16V	84	08/94 – 09/98	3640	
323 F VI (BJ)	1.4	53	01/01 – 05/04	3780	
323 F VI (BJ)	1.4 16V	54	09/98 – 01/01	3780	
323 F VI (BJ)	1.5 16V	65	09/98 – 01/01	3780	
323 F VI (BJ)	1.6	70	01/01 – 05/04	3832	3875
323 F VI (BJ)	1.6	72	01/01 – 05/04	3832	3875
323 F VI (BJ)	1.9 16V	84	09/98 – 01/01	3832	3875
323 F VI (BJ)	2.0	96	01/01 – 05/04	3832	3875
323 F VI (BJ)	2.0 D	52	09/98 – 05/04	3832	3875
323 F VI (BJ)	2.0 TD	66	09/98 – 12/01	3832	3875
323 F VI (BJ)	2.0 TD	74	01/01 – 05/04	3832	3875
323 III (BF)	1.1	40	08/85 – 04/90	3449	
323 III (BF)	1.3	44	08/85 – 05/89	3449	
323 III (BF)	1.4	44	04/87 – 07/89	3449	
323 III (BF)	1.5	54	09/87 – 10/89	3449	
323 III (BF)	1.5	55	08/85 – 05/89	3449	
323 III (BF)	1.5 i	70	08/85 – 05/89	3449	
323 III (BF)	1.5 i Turbo	85	08/85 – 05/89	3449	
323 III (BF)	1.6 GT	63	11/86 – 10/89	3449	
323 III (BF)	1.6 GT	77	01/86 – 12/88	3449	

MAKE & MODEL		KW	YEAR		
MAZDA					
323 III (BF)	1.6 GT Turbo	103	10/85 – 11/91	3449	
323 III (BF)	1.7 D	40	09/86 – 05/89	3449	
323 III (BF)	1.7 D	42	01/87 – 05/89	3449	
323 III Hatchback (BF)	1.1	40	09/85 – 10/89	3449	
323 III Hatchback (BF)	1.3	44	09/85 – 12/87	3449	
323 III Hatchback (BF)	1.3 i	49	09/85 – 08/89	3449	
323 III Hatchback (BF)	1.4	44	09/87 – 10/89	3449	
323 III Hatchback (BF)	1.5	54	09/87 – 10/89	3449	
323 III Hatchback (BF)	1.5	55	08/85 – 05/89	3449	
323 III Hatchback (BF)	1.5 i	70	08/85 – 05/89	3449	
323 III Hatchback (BF)	1.5 i Turbo	85	08/85 – 05/89	3449	
323 III Hatchback (BF)	1.6	54	09/87 – 10/89	3449	
323 III Hatchback (BF)	1.6 GT	63	09/87 – 10/89	3449	
323 III Hatchback (BF)	1.6 GT	77	08/85 – 08/93	3449	
323 III Hatchback (BF)	1.6 GT Turbo (BF1)	103	10/85 – 08/93	3449	
323 III Hatchback (BF)	1.6 GT Turbo 4WD (BF2)	103	10/87 – 11/91	3449	
323 III Hatchback (BF)	1.6 GT Turbo 4WD (BF2)	110	08/87 – 10/89	3449	
323 III Hatchback (BF)	1.7 D	40	04/86 – 05/89	3449	
323 III Hatchback (BF)	1.7 D	42	01/87 – 05/89	3449	
323 III Station Wagon (BW)	1.3	44	07/86 – 04/90	3449	
323 III Station Wagon (BW)	1.3	50	01/86 – 06/87	3449	
323 III Station Wagon (BW)	1.3	52	01/86 – 06/87	3449	
323 III Station Wagon (BW)	1.5	54	01/87 – 05/89	3449	
323 III Station Wagon (BW)	1.5	55	05/86 – 05/89	3449	
323 III Station Wagon (BW)	1.5	55	09/89 – 09/91	3449	
323 III Station Wagon (BW)	1.6	54	09/87 – 10/89	3449	
323 III Station Wagon (BW)	1.6	63	09/89 – 10/95	3449	
323 III Station Wagon (BW)	1.6 4x4	63	05/90 – 03/93	3449	
323 III Station Wagon (BW)	1.7 D	40	11/86 – 08/87	3449	
323 III Station Wagon (BW)	1.7 D	41	10/89 – 03/93	3449	
323 III Station Wagon (BW)	1.7 D	42	11/86 – 10/89	3449	
323 P V (BA)	1.3	49	09/89 – 06/91	3522	
323 P V (BA)	1.3 16V	54	04/91 – 07/94	3522	
323 P V (BA)	1.3 16V	54	10/96 – 09/98	3522	
323 S IV (BG)	1.5 16V	65	10/96 – 09/98	3522	
323 S IV (BG)	1.6	62	09/89 – 06/91	3522	
323 S IV (BG)	1.6	64	06/89 – 03/91	3522	
323 S IV (BG)	1.6	66	04/91 – 10/94	3522	
323 S IV (BG)	1.6 16V	65	08/89 – 10/94	3522	
323 S IV (BG)	1.7 D	41	08/89 – 07/94	3522	
323 S IV (BG)	1.8 16V	76	08/89 – 07/94	3522	
323 S IV (BG)	1.8 16V 4WD	76	09/91 – 07/94	3640	
323 S IV (BG)	1.8 16V GT	94	06/89 – 07/94	3522	
323 S IV (BG)	1.8 16V Turbo 4WD	120	01/91 – 07/94	3640	
323 S IV (BG)	2.0 D	52	10/96 – 09/98	3640	
323 S V (BA)	1.3 16V	54	08/94 – 09/98	3522	
323 S V (BA)	1.5 16V	65	08/94 – 09/98	3522	
323 S V (BA)	1.6	80	08/94 – 09/98	3640	
323 S V (BA)	1.6 TD	60	05/94 – 09/98	3640	
323 S V (BA)	1.8	92	07/94 – 09/98	3640	
323 S V (BA)	1.8 16V	84	08/94 – 09/98	3640	
323 S V (BA)	2.0 D	52	10/96 – 09/98	3640	
323 S VI (BJ)	1.4	53	01/01 – 05/04	3780	
323 S VI (BJ)	1.4 16V	54	09/98 – 01/01	3780	
323 S VI (BJ)	1.5 16V	65	09/98 – 01/01	3780	
323 S VI (BJ)	1.6	70	01/01 – 05/04	3832	3875
323 S VI (BJ)	1.6	72	01/01 – 05/04	3832	3875
323 S VI (BJ)	1.6	80	09/98 – 02/01	3780	3875
323 S VI (BJ)	1.9 16V	84	09/98 – 05/04	3832	3875
323 S VI (BJ)	2.0	96	01/01 – 05/04	3832	3875
323 S VI (BJ)	2.0 D	52	09/98 – 05/04	3832	3875
323 S VI (BJ)	2.0 DiTD	74	10/00 – 10/02	3832	3875
323 S VI (BJ)	2.0 TD	66	09/98 – 05/04	3832	3875
5 (CR19)	1.8	85	03/05 -	3885	3853/1
5 (CR19)	2.0	107	03/05 -	3885	3853/1
5 (CR19)	2.0 CD	81	03/05 -	3885	3853/1
5 (CR19)	2.0 CD	105	06/05 -	3885	3853/1
5 (CR19)	2.3	122	02/05 -	3885	3853/1
5 (CW)	1.6 CD	85	09/10 -	3885	3853/1
5 (CW)	1.8 MZR	85	09/10 -	3885	3853/1
5 (CW)	2.0	106	01/11 -	3885	3853/1
5 (CW)	2.0	108	01/11 -	3885	3853/1
5 (CW)	2.0	110	09/10 -	3885	3853/1
5 (CW)	2.0	111	08/14 -	3885	3853/1
5 (CW)	2.0 4WD	102	08/14 -	3885	3853/1
6 (GG)	1.8	88	08/02 – 08/07	4118	3875

MAKE & MODEL   		KW	YEAR		
MAZDA					
6 (GG)	2.0	104	06/02 – 08/07	3889	3875
6 (GG)	2.0	108	03/05 – 08/07	3889	3875
6 (GG)	2.0 DI	89	08/02 – 08/07	3889	3875
6 (GG)	2.0 DI	100	06/02 – 08/07	3889	3875
6 (GG)	2.0 DI	105	06/05 – 08/07	3889	3875
6 (GG)	2.3	120	03/05 – 07/07	3889	3875
6 (GG)	2.3	122	06/02 – 08/07	3889	3875
6 (GG)	2.3 MPS Turbo	191	12/05 – 08/07		4242
6 (GH)	1.8 MZR	88	08/07 -	4029	3875
6 (GH)	2.0 MZR	108	08/07 -	4029	3875
6 (GH)	2.0 MZR	114	01/10 -	4029	3875
6 (GH)	2.0 MZR-CD	103	08/07 -	4029	3875
6 (GH)	2.2 D	95	01/10 -	4029	3875
6 (GH)	2.2 D	132	01/10 -	4029	3875
6 (GH)	2.2 MZR-CD	92	01/09 – 12/12	4029	3875
6 (GH)	2.2 MZR-CD	120	01/09 -	4029	3875
6 (GH)	2.2 MZR-CD	136	01/09 -	4029	3875
6 (GH)	2.5 MZR	125	08/07 -	4029	3875
6 Estate (GH)	1.8 MZR	88	02/08 -	4029	3875
6 Estate (GH)	2.0 MZR	108	02/08 -	4029	3875
6 Estate (GH)	2.0 MZR	114	01/10 -	4029	3875
6 Estate (GH)	2.0 MZR-CD	103	02/08 -	4029	3875
6 Estate (GH)	2.2 D	95	01/10 -	4029	3875
6 Estate (GH)	2.2 MZR-CD	92	01/09 -	4029	3875
6 Estate (GH)	2.2 MZR-CD	120	01/09 -	4029	3875
6 Estate (GH)	2.2 MZR-CD	132	01/10 -	4029	3875
6 Estate (GH)	2.2 MZR-CD	136	01/09 -	4029	3875
6 Estate (GH)	2.5 MZR	125	02/08 -	4029	3875
6 Hatchback (GG)	1.8	88	08/02 – 08/07	4118	3875
6 Hatchback (GG)	2.0	104	08/02 – 08/07	3889	3875
6 Hatchback (GG)	2.0	108	03/05 – 08/07	3889	3875
6 Hatchback (GG)	2.0 DI	89	08/02 – 08/07	3889	3875
6 Hatchback (GG)	2.0 DI	100	08/02 – 08/07	3889	3875
6 Hatchback (GG)	2.0 DI	105	06/05 – 08/07	3889	3875
6 Hatchback (GG)	2.3	122	08/02 – 08/07	3889	3875
6 Hatchback (GG)	2.5	125	08/07 – 12/08	4029	3875
6 Hatchback (GH)	1.8 MZR	88	08/07 -	4029	3875
6 Hatchback (GH)	2.0 MZR	108	08/07 -	4029	3875
6 Hatchback (GH)	2.0 MZR	114	01/10 -	4029	3875
6 Hatchback (GH)	2.0 MZR-CD	103	08/07 -	4029	3875
6 Hatchback (GH)	2.2 D	95	01/10 -	4029	3875
6 Hatchback (GH)	2.2 MZR-CD	92	01/09 -	4029	3875
6 Hatchback (GH)	2.2 MZR-CD	120	01/09 -	4029	3875
6 Hatchback (GH)	2.2 MZR-CD	132	01/10 -	4029	3875
6 Hatchback (GH)	2.2 MZR-CD	136	01/09 -	4029	3875
6 Hatchback (GH)	2.5 MZR	125	08/07 -	4029	3875
6 III Sedan (GJ, GL) / Atenza 2.0	PE-VPR, PEY5, PEY7	114	12/2012 -	4315	4316
6 III Sedan (GJ, GL) / Atenza 2.0	PEXB, PEXL, PEY5, PEY7	121	01/2013 -	4315	4316
6 III Sedan (GJ, GL) / Atenza 2.0	PEXL, PEY7	110	12/2012 -	4315	4316
6 III Sedan (GJ, GL) / Atenza 2.0 (GJ2, GL2, GL6)	PEXB, PEXL, PEY5, PEY7	107	01/2013 -	4315	4316
6 III Sedan (GJ, GL) / Atenza 44229 D	SH-VPTR	129	07/2014 -	4315	4316
6 III Sedan (GJ, GL) / Atenza 44229 D	SH-VPTR	140	06/2018 -	4315	4316
6 III Sedan (GJ, GL) / Atenza 44229 D	SHY1	129	12/2012 -	4315	4316
6 III Sedan (GJ, GL) / Atenza 44229 D	SHY1, SHY4, SHY6, SHY8	110	12/2012 -	4315	4316
6 III Sedan (GJ, GL) / Atenza 44229 D	SHY8	135	03/2018 -	4315	4316
6 III Sedan (GJ, GL) / Atenza 44229 D 4WD	SH-VPTR	129	07/2014 -	4315	4316
6 III Sedan (GJ, GL) / Atenza 44229 D AWD	SH-VPTR	140	06/2018 -	4315	4316
6 III Sedan (GJ, GL) / Atenza 44318	PY-RPR, PYZC	140	03/2018 -	4315	4316
6 III Sedan (GJ, GL) / Atenza 44318	PY-VPR, PYY1	138	12/2012 -	4315	4316
6 III Sedan (GJ, GL) / Atenza 44318	PYY1, PYY3	136	12/2012 -	4315	4316
6 III Sedan (GJ, GL) / Atenza 44318	PY-Y8, PY-ZA, PYY1	141	01/2013 -	4315	4316
6 III Sedan (GJ, GL) / Atenza 44318	PYZ4	170	03/2018 -	4315	4316
6 III Sedan (GJ, GL) / Atenza 44318	PYZ8, PYZC	143	03/2018 -	4315	4316
6 III SW (GJ, GL) / Atenza 2.0	PE-VPR, PEY7	114	12/2012 -	4315	4316
6 III SW (GJ, GL) / Atenza 2.0	PEXB, PEXL, PEY5, PEY7	107	01/2013 -	4315	4316
6 III SW (GJ, GL) / Atenza 2.0	PEXB, PEXL, PEY5, PEY7	121	01/2013 -	4315	4316
6 III SW (GJ, GL) / Atenza 44229 D	SH-VPTR	129	07/2014 -	4315	4316
6 III SW (GJ, GL) / Atenza 44229 D	SH-VPTR	140	06/2018 -	4315	4316
6 III SW (GJ, GL) / Atenza 44229 D	SHY1, SHY4, SHY6, SHY8	110	12/2012 -	4315	4316
6 III SW (GJ, GL) / Atenza 44229 D	SHY4, SHY6	129	08/2012 - 02/2018	4315	4316
6 III SW (GJ, GL) / Atenza 44229 D	SHY8	135	03/2018 -	4315	4316
6 III SW (GJ, GL) / Atenza 44229 D 4WD	SH-VPTR	129	07/2014 -	4315	4316
6 III SW (GJ, GL) / Atenza 44229 D AWD	SH-VPTR	140	06/2018 -	4315	4316
6 III SW (GJ, GL) / Atenza 44229 D AWD	SHY4	129	02/2015 -	4315	4316
6 III SW (GJ, GL) / Atenza 44229 D AWD	SHY4, SHY6, SHY8	110	12/2012 -	4315	4316
6 III SW (GJ, GL) / Atenza 44229 D AWD	SHY8	135	03/2018 -	4315	4316

MAKE & MODEL		KW	YEAR		
MAZDA					
6 III SW (GJ, GL) / Atenza 44318	PY-RPR, PYZC	140	03/2018 -	4315	4316
6 III SW (GJ, GL) / Atenza 44318	PYY1	138	12/2012 -	4315	4316
6 III SW (GJ, GL) / Atenza 44318	PYY1, PYY3	136	12/2012 -	4315	4316
6 III SW (GJ, GL) / Atenza 44318	PY-Y8, PY-ZA, PYY1	141	12/2012 -	4315	4316
6 III SW (GJ, GL) / Atenza 44318	PYZ8, PYZC	143	03/2018 -	4315	4316
6 Station Wagon (GY)	1.8	88	08/02 – 08/07	3889	3875
6 Station Wagon (GY)	2.0	104	08/02 – 08/07	3889	3875
6 Station Wagon (GY)	2.0	108	03/05 – 08/07	3889	3875
6 Station Wagon (GY)	2.0 DI	89	08/02 – 08/07	3889	3875
6 Station Wagon (GY)	2.0 DI	100	08/02 – 08/07	3889	3875
6 Station Wagon (GY)	2.0 DI	105	06/05 – 08/07	3889	3875
6 Station Wagon (GY)	2.3	122	08/02 – 08/07	3889	3875
6 Station Wagon (GY)	2.3	122	08/02 – 08/07		4242
6 Station Wagon (GY)	2.3 AWD	119	11/02 – 08/07	3889	3875
626 II (GC)	2.0 i Turbo	87	01/86 – 10/87	3437	
626 III (GD)	1.6	60	06/87 – 05/92	3437	
626 III (GD)	1.8	65	11/87 – 05/92	3437	
626 III (GD)	2.0	66	09/87 – 10/90	3437	
626 III (GD)	2.0 12V	79	09/87 – 05/92	3437	
626 III (GD)	2.0 16V	103	11/87 – 05/92	3437	
626 III (GD)	2.0 16V	109	07/87 – 09/89	3437	
626 III (GD)	2.0 D	44	07/87 – 07/91	3437	
626 III (GD)	2.2 12V	85	11/87 – 07/91	3437	
626 III (GD)	2.2 12V 4WD	85	01/90 – 05/92	3437	
626 III Coupe (GD)	1.6	60	06/87 – 05/92	3437	
626 III Coupe (GD)	1.8	65	09/87 – 08/91	3437	
626 III Coupe (GD)	2.0	66	09/87 – 10/90	3437	
626 III Coupe (GD)	2.0 12V	79	09/87 – 12/88	3437	
626 III Coupe (GD)	2.0 16V	103	12/87 – 10/90	3437	
626 III Coupe (GD)	2.0 16V	109	06/87 09/89	3437	
626 III Coupe (GD)	2.2 12V	85	04/88 – 12/91	3437	
626 III Hatchback (GD)	1.6	60	06/87 – 05/92	3437	
626 III Hatchback (GD)	1.8	65	11/87 – 05/92	3437	
626 III Hatchback (GD)	1.8	69	11/87 – 05/92	3437	
626 III Hatchback (GD)	2.0	66	09/87 – 10/90	3437	
626 III Hatchback (GD)	2.0	74	10/87 – 07/89	3437	
626 III Hatchback (GD)	2.0 12V	79	11/87 – 05/92	3437	
626 III Hatchback (GD)	2.0 16V	103	11/87 – 10/90	3437	
626 III Hatchback (GD)	2.0 16V	109	06/87 – 08/89	3437	
626 III Hatchback (GD)	2.0 4x4	110	08/89 – 07/91	3437	
626 III Hatchback (GD)	2.0 D	44	07/87 – 07/91	3437	
626 III Hatchback (GD)	2.2 12V	85	06/88 – 04/92	3437	
626 III Hatchback (GD)	2.2 12V 4WD	85	11/87 – 07/90	3437	
626 III Hatchback (GD)	2.2 i Turbo	100	10/87 – 12/91	3437	
626 III Station Wagon (GV)	1.8	65	01/88 – 03/92	3437	
626 III Station Wagon (GV)	1.8	66	10/89 – 03/92	3437	
626 III Station Wagon (GV)	2.0	66	10/88 – 09/97	3437	
626 III Station Wagon (GV)	2.0 12V	81	09/87 – 01/90	3437	
626 III Station Wagon (GV)	2.0 16V	103	01/88 – 03/92	3437	
626 III Station Wagon (GV)	2.0 D	44	09/88 – 07/91	3437	
626 III Station Wagon (GV)	2.0 D	60	11/94 – 09/97	3437	
626 III Station Wagon (GV)	2.0 D Comprex	55	05/93 – 11/96	3437	
626 III Station Wagon (GV)	2.0 i 16V	110	11/94 – 09/97	3437	
626 III Station Wagon (GV)	2.2 12V	85	03/89 – 11/96	3437	
626 III Station Wagon (GV)	2.2 12V 4WD	85	05/91 – 11/92	3437	3875
626 IV (GE)	1.8 i	66	08/94 – 04/97	3832	3833
626 IV (GE)	1.8 i	77	01/92 – 04/97	3832	3833
626 IV (GE)	1.8 i	78	05/94 – 06/97	3832	3833
626 IV (GE)	2.0 D	56	05/94 – 06/97	3832	3833
626 IV (GE)	2.0 D GLX Comprex	55	10/92 – 04/97	3832	3833
626 IV (GE)	2.0 i	85	01/92 – 04/97	3832	3833
626 IV (GE)	2.0 i 4WD	85	04/92 – 04/97	3832	3833
626 IV Hatchback (GE)	1.8	66	08/94 – 04/97	3832	3833
626 IV Hatchback (GE)	1.8	77	08/91 – 04/97	3832	3833
626 IV Hatchback (GE)	2.0 D GLX Comprex	55	01/93 – 04/97	3832	3833
626 IV Hatchback (GE)	2.0 i	85	08/91 – 04/97	3832	3833
626 IV Hatchback (GE)	2.0 i 4WD	85	04/92 – 04/97	3832	3833
626 IV Hatchback (GE)	2.5 24V	120	08/94 – 04/97	3832	3833
626 IV Hatchback (GE)	2.5 24V	121	01/92 – 04/97	3832	3833
626 V (GF)	1.6	79	07/97 – 07/99	3832	3875
626 V (GF)	1.8	66	05/97 – 12/99	3832	3875
626 V (GF)	1.8	74	12/99 – 10/02	3832	3875
626 V (GF)	2.0	85	05/97 – 10/02	3832	3875
626 V (GF)	2.0	100	04/98 – 10/02	3832	3875
626 V (GF)	2.0 DI TD	66	04/98 – 10/02	3832	3875
626 V (GF)	2.0 TD	81	10/00 – 10/02	3832	3875

MAKE & MODEL   		KW	YEAR		
MAZDA					
626 V (GF)	2.0 Turbo DI	74	04/98 – 10/02	3832	3875
626 V Hatchback (GF)	1.8	66	05/97 – 12/99	3832	3875
626 V Hatchback (GF)	1.8	74	12/99 – 10/02	3832	3875
626 V Hatchback (GF)	2.0	85	05/97 – 10/02	3832	3875
626 V Hatchback (GF)	2.0 DITD	66	04/98 – 10/02	3832	3875
626 V Hatchback (GF)	2.0 H.P.	100	02/98 – 10/02	3832	3875
626 V Hatchback (GF)	2.0 TD	81	10/00 – 10/02		3875
626 V Hatchback (GF)	2.0 Turbo DI	74	04/98 – 10/02	3832	3875
626 V Station Wagon (GW)	1.8	66	02/98 – 01/00	3832	
626 V Station Wagon (GW)	1.8	74	01/00 – 10/02	3832	3875
626 V Station Wagon (GW)	2.0	85	02/98 – 10/02	3832	3875
626 V Station Wagon (GW)	2.0 DITD	66	09/99 – 10/02		3875
626 V Station Wagon (GW)	2.0 H.P.	100	02/98 – 10/02	3832	3875
626 V Station Wagon (GW)	2.0 TD	81	10/00 – 10/02		3875
626 V Station Wagon (GW)	2.0 Turbo DI	74	04/98 – 10/02	3832	3875
818 / 808 / MIZER	1.3 (TC)	44	01/74 – 10/78	3709	
818 / 808 / MIZER	1.6 (NA)	55	01/77 – 10/78	3709	
929 IV / LUCE (HC)	2.0 (FEFA)	85	06/87 – 12/88	3666	
929 IV / LUCE (HC)	2.0 (FEFA)	85	06/87 – 12/88	3672	
929 IV / LUCE (HC)	2.0 (FE (8V)	85	06/87 – 12/88	3666	
929 IV / LUCE (HC)	2.0 (FE (8V)	85	06/87 – 12/88	3672	
929 IV / LUCE (HC)	2.2 12V (F2)	85	01/88 – 04/89	3666	
929 IV / LUCE (HC)	2.2 12V (F2)	85	01/88 – 04/89	3672	
929 IV / LUCE (HC)	2.2 12V (F21)	85	01/88 – 04/89	3666	
929 IV / LUCE (HC)	2.2 12V (F21)	85	01/88 – 04/89	3672	
929 IV / LUCE (HC)	2.2 12V (F2-C)	94	04/89 – 06/91	3666	
929 IV / LUCE (HC)	2.2 12V (F2-C)	94	04/89 – 06/91	3672	
929 IV / LUCE (HC)	2.2 12V (F2E)	85	01/88 – 04/89	3666	
929 IV / LUCE (HC)	2.2 12V (F2E)	85	01/88 – 04/89	3672	
929 IV / LUCE (HC)	2.2 i (F2-EGI)	100	05/87 – 12/88	3666	
929 IV / LUCE (HC)	2.2 i (F2-EGI)	100	05/87 – 12/88	3672	
929 IV / LUCE (HC)	3.0 (JE)	140	06/87 – 06/91	3666	
929 IV / LUCE (HC)	3.0 (JE)	140	06/87 – 06/91	3672	
929 IV / LUCE (HC)	3.0 (JE3)	125	01/88 – 12/89	3666	
929 IV / LUCE (HC)	3.0 (JE3)	125	01/88 – 12/89	3672	
929 IV / LUCE (HC)	3.0 i (JE3)	123	01/90 – 06/91	3666	
929 IV / LUCE (HC)	3.0 i (JE3)	123	01/90 – 06/91	3672	
BONGO TRUCK Platform/Chassis (SKF_)	BONGO TRUCK Platform/Chassis (SKF_)	75	08/10 -	3892	
BONGO VAN Bus (SK_)	BONGO VAN Bus (SK_)	75	09/99 -	3892	
B-SERIE (UF)	2.2	68	11/99 – 08/02	3767	
B-SERIE (UF)	2.2 4WD	60	02/99 – 11/06	3767	
B-SERIE (UF)	2.2 8V 4WD	68	06/99 – 11/06	3767	
B-SERIE (UF)	2.5 D	57	06/99 – 11/06	3767	
B-SERIE (UF)	2.5 D	61	11/99 – 12/01	3767	
B-SERIE (UN)	2.5 D	62	12/02 – 11/06	3767	
B-SERIE (UN)	2.5 D 4WD	57	06/99 – 11/06	3767	
B-SERIE (UN)	2.5 D 4WD	57	09/98 – 06/99	3781	
B-SERIE (UN)	2.5 D 4WD	61	11/99 – 12/01	3767	
B-SERIE (UN)	2.5 D 4WD	62	12/02 – 11/06	3767	
B-SERIE (UN)	2.5 D 4WD	63	02/96 – 06/99	3781	
B-SERIE (UN)	2.5 D 4WD	64	04/96 – 02/99	3781	
B-SERIE (UN)	2.5 D 4WD	65	11/99 – 07/02	3767	
B-SERIE (UN)	2.5 D 4WD	86	02/99 – 03/05	3767	
B-SERIE (UN)	2.5 TD	86	02/99 – 03/05	3767	
B-SERIE (UN)	2.5 TD 4WD	80	06/99 – 07/06	3767	
B-SERIE (UN)	2.6 12V 4WD	90	01/90 – 06/99	3781	
B-SERIE (UN)	2.6 12V 4WD	90	06/99 – 11/06	3767	
B-SERIE (UN)	2.6 i	92	02/99 – 11/06	3767	
B-SERIE (UN)	2.6 i 4WD	92	01/90 – 02/99	3781	
B-SERIE (UN)	2.6 i 4WD	92	02/99 – 11/06	3767	
B-SERIE III / B-SERIE BRAVO	1.6 (H629)	58	10/81 – 12/84	3436	
B-SERIE III / B-SERIE BRAVO	1.8 (H816)	62	10/81 – 08/85	3436	
B-SERIE III / B-SERIE BRAVO	1.8 (H817)	62	10/81 – 08/85	3436	
B-SERIE III / B-SERIE BRAVO	2.0 (HEA1)	57	06/82 – 12/84	3436	
B-SERIE III / B-SERIE BRAVO	2.0 (UA)	57	01/83 – 12/84	3436	
BT-50 Pickup (CD, UN)	2.5 MRZ-CD 4x4	105	12/06 – 12/15	3988	
BT-50 Pickup (CD, UN)	2.5 TDi 4x4	81	08/06 – 12/15	3988	
BT-50 Pickup (CD, UN)	3.0 CDVi	115	12/06 – 12/15	3767	
BT-50 Pickup (CD, UN)	3.0 CDVi 4x4	115	12/06 – 12/15	3988	
BT-50 Platform/Chassis (CD, UN)	2.5 CDVi	105	12/06 -	3767	
BT-50 Platform/Chassis (CD, UN)	3.0 CDVi 4x4	115	12/06 -	3988	
CX-3 (DK) 2.0	PEX0	109	07/2015 -	4317	
CX-3 (DK) 2.0	PEX3	115	01/2016 -	4317	
CX-3 (DK) 2.0	PEX3, PEXB (02.18-.)	88	05/2015 -	4317	
CX-3 (DK) 2.0	PEXB	110	05/2018 -	4317	
CX-3 (DK) 2.0	PEXB, PEXT	89	02/2018 -	4317	

MAKE & MODEL		KW	YEAR		
MAZDA					
CX-3 (DK) 2.0 AWD	PEX0	109	07/2015 -	4317	
CX-3 (DK) 2.0 AWD	PEX3 (.-02.18), PEXB (02.18-.), PEXT	110	05/2015 -	4317	
CX-3 (DK) 44317 D	S5Y2 (09.15-.), S5Y5 (02.15-.), S5Y7 (12.16-.), S5	77	02/2015 - 01/2018	4317	
CX-3 (DK) 44317 D AWD	S5Y2 (09.15-.), S5Y5 (02.15-.), S5Y7 (12.16-.), S5	77	02/2015 - 01/2018	4317	
CX-3 (DK) 44409 D	S8-DPTS	85	05/2018 -	4317	
CX-3 (DK) 44409 D	S8Y1	85	02/2018 -	4317	
CX-3 (DK) 44409 D AWD	S8-DPTS	85	05/2018 -	4317	
CX-3 (DK) 44409 D AWD	S8Y1	85	02/2018 -	4317	
CX-30 (DM) 2.0 SKYACTIV-G	PEXN	115	08/2019 -	4317	
CX-30 (DM) 2.0 SKYACTIV-G	PEXP	114	09/2019 -	4317	
CX-30 (DM) 2.0 SKYACTIV-G	PEXP	121	09/2019 -	4317	
CX-30 (DM) 44318 SKYACTIV-G	PYZC	139	09/2019 -	4317	
CX-30 (DM) 44318 SKYACTIV-G	PYZC	143	09/2019 -	4317	
CX-30 (DM) 44409 D	S8Y1	85	07/2019 -	4317	
CX-30 (DM) 44409 D AWD	S8Y1	85	07/2019 -	4317	
CX-30 (DM) M Hybrid	HFY1	132	07/2019 -	4317	
CX-30 (DM) M Hybrid	PEXN	90	07/2019 -	4317	
CX-30 (DM) M Hybrid AWD	HFY1	132	07/2019 -	4317	
CX-30 (DM) M Hybrid AWD	PEXN	90	07/2019 -	4317	
CX-30 (DM) SKYACTIV-G M Hybrid	PEXW	110	01/2020 -	4317	
CX-30 (DM) SKYACTIV-G M Hybrid AWD	PEXW	110	01/2020 -	4317	
DEMIO (DW)	1.3 16V	46	08/98 – 07/03	3522	
DEMIO (DW)	1.3 i 16V	53	08/98 – 04/00	3522	
DEMIO (DW)	1.5 16V	55	04/00 – 07/03	3522	
E-SERIE II	1.6 E1600	51	08/80 – 06/84	3436	
E-SERIE II	1.6 E1600	51	08/80 – 06/84	3376	
E-SERIE III-IV / BONGO (SR2)	2.2 E2200 D	46	05/85 – 02/88	3376	
E-SERIE Box (SG)	E2000	71	04/04 – 07/06	3874	
E-SERIE Box (SR2)	2200 D 4WD	47	03/91 – 05/03	3463	
E-SERIE Box (SR2)	2200 D 4WD	47	03/91 – 05/03	3499	
E-SERIE Box (SR2)	2200 D 4WD	47	03/91 – 05/03	3874	
E-SERIE Box (SR2)	E2000	60	03/91 – 05/94	3463	
E-SERIE Box (SR2)	E2000	60	03/91 – 05/94	3499	
E-SERIE Box (SR2)	E2000	63	05/85 – 04/89	3463	
E-SERIE Box (SR2)	E2000	63	05/85 – 04/89	3499	
E-SERIE Box (SR2)	E2000	65	01/84 – 12/90	3463	
E-SERIE Box (SR2)	E2000	65	01/84 – 12/90	3499	
E-SERIE Box (SR2)	E2000	70	06/94 – 05/03	3463	
E-SERIE Box (SR2)	E2000	70	06/94 – 05/03	3499	
E-SERIE Box (SR2)	E2000	70	06/94 – 05/03	3874	
E-SERIE Box (SR2)	E2000 4WD	65	01/88 – 07/91	3463	
E-SERIE Box (SR2)	E2000 4WD	65	01/88 – 07/91	3499	
E-SERIE Box (SR2)	E2000 4WD	71	04/97 – 08/99	3463	
E-SERIE Box (SR2)	E2000 4WD	71	04/97 – 08/99	3499	
E-SERIE Box (SR2)	E2200 D	46	05/85 – 02/88	3463	
E-SERIE Box (SR2)	E2200 D	46	05/85 – 02/88	3499	
E-SERIE Box (SR2)	E2200 D	47	03/91 – 05/03	3463	
E-SERIE Box (SR2)	E2200 D	47	03/91 – 05/03	3499	
E-SERIE Box (SR2)	E2200 D	52	02/97 – 08/02	3463	
E-SERIE Box (SR2)	E2200 D	52	02/97 – 08/02	3499	
E-SERIE Box (SR2)	E2200 D	52	02/97 – 08/02	3874	
E-SERIE Box (SR2)	E2200 D 4WD	52	02/97 – 05/03	3463	
E-SERIE Box (SR2)	E2200 D 4WD	52	02/97 – 05/03	3499	
E-SERIE Box (SR2)	E2200 D 4WD	52	02/97 – 05/03	3874	
E-SERIE Bus	E2200 D	47	03/91 – 05/03	3463	
E-SERIE Bus	E2200 D	47	03/91 – 05/03	3499	
E-SERIE Bus	E-SERIE Bus	47	03/91 – 05/03	3892	
E-SERIE Bus (SR1)	E2000	63	11/84 – 05/94	3463	
E-SERIE Bus (SR1)	E2000	63	11/84 – 05/94	3499	
E-SERIE Bus (SR1)	E2000 4WD	60	10/88 – 09/89	3463	
E-SERIE Bus (SR1)	E2000 4WD	60	10/88 – 09/89	3499	
E-SERIE Bus (SR1)	E2200 D	46	01/84 – 02/88	3463	
E-SERIE Bus (SR1)	E2200 D	46	01/84 – 02/88	3499	
E-SERIE MPV (SG)	2.5 TD (SGL35, SGLW)	92	09/99 – 10/01	3874	
E-SERIE MPV (SG)	2.5 TD 4x4 (SGL5, SGLR)	92	09/99 – 10/01	3874	
E-SERIE MPV (SG)	E-SERIE MPV (SG)	74	08/99 – 10/01	3892	
E-SERIE Platform/Chassis (SD1)	E2000	60	10/89 – 05/95	3463	
E-SERIE Platform/Chassis (SD1)	E2000	60	10/89 – 05/95	3499	
E-SERIE Platform/Chassis (SD1)	E2000	63	11/88 – 09/89	3463	
E-SERIE Platform/Chassis (SD1)	E2000	63	11/88 – 09/89	3499	
E-SERIE Platform/Chassis (SD1)	E2000	65	01/83 – 07/91	3463	
E-SERIE Platform/Chassis (SD1)	E2000	65	01/83 – 07/91	3499	
E-SERIE Platform/Chassis (SD1)	E2000	71	01/91 – 08/98	3463	
E-SERIE Platform/Chassis (SD1)	E2000	71	01/91 – 08/98	3499	
E-SERIE Platform/Chassis (SD1)	E2200 D	47	11/88 – 03/97	3463	
E-SERIE Platform/Chassis (SD1)	E2200 D	47	11/88 – 03/97	3499	

MAKE & MODEL   		KW	YEAR		
MAZDA					
E-SERIE Platform/Chassis (SD1)	E2200 D	52	04/97 – 07/99	3463	
E-SERIE Platform/Chassis (SD1)	E2200 D	52	04/97 – 07/99	3499	
E-SERIE Platform/Chassis (SD1, SL)	E2000	71	09/99 – 09/04	3874	
E-SERIE Platform/Chassis (SD1, SL)	E2200 D	52	09/99 – 07/04	3874	
FESTIVA	1.1	40	04/89 – 10/90	3723	
FESTIVA	1.3	48	04/89 – 10/90	3723	
FIGHTER Pickup	2.5 TDiC 4WD	80	08/02 – 07/06	3767	
LCV B-Serie III (UF) 44318 D	WL	57	02/1992 - 06/1999	3988/1	
LCV B-Serie IV (UN) / Proceed 44229	F2R4	68	11/1999 - 08/2002	3988/1	
LCV B-Serie IV (UN) / Proceed 44229 4WD	R5A2	60	02/1999 - 11/2006	3988/1	
LCV B-Serie IV (UN) / Proceed 44229 8V 4WD	F2R4	68	06/1999 - 11/2006	3988/1	
LCV B-Serie IV (UN) / Proceed 44318 D	MD25NA	57	06/1999 - 11/2006	3988/1	
LCV B-Serie IV (UN) / Proceed 44318 D	WLE7	62	12/2002 - 11/2006	3988/1	
LCV B-Serie IV (UN) / Proceed 44318 D 4WD	MD25NA	57	06/1999 - 11/2006	3988/1	
LCV B-Serie IV (UN) / Proceed 44318 D 4WD	WLE7	62	12/2002 - 11/2006	3988/1	
LCV B-Serie IV (UN) / Proceed 44318 D 4WD	WLF5	86	02/1999 - 03/2005	3988/1	
LCV B-Serie IV (UN) / Proceed 44318 TD	WL-T	86	02/1999 - 03/2005	3988/1	
LCV B-Serie IV (UN) / Proceed 44318 TD 4WD	MD25TI	80	06/1999 - 07/2006	3988/1	
LCV B-Serie IV (UN) / Proceed 44349 12v	-	90	02/1999 - 07/2006	3988/1	
LCV B-Serie IV (UN) / Proceed 44349 12V 4WD	JK26	90	06/1999 - 11/2006	3988/1	
LCV B-Serie IV (UN) / Proceed 44349 i	G6Y1	92	02/1999 - 11/2006	3988/1	
LCV B-Serie IV (UN) / Proceed 44349 i 4WD	G6Y1	92	02/1999 - 11/2006	3988/1	
LCV B-Serie IV (UN) / Proceed 44441 D	D29UYT	70	09/2001 - 03/2005	3988/1	
LCV B-Serie IV (UN) / Proceed 44441 D 4WD	D29UYT	70	09/2001 - 07/2006	3988/1	
LCV BT-50 I Pick-up (CD, UN) 3.0 CDVi	WEAT	115	12/2006 - 12/2015	3988/1	
LCV BT-50 I Pick-up (CD, UN) 3.0 CDVi 4x4	WEAT	115	10/2006 - 12/2015	3988/1	
LCV BT-50 I Pick-up (CD, UN) 44318 MRZ-CD	WLAA	105	08/2006 - 06/2013	3988/1	
LCV BT-50 I Pick-up (CD, UN) 44318 MRZ-CD 4x4	WLAA	105	12/2006 - 12/2015	3988/1	
LCV BT-50 I Pick-up (CD, UN) 44318 TDI	-	81	08/2006 - 12/2015	3988/1	
LCV BT-50 I Pick-up (CD, UN) 44318 TDI 4x4	-	81	08/2006 - 12/2015	3988/1	
LCV BT-50 I Pick-up (CD, UN) 44349	G6Y1	90	10/2006 - 06/2013	3988/1	
LCV BT-50 I Pick-up (CD, UN) 44349	G6Y1	92	10/2006 - 12/2015	3988/1	
LCV BT-50 I Pick-up (CD, UN) 44349 4x4	G6Y1	115	10/2006 - 12/2015	3988/1	
LCV BT-50 I Pick-up (CD, UN) 44349 4x4	G6Y1	92	10/2006 - 12/2015	3988/1	
LCV BT-50 I Platform/Chassis (CD, UN) 3.0 CDVi 4x4	WEAT	115	12/2006 -	3988/1	
LCV BT-50 I Platform/Chassis (CD, UN) 44318 CDVi	WLAT (16 V)	105	12/2006 -	3988/1	
LCV BT-50 I Platform/Chassis (CD, UN) 44318 TDI	-	81	08/2006 -	3988/1	
LCV BT-50 I Platform/Chassis (CD, UN) 44318 TDI 4WD	-	81	08/2006 -	3988/1	
LCV BT-50 I Platform/Chassis (CD, UN) 44349	G6Y1	92	10/2006 -	3988/1	
LCV BT-50 I Platform/Chassis (CD, UN) 44349 4WD	G6Y1	115	10/2006 -	3988/1	
LCV BT-50 I Platform/Chassis (CD, UN) 44349 4WD	G6Y1	92	10/2006 -	3988/1	
MPV I (LV)	2.5 TD	85	05/96 – 09/99	3874	
MPV I (LV)	3.0 i V6	109	11/89 – 09/99	3874	
MPV I (LV)	3.0 i V6 (LV10)	113	03/95 – 09/99	3874	
MPV II (LW)	2.0	88	08/00 – 07/02	3874	
MPV II (LW)	2.0	90	09/99 – 08/00	3874	
MPV II (LW)	2.0 DI	100	07/02 – 02/06	3874	
MPV II (LW)	2.3	104	07/02 – 02/06	3874	
MPV II (LW)	2.5 V6	125	09/99 – 03/02	3874	
MPV II (LW)	3.0 i V6	147	03/02 – 02/06	3874	
MX-3 (EC)	1.6 i	65	07/91 – 10/97	3640	
MX-3 (EC)	1.6 i	79	01/94 – 10/97	3640	
MX-3 (EC)	1.8 i V6	95	01/94 – 10/97	3640	
MX-3 (EC)	1.8 i V6	98	01/92 – 01/94	3640	
MX-3 (EC)	1.8 i V6	99	01/96 – 10/97	3640	
MX-6 (GE)	1.8	74	12/95 – 02/97	3832	3833
MX-6 (GE)	2.0	85	02/92 – 02/97	3832	3833
MX-6 (GE)	2.2	162	12/95 – 02/97	3832	3833
MX-6 (GE)	2.5 24V	121	02/92 – 02/97	3832	3833
MX-6 (GE)	2.5 24V	123	02/93 – 11/95	3832	3833
MX-6 (GE)	2.5 i 24V	120	08/94 – 02/97	3832	3833
PREMACY (CP)	1.9	74	07/99 – 03/05	3832	3875
PREMACY (CP)	1.9	84	07/99 – 03/05	3832	3875
PREMACY (CP)	2.0	96	11/01 – 03/05	3832	3875
PREMACY (CP)	2.0	107	02/05 – 03/05	3832	3853/1
PREMACY (CP)	2.0	107	02/05 – 03/05	3885	3875
PREMACY (CP)	2.0 TD	66	10/99 – 07/00	3832	3875
PREMACY (CP)	2.0 TD	74	07/00 – 03/05	3832	3875
PREMACY (CP)	2.3 SVT	122	02/05 – 03/05	3832	3853/1
PREMACY (CP)	2.3 SVT	122	02/05 – 03/05	3885	3875
RX 7 I (SA)	Wankel	83	03/84 – 03/86		3875
RX 7 I (SA)	Wankel	85	01/81 – 03/84		3875
RX 7 II (FC)	Turbo	133	06/87 – 11/89		3875
RX 7 II (FC)	Turbo	147	03/89 – 12/91		3875
RX 7 II (FC)	Wankel	110	11/85 – 04/89		3875
RX 7 II Convertible	Turbo	147	03/89 – 12/91		3875

MAKE & MODEL		KW	YEAR		
MAZDA					
RX 7 III (FD)	Wankel Twin Turbo	176	07/92 – 08/02		3875
RX-8 (SE, FE) 44256	13B-MSP	141	10/2003 - 06/2012		4303
RX-8 (SE, FE) 44256	13B-MSP	170	10/2003 - 06/2012		4303
TRIBUTE (EP)	2.0	91	03/00 – 05/08	4119	4215
TRIBUTE (EP)	2.0 (YF)	91	03/00 – 05/08	4220	
TRIBUTE (EP)	2.0 4WD	91	03/00 – 05/08	4119	4215
TRIBUTE (EP)	2.3 (L3-VE)	110	04/04 – 05/08	4220	
TRIBUTE (EP)	2.3 A las 4 ruedas (L3)	109	07/06 – 05/08	4220	
TRIBUTE (EP)	2.3 All-wheel Drive	109	07/06 – 05/08	4119	4215
TRIBUTE (EP)	2.3 AWD	110	04/ 04 – 05/08	4119	4215
TRIBUTE (EP)	2.3 GX	110	12/03 – 10/04	4119	4215
TRIBUTE (EP)	3.0 V6 (AJ)	149	04/04 – 05/08	4220	
TRIBUTE (EP)	3.0 V6 24V (AJ)	145	03/00 – 05/08	4220	
TRIBUTE (EP)	3.0 V6 24V 4WD	145	03/00 – 05/08	4119	4215
TRIBUTE (EP)	3.0 V6 AWD	149	04/04 – 05/08	4119	4215
VERISA (ND)	1.5	83	07/04 – 03/15	3877	
XEDOS 6 (CA)	1.6 16V	79	06/94 – 10/99	3832	3833
XEDOS 6 (CA)	1.6 16V	83	08/92 – 05/94	3832	3833
XEDOS 6 (CA)	1.8	85	04/94 – 10/99	3832	3833
XEDOS 6 (CA)	2.0 V6	103	06/94 – 10/99	3832	3833
XEDOS 6 (CA)	2.0 V6	106	01/92 – 05/94	3832	3833
MAZDA (CHANGAN)					
2	1.3	68	10/07 -	4122	
2	1.5	76	10/07 -	4122	
2 Saloon	1.3	63	02/09 -	4122	
2 Saloon	1.3	68	06/08 -	4122	
2 Saloon	1.5	76	06/08 -	4122	
MAZDA (FAW)					
6 RUI YI	2.0	108	10/09 -	4029	
6 RUI YI	2.5	124	01/09 – 12/14	4029	
MAZDA (HAINAN)					
PREMACY MPV	1.8	90	01/01 – 02/07	3832	3875
MEGA					
CLUB II	1.4 i	55	06/99 -	3380	
CLUB II	1.4 i	55	06/99 -	3381	
CLUB II 1.4 i)		55	06.1999 -	3487	
MERCEDES BENZ					
(BBDC) C-Class II (W205) C 180 L -205141	M 274.910	115	10/2014 -		4349
(BBDC) C-Class II (W205) C 200 L -205142	M 274.920	135	08/2014 -		4349
(BBDC) C-Class II (W205) C 200 L 4-matic -205143	M 274.920	135	04/2015 -		4349
(BBDC) C-Class II (W205) C 260 L -205145	M 274.920	155	08/2014 - 12/2015		4349
(BBDC) C-Class II (W205) C 300 L -205148	M 274.920	180	06/2015 -		4349
(BBDC) E-Class III (W213) E 200 L -213142	M 274.920	135	11/2016 -	4334	
(BBDC) GLA I (X156) 200 -156943	M 270.910	115	04/2015 -	4326	
(BBDC) GLA I (X156) 260 4-matic -156946	M 270.920	155	04/2015 -	4326	
(BBDC) GLK Close Off-Road (X204) 200 -204394	M 274.920	135	06/2014 - 12/2015	4391	
(BBDC) GLK Close Off-Road (X204) 260 4-matic -204934	M 274.920	155	08/2013 - 12/2015	4391	
(BBDC) GLK Close Off-Road (X204) 300 4-matic -204981	M 272.948	180	04/2012 - 12/2015	4391	
Citan Combi -415 108 CDI -415703	OM 607.951	55	11/2012 -	3966/1	
Citan Combi -415 109 CDI -415703	OM 607.951	66	11/2012 -	3966/1	
Citan Combi -415 111 CDI -415703	OM 607.951	81	06/2013 -	3966/1	
Citan Combi -415 112 -415703	M 200.711	84	06/2013 -	3966/1	
CLA I Coupe (C117) CLA 180 -117342	M 270.910	90	01/2013 - 03/2019	4326	
CLA I Coupe (C117) CLA 180 CDI / d -117312	OM 607.951	80	10/2013 - 05/2018	4326	
CLA I Coupe (C117) CLA 200 -117343	M 270.910	115	01/2013 - 03/2019	4326	
CLA I Coupe (C117) CLA 200 CDI / d -117308	OM 651.930	100	07/2014 - 03/2019	4326	
CLA I Coupe (C117) CLA 200 CDI / d 4-matic -117302	OM 651.930	100	07/2014 - 03/2019	4326	
CLA I Coupe (C117) CLA 200 CDI -117301	OM 651.901	100	06/2013 - 08/2014	4326	
CLA I Coupe (C117) CLA 220 -117345	M 270.920	135	04/2016 -	4326	
CLA I Coupe (C117) CLA 220 4-matic -117347	M 270.920	135	04/2016 - 03/2019	4326	
CLA I Coupe (C117) CLA 220 CDI / d -117303	OM 651.930	120	01/2013 - 03/2019	4326	
CLA I Coupe (C117) CLA 220 CDI / d -117303	OM 651.930	125	01/2013 - 03/2019	4326	
CLA I Coupe (C117) CLA 220 CDI / d -117303	OM 651.930	130	09/2014 - 03/2019	4326	
CLA I Coupe (C117) CLA 220 CDI / d 4-matic -117305	OM 651.930	120	08/2014 - 03/2019	4326	
CLA I Coupe (C117) CLA 220 CDI / d 4-matic -117305	OM 651.930	130	09/2014 - 03/2019	4326	
CLA I Coupe (C117) CLA 220 CDI 4-matic -117305	OM 651.930	125	07/2014 - 03/2019	4326	
CLA I Coupe (C117) CLA 250 -117344	M 270.920	155	01/2013 - 03/2019	4326	
CLA I Coupe (C117) CLA 250 -117350	M 270.920	160	07/2015 - 03/2019	4326	
CLA I Coupe (C117) CLA 250 4-matic -117346	M 270.920	155	07/2013 - 03/2019	4326	
CLA I Coupe (C117) CLA 250 4-matic -117351	M 270.920	160	07/2015 - 03/2019	4326	
CLA I Shooting Brake I (X117) CLA 180 -117942	M 270.910	90	01/2015 - 03/2019	4326	
CLA I Shooting Brake I (X117) CLA 180 d -117912	OM 607.951	80	07/2015 - 05/2018	4326	
CLA I Shooting Brake I (X117) CLA 200 -117943	M 270.910	115	01/2015 - 03/2019	4326	
CLA I Shooting Brake I (X117) CLA 200 CDI / d -117908	OM 651.930	100	01/2015 - 03/2019	4326	

MAKE & MODEL   		KW	YEAR		
MERCEDES BENZ					
CLA I Shooting Brake I (X117) CLA 200 CDI / d 4-matic -117902	OM 651.930	100	01/2015 - 03/2019	4326	
CLA I Shooting Brake I (X117) CLA 220 CDI / d -117903	OM 651.930	120	01/2015 - 03/2019	4326	
CLA I Shooting Brake I (X117) CLA 220 CDI / d -117903	OM 651.930	130	01/2015 - 03/2019	4326	
CLA I Shooting Brake I (X117) CLA 220 CDI / d 4-matic -117905	OM 651.930	120	09/2015 - 03/2019	4326	
CLA I Shooting Brake I (X117) CLA 220 CDI / d 4-matic -117905	OM 651.930	130	01/2015 - 03/2019	4326	
CLA I Shooting Brake I (X117) CLA 250 -117944	M 270.920	155	01/2015 - 03/2019	4326	
CLA I Shooting Brake I (X117) CLA 250 4-matic -117946	M 270.920	155	01/2015 - 03/2019	4326	
CLA I Shooting Brake I (X117) CLA 250 4-matic -117951	M 270.920	160	07/2015 - 03/2019	4326	
Classe A III (W176) A 160 -176041	M 270.910	75	07/2015 - 05/2018	4326	
Classe A III (W176) A 160 CDI / d -176011	OM 607.951	66	06/2013 - 05/2018	4326	
Classe A III (W176) A 180 -176042	M 270.910	90	09/2012 - 05/2018	4326	
Classe A III (W176) A 180 CDI / d -176012	OM 607.951	80	06/2012 - 05/2018	4326	
Classe A III (W176) A 180 CDI -176000	OM 651.901	80	06/2012 - 10/2014	4326	
Classe A III (W176) A 200 -176043	M 270.910	115	06/2012 - 05/2018	4326	
Classe A III (W176) A 200 CDI / d -176008	OM 651.930	100	02/2014 - 05/2018	4326	
Classe A III (W176) A 200 CDI / d 4-matic -176002	OM 651.930	100	02/2014 - 05/2018	4326	
Classe A III (W176) A 200 CDI -176001	OM 651.901	100	06/2012 - 10/2014	4326	
Classe A III (W176) A 220 4-matic -176047	M 270.920	135	05/2014 - 05/2018	4326	
Classe A III (W176) A 220 CDI -176003	OM 651.930	120	01/2014 - 05/2018	4326	
Classe A III (W176) A 220 CDI -176003	OM 651.930	125	09/2012 - 05/2018	4326	
Classe A III (W176) A 220 CDI 4-matic -176005	OM 651.930	125	02/2014 - 05/2018	4326	
Classe A III (W176) A 220 d -176003	OM 651.930	130	07/2015 - 05/2018	4326	
Classe A III (W176) A 220 d 4-matic -176005	OM 651.930	130	07/2015 - 05/2018	4326	
Classe A III (W176) A 250 -176044	M 270.920	155	06/2012 - 05/2018	4326	
Classe A III (W176) A 250 -176050	M 270.920	160	07/2015 - 05/2018	4326	
Classe A III (W176) A 250 4-matic -176046	M 270.920	155	06/2013 - 05/2018	4326	
Classe A III (W176) A 250 4-matic -176051	M 270.920	160	07/2015 - 05/2018	4326	
Classe B II (W246, W242) B 160 CDI / d -246211	OM 607.951	66	05/2013 - 12/2018	4326	
Classe B II (W246, W242) B 180 -246242	M 270.910	90	11/2011 - 12/2018	4326	
Classe B II (W246, W242) B 180 CDI / d -246212	OM 607.951	80	02/2013 - 12/2018	4326	
Classe B II (W246, W242) B 180 CDI -246200	OM 651.901	80	11/2011 - 08/2014	4326	
Classe B II (W246, W242) B 200 -246243	M 270.910	115	11/2011 - 12/2018	4326	
Classe B II (W246, W242) B 200 CDI / d -246208	OM 651.930	100	08/2014 - 12/2018	4326	
Classe B II (W246, W242) B 200 CDI / d 4-matic -246202	OM 651.930	100	08/2014 - 12/2018	4326	
Classe B II (W246, W242) B 200 CDI -246201	OM 651.901	100	11/2011 - 08/2014	4326	
Classe B II (W246, W242) B 200 Natural Gas Drive / B 200 c -242848	M 270.920	115	11/2012 - 12/2017	4326	
Classe B II (W246, W242) B 220 -246245	M 270.920	135	08/2014 -	4326	
Classe B II (W246, W242) B 220 4-matic -246247	M 270.920	135	05/2013 - 12/2018	4326	
Classe B II (W246, W242) B 220 CDI / d -246203	OM 651.930	120	06/2013 - 12/2018	4326	
Classe B II (W246, W242) B 220 CDI / d -246203	OM 651.930	125	11/2011 - 12/2018	4326	
Classe B II (W246, W242) B 220 CDI / d -246203	OM 651.930	130	08/2014 - 12/2018	4326	
Classe B II (W246, W242) B 220 CDI / d 4-matic -246205	OM 651.930	130	08/2014 - 12/2018	4326	
Classe B II (W246, W242) B 220 d 4-matic -246205	OM 651.930	125	06/2018 - 12/2018	4326	
Classe B II (W246, W242) B 250 -246244	M 270.920	155	05/2012 - 12/2018	4326	
Classe B II (W246, W242) B 250 4-matic -246246	M 270.920	155	08/2014 - 12/2018	4326	
Classe C IV (W205) C 160 -205044	M 274.910	95	04/2015 -	4334	4349
Classe C IV (W205) C 180 (205.040, 205.140)	M 274.910	115	03/2014 -	4334	4349
Classe C IV (W205) C 180 BlueTEC / d -205036	OM 626.951	85	05/2014 - 05/2018	4334	4349
Classe C IV (W205) C 200 -205042	M 274.920	135	12/2013 - 08/2018	4334	4349
Classe C IV (W205) C 200 4-matic -205043	M 274.920	135	04/2015 - 08/2018	4334	4349
Classe C IV (W205) C 200 BlueTEC / d -205037	OM 626.951	100	05/2014 - 05/2018	4334	4349
Classe C IV (W205) C 200 d -205007	OM 651.921	100	10/2015 - 05/2018	4334	4349
Classe C IV (W205) C 220 BlueTEC / d (205.002, 205.004)	OM 651.921	125	02/2014 - 05/2018	4334	4349
Classe C IV (W205) C 220 BlueTEC / d -205003	OM 651.921	120	03/2014 - 05/2016	4334	4349
Classe C IV (W205) C 220 d 4-matic -205005	OM 651.921	125	04/2015 - 05/2018	4334	4349
Classe C IV (W205) C 250 -205045	M 274.920	155	03/2014 - 05/2018		4349
Classe C IV (W205) C 250 BlueTEC / d (205.008, 205.006)	OM 651.921	150	02/2014 - 05/2018		4349
Classe C IV (W205) C 250 BlueTEC / d 4-matic -205009	OM 651.921	150	02/2014 - 05/2018		4349
Classe C IV (W205) C 300 -205048	M 274.920	180	09/2015 - 08/2018		4349
Classe C IV (W205) C 300 Bluetec Hybrid	-	170	07/2014 -		4349
Classe C IV (W205) C 300 BlueTEC Hybrid / h -205012	OM 651.921	150	05/2014 - 05/2018		4349
Classe C IV (W205) C 350 e -205047	M 274.920	155	02/2015 - 08/2018		4349
Classe C IV (W205) C 350 e -205047	M 274.920	205	02/2015 - 08/2018		4349
Classe C IV (W205) C 400 4-matic -205066	M 276.823	245	10/2014 -		4349
Classe C IV (W205) C 450 AMG 4-matic -205064	M 276.823	270	04/2015 - 05/2018		4349
Classe C IV Cabrio (A205) C 180 -205440	M 274.910	115	06/2016 -	4334	4349
Classe C IV Cabrio (A205) C 200 -205442	M 274.920	135	06/2016 - 05/2018	4334	4349
Classe C IV Cabrio (A205) C 200 4-matic -205443	M 274.920	135	06/2016 - 05/2018	4334	4349
Classe C IV Cabrio (A205) C 220 d -205404	OM 651.921	125	06/2016 - 05/2018	4334	4349
Classe C IV Cabrio (A205) C 220 d 4-matic -205405	OM 651.921	125	06/2016 - 05/2018	4334	4349
Classe C IV Cabrio (A205) C 250 -205445	M 274.920	155	06/2016 - 05/2018		4349
Classe C IV Cabrio (A205) C 250 d -205408	OM 651.921	150	06/2016 - 05/2018		4349
Classe C IV Cabrio (A205) C 300 -205448	M 274.920	180	06/2016 - 05/2018		4349
Classe C IV Cabrio (A205) C 400 4-matic -205466	M 276.823	245	06/2016 -		4349
Classe C IV Coupe (C205) C 180 -205340	M 274.910	115	10/2015 -	4334	4349
Classe C IV Coupe (C205) C 200 -205342	M 274.920	135	10/2015 - 05/2018	4334	4349

MAKE & MODEL		KW	YEAR		
MERCEDES BENZ					
Classe C IV Coupe (C205) C 200 4-matic -205343	M 274.920	135	04/2016 - 05/2018	4334	4349
Classe C IV Coupe (C205) C 220 d -205304	OM 651.921	120	10/2015 - 05/2018	4334	4349
Classe C IV Coupe (C205) C 220 d -205304	OM 651.921	125	10/2015 - 05/2018	4334	4349
Classe C IV Coupe (C205) C 220 d 4-matic -205305	OM 651.921	125	04/2016 - 05/2018	4334	4349
Classe C IV Coupe (C205) C 250 -205345	M 274.920	155	10/2015 - 05/2018		4349
Classe C IV Coupe (C205) C 250 d -205308	OM 651.921	150	10/2015 - 05/2018		4349
Classe C IV Coupe (C205) C 250 d 4-matic -205309	OM 651.921	150	04/2016 - 05/2018		4349
Classe C IV Coupe (C205) C 300 -205348	M 274.920	180	10/2015 - 12/2018		4349
Classe C IV Coupe (C205) C 400 4-matic -205366	M 276.823	245	04/2016 -		4349
Classe C IV T-Model (S205) C 160 -205244	M 274.910	95	04/2015 -	4334	4349
Classe C IV T-Model (S205) C 180 -205240	M 274.910	115	09/2014 -	4334	4349
Classe C IV T-Model (S205) C 180 BlueTEC / d -205236	OM 626.951	85	09/2014 - 05/2018	4334	4349
Classe C IV T-Model (S205) C 200 -205242	M 274.920	135	09/2014 - 05/2018	4334	4349
Classe C IV T-Model (S205) C 200 4-matic -205243	M 274.920	135	04/2015 - 05/2018	4334	4349
Classe C IV T-Model (S205) C 200 BlueTEC / d -205237	OM 626.951	100	09/2014 - 05/2018	4334	4349
Classe C IV T-Model (S205) C 200 d -205207	OM 651.921	100	10/2015 - 05/2018	4334	4349
Classe C IV T-Model (S205) C 220 BlueTEC / d -205204	OM 651.921	120	09/2014 - 05/2018	4334	4349
Classe C IV T-Model (S205) C 220 BlueTEC / d -205204	OM 651.921	125	09/2014 - 05/2018	4334	4349
Classe C IV T-Model (S205) C 220 d 4-matic -205205	OM 651.921	125	04/2015 - 05/2018	4334	4349
Classe C IV T-Model (S205) C 250 -205245	M 274.920	155	09/2014 - 05/2018		4349
Classe C IV T-Model (S205) C 250 BlueTEC / d -205208	OM 651.921	150	09/2014 - 05/2018		4349
Classe C IV T-Model (S205) C 250 BlueTEC / d 4-matic -205209	OM 651.921	150	10/2014 - 05/2018		4349
Classe C IV T-Model (S205) C 300 -205248	M 274.920	180	09/2015 - 05/2018		4349
Classe C IV T-Model (S205) C 300 Bluetec Hybrid	-	170	10/2014 -		4349
Classe C IV T-Model (S205) C 300 BlueTEC Hybrid / h -205212	OM 651.921	150	10/2014 - 05/2018		4349
Classe C IV T-Model (S205) C 400 4-matic -205266	M 276.823	245	10/2014 -		4349
Classe E III (W211) E 200 CDI -211004	OM 646.951	75	07/2002 - 12/2008	4097/1	
Classe E III (W211) E 200 CDI -211004	OM 646.951	90	07/2002 - 12/2008	4097/1	
Classe E III (W211) E 200 CDI -211007	OM 646.820	100	04/2006 - 12/2008	4097/1	
Classe E III (W211) E 200 CGI	M271.946	125	11/2002 - 02/2009	4097/1	
Classe E III (W211) E 200 Kompressor -211041	M 271.956	135	04/2006 - 12/2008	4097/1	
Classe E III (W211) E 200 Kompressor -211042	M 271.941	120	11/2002 - 12/2008	4097/1	
Classe E III (W211) E 200 NGT -211042	M 271.941	120	03/2004 - 12/2008	4097/1	
Classe E III (W211) E 220 CDI	OM 646.821	120	03/2003 - 12/2008	4097/1	
Classe E III (W211) E 220 CDI -211006	OM 646.961	100	03/2002 - 12/2008	4097/1	
Classe E III (W211) E 220 CDI -211006	OM 646.961	110	03/2002 - 12/2008	4097/1	
Classe E III (W211) E 220 CDI -211008	OM 646.821	125	04/2006 - 12/2008	4097/1	
Classe E III (W211) E 230 -211052	M 272.922	150	09/2007 - 12/2008	4097/1	
Classe E III (W211) E 240 -211061	M 112.913, M 112.917	130	03/2002 - 12/2008	4097/1	
Classe E III (W211) E 270 CDI -211016	OM 647.961	120	03/2002 - 12/2008	4097/1	
Classe E III (W211) E 270 CDI -211016	OM 647.961	130	03/2002 - 12/2008	4097/1	
Classe E III (W211) E 280 -211054	M 272.943	170	03/2005 - 12/2008	4097/1	
Classe E III (W211) E 280 CDI -211020	OM 642.920	140	03/2005 - 12/2008	4097/1	
Classe E III (W211) E 280 CDI -211023	OM 648.961	130	05/2004 - 12/2008	4097/1	
Classe E III (W211) E 300 BlueTEC -211024	OM 642.920	155	09/2007 - 12/2008	4097/1	
Classe E III (W211) E 320 -211065	M 112.949	165	03/2002 - 12/2008	4097/1	
Classe E III (W211) E 320 CDI -211022	OM 642.920	165	03/2005 - 12/2008	4097/1	
Classe E III (W211) E 320 CDI -211026	OM 648.961	150	11/2002 - 12/2008	4097/1	
Classe E III (W211) E 350 -211056	M 272.964	200	03/2005 - 12/2008	4097/1	
Classe E III (W211) E 350 CGI -211057	M 272.985	215	09/2007 - 12/2008	4097/1	
Classe E III T-Model (S211) 350 CGI -211257	M 272.985	215	05/2006 - 07/2009	4097/1	
Classe E III T-Model (S211) E 200 CDI -211207	OM 646.821	100	04/2006 - 07/2009	4097/1	
Classe E III T-Model (S211) E 200 Kompressor -211241	M 271.956	135	04/2006 - 07/2009	4097/1	
Classe E III T-Model (S211) E 200 T Kompressor -211242	M 271.941	120	03/2003 - 07/2009	4097/1	
Classe E III T-Model (S211) E 220 CDI -211206	OM 646.961	100	03/2003 - 07/2009	4097/1	
Classe E III T-Model (S211) E 220 T CDI	OM 646.821	120	03/2003 - 07/2009	4097/1	
Classe E III T-Model (S211) E 220 T CDI -211206	OM 646.961	110	03/2003 - 07/2009	4097/1	
Classe E III T-Model (S211) E 220 T CDI -211208	OM 646.821	125	04/2006 - 07/2009	4097/1	
Classe E III T-Model (S211) E 240 T -211261	M 112.913	130	03/2003 - 07/2009	4097/1	
Classe E III T-Model (S211) E 270 T CDI -211216	OM 647.961	120	03/2003 - 07/2009	4097/1	
Classe E III T-Model (S211) E 270 T CDI -211216	OM 647.961	130	03/2003 - 07/2009	4097/1	
Classe E III T-Model (S211) E 280 T -211254	M 272.943	170	03/2005 - 07/2009	4097/1	
Classe E III T-Model (S211) E 280 T CDI -211220	OM 642.920	140	03/2005 - 07/2009	4097/1	
Classe E III T-Model (S211) E 280 T CDI -211223	OM 648.961	130	05/2004 - 07/2009	4097/1	
Classe E III T-Model (S211) E 320 T -211265	M 112.949	165	03/2003 - 07/2009	4097/1	
Classe E III T-Model (S211) E 320 T CDI -211222	OM 642.920	165	03/2005 - 07/2009	4097/1	
Classe E III T-Model (S211) E 320 T CDI -211226	OM 648.961	150	03/2003 - 07/2009	4097/1	
Classe E III T-Model (S211) E 350 T -211256	M 272.964	200	03/2005 - 07/2009	4097/1	
Classe E V (W213) E 180 -213040	M 274.910	115	01/2017 -	4334	
Classe E V (W213) E 200 -213042	M 274.920	135	01/2016 -	4334	
Classe E V (W213) E 200 4-matic -213043	M 274.920	135	07/2016 -	4334	
Classe E V (W213) E 200 d -213013	OM 654.920	110	07/2016 -	4334	
Classe E V (W213) E 220 d -213004	OM 654.920	120	01/2016 -	4334	
Classe E V (W213) E 220 d -213004	OM 654.920	143	01/2016 -	4334	
Classe E V (W213) E 220 d 4-matic -213005	OM 654.920	120	10/2016 -	4334	
Classe E V (W213) E 220 d 4-matic -213005	OM 654.920	143	10/2016 -	4334	

MAKE & MODEL   		KW	YEAR		
MERCEDES BENZ					
Classe E V All-Terrain (S213) E 220 d 4-matic -213217	OM 654.920	143	01/2017 -	4334	
Classe E V Cabrio (A238) E 200 -238442	M 274.920	135	06/2017 -	4334	
Classe E V Cabrio (A238) E 200 4-matic -238443	M 274.920	135	10/2017 -	4334	
Classe E V Cabrio (A238) E 220 d -238414	OM 654.920	120	06/2017 -	4334	
Classe E V Cabrio (A238) E 220 d -238414	OM 654.920	143	06/2017 -	4334	
Classe E V Cabrio (A238) E 220 d 4-matic -238415	OM 654.920	143	10/2017 -	4334	
Classe E V Coupe (C238) E 200 -238342	M 274.920	135	12/2016 -	4334	
Classe E V Coupe (C238) E 200 4-matic -238343	M 274.920	135	06/2017 -	4334	
Classe E V Coupe (C238) E 220 d -238314	-	120	12/2016 -	4334	
Classe E V Coupe (C238) E 220 d -238314	OM 654.920	143	12/2016 -	4334	
Classe E V Coupe (C238) E 220 d 4-matic -238315	OM 654.920	143	03/2017 -	4334	
Classe E V T-Model (S213) E 200 -213242	M 274.920	135	07/2016 -	4334	
Classe E V T-Model (S213) E 200 4-matic -213243	M 274.920	135	01/2017 -	4334	
Classe E V T-Model (S213) E 200 d -213213	OM 654.920	110	10/2016 -	4334	
Classe E V T-Model (S213) E 220 d -213204	OM 654.920	120	07/2016 -	4334	
Classe E V T-Model (S213) E 220 d -213204	OM 654.920	143	07/2016 -	4334	
Classe E V T-Model (S213) E 220 d 4-matic -213205	OM 654.920	143	01/2017 -	4334	
Classe GLA I (X156) GLA 180 -156942	M 270.910	90	02/2015 -	4326	
Classe GLA I (X156) GLA 180 CDI / d -156912	OM 607.951	80	07/2014 -	4326	
Classe GLA I (X156) GLA 200 -156943	M 270.910	115	12/2013 -	4326	
Classe GLA I (X156) GLA 200 CDI / d -156908	OM 651.930	100	12/2013 -	4326	
Classe GLA I (X156) GLA 200 CDI 4-matic -156902	OM 651.930	100	12/2013 -	4326	
Classe GLA I (X156) GLA 220 CDI / d -156903	OM 651.930	120	12/2013 -	4326	
Classe GLA I (X156) GLA 220 CDI / d 4-matic -156905	OM 651.930	120	12/2013 -	4326	
Classe GLA I (X156) GLA 220 CDI -156903	OM 651.930	125	12/2013 -	4326	
Classe GLA I (X156) GLA 220 CDI 4-matic -156905	OM 651.930	125	12/2013 -	4326	
Classe GLA I (X156) GLA 220 d -156903	OM 651.930	130	07/2015 -	4326	
Classe GLA I (X156) GLA 220 d 4-matic -156905	OM 651.930	130	07/2015 -	4326	
Classe GLA I (X156) GLA 250 -156944	M 270.920	155	12/2013 -	4326	
Classe GLA I (X156) GLA 250 4-matic -156946	M 270.920	155	12/2013 -	4326	
Classe GLK (X204) 200 (204.934)	M 274.920	135	08/2013 - 06/2015	4391	
Classe GLK (X204) 200 CDI -204901	OM 651.913, OM 651.916	105	07/2010 - 06/2015	4391	
Classe GLK (X204) 200 CDI -204901	OM 651.916	100	12/2013 - 06/2015	4391	
Classe GLK (X204) 220 CDI -204902	OM 651.916	120	12/2008 - 06/2015	4391	
Classe GLK (X204) 220 CDI -204902	OM 651.916	125	12/2008 - 06/2015	4391	
Classe GLK (X204) 220 CDI 4-matic (204.984, 204.997)	OM 651.912	125	12/2008 - 06/2015	4391	
Classe GLK (X204) 220 CDI 4-matic -204984	OM 651.912	120	12/2008 - 06/2015	4391	
Classe GLK (X204) 250 (204.936)	M 274.920	155	08/2013 - 06/2015	4391	
Classe GLK (X204) 250 4-matic -204937	M 274.920	155	08/2013 - 06/2015	4391	
Classe GLK (X204) 250 CDI 4-matic (204.982, 204.904)	OM 651.912	150	09/2009 - 06/2015	4391	
Classe GLK (X204) 280 4-matic -204981	M 272.948	170	06/2008 - 06/2009	4391	
Classe GLK (X204) 300 4-matic	M 276.957	185	09/2009 - 06/2015	4391	
Classe GLK (X204) 300 4-matic -204981	M 272.948	170	07/2009 - 12/2015	4391	
Classe GLK (X204) 320 CDI 4-matic -204983	OM 642.961	165	06/2008 - 06/2015	4391	
Classe GLK (X204) 350 (204.956)	M 272.991	200	04/2009 - 06/2015	4391	
Classe GLK (X204) 350 4-matic -204987	M 272.971	200	06/2008 - 04/2011	4391	
Classe GLK (X204) 350 4-matic -204988	M 276.957	225	06/2008 - 06/2015	4391	
Classe GLK (X204) 350 CDI 4-matic -204992	OM 642.832	165	07/2009 - 01/2010	4391	
Classe GLK (X204) 350 CDI 4-matic -204992	OM 642.832	170	02/2010 - 06/2015	4391	
Classe GLK (X204) 350 CDI 4-matic -204993	OM 642.835	195	07/2012 - 06/2015	4391	
Classe GLK (X204) 350 CGI	M 276.957	225	09/2012 - 06/2015	4391	
Classe M I (W163) ML 230 -163136	M 111.977	110	02/1998 - 06/2005	4126/1	
Classe M I (W163) ML 270 CDI -163113	OM 612.963	120	12/1999 - 06/2005	4126/1	
Classe M I (W163) ML 320 -163154	M 112.942 (02.98-.)	160	02/1998 - 08/2002	4126/1	
Classe S VII (W222, V222, X222) S 300 BlueTEC Hybrid / h (222.004, 222.104)	OM 651.921	150	02/2014 - 05/2017	4313	4335
Classe S VII (W222, V222, X222) S 300 BlueTEC Hybrid / h -222104	OM 651.921	170	02/2014 - 05/2017	4313	4335
Classe S VII (W222, V222, X222) S 320 -222162	M 276.824	200	05/2014 -	4313	4335
Classe S VII (W222, V222, X222) S 320 L Mild Hybrid -222150	M 264.920	220	08/2018 -	4313	4335
Classe S VII (W222, V222, X222) S 350 BlueTEC / d (222.132, 222032 222.123)	OM 642.861	190	05/2013 - 05/2017	4313	4335
Classe S VII (W222, V222, X222) S 350 BlueTEC / d 4-matic (222.033, 222.133)	OM 642.861, OM 642.867	190	02/2014 - 05/2017	4313	4335
Classe S VII (W222, V222, X222) S 350 BlueTEC 4-matic -222133	OM 642.867	185	02/2014 - 05/2017	4313	4335
Classe S VII (W222, V222, X222) S 350 d (222.020, 222.120)	OM 656.929	210	07/2017 -	4313	4335
Classe S VII (W222, V222, X222) S 350 d 4-matic (222.021, 222.121)	OM 656.929	210	05/2017 -	4313	4335
Classe S VII (W222, V222, X222) S 350 d 4-matic -222121	OM 656.929	183	07/2018 -	4313	4335
Classe S VII (W222, V222, X222) S 350 L -222155	M 276.824	230	09/2017 -	4313	4335
Classe S VII (W222, V222, X222) S 400 -222165	M 276.824	245	03/2014 - 05/2017	4313	4335
Classe S VII (W222, V222, X222) S 400 4-matic -222067	M 276.824	245	11/2014 - 05/2017	4313	4335
Classe S VII (W222, V222, X222) S 400 d (222.034, 222.134)	OM 656.929	250	07/2017 -	4313	4335
Classe S VII (W222, V222, X222) S 400 d 4-matic (222.035, 222.135)	OM 656.929	250	05/2017 -	4313	4335
Classe S VII (W222, V222, X222) S 400 Hybrid / h (222.057, 222.157)	M 276.960	225	05/2013 - 05/2017	4313	4335
Classe S VII (W222, V222, X222) S 400 Maybach 4-matic -222967	M 276.824	245	01/2015 -	4313	4335
Classe S VII (W222, V222, X222) S 450 (222.066, 222.166)	M 276.824	270	02/2017 -	4313	4335
Classe S VII (W222, V222, X222) S 450 4-matic (222.064, 222.164)	M 276.824	270	02/2017 -	4313	4335
Classe S VII (W222, V222, X222) S 450 EQ Boost (222.158, 222.058)	M 256.930	270	07/2017 -	4313	4335
Classe S VII (W222, V222, X222) S 450 EQ Boost 4-matic (222.059, 222.159)	M 256.930	270	07/2017 -	4313	4335
Classe S VII (W222, V222, X222) S 450 Maybach 4-matic (222.959, 222.964)	M 276.824	270	09/2017 -	4313	4335

MAKE & MODEL		KW	YEAR		
MERCEDES BENZ					
Classe S VII (W222, V222, X222) S 500 (222.082, 222.182)	M 278.929	320	09/2013 -	4313	4335
Classe S VII (W222, V222, X222) S 500 (222.082, 222.182)	M 278.929	335	05/2013 - 05/2017	4313	4335
Classe S VII (W222, V222, X222) S 500 4-matic (222.085, 222.185)	M 278.929	335	05/2013 - 05/2017	4313	4335
Classe S VII (W222, V222, X222) S 500 4-matic -222184	M 278.910	310	02/2014 -	4313	4335
Classe S VII (W222, V222, X222) S 500 4-matic -222185	M 278.929	320	09/2013 - 05/2017	4313	4335
Classe S VII (W222, V222, X222) S 500 EQ Boost (222.060, 222.160)	M 256.930	320	07/2017 -	4313	4335
Classe S VII (W222, V222, X222) S 500 Hybrid / e -222163	M 276.824	245	07/2014 - 05/2017	4313	4335
Classe S VII (W222, V222, X222) S 500 L 4-matic -222169	M 256.930	320	11/2017 -	4313	4335
Classe S VII (W222, V222, X222) S 500 Maybach -222982	M 278.929	335	12/2014 - 05/2017	4313	4335
Classe S VII (W222, V222, X222) S 500 Maybach 4-matic -222984	M 278.910	310	09/2015 -	4313	4335
Classe S VII (W222, V222, X222) S 500 Maybach 4-matic -222985	M 278.929	335	04/2015 - 05/2017	4313	4335
Classe S VII (W222, V222, X222) S 560 (222.083, 222.183)	M 176.980	345	07/2017 -	4313	4335
Classe S VII (W222, V222, X222) S 560 4-matic (222.086, 222.186)	M 176.980	345	05/2017 -	4313	4335
Classe S VII (W222, V222, X222) S 560 e -222173	M 276.824	270	10/2018 -	4313	4335
Classe S VII (W222, V222, X222) S 560 Maybach -222983	M 176.980	345	07/2017 -	4313	4335
Classe S VII (W222, V222, X222) S 560 Maybach 4-matic -222986	M 176.980	345	07/2017 -	4313	4335
Classe S VII Cabrio (A217) S 500 -217482	M 278.929	335	12/2015 - 10/2017	4313	4335
Classe S VII Cabrio (A217) S 560 -217483	M 176.980	345	10/2017 -	4313	4335
Classe S VII Coupe (C217) S 400 4-matic -217364	M 276.824	270	10/2015 -	4313	4335
Classe S VII Coupe (C217) S 450 4-matic -217364	M 276.824	270	10/2017 -	4313	4335
Classe S VII Coupe (C217) S 500 -217382	M 278.929	335	11/2014 - 10/2017	4313	4335
Classe S VII Coupe (C217) S 500 4-matic -217384	M 278.910	310	11/2014 -	4313	4335
Classe S VII Coupe (C217) S 500 4-matic -217385	M 278.929	335	04/2014 - 10/2017	4313	4335
Classe S VII Coupe (C217) S 560 -217383	M 176.980	345	10/2017 -	4313	4335
Classe S VII Coupe (C217) S 560 4-matic -217386	M 176.980	345	10/2017 -	4313	4335
Classe V II (W447) V 200 CDI / d (447.811, 447813 447.815)	OM 651.950	100	03/2014 -	3925/2	
Classe V II (W447) V 200 CDI / d 4-matic	OM 651.950	100	04/2015 -	3925/2	
HCV eSprinter III Van (B910) eSprinter -910633	EM 780.703	85	02/2020 -	3962/1	4355
HCV Sprinter Classic II 3,5-t Van (B909) 311 CDI (909.632, 909.633)	OM 646.701	80	09/2013 -	3925/2	3926/1
HCV Sprinter Classic II 4,6-t Bus (B909) 411 CDI -909843	OM 646.701	80	09/2013 -	3962/1	3963/1
HCV Sprinter II 3,5-t Bus (B906) 310 CDI (906.731, 906733 906.735)	OM 651.955, OM 651.956	70	03/2009 - 12/2013	3925/2	3926/1
HCV Sprinter II 3,5-t Bus (B906) 311 CDI (906.731, 906733 906.735)	OM 646.985	80	06/2006 - 12/2009	3925/2	3926/1
HCV Sprinter II 3,5-t Bus (B906) 311 CDI (906.731, 906733 906.735)	OM 651.955	84	05/2016 -	3925/2	3926/1
HCV Sprinter II 3,5-t Bus (B906) 311 CDI 4x4 (906.731, 906733 906.735)	OM 646.985	80	02/2008 - 12/2009	3925/2	3926/1
HCV Sprinter II 3,5-t Bus (B906) 313 CDI (906.731, 906733 906.735)	OM 651.955	95	08/2011 - 05/2016	3925/2	3926/1
HCV Sprinter II 3,5-t Bus (B906) 313 CDI 4x4 (906.731, 906733 906.735)	OM 651.955	95	08/2011 - 05/2016	3925/2	3926/1
HCV Sprinter II 3,5-t Bus (B906) 314 CDI (906.731, 906733 906.735)	OM 651.955	105	05/2016 -	3925/2	3926/1
HCV Sprinter II 3,5-t Bus (B906) 314 CDI 4x4 (906.731, 906733 906.735)	OM 651.955	105	05/2016 -	3925/2	3926/1
HCV Sprinter II 3,5-t Bus (B906) 315 CDI (906.731, 906733 906.735)	OM 646.986, OM 646.989, OM 646.990	110	06/2006 - 12/2009	3925/2	3926/1
HCV Sprinter II 3,5-t Bus (B906) 315 CDI 4x4 (906.731, 906733 906.735)	OM 646.986, OM 646.989, OM 646.990	110	02/2008 - 12/2009	3925/2	3926/1
HCV Sprinter II 3,5-t Bus (B906) 316 (906.733, 906.735)	M 271.951	115	09/2008 -	3925/2	3926/1
HCV Sprinter II 3,5-t Bus (B906) 316 CDI (906.731, 906733 906.735)	OM 651.955, OM 651.957	120	08/2011 -	3925/2	3926/1
HCV Sprinter II 3,5-t Bus (B906) 316 CDI 4x4 (906.731, 906733 906.735)	OM 651.955, OM 651.957	120	08/2011 -	3925/2	3926/1
HCV Sprinter II 3,5-t Bus (B906) 316 LGT	M 271.951	115	09/2008 -	3925/2	3926/1
HCV Sprinter II 3,5-t Bus (B906) 316 NGT (906.733, 906.735)	M 271.951	115	09/2008 -	3925/2	3926/1
HCV Sprinter II 3,5-t Bus (B906) 318 CDI (906.731, 906733 906.735)	OM 642.896, OM 642.986, OM 642.992, OM 642.993	135	02/2008 - 12/2009	3925/2	3926/1
HCV Sprinter II 3,5-t Bus (B906) 318 CDI 4x4 (906.731, 906733 906.735)	OM 642.896, OM 642.986, OM 642.992, OM 642.993	135	02/2008 - 12/2009	3925/2	3926/1
HCV Sprinter II 3,5-t Bus (B906) 319 CDI / BlueTEC (906.731, 906733 906.735)	OM 642.896, OM 642.898, OM 642.986, OM 642.992	140	03/2009 -	3925/2	3926/1
HCV Sprinter II 3,5-t Bus (B906) 319 CDI / BlueTEC 4x4 (906.731, 906733 906.735)	OM 642.896, OM 642.898, OM 642.986, OM 642.992	140	03/2009 -	3925/2	3926/1
HCV Sprinter II 3,5-t Bus (B906) 324 (906.733, 906.735)	M 272.979	190	06/2006 - 12/2013	3925/2	3926/1
HCV Sprinter II 3,5-t Platform/Chassis (B906) 309 CDI (906.131, 906133 906135 906231 906.2	OM 646.984	65	06/2006 - 12/2009	3925/2	3926/1
HCV Sprinter II 3,5-t Platform/Chassis (B906) 310 CDI (906.131, 906133 906135 906231 906.2	OM 651.955	70	03/2009 - 05/2016	3925/2	3926/1
HCV Sprinter II 3,5-t Platform/Chassis (B906) 311 CDI (906.131, 906133 906135 906231 906.2	OM 646.985	80	06/2006 - 12/2009	3925/2	3926/1
HCV Sprinter II 3,5-t Platform/Chassis (B906) 311 CDI (906.131, 906133 906135 906231 906.2	OM 651.955	84	05/2016 -	3925/2	3926/1
HCV Sprinter II 3,5-t Platform/Chassis (B906) 311 CDI 4x4 (906.131, 906133 906135 906231 9	OM 646.985	80	02/2008 - 12/2009	3925/2	3926/1
HCV Sprinter II 3,5-t Platform/Chassis (B906) 313 CDI (906.131, 906133 906135 906231 906.2	OM 646.986	95	06/2006 - 05/2016	3925/2	3926/1
HCV Sprinter II 3,5-t Platform/Chassis (B906) 313 CDI (906.131, 906133 906135 906231 906.2	OM 651.955, OM 651.956	95	06/2006 - 05/2016	3925/2	3926/1
HCV Sprinter II 3,5-t Platform/Chassis (B906) 313 CDI 4x4 (906.131, 906133 906135 906231 9	OM 651.955	95	06/2006 - 05/2016	3925/2	3926/1
HCV Sprinter II 3,5-t Platform/Chassis (B906) 314 CDI (906.131, 906133 906135 906231 906.2	OM 651.955	105	05/2016 -	3925/2	3926/1
HCV Sprinter II 3,5-t Platform/Chassis (B906) 314 CDI 4x4 (906.131, 906133 906135 906231 9	OM 651.955	105	05/2016 -	3925/2	3926/1
HCV Sprinter II 3,5-t Platform/Chassis (B906) 315 CDI (906.131, 906133 906135 906231 906.2	OM 646.986, OM 646.989, OM 646.990	110	06/2006 - 12/2009	3925/2	3926/1
HCV Sprinter II 3,5-t Platform/Chassis (B906) 315 CDI 4x4 (906.131, 906133 906135 906231 9	OM 646.986, OM 646.989, OM 646.990	110	02/2008 - 12/2009	3925/2	3926/1
HCV Sprinter II 3,5-t Platform/Chassis (B906) 316 (906.133, 906135 906233 906.235)	M 271.951	115	09/2008 -	3925/2	3926/1
HCV Sprinter II 3,5-t Platform/Chassis (B906) 316 CDI (906.131, 906133 906135 906231 906.2	OM 651.955, OM 651.957	120	03/2009 -	3925/2	3926/1
HCV Sprinter II 3,5-t Platform/Chassis (B906) 316 CDI 4x4 (906.131, 906133 906135 906231 9	OM 651.955, OM 651.957	120	03/2009 -	3925/2	3926/1
HCV Sprinter II 3,5-t Platform/Chassis (B906) 316 LGT (906.133, 906135 906233 906.235)	M 271.951	115	09/2008 -	3925/2	3926/1
HCV Sprinter II 3,5-t Platform/Chassis (B906) 316 NGT (906.133, 906135 906233 906.235)	M 271.951	115	09/2008 -	3925/2	3926/1
HCV Sprinter II 3,5-t Platform/Chassis (B906) 318 CDI (906.131, 906133 906135 906231 906.2	OM 642.896, OM 642.992, OM 642.993	135	06/2006 - 12/2009	3925/2	3926/1
HCV Sprinter II 3,5-t Platform/Chassis (B906) 318 CDI 4x4 (906.131, 906133 906135 906231 9	OM 642.896, OM 642.992, OM 642.993	135	02/2008 - 12/2009	3925/2	3926/1
HCV Sprinter II 3,5-t Platform/Chassis (B906) 319 CDI / BlueTEC (906.131, 906133 906135 906.	OM 642.896, OM 642.898, OM 642.992	140	03/2009 -	3925/2	3926/1
HCV Sprinter II 3,5-t Platform/Chassis (B906) 319 CDI / BlueTEC 4x4 (906.131, 906133 906.135,.	OM 642.896, OM 642.898, OM 642.992	140	05/2011 -	3925/2	3926/1
HCV Sprinter II 3,5-t Platform/Chassis (B906) 324 (906.133, 906135 906233 906.235)	M 272.979	190	06/2006 - 12/2013	3925/2	3926/1
HCV Sprinter II 3,5-t Van (B906) 309 CDI (906.631, 906633 906635 906.637)	OM 646.984	65	06/2006 - 12/2009	3925/2	3926/1
HCV Sprinter II 3,5-t Van (B906) 310 CDI (906.631, 906633 906635 906.637)	OM 651.955	70	03/2009 -	3925/2	3926/1
HCV Sprinter II 3,5-t Van (B906) 311 CDI (906.631, 906633 906635 906.637)	OM 646.985	80	06/2006 - 12/2009	3925/2	3926/1
HCV Sprinter II 3,5-t Van (B906) 311 CDI (906.631, 906633 906635 906.637)	OM 651.955	84	05/2016 -	3925/2	3926/1

MAKE & MODEL		KW	YEAR		
MERCEDES BENZ					
HCV Sprinter II 3,5-t Van (B906) 311 CDI 4x4 (906.631, 906633 906635 906.637)	OM 646.985	80	02/2008 - 12/2009	3925/2	3926/1
HCV Sprinter II 3,5-t Van (B906) 313 CDI (906.631, 906633 906635 906.637)	OM 646.986	95	06/2006 -	3925/2	3926/1
HCV Sprinter II 3,5-t Van (B906) 313 CDI (906.631, 906633 906635 906.637)	OM 651.940, OM 651.955	95	05/2009 -	3925/2	3926/1
HCV Sprinter II 3,5-t Van (B906) 313 CDI 4x4 (906.631, 906633 906635 906.637)	OM 651.955	95	05/2009 -	3925/2	3926/1
HCV Sprinter II 3,5-t Van (B906) 314 CDI (906.631, 906633 906635 906.637)	OM 651.955	105	05/2016 -	3925/2	3926/1
HCV Sprinter II 3,5-t Van (B906) 314 CDI 4x4 (906.631, 906633 906635 906.637)	OM 651.955	105	05/2016 -	3925/2	3926/1
HCV Sprinter II 3,5-t Van (B906) 315 CDI (906.631, 906633 906635 906.637)	OM 646.986, OM 646.989, OM 646.990	110	06/2006 - 12/2009	3925/2	3926/1
HCV Sprinter II 3,5-t Van (B906) 315 CDI 4x4 (906.631, 906633 906635 906.637)	OM 646.986, OM 646.989, OM 646.990	110	02/2008 - 12/2009	3925/2	3926/1
HCV Sprinter II 3,5-t Van (B906) 316 (906.635, 906.633)	M 271.951	115	09/2008 -	3925/2	3926/1
HCV Sprinter II 3,5-t Van (B906) 316 CDI (906.631, 906633 906635 906.637)	OM 651.955, OM 651.957	120	03/2009 -	3925/2	3926/1
HCV Sprinter II 3,5-t Van (B906) 316 CDI 4x4 (906.631, 906633 906635 906.637)	OM 651.955, OM 651.957	120	03/2009 -	3925/2	3926/1
HCV Sprinter II 3,5-t Van (B906) 316 LGT (906.633, 906.635)	M 271.951	115	09/2008 -	3925/2	3926/1
HCV Sprinter II 3,5-t Van (B906) 316 NGT (906.633, 906.635)	M 271.951	115	09/2008 -	3925/2	3926/1
HCV Sprinter II 3,5-t Van (B906) 318 CDI (906.631, 906633 906635 906.637)	OM 642.896, OM 642.986, OM 642.992, OM 642.993	135	06/2006 - 12/2009	3925/2	3926/1
HCV Sprinter II 3,5-t Van (B906) 318 CDI 4x4 (906.631, 906633 906635 906.637)	OM 642.896, OM 642.986, OM 642.992, OM 642.993	135	02/2008 - 12/2009	3925/2	3926/1
HCV Sprinter II 3,5-t Van (B906) 319 CDI / BlueTEC (906.631, 906633 906635 906.	OM 642.896, OM 642.898, OM 642.986, OM 642.992	140	03/2009 -	3925/2	3926/1
HCV Sprinter II 3,5-t Van (B906) 319 CDI / BlueTEC 4x4 (906.631, 906633 906.635,.	OM 642.896, OM 642.898, OM 642.986, OM 642.992	140	03/2009 -	3925/2	3926/1
HCV Sprinter II 3,5-t Van (B906) 324 (906.633, 906635 906.637)	M 272.979	190	06/2006 - 12/2013	3925/2	3926/1
HCV Sprinter II 3-t Bus (B906) 210 CDI (906.711, 906.713)	OM 651.955	70	03/2009 - 12/2013	3925/2	3926/1
HCV Sprinter II 3-t Bus (B906) 211 CDI (906.711, 906.713)	OM 646.985	80	06/2006 - 12/2009	3925/2	3926/1
HCV Sprinter II 3-t Bus (B906) 211 CDI (906.711, 906.713)	OM 651.955	84	04/2016 -	3925/2	3926/1
HCV Sprinter II 3-t Bus (B906) 213 CDI (906.711, 906.713)	OM 651.955	95	06/2006 - 05/2016	3925/2	3926/1
HCV Sprinter II 3-t Bus (B906) 214 CDI (906.711, 906.713)	OM 651.955	105	04/2016 -	3925/2	3926/1
HCV Sprinter II 3-t Bus (B906) 215 CDI (906.711, 906.713)	OM 646.986, OM 646.989, OM 646.990	110	06/2006 - 12/2009	3925/2	3926/1
HCV Sprinter II 3-t Bus (B906) 216 -906713	M 271.951	115	09/2008 -	3925/2	3926/1
HCV Sprinter II 3-t Bus (B906) 216 CDI (906.711, 906.713)	OM 651.955, OM 651.957	120	06/2006 -	3925/2	3926/1
HCV Sprinter II 3-t Bus (B906) 224 -906713	M 272.979	190	06/2006 - 12/2013	3925/2	3926/1
HCV Sprinter II 3-t Platform/Chassis (B906) 209 CDI (906.111, 906113 906211 906.213)	OM 646.984	65	06/2006 - 12/2009	3925/2	3926/1
HCV Sprinter II 3-t Platform/Chassis (B906) 210 CDI (906.111, 906113 906211 906.213)	OM 651.955	70	03/2009 - 05/2016	3925/2	3926/1
HCV Sprinter II 3-t Platform/Chassis (B906) 211 CDI (906.111, 906113 906211 906.213)	OM 646.985	80	06/2006 - 12/2009	3925/2	3926/1
HCV Sprinter II 3-t Platform/Chassis (B906) 211 CDI (906.111, 906113 906211 906.213)	OM 651.955	84	04/2016 -	3925/2	3926/1
HCV Sprinter II 3-t Platform/Chassis (B906) 213 CDI (906.111, 906113 906211 906.213)	OM 646.986	95	06/2006 - 12/2009	3925/2	3926/1
HCV Sprinter II 3-t Platform/Chassis (B906) 213 CDI (906.111, 906113 906211 906.213)	OM 651.955, OM 651.957	95	03/2009 - 05/2016	3925/2	3926/1
HCV Sprinter II 3-t Platform/Chassis (B906) 214 CDI (906.111, 906113 906211 906.213)	OM 651.955	105	04/2016 -	3925/2	3926/1
HCV Sprinter II 3-t Platform/Chassis (B906) 215 CDI (906.111, 906113 906211 906.213)	OM 646.986, OM 646.989, OM 646.990	110	06/2006 - 12/2009	3925/2	3926/1
HCV Sprinter II 3-t Platform/Chassis (B906) 216 (906.113, 906.213)	M 271.951	115	09/2008 - 05/2016	3925/2	3926/1
HCV Sprinter II 3-t Platform/Chassis (B906) 216 CDI (906.111, 906113 906211 906.213)	OM 651.957	120	03/2009 -	3925/2	3926/1
HCV Sprinter II 3-t Platform/Chassis (B906) 218 CDI (906.111, 906113 906211 906.213)	OM 642.896, OM 642.992, OM 642.993	135	06/2006 - 12/2009	3925/2	3926/1
HCV Sprinter II 3-t Platform/Chassis (B906) 219 CDI / BlueTEC (906.111, 906113 906211 906.	OM 642.896, OM 642.992	140	03/2009 - 05/2016	3925/2	3926/1
HCV Sprinter II 3-t Platform/Chassis (B906) 224 (906.113, 906.213)	M 272.979	190	06/2006 - 12/2013	3925/2	3926/1
HCV Sprinter II 3-t Van (B906) 209 CDI (906.611, 906.613)	OM 646.984	65	06/2006 - 12/2009	3925/2	3926/1
HCV Sprinter II 3-t Van (B906) 210 CDI (906.611, 906.613)	OM 651.955	70	03/2009 -	3925/2	3926/1
HCV Sprinter II 3-t Van (B906) 211 CDI (906.611, 906.613)	OM 646.985	80	06/2006 - 12/2009	3925/2	3926/1
HCV Sprinter II 3-t Van (B906) 211 CDI (906.611, 906.613)	OM 651.955	84	04/2016 -	3925/2	3926/1
HCV Sprinter II 3-t Van (B906) 213 CDI (906.611, 906.613)	OM 646.986	95	06/2006 - 12/2009	3925/2	3926/1
HCV Sprinter II 3-t Van (B906) 213 CDI (906.611, 906.613)	OM 651.955, OM 651.957	95	06/2006 -	3925/2	3926/1
HCV Sprinter II 3-t Van (B906) 214 CDI (906.611, 906.613)	OM 651.955	105	04/2016 -	3925/2	3926/1
HCV Sprinter II 3-t Van (B906) 215 CDI (906.611, 906.613)	OM 646.986, OM 646.989, OM 646.990	110	06/2006 - 12/2009	3925/2	3926/1
HCV Sprinter II 3-t Van (B906) 216 -906613	M 271.951	115	09/2008 -	3925/2	3926/1
HCV Sprinter II 3-t Van (B906) 216 CDI (906.611, 906.613)	OM 651.955, OM 651.957	120	03/2009 -	3925/2	3926/1
HCV Sprinter II 3-t Van (B906) 218 CDI (906.611, 906.613)	OM 642.896, OM 642.992	135	06/2006 - 12/2009	3925/2	3926/1
HCV Sprinter II 3-t Van (B906) 219 CDI / BlueTEC (906.611, 906.613)	OM 642.896, OM 642.992	140	03/2009 -	3925/2	3926/1
HCV Sprinter II 3-t Van (B906) 224 -906613	M 272.979	190	06/2006 -	3925/2	3926/1
HCV Sprinter II 4,6-t Platform/Chassis (B906) 409 CDi	OM646.DELA	65	06/2006 - 08/2013	3962/1	3963/1
HCV Sprinter II 4,6-t Platform/Chassis (B906) 411 CDI (906.153, 906155 906253 906.255)	OM 646.985	80	06/2009 - 12/2018	3962/1	3963/1
HCV Sprinter II 4,6-t Platform/Chassis (B906) 413 CDI	OM 651.955	95	03/2009 -	3962/1	3963/1
HCV Sprinter II 4,6-t Platform/Chassis (B906) 413 CDi	OM646.DELA	95	06/2006 - 08/2013	3962/1	3963/1
HCV Sprinter II 4,6-t Platform/Chassis (B906) 414 CDI	-	105	05/2016 -	3962/1	3963/1
HCV Sprinter II 4,6-t Platform/Chassis (B906) 415 CDI (906.153, 906155 906253 906.255)	OM 646.986, OM 646.989, OM 646.990	110	06/2006 - 12/2009	3962/1	3963/1
HCV Sprinter II 4,6-t Platform/Chassis (B906) 416 CDI (906.153, 906155 906253 906.255)	OM 651.955, OM 651.957	120	03/2009 -	3962/1	3963/1
HCV Sprinter II 4,6-t Platform/Chassis (B906) 418 CDI (906.153, 906155 906253 906.255)	OM 642.896, OM 642.986, OM 642.992, OM 642.993	135	06/2006 - 12/2009	3962/1	3963/1
HCV Sprinter II 4,6-t Platform/Chassis (B906) 419 CDI (906.153, 906155 906253 906.255)	OM 642.896, OM 642.898, OM 642.986, OM 642.992	140	03/2009 -	3962/1	3963/1
HCV Sprinter II 4,6-t Platform/Chassis (B906) 424 (906.153, 906155 906253 906.255)	M 272.979	190	06/2006 - 12/2013	3962/1	3963/1
HCV Sprinter II 4,6-t Van (B906) 409 CDI	OM646.DELA	65	06/2006 - 08/2013	3962/1	3963/1
HCV Sprinter II 4,6-t Van (B906) 411 CDI (906.653, 906655 906.657)	OM 646.985	80	06/2009 - 12/2018	3962/1	3963/1
HCV Sprinter II 4,6-t Van (B906) 413 CDI	OM646.DELA	95	06/2006 - 08/2013	3962/1	3963/1
HCV Sprinter II 4,6-t Van (B906) 413 CDI (906.653, 906655 906.657)	OM 651.955, OM 651.956	95	06/2006 - 05/2016	3962/1	3963/1
HCV Sprinter II 4,6-t Van (B906) 414 CDI	OM 651.955	105	05/2016 -	3962/1	3963/1
HCV Sprinter II 4,6-t Van (B906) 415 CDI (906.653, 906655 906.657)	OM 646.986, OM 646.989, OM 646.990	110	06/2009 - 12/2009	3962/1	3963/1

MAKE & MODEL   		KW	YEAR		
MERCEDES BENZ					
HCV Sprinter II 4,6-t Van (B906) 416 CDI (906.653, 906655 906.657)	OM 651.955, OM 651.957	120	03/2009 -	3962/1	3963/1
HCV Sprinter II 4,6-t Van (B906) 418 CDI (906.653, 906655 906.657)	OM 642.896, OM 642.986, OM 642.992	135	06/2009 - 05/2016	3962/1	3963/1
HCV Sprinter II 4,6-t Van (B906) 419 CDI (906.653, 906655 906.657)	OM 642.896, OM 642.992	140	03/2009 -	3962/1	3963/1
HCV Sprinter II 4,6-t Van (B906) 424 (906.655, 906657 906.653)	M 272.979	190	06/2006 - 12/2013	3962/1	3963/1
HCV Sprinter II 5-t Bus (B906) 513 CDI (906.653, 906655 906.657)	OM 651.955	95	06/2006 -	3962/1	3963/1
HCV Sprinter II 5-t Bus (B906) 516 CDI	OM 651.955	120	03/2009 -	3962/1	3963/1
HCV Sprinter II 5-t Bus (B906) 519 CDI / BlueTEC	OM 642.896	140	03/2009 -	3962/1	3963/1
HCV Sprinter II 5-t Platform/Chassis (B906) 509 CDI (906.153, 906155 906253 906.255)	OM 646.984	65	06/2006 - 12/2009	3962/1	3963/1
HCV Sprinter II 5-t Platform/Chassis (B906) 510 CDI (906.153, 906155 906253 906.255)	OM 651.955	70	03/2009 -	3962/1	3963/1
HCV Sprinter II 5-t Platform/Chassis (B906) 511 CDI (906.153, 906155 906253 906.255)	OM 646.985	80	06/2006 - 12/2009	3962/1	3963/1
HCV Sprinter II 5-t Platform/Chassis (B906) 511 CDI (906.153, 906155 906253 906.255)	OM 651.955	84	05/2016 -	3962/1	3963/1
HCV Sprinter II 5-t Platform/Chassis (B906) 511 CDI 4x4 (906.155, 906253 906.255)	OM 646.985	80	06/2006 - 12/2009	3962/1	3963/1
HCV Sprinter II 5-t Platform/Chassis (B906) 513 CDI (906.155, 906253 906.255)	OM 646.986	95	06/2006 - 05/2016	3962/1	3963/1
HCV Sprinter II 5-t Platform/Chassis (B906) 513 CDI (906.155, 906253 906.255)	OM 651.955, OM 651.957	95	06/2006 - 05/2016	3962/1	3963/1
HCV Sprinter II 5-t Platform/Chassis (B906) 513 CDI 4x4 (906.155, 906253 906.255)	OM 651.955, OM 651.957	95	05/2011 - 05/2016	3962/1	3963/1
HCV Sprinter II 5-t Platform/Chassis (B906) 514 CDI (906.153, 906155 906253 906.255)	OM 651.955	105	05/2016 -	3962/1	3963/1
HCV Sprinter II 5-t Platform/Chassis (B906) 514 CDI 4x4 (906.153, 906155 906253 906.255)	OM 651.955	105	05/2016 -	3962/1	3963/1
HCV Sprinter II 5-t Platform/Chassis (B906) 515 CDI (906.153, 906155 906253 906.255)	OM 646.986, OM 646.989, OM 646.990	110	06/2006 - 12/2009	3962/1	3963/1
HCV Sprinter II 5-t Platform/Chassis (B906) 515 CDI 4x4 (906.153, 906155 906253 906.255)	OM 646.986, OM 646.989, OM 646.990	110	06/2006 - 12/2009	3962/1	3963/1
HCV Sprinter II 5-t Platform/Chassis (B906) 516 (906.153, 906155 906253 906.255)	M 271.951	115	09/2008 -	3962/1	3963/1
HCV Sprinter II 5-t Platform/Chassis (B906) 516 CDI (906.153, 906155 906253 906.255)	OM 651.955, OM 651.957	120	03/2009 -	3962/1	3963/1
HCV Sprinter II 5-t Platform/Chassis (B906) 516 CDI 4x4 (906.153, 906155 906.255)	OM 651.955, OM 651.957	120	05/2011 -	3962/1	3963/1
HCV Sprinter II 5-t Platform/Chassis (B906) 516 NGT (906.153, 906155 906253 906.255)	M 271.951	115	09/2008 -	3962/1	3963/1
HCV Sprinter II 5-t Platform/Chassis (B906) 518 CDI (906.153, 906155 906253 906.255)	OM 642.896, OM 642.986, OM 642.992, OM 642.993	135	06/2006 - 12/2009	3962/1	3963/1
HCV Sprinter II 5-t Platform/Chassis (B906) 518 CDI 4x4 (906.153, 906155 906253 906.255)	OM 642.896, OM 642.986, OM 642.992, OM 642.993	135	06/2006 - 12/2009	3962/1	3963/1
HCV Sprinter II 5-t Platform/Chassis (B906) 519 CDI / BlueTEC (906.153, 906155 906253 906.	OM 642.896, OM 642.898, OM 642.986, OM 642.992	140	03/2009 -	3962/1	3963/1
HCV Sprinter II 5-t Platform/Chassis (B906) 519 CDI / BlueTEC 4x4 (906.153, 906155 906.253,.	OM 642.896, OM 642.898, OM 642.986, OM 642.992	140	03/2009 -	3962/1	3963/1
HCV Sprinter II 5-t Platform/Chassis (B906) 524 (906.153, 906155 906253 906.255)	M 272.979	190	06/2006 - 12/2013	3962/1	3963/1
HCV Sprinter II 5-t Van (B906) 509 CDI (906.653, 906655 906.657)	OM 646.984	65	06/2006 - 12/2009	3962/1	3963/1
HCV Sprinter II 5-t Van (B906) 510 CDI (906.653, 906655 906.657)	OM 651.955	70	03/2009 - 05/2016	3962/1	3963/1
HCV Sprinter II 5-t Van (B906) 511 CDI (906.653, 906655 906.657)	OM 646.985	80	06/2006 - 12/2009	3962/1	3963/1
HCV Sprinter II 5-t Van (B906) 511 CDI (906.653, 906655 906.657)	OM 651.955	84	05/2016 -	3962/1	3963/1
HCV Sprinter II 5-t Van (B906) 511 CDI 4x4 (906.653, 906655 906.657)	OM 646.985	80	06/2006 - 12/2009	3962/1	3963/1
HCV Sprinter II 5-t Van (B906) 513 CDI (906.653, 906655 906.657)	OM 646.986	95	06/2006 -	3962/1	3963/1
HCV Sprinter II 5-t Van (B906) 513 CDI (906.653, 906655 906.657)	OM 651.955, OM 651.957	95	06/2006 -	3962/1	3963/1
HCV Sprinter II 5-t Van (B906) 513 CDI 4x4 (906.653, 906655 906.657)	OM 651.955, OM 651.957	95	06/2006 -	3962/1	3963/1
HCV Sprinter II 5-t Van (B906) 514 CDI (906.653, 906655 906.657)	OM 651.955	105	05/2016 -	3962/1	3963/1
HCV Sprinter II 5-t Van (B906) 514 CDI 4x4 (906.653, 906655 906.657)	OM 651.955	105	05/2016 -	3962/1	3963/1
HCV Sprinter II 5-t Van (B906) 515 CDI (906.653, 906655 906.657)	OM 646.986, OM 646.989, OM 646.990	110	06/2006 - 12/2009	3962/1	3963/1
HCV Sprinter II 5-t Van (B906) 515 CDI 4x4 (906.653, 906655 906.657)	OM 646.986, OM 646.989, OM 646.990	110	06/2006 - 12/2009	3962/1	3963/1
HCV Sprinter II 5-t Van (B906) 516 CDI (906.653, 906655 906.657)	OM 651.955, OM 651.957	120	03/2009 -	3962/1	3963/1
HCV Sprinter II 5-t Van (B906) 516 CDI 4x4 (906.653, 906655 906.657)	OM 651.955, OM 651.957	120	06/2006 -	3962/1	3963/1
HCV Sprinter II 5-t Van (B906) 518 CDI (906.653, 906655 906.657)	OM 642.896, OM 642.986, OM 642.992, OM 642.993	135	06/2006 - 12/2009	3962/1	3963/1
HCV Sprinter II 5-t Van (B906) 518 CDI 4x4 (906.653, 906655 906.657)	OM 642.896, OM 642.986, OM 642.992, OM 642.993	135	06/2006 - 12/2009	3962/1	3963/1
HCV Sprinter II 5-t Van (B906) 519 CDI / BlueTEC (906.653, 906655 906.657)	OM 642.896, OM 642.898, OM 642.986, OM 642.992	140	03/2009 -	3962/1	3963/1
HCV Sprinter II 5-t Van (B906) 519 CDI / BlueTEC 4x4 (906.653, 906655 906.657)	OM 642.896, OM 642.898, OM 642.986, OM 642.992	140	03/2009 -	3962/1	3963/1
HCV Sprinter II 5-t Van (B906) 524 (906.653, 906655 906.657)	M 272.979	190	06/2006 - 12/2013	3962/1	3963/1
HCV Sprinter III 3,5-t Bus (B907) 311 CDI (907.731, 907.733)	OM 651.958	84	02/2018 -	3925/2	4355
HCV Sprinter III 3,5-t Bus (B907) 314 CDI (907.731, 907733 907.735)	OM 651.958	105	02/2018 -	3925/2	4355
HCV Sprinter III 3,5-t Bus (B907) 314 CDI Trazione integrale -907733	OM 651.958	105	01/2019 -	3925/2	4355
HCV Sprinter III 3,5-t Bus (B907) 316 CDI (907.731, 907733 907.735)	OM 651.958	120	02/2018 -	3925/2	4355
HCV Sprinter III 3,5-t Bus (B907) 316 CDI Trazione integrale -907733	OM 651.958	120	01/2019 -	3925/2	4355
HCV Sprinter III 3,5-t Bus (B907) 319 CDI (907.733, 907.735)	OM 642.899	140	02/2018 -	3925/2	4355
HCV Sprinter III 3,5-t Bus (B907) 319 CDI Trazione integrale -907733	OM 642.899	140	01/2019 -	3925/2	4355
HCV Sprinter III 3,5-t Platform/Chassis (B907, B910) 311 CDI (907.131, 907133 907135 907231 907.2	OM 651.958	84	02/2018 -	3925/2	4355
HCV Sprinter III 3,5-t Platform/Chassis (B907, B910) 311 CDI (910.131, 910.133)	OM 651.950, OM 651.958	84	02/2018 -	3925/2	4355
HCV Sprinter III 3,5-t Platform/Chassis (B907, B910) 311 CDI RWD (907.131, 907133 907135	OM 654.920	84	06/2020 -	3925/2	4355
HCV Sprinter III 3,5-t Platform/Chassis (B907, B910) 314 CDI (907.131, 907133 907135 907231 907.2	OM 651.958	105	02/2018 -	3925/2	4355
HCV Sprinter III 3,5-t Platform/Chassis (B907, B910) 314 CDI (910.131, 910.133)	OM 651.950, OM 651.958	105	02/2018 -	3925/2	4355
HCV Sprinter III 3,5-t Platform/Chassis (B907, B910) 314 CDI Trazione integrale (907.133, 907135 907.	OM 651.958	105	01/2019 -	3925/2	4355
HCV Sprinter III 3,5-t Platform/Chassis (B907, B910) 315 CDI RWD (907.131, 907133 907135	OM 654.920	110	06/2020 -	3925/2	4355
HCV Sprinter III 3,5-t Platform/Chassis (B907, B910) 316 CDI (907.131, 907133 907135 907231 907.2	OM 651.958	120	02/2018 -	3925/2	4355
HCV Sprinter III 3,5-t Platform/Chassis (B907, B910) 316 CDI Trazione integrale (907.133, 907135 907.	OM 651.958	120	01/2019 -	3925/2	4355
HCV Sprinter III 3,5-t Platform/Chassis (B907, B910) 317 CDI RWD (907.131, 907133 907135	OM 654.920	125	06/2020 -	3925/2	4355
HCV Sprinter III 3,5-t Platform/Chassis (B907, B910) 319 CDI (907.133, 907135 907233 907.235)	OM 642.899	140	02/2018 -	3925/2	4355
HCV Sprinter III 3,5-t Platform/Chassis (B907, B910) 319 CDI Trazione integrale (907.133, 907135 907.	OM 642.899	140	01/2019 -	3925/2	4355
HCV Sprinter III 3,5-t Van (B907, B910) 311 CDI (907.633, 907635 907631 907.637)	OM 651.958	84	02/2018 -	3925/2	4355
HCV Sprinter III 3,5-t Van (B907, B910) 311 CDI (910.631, 910.633)	OM 651.950, OM 651.958	84	02/2018 -	3925/2	4355
HCV Sprinter III 3,5-t Van (B907, B910) 311 CDI RWD (907.631, 907633 907635 907.637)	OM 654.920	84	06/2020 -	3925/2	4355

BESER

MAKE & MODEL   		KW	YEAR		
MERCEDES BENZ					
HCV Sprinter III 3,5-t Van (B907, B910) 314 CDI (907.631, 907633 907635 907.637)	OM 651.958	105	02/2018 -	3925/2	4355
HCV Sprinter III 3,5-t Van (B907, B910) 314 CDI (910.631, 910.633)	OM 651.950, OM 651.958	105	02/2018 -	3925/2	4355
HCV Sprinter III 3,5-t Van (B907, B910) 314 CDI 4WD (907.633, 907635 907.637)	OM 651.958	105	01/2019 -	3925/2	4355
HCV Sprinter III 3,5-t Van (B907, B910) 315 CDI RWD (907.631, 907633 907635 907.637)	OM 654.920	110	06/2020 -	3925/2	4355
HCV Sprinter III 3,5-t Van (B907, B910) 316 CDI (907.631, 907633 907635 907.637)	OM 651.958	120	02/2018 -	3925/2	4355
HCV Sprinter III 3,5-t Van (B907, B910) 316 CDI 4WD (907.633, 907635 907.637)	OM 651.958	120	01/2019 -	3925/2	4355
HCV Sprinter III 3,5-t Van (B907, B910) 317 CDI RWD (907.631, 907633 907635 907.637)	OM 654.920	125	06/2020 -	3925/2	4355
HCV Sprinter III 3,5-t Van (B907, B910) 319 CDI (907.633, 907635 907.637)	OM 642.899	140	02/2018 -	3925/2	4355
HCV Sprinter III 3,5-t Van (B907, B910) 319 CDI 4WD (907.633, 907635 907.637)	OM 642.899	140	01/2019 -	3925/2	4355
HCV Sprinter III 3-t Bus (B907) 211 CDI (907.721, 907.723)	-	84	02/2018 -	3925/2	4355
HCV Sprinter III 3-t Bus (B907) 214 CDi (907.721, 907.723)	-	105	02/2018 -	3925/2	4355
HCV Sprinter III 3-t Platform/Chassis (B910, B907) 211 CDI (907.123, 907221 907.223)	OM 651.958	84	02/2018 -	3925/2	4355
HCV Sprinter III 3-t Platform/Chassis (B910, B907) 211 CDI (910.121, 910.123)	OM 651.950	84	02/2018 -	3925/2	4355
HCV Sprinter III 3-t Platform/Chassis (B910, B907) 211 CDI RWD (907.221, 907.223)	OM 654.920	84	06/2020 -	3925/2	4355
HCV Sprinter III 3-t Platform/Chassis (B910, B907) 214 CDI (907.221, 907.223)	OM 651.958	105	02/2018 -	3925/2	4355
HCV Sprinter III 3-t Platform/Chassis (B910, B907) 214 CDI (910.121, 910.123)	OM 651.950, OM 651.958	105	02/2018 -	3925/2	4355
HCV Sprinter III 3-t Platform/Chassis (B910, B907) 215 CDI RWD (907.221, 907.223)	OM 654.920	110	06/2020 -	3925/2	4355
HCV Sprinter III 3-t Platform/Chassis (B910, B907) 216 CDI (907.221, 907.223)	OM 651.958	120	02/2018 -	3925/2	4355
HCV Sprinter III 3-t Platform/Chassis (B910, B907) 217 CDI RWD (907.221, 907.223)	OM 654.920	125	06/2020 -	3925/2	4355
HCV Sprinter III 3-t Van (B910) 211 CDI (910.621, 910.623)	OM 651.950, OM 651.958	84	02/2018 -	3925/2	4355
HCV Sprinter III 3-t Van (B910) 214 CDI (910.621, 910.623)	OM 651.950, OM 651.958	105	02/2018 -	3925/2	4355
HCV Sprinter III 4-t Platform/Chassis (B907, B910) 411 CDI (907.141, 907143 907145 907241 907.2	OM 651.958	84	02/2018 -	3962/1	4384
HCV Sprinter III 4-t Platform/Chassis (B907, B910) 414 CDI (907.143, 907145 907243 907.245)	OM 651.958	105	02/2018 -	3962/1	4384
HCV Sprinter III 4-t Platform/Chassis (B907, B910) 414 CDI (910.141, 910.143)	OM 651.950, OM 651.958	105	02/2018 -	3962/1	4384
HCV Sprinter III 4-t Platform/Chassis (B907, B910) 414 CDI Trazione integrale (907.143, 907145 907.	OM 651.958	105	01/2019 -	3962/1	4384
HCV Sprinter III 4-t Platform/Chassis (B907, B910) 416 CDI (907.143, 907145 907.243)	OM 651.958	120	02/2018 -	3962/1	4384
HCV Sprinter III 4-t Platform/Chassis (B907, B910) 416 CDI Trazione integrale (907.143, 907145 907.	OM 651.958	120	01/2019 -	3962/1	4384
HCV Sprinter III 4-t Platform/Chassis (B907, B910) 419 CDI (907.143, 907145 907243 907.245)	OM 642.899	140	02/2018 -	3962/1	4384
HCV Sprinter III 4-t Platform/Chassis (B907, B910) 419 CDI Trazione integrale (907.143, 907145 907.	OM 642.899	140	01/2019 -	3962/1	4384
HCV Sprinter III 4-t Van (B907, B910) 411 CDI (907.643, 907.645)	OM 651.958	84	02/2018 -	3962/1	4384
HCV Sprinter III 4-t Van (B907, B910) 411 CDI (910.641, 910.643)	OM 651.950, OM 651.958	84	02/2018 -	3962/1	4384
HCV Sprinter III 4-t Van (B907, B910) 414 CDI (907.643, 907645 907.647)	OM 651.958	105	02/2018 -	3962/1	4384
HCV Sprinter III 4-t Van (B907, B910) 414 CDI 4WD (907.643, 907645 907.647)	OM 651.958	105	01/2019 -	3962/1	4384
HCV Sprinter III 4-t Van (B907, B910) 414 CDI -910643	OM 651.958	105	02/2018 -	3962/1	4384
HCV Sprinter III 4-t Van (B907, B910) 416 CDI (907.643, 907645 907.647)	OM 651.958	120	02/2018 -	3962/1	4384
HCV Sprinter III 4-t Van (B907, B910) 416 CDI 4WD (907.643, 907645 907.647)	OM 651.958	120	01/2019 -	3962/1	4384
HCV Sprinter III 4-t Van (B907, B910) 417 CDI RWD (907.641, 907643 907645 907.647)	OM 654.920	125	06/2020 -	3962/1	4384
HCV Sprinter III 4-t Van (B907, B910) 419 CDI (907.643, 907645 907.647)	OM 642.899	140	02/2018 -	3962/1	4384
HCV Sprinter III 4-t Van (B907, B910) 419 CDI 4WD (907.643, 907645 907.647)	OM 642.899	140	01/2019 -	3962/1	4384
HCV Sprinter III 5-t Platform/Chassis (B907) 511 CDI (907.153, 907155 907253 907.255)	OM 651.958	84	02/2018 -	3962/1	4384
HCV Sprinter III 5-t Platform/Chassis (B907) 514 CDI (907.153, 907155 907253 907.255)	OM 651.958	105	02/2018 -	3962/1	4384
HCV Sprinter III 5-t Platform/Chassis (B907) 516 CDI (907.153, 907155 907253 907.255)	OM 651.958	120	02/2018 -	3962/1	4384
HCV Sprinter III 5-t Platform/Chassis (B907) 516 CDI Trazione integrale (907.153, 907155 907.	OM 651.958	120	01/2019 -	3962/1	4384
HCV Sprinter III 5-t Platform/Chassis (B907) 519 CDI (907.153, 907155 907253 907.255)	OM 642.899	140	02/2018 -	3962/1	4384
HCV Sprinter III 5-t Platform/Chassis (B907) 519 CDI Trazione integrale (907.153, 907155 907.	OM 642.899	140	01/2019 -	3962/1	4384
HCV Sprinter III 5-t Van (B907, B910) 511 CDI (907.653, 907655 907.657)	OM 651.958	84	02/2018 -	3962/1	4384
HCV Sprinter III 5-t Van (B907, B910) 514 CDI (907.653, 907655 907.657)	OM 651.958	105	02/2018 -	3962/1	4384
HCV Sprinter III 5-t Van (B907, B910) 516 CDI (907.653, 907655 907.657)	OM 651.958	120	02/2018 -	3962/1	4384
HCV Sprinter III 5-t Van (B907, B910) 516 CDI4WD (907.653, 907655 907.657)	OM 651.958	120	01/2019 -	3962/1	4384
HCV Sprinter III 5-t Van (B907, B910) 519 CDI (907.653, 907655 907.657)	OM 642.899	140	02/2018 -	3962/1	4384
HCV Sprinter III 5-t Van (B907, B910) 519 CDI 4WD (907.653, 907655 907.657)	OM 642.899	140	01/2019 -	3962/1	4384
LCV Metris Van (W447) 2.0	M 274.920	155	09/2015 -	3925/2	
LCV Vito II Bus (W639) 109 CDI (639.701, 639.703)	OM 646.980	70	09/2006 -	3923/1	
LCV Vito II Bus (W639) 109 CDI (639.701, 639.703)	OM 646.980	70	09/2006 -		3924/1
LCV Vito II Bus (W639) 109 CDI (639.701, 639.703)	OM 646.980	70	09/2006 -	3925/2	
LCV Vito II Bus (W639) 109 CDI (639.701, 639.703)	OM 646.980	70	09/2006 -	3923/1	3924/1
LCV Vito II Bus (W639) 109 CDI 4x4 -639701	OM 646.981	70	09/2007 -	3923/1	
LCV Vito II Bus (W639) 109 CDI 4x4 -639701	OM 646.981	70	09/2007 -		3924/1
LCV Vito II Bus (W639) 109 CDI 4x4 -639701	OM 646.981	70	09/2007 -	3925/2	
LCV Vito II Bus (W639) 109 CDI 4x4 -639701	OM 646.981	70	09/2007 -	3923/1	3924/1
LCV Vito II Bus (W639) 109 CDI -639701	OM 646.983	65	09/2003 -	3923/1	
LCV Vito II Bus (W639) 109 CDI -639701	OM 646.983	65	09/2003 -		3924/1
LCV Vito II Bus (W639) 109 CDI -639701	OM 646.983	65	09/2003 -	3925/2	
LCV Vito II Bus (W639) 109 CDI -639701	OM 646.983	65	09/2003 -	3923/1	3924/1
LCV Vito II Bus (W639) 110 CDI (639.701, 639703 639.705)	OM 651.940	70	09/2010 -	3925/2	3924/1
LCV Vito II Bus (W639) 111 CDI (639.701, 639703 639.705)	OM 646.980	85	09/2007 -	3923/1	
LCV Vito II Bus (W639) 111 CDI (639.701, 639703 639.705)	OM 646.980	85	09/2007 -		3924/1
LCV Vito II Bus (W639) 111 CDI (639.701, 639703 639.705)	OM 646.980	85	09/2007 -	3925/2	
LCV Vito II Bus (W639) 111 CDI (639.701, 639703 639.705)	OM 646.980	85	09/2007 -	3923/1	3924/1

MAKE & MODEL   		KW	YEAR		
MERCEDES BENZ					
LCV Vito II Bus (W639) 111 CDI (639.701, 639703 639.705)	OM 646.982	80	09/2003 -	3923/1	
LCV Vito II Bus (W639) 111 CDI (639.701, 639703 639.705)	OM 646.982	80	09/2003 -		3924/1
LCV Vito II Bus (W639) 111 CDI (639.701, 639703 639.705)	OM 646.982	80	09/2003 -	3925/2	
LCV Vito II Bus (W639) 111 CDI (639.701, 639703 639.705)	OM 646.982	80	09/2003 -	3923/1	3924/1
LCV Vito II Bus (W639) 111 CDI 4x4 (639.701, 639703 639.705)	OM 646.982	80	09/2007 -	3923/1	
LCV Vito II Bus (W639) 111 CDI 4x4 (639.701, 639703 639.705)	OM 646.982	80	09/2007 -		3924/1
LCV Vito II Bus (W639) 111 CDI 4x4 (639.701, 639703 639.705)	OM 646.982	80	09/2007 -	3925/2	
LCV Vito II Bus (W639) 111 CDI 4x4 (639.701, 639703 639.705)	OM 646.982	80	09/2007 -	3923/1	3924/1
LCV Vito II Bus (W639) 113 CDI (639.701, 639703 639.705)	OM 651.940	100	09/2010 -	3925/2	3924/1
LCV Vito II Bus (W639) 113 CDI 4x4 (639.701, 639703 639.705)	OM 651.940	100	09/2010 -	3925/2	3924/1
LCV Vito II Bus (W639) 115 CDI (639.701, 639703 639.705)	OM 646.980, OM 646.982	110	09/2003 -	3923/1	
LCV Vito II Bus (W639) 115 CDI (639.701, 639703 639.705)	OM 646.980, OM 646.982	110	09/2003 -		3924/1
LCV Vito II Bus (W639) 115 CDI (639.701, 639703 639.705)	OM 646.980, OM 646.982	110	09/2003 -	3925/2	
LCV Vito II Bus (W639) 115 CDI (639.701, 639703 639.705)	OM 646.980, OM 646.982	110	09/2003 -	3923/1	3924/1
LCV Vito II Bus (W639) 115 CDI 4x4 (639.701, 639.705)	OM 646.982	110	09/2007 -	3923/1	
LCV Vito II Bus (W639) 115 CDI 4x4 (639.701, 639.705)	OM 646.982	110	09/2007 -		3924/1
LCV Vito II Bus (W639) 115 CDI 4x4 (639.701, 639.705)	OM 646.982	110	09/2007 -	3925/2	
LCV Vito II Bus (W639) 115 CDI 4x4 (639.701, 639.705)	OM 646.982	110	09/2007 -	3923/1	3924/1
LCV Vito II Bus (W639) 116 CDI (639.701, 639703 639.705)	OM 651.940	120	09/2010 -	3925/2	3924/1
LCV Vito II Bus (W639) 116 CDI 4x4 (639.701, 639703 639.705)	OM 651.940	120	09/2010 -	3925/2	3924/1
LCV Vito II Bus (W639) 119 (639.701, 639703 639.705)	M 112.951	140	09/2003 -	3923/1	
LCV Vito II Bus (W639) 119 (639.701, 639703 639.705)	M 112.951	140	09/2003 -		3924/1
LCV Vito II Bus (W639) 119 (639.701, 639703 639.705)	M 112.951	140	09/2003 -	3925/2	
LCV Vito II Bus (W639) 119 (639.701, 639703 639.705)	M 112.951	140	09/2003 -	3923/1	3924/1
LCV Vito II Bus (W639) 120 CDI (639.701, 639703 639.705)	OM 642.990	150	07/2006 -	3923/1	
LCV Vito II Bus (W639) 120 CDI (639.701, 639703 639.705)	OM 642.990	150	07/2006 -		3924/1
LCV Vito II Bus (W639) 120 CDI (639.701, 639703 639.705)	OM 642.990	150	07/2006 -	3925/2	
LCV Vito II Bus (W639) 120 CDI (639.701, 639703 639.705)	OM 642.990	150	07/2006 -	3923/1	3924/1
LCV Vito II Bus (W639) 122 (639.701, 639703 639.705)	M 112.951	160	09/2003 -	3923/1	
LCV Vito II Bus (W639) 122 (639.701, 639703 639.705)	M 112.951	160	09/2003 -		3924/1
LCV Vito II Bus (W639) 122 (639.701, 639703 639.705)	M 112.951	160	09/2003 -	3925/2	
LCV Vito II Bus (W639) 122 (639.701, 639703 639.705)	M 112.951	160	09/2003 -	3923/1	3924/1
LCV Vito II Bus (W639) 122 CDI (639.701, 639703 639.705)	OM 642.890	165	09/2010 -	3925/2	3924/1
LCV Vito II Bus (W639) 123 (639.701, 639703 639.705)	M 112.976	165	06/2004 - 07/2008	3923/1	3924/1
LCV Vito II Bus (W639) 123 -639701	M 112.976	170	06/2004 -	3923/1	3924/1
LCV Vito II Bus (W639) 126 (639.701, 639703 639.705)	M 272.978	190	09/2007 -	3923/1	
LCV Vito II Bus (W639) 126 (639.701, 639703 639.705)	M 272.978	190	09/2007 -		3924/1
LCV Vito II Bus (W639) 126 (639.701, 639703 639.705)	M 272.978	190	09/2007 -	3925/2	
LCV Vito II Bus (W639) 126 (639.701, 639703 639.705)	M 272.978	190	09/2007 -	3923/1	3924/1
LCV Vito II Mixto, Van (W639) 109 CDI (639.601, 639603 639.605)	OM 646.980, OM 646.981	70	08/2006 -	3923/1	
LCV Vito II Mixto, Van (W639) 109 CDI (639.601, 639603 639.605)	OM 646.980, OM 646.981	70	08/2006 -		3924/1
LCV Vito II Mixto, Van (W639) 109 CDI (639.601, 639603 639.605)	OM 646.980, OM 646.981	70	08/2006 -	3925/2	
LCV Vito II Mixto, Van (W639) 109 CDI (639.601, 639603 639.605)	OM 646.980, OM 646.981	70	08/2006 -	3923/1	3924/1
LCV Vito II Mixto, Van (W639) 109 CDI (639.601, 639603 639.605)	OM 646.983	65	09/2003 -	3923/1	
LCV Vito II Mixto, Van (W639) 109 CDI (639.601, 639603 639.605)	OM 646.983	65	09/2003 -		3924/1
LCV Vito II Mixto, Van (W639) 109 CDI (639.601, 639603 639.605)	OM 646.983	65	09/2003 -	3925/2	
LCV Vito II Mixto, Van (W639) 109 CDI (639.601, 639603 639.605)	OM 646.983	65	09/2003 -	3923/1	3924/1
LCV Vito II Mixto, Van (W639) 110 CDI (639.601, 639603 639.605)	OM 651.940	70	09/2010 -	3925/2	3924/1
LCV Vito II Mixto, Van (W639) 111 CDI (639.601, 639.603)	OM 646.980, OM 646.982	85	09/2007 -	3923/1	
LCV Vito II Mixto, Van (W639) 111 CDI (639.601, 639.603)	OM 646.980, OM 646.982	85	09/2007 -		3924/1
LCV Vito II Mixto, Van (W639) 111 CDI (639.601, 639.603)	OM 646.980, OM 646.982	85	09/2007 -	3925/2	
LCV Vito II Mixto, Van (W639) 111 CDI (639.601, 639.603)	OM 646.980, OM 646.982	85	09/2007 -	3923/1	3924/1
LCV Vito II Mixto, Van (W639) 111 CDI (639.601, 639603 639.605)	OM 646.982	80	09/2003 -	3923/1	
LCV Vito II Mixto, Van (W639) 111 CDI (639.601, 639603 639.605)	OM 646.982	80	09/2003 -		3924/1
LCV Vito II Mixto, Van (W639) 111 CDI (639.601, 639603 639.605)	OM 646.982	80	09/2003 -	3925/2	
LCV Vito II Mixto, Van (W639) 111 CDI (639.601, 639603 639.605)	OM 646.982	80	09/2003 -	3923/1	3924/1
LCV Vito II Mixto, Van (W639) 111 CDI 4x4 (639.601, 639603 639.605)	OM 646.982	80	09/2007 -	3923/1	
LCV Vito II Mixto, Van (W639) 111 CDI 4x4 (639.601, 639603 639.605)	OM 646.982	80	09/2007 -		3924/1
LCV Vito II Mixto, Van (W639) 111 CDI 4x4 (639.601, 639603 639.605)	OM 646.982	80	09/2007 -	3925/2	
LCV Vito II Mixto, Van (W639) 111 CDI 4x4 (639.601, 639603 639.605)	OM 646.982	80	09/2007 -	3923/1	3924/1
LCV Vito II Mixto, Van (W639) 113 CDI (639.601, 639603 639.605)	OM 651.940	100	09/2010 -	3925/2	3924/1
LCV Vito II Mixto, Van (W639) 113 CDI 4x4 (639.601, 639603 639.605)	OM 651.940	100	09/2010 -	3925/2	3924/1
LCV Vito II Mixto, Van (W639) 115 CDI (639.601, 639603 639.605)	OM 646.980, OM 646.982	110	09/2003 -	3923/1	
LCV Vito II Mixto, Van (W639) 115 CDI (639.601, 639603 639.605)	OM 646.980, OM 646.982	110	09/2003 -		3924/1
LCV Vito II Mixto, Van (W639) 115 CDI (639.601, 639603 639.605)	OM 646.980, OM 646.982	110	09/2003 -	3925/2	
LCV Vito II Mixto, Van (W639) 115 CDI (639.601, 639603 639.605)	OM 646.980, OM 646.982	110	09/2003 -	3923/1	3924/1
LCV Vito II Mixto, Van (W639) 115 CDI 4x4 (639.601, 639603 639.605)	OM 646.982	110	07/2006 -	3923/1	
LCV Vito II Mixto, Van (W639) 115 CDI 4x4 (639.601, 639603 639.605)	OM 646.982	110	07/2006 -		3924/1

MAKE & MODEL   		KW	YEAR		
MERCEDES BENZ					
LCV Vito II Mixto, Van (W639) 115 CDI 4x4 (639.601, 639603 639.605)	OM 646.982	110	07/2006 -	3925/2	
LCV Vito II Mixto, Van (W639) 115 CDI 4x4 (639.601, 639603 639.605)	OM 646.982	110	07/2006 -	3923/1	3924/1
LCV Vito II Mixto, Van (W639) 116 CDI (639.601, 639603 639.605)	OM 651.940	120	09/2010 -	3925/2	3924/1
LCV Vito II Mixto, Van (W639) 116 CDI 4x4 (639.601, 639603 639.605)	OM 651.940	120	09/2010 -	3925/2	3924/1
LCV Vito II Mixto, Van (W639) 119 (639.601, 639603 639.605)	M 112.951	140	09/2003 -	3923/1	
LCV Vito II Mixto, Van (W639) 119 (639.601, 639603 639.605)	M 112.951	140	09/2003 -		3924/1
LCV Vito II Mixto, Van (W639) 119 (639.601, 639603 639.605)	M 112.951	140	09/2003 -	3925/2	
LCV Vito II Mixto, Van (W639) 119 (639.601, 639603 639.605)	M 112.951	140	09/2003 -	3923/1	3924/1
LCV Vito II Mixto, Van (W639) 120 CDI (639.601, 639603 639.605)	OM 642.990	150	07/2006 -	3923/1	
LCV Vito II Mixto, Van (W639) 120 CDI (639.601, 639603 639.605)	OM 642.990	150	07/2006 -		3924/1
LCV Vito II Mixto, Van (W639) 120 CDI (639.601, 639603 639.605)	OM 642.990	150	07/2006 -	3925/2	
LCV Vito II Mixto, Van (W639) 120 CDI (639.601, 639603 639.605)	OM 642.990	150	07/2006 -	3923/1	3924/1
LCV Vito II Mixto, Van (W639) 122 (639.601, 639603 639.605)	M 112.951	160	09/2003 -	3923/1	
LCV Vito II Mixto, Van (W639) 122 (639.601, 639603 639.605)	M 112.951	160	09/2003 -		3924/1
LCV Vito II Mixto, Van (W639) 122 (639.601, 639603 639.605)	M 112.951	160	09/2003 -	3925/2	
LCV Vito II Mixto, Van (W639) 122 (639.601, 639603 639.605)	M 112.951	160	09/2003 -	3923/1	3924/1
LCV Vito II Mixto, Van (W639) 122 CDI (639.601, 639603 639.605)	OM 642.890	165	09/2010 -	3925/2	3924/1
LCV Vito II Mixto, Van (W639) 123 (639.601, 639603 639.605)	M 112.976	165	06/2004 - 07/2008	3923/1	3924/1
LCV Vito II Mixto, Van (W639) 123 -639601	M 112.976	170	06/2004 - 07/2008	3923/1	3924/1
LCV Vito II Mixto, Van (W639) 126 (639.601, 639603 639.605)	M 272.978	190	09/2007 -	3923/1	
LCV Vito II Mixto, Van (W639) 126 (639.601, 639603 639.605)	M 272.978	190	09/2007 -		3924/1
LCV Vito II Mixto, Van (W639) 126 (639.601, 639603 639.605)	M 272.978	190	09/2007 -	3925/2	
LCV Vito II Mixto, Van (W639) 126 (639.601, 639603 639.605)	M 272.978	190	09/2007 -	3923/1	3924/1
LCV Vito III Mixto (W447) 109 CDI (447.701, 447703 447.705)	OM 622.951	65	10/2014 -	3925/2	
LCV Vito III Mixto (W447) 111 CDI (447.701, 447703 447.705)	OM 622.951	84	10/2014 -	3925/2	
LCV Vito III Tourer (W447) 109 CDI / 109 BlueTEC (447.701, 447703 447.705)	OM 622.951	65	10/2014 -	3925/2	
LCV Vito III Tourer (W447) 111 CDI / 111 BlueTEC (447.701, 447703 447.705)	OM 622.951	84	10/2014 -	3925/2	
LCV Vito III Tourer (W447) 119 Flex -447703	M 274.920	135	11/2015 -	3925/2	
LCV Vito III Tourer (W447) 2.0	M 274.920	155	01/2016 -	3925/2	
LCV Vito III Van (W447) 109 CDI (447.601, 447603 447.605)	OM 622.951	65	10/2014 -	3925/2	
LCV Vito III Van (W447) 111 CDI (447.601, 447603 447.605)	OM 622.951	84	10/2014 -	3925/2	
SL (R231) 350 -231457	M 276.954	225	02/2012 -		4335
SL (R231) 400 -231465	M 276.825	245	04/2014 -		4335
SL (R231) 400 -231466	M 276.825	270	01/2016 -		4335
SL (R231) 500 -231473	M 278.927	320	01/2012 -		4335
SL (R231) 500 -231473	M 278.927	335	04/2015 -		4335
Viano (W639) 3 (639.711, 639.811)	M 112.951	140	09/2003 -	3923/1	
Viano (W639) 3 (639.711, 639.811)	M 112.951	140	09/2003 -		3924/1
Viano (W639) 3 (639.711, 639.811)	M 112.951	140	09/2003 -	3925/2	
Viano (W639) 3 (639.711, 639.811)	M 112.951	140	09/2003 -	3923/1	3924/1
Viano (W639) 44230 (639.713, 639813 639.815)	M 112.951	160	09/2003 -	3923/1	
Viano (W639) 44230 (639.713, 639813 639.815)	M 112.951	160	09/2003 -		3924/1
Viano (W639) 44230 (639.713, 639813 639.815)	M 112.951	160	09/2003 -	3925/2	
Viano (W639) 44230 (639.713, 639813 639.815)	M 112.951	160	09/2003 -	3923/1	3924/1
Viano (W639) 44319 (639.811, 639813 639.815)	M 272.978	190	09/2007 -	3923/1	
Viano (W639) 44319 (639.811, 639813 639.815)	M 272.978	190	09/2007 -		3924/1
Viano (W639) 44319 (639.811, 639813 639.815)	M 272.978	190	09/2007 -	3925/2	
Viano (W639) 44319 (639.811, 639813 639.815)	M 272.978	190	09/2007 -	3923/1	3924/1
Viano (W639) 44380 (639.811, 639813 639.815)	M 112.976	165	06/2004 - 07/2007	3923/1	3924/1
Viano (W639) 44380 -639815	M 112.976	170	06/2004 -	3923/1	3924/1
Viano (W639) CDI 2.0 (639.711, 639713 639811 639813 639.8	OM 646.982	80	09/2003 -	3923/1	
Viano (W639) CDI 2.0 (639.711, 639713 639811 639813 639.8	OM 646.982	80	09/2003 -		3924/1
Viano (W639) CDI 2.0 (639.711, 639713 639811 639813 639.8	OM 646.982	80	09/2003 -	3925/2	
Viano (W639) CDI 2.0 (639.711, 639713 639811 639813 639.8	OM 646.982	80	09/2003 -	3923/1	3924/1
Viano (W639) CDI 2.0 (639.711, 639713 639811 639813 639.8	OM 646.982	85	08/2005 -	3923/1	
Viano (W639) CDI 2.0 (639.711, 639713 639811 639813 639.8	OM 646.982	85	08/2005 -		3924/1
Viano (W639) CDI 2.0 (639.711, 639713 639811 639813 639.8	OM 646.982	85	08/2005 -	3925/2	
Viano (W639) CDI 2.0 (639.711, 639713 639811 639813 639.8	OM 646.982	85	08/2005 -	3923/1	3924/1
Viano (W639) CDI 2.0 (639.811, 639813 639.815)	OM 651.940	100	07/2010 -	3925/2	3924/1
Viano (W639) CDI 2.0 4-matic (639.711, 639713 639811 639.81	OM 646.982	85	03/2006 -	3923/1	
Viano (W639) CDI 2.0 4-matic (639.711, 639713 639811 639.81	OM 646.982	85	03/2006 -		3924/1
Viano (W639) CDI 2.0 4-matic (639.711, 639713 639811 639.81	OM 646.982	85	03/2006 -	3925/2	
Viano (W639) CDI 2.0 4-matic (639.711, 639713 639811 639.81	OM 646.982	85	03/2006 -	3923/1	3924/1
Viano (W639) CDI 2.0 4-matic (639.811, 639813 639.815)	OM 651.940	100	07/2010 -	3925/2	3924/1
Viano (W639) CDI 2.0 4-matic -639713	OM 646.982	80	07/2005 -	3923/1	
Viano (W639) CDI 2.0 4-matic -639713	OM 646.982	80	07/2005 -		3924/1
Viano (W639) CDI 2.0 4-matic -639713	OM 646.982	80	07/2005 -	3925/2	
Viano (W639) CDI 2.0 4-matic -639713	OM 646.982	80	07/2005 -	3923/1	3924/1

MAKE & MODEL		KW	YEAR		
MERCEDES BENZ					
Viano (W639) CDI 3.0 (639.811, 639813 639.815)	OM 642.890	165	07/2010 -	3925/2	3924/1
Viano (W639) CDI 3.0 (639.811, 639813 639.815)	OM 642.990	150	03/2006 -	3923/1	
Viano (W639) CDI 3.0 (639.811, 639813 639.815)	OM 642.990	150	03/2006 -		3924/1
Viano (W639) CDI 3.0 (639.811, 639813 639.815)	OM 642.990	150	03/2006 -	3925/2	
Viano (W639) CDI 3.0 (639.811, 639813 639.815)	OM 642.990	150	03/2006 -	3923/1	3924/1
Viano (W639) CDI 44229 (639.711, 639713 639811 639813 639.8	OM 646.980, OM 646.982	110	09/2003 -	3923/1	
Viano (W639) CDI 44229 (639.711, 639713 639811 639813 639.8	OM 646.980, OM 646.982	110	09/2003 -		3924/1
Viano (W639) CDI 44229 (639.711, 639713 639811 639813 639.8	OM 646.980, OM 646.982	110	09/2003 -	3925/2	
Viano (W639) CDI 44229 (639.711, 639713 639811 639813 639.8	OM 646.980, OM 646.982	110	09/2003 -	3923/1	3924/1
Viano (W639) CDI 44229 (639.811, 639813 639.815)	OM 651.940	120	07/2010 -	3925/2	3924/1
Viano (W639) CDI 44229 4-matic (639.711, 639713 639811 639.81	OM 646.982	110	07/2005 -	3923/1	
Viano (W639) CDI 44229 4-matic (639.711, 639713 639811 639.81	OM 646.982	110	07/2005 -		3924/1
Viano (W639) CDI 44229 4-matic (639.711, 639713 639811 639.81	OM 646.982	110	07/2005 -	3925/2	
Viano (W639) CDI 44229 4-matic (639.711, 639713 639811 639.81	OM 646.982	110	07/2005 -	3923/1	3924/1
Viano (W639) CDI 44229 4-matic (639.811, 639813 639.815)	OM 651.940	120	07/2010 -	3925/2	3924/1
/8 (W114)	250	96	07/68 – 08/72	3315	
/8 (W114)	250	96	07/68 – 08/72	3515	
/8 (W114)	230.6 (114.015)	88	01/68 – 11/76	3315	
/8 (W114)	230.6 (114.015)	88	01/68 – 11/76	3515	
/8 (W114)	250 (114.010)	85	01/68 – 08/72	3315	
/8 (W114)	250 (114.010)	85	01/68 – 08/72	3515	
/8 (W114)	250 2.8 (114.011)	96	06/72 – 11/76	3315	
/8 (W114)	250 2.8 (114.011)	96	06/72 – 11/76	3515	
/8 (W114)	280 (114.060)	118	06/72 – 11/76	3315	
/8 (W114)	280 (114.060)	118	06/72 – 11/76	3515	
/8 (W114)	280 E (114.062)	136	06/72 – 11/76	3315	
/8 (W114)	280 E (114.062)	136	06/72 – 11/76	3515	
/8 (W115)	200	70	01/68 – 01/77	3320	
/8 (W115)	200	70	01/68 – 01/77	3350	
/8 (W115)	200 (115.015)	63	01/68 – 01/77	3320	
/8 (W115)	200 (115.015)	63	01/68 – 01/77	3350	
/8 (W115)	200 D (115.115)	40	01/68 – 01/77	3320	
/8 (W115)	200 D (115.115)	40	01/68 – 01/77	3350	
/8 (W115)	220 (115.010)	66	01/68 – 07/73	3320	
/8 (W115)	220 (115.010)	66	01/68 – 07/73	3350	
/8 (W115)	220 (115.010)	77	01/68 – 07/73	3320	
/8 (W115)	220 (115.010)	77	01/68 – 07/73	3350	
/8 (W115)	220 D (115.110)	44	01/68 – 01/77	3320	
/8 (W115)	220 D (115.110)	44	01/68 – 01/77	3350	
/8 (W115)	230.4 (115.017)	81	08/73 – 12/76	3320	
/8 (W115)	230.4 (115.017)	81	08/73 – 12/76	3350	
/8 (W115)	240 D (115.117)	48	08/73 – 01/77	3320	
/8 (W115)	240 D (115.117)	48	08/73 – 01/77	3350	
/8 (W115)	240 D 3.0 (115.114)	59	08/74 – 11/76	3515	
/8 Coupe (W114)	250 C (114.021)	96	04/69 – 06/72	3515	
/8 Coupe (W114)	250 C 2.8 (114.023)	96	06/72 – 11/76	3315	
/8 Coupe (W114)	250 C 2.8 (114.023)	96	06/72 – 11/76	3515	
/8 Coupe (W114)	250 CE (114.022)	110	04/69 – 04/72	3315	
/8 Coupe (W114)	250 CE (114.022)	110	04/69 – 04/72	3515	
/8 Coupe (W114)	280 C (114.073)	118	06/72 – 02/77	3315	
/8 Coupe (W114)	280 C (114.073)	118	06/72 – 02/77	3515	
/8 Coupe (W114)	280 CE (114.072)	136	06/72 – 01/77	3315	
/8 Coupe (W114)	280 CE (114.072)	136	06/72 – 01/77	3515	
100 Box (631)	2.0 D	44	04/88 – 08/93	3689	
100 Box (631)	2.0 D	45	09/93 – 04/96	3689	
100 Bus (631)	D (631.332, 631.342)	53	02/88 – 05/92	3689	
100 Bus (631)	D (631.332, 631.342)	55	12/90 – 02/96	3689	
100 Bus (631)	D (631.333, 631.343, 631.334,631.344)	53	02/88 – 05/92	3689	
100 Bus (631)	D (631.333, 631.343, 631.334,631.344)	55	12/90 – 02/96	3689	
100 Platform/Chassis (631)	D (631.340)	53	02/88 – 05/92	3689	
100 Platform/Chassis (631)	D (631.340)	55	12/90 – 02/96	3689	
190 (W201)	2.0 (201.022)	66	10/82 – 10/84		3611
190 (W201)	2.0 (201.023)	75	01/86 – 05/90		3611
190 (W201)	2.0 (201.023)	75	01/86 – 05/90		3630
190 (W201)	2.0 (201.023)	77	09/84 – 05/90		3611
190 (W201)	2.0 (201.023)	77	09/84 – 05/90		3630
190 (W201)	2.3	97	09/87 – 09/88		3611
190 (W201)	2.3 E	100	10/82 – 09/88		3611
190 (W201)	2.6	118	10/82 – 09/88		3611
190 (W201)	D 2.0 (201.122)	53	08/83 – 08/89		3611
190 (W201)	D 2.0 (201.122)	55	08/89 – 08/93		3611
190 (W201)	D 2.0 (201.122)	55	08/89 – 08/93		3630
190 (W201)	D 2.5 (201.126)	66	04/85 – 08/93		3611
190 (W201)	D 2.5 (201.126)	66	04/85 – 08/93		3630
190 (W201)	D 2.5 (201.126)	69	08/89 – 08/93		3611
190 (W201)	D 2.5 (201.126)	69	08/89 – 08/93		3630

MAKE & MODEL   		KW	YEAR		
MERCEDES BENZ					
190 (W201)	E 1.8 (201.018)	80	04/90 – 08/93		3611
190 (W201)	E 1.8 (201.018)	80	04/90 – 08/93		3630
190 (W201)	E 2.0	87	01/85 – 08/93		3611
190 (W201)	E 2.0	87	01/85 – 08/93		3630
190 (W201)	E 2.0	93	10/82 – 06/93		3611
190 (W201)	E 2.0	93	10/82 – 06/93		3630
190 (W201)	E 2.0 (201.024)	83	02/85 – 12/86		3611
190 (W201)	E 2.0 (201.024)	85	02/85 – 12/86		3611
190 (W201)	E 2.0 (201.024)	90	10/82 – 06/93		3611
190 (W201)	E 2.0 (201.024)	90	10/82 – 06/93		3630
190 (W201)	E 2.3	97	09/86 – 08/91		3611
190 (W201)	E 2.3	97	09/86 – 08/91		3630
190 (W201)	E 2.3 (201.028)	100	10/86 – 08/93		3611
190 (W201)	E 2.3 (201.028)	100	10/86 – 08/93		3630
190 (W201)	E 2.3-16	125	09/85 – 12/87	3408	3550
190 (W201)	E 2.3-16	130	09/85 – 08/88	3408	3550
190 (W201)	E 2.3-16 (201.034)	136	04/84 – 01/87	3408	3550
190 (W201)	E 2.5-16	143	03/89 – 08/93	3408	3550
190 (W201)	E 2.5-16	150	09/88 – 08/93	3408	3550
190 (W201)	E 2.6	122	09/86 – 12/89		3611
190 (W201)	E 2.6 (201.029)	118	09/86 – 08/93		3611
190 (W201)	E 2.6 (201.029)	118	09/86 – 08/93		3630
190 (W201)	E Evolution II 2.5	173	05/90 – 08/93	3629	
190 (W201)	Turbo-D 2.5 (201.128)	90	02/88 – 08/93		3611
190 (W201)	Turbo-D 2.5 (201.128)	93	02/88 – 08/93		3630
A-CLASS (W168)	A 140 (168.031, 168.131)	60	07/97 – 08/04	4125	
A-CLASS (W168)	A 160 (168.033, 168.133)	75	07/97 – 08/04	4125	
A-CLASS (W168)	A 160 CDI (168.006)	55	02/01 – 08/04	4125	
A-CLASS (W168)	A 160 CDI (168.007)	44	07/98 – 02/01	4125	
A-CLASS (W168)	A 170 CDI (168.008)	66	07/98 – 02/01	4125	
A-CLASS (W168)	A 170 CDI (168.009, 168.109)	70	02/01 – 08/04	4125	
A-CLASS (W168)	A 190 (168.032, 168.132)	92	03/99 – 08/04	4125	
A-CLASS (W168)	A 210 (168.035, 168.135)	103	03/02 – 08/04	4125	
C 32 AMG Kompressor	(203.065)	260	02/01 – 02/07		3581
CABRIOLET (A124)	300 CE-24 (124.061)	162	04/92 – 06/93	3629	
CABRIOLET (A124)	300 CE-24 (124.061)	170	04/92 – 06/93	3629	
C-CLASS (W202)	C 180 (202.018)	89	11/94 – 05/00	3658	3550
C-CLASS (W202)	C 180 (202.018)	89	11/94 – 05/00		3663
C-CLASS (W202)	C 180 (202.018)	90	03/93 – 05/00	3658	3550
C-CLASS (W202)	C 180 (202.018)	90	03/93 – 05/00		3663
C-CLASS (W202)	C 200 (202.020)	100	01/94 – 05/00	3658	3550
C-CLASS (W202)	C 200 (202.020)	100	01/94 – 05/00		3663
C-CLASS (W202)	C 200 CDI (202.134)	75	03/98 – 05/00	3658	3663
C-CLASS (W202)	C 200 D (202.120)	55	03/93 – 05/00	3658	3550
C-CLASS (W202)	C 200 D (202.120)	55	03/93 – 05/00		3663
C-CLASS (W202)	C 200 D (202.122)	65	10/96 – 05/00	3658	3550
C-CLASS (W202)	C 200 D (202.122)	65	10/96 – 05/00		3663
C-CLASS (W202)	C 200 Kompressor (202.025)	132	10/95 – 05/00	3677	3676
C-CLASS (W202)	C 200 Kompressor (202.025)	141	11/96 – 05/00	3677	3676
C-CLASS (W202)	C 220 (202.022)	110	03/93 – 05/00	3658	3550
C-CLASS (W202)	C 220 (202.022)	110	03/93 – 05/00		3663
C-CLASS (W202)	C 220 CDI (202.133)	92	09/97 – 05/00	3658	3663
C-CLASS (W202)	C 220 D (202.021)	55	07/96 – 05/00	3658	3550
C-CLASS (W202)	C 220 D (202.021)	55	07/96 – 05/00		3663
C-CLASS (W202)	C 220 D (202.121)	70	08/93 – 05/00	3658	3550
C-CLASS (W202)	C 220 D (202.121)	70	08/93 – 05/00		3663
C-CLASS (W202)	C 230 (202.023)	110	06/96 – 06/97	3658	3550
C-CLASS (W202)	C 230 (202.023)	110	06/96 – 06/97		3663
C-CLASS (W202)	C 230 Kompressor (202.024)	142	10/95 – 05/00	3677	3676
C-CLASS (W202)	C 240 (202.026)	125	06/97 – 05/00	3677	3676
C-CLASS (W202)	C 250 D (202.125)	83	05/93 – 05/00	3658	3550
C-CLASS (W202)	C 250 D (202.125)	83	05/93 – 05/00		3663
C-CLASS (W202)	C 250 Turbo-D (202.128)	110	10/95 – 05/00	3677	3676
C-CLASS (W202)	C 280 (202.028)	142	05/93 – 05/00	3677	3550
C-CLASS (W202)	C 280 (202.028)	142	05/93 – 05/00	3658	3630
C-CLASS (W202)	C 280 (202.029)	145	06/97 – 05/00	3677	3676
C-CLASS (W202)	C 36 AMG (202.028)	206	05/94 – 05/00	3629	3581
C-CLASS (W202)	C 43 AMG (202.033)	225	08/97 – 05/00		3581
C-CLASS (W203)	C 180 (203.035)	95	10/00 – 05/02	3836	
C-CLASS (W203)	C 180 Kompressor (203.046)	105	05/02 – 02/07	3821	
C-CLASS (W203)	C 180 Kompressor (203.046)	105	05/02 – 02/07	3836	
C-CLASS (W203)	C 180 Kompressor (203.046)	105	05/02 – 02/07	4102	
C-CLASS (W203)	C 200 CDI (203.004)	75	02/01 – 02/07	3821	
C-CLASS (W203)	C 200 CDI (203.004)	75	02/01 – 02/07	3836	
C-CLASS (W203)	C 200 CDI (203.004)	75	02/01 – 02/07	4102	
C-CLASS (W203)	C 200 CDI (203.004)	85	09/00 – 02/07	3821	

MAKE & MODEL		KW	YEAR		
MERCEDES BENZ					
C-CLASS (W203)	C 200 CDI (203.004)	85	09/00 – 02/07	3836	
C-CLASS (W203)	C 200 CDI (203.004)	85	09/00 – 02/07	4102	
C-CLASS (W203)	C 200 CDI (203.007)	90	04/03 – 02/07	3821	
C-CLASS (W203)	C 200 CDI (203.007)	90	04/03 – 02/07	4102	
C-CLASS (W203)	C 200 CDI (203.007)	90	04/03 – 02/07	3836	
C-CLASS (W203)	C 200 CGI Kompressor (203.043)	125	07/03 – 02/07	3836	
C-CLASS (W203)	C 200 CGI Kompressor (203.043)	125	07/03 – 02/07	3821	
C-CLASS (W203)	C 200 CGI Kompressor (203.043)	125	07/03 – 02/07	4102	
C-CLASS (W203)	C 200 Kompressor (203.042)	120	05/02 – 02/07	3821	
C-CLASS (W203)	C 200 Kompressor (203.042)	120	05/02 – 02/07	3836	
C-CLASS (W203)	C 200 Kompressor (203.042)	120	05/02 – 02/07	4102	
C-CLASS (W203)	C 200 Kompressor (203.045)	120	05/00 – 06/02	3836	
C-CLASS (W203)	C 220 CDI (203.006)	100	05/00 – 02/07	3821	
C-CLASS (W203)	C 220 CDI (203.006)	100	05/00 – 02/07	3836	
C-CLASS (W203)	C 220 CDI (203.006)	100	05/00 – 02/07	4102	
C-CLASS (W203)	C 220 CDI (203.006)	105	05/00 – 02/07	3821	
C-CLASS (W203)	C 220 CDI (203.006)	105	05/00 – 02/07	3836	
C-CLASS (W203)	C 220 CDI (203.006)	105	05/00 – 02/07	4102	
C-CLASS (W203)	C 220 CDI (203.008)	110	02/03 – 02/07	3821	
C-CLASS (W203)	C 220 CDI (203.008)	110	02/03 – 02/07	3836	
C-CLASS (W203)	C 220 CDI (203.008)	110	02/03 – 02/07	4102	
C-CLASS (W203)	C 230 (203.052)	150	01/05 – 02/07	3821	
C-CLASS (W203)	C 230 (203.052)	150	01/05 – 02/07	3836	
C-CLASS (W203)	C 230 Kompressor (203.040)	141	02/04 – 02/07	3821	
C-CLASS (W203)	C 230 Kompressor (203.040)	141	02/04 – 02/07	3836	
C-CLASS (W203)	C 230 Kompressor (203.040)	141	02/04 – 02/07	4102	
C-CLASS (W203)	C 240 (203.061)	125	05/00 – 02/07	3821	
C-CLASS (W203)	C 240 (203.061)	125	05/00 – 02/07	3836	
C-CLASS (W203)	C 240 (203.061)	125	05/00 – 02/07	4102	
C-CLASS (W203)	C 240 4-matic (203.081)	125	07/02 – 02/07	3821	
C-CLASS (W203)	C 270 CDI (203.016)	125	12/00 – 02/07	3821	
C-CLASS (W203)	C 270 CDI (203.016)	125	12/00 – 02/07	4102	
C-CLASS (W203)	C 280 (203.054)	170	01/05 – 02/07	3821	
C-CLASS (W203)	C 280 4-matic (203.092)	170	01/05 – 02/07	3821	
C-CLASS (W203)	C 30 CDI AMG (203.018)	170	01/03 – 02/07	4102	3581
C-CLASS (W203)	C 32 AMG Kompressor (203.065)	260	02/01 – 02/07	4102	
C-CLASS (W203)	C 320 (203.064)	160	05/00 – 02/07	3821	
C-CLASS (W203)	C 320 (203.064)	160	05/00 – 02/07	4102	
C-CLASS (W203)	C 320 4-matic (203.084)	160	07/02 – 02/07	3821	
C-CLASS (W203)	C 320 CDI (203.020)	165	01/05 – 02/07	3821	
C-CLASS (W203)	C 320 CDI (203.020)	165	01/05 – 02/07	4102	
C-CLASS (W203)	C 350 (203.056)	200	01/05 – 02/07	3821	
C-CLASS (W203)	C 350 (203.056)	200	01/05 – 02/07	4102	
C-CLASS (W203)	C 350 4-matic (203.087)	200	01/05 – 02/07	3821	
C-CLASS (W203)	C 350 4-matic (203.087)	200	01/05 – 02/07	4102	
C-CLASS (W203)	C 55 AMG (203.076)	270	02/04 – 02/07	4102	3581
C-CLASS (W204)	C 180 CDI (204.000)	88	01/11 – 01/14	4248	
C-CLASS (W204)	C 180 CGI (204.031)	115	01/08 – 01/14	4248	
C-CLASS (W204)	C 180 CGI (204.049)	115	01/07 – 01/14	4248	
C-CLASS (W204)	C 200 (204.048)	137	05/11 – 01/14	4248	
C-CLASS (W204)	C 200 CDI (204.001)	100	01/11 – 01/14	4248	
C-CLASS (W204)	C 200 CGI (204.048)	135	01/07 – 01/14	4248	
C-CLASS (W204)	C 200 Kompressor (204.041)	135	01/07 – 01/14	4248	
C-CLASS (W204)	C 220 CDI (204.002)	120	10/08 – 01/14	4248	
C-CLASS (W204)	C 220 CDI (204.002)	125	12/08 – 01/14	4248	
C-CLASS (W204)	C 220 CDI (204.008)	120	01/07 – 11/08	4248	
C-CLASS (W204)	C 220 CDI (204.008)	125	01/07 – 11/08	4248	
C-CLASS (W204)	C 220 CDI 4-matic (204.084)	125	02/13 – 01/14	4248	
C-CLASS (W204)	C 230 (204.052)	150	01/07 – 01/14	4248	
C-CLASS (W204)	C 230 4-matic (204.085)	150	07/07 – 01/14	4248	
C-CLASS (W204)	C 250 CDI (204.003)	150	08/08 – 01/14	4248	
C-CLASS (W204)	C 250 CDI 4-matic (204.082)	150	01/11 – 01/14	4248	
C-CLASS (W204)	C 250 CDI 4-matic (204.082)	150	01/11 – 01/14	4249	
C-CLASS (W204)	C 250 CGI (204.047)	150	07/09 – 01/14	4248	
C-CLASS (W204)	C 280 (204.054)	170	01/07 – 01/14	4248	
C-CLASS (W204)	C 280 (204.054)	170	01/07 – 01/14	4249	
C-CLASS (W204)	C 280 4-matic (204.081)	170	07/07 – 01/14	4248	
C-CLASS (W204)	C 280 4-matic (204.081)	170	07/07 – 01/14	4249	
C-CLASS (W204)	C 300 (204.054)	170	07/09 – 01/14	4248	
C-CLASS (W204)	C 300 (204.054)	170	07/09 – 01/14	4249	
C-CLASS (W204)	C 300 (204.055)	185	02/11 – 01/14	4249	
C-CLASS (W204)	C 300 4-matic (204.080)	185	02/11 – 01/14	4249	
C-CLASS (W204)	C 300 4-matic (204.081)	170	07/07 – 01/14	4248	
C-CLASS (W204)	C 300 4-matic (204.081)	170	07/07 – 01/14	4249	
C-CLASS (W204)	C 300 CDI 4-matic (204.092)	170	01/11 – 01/14	4249	
C-CLASS (W204)	C 320 CDI (204.022)	165	01/07 – 01/14	4249	

MAKE & MODEL		KW	YEAR		
MERCEDES BENZ					
C-CLASS (W204)	C 320 CDI 4-matic (204.089)	165	07/07 – 01/14	4249	
C-CLASS (W204)	C 350 (204.056)	200	01/07 – 01/14	4249	
C-CLASS (W204)	C 350 (204.057)	225	01/11 – 01/14	4249	
C-CLASS (W204)	C 350 4-matic (204.087)	200	07/07 – 01/14	4249	
C-CLASS (W204)	C 350 4-matic (204.088)	225	01/11 – 01/14	4249	
C-CLASS (W204)	C 350 CDI (204.022)	165	07/09 – 01/14	4249	
C-CLASS (W204)	C 350 CDI (204.023)	195	06/11 – 01/14	4249	
C-CLASS (W204)	C 350 CDI (204.025)	170	10/09 – 01/14	4249	
C-CLASS (W204)	C 350 CDI 4-matic (204.089)	165	07/09 – 01/14	4249	
C-CLASS (W204)	C 350 CDI 4-matic (204.092)	170	10/09 – 01/14	4249	
C-CLASS (W204)	C 350 CGI (204.065)	215	09/08 – 01/14	4249	
C-CLASS Coupe (C204)	C 180 (204.331)	115	01/13 -	4248	
C-CLASS Coupe (C204)	C 180 (204.349)	115	06/11 -	4248	
C-CLASS Coupe (C204)	C 180 (204.349)	115	06/11 -	4249	
C-CLASS Coupe (C204)	C 200 CGI (204.348)	135	06/11 -	4248	
C-CLASS Coupe (C204)	C 200 CGI (204.348)	135	06/11 -	4249	
C-CLASS Coupe (C204)	C 220 CDI (204.302)	120	06/11 -	4248	
C-CLASS Coupe (C204)	C 220 CDI (204.302)	125	06/11 -	4248	
C-CLASS Coupe (C204)	C 250 (204.347)	150	06/11 -	4248	
C-CLASS Coupe (C204)	C 250 CDI (204.303)	150	06/11 -	4248	
C-CLASS Coupe (C204)	C 350 (204.357)	225	06/11 -	4249	
C-CLASS Coupe (C204)	C 350 4-matic	225	09/13 -	4249	
C-CLASS Coupe (CL203)	C 160 Kompressor (203.730)	90	05/02 – 05/08	3836	
C-CLASS Coupe (CL203)	C 180 (203.735)	95	03/01 – 05/02	3836	
C-CLASS Coupe (CL203)	C 180 Kompressor (203.746)	105	05/02 – 05/08	3836	
C-CLASS Coupe (CL203)	C 200 CDI (203.707)	90	03/03 – 05/08	3836	
C-CLASS Coupe (CL203)	C 200 CGI Kompressor (203.743)	125	03/03 – 05/08	3836	
C-CLASS Coupe (CL203)	C 200 Kompressor (203.742)	120	05/02 – 05/08	3836	
C-CLASS Coupe (CL203)	C 200 Kompressor (203.745)	120	03/01 – 05/02	3836	
C-CLASS Coupe (CL203)	C 220	120	05/02 – 05/08	3836	
C-CLASS Coupe (CL203)	C 220 CDI	100	03/01 – 01/04	3836	
C-CLASS Coupe (CL203)	C 220 CDI (203.706)	105	03/01 – 01/04	3836	
C-CLASS Coupe (CL203)	C 220 CDI (203.708)	110	02/04 – 05/08	3836	
C-CLASS Coupe (CL203)	C 230 (203.752)	150	01/05 – 05/08	3821	
C-CLASS Coupe (CL203)	C 230 Kompressor (203.740)	141	05/02 – 05/08	3821	
C-CLASS Coupe (CL203)	C 230 Kompressor (203.740)	141	05/02 – 05/08	3836	
C-CLASS Coupe (CL203)	C 230 Kompressor (203.747)	145	03/01 – 05/02	3821	
C-CLASS Coupe (CL203)	C 230 Kompressor (203.747)	145	03/01 – 05/02	3836	
C-CLASS Coupe (CL203)	C 30 CDI AMG (203.718)	170	09/02 – 05/08	4102	3581
C-CLASS Coupe (CL203)	C 32 AMG Kompressor (203.765)	260	05/02 – 05/08	4102	3581
C-CLASS Coupe (CL203)	C 320 (203.764)	160	09/02 – 05/08	3821	
C-CLASS Coupe (CL203)	C 350 (203.756)	200	01/05 – 05/08	3821	
C-CLASS Estate (S202)	C 180 T (202.078)	90	06/96 – 09/00	3658	3676
C-CLASS Estate (S202)	C 180 T (202.081)	95	09/00 - 03/01	3658	3676
C-CLASS Estate (S202)	C 200 T (202.080)	100	06/96 – 03/01	3658	3676
C-CLASS Estate (S202)	C 200 T CDI (202.194)	75	03/98 – 03/01	3658	3676
C-CLASS Estate (S202)	C 200 T D (202.180)	65	10/96 – 03/01	3658	3676
C-CLASS Estate (S202)	C 200 T Kompressor (202.082)	141	11/96 – 03/01	3677	3676
C-CLASS Estate (S202)	C 200 T Kompressor (202.087)	120	09/00 – 03/01	3677	3676
C-CLASS Estate (S202)	C 220 T CDI (202.193)	92	09/97 – 03/01	3658	3676
C-CLASS Estate (S202)	C 220 T D (202.182)	55	06/96 – 03/01	3658	3676
C-CLASS Estate (S202)	C 220 T D (202.182)	70	06/96 – 09/98	3658	3676
C-CLASS Estate (S202)	C 230 T (202.083)	110	06/96 – 06/98	3658	3676
C-CLASS Estate (S202)	C 230 T Kompressor (202.085)	142	06/97 – 09/00	3677	3676
C-CLASS Estate (S202)	C 240 T (202.086)	125	06/97 – 09/00	3677	3676
C-CLASS Estate (S202)	C 240 T (202.088)	125	09/00 – 03/01	3677	3676
C-CLASS Estate (S202)	C 250 T Turbo-D (202.188)	110	06/96 – 03/01	3677	3676
C-CLASS Estate (S202)	C 280 T (202.089)	145	06/97 – 03/01	3677	3676
C-CLASS Estate (S202)	C 43 AMG (202.093)	225	08/97 – 03/01		3581
C-CLASS T-Model (S203)	C 180 (203.235)	95	03/01 – 05/02	3821	
C-CLASS T-Model (S203)	C 180 (203.235)	95	03/01 – 05/02	3836	
C-CLASS T-Model (S203)	C 180 Kompressor (203.246)	105	05/02 – 08/07	3821	
C-CLASS T-Model (S203)	C 180 Kompressor (203.246)	105	05/02 – 08/07	3836	
C-CLASS T-Model (S203)	C 180 Kompressor (203.246)	105	05/02 – 08/07	4102	
C-CLASS T-Model (S203)	C 200 CDI (203.204)	85	03/01 – 08/07	3821	
C-CLASS T-Model (S203)	C 200 CDI (203.204)	85	03/01 – 08/07	3836	
C-CLASS T-Model (S203)	C 200 CDI (203.204)	85	03/01 – 08/07	4102	
C-CLASS T-Model (S203)	C 200 CDI (203.204, 203.207)	75	03/01 – 08/07	3821	
C-CLASS T-Model (S203)	C 200 CDI (203.204, 203.207)	75	03/01 – 08/07	3836	
C-CLASS T-Model (S203)	C 200 CDI (203.204, 203.207)	75	03/01 – 08/07	4102	
C-CLASS T-Model (S203)	C 200 CDI (203.207)	90	04/03 – 08/07	3821	
C-CLASS T-Model (S203)	C 200 CDI (203.207)	90	04/03 – 08/07	3836	
C-CLASS T-Model (S203)	C 200 CDI (203.207)	90	04/03 – 08/07	4102	
C-CLASS T-Model (S203)	C 200 CGI Kompressor (203.243)	125	07/03 – 08/07	3821	
C-CLASS T-Model (S203)	C 200 CGI Kompressor (203.243)	125	07/03 – 08/07	3836	
C-CLASS T-Model (S203)	C 200 CGI Kompressor (203.243)	125	07/03 – 08/07	4102	

MAKE & MODEL		KW	YEAR		
MERCEDES BENZ					
C-CLASS T-Model (S203)	C 200 Kompressor (203.242)	120	05/02 – 08/07	3821	
C-CLASS T-Model (S203)	C 200 Kompressor (203.242)	120	05/02 – 08/07	3836	
C-CLASS T-Model (S203)	C 200 Kompressor (203.242)	120	05/02 – 08/07	4102	
C-CLASS T-Model (S203)	C 200 Kompressor (203.245)	120	03/01 – 05/02	3821	
C-CLASS T-Model (S203)	C 200 Kompressor (203.245)	120	03/01 – 05/02	3836	
C-CLASS T-Model (S203)	C 200 Kompressor (203.245)	120	03/01 – 05/02	4102	
C-CLASS T-Model (S203)	C 220 CDI (203.206)	105	03/01 – 08/07	3821	
C-CLASS T-Model (S203)	C 220 CDI (203.206)	105	03/01 – 08/07	3836	
C-CLASS T-Model (S203)	C 220 CDI (203.206)	105	03/01 – 08/07	4102	
C-CLASS T-Model (S203)	C 220 CDI (203.208)	100	08/06 – 08/07	3821	
C-CLASS T-Model (S203)	C 220 CDI (203.208)	100	08/06 – 08/07	3836	
C-CLASS T-Model (S203)	C 220 CDI (203.208)	100	08/06 – 08/07	4102	
C-CLASS T-Model (S203)	C 220 CDI (203.208)	110	02/04 – 08/07	3821	
C-CLASS T-Model (S203)	C 220 CDI (203.208)	110	02/04 – 08/07	3836	
C-CLASS T-Model (S203)	C 220 CDI (203.208)	110	02/04 – 08/07	4102	
C-CLASS T-Model (S203)	C 230 (203.252)	150	01/05 – 08/07	3821	
C-CLASS T-Model (S203)	C 230 (203.252)	150	01/05 – 08/07	3836	
C-CLASS T-Model (S203)	C 230 Kompressor (203.240)	141	02/04 – 08/07	3821	
C-CLASS T-Model (S203)	C 230 Kompressor (203.240)	141	02/04 – 08/07	3836	
C-CLASS T-Model (S203)	C 230 Kompressor (203.240)	141	02/04 – 08/07	4102	
C-CLASS T-Model (S203)	C 240 (203.261)	125	03/01 – 08/07	3821	
C-CLASS T-Model (S203)	C 240 (203.261)	125	03/01 – 08/07	3836	
C-CLASS T-Model (S203)	C 240 (203.261)	125	03/01 – 08/07	4102	
C-CLASS T-Model (S203)	C 240 4-matic (203.281)	125	07/02 – 08/07	3821	
C-CLASS T-Model (S203)	C 270 CDI (203.216)	125	03/01 – 08/07	3821	
C-CLASS T-Model (S203)	C 270 CDI (203.216)	125	03/01 – 08/07	4102	
C-CLASS T-Model (S203)	C 280 (203.254)	170	01/05 – 08/07	3821	
C-CLASS T-Model (S203)	C 280 4-matic (203.292)	170	01/05 – 08/07	3821	3581
C-CLASS T-Model (S203)	C 30 CDI AMG (203.218)	170	01/03 – 08/07	4102	
C-CLASS T-Model (S203)	C 32 AMG Kompressor (203.265)	260	03/01 – 08/07	4102	3581
C-CLASS T-Model (S203)	C 320 (203.264)	160	03/01 – 08/07	3821	
C-CLASS T-Model (S203)	C 320 (203.264)	160	03/01 – 08/07	4102	
C-CLASS T-Model (S203)	C 320 4-matic (203.284)	160	07/02 – 08/07	3821	
C-CLASS T-Model (S203)	C 320 CDI (203.220)	165	06/05 – 08/07	3821	
C-CLASS T-Model (S203)	C 320 CDI (203.220)	165	06/05 – 08/07	4102	
C-CLASS T-Model (S203)	C 350 (203.256)	200	01/05 – 08/07	3821	
C-CLASS T-Model (S203)	C 350 (203.256)	200	01/05 – 08/07	4102	
C-CLASS T-Model (S203)	C 350 4-matic (203.287)	200	01/05 – 08/07	3821	3581
C-CLASS T-Model (S203)	C 350 4-matic (203.287)	200	01/05 – 08/07	4102	
C-CLASS T-Model (S203)	C 55 AMG (203.276)	270	02/04 – 08/07	4102	3581
C-CLASS T-Model (S204)	C 180 (204.231)	115	02/12 – 08/14	4248	
C-CLASS T-Model (S204)	C 180 CGI (204.249)	115	11/09 – 08/14	4248	
C-CLASS T-Model (S204)	C 200 CGI (204.248)	135	08/07 – 08/14	4248	
C-CLASS T-Model (S204)	C 200 Kompressor (204.241)	135	08/07 – 08/14	4248	
C-CLASS T-Model (S204)	C 220 CDI (204.202)	120	12/08 – 08/14	4248	
C-CLASS T-Model (S204)	C 220 CDI (204.202)	125	12/08 – 08/14	4248	
C-CLASS T-Model (S204)	C 220 CDI (204.208)	120	08/07 – 11/08	4248	
C-CLASS T-Model (S204)	C 220 CDI (204.208)	125	08/07 – 11/08	4248	
C-CLASS T-Model (S204)	C 220 CDI 4-matic (204.284)	125	02/13 – 08/14	4248	
C-CLASS T-Model (S204)	C 230 (204.252)	150	08/07 – 08/14	4248	
C-CLASS T-Model (S204)	C 250 CDI (204.203)	150	01/09 – 08/14	4248	
C-CLASS T-Model (S204)	C 250 CDI 4-matic (204.282)	150	04/10 – 08/14	4248	
C-CLASS T-Model (S204)	C 250 CDI 4-matic (204.282)	150	04/10 – 08/14	4249	
C-CLASS T-Model (S204)	C 250 CGI (204.247)	150	07/09 – 08/14	4248	
C-CLASS T-Model (S204)	C 280 (204.254)	170	08/07 – 08/14	4248	
C-CLASS T-Model (S204)	C 280 (204.254)	170	08/07 – 08/14	4249	
C-CLASS T-Model (S204)	C 300 (204.254)	170	08/07 – 08/14	4248	
C-CLASS T-Model (S204)	C 300 (204.254)	170	08/07 – 08/14	4249	
C-CLASS T-Model (S204)	C 320 CDI (204.222)	165	08/07 – 08/14	4249	
C-CLASS T-Model (S204)	C 320 CDI 4-matic (204.289)	165	08/07 – 08/14	4249	
C-CLASS T-Model (S204)	C 350 (204.256)	200	08/07 – 08/14	4249	
C-CLASS T-Model (S204)	C 350 CDI	165	08/07 – 08/14	4249	
C-CLASS T-Model (S204)	C 350 CDI (204.223)	195	06/11 – 08/14	4249	
C-CLASS T-Model (S204)	C 350 CDI (204.225)	170	10/09 – 08/14	4249	
C-CLASS T-Model (S204)	C 350 CDI 4-matic (204.292)	170	10/09 – 08/14	4249	
C-CLASS T-Model (S204)	C 350 CGI (204.257)	225	06/11 – 08/14	4249	
CITAN Box (415)	108 CDI (415.601, 415.603)	55	11/12 -	3966	
CITAN Box (415)	108 CDI (415.601, 415.603)	55	11/12 -	3983	
CITAN Box (415)	109 CDI (415.601, 415.603,415.605)	66	11/12 -	3966	
CITAN Box (415)	109 CDI (415.601, 415.603,415.605)	66	11/12 -	3983	
CITAN Box (415)	111 CDI (415.603, 415.605)	81	06/13 -	3966	
CITAN Box (415)	111 CDI (415.603, 415.605)	81	06/13 -	3983	
CITAN Box (415)	112 (415.603)	84	06/13 -	3966	
CITAN Box (415)	112 (415.603)	84	06/13 -	3983	
CITAN Combi (415)	108 CDI (415.703)	55	11/12 -	3966	
CITAN Combi (415)	108 CDI (415.703)	55	11/12 -	3983	

MAKE & MODEL   		KW	YEAR		
MERCEDES BENZ					
CITAN Combi (415)	109 CDI (415.703)	66	11/12 -	3966	
CITAN Combi (415)	109 CDI (415.703)	66	11/12 -	3983	
CITAN Combi (415)	111 CDI (415.703)	81	06/13 -	3966	
CITAN Combi (415)	111 CDI (415.703)	81	06/13 -	3983	
CITAN Combi (415)	112 (415.703)	84	06/13 -	3966	
CITAN Combi (415)	112 (415.703)	84	06/13 -	3983	
CITAN Mixto (415)	109 CDI	66	11/12 -	3966	
CITAN Mixto (415)	109 CDI	66	11/12 -	3983	
CITAN Mixto (415)	111 CDI (415.601, 415.603,415.605)	81	06/13 -	3966	
CITAN Mixto (415)	111 CDI (415.601, 415.603,415.605)	81	06/13 -	3983	
CLC-CLASS (CL203)	CLC 160 (203.731)	95	02/09 – 06/11	3836	
CLC-CLASS (CL203)	CLC 180 Kompressor (203.746)	105	05/08 – 06/11	3836	
CLC-CLASS (CL203)	CLC 200 CDI (203.707)	90	05/08 – 06/11	3836	
CLC-CLASS (CL203)	CLC 200 Kompressor (203.741)	135	05/08 – 06/11	3836	
CLC-CLASS (CL203)	CLC 220 CDI (203.708)	110	05/08 – 06/11	3836	
CLC-CLASS (CL203)	CLC 230 (203.752)	150	05/08 – 06/11	3821	
CLC-CLASS (CL203)	CLC 350 (203.756)	200	05/08 – 06/11	3821	
CLK (C208)	54	260	10/98 – 07/02		3581
CLK (C208)	200 (208.335)	100	06/97 – 06/02	3677	3676
CLK (C208)	200 Kompressor (208.344)	120	06/00 – 06/02	3677	3676
CLK (C208)	200 Kompressor (208.345)	141	06/97 – 06/00	3677	3676
CLK (C208)	230 Kompressor (208.347)	142	06/97 – 06/00	3677	3676
CLK (C208)	230 Kompressor (208.348)	145	06/00 – 06/02	3677	3676
CLK (C208)	320 (208.365)	160	06/97 – 06/02	3821	3581
CLK (C208)	320 (208.365)	160	06/97 – 06/02	3863	
CLK (C208)	430 (208.370)	205	07/98 – 06/02	3629	3581
CLK (C208)	430 (208.370)	205	07/98 – 06/02	3863	
CLK (C208)	55 AMG (208.374)	255	08/99 – 06/02		3581
CLK (C209)	200 CGI (209.343)	125	07/03 – 05/09	3821	
CLK (C209)	200 CGI (209.343)	125	07/03 – 05/09	3836	
CLK (C209)	200 Kompressor (209.341)	135	10/06 – 05/09	3821	
CLK (C209)	200 Kompressor (209.342)	120	09/02 – 05/09	3821	
CLK (C209)	200 Kompressor (209.342)	120	09/02 – 05/09	3836	
CLK (C209)	220 CDI (209.308)	100	01/05 – 05/09	3821	
CLK (C209)	220 CDI (209.308)	100	01/05 – 05/09	3836	
CLK (C209)	220 CDI (209.308)	110	01/05 – 05/09	3821	
CLK (C209)	220 CDI (209.308)	110	01/05 – 05/09	3836	
CLK (C209)	240 (209.361)	120	06/02 – 05/09	3821	
CLK (C209)	240 (209.361)	125	06/02 – 05/09	3821	
CLK (C209)	270 CDI (209.316)	120	02/03 – 06/05	3821	
CLK (C209)	270 CDI (209.316)	125	10/02 – 05/09	3821	
CLK (C209)	280 (209.354)	170	01/05 – 05/09	3821	
CLK (C209)	320 (209.365)	160	06/02 – 05/09	3821	
CLK (C209)	320 CDI (209.320)	165	01/05 – 05/09	3821	
CLK (C209)	320 CDI (209.320)	165	01/05 – 05/09	4102	
CLK (C209)	350 (209.356)	200	01/05 – 05/09	3821	
CLK (C209)	350 (209.356)	200	01/05 – 05/09	4102	
CLK (C209)	500 (209.372)	285	06/06 – 05/09	4102	3581
CLK (C209)	500 (209.375)	225	06/02 – 05/09	4102	3581
CLK (C209)	55 AMG (209.376)	270	09/02 – 05/09	4102	3581
CLK Convertible (A208)	200 (208.435)	100	03/98 – 03/02	3677	3676
CLK Convertible (A208)	200 Kompressor (208.444)	120	06/00 – 03/02	3863	3581
CLK Convertible (A208)	200 Kompressor (208.445)	141	03/98 – 06/00	3863	3581
CLK Convertible (A208)	230 Kompressor (208.447)	142	03/98 – 06/00	3863	3581
CLK Convertible (A208)	230 Kompressor (208.448)	145	06/00 – 03/02	3863	3581
CLK Convertible (A208)	320 (208.465)	160	03/98 – 03/02	3821	3581
CLK Convertible (A208)	320 (208.465)	160	03/98 – 03/02	3863	
CLK Convertible (A208)	430 (208.470)	205	09/98 – 03/02	3629	3581
CLK Convertible (A208)	430 (208.470)	205	09/98 – 03/02	3863	
CLK Convertible (A208)	55 AMG (208.474)	255	01/00 – 03/02		3581
CLK Convertible (A209)	CLK 200 CGI (209.443)	125	07/03 – 03/10	3821	
CLK Convertible (A209)	CLK 200 CGI (209.443)	125	07/03 – 03/10	3836	
CLK Convertible (A209)	CLK 200 Kompressor(209.441)	135	10/06 – 03/10	3821	
CLK Convertible (A209)	CLK 200 Kompressor(209.442)	120	02/03 – 03/10	3821	
CLK Convertible (A209)	CLK 240 (209.461)	125	02/03 – 03/10	3821	
CLK Convertible (A209)	CLK 280 (209.454)	170	01/05 – 03/10	3821	
CLK Convertible (A209)	CLK 320 (209.465)	160	02/03 – 03/10	3821	
CLK Convertible (A209)	CLK 320 CDI (209.420)	165	03/05 – 03/10	3821	
CLK Convertible (A209)	CLK 320 CDI (209.420)	165	03/05 – 03/10	4102	
CLK Convertible (A209)	CLK 350 (209.456)	200	01/05 – 03/10	3821	
CLK Convertible (A209)	CLK 350 (209.456)	200	01/05 – 03/10	4102	
CLK Convertible (A209)	CLK 500 (209.472)	285	06/06 – 03/10	4102	3581
CLK Convertible (A209)	CLK 500 (209.475)	225	02/03 – 03/10	4102	3581
CLK Convertible (A209)	CLK 55 AMG (209.476)	270	02/03 – 03/10	4102	3581
CLS (C218)	CLS 220 BlueTEC (218.301)	130	05/14 -	4249	
CLS (C218)	CLS 220 BlueTEC / d (218.301)	120	05/14 -	4249	

MAKE & MODEL		KW	YEAR		
MERCEDES BENZ					
CLS (C218)	CLS 220 BlueTEC / d (218.301)	125	05/14 -	4249	
CLS (C218)	CLS 250 BlueTEC / d 4-matic (218.397)	150	05/14 -	4249	
CLS (C218)	CLS 260 (218.336)	155	01/15 -	4249	
CLS (C218)	CLS 300 CGI (218.355)	185	10/11 -	4249	
CLS (C218)	CLS 350 (218.359)	225	01/11 -	4249	
CLS (C218)	CLS 350 BlueTEC / d (218.326)	190	06/14 -	4249	
CLS (C218)	CLS 350 BlueTEC 4-matic (218.394)	185	11/12 -	4249	
CLS (C218)	CLS 350 CDI (218.323)	195	01/11 -	4249	
CLS (C218)	CLS 350 CDI 4-matic (218.393)	195	09/11 -	4249	
CLS (C218)	CLS 350 d 4-matic (218.394)	190	04/15 -	4249	
CLS (C218)	CLS 400 (218.361)	245	07/14 -	4249	
CLS (C218)	CLS 400 (218.365)	245	05/14 -	4249	
CLS (C218)	CLS 400 4-matic (218.367)	245	05/14 -	4249	
CLS (C218)	CLS 400 4-matic (218.368)	245	07/14 -	4249	
CLS (C219)	CLS 280 (219.354)	170	07/08 – 12/10	4102	
CLS (C219)	CLS 300 (219.354)	170	04/09 – 12/10	4102	
CLS (C219)	CLS 320 CDI	155	01/05 – 12/10	4102	
CLS (C219)	CLS 320 CDI (219.322)	165	01/05 – 12/10	4102	
CLS (C219)	CLS 350 (219.356)	200	10/04 – 12/10	4102	
CLS (C219)	CLS 350 (219.357)	215	04/06 – 12/10	4102	
CLS (C219)	CLS 350 CDI	200	04/09 – 12/10	4102	
CLS (C219)	CLS 350 CDI (219.322)	165	04/09 – 12/10	4102	
CLS (C219)	CLS 350 CGI (219.357)	215	04/09 – 12/10	4102	
CLS (C219)	CLS 500 (219.372)	285	04/06 – 12/10	4102	
CLS (C219)	CLS 500 (219.375)	225	10/04 – 12/10	4102	
CLS Shooting Brake (X218)	CLS 220 BlueTEC (218.901)	130	05/14 -	4249	
CLS Shooting Brake (X218)	CLS 220 BlueTEC / d (218.901)	120	05/14 -	4249	
CLS Shooting Brake (X218)	CLS 220 BlueTEC / d (218.901)	125	05/14 -	4249	
CLS Shooting Brake (X218)	CLS 250 BlueTEC / d 4-matic (218.997)	150	05/14 -	4249	
CLS Shooting Brake (X218)	CLS 250 CDI / BlueTEC / d (218.903, 218.904)	150	10/12 -	4249	
CLS Shooting Brake (X218)	CLS 350 (218.959)	225	10/12 -	4249	
CLS Shooting Brake (X218)	CLS 350 BlueTEC / d (218.926)	190	05/14 -	4249	
CLS Shooting Brake (X218)	CLS 350 BlueTEC 4-matic (218.994)	185	05/14 -	4249	
CLS Shooting Brake (X218)	CLS 350 CDI (218.923)	195	10/12 -	4249	
CLS Shooting Brake (X218)	CLS 350 CDI 4-matic (218.993)	195	10/12 -	4249	
CLS Shooting Brake (X218)	CLS 350 d 4-matic (218.994)	190	04/15 -	4249	
CLS Shooting Brake (X218)	CLS 400 (218.961)	245	07/14 -	4249	
CLS Shooting Brake (X218)	CLS 400 (218.965)	245	05/14 -	4249	
CLS Shooting Brake (X218)	CLS 400 4-matic (218.967)	245	05/14 -	4249	
CLS Shooting Brake (X218)	CLS 400 4-matic (218.968)	245	07/14 -	4249	
COUPE (C123)	230 C (123.043)	80	05/77 – 04/80	3315	
COUPE (C123)	230 C (123.043)	80	05/77 – 04/80	3339	
COUPE (C123)	230 C (123.043)	80	05/77 – 04/80	3514	
COUPE (C123)	230 C (123.043)	80	05/77 – 04/80	3515	
COUPE (C123)	230 CE (123.243)	100	04/80 – 12/85	3339	
COUPE (C123)	230 CE (123.243)	100	04/80 – 12/85	3514	
COUPE (C123)	280 C (123.050)	115	03/77 – 03/80	3315	
COUPE (C123)	280 C (123.050)	115	03/77 – 03/80	3339	
COUPE (C123)	280 C (123.050)	115	03/77 – 03/80	3514	
COUPE (C123)	280 C (123.050)	115	03/77 – 03/80	3515	
COUPE (C123)	280 CE	130	09/77 – 08/79	3315	
COUPE (C123)	280 CE	130	09/77 – 08/79	3515	
COUPE (C123)	280 CE	136	03/77 – 11/85	3315	
COUPE (C123)	280 CE	136	03/77 – 11/85	3339	
COUPE (C123)	280 CE	136	03/77 – 11/85	3514	
COUPE (C123)	280 CE	136	03/77 – 11/85	3515	
COUPE (C123)	300 C Turbo-D (123.153)	92	09/81 – 07/85	3339	
COUPE (C123)	300 C Turbo-D (123.153)	92	09/81 – 07/85	3514	
COUPE (C124)	220 CE (124.042)	110	10/92 – 05/93	3408	3550
COUPE (C124)	220 CE (124.042)	110	10/92 – 05/93		3630
COUPE (C124)	230 CE (124.043)	97	03/87 – 12/92	3408	3550
COUPE (C124)	230 CE (124.043)	97	03/87 12/92		3630
COUPE (C124)	230 CE (124.043)	100	03/87 – 12/92	3408	3550
COUPE (C124)	230 CE (124.043)	100	03/87 12/92		3630
COUPE (C124)	230 CE (124.043) CAT	97	06/89 – 12/92	3408	3550
COUPE (C124)	230 CE (124.043) CAT	97	06/89 – 12/92		3630
COUPE (C124)	300 CE	138	03/87 – 12/89	3408	3550
COUPE (C124)	300 CE (124.050)	132	03/87 – 05/93	3408	3550
COUPE (C124)	300 CE (124.050)	132	03/87 – 05/93		3630
COUPE (C124)	300 CE-24 (124.051)	162	09/89 – 12/92	3629	
COUPE (C124)	300 CE-24 (124.051)	170	09/89 – 12/92	3629	
COUPE (C124)	320 CE (124.052)	162	10/92 – 05/93	3628	
COUPE (C124)	320 CE (124.052)	162	10/92 – 05/93	3629	
COUPE (W111)	220 SEB (111.021)	88	01/61 – 12/65	3455	
COUPE (W111)	220 SEB (111.021)	88	01/61 – 12/65	3471	
COUPE (W111)	250 SE (111.021)	110	01/65 – 12/67	3318	

MAKE & MODEL   		KW	YEAR		
MERCEDES BENZ					
COUPE (W111)	250 SE (111.021)	110	01/65 – 12/67	3320	
COUPE (W111)	250 SE (111.021)	110	01/65 – 12/67	3350	
COUPE (W111)	280 SE (111.024)	118	01/67 – 12/71	3318	
COUPE (W111)	280 SE (111.024)	118	01/67 – 12/71	3320	
COUPE (W111)	280 SE (111.024)	118	01/67 – 12/71	3350	
COUPE (W111)	280 SE 3.5 (111.026)	147	01/69 – 12/71	3318	
COUPE (W111)	280 SE 3.5 (111.026)	147	01/69 – 12/71	3320	
COUPE (W111)	280 SE 3.5 (111.026)	147	01/69 – 12/71	3350	
E-CLASS (W124)	E 200 (124.019)	100	06/93 – 06/95	3408	3550
E-CLASS (W124)	E 200 (124.019)	100	06/93 – 06/95		3630
E-CLASS (W124)	E 200 D (124.120)	55	06/93 – 06/95	3408	3550
E-CLASS (W124)	E 200 D (124.120)	55	06/93 – 06/95		3630
E-CLASS (W124)	E 220 (124.022)	110	06/93 – 06/95	3408	3550
E-CLASS (W124)	E 220 (124.022)	110	06/93 – 06/95		3630
E-CLASS (W124)	E 250 D (124.126, 124.129)	83	07/93 – 06/95	3408	3550
E-CLASS (W124)	E 250 Turbo-D (124.128)	93	06/93 – 06/95	3408	3550
E-CLASS (W124)	E 280 (124.028)	145	06/93 – 06/95	3408	3550
E-CLASS (W124)	E 280 (124.028)	145	06/93 – 06/95	3629	3630
E-CLASS (W124)	E 280 (124.028)	145	06/93 – 06/95	3628	
E-CLASS (W124)	E 280 (124.029)	142	06/93 – 06/95	3408	3550
E-CLASS (W124)	E 280 (124.029)	142	06/93 – 06/95	3629	3630
E-CLASS (W124)	E 280 (124.029)	142	06/93 – 06/95	3628	
E-CLASS (W124)	E 300 4-matic (124.230)	132	06/93 – 06/95	3408	3550
E-CLASS (W124)	E 300 4-matic (124.230)	132	06/93 – 06/95		3630
E-CLASS (W124)	E 300 D (124.131)	100	07/93 – 06/95	3408	3550
E-CLASS (W124)	E 300 Turbo-D (124.133)	108	06/93 – 06/95	3408	3550
E-CLASS (W124)	E 300 Turbo-D 4-matic (124.333)	108	06/93 – 06/95	3408	3550
E-CLASS (W124)	E 300 Turbo-D 4-matic (124.333)	108	06/93 – 06/95		3630
E-CLASS (W124)	E 320 (124.032)	162	06/93 – 06/95	3628	
E-CLASS (W124)	E 320 (124.032)	162	06/93 – 06/95	3629	
E-CLASS (W124)	E 36 AMG	200	07/94 – 01/95	3628	
E-CLASS (W124)	E 36 AMG	200	07/94 – 01/95	3629	
E-CLASS (W124)	E 420 (124.034)	205	06/93 – 06/95	3628	
E-CLASS (W124)	E 420 (124.034)	205	06/93 – 06/95	3629	
E-CLASS (W124)	E 500 (124.036)	235	06/93 – 06/95	3629	3581
E-CLASS (W124)	E 60 AMG (124.036)	280	05/94 – 06/95	3628	3581
E-CLASS (W210)	E 200 (210.035)	100	06/95 – 08/00	3677	3676
E-CLASS (W210)	E 200 CDI (210.007)	75	06/98 – 03/02	3677	3676
E-CLASS (W210)	E 200 CDI (210.007)	85	07/99 – 03/02	3677	3676
E-CLASS (W210)	E 200 D (210.003)	65	01/96 – 03/02	3677	3676
E-CLASS (W210)	E 200 Kompressor (210.045)	137	06/97 – 03/02	3821	3581
E-CLASS (W210)	E 200 Kompressor (210.045)	137	06/97 – 03/02	3863	
E-CLASS (W210)	E 200 Kompressor (210.048)	120	08/00 – 03/02	3677	3676
E-CLASS (W210)	E 220 CDI	100	07/99 – 03/02	3677	3676
E-CLASS (W210)	E 220 CDI (210.006)	92	06/98 – 07/99	3677	3676
E-CLASS (W210)	E 220 CDI (210.006)	105	07/99 – 03/02	3677	3676
E-CLASS (W210)	E 220 D	55	05/96 – 03/02	3677	3676
E-CLASS (W210)	E 220 D (210.004)	70	06/95 – 07/99	3677	3676
E-CLASS (W210)	E 230 (210.037)	110	06/95 – 06/97	3677	3676
E-CLASS (W210)	E 240 (210.061)	125	06/97 – 08/00	3677	3676
E-CLASS (W210)	E 240 (210.061)	125	06/97 – 08/00	3863	3676
E-CLASS (W210)	E 240 (210.061)	125	06/97 – 08/00	3821	
E-CLASS (W210)	E 240 (210.062)	125	08/00 – 03/02	3677	
E-CLASS (W210)	E 240 (210.062)	125	08/00 – 03/02	3821	
E-CLASS (W210)	E 240 (210.062)	125	08/00 – 03/02	3863	
E-CLASS (W210)	E 250 D (210.010)	83	06/95 – 07/99	3677	3676
E-CLASS (W210)	E 250 Turbo-D (210.015)	110	06/97 – 07/99	3677	3676
E-CLASS (W210)	E 270 CDI	120	07/99 – 03/02	3821	
E-CLASS (W210)	E 270 CDI	120	07/99 – 03/02	3863	
E-CLASS (W210)	E 270 CDI (210.016)	125	07/99 – 03/02	3821	
E-CLASS (W210)	E 270 CDI (210.016)	125	07/99 – 03/02	3863	
E-CLASS (W210)	E 280 (210.053)	142	01/96 – 06/97	3821	3581
E-CLASS (W210)	E 280 (210.053)	142	01/96 – 06/97	3863	
E-CLASS (W210)	E 280 (210.063)	150	12/96 – 03/02	3821	3581
E-CLASS (W210)	E 280 (210.063)	150	12/96 – 03/02	3863	
E-CLASS (W210)	E 280 4-matic (210.081)	150	12/96 – 03/02	3821	3581
E-CLASS (W210)	E 280 4-matic (210.081)	150	12/96 – 03/02	3863	
E-CLASS (W210)	E 290 Turbo-D (210.017)	95	03/96 – 07/99	3677	3676
E-CLASS (W210)	E 300 D (210.020)	100	06/95 – 06/97	3677	3676
E-CLASS (W210)	E 300 Turbo-D (210.025)	130	12/96 – 07/99	3821	3581
E-CLASS (W210)	E 300 Turbo-D (210.025)	130	12/96 – 07/99	3863	
E-CLASS (W210)	E 320 (210.055)	162	06/95 – 06/97	3821	3581
E-CLASS (W210)	E 320 (210.055)	162	06/95 – 06/97	3863	
E-CLASS (W210)	E 320 (210.065)	165	06/97 – 03/02	3821	3581
E-CLASS (W210)	E 320 (210.065)	165	06/97 – 03/02	3863	
E-CLASS (W210)	E 320 4-matic (210.082)	165	06/97 – 03/02	3821	3581

MAKE & MODEL		KW	YEAR		
MERCEDES BENZ					
E-CLASS (W210)	E 320 4-matic (210.082)	165	06/97 – 03/02	3863	
E-CLASS (W210)	E 320 CDI (210.026)	145	07/99 – 03/02	3821	3581
E-CLASS (W210)	E 320 CDI (210.026)	145	07/99 – 03/02	3863	
E-CLASS (W210)	E 420 (210.072)	205	01/96 – 06/97	3629	3581
E-CLASS (W210)	E 420 (210.072)	205	01/96 – 06/97	3821	
E-CLASS (W210)	E 420 (210.072)	205	01/96 – 06/97	3863	
E-CLASS (W210)	E 430 (210.070)	205	06/97 – 03/02	3629	3581
E-CLASS (W210)	E 430 (210.070)	205	06/97 – 03/02	3821	
E-CLASS (W210)	E 430 (210.070)	205	06/97 – 03/02	3863	
E-CLASS (W210)	E 430 4-matic (210.083)	205	05/99 – 03/02	3821	3581
E-CLASS (W210)	E 50 AMG (210.072)	255	02/96 – 08/97	3629	3581
E-CLASS (W210)	E 55 AMG (210.074)	260	08/97 – 03/02		3581
E-CLASS (W210)	E 55 AMG 4-matic (210.074)	260	03/01 – 03/02		3581
E-CLASS (W211)	E 200 CDI (211.004)	75	07/02 – 12/08	4097	
E-CLASS (W211)	E 200 CDI (211.004)	90	07/02 – 12/08	4097	
E-CLASS (W211)	E 200 CDI (211.007)	100	04/06 – 12/08	4097	
E-CLASS (W211)	E 200 Kompressor (211.041)	135	04/06 – 12/08	4097	
E-CLASS (W211)	E 200 Kompressor (211.042)	120	11/02 – 12/08	4097	
E-CLASS (W211)	E 200 NGT (211.041)	120	03/04 – 12/08	4097	
E-CLASS (W211)	E 220 CDI	120	03/03 – 12/08	4097	
E-CLASS (W211)	E 220 CDI (211.006)	100	03/02 – 12/08	4097	
E-CLASS (W211)	E 220 CDI (211.006)	110	03/02 – 12/08	4097	
E-CLASS (W211)	E 220 CDI (211.008)	125	04/06 – 12/08	4097	
E-CLASS (W211)	E 230 (211.052)	150	09/07 – 12/08	4097	
E-CLASS (W211)	E 230 (211.052)	150	09/07 – 12/08	4102	
E-CLASS (W211)	E 240 (211.061)	130	03/02 – 12/08	4097	
E-CLASS (W211)	E 240 4-matic (211.080)	130	03/03 – 12/08	4210	
E-CLASS (W211)	E 270 CDI (211.016)	120	03/02 – 12/08	4097	
E-CLASS (W211)	E 270 CDI (211.016)	130	03/02 – 12/08	4097	
E-CLASS (W211)	E 280 (211.054)	170	03/05 – 12/08	4097	
E-CLASS (W211)	E 280 (211.054)	170	03/05 – 12/08	4102	
E-CLASS (W211)	E 280 4-matic (211.092)	170	01/06 – 12/08	4210	
E-CLASS (W211)	E 280 CDI (211.020)	140	03/05 – 12/08	4097	
E-CLASS (W211)	E 280 CDI (211.020)	140	03/05 – 12/08	4102	
E-CLASS (W211)	E 280 CDI (211.023)	130	05/04 – 12/08	4097	
E-CLASS (W211)	E 280 CDI (211.023)	130	05/04 – 12/08	4102	
E-CLASS (W211)	E 280 CDI 4-matic	140	03/05 – 12/08	4210	
E-CLASS (W211)	E 300 BlueTEC	155	09/07 – 12/08	4097	
E-CLASS (W211)	E 300 BlueTEC	155	09/07 – 12/08	4102	
E-CLASS (W211)	E 320 (211.065)	165	03/02 – 12/08	4097	
E-CLASS (W211)	E 320 (211.065)	165	03/02 – 12/08	4102	
E-CLASS (W211)	E 320 4-matic (211.082)	165	03/03 – 12/08	4210	
E-CLASS (W211)	E 320 CDI (211.022)	165	03/05 – 12/08	4097	
E-CLASS (W211)	E 320 CDI (211.022)	165	03/05 – 12/08	4102	
E-CLASS (W211)	E 320 CDI (211.026)	150	11/02 – 12/08	4097	
E-CLASS (W211)	E 320 CDI (211.026)	150	11/02 – 12/08	4102	
E-CLASS (W211)	E 320 CDI 4-matic	165	03/05 – 12/08	4210	
E-CLASS (W211)	E 350 (211.056)	200	03/05 – 12/08	4097	
E-CLASS (W211)	E 350 (211.056)	200	03/05 – 12/08	4102	
E-CLASS (W211)	E 350 4-matic	205	08/04 – 08/06	4210	
E-CLASS (W211)	E 350 4-matic (211.087)	200	03/05 – 12/08	4210	
E-CLASS (W211)	E 350 CGI (211.057)	215	09/07 – 12/08	4097	
E-CLASS (W211)	E 350 CGI (211.057)	215	09/07 – 12/08	4102	
E-CLASS (W211)	E 400 CDI (211.028)	191	02/03 – 12/08	4102	
E-CLASS (W211)	E 420 CDI (211.029)	231	01/06 – 12/08	4240	
E-CLASS (W211)	E 500 (211.070)	225	03/02 – 12/08	4102	
E-CLASS (W211)	E 500 (211.072)	285	04/06 – 12/08	4102	
E-CLASS (W211)	E 500 (211.072)	285	04/06 – 12/08	4240	
E-CLASS (W211)	E 500 4-matic (211.083)	225	10/03 – 12/08	4210	
E-CLASS (W211)	E 500 4-matic (211.090)	285	04/06 – 12/08	4210	
E-CLASS (W212)	E 200 (212.034)	135	01/13 -	4249	
E-CLASS (W212)	E 200 CDI / BlueTEC (212.005,212.006)	100	01/09 -	4248	
E-CLASS (W212)	E 200 CDI / BlueTEC (212.005,212.006)	100	01/09 -	4249	
E-CLASS (W212)	E 200 CGI (212.048, 212.148)	135	08/09 -	4249	
E-CLASS (W212)	E 200 NGT (212.035)	115	07/13 -	4249	
E-CLASS (W212)	E 200 NGT (212.041)	120	03/11 -	4248	
E-CLASS (W212)	E 220 BlueTEC (212.001)	130	05/14 -	4248	
E-CLASS (W212)	E 220 BlueTEC 4-matic (212.011)	125	01/15 -	4249	
E-CLASS (W212)	E 220 CDI	120	01/09 -	4249	
E-CLASS (W212)	E 220 CDI / BlueTEC (212.001, 212.002)	125	01/09 -	4249	
E-CLASS (W212)	E 250 (212.036)	155	01/13 -	4249	
E-CLASS (W212)	E 250 CDI / BlueTEC (212.003, 212.004)	150	01/09 -	4249	
E-CLASS (W212)	E 250 CDI / BlueTEC 4-matic (212.082, 212.097)	150	01/09 -	4249	
E-CLASS (W212)	E 250 CGI (212.047, 212.147)	150	01/09 -	4249	
E-CLASS (W212)	E 300 (212.054)	170	01/09 -	4249	
E-CLASS (W212)	E 300 (212.055)	185	07/11 -	4249	

MAKE & MODEL		KW	YEAR		
MERCEDES BENZ					
E-CLASS (W212)	E 300 4-matic (212.080)	185	07/11 -	4249	
E-CLASS (W212)	E 300 CDI (212.020)	150	12/09 – 12/10	4249	
E-CLASS (W212)	E 300 CDI / BlueTEC (212.020, 212.021, 212.027)	170	03/11 -	4249	
E-CLASS (W212)	E 300 Hybrid / BlueTEC Hybrid (212.098)	150	12/11 -	4249	
E-CLASS (W212)	E 350 (212.056)	200	01/09 -	4249	
E-CLASS (W212)	E 350 (212.059)	225	09/11 -	4249	
E-CLASS (W212)	E 350 4-matic (212.087)	200	01/09 – 08/11	4249	
E-CLASS (W212)	E 350 4-matic (212.088)	225	09/11 -	4249	
E-CLASS (W212)	E 350 BlueTEC	185	11/12 -	4249	
E-CLASS (W212)	E 350 BlueTEC (212.024)	155	01/09 -	4249	
E-CLASS (W212)	E 350 BlueTEC (212.026)	190	05/14 -	4249	
E-CLASS (W212)	E 350 BlueTEC 4-matic (212.094)	185	11/12 -	4249	
E-CLASS (W212)	E 350 BlueTEC 4-matic (212.094)	190	05/14 -	4249	
E-CLASS (W212)	E 350 CDI (212.023)	195	03/11 -	4249	
E-CLASS (W212)	E 350 CDI (212.025)	170	01/09 -	4249	
E-CLASS (W212)	E 350 CDI 4-matic (212.089)	170	09/09 -	4249	
E-CLASS (W212)	E 350 CDI 4-matic (212.093)	195	03/11 -	4249	
E-CLASS (W212)	E 350 CGI (212.057)	215	01/09 – 08/11	4249	
E-CLASS (W212)	E 400 4-matic (212.099)	245	07/14 -	4249	
E-CLASS (W212)	E 400 Hybrid (212.095)	245	05/15 -	4249	
E-CLASS Convertible (A124)	E 200 (124.060)	100	06/93 – 03/98	3408	
E-CLASS Convertible (A124)	E 220 (124.062)	110	06/93 – 03/98	3408	
E-CLASS Convertible (A124)	E 320 (124.066)	162	06/93 – 03/98	3628	
E-CLASS Convertible (A124)	E 320 (124.066)	162	06/93 – 03/98	3629	
E-CLASS Convertible (A124)	E 36 AMG (124.066)	200	05/94 – 03/98	3628	3581
E-CLASS Convertible (A124)	E 36 AMG (124.066)	200	05/94 – 03/98	3821	
E-CLASS Convertible (A207)	E 200 (207.434)	135	03/13 -	4248	
E-CLASS Convertible (A207)	E 200 (207.434)	135	03/13 -	4249	
E-CLASS Convertible (A207)	E 200 CGI (207.448)	135	01/10 -	4248	
E-CLASS Convertible (A207)	E 200 CGI (207.448)	135	01/10 -	4249	
E-CLASS Convertible (A207)	E 220 BlueTEC (207.401)	130	05/14 -	4248	
E-CLASS Convertible (A207)	E 220 BlueTEC (207.401)	130	05/14 -	4249	
E-CLASS Convertible (A207)	E 220 CDI (207.402)	120	02/10 -	4248	
E-CLASS Convertible (A207)	E 220 CDI (207.402)	120	02/10 -	4249	
E-CLASS Convertible (A207)	E 220 CDI / BlueTEC / d (207.402, 207.401)	125	01/10 -	4248	
E-CLASS Convertible (A207)	E 220 CDI / BlueTEC / d (207.402, 207.401)	125	01/10 -	4249	
E-CLASS Convertible (A207)	E 250 (207.436)	155	06/13 -	4249	
E-CLASS Convertible (A207)	E 250 CDI / BlueTEC / d (207.403, 207.404)	150	01/10 -	4249	
E-CLASS Convertible (A207)	E 250 CGI (207.447)	150	01/10 -	4248	
E-CLASS Convertible (A207)	E 250 CGI (207.447)	150	01/10 -	4249	
E-CLASS Convertible (A207)	E 300 (207.455)	185	04/11 -	4249	
E-CLASS Convertible (A207)	E 320 (207.462)	200	07/14 -	4249	
E-CLASS Convertible (A207)	E 350 (207.459)	225	04/11 -	4249	
E-CLASS Convertible (A207)	E 350 BlueTEC (207.426)	185	06/13 -	4249	
E-CLASS Convertible (A207)	E 350 BlueTEC/ d (207.426)	190	05/14 -	4249	
E-CLASS Convertible (A207)	E 350 CDI	195	04/11 -	4249	
E-CLASS Convertible (A207)	E 350 CDI (207.422)	170	01/10 -	4249	
E-CLASS Convertible (A207)	E 350 CGI (207.457)	215	01/10 -	4249	
E-CLASS Convertible (A207)	E 400 (207.461)	245	07/14 -	4249	
E-CLASS Convertible (A207)	E 400 (207.465)	245	06/13 -	4249	
E-CLASS Convertible (A207)	E 500 (207.472)	285	01/10 -	4249	
E-CLASS Convertible (A207)	E 500 (207.473)	300	09/11 -	4249	
E-CLASS Coupe (C124)	E 200 (124.040)	100	06/93 – 06/97	3408	3550
E-CLASS Coupe (C124)	E 200 (124.040)	100	06/93 – 06/97		3630
E-CLASS Coupe (C124)	E 200 (124.040)	100	06/93 – 06/97		3663
E-CLASS Coupe (C124)	E 220 (124.042)	110	06/93 – 06/97	3408	3550
E-CLASS Coupe (C124)	E 220 (124.042)	110	06/93 – 06/97		3630
E-CLASS Coupe (C124)	E 220 (124.042)	110	06/93 – 06/97		3663
E-CLASS Coupe (C124)	E 320 (124.052)	162	06/93 – 06/97	3628	3676
E-CLASS Coupe (C124)	E 320 (124.052)	162	06/93 – 06/97	3629	
E-CLASS Coupe (C124)	E 36 AMG (124.052)	195	06/93 – 04/95	3628	3581
E-CLASS Coupe (C124)	E 36 AMG (124.052)	200	05/94 – 06/97	3628	3581
E-CLASS Coupe (C124)	E 36 AMG (124.052)	200	05/94 – 06/97	3821	
E-CLASS Coupe (C207)	E 200 (207.334)	135	06/13 -	4248	
E-CLASS Coupe (C207)	E 200 (207.334)	135	06/13 -	4249	
E-CLASS Coupe (C207)	E 200 CGI (207.348)	135	01/10 -	4248	
E-CLASS Coupe (C207)	E 200 CGI (207.348)	135	01/10 -	4249	
E-CLASS Coupe (C207)	E 220 BlueTEC (207.301)	130	05/14 -	4248	
E-CLASS Coupe (C207)	E 220 BlueTEC (207.301)	130	05/14 -	4249	
E-CLASS Coupe (C207)	E 220 CDI	120	07/14 -	4248	
E-CLASS Coupe (C207)	E 220 CDI	120	07/14 -	4249	
E-CLASS Coupe (C207)	E 220 CDI / d (207.302)	125	01/10 -	4248	
E-CLASS Coupe (C207)	E 220 CDI / d (207.302)	125	01/10 -	4249	
E-CLASS Coupe (C207)	E 250 (207.336)	155	06/13 -	4249	
E-CLASS Coupe (C207)	E 250 CDI / d (207.303)	150	01/09 -	4249	
E-CLASS Coupe (C207)	E 250 CGI (207.347)	150	01/09 -	4248	

MAKE & MODEL   		KW	YEAR		
MERCEDES BENZ					
E-CLASS Coupe (C207)	E 250 CGI (207.347)	150	01/09 -	4249	
E-CLASS Coupe (C207)	E 300 (207.355)	185	04/11 -	4249	
E-CLASS Coupe (C207)	E 320 (207.362)	200	07/14 -	4249	
E-CLASS Coupe (C207)	E 350 (207.356)	200	05/11 -	4249	
E-CLASS Coupe (C207)	E 350 (207.356)	225	04/11 -	4249	
E-CLASS Coupe (C207)	E 350 4-matic (207.388)	225	02/13 -	4249	
E-CLASS Coupe (C207)	E 350 BlueTEC	185	03/13 -	4249	
E-CLASS Coupe (C207)	E 350 BlueTEC / d (207.326)	190	05/14 -	4249	
E-CLASS Coupe (C207)	E 350 CDI	195	04/11 -	4249	
E-CLASS Coupe (C207)	E 350 CDI (207.322)	170	01/09 -	4249	
E-CLASS Coupe (C207)	E 350 CGI (207.357)	215	01/09 -	4249	
E-CLASS Coupe (C207)	E 400	245	06/13 -	4249	
E-CLASS Coupe (C207)	E 400 (207.361)	245	07/14 -	4249	
E-CLASS Coupe (C207)	E 500 (207.372)	285	01/09 -	4249	
E-CLASS Coupe (C207)	E 500 (207.373)	300	09/11 -	4249	
E-CLASS Estate (S124)	E 200 T (124.079)	100	06/93 – 06/96	3408	3676
E-CLASS Estate (S124)	E 220 T (124.082)	110	06/93 – 06/96	3408	3676
E-CLASS Estate (S124)	E 250 TD (124.186)	83	06/93 – 06/96	3408	3676
E-CLASS Estate (S124)	E 250 Turbo D	93	06/93 – 06/96	3408	
E-CLASS Estate (S124)	E 280 T (124.088)	142	06/93 – 06/96	3408	3676
E-CLASS Estate (S124)	E 280 T (124.088)	142	06/93 – 06/96	3629	
E-CLASS Estate (S124)	E 280 T (124.088)	145	06/93 – 06/96	3408	3676
E-CLASS Estate (S124)	E 280 T (124.088)	145	06/93 – 06/96	3629	
E-CLASS Estate (S124)	E 300 T 4-matic (124.290)	132	06/93 – 06/96	3408	3676
E-CLASS Estate (S124)	E 300 T Turbo-D (124.193)	108	06/93 – 06/96	3408	3676
E-CLASS Estate (S124)	E 300 T Turbo-D 4-matic (124.393)	108	06/93 – 06/96	3408	3676
E-CLASS Estate (S124)	E 300 TD (124.191)	100	06/93 – 06/96	3408	3676
E-CLASS Estate (S124)	E 300 TE-24 AMG (124.091)	162	06/93 – 06/96	3628	3676
E-CLASS Estate (S124)	E 300 TE-24 AMG (124.091)	162	06/93 – 06/96	3629	
E-CLASS Estate (S124)	E 320 T (124.092)	162	06/93 – 06/96	3628	3676
E-CLASS Estate (S124)	E 320 T (124.092)	162	06/93 – 06/96	3629	
E-CLASS Estate (S124)	E 36 T AMG (124.092)	200	05/94 – 06/96	3628	3581
E-CLASS Estate (S210)	E 200 T (210.235)	100	06/96 – 08/00	3677	3581
E-CLASS Estate (S210)	E 200 T Kompressor (210.245)	137	06/97 – 03/03	3863	3581
E-CLASS Estate (S210)	E 200 T Kompressor (210.248)	120	08/00 – 03/03	3677	3581
E-CLASS Estate (S210)	E 220 T CDI (210.206)	92	06/98 – 07/99	3677	3581
E-CLASS Estate (S210)	E 220 T CDI (210.206)	92	06/98 – 07/99	3863	
E-CLASS Estate (S210)	E 220 T CDI (210.206)	100	05/99 – 03/03	3677	3581
E-CLASS Estate (S210)	E 220 T CDI (210.206)	100	05/99 – 03/03	3863	
E-CLASS Estate (S210)	E 220 T CDI (210.206)	105	07/99 – 03/03	3677	3581
E-CLASS Estate (S210)	E 220 T CDI (210.206)	105	07/99 – 03/03	3863	
E-CLASS Estate (S210)	E 230 T (210.237)	110	06/96 – 06/97	3677	3581
E-CLASS Estate (S210)	E 240 T (210.261)	125	06/97 – 03/03	3677	3581
E-CLASS Estate (S210)	E 240 T (210.261)	125	06/97 – 03/03	3863	
E-CLASS Estate (S210)	E 240 T (210.262)	125	08/00 – 03/03	3677	3581
E-CLASS Estate (S210)	E 240 T (210.262)	125	08/00 – 03/03	3863	
E-CLASS Estate (S210)	E 250 T D (210.210)	83	06/96 – 07/99	3677	3581
E-CLASS Estate (S210)	E 250 T D (210.210)	83	06/96 – 07/99	3863	
E-CLASS Estate (S210)	E 250 T Turbo-D (210.215)	110	06/97 – 07/99	3677	3581
E-CLASS Estate (S210)	E 270 T CDI	120	02/00 – 03/03	3821	3581
E-CLASS Estate (S210)	E 270 T CDI	120	02/00 – 03/03	3863	
E-CLASS Estate (S210)	E 270 T CDI (210.216)	125	07/99 – 03/03	3821	3581
E-CLASS Estate (S210)	E 270 T CDI (210.216)	125	07/99 – 03/03	3863	
E-CLASS Estate (S210)	E 280 T (210.263)	150	12/96 – 03/03	3863	3581
E-CLASS Estate (S210)	E 280 T 4-matic (210.281)	150	12/96 – 03/03	3863	3581
E-CLASS Estate (S210)	E 290 T Turbo-D (210.217)	95	06/96 – 07/99	3677	3581
E-CLASS Estate (S210)	E 290 T Turbo-D (210.217)	95	06/96 – 07/99	3863	
E-CLASS Estate (S210)	E 300 T Turbo-D (210.225)	130	12/96 – 07/99	3821	3581
E-CLASS Estate (S210)	E 300 T Turbo-D (210.225)	130	12/96 – 07/99	3863	
E-CLASS Estate (S210)	E 320 T (210.265)	165	12/96 – 03/03	3863	3581
E-CLASS Estate (S210)	E 320 T 4-matic (210.282)	165	12/96 – 03/03	3863	3581
E-CLASS Estate (S210)	E 320 T CDI (210.226)	145	07/99 – 03/03	3821	3581
E-CLASS Estate (S210)	E 320 T CDI (210.226)	145	07/99 – 03/03	3863	
E-CLASS Estate (S210)	E 420 T (210.272)	205	06/96 – 06/97	3629	3581
E-CLASS Estate (S210)	E 420 T (210.272)	205	06/96 – 06/97	3863	
E-CLASS Estate (S210)	E 430 T (210.270)	205	06/97 – 03/03	3629	3581
E-CLASS Estate (S210)	E 430 T (210.270)	205	06/97 – 03/03	3863	
E-CLASS Estate (S210)	E 430 T 4-matic (210.283)	205	05/99 – 03/03		3581
E-CLASS Estate (S210)	E 55 T AMG (210.274)	260	08/97 – 03/03		3581
E-CLASS Estate (S210)	E 55 T AMG 4-matic (210.283)	260	03/01 – 03/03		3581
E-CLASS T-Model (S211)	350 CGI (211.257)	215	05/06 – 07/09	4102	
E-CLASS T-Model (S211)	350 CGI (211.257)	215	05/06 – 07/09	4097	
E-CLASS T-Model (S211)	E 200 CDI (211.207)	100	04/06 – 07/09	4097	
E-CLASS T-Model (S211)	E 200 CDI (211.207)	100	04/06 – 07/09	4102	
E-CLASS T-Model (S211)	E 200 Kompressor (211.241)	135	04/06 – 07/09	4097	
E-CLASS T-Model (S211)	E 200 Kompressor (211.241)	135	04/06 – 07/09	4102	

BESER®

MAKE & MODEL		KW	YEAR		
MERCEDES BENZ					
E-CLASS T-Model (S211)	E 200 T Kompressor (211.242)	120	03/03 – 07/09	4097	
E-CLASS T-Model (S211)	E 200 T Kompressor (211.242)	120	03/03 – 07/09	4102	
E-CLASS T-Model (S211)	E 220 CDI (211.206)	100	03/03 – 07/09	4097	
E-CLASS T-Model (S211)	E 220 CDI (211.206)	100	03/03 – 07/09	4102	
E-CLASS T-Model (S211)	E 220 T CDI	120	03/03 – 07/09	4097	
E-CLASS T-Model (S211)	E 220 T CDI (211.206)	110	03/03 – 07/09	4097	
E-CLASS T-Model (S211)	E 220 T CDI (211.208)	125	04/06 – 07/09	4097	
E-CLASS T-Model (S211)	E 230 T (211.252)	150	05/07 – 07/09	4097	
E-CLASS T-Model (S211)	E 230 T (211.252)	150	05/07 – 07/09	4102	
E-CLASS T-Model (S211)	E 240 T (211.261)	130	03/03 – 07/09	4097	
E-CLASS T-Model (S211)	E 240 T 4-matic (211.280)	130	07/03 – 07/09	4210	
E-CLASS T-Model (S211)	E 270 T CDI (211.216)	120	03/03 – 07/09	4097	
E-CLASS T-Model (S211)	E 270 T CDI (211.216)	130	03/03 – 07/09	4097	
E-CLASS T-Model (S211)	E 280 T (211.254)	170	03/05 – 07/09	4102	
E-CLASS T-Model (S211)	E 280 T 4-matic (211.292)	170	03/05 – 07/09	4210	
E-CLASS T-Model (S211)	E 280 T CDI (211.220)	140	03/05 – 07/09	4097	
E-CLASS T-Model (S211)	E 280 T CDI (211.220)	140	03/05 – 07/09	4102	
E-CLASS T-Model (S211)	E 280 T CDI (211.223)	130	05/04 – 07/09	4097	
E-CLASS T-Model (S211)	E 280 T CDI (211.223)	130	05/04 – 07/09	4102	
E-CLASS T-Model (S211)	E 280 T CDI 4-matic (211.284)	140	03/05 – 07/09	4210	
E-CLASS T-Model (S211)	E 320 T (211.265)	165	03/03 – 07/09	4097	
E-CLASS T-Model (S211)	E 320 T (211.265)	165	03/03 – 07/09	4102	
E-CLASS T-Model (S211)	E 320 T 4-matic (211.282)	165	07/03 – 07/09	4210	
E-CLASS T-Model (S211)	E 320 T CDI (211.222)	165	03/05 – 07/09	4097	
E-CLASS T-Model (S211)	E 320 T CDI (211.222)	165	03/05 – 07/09	4102	
E-CLASS T-Model (S211)	E 320 T CDI (211.226)	150	03/03 – 07/09	4097	
E-CLASS T-Model (S211)	E 320 T CDI (211.226)	150	03/03 – 07/09	4102	
E-CLASS T-Model (S211)	E 320 T CDI 4-matic (211.289)	165	03/05 – 07/09	4210	
E-CLASS T-Model (S211)	E 350 T (211.256)	200	03/05 – 07/09	4097	
E-CLASS T-Model (S211)	E 350 T (211.256)	200	03/05 – 07/09	4102	
E-CLASS T-Model (S211)	E 350 T 4-matic (211.287)	200	03/05 – 07/09	4210	
E-CLASS T-Model (S211)	E 500 T (211.270)	225	10/03 – 07/09	4102	
E-CLASS T-Model (S211)	E 500 T (211.272)	285	04/06 – 07/09	4102	
E-CLASS T-Model (S211)	E 500 T (211.272)	285	04/06 – 07/09	4240	
E-CLASS T-Model (S211)	E 500 T 4-matic (211.283)	225	10/03 – 07/09	4210	
E-CLASS T-Model (S211)	E 500 T 4-matic (211.290)	285	04/06 – 07/09	4210	
E-CLASS T-Model (S212)	E 200 (212.234)	135	11/12 -	4249	
E-CLASS T-Model (S212)	E 200 CDI / BlueTEC (212.205,212.206)	100	11/09 -	4248	
E-CLASS T-Model (S212)	E 200 CDI / BlueTEC (212.205,212.206)	100	11/09 -	4249	
E-CLASS T-Model (S212)	E 200 CGI (212.248)	135	11/09 -	4249	
E-CLASS T-Model (S212)	E 220 BlueTEC	130	05/15 -	4249	
E-CLASS T-Model (S212)	E 220 BlueTEC 4-matic (212.211)	125	12/14 -	4249	
E-CLASS T-Model (S212)	E 220 CDI (212.202)	120	08/09 -	4249	
E-CLASS T-Model (S212)	E 220 CDI / BlueTEC (212.202, 212.201)	125	11/09 -	4249	
E-CLASS T-Model (S212)	E 250 (212.236)	155	11/12 -	4249	
E-CLASS T-Model (S212)	E 250 CDI / BlueTEC (212.203, 212.204)	150	11/09 -	4249	
E-CLASS T-Model (S212)	E 250 CDI / BlueTEC 4-matic (212.282, 212.297)	150	07/10 -	4249	
E-CLASS T-Model (S212)	E 250 CGI (212.247)	150	11/09 -	4249	
E-CLASS T-Model (S212)	E 300 (212.254)	170	11/09 -	4249	
E-CLASS T-Model (S212)	E 300 (212.255)	185	07/11 -	4249	
E-CLASS T-Model (S212)	E 300 4-matic (212.280)	185	07/11 -	4249	
E-CLASS T-Model (S212)	E 300 CDI (212.220)	150	12/09 – 12/10	4249	
E-CLASS T-Model (S212)	E 300 CDI / BlueTEC (212.227,212.221)	170	11/09 -	4249	
E-CLASS T-Model (S212)	E 300 Hybrid / BlueTEC Hybrid	150	12/11 -	4249	
E-CLASS T-Model (S212)	E 350 (212.256)	200	08/09 -	4249	
E-CLASS T-Model (S212)	E 350 (212.259)	225	09/11 -	4249	
E-CLASS T-Model (S212)	E 350 4-matic (212.287)	200	11/09 -	4249	
E-CLASS T-Model (S212)	E 350 4-matic (212.288, 212.287)	225	09/11 -	4249	
E-CLASS T-Model (S212)	E 350 BlueTEC	185	11/12 -	4249	
E-CLASS T-Model (S212)	E 350 BlueTEC (212.224)	155	11/09 -	4249	
E-CLASS T-Model (S212)	E 350 BlueTEC (212.226)	190	07/14 -	4249	
E-CLASS T-Model (S212)	E 350 BlueTEC 4-matic	185	11/12 -	4249	
E-CLASS T-Model (S212)	E 350 BlueTEC 4-matic (212.294)	190	07/14 -	4249	
E-CLASS T-Model (S212)	E 350 CDI (212.223)	195	07/11 -	4249	
E-CLASS T-Model (S212)	E 350 CDI (212.225)	170	11/09 -	4249	
E-CLASS T-Model (S212)	E 350 CDI 4-matic (212.289)	170	11/09 -	4249	
E-CLASS T-Model (S212)	E 350 CDI 4-matic (212.293)	195	07/11 -	4249	
E-CLASS T-Model (S212)	E 350 CGI (212.257)	215	11/09 -	4249	
G-CLASS (W460)	230 G (460,2)	66	03/79 – 07/93	3513	
G-CLASS (W460)	230 G (460,2)	75	02/80 – 07/87	3513	
G-CLASS (W460)	230 GE (460,2)	90	05/87 – 08/92	3513	
G-CLASS (W460)	230 GE (460,2)	92	04/82 – 08/92	3513	
G-CLASS (W460)	240 GD (460,3)	53	03/79 – 08/87	3513	
G-CLASS (W460)	250 GD (460,3)	62	10/87 – 12/92	3513	
G-CLASS (W460)	250 GD (460,3)	68	12/88 – 08/92	3513	
G-CLASS (W460)	280 GE (460,2)	110	08/84 – 08/89	3513	

MAKE & MODEL		KW	YEAR		
MERCEDES BENZ					
G-CLASS (W460)	280 GE (460,2)	115	11/79 – 08/89	3513	
G-CLASS (W460)	300 GD (460,3)	65	12/79 – 12/91	3513	
G-CLASS (W460)	300 GD (460.3)	83	03/79 – 07/93	3513	
G-CLASS (W461)	230 GE (461)	92	06/93 -	3513	
G-CLASS (W461)	230 GE (461.238, 461.239)	90	02/93 -	3513	
G-CLASS (W461)	250 GD (461)	68	02/90 -	3513	
G-CLASS (W461)	290 GD/G 290 D (461.337,461.338)	70	04/92 -	3513	
G-CLASS (W461)	G 270 CDI	115	01/03 -	3513	3804
G-CLASS (W461)	G 280 CDI	135	04/09 -	3513	3804
G-CLASS (W461)	G 290 TD (461.335, 461.336)	88	07/97 -	3513	3804
G-CLASS (W461)	G 300 CDI	135	04/10 -	3513	3804
G-Class (W463)	2.7 G 270 CDI (OM 612.965)	115	10/01 -	3670	
G-Class (W463)	200 GE (463.220)	85	01/90 – 07/93	3513	
G-Class (W463)	230 GE (463.224, 463.225)	93	06/90 – 06/93	3513	3804
G-Class (W463)	250 GD (463.324, 463.325)	69	06/90 -	3513	
G-Class (W463)	250 GD (463.324, 463.325)	69	06/90 – 10/92	3670	3804
G-Class (W463)	3.0 300 GD (OM 603.931)	83	12/90 – 09/97	3670	
G-Class (W463)	3.0 G 320 CDI (OM 642.970)	165	09/06 -	3670	
G-Class (W463)	3.0 G 350 CDI (OM 642.886)	155	07/11 -	3670	
G-Class (W463)	3.2 320 GE (M 104.996)	155	09/94 – 11/97	3670	
G-Class (W463)	3.2 G 320 (M 104.996)	155	09/94 – 12/97	3670	
G-Class (W463)	3.2 G 320 (M 112.945)	158	07/97 -	3670	
G-Class (W463)	3.2 G 320 (M 112.945)	158	11/97 -	3670	
G-Class (W463)	300 GD (463.327, 463.328)	83	09/89 -	3513	
G-Class (W463)	300 GD (463.327, 463.328)	83	09/89 – 06/93	3670	3804
G-Class (W463)	300 GE (463.227, 463.228)	125	09/89 – 08/93	3513	3804
G-Class (W463)	300 GE (463.227, 463.228)	128	06/90 -	3513	
G-Class (W463)	300 GE (463.227, 463.228)	128	06/90 – 08/97	3670	3804
G-Class (W463)	350 Turbo GD (463.320,463.321)	100	09/91 – 08/96	3513	3804
G-CLASS (W463)	4.0 G 400 CDI (OM 628.962)	184	12/00 -	3670	
G-CLASS (W463)	4.9 G 500 E (M 117.965)	177	09/93 -	3670	
G-CLASS (W463)	5.0 G 500 (M 113.962)	218	04/98 -	3670	
G-CLASS (W463)	5.4 G 55 AMG (M 113.993)	350	06/04 -	3670	
G-CLASS (W463)	5.4 G 55 AMG (M 113.993)	368	08/06 -	3670	
G-CLASS (W463)	5.5 G 500 (M 273.963)	285	12/09 -	3670	
G-CLASS (W463)	5.5 G 55 AMG (M 113.982)	260	04/99 -	3670	
G-CLASS (W463)	AMG G 63 (463.272)	420	06/15 -	3513	
G-CLASS (W463)	AMG G 65 (463.274)	463	06/15 -	3513	
G-CLASS (W463)	G 270 CDI (463.322, 463.323)	115	10/01 -	3513	3804
G-CLASS (W463)	G 300 TD (463.308) (OM 606.964)	130	09/96 – 07/00	3670	
G-CLASS (W463)	G 300 TD (463.330, 463.331)	130	08/96 – 07/00	3513	3804
G-CLASS (W463)	G 300 TD (463.330, 463.331) (OM 606.964)	130	08/96 – 07/00	3670	
G-CLASS (W463)	G 320 (463.230, 463.231)	155	09/94 – 12/97	3513	3804
G-CLASS (W463)	G 320 (463.232, 463.233,463.244, 463.245)	158	07/97 -	3513	3804
G-CLASS (W463)	G 320 CDI (463.340, 463.341,463.343)	165	09/06 -	3513	3804
G-CLASS (W463)	G 350 CDI	155	07/11 -	3513	3804
G-CLASS (W463)	G 350 d (463.348)	180	06/15 -	3513	3804
G-CLASS (W463)	G 36 AMG (463.230)	200	01/95 – 07/98	3513	3804
G-CLASS (W463)	G 36 AMG (463.230) (M 104.996 (AMG 3,6))	200	01/95 – 07/98	3670	
G-CLASS (W463)	G 400 CDI (463.332, 463.333)	184	12/00 -	3513	3804
G-CLASS (W463)	G 500	285	05/08 -	3513	3804
G-CLASS (W463)	G 500 (463.234)	310	06/15 -	3513	3804
G-CLASS (W463)	G 500 (463.247, 463.248,463.249, 463.240, 463.241)	200	04/98 -	3513	3804
G-CLASS (W463)	G 500 E (463.228)	177	09/93 -	3513	3804
G-CLASS (W463)	G 55 AMG (463.243, 463.246)	260	04/99 -	3513	3804
G-CLASS (W463)	G 55 AMG (463.270, 463.271)	350	06/04 -	3513	3804
G-CLASS (W463)	G 55 AMG (463.270, 463.271)	350	06/04 -	4210	
G-CLASS (W463)	G 55 AMG (463.270, 463.271)	368	08/06 -	3513	3804
G-CLASS (W463)	G 55 AMG (463.270, 463.271)	368	08/06 -	4210	
G-CLASS (W463)	G 55 AMG (463.270, 463.271)	373	08/08 -	3513	3804
G-CLASS (W463)	G 55 AMG (463.270, 463.271)	373	08/08 -	4210	
G-CLASS (W463)	G 63 AMG (463.273)	400	05/12 -	3513	3804
G-CLASS (W463)	G 63 AMG (463.273)	400	05/12 -	4210	
G-CLASS (W463)	G 63 AMG 6x6	400	12/14 -	3513	
G-CLASS (W463)	G 65 AMG	450	05/12 -	3513	
G-Class (W463) Closed SUV (Luxury Crossover SUV-J Segment)	300 GE (463.227, 463.228) (M 103.987)	125	09/89 – 08/93	3670	
G-Class (W463) Open SUV (Luxury Crossover SUV-J Segment)	3.0 300 GE (M 103.987)	125	09/89 – 09/97	3670	
G-CLASS Cabrio (W463)	200 GE (463.200)	80	01/90 – 07/93	3513	3804
G-CLASS Cabrio (W463)	200 GE (463.200)	85	01/90 – 07/93	3513	
G-CLASS Cabrio (W463)	230 GE (463.204)	93	06/90 – 02/93	3513	3804
G-CLASS Cabrio (W463)	300 GD (463.307)	83	12/90 – 09/97	3513	3804
G-CLASS Cabrio (W463)	300 GE (463.207)	125	09/89 – 09/97	3513	3804
G-CLASS Cabrio (W463)	320 GE (463.208)	155	09/94 – 11/97	3513	3804
G-CLASS Cabrio (W463)	350 G Turbo-D (463.300)	100	09/91 – 09/97	3513	3804
G-CLASS Cabrio (W463)	G 300 TD (463.308)	130	09/96 – 07/00	3513	3804
G-CLASS Cabrio (W463)	G 320 (463.209)	158	11/97 -	3513	3804

MAKE & MODEL   		KW	YEAR		
MERCEDES BENZ					
G-CLASS Cabrio (W463)	G 320 CDI (463.303)	165	09/06 -	3513	3804
G-CLASS Cabrio (W463)	G 350 CDI	155	07/11 -	3513	3804
G-CLASS Cabrio (W463)	G 400 CDI (463.309)	184	12/00 -	3513	3804
G-CLASS Cabrio (W463)	G 500	285	12/09 -	3513	3804
G-CLASS Cabrio (W463)	G 500 (463)	218	04/98 -	3513	3804
GL-CLASS (X164)	GL 320 CDI / 350 BlueTEC 4-matic (164.824, 164.825)	155	12/09 -	4210	
GL-CLASS (X164)	GL 320 CDI 4-matic (164.822)	165	09/06 – 05/09	4210	
GL-CLASS (X164)	GL 350 CDI 4-matic (164.822)	165	05/09 -	4210	
GL-CLASS (X164)	GL 350 CDI 4-matic (164.823)	195	10/10 -	4210	
HENSCHEL 2-t	206 D 2.2	44	02/73 – 12/77	3513	
HENSCHEL 2-t	207 1.8	51	02/73 – 12/77	3513	
KOMBI Estate (S123)	200 T	80	11/80 – 11/85	3339	
KOMBI Estate (S123)	200 T	80	11/80 – 11/85	3514	
KOMBI Estate (S123)	200 T (123.280)	74	11/80 – 11/85	3339	
KOMBI Estate (S123)	200 T (123.280)	74	11/80 – 11/85	3514	
KOMBI Estate (S123)	230 T (123.083)	80	09/77 – 03/80	3315	
KOMBI Estate (S123)	230 T (123.083)	80	09/77 – 03/80	3339	
KOMBI Estate (S123)	230 T (123.083)	80	09/77 – 03/80	3514	
KOMBI Estate (S123)	230 T (123.083)	80	09/77 – 03/80	3515	
KOMBI Estate (S123)	230 TE (123.283)	100	04/80 – 11/85	3339	
KOMBI Estate (S123)	230 TE (123.283)	100	04/80 – 11/85	3514	
KOMBI Estate (S123)	240 T D	48	09/77 – 02/79	3315	
KOMBI Estate (S123)	240 T D	48	09/77 – 02/79	3515	
KOMBI Estate (S123)	240 T D (123.183)	53	03/79 – 12/85	3315	
KOMBI Estate (S123)	240 T D (123.183)	53	03/79 – 12/85	3339	
KOMBI Estate (S123)	240 T D (123.183)	53	03/79 – 12/85	3514	
KOMBI Estate (S123)	240 T D (123.183)	53	03/79 – 12/85	3515	
KOMBI Estate (S123)	250 T (123.086)	95	05/78 – 10/79	3315	
KOMBI Estate (S123)	250 T (123.086)	95	05/78 – 10/79	3339	
KOMBI Estate (S123)	250 T (123.086)	95	05/78 – 10/79	3514	
KOMBI Estate (S123)	250 T (123.086)	95	05/78 – 10/79	3515	
KOMBI Estate (S123)	250 T (123.086)	103	05/78 – 08/82	3315	
KOMBI Estate (S123)	250 T (123.086)	103	05/78 – 08/82	3339	
KOMBI Estate (S123)	250 T (123.086)	103	05/78 – 08/82	3514	
KOMBI Estate (S123)	250 T (123.086)	103	05/78 – 08/82	3515	
KOMBI Estate (S123)	280 TE (123.093)	136	09/77 – 11/85	3315	
KOMBI Estate (S123)	280 TE (123.093)	136	09/77 – 11/85	3339	
KOMBI Estate (S123)	280 TE (123.093)	136	09/77 – 11/85	3514	
KOMBI Estate (S123)	280 TE (123.093)	136	09/77 – 11/85	3515	
KOMBI Estate (S123)	300 T D (123.190)	59	09/77 – 10/85	3315	
KOMBI Estate (S123)	300 T D (123.190)	59	09/77 – 10/85	3339	
KOMBI Estate (S123)	300 T D (123.190)	59	09/77 – 10/85	3514	
KOMBI Estate (S123)	300 T D (123.190)	59	09/77 – 10/85	3515	
KOMBI Estate (S123)	300 T D (123.190)	65	03/79 – 11/85	3315	
KOMBI Estate (S123)	300 T D (123.190)	65	03/79 – 11/85	3339	
KOMBI Estate (S123)	300 T D (123.190)	65	03/79 – 11/85	3514	
KOMBI Estate (S123)	300 T D (123.190)	65	03/79 – 11/85	3515	
KOMBI Estate (S123)	300 T Turbo-D (123.193)	92	10/80 – 11/85	3339	
KOMBI Estate (S123)	300 T Turbo-D (123.193)	92	10/80 – 11/85	3514	
KOMBI Estate (S124)	200 E	77	11/92 – 05/93	3408	
KOMBI Estate (S124)	200 T (124.080)	77	01/86 – 05/90	3408	
KOMBI Estate (S124)	200 T (124.080)	80	09/85 – 08/89	3408	
KOMBI Estate (S124)	200 T D (124.180)	53	09/85 – 08/91	3408	
KOMBI Estate (S124)	200 T D (124.180)	55	09/88 – 08/91	3408	
KOMBI Estate (S124)	200 TE	90	09/88 – 12/89	3408	
KOMBI Estate (S124)	200 TE (124.079)	100	05/86 – 06/93	3408	
KOMBI Estate (S124)	200 TE (124.081)	87	09/88 – 08/92	3408	
KOMBI Estate (S124)	220 TE (124.082)	110	10/92 – 05/93	3408	
KOMBI Estate (S124)	230 TE (124.083)	97	09/85 – 08/92	3408	
KOMBI Estate (S124)	230 TE (124.083)	100	09/85 – 08/92	3408	
KOMBI Estate (S124)	230 TE (124.083) CAT	97	06/89 – 08/92	3408	
KOMBI Estate (S124)	250 T D (124.185)	66	09/85 – 06/93	3408	
KOMBI Estate (S124)	250 T D (124.185)	69	01/89 – 06/93	3408	
KOMBI Estate (S124)	250 TD Turbo (124.188)	93	03/88 – 07/93	3408	
KOMBI Estate (S124)	260 TE FGST.	118	09/89 – 08/92	3408	
KOMBI Estate (S124)	260 TE FGST.	122	09/85 – 12/89	3408	
KOMBI Estate (S124)	280 TE (124.088)	145	10/92 – 06/93	3408	
KOMBI Estate (S124)	280 TE (124.088)	145	10/92 – 06/93	3629	
KOMBI Estate (S124)	300 T D (124.190)	80	09/86 – 06/93	3408	
KOMBI Estate (S124)	300 T D (124.190)	81	01/89 – 06/93	3408	
KOMBI Estate (S124)	300 T D (124.190)	83	01/89 – 06/93	3408	
KOMBI Estate (S124)	300 T Turbo-D	105	09/86 – 01/89	3408	
KOMBI Estate (S124)	300 T Turbo-D (124.193)	108	01/89 – 06/93	3408	
KOMBI Estate (S124)	300 T Turbo-D 4-matic (124.393)	105	09/86 – 01/89	3408	
KOMBI Estate (S124)	300 T Turbo-D 4-matic (124.393)	108	01/89 – 06/93	3408	
KOMBI Estate (S124)	300 TD T	100	06/92 – 05/93	3408	

BESER®

MAKE & MODEL   		KW	YEAR		
MERCEDES BENZ					
KOMBI Estate (S124)	300 TE (124.090)	132	01/86 – 08/92	3408	
KOMBI Estate (S124)	300 TE (124.090)	138	01/86 – 12/89	3408	
KOMBI Estate (S124)	300 TE 4-matic (124.290)	132	09/86 – 06/93	3408	
KOMBI Estate (S124)	300 TE 4-matic (124.290)	138	09/86 – 12/89	3408	
KOMBI Estate (S124)	300 TE-24 (124.091)	162	09/89 – 08/92	3629	
KOMBI Estate (S124)	300 TE-24 (124.091)	170	09/89 – 08/92	3628	
KOMBI Estate (S124)	300 TE-24 (124.091)	170	09/89 – 08/92	3629	
KOMBI Estate (S124)	320 TE (124.092)	162	10/92 – 06/93	3628	
KOMBI Estate (S124)	320 TE (124.092)	162	10/92 – 06/93	3629	
M-CLASS (W163)	ML 230 (163.136)	110	02/98 – 06/05	4126	4069
M-CLASS (W163)	ML 230 (163.136)	110	02/98 – 06/05		4103
M-CLASS (W163)	ML 270 CDI (163.113)	120	12/99 – 06/05	4126	4103
M-CLASS (W163)	ML 320 (163.154)	160	02/98 – 08/02	4126	4069
M-CLASS (W163)	ML 320 (163.154)	160	02/98 – 08/02		4103
M-CLASS (W163)	ML 350 (163.157)	180	08/02 – 06/05		4103
M-CLASS (W163)	ML 350 4-matic	173	02/03 – 06/05	4126	4103
M-CLASS (W163)	ML 400 CDI (163.128)	184	09/01 – 06/05		4103
M-CLASS (W163)	ML 430 (163.172)	200	02/98 – 06/05	4126	4103
M-CLASS (W163)	ML 500 (163.175)	215	09/01 – 06/05		4103
M-CLASS (W163)	ML 55 AMG (163.174)	255	02/00 – 06/05		4103
M-CLASS (W164)	ML 280 CDI 4-matic (164.120)	140	07/05 – 07/09	4210	
M-CLASS (W164)	ML 300 CDI 4-matic (164.120)	140	07/09 – 12/11	4210	
M-CLASS (W164)	ML 300 CDI 4-matic (164.121)	150	02/10 – 12/11	4210	
M-CLASS (W164)	ML 320 CDI 4-matic (164.122)	165	07/05 – 07/09	4210	
M-CLASS (W164)	ML 350 4-matic (164.186)	200	07/05 – 12/11	4210	
M-CLASS (W164)	ML 350 CDI 4-matic	155	09/09 – 12/11	4210	
M-CLASS (W164)	ML 350 CDI 4-matic (164.122)	165	07/09 – 12/11	4210	
M-CLASS (W164)	ML 350 CDI 4-matic (164.125)	170	02/10 – 12/11	4210	
M-CLASS (W164)	ML 420 CDI 4-matic (164.128)	225	02/06 – 09/09	4210	
M-CLASS (W164)	ML 450 CDI 4-matic (164.128)	225	09/09 – 12/11	4210	
M-CLASS (W164)	ML 500 4-matic (164.172)	285	12/07 – 12/11	4210	
M-CLASS (W164)	ML 500 4-matic (164.175)	225	07/05 – 12/11	4210	
O 100	City	70	01/94 -	3689	
PAGODE (W113)	230 SL (113.042)	110	01/63 – 01/67	3455	
PAGODE (W113)	230 SL (113.042)	110	01/63 – 01/67	3471	
PAGODE (W113)	250 SL (113.043)	110	01/66 – 01/68	3318	
PAGODE (W113)	250 SL (113.043)	110	01/66 – 01/68	3320	
PAGODE (W113)	250 SL (113.043)	110	01/66 – 01/68	3350	
PAGODE (W113)	280 SL (113.044)	125	01/68 – 03/71	3318	
PAGODE (W113)	280 SL (113.044)	125	01/68 – 03/71	3320	
PAGODE (W113)	280 SL (113.044)	125	01/68 – 03/71	3350	
R-CLASS (W251, V251)	R 280 (251.054, 251.154)	170	01/07 -	4210	
R-CLASS (W251, V251)	R 280 4-matic (251.062)	170	05/07 -	4210	
R-CLASS (W251, V251)	R 280 CDI (251.121, 251.026,251.126)	140	05/06 -	4210	
R-CLASS (W251, V251)	R 280 CDI 4-matic (251.020)	140	05/06 -	4210	
R-CLASS (W251, V251)	R 300 (251.054, 251.154)	170	07/09 -	4210	
R-CLASS (W251, V251)	R 300 CDI (251.021, 251.121,251.026, 251.126)	140	07/09 -	4210	
R-CLASS (W251, V251)	R 300 CDI 4-matic (251.020)	140	07/09 -	4210	
R-CLASS (W251, V251)	R 320 CDI 4-matic (251.022, 251.122)	165	01/06 -	4210	
R-CLASS (W251, V251)	R 320 CDI 4-matic (251.125)	155	01/06 -	4210	
R-CLASS (W251, V251)	R 350 (251.056, 251.156)	200	01/07 -	4210	
R-CLASS (W251, V251)	R 350 4-matic (251.065,251.165)	200	01/06 -	4210	
R-CLASS (W251, V251)	R 350 CDI 4-matic (251.022, 251.122)	165	07/09 -	4210	
R-CLASS (W251, V251)	R 350 CDI 4-matic (251.023, 251.123)	195	08/10 -	4210	
R-CLASS (W251, V251)	R 350 CDI 4-matic (251.124, 251.125)	155	01/06 -	4210	
R-CLASS (W251, V251)	R 350 CGI 4-matic (251.057, 251.157)	225	01/06 -	4210	
R-CLASS (W251, V251)	R 500 4-matic (251.072, 251.172)	285	01/07 -	4210	
R-CLASS (W251, V251)	R 500 4-matic (251.075, 251.175)	225	01/06 -	4210	
Saloon (W123)	200	62	02/76 – 08/80	3315	
Saloon (W123)	200	62	02/76 – 08/80	3339	
Saloon (W123)	200	62	02/76 – 08/80	3514	
Saloon (W123)	200	62	02/76 – 08/80	3515	
Saloon (W123)	200	74	06/80 – 11/85	3339	
Saloon (W123)	200	74	06/80 – 11/85	3514	
Saloon (W123)	200 (123.020)	69	02/76 – 08/80	3315	
Saloon (W123)	200 (123.020)	69	02/76 – 08/80	3339	
Saloon (W123)	200 (123.020)	69	02/76 – 08/80	3514	
Saloon (W123)	200 (123.020)	69	02/76 – 08/80	3515	
Saloon (W123)	200 (123.220)	80	06/80 – 11/85	3339	
Saloon (W123)	200 (123.220)	80	06/80 – 11/85	3514	
Saloon (W123)	200 D	44	03/79 – 11/85	3315	
Saloon (W123)	200 D	44	03/79 – 11/85	3339	
Saloon (W123)	200 D	44	03/79 – 11/85	3514	
Saloon (W123)	200 D	44	03/79 – 11/85	3515	
Saloon (W123)	200 D (123.120)	40	07/76 – 02/79	3315	
Saloon (W123)	200 D (123.120)	40	07/76 – 02/79	3515	

MAKE & MODEL   		KW	YEAR		
MERCEDES BENZ					
Saloon (W123)	220 D	49	01/77 – 03/79	3315	
Saloon (W123)	220 D	49	01/77 – 03/79	3515	
Saloon (W123)	220 D (123.126)	44	01/76 – 02/79	3315	
Saloon (W123)	220 D (123.126)	44	01/76 – 02/79	3515	
Saloon (W123)	230 (123.023)	80	02/76 – 03/81	3315	
Saloon (W123)	230 (123.023)	80	02/76 – 03/81	3339	
Saloon (W123)	230 (123.023)	80	02/76 – 03/81	3514	
Saloon (W123)	230 (123.023)	80	02/76 – 03/81	3515	
Saloon (W123)	230 E (123.223)	100	04/80 – 12/85	3339	
Saloon (W123)	230 E (123.223)	100	04/80 – 12/85	3514	
Saloon (W123)	240 D (123.123)	48	02/76 – 02/79	3315	
Saloon (W123)	240 D (123.123)	48	02/76 – 02/79	3515	
Saloon (W123)	240 D (123.123)	53	03/79 – 11/85	3315	
Saloon (W123)	240 D (123.123)	53	03/79 – 11/85	3339	
Saloon (W123)	240 D (123.123)	53	03/79 – 11/85	3514	
Saloon (W123)	240 D (123.123)	53	03/79 – 11/85	3515	
Saloon (W123)	250 (123.026)	95	02/76 – 10/79	3315	
Saloon (W123)	250 (123.026)	95	02/76 – 10/79	3339	
Saloon (W123)	250 (123.026)	95	02/76 – 10/79	3514	
Saloon (W123)	250 (123.026)	95	02/76 – 10/79	3515	
Saloon (W123)	250 (123.026)	103	10/79 – 07/85	3339	
Saloon (W123)	250 (123.026)	103	10/79 – 07/85	3514	
Saloon (W123)	280 (123.030)	115	02/76 – 08/81	3315	
Saloon (W123)	280 (123.030)	115	02/76 – 08/81	3339	
Saloon (W123)	280 (123.030)	115	02/76 – 08/81	3514	
Saloon (W123)	280 (123.030)	115	02/76 – 08/81	3515	
Saloon (W123)	280 E	130	08/76 – 08/81	3315	
Saloon (W123)	280 E	130	08/76 – 08/81	3339	
Saloon (W123)	280 E	130	08/76 – 08/81	3514	
Saloon (W123)	280 E	130	08/76 – 08/81	3515	
Saloon (W123)	280 E (123.033)	136	02/76 – 11/85	3315	
Saloon (W123)	280 E (123.033)	136	02/76 – 11/85	3339	
Saloon (W123)	280 E (123.033)	136	02/76 – 11/85	3514	
Saloon (W123)	280 E (123.033)	136	02/76 – 11/85	3515	
Saloon (W123)	300 D (123.130)	59	02/76 – 07/80	3315	
Saloon (W123)	300 D (123.130)	59	02/76 – 07/80	3339	
Saloon (W123)	300 D (123.130)	59	02/76 – 07/80	3514	
Saloon (W123)	300 D (123.130)	59	02/76 – 07/80	3515	
Saloon (W123)	300 D (123.130)	65	03/79 – 11/85	3315	
Saloon (W123)	300 D (123.130)	65	03/79 – 11/85	3339	
Saloon (W123)	300 D (123.130)	65	03/79 – 11/85	3514	
Saloon (W123)	300 D (123.130)	65	03/79 – 11/85	3515	
Saloon (W123)	300 D (123.130)	65	03/79 – 11/85	3515	
Saloon (W123)	300 Turbo-D (123.133)	92	08/81 – 07/85	3339	
Saloon (W123)	300 Turbo-D (123.133)	92	08/81 – 07/85	3514	
Saloon (W124)	200	77	01/86 – 05/90	3408	3550
Saloon (W124)	200	77	01/86 – 05/90		3630
Saloon (W124)	200 (124.020)	75	01/86 – 05/90	3408	3550
Saloon (W124)	200 (124.020)	75	01/86 – 05/90		3630
Saloon (W124)	200 (124.020)	80	12/85 – 05/90	3408	3550
Saloon (W124)	200 (124.020)	80	12/85 – 05/90		3630
Saloon (W124)	200 D (124.120)	53	12/84 – 08/89	3408	3550
Saloon (W124)	200 D (124.120)	55	08/89 – 06/93	3408	3550
Saloon (W124)	200 D (124.120)	55	08/89 – 06/93		3630
Saloon (W124)	200 E	77	11/92 – 05/93	3408	3550
Saloon (W124)	200 E	77	11/92 – 05/93		3630
Saloon (W124)	200 E (124.019)	100	10/92 – 06/93	3408	3550
Saloon (W124)	200 E (124.019)	100	10/92 – 06/93		3630
Saloon (W124)	200 E (124.021)	87	09/88 – 08/92	3408	3550
Saloon (W124)	200 E (124.021)	87	09/88 – 08/92		3630
Saloon (W124)	200 E (124.021)	90	09/88 – 12/89	3408	3550
Saloon (W124)	220 E (124.022)	110	10/92 – 06/93	3408	3550
Saloon (W124)	220 E (124.022)	110	10/92 – 06/93		3630
Saloon (W124)	230 E (124.023)	97	12/84 – 03/92	3408	3550
Saloon (W124)	230 E (124.023)	97	12/84 – 03/92		3630
Saloon (W124)	230 E (124.023)	100	01/85 – 06/93	3408	3550
Saloon (W124)	230 E (124.023)	100	01/85 – 06/93	3408	3630
Saloon (W124)	230 E (124.023) CAT	97	06/89 – 06/93		3550
Saloon (W124)	230 E (124.023) CAT	97	06/89 – 06/93		3630
Saloon (W124)	250 D (124.125)	66	04/85 – 06/93	3408	3550
Saloon (W124)	250 D (124.125)	69	01/89 – 06/93	3408	3550
Saloon (W124)	250 Turbo-D (124.128)	93	09/88 – 06/93	3408	3550
Saloon (W124)	260 E (124.026)	118	09/85 – 08/92	3408	3550
Saloon (W124)	260 E (124.026)	118	09/85 – 08/92		3630
Saloon (W124)	260 E (124.026)	122	09/85 – 12/89	3408	3550
Saloon (W124)	260 E 4-matic (124.226)	118	09/86 – 08/92	3408	3550

MAKE & MODEL		KW	YEAR		
MERCEDES BENZ					
Saloon (W124)	260 E 4-matic (124.226)	118	09/86 – 08/92		3630
Saloon (W124)	260 E 4-matic (124.226)	122	12/86 – 12/89	3408	3550
Saloon (W124)	280 E (124.028)	145	10/92 – 06/93	3408	3550
Saloon (W124)	280 E (124.028)	145	10/92 – 06/93	3629	3630
Saloon (W124)	280 E (124.028)	145	10/92 – 06/93	3628	
Saloon (W124)	300 AMG (124.031)	265	09/88 – 06/93	3628	
Saloon (W124)	300 D (124.130)	80	12/84 – 08/89	3408	3550
Saloon (W124)	300 D (124.130)	81	06/90 – 06/93	3408	3550
Saloon (W124)	300 D (124.130)	83	08/89 – 06/93	3408	3550
Saloon (W124)	300 D 4-matic (124.330)	80	09/86 – 08/92	3408	3550
Saloon (W124)	300 D 4-matic (124.330)	80	09/86 – 08/92		3630
Saloon (W124)	300 D 4-matic (124.330)	83	08/89 – 06/93	3408	3550
Saloon (W124)	300 D 4-matic (124.330)	83	08/89 – 06/93		3630
Saloon (W124)	300 E	138	06/85 – 08/92	3408	3550
Saloon (W124)	300 E	138	06/85 – 08/92		3550
Saloon (W124)	300 E	138	06/85 – 08/92		3630
Saloon (W124)	300 E (124.030)	132	08/85 – 08/92	3408	3550
Saloon (W124)	300 E (124.030)	132	08/85 – 08/92		3630
Saloon (W124)	300 E 4-matic	138	09/86 – 02/92	3408	3550
Saloon (W124)	300 E 4-matic	138	09/86 – 02/92		3630
Saloon (W124)	300 E 4-matic (124.230)	132	09/86 – 06/93	3408	3550
Saloon (W124)	300 E 4-matic (124.230)	132	09/86 – 06/93		3630
Saloon (W124)	300 E-24 (124.031)	162	09/88 – 08/92	3629	
Saloon (W124)	300 E-24 (124.031)	170	09/88 – 08/92	3629	
Saloon (W124)	300 TD SD	110	06/91 – 05/93	3408	3550
Saloon (W124)	300 Turbo-D (124.133)	105	09/86 – 09/88	3408	3550
Saloon (W124)	300 Turbo-D (124.133)	108	09/88 – 06/93	3408	3550
Saloon (W124)	300 Turbo-D 4-matic (124.333)	105	09/86 – 09/88	3408	3550
Saloon (W124)	300 Turbo-D 4-matic (124.333)	108	01/88 – 06/93	3408	3550
Saloon (W124)	300 Turbo-D 4-matic (124.333)	108	01/88 – 06/93		3630
Saloon (W124)	320 E (124.032)	162	10/92 – 06/93	3628	
Saloon (W124)	320 E (124.032)	162	10/92 – 06/93	3629	
Saloon (W124)	400 E 4.2 (124.034)	205	10/92 – 06/93	3628	
Saloon (W124)	400 E 4.2 (124.034)	205	10/92 – 06/93	3629	
Saloon (W124)	500 E (124.036)	240	01/91 – 06/93	3629	
Saloon (W124)	500 E AMG 6.0 (124.036)	275	01/92 – 06/93	3628	
S-Class III (W140)	2.8 S 280 (M 104.944)	142	02/93 – 10/98	3626	
S-Class III (W140)	3.4 S 350 Turbo-D (OM 603.971)	110	01/93 – 10/98	3626	
S-Class III (W140)	300 SE, SEL/S320 (140.032, 140.033)	170	03/91 – 10/98	3626	
S-CLASS (W116)	280 S (116.020)	115	08/72 – 07/80	3315	
S-CLASS (W116)	280 S (116.020)	115	08/72 – 07/80	3515	
S-CLASS (W116)	280 S (116.020)	118	08/72 – 07/80	3315	
S-CLASS (W116)	280 S (116.020)	118	08/72 – 07/80	3515	
S-CLASS (W116)	280 SE,SEL (116.024)	130	08/72 – 07/80	3315	
S-CLASS (W116)	280 SE,SEL (116.024)	130	08/72 – 07/80	3515	
S-CLASS (W116)	280 SE,SEL (116.024)	136	08/72 – 07/80	3315	
S-CLASS (W116)	280 SE,SEL (116.024)	136	08/72 – 07/80	3515	
S-CLASS (W116)	350 SE,SEL (116.028,116.029)	143	03/76 – 03/80	3515	
S-CLASS (W116)	350 SE,SEL (116.028,116.029)	147	08/72 – 02/76	3515	
S-CLASS (W116)	350 SE,SEL (116.028,116.029)	151	03/76 – 03/80	3515	
S-CLASS (W116)	450 SE	143	08/72 – 12/76	3315	
S-CLASS (W116)	450 SE	143	08/72 – 12/76	3515	
S-CLASS (W116)	450 SE,SEL (116.032)	165	01/73 – 04/80	3315	
S-CLASS (W116)	450 SE,SEL (116.032)	165	01/73 – 04/80	3515	
S-CLASS (W116)	450 SE,SEL (116.033)	160	12/75 – 04/80	3315	
S-CLASS (W116)	450 SE,SEL (116.033)	160	12/75 – 04/80	3515	
S-CLASS (W116)	450 SEL 6.9 (116.036)	210	07/75 – 03/80	3315	
S-CLASS (W116)	450 SEL 6.9 (116.036)	210	07/75 – 03/80	3515	
S-CLASS (W126)	260 SE (126.020)	118	09/85 – 06/91	3339	
S-CLASS (W126)	260 SE (126.020)	118	09/85 – 06/91	3514	
S-CLASS (W126)	260 SE (126.020)	122	09/85 – 06/91	3339	
S-CLASS (W126)	260 SE (126.020)	122	09/85 – 06/91	3514	
S-CLASS (W126)	280 S (126.021)	115	12/79 – 07/85	3339	
S-CLASS (W126)	280 S (126.021)	115	12/79 – 07/85	3514	
S-CLASS (W126)	280 SE, SEL (126.022,126.023)	136	10/79 – 07/85	3339	
S-CLASS (W126)	280 SE, SEL (126.022,126.023)	136	10/79 – 07/85	3514	
S-CLASS (W126)	3.8	160	08/80 – 08/84	3514	
S-CLASS (W126)	300 SE, SEL (126.024,126.025)	132	01/86 – 06/91	3339	
S-CLASS (W126)	300 SE, SEL (126.024,126.025)	132	01/86 – 06/91	3514	
S-CLASS (W126)	300 SE, SEL (126.024,126.025)	138	09/85 – 12/89	3339	
S-CLASS (W126)	300 SE, SEL (126.024,126.025)	138	09/85 – 12/89	3514	
S-CLASS (W126)	380 SE, SEL (126.032)	150	10/81 – 08/85	3339	
S-CLASS (W126)	380 SE, SEL (126.032)	150	10/81 – 08/85	3514	
S-CLASS (W126)	380 SE, SEL (126.032)	160	09/80 – 10/81	3339	
S-CLASS (W126)	380 SE, SEL (126.032)	160	09/80 – 10/81	3514	
S-CLASS (W126)	420 SE, SEL	165	10/85 – 06/91	3339	

MAKE & MODEL		KW	YEAR		
MERCEDES BENZ					
S-CLASS (W126)	420 SE, SEL	165	10/85 – 06/91	3514	
S-CLASS (W126)	420 SE, SEL	170	10/85 – 12/87	3339	
S-CLASS (W126)	420 SE, SEL	170	10/85 – 12/87	3514	
S-CLASS (W126)	420 SE, SEL (126.034)	160	10/85 – 12/87	3339	
S-CLASS (W126)	420 SE, SEL (126.034)	160	10/85 – 12/87	3514	
S-CLASS (W126)	420 SE, SEL (126.034,126.035)	150	10/85 – 06/91	3339	
S-CLASS (W126)	420 SE, SEL (126.034,126.035)	150	10/85 – 06/91	3514	
S-CLASS (W126)	500 SE, SEL	185	09/87 – 06/91	3339	
S-CLASS (W126)	500 SE, SEL	185	09/87 – 06/91	3514	
S-CLASS (W126)	500 SE, SEL	195	09/87 – 06/91	3339	
S-CLASS (W126)	500 SE, SEL	195	09/87 – 06/91	3514	
S-CLASS (W126)	500 SE, SEL (126.036)	164	09/85 – 06/91	3339	
S-CLASS (W126)	500 SE, SEL (126.036)	164	09/85 – 06/91	3514	
S-CLASS (W126)	500 SE, SEL (126.036)	170	12/79 – 08/85	3339	
S-CLASS (W126)	500 SE, SEL (126.036)	170	12/79 – 08/85	3514	
S-CLASS (W126)	500 SE, SEL (126.036)	177	12/79 – 08/85	3339	
S-CLASS (W126)	500 SE, SEL (126.036)	177	12/79 – 08/85	3514	
S-CLASS (W126)	500 SE, SEL (126.036)	180	09/85 – 06/91	3339	
S-CLASS (W126)	500 SE, SEL (126.036)	180	09/85 – 06/91	3514	
S-CLASS (W126)	500 SE, SEL CAT	185	06/89 – 06/91	3339	
S-CLASS (W126)	500 SE, SEL CAT	185	06/89 – 06/91	3514	
S-CLASS (W126)	560 SE, SEL	205	08/87 – 06/91	3339	
S-CLASS (W126)	560 SE, SEL	205	08/87 – 06/91	3514	
S-CLASS (W126)	560 SE, SEL	220	10/85 – 06/91	3339	
S-CLASS (W126)	560 SE, SEL	220	10/85 – 06/91	3514	
S-CLASS (W126)	560 SE, SEL (126.038)	200	10/85 – 12/87	3339	
S-CLASS (W126)	560 SE, SEL (126.038)	200	10/85 – 12/87	3514	
S-CLASS (W126)	560 SE, SEL (126.038,126.039)	178	10/85 – 06/91	3339	
S-CLASS (W126)	560 SE, SEL (126.038,126.039)	178	10/85 – 06/91	3514	
S-CLASS (W140)	300 SE 2.8 (140.028)	145	01/93 – 10/98	3627	3581
S-CLASS (W140)	300 SE, SEL/S320 (140.032,140.033)	170	03/91 – 10/98	3627	3581
S-CLASS (W140)	400 SE, SEL/S420 (140.042,140.043)	210	02/91 – 10/98	3627	3581
S-CLASS (W140)	500 SE, SEL (140.050,140.051)	240	02/91 – 10/98	3627	3581
S-CLASS (W140)	600 SE, SEL (140.056,140.057)	300	04/91 – 12/92	3627	3581
S-CLASS (W140)	S 280 (140.028)	142	02/93 – 10/98	3627	3581
S-CLASS (W140)	S 300 Turbo-D (140.135)	130	05/96 – 10/98	3627	3581
S-CLASS (W140)	S 350 Turbo-D (140.134)	110	01/93 – 10/98	3627	3581
S-CLASS (W140)	S 420 (140.042)	205	01/93 – 10/98	3627	3581
S-CLASS (W140)	S 500 (140.050, 140.051)	235	01/93 – 10/98	3627	3581
S-CLASS (W140)	S 600 (140.056, 140.057)	290	01/93 – 10/98	3627	3581
S-CLASS (W220)	S 280 (220.063, 220.163)	150	10/98 – 08/05		4101
S-CLASS (W220)	S 280 (220.063, 220.163)	150	10/98 – 08/05		4209
S-CLASS (W220)	S 320 (220.065, 220.165)	165	10/98 – 08/05		4101
S-CLASS (W220)	S 320 (220.065, 220.165)	165	10/98 – 08/05		4209
S-CLASS (W220)	S 320 CDI (220.026, 220.126)	145	08/99 – 09/02		4101
S-CLASS (W220)	S 320 CDI (220.026, 220.126)	145	08/99 – 09/02		4209
S-CLASS (W220)	S 350 4-matic (220.087,220.187)	180	06/03 – 08/05	3863	
S-CLASS (W220)	S 400 CDI (220.028, 220.128)	184	06/00 – 08/05		4101
S-CLASS (W220)	S 400 CDI (220.028, 220.128)	184	06/00 – 08/05		4209
S-CLASS (W220)	S 430 (220.070, 220.170)	205	10/98 – 08/05		4101
S-CLASS (W220)	S 430 (220.070, 220.170)	205	10/98 – 08/05		4209
S-CLASS (W220)	S 500 (220.075, 220.175,220.875)	225	10/98 – 08/05		3581
S-CLASS (W220)	S 500 (220.075, 220.175,220.875)	225	10/98 – 08/05		4101
S-CLASS (W220)	S 500 (220.075, 220.175,220.875)	225	10/98 – 08/05		4209
S-CLASS (W220)	S 600 (220.878, 220.178)	270	01/00 – 08/05		3581
S-CLASS (W221)	S 250 CDI (221.003, 221.103)	150	01/11 – 12/13	4240	
S-CLASS (W221)	S 280 (221.054)	170	08/06 – 12/13	4240	
S-CLASS (W221)	S 300 (221.054)	170	08/06 – 12/13	4240	
S-CLASS (W221)	S 320 CDI	155	10/05 – 12/13	4240	
S-CLASS (W221)	S 320 CDI (221.022, 221.122)	173	12/05 – 06/09	4240	
S-CLASS (W221)	S 320 CDI 4-matic (221.080,221.180)	155	10/05 – 12/13	4240	
S-CLASS (W221)	S 320 CDI 4-matic (221.080,221.180)	173	10/06 – 12/13	4240	
S-CLASS (W221)	S 350 (221.056, 221.156)	200	10/05 – 12/13	4240	
S-CLASS (W221)	S 350 4-matic (221.087,221.187)	200	02/08 – 12/13	4240	
S-CLASS (W221)	S 350 BlueTec (221.026,221.126)	190	04/11 – 12/13	4240	
S-CLASS (W221)	S 350 BlueTEC 4-matic (221.083, 221.183)	190	04/11 – 12/13	4240	
S-CLASS (W221)	S 350 CDI	173	06/09 – 12/13	4240	
S-CLASS (W221)	S 350 CGI (221.057, 221.157)	225	04/11 – 12/13	4240	
S-CLASS (W221)	S 350 CGI 4-matic (221.082,221.182)	225	04/11 – 12/13	4240	
S-CLASS (W221)	S 400 Hybrid (221.095,221.195)	205	01/09 – 12/13	4240	
S-CLASS (W221)	S 420 CDI / S 450 CDI (221.028, 221.128)	235	10/06 – 12/13	4240	
S-CLASS (W221)	S 450 (221.070, 221.170)	250	12/05 – 12/13	4240	
S-CLASS (W221)	S 450 4-matic (221.084,221.184)	250	12/05 – 12/13	4240	
S-CLASS (W221)	S 500 (221.071, 221.171)	285	10/05 – 12/13	4240	
S-CLASS (W221)	S 500 4-matic (221.086,221.186)	285	10/05 – 12/13	4240	
S-CLASS (W221)	S 500 CGI (221.073, 221.173)	320	04/11 – 12/13	4240	

MAKE & MODEL		KW	YEAR		
MERCEDES BENZ					
S-CLASS (W221)	S 500 CGI 4-matic (221.094,221.194)	320	03/11 – 12/13	4240	
S-CLASS (W221)	S 600 (221.176)	380	12/05 – 12/13	4240	
S-CLASS Coupe (C126)	420 SEC (126.046)	150	10/85 – 06/91	3339	
S-CLASS Coupe (C126)	420 SEC (126.046)	150	10/85 – 06/91	3514	
S-CLASS Coupe (C126)	420 SEC (126.046)	160	10/85 – 12/87	3339	
S-CLASS Coupe (C126)	420 SEC (126.046)	160	10/85 – 12/87	3514	
S-CLASS Coupe (C126)	420 SEC (126.046)	165	10/85 – 06/91	3339	
S-CLASS Coupe (C126)	420 SEC (126.046)	165	10/85 – 06/91	3514	
S-CLASS Coupe (C126)	500 SEC (126.044)	164	10/85 – 06/91	3339	
S-CLASS Coupe (C126)	500 SEC (126.044)	164	10/85 – 06/91	3514	
S-CLASS Coupe (C126)	500 SEC (126.044)	180	09/85 – 06/91	3339	
S-CLASS Coupe (C126)	500 SEC (126.044)	180	09/85 – 06/91	3514	
S-CLASS Coupe (C126)	500 SEC (126.044)	185	08/87 – 06/91	3339	
S-CLASS Coupe (C126)	500 SEC (126.044)	185	08/87 – 06/91	3514	
S-CLASS Coupe (C126)	500 SEC (126.044)	195	09/85 – 06/91	3339	
S-CLASS Coupe (C126)	500 SEC (126.044)	195	09/85 – 06/91	3514	
S-CLASS Coupe (C126)	500 SEC CAT	185	06/89 – 06/91	3339	
S-CLASS Coupe (C126)	500 SEC CAT	185	06/89 – 06/91	3514	
S-CLASS Coupe (C126)	560 SEC (126.045)	178	10/85 – 06/91	3339	
S-CLASS Coupe (C126)	560 SEC (126.045)	178	10/85 – 06/91	3514	
S-CLASS Coupe (C126)	560 SEC (126.045)	200	10/85 – 12/87	3339	
S-CLASS Coupe (C126)	560 SEC (126.045)	200	10/85 – 12/87	3514	
S-CLASS Coupe (C126)	560 SEC (126.045)	205	10/85 – 06/91	3339	
S-CLASS Coupe (C126)	560 SEC (126.045)	205	10/85 – 06/91	3514	
S-CLASS Coupe (C126)	560 SEC (126.045)	220	10/85 – 12/89	3339	
S-CLASS Coupe (C126)	560 SEC (126.045)	220	10/85 – 12/89	3514	
S-CLASS Coupe (C140)	SEC/CL 420 (140.063)	205	10/94 – 02/99	3627	3581
S-CLASS Coupe (C140)	SEC/CL 500 (140.070)	235	10/92 – 02/99	3627	3581
S-CLASS Coupe (C140)	SEC/CL 600 (140.076)	290	09/92 – 02/99	3627	3581
S-CLASS Coupe (C215)	CL 500 (215.375)	225	03/99 – 03/06		4101
S-CLASS Coupe (C215)	CL 500 (215.375)	225	03/99 – 03/06		4209
S-CLASS Coupe (C215)	CL 500 (215.375)	225	03/99 – 03/06		4209
S-CLASS Coupe (C215)	CL 55 AMG (215.373)	265	10/99 – 03/06	4102	4101
S-CLASS Coupe (C215)	CL 55 AMG (215.373)	265	10/99 – 03/06		4209
S-CLASS Coupe (C215)	CL 55 AMG Kompressor (215.374)	368	06/02 – 03/06		4101
S-CLASS Coupe (C215)	CL 55 AMG Kompressor (215.374)	368	06/02 – 03/06		4209
S-CLASS Coupe (C215)	CL 600 (215.376)	368	09/02 – 03/06		4101
S-CLASS Coupe (C215)	CL 600 (215.376)	368	09/02 – 03/06		4209
S-CLASS Coupe (C215)	CL 600 (215.378)	270	03/99 – 03/06		4101
S-CLASS Coupe (C215)	CL 600 (215.378)	270	03/99 – 03/06		4209
S-CLASS Coupe (C215)	CL 63 AMG	326	09/01 – 03/06	4102	4101
S-CLASS Coupe (C215)	CL 63 AMG	326	09/01 – 03/06		4209
S-CLASS Coupe (C216)	CL 500 (216.371)	285	06/06 – 12/13	4240	
S-CLASS Coupe (C216)	CL 500 (216.373)	320	02/11 – 12/13	4240	
S-CLASS Coupe (C216)	CL 500 4-matic (216.386)	285	02/08 – 12/13	4240	
S-CLASS Coupe (C216)	CL 500 4-matic (216.394)	320	02/11 – 12/13	4240	
S-CLASS Coupe (C216)	CL 600 (216.376)	380	05/06 – 12/13	4240	
SL (R107)	280 SL (107.042)	130	06/76 – 09/81	3315	
SL (R107)	280 SL (107.042)	130	06/76 – 09/81	3339	
SL (R107)	280 SL (107.042)	130	06/76 – 09/81	3514	
SL (R107)	280 SL (107.042)	130	06/76 – 09/81	3515	
SL (R107)	280 SL (107.042)	136	08/74 – 07/85	3315	
SL (R107)	280 SL (107.042)	136	08/74 – 07/85	3339	
SL (R107)	280 SL (107.042)	136	08/74 – 07/85	3514	
SL (R107)	280 SL (107.042)	136	08/74 – 07/85	3515	
SL (R107)	300 SL (107.041)	132	09/85 – 08/89	3339	
SL (R107)	300 SL (107.041)	132	09/85 – 08/89	3514	
SL (R107)	300 SL (107.041)	138	09/85 – 08/89	3339	
SL (R107)	300 SL (107.041)	138	09/85 – 08/89	3514	
SL (R107)	350 SL (107.043)	143	05/71 – 02/80	3315	
SL (R107)	350 SL (107.043)	143	05/71 – 02/80	3339	
SL (R107)	350 SL (107.043)	143	05/71 – 02/80	3514	
SL (R107)	350 SL (107.043)	143	05/71 – 02/80	3515	
SL (R107)	380 SL (107.045)	150	09/80 – 08/85	3339	
SL (R107)	380 SL (107.045)	150	09/80 – 08/85	3514	
SL (R107)	380 SL (107.045)	160	09/80 – 08/81	3339	
SL (R107)	380 SL (107.045)	160	09/80 – 08/81	3514	
SL (R107)	420 SL (107.047)	150	01/86 – 08/89	3339	
SL (R107)	420 SL (107.047)	150	01/86 – 08/89	3514	
SL (R107)	420 SL (107.047)	160	01/86 – 08/89	3339	
SL (R107)	420 SL (107.047)	160	01/86 – 08/89	3514	
SL (R107)	450 SL (107.044)	160	09/75 – 10/80	3315	
SL (R107)	450 SL (107.044)	160	09/75 – 10/80	3339	
SL (R107)	450 SL (107.044)	160	09/75 – 10/80	3514	
SL (R107)	450 SL (107.044)	160	09/75 – 10/80	3515	
SL (R107)	450 SL (107.044)	165	10/72 – 10/80	3315	

MAKE & MODEL   		KW	YEAR		
MERCEDES BENZ					
SL (R107)	450 SL (107.044)	165	10/72 – 10/80	3339	
SL (R107)	450 SL (107.044)	165	10/72 – 10/80	3514	
SL (R107)	450 SL (107.044)	165	10/72 – 10/80	3515	
SL (R107)	500 SL (107.046)	164	01/86 – 08/89	3339	
SL (R107)	500 SL (107.046)	164	01/86 – 08/89	3514	
SL (R107)	500 SL (107.046)	170	05/80 – 12/85	3339	
SL (R107)	500 SL (107.046)	170	05/80 – 12/85	3514	
SL (R129)	280 (129.058)	142	08/93 – 10/01	3629	3581
SL (R129)	280 (129.059)	150	05/98 – 10/01	3629	3581
SL (R129)	300 SL (129.060)	140	03/89 – 08/93	3629	
SL (R129)	300 SL-24 (129.061)	170	03/89 – 07/93	3629	3581
SL (R129)	320 (129.063)	170	09/93 – 10/01	3629	
SL (R129)	320 (129.064)	165	05/98 – 10/01	3629	3581
SL (R129)	500 (129.067)	235	09/92 – 10/01	3629	3581
SL (R129)	500 (129.068)	225	05/98 – 10/01	3629	3581
SL (R129)	500 SL (107.046)	177	05/80 – 12/81	3339	
SL (R129)	500 SL (107.046)	177	05/80 – 12/81	3514	
SL (R129)	500 SL (107.046)	180	01/86 – 08/89	3339	
SL (R129)	500 SL (107.046)	180	01/86 – 08/89	3514	
SL (R129)	500 SL (129.066)	240	09/89 – 08/92	3629	
SL (R129)	55 AMG	260	03/00 – 10/01	3629	3581
SL (R129)	60 AMG (129.067)	280	05/97 – 10/01	3629	3581
SL (R129)	600 (129.076)	290	07/92 – 10/01	3629	3581
SL (R230)	280	170	03/08 – 01/12	4102	
SL (R230)	280	170	03/08 – 01/12	4240	
SL (R230)	300	170	04/09 – 01/12	4102	
SL (R230)	300	170	04/09 – 01/12	4240	
SL (R230)	350	200	03/06 – 01/12	4102	
SL (R230)	350	200	03/06 – 01/12	4240	
SL (R230)	350	232	04/08 – 01/12	4102	
SL (R230)	350	232	04/08 – 01/12	4240	
SL (R230)	500	285	03/06 – 01/12	4102	
SL (R230)	500	285	03/06 – 01/12	4240	
SL (R230)	600 SL	300	02/92 – 08/94	3629	3581
SL (R230)	SL 73 AMG (129.076)	385	01/99 – 12/01		3581
SL Coupe (C107)	280 SLC (107.022)	130	06/76 – 09/81	3315	
SL Coupe (C107)	280 SLC (107.022)	130	06/76 – 09/81	3339	
SL Coupe (C107)	280 SLC (107.022)	130	06/76 – 09/81	3514	
SL Coupe (C107)	280 SLC (107.022)	130	06/76 – 09/81	3515	
SL Coupe (C107)	280 SLC (107.022)	136	08/74 – 09/81	3315	
SL Coupe (C107)	280 SLC (107.022)	136	08/74 – 09/81	3339	
SL Coupe (C107)	280 SLC (107.022)	136	08/74 – 09/81	3514	
SL Coupe (C107)	280 SLC (107.022)	136	08/74 – 09/81	3515	
SL Coupe (C107)	350 SLC (107.023)	143	03/76 – 02/80	3315	
SL Coupe (C107)	350 SLC (107.023)	143	03/76 – 02/80	3339	
SL Coupe (C107)	350 SLC (107.023)	143	03/76 – 02/80	3514	
SL Coupe (C107)	350 SLC (107.023)	143	03/76 – 02/80	3515	
SL Coupe (C107)	350 SLC (107.023)	147	01/72 – 02/76	3315	
SL Coupe (C107)	350 SLC (107.023)	147	01/72 – 02/76	3515	
SL Coupe (C107)	380 SLC (107.025)	160	07/80 – 08/81	3339	
SL Coupe (C107)	380 SLC (107.025)	160	07/80 – 08/81	3514	
SL Coupe (C107)	450 SLC (107.024)	160	09/75 – 08/79	3315	
SL Coupe (C107)	450 SLC (107.024)	160	09/75 – 08/79	3515	
SL Coupe (C107)	450 SLC (107.024)	165	01/73 – 11/75	3315	
SL Coupe (C107)	450 SLC (107.024)	165	01/73 – 11/75	3515	
SLC (R172)	450 SLC 5.0 (107.026)	177	06/78 – 02/80	3315	
SLC (R172)	450 SLC 5.0 (107.026)	177	06/78 – 02/80	3339	
SLC (R172)	450 SLC 5.0 (107.026)	177	06/78 – 02/80	3514	
SLC (R172)	450 SLC 5.0 (107.026)	177	06/78 – 02/80	3515	
SLC (R172)	450 SLC 5.0 (107.026)	177	06/78 – 02/80	3515	
SLK (R170)	180 (172.431)	115	01/16 -	4249	
SLK (R170)	200 (170.435)	100	09/96 – 03/00	3677	3676
SLK (R170)	200 (172.434)	135	01/16 -	4249	
SLK (R170)	200 Kompressor (170.444)	120	03/00 – 04/04	3677	3676
SLK (R170)	200 Kompressor (170.445)	141	10/96 – 03/00	3677	3676
SLK (R170)	230 Kompressor (170.447)	142	09/96 – 03/00	3677	3676
SLK (R170)	230 Kompressor (170.449)	145	03/00 – 04/04	3677	3676
SLK (R170)	250 d (172.404)	150	01/16 -	4249	
SLK (R170)	300 (172.438)	180	01/16 -	4249	
SLK (R171)	200 Kompressor (171.442)	120	03/04 – 02/11	3821	
SLK (R171)	200 Kompressor (171.442)	120	03/04 – 02/11	3836	
SLK (R171)	200 Kompressor (171.445)	135	01/08 – 02/11	3821	
SLK (R171)	200 Kompressor (171.445)	135	01/08 – 02/11	3836	
SLK (R171)	280 (171.454)	170	01/05 – 02/11	3821	
SLK (R171)	300 (171.454)	170	04/09 – 02/11	3821	
SLK (R171)	32 AMG Kompressor (170.466)	260	03/01 – 04/04		3581

MAKE & MODEL		KW	YEAR		
MERCEDES BENZ					
SLK (R171)	320 (170.465)	160	03/00 – 04/04	3863	3676
SLK (R171)	350 (171.456)	200	06/04 – 02/11	3821	
SLK (R171)	350 (171.456)	200	06/04 – 02/11	4102	
SLK (R171)	350 (171.458)	224	01/08 – 02/11	3821	
SLK (R171)	55 AMG (171.473)	265	06/04 – 02/11	4102	
SLK (R172)	200 (172.434)	135	04/15 -	4249	
SLK (R172)	200 (172.448)	135	02/11 -	4249	
SLK (R172)	55 AMG (171.473)	294	06/06 – 02/11	4102	
SPRINTER 2-t Box	214	105	02/95 – 05/06		3804
SPRINTER 2-t Box	208 CDI	60	04/00 – 05/06		3804
SPRINTER 2-t Box	208 D	58	02/95 – 04/00		3804
SPRINTER 2-t Box	208 D	60	10/96 – 04/00		3804
SPRINTER 2-t Box	210 D	75	01/97 – 04/00		3804
SPRINTER 2-t Box	210 D	75	03/97 – 04/00		3804
SPRINTER 2-t Box	211 CDI	80	04/00 – 05/06		3804
SPRINTER 2-t Box	212 D	90	02/95 – 04/00		3804
SPRINTER 2-t Box	213 CDI	95	04/00 – 05/06		3804
SPRINTER 2-t Box	214 NGT	92	04/00 – 05/06		3804
SPRINTER 2-t Box	216 CDI	115	04/00 – 05/06		3804
SPRINTER 2-t Box	250 (172.447)	150	02/11 -	4249	
SPRINTER 2-t Box	250 CDI / d (172.403)	150	01/12 -	4249	
SPRINTER 2-t Box	300 (172.438)	180	07/15 -	4249	
SPRINTER 2-t Box	350 (172.457)	225	02/11 -	4249	
SPRINTER 2-t Platform/Chassis (901, 902)	214	105	02/95 – 05/06		3804
SPRINTER 2-t Platform/Chassis (901, 902)	208 CDI	60	04/00 – 05/06		3804
SPRINTER 2-t Platform/Chassis (901, 902)	208 D	58	01/95 – 04/00		3804
SPRINTER 2-t Platform/Chassis (901, 902)	208 D	60	09/96 – 04/00		3804
SPRINTER 2-t Platform/Chassis (901, 902)	210 D	75	01/97 – 04/00		3804
SPRINTER 2-t Platform/Chassis (901, 902)	211 CDI	80	04/00 – 05/06		3804
SPRINTER 2-t Platform/Chassis (901, 902)	212 D	90	02/95 – 04/00		3804
SPRINTER 2-t Platform/Chassis (901, 902)	213 CDI	95	04/00 – 05/06		3804
SPRINTER 2-t Platform/Chassis (901, 902)	214 NGT	92	04/00 – 05/06		3804
SPRINTER 2-t Platform/Chassis (901, 902)	216 CDI	115	04/00 – 05/06		3804
SPRINTER 2-Ton.	2.1 208 CDI (OM 611.987)	60	04/00 – 05/06	3567	
SPRINTER 2-Ton.	2.1 211 CDI (OM 611.981)	80	04/00 – 05/06	3567	
SPRINTER 2-Ton.	2.1 213 CDI (OM 611.981)	95	04/00 – 05/06	3567	
SPRINTER 2-Ton.	2.3 208 D (OM 601.943)	58	01/95 – 04/00	3567	
SPRINTER 2-Ton.	2.3 208 D (OM 601.943)	60	09/96 – 04/00	3567	
SPRINTER 2-Ton.	2.3 214 NGT (M 111.984)	92	04/00 – 05/06	3567	
SPRINTER 2-Ton.	2.7 216 CDI (OM 612.981)	115	04/00 – 05/06	3567	
SPRINTER 2-Ton.	2.9 210 D (OM 602.980)	75	01/97 – 04/00	3567	
SPRINTER 2-Ton.	2.9 212 D (OM 602.980)	90	02/95 – 04/00	3567	
SPRINTER 2-Ton.	212 D	90	02/95 – 04/00		3804
SPRINTER 2-Ton.	213 CDI	95	04/00 – 05/06		3804
SPRINTER 2-Ton.	214 (M 111.979)	105	02/95 – 05/06	3567	
SPRINTER 2-Ton.	214 NGT	92	04/00 – 05/06		3804
SPRINTER 2-Ton.	216 CDI	115	04/00 – 05/06		3804
SPRINTER 2-Ton. Bus	2.1 208 CDI (OM 611.987)	60	04/00 – 05/06		3678
SPRINTER 2-Ton. Bus	2.1 211 CDI (OM 611.981)	80	04/00 – 05/06		3678
SPRINTER 2-Ton. Bus	2.1 213 CDI (OM 611.981)	95	04/00 – 05/06		3678
SPRINTER 2-Ton. Bus	2.3 214 NGT (M 111.984)	92	04/00 – 05/06		3678
SPRINTER 2-Ton. Bus	214 (M 111.979)	105	02/95 – 05/06		3678
SPRINTER 2-Ton. Bus	214 (M 111.979)	105	02/95 – 05/06	3567	
SPRINTER 2-Ton. Bus	214 (M 111.984)	105	02/95 – 05/06	3567	
SPRINTER 2-Ton. Bus	214 NGT (M 111.984)	92	04/00 – 05/06	3567	
SPRINTER 2-Ton.Caja/Chasis	2.1 208 CDI (OM 611.987)	60	04/00 – 05/06		3678
SPRINTER 2-Ton.Caja/Chasis	2.1 211 CDI (OM 611.981)	80	04/00 – 05/06		3678
SPRINTER 2-Ton.Caja/Chasis	2.1 213 CDI (OM 611.981)	95	04/00 – 05/06		3678
SPRINTER 2-Ton.Caja/Chasis	2.3 208 D (OM 601.943)	58	01/95 – 04/00		3678
SPRINTER 2-Ton.Caja/Chasis	2.3 208 D (OM 601.943)	58	02/95 – 04/00		3678
SPRINTER 2-Ton.Caja/Chasis	2.7 216 CDI (OM 612.981)	115	04/00 – 05/06		3678
SPRINTER 2-Ton.Caja/Chasis	2.9 210 D (OM 602.980)	75	03/97 – 04/00		3678
SPRINTER 2-Ton.Caja/Chasis	2.9 212 D (OM 602.980)	90	02/95 – 04/00		3678
SPRINTER 2-Ton.Caja/Chasis	214 (M 111.979)	105	02/95 – 05/06		3678
SPRINTER 2-Ton.Caja/Chasis	214 NGT (M 111.984)	92	04/00 – 05/06		3678
SPRINTER 2-Ton.Furgón	2.1 208 CDI (OM 611.987)	60	04/00 – 05/06		3678
SPRINTER 2-Ton.Furgón	2.1 211 CDI (OM 611.981)	80	04/00 – 05/06		3678
SPRINTER 2-Ton.Furgón	2.1 213 CDI (OM 611.981)	95	04/00 – 05/06		3678
SPRINTER 2-Ton.Furgón	2.3 208 D (OM 601.943)	58	02/95 – 04/00		3678
SPRINTER 2-Ton.Furgón	2.3 208 D (OM 601.943)	60	09/96 – 04/00		3678
SPRINTER 2-Ton.Furgón	2.3 214 NGT (M 111.984)	92	04/00 – 05/06		3678
SPRINTER 2-Ton.Furgón	2.7 216 CDI (OM 612.981)	115	04/00 – 05/06		3678
SPRINTER 2-Ton.Furgón	2.9 210 D (OM 602.980)	75	01/97 – 04/00		3678
SPRINTER 2-Ton.Furgón	2.9 212 D (OM 602.980)	90	02/95 – 04/00		3678
SPRINTER 2-Ton.Furgón	214 (M 111.979)	105	02/95 – 05/06		3678
SPRINTER 2-Ton.Furgón	214 (M 111.984)	105	02/95 – 05/06		3678

MAKE & MODEL	  	KW	YEAR		
MERCEDES BENZ					
SPRINTER 3,5-t Box (906)	309 CDI (906.631, 906.633,906.635, 906.637)	65	06/06 – 12/09	3925	3926
SPRINTER 3,5-t Box (906)	310 CDI (906.631, 906.633,906.635, 906.637)	70	03/09 -	3925	3926
SPRINTER 3,5-t Box (906)	310 CDI (906.731, 906.733,906.735)	70	03/09 – 12/13	3925	3926
SPRINTER 3,5-t Box (906)	311 CDI (906.631, 906.633,906.635, 906.637)	80	06/06 – 12/09	3925	3926
SPRINTER 3,5-t Box (906)	311 CDI (906.631, 906.633,906.635, 906.637)	84	05/16 -	3925	3926
SPRINTER 3,5-t Box (906)	311 CDI (906.631, 906.633906.635, 906.637)	84	05/16 -	3962	
SPRINTER 3,5-t Box (906)	311 CDI (906.731, 906.733,906.735)	80	06/06 – 12/09	3925	3926
SPRINTER 3,5-t Box (906)	311 CDI (906.731, 906.733,906.735)	80	06/06 – 12/09		3926
SPRINTER 3,5-t Box (906)	311 CDI (906.731, 906.733,906.735)	84	05/16 -	3962	3926
SPRINTER 3,5-t Box (906)	311 CDI (906.731, 906.733,906.735)	84	05/16 -	3925	
SPRINTER 3,5-t Box (906)	311 CDI 4x4 (906.631,906.633, 906.635, 906.637)	80	02/08 – 12/09	3925	3926
SPRINTER 3,5-t Box (906)	311 CDI 4x4 (906.731,906.733, 906.735)	80	02/08 – 12/09	3925	
SPRINTER 3,5-t Box (906)	313 CDI (906.631, 906.633,906.635, 906.637)	95	06/06 -	3925	3926
SPRINTER 3,5-t Box (906)	313 CDI (906.731, 906.733,906.735)	95	08/11 – 05/16	3925	3926
SPRINTER 3,5-t Box (906)	313 CDI 4x4 (906.631,906.633, 906.635, 906.637)	95	05/09 -	3925	3926
SPRINTER 3,5-t Box (906)	313 CDI 4x4 (906.731,906.733, 906.735)	95	08/11 – 05/16	3925	3926
SPRINTER 3,5-t Box (906)	314 CDI (906.631, 906.633,906.635, 906.637)	105	05/16 -	3925	3926
SPRINTER 3,5-t Box (906)	314 CDI (906.631, 906.633,906.635, 906.637)	105	05/16 -	3962	
SPRINTER 3,5-t Box (906)	314 CDI (906.731, 906.733,906.735)	105	05/16 -	3962	3926
SPRINTER 3,5-t Box (906)	314 CDI (906.731, 906.733,906.735)	105	05/16 -	3925	
SPRINTER 3,5-t Box (906)	314 CDI 4x4 (906.631,906.633, 906.635, 906.637)	105	05/16 -	3925	3926
SPRINTER 3,5-t Box (906)	314 CDI 4x4 (906.631,906.633, 906.635, 906.637)	105	05/16 -	3962	3926
SPRINTER 3,5-t Box (906)	314 CDI 4x4 (906.731,906.733, 906.735)	105	05/16 -	3962	
SPRINTER 3,5-t Box (906)	314 CDI 4x4 (906.731,906.733, 906.735)	105	05/16 -	3925	
SPRINTER 3,5-t Box (906)	315 CDI (906.631, 906.633,906.635, 906.637)	110	06/06 – 12/09	3925	3926
SPRINTER 3,5-t Box (906)	315 CDI (906.731, 906.733,906.735)	110	06/06 – 12/09	3925	3926
SPRINTER 3,5-t Box (906)	315 CDI 4x4 (906.631,906.633, 906.635, 906.637)	110	02/08 – 12/09	3925	3926
SPRINTER 3,5-t Box (906)	315 CDI 4x4 (906.731,906.733, 906.735)	110	02/08 – 12/09	3925	3926
SPRINTER 3,5-t Box (906)	316 (906.635, 906.633)	115	09/08 -	3925	3926
SPRINTER 3,5-t Box (906)	316 (906.733, 906.735)	115	09/08 -	3925	3926
SPRINTER 3,5-t Box (906)	316 CDI (906.631, 906.633,906.635, 906.637)	120	03/09 -	3925	3926
SPRINTER 3,5-t Box (906)	316 CDI (906.731, 906.733,906.735)	120	08/11 -	3925	3926
SPRINTER 3,5-t Box (906)	316 CDI 4x4 (906.631,906.633, 906.635, 906.637)	120	03/09 -	3925	3926
SPRINTER 3,5-t Box (906)	316 CDI 4x4 (906.731,906.733, 906.735)	120	08/11 -	3925	3926
SPRINTER 3,5-t Box (906)	316 LGT	115	09/08 -	3925	3926
SPRINTER 3,5-t Box (906)	316 LGT (906.633, 906.635)	115	09/08 -	3925	3926
SPRINTER 3,5-t Box (906)	316 NGT (906.633, 906.635)	115	09/08 -	3925	3926
SPRINTER 3,5-t Box (906)	316 NGT (906.733, 906.735)	115	09/08 -	3925	3926
SPRINTER 3,5-t Box (906)	318 CDI (906.631, 906.633,906.635, 906.637)	135	06/06 – 12/09	3925	3926
SPRINTER 3,5-t Box (906)	318 CDI (906.731, 906.733,906.735)	135	02/08 – 12/09	3925	3926
SPRINTER 3,5-t Box (906)	318 CDI 4x4 (906.631,906.633, 906.635, 906.637)	135	02/08 – 12/09	3925	3926
SPRINTER 3,5-t Box (906)	318 CDI 4x4 (906.731,906.733, 906.735)	135	02/08 – 12/09	3925	3926
SPRINTER 3,5-t Box (906)	319 CDI / BlueTEC (906.631,906.633, 906.635, 906.637)	140	03/09 -	3925	3926
SPRINTER 3,5-t Box (906)	319 CDI / BlueTEC (906.731,906.733, 906.735)	140	03/09 -	3925	3926
SPRINTER 3,5-t Box (906)	319 CDI / BlueTEC 4x4 (906.631, 906.633, 906.635,906.637)	140	03/09 -	3925	3926
SPRINTER 3,5-t Bus (906)	319 CDI / BlueTEC 4x4 (906.731, 906.733, 906.735)	140	03/09 -	3925	3926
SPRINTER 3,5-t Bus (906)	324 (906.633, 906.635,906.637)	190	06/06 – 12/13	3925	3926
SPRINTER 3,5-t Bus (906)	324 (906.733, 906.735)	190	06/06 – 12/13	3925	3926
SPRINTER 3,5-t Platform/Chassis (906)	309 CDI (906.131, 906.133,906.135, 906.231, 906.233...)	65	06/06 – 12/09	3925	3926
SPRINTER 3,5-t Platform/Chassis (906)	310 CDI (906.131, 906.133,906.135, 906.231, 906.233...)	70	03/09 – 05/16	3925	3926
SPRINTER 3,5-t Platform/Chassis (906)	311 CDI (906.131, 906.133,906.135, 906.231, 906.233...)	80	06/06 – 12/09	3925	3926
SPRINTER 3,5-t Platform/Chassis (906)	311 CDI (906.131, 906.133,906.135, 906.231, 906.233...)	84	05/16 -	3925	3926
SPRINTER 3,5-t Platform/Chassis (906)	311 CDI (906.131, 906.133,906.135, 906.231, 906.233...)	84	05/16 -	3962	
SPRINTER 3,5-t Platform/Chassis (906)	311 CDI 4x4 (906.131,906.133, 906.135, 906.231...)	80	02/08 – 12/09	3925	3926
SPRINTER 3,5-t Platform/Chassis (906)	313 CDI (906.131, 906.133,906.135, 906.231, 906.233...)	95	06/06 – 05/16	3925	3926
SPRINTER 3,5-t Platform/Chassis (906)	313 CDI 4x4 (906.131,906.133, 906.135, 906.231...)	95	06/06 – 05/16	3925	3926
SPRINTER 3,5-t Platform/Chassis (906)	314 CDI (906.131, 906.133,906.135, 906.231, 906.233...)	105	05/16 -	3925	3926
SPRINTER 3,5-t Platform/Chassis (906)	314 CDI (906.131, 906.133,906.135, 906.231, 906.233...)	105	05/16 -	3962	
SPRINTER 3,5-t Platform/Chassis (906)	314 CDI 4x4 (906.131,906.133, 906.135, 906.231...)	105	05/16 -	3925	3926
SPRINTER 3,5-t Platform/Chassis (906)	314 CDI 4x4 (906.131,906.133, 906.135, 906.231...)	105	05/16 -	3962	
SPRINTER 3,5-t Platform/Chassis (906)	315 CDI (906.131, 906.133,906.135, 906.231, 906.233...)	110	06/06 – 12/09	3925	3926
SPRINTER 3,5-t Platform/Chassis (906)	315 CDI 4x4 (906.131,906.133, 906.135, 906.231...)	110	02/08 – 12/09	3925	3926
SPRINTER 3,5-t Platform/Chassis (906)	316 (906.133, 906.135,906.233, 906.235)	115	09/08 -	3925	3926
SPRINTER 3,5-t Platform/Chassis (906)	316 CDI (906.131, 906.133,906.135, 906.231, 906.233...)	120	03/09 -	3925	3926
SPRINTER 3,5-t Platform/Chassis (906)	316 CDI 4x4 (906.131,906.133, 906.135, 906.231...)	120	03/09 -	3925	3926
SPRINTER 3,5-t Platform/Chassis (906)	316 LGT (906.133, 906.135,906.233, 906.235)	115	09/08 -	3925	3926
SPRINTER 3,5-t Platform/Chassis (906)	316 NGT (906.133, 906.135,906.233, 906.235)	115	09/08 -	3925	3926
SPRINTER 3,5-t Platform/Chassis (906)	318 CDI (906.131, 906.133,906.135, 906.231, 906.233...)	135	06/06 – 12/09	3925	3926
SPRINTER 3,5-t Platform/Chassis (906)	318 CDI 4x4 (906.131,906.133, 906.135, 906.231...)	135	02/08 – 12/09	3925	3926
SPRINTER 3,5-t Platform/Chassis (906)	319 CDI / BlueTEC (906.131,906.133, 906.135, 906.231...)	140	03/09 -	3925	3926
SPRINTER 3,5-t Platform/Chassis (906)	319 CDI / BlueTEC 4x4 (906.131, 906.133, 906.135...)	140	05/11 -	3925	3926
SPRINTER 3,5-t Platform/Chassis (906)	324 (906.133, 906.135,906.233, 906.235)	190	06/06 – 12/13	3925	3926
SPRINTER 3-t Box (903)	314	105	02/95 – 05/06		3804
SPRINTER 3-t Box (903)	2.3 208 D (OM 601.943)	60	10/96 – 04/00		3678
SPRINTER 3-t Box (903)	2.7 216 CDI (OM 612.981)	115	04/00 – 05/06		3678
SPRINTER 3-t Box (903)	2.9 210 D (OM 602.980)	75	01/97 – 04/00		3678

MAKE & MODEL   		KW	YEAR		
MERCEDES BENZ					
SPRINTER 3-t Box (903)	2.9 212 D (OM 602.980)	90	02/95 – 04/00		3678
SPRINTER 3-t Box (903)	308 CDI	60	04/00 – 05/06		3804
SPRINTER 3-t Box (903)	308 D 2.3	58	02/95 – 04/00		3804
SPRINTER 3-t Box (903)	308 D 2.3	60	02/95 – 04/00		3804
SPRINTER 3-t Box (903)	310 D 2.9	75	02/95 – 04/00		3804
SPRINTER 3-t Box (903)	311 CDI	80	04/00 – 05/06		3804
SPRINTER 3-t Box (903)	311 CDI 4x4	80	08/02 – 05/06		3804
SPRINTER 3-t Box (903)	312 D 2.9	90	02/95 – 04/00		3804
SPRINTER 3-t Box (903)	312 D 2.9 4x4	90	05/97 – 08/02		3804
SPRINTER 3-t Box (903)	313 CDI	95	04/00 – 05/06		3804
SPRINTER 3-t Box (903)	313 CDI 4x4	95	08/02 – 05/06		3804
SPRINTER 3-t Box (906)	209 CDI (906.611, 906.613)	65	06/06 – 12/09	3925	3926
SPRINTER 3-t Box (906)	210 CDI (906.611, 906.613)	70	03/09 -	3925	3926
SPRINTER 3-t Box (906)	211 CDI (906.611, 906.613)	80	06/06 – 12/09	3925	3926
SPRINTER 3-t Box (906)	211 CDI (906.611, 906.613)	84	04/16 -	3925	3926
SPRINTER 3-t Box (906)	213 CDI (906.611, 906.613)	95	06/06 – 12/09	3925	3926
SPRINTER 3-t Box (906)	214 CDI (906.611, 906.613)	105	04/16 -	3925	3926
SPRINTER 3-t Box (906)	215 CDI (906.611, 906.613)	110	06/06 – 12/09	3925	3926
SPRINTER 3-t Box (906)	216 (906.613)	115	09/08 -	3925	3926
SPRINTER 3-t Box (906)	216 CDI (906.611, 906.613)	120	03/09 -	3925	3926
SPRINTER 3-t Box (906)	218 CDI (906.611, 906.613)	135	06/06 – 12/09	3925	3926
SPRINTER 3-t Box (906)	314 4x4	105	08/02 – 05/06		3804
SPRINTER 3-t Box (906)	314 NGT (903.661)	92	04/00 – 05/06		3804
SPRINTER 3-t Box (906)	316 CDI	115	04/00 – 05/06		3804
SPRINTER 3-t Box (906)	316 CDI 4x4	115	08/02 – 05/06		3804
SPRINTER 3-t Bus (903)	314	105	02/95 – 05/06		3804
SPRINTER 3-t Bus (903)	219 CDI / BlueTEC (906.611,906.613)	140	03/09 -	3925	3926
SPRINTER 3-t Bus (903)	224 (906.613)	190	06/06 -	3925	3926
SPRINTER 3-t Bus (903)	308 CDI	60	04/00 – 05/06		3804
SPRINTER 3-t Bus (903)	308 D	58	02/95 – 04/00		3804
SPRINTER 3-t Bus (903)	308 D (903.371, 903.372,903.373)	60	03/97 – 04/00		3804
SPRINTER 3-t Bus (903)	308 E	40	04/00 – 05/06		3804
SPRINTER 3-t Bus (903)	310 D (903.371, 903.372,903.373)	75	01/97 – 12/99		3804
SPRINTER 3-t Bus (903)	310 D 4x4	75	05/97 – 08/02		3804
SPRINTER 3-t Bus (903)	311 CDI	80	04/00 – 05/06		3804
SPRINTER 3-t Bus (903)	311 CDI 4x4	80	08/02 – 05/06		3804
SPRINTER 3-t Bus (903)	312 D 2.9	90	02/95 – 04/00		3804
SPRINTER 3-t Bus (903)	312 D 2.9 4x4	90	05/97 – 08/02		3804
SPRINTER 3-t Bus (903)	313 CDI	95	04/00 – 05/06		3804
SPRINTER 3-t Bus (903)	313 CDI 4x4	95	08/02 – 05/06		3804
SPRINTER 3-t Bus (906)	210 CDI (906.711, 906.713)	70	03/09 – 12/13	3925	3926
SPRINTER 3-t Bus (906)	211 CDI (906.711, 906.713)	80	06/06 – 12/09	3925	3926
SPRINTER 3-t Bus (906)	211 CDI (906.711, 906.713)	84	04/16 -	3925	3926
SPRINTER 3-t Bus (906)	213 CDI (906.711, 906.713)	95	06/06 – 05/16	3925	3926
SPRINTER 3-t Bus (906)	214 CDI (906.711, 906.713)	105	04/16 -	3925	3926
SPRINTER 3-t Bus (906)	215 CDI (906.711, 906.713)	110	06/06 – 12/09	3925	3926
SPRINTER 3-t Bus (906)	216 (906.713)	115	09/08 -	3925	3926
SPRINTER 3-t Bus (906)	314 4x4	105	08/02 – 05/06		3804
SPRINTER 3-t Bus (906)	314 NGT	92	04/00 – 05/06		3804
SPRINTER 3-t Bus (906)	316 CDI	115	04/00 – 05/06		3804
SPRINTER 3-t Bus (906)	316 CDI 4x4	115	08/02 – 05/06		3804
SPRINTER 3-t Platform/Chassis (903)	314	105	02/95 – 05/06		3804
SPRINTER 3-t Platform/Chassis (903)	216 CDI (906.711, 906.713)	120	06/06 -	3925	3926
SPRINTER 3-t Platform/Chassis (903)	224 (906.713)	190	06/06 – 12/13	3925	3926
SPRINTER 3-t Platform/Chassis (903)	308 CDI	60	04/00 – 05/06		3804
SPRINTER 3-t Platform/Chassis (903)	308 D 2.3	58	02/95 – 04/00		3804
SPRINTER 3-t Platform/Chassis (903)	308 D 2.3	60	11/96 – 04/00		3804
SPRINTER 3-t Platform/Chassis (903)	310 D 2.9	75	01/97 – 04/00		3804
SPRINTER 3-t Platform/Chassis (903)	311 CDI	80	04/00 – 05/06		3804
SPRINTER 3-t Platform/Chassis (903)	311 CDI 4x4	80	08/02 – 05/06		3804
SPRINTER 3-t Platform/Chassis (903)	312 D 2.9	90	02/95 – 04/00		3804
SPRINTER 3-t Platform/Chassis (903)	312 D 2.9 4x4	85	12/98 – 09/01		3804
SPRINTER 3-t Platform/Chassis (903)	313 CDI	95	04/00 – 05/06		3804
SPRINTER 3-t Platform/Chassis (903)	313 CDI 4x4	95	08/02 – 05/06		3804
SPRINTER 3-t Platform/Chassis (903)	314 4x4	105	08/02 – 05/06		3804
SPRINTER 3-t Platform/Chassis (903)	314 NGT (903.611, 903.612)	92	04/00 – 05/06		3804
SPRINTER 3-t Platform/Chassis (903)	316 CDI	115	04/00 – 05/06		3804
SPRINTER 3-t Platform/Chassis (903)	316 CDI 4x4	115	08/02 – 05/06		3804
SPRINTER 3-t Platform/Chassis (906)	209 CDI (906.111, 906.113,906.211, 906.213)	65	06/06 – 12/09	3925	3926
SPRINTER 3-t Platform/Chassis (906)	210 CDI (906.111, 906.113,906.211, 906.213)	70	03/09 – 05/16	3925	3926
SPRINTER 3-t Platform/Chassis (906)	211 CDI (906.111, 906.113,906.211, 906.213)	80	06/06 – 12/09	3925	3926
SPRINTER 3-t Platform/Chassis (906)	211 CDI (906.111, 906.113,906.211, 906.213)	84	04/16 -	3925	3926
SPRINTER 3-t Platform/Chassis (906)	213 CDI (906.111, 906.113,906.211, 906.213)	95	03/09 – 05/16	3925	3926
SPRINTER 3-t Platform/Chassis (906)	213 CDI (906.111, 906.113,906.211, 906.213)	95	06/06 – 12/09	3925	3926
SPRINTER 3-t Platform/Chassis (906)	214 CDI (906.111, 906.113,906.211, 906.213)	105	04/16 -	3925	3926
SPRINTER 3-t Platform/Chassis (906)	215 CDI (906.111, 906.113,906.211, 906.213)	110	06/06 – 12/09	3925	3926

MAKE & MODEL		KW	YEAR		
MERCEDES BENZ					
SPRINTER 3-t Platform/Chassis (906)	216 (906.113, 906.213)	115	09/08 – 05/16	3925	3926
SPRINTER 3-t Platform/Chassis (906)	216 CDI (906.111, 906.113,906.211, 906.213)	120	03/09 -	3925	3926
SPRINTER 3-t Platform/Chassis (906)	218 CDI (906.111, 906.113,906.211, 906.213)	135	06/06 – 12/09	3925	3926
SPRINTER 3-t Platform/Chassis (906)	219 CDI / BlueTEC (906.111,906.113, 906.211, 906.213)	140	03/09 – 05/16	3925	3926
SPRINTER 3-t Platform/Chassis (906)	224 (906.113, 906.213)	190	06/06 – 12/13	3925	3926
SPRINTER 3-Ton.	0.0 308 E	40	04/00 – 05/06	3567	
SPRINTER 3-Ton.	2.1 308 CDI (OM 611.987)	60	04/00 – 05/06	3567	
SPRINTER 3-Ton.	2.1 311 CDI (OM 611.981)	80	04/00 – 05/06	3567	
SPRINTER 3-Ton.	2.1 313 CDI (OM 611.981)	95	04/00 – 05/06	3567	
SPRINTER 3-Ton.	2.3 308 D (OM 601.943)	58	02/95 – 04/00	3567	
SPRINTER 3-Ton.	2.3 308 D (OM 601.943)	60	02/95 – 04/00	3567	
SPRINTER 3-Ton.	2.3 314 (M 111.984)	105	02/95 – 05/06	3567	
SPRINTER 3-Ton.	2.3 314 NGT (M 111.984)	92	04/00 – 05/06	3567	
SPRINTER 3-Ton.	2.3 D	58	06/97 – 12/99	3567	
SPRINTER 3-Ton.	2.7 316 CDI (OM 612.981)	115	04/00 – 05/06	3567	
SPRINTER 3-Ton.	2.9 310 D (OM 602.980)	75	02/95 – 08/02	3567	
SPRINTER 3-Ton.	2.9 312 D (OM 602.980)	90	02/95 – 04/00	3567	
SPRINTER 3-Ton.	2.9 312 D 2.9 (OM 602.980)	90	05/97 – 08/02	3567	
SPRINTER 3-Ton.	2.9 TDi (OM 602.980)	75	01/97 – 12/99	3567	
SPRINTER 3-Ton.	314 (M 111.979)	105	02/95 – 05/06	3567	
SPRINTER 3-Ton.	314 (M 111.984)	105	02/95 – 05/06	3567	
SPRINTER 3-Ton.	314 NGT (903.611, 903.612)	92	04/00 – 05/06	3567	
SPRINTER 3-Ton.	314 NGT (903.661) (M 111.984)	92	04/00 – 05/06	3567	
SPRINTER 3-Ton. (903)	0.0 308 E	40	04/00 – 05/06	3670	
SPRINTER 3-Ton. (903)	2.1 308 CDI (OM 611.987)	60	04/00 – 05/06	3670	
SPRINTER 3-Ton. (903)	2.1 311 CDI (OM 611.981)	80	04/00 – 05/06	3670	
SPRINTER 3-Ton. (903)	2.1 313 CDI (OM 611.981)	95	04/00 – 05/06	3670	
SPRINTER 3-Ton. (903)	2.3 308 D (OM 601.943)	58	02/95 – 04/00	3670	
SPRINTER 3-Ton. (903)	2.3 308 D (OM 601.943)	60	02/95 – 04/00	3670	
SPRINTER 3-Ton. (903)	2.3 314 (M 111.984)	105	02/95 – 05/06	3670	
SPRINTER 3-Ton. (903)	2.3 314 NGT (M 111.984) Bus (Minibus-M2-Segment)	92	04/00 – 05/06	3670	
SPRINTER 3-Ton. (903)	2.3 D	58	06/97 – 12/99	3670	
SPRINTER 3-Ton. (903)	2.7 316 CDI (OM 612.981)	115	04/00 – 05/06	3670	
SPRINTER 3-Ton. (903)	2.9 310 D (OM 602.980)	75	02/95 – 08/02	3670	
SPRINTER 3-Ton. (903)	2.9 312 D (OM 602.980)	90	02/95 – 04/00	3670	
SPRINTER 3-Ton. (903)	2.9 312 D 2.9 (OM 602.980)	90	05/97 – 08/02	3670	
SPRINTER 3-Ton. (903)	2.9 TDi (OM 602.980)	75	01/97 – 12/99	3670	
SPRINTER 3-Ton. (903)	314 (M 111.979)	105	02/95 – 05/06	3670	
SPRINTER 3-Ton. (903)	314 (M 111.984)	105	02/95 – 05/06	3670	
SPRINTER 3-Ton. (903) Caja/Chasis (LCVs-N1 Segment)	314 NGT (903.611, 903.612) (M 111.984)	92	04/00 – 05/06	3670	
SPRINTER 3-Ton. (903) Furgón (LCVs-N1 Segment)	314 NGT (903.661) (M 111.984)	92	04/00 – 05/06	3670	
SPRINTER 4,6-t Box (906)	411 CDI (906.653, 906.655,906.657)	80	06/09 – 12/09	3962	3926
SPRINTER 4,6-t Box (906)	411 CDI (906.653, 906.655,906.657)	80	06/09 – 12/09		3963
SPRINTER 4,6-t Box (906)	413 CDI (906.653, 906.655,906.657)	95	06/06 – 05/16	3962	3926
SPRINTER 4,6-t Box (906)	413 CDI (906.653, 906.655,906.657)	95	06/06 – 05/16	3962	3963
SPRINTER 4,6-t Box (906)	414 CDI	105	05/16 -	3962	3926
SPRINTER 4,6-t Box (906)	414 CDI	105	05/16 -		3963
SPRINTER 4,6-t Box (906)	415 CDI (906.653, 906.655,906.657)	110	06/09 – 12/09	3962	3926
SPRINTER 4,6-t Box (906)	415 CDI (906.653, 906.655,906.657)	110	06/09 – 12/09		3963
SPRINTER 4,6-t Box (906)	416 CDI (906.653, 906.655,906.657)	120	03/09 -	3962	3926
SPRINTER 4,6-t Box (906)	416 CDI (906.653, 906.655,906.657)	120	03/09 -		3963
SPRINTER 4,6-t Box (906)	418 CDI (906.653, 906.655,906.657)	135	06/09 – 05/16	3962	3926
SPRINTER 4,6-t Box (906)	418 CDI (906.653, 906.655,906.657)	135	06/09 – 05/16		3963
SPRINTER 4,6-t Box (906)	419 CDI (906.653, 906.655,906.657)	140	03/09 -		3963
SPRINTER 4,6-t Box (906)	419 CDI (906.653, 906.655,906.657)	140	03/09 -	3962	3926
SPRINTER 4,6-t Box (906)	424 (906.655, 906.657,906.653)	190	06/06 – 12/13	3962	3926
SPRINTER 4,6-t Box (906)	424 (906.655, 906.657,906.653)	190	06/06 – 12/13		3963
SPRINTER 4,6-t Platform/Chassis (906)	411 CDI (906.153, 906.155,906.253, 906.255)	80	06/09 – 12/09	3962	3926
SPRINTER 4,6-t Platform/Chassis (906)	411 CDI (906.153, 906.155,906.253, 906.255)	80	06/09 – 12/09		3963
SPRINTER 4,6-t Platform/Chassis (906)	413 CDI (906.153, 906.155,906.253, 906.255)	95	06/06 – 05/16	3962	3926
SPRINTER 4,6-t Platform/Chassis (906)	413 CDI (906.153, 906.155,906.253, 906.255)	95	06/06 – 05/16		3963
SPRINTER 4,6-t Platform/Chassis (906)	414 CDI	105	05/16 -	3925	3926
SPRINTER 4,6-t Platform/Chassis (906)	414 CDI	105	05/16 -	3962	
SPRINTER 4,6-t Platform/Chassis (906)	415 CDI (906.153, 906.155,906.253, 906.255)	110	06/06 – 12/09	3962	3926
SPRINTER 4,6-t Platform/Chassis (906)	415 CDI (906.153, 906.155,906.253, 906.255)	110	06/06 – 12/09		3963
SPRINTER 4,6-t Platform/Chassis (906)	416 CDI (906.153, 906.155,906.253, 906.255)	120	03/09 -	3962	3926
SPRINTER 4,6-t Platform/Chassis (906)	416 CDI (906.153, 906.155,906.253, 906.255)	120	03/09 -		3963
SPRINTER 4,6-t Platform/Chassis (906)	418 CDI (906.153, 906.155,906.253, 906.255)	135	06/06 – 12/09	3962	3926
SPRINTER 4,6-t Platform/Chassis (906)	418 CDI (906.153, 906.155,906.253, 906.255)	135	06/06 – 12/09		3963
SPRINTER 4,6-t Platform/Chassis (906)	419 CDI (906.153, 906.155,906.253, 906.255)	140	03/09 -	3962	3926
SPRINTER 4,6-t Platform/Chassis (906)	419 CDI (906.153, 906.155,906.253, 906.255)	140	03/09 -		3963
SPRINTER 4,6-t Platform/Chassis (906)	424 (906.153, 906.155,906.253, 906.255)	190	06/06 – 12/13	3962	3963
SPRINTER 4,6-t Platform/Chassis (906)	424 (906.153, 906.155,906.253, 906.255)	190	06/06 – 12/13		3926
SPRINTER 4-t Platform şasi (904)	412 D	85	02/96 – 05/06	3614	3614
SPRINTER 4-t Platform şasi (904)	412 D	90	02/96 – 05/06	3614	3614
SPRINTER 4-t Platform şasi (904)	413 CDI	95	04/00 – 05/06	3614	3614

MAKE & MODEL		KW	YEAR		
MERCEDES BENZ					
SPRINTER 4-t Platform şasi (904)	413 CDI	95	04/00 – 05/06	3614	3614
SPRINTER 4-t Platform şasi (904)	413 CDI 4x4	95	04/00 – 05/06	3614	3614
SPRINTER 4-t Platform şasi (904)	408 D	58	02/96 – 05/06	3614	3614
SPRINTER 4-t Platform şasi (904)	410 D	75	02/96 – 05/06	3614	3614
SPRINTER 4-t Platform şasi (904)	410 D 4x4	75	05/97 – 05/06	3614	3614
SPRINTER 4-t Platform şasi (904)	412 D 4x4	85	05/97 – 05/06	3614	3614
SPRINTER 4-t Platform şasi (904)	412 D 4x4	90	05/97 – 05/06	3614	3614
SPRINTER 4-t Platform şasi (904)	416 CDI	115	04/00 – 05/06	3614	3614
SPRINTER 4-t Platform şasi (904)	416 CDI 4x4	115	04/00 – 05/06	3614	3614
SPRINTER 5-t Box (906)	509 CDI (906.653, 906.655,906.657)	65	06/06 – 12/09	3962	3963
SPRINTER 5-t Box (906)	509 CDI (906.653, 906.655,906.657)	65	06/06 – 12/09		3926
SPRINTER 5-t Box (906)	510 CDI (906.653, 906.655,906.657)	70	03/09 – 05/16	3962	3963
SPRINTER 5-t Box (906)	510 CDI (906.653, 906.655,906.657)	70	03/09 – 05/16		3926
SPRINTER 5-t Box (906)	511 CDI (906.653, 906.655,906.657)	80	06/06 – 12/09	3962	3926
SPRINTER 5-t Box (906)	511 CDI (906.653, 906.655,906.657)	80	06/06 – 12/09		3963
SPRINTER 5-t Box (906)	511 CDI (906.653, 906.655,906.657)	84	05/16 -		3963
SPRINTER 5-t Box (906)	511 CDI 4x4 (906.653,906.655, 906.657)	80	06/06 – 12/09	3962	3926
SPRINTER 5-t Box (906)	511 CDI 4x4 (906.653,906.655, 906.657)	80	06/06 – 12/09		3963
SPRINTER 5-t Box (906)	513 CDI (906.653, 906.655,906.657)	95	06/06 -	3962	3926
SPRINTER 5-t Box (906)	513 CDI (906.653, 906.655,906.657)	95	06/06 -		3963
SPRINTER 5-t Box (906)	513 CDI 4x4 (906.653,906.655, 906.657)	95	06/06 -	3962	3963
SPRINTER 5-t Box (906)	513 CDI 4x4 (906.653,906.655, 906.657)	95	06/06 -		3926
SPRINTER 5-t Box (906)	514 CDI (906.653, 906.655,906.657)	95	06/06 -	3962	
SPRINTER 5-t Box (906)	514 CDI (906.653, 906.655,906.657)	105	05/16 -	3962	3963
SPRINTER 5-t Box (906)	514 CDI 4x4 (906.653,906.655, 906.657)	105	05/16 -		3963
SPRINTER 5-t Box (906)	515 CDI (906.653, 906.655,906.657)	105	05/16 -	3962	3963
SPRINTER 5-t Box (906)	515 CDI (906.653, 906.655,906.657)	110	06/06 – 12/09		3926
SPRINTER 5-t Box (906)	515 CDI 4x4 (906.653,906.655, 906.657)	110	06/06 – 12/09	3962	3926
SPRINTER 5-t Box (906)	515 CDI 4x4 (906.653,906.655, 906.657)	110	06/06 – 12/09		3963
SPRINTER 5-t Box (906)	516 CDI (906.653, 906.655,906.657)	110	06/06 – 12/09	3962	3963
SPRINTER 5-t Box (906)	516 CDI (906.653, 906.655,906.657)	120	03/09 -		3926
SPRINTER 5-t Box (906)	516 CDI 4x4 (906.653,906.655, 906.657)	120	06/06 -	3962	3926
SPRINTER 5-t Box (906)	516 CDI 4x4 (906.653,906.655, 906.657)	120	06/06 -		3963
SPRINTER 5-t Box (906)	518 CDI (906.653, 906.655,906.657)	120	06/06 -	3962	3963
SPRINTER 5-t Box (906)	518 CDI (906.653, 906.655,906.657)	135	06/06 – 12/09		3926
SPRINTER 5-t Box (906)	518 CDI 4x4 (906.653,906.655, 906.657)	135	06/06 – 12/09	3962	3926
SPRINTER 5-t Box (906)	518 CDI 4x4 (906.653,906.655, 906.657)	135	06/06 – 12-09		3963
SPRINTER 5-t Box (906)	519 CDI / BlueTEC (906.653,906.655, 906.657)	135	06/06 – 12/09	3962	3963
SPRINTER 5-t Box (906)	519 CDI / BlueTEC (906.653,906.655, 906.657)	140	03/09 -		3926
SPRINTER 5-t Box (906)	519 CDI / BlueTEC 4x4 (906.653, 906.655, 906.657)	140	03/09 -	3962	3926
SPRINTER 5-t Box (906)	519 CDI / BlueTEC 4x4 (906.653, 906.655, 906.657)	140	03/09 -		3963
SPRINTER 5-t Box (906)	524 (906.653, 906.655,906.657)	140	03/09 -	3962	3963
SPRINTER 5-t Box (906)	524 (906.653, 906.655,906.657)	190	06/06 – 12/13		3926
SPRINTER 5-t Platform/Chassis (906)	509 CDI (906.153, 906.155,906.253, 906.255)	65	06/06 – 12/09	3962	3963
SPRINTER 5-t Platform/Chassis (906)	509 CDI (906.153, 906.155,906.253, 906.255)	65	06/06- 12/09		3926
SPRINTER 5-t Platform/Chassis (906)	510 CDI (906.153, 906.155,906.253, 906.255)	70	03/09 -	3962	3963
SPRINTER 5-t Platform/Chassis (906)	510 CDI (906.153, 906.155,906.253, 906.255)	70	03/09 -		3926
SPRINTER 5-t Platform/Chassis (906)	511 CDI (906.153, 906.155,906.253, 906.255)	80	06/06 – 12/09		3926
SPRINTER 5-t Platform/Chassis (906)	511 CDI (906.153, 906.155,906.253, 906.255)	80	06/06 – 12/09		3963
SPRINTER 5-t Platform/Chassis (906)	511 CDI (906.153, 906.155,906.253, 906.255)	80	06/06 – 12/09	3962	
SPRINTER 5-t Platform/Chassis (906)	511 CDI (906.153, 906.155,906.253, 906.255)	80	06/06 – 12/09		3963
SPRINTER 5-t Platform/Chassis (906)	511 CDI (906.153, 906.155,906.253, 906.255)	84	05/16 -	3962	
SPRINTER 5-t Platform/Chassis (906)	511 CDI 4x4 (906.155,906.253, 906.255)	80	06/06 – 12/09	3962	3963
SPRINTER 5-t Platform/Chassis (906)	511 CDI 4x4 (906.155,906.253, 906.255)	80	06/06 – 12/09		3926
SPRINTER 5-t Platform/Chassis (906)	513 CDI (906.155, 906.253,906.255)	95	06/06 – 05/16	3962	3963
SPRINTER 5-t Platform/Chassis (906)	513 CDI (906.155, 906.253,906.255)	95	06/06 – 05/16		3926
SPRINTER 5-t Platform/Chassis (906)	513 CDI 4x4 (906.155,906.253, 906.255)	95	05/11 – 05/16	3962	3926
SPRINTER 5-t Platform/Chassis (906)	513 CDI 4x4 (906.155,906.253, 906.255)	95	05/11 – 05/16		3963
SPRINTER 5-t Platform/Chassis (906)	514 CDI (906.153, 906.155,906.253, 906.255)	105	05/16 -		3926
SPRINTER 5-t Platform/Chassis (906)	514 CDI 4x4 (906.153,906.155, 906.253, 906.255)	105	05/16 -	3962	3926
SPRINTER 5-t Platform/Chassis (906)	515 CDI (906.153, 906.155,906.253, 906.255)	110	06/06 – 12/09	3962	3926
SPRINTER 5-t Platform/Chassis (906)	515 CDI (906.153, 906.155,906.253, 906.255)	110	06/06 – 12/09		3963
SPRINTER 5-t Platform/Chassis (906)	515 CDI 4x4 (906.153,906.155, 906.253, 906.255)	110	06/06 – 12/09	3962	3926
SPRINTER 5-t Platform/Chassis (906)	516 (906.153, 906.155,906.253, 906.255)	115	09/08 -	3962	3926
SPRINTER 5-t Platform/Chassis (906)	516 (906.153, 906.155,906.253, 906.255)	120	03/09 -	3962	
SPRINTER 5-t Platform/Chassis (906)	516 (906.153, 906.155,906.253, 906.255)	115	09/08 -		3963
SPRINTER 5-t Platform/Chassis (906)	516 CDI (906.153, 906.155,906.253, 906.255)	120	03/09 -		3926
SPRINTER 5-t Platform/Chassis (906)	516 CDI (906.153, 906.155,906.253, 906.255)	120	03/09 -		3963
SPRINTER 5-t Platform/Chassis (906)	516 CDI 4x4 (906.153,906.155, 906.255)	120	05/11 -	3962	3926
SPRINTER 5-t Platform/Chassis (906)	516 CDI 4x4 (906.153,906.155, 906.255)	120	05/11 -		3963
SPRINTER 5-t Platform/Chassis (906)	516 NGT (906.153, 906.155,906.253, 906.255)	115	09/08 -	3962	3926
SPRINTER 5-t Platform/Chassis (906)	516 NGT (906.153, 906.155,906.253, 906.255)	115	09/08 -		3963
SPRINTER 5-t Platform/Chassis (906)	518 CDI (906.153, 906.155,906.253, 906.255)	135	06/06 – 12/09	3962	3926
SPRINTER 5-t Platform/Chassis (906)	518 CDI (906.153, 906.155,906.253, 906.255)	135	06/06 – 12/09		3963
SPRINTER 5-t Platform/Chassis (906)	518 CDI 4x4 (906.153,906.155, 906.253, 906.255)	135	06/06 – 12/09	3962	3926
SPRINTER 5-t Platform/Chassis (906)	518 CDI 4x4 (906.153,906.155, 906.253, 906.255)	135	06/06 – 12/09		3963

MAKE & MODEL		KW	YEAR		
MERCEDES BENZ					
SPRINTER 5-t Platform/Chassis (906)	519 CDI / BlueTEC (906.153,906.155, 906.253, 906.255)	140	03/09 -	3962	3926
SPRINTER 5-t Platform/Chassis (906)	519 CDI / BlueTEC (906.153,906.155, 906.253, 906.255)	140	03/09 -		3963
SPRINTER 5-t Platform/Chassis (906)	519 CDI / BlueTEC 4x4 (906.153, 906.155, 906.253,906.255)	140	03/09 -	3962	3926
SPRINTER 5-t Platform/Chassis (906)	519 CDI / BlueTEC 4x4 (906.153, 906.155, 906.253,906.255)	140	03/09 -		3963
SPRINTER 5-t Platform/Chassis (906)	524 (906.153, 906.155,906.253, 906.255)	190	06/06 – 12/13	3962	3926
SPRINTER 5-t Platform/Chassis (906)	524 (906.153, 906.155,906.253, 906.255)	190	06/06 – 12/13		3963
SPRINTER 5-t Platform/Chassis (906)	616 CDI (905.612, 905.613,905.622, 905.623)	115	04/01 – 05/06	3679	
SPRINTER CLASSIC 3,5-t Box (909)	311 CDI (909.632, 909.633)	80	09/13 -		3804
SPRINTER CLASSIC 4,6-t Bus (909)	411 CDI (909.843)	80	09/13 -		3804
SPRINTER Dumptruck (905)	616 CDI (905.612, 905.622,905.623)	115	04/01 -	3679	
T1 Box (601)	207 D 2.4	53	06/82 – 01/90	3513	
T1 Box (601)	208 D 2.3	58	11/88 – 02/96	3513	
T1 Box (601)	208 D 2.3	60	10/88 – 02/96	3513	
T1 Box (601)	209 D 2.9	65	12/82 – 01/90	3513	
T1 Box (601)	210 2.3	63	05/77 – 12/82	3513	
T1 Box (601)	210 2.3	70	07/82 – 02/96	3513	
T1 Box (601)	210 2.3	77	05/89 – 02/96	3513	
T1 Box (601)	210 D 2.8	70	10/88 – 02/96	3513	
T1 Box (601)	210 D 2.8	72	10/88 – 02/96	3513	
T1 Box (602)	307 D 2.4	53	10/82 – 01/90	3513	
T1 Box (602)	308 D 2.3	58	11/88 – 02/96	3513	
T1 Box (602)	308 D 2.3	60	06/89 – 02/96	3513	
T1 Box (602)	309 D 3.0	65	10/82 – 01/90	3513	
T1 Box (602)	310 2.3	70	06/89 – 02/96	3513	
T1 Box (602)	310 2.3	77	01/89 – 12/95	3513	
T1 Box (602)	310 D 2.9	70	06/89 – 02/96	3513	
T1 Box (602)	310 D 2.9	72	06/89 – 02/96	3513	
T1 Bus (601)	207 D 2.4 (601.371, 601.372,601.376, 601.377)	48	05/77 – 12/82	3513	
T1 Bus (601)	207 D 2.4 (601.371, 601.376,601.377)	53	07/82 – 01/90	3513	
T1 Bus (601)	208 2.3	63	05/77 – 12/82	3513	
T1 Bus (601)	208 D 2.3	60	10/88 – 02/96	3513	
T1 Bus (601)	208 D 2.3 (601.371, 601.372,601.376, 601.377)	58	10/88 – 02/96	3513	
T1 Bus (601)	209 D 2.9	65	12/82 – 01/90	3513	
T1 Bus (601)	210 2.3	70	07/82 – 01/90	3513	
T1 Bus (601)	210 2.3	77	05/89 – 02/96	3513	
T1 Bus (601)	210 D 2.8	70	11/88 – 02/96	3513	
T1 Bus (601)	210 D 2.8	72	11/88 – 02/96	3513	
T1 Bus (602)	308 D 2.3	58	05/90 – 02/96	3513	
T1 Bus (602)	308 D 2.3	60	06/89 – 02/96	3513	
T1 Bus (602)	310 D 2.9	70	06/89 – 02/96	3513	
T1 Bus (602)	310 D 2.9	72	06/90 – 02/96	3513	
T1 Platform/Chassis (601)	207 D 2.4	48	04/77 – 12/82	3513	
T1 Platform/Chassis (601)	207 D 2.4	53	12/77 – 10/89	3513	
T1 Platform/Chassis (601)	208 D 2.3	58	11/88 – 02/96	3513	
T1 Platform/Chassis (601)	208 D 2.3	60	06/89 – 02/96	3513	
T1 Platform/Chassis (601)	209 D 2.9	65	12/82 – 01/90	3513	
T1 Platform/Chassis (601)	210 2.3	63	04/77 – 10/89	3513	
T1 Platform/Chassis (601)	210 2.3	70	04/77 – 10/89	3513	
T1 Platform/Chassis (601)	210 D 2.8	72	11/88 – 02/96	3513	
T1 Platform/Chassis (601)	210 D 2.9	70	11/88 – 02/96	3513	
T1 Platform/Chassis (602)	307 D 2.4	48	01/77 – 12/90	3513	
T1 Platform/Chassis (602)	307 D 2.4	48	04/77 – 01/83	3513	
T1 Platform/Chassis (602)	307 D 2.4	53	06/82 – 01/90	3513	
T1 Platform/Chassis (602)	308 D 2.3	58	06/89 – 02/96	3513	
T1 Platform/Chassis (602)	308 D 2.3	60	06/89 – 02/96	3513	
T1 Platform/Chassis (602)	309 D 3.0	65	10/82 – 01/90	3513	
T1 Platform/Chassis (602)	310 2.3	70	01/82 – 12/94	3513	
T1 Platform/Chassis (602)	310 D 2.9	70	06/89 – 02/96	3513	
T1 Platform/Chassis (602)	310 D 2.9	72	06/89 – 02/96	3513	
T1/TN Box Body / Estate	407 D (611.367, 611.368)	53	07/81 – 01/89	3513	
T1/TN Box Body / Estate	408 D (611.367, 611.368)	58	11/88 – 06/95	3513	
T1/TN Box Body / Estate	408 D (611.367, 611.368)	60	11/88 – 06/95	3513	
T1/TN Box Body / Estate	409 D (611.467, 611.468)	65	04/82 – 01/89	3513	
T1/TN Box Body / Estate	410 (611.067, 611.068)	70	08/82 – 06/95	3513	
T1/TN Box Body / Estate	410 (611.067, 611.068)	77	08/82 – 06/95	3513	
T1/TN Box Body / Estate	410 D (611.467, 611.468)	70	11/88 – 06/95	3513	
T1/TN Box Body / Estate	410 D (611.467, 611.468)	72	11/88 – 06/95	3513	
T1/TN Platform/Chassis	407 D (611.317, 611.318)	53	07/81 – 01/89	3513	
T1/TN Platform/Chassis	408 D (611.317, 611.318)	58	11/88 – 06/95	3513	
T1/TN Platform/Chassis	408 D (611.317, 611.318)	60	11/88 – 06/95	3513	
T1/TN Platform/Chassis	409 D (611.417, 611.418)	65	04/82 – 01/89	3513	
T1/TN Platform/Chassis	410 (611.017, 611.018)	70	08/82 – 06/95	3513	
T1/TN Platform/Chassis	410 (611.017, 611.018)	77	08/82 – 06/95	3513	
T1/TN Platform/Chassis	410 D (611.417, 611.418)	70	11/88 – 06/95	3513	
T1/TN Platform/Chassis	410 D (611.417, 611.418)	72	11/88 – 06/95	3513	
T2/L	L 911	124	01/72 – 07/83	3513	

MAKE & MODEL		KW	YEAR		
MERCEDES BENZ					
T2/L	LA 911	81	01/72 -	3513	
T2/L	LA 911	96	01/72 -	3513	
T2/L	LA 911	124	01/72 -	3513	
T2/L Box Body / Estate	L 405 D	44	01/72 – 12/80	3513	
T2/L Box Body / Estate	L 406 DG (309.111, 309.112,309.113, 309.114, 309.115...)	44	01/68 – 12/74	3513	
T2/L Box Body / Estate	L 407 D (309.111, 309.112, 309.113, 309.114, 309.115...)	48	01/75 – 12/88	3513	
T2/L Box Body / Estate	L 407 D (309.111, 309.112,309.113, 309.114, 309.115...)	53	01/75 – 12/88	3513	
T2/L Box Body / Estate	L 408 G (309.012, 309.013, 309.014, 309.015, 309.016...)	55	08/72 – 12/74	3513	
T2/L Box Body / Estate	L 408 G (309.012, 309.013, 309.014, 309.015, 309.016...)	63	08/72 – 12/74	3513	
T2/L Box Body / Estate	L 409 (309.011, 309.012,309.013, 309.014, 309.015...)	66	01/75 – 08/82	3513	
T2/L Box Body / Estate	L 410 (309.011, 309.012,309.013, 309.014, 309.015...)	70	08/82 – 12/88	3513	
T2/L Box Body / Estate	L 508 DG (309.411, 309.412, 309.413, 309.414, 309.415...)	60	01/70 – 12/88	3513	
T2/L Box Body / Estate	L 508 DG (309.411, 309.412, 309.413, 309.414, 309.415...)	63	01/70 – 12/88	3513	
T2/L Box Body / Estate	L 608 D (310.311, 310.312, 310.313, 310.314, 310.315...)	63	01/70 – 12/88	3513	
T2/L Box Body / Estate	L613 D (310.510, 313.424, 313.427, 313.429)	96	04/77 – 12/88	3513	
T2/L Platform/Chassis	L 405 D	44	01/72 – 12/80	3513	
T2/L Platform/Chassis	L 406 DG (309.100, 309.101,309.102, 309.103)	44	01/68 – 12/74	3513	
T2/L Platform/Chassis	L 407 D (309.100, 309.101,309.102, 309.103)	48	01/75 – 12/88	3513	
T2/L Platform/Chassis	L 407 D (309.100, 309.101,309.102, 309.103)	53	01/75 – 12/88	3513	
T2/L Platform/Chassis	L 408 G (309.000, 309.001,309.002, 309.003, 309.011)	55	08/72 – 12/74	3513	
T2/L Platform/Chassis	L 408 G (309.000, 309.001,309.002, 309.003, 309.011)	63	08/72 – 12/74	3513	
T2/L Platform/Chassis	L 409 (309.000, 309.001,309.002, 309.003)	66	01/75 – 08/82	3513	
T2/L Platform/Chassis	L 410 (309.000, 309.002)	70	08/82 – 12/88	3513	
T2/L Platform/Chassis	L 508 DG (309.400, 309.401,309.402, 309.403, 309.404...)	60	01/70 – 12/88	3513	
T2/L Platform/Chassis	L 508 DG (309.400, 309.401,309.402, 309.403, 309.404...)	63	01/70 – 12/88	3513	
T2/L Platform/Chassis	L 608 D (310.300, 310.301,310.302, 310.303, 310.304...)	63	01/70 – 12/88	3513	
T2/L Platform/Chassis	L 613 D (313.402, 313.404)	96	04/77 – 12/88	3513	
T2/L Platform/Chassis	L 911 (328.001, 328.002,328.003, 328.005, 328.020...)	81	01/72 – 07/83	3513	
T2/LN1 Box Body / Estate	507 D (667.361, 667.362)	53	04/86 – 04/89	3513	
T2/LN1 Box Body / Estate	508 D (667.361, 667.362)	58	03/89 – 12/94	3513	
T2/LN1 Box Body / Estate	510 (667.061, 667.062)	70	04/86 – 12/94	3513	
T2/LN1 Box Body / Estate	510 (667.061, 667.062)	77	04/86 – 12/94	3513	
T2/LN1 Box Body / Estate	609 D (668.061, 668.062,668.063)	63	04/86 – 12/94	3679	
T2/LN1 Box Body / Estate	609 D (668.061, 668.062,668.063)	66	04/86 – 12/94	3679	
T2/LN1 Box Body / Estate	609 D (668.061, 668.062,668.063)	77	06/94 – 12/94	3679	
T2/LN1 Box Body / Estate	611 D (668.061, 668.062,668.063)	77	06/94 – 12/94	3679	
T2/LN1 Box Body / Estate	709 D (669.061, 669.062,669.063)	63	04/86 – 12/94	3679	
T2/LN1 Box Body / Estate	709 D (669.061, 669.062,669.063)	66	04/86 – 12/94	3679	
T2/LN1 Box Body / Estate	711 D (669.361, 669.362,669.363)	77	04/86 – 12/94	3679	
T2/LN1 Box Body / Estate	711 D (669.361, 669.362,669.363)	85	04/86 – 12/94	3679	
T2/LN1 Box Body / Estate	714 D (669.361, 669.362,669.363)	103	06/94 – 12/94	3679	
T2/LN1 Box Body / Estate	809 D (670.061, 670.062,670.063)	63	04/86 – 12/94	3679	
T2/LN1 Box Body / Estate	809 D (670.061, 670.062,670.063)	66	04/86 – 12/94	3679	
T2/LN1 Box Body / Estate	811 D (670.362, 670.363)	77	04/86 – 12/94	3679	
T2/LN1 Box Body / Estate	811 D (670.362, 670.363)	85	04/86 – 12/94	3679	
T2/LN1 Box Body / Estate	814 D (670.364, 670.365,670.366)	100	11/87 – 12/94	3679	
T2/LN1 Box Body / Estate	814 D (670.364, 670.365,670.366)	103	11/87 – 12/94	3679	
T2/LN1 Box Body / Estate	814 DA 4x4 (670.464, 670.465)	100	11/87 – 12/94	3679	
T2/LN1 Box Body / Estate	814 DA 4x4 (670.464, 670.465)	103	11/87 – 12/94	3679	
T2/LN1 Bus	O 609 D (672.072, 672.073)	66	07/87 – 12/92	3679	
T2/LN1 Bus	O 611 D (672.372, 672.373)	85	07/87 – 12/92	3679	
T2/LN1 Bus	O 614 D (672.375, 672.376)	100	07/87 – 12/92	3679	
T2/LN1 Cab with engine	809 DT (670.199)	63	04/86 – 12/94	3679	
T2/LN1 Cab with engine	809 DT (670.199)	66	04/86 – 12/94	3679	
T2/LN1 Dumptruck	507 DK (667.341, 667.342)	53	04/86 – 04/89	3513	
T2/LN1 Dumptruck	508 D (667.301, 667.302,)	58	03/89 – 12/94	3513	
T2/LN1 Dumptruck	609 DK (668.041, 668.042)	63	04/86 – 12/94	3679	
T2/LN1 Dumptruck	609 DK (668.041, 668.042)	66	04/86 – 12/94	3679	
T2/LN1 Dumptruck	611 DK (668.041, 668.042)	77	06/94 – 12/94	3679	
T2/LN1 Dumptruck	709 DK (669.041, 669.042)	63	04/86 – 12/94	3679	
T2/LN1 Dumptruck	709 DK (669.041, 669.042)	66	04/86 – 12/94	3679	
T2/LN1 Dumptruck	809 DK (670.041, 670.042)	63	04/86 – 12/94	3679	
T2/LN1 Dumptruck	809 DK (670.041, 670.042)	66	04/86 – 12/94	3679	
T2/LN1 Dumptruck	811 DK (670.341, 670.342)	77	04/86 – 12/94	3679	
T2/LN1 Dumptruck	811 DK (670.341, 670.342)	85	04/86 – 12/94	3679	
T2/LN1 Platform/Chassis	507 D (667.301, 667.302,667.341, 667.342)	53	04/86 – 04/89	3513	
T2/LN1 Platform/Chassis	510 (667.001, 667.002)	70	04/86 – 12/94	3513	
T2/LN1 Platform/Chassis	510 (667.001, 667.002)	77	04/86 – 12/94	3513	
T2/LN1 Platform/Chassis	609 D (668.001, 668.002,668.003)	63	04/86 – 12/94	3679	
T2/LN1 Platform/Chassis	609 D (668.001, 668.002,668.003)	66	04/86 – 12/94	3679	
T2/LN1 Platform/Chassis	611 D (668.001, 668.002,668.003)	77	06/94 – 12/94	3679	
T2/LN1 Platform/Chassis	709 D (669.000, 669.001,669.002, 669.003, 669.041)	63	04/86 – 12/94	3679	
T2/LN1 Platform/Chassis	709 D (669.000, 669.001,669.002, 669.003, 669.041)	66	04/86 – 12/94	3679	
T2/LN1 Platform/Chassis	709 D (669.001, 669.002,669.003, 669.041, 669.000)	63	04/86 – 12/94	3679	
T2/LN1 Platform/Chassis	711 D (669.301, 669.302,669.303)	77	04/86 – 12/94	3679	
T2/LN1 Platform/Chassis	711 D (669.301, 669.302,669.303)	85	04/86 – 12/94	3679	

MAKE & MODEL   		KW	YEAR		
MERCEDES BENZ					
T2/LN1 Platform/Chassis	714 D (669.301, 669.302,669.303)	103	06/94 – 12/94	3679	
T2/LN1 Platform/Chassis	809 D (670.001, 670.002,670.003)	63	04/86 – 12/94	3679	
T2/LN1 Platform/Chassis	809 D (670.001, 670.002,670.003)	66	04/86 – 12/94	3679	
T2/LN1 Platform/Chassis	811 D (670.302, 670.303)	77	04/86 – 12/94	3679	
T2/LN1 Platform/Chassis	811 D (670.302, 670.303)	85	04/86 – 12/94	3679	
T2/LN1 Platform/Chassis	814 D (670.312, 670.313)	100	11/87 – 12/94	3679	
T2/LN1 Platform/Chassis	814 D (670.312, 670.313)	103	11/87 – 12/94	3679	
T2/LN1 Platform/Chassis	814 DA 4x4 (670.411, 670.412)	100	11/87 – 12/94	3679	
T2/LN1 Platform/Chassis	814 DA 4x4 (670.411, 670.412)	103	11/87 – 12/94	3679	
UNIMOG	U 110		01/55 -	3521	3521
UNIMOG	U 120	88	01/55 -	3390	
UNIMOG	U 140		01/55 -	3521	3521
UNIMOG	U 150	88	01/55 -	3390	
UNIMOG	U 150/4255		01/55 -	3390	
UNIMOG	U 435	88	01/55 -	3390	
UNIMOG	U 650		01/55 -	3521	3521
UNIMOG	U 100, U 110, U 1100L (OM 353.901)	74	01/77 – 05/88	3390	
UNIMOG	U 100, U 110, U 1100L (OM 353.940)	74	01/77 – 05/88	3390	
UNIMOG	U 100, U 110, U 1100L (OM 353.980)	74	01/77 – 05/88	3390	
UNIMOG	U 100L (OM 602.948)	71	11/92 -	3521	3521
UNIMOG	U 100L (OM 602.981)	85	07/96 -	3521	3521
UNIMOG	U 100L (OM 602.989)	85	07/96 -	3521	3521
UNIMOG	U 110,U 110L (OM 364.955)	75	02/92 -	3521	3521
UNIMOG	U 110,U 110L (OM 364.958)	75	02/92 -	3521	3521
UNIMOG	U 1100		01/55 -	3521	3521
UNIMOG	U 120/145		01/55 -	3390	
UNIMOG	U 1200T (OM 353.973)	92	01/83 – 05/88	3390	
UNIMOG	U 1200T (OM 353.995)	92	01/83 – 05/88	3390	
UNIMOG	U 1250 (OM 353.973)	92	12/84 – 05/88	3390	
UNIMOG	U 1250 (OM 353.995)	92	12/84 – 05/88	3390	
UNIMOG	U 1250,U 1250L (OM 356.950)	92	01/88 -	3521	3521
UNIMOG	U 1250,U 1250L (OM 356.954)	92	01/88 -	3521	3521
UNIMOG	U 1250,U 1250L (OM 366.949)	92	01/88 -	3521	3521
UNIMOG	U 1250L (OM 366.955)	100	05/88 -	3521	3521
UNIMOG	U 130,U 140 (OM 364.982)	98	07/92 -	3521	3521
UNIMOG	U 130,U 140 (OM 364.985)	98	07/92 -	3521	3521
UNIMOG	U 1300 (OM 353.973)	92	01/77 – 12/84	3390	
UNIMOG	U 1300 (OM 353.995)	92	01/77 – 12/84	3390	
UNIMOG	U 140L (OM 364.985)	100	07/92 -	3521	3521
UNIMOG	U 140T (OM 364.982)	98	07/92 -	3521	3521
UNIMOG	U 1550L (OM 356.956)	115	05/88 -	3521	3521
UNIMOG	U 1550L (OM 356.980)	177	05/88 -	3521	3521
UNIMOG	U 1550L (OM 356.997)	150	05/88 -	3521	3521
UNIMOG	U 1550L (OM 357.924)	150	05/88 -	3521	3521
UNIMOG	U 1550L (OM 357.945)	177	05/88 -	3521	3521
UNIMOG	U 1550L (OM 366.955)	100	05/88 -	3521	3521
UNIMOG	U 1550L (OM 366.956)	100	05/88 -	3521	3521
UNIMOG	U 1550L (OM 366.984)	150	05/88 -	3521	3521
UNIMOG	U 1600		01/55 -	3521	3521
UNIMOG	U 1600 (OM 356.956)	115	01/88 -	3521	3521
UNIMOG	U 1600 (OM 356.997)	150	09/89 -	3521	3521
UNIMOG	U 1600 (OM 357.924)	150	09/89 -	3521	3521
UNIMOG	U 1600 (OM 366.949)	115	01/88 -	3521	3521
UNIMOG	U 1600 (OM 366.984)	150	09/89 -	3521	3521
UNIMOG	U 1650,U 1650L (OM 356.956)	115	01/88 -	3521	3521
UNIMOG	U 1650,U 1650L (OM 356.997)	150	09/89 -	3521	3521
UNIMOG	U 1650,U 1650L (OM 357.924)	150	09/89 -	3521	3521
UNIMOG	U 1650,U 1650L (OM 366.948)	115	01/88 -	3521	3521
UNIMOG	U 1650,U 1650L (OM 366.949)	115	01/88 -	3521	3521
UNIMOG	U 1650,U 1650L (OM 366.984)	150	09/89 -	3521	3521
UNIMOG	U 1700T (OM 356.957)	122	09/88 -	3521	3521
UNIMOG	U 1700T (OM 366.963)	122	09/88 -	3521	3521
UNIMOG	U 1750,U 1750L (OM 356.957)	122	09/88 -	3521	3521
UNIMOG	U 1750,U 1750L (OM 356.981)	122	09/88 -	3521	3521
UNIMOG	U 1750,U 1750L (OM 366.963)	122	09/88 -	3521	3521
UNIMOG	U 1800 (OM 356.998)	132	04/92 -	3521	3521
UNIMOG	U 1800T (OM 356.998)	132	04/92 -	3521	3521
UNIMOG	U 1850,U 1850L (OM 356.998)	132	04/92 -	3521	3521
UNIMOG	U 2100 (OM 356.997)	155	09/89 -	3521	3521
UNIMOG	U 2100 (OM 366.984)	155	09/89 -	3521	3521
UNIMOG	U 2100T (OM 356.997)	155	09/89 -	3521	3521
UNIMOG	U 2100T (OM 366.984)	155	09/89 -	3521	3521
UNIMOG	U 2150 (OM 356.997)	155	09/89 -	3521	3521
UNIMOG	U 2150 (OM 366.984)	155	09/89 -	3521	3521
UNIMOG	U 2150,U 2150L (OM 356.980)	177	09/89 -	3521	3521
UNIMOG	U 2150,U 2150L (OM 356.997)	155	09/89 -	3521	3521

MAKE & MODEL		KW	YEAR		
MERCEDES BENZ					
UNIMOG	U 2150,U 2150L (OM 357.924)	155	09/89 -	3521	3521
UNIMOG	U 2150,U 2150L (OM 357.945)	177	09/89 -	3521	3521
UNIMOG	U 2150,U 2150L (OM 366.984)	155	09/89 -	3521	3521
UNIMOG	U 2400 (OM 356.980)	177	05/91 -	3521	3521
UNIMOG	U 2400 (OM 357.945)	177	05/91 -	3521	3521
UNIMOG	U 2400TG (OM 356.980)	177	07/93 -	3521	3521
UNIMOG	U 2400TG (OM 357.945)	177	07/93 -	3521	3521
UNIMOG	U 2450,U 2450L (OM 356.980)	177	05/91 -	3521	3521
UNIMOG	U 2450,U 2450L (OM 357.945)	177	05/91 -	3521	3521
UNIMOG	U 2450L (OM 356.980)	177	07/93 -	3521	3521
UNIMOG	U 2450L (OM 357.945)	177	07/93 -	3521	3521
UNIMOG	U 600		01/55 -	3521	3521
UNIMOG	U 600 (OM 616.942)	38	05/88 -	3390	
UNIMOG	U 600 (OM 616.943)	38	05/88 -	3390	
UNIMOG	U 90		01/55 -	3521	3521
UNIMOG	U 90 (OM 602.941)	65	11/92 -	3521	3521
UNIMOG	U 90 (OM 602.981)	85	07/96 -	3521	3521
UNIMOG	U 90 (OM 602.989)	85	07/96 -	3521	3521
UNIMOG	UX 100H,UX 100M (OM 602.981)	80	09/96 -	3521	3521
UNIMOG	UX 100H,UX 100M (OM 602.989)	80	09/96 -	3521	3521
VARIO Box Body / Estate	612 D (668.351, 668.352,668.353)	90	09/96 -	3679	
VARIO Box Body / Estate	613 D, 614 D (668.351, 668.352, 668.353)	95	09/96 -	3679	
VARIO Box Body / Estate	613 D, 614 D (668.351, 668.352, 668.353)	100	09/96 -	3679	
VARIO Box Body / Estate	615 D, 616 D (668.351, 668.352, 668.353)	112	09/98 -	3679	
VARIO Box Body / Estate	615 D, 616 D (668.351, 668.352, 668.353)	115	09/98 -	3679	
VARIO Box Body / Estate	618D	130	09/06 -	3679	
VARIO Box Body / Estate	812 D (670.351, 670.352,670.353)	90	09/96 -	3679	
VARIO Box Body / Estate	813 D, 814 D (670.351, 670.352, 670.353)	95	09/96 -	3679	
VARIO Box Body / Estate	813 D, 814 D (670.351, 670.352, 670.353)	100	09/96 -	3679	
VARIO Box Body / Estate	813 DA, 814 DA 4x4 (669.599, 670.451, 670.452, 670.453)	95	09/96 -	3679	
VARIO Box Body / Estate	813 DA, 814 DA 4x4 (669.599, 670.451, 670.452, 670.453)	100	09/96 -	3679	
VARIO Box Body / Estate	815 D, 816 D (670.351, 670.352, 670.353)	112	09/96 -	3679	
VARIO Box Body / Estate	815 D, 816 D (670.351, 670.352, 670.353)	115	09/96 -	3679	
VARIO Box Body / Estate	815 DA, 816 DA 4x4 (669.599, 670.451, 670.452, 670.453)	112	09/96 -	3679	
VARIO Box Body / Estate	815 DA, 816 DA 4x4 (669.599, 670.451, 670.452, 670.453)	115	09/96 -	3679	
VARIO Box Body / Estate	818 D (670.351, 670.352,670.353)	130	09/96 -	3679	
VARIO Bus	O 810 (670.373, 670.374)	75	09/96 -	3679	
VARIO Bus	O 812 (670.373, 670.674)	90	09/96 -	3679	
VARIO Bus	O 813 (670.373, 670.374)	95	01/06 -	3679	
VARIO Bus	O 814 (670.373, 670.374)	100	09/96 -	3679	
VARIO Bus	O 815 (670.373, 670.374)	112	09/96 -	3679	
VARIO Bus	O 816 D (670.373, 670.374)	115	01/06 -	3679	
VARIO Bus	O 818 D (670.373, 670.374)	130	09/06 -	3679	
VARIO Cab with engine	810 DT (670.398)	75	09/96 -	3679	
VARIO Cab with engine	812 DT	90	09/96 -	3679	
VARIO Cab with engine	814 DT (670.398)	100	09/96 -	3679	
VARIO Cab with engine	816 DT (670.398)	112	09/96 -	3679	
VARIO Dumptruck	612 D (668.331, 668.332)	90	09/96 -	3679	
VARIO Dumptruck	613 D, 614 D (668.331,668.332)	95	09/96 -	3679	
VARIO Dumptruck	613 D, 614 D (668.331,668.332)	100	09/96 -	3679	
VARIO Dumptruck	615 D, 616 D (668.331,668.332)	112	09/98 -	3679	
VARIO Dumptruck	615 D, 616 D (668.331,668.332)	115	09/98 -	3679	
VARIO Dumptruck	618 D	130	09/06 -	3679	
VARIO Dumptruck	812 D (670.331, 670.332)	90	09/96 -	3679	
VARIO Dumptruck	813 D, 814 D (670.331,670.332)	95	09/96 -	3679	
VARIO Dumptruck	813 D, 814 D (670.331,670.332)	100	09/96 -	3679	
VARIO Dumptruck	813 DA, 814 DA 4x4 (670.431,670.432)	95	09/96 -	3679	
VARIO Dumptruck	813 DA, 814 DA 4x4 (670.431,670.432)	100	09/96 -	3679	
VARIO Dumptruck	815 D, 816 D (670.331,670.332)	112	09/96 -	3679	
VARIO Dumptruck	815 D, 816 D (670.331,670.332)	115	09/96 -	3679	
VARIO Dumptruck	815 DA, 816 DA 4x4 (670.431,670.432)	112	09/96 -	3679	
VARIO Dumptruck	815 DA, 816 DA 4x4 (670.431,670.432)	115	09/96 -	3679	
VARIO Dumptruck	818 D (670.321, 670.322)	130	09/06 -	3679	
VARIO Dumptruck	818 DA 4x4	130	09/06 -	3679	
VARIO Kombi Van	512 D (667.351,667.352,667.353)	90	09/96 – 12/10	3614	3614
VARIO Platform şasi	512 D (667.321,667.322,667.323)	90	09/96 – 12/10	3614	3614
VARIO Platform/Chassis	612 D (668.321, 668.322,668.323)	90	09/96 -	3679	
VARIO Platform/Chassis	613 D, 614 D (668.321,668.322, 668.323)	95	09/96 -	3679	
VARIO Platform/Chassis	613 D, 614 D (668.321,668.322, 668.323)	100	09/96 -	3679	
VARIO Platform/Chassis	615 D, 616 D (668.321,668.322, 668.323)	112	09/98 -	3679	
VARIO Platform/Chassis	615 D, 616 D (668.321,668.322, 668.323)	115	09/98 -	3679	
VARIO Platform/Chassis	618 D (668.321, 668.322,668.323)	130	09/96 -	3679	
VARIO Platform/Chassis	812 D (670.321, 670.322,670.323, 670.324)	90	09/96 -	3679	
VARIO Platform/Chassis	813 D, 814 D (670.321,670.322, 670.323, 670.324)	95	09/96 -	3679	
VARIO Platform/Chassis	813 D, 814 D (670.321,670.322, 670.323, 670.324)	100	09/96 -	3679	
VARIO Platform/Chassis	813 DA, 814 DA 4x4 (670.421,670.422, 670.423)	95	09/96 -	3679	

MAKE & MODEL   		KW	YEAR		
MERCEDES BENZ					
VARIO Platform/Chassis	813 DA, 814 DA 4x4 (670.421,670.422, 670.423)	100	09/96 -	3679	
VARIO Platform/Chassis	815 D, 816 D (670.321,670.322, 670.323, 670.324)	112	09/96 -	3679	
VARIO Platform/Chassis	815 D, 816 D (670.321,670.322, 670.323, 670.324)	115	09/96 -	3679	
VARIO Platform/Chassis	815 DA, 816 DA 4x4 (670.421,670.422, 670.423)	112	09/96 -	3679	
VARIO Platform/Chassis	815 DA, 816 DA 4x4 (670.421,670.422, 670.423)	115	09/96 -	3679	
VARIO Platform/Chassis	818 D (670.321, 670.322,670.323, 670.324)	130	09/06 -	3679	
VARIO Platform/Chassis	818 DA 4x4	130	09/96 -	3679	
V-Class (638/2)	2.0 V 200 (M 111.950)	95	02/97 – 07/03	3567	
V-Class (638/2)	2.0 V 200 (M 111.948)	95	02/97 – 07/03	3567	
V-Class (638/2)	2.2 V 200 CDI (OM 611.980)	75	03/99 – 07/03	3567	
V-Class (638/2)	2.2 V 220 CDI (OM 611.980)	90	03/99 – 07/03	3567	
V-Class (638/2)	2.3 V 230 (M 111.978)	105	10/96 – 07/03	3567	
V-Class (638/2)	2.3 V 230 TD (OM 601.970)	72	09/96 – 07/03	3567	
V-Class (638/2)	2.8 V 280 (M 104.900)	128	08/97 – 07/03	3567	
V-CLASS (638/2)	V 200 (638.214, 638.294)	95	02/97 – 07/03	3681	3680
V-CLASS (638/2)	V 200 (638.214, 638.294)	95	02/97 – 07/03		3861
V-CLASS (638/2)	V 200 CDI (638.294)	75	03/99 – 07/03	3681	3680
V-CLASS (638/2)	V 200 CDI (638.294)	75	03/99 – 07/03		3861
V-CLASS (638/2)	V 220 CDI (638.294)	90	03/99 – 07/03	3681	3680
V-CLASS (638/2)	V 220 CDI (638.294)	90	03/99 – 07/03		3861
V-CLASS (638/2)	V 230 (638.234, 638.294)	105	10/96 – 07/03	3681	3680
V-CLASS (638/2)	V 230 (638.234, 638.294)	105	10/96 – 07/03		3861
V-CLASS (638/2)	V 230 TD (638.274)	72	09/96 – 07/03	3681	3680
V-CLASS (638/2)	V 230 TD (638.274)	72	09/96 – 07/03		3861
V-CLASS (638/2)	V 280 (638.244, 638.294)	128	08/97 – 07/03	3681	3680
V-CLASS (638/2)	V 280 (638.244, 638.294)	128	08/97 – 07/03		3861
V-CLASS (W447)	V 200 CDI / d (447.811,447.813, 447.815)	100	03/14 -	3681	3680
V-CLASS (W447)	V 200 CDI / d (447.811,447.813, 447.815)	100	03/14 -		3861
V-CLASS (W447)	V 220 CDI / d (447.811,447.813, 447.815)	120	03/14 -	3681	3680
V-CLASS (W447)	V 220 CDI / d (447.811,447.813, 447.815)	120	03/14 -		3861
VIANO (W639)	3.0	140	09/03 -	3923	3924
VIANO (W639)	3.0	140	09/03 -	3925	
VIANO (W639)	3.2	160	09/03 -	3923	3924
VIANO (W639)	3.2	160	09/03 -	3925	
VIANO (W639)	3.5	190	09/07 -	3923	3924
VIANO (W639)	3.5	190	09/07 -	3925	
VIANO (W639)	3.7	170	06/04 -	3923	3924
VIANO (W639)	3.7	170	06/04 -	3925	
VIANO (W639)	CDI 2.0	80	09/03 -	3923	3924
VIANO (W639)	CDI 2.0	80	09/03 -	3925	
VIANO (W639)	CDI 2.0	85	08/05 -	3923	3924
VIANO (W639)	CDI 2.0	85	08/05 -	3925	
VIANO (W639)	CDI 2.0	100	07/10 -	3925	3924
VIANO (W639)	CDI 2.0 4-matic	80	07/05 -	3923	3924
VIANO (W639)	CDI 2.0 4-matic	80	07/05 -	3925	
VIANO (W639)	CDI 2.0 4-matic	100	07/10 -	3925	3924
VIANO (W639)	CDI 2.2	110	09/03 -	3923	3924
VIANO (W639)	CDI 2.2	110	09/03 -	3925	
VIANO (W639)	CDI 2.2	120	07/10 -	3925	3924
VIANO (W639)	CDI 2.2 4-matic	110	07/05 -	3923	3924
VIANO (W639)	CDI 2.2 4-matic	110	07/05 -	3925	
VIANO (W639)	CDI 2.2 4-matic	120	07/10 -	3925	3924
VIANO (W639)	CDI 3.0	150	03/06 -	3923	3924
VIANO (W639)	CDI 3.0	150	03/06 -	3925	3924
VIANO (W639)	CDI 3.0	165	07/10 -	3925	
VITO (638)	108 D 2.3 (638.064) (OM 601.942)	58	03/97 – 07/03	3567	
VITO (638)	2.0 113 (M 111.948)	95	02/96 – 07/03	3567	
VITO (638)	2.0 113 (M 111.950)	95	02/96 – 07/03	3567	
VITO (638)	2.3 108 D (OM 601.942)	58	02/96 – 07/03	3567	
VITO (638)	2.3 110 D (OM 601.970)	72	03/97 – 07/03	3567	
VITO (638)	2.3 110 TD (OM 601.970)	72	02/96 – 07/03	3567	
VITO (638)	2.3 114 (M 111.978)	105	12/96 – 07/03	3567	
VITO / MIXTO Box (W639)	119	140	09/03 -	3923	3924
VITO / MIXTO Box (W639)	119	140	09/03 -	3925	
VITO / MIXTO Box (W639)	122	160	09/03 -	3923	3924
VITO / MIXTO Box (W639)	122	160	09/03 -	3925	
VITO / MIXTO Box (W639)	126	190	09/07 -	3923	3924
VITO / MIXTO Box (W639)	126	190	09/07 -	3925	
VITO / MIXTO Box (W639)	109 CDI	65	09/03 -	3923	3924
VITO / MIXTO Box (W639)	109 CDI	65	09/03 -	3925	
VITO / MIXTO Box (W639)	109 CDI	70	08/06 -	3923	3924
VITO / MIXTO Box (W639)	109 CDI	70	08/06 -	3925	
VITO / MIXTO Box (W639)	110 CDI	70	09/10 -	3925	3924
VITO / MIXTO Box (W639)	111 CDI	80	09/03 -	3923	3924
VITO / MIXTO Box (W639)	111 CDI	80	09/03 -	3925	
VITO / MIXTO Box (W639)	111 CDI	85	09/07 -	3923	3924

MAKE & MODEL   		KW	YEAR		
MERCEDES BENZ					
VITO / MIXTO Box (W639)	111 CDI	85	09/07 -	3925	
VITO / MIXTO Box (W639)	111 CDI 4x4	80	09/07 -	3923	3924
VITO / MIXTO Box (W639)	111 CDI 4x4	80	09/07 -	3925	
VITO / MIXTO Box (W639)	113 CDI	100	09/10 -	3925	3924
VITO / MIXTO Box (W639)	113 CDI 4x4	100	09/10 -	3923	3924
VITO / MIXTO Box (W639)	113 CDI 4x4	100	09/10 -	3925	
VITO / MIXTO Box (W639)	115 CDI	110	09/03 -	3923	3924
VITO / MIXTO Box (W639)	115 CDI	110	09/03 -	3925	
VITO / MIXTO Box (W639)	115 CDI 4x4	110	07/06 -	3923	3924
VITO / MIXTO Box (W639)	115 CDI 4x4	110	07/06 -	3925	
VITO / MIXTO Box (W639)	116 CDI	120	09/10 -	3925	3924
VITO / MIXTO Box (W639)	116 CDI 4x4	120	09/10 -	3923	3924
VITO / MIXTO Box (W639)	116 CDI 4x4	120	09/10 -	3925	
VITO / MIXTO Box (W639)	120 CDI	150	07/06 -	3923	3924
VITO / MIXTO Box (W639)	120 CDI	150	07/06 -	3925	
VITO / MIXTO Box (W639)	122 CDI	165	09/10 -	3925	3924
VITO / MIXTO Box (W639)	123 (639.603)	170	06/04 – 07/08	3923	3924
VITO / MIXTO Box (W639)	123 (639.603)	170	06/04 – 07/08	3925	
VITO / MIXTO Box (W639)	E-CELL	60	03/12 -	3925	3924
VITO Box (638)	108 CDI 2.2 (638.094)	60	03/99 – 07/03	3681	3680
VITO Box (638)	108 CDI 2.2 (638.094)	60	03/99 – 07/03		3861
VITO Box (638)	108 D 2.3 (638.064)	58	03/97 – 07/03	3681	3680
VITO Box (638)	108 D 2.3 (638.064)	58	03/97 – 07/03		3861
VITO Box (638)	110 CDI 2.2 (638.094)	75	03/99 – 07/03	3681	3680
VITO Box (638)	110 CDI 2.2 (638.094)	75	03/99 – 07/03		3861
VITO Box (638)	110 D 2.3 (638.074)	72	03/97 – 07/03	3681	3680
VITO Box (638)	110 D 2.3 (638.074)	72	03/97 – 07/03		3861
VITO Box (638)	112 CDI 2.2 (638.094)	90	03/99 – 07/03	3681	3680
VITO Box (638)	112 CDI 2.2 (638.094)	90	03/99 – 07/03		3861
VITO Box (638)	113 2.0 (638.014, 638.094)	95	03/97 – 07/03	3681	3680
VITO Box (638)	113 2.0 (638.014, 638.094)	95	03/97 – 07/03		3861
VITO Box (638)	114 2.3 (638.034, 638.094)	105	03/97 – 07/03	3681	3861
VITO Box (638)	114 2.3 (638.034, 638.094)	105	03/97 – 07/03		3680
VITO Box (W447)	109 CDI (447.601, 447.603,447.605)	65	10/14 -	3925	
VITO Box (W447)	111 CDI (447.601, 447.603,447.605)	84	10/14 -	3925	
VITO Bus (638)	108 CDI 2.2 (638.194)	60	03/99 – 07/03	3681	3680
VITO Bus (638)	108 CDI 2.2 (638.194)	60	03/99 – 07/03		3861
VITO Bus (638)	108 D 2.3 (638.164)	58	02/96 – 07/03	3681	3680
VITO Bus (638)	108 D 2.3 (638.164)	58	02/96 – 07/03		3861
VITO Bus (638)	110 CDI 2.2 (638.194)	75	03/99 – 07/03	3681	3680
VITO Bus (638)	110 CDI 2.2 (638.194)	75	03/99 – 07/03		3861
VITO Bus (638)	110 TD 2.3 (638.174)	72	02/96 – 07/03	3681	3680
VITO Bus (638)	110 TD 2.3 (638.174)	72	02/96 – 07/03		3861
VITO Bus (638)	112 CDI 2.2 (638.194)	90	03/99 – 07/03	3681	3680
VITO Bus (638)	112 CDI 2.2 (638.194)	90	03/99 – 07/03		3861
VITO Bus (638)	113 2.0 (638.114, 638.194)	95	02/96 – 07/03	3681	3680
VITO Bus (638)	113 2.0 (638.114, 638.194)	95	02/96 – 07/03		3861
VITO Bus (638)	114 2.3 (638.134, 638.194)	105	12/96 – 07/03	3681	3680
VITO Bus (638)	114 2.3 (638.134, 638.194)	105	12/96 – 07/03		3861
VITO Bus (W639)	119	140	09/03 -	3923	3924
VITO Bus (W639)	119	140	09/03 -	3925	
VITO Bus (W639)	122	160	09/03 -	3923	3924
VITO Bus (W639)	122	160	09/03 -	3925	
VITO Bus (W639)	123	170	06/04 -	3923	3924
VITO Bus (W639)	123	170	06/04 -	3925	
VITO Bus (W639)	126	190	09/07 -	3923	3924
VITO Bus (W639)	126	190	09/07 -	3925	
VITO Bus (W639)	109 CDI	65	09/03 -	3923	3924
VITO Bus (W639)	109 CDI	65	09/03 -	3925	
VITO Bus (W639)	109 CDI	70	09/06 -	3923	3924
VITO Bus (W639)	109 CDI	70	09/06 -	3925	
VITO Bus (W639)	109 CDI 4x4	70	09/07 -	3923	3924
VITO Bus (W639)	109 CDI 4x4	70	09/07 -	3925	
VITO Bus (W639)	110 CDI	70	09/10 -	3925	3924
VITO Bus (W639)	111 CDI	80	09/03 -	3923	3924
VITO Bus (W639)	111 CDI	80	09/03 -	3925	3923
VITO Bus (W639)	111 CDI (639.701)	85	09/07 -	3925	3924
VITO Bus (W639)	111 CDI 4x4	80	09/07 -	3923	3924
VITO Bus (W639)	111 CDI 4x4	80	09/07 -	3925	
VITO Bus (W639)	113 CDI	100	09/10 -	3925	3924
VITO Bus (W639)	113 CDI 4x4	100	09/10 -	3925	3924
VITO Bus (W639)	115 CDI	110	09/03 -	3923	3924
VITO Bus (W639)	115 CDI	110	09/03 -	3925	
VITO Bus (W639)	115 CDI 4x4	110	09/07 -	3923	3924
VITO Bus (W639)	115 CDI 4x4	110	09/07 -	3925	
VITO Bus (W639)	116 CDI	120	09/10 -	3925	3924

MAKE & MODEL		KW	YEAR		
MERCEDES BENZ					
VITO Bus (W639)	116 CDI 4x4	120	09/10 -	3925	3924
VITO Bus (W639)	120 CDI	150	07/06 -	3923	3924
VITO Bus (W639)	120 CDI	150	07/06 -	3925	
VITO Bus (W639)	122 CDI	165	09/10 -	3925	3924
VITO Bus (W639)	E-CELL	60	03/12 -	3923	3924
VITO Bus (W639)	E-CELL	60	03/12 -	3925	
VITO Mixto (W447)	109 CDI (447.701, 447.703,447.705)	65	10/14 -	3925	
VITO Mixto (W447)	109 CDI / 109 BlueTEC (447.701, 447.703, 447.705)	65	10/14 -	3925	
VITO Mixto (W447)	111 CDI (447.701, 447.703,447.705)	84	10/14 -	3925	
VITO Mixto (W447)	111 CDI / 111 BlueTEC (447.701, 447.703, 447.705)	84	10/14 -	3925	
X-SERISI (470)	220 d 4-matic (470.211)	120	09.2017 - 05.2020	4376	
X-SERISI (470)	250 d (470.230)	140	09.2017 - 05.2020	4376	
X-SERISI (470)	250 d 4-matic (470.231)	140	09.2017 - 05.2020	4376	
X-SERISI (470)	220 d (470.210)	120	09.2017 - 05.2020	4376	
X-SERISI (470)	350 d 4-matic (470.252)	190	07.2018 - 05.2020	4376	
X-SERISI (470) X 220 d (470.210)		120	09.2017 - 05.2020	4367	
X-SERISI (470) X 220 d 4-matic (470.211)		120	09.2017 - 05.2020	4367	
X-SERISI (470) X 250 d (470.230)		140	09.2017 - 05.2020	4367	
X-SERISI (470) X 250 d 4-matic (470.231)		140	09.2017 - 05.2020	4367	
X-SERISI (470) X 350 d 4-matic (470.252)		190	07.2018 - 05.2020	4367	
X-SERISI Platform şasi (470)	220 d (470.210)	120	09.2017 -	4376	
X-SERISI Platform şasi (470)	250 d 4-matic (470.231)	140	09.2017 -	4376	
X-SERISI Platform şasi (470) X 220 d (470.210)		120	09.2017 -	4367	
X-SERISI Platform şasi (470) X 250 d 4-matic (470.231)		140	09.2017 -	4367	
MERCEDES-BENZ (BBDC)					
C-CLASS (W204)	C 180 K (204.045)	115	07/10 -	4248	
C-CLASS (W204)	C 200 K (204.041)	135	03/08 – 12/09	4248	
C-CLASS (W204)	C 230	150	05/08 – 10/09	4248	
C-CLASS (W204)	C 260 Turbo	150	10/09 – 12/14	4248	
C-CLASS (W204)	C 280	170	03/08 – 01/09	4248	
C-CLASS (W204)	C 280	170	03/08 – 01/09	4249	
C-CLASS (W204)	C 300	180	07/11 -	4248	
E-CLASS (W211)	1.8 E 200	120	11/05 – 12/06	4097	
E-CLASS (W211)	1.8 E 200	120	11/05 – 12/06	4102	
E-CLASS (W211)	1.8 E 200 (211.041)	135	09/06 -	4097	
E-CLASS (W211)	1.8 E 200 (211.041)	135	09/06 -	4102	
E-CLASS (W211)	2.5 E 230	150	11/05 -	4097	
E-CLASS (W211)	2.5 E 230	150	11/05 -	4102	
E-CLASS (W211)	3.0 E 280	170	11/05 -	4097	
E-CLASS (W211)	3.0 E 280	170	11/05 -	4102	
E-CLASS (W211)	3.5 E 350	200	11/05 -	4097	
E-CLASS (W211)	3.5 E 350	200	11/05 -	4102	
E-CLASS (W212)	E 260 L CGI (212.147)	150	06/10 -	4249	
E-CLASS (W212)	E 300 L (212.054)	180	12/10 -	4249	
MERCEDES-BENZ (FJDA)					
VIANO MPV	2.5	140	01/10 – 12/12	3923	3924
VIANO MPV	2.5	140	01/10 – 12/12	3925	
VITO Bus	115 CDI - 2.2	110	01/10 – 03/16	3923	3924
VITO Bus	115 CDI - 2.2	110	01/10 – 03/16	3925	
VITO Bus	119 - 2.5	140	01/10 – 03/16	3923	3924
VITO Bus	119 - 2.5	140	01/10 – 03/16	3925	
MERCURY					
MARINER	2.3 16V		05/04 -	4220	
MARINER	2.3 16V 4WD		05/04 -	4220	
MARINER	3.0 24V		05/04 -	4220	
MARINER	3.0 24V 4WD		05/04 -	4220	
MARINER	3.0 A las 4 ruedas	151	05/04 – 12/07	4220	
MG					
EXPRESS Box	160	118	03/03 – 05/05	4115	4148
EXPRESS Box	1.4	76	03/03 – 05/05	3872	4212
EXPRESS Box	1.4	76	03/03 – 05/05	3683	
EXPRESS Box	1.8	86	03/03 – 05/05	3872	4212
EXPRESS Box	1.8	86	03/03 – 05/05	3683	
EXPRESS Box	2.0 TD	74	03/03 – 05/05	3872	4212
EXPRESS Box	2.0 TD	74	03/03 – 05/05	3683	
EXPRESS Box	2.0 TD	83	03/03 – 05/05	3872	4212
EXPRESS Box	2.0 TD	83	03/03 – 05/05	3683	
LCV Express Van 160	18 K4K	118	03/2003 - 05/2005		4148/1
LCV Express Van 2.0 TD	20 T2N	74	03/2003 - 05/2005	3872/1	
LCV Express Van 2.0 TD	20 T2N	83	03/2003 - 05/2005	3872/1	
LCV Express Van 44287	14 K4F	76	03/2003 - 05/2005	3872/1	
LCV Express Van 44409	18 K4F	86	03/2003 - 05/2005	3872/1	
MAESTRO	1600	76	03/83 – 09/84	3624	
MAESTRO	2.0 EFi	86	10/84 – 09/90	3624	

MAKE & MODEL			KW	YEAR		
MG						
MG ZR	105		76	06/01 – 04/05	3683	
MG ZR	105		76	06/01 – 04/05	3872	
MG ZR	105		76	06/01 – 04/05		4212
MG ZR	105		76	06/01 – 04/05	3872	4212
MG ZR	120		86	06/01 – 04/05	3872	4212
MG ZR	120		86	06/01 – 04/05	3683	
MG ZR	160		118	06/01 – 04/05	4115	4148
MG ZR	2.0 TD		74	06/01 – 04/05	3872	4212
MG ZR	2.0 TD		74	06/01 – 04/05	3683	
MG ZR	2.0 TD		83	12/02 – 04/05	3872	4212
MG ZR	2.0 TD		83	12/02 – 04/05	3683	
MG ZR 105	14 K4F		76	06/2001 - 04/2005	3872/1	
MG ZR 120	18 K4F		86	06/2001 - 04/2005	3872/1	
MG ZR 160	18 K4K		118	06/2001 - 04/2005		4148/1
MG ZR 2.0 TD	20 T2N		74	06/2001 - 04/2005	3872/1	
MG ZR 2.0 TD	20 T2N		83	12/2002 - 04/2005	3872/1	
MG ZS	120		86	07/01 – 04/05	3872	4212
MG ZS	120		86	07/01 – 04/05	3683	
MG ZS	180		130	07/01 – 04/05	4115	4148
MG ZS	180		130	07/01 – 04/05		4212
MG ZS	1.6		79	07/03 – 04/05	3872	4212
MG ZS	1.6		79	07/03 – 04/05	3683	
MG ZS	2.0 TD		74	01/04 – 04/05	3872	4212
MG ZS	2.0 TD		74	01/04 – 04/05	3683	
MG ZS	2.0 TD		83	01/04 – 04/05	3872	4212
MG ZS	2.0 TD		83	01/04 – 04/05	3683	
MG ZS 120	18 K4F		86	07/2001 - 04/2005	3872/1	
MG ZS 180	25 K4F		130	07/2001 - 04/2005		4148/1
MG ZS 2.0 TD	20 T2N		74	01/2004 - 04/2005	3872/1	
MG ZS 2.0 TD	20 T2N		83	01/2004 - 04/2005	3872/1	
MG ZS 44348	16 K4F		79	07/2003 - 04/2005	3872/1	
MG ZS Hatchback	120		86	07/01 – 10/05	3872	4212
MG ZS Hatchback	120		86	07/01 – 10/05	3683	
MG ZS Hatchback	180		130	07/01 – 10/05	4115	4148
MG ZS Hatchback	180		130	07/01 – 10/05		4212
MG ZS Hatchback	1.6		82	11/01 – 10/05	3872	4212
MG ZS Hatchback	1.6		82	11/01 – 10/05	3683	
MG ZS Hatchback	2.0 TD		74	01/04 – 10/05	3872	4212
MG ZS Hatchback	2.0 TD		74	01/04 – 10/05	3683	
MG ZS Hatchback	2.0 TD		83	01/04 – 10/05	3872	4212
MG ZS Hatchback	2.0 TD		83	01/04 – 10/05	3683	
MG ZS Hatchback 120	18 K4F		86	07/2001 - 10/2005	3872/1	
MG ZS Hatchback 180	25 K4F		130	07/2001 - 10/2005		4148/1
MG ZS Hatchback 2.0 TD	20 T2N		74	01/2004 - 10/2005	3872/1	
MG ZS Hatchback 2.0 TD	20 T2N		83	01/2004 - 10/2005	3872/1	
MG ZS Hatchback 44348	16 K4F		79	07/2003 - 04/2005	3872/1	
MG ZS Hatchback 44348	16 K4F		82	11/2001 - 10/2005	3872/1	
MG ZT	160		118	06/01 – 07/05	3943	
MG ZT	180		130	01/03 – 07/05	3943	
MG ZT	190		140	06/01 – 07/05	3943	
MG ZT	1.8 16V		88	01/03 – 07/05	3943	
MG ZT	1.8 T 16V		118	01/03 – 07/05	3943	
MG ZT	2.0 CDTi		85	06/02 – 09/03	3943	
MG ZT	2.0 CDTi		96	11/02 – 07/05	3943	
MG ZT- T	160		118	10/01 – 07/05	3943	
MG ZT- T	180		130	01/03 – 07/05	3943	
MG ZT- T	190		140	10/01 – 07/05	3943	
MG ZT- T	1.8 16V		88	01/03 – 07/05	3943	
MG ZT- T	1.8 T 16V		118	01/03 – 07/05	3943	
MG ZT- T	2.0 CDTi		85	06/02 – 07/05	3943	
MG ZT- T	2.0 CDTi		96	11/02 – 07/05	3943	
MGB Convertible	1.8		68	01/66 – 12/80	3319	
MGB GT	1.8		68	01/66 – 11/80	3319	
MGR V8	3.9		140	09/92 – 12/95	3683	
MGR V8	3.9		140	09/92 – 12/95	3872	
MONTEGO	2.0 EFi		86	04/84 – 09/90	3624	
MONTEGO	2.0 Turbo		110	10/84 – 09/90	3624	
MINI						
Mini II Countryman (R60)/ Crossover 1.6 One	N16B16A		72	06/2010 - 11/2016		4389
Mini II Countryman (R60)/ Crossover Cooper	N16 B16 A		85	08/2010 - 10/2016		4389
Mini II Countryman (R60)/ Crossover Cooper	N16 B16 A		88	08/2010 - 10/2016		4389
Mini II Countryman (R60)/ Crossover Cooper	N16 B16 A		90	08/2010 - 10/2016		4389
Mini II Countryman (R60)/ Crossover Cooper ALL4	N16 B16 A		90	11/2012 - 10/2016		4389
Mini II Countryman (R60)/ Crossover Cooper ALL4	N18 B16 A		90	11/2012 - 10/2016		4389
Mini II Countryman (R60)/ Crossover Cooper D	N47 C16 A		82	08/2010 - 10/2016		4389

MAKE & MODEL		KW	YEAR		
MINI					
Mini II Countryman (R60)/ Crossover Cooper D	N47 C20 A	82	03/2011 - 10/2016		4389
Mini II Countryman (R60)/ Crossover Cooper D ALL4	N47 C16 A	82	08/2010 - 10/2016		4389
Mini II Countryman (R60)/ Crossover Cooper D ALL4	N47 C20 A	82	03/2011 - 10/2016		4389
Mini II Countryman (R60)/ Crossover Cooper S	N18 B16 A	135	08/2010 - 10/2016		4389
Mini II Countryman (R60)/ Crossover Cooper S	N18 B16 A	140	07/2014 - 10/2016		4389
Mini II Countryman (R60)/ Crossover Cooper S	N18 B16 A	147	08/2010 - 10/2016		4389
Mini II Countryman (R60)/ Crossover Cooper S ALL4	N18 B16 A	120	08/2010 - 10/2016		4389
Mini II Countryman (R60)/ Crossover Cooper S ALL4	N18 B16 A	135	08/2010 - 10/2016		4389
Mini II Countryman (R60)/ Crossover Cooper S ALL4	N18 B16 A	140	07/2014 - 10/2016		4389
Mini II Countryman (R60)/ Crossover Cooper SD	N47 C20 A	100	03/2011 - 10/2016		4389
Mini II Countryman (R60)/ Crossover Cooper SD	N47 C20 A	105	03/2011 - 10/2016		4389
Mini II Countryman (R60)/ Crossover Cooper SD ALL4	N47 C20 A	100	03/2011 - 10/2016		4389
Mini II Countryman (R60)/ Crossover Cooper SD ALL4	N47 C20 A	105	03/2011 - 10/2016		4389
Mini II Countryman (R60)/ Crossover John Cooper Works ALL4	N18 B16 C	160	11/2012 - 10/2016		4389
Mini II Countryman (R60)/ Crossover One D	N47 C16 A	66	08/2010 - 10/2016		4389
Mini II Paceman (R61) 1.6 One	N16B16A	72	06/2010 - 11/2016		4389
Mini II Paceman (R61) Cooper	N16 B16 A	88	04/2012 - 09/2016		4389
Mini II Paceman (R61) Cooper	N16 B16 A	90	04/2012 - 09/2016		4389
Mini II Paceman (R61) Cooper ALL4	N16 B16 A	90	07/2013 - 09/2016		4389
Mini II Paceman (R61) Cooper ALL4	N18 B16 A	90	11/2012 - 09/2016		4389
Mini II Paceman (R61) Cooper D	N47 C16 A	82	04/2012 - 09/2016		4389
Mini II Paceman (R61) Cooper D	N47 C20 A	82	07/2012 - 09/2016		4389
Mini II Paceman (R61) Cooper D ALL4	N47 C16 A	82	04/2012 - 09/2016		4389
Mini II Paceman (R61) Cooper D ALL4	N47 C20 A	82	03/2012 - 09/2016		4389
Mini II Paceman (R61) Cooper S	N18 B16 A	135	11/2012 - 10/2016		4389
Mini II Paceman (R61) Cooper S	N18 B16 A	140	07/2014 - 09/2016		4389
Mini II Paceman (R61) Cooper S ALL4	N18 B16 A	120	03/2012 - 09/2016		4389
Mini II Paceman (R61) Cooper S ALL4	N18 B16 A	135	03/2012 - 09/2016		4389
Mini II Paceman (R61) Cooper S ALL4	N18 B16 A	140	03/2012 - 09/2016		4389
Mini II Paceman (R61) Cooper SD	N47 C20 A	105	03/2012 - 09/2016		4389
Mini II Paceman (R61) Cooper SD ALL4	N47 C20 A	100	04/2012 - 09/2016		4389
Mini II Paceman (R61) Cooper SD ALL4	N47 C20 A	105	04/2012 - 09/2016		4389
Mini II Paceman (R61) John Cooper Works	N18 B16 C	160	03/2013 - 10/2016		4389
MITSUBISHI					
(GAC) Outlander (GF_W) 2.0 (GF7W)	4J11	122	08/2016 -		4316
ASX (GA_W_)	1.6 DI-D	84	07/15 -		3893
ASX (GA_W_)	1.6 DI-D 4WD	84	07/15 -		3893
ASX (GA_W_)	1.6 MIVEC	85	05/10 -		3893
ASX (GA_W_)	1.6 MIVEC	86	06/10 -		3893
ASX (GA_W_)	1.8	102	02/10 -		3893
ASX (GA_W_)	1.8 4WD	102	02/10 -		3893
ASX (GA_W_)	1.8 DI-D	85	06/10 -		3893
ASX (GA_W_)	1.8 DI-D	110	06/10 -		3893
ASX (GA_W_)	1.8 DI-D 4WD	85	06/10 -		3893
ASX (GA_W_)	1.8 DI-D 4WD	110	06/10 -		3893
ASX (GA_W_)	2.0 i	110	06/10 -		3893
ASX (GA_W_)	2.0 i	118	06/10 -		3893
ASX (GA_W_)	2.0 i 4WD	110	06/10 -		3893
ASX (GA_W_)	2.0 i 4WD	118	06/10 -		3893
ASX (GA_W_)/ RVR 2.0 i	4B11	118	06/2010 -		4316
ASX (GA_W_)/ RVR 2.0 i	4B11, 4J11	110	06/2010 -		4316
ASX (GA_W_)/ RVR 2.0 i 4WD	4B11	118	06/2010 -		4316
ASX (GA_W_)/ RVR 2.0 i 4WD	4B11, 4J11	110	06/2010 -		4316
ASX (GA_W_)/ RVR 44229 Di-D 4WD	4N14	110	04/2013 -		4316
ASX (GA_W_)/ RVR 44348 DI-D	9HD	84	07/2015 -		4316
ASX (GA_W_)/ RVR 44348 DI-D 4WD	9HD	84	07/2015 -		4316
ASX (GA_W_)/ RVR 44348 MIVEC	4A92	85	05/2010 -		4316
ASX (GA_W_)/ RVR 44348 MIVEC	4A92	86	06/2010 -		4316
ASX (GA_W_)/ RVR 44409	4B10	102	02/2010 -		4316
ASX (GA_W_)/ RVR 44409 4WD	4B10, 4J10	102	02/2010 -		4316
ASX (GA_W_)/ RVR 44409 DI-D	4N13	110	06/2010 -		4316
ASX (GA_W_)/ RVR 44409 DI-D	4N13	85	06/2010 -		4316
ASX (GA_W_)/ RVR 44409 DI-D 4WD	4N13	110	06/2010 -		4316
ASX (GA_W_)/ RVR 44409 DI-D 4WD	4N13	85	06/2010 -		4316
ASX Van (GA_W_)	1.8 DI-D 4WD	110	06/10 -		3893
Canter (FE5, FE6) 6.Generation	6C18 4X4	110	01/12 -	4054	
Canter (FE5, FE6) 6.Generation	Canter 55	92	09/01 -	4216	
Canter (FE5, FE6) 6.Generation	Canter 60	100	08/96 -	4216	
Canter (FE5, FE6) 6.Generation	Canter 60	105	09/01 -	4216	
Canter (FE5, FE6) 6.Generation	Canter 75	100	10/97 -	4216	
Canter (FE5, FE6) 6.Generation	Canter 75	105	09/01 -	4216	
CARISMA (DA_)	1.6 (DA1A)	66	07/95 – 06/06	3675	4062
CARISMA (DA_)	1.6 (DA1A)	70	12/98 – 06/06	3675	4062
CARISMA (DA_)	1.6 (DA1A)	73	05/97 – 06/06	3675	4062
CARISMA (DA_)	1.6 (DA1A)	76	09/00 – 06/06		4062

MAKE & MODEL		KW	YEAR		
MITSUBISHI					
CARISMA (DA_)	1.8 (DA2A)	85	07/95 – 07/97		4062
CARISMA (DA_)	1.8 16V GDI (DA2A)	92	09/97 – 06/06		4062
CARISMA (DA_)	1.8 GDI (DA2A)	90	10/00 – 06/06		4062
CARISMA (DA_)	1.8 MSX - 16V (DA2A)	103	07/95 – 07/97		4062
CARISMA (DA_)	1.9 DI-D	85	09/00 – 06/06		4062
CARISMA (DA_)	1.9 DI-D (DA5A)	75	09/00 – 06/06		4062
CARISMA (DA_)	1.9 TD (DA4A)	66	10/96 – 09/00	3675	4062
CARISMA Saloon (DA_)	1.3 12V (DA6A)	55	09/00 – 10/04		4062
CARISMA Saloon (DA_)	1.6 (DA1A)	66	09/96 – 06/06	3675	4062
CARISMA Saloon (DA_)	1.6 (DA1A)	70	12/98 – 06/06	3675	4062
CARISMA Saloon (DA_)	1.6 (DA1A)	73	05/97 – 06/06	3675	4062
CARISMA Saloon (DA_)	1.6 (DA1A)	76	09/00 – 06/06		4062
CARISMA Saloon (DA_)	1.8 (DA2A)	85	09/96 – 09/97		4062
CARISMA Saloon (DA_)	1.8 16V GDI (DA2A)	92	09/97 – 06/06		4062
CARISMA Saloon (DA_)	1.8 GDI (DA2A)	90	10/00 – 06/06		4062
CARISMA Saloon (DA_)	1.9 DI-D	85	09/00 – 06/06		4062
CARISMA Saloon (DA_)	1.9 DI-D (DA5A)	75	09/00 – 06/06		4062
CARISMA Saloon (DA_)	1.9 TD (DA4A)	66	10/96 – 09/00	3675	4062
CELESTE (A7_)	1.4	44	10/75 -	3709	
CELESTE (A7_)	1.6 ST (4G32)	54	01/77 – 06/81	3709	
CELESTE (A7_)	2.0 GSR (4G52)	66	10/75 – 06/81	3709	
CELESTE (A7_)	2.0 GSR (4G52)	71	01/77 – 06/81	3709	
CELESTE (A7_)	2.0 GSR (4G52)	77	01/79 – 06/81	3709	
COLT CZC Convertible (RG)	1.5	80	05/06 – 07/09		4062
COLT CZC Convertible (RG)	1.5 Turbo	110	05/06 – 07/09	4059	4062
COLT II (A15_A)	1.2 GL (4G11)	40	12/78 – 01/84	3709	
COLT II (A15_A)	1.4 GLX,GT (4G12)	51	05/79 – 01/84	3709	
COLT II (A15_A)	1.4 Turbo (4G12 T)	77	09/81 – 01/84	3709	
COLT II (C1_A)	1.2 EL,GL (C15A)	40	02/84 – 09/86	3400	
COLT II (C1_A)	1.2 EL,GL (C15A)	44	09/86 – 04/88	3400	
COLT II (C1_A)	1.3 EL,GL (C11A)	49	06/86 – 04/88	3400	
COLT II (C1_A)	1.5 GLX (C12A)	51	09/85 – 04/88	3400	
COLT II (C1_A)	1.5 GLX (C12A)	55	09/84 – 04/88	3400	
Colt II (C1_A) 44348 Turbo ECi (C13A)	4G32 T/C (02.84-04.88)	92	02/1984 - 04/1988	3401	
Colt II (C1_A) 44348 Turbo ECi (C13A)	G32BT	77	07/1986 - 04/1988	3401	
Colt II (C1_A) 44409 GL Diesel (C14A)	4D65	43	02/1984 - 09/1986	3401	
Colt II (C1_A) 44409 GL Diesel (C14A)	4D65 (09.86-04.88)	44	09/1986 - 04/1988	3401	
COLT III (C5_A)	1.3 (C51A)	51	04/88 – 05/92	3400	
COLT III (C5_A)	1.3 (C51A)	51	04/88 – 05/92	3604	
COLT III (C5_A)	1.3 12V (C51A)	55	04/88 – 05/92	3400	
COLT III (C5_A)	1.3 12V (C51A)	55	04/88 – 05/92	3604	
COLT III (C5_A)	1.3 GL (C61A)	44	04/88 – 12/90	3400	
COLT III (C5_A)	1.3 GL (C61A)	44	04/88 – 12/90	3604	
COLT III (C5_A)	1.5 (C52A) CAT	66	07/90 – 05/92	3604	
COLT III (C5_A)	1.5 GLXi (C52A)	62	04/88 – 05/92	3400	
COLT III (C5_A)	1.5 GLXi (C52A)	62	04/88 – 05/92	3604	
COLT III (C5_A)	1.8 Diesel GLX (C54A)	44	04/88 – 05/92	3400	
COLT III (C5_A)	1.8 Diesel GLX (C54A)	44	04/88 – 05/92	3604	
COLT III (C5_A)	1.8 GTi 16V (C58A) CAT	100	06/90 – 05/92	3622	
Colt III (C5_A) 44256 (C51A)	4G13 (8V) (07.88-12.90)	51	04/1988 - 05/1992	3401	
Colt III (C5_A) 44256 GL (C61A)	4G13 (8V) (07.88-12.90)	44	04/1988 - 12/1990	3401	
Colt III (C5_A) 44317 Cat (C52A)	4G15 (12V)	66	07/1990 - 05/1992	3401	
Colt III (C5_A) 44317 GLXi (C52A)	4G15 (8V) (07.88-12.90)	62	04/1988 - 05/1992	3401	
Colt III (C5_A) 44348 GTi 16V (C53A)	4G61 (04.88-12.89)	91	04/1988 - 05/1990	3401	
Colt III (C5_A) 44409 Diesel GLX (C54A)	4D65 (04.88-05.92)	44	04/1988 - 05/1992	3401	
COLT IV (CA_A)	1.3 GLi 12V (CA1A)	55	04/92 – 04/96	3604	
COLT IV (CA_A)	1.6 (CA4A)	66	02/94 – 04/96	3604	
COLT IV (CA_A)	1.6 4WD (CC4A)	84	08/93 – 08/95	3604	
COLT IV (CA_A)	1.6 GLXi 16V (CA4A)	83	04/92 – 04/96	3604	
COLT IV (CA_A)	1.8 GTi 16V (CA5A)	103	04/92 – 04/96	3622	
COLT LANCER II (A7_K)	1.2 (4G36)	40	01/78 – 09/79	3709	
COLT LANCER II (A7_K)	1.4 (4G33)	50	01/78 – 09/79	3709	
COLT LANCER II (A7_K)	1.6 (4G32 GS)	60	01/78 – 09/79	3709	
COLT LANCER II (A7_K)	1.6 GL, GLX	62	01/78 -	3709	
COLT V (CJ_, CP_)	1600	76	09/00 – 09/03	3604	
COLT V (CJ_, CP_)	1.5 16V (CJ2A)	69	10/99 – 09/03	3604	
COLT V (CJ_, CP_)	1300 (CJ1A)	60	06/00 – 09/03	3604	
COLT V (CJ_, CP_)	1300 GL,GLX (CJ1A)	55	05/96 – 06/00	3604	
COLT V (CJ_, CP_)	1600 GLX (CJ4A)	66	05/96 – 09/00	3604	
COLT VI (Z3_A, Z2_A)	1.1	55	10/04 – 06/12		3916
COLT VI (Z3_A, Z2_A)	1.1	55	10/04 – 06/12		4062
COLT VI (Z3_A, Z2_A)	1.1 LPG	55	10/04 – 06/12		4062
COLT VI (Z3_A, Z2_A)	1.3	68	10/04 – 06/12		4062
COLT VI (Z3_A, Z2_A)	1.3	70	06/04 – 06/12		3916
COLT VI (Z3_A, Z2_A)	1.3	70	06/04 – 06/12		4062
COLT VI (Z3_A, Z2_A)	1.3 LPG	70	06/04 – 06/12		4062

MAKE & MODEL		KW	YEAR		
MITSUBISHI					
COLT VI (Z3_A, Z2_A)	1.5	80	06/04 – 06/12		3916
COLT VI (Z3_A, Z2_A)	1.5	80	06/04 – 06/12		4062
COLT VI (Z3_A, Z2_A)	1.5 (Z23)	77	07/06 – 06/12		4062
COLT VI (Z3_A, Z2_A)	1.5 (Z27)	72	09/04 – 02/06		4062
COLT VI (Z3_A, Z2_A)	1.5 CZT	110	03/05 – 06/12	4059	4062
COLT VI (Z3_A, Z2_A)	1.5 DI-D	50	08/04 – 06/12		3916
COLT VI (Z3_A, Z2_A)	1.5 DI-D	50	08/04 – 06/12		4062
COLT VI (Z3_A, Z2_A)	1.5 DI-D	70	08/04 – 06/12		3916
COLT VI (Z3_A, Z2_A)	1.5 DI-D	70	08/04 – 06/12		4062
COLT VI (Z3_A, Z2_A)	1.5 Ralliart R	120	02/10 – 06/12	4059	4062
COLT VI (Z3_A, Z2_A)	1.5 Turbo (Z23)	113	09/06 – 06/12	4059	4062
Cordia (A21_A, AB, AC) 44348 Turbo (A212A)	4G32 T	84	10/1982 - 05/1985	3401	
Cordia (A21_A, AB, AC) 44348 Turbo (A212A)	4G32 T (07.83-07.84)	85	07/1983 - 05/1985	3401	
Cordia (A21_A, AB, AC) 44409 Turbo ECi (A213A)	4G62 T (01.86-12.86)	100	10/1984 - 07/1989	3401	
ECLIPSE I (D2_A)	2.0 i 16V (D22A, D27A)	110	04/91 – 11/95	3622	
ECLIPSE I (D2_A)	2.0 i 16V 4WD (D22A, D27A)	110	04/91 – 11/95	3685	
ECLIPSE II (D3_A)	2.0 Turbo 4WD	157	12/95 – 04/99	3622	4108
ECLIPSE II (D3_A)	2000 GS 16V (D32A)	107	12/95 – 04/99	3622	4108
ECLIPSE II (D3_A)	2000 GT 16V	157	12/95 – 04/99	3622	4108
ECLIPSE II (D3_A)	2400 GS 16V	105	09/98 – 04/99	3622	4108
FTO Coupe (DE_A)	1.8 (DE2A)	92	09/94 – 07/01	3622	
FTO Coupe (DE_A)	2.0 (DE3A)	127	09/94 – 07/01	3622	
FTO Coupe (DE_A)	2.0 (DE3A)	132	08/97 – 07/01	3622	
FTO Coupe (DE_A)	2.0 (DE3A)	147	09/94 – 07/01	3685	
GALANT III (A12_V)	1.6 (4G32)	55	01/77 – 08/80	3709	
GALANT III (A12_V)	1.6 GL (4G32)	55	01/79 – 08/80	3709	
GALANT III (A12_V)	2.0 (4G52)	72	01/79 – 08/80	3709	
GALANT III (A12_V)	2.0 GLX (4G52)	63	01/77 – 08/80	3709	
GALANT III (A12_V)	2.0 GLX (4G52)	72	01/79 – 08/80	3709	
GALANT IV (A16_V)	1.6 GLX	55	09/80 – 05/84	3407	
Galant III (E1_A) 2.0 GLS (E15A)	4G63 (SOHC 8V)	75	06/1984 - 04/1990	3401	
Galant III (E1_A) 2.0 GLS (E15A)	G63B (06.86-12.87)	66	06/1986 - 04/1990	3401	
Galant III (E1_A) 2.0 Turbo ECi (E15A)	4G63-T (SOHC 8V) (06.84-05.85)	110	06/1984 - 04/1990	3401	
Galant III (E1_A) 44257 D	4D55	50	01/1980 - 12/1987	3401	
Galant III (E1_A) 44257 TD	4D55T	62	01/1982 - 12/1986	3401	
Galant III (E1_A) 44288 GLS (E16A)	G64B (02.86-12.87)	82	07/1985 - 04/1990	3401	
Galant III (E1_A) 44348 GLX (E11A)	4G32	55	06/1984 - 04/1990	3401	
Galant III (E1_A) 44409 (E12A)	4G37	60-66	06/1984 - 12/1987	3401	
Galant III (E1_A) 44409 T. (E13A)	G62B	100	01/1986 - 08/1987	3401	
Galant III (E1_A) 44409 Turbo-D (E14A)	4D65 T	60	06/1984 - 04/1990	3401	
Galant III (E1_A) Sigma 2.0	E17A		01/1986 - 12/1987	3401	
GALANT IV (E3_A)	1.8 (E32A)	66	11/88 – 10/92	3622	
GALANT IV (E3_A)	1.8 Turbo-D (E34A)	55	11/88 – 10/92	3622	
GALANT IV (E3_A)	2.0 (E39A, E38A, E33A)	77	05/89 – 12/92	3622	
GALANT IV (E3_A)	2.0 (E39A, E38A, E33A)	80	04/89 – 10/92	3622	
GALANT IV (E3_A)	2.0 4WD (E33A, E38A, E39A)	80	04/89 – 10/92	3622	
GALANT IV (E3_A)	2.0 GTI 16V (E39A, E38A, E33A)	106	11/88 – 10/92	3622	
GALANT IV (E3_A)	2.0 GTI 16V (E39A, E38A, E33A)	107	11/88 – 10/92	3622	
GALANT IV (E3_A)	2.0 GTI 16V 4x4 (E38A, E39A, E33A)	106	07/89 – 12/92	3622	
Galant IV (E3_A) 2.0 (E39A, E38A, E33A)	4G63 (SOHC 8V)	80	04/1989 - 10/1992	3401	
Galant IV (E3_A) 2.0 4WD (E33A, E38A, E39A)	4G63 (SOHC 8V)	80	04/1989 - 10/1992	3401	
Galant IV (E3_A) 2.0 GTI 16V (E39A, E38A, E33A)	4G63 (DOHC 16V) (11.88-10.92)	106	11/1988 - 10/1992	3401	
Galant IV (E3_A) 2.0 GTI 16V (E39A, E38A, E33A)	4G63 (DOHC 16V) (11.88-10.92)	107	11/1988 - 10/1992	3401	
Galant IV (E3_A) 2.0 GTI 16V 4x4 (E38A, E39A, E33A)	4G63 (DOHC 16V) (07.89-12.92)	106	07/1989 - 12/1992	3401	
Galant IV (E3_A) 2.0 GTi 16V 4WD (E39A)	4G63 (DOHC 16V)	107	11/1988 - 10/1992	3401	
Galant IV (E3_A) 44348 (E31A)	4G32B	60	11/1988 - 10/1992	3401	
Galant IV (E3_A) 44409	4G37	63	11/1988 - 10/1992	3401	
Galant IV (E3_A) 44409 (E32A)	4G37	66	11/1988 - 10/1992	3401	
Galant IV (E3_A) 44409 TD	4D65T	60	01/1987 - 12/1991	3401	
Galant IV (E3_A) 44409 Turbo-D (E34A)	4D65 T (11.88-10.92)	55	11/1988 - 10/1992	3401	
GALANT IV Saloon (E3_A)	1.8 (E32A)	63	11/87 – 08/90	3622	
GALANT IV Saloon (E3_A)	1.8 (E32A)	66	11/87 – 10/92	3622	
GALANT IV Saloon (E3_A)	1.8 Turbo-D (E34A)	55	11/87 – 10/92	3622	
GALANT IV Saloon (E3_A)	2.0 (E39A, E38A, E33A)	77	05/89 – 12/92	3622	
GALANT IV Saloon (E3_A)	2.0 (E39A, E38A, E33A)	80	11/87 – 10/92	3622	
GALANT IV Saloon (E3_A)	2.0 4WD (E39A, E38A, E33A)	80	12/88 – 10/92	3622	
GALANT IV Saloon (E3_A)	2.0 GTI 16V 4WD (E38A, E39A, E33A) CAT	110	09/91 – 10/92	3622	
GALANT IV Saloon (E3_A)	2.0 GTi 16V (E39A, E38A, E33A)	106	11/87 – 10/92	3622	
GALANT IV Saloon (E3_A)	2.0 GTi 16V (E39A, E38A, E33A)	107	11/88 – 10/92	3622	
GALANT IV Saloon (E3_A)	2.0 GTi 16V 4WD (E39A, E38A, E33A)	106	06/88 – 10/92	3622	
Galant IV Sedan (E3_A) 2.0 (E39A, E38A, E33A)	4G63 (SOHC 8V)	80	11/1987 - 10/1992	3401	
Galant IV Sedan (E3_A) 2.0 4WD (E39A, E38A, E33A)	4G63 (SOHC 8V)	80	12/1988 - 10/1992	3401	
Galant IV Sedan (E3_A) 2.0 GTi 16V (E39A, E38A, E33A)	4G63 (DOHC 16V)	107	11/1988 - 10/1992	3401	
Galant IV Sedan (E3_A) 2.0 GTi 16V (E39A, E38A, E33A)	4G63 (DOHC 16V) (09.88-10.92)	106	11/1987 - 10/1992	3401	
Galant IV Sedan (E3_A) 2.0 GTi 16V 4WD (E39A, E38A, E33A)	4G63 (DOHC 16V) (09.88-10.92)	106	06/1988 - 10/1992	3401	
Galant IV Sedan (E3_A) 44348 (E31A)	4G32 (01.88-10.92)	55	01/1988 - 10/1992	3401	

MAKE & MODEL		KW	YEAR		
MITSUBISHI					
Galant IV Sedan (E3_A) 44409 (E32A)	4G37	63	11/1987 - 08/1990	3401	
Galant IV Sedan (E3_A) 44409 (E32A)	4G37	66	11/1987 - 10/1992	3401	
Galant IV Sedan (E3_A) 44409 Turbo-D (E34A)	4D65 T (01.88-10.92)	55	12/1987 - 10/1992	3401	
GALANT V (E5_A, E7_A, E8_A)	1.8 (E52A)	85	02/94 – 08/96	3622	4108
GALANT V (E5_A, E7_A, E8_A)	1.8 GLSI (E52A)	93	11/92 – 08/96	3622	4108
GALANT V (E5_A, E7_A, E8_A)	2.0 (E55A)	90	04/93 – 03/95	3622	
GALANT V (E5_A, E7_A, E8_A)	2.0 GLSI (E55A)	101	11/92 – 08/96	3622	4108
GALANT V (E5_A, E7_A, E8_A)	2.0 GLSI 4WD (E75A)	101	11/92 – 08/96	3622	4108
GALANT V (E5_A, E7_A, E8_A)	2.0 GLSTD (E57A)	66	11/92 – 08/96	3622	4108
GALANT V (E5_A, E7_A, E8_A)	2.0 V6-24 (E64A, E54A)	110	11/92 – 08/96	3622	4108
GALANT V (E5_A, E7_A, E8_A)	2.5 V6-24 4WD (E88A)	125	11/92 – 08/96	3685	4108
GALANT V Saloon (E5_A, E7_A, E8_A)	1.8 (E52A)	85	02/94 – 08/96	3622	4108
GALANT V Saloon (E5_A, E7_A, E8_A)	1.8 GLSI (E52A)	93	11/92 – 08/96	3622	4108
GALANT V Saloon (E5_A, E7_A, E8_A)	2.0 GLSI (E55A)	101	11/92 – 08/96	3622	4108
GALANT V Saloon (E5_A, E7_A, E8_A)	2.0 GLSI 4WD (E75A)	101	11/92 – 08/96	3622	4108
GALANT V Saloon (E5_A, E7_A, E8_A)	2.0 GLSTD (E57A)	66	11/92 – 08/96	3622	4108
GALANT V Saloon (E5_A, E7_A, E8_A)	2.0 V6-24 (E64A, E54A)	110	11/92 – 08/96	3622	4108
GALANT V Saloon (E5_A, E7_A, E8_A)	2.5 V6-24 4WD (E88A)	125	11/92 – 08/96	3685	4108
GALANT VI (EA_)	1.8 GDi	103	11/97 – 10/01	3622	4108
GALANT VI (EA_)	2.0 (EA2A)	98	09/00 – 10/04	3622	4108
GALANT VI (EA_)	2.0 (EA2A)	100	09/96 – 09/00	3685	4108
GALANT VI (EA_)	2.0 GDI	107	10/99 – 10/04		4108
GALANT VI (EA_)	2.0 TDI (EA6A)	66	09/96 – 10/04	3685	4108
GALANT VI (EA_)	2.0 TDI (EA6A)	66	09/96 – 10/04	3622	
GALANT VI (EA_)	2.4 GDI (EA3A)	106	09/00 – 10/04	3622	4108
GALANT VI (EA_)	2.4 GDI (EA3A)	110	02/99 – 09/00	3622	4108
GALANT VI (EA_)	2.5 Type S	151	10/99 – 10/04	3622	
GALANT VI (EA_)	2.5 Type S	151	10/99 – 10/04	3685	
GALANT VI (EA_)	2.5 V6 24V	206	09/96 – 10/02	3685	
GALANT VI (EA_)	2.5 V6 24V (EA5A)	118	09/00 – 10/04	3622	4108
GALANT VI (EA_)	2.5 V6 24V (EA5A)	120	09/96 – 09/00	3685	4108
GALANT VI (EA_)	2.5 V6 24V (EA5A)	120	09/96 – 09/00	3622	
GALANT VI Estate (EA_)	2.0 (EA2W)	98	09/00 – 10/03		4108
GALANT VI Estate (EA_)	2.0 (EA2W)	100	09/96 – 09/00	3685	4108
GALANT VI Estate (EA_)	2.0 (EA2W)	100	09/96 – 09/00	3622	
GALANT VI Estate (EA_)	2.0 TDI (EA6W)	66	09/96 – 10/03	3685	4108
GALANT VI Estate (EA_)	2.0 TDI (EA6W)	66	09/96 – 10/03	3622	
GALANT VI Estate (EA_)	2.4 GDI (EA3W)	106	09/00 – 10/03		4108
GALANT VI Estate (EA_)	2.4 GDI (EA3W)	110	02/99 – 10/03	3685	4108
GALANT VI Estate (EA_)	2.5 V6 24V	206	09/96 – 10/02	3685	
GALANT VI Estate (EA_)	2.5 V6 24V (EA5W)	118	09/00 – 10/03		4108
GALANT VI Estate (EA_)	2.5 V6 24V (EA5W)	120	09/96 – 09/00	3685	4108
GRANDIS (NA_W)	2.0 DI-D	100	09/05 -		3893
GRANDIS (NA_W)	2.0 DI-D	103	02/07 -		3893
GRANDIS (NA_W)	2.4	121	04/04 -		3893
GRANDIS (NA_W)	2.4	130	04/04 -		3893
GRANDIS (NA_W)	GRANDIS (NA_W)	100	09/05 -	3892	
GRANDIS (NA_W)	GRANDIS (NA_W)	103	02/07 -	3892	
GRANDIS (NA_W)	GRANDIS (NA_W)	121	04/04 -	3892	
GRANDIS (NA_W)	GRANDIS (NA_W)	130	04/04 -	3892	
L 200 (K3_T, K2_T, K1_T, K0_T)	1.6 (K11T)	60	04/87 – 10/96	3448	
L 200 (K3_T, K2_T, K1_T, K0_T)	2.0 (K12T, K32T)	75	11/86 – 08/96	3448	
L 200 (K3_T, K2_T, K1_T, K0_T)	2.0 (K32T, K12T)	69	01/87 – 12/90	3448	
L 200 (K3_T, K2_T, K1_T, K0_T)	2.0 4WD (K32T, K22T)	75	11/86 – 08/96	3448	
L 200 (K3_T, K2_T, K1_T, K0_T)	2.5 D (K14T)	51	11/86 – 10/96	3448	
L 200 (K3_T, K2_T, K1_T, K0_T)	2.5 D (K14T)	51	11/86 – 10/96	3685	
L 200 (K3_T, K2_T, K1_T, K0_T)	2.5 D 4WD (K24T)	51	12/87 – 05/93	3448	
L 200 (K3_T, K2_T, K1_T, K0_T)	2.5 D 4WD (K24T)	51	12/87 – 05/93	3685	
L 200 (K3_T, K2_T, K1_T, K0_T)	2.5 TD 4WD (K34T)	64	11/92 – 08/96	3448	
L 200 (K3_T, K2_T, K1_T, K0_T)	2.5 TD 4WD (K34T)	64	11/92 – 08/96	3685	
L 200 (K3_T, K2_T, K1_T, K0_T)	2.6 4WD (K33T)	76	11/89 – 05/95	3448	
L 200 (K3_T, K2_T, K1_T, K0_T)	2.6 4WD (K33T)	76	11/89 – 05/95	3685	
L 200 (K7_T, K6_T)	2.0 (K62T)	90	06/96 – 12/07	3809	
L 200 (K7_T, K6_T)	2.0 (K62T)	90	06/96 – 12/07	3900	
L 200 (K7_T, K6_T)	2.4 4WD (K75T)	97	06/96 – 12/07	3809	
L 200 (K7_T, K6_T)	2.4 4WD (K75T)	97	06/96 – 12/07	3900	
L 200 (K7_T, K6_T)	2.5 D (K64T)	55	06/96 – 12/07	3809	
L 200 (K7_T, K6_T)	2.5 D (K64T)	55	06/96 – 12/07	3900	
L 200 (K7_T, K6_T)	2.5 TD (K64T)	66	08/01 – 11/05	3809	
L 200 (K7_T, K6_T)	2.5 TD (K64T)	66	08/01 – 11/05	3900	
L 200 (K7_T, K6_T)	2.5 TD 4WD (K74T)	73	06/96 – 12/07	3809	
L 200 (K7_T, K6_T)	2.5 TD 4WD (K74T)	73	06/96 – 12/07	3900	
L 200 (K7_T, K6_T)	2.5 TD 4WD (K74T)	85	09/01 – 12/07	3809	
L 200 (K7_T, K6_T)	2.5 TD 4WD (K74T)	85	09/01 – 12/07	3900	
L 200 (K7_T, K6_T)	2.5 TD 4WD (K74T)	98	08/01 – 12/07	3809	
L 200 (K7_T, K6_T)	2.5 TD 4WD (K74T)	98	08/01 – 12/07	3900	

MAKE & MODEL		KW	YEAR		
MITSUBISHI					
L 200 (K7_T, K6_T)	2.8 TD 4WD	92	04/03 – 06/06	3809	
L 200 (K7_T, K6_T)	3.0 4WD	133	10/96 – 10/06	3809	
L 200 / L200 EXPRESS / FORTE / COLT-RODEO (MA, MB, MC, MD)	1.6	51	01/78 -	3376	
L 200 / L200 EXPRESS / FORTE / COLT-RODEO (MA, MB, MC, MD)	1.6	60	03/80 – 08/84	3376	
L 200 / L200 EXPRESS / FORTE / COLT-RODEO (MA, MB, MC, MD)	1.6	60	09/84 – 10/86	3376	
L 200 / L200 EXPRESS / FORTE / COLT-RODEO (MA, MB, MC, MD)	2.0	63	01/81 – 10/86	3376	
L 200 / L200 EXPRESS / FORTE / COLT-RODEO (MA, MB, MC, MD)	2.0	66	07/81 – 09/82	3376	
L 200 / L200 EXPRESS / FORTE / COLT-RODEO (MA, MB, MC, MD)	2.0	66	10/82 – 10/86	3376	
L 200 / L200 EXPRESS / FORTE / COLT-RODEO (MA, MB, MC, MD)	2.3	50	10/82 – 10/86	3376	
L 200 / L200 EXPRESS / FORTE / COLT-RODEO (MA, MB, MC, MD)	2.3 D (4D55)	62	01/83 – 10/86	3376	
L 200 / TRITON (KA_T, KB_T)	2.4 CNG	94	04/10 -	3975	
L 200 / TRITON (KA_T, KB_T)	2.4 i	94	11/05 -	3975	
L 200 / TRITON (KA_T, KB_T)	2.5 DI-D	103	04/10 -	3975	
L 200 / TRITON (KA_T, KB_T)	2.5 DI-D	123	08/07 -	3975	
L 200 / TRITON (KA_T, KB_T)	2.5 DI-D (KA4T)	94	04/10 -	3975	
L 200 / TRITON (KA_T, KB_T)	2.5 DI-D 4WD (KA4TXCN)	103	04/10 -	3975	
L 200 / TRITON (KA_T, KB_T)	2.5 DI-D 4WD (KB4T)	100	11/05 -	3975	
L 200 / TRITON (KA_T, KB_T)	2.5 DI-D 4WD (KB4T)	123	10/07 -	3975	
L 200 / TRITON (KA_T, KB_T)	2.5 DI-D 4WD (KB4T)	131	04/10 -	3975	
L 200 / TRITON (KA_T, KB_T)	2.5 DiD (KA4T)	100	11/05 -	3975	
L 200 / TRITON (KA_T, KB_T)	3.2 DI-D 4WD	118	07/06 -	3975	
L 200 / TRITON (KA_T, KB_T)	3.2 DI-D 4WD	121	05/07 -	3975	
L 200 / TRITON (KA_T, KB_T)	3.5 4WD	147	05/07 -	3975	
L 200 / TRITON (KJ_, KK_, KL_)	2.4 (KK4T)	94	11/14 -	3975	
L 200 / TRITON (KJ_, KK_, KL_)	2.4 DI-D	133	01/15 -	3975	
L 200 / TRITON (KJ_, KK_, KL_)	2.4 DI-D 4WD	133	11/14 -	3975	
L 200 / TRITON (KJ_, KK_, KL_)	2.4 DI-D 4WD (KJ0T)	113	09/15 -	3975	
L 200 / TRITON (KJ_, KK_, KL_)	2.5 DI-D	94	11/14 -	3975	
L 200 / TRITON (KJ_, KK_, KL_)	2.5 DI-D	100	01/15 -	3975	
L 200 / TRITON (KJ_, KK_, KL_)	2.5 DI-D 4WD	131	11/14 -	3975	
L 200 Platform/Chassis (MQ)	2.4 D	133	01/15 -	3975	
L 200 Platform/Chassis (MQ)	2.4 D 4WD	133	01/15 -	3975	
L 300 I Platform/Chassis (L03_P)	1.6 (L032P, L062P)	51	04/83 – 04/94	3448	
L 300 I Platform/Chassis (L03_P)	2.5 D (L039P)	51	11/86 – 04/94	3448	
L 300 II Box (P0_V, P1_V, P_2V)	1.6 (P12V, P02V)	51	11/86 – 05/94	3448	
L 300 II Box (P0_V, P1_V, P_2V)	2.0 (P03V, P13V)	64	11/86 – 05/96	3448	
L 300 II Box (P0_V, P1_V, P_2V)	2.0 (P23V, P03V, P13V)	78	06/94 – 05/96	3448	
L 300 II Box (P0_V, P1_V, P_2V)	2.0 (P23W, P23V)	83	11/03 – 02/06	3448	
L 300 II Box (P0_V, P1_V, P_2V)	2.0 4WD (P23W, P23V)	63	08/88 – 05/94	3448	
L 300 II Box (P0_V, P1_V, P_2V)	2.4 (P24V, P24W)	82	11/86 – 08/97	3448	
L 300 II Box (P0_V, P1_V, P_2V)	2.4 4WD (P24V, P24W)	82	11/86 – 08/97	3448	
L 300 II Box (P0_V, P1_V, P_2V)	2.4 i	84	03/06 – 09/13	3448	
L 300 II Box (P0_V, P1_V, P_2V)	2.5 D	55	09/91 – 09/03	3448	
L 300 II Box (P0_V, P1_V, P_2V)	2.5 D (P05V, P05W, P15V)	51	11/86 – 02/06	3448	
L 300 II Box (P0_V, P1_V, P_2V)	2.5 TD 4WD	64	11/91 – 05/03	3448	
L 300 II Bus (P0_W, P1_W, P2_W)	1.6 (P02V, P12V)	51	11/86 – 05/04	3448	
L 300 II Bus (P0_W, P1_W, P2_W)	2.0 (P13T, P03W, P03V, P13V)	66	11/86 – 05/04	3448	
L 300 II Bus (P0_W, P1_W, P2_W)	2.0 (P13V, P13W, P03W, P13T)	64	11/86 – 05/04	3448	
L 300 II Bus (P0_W, P1_W, P2_W)	2.0 4WD (P13V, P23V, P23W, P03V, P13T)	65	12/86 – 05/04	3448	
L 300 II Bus (P0_W, P1_W, P2_W)	2.0 4WD (P13V, P23W, P03V, P13T)	66	11/86 – 05/04	3448	
L 300 II Bus (P0_W, P1_W, P2_W)	2.0 GLS (P13V, P03W, P03V, P13T)	78	06/94 – 05/96	3448	
L 300 II Bus (P0_W, P1_W, P2_W)	2.0 i (P13V, P00W, P03V, P03W, P13T)	83	06/94 – 10/98	3448	
L 300 II Bus (P0_W, P1_W, P2_W)	2.4 (P04W, P14V, P04V)	82	11/90 – 05/04	3448	
L 300 II Bus (P0_W, P1_W, P2_W)	2.4 4WD (P24W, P24V)	80	11/86 – 12/90	3448	
L 300 II Bus (P0_W, P1_W, P2_W)	2.4 4WD (P24W, P24V)	82	11/90 – 05/04	3448	
L 300 II Bus (P0_W, P1_W, P2_W)	2.5 D (P05W, P05V, P15T)	55	09/91 – 09/03	3448	
L 300 II Bus (P0_W, P1_W, P2_W)	2.5 D (P25V, P05W, P05V, P15V, P15T)	51	11/86 – 05/04	3448	
L 300 II Bus (P0_W, P1_W, P2_W)	2.5 TD 4WD (P25W, P25V)	64	11/88 – 05/04	3448	
L 300 II Bus (P0_W, P1_W, P2_W)	3.0	136	06/94 – 05/03	3448	
L 300 II Bus (P0_W, P1_W, P2_W)	3.0 4WD	136	10/00 – 05/03	3448	
L 300 II Platform/Chassis (P1_T)	2.0 (P13T)	85	07/94 – 04/00	3448	
L 300 II Platform/Chassis (P1_T)	2.0 (P13T)	85	07/94 – 04/00	3809	
L 300 III Platform/Chassis (P1_T)	2.5 TD (P15T)	64	11/94 – 04/00	3448	
L 300 III Platform/Chassis (P1_T)	2.5 TD (P15T)	64	11/94 – 04/00	3809	
L 400 / SPACE GEAR Bus (PD_W, PC_W, PA_V, PB_V,PA_W)	2.0 (PA3W)	83	09/95 – 10/02	3685	
L 400 / SPACE GEAR Bus (PD_W, PC_W, PA_V, PB_V,PA_W)	2.0 16V	85	05/95 – 05/00	3685	
L 400 / SPACE GEAR Bus (PD_W, PC_W, PA_V, PB_V,PA_W)	2.0 16V (PA3V/W, PB3V,PA3W)	85	05/95 – 05/00		3688
L 400 / SPACE GEAR Bus (PD_W, PC_W, PA_V, PB_V,PA_W)	2.4	97	05/95 – 10/02	3685	
L 400 / SPACE GEAR Bus (PD_W, PC_W, PA_V, PB_V,PA_W)	2.4 i 4WD (PD4V/W)	97	05/95 – 05/00	3685	3688
L 400 / SPACE GEAR Bus (PD_W, PC_W, PA_V, PB_V,PA_W)	2.5 TD (PA5V/W, PB5V)	73	05/95 – 05/00	3685	3688
L 400 / SPACE GEAR Bus (PD_W, PC_W, PA_V, PB_V,PA_W)	2.5 TD 4WD (PD5V/W)	73	05/95 – 05/00	3685	3688
L 400 / SPACE GEAR Bus (PD_W, PC_W, PA_V, PB_V,PA_W)	2500 TD	64	05/95 – 06/05	3685	3688
L 400 Box (PD_W, PC_W, PB_V, PA_W, PA_V)	1.6	51	06/96 – 10/02	3685	
L 400 Box (PD_W, PC_W, PB_V, PA_W, PA_V)	1.6	51	06/96 – 10/02	3809	
L 400 Box (PD_W, PC_W, PB_V, PA_W, PA_V)	2.0	85	06/96 – 03/01	3685	
L 400 Box (PD_W, PC_W, PB_V, PA_W, PA_V)	2.0	85	06/96 – 03/01	3809	

MAKE & MODEL		KW	YEAR		
MITSUBISHI					
L 400 Box (PD_W, PC_W, PB_V, PA_W, PA_V)	2.0 (PA3W)	83	12/94 – 10/02	3685	
L 400 Box (PD_W, PC_W, PB_V, PA_W, PA_V)	2.0 (PA3W)	83	12/94 – 10/02	3809	
L 400 Box (PD_W, PC_W, PB_V, PA_W, PA_V)	2.0 16V (PA3V/W, PB3V,PA3W)	85	05/95 – 05/00	3809	
L 400 Box (PD_W, PC_W, PB_V, PA_W, PA_V)	2.4	97	06/96 – 10/02	3685	
L 400 Box (PD_W, PC_W, PB_V, PA_W, PA_V)	2.4	97	05/95 – 10/02	3809	
L 400 Box (PD_W, PC_W, PB_V, PA_W, PA_V)	2.4 i 4WD (PD4V/W)	97	05/95 – 05/00	3809	
L 400 Box (PD_W, PC_W, PB_V, PA_W, PA_V)	2.5 TD (PA5V/W, PB5V)	73	05/95 – 05/00	3809	
L 400 Bus (PD_W, PC_W, PA_V, PB_V, PA_W)	2.5 TD 4WD (PD5V/W)	73	05/95 – 05/00	3809	
L 400 Bus (PD_W, PC_W, PA_V, PB_V, PA_W)	2500 TD	64	05/95 – 06/05	3809	
L 400 Bus (PD_W, PC_W, PA_V, PB_V, PA_W)	2500 TD (PD5W, PD5V, PA5W, PA5V)	64	09/96 – 06/05	3809	3688
L 400 Bus (PD_W, PC_W, PA_V, PB_V, PA_W)	2500 TD (PD5W, PD5V, PA5W, PA5V)	64	09/96 – 06/05	3685	
L 400 Bus (PD_W, PC_W, PA_V, PB_V, PA_W)	2500 TD 4WD (PD5W, PD5V,PA5W, PA5V)	64	09/96 – 06/05	3809	
L 400 Bus (PD_W, PC_W, PA_V, PB_V, PA_W)	2500 TD 4WD (PD5W, PD5V,PA5W, PA5V)	64	09/96 – 06/05	3685	
LANCER II	1.2 (4G11)	40	01/80 – 12/81	3407	
LANCER II	1.4 GLX (4G12)	50	09/79 – 02/83	3407	
LANCER II	1.6 (4G32 GS)	60	09/79 – 02/83	3407	
LANCER II	1.6 (4G32 GS)	62	01/81 – 02/83	3407	
LANCER II (A17_)	1.4 GLX (4G12)	50	09/79 – 02/83	3709	
LANCER II (A17_)	1.6 (4G32 GS)	60	09/79 – 02/83	3709	
LANCER Estate (CS_W)	1.6	72	09/03 – 10/08		4106
LANCER Estate (CS_W)	2.0	92	08/05 – 10/08	3765	4106
LANCER Estate (CS_W)	2.0	99	09/03 – 12/07		4106
LANCER F II / COLT (A17_)	1.2 GLX	40	03/83 -	3709	
LANCER F II / COLT (A17_)	1.2 GLX (4G11)	40	03/83 – 01/84	3709	
LANCER F II / COLT (A17_)	1.4 GLX	51	03/83 -	3709	
LANCER F II / COLT (A17_)	1.4 GLX (4G12)	51	03/83 – 01/84	3709	
LANCER F II / COLT (A17_)	1.4 Turbo	77	03/83 -	3709	
LANCER F II / COLT (A17_)	1.4 Turbo (4G12 T)	77	03/83 – 01/84	3709	
LANCER III (C1_A, C6_A)	1.2 (C65A)	44	08/86 – 04/88	3400	
LANCER III (C1_A, C6_A)	1.2 GL (C15AS)	40	01/84 – 10/86	3400	
LANCER III (C1_A, C6_A)	1.5 GLX (C12AS)	51	06/85 – 04/88	3400	
LANCER III (C1_A, C6_A)	1.5 GLX (C12AS)	55	11/83 – 04/88	3400	
LANCER III Station Wagon (C1_V, C3_V)	1.5 (C12V)	51	09/85 – 08/89	3400	
LANCER III Station Wagon (C1_V, C3_V)	1.5 (C12V)	55	09/85 – 12/87	3400	
LANCER III Station Wagon (C1_V, C3_V)	1.5 (C12V)	61	09/88 – 12/90	3400	
LANCER III Station Wagon (C1_V, C3_V)	1.5 (C12V)	61	09/88 – 12/90	3604	
LANCER III Station Wagon (C1_V, C3_V)	1.5 12V (C12V)	66	09/90 – 12/91	3604	
LANCER III Station Wagon (C1_V, C3_V)	1.8 4WD (C37V)	63	03/89 – 12/90	3604	
LANCER III Station Wagon (C1_V, C3_V)	1.8 4WD (C37V)	69	08/90 – 06/92	3604	
LANCER III Station Wagon (C1_V, C3_V)	1.8 D (C14V)	44	08/86 – 06/92	3604	
Lancer III SW (C1_V, C3_V) 44317 (C12V)	4G15 (8V)	55	09/1985 - 12/1987	3401	
Lancer III SW (C1_V, C3_V) 44317 (C12V)	G15B (09.85-11.88)	51	09/1985 - 08/1989	3401	
Lancer III SW (C1_V, C3_V) 44409 4WD (C37V)	4G37	63	03/1989 - 12/1990	3401	
Lancer III SW (C1_V, C3_V) 44409 4WD (C37V)	4G37	69	08/1990 - 06/1992	3401	
Lancer III SW (C1_V, C3_V) 44409 4WD (C37V)	4G37 (01.87-12.87)	66	01/1987 - 12/1987	3401	
Lancer III SW (C1_V, C3_V) 44409 4WD (C37V)	G37B (01.87-08.89)	61	01/1987 - 08/1989	3401	
Lancer III SW (C1_V, C3_V) 44409 D (C14V)	4D65	43	09/1985 - 09/1986	3401	
Lancer III SW (C1_V, C3_V) 44409 D (C14V)	4D65 (09.86-05.92)	44	08/1986 - 06/1992	3401	
Lancer III SW (C1_V, C3_V) 44409 D 4WD	4D65	44	10/1986 - 10/1988	3401	
LANCER IV (C6_A, C7_A)	1.3 12V (C61A)	55	06/92 – 05/94	3604	
LANCER IV (C6_A, C7_A)	1.5 (C62A)	62	06/88 – 05/92	3400	
LANCER IV (C6_A, C7_A)	1.5 (C62A)	62	06/88 – 05/92	3604	
LANCER IV (C6_A, C7_A)	1.5 12V (C62A)	66	05/89 – 05/92	3400	
LANCER IV (C6_A, C7_A)	1.5 12V (C62A)	66	05/89 – 05/92	3604	
LANCER IV (C6_A, C7_A)	1.6 16V (C76A, C66A)	83	06/92 – 05/94	3604	
LANCER IV (C6_A, C7_A)	1.6 i (C63A)	90	09/90 – 09/92	3604	
LANCER IV (C6_A, C7_A)	1.8 4WD (C77A)	71	09/89 – 06/92	3400	
LANCER IV (C6_A, C7_A)	1.8 4WD (C77A)	71	09/89 – 06/92	3604	
LANCER IV (C6_A, C7_A)	1.8 D (C64A)	44	04/88 – 05/92	3400	
LANCER IV (C6_A, C7_A)	1.8 D (C64A)	44	04/88 – 05/92	3604	
LANCER IV (C6_A, C7_A)	1.8 GTi 16V (C68A)	100	11/89 – 05/92	3622	
LANCER IV (C6_A, C7_A)	1.8 GTi 16V (C69A)	103	06/92 – 12/93	3622	
Lancer IV (C6_A, C7_A) 44256 (C61A)	4G13 (8V) (07.88-12.90)	44	04/1988 - 05/1992	3401	
Lancer IV (C6_A, C7_A) 44256 (C61A)	4G13 (8V), G13B	51	08/1988 - 05/1992	3401	
Lancer IV (C6_A, C7_A) 44317	4G15 (12V)	65	09/1990 - 09/1992	3401	
Lancer IV (C6_A, C7_A) 44317 (C62A)	4G15 (12V)	62	04/1988 - 05/1992	3401	
Lancer IV (C6_A, C7_A) 44317 (C62A)	4G15 (8V)	56	09/1988 - 08/1990	3401	
Lancer IV (C6_A, C7_A) 44317 12V (C62A)	4G15 (12V) (09.90-12.90)	66	06/1990 - 05/1992	3401	
Lancer IV (C6_A, C7_A) 44317 GLS	4G15 (12V)	63	08/1989 - 08/1992	3401	
Lancer IV (C6_A, C7_A) 44409 GLX Diesel (C64A)	4D65 (04.88-05.92)	44	04/1988 - 05/1992	3401	
Lancer IV Hatchback (C6_A, C7_A) 44317 (C62A)	4G15 (8V) (07.88-12.90)	62	06/1988 - 05/1992	3401	
Lancer IV Hatchback (C6_A, C7_A) 44317 12V (C62A)	4G15 (12V) (09.90-12.90)	66	05/1989 - 05/1992	3401	
Lancer IV Hatchback (C6_A, C7_A) 44409 4WD (C77A)	4G37	71	09/1989 - 06/1992	3401	
Lancer IV Hatchback (C6_A, C7_A) 44409 D (C64A)	4D65 (04.88-05.92)	44	04/1988 - 05/1992	3401	
LANCER IV Saloon (C6_A)	1.3 (C61A)	44	04/88 – 05/92	3400	
LANCER IV Saloon (C6_A)	1.3 (C61A)	44	04/88 – 05/92	3604	

MAKE & MODEL		KW	YEAR		
MITSUBISHI					
LANCER IV Saloon (C6_A)	1.3 (C61A)	51	08/88 – 05/92	3400	
LANCER IV Saloon (C6_A)	1.3 (C61A)	51	08/88 – 05/92	3604	
LANCER IV Saloon (C6_A)	1.3 12V (C61A)	55	07/90 – 06/92	3604	
LANCER IV Saloon (C6_A)	1.5 (C62A)	62	04/88 – 05/92	3400	
LANCER IV Saloon (C6_A)	1.5 (C62A)	62	04/88 – 05/92	3604	
LANCER IV Saloon (C6_A)	1.5 12V (C62A)	66	05/89 – 05/92	3400	
LANCER IV Saloon (C6_A)	1.5 12V (C62A)	66	05/89 – 05/92	3604	
LANCER IV Saloon (C6_A)	1.8 GLX Diesel (C64A)	44	04/88 – 05/92	3400	
LANCER IV Saloon (C6_A)	1.8 GLX Diesel (C64A)	44	04/88 – 05/92	3604	
LANCER Saloon (CS_A, CT0)	1.3	60	09/03 -		4106
LANCER Saloon (CS_A, CT0)	1.6 (CS3A)	72	09/03 -		4106
LANCER Saloon (CS_A, CT0)	2.0	85	09/03 -		4106
LANCER Saloon (CS_A, CT0)	2.0	92	08/05 -	3765	4106
LANCER Saloon (CS_A, CT0)	2.0 (CS9A)	99	12/03 -		4106
LANCER Saloon (CS_A, CT0)	2.0 16V EVO IX (CT9A)	206	01/06 -		4106
LANCER Saloon (CS_A, CT0)	2.0 16V EVO VIII (CT9A)	195	03/04 -		4106
LANCER Saloon (CS_A, CT0)	2.0 4WD	213	08/05 -		4106
LANCER Saloon (CS_A, CT0)	2.0 GDi	92	09/03 -	3765	4106
LANCER Saloon (CS_A, CT0)	2.4 iVRX	115	08/05 -	3765	4106
LANCER Saloon (CY/Z_A)	1.5	80	06/08 -		4106
LANCER Saloon (CY/Z_A)	1.5 Bifuel	80	02/10 -		4106
LANCER Saloon (CY/Z_A)	1.6 MIVEC	86	05/10 -		4106
LANCER Saloon (CY/Z_A)	1.8	103	05/10 -		4106
LANCER Saloon (CY/Z_A)	1.8	105	02/08 -		4106
LANCER Saloon (CY/Z_A)	1.8 Bifuel	105	02/10 -		4106
LANCER Saloon (CY/Z_A)	1.8 DI-D	85	05/10 -		4106
LANCER Saloon (CY/Z_A)	1.8 DI-D (CY9A)	110	06/10 -		4106
LANCER Saloon (CY/Z_A)	1.8 Flex	103	03/09 -		4106
LANCER Saloon (CY/Z_A)	2.0	108	01/09 -		4106
LANCER Saloon (CY/Z_A)	2.0	115	04/08 -		4106
LANCER Saloon (CY/Z_A)	2.0 (CY4A)	110	01/13 -		4106
LANCER Saloon (CY/Z_A)	2.0 DI-D	103	01/08 -		4106
LANCER Saloon (CY/Z_A)	2.0 i	113	01/09 -		4106
LANCER Saloon (CY/Z_A)	2.0 i	118	10/09 -		4106
LANCER Saloon (CY/Z_A)	2.0 i Ralliart 4WD (CY4A)	177	10/08 -	3685	3893
LANCER Saloon (CY/Z_A)	2.0 i Ralliart 4WD (CY4A)	177	10/08 -		4106
LANCER SPORTBACK (CX_A)	1.5	80	06/08 -		4106
LANCER SPORTBACK (CX_A)	1.5 Bifuel	80	03/10 -		4106
LANCER SPORTBACK (CX_A)	1.6 MIVEC	86	05/10 -		4106
LANCER SPORTBACK (CX_A)	1.8 (CX3A)	105	06/08 -		4106
LANCER SPORTBACK (CX_A)	1.8 Bifuel	105	02/10 -		4106
LANCER SPORTBACK (CX_A)	1.8 DI-D	85	05/10 -		4106
LANCER SPORTBACK (CX_A)	1.8 DI-D (CX9A)	110	06/10 -		4106
LANCER SPORTBACK (CX_A)	1.8 MIVEC	103	03/09 -		4106
LANCER SPORTBACK (CX_A)	2.0 DI-D	103	06/08 -		4106
LANCER SPORTBACK (CX_A)	2.0 Ralliart 4WD (CX4A)	177	10/08 -	3685	3893
LANCER V (CB/D_A)	1.3	55	06/92 – 02/95	3604	
LANCER V (CB/D_A)	1.3 (CB1A)	55	06/92 – 12/96	3604	
LANCER V (CB/D_A)	1.5	65	09/92 – 07/96	3604	
LANCER V (CB/D_A)	1.5	65	09/92 – 07/96	3622	
LANCER V (CB/D_A)	1.6 (CB4A)	66	02/94 – 12/96	3604	
LANCER V (CB/D_A)	1.6 16V (CB4A)	83	06/92 – 12/96	3604	
LANCER V (CB/D_A)	1.6 16V 4WD (CD4A)	83	06/92 – 12/96	3604	
LANCER V (CB/D_A)	1.8 16V (CB5A)	103	06/92 – 12/93	3622	
LANCER V (CB/D_A)	2.0 Diesel (CB8A)	50	06/92 – 12/96	3604	
LANCER V (CB/D_A)	2.0 EVO II (CE9A)	192	01/94 – 07/95	3685	
LANCER V (CB/D_A)	2.0 EVO III (CE9A)	198	08/95 – 07/96	3685	
LANCER V Station Wagon (CB_W, CD_W)	1.6 16V (CB4W)	83	12/92 – 10/03	3604	
LANCER V Station Wagon (CB_W, CD_W)	1.6 16V 4WD (CD4W)	83	12/92 – 10/03	3622	
LANCER V Station Wagon (CB_W, CD_W)	1.8 i	88	03/95 – 10/03	3604	
LANCER V Station Wagon (CB_W, CD_W)	1.8 i	88	03/95 – 10/03	3622	
LANCER V Station Wagon (CB_W, CD_W)	2.0 D (CB8W)	50	12/92 – 10/03	3604	
LANCER VI (CJ-CP_)	1.3 12V (CK1A)	55	12/95 – 08/03	3604	
LANCER VI (CJ-CP_)	1.5 16V (CK2A)	69	10/99 – 08/03	3604	
LANCER VI (CJ-CP_)	1.6 16V (CK4A)	66	12/95 – 08/03	3604	
LANCER VI (CJ-CP_)	1.8 16V	151	09/95 – 08/03	3685	
LANCER VI (CJ-CP_)	1.8 16V	151	09/95 – 08/03	3765	
MAGNA Estate	3.5	143	06/03 – 07/05	3685	
MAGNA Estate (TE)	3.0 i	140	04/96 – 06/97	3685	4108
MAGNA Estate (TH)	3.5	147	03/99 – 08/00	3685	4108
MAGNA Estate (TJ)	3.5 i	155	08/00 – 05/03	3685	4108
MAGNA Estate (TJ)	3.5 i 4WD	155	08/00 – 05/03	3685	3688
MAGNA Estate (TJ)	3.5 i 4WD	155	08/00 – 05/03		4108
MAGNA Estate (TJ)	3.5 i Sport	163	08/00 – 05/03	3685	4108
MAGNA Estate (TW)	3.5	143	06/03 – 07/05		4108
MAGNA Saloon (TE)	3.0 i	140	04/96 – 06/97	3685	4108

MAKE & MODEL		KW	YEAR		
MITSUBISHI					
MAGNA Saloon (TH)	3.5 i	147	03/99 – 08/00	3685	4108
MAGNA Saloon (TJ)	3.0	150	08/00 – 05/03	3685	4108
MAGNA Saloon (TJ)	3.5 i	155	08/00 – 05/03	3685	4108
MAGNA Saloon (TJ)	3.5 i 4WD	154	08/00 – 05/03	3685	4108
MAGNA Saloon (TJ)	3.5 i Series II Ralliart	180	08/02 – 05/03	3685	4108
MAGNA Saloon (TJ)	3.5 Series II Sports VR-X	163	08/02 – 05/03	3685	4108
MAGNA Saloon (TW)	3.5 i 4WD	159	06/03 – 07/05	3685	4108
MIRAGE Coupe	1.3	58	12/91 – 08/95	3604	
MIRAGE Hatchback (CJ_A)	1.3	55	09/95 – 07/03	3604	
MIRAGE Hatchback (CJ_A)	1.5 (CJ2A)	81	09/95 – 08/99	3604	
MIRAGE Hatchback (CJ_A)	1.6	84	09/99 – 07/03	3604	
MIRAGE Hatchback (CJ_A)	1.6	128	09/95 – 08/99	3604	
MIRAGE Hatchback (CJ_A)	1.8	103	08/01 – 07/03	3622	
MIRAGE Hatchback (CJ_A, CL_A)	1.3	58	12/91 – 08/95	3604	
MIRAGE Hatchback (CJ_A, CL_A)	1.6	88	12/91 – 08/95	3604	
MIRAGE Hatchback (CJ_A, CL_A)	1.6 4WD	84	03/92 – 07/93	3604	
MIRAGE Hatchback (CJ_A, CL_A)	1.6 4WD	88	12/91 – 08/95	3604	
MIRAGE Hatchback (CJ_A, CL_A)	1.6 ZR (CJ4A)	128	09/95 – 08/99	3604	
MIRAGE Hatchback (CJ_A, CL_A)	1.8 Gti	103	12/91 – 07/03	3622	
MIRAGE Saloon (CK_A)	1.5 (CK2A)	81	09/95 – 08/99	3604	
MIRAGE V Coupe (CJ - CM)	1.5 (CJ2A)	81	09/95 – 08/99	3604	
MIRAGE V Coupe (CJ - CM)	1.6 ZR	128	09/95 – 08/99	3604	
Mirage III Hatchback (C5_ - C8_) 44256	4G13 (12V)	51	05/1988 - 11/1991	3401	
Mirage III Hatchback (C5_ - C8_) 44256	4G13 (8V) (07.88-12.90)	51	05/1988 - 11/1991	3401	
Mirage III Hatchback (C5_ - C8_) 44256 GS	4G13 (12V)	49	07/1990 - 11/1991	3401	
Mirage III Hatchback (C5_ - C8_) 44256 GS	4G13 (8V)	49	07/1990 - 11/1991	3401	
Mirage III Hatchback (C5_ - C8_) 44317	4G15 (12V)	62	05/1988 - 06/1990	3401	
Mirage III Hatchback (C5_ - C8_) 44317	G15B	62	05/1988 - 06/1990	3401	
Mirage III Hatchback (C5_ - C8_) 44317 12V	4G15 (12V)	60	05/1988 - 06/1990	3401	
Mirage III Hatchback (C5_ - C8_) 44317 E	G15B	60	05/1988 - 06/1990	3401	
Mirage III Sedan (C5_ - C8_) 44256	4G13 (8V)	49	07/1990 - 11/1991	3401	
Mirage III Sedan (C5_ - C8_) 44256	4G13 (8V)	51	05/1988 - 11/1991	3401	
Mirage III Sedan (C5_ - C8_) 44256 12V	4G13 (12V)	49	07/1990 - 11/1991	3401	
Mirage III Sedan (C5_ - C8_) 44256 12V	4G13-P	51	05/1988 - 11/1991	3401	
Mirage III Sedan (C5_ - C8_) 44317	G15B	60	05/1988 - 06/1990	3401	
Mirage III Sedan (C5_ - C8_) 44317	G15B	62	05/1988 - 11/1991	3401	
Mirage III Sedan (C5_ - C8_) 44317 12V	4G15 (12V)	60	05/1988 - 06/1990	3401	
Mirage III Sedan (C5_ - C8_) 44317 12V	4G15 (12V)	62	05/1988 - 06/1990	3401	
Mirage III Sedan (C5_ - C8_) 44317 4WD	G15B	62	05/1988 - 11/1991	3401	
Mirage III Sedan (C5_ - C8_) 44409 D	4D65	45	05/1988 - 11/1991	3401	
Mirage III Sedan (C5_ - C8_) 44409 D 4WD	4D65	45	05/1988 - 11/1991	3401	
OUTLANDER I (CU_W)	2.0 (CU2W)	100	05/03 – 10/06	3685	4106
OUTLANDER I (CU_W)	2.0 4WD	177	01/02 – 10/06	3685	
OUTLANDER I (CU_W)	2.0 4WD (CU2W)	93	05/03 – 10/06	3685	4106
OUTLANDER I (CU_W)	2.0 4WD (CU2W)	100	05/03 – 10/06	3685	4106
OUTLANDER I (CU_W)	2.0 Turbo 4WD (CU2W)	148	04/04 – 10/06	3685	4106
OUTLANDER I (CU_W)	2.0 Turbo-R 4WD	177	01/02 – 10/06		4106
OUTLANDER I (CU_W)	2.4 4WD	102	05/03 – 10/06	3685	4106
OUTLANDER I (CU_W)	2.4 4WD (CU5W)	118	11/03 – 10/06	3685	4106
OUTLANDER I (CU_W)	2.4 4WD (CU5W)	119	05/03 – 10/06	3685	4106
OUTLANDER I (CU_W)	2.4 HDD Mivec (CU5W)	118	03/01 – 12/06	3685	4106
OUTLANDER II (CW_W)	2.0	108	11/06 – 11/12	3685	3893
OUTLANDER II (CW_W)	2.0 4WD	108	11/06 – 11/12	3685	3893
OUTLANDER II (CW_W)	2.0 DI-D	103	02/07 – 11/12	3685	3893
OUTLANDER II (CW_W)	2.2 DI-D	130	11/06 – 11/12	3685	3893
OUTLANDER II (CW_W)	2.2 DI-D 4WD	103	09/10 – 11/12	3685	3893
OUTLANDER II (CW_W)	2.2 DI-D 4WD	115	08/07 – 11/12	3685	3893
OUTLANDER II (CW_W)	2.2 DI-D 4WD	130	11/06 – 11/12	3685	3893
OUTLANDER II (CW_W)	2.4	125	11/06 – 11/12	3685	3893
OUTLANDER II (CW_W)	2.4 4WD	125	09/07 – 11/12	3685	3893
OUTLANDER II (CW_W)	2.4 Flex 4WD	125	09/07 – 11/12	3685	3893
OUTLANDER II (CW_W)	3.0 4WD	162	11/06 – 11/12	3685	3893
OUTLANDER II (CW_W)	3.0 4WD	164	11/06 – 12/10	3685	3893
OUTLANDER II (CW_W)	3.0 AWD	169	09/10 – 12/12	3685	3893
OUTLANDER II (CW_W)	3.0 FWD	177	10/09 – 11/12	3685	3893
OUTLANDER II Van (CW_W)	2.0 DI-D	103	12/06 – 11/12	3685	
OUTLANDER II Van (CW_W)	2.2 DI-D 4WD	130	09/10 – 11/12	3685	
OUTLANDER III (GG_W, GF_W, ZJ)	2.0 (GF7W)	107	10/12 -	3685	
OUTLANDER III (GG_W, GF_W, ZJ)	2.0 (GF7W)	110	08/12 -	3685	
OUTLANDER III (GG_W, GF_W, ZJ)	2.0 4WD (GF2W)	107	10/12 -	3685	
OUTLANDER III (GG_W, GF_W, ZJ)	2.0 4WD (GF2W)	110	08/12 -	3685	
OUTLANDER III (GG_W, GF_W, ZJ)	2.0 Hybrid 4WD (GG2W)	87	01/14 -	3685	
OUTLANDER III (GG_W, GF_W, ZJ)	2.0 Hybrid 4WD (GG2W)	89	12/12 -	3685	
OUTLANDER III (GG_W, GF_W, ZJ)	2.2 Di-D	110	08/12 -	3685	
OUTLANDER III (GG_W, GF_W, ZJ)	2.2 Di-D 4WD	110	08/12 -	3685	
Outlander III (GG_W, GF_W, ZJ) 2.0 (GF2W)	4B11	107	10/2012 -		4316

BESER®

MAKE & MODEL			KW	YEAR		
MITSUBISHI						
Outlander III (GG_W, GF_W, ZJ) 2.0 (GF7W)	4J11		110	08/2012 -		4316
Outlander III (GG_W, GF_W, ZJ) 2.0 4WD (GF2W)	4B11		107	10/2012 -		4316
Outlander III (GG_W, GF_W, ZJ) 2.0 4WD (GF7W)	4J11		110	08/2012 -		4316
Outlander III (GG_W, GF_W, ZJ) 2.0 GPL, 4WD	-		110	05/2013 -		4316
Outlander III (GG_W, GF_W, ZJ) 2.0 Hybrid 4WD (GG2W)	4B11, S61, Y61		139	12/2012 -		4316
Outlander III (GG_W, GF_W, ZJ) 2.0 Hybrid 4WD (GG2W)	4B11, S61, Y61		87	01/2014 -		4316
Outlander III (GG_W, GF_W, ZJ) 2.0 Hybrid 4WD (GG2W)	4B11, S61, Y61		89	12/2012 -		4316
Outlander III (GG_W, GF_W, ZJ) 2.0 Mivec 4WD	-		149	06/2014 -		4316
Outlander III (GG_W, GF_W, ZJ) 44229 Di-D (GF6W)	4N14		110	08/2012 -		4316
Outlander III (GG_W, GF_W, ZJ) 44229 Di-D 4WD (GF6W)	4N14		110	08/2012 -		4316
Outlander III (GG_W, GF_W, ZJ) 44288 4WD	4B12		123	10/2012 -		4316
Outlander III (GG_W, GF_W, ZJ) 44288 4WD (GF3W)	4B12, 4J12		124	10/2012 -		4316
OUTLANDER III Van (GF_W, GG_W)	2.2 Di-D 4WD		110	04/13 -	3685	
PAJERO CLASSIC (V2_W)	2.5 TD		80	06/02 -	3685	3688
PAJERO CLASSIC (V2_W)	2.8 TD		85	07/02 -	3685	3688
PAJERO CLASSIC (V2_W)	2.8 TD		87	06/02 -	3685	3688
PAJERO CLASSIC (V2_W)	3.0		131	09/06 -	3892	3893
PAJERO CLASSIC (V2_W)	3.2 DiD		125	09/06 -	3685	3688
PAJERO CLASSIC (V2_W)	3.8 All-wheel Drive		184	09/06 -	3892	3893
PAJERO CLASSIC (V2_W)	3.8 All-wheel Drive		184	09/06 -	3693	
PAJERO I (L04_G, L14_G)	2.0 4WD		81	01/83 – 02/91	3448	
PAJERO I (L04_G, L14_G)	2.0 Turbo 4WD		107	10/84 – 02/91	3448	
PAJERO I (L04_G, L14_G)	2.3 D (L049GW, L044GV)		62	10/84 – 09/86	3448	
PAJERO I (L04_G, L14_G)	2.5 TD (L044G, L049G)		64	01/90 – 12/91	3448	
PAJERO I (L04_G, L14_G)	2.5 TD (L044G, L049G)		70	11/89 – 11/90	3448	
PAJERO I (L04_G, L14_G)	2.5 TD 4WD		62	10/86 – 05/91	3448	
PAJERO I (L04_G, L14_G)	2.6 4WD (L042G)		79	10/86 – 05/91	3448	
PAJERO I (L04_G, L14_G)	3.0 i 4WD		105	05/88 – 05/91	3448	
PAJERO I (L04_G, L14_G)	3.0 V6 (L141G, L146G)		104	11/88 – 11/90	3448	
PAJERO I Canvas Top (L04_G)	2.5 TD (L044G, L049G)		62	05/86 – 10/89	3448	
PAJERO I Canvas Top (L04_G)	2.5 TD (L044G, L049G)		70	11/89 – 11/90	3448	
PAJERO I Canvas Top (L04_G)	2.6 (L042G, L047G)		76	01/83 – 11/90	3448	
PAJERO II (V3_W, V2_W, V4_W)	2.4 (V21W, V21C)		82	04/91 – 10/99	3685	3893
PAJERO II (V3_W, V2_W, V4_W)	2.4 (V21W, V21C)		82	04/91 – 10/99		4084
PAJERO II (V3_W, V2_W, V4_W)	2.4 (V21W, V21C)		82	04/91 – 10/99		3688
PAJERO II (V3_W, V2_W, V4_W)	2.5 TD 4WD (V24C, V24W)		73	12/90 – 10/99	3685	3688
PAJERO II (V3_W, V2_W, V4_W)	2.5 TD 4WD (V24C, V24W)		73	12/90 – 10/99		3893
PAJERO II (V3_W, V2_W, V4_W)	2.5 TD 4WD (V24C, V24W)		73	12/90 – 10/99		4084
PAJERO II (V3_W, V2_W, V4_W)	2.5 TDiC (V44W, V24W)		73	03/91 – 08/99	3685	3688
PAJERO II (V3_W, V2_W, V4_W)	2.8 D 4WD (V46W, V26W)		71	11/93 – 07/97		3688
PAJERO II (V3_W, V2_W, V4_W)	2.8 TD (V46W, V26W)		92	06/94 – 10/99	3685	3688
PAJERO II (V3_W, V2_W, V4_W)	2.8 TD (V46W, V26W)		92	06/94 – 10/99		3893
PAJERO II (V3_W, V2_W, V4_W)	2.8 TD (V46W, V26W)		92	06/94 – 10/99		4084
PAJERO II (V3_W, V2_W, V4_W)	3.0 V6 24V (V43W, V23W)		130	06/97 – 10/99	3685	3688
PAJERO II (V3_W, V2_W, V4_W)	3.0 V6 24V (V43W, V23W)		130	06/97 – 10/99		3893
PAJERO II (V3_W, V2_W, V4_W)	3.0 V6 24V (V43W, V23W)		130	06/97 – 10/99		4084
PAJERO II (V3_W, V2_W, V4_W)	3.0 V6 24V (V43W, V23W)		133	06/94 – 05/97	3685	3688
PAJERO II (V3_W, V2_W, V4_W)	3.0 V6 4WD (V23W, V43W, V23C)		110	12/90 – 12/95	3685	3688
PAJERO II (V3_W, V2_W, V4_W)	3.5 V6 24V (V25W, V45W)		153	06/94 – 10/99	3685	3688
PAJERO II (V3_W, V2_W, V4_W)	3.5 V6 24V (V45W, V25W)		143	07/97 – 10/99	3685	3688
PAJERO II Canvas Top (V2_W, V4_W)	1.8 GDI		96	06/98 – 04/00	3685	3688
PAJERO II Canvas Top (V2_W, V4_W)	1.8 GDI		96	06/98 – 04/00		3893
PAJERO II Canvas Top (V2_W, V4_W)	1.8 GDI		96	06/98 – 04/00		4084
PAJERO II Canvas Top (V2_W, V4_W)	2.4 (V41W, V21W, V21C)		82	04/91 – 04/00	3685	3688
PAJERO II Canvas Top (V2_W, V4_W)	2.4 (V41W, V21W, V21C)		82	04/91 – 04/00		3893
PAJERO II Canvas Top (V2_W, V4_W)	2.4 (V41W, V21W, V21C)		82	04/91 – 04/00		4084
PAJERO II Canvas Top (V2_W, V4_W)	2.5 TD 4WD (V24C, V24W)		73	12/90 – 04/00	3685	3688
PAJERO II Canvas Top (V2_W, V4_W)	2.5 TD 4WD (V24C, V24W)		73	12/90 – 04/00		3893
PAJERO II Canvas Top (V2_W, V4_W)	2.5 TD 4WD (V24C, V24W)		73	12/90 – 04/00		4084
PAJERO II Canvas Top (V2_W, V4_W)	3.0 V6 (V23W, v43W, V23C)		110	12/90 – 12/95	3685	3688
PAJERO II Canvas Top (V2_W, V4_W)	3.0 V6 24V (V23W, V23C)		133	06/94 – 04/00	3685	3688
PAJERO II Canvas Top (V2_W, V4_W)	3.0 V6 24V (V23W, V23C)		133	06/94 – 04/00		3893
PAJERO II Canvas Top (V2_W, V4_W)	3.0 V6 24V (V23W, V23C)		133	06/94 – 04/00		4084
PAJERO III (V7_W, V6_W)	2.5 TDi		73	04/00 – 12/06	3892	3893
PAJERO III (V7_W, V6_W)	2.5 TDi		85	09/01 – 12/06	3892	3893
PAJERO III (V7_W, V6_W)	3.2 Di-D		118	04/00 – 12/06	3892	3893
PAJERO III (V7_W, V6_W)	3.2 Di-D		121	04/00 – 10/01	3892	3893
PAJERO III (V7_W, V6_W)	3.5		149	04/00 – 01/07	3892	3893
PAJERO III Open Off-Road Vehicle (V6_W, V7_W)	2.4		82	10/01 – 08/06	3892	3893
PAJERO III Open Off-Road Vehicle (V6_W, V7_W)	2.5 TDi (V64W, V74W		73	04/00 – 12/06	3892	3893
PAJERO III Open Off-Road Vehicle (V6_W, V7_W)	2.5 TDi (V64W, V74W)		85	09/01 – 12/06	3892	3893
PAJERO III Open Off-Road Vehicle (V6_W, V7_W)	3.0 (V73W)		125	10/01 – 12/06	3892	3893
PAJERO III Open Off-Road Vehicle (V6_W, V7_W)	3.2 DI-D (V68W, V78W)		118	10/01 – 12/06	3892	3893
PAJERO III Open Off-Road Vehicle (V6_W, V7_W)	3.2 DI-D (V68W, V78W)		121	04/00 – 12/06	3892	3893
PAJERO III Open Off-Road Vehicle (V6_W, V7_W)	3.5 i		160	09/03 – 10/06	3892	3893
PAJERO III Open Off-Road Vehicle (V6_W, V7_W)	3.5 V6 GDI (V65W, V75W)		149	04/00 – 12/06	3892	3893

MAKE & MODEL		KW	YEAR		
MITSUBISHI					
PAJERO IV (V8_W, V9_W)	3.0 4WD	131	02/07 -	3693	
PAJERO IV (V8_W, V9_W)	3.0 4WD	131	02/07 -	3892	
PAJERO IV (V8_W, V9_W)	3.2 DI-D	121	01/10 -	3892	3893
PAJERO IV (V8_W, V9_W)	3.2 DI-D	121	01/10 -	3693	
PAJERO IV (V8_W, V9_W)	3.2 DI-D (V88W, V98W)	118	02/07 -	3892	3893
PAJERO IV (V8_W, V9_W)	3.2 DI-D (V88W, V98W)	118	02/07 -	3693	
PAJERO IV (V8_W, V9_W)	3.2 DI-D (V88W, V98W)	125	02/07 -	3892	3893
PAJERO IV (V8_W, V9_W)	3.2 DI-D (V88W, V98W)	125	02/07 -	3693	
PAJERO IV (V8_W, V9_W)	3.2 DI-D (V88W, V98W)	140	02/07 -	3892	
PAJERO IV (V8_W, V9_W)	3.2 DI-D 4WD (V98W)	140	02/07 -	3693	3893
PAJERO IV (V8_W, V9_W)	3.2 DI-D 4WD (V98W, V88W)	147	01/09 -	3892	3893
PAJERO IV (V8_W, V9_W)	3.2 DI-D 4WD (V98W, V88W)	147	01/09 -	3693	
PAJERO IV (V8_W, V9_W)	3.8 V6	180	02/10 -	3892	3893
PAJERO IV (V8_W, V9_W)	3.8 V6	180	02/10 -	3693	
PAJERO IV (V8_W, V9_W)	3.8 V6	182	02/10 -	3892	3893
PAJERO IV (V8_W, V9_W)	3.8 V6	182	02/10 -	3693	
PAJERO IV (V8_W, V9_W)	3.8 V6 (V87W, V97W)	184	02/07 -	3892	3893
PAJERO IV (V8_W, V9_W)	3.8 V6 (V87W, V97W)	184	02/07 -	3693	
PAJERO IV Van (V90, V80, V8_V)	3.2 DI-D	118	11/06 -	3892	3893
PAJERO IV Van (V90, V80, V8_V)	3.2 DI-D	118	11/06 -	3693	
PAJERO IV Van (V90, V80, V8_V)	3.2 TD 4WD	147	01/10 -	3892	3893
PAJERO IV Van (V90, V80, V8_V)	3.2 TD 4WD	147	01/10 -	3693	
PAJERO MINI (H5_A)	0.7	37	10/94 – 08/98	4271	
PAJERO MINI (H5_A)	0.7	38	10/94 – 08/12	4271	
PAJERO MINI (H5_A)	0.7 4WD	37	10/94 – 08/98	4271	
PAJERO MINI (H5_A)	0.7 4WD	47	10/94 – 08/12	4271	
PAJERO PININ (H6_W, H7_W)	1.8 (H76W, H66W)	84	11/01 – 06/07	4271	4108
PAJERO PININ (H6_W, H7_W)	1.8 GDI (H66W)	88	10/99 – 10/01	4271	4108
PAJERO PININ (H6_W, H7_W)	2.0 GDI (H67W, H77W)	95	10/00 – 06/07	4271	4108
PAJERO SPORT I (K90)	2.5 TD (K94W)	73	11/98 -	3685	4084
PAJERO SPORT I (K90)	2.5 TD (K94W)	85	07/02 -	3685	4084
PAJERO SPORT I (K90)	2.5 TD (K94W)	98	08/03 -	3685	4084
PAJERO SPORT I (K90)	2.5 TD 4WD (K94W)	83	11/97 – 10/98	3685	4084
PAJERO SPORT I (K90)	3.0 V6 (K96W)	123	03/03 -	3685	4084
PAJERO SPORT I (K90)	3.0 V6 (K96W)	125	06/00 -	3685	4084
PAJERO SPORT I (K90)	3.0 V6 (K96W)	130	11/98 -	3685	4084
PAJERO SPORT I (K90)	3.2 TDi	121	11/98 -	3685	4084
PAJERO SPORT II (KH_, KG_)	2.5 DI-D	131	07/08 -	3975	4084
PAJERO SPORT II (KH_, KG_)	2.5 DI-D 4WD (KH4W)	131	07/08 -	3975	
PAJERO SPORT II (KH_, KG_)	2.5 TD	98	09/08 -	3975	4084
PAJERO SPORT II (KH_, KG_)	3.0 4WD	162	09/08 -	3975	4084
PAJERO SPORT II (KH_, KG_)	3.2 DI-D 4WD	118	07/08 -	3975	
PAJERO SPORT II (KH_, KG_)	3.5	137	01/10 -	3975	
PAJERO SPORT II (KH_, KG_)	3.5 V6 24V	153	09/08 -	3975	
PAJERO SPORT III (KS_)	2.4 DI-D	133	08/15 -		4084
PAJERO SPORT III (KS_)	2.4 DI-D 4x4	133	08/15 -		4084
PAJERO SPORT III (KS_)	2.5 DI-D	100	08/15 -		4084
PAJERO SPORT III (KS_)	2.5 DI-D 4x4	100	08/15 -		4084
PAJERO SPORT VAN I (K90)	2.5 TD	85	12/99 – 01/08	3685	4084
PAJERO SPORT VAN I (K90)	3.0 V6	125	12/99 – 01/08	3685	4084
PROUDIA/DIGNITY (S4_A, S3_A)	3.5	177	10/99 – 05/01	3892	
PROUDIA/DIGNITY (S4_A, S3_A)	4.5	206	10/99 – 05/01	3892	
SANTAMO	2.0 16V	102	05/99 – 12/04	3632	4108
SANTAMO	2.0 16V	102	05/99 – 12/04	3622	
SANTAMO	2.0 16V 4WD	102	05/99 – 12/04	3632	4108
SANTAMO	2.0 16V 4WD	102	05/99 – 12/04	3622	
SAPPORO (A16_A)	1.6 GLX (4G32)	55	08/80 – 09/84	3407	
SAPPORO (A12_)	1.6 SL,GL (4G32)	55	04/78 – 07/80	3709	
SAPPORO (A12_)	2.0 (4G52)	66	04/78 – 07/80	3376	
SAPPORO (A12_)	2.0 (4G52)	72	04/78 – 07/80	3376	
SAPPORO (A12_)	2.0 (4G52)	79	01/79 – 07/80	3376	
SAPPORO III (E16A)	2.4 (E16A)	91	06/87 – 08/90		4108
SIGMA III (GJ, GK, GN)	2.0 GL	68	03/82 -	3376	
SIGMA III (GJ, GK, GN)	2.0 SE	68	03/82 -	3376	
SIGMA III SCORPION (GJ, GK, GL)	GH, GJ, GK, GL		11/80 -	3376	
SIGMA (F2_A, F1_A)	3.0 V6	130	12/90 – 07/96	3685	4108
SIGMA (F2_A, F1_A)	3.0 V6	151	12/90 – 07/96	3685	4108
SIGMA (GE)	2.0 GL	54	09/78 -	3407	
SIGMA (GE)	2.0 GL	54	10/77 -	3407	
SIGMA (GE)	2.0 GLX	74	09/78 -	3376	
SIGMA (GE)	All models	54	10/77 -	3709	
SIGMA Station Wagon (F0_W)	3.0	125	06/92 – 10/96	3685	4108
SPACE RUNNER (N1_W, N2_W)	1.8 (N11W)	85	06/96 – 08/99	3622	4108
SPACE RUNNER (N1_W, N2_W)	1.8 (N11W)	90	10/91 – 08/99	3622	4108
SPACE RUNNER (N1_W, N2_W)	1.8 4WD (N21W)	85	06/96 – 08/99	3622	4108
SPACE RUNNER (N1_W, N2_W)	1.8 4WD (N21W)	90	10/91 – 08/99	3622	4108

MAKE & MODEL   		KW	YEAR		
MITSUBISHI					
SPACE RUNNER (N1_W, N2_W)	2.0 16V	98	06/97 – 08/99	3622	4108
SPACE RUNNER (N1_W, N2_W)	2.0 TD (N18W)	60	10/92 – 08/99	3622	4108
SPACE RUNNER (N6_W)	2.0	98	05/00 – 08/02		4108
SPACE RUNNER (N6_W)	2.0 (N63W)	100	08/99 – 08/02	3685	4108
SPACE RUNNER (N6_W)	2.4 GDI	108	08/99 – 08/02		4108
SPACE RUNNER (N6_W)	2.4 GDI	110	08/99 – 08/02	3685	4108
SPACE STAR MPV (DG_A)	1.3 16V (DG1A)	60	09/00 – 12/04		4062
SPACE STAR MPV (DG_A)	1.3 16V (DG1A)	61	12/98 – 12/04		4062
SPACE STAR MPV (DG_A)	1.3 16V (DG1A)	63	06/98 – 12/04		4062
SPACE STAR MPV (DG_A)	1.6	72	04/01 – 12/04		4062
SPACE STAR MPV (DG_A)	1.6 16V (DG3A)	72	01/01 – 12/04		4062
SPACE STAR MPV (DG_A)	1.8 GDI (DG5A)	87	06/98 – 12/04		4062
SPACE STAR MPV (DG_A)	1.8 GDI (DG5A)	90	06/98 – 12/04		4062
SPACE STAR MPV (DG_A)	1.8 MPI	82	10/02 – 12/04		4062
SPACE STAR MPV (DG_A)	1.9 DI-D	85	10/02 – 12/04		4062
SPACE STAR MPV (DG_A)	1.9 DI-D (DG4A)	75	02/01 – 12/04		4062
SPACE WAGON (N3_W, N4_W)	1.8 (N31W)	90	10/91 – 10/98	3622	4108
SPACE WAGON (N3_W, N4_W)	1.8 4WD (N41W)	90	10/91 – 10/98	3622	4108
SPACE WAGON (N3_W, N4_W)	1.8 TD (N35W)	55	10/91 – 10/98	3622	4108
SPACE WAGON (N3_W, N4_W)	2.0 (N33W)	98	10/92 – 10/98	3622	4108
SPACE WAGON (N3_W, N4_W)	2.0 4WD (N43W)	98	10/92 – 10/98	3622	4108
SPACE WAGON (N3_W, N4_W)	2.0 TD (N38W)	60	10/92 – 10/98	3622	4108
SPACE WAGON (N3_W, N4_W)	2.4	88	10/91 – 10/97	3622	4108
SPACE WAGON (N3_W, N4_W)	2.4 i (N34W)	102	10/92 – 10/98	3622	4108
SPACE WAGON (N9_W, N8_W)	2.0	98	10/98 – 12/04	3685	
SPACE WAGON (N9_W, N8_W)	2.4	96	11/98 – 04/04	3622	3688
SPACE WAGON (N9_W, N8_W)	2.4 GDI	108	09/00 – 12/04	3685	
SPACE WAGON (N9_W, N8_W)	2.4 GDI	110	10/98 – 12/04	3685	
SPACE WAGON (N9_W, N8_W)	2.4 GDI 4WD	108	09/00 – 12/04	3685	
SPACE WAGON (N9_W, N8_W)	2.4 GDI 4WD	110	10/98 – 12/04	3685	
Space Wagon I (D0_V/W)/ Chariot 2.0 4WD (D08W)	4G63 (SOHC 8V)	75	03/1985 - 04/1991	3401	
Space Wagon I (D0_V/W)/ Chariot 2.0 GLX (D04W)	G63B (06.86-05.88)	62	06/1986 - 05/1988	3401	
Space Wagon I (D0_V/W)/ Chariot 2.0 GLX 4WD (D08W)	G63B (06.86-05.88)	62	06/1986 - 05/1988	3401	
Space Wagon I (D0_V/W)/ Chariot 2.0 GLX 4WD (D08W, D04W)	4G63 (SOHC 8V)	81	03/1985 - 08/1988	3401	
Space Wagon I (D0_V/W)/ Chariot 2.0 GLXi (D04W)	4G63 (SOHC 8V)	74	06/1988 - 04/1991	3401	
Space Wagon I (D0_V/W)/ Chariot 2.0 GLXi 4WD (D08W)	4G63 (SOHC 8V)	74	06/1988 - 04/1991	3401	
Space Wagon I (D0_V/W)/ Chariot 44409 (D03W)	G62B	100	01/1983 - 08/1986	3401	
Space Wagon I (D0_V/W)/ Chariot 44409 4WD (D05V, D05W)	4G37 (10.87-12.87)	66	10/1987 - 08/1988	3401	
Space Wagon I (D0_V/W)/ Chariot 44409 GLX (D05V, D05W)	4G37 (01.84-12.87)	66	01/1984 - 12/1988	3401	
Space Wagon I (D0_V/W)/ Chariot 44409 TD	4D65T	60	01/1985 - 12/1991	3401	
Space Wagon I (D0_V/W)/ Chariot 44409 TD (D09V, D09W)	4D65 T (01.88-04.91)	55	06/1986 - 04/1991	3401	
Tredia (A21_) 44348 Turbo (A212)	4G32 T (09.82-07.84)	84	09/1982 - 05/1985	3401	
Tredia (A21_) 44348 Turbo (A212)	4G32 T (09.82-07.84)	85	09/1982 - 07/1984	3401	
Tredia (A21_) 44409 GLS (A215)	4G37 (08.84-07.86)	66	08/1984 - 07/1986	3401	
Tredia (A21_) 44409 GLS 4WD	4G37	66	04/1985 - 07/1986	3401	
Tredia (A21_) 44409 Turbo	G62B	100	08/1984 - 07/1986	3401	
VERADA Estate (KS)	3.0	120	03/94 – 03/97		4108
VERADA Saloon (KJ)	3.5 i	150	08/00 – 05/03		4108
VERADA Saloon (KL)	3.5	155	06/03 – 10/04	3685	
VERADA Saloon (KL)	3.5	163	06/03 – 10/04	3685	
VERADA Saloon (KL)	3.5 24V	169	06/03 – 10/04	3685	
VERADA Saloon (KL)	3.5 i Series II 4WD	154	06/03 – 10/04	3685	3688
VERADA Saloon (KL)	3.5 i Series II 4WD	154	06/03 – 10/04		4108
VERADA Saloon (KR)	3.0	151	10/92 – 02/94		4108
VERADA Saloon (KR)	3.0 i	125	07/91 – 02/94		4108
VERADA Saloon (KS)	3.0	120	03/94 – 03/97		4108
VERADA Saloon (KW)	3.5	155	10/04 – 07/05	3685	3688
VERADA Saloon (KW)	3.5	155	10/04 – 07/05		4108
VERADA Saloon (KW)	3.5 24V	157	10/04 – 05/05	3685	3688
VERADA Saloon (KW)	3.5 24V	169	10/04 – 07/05	3685	3688
VERADA Saloon (KW)	3.5 4WD	154	10/04 – 07/05	3685	3688
VERADA Saloon (KW)	3.5 4WD	154	10/04 – 07/05		4108
CANTER	3000			4244	4245
CANTER	3000			4244/1	4245/1
CANTER	3000 (FBA20)		12-	4244/1	4245/1
CANTER	3000 (FDA20)		11-	4244	4245
CANTER	3000 (FBA20)		12-	4244	4245
CANTER	3000 (FDA20)		11-	4244/1	4245/1
CANTER	3000 (FEA20)		10-	4244	4245
CANTER	3000 (FEA20)		10-	4244/1	4245/1
CANTER	3000 (FEB20)		10-	4244	4245
CANTER	3000 (FEB20)		10-	4244/1	4245/1
MITSUBISHI (BBDC)					
OUTLANDER	2.4	99	07/06 -	3685	4106
OUTLANDER	2.4	121	07/06 -	3685	4106
OUTLANDER	2.4 All-wheel Drive	121	07/06 -	3685	4106

MAKE & MODEL		KW	YEAR		
MITSUBISHI (BJC)					
PAJERO SPORT	2.4	94	01/03 – 02/06	3809	
PAJERO SPORT	3.0 All-wheel Drive	123	01/03 – 02/06	3892	3893
MULTICAR					
M25	1.9	40	01/91 – 12/92	3440	
NAZA					
RIA	2.5	100	10/01 – 09/06	3802	
RIA	2.5	129	11/01 – 09/06	3802	
SURIA	1.1	48	11/06 -	3968	
NISSAN					
100 NX (B13)	1.6	66	03/90 – 10/94	3598	
100 NX (B13)	1.6	66	03/90 – 10/94	3766	
100 NX (B13)	1.6 SR	75	09/93 – 10/94	3598	
100 NX (B13)	1.6 SR	75	09/93 – 10/94	3766	
100 NX (B13) 44348	GA16DS	66	03/1990 - 10/1994	3598/1	
100 NX (B13) 44348 SR	GA16DE	75	09/1993 - 10/1994	3598/1	
180 SX Coupe (S13)	2.0 Turbo	147	04/91 – 03/94	3699	
180 SX Coupe (S13)	2.0 Turbo	147	04/91 – 03/94	3779	
200 B	All models		01/77 -	3375	
200 SX (S13)	1.8	99	09/88 – 03/94	3699	
200 SX (S13)	1.8	99	09/88 – 03/94	3700	
200 SX (S13)	1.8	99	09/88 – 03/94	3779	
200 SX (S13)	1.8 Turbo	122	01/92 – 09/94	3699	
200 SX (S13)	1.8 Turbo	122	01/92 – 09/94	3779	
200 SX (S13)	1.8 Turbo	124	07/88 – 11/93	3699	
200 SX (S13)	1.8 Turbo	124	07/88 – 11/93	3700	
200 SX (S13)	1.8 Turbo	124	07/88 – 11/93	3779	
200 SX (S13)	2.0 i 16V	103	07/88 – 11/93	3699	
200 SX (S13)	2.0 i 16V	103	07/88 – 11/93	3700	
200 SX (S13)	2.0 i 16V	103	07/88 – 11/93	3779	
240 K	GL		01/72 -	3375	
240 Z / DATSUN 240 Z	HS30		10/70 -	3375	
260 C	All models		01/80 -	3369	
260 Z / DATSUN 260 Z	1.6 260 Z	49	05/74 -	3375	
280 C	2.8 CDX	147	01/74 -	3369	
280 C	2.8 CDX		01/74 -	3375	
280 ZX	2.8 i		09/78 -	3369	
280 ZX	2.8 i Turbo		09/78 -	3369	
280 ZX,ZXT	2.8 (L28E)	103	10/78 – 06/83	3369	
280 ZX,ZXT	2.8 (L28E)	108	02/80 – 09/82	3369	
ALMERA Classic (B10)	1.6 16V	79	03/06 -	3797	
ALMERA I (N15)	1.4	64	09/95 – 07/00	3577	
ALMERA I (N15)	1.4	64	09/95 – 07/00	4010	
ALMERA I (N15)	1.4 GX,LX	55	09/95 – 07/00	3577	
ALMERA I (N15)	1.4 GX,LX	55	09/95 – 07/00	4010	
ALMERA I (N15)	1.5	77	07/95 – 05/00	3577	
ALMERA I (N15)	1.5	77	07/95 – 05/00	4010	
ALMERA I (N15)	1.6	73	09/95 – 07/00	3577	
ALMERA I (N15)	1.6	73	09/95 – 07/00	4010	
ALMERA I (N15)	1.6	75	07/95 – 03/00	3577	
ALMERA I (N15)	1.6	75	07/95 – 03/00	4010	
ALMERA I (N15)	1.6 SLX	66	09/95 – 07/00	3577	
ALMERA I (N15)	1.6 SLX	66	09/95 – 07/00	4010	
ALMERA I (N15)	1.8	84	07/95 – 05/00	3577	
ALMERA I (N15)	1.8	84	07/95 – 05/00	4010	
ALMERA I (N15)	2.0 D	55	11/95 – 07/00	3577	
ALMERA I (N15)	2.0 D	55	11/95 – 07/00	4010	
Almera I (N15) 2.0 D	CD20	55	11/1995 - 07/2000	3647	
Almera I (N15) 2.0 D	CD20	55	11/1995 - 07/2000	3647	
Almera I (N15) 44287	GA14DE	64	09/1995 - 07/2000	3647	
Almera I (N15) 44287	GA14DE	64	09/1995 - 07/2000	3647	
Almera I (N15) 44287 GX,LX	GA14DE	55	09/1995 - 07/2000	3647	
Almera I (N15) 44287 GX,LX	GA14DE	55	09/1995 - 07/2000	3647	
Almera I (N15) 44348	GA16DE	73	09/1995 - 07/2000	3647	
Almera I (N15) 44348	GA16DE	75	07/1995 - 03/2000	3647	
Almera I (N15) 44348 SLX	GA16DE	66	09/1995 - 07/2000	3647	
ALMERA I Hatchback (N15)	1.4	64	09/95 – 03/00	3577	
ALMERA I Hatchback (N15)	1.4	64	09/95 – 03/00	4010	
ALMERA I Hatchback (N15)	1.4 S,GX,LX	55	09/95 – 03/00	3577	
ALMERA I Hatchback (N15)	1.4 S,GX,LX	55	09/95 – 03/00	4010	
ALMERA I Hatchback (N15)	1.5	77	07/95 – 03/00	3577	
ALMERA I Hatchback (N15)	1.5	77	07/95 – 03/00	4010	
ALMERA I Hatchback (N15)	1.6	73	09/95 – 03/00	3577	
ALMERA I Hatchback (N15)	1.6	73	09/95 – 03/00	4010	
ALMERA I Hatchback (N15)	1.6	75	07/95 – 03/00	3577	
ALMERA I Hatchback (N15)	1.6	75	07/95 – 03/00	4010	

MAKE & MODEL		KW	YEAR		
NISSAN					
ALMERA I Hatchback (N15)	1.6 SR,SLX	66	09/95 – 03/00	3577	
ALMERA I Hatchback (N15)	1.6 SR,SLX	66	09/95 – 03/00	4010	
ALMERA I Hatchback (N15)	2.0 D	55	11/95 – 03/00	3577	
ALMERA I Hatchback (N15)	2.0 D	55	11/95 – 03/00	4010	
Almera I Hatchback (N15) 2.0 D	CD20	55	11/1995 - 03/2000	3647	
Almera I Hatchback (N15) 2.0 D	CD20	55	11/1995 - 03/2000	3647	
Almera I Hatchback (N15) 44287	GA14DE	64	09/1995 - 03/2000	3647	
Almera I Hatchback (N15) 44287	GA14DE	64	09/1995 - 03/2000	3647	
Almera I Hatchback (N15) 44287 S,GX,LX	GA14DE	55	09/1995 - 03/2000	3647	
Almera I Hatchback (N15) 44287 S,GX,LX	GA14DE	55	09/1995 - 03/2000	3647	
Almera I Hatchback (N15) 44348	GA16DE	73	09/1995 - 03/2000	3647	
Almera I Hatchback (N15) 44348	GA16DE	75	07/1995 - 03/2000	3647	
Almera I Hatchback (N15) 44348 SR,SLX	GA16DE	66	09/1995 - 03/2000	3647	
ALMERA II (N16)	1.5	66	07/00 -	3652	3660
ALMERA II (N16)	1.5	66	07/00 -	3562	
ALMERA II (N16)	1.5	72	10/02 -	3652	3660
ALMERA II (N16)	1.5	72	10/02 -	3562	
ALMERA II (N16)	1.5	77	03/01 -	3652	3660
ALMERA II (N16)	1.5	77	03/01 -	3562	
ALMERA II (N16)	1.5 dCi	60	01/03 -	3652	3660
ALMERA II (N16)	1.5 dCi	60	01/03 -	3562	
ALMERA II (N16)	1.8	84	07/00 -		3660
ALMERA II (N16)	1.8	85	10/02 -		3660
ALMERA II (N16)	1.8	94	01/02 -		3660
ALMERA II (N16)	2.2 dCi	82	09/03 -		3660
ALMERA II (N16)	2.2 dCi	100	09/03 -		3660
ALMERA II (N16)	2.2 Di	81	07/00 -		3660
ALMERA II Hatchback (N16)	1.5	66	03/00 -	3652	3660
ALMERA II Hatchback (N16)	1.5	66	03/00 -	3562	
ALMERA II Hatchback (N16)	1.5	72	10/02 -	3652	3660
ALMERA II Hatchback (N16)	1.5	72	10/02 -	3562	
ALMERA II Hatchback (N16)	1.5 dCi	60	01/03 -	3652	3660
ALMERA II Hatchback (N16)	1.5 dCi	60	01/03 -	3562	
ALMERA II Hatchback (N16)	1.5 XL	77	03/01 -	3652	3660
ALMERA II Hatchback (N16)	1.5 XL	77	03/01 -	3562	
ALMERA II Hatchback (N16)	1.8	84	01/00 -		3660
ALMERA II Hatchback (N16)	1.8	85	10/02 -		3660
ALMERA II Hatchback (N16)	1.8	94	08/02 -		3660
ALMERA II Hatchback (N16)	2.2 dCi	82	09/03 -		3660
ALMERA II Hatchback (N16)	2.2 dCi	100	09/03 -		3660
ALMERA II Hatchback (N16)	2.2 Di	81	03/00 -		3660
ALMERA TINO (V10)	1.8	84	08/00 -	4115	3660
ALMERA TINO (V10)	1.8	85	12/02 -	4115	3660
ALMERA TINO (V10)	2.0	100	08/00 -	4115	3660
ALMERA TINO (V10)	2.2 dCi	82	09/03 -	4115	3660
ALMERA TINO (V10)	2.2 dCi	100	09/03 -	4115	3660
ALMERA TINO (V10)	2.2 Di	84	08/00 -	4115	3660
ALTIMA (L30)	2.4	112	06/97 – 08/01	3699	
ALTIMA (L30)	2.4	112	06/97 – 08/01	3779	
ALTIMA (L31)	2.5	121	08/01 – 09/06	3779	3933
ALTIMA (L31)	2.5	121	08/01 – 09/06	3699	
ALTIMA (L31)	3.5	180	08/01 – 09/06	3779	3933
ALTIMA (L31)	3.5	180	08/01 – 09/06	3699	
ALTIMA (L32)	2.5	128	10/06 -	3699	
ALTIMA (L32)	2.5	128	10/06 – 07/13	3779	3933
ALTIMA (L32)	2.5 Hybrid (L32HV)	118	10/06 -	3699	3933
ALTIMA (L32)	2.5 Hybrid (L32HV)	118	10/06 – 07/11	3779	
ALTIMA (L32)	3.5	201	10/06 -	3699	
ALTIMA (L32)	3.5	201	10/06 – 07/13	3779	3933
ALTIMA (L33)	2.5	127	11/13 -		3933
ALTIMA (L33)	2.5	132	01/13 -		3933
ALTIMA (L33)	2.5	134	05/12 -		3933
ALTIMA (L33)	3.5	201	08/12 -		3933
ALTIMA Coupe (CL32)	2.5 Hybrid (CL32HV)	118	04/07 – 06/13	3779	3933
ALTIMA Coupe (CL32)	2.5 Hybrid (CL32HV)	118	10/06 -	3699	
BASSARA	2.4	110	11/99 – 08/02	3932	
BASSARA	2.5	121	06/02 – 08/03	3932	
BASSARA	2.5 DCi	110	11/99 – 08/03	3932	
BASSARA	3.0	162	11/99 – 08/03	3932	
BLUEBIRD VIII	1.6 (L16)	60	01/80 – 11/83	3370	
BLUEBIRD VIII	1.8 (L18S)	65	01/80 – 05/84	3370	
BLUEBIRD VIII	1.8 Turbo	99	01/80 – 10/83	3370	
BLUEBIRD VIII	1.9 i (Z20E)	80	01/82 – 05/84	3370	
BLUEBIRD VIII	2.0 D (LD20)	44	01/80 – 05/84	3370	
BLUEBIRD VIII	2.0 i (Z20E)	80	01/82 – 12/83	3370	
BLUEBIRD VIII	2.0 i GLE, GL	80	01/80 -	3370	

MAKE & MODEL		KW	YEAR		
NISSAN					
BLUEBIRD VIII	2.0 TD (LD20T)	57	01/83 – 09/83	3370	
BLUEBIRD (T72 , T12)	1.6	61	03/86 – 06/90	3397	
BLUEBIRD (T72 , T12)	1.6	61	03/86 – 06/90	3758	
BLUEBIRD (T72 , T12)	1.8 i 16V (RLT72)	95	02/89 – 12/90	3397	
BLUEBIRD (T72 , T12)	1.8 i 16V (RLT72)	95	02/89 – 12/90	3758	
BLUEBIRD (T72 , T12)	2.0 (T12)	75	12/85 – 12/87	3397	
BLUEBIRD (T72 , T12)	2.0 (T12)	75	12/85 – 12/87	3758	
BLUEBIRD (T72 , T12)	2.0 D (SLT72, T12)	49	03/86 – 12/90	3397	
BLUEBIRD (T72 , T12)	2.0 D (SLT72, T12)	49	03/86 – 12/90	3758	
BLUEBIRD (T72 , T12)	2.0 i	85	09/88 – 09/90	3397	
BLUEBIRD (T72 , T12)	2.0 i	85	09/88 – 09/90	3758	
BLUEBIRD (T72 , T12)	2.0 i (HLT72, T12)	77	12/85 – 12/90	3397	
BLUEBIRD (T72 , T12)	2.0 i (HLT72, T12)	77	12/85 – 12/90	3758	
BLUEBIRD (T72 , T12, U12)	1.8 i 16V (RLT72)	95	02/89 – 12/90	4087	
BLUEBIRD (U11)	1.8	66	11/83 – 06/88	3397	
BLUEBIRD (U11)	1.8	66	11/83 – 06/88	3758	
BLUEBIRD (U11)	2.0 D	43	04/84 – 01/88	3397	
BLUEBIRD (U11)	2.0 D	43	04/84 – 01/88	3758	
BLUEBIRD (U11)	2.0 i	77	04/84 – 01/88	3397	
BLUEBIRD (U11)	2.0 i	77	04/84 – 01/88	3758	
BLUEBIRD Hatchback (T72, T12)	1.6	61	03/86 – 06/90	3397	
BLUEBIRD Hatchback (T72, T12)	1.6	61	03/86 – 06/90	3758	
BLUEBIRD Hatchback (T72, T12)	1.6	66	03/86 – 06/91	3397	
BLUEBIRD Hatchback (T72, T12)	1.6	66	03/86 – 06/91	3758	
BLUEBIRD Hatchback (T72, T12)	1.8 i 16V (FRLT72)	95	02/89 – 12/90	3397	
BLUEBIRD Hatchback (T72, T12)	1.8 i 16V (FRLT72)	95	02/89 – 12/90	3758	
BLUEBIRD Hatchback (T72, T12)	1.8 i 16V (FRLT72)	95	02/89 – 12/90	4087	
BLUEBIRD Hatchback (T72, T12)	2.0 (T12)	75	12/85 – 12/87	3397	
BLUEBIRD Hatchback (T72, T12)	2.0 (T12)	75	12/85 – 12/87	3758	
BLUEBIRD Hatchback (T72, T12)	2.0 D (FSLT72, T12)	49	03/86 – 12/90	3397	
BLUEBIRD Hatchback (T72, T12)	2.0 D (FSLT72, T12)	49	03/86 – 12/90	3758	
BLUEBIRD Hatchback (T72, T12)	2.0 i	85	09/88 – 09/90	3397	
BLUEBIRD Hatchback (T72, T12)	2.0 i	85	09/88 – 09/90	3758	
BLUEBIRD Hatchback (T72, T12)	2.0 i (FHLT72, T12)	77	12/85 – 12/90	3397	
BLUEBIRD Hatchback (T72, T12)	2.0 i (FHLT72, T12)	77	12/85 – 12/90	3758	
BLUEBIRD Station Wagon (WU11)	2.0	75	04/86 – 09/90	3397	
BLUEBIRD Station Wagon (WU11)	2.0	75	04/86 – 09/90	3758	
BLUEBIRD Station Wagon (WU11)	2.0 D	43	04/84 – 01/88	3397	
BLUEBIRD Station Wagon (WU11)	2.0 D	43	04/84 – 01/88	3758	
BLUEBIRD Station Wagon (WU11)	2.0 D	49	03/86 – 12/90	3397	
BLUEBIRD Station Wagon (WU11)	2.0 D	49	03/86 – 12/90	3758	
BLUEBIRD Station Wagon (WU11)	2.0 i	77	04/84 – 12/90	3397	
BLUEBIRD Station Wagon (WU11)	2.0 i	77	04/84 – 12/90	3758	
BLUEBIRD Station Wagon (WU11)	2.0 i	85	09/88 – 09/90	3397	
BLUEBIRD Station Wagon (WU11)	2.0 i	85	09/88 – 09/90	3758	
CABSTAR	2811	81	10/06 -	3965/1	
CABSTAR	2812	90	10/06 -	3965/1	
CABSTAR	3211	81	01/07 – 07/11	3965/1	
CABSTAR	3511	81	09/06 – 03/09	3965/1	
CABSTAR	3512	90	10/06 -	3965/1	
CABSTAR	3513	96	09/06 – 12/12	3965/1	
CABSTAR	3514	100	10/06 -	3965/1	
CABSTAR	3515	101	10/06 -	3965/1	
CABSTAR	4513	96	10/06 -	3965/1	
CABSTAR	4515	110	10/06 -	3965/1	
CABSTAR (F23, H41, H42)	2.5 dCi	96	10/06 – 09/11	3965/1	
CABSTAR (F23, H41, H42)	35 DI 3.0	92	01/04 – 12/06	3965/1	
CARAVAN (E25)	2.0 (KA20DE)	88	10/00 – 09/02	4002	
CARAVAN (E25)	2.4 (KA24DE)	103	05/01 – 01/12	4002	
CEDRIC V / DATSUN 280C	2.8 CDX		03/78 -	3369	
CEFIRO II Saloon (A32)	2.0	103	10/94 – 12/99	3699	
CEFIRO II Saloon (A32)	2.0	103	10/94 – 12/99	3779	
CEFIRO II Saloon (A32)	3.0	142	10/94 – 12/99	3697	
CHERRY III (N12)	1.0	37	05/82 – 05/86	3394	
CHERRY III (N12)	1.3	44	05/82 – 10/86	3394	
CHERRY III (N12)	1.5	55	11/83 – 10/86	3394	
CHERRY III (N12)	1.5 ET Turbo	77	01/83 – 12/85	3394	
CHERRY III (N12)	1.6	51	05/84 – 07/86	3394	
CIVILAN	4.5		04/07 -	4116	
CIVILAN	4.9		04/07 -	4116	
CUBE (Z10)	1.3	55	03/98 – 08/00	3797	
CUBE (Z10)	1.3	63	09/00 – 12/02	3797	
CUBE (Z10)	1.3	74	09/00 – 12/02	3797	
CUBE (Z10)	1.3 All-wheel Drive	63	09/00 – 12/02	3797	
CUBE (Z10)	1.3 All-wheel Drive	74	09/00 – 12/02	3797	
CUBE (Z11)	1.4	72	01/03 – 09/05	4015	

MAKE & MODEL		KW	YEAR		
NISSAN					
CUBE (Z11)	1.4 4x4	72	01/03 – 09/05	4015	
CUBE (Z11)	1.5	80	01/03 – 09/05	4015	
CUBE (Z11)	1.5 4x4	80	01/03 – 09/05	4015	
CUBE (Z12)	1.5 dCi	78	03/10 -		3933
CUBE (Z12)	1.5 dCi	81	03/10 -		3933
CUBE (Z12)	1.6 16V	81	03/10 -		3933
DATSUN 180 B (PL810)	1.8 (L18S)	65	05/77 – 01/81	3370	
DATSUN 180 B (PL810)	1.8 (KPL810) (L18)	66	05/77 – 01/81	3370	
DATSUN 180 B (PL810)	1.8 (KPL810) (L18S)	66	05/77 – 01/81	3370	
DATSUN 180 B (PL810)	1.8 (KPL810) (L18T)	66	05/77 – 01/81	3370	
ELGRAND II (E51)	3.0 D (ZD30)	113	04/03 – 12/10	4002	
ELGRAND II (E51)	3.0 D (ZD30DD)	77	10/00 – 01/12	4002	
ELGRAND (E50)	3.2 D 4x4 (AVWE50)	110	10/95 – 08/01	3932	
ELGRAND (E51)	2.5	137	12/04 – 12/10	3932	3933
ELGRAND (E51)	2.5 AWD	137	12/04 – 12/10	3932	3933
ELGRAND (E51)	3.0 D	113	04/03 – 12/10	3932	3933
ELGRAND (E51)	3.5	177	05/02 – 12/10	3932	3933
ELGRAND (E51)	3.5 AWD	177	05/02 – 12/10	3932	3933
HCV Cabstar E (TL_, VL_) 105.35, 110.35, 110.45 (TL0)	BD-30Ti	78	10/1998 - 10/2006	3942/A	
HCV Cabstar E (TL_, VL_) 120.35, 120.45 (TL0)	BD-30Ti	88	10/1998 - 10/2006	3942/A	
HCV Cabstar E (TL_, VL_) 125.35, 125.45 (TL0, VL0)	BD-30Ti	92	10/1998 - 10/2006	3942/A	
HOMY III-IV	2.0 (Z20S)	66	08/82 – 04/92	3370	
INTERSTAR Box (X70)	dCi 100	73	11/03 -	3856	3855
INTERSTAR Box (X70)	dCi 100	74	04/06 -	3856	3855
INTERSTAR Box (X70)	dCi 120	84	07/02 -	3856	3855
INTERSTAR Box (X70)	dCi 120	88	09/06 -	3856	3855
INTERSTAR Bus (X70)	dCi 140	100	11/03 -	3856	3855
INTERSTAR Bus (X70)	dCi 150	107	09/06 -	3856	3855
INTERSTAR Bus (X70)	dCi 80	60	07/02 -	3856	3855
INTERSTAR Bus (X70)	dCi 90	66	07/02 -	3856	3855
INTERSTAR Platform/Chassis	dCi 100	73	02/04 -	3856	3855
INTERSTAR Platform/Chassis	dCi 120	84	08/03 -	3856	3855
INTERSTAR Platform/Chassis	dCi 120	88	08/06 -	3856	3855
INTERSTAR Platform/Chassis	dCi 140	100	11/03 -	3856	3855
INTERSTAR Platform/Chassis	dCi 150	107	08/06 -	3856	3855
JUKE (F15)	1.2 DIG-T	85	05/14 -	4109	
JUKE (F15)	1.2 DIG-T	85	05/14 -	4232	
JUKE (F15)	1.5 dCi	81	06/10 -	4109	
JUKE (F15)	1.5 dCi	81	06/10 -	4232	
JUKE (F15)	1.6	69	01/13 -	4109	
JUKE (F15)	1.6	69	01/13 -	4232	
JUKE (F15)	1.6	86	06/10 -	4109	
JUKE (F15)	1.6	86	06/10 -	4232	
JUKE (F15)	1.6 DIG-T	140	06/10 -	4109	
JUKE (F15)	1.6 DIG-T	140	06/10 -	4232	
JUKE (F15)	1.6 DIG-T 4x4	140	06/10 -	4109	
JUKE (F15)	1.6 DIG-T 4x4	140	06/10 -	4232	
JUKE (F15)	1.6 DIG-T NISMO	147	03/13 – 07/14	4109	
JUKE (F15)	1.6 DIG-T NISMO	147	03/13 – 07/14	4232	
JUKE (F15)	1.6 DIG-T NISMO 4x4	147	02/13 – 07/14	4109	
JUKE (F15)	1.6 DIG-T NISMO 4x4	147	02/13 – 07/14	4232	
JUKE (F15)	1.6 DIG-T NISMO RS	160	08/14 -	4109	
JUKE (F15)	1.6 DIG-T NISMO RS	160	08/14 -	4232	
JUKE (F15)	1.6 DIG-T NISMO RS 4x4	157	08/14 -	4109	
JUKE (F15)	1.6 DIG-T NISMO RS 4x4	157	08/14 -	4232	
L Series	L 80.9	70	01/95 -	3773	3773
LAUREL II (C130)	1.8	63	01/73 -	3375	
LAUREL III	2.0 (L20A)	71	03/77 – 05/83	3370	
LAUREL III	2.4 (L24)	83	12/77 – 05/83	3370	
LAUREL III (HLC230)	2.0 (L20A)	71	03/77 – 05/83	3375	
LAUREL III (HLC230)	2.4 (L24)	83	12/77 – 05/83	3375	
LAUREL IV	2.0 (L20A)	71	01/81 – 01/84	3370	
LAUREL IV	2.0 D (LD20)	44	04/81 – 10/84	3370	
LAUREL IV	2.4 (L24)	83	01/81 – 01/84	3370	
LAUREL IV	2.4 (L24)	88	09/83 – 12/85	3370	
LAUREL IV	2.8 D (LD28)	62	01/81 – 10/85	3370	
LAUREL (JC32)	2.4	94	01/85 – 12/87	3397	
LAUREL (JC32)	2.4	94	01/85 – 12/87	3758	
LAUREL (JC32)	2.8 D	62	01/85 – 12/87	3397	
LAUREL (JC32)	2.8 D	62	01/85 – 12/87	3758	
LAUREL (JC32)	2.8 D	66	01/85 – 12/89	3397	
LAUREL (JC32)	2.8 D	66	01/85 – 12/89	3758	
LCV Navara Platform/Chassis (D23) 44257 dCi 4x4	YS23DDT	120	01/2015 -	4307	
LCV NP300 Navara Pick-up (D23) 3.0 DCi 4WD	V9X	170	10/2014 -	4307	
LCV NP300 Navara Pick-up (D23) 44257 DCi	YS23DDT	116	01/2015 -	4307	
LCV NP300 Navara Pick-up (D23) 44257 DCi	YS23DDTT	140	10/2015 -	4307	

MAKE & MODEL		KW	YEAR		
NISSAN					
LCV NP300 Navara Pick-up (D23) 44257 dCi (D231)	YS23DDT	120	01/2015 -	4307	
LCV NP300 Navara Pick-up (D23) 44257 dCi 4x4	YS23DDT	116	01/2015 -	4307	
LCV NP300 Navara Pick-up (D23) 44257 dCi 4x4 (D231)	YS23DDT	120	01/2015 -	4307	
LCV NP300 Navara Pick-up (D23) 44257 dCi 4x4 (D231)	YS23DDTT	140	10/2015 -	4307	
LCV NP300 Navara Pick-up (D23) 44318	QR25DE	122	01/2015 -	4307	
LCV NP300 Navara Pick-up (D23) 44318	QR25DE	124	07/2014 -	4307	
LCV NP300 Navara Pick-up (D23) 44318 4x4	QR25DE	124	07/2014 -	4307	
LCV NP300 Navara Pick-up (D23) 44318 DCI 4x4	YD25DDTi	140	07/2014 -	4307	
LCV NP300 Navara Pick-up (D23) 44318 DCi	YD25DDTI	140	07/2014 -	4307	
LCV NP300 Navara Pick-up (D23) 44318 dCi	YD25DDTi	120	07/2014 -	4307	
LCV NP300 Navara Pick-up (D23) 44318 DCi 4WD	YD25DDTI	106	10/2014 -	4307	
LCV NP300 Navara Pick-up (D23) 44318 dCi 4x4	YD25DDTi	120	07/2014 -	4307	
LCV NV400 Bus (X62, X62B) dCi 100	M9T 670, M9T 672, M9T 676	74	11/2011 - 06/2014		4172/1
LCV NV400 Bus (X62, X62B) dCi 110	M9T 870	81	06/2014 - 09/2016		4172/1
LCV NV400 Bus (X62, X62B) dCi 125	M9T 670, M9T 672, M9T 676, M9T 680, M9T 870, M9T 8	92	11/2011 - 09/2016		4172/1
LCV NV400 Bus (X62, X62B) dCi 140	M9T 702	100	06/2014 - 09/2016		4172/1
LCV NV400 Bus (X62, X62B) dCi 145	M9T 678, M9T 680, M9T 706, M9T 708	107	11/2011 - 02/2014		4172/1
LCV NV400 Bus (X62, X62B) dCi 150	M9T 880	110	02/2014 - 09/2016		4172/1
LCV NV400 Bus (X62, X62B) dCi 160	M9T 702	120	06/2014 - 09/2016		4172/1
LCV NV400 Bus (X62, X62B) dCi 170	M9T 706	125	07/2015 -		4172/1
LCV NV400 Platform/Chassis (X62, X62B) dCi 100	M9T 670, M9T 672, M9T 676	74	11/2011 - 06/2014		4172/1
LCV NV400 Platform/Chassis (X62, X62B) dCi 110	M9T 704, M9T 870	81	06/2014 - 06/2016		4172/1
LCV NV400 Platform/Chassis (X62, X62B) dCi 125	M9T 670, M9T 672, M9T 676, M9T 680, M9T 872, M9T 8	92	11/2011 - 06/2016		4172/1
LCV NV400 Platform/Chassis (X62, X62B) dCi 125 RWD	M9T 686, M9T 690, M9T 692, M9T 696, M9T 698, M9T 8	92	11/2011 - 06/2016		4172/1
LCV NV400 Platform/Chassis (X62, X62B) dCi 140	M9T 702	100	06/2014 - 06/2016		4172/1
LCV NV400 Platform/Chassis (X62, X62B) dCi 140 RWD	M9T 696, M9T 698, M9T 700	100	06/2014 - 06/2016		4172/1
LCV NV400 Platform/Chassis (X62, X62B) dCi 145	M9T 678, M9T 680, M9T 706	107	11/2011 -		4172/1
LCV NV400 Platform/Chassis (X62, X62B) dCi 145 RWD	M9T 694, M9T 696, M9T 698, M9T 710	107	11/2011 -		4172/1
LCV NV400 Platform/Chassis (X62, X62B) dCi 150	M9T 716 (01.20-.), M9T 880	110	08/2014 -		4172/1
LCV NV400 Platform/Chassis (X62, X62B) dCi 150 RWD	M9T 880	110	08/2014 - 06/2016		4172/1
LCV NV400 Platform/Chassis (X62, X62B) dCi 165	M9T 702	120	06/2014 - 06/2016		4172/1
LCV NV400 Platform/Chassis (X62, X62B) dCi 165 RWD	M9T 700	120	06/2014 -		4172/1
LCV NV400 Platform/Chassis (X62, X62B) dCi 170	M9T 706	125	06/2016 -		4172/1
LCV NV400 Van (X62, X62B) 44257 dCi 145 RWD	M9T 694, M9T 696, M9T 698	107	11/2011 - 02/2014		4172/1
LCV NV400 Van (X62, X62B) 44257 dCi 150	M9T 716 (01.20-.), M9T 880	110	02/2014 -		4172/1
LCV NV400 Van (X62, X62B) 44257 dCi 165	M9T 702	120	06/2014 - 09/2016		4172/1
LCV NV400 Van (X62, X62B) dCi 100	M9T 670, M9T 672, M9T 676	74	11/2011 - 05/2014		4172/1
LCV NV400 Van (X62, X62B) dCi 110	M9T 704, M9T 870	81	06/2014 -		4172/1
LCV NV400 Van (X62, X62B) dCi 125	M9T 670, M9T 672, M9T 676, M9T 680, M9T 872, M9T 8	92	11/2011 - 09/2016		4172/1
LCV NV400 Van (X62, X62B) dCi 125 RWD	M9T 686, M9T 690, M9T 692, M9T 696, M9T 698, M9T 8	92	11/2011 - 09/2016		4172/1
LCV NV400 Van (X62, X62B) dCi 140	M9T 702, M9T 716 (01.20-.)	100	06/2014 -		4172/1
LCV NV400 Van (X62, X62B) dCi 140 RWD	M9T 700	100	06/2014 - 09/2016		4172/1
LCV NV400 Van (X62, X62B) dCi 145	M9T 678, M9T 680, M9T 706	107	11/2011 -		4172/1
LCV NV400 Van (X62, X62B) dCi 150 RWD	M9T 880	110	02/2014 - 09/2016		4172/1
LCV NV400 Van (X62, X62B) dCi 165 RWD	M9T 700	120	06/2014 - 09/2016		4172/1
LCV NV400 Van (X62, X62B) dCi 170	M9T 706	125	09/2016 -		4172/1
Leaf (ZE0) Electric	EM57, EM61	80	11/2010 -	4319	
Leaf (ZE1) Electric	EM57	110	08/2017 -		4283/1
Leaf (ZE1) Electric	EM57	160	01/2019 -		4283/1
LIVINA / GRAND LIVINA (L10, L11)	1.6	80	02/07 -	4015	
M Series	M 110.14	103	01/53 – 12/00	3773	3773
MAXIMA (U.S.A. G910)	2.4		09/80 -	3370	
MAXIMA (U.S.A. G910)	2.4 D		09/80 -	3370	
MAXIMA / MAXIMA QX IV (A32)	2.0	103	02/95 – 08/00	3697	
MAXIMA / MAXIMA QX IV (A32)	2.0	103	02/95 – 08/00	3699	
MAXIMA / MAXIMA QX IV (A32)	2.0	103	02/95 – 08/00	3779	
MAXIMA / MAXIMA QX IV (A32)	2.5 V6 24V	140	02/95 – 08/00	3697	
MAXIMA / MAXIMA QX IV (A32)	3.0	142	01/95 – 08/00	3697	
MAXIMA / MAXIMA QX IV Station Wagon (A32)	2.0 QX	103	10/97 – 12/00	3697	
MAXIMA / MAXIMA QX IV Station Wagon (A32)	2.5 V6 24V	140	10/97 – 12/00	3697	
MAXIMA / MAXIMA QX IV Station Wagon (A32)	3.0 QX	142	10/97 – 12/00	3697	
MAXIMA III (J30)	3.0 i	125	10/88 – 06/94	3697	
MAXIMA III (J30)	3.0 i	125	10/88 – 06/94	3699	
MAXIMA III (J30)	3.0 i	125	10/88 – 06/94	3779	
MAXIMA III (J30)	3.0 i	125	10/88 – 06/94	4087	
Maxima IV / Maxima QX SW (A32) 2.0 QX	VQ20DE	103	10/1997 - 12/2000		4303
Maxima IV / Maxima QX SW (A32) 3.0 QX	VQ30DE	142	10/1997 - 12/2000		4303
Maxima IV / Maxima QX SW (A32) 44318 V6 24V	VQ25DE	140	10/1997 - 12/2000		4303
MICRA C+C III (K12)	1.4 16V	65	08/05 -	3983	
MICRA C+C III (K12)	1.6 160 SR	81	08/05 -	3983	
MICRA II (K11)	1.0	40	01/92 – 04/93	4128	
MICRA II (K11)	1.0 i 16V	40	08/92 – 09/00	4128	
MICRA II (K11)	1.0 i 16V	44	09/00 – 02/03	4128	
MICRA II (K11)	1.3 i 16V	55	08/92 – 09/00	4128	
MICRA II (K11)	1.4 i 16V	60	09/00 – 02/03	4128	
MICRA II (K11)	1.5 D	42	02/98 – 02/03	4128	

MAKE & MODEL   		KW	YEAR		
NISSAN					
MICRA III (K12)	1.0 16V	48	01/03 – 06/10	3983	
MICRA III (K12)	1.0 16V	48	01/03 – 06/10	4015	
MICRA III (K12)	1.2 16V	48	01/03 – 06/10	3983	
MICRA III (K12)	1.2 16V	48	01/03 – 06/10	4015	
MICRA III (K12)	1.2 16V	59	01/03 – 06/10	3983	
MICRA III (K12)	1.2 16V	59	01/03 – 06/10	4015	
MICRA III (K12)	1.4 16V	65	01/03 – 06/10	3983	
MICRA III (K12)	1.4 16V	65	01/03 – 06/10	4015	
MICRA III (K12)	1.5 dCi	48	01/03 – 06/10	3983	
MICRA III (K12)	1.5 dCi	48	01/03 – 06/10	4015	
MICRA III (K12)	1.5 dCi	50	06/05 – 06/10	3983	
MICRA III (K12)	1.5 dCi	50	06/05 – 06/10	4015	
MICRA III (K12)	1.5 dCi	60	09/03 – 06/10	3983	
MICRA III (K12)	1.5 dCi	60	09/03 – 06/10	4015	
MICRA III (K12)	1.5 dCi	63	06/05 – 06/10	3983	
MICRA III (K12)	1.5 dCi	63	06/05 – 06/10	4015	
MICRA III (K12)	160 SR	81	05/05 – 06/10	3983	
MICRA III (K12)	160 SR	81	05/05 – 06/10	4015	
MICRA IV (K13)	1.2	56	05/10 -	3983/2	
MICRA IV (K13)	1.2	59	05/10 -	3983/2	
MICRA IV (K13)	1.2 DIG-S	72	04/11 -	3983/2	
MICRA IV (K13)	1.5	75	11/10 -	3983/2	
MICRA V (K14)	1.0 IG-T 100	74	12.2018 -	4363	
Micra IV (K13)/ March/ March Active 1.0 Conforto Flex	D4D	54	05/2014 -	3983/3	
Micra IV (K13)/ March/ March Active 44228	HR12DE	56	05/2010 -	3983/3	
Micra IV (K13)/ March/ March Active 44228	HR12DE	58	05/2010 -	3983/3	
Micra IV (K13)/ March/ March Active 44228	HR12DE	59	05/2010 -	3983/3	
Micra IV (K13)/ March/ March Active 44228 4WD	HR12DE	59	05/2010 -	3983/3	
Micra IV (K13)/ March/ March Active 44228 DIG-S	HR12DDR, HR12DR	72	03/2011 -	3983/3	
Micra IV (K13)/ March/ March Active 44228 LPG	HR12DE	59	05/2010 -	3983/3	
Micra IV (K13)/ March/ March Active 44317	HR15DE	73	12/2011 -	3983/3	
Micra IV (K13)/ March/ March Active 44317	HR15DE	74	01/2011 -	3983/3	
Micra IV (K13)/ March/ March Active 44317 DCi	K9K	73	01/2011 -	3983/3	
Micra IV (K13)/ March/ March Active 44348	HR16DE	78	09/2011 -	3983/3	
Micra IV (K13)/ March/ March Active 44348 Flex	HR16DE	82	02/2011 -	3983/3	
Micra V (K14) 0.9 IG-T	H4B 408, HR09DET	66	12/2016 -	3983/3	
Micra V (K14) 0.9 LPG	HR09DET	64	03/2019 -	3983/3	
Micra V (K14) 1.0	B4D 410, BR10DE	52	12/2016 -	3983/3	
Micra V (K14) 1.0	B4D 410, BR10DE	54	12/2016 -	3983/3	
Micra V (K14) 1.0 DIG-T 117	HR10DDT	86	02/2019 -	3983/3	
Micra V (K14) 44317 DCI	K9K 628	66	12/2016 -	3983/3	
MURANO I (Z50)	3.5 4x4	172	08/03 – 09/08	4074	3933
MURANO I (Z50)	3.5 4x4	172	08/03 – 09/08	4143	
MURANO II (Z51)	2.5 dCi 4x4	140	01/10 – 09/14	4143	
MURANO II (Z51)	3.5	191	01/11 – 09/14	4143	
MURANO II (Z51)	3.5	195	11/07 – 09/14	4143	
MURANO II (Z51)	3.5 4x4	183	12/10 – 09/14	4143	
MURANO II (Z51)	3.5 4x4	188	10/08 – 09/14	4143	
MURANO II (Z51)	3.5 4x4	191	12/09 – 09/14	4143	
MURANO II (Z51)	3.5 4x4	195	11/07 – 09/14	4143	
NAVARA Platform/Chassis (D22)	2.5 Di 4WD	98	02/02 -	3397	
NOTE (E11)	1.4	65	03/06 -		3529/2
NOTE (E11)	1.5 dCi	50	03/06 -		3529/2
NOTE (E11)	1.5 dCi	63	03/06 -		3529/2
NOTE (E11)	1.5 dCi	66	09/10 -		3529/2
NOTE (E11)	1.5 dCi	76	07/08 -		3529/2
NOTE (E11)	1.6	81	03/06 -		3529/2
NOTE (E11, NE11)	1.4	65	03/06 – 06/12	3983	
NOTE (E11, NE11)	1.4	65	03/06 – 06/12	4015	
NOTE (E11, NE11)	1.5 dCi	50	03/06 – 06/12	3983	
NOTE (E11, NE11)	1.5 dCi	50	03/06 – 06/12	4015	
NOTE (E11, NE11)	1.5 dCi	63	03/06 – 06/12	3983	
NOTE (E11, NE11)	1.5 dCi	63	03/06 – 06/12	4015	
NOTE (E11, NE11)	1.5 dCi	66	09/10 – 06/12	3983	
NOTE (E11, NE11)	1.5 dCi	66	09/10 – 06/12	4015	
NOTE (E11, NE11)	1.5 dCi	76	07/08 – 06/12	3983	
NOTE (E11, NE11)	1.5 dCi	76	07/08 – 06/12	4015	
NOTE (E11, NE11)	1.6	81	03/06 – 06/12	3983	
NOTE (E11, NE11)	1.6	81	03/06 – 06/12	4015	
NOTE (E12)	1.2	59	06/13 -	3983/2	
NOTE (E12)	1.2 DIG-S	72	06/13 -	3983/2	
NOTE (E12)	1.2 LPG	56	03/15 -	3983/2	
NOTE (E12)	1.5 dCi	66	06/13 -	3983/2	
Note II (E12) 44228	HR12DE	58	06/2013 -	3983/3	
Note II (E12) 44228	HR12DE	59	06/2013 -	3983/3	
Note II (E12) 44228 4WD	HR12DE	59	06/2013 -	3983/3	

MAKE & MODEL   		KW	YEAR		
NISSAN					
Note II (E12) 44228 DIG-S	HR12DDR, HR12DR	72	06/2013 -	3983/3	
Note II (E12) 44228 GPL	-	59	05/2014 -	3983/3	
Note II (E12) 44228 LPG	HR12DE	56	03/2015 -	3983/3	
Note II (E12) 44317 dCi	K9K 608, K9K 892	66	06/2013 -	3983/3	
Note II (E12) 44348	HR16DE	80	06/2013 -	3983/3	
Note II (E12) 44348	HR16DE	81	05/2015 -	3983/3	
Note II (E12) 44348 NISMO S	HR16DE	103	06/2013 -	3983/3	
NP300 NAVARA (D40)	2.5 D	98	09/08 -	3952	
NP300 NAVARA (D40)	2.5 dCi	106	07/05 -	4143	4025
NP300 NAVARA (D40)	2.5 dCi	106	07/05 -	3952	
NP300 NAVARA (D40)	2.5 dCi	120	10/06 -	3952	
NP300 NAVARA (D40)	2.5 dCi	128	12/05 -	4143	4025
NP300 NAVARA (D40)	2.5 dCi	128	12/05 -	3952	
NP300 NAVARA (D40)	2.5 dCi 4WD	106	10/08 -	3952	
NP300 NAVARA (D40)	2.5 dCi 4WD	106	10/08 -	4143	
NP300 NAVARA (D40)	2.5 dCi 4WD	126	10/06 -	4143	4025
NP300 NAVARA (D40)	2.5 dCi 4WD	126	10/06 -	3952	
NP300 NAVARA (D40)	2.5 dCi 4WD	128	07/05 -	4143	4025
NP300 NAVARA (D40)	2.5 dCi 4WD	128	07/05 -	3952	
NP300 NAVARA (D40)	2.5 dCi 4WD	140	12/09 -	4143	4025
NP300 NAVARA (D40)	3.0 dCi 4WD	170	02/10 -	4143	4025
NP300 NAVARA Pickup (D23)	2.5 dCi	120	07/14 -	3952	
NP300 NAVARA Pickup (D23)	2.5 dCi	140	07/14 -	3952	
NP300 NAVARA Pickup (D23)	2.5 dCi 4x4	120	07/14 -	3952	
NP300 NAVARA Pickup (D23)	2.5 dCi 4x4	120	07/14 -	4143	
NP300 NAVARA Pickup (D23)	2.5 dCi 4x4	140	07/14 -	3952	
NP300 NAVARA Pickup (D23)	2.5 dCi 4x4	140	07/14 -	4143	
NP300 NAVARA Pickup (D23)	3.0 dCi 4x4	170	10/14 -	3952	
NP300 NAVARA Pickup (D23)	3.0 dCi 4x4	170	10/14 -	4143	
NP300 NAVARA Platform/Chassis (D40)	2.5 dCi	106	08/08 – 12/15	3952	
NP300 NAVARA Platform/Chassis (D40)	2.5 dCi	140	03/10 -	4143	
NP300 NAVARA Platform/Chassis (D40)	2.5 dCi 4WD	106	08/08 -	3952	
NP300 NAVARA Platform/Chassis (D40)	2.5 dCi 4WD	106	08/08 -	4143	
NP300 NAVARA Platform/Chassis (D40)	2.5 dCi 4WD	126	08/08 -	4143	
NP300 NAVARA Platform/Chassis (D40)	3.0 dCi	170	03/10 -	4143	
NP300 PICKUP (D22)	2.5 dCi	98	04/08 -	4017	
NP300 PICKUP (D22)	2.5 dCi 4x4	98	04/08 -	4017	
NT400 CABSTAR (F24F)	3514	100	01/14 -	3965/1	
NT400 CABSTAR (F24F)	28.12, 32.12, 35.12 (F91AN)	90	01/14 -	3965/1	
NT400 CABSTAR (F24F)	35.15, 45.15	107	01/14 -	3965/1	
NV400 Box	2.3 dCi 145 [RWD]	107	11/11 – 02/14	4056	4057
NV400 Box	2.3 dCi 145 [RWD]	107	11/11 – 02/14		4132
NV400 Box	2.3 dCi 145 [RWD]	107	11/11 – 02/14		4172
NV400 Box	2.3 dCi 150	110	02/14 – 09/16	4056	4057
NV400 Box	2.3 dCi 165	120	06/14 – 09/16	4056	4057
NV400 Box	dCi 100	74	11/11 – 05/14	4056	4057
NV400 Box	dCi 110	81	06/14 -	4056	4057
NV400 Box	dCi 125	92	11/11 – 09/16	4056	4057
NV400 Box	dCi 125 [RWD]	92	11/11 – 09/16	4056	4057
NV400 Box	dCi 125 [RWD]	92	11/11 – 09/16		4132
NV400 Box	dCi 125 [RWD]	92	11/11 – 09/16		4172
NV400 Box	dCi 130	96	09/16 -	4056	
NV400 Box	dCi 130 [RWD]	96	09/16 -	4056	
NV400 Box	dCi 140	100	06/14 – 09/16	4056	4057
NV400 Box	dCi 140 [RWD]	100	06/14 – 09/16	4056	4057
NV400 Box	dCi 140 [RWD]	100	06/14 – 09/16		4132
NV400 Box	dCi 140 [RWD]	100	06/14 – 09/16		4172
NV400 Box	dCi 145	107	11/11 – 02/14	4056	4057
NV400 Box	dCi 150 [RWD]	110	02/14 – 09/16	4056	4057
NV400 Box	dCi 150 [RWD]	110	02/14 – 09/16		4132
NV400 Box	dCi 150 [RWD]	110	02/14 – 09/16		4172
NV400 Box	dCi 165 [RWD]	120	06/14 – 09/16	4056	4057
NV400 Box	dCi 165 [RWD]	120	06/14 – 09/16		4132
NV400 Box	dCi 165 [RWD]	120	06/14 – 09/16		4172
NV400 Box	dCi 170	125	09/16 -	4056	
NV400 Bus	dCi 100	74	11/11 – 06/14	4056	4057
NV400 Bus	dCi 110	81	06/14 – 09/16	4056	4057
NV400 Bus	dCi 125	92	11/11 – 09/16	4056	4057
NV400 Bus	dCi 140	100	06/14 – 09/16	4056	4057
NV400 Bus	dCi 145	107	11/11 – 02/14	4056	4057
NV400 Bus	dCi 150	110	02/14 – 09/16	4056	4057
NV400 Bus	dCi 160	120	06/14 – 09/16	4056	4057
NV400 Bus	dCi 170	125	07/15 -	4056	4057
NV400 Bus	dCi 170	125	07/15 -		4172
NV400 Bus	dCi 170	125	07/15 -		4132
NV400 Platform/Chassis	dCi 100	74	11/11 – 06/14	4056	4057

MAKE & MODEL		KW	YEAR		
NISSAN					
NV400 Platform/Chassis	dCi 110	81	06/14 – 06/16	4056	4057
NV400 Platform/Chassis	dCi 125	92	11/11 – 06/16	4056	4057
NV400 Platform/Chassis	dCi 125 [RWD]	92	11/11 – 06/16	4056	4057
NV400 Platform/Chassis	dCi 125 [RWD]	92	11/11 – 06/16		4132
NV400 Platform/Chassis	dCi 125 [RWD]	92	11/11 – 06/16		4172
NV400 Platform/Chassis	dCi 130	96	06/16 -	4056	
NV400 Platform/Chassis	dCi 130 [RWD]	96	06/16 -	4056	
NV400 Platform/Chassis	dCi 140	100	06/14 – 06/16	4056	4057
NV400 Platform/Chassis	dCi 140 [RWD]	100	06/14 – 06/16	4056	4057
NV400 Platform/Chassis	dCi 140 [RWD]	100	06/14 – 06/16		4132
NV400 Platform/Chassis	dCi 140 [RWD]	100	06/14 – 06/16		4172
NV400 Platform/Chassis	dCi 145	107	11/11 – 06/16	4056	4057
NV400 Platform/Chassis	dCi 145 [RWD]	107	11/11 – 06/16	4056	4057
NV400 Platform/Chassis	dCi 145 [RWD]	107	11/11 – 06/16		4132
NV400 Platform/Chassis	dCi 145 [RWD]	107	11/11 – 06/16		4172
NV400 Platform/Chassis	dCi 150	110	08/14 – 06/16	4056	4057
NV400 Platform/Chassis	dCi 150 [RWD]	110	08/14 – 06/16	4056	4057
NV400 Platform/Chassis	dCi 150 [RWD]	110	08/14 – 06/16		4132
NV400 Platform/Chassis	dCi 150 [RWD]	110	08/14 – 06/16		4172
NV400 Platform/Chassis	dCi 165	120	06/14 – 06/16	4056	4057
NV400 Platform/Chassis	dCi 165 [RWD]	120	06/14 -	4056	4057
NV400 Platform/Chassis	dCi 165 [RWD]	120	06/14 -		4132
NV400 Platform/Chassis	dCi 165 [RWD]	120	06/14 -		4172
NV400 Platform/Chassis	dCi 170	125	06/16 -	4056	
PATHFINDER I (WD21)	2.4 4WD	74	07/86 – 10/95	3692	
PATHFINDER I (WD21)	2.4 4WD	74	07/86 – 10/95	3760	
PATHFINDER I (WD21)	3.0 4WD	95	07/86 – 08/95	3692	
PATHFINDER I (WD21)	3.0 4WD	95	07/86 – 08/95	3760	
PATHFINDER II (R50)	2.4	87	09/99 – 02/02	3932	
PATHFINDER II (R50)	2.5 dCi	128	01/05 -	3932	3932
PATHFINDER II (R50)	2.5 dCi 4WD	120	01/05 -	3932	3932
PATHFINDER II (R50)	2.5 dCi 4WD	126	10/06 -	4025	3932
PATHFINDER III (R51)	2.5 dCi 4WD	128	03/05 -	4025	4143
PATHFINDER III (R51)	2.5 dCi 4WD	140	08/10 -	4025	4143
PATHFINDER III (R51)	2.7 TD 4WD	96	09/97 – 12/04	4143	
PATHFINDER III (R51)	3.0 dCi	170	08/10 -	4143	4025
PATHFINDER III (R51)	3.2 TD 4WD	110	09/97 – 12/04	4025	
PATHFINDER III (R51)	3.3 V6 4WD	110	03/98 – 10/00	4143	
PATHFINDER III (R51)	3.3 V6 4WD	125	09/97 – 12/04	4025	
PATHFINDER III (R51)	3.5 V6 4WD	162	11/00 – 12/04	4143	
PATHFINDER III (R51)	4.0 4WD	198	09/05 -	4143	4025
PATHFINDER IV (R52)	3.0 dCi 4WD	170	09/12 -	4143	4025
Pathfinder IV (R52) 3.0 dCi 4WD	V9X	170	09/2012 -	4341	
Pathfinder IV (R52) 44318 DCi	YD25DDTI	140	10/2012 - 08/2014	4341	
Pathfinder IV (R52) 44318 dCi 4WD	YD25DDTi	140	09/2012 -	4341	
Pathfinder IV (R52) 44318 Hybrid 4WD	QR25DER	186	09/2013 -	4341	
Pathfinder IV (R52) 44318 Hybrid 4WD	QR25DER	188	10/2013 -	4341	
Pathfinder IV (R52) 44319	VQ35	191	05/2014 -	4341	
Pathfinder IV (R52) 44319	VQ35DE	190	10/2013 -	4341	
Pathfinder IV (R52) 44319	VQ35DE	194	09/2012 -	4341	
Pathfinder IV (R52) 44319 4WD	VQ35	191	08/2013 -	4341	
Pathfinder IV (R52) 44319 4WD	VQ35	193	01/2014 -	4341	
Pathfinder IV (R52) 44319 4WD	VQ35DE	190	10/2013 -	4341	
Pathfinder IV (R52) 44319 4WD	VQ35DE	194	09/2012 -	4341	
PATROL GR IV (Y60, GR)	2.8 TD	82	10/95 – 02/98	3415	
PATROL GR IV (Y60, GR)	2.8 TD (Y60A)	85	09/88 – 06/97	3415	
PATROL GR IV (Y60, GR)	4.2 CAT	121	11/88 – 02/98	3415	
PATROL GR IV (Y60, GR)	4.2 CAT	121	11/88 – 02/98	3667	
PATROL GR IV (Y60, GR)	4.2 D (Y60GR)	85	11/88 – 06/97	3415	
PATROL GR IV (Y60, GR)	4.2 Efi 4WD	129	02/88 – 12/95	3415	
PATROL GR IV (Y60, GR)	4.2 Efi 4WD	129	02/88 – 12/95	3667	
PATROL GR V Platform/Chassis (Y61)	3.0 D 4x4	118	09/07 -	3859	
PATROL GR V Platform/Chassis (Y61)	3.0 D 4x4	118	09/07 -	4010	
PATROL GR V Wagon (Y61)	2.7 TD	73	05/98 – 06/01	3859	
PATROL GR V Wagon (Y61)	2.7 TD	73	05/98 – 06/01	4010	
PATROL GR V Wagon (Y61)	2.8 (K160)	88	07/80 – 08/88	3415	
PATROL GR V Wagon (Y61)	2.8 (K160)	89	07/80 – 08/88	3415	
PATROL GR V Wagon (Y61)	2.8 TD	95	06/97 – 05/00	3859	
PATROL GR V Wagon (Y61)	2.8 TD	95	06/97 – 05/00	4010	
PATROL GR V Wagon (Y61)	2.8 TDiC	96	10/97 – 02/00	3859	
PATROL GR V Wagon (Y61)	2.8 TDiC	96	10/97 – 02/00	4010	
PATROL GR V Wagon (Y61)	3.0 DTi	116	05/00 -	3859	
PATROL GR V Wagon (Y61)	3.0 DTi	116	05/00 -	4010	
PATROL GR V Wagon (Y61)	3.0 DTi	118	05/00 -	3859	
PATROL GR V Wagon (Y61)	3.0 DTi	118	05/00 -	4010	
PATROL GR V Wagon (Y61)	3.2 D	70	05/98 – 06/01	3859	

MAKE & MODEL		KW	YEAR		
NISSAN					
PATROL GR V Wagon (Y61)	3.2 D	70	05/98 – 06/01	4010	
PATROL GR V Wagon (Y61)	3.2 D (K160)	70	11/79 – 08/88	3415	
PATROL GR V Wagon (Y61)	3.2 TD (K160)	81	07/83 – 08/88	3415	
PATROL GR V Wagon (Y61)	4.2	125	03/00 – 08/02	3859	
PATROL GR V Wagon (Y61)	4.2	125	03/00 – 08/02	4010	
PATROL GR V Wagon (Y61)	4.2 D	114	05/99 – 09/04	3859	
PATROL GR V Wagon (Y61)	4.2 D	114	05/99 – 09/04	4010	
PATROL GR V Wagon (Y61)	4.5	145	12/97 – 09/01	3859	
PATROL GR V Wagon (Y61)	4.5	145	12/97 – 09/01	4010	
PATROL GR V Wagon (Y61)	4.8	180	03/00 -	3859	
PATROL GR V Wagon (Y61)	4.8	180	03/00 -	4010	
PATROL GR V Wagon (Y61)	4.8	185	10/01 – 12/07	3859	
PATROL GR V Wagon (Y61)	4.8	185	10/01 – 12/07	4010	
PATROL III/1 Hardtop (K160)	4.2 TD	107	06/97 -	3859	
PATROL III/1 Hardtop (K160)	4.2 TD	107	06/97 -	4010	
PATROL III/1 Hardtop (K160)	4.5 i	147	06/97 -	3859	
PATROL III/1 Hardtop (K160)	4.5 i	147	06/97 -	4010	
PATROL III/1 Station Wagon (W160)	2.8 (W160)	88	07/80 – 08/88	3415	
PATROL III/1 Station Wagon (W160)	3.2 D (W160)	70	11/79 – 08/88	3415	
PATROL III/1 Station Wagon (W160)	3.2 TD (W160)	81	07/83 – 08/88	3415	
PATROL III/1 Station Wagon (W160)	4.0	108	06/80 – 01/88	3415	
PATROL III/2 Hardtop (K260)	2.8	88	05/86 – 06/90	3415	
PATROL III/2 Hardtop (K260)	2.8 TD	85	05/86 – 06/90	3415	
PATROL III/2 Hardtop (K260)	3.2 D	81	08/88 – 06/90	3415	
PATROL III/2 Station Wagon (W260)	2.8 D 4x4	68	01/90 – 01/91	3415	
PATROL III/2 Station Wagon (W260)	2.8 TD	85	06/89 – 11/95	3415	
PATROL III/2 Station Wagon (W260)	2.8 TD 4x4	86	03/92 – 06/93	3415	
PATROL III/2 Station Wagon (W260)	3.2 D	81	08/88 – 06/90	3415	
Patrol VI (Y62) 4.0 (Y62)	VQ40DE	205	11/2013 -	4324	
Patrol VI (Y62) 44352	-	233	04/2010 -	4324	
Patrol VI (Y62) 44352	VK56VD	293	12/2010 -	4324	
Patrol VI (Y62) 44352	VK56VD	298	04/2010 -	4324	
Patrol VI (Y62) 44352 NISMO	VK56VD	315	10/2016 -	4324	
Patrol VI (Y62) 44412	TB48DE	206	11/2013 -	4324	
PICK UP (D22)	2.4 i	88	02/98 – 04/05	4017	
PICK UP (D22)	2.4 i 4WD	88	02/98 – 04/05	4017	
PICK UP (D22)	2.4 i 4WD	98	03/02 – 04/05	4017	
PICK UP (D22)	2.5 D	61	02/98 – 04/05	4017	
PICK UP (D22)	2.5 D 4WD	61	02/98 – 04/05	4017	
PICK UP (D22)	2.5 D 4WD	96	01/08 – 04/05	4017	
PICK UP (D22)	2.5 Di	98	03/02 – 04/05	4017	
PICK UP (D22)	2.5 Di 4WD	98	03/02 – 04/05	4017	
PICK UP (D22)	2.5 TD 4WD	76	05/98 – 04/05	4017	
PICK UP (D22)	2.8 D	101	11/01 – 04/05	4017	
PICK UP (D22)	3.0	120	01/97 – 09/01	4017	
PICK UP (D22)	3.0 4WD	120	02/98 – 10/01	4017	
PICK UP (D22)	3.0 TD	110	11/01 – 04/05	4017	
PICK UP (D22)	3.0 TD 4WD	110	11/01 – 04/05	4017	
PICK UP (D22)	3.2 D 4WD	76	12/98 – 04/05	4017	
PICK UP (D22)	3.3 4WD	125	01/03 – 04/05	4017	
PICK UP / 720	4WD		01/80 -	3375	
PICK UP I (720)	1.8	59	01/83 – 03/86	3397	
PICK UP I (720)	1.8	59	01/83 – 03/86	3758	
PICK UP I (720)	2.2 4WD	71	04/83 – 03/86	3397	
PICK UP I (720)	2.2 4WD	71	04/83 – 03/86	3758	
PICK UP I (720)	2.2 D	47	01/82 – 01/84	3397	
PICK UP I (720)	2.2 D	47	01/82 – 01/84	3758	
PICK UP I (720)	2.3 D	51	04/83 – 03/86	3397	
PICK UP I (720)	2.3 D	51	04/83 – 03/86	3758	
PICK UP I (720)	2.5 D 4WD	53	04/83 – 03/86	3397	
PICK UP I (720)	2.5 D 4WD	53	04/83 – 03/86	3758	
PICK UP II (D21)	2.0	64	09/85 – 07/88	3397	
PICK UP II (D21)	2.0	64	09/85 – 07/88	3758	
PICK UP II (D21)	2.0	66	09/88 – 08/91	3397	
PICK UP II (D21)	2.0	66	09/88 – 08/91	3758	
PICK UP II (D21)	2.3 D	51	09/85 – 08/88	3397	
PICK UP II (D21)	2.3 D	51	09/85 – 08/88	3758	
PICK UP II (D21)	2.4 i 12V	91	04/92 – 02/98	3397	
PICK UP II (D21)	2.4 i 12V	91	04/92 – 02/98	3758	
PICK UP II (D21)	2.4 i 12V 4WD	93	04/92 – 02/98	3692	
PICK UP II (D21)	2.4 i 12V 4WD	93	04/92 – 02/98	3760	
PICK UP II (D21)	2.4 i 4WD	74	03/86 – 04/92	3397	
PICK UP II (D21)	2.4 i 4WD	74	03/86 – 04/92	3758	
PICK UP II (D21)	2.5 D	55	09/87 – 02/98	3397	
PICK UP II (D21)	2.5 D	55	09/87 – 02/98	3758	
PICK UP II (D21)	2.5 D	59	09/94 – 08/96	3397	

MAKE & MODEL		KW	YEAR		
NISSAN					
PICK UP II (D21)	2.5 D	59	09/94 – 08/96	3758	
PICK UP II (D21)	2.5 D	61	08/92 – 02/98	3397	
PICK UP II (D21)	2.5 D	61	08/92 – 02/98	3758	
PICK UP II (D21)	2.5 D 4WD	53	09/85 – 08/88	3397	
PICK UP II (D21)	2.5 D 4WD	53	09/85 – 08/88	3758	
PICK UP II (D21)	2.5 D 4WD	55	03/86 – 08/91	3397	
PICK UP II (D21)	2.5 D 4WD	55	03/86 – 08/91	3758	
PICK UP II (D21)	2.5 D 4WD	59	08/87 – 02/98	3397	
PICK UP II (D21)	2.5 D 4WD	59	08/87 – 02/98	3758	
PICK UP II (D21)	2.5 D 4WD	61	03/96 – 02/98	3397	
PICK UP II (D21)	2.5 D 4WD	61	03/96 – 02/98	3758	
PICK UP II (D21)	2.7 D 4WD	58	09/87 – 08/91	3397	
PICK UP II (D21)	2.7 D 4WD	58	09/87 – 08/91	3758	
PICK UP II (D21)	2.7 D 4WD	73	08/87 – 02/98	3397	
PICK UP II (D21)	2.7 D 4WD	73	08/87 – 02/98	3758	
PICK UP II (D21)	2.7 TD 4WD	73	09/87 – 12/96	3397	
PICK UP II (D21)	2.7 TD 4WD	73	09/87 – 12/96	3758	
PICK UP II (D21)	3.0	112	09/85 – 12/96	3397	
PICK UP III (D22)	2.0	92	01/97 – 08/01	3692	
PICK UP III (D22)	2.0	92	01/97 – 08/01	3760	
PICK UP III (D22)	2.4	79	01/97 – 12/02	3692	
PICK UP III (D22)	2.4	79	01/97 – 12/02	3760	
PICK UP III (D22)	2.4	98	11/01 – 04/05	3692	
PICK UP III (D22)	2.4	98	11/01 – 04/05	3760	
PICK UP III (D22)	2.4	110	01/03 -	3692	
PICK UP III (D22)	2.4	110	01/03 -	3760	
PICK UP III (D22)	2.4 4WD	79	01/97 – 12/02	3692	
PICK UP III (D22)	2.4 4WD	79	01/97 – 12/02	3760	
PICK UP III (D22)	2.4 i	88	02/98 -	3692	
PICK UP III (D22)	2.4 i	88	02/98 -	3760	
PICK UP III (D22)	2.4 i 4WD	88	02/98 -	3397	
PICK UP III (D22)	2.4 i 4WD	88	02/98 -	3692	
PICK UP III (D22)	2.4 i 4WD	88	02/98 -	3760	
PICK UP III (D22)	2.4 i 4WD	98	03/02 -	3692	
PICK UP III (D22)	2.4 i 4WD	98	03/02 -	3760	
PICK UP III (D22)	2.5 D	61	02/98 -	3692	
PICK UP III (D22)	2.5 D	61	02/98 -	3760	
PICK UP III (D22)	2.5 D 4WD	61	02/98 -	3692	
PICK UP III (D22)	2.5 D 4WD	61	02/98 -	3760	
PICK UP III (D22)	2.5 Di	98	03/02 -	3692	
PICK UP III (D22)	2.5 Di	98	03/02 -	3760	
PICK UP III (D22)	2.5 TD 4WD	76	05/98 -	3692	
PICK UP III (D22)	2.5 TD 4WD	76	05/98 -	3760	
PICK UP III (D22)	2.5 Tdi	76	05/98 – 10/01	3692	
PICK UP III (D22)	2.5 Tdi	76	05/98 – 10/01	3760	
PICK UP III (D22)	2.7 D	66	02/98 -	3397	
PICK UP III (D22)	2.7 D	66	02/98 -	3692	
PICK UP III (D22)	2.7 D	66	02/98 -	3760	
PICK UP III (D22)	2.7 TD	73	01/97 – 10/01	3692	
PICK UP III (D22)	2.7 TD	73	01/97 – 10/01	3760	
PICK UP III (D22)	2.7 TD 4WD	73	01/97 – 10/01	3692	
PICK UP III (D22)	2.7 TD 4WD	73	01/97 – 10/01	3760	
PICK UP III (D22)	3.2 D 4WD	76	12/98 -	3692	
PICK UP III (D22)	3.2 D 4WD	76	12/98 -	3760	
PICK UP III (D22)	3.2 TD	76	01/97 – 10/01	3692	
PICK UP III (D22)	3.2 TD	76	01/97 – 10/01	3760	
PICKUP / NP300 PICKUP III (D22)	2.5 dCi	98	04/08 -	3692	
PICKUP / NP300 PICKUP III (D22)	2.5 dCi	98	04/08 -	3760	
PICKUP / NP300 PICKUP III (D22)	2.5 dCi 4x4	98	04/08 -	3692	
PICKUP / NP300 PICKUP III (D22)	2.5 dCi 4x4	98	04/08 -	3760	
PRAIRIE (M10, NM10)	1.5 S (M10)	55	01/84 – 12/87	3397	
PRAIRIE (M10, NM10)	1.5 S (M10)	55	01/84 – 12/87	3758	
PRAIRIE (M10, NM10)	1.8 SGL (M10)	66	05/85 – 10/87	3397	
PRAIRIE (M10, NM10)	1.8 SGL (M10)	66	05/85 – 10/87	3758	
PRAIRIE (M10, NM10)	2.0 4x4 (NM10)	68	06/86 – 09/88	3397	
PRAIRIE (M10, NM10)	2.0 4x4 (NM10)	68	06/86 – 09/88	3758	
PRAIRIE PRO (M11)	2.0 i	72	10/88 – 04/92	3700	
PRAIRIE PRO (M11)	2.0 i 4x4	72	10/88 – 12/92	3700	
PRAIRIE PRO (M11)	2.4 i	98	04/92 – 07/94	3700	
PRAIRIE PRO (M11)	2.4 i 4x4	98	04/92 – 07/94	3700	
PRIMASTAR Box (X83)	2.0	88	02/03 -	3848	3795/1
PRIMASTAR Box (X83)	2.0	88	03/01 -	3848	3795/1
PRIMASTAR Box (X83)	dCi 100	74	03/01 -	3848	3795/1
PRIMASTAR Box (X83)	dCi 115	84	09/08 -	3848	3795/1
PRIMASTAR Box (X83)	dCi 120	84	09/06 -	3848	3795/1
PRIMASTAR Bus (X83)	dCi 140	99	07/03 -	3848	3795/1

MAKE & MODEL		KW	YEAR		
NISSAN					
PRIMASTAR Bus (X83)	dCi 150	107	09/06 -	3848	3795/1
PRIMASTAR Bus (X83)	dCi 80	60	03/01 -	3848	3795/1
PRIMASTAR Bus (X83)	dCi 90	66	09/06 -	3848	3795/1
PRIMASTAR Platform/Chassis	1.9 dCi	74	07/02 – 08/06	3848	3795/1
PRIMERA (P10)	1.6	66	06/90 – 01/96	3562	3660
PRIMERA (P10)	1.6	66	06/90 – 01/96	3652	4104
PRIMERA (P10)	1.6	71	06/90 – 01/96	3562	3660
PRIMERA (P10)	1.6	71	06/90 – 01/96	3652	4104
PRIMERA (P10)	1.6	75	06/93 – 01/96	3562	3660
PRIMERA (P10)	1.6	75	06/93 – 01/96	3652	4104
PRIMERA (P10)	2.0	105	06/90 – 04/93	3652	3660
PRIMERA (P10)	2.0	105	06/90 – 04/93	3562	
PRIMERA (P10)	2.0 16V	85	06/90 – 01/96	3652	3660
PRIMERA (P10)	2.0 16V	85	06/90 – 01/96	3562	
PRIMERA (P10)	2.0 16V 4x4	85	04/91 – 06/96	3652	3660
PRIMERA (P10)	2.0 16V 4x4	85	04/91 – 06/96	3562	
PRIMERA (P10)	2.0 4x4	110	03/91 – 04/93	3652	3660
PRIMERA (P10)	2.0 4x4	110	03/91 – 04/93	3562	
PRIMERA (P10)	2.0 D	55	01/91 – 01/96	3562	3660
PRIMERA (P10)	2.0 D	55	01/91 – 01/96	3652	4104
PRIMERA (P10)	2.0 GT	110	06/90 – 01/96	3652	3660
PRIMERA (P10)	2.0 GT	110	06/90 – 01/96	3562	
PRIMERA (P10)	2.0 GT 4x4	105	03/91 – 04/93	3652	3660
PRIMERA (P10)	2.0 GT 4x4	105	03/91 – 04/93	3562	
PRIMERA (P10)	2.0 i	92	01/95 – 06/96	3652	3660
PRIMERA (P10)	2.0 i	92	01/95 – 06/96	3562	
PRIMERA (P11)	1.6 16V	66	09/96 – 12/01	3652	3660
PRIMERA (P11)	1.6 16V	66	09/96 – 12/01	3562	
PRIMERA (P11)	1.6 16V	73	09/96 – 10/00	3652	3660
PRIMERA (P11)	1.6 16V	73	09/96 – 10/00	3562	
PRIMERA (P11)	1.6 16V	78	06/96 – 12/01	3652	3660
PRIMERA (P11)	1.6 16V	78	06/96 – 12/01	3562	
PRIMERA (P11)	1.8 16V	84	08/99 – 12/01		3660
PRIMERA (P11)	2.0 16V	85	09/96 – 12/01	3652	3660
PRIMERA (P11)	2.0 16V	85	09/96 – 12/01	3562	
PRIMERA (P11)	2.0 16V	96	09/96 – 12/01	3652	3660
PRIMERA (P11)	2.0 16V	96	09/96 – 12/01	3562	
PRIMERA (P11)	2.0 16V	103	08/99 – 12/01		3660
PRIMERA (P11)	2.0 16V	110	09/96 – 12/01		3660
PRIMERA (P11)	2.0 TD	66	09/96 – 12/01	3652	3660
PRIMERA (P11)	2.0 TD	66	09/96 – 12/01	3562	
PRIMERA (P12)	1.6	78	03/02 -	4115	3853
PRIMERA (P12)	1.6	80	01/02 -	4115	3853
PRIMERA (P12)	1.8	85	03/02 -	4115	3853
PRIMERA (P12)	1.9 dCi	85	08/02 -	4115	3853
PRIMERA (P12)	1.9 dCi	88	04/03 -	4115	3853
PRIMERA (P12)	2.0	103	03/02 -	4115	3853
PRIMERA (P12)	2.2 dCi	102	04/03 -	4115	3853
PRIMERA (P12)	2.2 Di	93	03/02 -	4115	3853
PRIMERA (P12)	2.5	125	01/02 -	4115	3853
PRIMERA Estate (WP12)	1.6 Visia	80	01/02 -	4115	3853
PRIMERA Estate (WP12)	1.8	85	03/02 -	4115	3853
PRIMERA Estate (WP12)	1.9 dCi	85	08/02 -	4115	3853
PRIMERA Estate (WP12)	1.9 dCi	88	04/03 -	4115	3853
PRIMERA Estate (WP12)	2.0	103	03/02 -	4115	3853
PRIMERA Estate (WP12)	2.2 dCi	102	04/03 -	4115	3853
PRIMERA Estate (WP12)	2.2 Di	93	03/02 -	4115	3853
PRIMERA Estate (WP12)	2.5	125	01/02 -	4115	3853
PRIMERA Hatchback (P10)	1.6	66	06/90 – 01/96	3562	4104
PRIMERA Hatchback (P10)	1.6	66	06/90 – 01/96	3652	3660
PRIMERA Hatchback (P10)	1.6	71	06/90 – 06/93		3660
PRIMERA Hatchback (P10)	1.6	71	06/90 – 06/93		4104
PRIMERA Hatchback (P10)	1.6	75	06/93 – 01/96	3562	3660
PRIMERA Hatchback (P10)	1.6	75	06/93 – 01/96	3652	4104
PRIMERA Hatchback (P10)	1.6	78	07/02 -	4115	3853
PRIMERA Hatchback (P10)	1.6	80	07/02 -	4115	3853
PRIMERA Hatchback (P10)	1.6 16V	66	09/96 – 07/02	3652	3660
PRIMERA Hatchback (P10)	1.6 16V	66	09/96 – 07/02	3562	
PRIMERA Hatchback (P10)	1.6 16V	73	09/96 – 07/02	3652	3660
PRIMERA Hatchback (P10)	1.6 16V	73	09/96 – 07/02	3562	
PRIMERA Hatchback (P10)	1.8	85	07/02 -	4115	3853
PRIMERA Hatchback (P10)	2.0	103	07/02 -	4115	3853
PRIMERA Hatchback (P10)	2.0	105	06/90 – 04/93	3652	3660
PRIMERA Hatchback (P10)	2.0	105	06/90 – 04/93	3562	
PRIMERA Hatchback (P10)	2.0	110	06/90 – 01/96	3652	3660
PRIMERA Hatchback (P10)	2.0	110	06/90 – 01/96	3562	

MAKE & MODEL		KW	YEAR		
NISSAN					
PRIMERA Hatchback (P10)	2.0	112	09/90 – 01/96	3652	3660
PRIMERA Hatchback (P10)	2.0	112	09/90 – 01/96	3562	
PRIMERA Hatchback (P10)	2.5	125	01/02 -	4115	3853
PRIMERA Hatchback (P11)	1.6 16V	78	09/00 – 07/02		3660
PRIMERA Hatchback (P11)	1.8 16V	84	08/99 – 07/02		3660
PRIMERA Hatchback (P11)	1.9 dCi	85	08/02 -	4115	3853
PRIMERA Hatchback (P11)	1.9 dCi	88	04/03 -	4115	3853
PRIMERA Hatchback (P11)	2.0 16V	85	06/90 – 01/96	3652	3660
PRIMERA Hatchback (P11)	2.0 16V	85	06/90 – 01/96	3562	
PRIMERA Hatchback (P11)	2.0 16V	85	09/96 – 07/02	3652	3660
PRIMERA Hatchback (P11)	2.0 16V	85	09/96 – 07/02	3562	
PRIMERA Hatchback (P11)	2.0 16V	96	09/96 – 07/02	3652	3660
PRIMERA Hatchback (P11)	2.0 16V	96	09/96 – 07/02	3562	
PRIMERA Hatchback (P11)	2.0 16V	103	08/99 – 07/02		3660
PRIMERA Hatchback (P11)	2.0 16V	110	09/96 – 07/02		3660
PRIMERA Hatchback (P11)	2.0 16V 4x4	85	04/91 – 06/96	3652	3660
PRIMERA Hatchback (P11)	2.0 16V 4x4	85	04/91 – 06/96	3562	
PRIMERA Hatchback (P12)	2.0 D	55	01/91 – 01/96	3562	3660
PRIMERA Hatchback (P12)	2.0 D	55	01/91 – 01/96	3652	4104
PRIMERA Hatchback (P12)	2.0 GT 4x4	105	03/91 – 04/93	3652	3660
PRIMERA Hatchback (P12)	2.0 GT 4x4	105	03/91 – 04/93	3562	
PRIMERA Hatchback (P12)	2.0 i	92	01/95 – 06/96	3652	3660
PRIMERA Hatchback (P12)	2.0 i	92	01/95 – 06/96	3562	
PRIMERA Hatchback (P12)	2.0 TD	66	09/96 – 07/02	3652	3660
PRIMERA Hatchback (P12)	2.0 TD	66	09/96 – 07/02	3562	
PRIMERA Hatchback (P12)	2.2 dCi	102	04/03 -	4115	3853
PRIMERA Hatchback (P12)	2.2 Di	93	07/02 -	4115	3853
PRIMERA Traveller (W10)	1.6 16V	66	04/98 – 12/01		3660
PRIMERA Traveller (W10)	1.6 16V	73	04/98 – 12/01		3660
PRIMERA Traveller (W10)	1.6 16V	80	04/98 – 12/01	3652	3660
PRIMERA Traveller (W10)	1.6 16V	80	04/98 – 12/01	3562	
PRIMERA Traveller (WP11)	1.6 i	66	07/90 – 03/98	3700	
PRIMERA Traveller (WP11)	1.6 i	75	02/91 – 03/98	3700	
PRIMERA Traveller (WP11)	1.8 16V	84	08/99 – 12/01		3660
PRIMERA Traveller (WP11)	2.0 16V	85	06/96 – 12/01		3660
PRIMERA Traveller (WP11)	2.0 16V	96	04/98 – 12/01		3660
PRIMERA Traveller (WP11)	2.0 16V	103	08/99 – 12/01		3660
PRIMERA Traveller (WP11)	2.0 D	55	07/90 – 12/95	3700	
PRIMERA Traveller (WP11)	2.0 i	85	07/90 – 03/98	3700	
PRIMERA Traveller (WP11)	2.0 TD	66	04/98 – 12/01		3660
PULSAR Hatchback (C13)	1.2 DIG-T	85	10/14 -	4109	
PULSAR Hatchback (C13)	1.2 DIG-T	85	10/14 -	4232	
PULSAR Hatchback (C13)	1.5 dCi	81	10/14 -	4109	
PULSAR Hatchback (C13)	1.5 dCi	81	10/14 -	4232	
PULSAR Hatchback (C13)	1.6 DIG-T	140	02/15 -	4109	
PULSAR Hatchback (C13)	1.6 DIG-T	140	02/15 -	4232	
QASHQAI / QASHQAI +2 I (J10, JJ10)	1.5 dCi	76	07/08 – 12/13	4038	3933
QASHQAI / QASHQAI +2 I (J10, JJ10)	1.5 dCi	78	02/07 – 12/13	4038	3933
QASHQAI / QASHQAI +2 I (J10, JJ10)	1.5 dCi	81	01/10 – 12/13	4038	3933
QASHQAI / QASHQAI +2 I (J10, JJ10)	1.6	84	02/07 – 12/13	4038	3933
QASHQAI / QASHQAI +2 I (J10, JJ10)	1.6	86	11/10 – 12/13	4038	3933
QASHQAI / QASHQAI +2 I (J10, JJ10)	1.6 dCi	96	10/11 – 12/13	4038	3933
QASHQAI / QASHQAI +2 I (J10, JJ10)	1.6 dCi All-wheel Drive	96	10/11 – 12/13	4038	3933
QASHQAI / QASHQAI +2 I (J10, JJ10)	1.6 dCi All-wheel Drive	96	10/11 – 12/13	4143	
QASHQAI / QASHQAI +2 I (J10, JJ10)	2.0	102	02/07 – 12/13	4038	3933
QASHQAI / QASHQAI +2 I (J10, JJ10)	2.0	104	02/07 – 12/13	4038	3933
QASHQAI / QASHQAI +2 I (J10, JJ10)	2.0 All-wheel Drive	102	02/07 – 12/13	4038	3933
QASHQAI / QASHQAI +2 I (J10, JJ10)	2.0 All-wheel Drive	104	02/07 – 12/13	4038	3933
QASHQAI / QASHQAI +2 I (J10, JJ10)	2.0 All-wheel Drive	104	02/07 – 12/13	4143	3933
QASHQAI / QASHQAI +2 I (J10, JJ10)	2.0 dCi	110	02/07 – 12/13	4143	4038
QASHQAI / QASHQAI +2 I (J10, JJ10)	2.0 dCi All-wheel Drive	110	02/07 – 12/13	4038	3933
QASHQAI / QASHQAI +2 I (J10, JJ10)	3.5	176	05/03 -	3932	
QASHQAI II (J11, J11_)	1.2 DIG-T	85	11/13 -	4282/1	4283
QASHQAI II (J11, J11_)	1.2 DIG-T	85	11/13 -	4282	4283
QASHQAI II (J11, J11_)	1.5 dCi	81	11/13 -	4282/1	4283
QASHQAI II (J11, J11_)	1.5 dCi	81	11/13 -	4282	4283
QASHQAI II (J11, J11_)	1.6 dCi	96	11/13 -	4282/1	4283
QASHQAI II (J11, J11_)	1.6 dCi	96	11/13 -	4282	4283
QASHQAI II (J11, J11_)	1.6 dCi ALL MODE 4x4-i	96	11/13 -	4282/1	4283
QASHQAI II (J11, J11_)	1.6 dCi ALL MODE 4x4-i	96	11/13 -	4282	4283
QASHQAI II (J11, J11_)	1.6 DIG-T	120	10/14 -	4282/1	4283
QASHQAI II (J11, J11_)	1.6 DIG-T	120	10/14 -	4282	4283
QASHQAI II (J11, J11_)	2.0 (J11E)	106	06/14 -	4282/1	4283
QASHQAI II (J11, J11_)	2.0 (J11E)	106	06/14 -	4282	4283
QASHQAI II (J11, J11_)	2.0 ALL MODE 4x4-i (J11R)	106	10/15 -	4282/1	4283
QASHQAI II (J11, J11_)	2.0 ALL MODE 4x4-i (J11R)	106	10/15 -	4282	4283

MAKE & MODEL		KW	YEAR		
NISSAN					
Qashqai II Close Off-Road (J11, J11_) 44228 DIG-T	HRA2DDT	85	11/2013 -		4283/1
Qashqai II Close Off-Road (J11, J11_) 44317 dCi	K9K 636, K9K 646	81	11/2013 -		4283/1
Qashqai II Close Off-Road (J11, J11_) 44348 dCi	R9M	96	11/2013 -		4283/1
Qashqai II Close Off-Road (J11, J11_) 44348 dCi ALL MODE 4x4-i	R9M	96	11/2013 -		4283/1
Qashqai II Close Off-Road (J11, J11_) 44348 DIG-T	MR16DDT	120	10/2014 -		4283/1
QUEST (V42)	2.0 dCi All-wheel Drive	110	02/07 – 12/13	4143	
ROGUE	2,5	127/173	01/07-12/13	4282/1	
ROGUE	2.5 AWD	127/173	01/07-12/13	4282/1	
Sabre III Hatchback (N14) 1.6i	GA16DE	82	10/1990 - 05/1995	3598/1	
Sentra III (N14) 1.6, 16v 4WD, SW	GA16DS	66	10/1990 - 05/1995	3598/1	
Sentra III (N14) 44348 16v, 4WD, SW	GA16DE	73-75	10/1992 - 05/1995	3598/1	
SENTRA V (B15)	1.8	88	01/00 – 08/06	3700	
SENTRA V (B15)	1.8	93	01/00 – 08/06	3700	
SENTRA V (B15)	2.0	107	01/00 – 12/06	3699	
SENTRA V (B15)	2.0	107	01/00 – 12/06	3779	
SENTRA VII (B17)	1.6	86	08/14 -	4109	
SENTRA VII (B17)	1.6	86	08/14 -	4232	
SERENA (C23)	1.6	71	02/93 – 09/01	3888	
SERENA (C23)	1.6	75	10/94 – 08/00	3888	
SERENA (C23)	2.0	93	11/92 – 09/01	3888	
SERENA (C23)	2.0 D	49	11/92 – 09/01	3888	
SERENA (C23)	2.3 D	55	01/95 – 09/01	3888	
SERENA (C23)	2.4	93	07/94 – 08/00	3888	
SERENA (C23M)	1.6	75	10/94 – 08/00	3758	
SERENA (C23M)	1.6 16V	71	02/93 – 09/01	3758	
SERENA (C23M)	2.0 16V	93	11/92 – 09/01	3758	
SERENA (C23M)	2.0 D	49	11/92 – 09/01	3758	
SERENA (C23M)	2.3 D	55	01/95 – 09/01	3758	
SERENA (C23M)	2.4	93	07/94 – 08/00	3758	
SERENA (C24)	2.0 SGX	107	09/00 – 09/05	3932	
SERENA (C24)	2.0 SGX 4x4	107	09/00 – 09/05	3932	
SERENA (C24)	2.5 DCi SGX	110	06/99 – 09/05	3932	
SERENA (C24)	2.5 DCi SGX 4x4	110	06/99 – 09/05	3932	
SERENA (C25)	2.0	108	04/05 – 11/10		3933
SERENA (C25)	2.0 4x4	108	04/05 – 11/10		3933
SERENA (C25)	2.5	118	02/06 – 11/10		3933
SERENA (C25)	2.5 4x4	118	02/06 – 11/10		3933
SERENA (C26)	2.0	108	11/10 – 07/16	3952	
SERENA (C26)	2.0 4x4	106	11/10 – 07/16	3952	
SERENA (C26)	2.0 4x4	108	11/10 – 07/16	3952	
SERENA (C26)	2.0 Hybrid	108	03/13 – 07/16	3952	
SKYLINE (R34)	2.5 4x4 (ENR34)	147	06/98 – 07/00	3697	
SKYLINE Coupe (R34)	2.5	147	06/98 – 07/00	3697	
SKYLINE Coupe (R34)	2.5 4x4	147	06/98 – 07/00	3697	
SKYLINE V	2.4		09/78 -	3370	
SKYLINE V (C210)	1.6		09/78 -	3375	
STANZA III	1.8 (CA18S)	66	03/83 – 12/85	3370	
STANZA III	2.0		08/81-	3370	
SUNNY			2014 – 2015	4229	
SUNNY I (B11)	1.3	44	03/82 – 09/87	3394	
SUNNY I (B11)	1.5	55	03/82 – 10/86	3394	
SUNNY I Coupe (B11)	1.3	44	04/82 – 09/86	3394	
SUNNY I Coupe (B11)	1.5	55	03/82 – 10/86	3394	
SUNNY I Traveller (B11)	1.3	44	08/82 – 08/90	3394	
SUNNY I Traveller (B11)	1.5	55	03/82 – 10/86	3394	
SUNNY II (N13)	1.3	44	07/86 – 10/91	3394	
SUNNY II (N13)	1.4 LX	55	10/88 – 08/91	3394	
SUNNY II (N13)	1.5	52	06/86 – 10/88	3394	
SUNNY II (N13)	1.6	62	06/86 – 10/88	3394	
SUNNY II (N13)	1.6 i	54	06/86 – 10/90	3394	
SUNNY II (N13)	1.6 i 12V	66	10/88 – 06/91	3394	
SUNNY II (N13)	1.7 D	40	06/86 – 05/89	3394	
SUNNY II Coupe (B12)	1.5	52	06/86 – 10/88	3394	
SUNNY II Coupe (B12)	1.6	62	06/86 – 10/88	3394	
SUNNY II Coupe (B12)	1.6 i	54	06/86 – 05/89	3394	
SUNNY II Coupe (B12)	1.6 i 12V	66	10/88 – 06/91	3394	
SUNNY II Hatchback (N13)	1.0	37	07/86 – 09/90	3394	
SUNNY II Hatchback (N13)	1.3	44	06/86 – 10/88	3394	
SUNNY II Hatchback (N13)	1.4	60	10/88 – 09/90	3394	
SUNNY II Hatchback (N13)	1.4 LX	55	01/89 – 08/91	3394	
SUNNY II Hatchback (N13)	1.5	52	06/86 – 10/88	3394	
SUNNY II Hatchback (N13)	1.6	62	06/86 – 10/88	3394	
SUNNY II Hatchback (N13)	1.6 i	54	06/86 – 10/90	3394	
SUNNY II Hatchback (N13)	1.6 i 12V	66	06/86 – 10/90	3394	
SUNNY II Hatchback (N13)	1.7 D	40	06/86 – 01/91	3394	
SUNNY II Traveller (B12)	1.5	52	06/86 – 10/88	3394	

MAKE & MODEL		KW	YEAR		
NISSAN					
SUNNY II Traveller (B12)	1.6	62	06/86 – 10/88	3394	
SUNNY III (N14)	1.4	60	10/90 – 06/95	3598	
SUNNY III (N14)	1.4	60	10/90 – 06/95	3766	
SUNNY III (N14)	1.4 i	55	10/90 – 05/95	3598	
SUNNY III (N14)	1.4 i	55	10/90 – 05/95	3766	
SUNNY III (N14)	1.4 i 16V	64	10/90 – 06/95	3598	
SUNNY III (N14)	1.4 i 16V	64	10/90 – 06/95	3766	
SUNNY III (N14)	1.6	82	08/90 – 10/94	3598	
SUNNY III (N14)	1.6	82	08/90 – 10/94	3766	
SUNNY III (N14)	1.6 i	66	10/90 – 05/95	3598	
SUNNY III (N14)	1.6 i	66	10/90 – 05/95	3766	
SUNNY III (N14)	1.6 i 16V	75	10/92 – 05/95	3598	
SUNNY III (N14)	1.6 i 16V	75	10/92 – 05/95	3766	
SUNNY III (N14)	1.6 i 16V 4WD	66	10/90 – 05/95	3598	
SUNNY III (N14)	1.6 i 16V 4WD	66	10/90 – 05/95	3766	
SUNNY III (N14)	1.6 SR 4x4	66	01/92 – 06/95	3598	
SUNNY III (N14)	1.6 SR 4x4	66	01/92 – 06/95	3766	
SUNNY III (N14)	1.8	78	05/90 – 10/95	3598	
SUNNY III (N14)	1.8	78	05/90 – 10/95	3766	
SUNNY III (N14)	2.0 D	55	10/90 – 05/95	3598	
SUNNY III (N14)	2.0 D	55	10/90 – 05/95	3766	
SUNNY III Hatchback (N14)	1.4	60	10/90 – 06/95	3598	
SUNNY III Hatchback (N14)	1.4	60	10/90 – 06/95	3766	
SUNNY III Hatchback (N14)	1.4 i	55	10/90 – 05/95	3598	
SUNNY III Hatchback (N14)	1.4 i	55	10/90 – 05/95	3766	
SUNNY III Hatchback (N14)	1.4 i 16V	64	10/90 – 05/95	3598	
SUNNY III Hatchback (N14)	1.4 i 16V	64	10/90 – 05/95	3766	
SUNNY III Hatchback (N14)	1.5	51	10/90 – 05/95	3598	
SUNNY III Hatchback (N14)	1.5	51	10/90 – 05/95	3766	
SUNNY III Hatchback (N14)	1.6 i	66	10/90 – 05/95	3598	
SUNNY III Hatchback (N14)	1.6 i	66	10/90 – 05/95	3766	
SUNNY III Hatchback (N14)	1.6 i 16V	75	10/92 – 05/95	3598	
SUNNY III Hatchback (N14)	1.6 i 16V	75	10/92 – 05/95	3766	
SUNNY III Hatchback (N14)	1.6 i 16V 4x4	75	10/92 – 05/95	3598	
SUNNY III Hatchback (N14)	1.6 i 16V 4x4	75	10/92 – 05/95	3766	
SUNNY III Hatchback (N14)	1.6 SR 4x4	66	01/92 – 06/95	3598	
SUNNY III Hatchback (N14)	1.6 SR 4x4	66	01/92 – 06/95	3766	
SUNNY III Hatchback (N14)	2.0 D	55	10/90 – 05/95	3598	
SUNNY III Hatchback (N14)	2.0 D	55	10/90 – 05/95	3766	
SUNNY III Liftback (N14)	1.4	60	10/90 – 06/95	3598	
SUNNY III Liftback (N14)	1.4	60	10/90 – 06/95	3766	
SUNNY III Liftback (N14)	1.4 i	55	10/90 – 05/95	3598	
SUNNY III Liftback (N14)	1.4 i	55	10/90 – 05/95	3766	
SUNNY III Liftback (N14)	1.4 i 16V	64	10/90 – 06/95	3598	
SUNNY III Liftback (N14)	1.4 i 16V	64	10/90 – 06/95	3766	
SUNNY III Liftback (N14)	1.6 i	66	10/90 – 05/95	3598	
SUNNY III Liftback (N14)	1.6 i	66	10/90 – 05/95	3766	
SUNNY III Liftback (N14)	1.6 i 16V	75	10/92 – 05/95	3598	
SUNNY III Liftback (N14)	1.6 i 16V	75	10/92 – 05/95	3766	
SUNNY III Liftback (N14)	1.6 SR 4x4	66	01/92 – 06/95	3598	
SUNNY III Liftback (N14)	1.6 SR 4x4	66	01/92 – 06/95	3766	
SUNNY III Liftback (N14)	2.0 D	55	10/90 – 05/95	3598	
SUNNY III Liftback (N14)	2.0 D	55	10/90 – 05/95	3766	
Sunny IV (N14)/Pulsar/Sentra 2.0 D	CD20	55	10/1990 - 05/1995	3598/1	
Sunny IV (N14)/Pulsar/Sentra 44287	GA14DS	60	10/1990 - 06/1995	3598/1	
Sunny IV (N14)/Pulsar/Sentra 44287 i	GA14DE, GA14DS	55	10/1990 - 05/1995	3598/1	
Sunny IV (N14)/Pulsar/Sentra 44287 i 16V	GA14DE	64	10/1990 - 06/1995	3598/1	
Sunny IV (N14)/Pulsar/Sentra 44348	GA16DE	60	10/1990 - 06/1995	3598/1	
Sunny IV (N14)/Pulsar/Sentra 44348	GA16DE	82	08/1990 - 10/1994	3598/1	
Sunny IV (N14)/Pulsar/Sentra 44348 i	GA16DE, GA16DEL, GA16DS	66	10/1990 - 05/1995	3598/1	
Sunny IV (N14)/Pulsar/Sentra 44348 i 16V	GA16DE	75	10/1992 - 05/1995	3598/1	
Sunny IV (N14)/Pulsar/Sentra 44348 i 16V 4WD	GA16DE	75	10/1992 - 06/1995	3598/1	
Sunny IV (N14)/Pulsar/Sentra 44348 i 16V 4WD	GA16DS	66	10/1990 - 05/1995	3598/1	
Sunny IV (N14)/Pulsar/Sentra 44348 SR 4WD	GA16DEL	66	01/1992 - 06/1995	3598/1	
SUNNY IV Coupe	1.8	85	04/00 – 09/03	3797	
SUNNY IV Hatchback	1.5	77	04/00 – 08/03	3797	
SUNNY IV Hatchback	1.8	85	04/00 – 09/03	3797	
Sunny IV Hatchback (N14) 2.0 D	CD20	55	10/1990 - 05/1995	3598/1	
Sunny IV Hatchback (N14) 44287	GA14DS	60	10/1990 - 06/1995	3598/1	
Sunny IV Hatchback (N14) 44287 i	GA14DE, GA14DS	55	10/1990 - 05/1995	3598/1	
Sunny IV Hatchback (N14) 44287 i 16V	GA14DE	64	10/1990 - 05/1995	3598/1	
Sunny IV Hatchback (N14) 44348 i	GA16DE, GA16DEL, GA16DS	66	10/1990 - 05/1995	3598/1	
Sunny IV Hatchback (N14) 44348 i 16V	GA16DE	75	10/1992 - 05/1995	3598/1	
Sunny IV Hatchback (N14) 44348 i 16V 4x4	GA16DE	75	10/1992 - 05/1995	3598/1	
Sunny IV Hatchback (N14) 44348 SR 4x4	GA16DEL	66	01/1992 - 06/1995	3598/1	
Sunny IV Liftback (N14) 2.0 D	CD20	55	10/1990 - 05/1995	3598/1	

MAKE & MODEL   		KW	YEAR		
NISSAN					
Sunny IV Liftback (N14) 44287	GA14DS	60	10/1990 - 06/1995	3598/1	
Sunny IV Liftback (N14) 44287 i	GA14DE, GA14DS	55	10/1990 - 05/1995	3598/1	
Sunny IV Liftback (N14) 44287 i 16V	GA14DE	64	10/1990 - 06/1995	3598/1	
Sunny IV Liftback (N14) 44348 i	GA16DE, GA16DEL, GA16DS	66	10/1990 - 05/1995	3598/1	
Sunny IV Liftback (N14) 44348 i 16V	GA16DE	75	10/1992 - 05/1995	3598/1	
Sunny IV Liftback (N14) 44348 SR 4x4	GA16DEL	66	01/1992 - 06/1995	3598/1	
SUNNY IV Saloon	1.8	85	04/00 – 09/03	3797	
SUNNY IV Saloon	2.0	110	01/00 – 05/02	3797	
SYLPHY III Saloon (B17)	1.6	85	08/12 -	4109	
SYLPHY III Saloon (B17)	1.6	85	08/12 -	4232	
SYLPHY III Saloon (B17)	1.8	96	08/12 -	4109	
SYLPHY III Saloon (B17)	1.8	96	08/12 -	4232	
TEANA I (J31)	2.0	103	10/03 – 06/08		3933
TEANA I (J31)	2.3	127	10/03 – 06/08		3933
TEANA I (J31)	3.5	170	10/03 – 06/08		3933
TEANA II (J32)	2.0	100	02/13 – 09/13	4109	
TEANA II (J32)	2.0	100	02/13 – 09/13	4232	
TEANA II (J32)	2.3	127	07/08 – 09/13	4109	3933
TEANA II (J32)	2.3	127	07/08 – 09/13	4232	
TEANA II (J32)	2.5	134	07/08 – 09/13	4109	3933
TEANA II (J32)	2.5	134	07/08 – 09/13	4232	
TEANA II (J32)	3.5	183	07/08 – 09/13	4109	3933
TEANA II (J32)	3.5	183	07/08 – 09/13	4232	
TEANA III (J33)	2.5 (L33L, L33R, L33T)	127	09/13 -	4109	
TEANA III (J33)	2.5 (L33L, L33R, L33T)	127	09/13 -	4232	
TERRANO (D10)	1.6	76	03/14 -	3983	
TERRANO I (WD21)	2.4 i 4WD	76	10/87 – 02/93	3692	
TERRANO I (WD21)	2.4 i 4WD	76	10/87 – 02/93	3760	
TERRANO I (WD21)	2.7 TD 4WD	73	02/89 – 02/96	3692	
TERRANO I (WD21)	2.7 TD 4WD	73	02/89 – 02/96	3760	
TERRANO I (WD21)	3.0 i 4WD	109	01/90 – 12/95	3692	
TERRANO I (WD21)	3.0 i 4WD	109	01/90 – 12/95	3760	
TERRANO II (R20)	2.4 4WD	85	05/96 – 01/02	3888	
TERRANO II (R20)	2.4 4WD	87	05/96 – 09/07	3888	
TERRANO II (R20)	2.4 i 12V 4WD	91	02/93 – 06/96	3888	
TERRANO II (R20)	2.7 TD 4WD	74	02/93 – 01/02	3888	
TERRANO II (R20)	2.7 TDi 4WD	92	05/96 – 09/07	3888	
TERRANO II (R20)	3.0 Di 4WD	113	05/02 – 09/07	3888	
TERRANO II (R20)	3.0 DiTD 4WD	125	10/97 – 12/04	3888	
TERRANO II (R20)	3.2 TDi 4WD	110	10/92 – 10/97	3888	
TERRANO II (R20)	3.3	125	10/92 – 12/04	3888	
TERRANO II (R20)	3.3 4WD	125	10/92 – 10/97	3888	
TERRANO II (R20)	3.5 4WD	177	10/94 – 06/03	3888	
TERRANO II Van (R20)	2.7 TDi 4WD	92	06/98 – 09/07	3888	
TERRANO II Van (R20)	3.0 Di 4WD	113	04/03 – 09/07	3888	
TIIDA Hatchback (C11)	1.5 dCi	78	09/07 – 12/11	4015	3933
TIIDA Hatchback (C11)	1.6	81	09/07 – 12/11	4015	3933
TIIDA Hatchback (C11)	1.8	93	05/04 – 02/07	4015	3933
TIIDA Hatchback (C11)	1.8	93	09/07 – 12/11	4015	3933
TIIDA Hatchback (C12)	1.6	85	08/12 -	4109	
TIIDA Hatchback (C12)	1.6	85	08/12 -	4232	
TIIDA Hatchback (C12)	1.6	140	02/13 -	4109	
TIIDA Hatchback (C12)	1.6	140	02/13 -	4232	
TIIDA Saloon (C11)	1.5 dCi	76	01/07 – 12/12	4015	3933
TIIDA Saloon (C11)	1.5 dCi	78	09/07 – 12/12	4015	3933
TIIDA Saloon (C11)	1.6	81	09/07 – 12/12	4015	3933
TIIDA Saloon (C11)	1.8	93	09/07 – 12/12	4015	3933
TIIDA Saloon (C12)	1.6	85	08/11 -	4109	
TIIDA Saloon (C12)	1.6	85	08/11 -	4232	
TRADE Box	2.0 D	44	11/86 – 03/93	3397	
TRADE Box	2.0 D	49	04/93 – 10/98	3397	
TRADE Platform/Chassis	2.0 D	44	11/86 – 03/93	3397	
TRADE Platform/Chassis	2.0 D	49	04/93 – 10/98	3397	
TRADE Platform/Chassis	2.8 D	59	12/86 – 06/94	3397	
TRUCK NT500 56.15	ZD30	110	05/2013 -	3994/1	3995/1
TRUCK NT500 65.15	ZD30	110	05/2013 -	3994/1	3995/1
Tsuru III (N14) 44348 16v	GA16DE	78	01/1993 - 12/1995	3598/1	
URVAN (E25)	3.0 D (ZD30DD)	89	05/02 – 01/12	4002	
URVAN (E25)	3.0 Di (ZD30DD)	77	10/00 – 01/12	4002	
URVAN (E25)	3.0 Di (ZD30DDTI)	89	05/02 – 01/12	4002	
URVAN (E25)	3.5 (VQ35DE)	177	05/02 – 12/10	4002	
URVAN Box (E24)	2.0	64	05/87 – 05/97	3692	
URVAN Box (E24)	2.0	64	05/87 – 05/97	3760	
URVAN Box (E24)	2.0	65	06/86 – 09/94	3692	
URVAN Box (E24)	2.0	65	06/86 – 09/94	3760	
URVAN Box (E24)	2.0	66	01/92 – 09/93	3692	

MAKE & MODEL		KW	YEAR		
NISSAN					
URVAN Box (E24)	2.0	66	01/92 – 09/93	3760	
URVAN Box (E24)	2.0	66	02/87 – 07/94	3692	
URVAN Box (E24)	2.0	66	02/87 – 07/94	3760	
URVAN Box (E24)	2.0 D	49	02/92 – 09/94	3692	
URVAN Box (E24)	2.0 D	49	02/92 – 09/94	3760	
URVAN Box (E24)	2.3 D	51	01/88 – 05/97	3692	
URVAN Box (E24)	2.3 D	51	01/88 – 05/97	3760	
URVAN Box (E24)	2.4	72	10/93 – 05/97	3692	
URVAN Box (E24)	2.4	72	10/93 – 05/97	3760	
URVAN Box (E24)	2.4	74	02/92 – 04/97	3692	
URVAN Box (E24)	2.4	74	02/92 – 04/97	3760	
URVAN Box (E24)	3.0	95	02/92 – 04/97	3692	
URVAN Box (E24)	3.0	95	02/92 – 04/97	3760	
URVAN Bus (E24)	2.4 i	74	05/89 – 09/93	3692	
URVAN Bus (E24)	2.4 i	74	05/89 – 09/93	3760	
URVAN Bus (E24)	2.5 D	59	05/89 – 10/96	3692	
URVAN Bus (E24)	2.5 D	59	05/89 – 10/96	3760	
URVAN Bus (E24)	2.7 D	62	03/87 – 09/93	3692	
URVAN Bus (E24)	2.7 D	62	03/87 – 09/93	3760	
URVAN Bus (E24)	2.7 TD	58	10/94 – 04/97	3692	
URVAN Bus (E24)	2.7 TD	58	10/94 – 04/97	3760	
URVAN Bus (E24)	3.2 D	70	02/92 – 04/97	3692	
URVAN Bus (E24)	3.2 D	70	02/92 – 04/97	3760	
URVAN Bus (E24)	3.2 TD	81	02/92 – 04/97	3692	
URVAN Bus (E24)	3.2 TD	81	02/92 – 04/97	3760	
VANETTE (C20)	1.2 (A12)	47	07/82 – 10/84	3370	
VANETTE (C20)	2.0	66	09/82 – 06/87	3370	
VANETTE (C20)	2.0 D (LD20)	43	11/82 – 06/87	3370	
VANETTE Box (C22)	1.5	51	10/86 – 12/95	3692	
VANETTE Box (C22)	1.5	51	10/86 – 12/95	3760	
VANETTE Bus (C22)	2.0	66	07/87 – 08/94	3692	
VANETTE Bus (C22)	2.0	66	07/87 – 08/94	3760	
VANETTE Bus (C22)	2.0 D	49	07/91 – 01/95	3692	
VANETTE Bus (C22)	2.0 D	49	07/91 – 01/95	3760	
VANETTE Bus (C22)	2.0 D (ULC22)	47	10/86 – 12/95	3692	
VANETTE Bus (C22)	2.0 D (ULC22)	47	10/86 – 12/95	3760	
VANETTE Bus (C22)	2.4 i (SLC22)	74	10/86 – 12/95	3692	
VANETTE Bus (C22)	2.4 i (SLC22)	74	10/86 – 12/95	3760	
VANETTE Bus (C22)	2.4 i (SLC22)	77	10/86 – 12/95	3692	
VANETTE Bus (C22)	2.4 i (SLC22)	77	10/86 – 12/95	3760	
VANETTE Bus (KC120)	1.5	51	01/83 – 12/87	3692	
VANETTE Bus (KC120)	1.5	51	01/83 – 12/87	3760	
VANETTE CARGO Box (HC 23)	1.6 i	71	01/95 -	3758	
VANETTE CARGO Box (HC 23)	1.6 i	71	09/94 – 05/01	3888	
VANETTE CARGO Box (HC 23)	2.3 D	55	01/95 -	3758	
VANETTE CARGO Box (HC 23)	2.3 D	55	09/94 – 05/02	3888	
VANETTE CARGO Bus (HC 23)	1.6 i	72	01/96 -	3758	
VANETTE CARGO Bus (HC 23)	1.6 i	72	01/96 – 05/01	3888	
VANETTE CARGO Bus (HC 23)	2.0 D	49	01/96 -	3758	
VANETTE CARGO Bus (HC 23)	2.0 D	49	01/96 – 05/01	3888	
VANETTE CARGO Bus (HC 23)	2.3 D	55	01/96 -	3758	
VANETTE CARGO Bus (HC 23)	2.3 D	55	09/94 – 05/01	3888	
XTERRA (WD22_)	2.8 TDI 4x4 (WD22B)	103	06/05 – 08/08	4143	
X-TRAIL (T30)	2.0	103	07/01 – 01/13	3932	3933
X-TRAIL (T30)	2.0	110	09/01 – 01/13	3932	3933
X-TRAIL (T30)	2.0 4x4	103	07/01 – 01/13	3932	3933
X-TRAIL (T30)	2.0 4x4	110	09/01 – 01/13	3932	3933
X-TRAIL (T30)	2.0 4x4	206	06/01 – 01/13	3932	3933
X-TRAIL (T30)	2.2 DCi	84	10/04 – 01/13	3932	3933
X-TRAIL (T30)	2.2 DCi	100	12/03 – 01/13	3932	3933
X-TRAIL (T30)	2.2 dCi 4x4	100	12/03 – 01/13	3932	3933
X-TRAIL (T30)	2.2 DCi FWD	84	06/01 – 09/03	3932	3933
X-TRAIL (T30)	2.2 Di 4x4	84	07/01 – 10/05	3932	3933
X-TRAIL (T30)	2.5 4x4	121	09/02 – 01/13		3933
X-TRAIL (T30)	2.5 4x4	132	11/02 – 01/13	3932	3933
X-TRAIL (T31)	2.0	101	06/07 – 11/13	4038	3933
X-TRAIL (T31)	2.0	103	06/08 – 11/13	4038	3933
X-TRAIL (T31)	2.0	104	06/07 – 11/13	4038	3933
X-TRAIL (T31)	2.0 dCi	110	06/07 – 11/13	4038	3933
X-TRAIL (T31)	2.0 dCi	127	06/07 – 11/13	4038	3933
X-TRAIL (T31)	2.0 dCi FWD	110	06/07 – 11/13	4038	3933
X-TRAIL (T31)	2.0 FWD	103	06/08 – 11/13	4038	3933
X-TRAIL (T31)	2.0 FWD	104	03/07 – 11/13	4038	3933
X-TRAIL (T31)	2.5 4x4	124	06/07 – 11/13	4038	3933
X-TRAIL (T32_)	1.3 DIG-T	118/160	04/19	4282/1	
X-TRAIL (T32_)	1.6 dCi (T32)	96/130	04/14	4282/1	

MAKE & MODEL		KW	YEAR		
NISSAN					
X-TRAIL (T32_)	1.6 dCi (T32)	96	12/13 -		4283
X-TRAIL (T32_)	1.6 dCi ALL MODE 4x4-i (NT32)	96	12/13 -		4283
X-TRAIL (T32_)	1.6 dCi ALL MODE 4x4-i (NT32)	96/130	04/14	4282/1	
X-TRAIL (T32_)	1.6 DIG-T (T32)	120/163	06/15	4282/1	
X-TRAIL (T32_)	2.0 (T32)	106/144	09/14	4282/1	
X-TRAIL (T32_)	2.0 (T32)	108/147	12/13	4282/1	
X-TRAIL (T32_)	2.0 ALL MODE 4x4-i (NT32)	106/144	09/14	4282/1	
X-TRAIL (T32_)	2.0 ALL MODE 4x4-i (NT32)	108/147	12/13	4282/1	
X-TRAIL (T32_)	2.0 Hybrid (HT32)	138/188	11/16	4282/1	
X-TRAIL (T32_)	2.0 Hybrid ALL MODE 4x4-i (HNT32)	138/188	11/16	4282/1	
X-TRAIL (T32_)	2.5 (T32)	126/171	12/13	4282/1	
X-TRAIL (T32_)	2.5 ALL MODE 4x4-i (NT32)	124/169	10/14	4282/1	
X-TRAIL (T32_)	2.5 ALL MODE 4x4-i (NT32)	126/171	12/13	4282/1	
X-TRAIL (T32_)	1.6 DIG-T (T32)	120	06/15 -		4283
X-TRAIL (T32_)	2.0 (T32)	106	09/14 -		4283
X-TRAIL (T32_)	2.0 ALL MODE 4x4-i (NT32)	106	09/14 -		4283
X-TRAIL (T32_)	2.5 (T32)	126	12/13 -		3933
X-TRAIL (T32_)	2.5 ALL MODE 4x4-i (NT32)	126	12/13 -		3933
X-Trail III (T32_) 2.0 (T32)	MR20DD	104	09/2014 -	4308	4283/1
X-Trail III (T32_) 2.0 (T32)	MR20DD	106	09/2014 -	4308	4283/1
X-Trail III (T32_) 2.0 (T32)	MR20DD	108	12/2013 -	4308	4283/1
X-Trail III (T32_) 2.0 ALL MODE 4x4-i (NT32)	MR20DD	106	09/2014 -	4308	4283/1
X-Trail III (T32_) 2.0 ALL MODE 4x4-i (NT32)	MR20DD	108	12/2013 -	4308	4283/1
X-Trail III (T32_) 2.0 dCi (T32)	M9R	130	10/2016 -	4308	4283/1
X-Trail III (T32_) 2.0 dCi ALL MODE 4x4-i (NT32)	M9R	130	10/2016 -	4308	4283/1
X-Trail III (T32_) 2.0 Hybrid (HT32)	MR20DD, RM31	138	11/2016 -	4308	4283/1
X-Trail III (T32_) 2.0 Hybrid ALL MODE 4x4-i (HNT32)	MR20DD, RM31	138	11/2016 -	4308	4283/1
X-Trail III (T32_) 44256 DIG-T	HR13DDT	118	04/2019 -	4308	4283/1
X-Trail III (T32_) 44318	-	127	10/2013 -	4308	4283/1
X-Trail III (T32_) 44318 (T32)	QR25DE	124	01/2015 -	4308	4283/1
X-Trail III (T32_) 44318 (T32)	QR25DE	126	12/2013 -	4308	4283/1
X-Trail III (T32_) 44318 ALL MODE 4X4	-	127	12/2013 -	4308	4283/1
X-Trail III (T32_) 44318 ALL MODE 4x4-i (NT32)	QR25DE	124	10/2014 -	4308	4283/1
X-Trail III (T32_) 44318 ALL MODE 4x4-i (NT32)	QR25DE	126	12/2013 -	4308	4283/1
X-Trail III (T32_) 44348 dCi (T32)	R9M	96	04/2014 -	4308	4283/1
X-Trail III (T32_) 44348 dCi ALL MODE 4x4-i (NT32)	R9M	96	04/2014 -	4308	4283/1
X-Trail III (T32_) 44348 DIG-T (T32)	MR16DDT	120	06/2015 -	4308	4283/1
X-Trail III (T32_) 44378 dCi	R9N	110	04/2019 -	4308	4283/1
X-Trail III (T32_) 44378 dCi	R9N	120	04/2019 -	4308	4283/1
X-Trail III (T32_) 44378 dCi	R9N	96	04/2019 -	4308	4283/1
X-Trail III (T32_) 44378 dCi ALL MODE 4x4-i	R9N	110	04/2019 -	4308	4283/1
X-Trail III (T32_) 44378 dCi ALL MODE 4x4-i	R9N	120	04/2019 -	4308	4283/1
X-Trail III (T32_) 44378 dCi ALL MODE 4x4-i	R9N	96	04/2019 -	4308	4283/1
NISSAN (DFAC)					
X-TRAIL (T32)	2.0	110/150	03/14-12/18	4282/1	
X-TRAIL (T32)	2.0	113/154	08/18	4282/1	
X-TRAIL (T32)	2.0 2WD	111/151	08/02	4282/1	
X-TRAIL (T32)	2.0 All-wheel Drive	110/150	03/14-12/18	4282/1	
X-TRAIL (T32)	2.5 4WD	133/181	08/02	4282/1	
X-TRAIL (T32)	2.5 All-wheel Drive	137/186	02.14 12.18	4282/1	
NISSAN (DONGFENG)					
BLUEBIRD (G10)	2.0	107	04/00 – 12/06	3700	
BLUEBIRD SYLPHY (G11)	1.6	80	01/07 – 04/09		3933
BLUEBIRD SYLPHY (G11)	1.6	86	04/09 -		3933
BLUEBIRD SYLPHY (G11)	2.0	100	08/06 – 04/09	3779	3933
BLUEBIRD SYLPHY (G11)	2.0	100	08/06 – 04/09	3699	
BLUEBIRD SYLPHY (G11)	2.0	105	04/09 -	3699	
BLUEBIRD SYLPHY (G11)	2.0	105	04/09 – 12/12	3779	3933
GENISS / LIVINA GENISS MPV	1.8	93	11/06 – 01/10	4017	3933
LIVINA C-GEAR	1.6	77	03/10 -		3933
LIVINA Hatchback	1.6	77	03/10 -		3933
LIVINA Hatchback	1.6	80	04/07 – 03/10		3933
QASHQAI	1.6	81	11/08 – 12/10	4038	3933
QASHQAI	1.6	89	01/11 -	4038	3933
QASHQAI	2.0	102	03/08 – 12/10	4038	3933
QASHQAI	2.0	106	01/11 -	4038	3933
QASHQAI	2.0 4x4	102	03/08 – 12/10	4038	3933
TEANA (J31)	2.0	100	04/06 – 06/08	3779	3933
TEANA (J31)	2.0	100	04/06 – 06/08	3699	
TEANA (J31)	2.3	127	04/06 – 06/08	3779	3933
TEANA (J31)	2.3	127	04/06 – 06/08	3699	
TEANA (J31)	3.5	180	04/06 – 06/08	3779	3933
TEANA (J31)	3.5	180	04/06 – 06/08	3699	
TEANA (J32)	2.0	104	11/10 -	3779	3933
TEANA (J32)	2.0	104	11/10 -	3699	

MAKE & MODEL		KW	YEAR		
NISSAN (DONGFENG)					
TEANA (J32)	2.5	136	11/10 -	3779	3933
TEANA (J32)	2.5	136	11/10 -	3699	
TEANA (J32)	3.5	185	06/08 – 11/10	3779	3933
TEANA (J32)	3.5	185	06/08 – 11/10	3699	
TIIDA QIDA Hatchback (C11)	1.6	80	07/05 -		3933
TIIDA YIDA Saloon (C11)	1.6	80	04/05 -		3933
X-TRAIL (T31)	2.0	106	11/08 -	3932	3933
X-TRAIL (T31)	2.5	135	11/08 – 12/14	3932	3933
NISSAN (ZHENGZHOU)					
OTING Closed Off-Road Vehicle	2.4	96	10/07 -	4017	
OTING Closed Off-Road Vehicle	2.5 D	80	09/08 -	4017	
OTING Closed Off-Road Vehicle	2.5 D All-wheel Drive	80	09/08 -	4017	
OTING Closed Off-Road Vehicle	2.9 D	78	10/07 -	4017	
OTING Closed Off-Road Vehicle	2.9 D All-wheel Drive	78	10/07 -	4017	
OTING Closed Off-Road Vehicle	3.2 D	81	10/07 -	4017	
OTING Closed Off-Road Vehicle	3.2 D All-wheel Drive	81	10/07 -	4017	
PALADIN	2.4	110	02/03 -	4017	
PALADIN	2.4 All-wheel Drive	110	02/03 -	4017	
PALADIN	3.3 All-wheel Drive	125	02/03 -	4017	
OLCIT					
11	0.6	25	01/81 – 12/95	3513	
OPEL					
ADAM	1.0	66	07/14 -	3826/2	4286
ADAM	1.0	85	07/14 -	3826/2	4286
ADAM	1.2	51	10/12 -	3826/2	
ADAM	1.2	69	07/13 -	3826/2	
ADAM	1.4	64	10/12 -	3826/2	
ADAM	1.4	74	10/12 -	3826/2	
ADAM	1.4 LPG	64	07/13 -	3826/2	
ADAM	1.4 S	110	11/14 -	4042	4286
AGILA (B) (H08)	1.0	48	04/08 -	3983/1	
AGILA (B) (H08)	1.0	50	07/11 -	3983/1	
AGILA (B) (H08)	1.0 LPG	48	01/10 -	3983/1	
AGILA (B) (H08)	1.2	63	04/08 -	3983/1	
AGILA (B) (H08)	1.2	69	11/10 -	3983/1	
AGILA (B) (H08)	1.2 LPG	63	04/08 -	3983/1	
AGILA (B) (H08)	1.3 CDTI	55	04/08 -	3983/1	
AMPERA	EV 150	111	11/11 -	4014	
AMPERA	EV 150	111	11/11 -	4008	
ANTARA	2.0 CDTI	93	03/07 -	3976	
ANTARA	2.0 CDTI	93	09/08 -	3976	
ANTARA	2.0 CDTI	110	05/06 -	3976	
ANTARA	2.0 CDTI	125	01/16 -	3976	
ANTARA	2.0 CDTI 4x4	110	05/06 -	3976	
ANTARA	2.0 CDTI 4x4	125	01/16 -	3976	
ANTARA	2.2 CDTi	120	12/10 -	3976	
ANTARA	2.2 CDTi 4x4	120	12/10 -	3976	
ANTARA	2.2 CDTi 4x4	135	12/10 -	3976	
ANTARA	2.4	103	09/08 -	3976	
ANTARA	2.4	104	05/06 -	3976	
ANTARA	2.4	123	12/10 -	3976	
ANTARA	2.4 4x4	103	01/07 -	3976	
ANTARA	2.4 4x4	123	12/10 -	3976	
ANTARA	2.4 LPG	103	10/08 -	3976	
ANTARA	2.4 LPG 4x4	103	10/08 -	3976	
ANTARA	3.0	190	11/10 -	3976	
ANTARA	3.2 V6	167	03/07 -	3976	
ARENA Box	1.9 D	44	01/97 – 12/01	3482	
ARENA Box	2.5 D	55	01/97 – 12/01	3482	
ARENA Box (TB, TF)	1.9 D	44	03/98 – 08/01	3482	
ARENA Box (TB, TF)	2.5 D	55	03/98 – 08/01	3482	
ARENA Bus	1.9 D	44	01/97 – 12/01	3482	
ARENA Bus	2.5 D	55	01/97 – 12/01	3482	
ARENA Combi (THB)	1.9 D	44	03/98 – 08/01	3482	
ARENA Combi (THB)	2.5 D	55	03/98 – 08/01	3482	
ASCONA B (81_, 86_, 87_, 88_)	1.2	40	08/76 – 02/79	3335	
ASCONA B (81_, 86_, 87_, 88_)	1.2	40	08/76 – 02/79	3365	
ASCONA B (81_, 86_, 87_, 88_)	1.2	40	08/76 – 02/79	3410	
ASCONA B (81_, 86_, 87_, 88_)	1.2 S	44	09/75 – 02/79	3335	
ASCONA B (81_, 86_, 87_, 88_)	1.2 S	44	09/75 – 02/79	3365	
ASCONA B (81_, 86_, 87_, 88_)	1.2 S	44	09/75 – 02/79	3410	
ASCONA B (81_, 86_, 87_, 88_)	1.3 N	44	03/79 – 08/81	3410	
ASCONA B (81_, 86_, 87_, 88_)	1.3 N	44	09/81 – 08/86	3410	
ASCONA B (81_, 86_, 87_, 88_)	1.3 S	55	08/79 – 08/81	3410	
ASCONA B (81_, 86_, 87_, 88_)	1.3 S	55	09/81 – 08/88	3410	

MAKE & MODEL		KW	YEAR		
OPEL					
ASCONA B (81_, 86_, 87_, 88_)	1.6	55	09/81 – 09/87	3410	
ASCONA B (81_, 86_, 87_, 88_)	1.6	60	09/86 – 08/88	3410	
ASCONA B (81_, 86_, 87_, 88_)	1.6 D	40	03/82 – 08/88	3410	
ASCONA B (81_, 86_, 87_, 88_)	1.6 i	55	09/87 – 08/88	3410	
ASCONA B (81_, 86_, 87_, 88_)	1.6 i CAT	55	09/86 – 08/88	3410	
ASCONA B (81_, 86_, 87_, 88_)	1.6 N	44	09/75 – 08/81	3335	
ASCONA B (81_, 86_, 87_, 88_)	1.6 N	44	09/75 – 08/81	3365	
ASCONA B (81_, 86_, 87_, 88_)	1.6 S	55	09/75 – 08/81	3410	
ASCONA B (81_, 86_, 87_, 88_)	1.6 S	66	09/81 – 08/86	3410	
ASCONA B (81_, 86_, 87_, 88_)	1.8	62	09/87 – 08/88	3410	
ASCONA B (81_, 86_, 87_, 88_)	1.8 E	74	01/85 – 08/86	3410	
ASCONA B (81_, 86_, 87_, 88_)	1.8 i	85	09/82 – 08/86	3410	
ASCONA B (81_, 86_, 87_, 88_)	1.9 N	55	08/76 – 08/81	3335	
ASCONA C (81_, 86_, 87_, 88_)	1.9 N	55	08/76 – 08/81	3365	
ASCONA C (81_, 86_, 87_, 88_)	1.9 N	55	08/76 – 08/81	3410	
ASCONA C (81_, 86_, 87_, 88_)	1.9 S	66	09/75 – 08/81	3410	
ASCONA C (81_, 86_, 87_, 88_)	2.0 D	43	08/78 – 08/81	3410	
ASCONA C (81_, 86_, 87_, 88_)	2.0 E	81	08/79 – 08/81	3410	
ASCONA C (81_, 86_, 87_, 88_)	2.0 i	74	08/87 – 08/88	3410	
ASCONA C (81_, 86_, 87_, 88_)	2.0 i	85	09/86 – 08/88	3410	
ASCONA C (81_, 86_, 87_, 88_)	2.0 i CAT	85	09/86 – 08/88	3410	
ASCONA C (81_, 86_, 87_, 88_)	2.0 i GT	95	03/87 – 08/88	3410	
ASCONA C (81_, 86_, 87_, 88_)	2.0 N	66	08/77 – 08/81	3335	
ASCONA C (81_, 86_, 87_, 88_)	2.0 N	66	08/77 – 08/81	3365	
ASCONA C (81_, 86_, 87_, 88_)	2.0 N	66	08/77 – 08/81	3410	
ASCONA C (81_, 86_, 87_, 88_)	2.0 S	74	08/77 – 08/81	3335	
ASCONA C (81_, 86_, 87_, 88_)	2.0 S	74	08/77 – 08/81	3365	
ASCONA C (81_, 86_, 87_, 88_)	2.0 S	74	08/77 – 08/81	3410	
ASCONA C Hatchback (84_, 89_)	1.3 N	44	09/81 – 08/86	3410	
ASCONA C Hatchback (84_, 89_)	1.3 S	55	09/81 – 08/88	3410	
ASCONA C Hatchback (84_, 89_)	1.6	55	09/81 – 08/88	3410	
ASCONA C Hatchback (84_, 89_)	1.6	60	09/86 – 08/88	3410	
ASCONA C Hatchback (84_, 89_)	1.6 D	40	03/82 – 08/88	3410	
ASCONA C Hatchback (84_, 89_)	1.6 i	55	09/87 – 08/88	3410	
ASCONA C Hatchback (84_, 89_)	1.6 i CAT	55	09/86 – 08/88	3410	
ASCONA C Hatchback (84_, 89_)	1.6 S	66	09/81 – 08/86	3410	
ASCONA C Hatchback (84_, 89_)	1.8	62	09/87 – 08/88	3410	
ASCONA C Hatchback (84_, 89_)	1.8 E	74	01/85 – 08/86	3410	
ASCONA C Hatchback (84_, 89_)	1.8 i	85	09/82 – 08/86	3410	
ASCONA C Hatchback (84_, 89_)	2.0 i	85	09/86 – 08/88	3410	
ASCONA C Hatchback (84_, 89_)	2.0 i CAT	85	09/86 – 08/88	3410	
ASCONA C Hatchback (84_, 89_)	2.0 i GT	95	03/87 – 08/88	3410	
ASTRA F (56_, 57_)	1.4	55	09/91 – 09/93	3623	
ASTRA F (56_, 57_)	1.4	60	09/92 – 09/98	3470	
ASTRA F (56_, 57_)	1.4	60	09/92 – 09/98	3505	
ASTRA F (56_, 57_)	1.4	60	09/92 – 09/98	3615	
ASTRA F (56_, 57_)	1.4	60	09/92 – 09/98	3623	
ASTRA F (56_, 57_)	1.4 i	44	09/91 – 09/98	3623	
ASTRA F (56_, 57_)	1.4 i 16V	66	02/96 – 09/98	3623	
ASTRA F (56_, 57_)	1.4 Si	60	03/92 – 09/98	3470	
ASTRA F (56_, 57_)	1.4 Si	60	03/92 – 09/98	3505	
ASTRA F (56_, 57_)	1.4 Si	60	03/92 – 09/98	3615	
ASTRA F (56_, 57_)	1.4 Si	60	03/92 – 09/98	3623	
ASTRA F (56_, 57_)	1.6	55	09/95 – 09/98	3623	
ASTRA F (56_, 57_)	1.6 i	52	05/93 – 07/96	3623	
ASTRA F (56_, 57_)	1.6 i	55	03/92 – 09/98	3623	
ASTRA F (56_, 57_)	1.6 i 16V	74	08/94 – 09/98	3470	
ASTRA F (56_, 57_)	1.6 i 16V	74	08/94 – 09/98	3505	
ASTRA F (56_, 57_)	1.6 i 16V	74	08/94 – 09/98	3615	
ASTRA F (56_, 57_)	1.6 Si	74	05/92 – 12/94	3623	
ASTRA F (56_, 57_)	1.7 D	42	03/92 – 09/92	3470	
ASTRA F (56_, 57_)	1.7 D	42	03/92 – 09/92	3505	
ASTRA F (56_, 57_)	1.7 D	42	03/92 – 09/92	3615	
ASTRA F (56_, 57_)	1.7 D	42	03/92 – 09/92	3623	
ASTRA F (56_, 57_)	1.7 D	44	07/92 – 09/98	3470	
ASTRA F (56_, 57_)	1.7 D	44	07/92 – 09/98	3505	
ASTRA F (56_, 57_)	1.7 D	44	07/92 – 09/98	3615	
ASTRA F (56_, 57_)	1.7 D	44	07/92 – 09/98	3623	
ASTRA F (56_, 57_)	1.7 TD	50	11/94 – 09/98	3470	
ASTRA F (56_, 57_)	1.7 TD	50	11/94 – 09/98	3505	
ASTRA F (56_, 57_)	1.7 TD	50	11/94 – 09/98	3615	
ASTRA F (56_, 57_)	1.7 TD	50	11/94 – 09/98	3623	
ASTRA F (56_, 57_)	1.7 TDS	60	03/92 – 09/98	3470	
ASTRA F (56_, 57_)	1.7 TDS	60	03/92 – 09/98	3505	
ASTRA F (56_, 57_)	1.7 TDS	60	03/92 – 09/98	3615	
ASTRA F (56_, 57_)	1.7 TDS	60	03/92 – 09/98	3623	

MAKE & MODEL   		KW	YEAR		
OPEL					
ASTRA F (56_, 57_)	1.8 i	66	03/92 – 09/98	3623	
ASTRA F (56_, 57_)	1.8 i 16V	82	09/95 - 09/96	3470	3469
ASTRA F (56_, 57_)	1.8 i 16V	82	09/95 – 09/96	3505	
ASTRA F (56_, 57_)	1.8 i 16V	82	09/95 – 09/96	3615	
ASTRA F (56_, 57_)	1.8 i 16V	85	09/95 – 08/97	3470	3469
ASTRA F (56_, 57_)	1.8 i 16V	85	09/95 – 08/97	3505	
ASTRA F (56_, 57_)	1.8 i 16V	85	09/95 – 08/97	3615	
ASTRA F (56_, 57_)	1.8 i 16V	85	11/94 – 09/98	3470	3469
ASTRA F (56_, 57_)	1.8 i 16V	85	11/94 – 09/98	3505	
ASTRA F (56_, 57_)	1.8 i 16V	85	11/94 – 09/98	3615	
ASTRA F (56_, 57_)	1.8 i 16V	92	06/93 – 10/94	3470	3469
ASTRA F (56_, 57_)	1.8 i 16V	92	06/93 – 10/94	3505	
ASTRA F (56_, 57_)	1.8 i 16V	92	06/93 – 10/94	3615	
ASTRA F (56_, 57_)	2.0 i	85	03/92 – 09/98	3470	3469
ASTRA F (56_, 57_)	2.0 i	85	03/92 – 09/98	3505	
ASTRA F (56_, 57_)	2.0 i	85	03/92 – 09/98	3615	
ASTRA F (56_, 57_)	2.0 i 16V	100	02/95 – 09/98	3470	3469
ASTRA F (56_, 57_)	2.0 i 16V	100	02/95 – 09/98	3505	
ASTRA F (56_, 57_)	2.0 i 16V	100	02/95 – 09/98	3615	
ASTRA F CLASSIC Estate	1.4 Comfort	66	09/03 – 01/05	3623	3469
ASTRA F CLASSIC Estate	1.4 i	44	01/98 – 01/05	3623	
ASTRA F CLASSIC Estate	1.6 i	55	01/98 – 01/05	3623	
ASTRA F CLASSIC Estate	1.6 i 16V	74	01/98 – 01/05	3470	3469
ASTRA F CLASSIC Estate	1.6 i 16V	74	01/98 – 01/05	3505	
ASTRA F CLASSIC Estate	1.6 i 16V	74	01/98 – 01/05	3615	
ASTRA F CLASSIC Hatchback	1.4 i	44	01/98 – 08/02	3623	
ASTRA F CLASSIC Hatchback	1.6 i	55	01/98 – 08/02	3623	
ASTRA F CLASSIC Hatchback	1.6 i 16V	74	01/98 – 08/02	3470	
ASTRA F CLASSIC Hatchback	1.6 i 16V	74	01/98 – 08/02	3505	
ASTRA F CLASSIC Hatchback	1.6 i 16V	74	01/98 – 08/02	3615	
ASTRA F CLASSIC Saloon	1.4 i	44	01/98 – 08/02	3623	
ASTRA F CLASSIC Saloon	1.6 i	55	01/98 – 08/02	3623	
ASTRA F CLASSIC Saloon	1.6 i 16V	74	01/98 – 08/02	3470	
ASTRA F CLASSIC Saloon	1.6 i 16V	74	01/98 – 08/02	3505	
ASTRA F CLASSIC Saloon	1.6 i 16V	74	01/98 – 08/02	3615	
ASTRA F Convertible (53_B)	1.4 i 16V	66	01/96 – 03/01	3623	
ASTRA F Convertible (53_B)	1.4 Si	60	05/93 – 03/01	3623	
ASTRA F Convertible (53_B)	1.6 i	52	03/93 – 08/96	3623	
ASTRA F Convertible (53_B)	1.6 i	55	01/96 – 03/01	3623	
ASTRA F Convertible (53_B)	1.8 i 16V	85	11/94 – 03/01	3470	3469
ASTRA F Convertible (53_B)	1.8 i 16V	85	11/94 – 03/01	3505	
ASTRA F Convertible (53_B)	1.8 i 16V	85	11/94 – 03/01	3615	
ASTRA F Convertible (53_B)	2.0 i	85	03/93 – 10/94	3470	3469
ASTRA F Convertible (53_B)	2.0 i	85	03/93 – 10/94	3505	
ASTRA F Convertible (53_B)	2.0 i	85	03/93 – 10/94	3615	
ASTRA F Estate (51_, 52_)	1.4	55	09/91 – 09/93	3623	
ASTRA F Estate (51_, 52_)	1.4	60	09/92 – 01/98	3470	
ASTRA F Estate (51_, 52_)	1.4	60	09/92 – 01/98	3505	
ASTRA F Estate (51_, 52_)	1.4	60	09/92 – 01/98	3615	
ASTRA F Estate (51_, 52_)	1.4	60	09/92 – 01/98	3623	
ASTRA F Estate (51_, 52_)	1.4 i	44	09/91 – 01/98	3623	
ASTRA F Estate (51_, 52_)	1.4 i 16V	66	02/96 – 01/98	3623	
ASTRA F Estate (51_, 52_)	1.4 Si	60	03/92 – 01/98	3470	
ASTRA F Estate (51_, 52_)	1.4 Si	60	03/92 – 01/98	3505	
ASTRA F Estate (51_, 52_)	1.4 Si	60	03/92 – 01/98	3615	
ASTRA F Estate (51_, 52_)	1.4 Si	60	03/92 – 01/98	3623	
ASTRA F Estate (51_, 52_)	1.6	55	09/95 – 01/98	3623	
ASTRA F Estate (51_, 52_)	1.6 i	52	05/93 – 07/96	3623	
ASTRA F Estate (51_, 52_)	1.6 i	55	09/91 – 01/98	3623	
ASTRA F Estate (51_, 52_)	1.6 i 16V	74	08/94 – 01/98	3470	
ASTRA F Estate (51_, 52_)	1.6 i 16V	74	08/94 – 01/98	3505	
ASTRA F Estate (51_, 52_)	1.6 i 16V	74	08/94 – 01/98	3615	
ASTRA F Estate (51_, 52_)	1.6 Si	74	03/92 – 12/94	3623	
ASTRA F Estate (51_, 52_)	1.7 D	42	12/91 – 09/92	3470	
ASTRA F Estate (51_, 52_)	1.7 D	42	12/91 – 09/92	3505	
ASTRA F Estate (51_, 52_)	1.7 D	42	12/91 – 09/92	3615	
ASTRA F Estate (51_, 52_)	1.7 D	42	12/91 – 09/92	3623	
ASTRA F Estate (51_, 52_)	1.7 D	44	07/92 – 01/98	3470	
ASTRA F Estate (51_, 52_)	1.7 D	44	07/92 – 01/98	3505	
ASTRA F Estate (51_, 52_)	1.7 D	44	07/92 – 01/98	3615	
ASTRA F Estate (51_, 52_)	1.7 D	44	07/92 – 01/98	3623	
ASTRA F Estate (51_, 52_)	1.7 TD	50	11/94 – 01/98	3470	
ASTRA F Estate (51_, 52_)	1.7 TD	50	11/94 – 01/98	3505	
ASTRA F Estate (51_, 52_)	1.7 TD	50	11/94 – 01/98	3615	
ASTRA F Estate (51_, 52_)	1.7 TD	50	11/94 – 01/98	3623	
ASTRA F Estate (51_, 52_)	1.7 TDS	60	12/91 – 01/98	3470	

MAKE & MODEL		KW	YEAR		
OPEL					
ASTRA F Estate (51_, 52_)	1.7 TDS	60	12/91 – 01/98	3505	
ASTRA F Estate (51_, 52_)	1.7 TDS	60	12/91 – 01/98	3615	
ASTRA F Estate (51_, 52_)	1.7 TDS	60	12/91 – 01/98	3623	
ASTRA F Estate (51_, 52_)	1.8 i	66	09/91 – 01/98	3623	
ASTRA F Estate (51_, 52_)	1.8 i 16V	85	07/94 – 01/98	3470	3469
ASTRA F Estate (51_, 52_)	1.8 i 16V	85	07/94 – 01/98	3505	
ASTRA F Estate (51_, 52_)	1.8 i 16V	85	07/94 – 01/98	3615	
ASTRA F Estate (51_, 52_)	1.8 i 16V	92	06/93 – 01/98	3470	3469
ASTRA F Estate (51_, 52_)	1.8 i 16V	92	06/93 – 01/98	3505	
ASTRA F Estate (51_, 52_)	1.8 i 16V	92	06/93 – 01/98	3615	
ASTRA F Estate (51_, 52_)	2.0 i	85	09/91 – 07/94	3470	3469
ASTRA F Estate (51_, 52_)	2.0 i	85	09/91 – 07/94	3505	
ASTRA F Estate (51_, 52_)	2.0 i	85	09/91 – 07/94	3615	
ASTRA F Estate (51_, 52_)	2.0 i 16V	100	02/95 – 01/98	3470	3469
ASTRA F Estate (51_, 52_)	2.0 i 16V	100	02/95 – 01/98	3505	
ASTRA F Estate (51_, 52_)	2.0 i 16V	100	02/95 – 01/98	3615	
ASTRA F Estate (51_, 52_)	2.0 i 16V	110	03/93 – 01/98	3470	3469
ASTRA F Estate (51_, 52_)	2.0 i 16V	110	03/93 – 01/98	3505	
ASTRA F Estate (51_, 52_)	2.0 i 16V	110	03/93 – 01/98	3615	
ASTRA F Hatchback (53_, 54_, 58_, 59_)	1.4	55	09/91 – 09/93	3623	
ASTRA F Hatchback (53_, 54_, 58_, 59_)	1.4	60	09/92 – 01/98	3470	
ASTRA F Hatchback (53_, 54_, 58_, 59_)	1.4	60	09/92 – 01/98	3505	
ASTRA F Hatchback (53_, 54_, 58_, 59_)	1.4	60	09/92 – 01/98	3615	
ASTRA F Hatchback (53_, 54_, 58_, 59_)	1.4	60	09/92 – 01/98	3623	
ASTRA F Hatchback (53_, 54_, 58_, 59_)	1.4 i	44	03/92 – 01/98	3623	
ASTRA F Hatchback (53_, 54_, 58_, 59_)	1.4 i 16V	66	01/96 – 01/98	3623	
ASTRA F Hatchback (53_, 54_, 58_, 59_)	1.4 Si	60	03/92 – 01/98	3470	
ASTRA F Hatchback (53_, 54_, 58_, 59_)	1.4 Si	60	03/92 – 01/98	3505	
ASTRA F Hatchback (53_, 54_, 58_, 59_)	1.4 Si	60	03/92 – 01/98	3615	
ASTRA F Hatchback (53_, 54_, 58_, 59_)	1.4 Si	60	03/92 – 01/98	3623	
ASTRA F Hatchback (53_, 54_, 58_, 59_)	1.6	55	09/95 – 01/98	3623	
ASTRA F Hatchback (53_, 54_, 58_, 59_)	1.6 i	52	05/93 – 07/96	3623	
ASTRA F Hatchback (53_, 54_, 58_, 59_)	1.6 i	55	09/91 – 01/98	3623	
ASTRA F Hatchback (53_, 54_, 58_, 59_)	1.6 i 16V	74	08/94 – 01/98	3470	
ASTRA F Hatchback (53_, 54_, 58_, 59_)	1.6 i 16V	74	08/94 – 01/98	3505	
ASTRA F Hatchback (53_, 54_, 58_, 59_)	1.6 i 16V	74	08/94 – 01/98	3615	
ASTRA F Hatchback (53_, 54_, 58_, 59_)	1.6 Si	74	03/92 – 12/94	3623	
ASTRA F Hatchback (53_, 54_, 58_, 59_)	1.7 D	42	12/91 – 09/92	3470	
ASTRA F Hatchback (53_, 54_, 58_, 59_)	1.7 D	42	12/91 – 09/92	3505	
ASTRA F Hatchback (53_, 54_, 58_, 59_)	1.7 D	42	12/91 – 09/92	3615	
ASTRA F Hatchback (53_, 54_, 58_, 59_)	1.7 D	42	12/91 – 09/92	3623	
ASTRA F Hatchback (53_, 54_, 58_, 59_)	1.7 D	44	07/92 – 01/98	3470	
ASTRA F Hatchback (53_, 54_, 58_, 59_)	1.7 D	44	07/92 – 01/98	3505	
ASTRA F Hatchback (53_, 54_, 58_, 59_)	1.7 D	44	07/92 – 01/98	3615	
ASTRA F Hatchback (53_, 54_, 58_, 59_)	1.7 D	44	07/92 – 01/98	3623	
ASTRA F Hatchback (53_, 54_, 58_, 59_)	1.7 TD	50	11/94 – 01/98	3470	
ASTRA F Hatchback (53_, 54_, 58_, 59_)	1.7 TD	50	11/94 – 01/98	3505	
ASTRA F Hatchback (53_, 54_, 58_, 59_)	1.7 TD	50	11/94 – 01/98	3615	
ASTRA F Hatchback (53_, 54_, 58_, 59_)	1.7 TD	50	11/94 – 01/98	3623	
ASTRA F Hatchback (53_, 54_, 58_, 59_)	1.7 TDS	60	12/91 – 01/98	3470	
ASTRA F Hatchback (53_, 54_, 58_, 59_)	1.7 TDS	60	12/91 – 01/98	3505	
ASTRA F Hatchback (53_, 54_, 58_, 59_)	1.7 TDS	60	12/91 – 01/98	3615	
ASTRA F Hatchback (53_, 54_, 58_, 59_)	1.7 TDS	60	12/91 – 01/98	3623	
ASTRA F Hatchback (53_, 54_, 58_, 59_)	1.8 i	66	09/91 – 01/98	3623	
ASTRA F Hatchback (53_, 54_, 58_, 59_)	1.8 i 16V	85	09/94 – 01/98	3470	3469
ASTRA F Hatchback (53_, 54_, 58_, 59_)	1.8 i 16V	85	09/94 – 01/98	3505	
ASTRA F Hatchback (53_, 54_, 58_, 59_)	1.8 i 16V	85	09/94 – 01/98	3615	
ASTRA F Hatchback (53_, 54_, 58_, 59_)	1.8 i 16V	92	06/93 – 08/94	3470	3469
ASTRA F Hatchback (53_, 54_, 58_, 59_)	1.8 i 16V	92	06/93 – 08/94	3505	
ASTRA F Hatchback (53_, 54_, 58_, 59_)	1.8 i 16V	92	06/93 – 08/94	3615	
ASTRA F Hatchback (53_, 54_, 58_, 59_)	2.0 GSI 16V	110	09/91 – 01/98	3470	3469
ASTRA F Hatchback (53_, 54_, 58_, 59_)	2.0 GSI 16V	110	09/91 – 01/98	3505	
ASTRA F Hatchback (53_, 54_, 58_, 59_)	2.0 GSI 16V	110	09/91 – 01/98	3615	
ASTRA F Hatchback (53_, 54_, 58_, 59_)	2.0 i	85	09/91 – 01/98	3470	3469
ASTRA F Hatchback (53_, 54_, 58_, 59_)	2.0 i	85	09/91 – 01/98	3505	
ASTRA F Hatchback (53_, 54_, 58_, 59_)	2.0 i	85	09/91 – 01/98	3615	
ASTRA F Hatchback (53_, 54_, 58_, 59_)	2.0 i 16V	100	02/95 – 01/98	3470	3469
ASTRA F Hatchback (53_, 54_, 58_, 59_)	2.0 i 16V	100	02/95 – 01/98	3505	
ASTRA F Hatchback (53_, 54_, 58_, 59_)	2.0 i 16V	100	02/95 – 01/98	3615	
ASTRA F Van (55_)	1.4 i	44	10/91 – 01/99	3623	
ASTRA F Van (55_)	1.6 i	52	02/93 – 07/96	3623	
ASTRA F Van (55_)	1.6 i	55	10/91 – 04/93	3623	
ASTRA F Van (55_)	1.6 i 16V	74	08/94 – 03/98	3470	
ASTRA F Van (55_)	1.6 i 16V	74	08/94 – 03/98	3505	
ASTRA F Van (55_)	1.6 i 16V	74	08/94 – 03/98	3615	
ASTRA F Van (55_)	1.6 i 16V	74	08/94 – 03/98	3623	

MAKE & MODEL			KW	YEAR		
OPEL						
ASTRA F Van (55_)	1.7 D		42	12/91 – 09/92	3470	
ASTRA F Van (55_)	1.7 D		42	12/91 – 09/92	3505	
ASTRA F Van (55_)	1.7 D		42	12/91 – 09/92	3615	
ASTRA F Van (55_)	1.7 D		42	12/91 – 09/92	3623	
ASTRA F Van (55_)	1.7 D		44	07/92 – 01/99	3470	
ASTRA F Van (55_)	1.7 D		44	07/92 – 01/99	3505	
ASTRA F Van (55_)	1.7 D		44	07/92 – 01/99	3615	
ASTRA F Van (55_)	1.7 D		44	07/92 – 01/99	3623	
ASTRA F Van (55_)	1.7 TD		50	08/94 – 01/99	3470	
ASTRA F Van (55_)	1.7 TD		50	08/94 – 01/99	3505	
ASTRA F Van (55_)	1.7 TD		50	08/94 – 01/99	3615	
ASTRA F Van (55_)	1.7 TD		50	08/94 – 01/99	3623	
ASTRA F Van (55_)	1.7 TD		60	03/95 – 02/98	3470	
ASTRA F Van (55_)	1.7 TD		60	03/95 – 02/98	3505	
ASTRA F Van (55_)	1.7 TD		60	03/95 – 02/98	3615	
ASTRA F Van (55_)	1.7 TD		60	03/95 – 02/98	3623	
ASTRA G (F35_)	1.2 16V (X 12 XE)		48	02/98 – 09/00		3763
ASTRA G (F35_)	1.4 16V (X 14 XE)		66	06/98 – 07/04		3763
ASTRA G (F35_)	1.4 16V (Z 14 XE)		66	06/98 – 07/04		3763
ASTRA G (F35_)	1.6 (X 16 SZR)		55	02/98 – 09/00		3763
ASTRA G (F35_)	1.6 16V (X 16 XEL)		74	02/98 – 07/04		3763
ASTRA G (F35_)	1.6 16V (Z 16 XE)		74	02/98 – 0 7/04		3763
ASTRA G (F35_)	1.7 DTI 16V (Y 17 DT)		55	02/00 – 07/04		3763
ASTRA G (F35_)	1.7 TD (X 17 DTL)		50	02/98 – 08/00		3763
ASTRA G (F35_)	1.8 16V (X 18 XE1)		85	02/98 – 09/00		3763
ASTRA G (F35_)	2.0 16V (X 20 XEV)		100	02/98 – 07/04		3763
ASTRA G (F35_)	2.0 DI (X 20 DTL)		60	02/98 – 07/04		3763
ASTRA G (F35_)	2.0 DI (Y 20 DTL)		60	02/98 – 07/04		3763
ASTRA G (F35_)	2.0 DTI 16V (X 20 DTH)		74	08/99 – 07/04		3763
ASTRA G (F35_)	2.0 DTI 16V (Y 20 DTH)		74	08/99 – 07/04		3763
ASTRA G (F48_, F08_)	1.2 16V (X 12 XE)		48	02/98 – 09/00		3763
ASTRA G (F48_, F08_)	1.4 16V (X 14 XE)		66	02/98 – 01/05		3763
ASTRA G (F48_, F08_)	1.4 16V (Z 14 XE)		66	02/98 – 01/05		3763
ASTRA G (F48_, F08_)	1.6 (X 16 SZR)		55	02/98 – 09/00		3763
ASTRA G (F48_, F08_)	1.6 16V (C 16 SEL)		74	02/98 – 01/05		3763
ASTRA G (F48_, F08_)	1.6 16V (X 16 XEL)		74	02/98 – 01/05		3763
ASTRA G (F48_, F08_)	1.6 16V (Z 16 XE)		74	02/98 – 01/05		3763
ASTRA G (F48_, F08_)	1.7 DTI 16V (Y 17 DT)		55	02/00 – 01/05		3763
ASTRA G (F48_, F08_)	1.7 TD (X 17 DTL)		50	02/98 – 08/00		3763
ASTRA G (F48_, F08_)	1.8 16V (X 18 XE1)		85	02/98 – 09/00		3763
ASTRA G (F48_, F08_)	2.0 16V (C 20 SEL)		100	02/98 – 01/05		3763
ASTRA G (F48_, F08_)	2.0 16V (X 20 XEV)		100	02/98 – 01/05		3763
ASTRA G (F48_, F08_)	2.0 DI (X 20 DTL)		60	02/98 – 01/05		3763
ASTRA G (F48_, F08_)	2.0 DI (Y 20 DTL)		60	02/98 – 01/05		3763
ASTRA G (F48_, F08_)	2.0 DTI 16V (X 20 DTH)		74	08/99 – 01/05		3763
ASTRA G (F48_, F08_)	2.0 DTI 16V (Y 20 DTH)		74	08/99 – 01/05		3763
ASTRA G (F69_)	1.2 16V (X 12 XE)		48	09/98 – 09/00		3763
ASTRA G (F69_)	1.4 16V (X 14 XE)		66	09/98 – 01/05		3763
ASTRA G (F69_)	1.4 16V (Z 14 XE)		66	09/98 – 01/05		3763
ASTRA G (F69_)	1.6 (X 16 SZR)		55	09/98 – 09/00		3763
ASTRA G (F69_)	1.6 16V (X 16 XEL)		74	09/98 – 01/05		3763
ASTRA G (F69_)	1.6 16V (Z 16 XE)		74	09/98 – 01/05		3763
ASTRA G (F69_)	1.7 DTI 16V (Y 17 DT)		55	02/00 – 01/05		3763
ASTRA G (F69_)	1.7 TD (X 17 DTL)		50	09/98 – 08/00		3763
ASTRA G (F69_)	1.8 16V (X 18 XE1)		85	09/98 – 09/00		3763
ASTRA G (F69_)	2.0 16V (X 20 XEV)		100	09/98 – 01/05		3763
ASTRA G (F69_)	2.0 DI (X 20 DTL)		60	09/98 – 01/05		3763
ASTRA G (F69_)	2.0 DI (Y 20 DTL)		60	09/98 – 01/05		3763
ASTRA G (F69_)	2.0 DTI 16V (X 20 DTH)		74	08/99 – 01/05		3763
ASTRA G (F69_)	2.0 DTI 16V (Y 20 DTH)		74	08/99 – 01/05		3763
ASTRA G Box (F70)	1.6		55	01/99 – 09/00	3762	4040
ASTRA G Box (F70)	1.6		62	09/00 – 04/05	3762	4040
ASTRA G Box (F70)	1.6		76	10/04 – 04/05	3762	4040
ASTRA G Box (F70)	1.7 DTI 16V		55	02/00 – 04/05	3762	4040
ASTRA G Box (F70)	1.7 TD		50	01/99 – 04/05	3762	4040
ASTRA G Box (F70)	2.0 DI		60	01/99 – 04/05	3762	4040
ASTRA G Box (F70)	2.0 DI		60	01/99 – 04/05	4042	
ASTRA G Convertible (F67)	1.6		76	01/03 – 10/05	3762	4040
ASTRA G Convertible (F67)	1.6 16V		74	03/01 – 10/05	3762	4040
ASTRA G Convertible (F67)	1.8 16V		92	03/01 – 10/05	3762	4040
ASTRA G Convertible (F67)	1.8 16V		92	03/01 – 10/05	4042	
ASTRA G Convertible (F67)	2.0 16V Turbo		147	11/02 – 10/05		4040
ASTRA G Convertible (F67)	2.0 OPC		141	03/02 – 10/05		4040
ASTRA G Convertible (F67)	2.2 16V		108	03/01 – 10/05	4042	4040
ASTRA G Convertible (F67)	2.2 DTI		92	09/02 – 10/05	4042	4040
ASTRA G Coupe (F07_)	1.6 16V		74	03/00 – 05/05	3762	4040

MAKE & MODEL		KW	YEAR		
OPEL					
ASTRA G Coupe (F07_)	1.6 16V	76	03/00 – 05/05	3762	4040
ASTRA G Coupe (F07_)	1.8 16V	85	03/00 – 10/00	3762	4040
ASTRA G Coupe (F07_)	1.8 16V	85	03/00 – 10/00	4042	
ASTRA G Coupe (F07_)	1.8 16V	92	09/00 – 05/05	3762	4040
ASTRA G Coupe (F07_)	1.8 16V	92	09/00 – 05/05	4042	
ASTRA G Coupe (F07_)	2.0 16V Turbo	140	09/00 – 08/01		4040
ASTRA G Coupe (F07_)	2.0 16V Turbo	141	08/01 – 05/05		4040
ASTRA G Coupe (F07_)	2.0 16V Turbo	147	11/02 – 05/05		4040
ASTRA G Coupe (F07_)	2.2 16V	108	09/00 – 05/05	4042	4040
ASTRA G Coupe (F07_)	2.2 DTI	92	09/02 – 05/05	4042	4040
ASTRA G Estate (F35_)	1.2 16V	48	02/98 – 09/00	3762	4040
ASTRA G Estate (F35_)	1.2 16V	55	09/00 – 07/04	3762	4040
ASTRA G Estate (F35_)	1.4	66	10/04 – 12/09	3762	4040
ASTRA G Estate (F35_)	1.4 16V	66	06/98 – 07/04	3762	4040
ASTRA G Estate (F35_)	1.6	55	02/98 – 09/00	3762	4040
ASTRA G Estate (F35_)	1.6	62	09/00 – 07/04	3762	4040
ASTRA G Estate (F35_)	1.6	76	12/02 – 07/09	3762	4040
ASTRA G Estate (F35_)	1.6 16V	74	02/98 – 07/04	3762	4040
ASTRA G Estate (F35_)	1.6 CNG	71	03/03 – 07/04	4042	4040
ASTRA G Estate (F35_)	1.7 CDTI	59	04/03 – 07/09	3762	4040
ASTRA G Estate (F35_)	1.7 DTI 16V	55	02/00 – 07/04	3762	4040
ASTRA G Estate (F35_)	1.7 TD	50	02/98 – 08/00	3762	4040
ASTRA G Estate (F35_)	1.8 16V	85	02/98 – 09/00	3762	4040
ASTRA G Estate (F35_)	1.8 16V	85	02/98 – 09/00	4042	
ASTRA G Estate (F35_)	1.8 16V	92	09/00 – 07/04	3762	4040
ASTRA G Estate (F35_)	1.8 16V	92	09/00 – 07/04	4042	
ASTRA G Estate (F35_)	2.0 16V	100	02/98 – 07/04	4042	4040
ASTRA G Estate (F35_)	2.0 DI	60	02/98 – 07/04	3762	4040
ASTRA G Estate (F35_)	2.0 DI	60	02/98 – 07/04	4042	
ASTRA G Estate (F35_)	2.0 DTI 16V	74	08/99 – 07/04	3762	4040
ASTRA G Estate (F35_)	2.0 DTI 16V	74	08/99 – 07/04	4042	
ASTRA G Estate (F35_)	2.0 OPC	141	09/02 – 07/04		4040
ASTRA G Estate (F35_)	2.0 OPC	147	11/02 – 07/04		4040
ASTRA G Estate (F35_)	2.2 16V	108	03/01 – 07/04	4042	4040
ASTRA G Estate (F35_)	2.2 DTI	86	09/02 – 07/04	4042	4040
ASTRA G Estate (F35_)	2.2 DTI	92	09/02 – 07/04	4042	4040
ASTRA G Hatchback (F48_, F08_)	1.2 16V	48	02/98 – 09/00	3762	4040
ASTRA G Hatchback (F48_, F08_)	1.2 16V	55	09/00 – 01/05	3762	4040
ASTRA G Hatchback (F48_, F08_)	1.4	66	09/07 – 12/09	3762	4040
ASTRA G Hatchback (F48_, F08_)	1.4 16V	66	02/98 – 01/05	3762	4040
ASTRA G Hatchback (F48_, F08_)	1.6	55	02/98 – 09/00	3762	4040
ASTRA G Hatchback (F48_, F08_)	1.6	62	09/00 – 01/05	3762	4040
ASTRA G Hatchback (F48_, F08_)	1.6	76	12/02 – 12/09	3762	4040
ASTRA G Hatchback (F48_, F08_)	1.6 16V	74	02/98 – 01/05	3762	4040
ASTRA G Hatchback (F48_, F08_)	1.6 LPG	74	06/02 – 01/05	3762	4040
ASTRA G Hatchback (F48_, F08_)	1.7 CDTI	59	04/03 – 12/09	3762	4040
ASTRA G Hatchback (F48_, F08_)	1.7 DTI 16V	55	02/00 – 01/05	3762	4040
ASTRA G Hatchback (F48_, F08_)	1.7 TD	50	02/98 – 08/00	3762	4040
ASTRA G Hatchback (F48_, F08_)	1.8	81	02/03 – 01/04	3762	
ASTRA G Hatchback (F48_, F08_)	1.8 16V	85	02/98 – 09/00	3762	4040
ASTRA G Hatchback (F48_, F08_)	1.8 16V	85	02/98 – 09/00	4042	
ASTRA G Hatchback (F48_, F08_)	1.8 16V	92	09/00 – 01/05	3762	4040
ASTRA G Hatchback (F48_, F08_)	1.8 16V	92	09/00 – 01/05	4042	
ASTRA G Hatchback (F48_, F08_)	2.0 16V	100	02/98 – 01/05	4042	4040
ASTRA G Hatchback (F48_, F08_)	2.0 16V OPC	118	11/99 – 09/02		4040
ASTRA G Hatchback (F48_, F08_)	2.0 DI	60	02/98 – 01/05	3762	4040
ASTRA G Hatchback (F48_, F08_)	2.0 DI	60	02/98 – 01/05	4042	
ASTRA G Hatchback (F48_, F08_)	2.0 DTI 16V	74	08/99 – 01/05	3762	4040
ASTRA G Hatchback (F48_, F08_)	2.0 DTI 16V	74	08/99 – 01/05	4042	
ASTRA G Hatchback (F48_, F08_)	2.0 OPC	141	09/02 – 01/05		4040
ASTRA G Hatchback (F48_, F08_)	2.0 OPC	147	11/02 – 01/05		4040
ASTRA G Hatchback (F48_, F08_)	2.2 16V	108	06/00 – 01/05	4042	4040
ASTRA G Hatchback (F48_, F08_)	2.2 DTI	86	09/02 – 01/05	4042	4040
ASTRA G Hatchback (F48_, F08_)	2.2 DTI	92	09/02 – 01/05	4042	4040
ASTRA G Saloon (F69_)	1.2 16V	48	09/98 – 09/00	3762	4040
ASTRA G Saloon (F69_)	1.2 16V	55	09/00 – 01/05	3762	4040
ASTRA G Saloon (F69_)	1.4	66	09/07 – 12/09	3762	4040
ASTRA G Saloon (F69_)	1.4 16V	66	09/98 – 01/05	3762	4040
ASTRA G Saloon (F69_)	1.6	55	09/98 – 09/00	3762	4040
ASTRA G Saloon (F69_)	1.6	62	09/00 – 01/05	3762	4040
ASTRA G Saloon (F69_)	1.6	76	12/02 – 12/09	3762	4040
ASTRA G Saloon (F69_)	1.6 16V	74	09/98 – 01/05	3762	4040
ASTRA G Saloon (F69_)	1.6 LPG	74	06/02 – 01/05	3762	4040
ASTRA G Saloon (F69_)	1.7 CDTI	59	04/03 – 12/09	3762	4040
ASTRA G Saloon (F69_)	1.7 DTI 16V	55	02/00 – 01/05	3762	4040
ASTRA G Saloon (F69_)	1.7 TD	50	09/98 – 08/00	3762	4040

MAKE & MODEL		KW	YEAR		
OPEL					
ASTRA G Saloon (F69_)	1.8 16V	85	09/98 – 09/00	3762	4040
ASTRA G Saloon (F69_)	1.8 16V	85	09/98 – 09/00	4042	
ASTRA G Saloon (F69_)	1.8 16V	92	06/00 – 01/05	3762	4040
ASTRA G Saloon (F69_)	1.8 16V	92	06/00 – 01/05	4042	
ASTRA G Saloon (F69_)	2.0 16V	100	09/98 – 01/05	4042	4040
ASTRA G Saloon (F69_)	2.0 DI	60	09/98 – 01/05	3762	4040
ASTRA G Saloon (F69_)	2.0 DI	60	09/98 – 01/05	4042	
ASTRA G Saloon (F69_)	2.0 DTI 16V	74	08/99 – 01/05	3762	4040
ASTRA G Saloon (F69_)	2.0 DTI 16V	74	08/99 – 01/05	4042	
ASTRA G Saloon (F69_)	2.2 16V	108	03/01 – 01/05	4042	4040
ASTRA G Saloon (F69_)	2.2 DTI	86	09/02 – 01/05	4042	4040
ASTRA G Saloon (F69_)	2.2 DTI	92	09/02 – 01/05	4042	4040
ASTRA GTC J	1.4	74	10/11 -	4014	
ASTRA GTC J	1.4	74	10/11 -	4008	
ASTRA GTC J	1.4	74	10/11 -	4149	
ASTRA GTC J	1.4	74	10/11 -	4230	
ASTRA GTC J	1.4	88	10/11 -	4014	
ASTRA GTC J	1.4	88	10/11 -	4008	
ASTRA GTC J	1.4	88	10/11 -	4149	
ASTRA GTC J	1.4	88	10/11 -	4230	
ASTRA GTC J	1.4	103	10/11 -	4014	
ASTRA GTC J	1.4	103	10/11 -	4008	
ASTRA GTC J	1.4	103	10/11 -	4149	
ASTRA GTC J	1.4	103	10/11 -	4230	
ASTRA GTC J	1.6	132	10/11 -	4014	
ASTRA GTC J	1.6	132	10/11 -	4008	
ASTRA GTC J	1.6	132	10/11 -	4149	
ASTRA GTC J	1.6	132	10/11 -	4230	
ASTRA GTC J	1.6 CDTI	81	07/14 -	4014	
ASTRA GTC J	1.6 CDTI	81	07/14 -	4008	
ASTRA GTC J	1.6 CDTI	81	07/14 -	4149	
ASTRA GTC J	1.6 CDTI	81	07/14 -	4230	
ASTRA GTC J	1.6 CDTI	100	07/14 -	4014	
ASTRA GTC J	1.6 CDTI	100	07/14 -	4008	
ASTRA GTC J	1.6 CDTI	100	07/14 -	4149	
ASTRA GTC J	1.6 CDTI	100	07/14 -	4230	
ASTRA GTC J	1.6 SIDI	125	12/12 -	4014	
ASTRA GTC J	1.6 SIDI	125	12/12 -	4008	
ASTRA GTC J	1.6 SIDI	125	12/12 -	4149	
ASTRA GTC J	1.6 SIDI	125	12/12 -	4230	
ASTRA GTC J	1.6 SIDI	147	07/13 -	4014	
ASTRA GTC J	1.6 SIDI	147	07/13 -	4008	
ASTRA GTC J	1.6 SIDI	147	07/13 -	4149	
ASTRA GTC J	1.6 SIDI	147	07/13 -	4230	
ASTRA GTC J	1.7 CDTI	81	10/11 -	4014	
ASTRA GTC J	1.7 CDTI	81	10/11 -	4008	
ASTRA GTC J	1.7 CDTI	81	10/11 -	4149	
ASTRA GTC J	1.7 CDTI	81	10/11 -	4230	
ASTRA GTC J	1.7 CDTI	96	10/11 -	4014	
ASTRA GTC J	1.7 CDTI	96	10/11 -	4008	
ASTRA GTC J	1.7 CDTI	96	10/11 -	4149	
ASTRA GTC J	1.7 CDTI	96	10/11 -	4230	
ASTRA GTC J	1.8	103	10/11 -	4014	
ASTRA GTC J	1.8	103	10/11 -	4008	
ASTRA GTC J	1.8	103	10/11 -	4149	
ASTRA GTC J	1.8	103	10/11 -	4230	
ASTRA GTC J	2.0	206	04/12 -	4014	
ASTRA GTC J	2.0 BiTurbo CDTI	143	10/12 -	4014	
ASTRA GTC J	2.0 BiTurbo CDTI	143	10/12 -	4008	
ASTRA GTC J	2.0 BiTurbo CDTI	143	10/12 -	4149	
ASTRA GTC J	2.0 BiTurbo CDTI	143	10/12 -	4230	
ASTRA GTC J	2.0 CDTI	121	10/11 -	4014	
ASTRA GTC J	2.0 CDTI	121	10/11 -	4008	
ASTRA GTC J	2.0 CDTI	121	10/11 -	4149	
ASTRA GTC J	2.0 CDTI	121	10/11 -	4230	
ASTRA H (L48)	1.2	59	08/05 – 10/10	4042	4040
ASTRA H (L48)	1.3 CDTI	66	08/05 – 10/10	4042	4040
ASTRA H (L48)	1.4	55	04/04 – 10/04	4042	4040
ASTRA H (L48)	1.4	59	04/04 – 10/04	4042	4040
ASTRA H (L48)	1.4	66	03/04 – 10/10	4042	4040
ASTRA H (L48)	1.4 LPG	66	08/09 – 10/10	4042	4040
ASTRA H (L48)	1.6	77	03/04 – 10/10	4042	4040
ASTRA H (L48)	1.6	85	12/06 – 05/14	4042	4040
ASTRA H (L48)	1.6 Turbo	132	02/07 – 10/10	4042	4040
ASTRA H (L48)	1.7 CDTI	59	03/04 – 10/10	4042	4040
ASTRA H (L48)	1.7 CDTI	74	03/04 – 10/10	4042	4040

MAKE & MODEL   		KW	YEAR		
OPEL					
ASTRA H (L48)	1.7 CDTI	81	02/07 – 05/14	4042	4040
ASTRA H (L48)	1.7 CDTI	92	02/07 – 05/14	4042	4040
ASTRA H (L48)	1.8	92	03/04 – 10/10	4042	4040
ASTRA H (L48)	1.8	103	01/06 – 10/10	4042	4040
ASTRA H (L48)	1.9 CDTI	74	09/05 – 10/10	4042	4040
ASTRA H (L48)	1.9 CDTI	88	06/04 – 10/10	4042	4040
ASTRA H (L48)	1.9 CDTI	110	09/04 – 10/10	4042	4040
ASTRA H (L48)	1.9 CDTI 16V	88	04/04 – 10/10	4042	4040
ASTRA H (L48)	2.0 Turbo	125	03/04 – 10/10	4042	4040
ASTRA H (L48)	2.0 Turbo	147	09/04 – 10/10	4042	4040
ASTRA H (L48)	2.0 Turbo	177	03/05 – 10/10		4040
ASTRA H Box (L70)	1.3 CDTI	66	08/05 – 10/10	4042	4040
ASTRA H Box (L70)	1.6	76	02/04 – 11/04	4042	4040
ASTRA H Box (L70)	1.7 CDTI	74	03/04 – 10/10	4042	4040
ASTRA H Box (L70)	1.7 CDTI	81	02/07 – 10/10	4042	4040
ASTRA H Box (L70)	1.7 CDTI	92	02/07 – 10/10	4042	4040
ASTRA H Box (L70)	1.9 CDTI	88	09/05 – 10/10	4042	4040
ASTRA H Box (L70)	1.9 CDTI	110	09/04 – 10/10	4042	4040
ASTRA H Box (L70)	1.9 CDTI 16V	88	08/04 – 10/10	4042	4040
ASTRA H Estate (L35)	1.3 CDTI	66	08/05 – 10/10	4042	4040
ASTRA H Estate (L35)	1.4	55	08/04 – 10/10	4042	4040
ASTRA H Estate (L35)	1.4	66	08/04 – 10/10	4042	4040
ASTRA H Estate (L35)	1.4 LPG	66	08/09 – 10/10	4042	4040
ASTRA H Estate (L35)	1.6	77	08/04 – 10/10	4042	4040
ASTRA H Estate (L35)	1.6	85	12/06 – 05/14	4042	4040
ASTRA H Estate (L35)	1.6 LPG	85	08/09 – 10/10	4042	4040
ASTRA H Estate (L35)	1.6 Turbo	132	02/07 – 10/10	4042	4040
ASTRA H Estate (L35)	1.7 CDTI	59	08/04 – 10/10	4042	4040
ASTRA H Estate (L35)	1.7 CDTI	74	08/04 – 10/10	4042	4040
ASTRA H Estate (L35)	1.7 CDTI	81	02/07 – 05/14	4042	4040
ASTRA H Estate (L35)	1.7 CDTI	92	02/07 – 05/14	4042	4040
ASTRA H Estate (L35)	1.8	92	08/04 – 10/10	4042	4040
ASTRA H Estate (L35)	1.8	103	08/05 – 10/10	4042	4040
ASTRA H Estate (L35)	1.9 CDTI	74	09/05 – 10/10	4042	4040
ASTRA H Estate (L35)	1.9 CDTI	88	09/05 – 10/10	4042	4040
ASTRA H Estate (L35)	1.9 CDTI	110	09/04 – 10/10	4042	4040
ASTRA H Estate (L35)	1.9 CDTI 16V	88	08/04 – 10/10	4042	4040
ASTRA H Estate (L35)	2.0 Turbo	125	08/04 – 10/10	4042	4040
ASTRA H Estate (L35)	2.0 Turbo	147	09/04 – 10/10	4042	4040
ASTRA H GTC (L08)	1.2	59	08/05 – 10/10	4042	4040
ASTRA H GTC (L08)	1.3 CDTI	66	04/05 – 10/10	4042	4040
ASTRA H GTC (L08)	1.4	55	03/05 – 10/10	4042	4040
ASTRA H GTC (L08)	1.4	66	03/05 – 10/10	4042	4040
ASTRA H GTC (L08)	1.6	77	03/05 – 10/10	4042	4040
ASTRA H GTC (L08)	1.6	85	12/06 – 10/10	4042	4040
ASTRA H GTC (L08)	1.6 Turbo	132	02/07 – 10/10	4042	4040
ASTRA H GTC (L08)	1.7 CDTI	59	03/05 – 10/10	4042	4040
ASTRA H GTC (L08)	1.7 CDTI	74	03/05 – 10/10	4042	4040
ASTRA H GTC (L08)	1.7 CDTI	81	02/07 – 10/10	4042	4040
ASTRA H GTC (L08)	1.7 CDTi	92	02/07 – 10/10	4042	4040
ASTRA H GTC (L08)	1.8	92	03/05 – 10/10	4042	4040
ASTRA H GTC (L08)	1.8	103	01/06 – 10/10	4042	4040
ASTRA H GTC (L08)	1.9 CDTI	74	01/06 – 10/10	4042	4040
ASTRA H GTC (L08)	1.9 CDTI	88	09/05 – 10/10	4042	4040
ASTRA H GTC (L08)	1.9 CDTi	110	03/05 – 10/10	4042	4040
ASTRA H GTC (L08)	1.9 CDTi 16V	88	03/05 – 10/10	4042	4040
ASTRA H GTC (L08)	2.0 Turbo	125	03/05 – 10/10	4042	4040
ASTRA H GTC (L08)	2.0 Turbo	147	03/05 – 10/10	4042	4040
ASTRA H GTC (L08)	2.0 Turbo	177	08/05 – 10/10		4040
ASTRA H Saloon (L69)	1.3 CDTi	66	02/07 – 10/10	4042	4040
ASTRA H Saloon (L69)	1.6	85	02/07 – 05/14	4042	4040
ASTRA H Saloon (L69)	1.7 CDTI	74	02/07 – 10/10	4042	4040
ASTRA H Saloon (L69)	1.7 CDTi	81	02/07 – 05/14	4042	4040
ASTRA H Saloon (L69)	1.7 CDTi	92	02/07 – 05/14	4042	4040
ASTRA H Saloon (L69)	1.8	103	02/07 – 10/10	4042	4040
ASTRA H TwinTop (L67)	1.6	77	09/05 – 10/10	4042	4040
ASTRA H TwinTop (L67)	1.6	85	12/06 – 10/10	4042	4040
ASTRA H TwinTop (L67)	1.6 Turbo	132	02/07 – 10/10	4042	4040
ASTRA H TwinTop (L67)	1.8	92	09/05 – 10/10	4042	4040
ASTRA H TwinTop (L67)	1.8	103	09/05 – 10/10	4042	4040
ASTRA H TwinTop (L67)	1.9 CDTi	110	09/05 – 10/10	4042	4040
ASTRA H TwinTop (L67)	2.0 Turbo	125	09/05 – 10/10	4042	4040
ASTRA H TwinTop (L67)	2.0 Turbo	147	09/05 – 10/10		4040
ASTRA J	1.3 CDTI	70	12/09 -	4014	
ASTRA J	1.3 CDTI	70	12/09 -	4008	
ASTRA J	1.3 CDTI	70	12/09 -	4230	

MAKE & MODEL		KW	YEAR		
OPEL					
ASTRA J	1.4	64	12/09 -	4014	
ASTRA J	1.4	64	12/09 -	4008	
ASTRA J	1.4	64	12/09 -	4230	
ASTRA J	1.4	74	12/09 -	4014	
ASTRA J	1.4	74	12/09 -	4008	
ASTRA J	1.4	74	12/09 -	4230	
ASTRA J	1.4 LPG	103	01/12 -	4014	
ASTRA J	1.4 LPG	103	01/12 -	4008	
ASTRA J	1.4 LPG	103	01/12 -	4230	
ASTRA J	1.4 Turbo	88	10/10 -	4014	
ASTRA J	1.4 Turbo	88	10/10 -	4008	
ASTRA J	1.4 Turbo	88	10/10 -	4230	
ASTRA J	1.4 Turbo	103	12/09 -	4014	
ASTRA J	1.4 Turbo	103	12/09 -	4008	
ASTRA J	1.4 Turbo	103	12/09 -	4230	
ASTRA J	1.6	85	12/09 -	4014	
ASTRA J	1.6	85	12/09 -	4008	
ASTRA J	1.6	85	12/09 -	4230	
ASTRA J	1.6 CDTi	81	02/14 -	4014	
ASTRA J	1.6 CDTi	81	02/14 -	4008	
ASTRA J	1.6 CDTi	81	02/14 -	4230	
ASTRA J	1.6 CDTi	100	01/14 -	4008	4014
ASTRA J	1.6 CDTi	100	01/14 -	4230	4014
ASTRA J	1.6 CDTi	100	01/14 -	4014	
ASTRA J	1.6 SIDI	125	12/12 -	4014	
ASTRA J	1.6 SIDI	125	12/12 -	4008	
ASTRA J	1.6 SIDI	125	12/12 -	4230	
ASTRA J	1.6 Turbo	132	12/09 -	4014	
ASTRA J	1.6 Turbo	132	12/09 -	4008	
ASTRA J	1.6 Turbo	132	12/09 -	4230	
ASTRA J	1.7 CDTI	74	10/10 -	4014	
ASTRA J	1.7 CDTI	74	10/10 -	4008	
ASTRA J	1.7 CDTI	74	10/10 -	4230	
ASTRA J	1.7 CDTI	81	12/09 -	4014	
ASTRA J	1.7 CDTI	81	12/09 -	4008	
ASTRA J	1.7 CDTI	81	12/09 -	4230	
ASTRA J	1.7 CDTI	92	12/09 -	4014	
ASTRA J	1.7 CDTI	92	12/09 -	4008	
ASTRA J	1.7 CDTI	92	12/09 -	4230	
ASTRA J	1.7 CDTI	96	12/09 -	4014	
ASTRA J	1.7 CDTI	96	12/09 -	4008	
ASTRA J	1.7 CDTI	96	12/09 -	4230	
ASTRA J	2.0 BiTurbo CDTI	143	12/12 -	4014	
ASTRA J	2.0 BiTurbo CDTI	143	12/12 -	4008	
ASTRA J	2.0 BiTurbo CDTI	143	12/12 -	4230	
ASTRA J	2.0 CDTI	118	12/09 -	4014	
ASTRA J	2.0 CDTI	118	12/09 -	4008	
ASTRA J	2.0 CDTI	121	06/11 -	4014	
ASTRA J	2.0 CDTI	121	06/11 -	4008	
ASTRA J	2.0 CDTI	121	06/11 -	4230	
ASTRA J Saloon	1.3 CDTI	70	06/12 -	4014	
ASTRA J Saloon	1.3 CDTI	70	06/12 -	4008	
ASTRA J Saloon	1.3 CDTI	70	06/12 -	4230	
ASTRA J Saloon	1.4	74	06/12 -	4014	
ASTRA J Saloon	1.4	74	06/12 -	4008	
ASTRA J Saloon	1.4	74	06/12 -	4230	
ASTRA J Saloon	1.4 LPG	103	07/14 -	4014	
ASTRA J Saloon	1.4 LPG	103	07/14 -	4008	
ASTRA J Saloon	1.4 LPG	103	07/14 -	4230	
ASTRA J Saloon	1.4 Turbo	88	06/12 -	4014	
ASTRA J Saloon	1.4 Turbo	88	06/12 -	4008	
ASTRA J Saloon	1.4 Turbo	88	06/12 -	4230	
ASTRA J Saloon	1.4 Turbo	103	06/12 -	4014	
ASTRA J Saloon	1.4 Turbo	103	06/12 -	4008	
ASTRA J Saloon	1.4 Turbo	103	06/12 -	4230	
ASTRA J Saloon	1.6	85	06/12 -	4014	
ASTRA J Saloon	1.6	85	06/12 -	4008	
ASTRA J Saloon	1.6	85	06/12 -	4230	
ASTRA J Saloon	1.6 CDTi	81	04/14 -	4014	
ASTRA J Saloon	1.6 CDTi	81	04/14 -	4008	
ASTRA J Saloon	1.6 CDTi	81	04/14 -	4230	
ASTRA J Saloon	1.6 CDTi	100	01/14 -	4014	
ASTRA J Saloon	1.6 CDTi	100	01/14 -	4008	
ASTRA J Saloon	1.6 CDTi	100	01/14 -	4230	
ASTRA J Saloon	1.6 SIDI	125	12/12 -	4014	
ASTRA J Saloon	1.6 SIDI	125	12/12 -	4008	

MAKE & MODEL		KW	YEAR		
OPEL					
ASTRA J Saloon	1.6 SIDI	125	12/12 -	4230	
ASTRA J Saloon	1.6 Turbo	132	06/12 -	4014	
ASTRA J Saloon	1.6 Turbo	132	06/12 -	4008	
ASTRA J Saloon	1.6 Turbo	132	06/12 -	4230	
ASTRA J Saloon	1.7 CDTI	81	06/12 -	4014	
ASTRA J Saloon	1.7 CDTI	81	06/12 -	4008	
ASTRA J Saloon	1.7 CDTI	81	06/12 -	4230	
ASTRA J Saloon	1.7 CDTI	96	06/12 -	4014	
ASTRA J Saloon	1.7 CDTI	96	06/12 -	4008	
ASTRA J Saloon	1.7 CDTI	96	06/12 -	4230	
ASTRA J Sports Tourer	1.3 CDTI	70	10/10 -	4014	
ASTRA J Sports Tourer	1.3 CDTI	70	10/10 -	4008	
ASTRA J Sports Tourer	1.3 CDTI	70	10/10 -	4230	
ASTRA J Sports Tourer	1.4	74	10/10 -	4014	
ASTRA J Sports Tourer	1.4	74	10/10 -	4008	
ASTRA J Sports Tourer	1.4	74	10/10 -	4230	
ASTRA J Sports Tourer	1.4 LPG	103	01/12 -	4014	
ASTRA J Sports Tourer	1.4 LPG	103	01/12 -	4008	
ASTRA J Sports Tourer	1.4 LPG	103	01/12 -	4230	
ASTRA J Sports Tourer	1.4 Turbo	88	10/10 -	4014	
ASTRA J Sports Tourer	1.4 Turbo	88	10/10 -	4008	
ASTRA J Sports Tourer	1.4 Turbo	88	10/10 -	4230	
ASTRA J Sports Tourer	1.4 Turbo	103	10/10 -	4014	
ASTRA J Sports Tourer	1.4 Turbo	103	10/10 -	4008	
ASTRA J Sports Tourer	1.4 Turbo	103	10/10 -	4230	
ASTRA J Sports Tourer	1.6	85	10/10 -	4014	
ASTRA J Sports Tourer	1.6	85	10/10 -	4008	
ASTRA J Sports Tourer	1.6	85	10/10 -	4230	
ASTRA J Sports Tourer	1.6 CDTi	81	02/14 -	4014	
ASTRA J Sports Tourer	1.6 CDTi	81	02/14 -	4008	
ASTRA J Sports Tourer	1.6 CDTi	81	02/14 -	4230	
ASTRA J Sports Tourer	1.6 CDTi	100	01/14 -	4014	
ASTRA J Sports Tourer	1.6 CDTi	100	01/14 -	4008	
ASTRA J Sports Tourer	1.6 CDTi	100	01/14 -	4230	
ASTRA J Sports Tourer	1.6 LPG	84	10/12 -	4014	
ASTRA J Sports Tourer	1.6 LPG	84	10/12 -	4008	
ASTRA J Sports Tourer	1.6 LPG	84	10/12 -	4230	
ASTRA J Sports Tourer	1.6 SIDI	125	12/12 -	4014	
ASTRA J Sports Tourer	1.6 SIDI	125	12/12 -	4008	
ASTRA J Sports Tourer	1.6 SIDI	125	12/12 -	4230	
ASTRA J Sports Tourer	1.6 Turbo	132	10/10 -	4014	
ASTRA J Sports Tourer	1.6 Turbo	132	10/10 -	4008	
ASTRA J Sports Tourer	1.6 Turbo	132	10/10 -	4230	
ASTRA J Sports Tourer	1.7 CDTI	74	10/10 -	4014	
ASTRA J Sports Tourer	1.7 CDTI	74	10/10 -	4008	
ASTRA J Sports Tourer	1.7 CDTI	74	10/10 -	4230	
ASTRA J Sports Tourer	1.7 CDTI	81	10/10 -	4014	
ASTRA J Sports Tourer	1.7 CDTI	81	10/10 -	4008	
ASTRA J Sports Tourer	1.7 CDTI	81	10/10 -	4230	
ASTRA J Sports Tourer	1.7 CDTI	92	10/10 -	4014	
ASTRA J Sports Tourer	1.7 CDTI	92	10/10 -	4008	
ASTRA J Sports Tourer	1.7 CDTI	92	10/10 -	4230	
ASTRA J Sports Tourer	1.7 CDTI	96	10/10 -	4014	
ASTRA J Sports Tourer	1.7 CDTI	96	10/10 -	4008	
ASTRA J Sports Tourer	1.7 CDTI	96	10/10 -	4230	
ASTRA J Sports Tourer	2.0 BiTurbo CDTI	143	12/12 -	4014	
ASTRA J Sports Tourer	2.0 BiTurbo CDTI	143	12/12 -	4008	
ASTRA J Sports Tourer	2.0 BiTurbo CDTI	143	12/12 -	4230	
ASTRA J Sports Tourer	2.0 CDTI	118	10/10 -	4014	
ASTRA J Sports Tourer	2.0 CDTI	118	10/10 -	4008	
ASTRA J Sports Tourer	2.0 CDTI	118	10/10 -	4230	
ASTRA J Sports Tourer	2.0 CDTI	121	08/11 -	4014	
ASTRA J Sports Tourer	2.0 CDTI	121	08/11 -	4008	
ASTRA J Sports Tourer	2.0 CDTI	121	08/11 -	4230	
CALIBRA A (85_)	2.0 i	85	06/90 – 07/97	3470	3469
CALIBRA A (85_)	2.0 i	85	06/90 – 07/97	3505	
CALIBRA A (85_)	2.0 i	85	06/90 – 07/97	3615	
CALIBRA A (85_)	2.0 i 16V	100	02/94 – 07/97	3470	3469
CALIBRA A (85_)	2.0 i 16V	100	02/94 – 07/97	3505	
CALIBRA A (85_)	2.0 i 16V	100	02/94 – 07/97	3615	
CALIBRA A (85_)	2.0 i 16V	110	06/90 – 02/94	3470	3469
CALIBRA A (85_)	2.0 i 16V	110	06/90 – 02/94	3505	
CALIBRA A (85_)	2.0 i 16V	110	06/90 – 02/94	3615	
CALIBRA A (85_)	2.0 i 16V 4x4	100	02/94 – 07/97	3470	3469
CALIBRA A (85_)	2.0 i 16V 4x4	100	02/94 – 07/97	3505	
CALIBRA A (85_)	2.0 i 16V 4x4	100	02/94 – 07/97	3615	

MAKE & MODEL		KW	YEAR		
OPEL					
CALIBRA A (85_)	2.0 i 16V 4x4	110	06/90 – 02/94	3470	3469
CALIBRA A (85_)	2.0 i 16V 4x4	110	06/90 – 02/94	3505	
CALIBRA A (85_)	2.0 i 16V 4x4	110	06/90 – 02/94	3615	
CALIBRA A (85_)	2.0 i 4x4	85	06/90 – 07/97	3470	3469
CALIBRA A (85_)	2.0 i 4x4	85	06/90 – 07/97	3505	
CALIBRA A (85_)	2.0 i 4x4	85	06/90 – 07/97	3615	
CALIBRA A (85_)	2.0 i Turbo 4x4	150	03/92 – 07/97	3665	3469
CALIBRA A (85_)	2.0 i Turbo 4x4	150	03/92 – 07/97	3736	
CALIBRA A (85_)	2.5 i V6	125	04/93 – 07/97	3665	3469
CALIBRA A (85_)	2.5 i V6	125	04/93 – 07/97	3736	
CAMPO (TF_)	2.2 D	45	09/90 – 08/92	3657	
CAMPO (TF_)	2.2 D	45	09/90 – 08/92	3757	
CAMPO (TF_)	2.2 D	45	09/90 – 08/92	3857	
CAMPO (TF_)	2.2 D (TFR52)	39	08/91 – 09/96	3657	
CAMPO (TF_)	2.2 D (TFR52)	39	08/91 – 09/96	3757	
CAMPO (TF_)	2.2 D (TFR52)	39	08/91 – 09/96	3857	
CAMPO (TF_)	2.2 D (TFR52)	45	08/87 – 08/90	3657	
CAMPO (TF_)	2.2 D (TFR52)	45	08/87 – 08/90	3757	
CAMPO (TF_)	2.2 D (TFR52)	45	08/87 – 08/90	3857	
CAMPO (TF_)	2.2 D 4x4	45	09/90 – 08/92	3657	
CAMPO (TF_)	2.2 D 4x4	45	09/90 – 08/92	3757	
CAMPO (TF_)	2.2 D 4x4	45	09/90 – 08/92	3857	
CAMPO (TF_)	2.2 D 4x4 (TFS52)	39	08/91 – 09/96	3657	
CAMPO (TF_)	2.2 D 4x4 (TFS52)	39	08/91 – 09/96	3757	
CAMPO (TF_)	2.2 D 4x4 (TFS52)	39	08/91 – 09/96	3857	
CAMPO (TF_)	2.2 D 4x4 (TFS52)	45	08/87 – 08/90	3657	
CAMPO (TF_)	2.2 D 4x4 (TFS52)	45	08/87 – 08/90	3757	
CAMPO (TF_)	2.2 D 4x4 (TFS52)	45	08/87 – 08/90	3857	
CAMPO (TF_)	2.3 (TFR16)	69	08/91 – 08/94	3657	
CAMPO (TF_)	2.3 (TFR16)	69	08/91 – 08/94	3757	
CAMPO (TF_)	2.3 (TFR16)	69	08/91 – 08/94	3857	
CAMPO (TF_)	2.3 (TFR16)	72	08/94 – 09/96	3657	
CAMPO (TF_)	2.3 (TFR16)	72	08/94 – 09/96	3757	
CAMPO (TF_)	2.3 (TFR16)	72	08/94 – 09/96	3857	
CAMPO (TF_)	2.3 4x4 (TFS16)	69	08/91 – 08/94	3657	
CAMPO (TF_)	2.3 4x4 (TFS16)	69	08/91 – 08/94	3757	
CAMPO (TF_)	2.3 4x4 (TFS16)	69	08/91 – 08/94	3857	
CAMPO (TF_)	2.3 4x4 (TFS16)	72	08/94 – 09/96	3657	
CAMPO (TF_)	2.3 4x4 (TFS16)	72	08/94 – 09/96	3757	
CAMPO (TF_)	2.3 4x4 (TFS16)	72	08/94 – 09/96	3857	
CAMPO (TF_)	2.5 D (TFR54)	56	08/91 – 06/94	3657	
CAMPO (TF_)	2.5 D (TFR54)	56	08/91 – 06/94	3757	
CAMPO (TF_)	2.5 D (TFR54)	56	08/91 – 06/94	3857	
CAMPO (TF_)	2.5 D 4x4 (TFS54)	56	08/91 – 06/94	3657	
CAMPO (TF_)	2.5 D 4x4 (TFS54)	56	08/91 – 06/94	3757	
CAMPO (TF_)	2.5 D 4x4 (TFS54)	56	08/91 – 06/94	3857	
CAMPO (TF_)	2.5 DTI	74	07/01 – 12/01	3857	
CAMPO (TF_)	2.5 DTI	74	12/01 -	3657	
CAMPO (TF_)	2.5 DTI	74	12/01 -	3757	
CAMPO (TF_)	2.5 DTI 4x4	74	07/01 – 12/01	3857	
CAMPO (TF_)	2.5 DTI 4x4	74	12/01 -	3657	
CAMPO (TF_)	2.5 DTI 4x4	74	12/01 -	3757	
CAMPO (TF_)	2.5 TD (TFR54)	56	07/94 -	3657	
CAMPO (TF_)	2.5 TD (TFR54)	56	07/94 -	3757	
CAMPO (TF_)	2.5 TD (TFR54)	56	07/94 – 06/01	3857	
CAMPO (TF_)	2.5 TD 4x4 (TFS54)	56	07/94 -	3657	
CAMPO (TF_)	2.5 TD 4x4 (TFS54)	56	07/94 -	3757	
CAMPO (TF_)	2.5 TD 4x4 (TFS54)	56	07/94 – 06/01	3857	
CAMPO (TF_)	3.1 TD (TFR69)	80	12/92 -	3657	
CAMPO (TF_)	3.1 TD (TFR69)	80	12/92 -	3757	
CAMPO (TF_)	3.1 TD (TFR69)	80	12/92 – 06/01	3857	
CAMPO (TF_)	3.1 TD 4x4 (TFS69)	80	12/92 -	3657	
CAMPO (TF_)	3.1 TD 4x4 (TFS69)	80	12/92 -	3757	
CAMPO (TF_)	3.1 TD 4x4 (TFS69)	80	12/92 – 06/01	3857	
CASCADA (W13)	1.4	88	03/13 -	4014	
CASCADA (W13)	1.4	88	03/13 -	4149	
CASCADA (W13)	1.4 Turbo	103	03/13 -	4014	
CASCADA (W13)	1.4 Turbo	103	03/13 -	4149	
CASCADA (W13)	1.6	147	11/13 -	4014	
CASCADA (W13)	1.6	147	11/13 -	4149	
CASCADA (W13)	1.6 SIDI	125	03/13 -	4014	
CASCADA (W13)	1.6 SIDI	125	03/13 -	4149	
CASCADA (W13)	2.0 CDTI	121	03/13 -	4014	
CASCADA (W13)	2.0 CDTI	121	03/13 -	4149	
CASCADA (W13)	2.0 CDTI	125	07/15 -	4014	
CASCADA (W13)	2.0 CDTI	125	07/15 -	4149	

MAKE & MODEL   		KW	YEAR		
OPEL					
CASCADA (W13)	2.0 CDTI	143	03/13 -	4014	
CASCADA (W13)	2.0 CDTI	143	03/13 -	4149	
COMBO (71_)	1.2	33	07/94 – 10/01	3623	
COMBO (71_)	1.4	44	07/94 – 10/01	3623	
COMBO (71_)	1.4	60	07/94 – 10/01	3623	
COMBO (71_)	1.4 16V	66	08/99 – 10/01	3623	
COMBO (71_)	1.7 D	44	07/94 – 10/01	3623	
COMBO Box Body / Estate	1.3 CDTI 16V	51	08/05 -	3846	4040
COMBO Box Body / Estate	1.3 CDTI 16V	51	08/05 -	4042	
COMBO Box Body / Estate	1.3 CDTI 16V	55	10/05 -	3846	4040
COMBO Box Body / Estate	1.3 CDTI 16V	55	10/05 -	4042	
COMBO Box Body / Estate	1.4 16V	66	08/05 -	3846	4040
COMBO Box Body / Estate	1.4 16V	66	08/05 -	4042	
COMBO Box Body / Estate	1.6	64	10/01 -	3846	4040
COMBO Box Body / Estate	1.6	64	10/01 -	4042	
COMBO Box Body / Estate	1.6 CNG 16V	69	06/06 -	4042	4040
COMBO Box Body / Estate	1.6 CNG 16V	71	04/05 -	4042	4040
COMBO Box Body / Estate	1.7 CDTI 16V	74	12/04 -	4042	4040
COMBO Box Body / Estate	1.7 DI 16V	48	10/01 -	3846	4040
COMBO Box Body / Estate	1.7 DI 16V	48	10/01 -	4042	
COMBO Box Body / Estate	1.7 DTI 16V	55	10/01 -	3846	4040
COMBO Box Body / Estate	1.7 DTI 16V	55	10/01 -	4042	
COMBO Box Body / Estate (X12)	1.3 CDTI	66	02/12 -	4121	
COMBO Box Body / Estate (X12)	1.4	70	02/12 -	4121	
COMBO Box Body / Estate (X12)	1.4	88	02/12 -	4121	
COMBO Box Body / Estate (X12)	1.4 CNG	88	02/12 -	4121	
COMBO Box Body / Estate (X12)	1.6 CDTI	66	02/12 -	4121	
COMBO Box Body / Estate (X12)	1.6 CDTI	74	02/12 -	4121	
COMBO Box Body / Estate (X12)	1.6 CDTI	77	02/12 -	4121	
COMBO Box Body / Estate (X12)	2.0 CDTI	99	02/12 -	4121	
COMBO Kasa/büyük limuzin (X19)	1.2	81	02.2019 -	4371	4372
COMBO Kasa/büyük limuzin (X19)	1.2	96	09.2019 -	4371	4372
COMBO Kasa/büyük limuzin (X19)	1.5 D	56	08.2018 -	4371	4372
COMBO Kasa/büyük limuzin (X19)	1.5 D	75	08.2018 -	4371	4372
COMBO Kasa/büyük limuzin (X19)	1.5 D	96	08.2018 -	4371	4372
COMBO Kasa/büyük limuzin (X19)	1.5 D 4x4	96	08.2018 -	4371	4372
COMBO Kasa/büyük limuzin (X19)	1.6 D	55	06.2018 -	4371	4372
COMBO Kasa/büyük limuzin (X19)	1.6 D	73	06.2018 -		4372
COMBO Platform/Chassis (X12)	2.0 CDTI	99	02/12 -	4121	
COMBO Tour	1.3 CDTI 16V	51	10/04 -	3846	4040
COMBO Tour	1.3 CDTI 16V	51	10/04 -	4042	
COMBO Tour	1.3 CDTI 16V	55	10/05 -	3846	4040
COMBO Tour	1.3 CDTI 16V	55	10/05 -	4042	
COMBO Tour	1.4	66	10/04 -	3846	4040
COMBO Tour	1.4	66	10/04 -	4042	
COMBO Tour	1.6	64	10/01 -	3846	4040
COMBO Tour	1.6	64	10/01 -	4042	
COMBO Tour	1.6 CNG	69	06/06 -	4042	4040
COMBO Tour	1.6 CNG	71	04/05 -	4042	4040
COMBO Tour	1.7 CDTI 16V	74	12/04 -	3846	4040
COMBO Tour	1.7 CDTI 16V	74	12/04 -	4042	
COMBO Tour	1.7 DI 16V	48	10/01 -	3846	4040
COMBO Tour	1.7 DI 16V	48	10/01 -	4042	
COMBO Tour	1.7 DTI 16V	55	10/01 -	3846	4040
COMBO Tour	1.7 DTI 16V	55	10/01 -	4042	
COMBO Tour (X12)	1.3 CDTI	66	02/12 -	4121	
COMBO Tour (X12)	1.4	70	02/12 -	4121	
COMBO Tour (X12)	1.4	88	02/12 -	4121	
COMBO Tour (X12)	1.4 CNG	88	02/12 -	4121	
COMBO Tour (X12)	1.6 CDTI	66	02/12 -	4121	
COMBO Tour (X12)	1.6 CDTI	74	02/12 -	4121	
COMBO Tour (X12)	1.6 CDTI	77	02/12 -	4121	
COMBO Tour (X12)	2.0 CDTI	99	02/12 -	4121	
COMBO Tour / Life (X19)	1.2	81	06.2018 -	4371	4372
COMBO Tour / Life (X19)	1.2	96	07.2019 -	4371	4372
COMBO Tour / Life (X19)	1.5	56	06.2018 -	4371	4372
COMBO Tour / Life (X19)	1.5	75	06.2018 -	4371	4372
COMBO Tour / Life (X19)	1.5	96	06.2018 -	4371	4372
COMMODORE A	2.5	85	08/67 – 08/69	3334	
COMMODORE A	2.5	88	08/69 – 01/72	3334	
COMMODORE A	2.5 GS	96	08/67 – 01/72	3334	
COMMODORE A	2.5B GS/E	110	08/69 – 01/72	3334	
COMMODORE A	2.8 G/S	107	05/70 – 01/72	3334	
COMMODORE A Coupe	2.5	85	08/67 – 08/69	3334	
COMMODORE A Coupe	2.5	88	08/69 – 01/72	3334	
COMMODORE A Coupe	2.5 GS	96	08/67 – 01/72	3334	

MAKE & MODEL		KW	YEAR		
OPEL					
COMMODORE A Coupe	2.5 GS/E	110	08/69 – 01/72	3334	
COMMODORE A Coupe	2.8 GS	107	05/70 – 01/72	3334	
COMMODORE B	2.5 GS	85	01/72 – 07/78	3334	
COMMODORE B	2.5 GS	96	01/72 – 08/75	3334	
COMMODORE B	2.8 GS	103	03/75 – 07/78	3334	
COMMODORE B	2.8 GS	104	01/72 – 07/78	3334	
COMMODORE B	2.8 GS/E	114	03/75 – 07/78	3334	
COMMODORE B	2.8 GS/E	118	07/72 – 02/75	3334	
COMMODORE B Coupe	2.5	85	01/72 – 07/78	3334	
COMMODORE B Coupe	2.5 GS	96	01/72 – 08/75	3334	
COMMODORE B Coupe	2.8 GS	103	03/75 – 07/78	3334	
COMMODORE B Coupe	2.8 GS	104	12/72 – 07/78	3334	
COMMODORE B Coupe	2.8 GS/E	114	03/75 – 07/78	3334	
COMMODORE B Coupe	2.8 GS/E	118	07/72 – 02/75	3334	
COMMODORE C (14 19)	2.5 E	96	05/81 – 12/82	3334	
COMMODORE C (14 19)	2.5 S	85	08/78 – 12/82	3334	
COMMODORE C Station Wagon (61)	2.5 E	96	12/80 – 12/82	3334	
COMMODORE C Station Wagon (61)	2.5 S	85	12/80 – 12/82	3334	
CORSA A Box	1.0	33	02/86 – 04/89	3410	
CORSA A Box	1.2	33	02/86 – 04/89	3410	
CORSA A Box	1.2	40	02/86 – 04/89	3410	
CORSA A Box	1.2	44	02/86 – 07/90	3410	
CORSA A Box	1.3	44	02/86 – 04/89	3410	
CORSA A Box	1.3	51	02/86 – 04/89	3410	
CORSA A Box	1.5 D	37	06/87 – 04/89	3410	
CORSA A Hatchback (93_, 94_, 98_, 99_)	1.0	33	09/82 – 03/93	3410	
CORSA A Hatchback (93_, 94_, 98_, 99_)	1.0	33	09/82 – 03/93	3623	
CORSA A Hatchback (93_, 94_, 98_, 99_)	1.2	33	09/82 – 08/90	3410	
CORSA A Hatchback (93_, 94_, 98_, 99_)	1.2	44	09/82 – 08/90	3410	
CORSA A Hatchback (93_, 94_, 98_, 99_)	1.2 i	33	09/89 – 03/93	3410	
CORSA A Hatchback (93_, 94_, 98_, 99_)	1.2 i	33	09/89 – 03/93	3623	
CORSA A Hatchback (93_, 94_, 98_, 99_)	1.2 N	38	01/90 – 03/93	3410	
CORSA A Hatchback (93_, 94_, 98_, 99_)	1.2 N	38	01/90 – 03/93	3623	
CORSA A Hatchback (93_, 94_, 98_, 99_)	1.2 S	40	09/82 – 02/90	3410	
CORSA A Hatchback (93_, 94_, 98_, 99_)	1.3	44	09/85 – 10/89	3410	
CORSA A Hatchback (93_, 94_, 98_, 99_)	1.3 GL	55	09/82 – 03/93	3410	
CORSA A Hatchback (93_, 94_, 98_, 99_)	1.3 GL	55	09/82 – 03/93	3623	
CORSA A Hatchback (93_, 94_, 98_, 99_)	1.3 i	44	09/86 – 09/90	3410	
CORSA A Hatchback (93_, 94_, 98_, 99_)	1.3 S	51	09/82 – 10/89	3410	
CORSA A Hatchback (93_, 94_, 98_, 99_)	1.4 i	40	01/85 – 03/93	3410	
CORSA A Hatchback (93_, 94_, 98_, 99_)	1.4 i	40	01/85 – 03/93	3623	
CORSA A Hatchback (93_, 94_, 98_, 99_)	1.4 i	44	01/90 – 03/93	3410	
CORSA A Hatchback (93_, 94_, 98_, 99_)	1.4 i	44	01/90 – 03/93	3623	
CORSA A Hatchback (93_, 94_, 98_, 99_)	1.4 S	53	01/90 – 03/93	3410	
CORSA A Hatchback (93_, 94_, 98_, 99_)	1.4 S	53	01/90 – 03/93	3623	
CORSA A Hatchback (93_, 94_, 98_, 99_)	1.4 Si	60	09/91 – 03/93	3623	
CORSA A Hatchback (93_, 94_, 98_, 99_)	1.5 D	37	09/87 – 03/93	3410	
CORSA A Hatchback (93_, 94_, 98_, 99_)	1.5 D	37	09/87 – 03/93	3623	
CORSA A Hatchback (93_, 94_, 98_, 99_)	1.5 TD	49	03/88 – 03/93	3623	
CORSA A Hatchback (93_, 94_, 98_, 99_)	1.6 GSI	55	08/88 – 09/92	3410	
CORSA A Hatchback (93_, 94_, 98_, 99_)	1.6 GSI	55	08/88 – 09/92	3623	
CORSA A Hatchback (93_, 94_, 98_, 99_)	1.6 GSI	72	09/89 – 03/93	3623	
CORSA A Hatchback (93_, 94_, 98_, 99_)	1.6 GSI	74	05/88 – 03/92	3623	
CORSA A Hatchback (93_, 94_, 98_, 99_)	1.6 GSI CAT	74	02/92 – 03/93	3623	
CORSA A TR (91_, 92_, 96_, 97_)	1.0	33	09/82 – 09/92	3410	
CORSA A TR (91_, 92_, 96_, 97_)	1.0	33	09/82 – 09/92	3623	
CORSA A TR (91_, 92_, 96_, 97_)	1.2 i	33	09/89 – 03/93	3410	
CORSA A TR (91_, 92_, 96_, 97_)	1.2 i	33	09/89 – 03/93	3623	
CORSA A TR (91_, 92_, 96_, 97_)	1.2 N	33	01/85 – 10/87	3410	
CORSA A TR (91_, 92_, 96_, 97_)	1.2 S	40	09/82 – 03/93	3410	
CORSA A TR (91_, 92_, 96_, 97_)	1.2 S	40	09/82 – 03/93	3623	
CORSA A TR (91_, 92_, 96_, 97_)	1.2 S	43	09/82 – 10/87	3410	
CORSA A TR (91_, 92_, 96_, 97_)	1.3	44	09/85 – 10/87	3410	
CORSA A TR (91_, 92_, 96_, 97_)	1.3 GL	55	09/82 – 03/93	3410	
CORSA A TR (91_, 92_, 96_, 97_)	1.3 GL	55	09/82 – 03/93	3623	
CORSA A TR (91_, 92_, 96_, 97_)	1.3 S	51	09/82 – 10/87	3410	
CORSA A TR (91_, 92_, 96_, 97_)	1.4 i	44	10/89 – 03/93	3410	
CORSA A TR (91_, 92_, 96_, 97_)	1.4 i	44	10/89 – 03/93	3623	
CORSA A TR (91_, 92_, 96_, 97_)	1.4 S	53	09/89 – 03/93	3410	
CORSA A TR (91_, 92_, 96_, 97_)	1.4 S	53	09/89 – 03/93	3623	
CORSA A TR (91_, 92_, 96_, 97_)	1.5 D	37	10/87 – 11/92	3410	
CORSA A TR (91_, 92_, 96_, 97_)	1.5 D	37	10/87 – 11/92	3623	
CORSA A TR (91_, 92_, 96_, 97_)	1.5 TD	49	10/87 – 03/93	3410	
CORSA A TR (91_, 92_, 96_, 97_)	1.5 TD	49	10/87 – 03/93	3623	
CORSA B (73_, 78_, 79_)	1.0 i 12V	40	11/96 – 09/00	3623	
CORSA B (73_, 78_, 79_)	1.2 i	33	03/93 – 09/00	3623	

MAKE & MODEL		KW	YEAR		
OPEL					
CORSA B (73_, 78_, 79_)	1.2 i 16V	48	03/98 – 09/00	3623	
CORSA B (73_, 78_, 79_)	1.4	54	04/93 – 08/94	3623	
CORSA B (73_, 78_, 79_)	1.4 i	40	03/93 – 09/00	3623	
CORSA B (73_, 78_, 79_)	1.4 i	44	03/93 – 09/00	3623	
CORSA B (73_, 78_, 79_)	1.4 i 16V	63	08/97 – 09/00	3623	
CORSA B (73_, 78_, 79_)	1.4 i 16V	66	09/94 – 09/00	3623	
CORSA B (73_, 78_, 79_)	1.4 i 16V	67	09/94 – 09/00	3623	
CORSA B (73_, 78_, 79_)	1.4 Si	60	03/93 – 09/00	3623	
CORSA B (73_, 78_, 79_)	1.5 D	37	03/93 – 09/00	3623	
CORSA B (73_, 78_, 79_)	1.5 TD	49	03/93 – 09/00	3623	
CORSA B (73_, 78_, 79_)	1.6 GSI 16V	80	03/93 – 09/00	3623	
CORSA B (73_, 78_, 79_)	1.6 i 16V	74	08/97 – 09/00	3623	
CORSA B (73_, 78_, 79_)	1.6 i 16V	78	09/94 – 09/00	3623	
CORSA B (73_, 78_, 79_)	1.7 D	44	02/96 – 09/00	3623	
CORSA B Box (73_)	1.4 i	44	08/99 – 09/00	3623	
CORSA B Box (73_)	1.7 D	44	08/99 – 09/00	3623	
CORSA B Estate (F35)	1.4 i 16V	66	01/99 -	3623	
CORSA B Estate (F35)	1.7 D	44	01/99 -	3623	
Corsa B SW (S93) 44287 i 16V (F35)	X 14 XE	66	01/1999 - 12/2002	3561	
CORSA C (F08, F68)	1.0	43	09/00 – 06/03	3846	
CORSA C (F08, F68)	1.0	44	06/03 – 12/09	3846	
CORSA C (F08, F68)	1.2	55	09/00 – 12/09	3846	
CORSA C (F08, F68)	1.2 Twinport	59	07/04 – 12/09	3846	
CORSA C (F08, F68)	1.3 CDTI	51	06/03 – 12/09	3846	
CORSA C (F08, F68)	1.4	66	09/00 – 12/09	3846	
CORSA C (F08, F68)	1.4 Twinport	66	06/03 – 12/09	3846	
CORSA C (F08, F68)	1.7 CDTI	74	06/03 – 12/09	4042	4040
CORSA C (F08, F68)	1.7 DI	48	09/00 – 12/09	3846	
CORSA C (F08, F68)	1.7 DTI	55	09/00 – 12/09	3846	
CORSA C (F08, F68)	1.8	92	09/00 – 12/09	3846	
CORSA C Box (F08, W5L)	1.2	59	07/05 -	3846	
CORSA C Box (F08, W5L)	1.2 16V	55	09/00 -	3846	
CORSA C Box (F08, W5L)	1.3 CDTI 16V	51	08/05 -	3846	
CORSA C Box (F08, W5L)	1.4	66	08/03 -	3846	
CORSA C Box (F08, W5L)	1.7 CDTi	74	08/03 -	3846	
CORSA C Box (F08, W5L)	1.7 DI 16V	48	09/00 -	3846	
CORSA C Box (F08, W5L)	1.7 DTI 16V	55	09/00 -	3846	
CORSA D	1.6 Turbo	110	02/07 -	4042	
CORSA D	1.6 Turbo	141	02/07 -	4042	
CORSA E	1.0	66	09/14 -	4285	4286
CORSA E	1.0	66	09/14 -	4042	
CORSA E	1.0	85	09/14 -	4285	4286
CORSA E	1.0	85	09/14 -	4042	
CORSA E	1.2	51	09/14 -	4285	4286
CORSA E	1.2	51	09/14 -	4042	
CORSA E	1.3 CDTI	55	09/14 -	4285	4286
CORSA E	1.3 CDTI	55	09/14 -	4042	
CORSA E	1.3 CDTI	70	09/14 -	4285	4286
CORSA E	1.3 CDTI	70	09/14 -	4042	
CORSA E	1.4	55	09/14 -	4285	4286
CORSA E	1.4	55	09/14 -	4042	
CORSA E	1.4	66	09/14 -	4285	4286
CORSA E	1.4	66	09/14 -	4042	
CORSA E	1.4 LPG	64	11/15 -	4285	4286
CORSA E	1.4 LPG	66	03/15 -	4285	4286
CORSA E	1.4 Turbo	74	09/14 -	4285	4286
CORSA E	1.4 Turbo	74	09/14 -	4042	
CORSA E	1.4 Turbo	110	03/15 -	4285	4286
CORSA E	1.6 Turbo	152	03/15 -		4286
CORSA E (X15)	1.0 (B 10 XFL)	66	09/14 -	4284	
CORSA E (X15)	1.0 (B 10 XFT)	85	09/14 -	4284	
CORSA E (X15)	1.2 (B 12 XEL)	51	09/14 -	4284	
CORSA E (X15)	1.2 (B 12 XER)	51	09/14 -	4284	
CORSA E (X15)	1.3 CDTI (B 13 DTC)	55	09/14 -	4284	
CORSA E (X15)	1.3 CDTI (B 13 DTE)	70	09/14 -	4284	
CORSA E (X15)	1.3 CDTI (B 13 DTR)	70	09/14 -	4284	
CORSA E (X15)	1.4 (B 14 XEJ)	55	09/14 -	4284	
CORSA E (X15)	1.4 (B 14 XEL)	66	09/14 -	4284	
CORSA E (X15)	1.4 LPG (B 14 XEL)	64	11/15 -	4284	
CORSA E (X15)	1.4 LPG (B 14 XEL)	66	03/15 -	4284	
CORSA E (X15)	1.4 Turbo (B 14 NEH)	110	03/15 -	4284	
CORSA E (X15)	1.4 Turbo (B 14 NEJ)	74	09/14 -	4284	
CORSA E (X15)	1.6 Turbo (B 16 LES)	152	03/15 -	4284	
CORSA E Van	1.2	51	01/15 -	4285	4286
CORSA E Van	1.3 CDTI	55	01/15 -	4285	4286
CORSA E Van	1.3 CDTI	70	09/14 -	4285	4286

MAKE & MODEL   		KW	YEAR		
OPEL					
CORSA E Van	1.3 CDTI	70	09/14 -	4042	
CORSA E Van	1.4	55	09/14 -	4285	4286
CORSA E Van	1.4	55	09/14 -	4042	
CORSA E Van	1.4	66	09/14 -	4285	4286
CORSA E Van	1.4	66	09/14 -	4042	
CORSA F	CORSA-e (68)	100	07.2019 -		4372
Corsa F 44228	F 12 XEL (EB2FAD)	55	07/2019 -	3820/1	
Crossland X (P17) 44228	F 12 XE (EB2FA)	61	07/2019 -	3820/1	
Crossland X (P17) 44228 (08, 68)	B 12 XE (EB2F), D 12 XE (EB2FA)	60	03/2017 -	3820/1	
Crossland X (P17) 44228 (08, 68)	B 12 XHL (EB2DT), D 12 XHL (EB2ADT), F 12 XHL (EB2	81	03/2017 -	3820/1	
Crossland X (P17) 44228 (08, 68)	B 12 XHT (EB2DTS), D 12 XHT (EB2ADTS), F 12 XHT (E	96	03/2017 -	3820/1	
Crossland X (P17) 44228 LPG (08, 68)	B 12 XE (EB2F)	60	10/2017 -	3820/1	
Crossland X (P17) 44317 Turbo D (08, 68)	D 15 DT (DV5RD)	75	06/2018 -	3820/1	
Crossland X (P17) 44317 Turbo D (08, 68)	D 15 DTH (DV5RC), F 15 DTH (DV5RC)	88	08/2018 -	3820/1	
Crossland X (P17) 44348 Turbo D (08, 68)	B 16 DT (DV6FD)	73	03/2017 -	3820/1	
Crossland X (P17) 44348 Turbo D (08, 68)	B 16 DTH (DV6FC)	85	08/2017 -	3820/1	
Crossland X (P17) 44348 Turbo D (08, 68)	B 16 DTH (DV6FC)	88	03/2017 -	3820/1	
Crossland X (P17) 44348 Turbo D -75	B 16 DT (DV6DTED)	68	07/2019 -	3820/1	
FRONTERA A (5_MWL4)	2.2 i (54MWL4)	100	03/95 – 10/98	3857	3887
FRONTERA A (5_MWL4)	2.2 i (54MWL4)	100	03/95 – 10/98	3657	
FRONTERA A (5_MWL4)	2.2 i (54MWL4)	100	03/95 – 10/98	3674	
FRONTERA A (5_MWL4)	2.2 i (54MWL4)	100	03/95 – 10/98	3743	
FRONTERA A (5_MWL4)	2.2 i (54MWL4)	100	03/95 – 10/98	3757	
FRONTERA A (5_MWL4)	2.3 TD (5JMWL4)	74	03/92 – 10/98	3857	3887
FRONTERA A (5_MWL4)	2.3 TD (5JMWL4)	74	03/92 – 10/98	3657	
FRONTERA A (5_MWL4)	2.3 TD (5JMWL4)	74	03/92 – 10/98	3674	
FRONTERA A (5_MWL4)	2.3 TD (5JMWL4)	74	03/92 – 10/98	3743	
FRONTERA A (5_MWL4)	2.3 TD (5JMWL4)	74	03/92 – 10/98	3757	
FRONTERA A (5_MWL4)	2.4 i (53MWL4)	92	03/92 – 10/98	3857	3887
FRONTERA A (5_MWL4)	2.4 i (53MWL4)	92	03/92 – 10/98	3657	
FRONTERA A (5_MWL4)	2.4 i (53MWL4)	92	03/92 – 10/98	3674	
FRONTERA A (5_MWL4)	2.4 i (53MWL4)	92	03/92 – 10/98	3743	
FRONTERA A (5_MWL4)	2.4 i (53MWL4)	92	03/92 – 10/98	3757	
FRONTERA A (5_MWL4)	2.5 TDS	85	09/96 – 10/98	3857	3887
FRONTERA A (5_MWL4)	2.5 TDS	85	09/96 – 10/98	3657	
FRONTERA A (5_MWL4)	2.5 TDS	85	09/96 – 10/98	3674	
FRONTERA A (5_MWL4)	2.5 TDS	85	09/96 – 10/98	3743	
FRONTERA A (5_MWL4)	2.5 TDS	85	09/96 – 10/98	3757	
FRONTERA A (5_MWL4)	2.8 TD (5BMWL4)	83	03/95 – 10/98	3857	3887
FRONTERA A (5_MWL4)	2.8 TD (5BMWL4)	83	03/95 – 10/98	3657	
FRONTERA A (5_MWL4)	2.8 TD (5BMWL4)	83	03/95 – 10/98	3674	
FRONTERA A (5_MWL4)	2.8 TD (5BMWL4)	83	03/95 – 10/98	3743	
FRONTERA A (5_MWL4)	2.8 TD (5BMWL4)	83	03/95 – 10/98	3757	
FRONTERA A Sport (5_SUD2)	2.0 i (52SUD2, 55SUD2)	85	03/92 – 10/98	3857	3887
FRONTERA A Sport (5_SUD2)	2.0 i (52SUD2, 55SUD2)	85	03/92 – 10/98	3657	
FRONTERA A Sport (5_SUD2)	2.0 i (52SUD2, 55SUD2)	85	03/92 – 10/98	3674	
FRONTERA A Sport (5_SUD2)	2.0 i (52SUD2, 55SUD2)	85	03/92 – 10/98	3743	
FRONTERA A Sport (5_SUD2)	2.0 i (52SUD2, 55SUD2)	85	03/92 – 10/98	3757	
FRONTERA A Sport (5_SUD2)	2.5 TDS	85	09/96 – 10/98	3857	3887
FRONTERA A Sport (5_SUD2)	2.5 TDS	85	09/96 – 10/98	3657	
FRONTERA A Sport (5_SUD2)	2.5 TDS	85	09/96 – 10/98	3674	
FRONTERA A Sport (5_SUD2)	2.5 TDS	85	09/96 – 10/98	3743	
FRONTERA A Sport (5_SUD2)	2.5 TDS	85	09/96 – 10/98	3757	
FRONTERA A Sport (5_SUD2)	2.8 TD (53SUD2)	83	03/95 – 08/96	3857	3887
FRONTERA A Sport (5_SUD2)	2.8 TD (53SUD2)	83	03/95 – 08/96	3657	
FRONTERA A Sport (5_SUD2)	2.8 TD (53SUD2)	83	03/95 – 08/96	3674	
FRONTERA A Sport (5_SUD2)	2.8 TD (53SUD2)	83	03/95 – 08/96	3743	
FRONTERA A Sport (5_SUD2)	2.8 TD (53SUD2)	83	03/95 – 08/96	3757	
FRONTERA B (6B_)	2.2 DTI	88	09/02 -	3743	3887
FRONTERA B (6B_)	2.2 DTI	88	09/02 -	3674	
FRONTERA B (6B_)	2.2 DTI (6B_ZC, 6B_VF, 6B_66, 6B_76)	85	10/98 – 09/02	3674	3887
FRONTERA B (6B_)	2.2 DTI (6B_ZC, 6B_VF, 6B_66, 6B_76)	85	10/98 – 09/02	3743	
FRONTERA B (6B_)	2.2 i (6B_ZC, 6B_VF, 6B_66,6B_76)	100	10/98 -	3743	3887
FRONTERA B (6B_)	2.2 i (6B_ZC, 6B_VF, 6B_66,6B_76)	100	10/98 -	3674	
FRONTERA B (6B_)	3.2 i (6B1VF, 6B1_6)	151	10/98 -	3743	3887
FRONTERA B (6B_)	FRONTERA B (6B_)	151	10/98 -	3674	
GRANDLAND X (A18)	1.2 (75)	96	06.2017 -	4371	4372
GRANDLAND X (A18)	1.2 (75)	96	06.2017 -		4373
GRANDLAND X (A18)	1.2 (75)	96	06.2017 -		4374
GRANDLAND X (A18)	1.5 Turbo D (75)	75	06.2018 -	4371	4372
GRANDLAND X (A18)	1.5 Turbo D (75)	75	06.2018 -		4373
GRANDLAND X (A18)	1.5 Turbo D (75)	75	06.2018 -		4374
GRANDLAND X (A18)	1.5 Turbo D (75)	96	04.2018 -	4371	4372
GRANDLAND X (A18)	1.5 Turbo D (75)	96	04.2018 -		4373
GRANDLAND X (A18)	1.5 Turbo D (75)	96	04.2018 -		4374
GRANDLAND X (A18)	1.6 Turbo	110	12.2019 -	4371	4372

MAKE & MODEL		KW	YEAR		
OPEL					
GRANDLAND X (A18)	1.6 Turbo	110	12.2019 -		4373
GRANDLAND X (A18)	1.6 Turbo	110	12.2019 -		4374
GRANDLAND X (A18)	1.6 Turbo (75)	133	09.2018 -	4371	4372
GRANDLAND X (A18)	1.6 Turbo (75)	133	09.2018 -		4373
GRANDLAND X (A18)	1.6 Turbo (75)	133	09.2018 -		4374
GRANDLAND X (A18)	1.6 Turbo D (75)	88	06.2017 -	4371	4372
GRANDLAND X (A18)	1.6 Turbo D (75)	88	06.2017 -		4373
GRANDLAND X (A18)	1.6 Turbo D (75)	88	06.2017 -		4374
GRANDLAND X (A18)	1.6 Turbo Hybrid	133	12.2019 -	4371	
GRANDLAND X (A18)	1.6 Turbo Hybrid	133	12.2019 -		4372
GRANDLAND X (A18)	1.6 Turbo Hybrid	133	12.2019 -		4373
GRANDLAND X (A18)	1.6 Turbo Hybrid	133	12.2019 -		4374
GRANDLAND X (A18)	1.6 Turbo Hybrid	133	12.2019 -	4371	4374
GRANDLAND X (A18)	1.6 Turbo Hybrid	165	12.2019 -	4371	
GRANDLAND X (A18)	1.6 Turbo Hybrid	165	12.2019 -		4372
GRANDLAND X (A18)	1.6 Turbo Hybrid	165	12.2019 -		4373
GRANDLAND X (A18)	1.6 Turbo Hybrid	165	12.2019 -		4374
GRANDLAND X (A18)	1.6 Turbo Hybrid	165	12.2019 -	4371	4374
GRANDLAND X (A18)	1.6 Turbo Hybrid4	147	06.2019 -	4371	
GRANDLAND X (A18)	1.6 Turbo Hybrid4	147	06.2019 -		4372
GRANDLAND X (A18)	1.6 Turbo Hybrid4	147	06.2019 -		4373
GRANDLAND X (A18)	1.6 Turbo Hybrid4	147	06.2019 -		4374
GRANDLAND X (A18)	1.6 Turbo Hybrid4	147	06.2019 -	4371	4374
GRANDLAND X (A18)	1.6 Turbo Hybrid4	221	06.2019 -	4371	
GRANDLAND X (A18)	1.6 Turbo Hybrid4	221	06.2019 -		4372
GRANDLAND X (A18)	1.6 Turbo Hybrid4	221	06.2019 -		4373
GRANDLAND X (A18)	1.6 Turbo Hybrid4	221	06.2019 -		4374
GRANDLAND X (A18)	1.6 Turbo Hybrid4	221	06.2019 -	4371	4374
Grandland X (A18) 2.0 D -75	D 20 DTH (DW10FC)	130	11/2017 -		4374
Grandland X (A18) 44228 -75	-	60	10/2017 -		4374
Grandland X (A18) 44228 -75	B 12 XHT (EB2DTS), D 12 XHT (EB2ADTS)	96	06/2017 -		4374
Grandland X (A18) 44228 LPG -75	-	55	10/2017 -		4374
Grandland X (A18) 44317 Turbo D	D 15 DT (DV5RD)	75	06/2018 -		4374
Grandland X (A18) 44317 Turbo D -75	D 15 DTH (DV5RC)	96	04/2018 -		4374
Grandland X (A18) 44348 -75	A 16 NHT (EP6FDT)	115	10/2017 -		4374
Grandland X (A18) 44348 Turbo	A 16 NHT (EP6FDTM)	121	10/2017 -		4374
Grandland X (A18) 44348 Turbo -75	D 16 XHT (EP6FADTXD)	133	09/2018 -		4374
Grandland X (A18) 44348 Turbo D -75	-	120	04/2018 -		4374
Grandland X (A18) 44348 Turbo D -75	-	73	10/2017 -		4374
Grandland X (A18) 44348 Turbo D -75	B 16 DTH (DV6FC)	88	06/2017 -		4374
Grandland X (A18) 44348 Turbo Hybrid	F 16 XHR (EP6FADTXD)	133	12/2019 -		4374
Grandland X (A18) 44348 Turbo Hybrid	F 16 XHR (EP6FADTXD)	147	06/2019 -		4374
Grandland X (A18) 44348 Turbo Hybrid	F 16 XHR (EP6FADTXD)	165	12/2019 -		4374
Grandland X (A18) 44348 Turbo Hybrid	F 16 XHR (EP6FADTXD)	221	06/2019 -		4374
GT	1.1	44	09/68 – 12/70	3318	
GT	1.9	66	09/68 – 08/73	3318	
GT Convertible	2.0	194	06/07 -		3853/1
HCV Movano B Bus (X62) 44257 CDTI FWD (JV)	M9T 670, M9T 672, M9T 676	74	12/2010 -		4172/1
HCV Movano B Bus (X62) 44257 CDTI FWD (JV)	M9T 670, M9T 672, M9T 676, M9T 680, M9T 870, M9T 8	92	12/2010 -		4172/1
HCV Movano B Bus (X62) 44257 CDTI FWD (JV)	M9T 678, M9T 680, M9T 706, M9T 708	107	12/2010 -		4172/1
HCV Movano B Bus (X62) 44257 CDTI FWD (JV)	M9T 702, M9T 708	120	05/2014 -		4172/1
HCV Movano B Bus (X62) 44257 CDTI FWD (JV)	M9T 702, M9T 716	100	05/2014 -		4172/1
HCV Movano B Bus (X62) 44257 CDTI FWD (JV)	M9T 706	125	07/2015 -		4172/1
HCV Movano B Bus (X62) 44257 CDTI FWD (JV)	M9T 716, M9T 880	110	01/2013 -		4172/1
HCV Movano B Bus (X62) 44257 CDTI FWD (JV)	M9T 870	81	05/2014 -		4172/1
HCV Movano B Bus (X62) 44257 CDTi	-	88	10/2010 -		4172/1
HCV Movano B Dumper body (X62) 44257 CDTI FWD (UV, HV)	M9T 702	120	05/2014 -		4172/1
HCV Movano B Dumper body (X62) 44257 CDTI FWD (UV, HV)	M9T 706	125	11/2016 -		4172/1
HCV Movano B Dumper body (X62) 44257 CDTi	-	88	10/2010 -		4172/1
HCV Movano B Platform/Chassis (X62) 44257 CDTI FWD (EV, HV, UV)	M9T 670, M9T 672, M9T 676	74	05/2010 -		4172/1
HCV Movano B Platform/Chassis (X62) 44257 CDTI FWD (EV, HV, UV)	M9T 670, M9T 672, M9T 676, M9T 680, M9T 876	92	05/2010 -		4172/1
HCV Movano B Platform/Chassis (X62) 44257 CDTI FWD (EV, HV, UV)	M9T 678, M9T 680, M9T 706, M9T 708	107	05/2010 -		4172/1
HCV Movano B Platform/Chassis (X62) 44257 CDTI FWD (EV, HV, UV)	M9T 702	120	05/2014 -		4172/1
HCV Movano B Platform/Chassis (X62) 44257 CDTI FWD (EV, HV, UV)	M9T 702, M9T 716	100	05/2014 -		4172/1
HCV Movano B Platform/Chassis (X62) 44257 CDTI FWD (EV, HV, UV)	M9T 706	125	11/2016 -		4172/1
HCV Movano B Platform/Chassis (X62) 44257 CDTI FWD (EV, HV, UV)	M9T 716, M9T 880	110	01/2013 -		4172/1
HCV Movano B Platform/Chassis (X62) 44257 CDTI FWD (EV, HV, UV)	M9T 870	81	05/2014 -		4172/1
HCV Movano B Platform/Chassis (X62) 44257 CDTI RWD (EV, HV, UV)	M9T 690, M9T 692	74	05/2010 -		4172/1
HCV Movano B Platform/Chassis (X62) 44257 CDTI RWD (EV, HV, UV)	M9T 692, M9T 696, M9T 698, M9T 876	92	05/2010 -		4172/1
HCV Movano B Platform/Chassis (X62) 44257 CDTI RWD (EV, HV, UV)	M9T 694, M9T 696, M9T 698	110	01/2013 -		4172/1
HCV Movano B Platform/Chassis (X62) 44257 CDTI RWD (EV, HV, UV)	M9T 694, M9T 696, M9T 698, M9T 710	107	05/2010 -		4172/1
HCV Movano B Platform/Chassis (X62) 44257 CDTI RWD (EV, HV, UV)	M9T 700	100	05/2014 -		4172/1
HCV Movano B Platform/Chassis (X62) 44257 CDTI RWD (EV, HV, UV)	M9T 700	120	05/2014 -		4172/1
HCV Movano B Platform/Chassis (X62) 44257 CDTi	-	88	10/2010 -		4172/1
HCV Movano B Van (X62) 44257 CDTI FWD (FV)	M9T 670, M9T 672, M9T 676	74	05/2010 -		4172/1
HCV Movano B Van (X62) 44257 CDTI FWD (FV)	M9T 670, M9T 672, M9T 676, M9T 870, M9T 876	92	05/2010 -		4172/1

MAKE & MODEL		KW	YEAR		
OPEL					
HCV Movano B Van (X62) 44257 CDTI FWD (FV)	M9T 678, M9T 680, M9T 706, M9T 708, M9T 878, M9T 8	107	05/2010 -		4172/1
HCV Movano B Van (X62) 44257 CDTI FWD (FV)	M9T 702	120	05/2014 -		4172/1
HCV Movano B Van (X62) 44257 CDTI FWD (FV)	M9T 702, M9T 716	100	05/2014 -		4172/1
HCV Movano B Van (X62) 44257 CDTI FWD (FV)	M9T 706	125	11/2016 -		4172/1
HCV Movano B Van (X62) 44257 CDTI FWD (FV)	M9T 716, M9T 880	110	01/2013 -		4172/1
HCV Movano B Van (X62) 44257 CDTI FWD (FV)	M9T 870	81	02/2012 -		4172/1
HCV Movano B Van (X62) 44257 CDTI RWD (FV)	M9T 686, M9T 690, M9T 696, M9T 876	92	05/2010 -		4172/1
HCV Movano B Van (X62) 44257 CDTI RWD (FV)	M9T 690, M9T 692	74	05/2010 -		4172/1
HCV Movano B Van (X62) 44257 CDTI RWD (FV)	M9T 694, M9T 696, M9T 698	110	01/2013 -		4172/1
HCV Movano B Van (X62) 44257 CDTI RWD (FV)	M9T 694, M9T 696, M9T 698, M9T 710, M9T 896, M9T 8	107	05/2010 -		4172/1
HCV Movano B Van (X62) 44257 CDTI RWD (FV)	M9T 700	100	05/2014 -		4172/1
HCV Movano B Van (X62) 44257 CDTI RWD (FV)	M9T 700, M9T 710	120	05/2014 -		4172/1
HCV Movano B Van (X62) 44257 CDTi	-	88	10/2010 -		4172/1
INSIGNIA	1.4	103	04/11 -	4149	4150
INSIGNIA	1.4 LPG	103	07/12 -	4149	4150
INSIGNIA	1.6	85	07/08 -	4149	4150
INSIGNIA	1.6 CDTi	88	07/15 -	4149	4150
INSIGNIA	1.6 CDTi	100	07/15 -	4149	4150
INSIGNIA	1.6 SIDI	125	03/13 -	4149	4150
INSIGNIA	1.6 Turbo	132	07/08 -	4149	4150
INSIGNIA	1.8	103	07/08 -	4149	4150
INSIGNIA	2.0 Biturbo CDTI	140	07/08 -	4149	4150
INSIGNIA	2.0 Biturbo CDTI	143	01/12 -	4149	4150
INSIGNIA	2.0 Biturbo CDTI 4x4	140	05/09 -	4149	4150
INSIGNIA	2.0 Biturbo CDTI 4x4	143	01/12 -	4149	4150
INSIGNIA	2.0 CDTI	81	07/08 -	4149	4150
INSIGNIA	2.0 CDTI	88	03/12 -	4149	4150
INSIGNIA	2.0 CDTI	96	07/08 -	4149	4150
INSIGNIA	2.0 CDTI	103	07/13 -	4149	4150
INSIGNIA	2.0 CDTI	118	07/08 -	4149	4150
INSIGNIA	2.0 CDTI	120	07/13 -	4149	4150
INSIGNIA	2.0 CDTI	125	11/14 -	4149	4150
INSIGNIA	2.0 CDTI 4x4	118	06/10 -	4149	4150
INSIGNIA	2.0 CDTI 4x4	120	07/13 -	4149	4150
INSIGNIA	2.0 CDTI 4x4	125	11/14 -	4149	4150
INSIGNIA	2.0 E85 Turbo	162	09/10 -	4149	4150
INSIGNIA	2.0 Turbo	162	07/08 -	4149	4150
INSIGNIA	2.0 Turbo	184	04/14 -	4149	4150
INSIGNIA	2.0 Turbo 4x4	162	07/08 -	4149	4150
INSIGNIA	2.0 Turbo 4x4	184	09/11 -	4149	4150
INSIGNIA	2.8 V6 Turbo 4x4	191	07/08 -		4150
INSIGNIA	2.8 V6 Turbo OPC 4x4	239	07/09 -		4150
INSIGNIA Estate	1.4	103	09/11 -	4149	4150
INSIGNIA Estate	1.4 LPG	103	07/12 -	4149	4150
INSIGNIA Estate	1.6	85	07/08 -	4149	4150
INSIGNIA Estate	1.6 CDTi	88	07/15 -	4149	4150
INSIGNIA Estate	1.6 CDTi	100	07/15 -	4149	4150
INSIGNIA Estate	1.6 SIDI	125	03/13 -	4149	4150
INSIGNIA Estate	1.6 Turbo	132	01/09 -	4149	4150
INSIGNIA Estate	1.8	103	07/08 -	4149	4150
INSIGNIA Estate	2.0 Biturbo CDTI	140	07/08 -	4149	4150
INSIGNIA Estate	2.0 Biturbo CDTI	143	01/12 -	4149	4150
INSIGNIA Estate	2.0 Biturbo CDTI 4x4	140	07/08 -	4149	4150
INSIGNIA Estate	2.0 Biturbo CDTI 4x4	143	01/12 -	4149	4150
INSIGNIA Estate	2.0 CDTI	81	07/08 -	4149	4150
INSIGNIA Estate	2.0 CDTI	88	03/12 -	4149	4150
INSIGNIA Estate	2.0 CDTI	96	07/08 -	4149	4150
INSIGNIA Estate	2.0 CDTI	103	07/13 -	4149	4150
INSIGNIA Estate	2.0 CDTI	118	07/08 -	4149	4150
INSIGNIA Estate	2.0 CDTI	120	07/13 -	4149	4150
INSIGNIA Estate	2.0 CDTI	125	11/14 -	4149	4150
INSIGNIA Estate	2.0 CDTI 4x4	118	06/10 -	4149	4150
INSIGNIA Estate	2.0 CDTI 4x4	120	07/13 -	4149	4150
INSIGNIA Estate	2.0 CDTI 4x4	125	11/14 -	4149	4150
INSIGNIA Estate	2.0 E85 Turbo	162	09/10 -	4149	4150
INSIGNIA Estate	2.0 Turbo	162	07/08 -	4149	4150
INSIGNIA Estate	2.0 Turbo	184	04/14 -	4149	4150
INSIGNIA Estate	2.0 Turbo 4x4	162	07/08 -	4149	4150
INSIGNIA Estate	2.0 Turbo 4x4	184	09/11 -	4149	4150
INSIGNIA Estate	2.8 V6 Turbo 4x4	191	10/08 -		4150
INSIGNIA Estate	2.8 V6 Turbo OPC 4x4	239	07/09 -		4150
INSIGNIA Saloon	1.4	103	04/11 -	4149	4150
INSIGNIA Saloon	1.4 LPG	103	07/12 -	4149	4150
INSIGNIA Saloon	1.6	85	07/08 -	4149	4150
INSIGNIA Saloon	1.6 CDTi	88	07/15 -	4149	4150
INSIGNIA Saloon	1.6 CDTi	100	07/15 -	4149	4150

MAKE & MODEL   		KW	YEAR		
OPEL					
INSIGNIA Saloon	1.6 SIDI	125	03/13 -	4149	4150
INSIGNIA Saloon	1.6 Turbo	132	01/09 -	4149	4150
INSIGNIA Saloon	1.8	103	07/08 -	4149	4150
INSIGNIA Saloon	2.0 Biturbo CDTI	140	07/08 -	4149	4150
INSIGNIA Saloon	2.0 Biturbo CDTI	143	01/12 -	4149	4150
INSIGNIA Saloon	2.0 Biturbo CDTI 4x4	140	07/08 -	4149	4150
INSIGNIA Saloon	2.0 Biturbo CDTI 4x4	143	01/12 -	4149	4150
INSIGNIA Saloon	2.0 CDTI	81	07/08 -	4149	4150
INSIGNIA Saloon	2.0 CDTI	88	03/12 -	4149	4150
INSIGNIA Saloon	2.0 CDTI	96	07/08 -	4149	4150
INSIGNIA Saloon	2.0 CDTI	103	07/13 -	4149	4150
INSIGNIA Saloon	2.0 CDTI	118	07/08 -	4149	4150
INSIGNIA Saloon	2.0 CDTI	120	07/13 -	4149	4150
INSIGNIA Saloon	2.0 CDTI	125	11/14 -	4149	4150
INSIGNIA Saloon	2.0 CDTI 4x4	118	06/10 -	4149	4150
INSIGNIA Saloon	2.0 CDTI 4x4	120	07/13 -	4149	4150
INSIGNIA Saloon	2.0 CDTI 4x4	125	11/14 -	4149	4150
INSIGNIA Saloon	2.0 Turbo	162	07/08 -	4149	4150
INSIGNIA Saloon	2.0 Turbo	184	04/14 -	4149	4150
INSIGNIA Saloon	2.0 Turbo 4x4	162	07/08 -	4149	4150
INSIGNIA Saloon	2.0 Turbo 4x4	184	09/11 -	4149	4150
INSIGNIA Saloon	2.0 Turbo E85	162	07/08 -	4149	4150
INSIGNIA Saloon	2.8 V6 Turbo 4x4	191	07/08 -		4150
INSIGNIA Saloon	2.8 V6 Turbo OPC 4x4	239	07/09 -		4150
KADETT C	1.6 S	55	05/77 – 07/79	3335	
KADETT C	1.6 S	55	05/77 – 07/79	3365	
KADETT C City	1.6 S	55	05/77 – 07/79	3335	
KADETT C City	1.6 S	55	05/77 – 07/79	3365	
KADETT C Coupe	1.6 S	55	05/77 – 07/79	3335	
KADETT C Coupe	1.6 S	55	05/77 – 07/79	3365	
KADETT C Coupe	1.9 GT/E	77	09/75 – 07/77	3335	
KADETT C Coupe	1.9 GT/E	77	09/75 – 07/77	3365	
KADETT C Coupe	2.0 E Rallye	81	08/77 – 07/79	3335	
KADETT C Coupe	2.0 E Rallye	81	08/77 – 07/79	3365	
KADETT C Coupe	2.0 GT/E	85	08/77 – 07/79	3335	
KADETT C Coupe	2.0 GT/E	85	08/77 – 07/79	3365	
KADETT C Estate	1.6 S	55	05/77 – 07/79	3335	
KADETT C Estate	1.6 S	55	05/77 – 07/79	3365	
KADETT D (31_-34_, 41_-44_)	1.2	39	08/79 – 07/82	3410	
KADETT D (31_-34_, 41_-44_)	1.2	40	08/82 – 08/84	3410	
KADETT D (31_-34_, 41_-44_)	1.2 S	44	08/79 – 08/84	3410	
KADETT D (31_-34_, 41_-44_)	1.3 N	44	08/79 – 08/84	3410	
KADETT D (31_-34_, 41_-44_)	1.3 S	55	08/79 – 08/84	3410	
KADETT D (31_-34_, 41_-44_)	1.6 D	40	03/82 – 08/84	3410	
KADETT D (31_-34_, 41_-44_)	1.6 S	66	09/81 – 08/84	3410	
KADETT D (31_-34_, 41_-44_)	1.8 GT/E	85	02/83 – 08/84	3410	
KADETT D Estate (35_, 36_, 45_, 46_)	1.2	39	08/79 – 07/82	3410	
KADETT D Estate (35_, 36_, 45_, 46_)	1.2 S	44	08/79 – 08/84	3410	
KADETT D Estate (35_, 36_, 45_, 46_)	1.3 N	44	08/79 – 08/84	3410	
KADETT D Estate (35_, 36_, 45_, 46_)	1.3 S	55	08/79 – 08/84	3410	
KADETT D Estate (35_, 36_, 45_, 46_)	1.6 D	40	03/82 – 08/84	3410	
KADETT D Estate (35_, 36_, 45_, 46_)	1.6 S	66	09/81 – 08/84	3410	
KADETT E (39_, 49_)	1.2	40	09/84 – 07/86	3410	
KADETT E (39_, 49_)	1.3 i CAT	44	09/85 – 08/91	3410	
KADETT E (39_, 49_)	1.3 N	44	09/84 – 08/89	3410	
KADETT E (39_, 49_)	1.3 S	55	09/84 – 08/87	3410	
KADETT E (39_, 49_)	1.4 i	44	01/90 – 08/91	3410	
KADETT E (39_, 49_)	1.4 S	55	01/90 – 08/91	3410	
KADETT E (39_, 49_)	1.5 TD	53	07/88 – 08/91	3410	
KADETT E (39_, 49_)	1.6	75	09/87 – 08/91	3410	
KADETT E (39_, 49_)	1.6 D	40	09/84 – 01/89	3410	
KADETT E (39_, 49_)	1.6 i	55	09/86 – 08/91	3410	
KADETT E (39_, 49_)	1.6 i CAT	55	09/86 – 08/91	3410	
KADETT E (39_, 49_)	1.6 S	60	09/86 – 08/91	3410	
KADETT E (39_, 49_)	1.6 S	66	09/84 – 08/86	3410	
KADETT E (39_, 49_)	1.7 D	42	02/89 – 08/91	3410	
KADETT E (39_, 49_)	1.8	84	09/87 – 08/90	3410	
KADETT E (39_, 49_)	1.8	84	09/87 – 08/90	3470	
KADETT E (39_, 49_)	1.8	84	09/87 – 08/90	3505	
KADETT E (39_, 49_)	1.8	84	09/87 – 08/90	3615	
KADETT E (39_, 49_)	1.8 i	66	09/90 – 08/91	3410	
KADETT E (39_, 49_)	1.8 i	66	09/90 – 08/91	3470	
KADETT E (39_, 49_)	1.8 i	66	09/90 – 08/91	3505	
KADETT E (39_, 49_)	1.8 i	66	09/90 – 08/91	3615	
KADETT E (39_, 49_)	1.8 i	74	10/85 – 08/86	3410	
KADETT E (39_, 49_)	1.8 i	74	10/85 – 08/86	3470	

MAKE & MODEL		KW	YEAR		
OPEL					
KADETT E (39_, 49_)	1.8 i	74	10/85 – 08/86	3505	
KADETT E (39_, 49_)	1.8 i	74	10/85 – 08/86	3615	
KADETT E (39_, 49_)	1.8 i	85	09/84 – 08/86	3410	
KADETT E (39_, 49_)	1.8 i	85	09/84 – 08/86	3470	
KADETT E (39_, 49_)	1.8 i	85	09/84 – 08/86	3505	
KADETT E (39_, 49_)	1.8 i	85	09/84 – 08/86	3615	
KADETT E (39_, 49_)	1.8 S	62	09/87 – 08/91	3410	
KADETT E (39_, 49_)	1.8 S	62	09/87 – 08/91	3470	
KADETT E (39_, 49_)	1.8 S	62	09/87 – 08/91	3505	
KADETT E (39_, 49_)	1.8 S	62	09/87 – 08/91	3615	
KADETT E (39_, 49_)	2.0 i	85	03/87 – 08/91	3410	3469
KADETT E (39_, 49_)	2.0 i	85	03/87 – 08/91	3470	
KADETT E (39_, 49_)	2.0 i	85	03/87 – 08/91	3505	
KADETT E (39_, 49_)	2.0 i	85	03/87 – 08/91	3615	
KADETT E (39_, 49_)	2.0 i CAT	85	03/87 – 08/91	3410	3469
KADETT E (39_, 49_)	2.0 i CAT	85	03/87 – 08/91	3470	
KADETT E (39_, 49_)	2.0 i CAT	85	03/87 – 08/91	3505	
KADETT E (39_, 49_)	2.0 i CAT	85	03/87 – 08/91	3615	
KADETT E Box (37_, 47_)	1.2	40	09/84 – 07/86	3410	
KADETT E Box (37_, 47_)	1.3 N	44	09/84 – 07/89	3410	
KADETT E Box (37_, 47_)	1.4 i	44	01/90 – 08/91	3410	
KADETT E Box (37_, 47_)	1.6 D	40	08/84 – 08/88	3410	
KADETT E Box (37_, 47_)	1.6 i	55	08/89 – 09/93	3410	
KADETT E Box (37_, 47_)	1.7 D	42	08/88 – 09/92	3410	
KADETT E Box (37_, 47_)	1.8 i	66	08/84 – 09/92	3410	
KADETT E Combo (38_, 48_)	1.3 N	44	01/86 – 12/89	3410	
KADETT E Combo (38_, 48_)	1.3 S	55	01/86 – 12/89	3410	
KADETT E Combo (38_, 48_)	1.4 i	44	08/91 – 07/94	3410	
KADETT E Combo (38_, 48_)	1.4 S	55	07/89 – 08/91	3410	
KADETT E Combo (38_, 48_)	1.6	60	09/86 – 12/91	3410	
KADETT E Combo (38_, 48_)	1.6 D	40	01/86 – 12/89	3410	
KADETT E Combo (38_, 48_)	1.6 i	55	08/91 – 07/94	3410	
KADETT E Combo (38_, 48_)	1.7 D	42	01/89 – 07/94	3410	
KADETT E Combo (38_, 48_)	1.7 D	44	07/92 – 07/94	3410	
KADETT E Convertible (43B_)	1.3 S	55	03/87 – 02/93	3410	
KADETT E Convertible (43B_)	1.4 i	44	01/90 – 08/91	3410	
KADETT E Convertible (43B_)	1.4 S	55	08/90 – 02/93	3410	
KADETT E Convertible (43B_)	1.6 i	55	10/86 – 02/93	3410	
KADETT E Convertible (43B_)	1.6 i	60	07/89 – 02/93	3410	
KADETT E Convertible (43B_)	1.6 i CAT	55	10/87 – 02/93	3410	
KADETT E Convertible (43B_)	2.0	110	09/90 – 05/92	3410	
KADETT E Convertible (43B_)	2.0	110	09/90 – 05/92	3470	
KADETT E Convertible (43B_)	2.0	110	09/90 – 05/92	3505	
KADETT E Convertible (43B_)	2.0	110	09/90 – 05/92	3615	
KADETT E Convertible (43B_)	2.0 GSi	115	09/90 – 05/92	3410	
KADETT E Convertible (43B_)	2.0 GSi	115	09/90 – 05/92	3470	
KADETT E Convertible (43B_)	2.0 GSi	115	09/90 – 05/92	3505	
KADETT E Convertible (43B_)	2.0 GSi	115	09/90 – 05/92	3615	
KADETT E Convertible (43B_)	2.0 i	85	10/86 – 02/93	3410	
KADETT E Convertible (43B_)	2.0 i	85	10/86 – 02/93	3470	
KADETT E Convertible (43B_)	2.0 i	85	10/86 – 02/93	3505	
KADETT E Convertible (43B_)	2.0 i	85	10/86 – 02/93	3615	
KADETT E Convertible (43B_)	2.0 i CAT	85	10/86 – 02/93	3410	
KADETT E Convertible (43B_)	2.0 i CAT	85	10/86 – 02/93	3470	
KADETT E Convertible (43B_)	2.0 i CAT	85	10/86 – 02/93	3505	
KADETT E Convertible (43B_)	2.0 i CAT	85	10/86 – 02/93	3615	
KADETT E Estate (35_, 36_, 45_, 46_)	1.2	40	09/84 – 07/86	3410	
KADETT E Estate (35_, 36_, 45_, 46_)	1.3 i CAT	44	09/85 – 08/91	3410	
KADETT E Estate (35_, 36_, 45_, 46_)	1.3 N	44	09/84 – 08/91	3410	
KADETT E Estate (35_, 36_, 45_, 46_)	1.3 S	55	09/84 – 08/87	3410	
KADETT E Estate (35_, 36_, 45_, 46_)	1.4 i	44	01/90 – 08/91	3410	
KADETT E Estate (35_, 36_, 45_, 46_)	1.4 S	55	01/90 – 08/91	3410	
KADETT E Estate (35_, 36_, 45_, 46_)	1.5 TD	53	07/88 – 08/91	3410	
KADETT E Estate (35_, 36_, 45_, 46_)	1.6	60	09/86 – 08/91	3410	
KADETT E Estate (35_, 36_, 45_, 46_)	1.6 D	40	09/84 – 01/89	3410	
KADETT E Estate (35_, 36_, 45_, 46_)	1.6 i	55	09/86 – 08/91	3410	
KADETT E Estate (35_, 36_, 45_, 46_)	1.6 i CAT	55	09/86 – 08/91	3410	
KADETT E Estate (35_, 36_, 45_, 46_)	1.6 S	66	09/84 – 08/86	3410	
KADETT E Estate (35_, 36_, 45_, 46_)	1.7 D	42	02/89 – 08/91	3410	
KADETT E Estate (35_, 36_, 45_, 46_)	1.8 E	74	10/85 – 08/86	3410	
KADETT E Estate (35_, 36_, 45_, 46_)	1.8 i	66	06/85 – 08/91	3410	
KADETT E Estate (35_, 36_, 45_, 46_)	1.8 i	85	09/84 – 08/86	3410	
KADETT E Estate (35_, 36_, 45_, 46_)	1.8 S	62	09/87 – 08/91	3410	
KADETT E Estate (35_, 36_, 45_, 46_)	2.0 i	85	09/87 – 08/91	3470	
KADETT E Estate (35_, 36_, 45_, 46_)	2.0 i	85	09/87 – 08/91	3505	
KADETT E Estate (35_, 36_, 45_, 46_)	2.0 i	85	09/87 – 08/91	3615	

MAKE & MODEL		KW	YEAR		
OPEL					
KADETT E Estate (35_, 36_, 45_, 46_)	2.0 i CAT	85	09/87 – 08/91	3470	
KADETT E Estate (35_, 36_, 45_, 46_)	2.0 i CAT	85	09/87 – 08/91	3505	
KADETT E Estate (35_, 36_, 45_, 46_)	2.0 i CAT	85	09/87 – 08/91	3615	
KADETT E Hatchback (33_, 34_, 43_, 44_)	1.2	40	09/84 – 07/86	3410	
KADETT E Hatchback (33_, 34_, 43_, 44_)	1.3 i CAT	44	09/85 – 08/91	3410	
KADETT E Hatchback (33_, 34_, 43_, 44_)	1.3 N	44	09/84 – 08/91	3410	
KADETT E Hatchback (33_, 34_, 43_, 44_)	1.3 S	55	09/84 – 08/87	3410	
KADETT E Hatchback (33_, 34_, 43_, 44_)	1.4 i	44	01/90 – 08/91	3410	
KADETT E Hatchback (33_, 34_, 43_, 44_)	1.4 S	55	01/90 – 08/91	3410	
KADETT E Hatchback (33_, 34_, 43_, 44_)	1.4 S	60	09/89 – 08/91	3410	
KADETT E Hatchback (33_, 34_, 43_, 44_)	1.5 TD	53	07/88 – 08/91	3410	
KADETT E Hatchback (33_, 34_, 43_, 44_)	1.6 D	40	09/84 – 01/89	3410	
KADETT E Hatchback (33_, 34_, 43_, 44_)	1.6 i	55	09/86 – 08/91	3410	
KADETT E Hatchback (33_, 34_, 43_, 44_)	1.6 i CAT	55	09/86 – 08/91	3410	
KADETT E Hatchback (33_, 34_, 43_, 44_)	1.6 S	60	09/86 – 08/91	3410	
KADETT E Hatchback (33_, 34_, 43_, 44_)	1.6 S	66	09/84 – 08/86	3410	
KADETT E Hatchback (33_, 34_, 43_, 44_)	1.7 D	42	02/89 – 08/91	3410	
KADETT E Hatchback (33_, 34_, 43_, 44_)	1.8 E	74	10/85 – 08/86	3410	
KADETT E Hatchback (33_, 34_, 43_, 44_)	1.8 E	74	10/85 – 08/86	3470	
KADETT E Hatchback (33_, 34_, 43_, 44_)	1.8 E	74	10/85 – 08/86	3505	
KADETT E Hatchback (33_, 34_, 43_, 44_)	1.8 E	74	10/85 – 08/86	3615	
KADETT E Hatchback (33_, 34_, 43_, 44_)	1.8 GSI	85	09/84 – 08/86	3410	
KADETT E Hatchback (33_, 34_, 43_, 44_)	1.8 GSI	85	09/84 – 08/86	3470	
KADETT E Hatchback (33_, 34_, 43_, 44_)	1.8 GSI	85	09/84 – 08/86	3505	
KADETT E Hatchback (33_, 34_, 43_, 44_)	1.8 GSI	85	09/84 – 08/86	3615	
KADETT E Hatchback (33_, 34_, 43_, 44_)	1.8 i	66	06/85 – 08/91	3410	
KADETT E Hatchback (33_, 34_, 43_, 44_)	1.8 i	66	06/85 – 08/91	3470	
KADETT E Hatchback (33_, 34_, 43_, 44_)	1.8 i	66	06/85 – 08/91	3505	
KADETT E Hatchback (33_, 34_, 43_, 44_)	1.8 i	66	06/85 – 08/91	3615	
KADETT E Hatchback (33_, 34_, 43_, 44_)	1.8 S	62	09/87 – 08/91	3410	
KADETT E Hatchback (33_, 34_, 43_, 44_)	1.8 S	62	09/87 – 08/91	3470	
KADETT E Hatchback (33_, 34_, 43_, 44_)	1.8 S	62	09/87 – 08/91	3505	
KADETT E Hatchback (33_, 34_, 43_, 44_)	1.8 S	62	09/87 – 08/91	3615	
KADETT E Hatchback (33_, 34_, 43_, 44_)	2.0 GSI	85	09/86 – 08/91	3410	3469
KADETT E Hatchback (33_, 34_, 43_, 44_)	2.0 GSI	85	09/86 – 08/91	3470	
KADETT E Hatchback (33_, 34_, 43_, 44_)	2.0 GSI	85	09/86 – 08/91	3505	
KADETT E Hatchback (33_, 34_, 43_, 44_)	2.0 GSI	85	09/86 – 08/91	3615	
KADETT E Hatchback (33_, 34_, 43_, 44_)	2.0 GSI	95	09/86 – 08/91	3410	3469
KADETT E Hatchback (33_, 34_, 43_, 44_)	2.0 GSI	95	09/86 – 08/91	3470	
KADETT E Hatchback (33_, 34_, 43_, 44_)	2.0 GSI	95	09/86 – 08/91	3505	
KADETT E Hatchback (33_, 34_, 43_, 44_)	2.0 GSI	95	09/86 – 08/91	3615	
KADETT E Hatchback (33_, 34_, 43_, 44_)	2.0 GSI 16V	110	03/88 – 08/91	3410	3469
KADETT E Hatchback (33_, 34_, 43_, 44_)	2.0 GSI 16V	110	03/88 – 08/91	3470	
KADETT E Hatchback (33_, 34_, 43_, 44_)	2.0 GSI 16V	110	03/88 – 08/91	3505	
KADETT E Hatchback (33_, 34_, 43_, 44_)	2.0 GSI 16V	110	03/88 – 08/91	3615	
KADETT E Hatchback (33_, 34_, 43_, 44_)	2.0 GSI 16V	115	12/87 – 08/91	3410	3469
KADETT E Hatchback (33_, 34_, 43_, 44_)	2.0 GSI 16V	115	12/87 – 08/91	3470	
KADETT E Hatchback (33_, 34_, 43_, 44_)	2.0 GSI 16V	115	12/87 – 08/91	3505	
KADETT E Hatchback (33_, 34_, 43_, 44_)	2.0 GSI 16V	115	12/87 – 08/91	3615	
KADETT E Hatchback (33_, 34_, 43_, 44_)	2.0 GSI 16V CAT	110	03/88 – 08/91	3410	3469
KADETT E Hatchback (33_, 34_, 43_, 44_)	2.0 GSI 16V CAT	110	03/88 – 08/91	3470	
KADETT E Hatchback (33_, 34_, 43_, 44_)	2.0 GSI 16V CAT	110	03/88 – 08/91	3505	
KADETT E Hatchback (33_, 34_, 43_, 44_)	2.0 GSI 16V CAT	110	03/88 – 08/91	3615	
KADETT E Hatchback (33_, 34_, 43_, 44_)	2.0 GSI CAT	85	09/86 – 08/91	3410	3469
KADETT E Hatchback (33_, 34_, 43_, 44_)	2.0 GSI CAT	85	09/86 – 08/91	3470	
KADETT E Hatchback (33_, 34_, 43_, 44_)	2.0 GSI CAT	85	09/86 – 08/91	3505	
KADETT E Hatchback (33_, 34_, 43_, 44_)	2.0 GSI CAT	85	09/86 – 08/91	3615	
MANTA A (58_, 59_)	1.2	44	04/72 – 08/75	3335	
MANTA A (58_, 59_)	1.2	44	04/72 – 08/75	3365	
MANTA A (58_, 59_)	1.2 N	40	08/76 – 07/83	3335	
MANTA A (58_, 59_)	1.2 N	40	08/76 – 07/83	3365	
MANTA A (58_, 59_)	1.2 N	40	08/76 – 07/83	3410	
MANTA A (58_, 59_)	1.2 S	44	09/75 – 02/79	3335	
MANTA A (58_, 59_)	1.2 S	44	09/75 – 02/79	3365	
MANTA A (58_, 59_)	1.2 S	44	09/75 – 02/79	3410	
MANTA A (58_, 59_)	1.3 N	44	03/79 – 12/80	3410	
MANTA A (58_, 59_)	1.3 S	55	08/81 – 08/86	3410	
MANTA A (58_, 59_)	1.6	44	02/75 – 08/75	3335	
MANTA A (58_, 59_)	1.6	44	02/75 – 08/75	3365	
MANTA A (58_, 59_)	1.6	50	09/70 – 08/75	3335	
MANTA A (58_, 59_)	1.6	50	09/70 – 08/75	3365	
MANTA A (58_, 59_)	1.6	55	02/75 – 08/75	3335	
MANTA A (58_, 59_)	1.6	55	02/75 – 08/75	3365	
MANTA B (58_, 59_)	1.6 N	44	09/75 – 12/80	3335	
MANTA B (58_, 59_)	1.6 N	44	09/75 – 12/80	3365	
MANTA B (58_, 59_)	1.6 S	55	09/75 – 12/81	3335	

MAKE & MODEL		KW	YEAR		
OPEL					
MANTA B (58_, 59_)	1.6 S	55	09/75 – 12/81	3365	
MANTA B (58_, 59_)	1.6 S	55	09/75 – 12/81	3410	
MANTA B (58_, 59_)	1.6 S	59	09/70 – 08/75	3335	
MANTA B (58_, 59_)	1.6 S	59	09/70 – 08/75	3365	
MANTA B (58_, 59_)	1.8 S	66	07/82 – 08/87	3410	
MANTA B (58_, 59_)	1.9 E	77	09/75 – 08/77	3335	
MANTA B (58_, 59_)	1.9 E	77	09/75 – 08/77	3365	
MANTA B (58_, 59_)	1.9 GT/E	77	02/74 – 08/75	3335	
MANTA B (58_, 59_)	1.9 GT/E	77	02/74 – 08/75	3365	
MANTA B (58_, 59_)	1.9 N	55	08/76 – 12/81	3335	
MANTA B (58_, 59_)	1.9 N	55	08/76 – 12/81	3365	
MANTA B (58_, 59_)	1.9 N	55	08/76 – 12/81	3410	
MANTA B (58_, 59_)	1.9 S	65	09/70 – 08/75	3335	
MANTA B (58_, 59_)	1.9 S	65	09/70 – 08/75	3365	
MANTA B (58_, 59_)	1.9 S	66	09/70 – 08/75	3335	
MANTA B (58_, 59_)	1.9 S	66	09/70 – 08/75	3365	
MANTA B (58_, 59_)	1.9 S	66	09/75 – 12/80	3335	
MANTA B (58_, 59_)	1.9 S	66	09/75 – 12/80	3365	
MANTA B (58_, 59_)	1.9 S	66	09/75 – 12/80	3410	
MANTA B (58_, 59_)	2.0	66	08/77 – 12/80	3335	
MANTA B (58_, 59_)	2.0	66	08/77 – 12/80	3365	
MANTA B (58_, 59_)	2.0	66	08/77 – 12/80	3410	
MANTA B (58_, 59_)	2.0 E	81	08/77 – 08/88	3335	
MANTA B (58_, 59_)	2.0 E	81	08/77 – 08/88	3365	
MANTA B (58_, 59_)	2.0 E	81	08/77 – 08/88	3410	
MANTA B (58_, 59_)	2.0 S	74	08/77 – 08/84	3335	
MANTA B (58_, 59_)	2.0 S	74	08/77 – 08/84	3365	
MANTA B (58_, 59_)	2.0 S	74	08/77 – 08/84	3410	
MANTA B (58_, 59_)	2.4 400	106	07/80 – 08/84	3410	
MANTA B CC (53_, 55_)	1.3 N	44	03/79 – 12/80	3410	
MANTA B CC (53_, 55_)	1.3 S	55	08/79 – 08/86	3410	
MANTA B CC (53_, 55_)	1.6 N	44	09/75 – 12/80	3335	
MANTA B CC (53_, 55_)	1.6 N	44	09/75 – 12/80	3365	
MANTA B CC (53_, 55_)	1.8 S	66	07/82 – 08/87	3410	
MANTA B CC (53_, 55_)	1.9 N	55	08/76 – 12/81	3335	
MANTA B CC (53_, 55_)	1.9 N	55	08/76 – 12/81	3365	
MANTA B CC (53_, 55_)	1.9 N	55	08/76 – 12/81	3410	
MANTA B CC (53_, 55_)	2.0	66	08/77 – 12/80	3335	
MANTA B CC (53_, 55_)	2.0	66	08/77 – 12/80	3365	
MANTA B CC (53_, 55_)	2.0	66	08/77 – 12/80	3410	
MANTA B CC (53_, 55_)	2.0 E	81	08/77 – 08/88	3335	
MANTA B CC (53_, 55_)	2.0 E	81	08/77 – 08/88	3365	
MANTA B CC (53_, 55_)	2.0 E	81	08/77 – 08/88	3410	
MANTA B CC (53_, 55_)	2.0 E	81	08/77 – 08/88	3410	
MANTA B CC (53_, 55_)	2.0 S	74	08/77 - 08/84	3410	
MANTA B CC (53_, 55_)	2.0 S	74	08/77 – 08/84	3335	
MANTA B CC (53_, 55_)	2.0 S	74	08/77 – 08/84	3365	
MERIVA	1.3 CDTI	51	04/05 – 05/10	4042	4040
MERIVA	1.3 CDTI	55	09/03 – 05/10	4042	4040
MERIVA	1.4 16V Twinport	66	07/04 – 05/10	3846	4040
MERIVA	1.4 16V Twinport	66	07/04 – 05/10	4042	
MERIVA	1.4 16V Twinport LPG	66	07/04 – 05/10	3846	4040
MERIVA	1.4 16V Twinport LPG	66	07/04 – 05/10	4042	
MERIVA	1.6	64	05/03 – 05/10	3846	4040
MERIVA	1.6	64	05/03 – 05/10	4042	
MERIVA	1.6	77	01/06 – 05/10	4042	4040
MERIVA	1.6 16V	74	05/03 – 01/06	4042	4040
MERIVA	1.6 Turbo	132	09/05 – 05/10	4042	4040
MERIVA	1.7 CDTI	74	09/03 – 05/10	4042	4040
MERIVA	1.7 CDTI	92	09/06 – 05/10	4042	4040
MERIVA	1.7 DTI	55	09/03 – 05/10	4042	4040
MERIVA	1.8	92	05/03 – 05/10	4042	4040
MERIVA B	1.3 CDTI	55	06/10 -	4042	
MERIVA B	1.3 CDTI	70	06/10 -	4042	
MERIVA B	1.4	74	06/10 -	4042	
MERIVA B	1.4	88	06/10 -	4042	
MERIVA B	1.4	103	06/10 -	4042	
MERIVA B	1.4 LPG	88	06/11 -	4042	
MERIVA B	1.6 CDTI	70	01/14 -	4042	
MERIVA B	1.6 CDTI	81	03/14 -	4042	
MERIVA B	1.6 CDTi	100	08/13 -	4042	
MERIVA B	1.7 CDTI	74	06/10 -	4042	
MERIVA B	1.7 CDTI	81	06/10 -	4042	
MERIVA B	1.7 CDTI	96	06/10 -	4042	
MOKKA	1.4	103	04/13 -	4014	
MOKKA	1.4	103	04/13 -	4008	

MAKE & MODEL		KW	YEAR		
OPEL					
MOKKA	1.4 4x4	103	06/12 -	4014	
MOKKA	1.4 4x4	103	06/12 -	4008	
MOKKA	1.4 4x4	112	06/16 -	4014	
MOKKA	1.4 4x4	112	06/16 -	4008	
MOKKA	1.4 LPG	103	04/13 -	4014	
MOKKA	1.4 LPG	103	04/13 -	4008	
MOKKA	1.6	85	06/12 -	4014	
MOKKA	1.6	85	06/12 -	4008	
MOKKA	1.6 CDTI	81	06/15 -	4014	
MOKKA	1.6 CDTI	81	06/15 -	4008	
MOKKA	1.6 CDTI	100	01/15 -	4014	
MOKKA	1.6 CDTI	100	01/15 -	4008	
MOKKA	1.6 CDTI 4x4	100	01/15 -	4014	
MOKKA	1.6 CDTI 4x4	100	01/15 -	4008	
MOKKA	1.7 CDTI	96	06/12 -	4014	
MOKKA	1.7 CDTI	96	06/12 -	4008	
MOKKA	1.7 CDTI 4x4	96	06/12 -	4014	
MOKKA	1.7 CDTI 4x4	96	06/12 -	4008	
MOKKA	1.8	103	01/13 -	4014	
MOKKA	1.8	103	01/13 -	4008	
MOKKA	1.8 4x4	103	01/13 -	4014	
MOKKA	1.8 4x4	103	01/13 -	4008	
MOKKA	MOKKA-e (76)	100	06.2020 -		4372
MONTEREY A (UBS_)	3.1 TD (UBS69_)	84	09/91 – 07/98	3743	3887
MONTEREY A (UBS_)	3.2 (UBS25_)	130	06/92 – 07/98	3743	3887
MONTEREY A (UBS_)	MONTEREY A (UBS_)	84	09/91 – 07/98	3674	
MONTEREY A (UBS_)	MONTEREY A (UBS_)	130	06/92 – 07/98	3674	
MONTEREY B	3.0 DTI	117	07/98 – 08/99	3743	3887
MONTEREY B	3.5 V6 24V	158	07/98 – 08/99	3743	3887
MONTEREY B	MONTEREY B	117	07/98 – 08/99	3674	
MONTEREY B	MONTEREY B	158	07/98 – 08/99	3674	
MOVANO B Box	2.3 CDTI	74	12/10 -		4057
MOVANO B Box	2.3 CDTI	81	05/14 -		4057
MOVANO B Box	2.3 CDTI	81	05/14 -		4132
MOVANO B Box	2.3 CDTI	81	05/14 -		4172
MOVANO B Box	2.3 CDTI	92	12/10 -		4057
MOVANO B Box	2.3 CDTI	100	05/14 -		4057
MOVANO B Box	2.3 CDTI	100	05/14 -		4132
MOVANO B Box	2.3 CDTI	100	05/14 -		4172
MOVANO B Box	2.3 CDTI	107	12/10 -		4057
MOVANO B Box	2.3 CDTI	110	01/13 -		4057
MOVANO B Box	2.3 CDTI	110	01/13 -		4132
MOVANO B Box	2.3 CDTI	110	01/13 -		4172
MOVANO B Box	2.3 CDTI	120	05/14 -		4057
MOVANO B Box	2.3 CDTI	120	05/14 -		4132
MOVANO B Box	2.3 CDTI	120	05/14 -		4172
MOVANO B Box	2.3 CDTI	125	07/15 -		4057
MOVANO B Box	2.3 CDTI	125	07/15 -		4132
MOVANO B Box	2.3 CDTI	125	07/15 -		4172
MOVANO B Box	2.3 CDTI [RWD]	74	05/10 -	4056	4057
MOVANO B Box	2.3 CDTI [RWD]	74	05/10 -		4172
MOVANO B Box	2.3 CDTI [RWD]	74	05/10 -		4132
MOVANO B Box	2.3 CDTI [RWD]	92	05/10 -	4056	4057
MOVANO B Box	2.3 CDTI [RWD]	92	05/10 -		4172
MOVANO B Box	2.3 CDTI [RWD]	92	05/10 -		4132
MOVANO B Box	2.3 CDTI [RWD]	96	11/16 -	4056	
MOVANO B Box	2.3 CDTI [RWD]	100	05/14 -	4056	4057
MOVANO B Box	2.3 CDTI [RWD]	100	05/14 -		4132
MOVANO B Box	2.3 CDTI [RWD]	100	05/14 -		4172
MOVANO B Box	2.3 CDTI [RWD]	107	05/10 -	4056	4057
MOVANO B Box	2.3 CDTI [RWD]	107	05/10 -		4172
MOVANO B Box	2.3 CDTI [RWD]	107	05/10 -		4132
MOVANO B Box	2.3 CDTI [RWD]	110	01/13 -	4056	4057
MOVANO B Box	2.3 CDTI [RWD]	110	01/13 -		4132
MOVANO B Box	2.3 CDTI [RWD]	110	01/13 -		4172
MOVANO B Box	2.3 CDTI [RWD]	120	05/14 -	4056	
MOVANO B Box	2.3 CDTI FWD	74	05/10 -	4056	
MOVANO B Box	2.3 CDTI FWD	81	02/12 -	4056	
MOVANO B Box	2.3 CDTI FWD	92	05/10 -	4056	
MOVANO B Box	2.3 CDTI FWD	96	11/16 -	4056	
MOVANO B Box	2.3 CDTI FWD	100	05/14 -	4056	
MOVANO B Box	2.3 CDTI FWD	107	05/10 -	4056	
MOVANO B Box	2.3 CDTI FWD	110	01/13 -	4056	
MOVANO B Box	2.3 CDTI FWD	120	05/14 -	4056	
MOVANO B Box	2.3 CDTI FWD	125	11/16 -	4056	
MOVANO B Bus	2.3 CDTI	74	12/10 -	4056	

BESER®

MAKE & MODEL   		KW	YEAR		
OPEL					
MOVANO B Bus	2.3 CDTI	81	05/14 -	4056	
MOVANO B Bus	2.3 CDTI	92	12/10 -	4056	
MOVANO B Bus	2.3 CDTI	100	05/14 -	4056	
MOVANO B Bus	2.3 CDTI	107	12/10 -	4056	
MOVANO B Bus	2.3 CDTI	110	01/13 -	4056	
MOVANO B Bus	2.3 CDTI	120	05/14 -	4056	
MOVANO B Bus	2.3 CDTI	125	07/15 -	4056	
MOVANO B Bus	2.3 CDTI [RWD]	74	05/10 -		4057
MOVANO B Bus	2.3 CDTI [RWD]	81	02/12 -		4057
MOVANO B Bus	2.3 CDTI [RWD]	81	02/12 -		4132
MOVANO B Bus	2.3 CDTI FWD	81	02/12 -		4172
MOVANO B Bus	2.3 CDTI FWD	92	05/10 -		4057
MOVANO B Bus	2.3 CDTI FWD	100	05/14 -		4057
MOVANO B Bus	2.3 CDTI FWD	100	05/14 -		4132
MOVANO B Bus	2.3 CDTI FWD	100	05/14 -		4172
MOVANO B Bus	2.3 CDTI FWD	107	05/10 -		4057
MOVANO B Bus	2.3 CDTI FWD	110	01/13 -		4057
MOVANO B Bus	2.3 CDTI FWD	110	01/13 -		4132
MOVANO B Bus	2.3 CDTI FWD	110	01/13 -		4172
MOVANO B Bus	2.3 CDTI FWD	120	05/14 -		4057
MOVANO B Bus	2.3 CDTI FWD	120	05/14 -		4132
MOVANO B Bus	2.3 CDTI FWD	120	05/14 -		4172
MOVANO B Bus	2.3 CDTI FWD	120	05/14 -		4172
MOVANO B Platform/Chassis	2.3 CDTI [RWD]	74	05/10 -	4056	4057
MOVANO B Platform/Chassis	2.3 CDTI [RWD]	74	05/10 -		4132
MOVANO B Platform/Chassis	2.3 CDTI [RWD]	74	05/10 -		4172
MOVANO B Platform/Chassis	2.3 CDTI [RWD]	92	05/10 -	4056	4057
MOVANO B Platform/Chassis	2.3 CDTI [RWD]	92	05/10 -		4132
MOVANO B Platform/Chassis	2.3 CDTI [RWD]	92	05/10 -		4172
MOVANO B Platform/Chassis	2.3 CDTI [RWD]	96	11/16 -	4056	
MOVANO B Platform/Chassis	2.3 CDTI [RWD]	100	05/14 -	4056	4057
MOVANO B Platform/Chassis	2.3 CDTI [RWD]	100	05/14 -		4132
MOVANO B Platform/Chassis	2.3 CDTI [RWD]	100	05/14 -		4172
MOVANO B Platform/Chassis	2.3 CDTI [RWD]	107	05/10 -	4056	4057
MOVANO B Platform/Chassis	2.3 CDTI [RWD]	107	05/10 -		4132
MOVANO B Platform/Chassis	2.3 CDTI [RWD]	107	05/10 -		4172
MOVANO B Platform/Chassis	2.3 CDTI [RWD]	110	01/13 -	4056	4057
MOVANO B Platform/Chassis	2.3 CDTI [RWD]	110	01/13 -		4132
MOVANO B Platform/Chassis	2.3 CDTI [RWD]	110	01/13 -		4172
MOVANO B Platform/Chassis	2.3 CDTI [RWD]	120	05/14 -	4056	4057
MOVANO B Platform/Chassis	2.3 CDTI [RWD]	120	05/14 -		4132
MOVANO B Platform/Chassis	2.3 CDTI [RWD]	120	05/14 -		4172
MOVANO B Platform/Chassis	2.3 CDTI FWD	74	05/10 -	4056	4057
MOVANO B Platform/Chassis	2.3 CDTI FWD	81	05/14 -	4056	4057
MOVANO B Platform/Chassis	2.3 CDTI FWD	81	05/14 -		4132
MOVANO B Platform/Chassis	2.3 CDTI FWD	81	05/14 -		4172
MOVANO B Platform/Chassis	2.3 CDTI FWD	92	05/10 -	4056	4057
MOVANO B Platform/Chassis	2.3 CDTI FWD	96	11/16 -	4056	
MOVANO B Platform/Chassis	2.3 CDTI FWD	100	05/14 -	4056	4057
MOVANO B Platform/Chassis	2.3 CDTI FWD	100	05/14 -		4132
MOVANO B Platform/Chassis	2.3 CDTI FWD	100	05/14 -		4172
MOVANO B Platform/Chassis	2.3 CDTI FWD	107	05/10 -	4056	4057
MOVANO B Platform/Chassis	2.3 CDTI FWD	110	01/13 -	4056	4057
MOVANO B Platform/Chassis	2.3 CDTI FWD	110	01/13 -		4132
MOVANO B Platform/Chassis	2.3 CDTI FWD	110	01/13 -		4172
MOVANO B Platform/Chassis	2.3 CDTI FWD	120	05/14 -	4056	4057
MOVANO B Platform/Chassis	2.3 CDTI FWD	120	05/14 -		4132
MOVANO B Platform/Chassis	2.3 CDTI FWD	120	05/14 -		4172
MOVANO B Platform/Chassis	2.3 CDTI FWD	125	11/16 -	4056	
MOVANO Box (F9)	1.9 DTI	59	09/00 – 10/01	3856	3855
MOVANO Box (F9)	1.9 DTI	60	10/01 -	3856	3855
MOVANO Box (F9)	2.2 DTI	66	09/00 -	3856	3855
MOVANO Box (F9)	2.5 CDTI	74	10/03 -	3856	3855
MOVANO Box (F9)	2.5 CDTI	88	10/03 -	3856	3855
MOVANO Box (F9)	2.5 CDTI	107	10/03 -	3856	3855
MOVANO Box (F9)	2.5 D	59	01/99 – 09/00	3856	3855
MOVANO Box (F9)	2.5 DTI	73	10/03 -	3856	3855
MOVANO Box (F9)	2.5 DTI	84	10/01 -	3856	3855
MOVANO Box (F9)	2.8 DTI	84	01/99 – 10/01	3856	3855
MOVANO Box (F9)	3.0 DTI	100	10/03 -	3856	3855
MOVANO Combi (J9)	1.9 DTI	59	09/00 – 10/01	3856	3855
MOVANO Combi (J9)	1.9 DTI	60	10/01 -	3856	3855
MOVANO Combi (J9)	2.2 DTI	66	09/00 -	3856	3855
MOVANO Combi (J9)	2.5 CDTI	73	10/03 – 12/06	3856	3855
MOVANO Combi (J9)	2.5 CDTI	74	09/07 -	3856	3855
MOVANO Combi (J9)	2.5 CDTI	88	08/06 -	3856	3855

MAKE & MODEL		KW	YEAR		
OPEL					
MOVANO Combi (J9)	2.5 CDTI	107	08/06 -	3856	3855
MOVANO Combi (J9)	2.5 D	59	07/98 – 09/00	3856	3855
MOVANO Combi (J9)	2.5 DTI	84	10/01 -	3856	3855
MOVANO Combi (J9)	2.8 DTI	84	07/98 – 10/01	3856	3855
MOVANO Combi (J9)	3.0 DTi	100	10/03 -	3856	3855
MOVANO Dumptruck (H9)	2.2 DTI	66	09/00 -	3856	3855
MOVANO Dumptruck (H9)	2.5 CDTI	74	08/06 -	3856	3855
MOVANO Dumptruck (H9)	2.5 CDTI	88	08/06 -	3856	3855
MOVANO Dumptruck (H9)	2.5 CDTI	107	08/06 -	3856	3855
MOVANO Dumptruck (H9)	2.5 D	59	01/99 – 09/00	3856	3855
MOVANO Dumptruck (H9)	2.5 DTI	73	10/03 -	3856	3855
MOVANO Dumptruck (H9)	2.5 DTI	84	10/01 -	3856	3855
MOVANO Dumptruck (H9)	2.8 DTI	84	01/99 – 10/01	3856	3855
MOVANO Dumptruck (H9)	3.0 DTI	100	10/03 -	3856	3855
MOVANO Platform/Chassis (U9, E9)	2.2 DTI	66	09/00 -	3856	3855
MOVANO Platform/Chassis (U9, E9)	2.5 CDTI	74	08/06 -	3856	3855
MOVANO Platform/Chassis (U9, E9)	2.5 CDTI	88	08/06 -	3856	3855
MOVANO Platform/Chassis (U9, E9)	2.5 CDTI	107	08/06 -	3856	3855
MOVANO Platform/Chassis (U9, E9)	2.5 D	59	07/98 – 09/00	3856	3855
MOVANO Platform/Chassis (U9, E9)	2.5 DTI	73	10/03 -	3856	3855
MOVANO Platform/Chassis (U9, E9)	2.5 DTi	84	10/01 -	3856	3855
MOVANO Platform/Chassis (U9, E9)	2.8 DTI	84	07/98 – 10/01	3856	3855
MOVANO Platform/Chassis (U9, E9)	3.0 DTI	100	10/03 -	3856	3855
OMEGA A (16_, 17_, 19_)	1.8	65	09/87 – 03/94	3410	
OMEGA A (16_, 17_, 19_)	1.8	65	09/87 – 03/94	3470	
OMEGA A (16_, 17_, 19_)	1.8	65	09/87 – 03/94	3505	
OMEGA A (16_, 17_, 19_)	1.8	65	09/87 – 03/94	3615	
OMEGA A (16_, 17_, 19_)	1.8	65	09/87 – 03/94	3717	
OMEGA A (16_, 17_, 19_)	1.8	85	09/86 – 03/94	3410	
OMEGA A (16_, 17_, 19_)	1.8	85	09/86 – 03/94	3470	
OMEGA A (16_, 17_, 19_)	1.8	85	09/86 – 03/94	3505	
OMEGA A (16_, 17_, 19_)	1.8	85	09/86 – 03/94	3615	
OMEGA A (16_, 17_, 19_)	1.8	85	09/86 – 03/94	3717	
OMEGA A (16_, 17_, 19_)	1.8 N	60	09/86 – 08/87	3410	
OMEGA A (16_, 17_, 19_)	1.8 S	66	09/86 – 03/94	3410	
OMEGA A (16_, 17_, 19_)	1.8 S	66	09/86 – 03/94	3470	
OMEGA A (16_, 17_, 19_)	1.8 S	66	09/86 – 03/94	3505	
OMEGA A (16_, 17_, 19_)	1.8 S	66	09/86 – 03/94	3615	
OMEGA A (16_, 17_, 19_)	1.8 S	66	09/86 – 03/94	3717	
OMEGA A (16_, 17_, 19_)	2.0	73	09/90 – 03/94	3470	
OMEGA A (16_, 17_, 19_)	2.0	73	09/90 – 03/94	3505	
OMEGA A (16_, 17_, 19_)	2.0	73	09/90 – 03/94	3615	
OMEGA A (16_, 17_, 19_)	2.0	73	09/90 – 03/94	3717	
OMEGA A (16_, 17_, 19_)	2.0	74	09/90 – 03/94	3470	
OMEGA A (16_, 17_, 19_)	2.0	74	09/90 – 03/94	3505	
OMEGA A (16_, 17_, 19_)	2.0	74	09/90 – 03/94	3615	
OMEGA A (16_, 17_, 19_)	2.0	74	09/90 – 03/94	3717	
OMEGA A (16_, 17_, 19_)	2.0	85	09/87 – 04/94	3410	
OMEGA A (16_, 17_, 19_)	2.0	85	09/87 – 04/94	3470	
OMEGA A (16_, 17_, 19_)	2.0	85	09/87 – 04/94	3505	
OMEGA A (16_, 17_, 19_)	2.0	85	09/87 – 04/94	3615	
OMEGA A (16_, 17_, 19_)	2.0	85	09/87 – 04/94	3717	
OMEGA A (16_, 17_, 19_)	2.0	90	09/86 – 03/94	3410	
OMEGA A (16_, 17_, 19_)	2.0	90	09/86 – 03/94	3470	
OMEGA A (16_, 17_, 19_)	2.0	90	09/86 – 03/94	3505	
OMEGA A (16_, 17_, 19_)	2.0	90	09/86 – 03/94	3615	
OMEGA A (16_, 17_, 19_)	2.0	90	09/86 – 03/94	3717	
OMEGA A (16_, 17_, 19_)	2.0 i	85	09/86 – 03/94	3410	
OMEGA A (16_, 17_, 19_)	2.0 i	85	09/86 – 03/94	3470	
OMEGA A (16_, 17_, 19_)	2.0 i	85	09/86 – 03/94	3505	
OMEGA A (16_, 17_, 19_)	2.0 i	85	09/86 – 03/94	3615	
OMEGA A (16_, 17_, 19_)	2.0 i	85	09/86 – 03/94	3717	
OMEGA A (16_, 17_, 19_)	2.3 D	54	10/86 – 03/94	3410	
OMEGA A (16_, 17_, 19_)	2.3 D	54	10/86 – 03/94	3470	
OMEGA A (16_, 17_, 19_)	2.3 D	54	10/86 – 03/94	3505	
OMEGA A (16_, 17_, 19_)	2.3 D	54	10/86 – 03/94	3615	
OMEGA A (16_, 17_, 19_)	2.3 D	54	10/86 – 03/94	3717	
OMEGA A (16_, 17_, 19_)	2.3 TD	66	10/86 – 08/88	3410	
OMEGA A (16_, 17_, 19_)	2.3 TD Interc.	74	08/88 – 03/94	3410	
OMEGA A (16_, 17_, 19_)	2.3 TD Interc.	74	08/88 – 03/94	3470	
OMEGA A (16_, 17_, 19_)	2.3 TD Interc.	74	08/88 – 03/94	3505	
OMEGA A (16_, 17_, 19_)	2.3 TD Interc.	74	08/88 – 03/94	3615	
OMEGA A (16_, 17_, 19_)	2.3 TD Interc.	74	08/88 – 03/94	3717	
OMEGA A (16_, 17_, 19_)	2.4 i	92	09/88 – 03/94	3470	
OMEGA A (16_, 17_, 19_)	2.4 i	92	09/88 – 03/94	3505	
OMEGA A (16_, 17_, 19_)	2.4 i	92	09/88 – 03/94	3615	

MAKE & MODEL		KW	YEAR		
OPEL					
OMEGA A (16_, 17_, 19_)	2.4 i	92	09/88 – 03/94	3717	
OMEGA A (16_, 17_, 19_)	2.6 i	110	09/90 – 03/94	3717	
OMEGA A (16_, 17_, 19_)	2.6 i	110	09/90 – 03/94	3733	
OMEGA A (16_, 17_, 19_)	3.0 (3000)	115	03/87 – 12/87	3717	
OMEGA A (16_, 17_, 19_)	3.0 (3000)	130	03/87 – 09/90	3717	
OMEGA A (16_, 17_, 19_)	3.0 (3000) CAT	130	03/88 – 03/94	3717	
OMEGA A (16_, 17_, 19_)	3.0 (3000) CAT	130	03/88 – 03/94	3733	
OMEGA A (16_, 17_, 19_)	3.0 24V (3000)	147	09/89 – 03/94	3717	
OMEGA A (16_, 17_, 19_)	3.0 24V (3000)	147	09/89 – 03/94	3733	
OMEGA A (16_, 17_, 19_)	3.0 24V (3000)	150	09/89 – 03/94	3717	
OMEGA A (16_, 17_, 19_)	3.0 24V (3000)	150	09/89 – 03/94	3733	
OMEGA A (16_, 17_, 19_)	3.0 24V Evolution500	169	03/91 – 07/92	3717	
OMEGA A (16_, 17_, 19_)	3.0 24V Evolution500	169	03/91 – 07/92	3733	
OMEGA A (16_, 17_, 19_)	3.6 24V Lotus	277	08/90 – 09/92	3717	
OMEGA A (16_, 17_, 19_)	3.6 24V Lotus	277	08/90 – 09/92	3733	
OMEGA A Estate (66_, 67_)	1.8	65	09/87 – 03/94	3410	
OMEGA A Estate (66_, 67_)	1.8	65	09/87 – 03/94	3470	
OMEGA A Estate (66_, 67_)	1.8	65	09/87 – 03/94	3505	
OMEGA A Estate (66_, 67_)	1.8	65	09/87 – 03/94	3615	
OMEGA A Estate (66_, 67_)	1.8	65	09/87 – 03/94	3717	
OMEGA A Estate (66_, 67_)	1.8	85	09/86 – 03/94	3410	
OMEGA A Estate (66_, 67_)	1.8	85	09/86 – 03/94	3470	
OMEGA A Estate (66_, 67_)	1.8	85	09/86 – 03/94	3505	
OMEGA A Estate (66_, 67_)	1.8	85	09/86 – 03/94	3615	
OMEGA A Estate (66_, 67_)	1.8	85	09/86 – 03/94	3717	
OMEGA A Estate (66_, 67_)	1.8 N	60	09/86 – 08/87	3410	
OMEGA A Estate (66_, 67_)	1.8 N	60	09/86 – 08/87	3717	
OMEGA A Estate (66_, 67_)	1.8 S	66	09/86 – 03/94	3410	
OMEGA A Estate (66_, 67_)	1.8 S	66	09/86 – 03/94	3470	
OMEGA A Estate (66_, 67_)	1.8 S	66	09/86 – 03/94	3505	
OMEGA A Estate (66_, 67_)	1.8 S	66	09/86 – 03/94	3615	
OMEGA A Estate (66_, 67_)	1.8 S	66	09/86 – 03/94	3717	
OMEGA A Estate (66_, 67_)	2.0	74	09/90 – 03/94	3470	
OMEGA A Estate (66_, 67_)	2.0	74	09/90 – 03/94	3505	
OMEGA A Estate (66_, 67_)	2.0	74	09/90 – 03/94	3615	
OMEGA A Estate (66_, 67_)	2.0	74	09/90 – 03/94	3717	
OMEGA A Estate (66_, 67_)	2.0	85	09/87 – 04/94	3410	
OMEGA A Estate (66_, 67_)	2.0	85	09/87 – 04/94	3470	
OMEGA A Estate (66_, 67_)	2.0	85	09/87 – 04/94	3505	
OMEGA A Estate (66_, 67_)	2.0	85	09/87 – 04/94	3615	
OMEGA A Estate (66_, 67_)	2.0	85	09/87 – 04/94	3717	
OMEGA A Estate (66_, 67_)	2.0	90	09/86 – 03/94	3410	
OMEGA A Estate (66_, 67_)	2.0	90	09/86 – 03/94	3470	
OMEGA A Estate (66_, 67_)	2.0	90	09/86 – 03/94	3505	
OMEGA A Estate (66_, 67_)	2.0	90	09/86 – 03/94	3615	
OMEGA A Estate (66_, 67_)	2.0	90	09/86 – 03/94	3717	
OMEGA A Estate (66_, 67_)	2.0 i	73	09/90 – 03/94	3470	
OMEGA A Estate (66_, 67_)	2.0 i	73	09/90 – 03/94	3505	
OMEGA A Estate (66_, 67_)	2.0 i	73	09/90 – 03/94	3615	
OMEGA A Estate (66_, 67_)	2.0 i	73	09/90 – 03/94	3717	
OMEGA A Estate (66_, 67_)	2.0 i	85	09/86 – 03/94	3410	
OMEGA A Estate (66_, 67_)	2.0 i	85	09/86 – 03/94	3470	
OMEGA A Estate (66_, 67_)	2.0 i	85	09/86 – 03/94	3505	
OMEGA A Estate (66_, 67_)	2.0 i	85	09/86 – 03/94	3615	
OMEGA A Estate (66_, 67_)	2.0 i	85	09/86 – 03/94	3717	
OMEGA A Estate (66_, 67_)	2.3 D	54	09/86 – 03/94	3410	
OMEGA A Estate (66_, 67_)	2.3 D	54	09/86 – 03/94	3470	
OMEGA A Estate (66_, 67_)	2.3 D	54	09/86 – 03/94	3505	
OMEGA A Estate (66_, 67_)	2.3 D	54	09/86 – 03/94	3615	
OMEGA A Estate (66_, 67_)	2.3 D	54	09/86 – 03/94	3717	
OMEGA A Estate (66_, 67_)	2.3 TD	66	09/86 – 08/88	3410	
OMEGA A Estate (66_, 67_)	2.3 TD	66	09/86 – 08/88	3717	
OMEGA A Estate (66_, 67_)	2.3 TD Interc.	74	09/88 – 03/94	3410	
OMEGA A Estate (66_, 67_)	2.3 TD Interc.	74	09/88 – 03/94	3470	
OMEGA A Estate (66_, 67_)	2.3 TD Interc.	74	09/88 – 03/94	3505	
OMEGA A Estate (66_, 67_)	2.3 TD Interc.	74	09/88 – 03/94	3615	
OMEGA A Estate (66_, 67_)	2.3 TD Interc.	74	09/88 – 03/94	3717	
OMEGA A Estate (66_, 67_)	2.4 i	92	09/88 – 03/94	3470	
OMEGA A Estate (66_, 67_)	2.4 i	92	09/88 – 03/94	3505	
OMEGA A Estate (66_, 67_)	2.4 i	92	09/88 – 03/94	3615	
OMEGA A Estate (66_, 67_)	2.4 i	92	09/88 – 03/94	3717	
OMEGA A Estate (66_, 67_)	2.6	135	09/87 – 04/94	3717	
OMEGA A Estate (66_, 67_)	2.6	135	09/87 – 04/94	3733	
OMEGA A Estate (66_, 67_)	2.6 i	110	09/90 – 03/94	3717	
OMEGA A Estate (66_, 67_)	2.6 i	110	09/90 – 03/94	3733	
OMEGA A Estate (66_, 67_)	3.0	115	03/87 – 03/94	3717	

MAKE & MODEL		KW	YEAR		
OPEL					
OMEGA A Estate (66_, 67_)	3.0	115	03/87 – 03/94	3733	
OMEGA A Estate (66_, 67_)	3.0	130	03/87 – 09/90	3717	
OMEGA A Estate (66_, 67_)	3.0	130	03/87 – 09/90	3733	
OMEGA A Estate (66_, 67_)	3.0 24V	147	09/89 – 03/94	3717	
OMEGA A Estate (66_, 67_)	3.0 24V	147	09/89 – 03/94	3733	
OMEGA A Estate (66_, 67_)	3.0 24V Omega 3000	150	09/88 – 04/94	3717	
OMEGA A Estate (66_, 67_)	3.0 24V Omega 3000	150	09/88 – 04/94	3733	
OMEGA A Estate (66_, 67_)	3.0 CAT	130	03/87 – 03/94	3717	
OMEGA A Estate (66_, 67_)	3.0 CAT	130	03/87 – 03/94	3733	
OMEGA B (25_, 26_, 27_)	2.0	85	03/94 – 09/99	3717	
OMEGA B (25_, 26_, 27_)	2.0	85	03/94 – 09/99	3733	
OMEGA B (25_, 26_, 27_)	2.0	85	03/94 – 09/99	3736	
OMEGA B (25_, 26_, 27_)	2.0	85	03/94 – 12/00	3717	
OMEGA B (25_, 26_, 27_)	2.0	85	03/94 – 12/00	3733	
OMEGA B (25_, 26_, 27_)	2.0	85	03/94 – 12/00	3736	
OMEGA B (25_, 26_, 27_)	2.0	90	05/94 – 05/99	3717	
OMEGA B (25_, 26_, 27_)	2.0	90	05/94 – 05/99	3733	
OMEGA B (25_, 26_, 27_)	2.0	90	05/94 – 05/99	3736	
OMEGA B (25_, 26_, 27_)	2.0 16V	100	03/94 – 09/99	3717	
OMEGA B (25_, 26_, 27_)	2.0 16V	100	03/94 – 09/99	3733	
OMEGA B (25_, 26_, 27_)	2.0 16V	100	03/94 – 09/99	3736	
OMEGA B (25_, 26_, 27_)	2.0 DTI 16V	74	09/97 – 09/00	3717	
OMEGA B (25_, 26_, 27_)	2.0 DTI 16V	74	09/97 – 09/00	3733	
OMEGA B (25_, 26_, 27_)	2.2 16V	106	09/99 – 07/03	3717	
OMEGA B (25_, 26_, 27_)	2.2 16V	106	09/99 – 07/03	3733	
OMEGA B (25_, 26_, 27_)	2.2 DTI 16V	81	09/00 – 07/03	3717	
OMEGA B (25_, 26_, 27_)	2.2 DTI 16V	81	09/00 – 07/03	3733	
OMEGA B (25_, 26_, 27_)	2.2 DTI 16V	86	01/01 – 07/03	3717	
OMEGA B (25_, 26_, 27_)	2.2 DTI 16V	86	01/01 – 07/03	3733	
OMEGA B (25_, 26_, 27_)	2.2 DTI 16V	88	09/00 – 07/03	3717	
OMEGA B (25_, 26_, 27_)	2.2 DTI 16V	88	09/00 – 07/03	3733	
OMEGA B (25_, 26_, 27_)	2.5 D	96	05/94 – 05/99	3717	
OMEGA B (25_, 26_, 27_)	2.5 D	96	05/94 – 05/99	3733	
OMEGA B (25_, 26_, 27_)	2.5 DTI	110	09/01 – 07/03	3717	
OMEGA B (25_, 26_, 27_)	2.5 DTI	110	09/01 – 07/03	3733	
OMEGA B (25_, 26_, 27_)	2.5 TD	96	04/94 – 07/03	3717	
OMEGA B (25_, 26_, 27_)	2.5 TD	96	04/94 – 07/03	3733	
OMEGA B (25_, 26_, 27_)	2.5 V6	125	03/94 – 09/00	3717	
OMEGA B (25_, 26_, 27_)	2.5 V6	125	03/94 – 09/00	3733	
OMEGA B (25_, 26_, 27_)	2.6 V6	132	09/00 – 07/03	3717	
OMEGA B (25_, 26_, 27_)	2.6 V6	132	09/00 – 07/03	3733	
OMEGA B (25_, 26_, 27_)	3.0 V6	155	04/94 – 02/01	3717	
OMEGA B (25_, 26_, 27_)	3.0 V6	155	04/94 – 02/01	3733	
OMEGA B (25_, 26_, 27_)	3.2 V6	160	02/01 – 07/03	3717	
OMEGA B (25_, 26_, 27_)	3.2 V6	160	02/01 – 07/03	3733	
OMEGA B Estate (21_, 22_, 23_)	2.0	85	03/94 – 09/99	3717	
OMEGA B Estate (21_, 22_, 23_)	2.0	85	03/94 – 09/99	3733	
OMEGA B Estate (21_, 22_, 23_)	2.0	85	03/94 – 09/99	3736	
OMEGA B Estate (21_, 22_, 23_)	2.0	90	05/94 – 05/99	3717	
OMEGA B Estate (21_, 22_, 23_)	2.0	90	05/94 – 05/99	3733	
OMEGA B Estate (21_, 22_, 23_)	2.0	90	05/94 – 05/99	3736	
OMEGA B Estate (21_, 22_, 23_)	2.0 16V	100	03/94 – 09/99	3717	
OMEGA B Estate (21_, 22_, 23_)	2.0 16V	100	03/94 – 09/99	3733	
OMEGA B Estate (21_, 22_, 23_)	2.0 16V	100	03/94 – 09/99	3736	
OMEGA B Estate (21_, 22_, 23_)	2.0 DTI 16V	74	09/97 – 09/00	3717	
OMEGA B Estate (21_, 22_, 23_)	2.0 DTI 16V	74	09/97 – 09/00	3733	
OMEGA B Estate (21_, 22_, 23_)	2.2 16V	106	09/99 – 07/03	3717	
OMEGA B Estate (21_, 22_, 23_)	2.2 16V	106	09/99 – 07/03	3733	
OMEGA B Estate (21_, 22_, 23_)	2.2 DTI 16V	81	09/00 – 07/03	3717	
OMEGA B Estate (21_, 22_, 23_)	2.2 DTI 16V	81	09/00 – 07/03	3733	
OMEGA B Estate (21_, 22_, 23_)	2.2 DTI 16V	88	09/00 – 07/03	3717	
OMEGA B Estate (21_, 22_, 23_)	2.2 DTI 16V	88	09/00 – 07/03	3733	
OMEGA B Estate (21_, 22_, 23_)	2.5 DTI	110	09/01 – 07/03	3717	
OMEGA B Estate (21_, 22_, 23_)	2.5 DTI	110	09/01 – 07/03	3733	
OMEGA B Estate (21_, 22_, 23_)	2.5 TD	96	04/94 – 07/01	3717	
OMEGA B Estate (21_, 22_, 23_)	2.5 TD	96	04/94 – 07/01	3733	
OMEGA B Estate (21_, 22_, 23_)	2.5 V6	125	03/94 – 09/00	3717	
OMEGA B Estate (21_, 22_, 23_)	2.5 V6	125	03/94 – 09/00	3733	
OMEGA B Estate (21_, 22_, 23_)	2.6	138	05/94 – 05/99	3717	
OMEGA B Estate (21_, 22_, 23_)	2.6	138	05/94 – 05/99	3733	
OMEGA B Estate (21_, 22_, 23_)	2.6 V6	132	09/00 – 07/03	3717	
OMEGA B Estate (21_, 22_, 23_)	2.6 V6	132	09/00 – 07/03	3733	
OMEGA B Estate (21_, 22_, 23_)	3.0 V6	155	04/94 – 02/01	3717	
OMEGA B Estate (21_, 22_, 23_)	3.0 V6	155	04/94 – 02/01	3733	
OMEGA B Estate (21_, 22_, 23_)	3.2 V6	160	02/01 – 07/03	3717	
OMEGA B Estate (21_, 22_, 23_)	3.2 V6	160	02/01 – 07/03	3733	

MAKE & MODEL   		KW	YEAR		
OPEL					
REKORD E (17_-19_, 11_, 14_, 16_)	1.7	44	09/77 – 10/82	3335	
REKORD E (17_-19_, 11_, 14_, 16_)	1.7	44	09/77 – 10/82	3365	
REKORD E (17_-19_, 11_, 14_, 16_)	1.7	44	09/77 – 10/82	3410	
REKORD E (17_-19_, 11_, 14_, 16_)	1.8	55	11/82 – 08/86	3410	
REKORD E (17_-19_, 11_, 14_, 16_)	1.8 E	74	05/85 – 08/86	3410	
REKORD E (17_-19_, 11_, 14_, 16_)	1.8 S	66	11/82 – 08/86	3410	
REKORD E (17_-19_, 11_, 14_, 16_)	1.9	55	09/77 – 10/82	3335	
REKORD E (17_-19_, 11_, 14_, 16_)	1.9	55	09/77 – 10/82	3365	
REKORD E (17_-19_, 11_, 14_, 16_)	1.9	55	09/77 – 10/82	3410	
REKORD E (17_-19_, 11_, 14_, 16_)	2.0	66	09/77 – 10/82	3335	
REKORD E (17_-19_, 11_, 14_, 16_)	2.0	66	09/77 – 10/82	3365	
REKORD E (17_-19_, 11_, 14_, 16_)	2.0	66	09/77 – 10/82	3410	
REKORD E (17_-19_, 11_, 14_, 16_)	2.0 D	43	09/77 – 10/82	3335	
REKORD E (17_-19_, 11_, 14_, 16_)	2.0 D	43	09/77 – 10/82	3365	
REKORD E (17_-19_, 11_, 14_, 16_)	2.0 D	43	09/77 – 10/82	3410	
REKORD E (17_-19_, 11_, 14_, 16_)	2.0 E	81	09/77 – 10/84	3335	
REKORD E (17_-19_, 11_, 14_, 16_)	2.0 E	81	09/77 – 10/84	3365	
REKORD E (17_-19_, 11_, 14_, 16_)	2.0 E	81	09/77 – 10/84	3410	
REKORD E (17_-19_, 11_, 14_, 16_)	2.0 S	74	08/77 – 08/86	3335	
REKORD E (17_-19_, 11_, 14_, 16_)	2.0 S	74	08/77 – 08/86	3365	
REKORD E (17_-19_, 11_, 14_, 16_)	2.0 S	74	08/77 – 08/86	3410	
REKORD E (17_-19_, 11_, 14_, 16_)	2.1 D	44	09/77 – 07/78	3335	
REKORD E (17_-19_, 11_, 14_, 16_)	2.1 D	44	09/77 – 07/78	3365	
REKORD E (17_-19_, 11_, 14_, 16_)	2.2 D	48	08/78 – 08/83	3335	
REKORD E (17_-19_, 11_, 14_, 16_)	2.2 D	48	08/78 – 08/83	3365	
REKORD E (17_-19_, 11_, 14_, 16_)	2.2 D	48	08/78 – 08/83	3410	
REKORD E (17_-19_, 11_, 14_, 16_)	2.2 D	52	11/82 – 08/86	3410	
REKORD E (17_-19_, 11_, 14_, 16_)	2.2 E	85	11/84 – 08/86	3410	
REKORD E (17_-19_, 11_, 14_, 16_)	2.2 TD	63	06/84 – 08/86	3410	
REKORD E Estate (61_, 66_, 67_)	1.7	44	09/77 – 10/82	3335	
REKORD E Estate (61_, 66_, 67_)	1.7	44	09/77 – 10/82	3365	
REKORD E Estate (61_, 66_, 67_)	1.7	44	09/77 – 10/82	3410	
REKORD E Estate (61_, 66_, 67_)	1.8	55	11/82 – 08/86	3410	
REKORD E Estate (61_, 66_, 67_)	1.8 E	74	05/85 – 08/86	3410	
REKORD E Estate (61_, 66_, 67_)	1.8 S	66	11/82 – 08/86	3410	
REKORD E Estate (61_, 66_, 67_)	1.9	55	09/77 – 10/82	3335	
REKORD E Estate (61_, 66_, 67_)	1.9	55	09/77 – 10/82	3365	
REKORD E Estate (61_, 66_, 67_)	1.9	55	09/77 – 10/82	3410	
REKORD E Estate (61_, 66_, 67_)	2.0	66	09/77 – 10/82	3335	
REKORD E Estate (61_, 66_, 67_)	2.0	66	09/77 – 10/82	3365	
REKORD E Estate (61_, 66_, 67_)	2.0	66	09/77 – 10/82	3410	
REKORD E Estate (61_, 66_, 67_)	2.0 D	43	09/77 – 10/82	3335	
REKORD E Estate (61_, 66_, 67_)	2.0 D	43	09/77 – 10/82	3365	
REKORD E Estate (61_, 66_, 67_)	2.0 D	43	09/77 – 10/82	3410	
REKORD E Estate (61_, 66_, 67_)	2.0 E	81	09/77 – 10/84	3335	
REKORD E Estate (61_, 66_, 67_)	2.0 E	81	09/77 – 10/84	3365	
REKORD E Estate (61_, 66_, 67_)	2.0 E	81	09/77 – 10/84	3410	
REKORD E Estate (61_, 66_, 67_)	2.0 S	74	08/77 – 08/86	3335	
REKORD E Estate (61_, 66_, 67_)	2.0 S	74	08/77 – 08/86	3365	
REKORD E Estate (61_, 66_, 67_)	2.0 S	74	08/77 – 08/86	3410	
REKORD E Estate (61_, 66_, 67_)	2.1 D	44	09/77 – 07/78	3335	
REKORD E Estate (61_, 66_, 67_)	2.1 D	44	09/77 – 07/78	3365	
REKORD E Estate (61_, 66_, 67_)	2.2 D	48	08/78 – 08/83	3335	
REKORD E Estate (61_, 66_, 67_)	2.2 D	48	08/78 – 08/83	3365	
REKORD E Estate (61_, 66_, 67_)	2.2 D	48	08/78 – 08/83	3410	
REKORD E Estate (61_, 66_, 67_)	2.2 E	85	11/84 – 08/86	3410	
REKORD E Estate (61_, 66_, 67_)	2.2 TD	63	06/84 – 08/86	3410	
REKORD E Estate (61_, 66_, 67_)	2.3 D	52	11/82 – 08/86	3410	
SENATOR B (29_)	2.5 i	103	09/90 – 09/93	3717	
SENATOR B (29_)	2.5 i	103	09/90 – 09/93	3733	
SENATOR B (29_)	2.6 i	110	09/90 – 09/93	3717	
SENATOR B (29_)	2.6 i	110	09/90 – 09/93	3733	
SENATOR B (29_)	3.0	115	09/87 – 09/93	3717	
SENATOR B (29_)	3.0	115	09/87 – 09/93	3733	
SENATOR B (29_)	3.0	130	01/88 – 09/90	3717	
SENATOR B (29_)	3.0	130	01/88 – 09/90	3733	
SENATOR B (29_)	3.0 24V	150	09/89 – 09/93	3717	
SENATOR B (29_)	3.0 24V	150	09/89 – 09/93	3733	
SENATOR B (29_)	3.0 i CAT	130	01/88 – 09/93	3717	
SENATOR B (29_)	3.0 i CAT	130	01/88 – 09/93	3733	
SENATOR B (29_)	3.6	147	09/91 – 08/93	3717	
SENATOR B (29_)	3.6	147	09/91 – 08/93	3733	
SIGNUM	1.8	90	05/03 -		3853/1
SIGNUM	1.8	103	09/05 -		3853/1
SIGNUM	1.8 (Z 18 XER)	103	09/05 -	4211	
SIGNUM	1.8 (Z 18 XE)	90	05/03 -	4211	

MAKE & MODEL		KW	YEAR		
OPEL					
SIGNUM	1.9 CDTI	74	08/05 -		3853/1
SIGNUM	1.9 CDTI	88	04/04 -		3853/1
SIGNUM	1.9 CDTI	110	04/04 -		3853/1
SIGNUM	1.9 CDTI (Z 19 DT)	88	04/04 -	4211	
SIGNUM	1.9 CDTI (Z 19 DTH)	110	04/04 -	4211	
SIGNUM	1.9 CDTI (Z 19 DT)	74	08/05 -	4211	
SIGNUM	2.0 DTI	74	05/03 -		3853/1
SIGNUM	2.0 DTI (Y 20 DTH)	74	05/03 -	4211	
SIGNUM	2.0 Turbo	129	05/03 -		3853/1
SIGNUM	2.0 Turbo (Z 20 NET)	129	05/03 -	4211	
SIGNUM	2.2 direct	114	05/03 -	4211	3853/1
SIGNUM	2.2 DTI	92	05/03 -	4211	3853/1
SIGNUM	2.2 DTI 16V	86	05/03 – 06/08		3853/1
SIGNUM	2.8 V6 Turbo	169	09/05 -		3853/1
SIGNUM	2.8 V6 Turbo	184	01/06 -		3853/1
SIGNUM	2.8 V6 Turbo (Z 28 NEL)	169	09/05 -	4211	
SIGNUM	2.8 V6 Turbo (Z 28 NET)	184	01/06 -	4211	
SIGNUM	3.0 V6 CDTI	130	05/03 -		3853/1
SIGNUM	3.0 V6 CDTI	135	09/05 -		3853/1
SIGNUM	3.0 V6 CDTI (Y 30 DT)	130	05/03 -	4211	
SIGNUM	3.0 V6 CDTI (Z 30 DT)	135	09/05 -	4211	
SIGNUM	3.2 V6	155	05/03 -	4211	3853/1
TIGRA (95_)	1.4 16V	63	08/97 – 12/00	3623	
TIGRA (95_)	1.4 16V	66	07/94 – 12/00	3623	
TIGRA (95_)	1.6 16V	74	08/97 – 08/98	3623	
TIGRA (95_)	1.6 16V	78	07/94 – 08/98	3623	
TIGRA TwinTop	1.3 CDTI	51	06/04 -	3846	
TIGRA TwinTop	1.4	66	06/04 -	3846	
TIGRA TwinTop	1.8	92	06/04 -	3846	
VECTRA A (86_, 87_)	1.4 S	55	09/88 – 06/92	3410	
VECTRA A (86_, 87_)	1.4 S	55	09/88 – 06/92	3623	
VECTRA A (86_, 87_)	1.6	51	08/92 – 07/93	3410	
VECTRA A (86_, 87_)	1.6	51	08/92 – 07/93	3623	
VECTRA A (86_, 87_)	1.6	60	09/88 – 05/93	3410	
VECTRA A (86_, 87_)	1.6	60	09/88 – 05/93	3623	
VECTRA A (86_, 87_)	1.6 i	52	09/93 – 11/95	3410	
VECTRA A (86_, 87_)	1.6 i	52	09/93 – 11/95	3623	
VECTRA A (86_, 87_)	1.6 i	55	09/88 – 11/95	3410	
VECTRA A (86_, 87_)	1.6 i	55	09/88 – 11/95	3623	
VECTRA A (86_, 87_)	1.6 i	55	09/93 – 11/95	3410	
VECTRA A (86_, 87_)	1.6 i	55	09/93 – 11/95	3623	
VECTRA A (86_, 87_)	1.7 D	42	10/88 – 09/92	3410	
VECTRA A (86_, 87_)	1.7 D	42	10/88 – 09/92	3470	
VECTRA A (86_, 87_)	1.7 D	42	10/88 – 09/92	3505	
VECTRA A (86_, 87_)	1.7 D	42	10/88 – 09/92	3615	
VECTRA A (86_, 87_)	1.7 D	42	10/88 – 09/92	3623	
VECTRA A (86_, 87_)	1.7 D	44	07/92 – 11/95	3410	
VECTRA A (86_, 87_)	1.7 D	44	07/92 – 11/95	3470	
VECTRA A (86_, 87_)	1.7 D	44	07/92 – 11/95	3505	
VECTRA A (86_, 87_)	1.7 D	44	07/92 – 11/95	3615	
VECTRA A (86_, 87_)	1.7 D	44	07/92 – 11/95	3623	
VECTRA A (86_, 87_)	1.7 TD	60	03/90 – 11/95	3410	
VECTRA A (86_, 87_)	1.7 TD	60	03/90 – 11/95	3470	
VECTRA A (86_, 87_)	1.7 TD	60	03/90 – 11/95	3505	
VECTRA A (86_, 87_)	1.7 TD	60	03/90 – 11/95	3615	
VECTRA A (86_, 87_)	1.7 TD	60	03/90 – 11/95	3623	
VECTRA A (86_, 87_)	1.8 i CAT	66	03/90 – 11/95	3410	
VECTRA A (86_, 87_)	1.8 i CAT	66	03/90 – 11/95	3470	
VECTRA A (86_, 87_)	1.8 i CAT	66	03/90 – 11/95	3505	
VECTRA A (86_, 87_)	1.8 i CAT	66	03/90 – 11/95	3615	
VECTRA A (86_, 87_)	1.8 i CAT	66	03/90 – 11/95	3623	
VECTRA A (86_, 87_)	1.8 S	65	09/88 – 07/89	3410	
VECTRA A (86_, 87_)	1.8 S	65	09/88 – 07/89	3470	
VECTRA A (86_, 87_)	1.8 S	65	09/88 – 07/89	3505	
VECTRA A (86_, 87_)	1.8 S	65	09/88 – 07/89	3615	
VECTRA A (86_, 87_)	1.8 S	65	09/88 – 07/89	3623	
VECTRA A (86_, 87_)	1.8 S	66	09/89 – 10/90	3410	
VECTRA A (86_, 87_)	1.8 S	66	09/89 – 10/90	3470	
VECTRA A (86_, 87_)	1.8 S	66	09/89 – 10/90	3505	
VECTRA A (86_, 87_)	1.8 S	66	09/89 – 10/90	3615	
VECTRA A (86_, 87_)	1.8 S	66	09/89 – 10/90	3623	
VECTRA A (86_, 87_)	1.8 S 4x4	65	01/89 – 07/89	3470	3469
VECTRA A (86_, 87_)	1.8 S 4x4	65	01/89 – 07/89	3505	
VECTRA A (86_, 87_)	1.8 S 4x4	65	01/89 – 07/89	3615	
VECTRA A (86_, 87_)	2.0	74	09/88 – 09/89	3470	3469
VECTRA A (86_, 87_)	2.0	74	09/88 – 09/89	3505	

MAKE & MODEL   		KW	YEAR		
OPEL					
VECTRA A (86_, 87_)	2.0	74	09/88 – 09/89	3615	
VECTRA A (86_, 87_)	2.0 i	85	09/88 – 10/90	3470	3469
VECTRA A (86_, 87_)	2.0 i	85	09/88 – 10/90	3505	
VECTRA A (86_, 87_)	2.0 i	85	09/88 – 10/90	3615	
VECTRA A (86_, 87_)	2.0 i	95	09/88 – 09/92	3470	3469
VECTRA A (86_, 87_)	2.0 i	95	09/88 – 09/92	3505	
VECTRA A (86_, 87_)	2.0 i	95	09/88 – 09/92	3615	
VECTRA A (86_, 87_)	2.0 i 16V	100	06/94 – 11/95	3470	3469
VECTRA A (86_, 87_)	2.0 i 16V	100	06/94 – 11/95	3505	
VECTRA A (86_, 87_)	2.0 i 16V	100	06/94 – 11/95	3615	
VECTRA A (86_, 87_)	2.0 i 16V 4x4	100	06/94 – 11/95	3470	3469
VECTRA A (86_, 87_)	2.0 i 16V 4x4	100	06/94 – 11/95	3505	
VECTRA A (86_, 87_)	2.0 i 16V 4x4	100	06/94 – 11/95	3615	
VECTRA A (86_, 87_)	2.0 i 4x4	85	01/89 – 10/90	3470	3469
VECTRA A (86_, 87_)	2.0 i 4x4	85	01/89 – 10/90	3505	
VECTRA A (86_, 87_)	2.0 i 4x4	85	01/89 – 10/90	3615	
VECTRA A (86_, 87_)	2.0 i 4x4	95	01/89 – 09/92	3470	3469
VECTRA A (86_, 87_)	2.0 i 4x4	95	01/89 – 09/92	3505	
VECTRA A (86_, 87_)	2.0 i 4x4	95	01/89 – 09/92	3615	
VECTRA A (86_, 87_)	2.0 i 4x4 CAT	85	01/89 – 11/95	3470	3469
VECTRA A (86_, 87_)	2.0 i 4x4 CAT	85	01/89 – 11/95	3505	
VECTRA A (86_, 87_)	2.0 i 4x4 CAT	85	01/89 – 11/95	3615	
VECTRA A (86_, 87_)	2.0 i CAT	85	09/88 – 11/95	3470	3469
VECTRA A (86_, 87_)	2.0 i CAT	85	09/88 – 11/95	3505	
VECTRA A (86_, 87_)	2.0 i CAT	85	09/88 – 11/95	3615	
VECTRA A (86_, 87_)	2.0 i Turbo 4x4	150	06/94 – 11/95	3736	3469
VECTRA A (86_, 87_)	2.5 CD 4x4	125	08/92 – 08/95	3470	3469
VECTRA A (86_, 87_)	2.5 CD 4x4	125	08/92 – 08/95	3505	
VECTRA A (86_, 87_)	2.5 CD 4x4	125	08/92 – 08/95	3615	
VECTRA A (86_, 87_)	2.5 V6	125	02/93 – 11/95	3736	3469
VECTRA A (86_, 87_)	2000 16V 4x4	110	01/89 – 10/90	3470	3469
VECTRA A (86_, 87_)	2000 16V 4x4	110	01/89 – 10/90	3505	
VECTRA A (86_, 87_)	2000 16V 4x4	110	01/89 – 10/90	3615	
VECTRA A (86_, 87_)	2000/GT 16V	110	01/89 – 06/94	3470	3469
VECTRA A (86_, 87_)	2000/GT 16V	110	01/89 – 06/94	3505	
VECTRA A (86_, 87_)	2000/GT 16V	110	01/89 – 06/94	3615	
VECTRA A (86_, 87_)	2000/GT 16V 4x4 CAT	110	02/90 – 11/95	3470	3469
VECTRA A (86_, 87_)	2000/GT 16V 4x4 CAT	110	02/90 – 11/95	3505	
VECTRA A (86_, 87_)	2000/GT 16V 4x4 CAT	110	02/90 – 11/95	3615	
VECTRA A (86_, 87_)	2000/GT 16V CAT	110	02/90 – 11/95	3470	3469
VECTRA A (86_, 87_)	2000/GT 16V CAT	110	02/90 – 11/95	3505	
VECTRA A (86_, 87_)	2000/GT 16V CAT	110	02/90 – 11/95	3615	
VECTRA A Hatchback (88_, 89_)	1.4 S	55	04/88 – 06/92	3410	
VECTRA A Hatchback (88_, 89_)	1.4 S	55	04/88 – 06/92	3623	
VECTRA A Hatchback (88_, 89_)	1.6 i	52	09/93 – 11/95	3410	
VECTRA A Hatchback (88_, 89_)	1.6 i	52	09/93 – 11/95	3623	
VECTRA A Hatchback (88_, 89_)	1.6 i	55	09/93 – 11/95	3410	
VECTRA A Hatchback (88_, 89_)	1.6 i	55	09/93 – 11/95	3623	
VECTRA A Hatchback (88_, 89_)	1.6 i CAT	55	09/88 – 11/95	3410	
VECTRA A Hatchback (88_, 89_)	1.6 i CAT	55	09/88 – 11/95	3623	
VECTRA A Hatchback (88_, 89_)	1.6 S	60	09/88 – 05/93	3410	
VECTRA A Hatchback (88_, 89_)	1.6 S	60	09/88 – 05/93	3623	
VECTRA A Hatchback (88_, 89_)	1.7 D	42	09/88 – 09/92	3410	
VECTRA A Hatchback (88_, 89_)	1.7 D	42	09/88 – 09/92	3470	
VECTRA A Hatchback (88_, 89_)	1.7 D	42	09/88 – 09/92	3505	
VECTRA A Hatchback (88_, 89_)	1.7 D	42	09/88 – 09/92	3615	
VECTRA A Hatchback (88_, 89_)	1.7 D	42	09/88 – 09/92	3623	
VECTRA A Hatchback (88_, 89_)	1.7 D	44	07/92 – 11/95	3410	
VECTRA A Hatchback (88_, 89_)	1.7 D	44	07/92 – 11/95	3470	
VECTRA A Hatchback (88_, 89_)	1.7 D	44	07/92 – 11/95	3505	
VECTRA A Hatchback (88_, 89_)	1.7 D	44	07/92 – 11/95	3615	
VECTRA A Hatchback (88_, 89_)	1.7 D	44	07/92 – 11/95	3623	
VECTRA A Hatchback (88_, 89_)	1.7 TD	60	03/90 – 11/95	3410	
VECTRA A Hatchback (88_, 89_)	1.7 TD	60	03/90 – 11/95	3470	
VECTRA A Hatchback (88_, 89_)	1.7 TD	60	03/90 – 11/95	3505	
VECTRA A Hatchback (88_, 89_)	1.7 TD	60	03/90 – 11/95	3615	
VECTRA A Hatchback (88_, 89_)	1.7 TD	60	03/90 – 11/95	3623	
VECTRA A Hatchback (88_, 89_)	1.8 i	66	09/88 – 10/90	3410	
VECTRA A Hatchback (88_, 89_)	1.8 i	66	09/88 – 10/90	3623	
VECTRA A Hatchback (88_, 89_)	1.8 i CAT	66	03/90 – 11/95	3410	
VECTRA A Hatchback (88_, 89_)	1.8 i CAT	66	03/90 – 11/95	3470	
VECTRA A Hatchback (88_, 89_)	1.8 i CAT	66	03/90 – 11/95	3505	
VECTRA A Hatchback (88_, 89_)	1.8 i CAT	66	03/90 – 11/95	3615	
VECTRA A Hatchback (88_, 89_)	1.8 i CAT	66	03/90 – 11/95	3623	
VECTRA A Hatchback (88_, 89_)	1.8 S	65	09/88 – 07/89	3410	
VECTRA A Hatchback (88_, 89_)	1.8 S	65	09/88 – 07/89	3623	

MAKE & MODEL   		KW	YEAR		
OPEL					
VECTRA A Hatchback (88_, 89_)	2.0	74	04/88 – 09/89	3470	3469
VECTRA A Hatchback (88_, 89_)	2.0	74	04/88 – 09/89	3505	
VECTRA A Hatchback (88_, 89_)	2.0	74	04/88 – 09/89	3615	
VECTRA A Hatchback (88_, 89_)	2.0 i	85	09/88 – 10/90	3470	3469
VECTRA A Hatchback (88_, 89_)	2.0 i	85	09/88 – 10/90	3505	
VECTRA A Hatchback (88_, 89_)	2.0 i	85	09/88 – 10/90	3615	
VECTRA A Hatchback (88_, 89_)	2.0 i 16V	100	06/94 – 11/95	3470	3469
VECTRA A Hatchback (88_, 89_)	2.0 i 16V	100	06/94 – 11/95	3505	
VECTRA A Hatchback (88_, 89_)	2.0 i 16V	100	06/94 – 11/95	3615	
VECTRA A Hatchback (88_, 89_)	2.0 i 16V	110	02/89 – 10/90	3470	3469
VECTRA A Hatchback (88_, 89_)	2.0 i 16V	110	02/89 – 10/90	3505	
VECTRA A Hatchback (88_, 89_)	2.0 i 16V	110	02/89 – 10/90	3615	
VECTRA A Hatchback (88_, 89_)	2.0 i 16V CAT	110	02/90 – 11/95	3470	3469
VECTRA A Hatchback (88_, 89_)	2.0 i 16V CAT	110	02/90 – 11/95	3505	
VECTRA A Hatchback (88_, 89_)	2.0 i 16V CAT	110	02/90 – 11/95	3615	
VECTRA A Hatchback (88_, 89_)	2.0 i CAT	85	09/88 – 11/95	3470	3469
VECTRA A Hatchback (88_, 89_)	2.0 i CAT	85	09/88 – 11/95	3505	
VECTRA A Hatchback (88_, 89_)	2.0 i CAT	85	09/88 – 11/95	3615	
VECTRA A Hatchback (88_, 89_)	2.0 i GT	95	09/88 – 11/95	3470	3469
VECTRA A Hatchback (88_, 89_)	2.0 i GT	95	09/88 – 11/95	3505	
VECTRA A Hatchback (88_, 89_)	2.0 i GT	95	09/88 – 11/95	3615	
VECTRA A Hatchback (88_, 89_)	2.5 V6	125	02/93 – 11/95	3736	3469
VECTRA B (36_)	1.6 GL	60	09/95 – 08/96	3470	
VECTRA B (36_)	1.6 GL	60	09/95 – 08/96	3505	
VECTRA B (36_)	1.6 GL	60	09/95 – 08/96	3615	
VECTRA B (36_)	1.6 GL	60	09/95 – 08/96	3665	
VECTRA B (36_)	1.6 i	55	10/95 – 04/02	3470	
VECTRA B (36_)	1.6 i	55	10/95 – 04/02	3505	
VECTRA B (36_)	1.6 i	55	10/95 – 04/02	3615	
VECTRA B (36_)	1.6 i	55	10/95 – 04/02	3665	
VECTRA B (36_)	1.6 i 16V	74	10/95 – 04/02	3470	
VECTRA B (36_)	1.6 i 16V	74	10/95 – 04/02	3505	
VECTRA B (36_)	1.6 i 16V	74	10/95 – 04/02	3615	
VECTRA B (36_)	1.6 i 16V	74	10/95 – 04/02	3665	
VECTRA B (36_)	1.6 i 16V	74	10/95 – 04/02	3717	
VECTRA B (36_)	1.7 TD	60	10/95 – 12/98	3470	
VECTRA B (36_)	1.7 TD	60	10/95 – 12/98	3505	
VECTRA B (36_)	1.7 TD	60	10/95 – 12/98	3615	
VECTRA B (36_)	1.7 TD	60	10/95 – 12/98	3717	
VECTRA B (36_)	1.8 i 16V	85	10/95 – 09/00	3470	
VECTRA B (36_)	1.8 i 16V	85	10/95 – 09/00	3505	
VECTRA B (36_)	1.8 i 16V	85	10/95 – 09/00	3615	
VECTRA B (36_)	1.8 i 16V	85	10/95 – 09/00	3665	
VECTRA B (36_)	1.8 i 16V	85	10/95 – 09/00	3717	
VECTRA B (36_)	1.8 i 16V	92	09/00 – 04/02	3470	
VECTRA B (36_)	1.8 i 16V	92	09/00 – 04/02	3505	
VECTRA B (36_)	1.8 i 16V	92	09/00 – 04/02	3615	
VECTRA B (36_)	1.8 i 16V	92	09/00 – 04/02	3665	
VECTRA B (36_)	1.8 i 16V	92	09/00 – 04/02	3717	
VECTRA B (36_)	2.0 DI 16V	60	11/96 – 04/02	3470	
VECTRA B (36_)	2.0 DI 16V	60	11/96 – 04/02	3505	
VECTRA B (36_)	2.0 DI 16V	60	11/96 – 04/02	3615	
VECTRA B (36_)	2.0 DI 16V	60	11/96 – 04/02	3665	
VECTRA B (36_)	2.0 DTI 16V	74	06/97 – 04/02	3470	
VECTRA B (36_)	2.0 DTI 16V	74	06/97 – 04/02	3505	
VECTRA B (36_)	2.0 DTI 16V	74	06/97 – 04/02	3615	
VECTRA B (36_)	2.0 DTI 16V	74	06/97 – 04/02	3665	
VECTRA B (36_)	2.0 DTI 16V	74	06/97 – 04/02	3717	
VECTRA B (36_)	2.0 i	82	10/95 – 04/02	3665	
VECTRA B (36_)	2.0 i	82	10/95 – 04/02	3717	
VECTRA B (36_)	2.0 i 16V	100	10/95 – 09/00	3665	
VECTRA B (36_)	2.0 i 16V	100	10/95 – 09/00	3717	
VECTRA B (36_)	2.2 DTI 16V	88	09/00 – 04/02	3665	
VECTRA B (36_)	2.2 DTI 16V	88	09/00 – 04/02	3717	
VECTRA B (36_)	2.2 DTI 16V	92	09/00 – 04/02	3665	
VECTRA B (36_)	2.2 DTI 16V	92	09/00 – 04/02	3717	
VECTRA B (36_)	2.2 i 16V	108	09/00 – 04/02	3665	
VECTRA B (36_)	2.2 i 16V	108	09/00 – 04/02	3717	
VECTRA B (36_)	2.5 i V6	125	10/95 – 09/00	3665	
VECTRA B (36_)	2.5 i V6	125	10/95 – 09/00	3717	
VECTRA B (36_)	2.6 i V6	125	09/00 – 04/02	3665	
VECTRA B (36_)	2.6 i V6	125	09/00 – 04/02	3717	
VECTRA B (36_)	i 500 2.5	143	05/98 – 09/00	3665	
VECTRA B (36_)	i 500 2.5	143	05/98 – 09/00	3717	
VECTRA B Estate (31_)	1.6 i	55	11/96 – 06/00	3470	
VECTRA B Estate (31_)	1.6 i	55	11/96 – 06/00	3505	

MAKE & MODEL		KW	YEAR		
OPEL					
VECTRA B Estate (31_)	1.6 i	55	11/96 – 06/00	3615	
VECTRA B Estate (31_)	1.6 i	55	11/96 – 06/00	3665	
VECTRA B Estate (31_)	1.6 i 16V	74	11/96 – 07/02	3470	
VECTRA B Estate (31_)	1.6 i 16V	74	11/96 – 07/02	3505	
VECTRA B Estate (31_)	1.6 i 16V	74	11/96 – 07/02	3615	
VECTRA B Estate (31_)	1.6 i 16V	74	11/96 – 07/02	3665	
VECTRA B Estate (31_)	1.6 i 16V	74	11/96 – 07/02	3717	
VECTRA B Estate (31_)	1.7 TD	60	11/96 – 12/97	3470	
VECTRA B Estate (31_)	1.7 TD	60	11/96 – 12/97	3505	
VECTRA B Estate (31_)	1.7 TD	60	11/96 – 12/97	3615	
VECTRA B Estate (31_)	1.7 TD	60	11/96 – 12/97	3717	
VECTRA B Estate (31_)	1.8 i 16V	85	11/96 – 09/00	3470	
VECTRA B Estate (31_)	1.8 i 16V	85	11/96 – 09/00	3505	
VECTRA B Estate (31_)	1.8 i 16V	85	11/96 – 09/00	3615	
VECTRA B Estate (31_)	1.8 i 16V	85	11/96 – 09/00	3665	
VECTRA B Estate (31_)	1.8 i 16V	85	11/96 – 09/00	3717	
VECTRA B Estate (31_)	1.8 i 16V	92	09/00 – 07/03	3470	
VECTRA B Estate (31_)	1.8 i 16V	92	09/00 – 07/03	3505	
VECTRA B Estate (31_)	1.8 i 16V	92	09/00 – 07/03	3615	
VECTRA B Estate (31_)	1.8 i 16V	92	09/00 – 07/03	3665	
VECTRA B Estate (31_)	1.8 i 16V	92	09/00 – 07/03	3717	
VECTRA B Estate (31_)	2.0 DI 16V	60	11/96 – 06/00	3470	
VECTRA B Estate (31_)	2.0 DI 16V	60	11/96 – 06/00	3505	
VECTRA B Estate (31_)	2.0 DI 16V	60	11/96 – 06/00	3615	
VECTRA B Estate (31_)	2.0 DI 16V	60	11/96 – 06/00	3665	
VECTRA B Estate (31_)	2.0 DI 16V	60	11/96 – 06/00	3717	
VECTRA B Estate (31_)	2.0 DTI 16V	74	06/97 – 07/03	3470	
VECTRA B Estate (31_)	2.0 DTI 16V	74	06/97 – 07/03	3505	
VECTRA B Estate (31_)	2.0 DTI 16V	74	06/97 – 07/03	3615	
VECTRA B Estate (31_)	2.0 DTI 16V	74	06/97 – 07/03	3665	
VECTRA B Estate (31_)	2.0 DTI 16V	74	06/97 – 07/03	3717	
VECTRA B Estate (31_)	2.0 i	82	11/96 – 02/02	3665	
VECTRA B Estate (31_)	2.0 i	82	11/96 – 02/02	3717	
VECTRA B Estate (31_)	2.0 i 16V	100	11/96 – 09/00	3665	
VECTRA B Estate (31_)	2.0 i 16V	100	11/96 – 09/00	3717	
VECTRA B Estate (31_)	2.2 DTI 16V	88	09/00 – 04/02	3665	
VECTRA B Estate (31_)	2.2 DTI 16V	88	09/00 – 04/02	3717	
VECTRA B Estate (31_)	2.2 DTI 16V	92	09/00 – 07/03	3665	
VECTRA B Estate (31_)	2.2 DTI 16V	92	09/00 – 07/03	3717	
VECTRA B Estate (31_)	2.2 i 16V	108	09/00 – 07/03	3665	
VECTRA B Estate (31_)	2.2 i 16V	108	09/00 – 07/03	3717	
VECTRA B Estate (31_)	2.5 i V6	125	11/96 – 09/00	3665	
VECTRA B Estate (31_)	2.5 i V6	125	11/96 – 09/00	3717	
VECTRA B Estate (31_)	2.6 i V6	125	09/00 – 07/03	3665	
VECTRA B Estate (31_)	2.6 i V6	125	09/00 – 07/03	3717	
VECTRA B Estate (31_)	i 500 2.5	143	05/98 – 09/00	3665	
VECTRA B Estate (31_)	i 500 2.5	143	05/98 – 09/00	3717	
VECTRA B Hatchback (38_)	1.6 i	55	10/95 – 07/03	3470	
VECTRA B Hatchback (38_)	1.6 i	55	10/95 – 07/03	3505	
VECTRA B Hatchback (38_)	1.6 i	55	10/95 – 07/03	3615	
VECTRA B Hatchback (38_)	1.6 i	55	10/95 – 07/03	3665	
VECTRA B Hatchback (38_)	1.6 i 16V	74	10/95 – 07/02	3470	
VECTRA B Hatchback (38_)	1.6 i 16V	74	10/95 – 07/02	3505	
VECTRA B Hatchback (38_)	1.6 i 16V	74	10/95 – 07/02	3615	
VECTRA B Hatchback (38_)	1.6 i 16V	74	10/95 – 07/02	3665	
VECTRA B Hatchback (38_)	1.6 i 16V	74	10/95 – 07/02	3717	
VECTRA B Hatchback (38_)	1.7 TD	60	10/95 – 12/98	3470	
VECTRA B Hatchback (38_)	1.7 TD	60	10/95 – 12/98	3505	
VECTRA B Hatchback (38_)	1.7 TD	60	10/95 – 12/98	3615	
VECTRA B Hatchback (38_)	1.7 TD	60	10/95 – 12/98	3717	
VECTRA B Hatchback (38_)	1.8 i 16V	85	10/95 – 09/00	3470	
VECTRA B Hatchback (38_)	1.8 i 16V	85	10/95 – 09/00	3505	
VECTRA B Hatchback (38_)	1.8 i 16V	85	10/95 – 09/00	3615	
VECTRA B Hatchback (38_)	1.8 i 16V	85	10/95 – 09/00	3665	
VECTRA B Hatchback (38_)	1.8 i 16V	85	10/95 – 09/00	3717	
VECTRA B Hatchback (38_)	1.8 i 16V	92	09/00 – 07/03	3470	
VECTRA B Hatchback (38_)	1.8 i 16V	92	09/00 – 07/03	3505	
VECTRA B Hatchback (38_)	1.8 i 16V	92	09/00 – 07/03	3615	
VECTRA B Hatchback (38_)	1.8 i 16V	92	09/00 – 07/03	3665	
VECTRA B Hatchback (38_)	1.8 i 16V	92	09/00 – 07/03	3717	
VECTRA B Hatchback (38_)	2.0 DI 16V	60	11/96 – 06/00	3470	
VECTRA B Hatchback (38_)	2.0 DI 16V	60	11/96 – 06/00	3505	
VECTRA B Hatchback (38_)	2.0 DI 16V	60	11/96 – 06/00	3615	
VECTRA B Hatchback (38_)	2.0 DI 16V	60	11/96 – 06/00	3665	
VECTRA B Hatchback (38_)	2.0 DTI 16V	74	06/97 – 07/03	3470	
VECTRA B Hatchback (38_)	2.0 DTI 16V	74	06/97 – 07/03	3505	

MAKE & MODEL		KW	YEAR		
OPEL					
VECTRA B Hatchback (38_)	2.0 DTI 16V	74	06/97 – 07/03	3615	
VECTRA B Hatchback (38_)	2.0 DTI 16V	74	06/97 – 07/03	3665	
VECTRA B Hatchback (38_)	2.0 DTI 16V	74	06/97 – 07/03	3717	
VECTRA B Hatchback (38_)	2.0 i	82	10/95 – 02/02	3665	
VECTRA B Hatchback (38_)	2.0 i	82	10/95 – 02/02	3717	
VECTRA B Hatchback (38_)	2.0 i 16V	100	10/95 – 09/00	3665	
VECTRA B Hatchback (38_)	2.0 i 16V	100	10/95 – 09/00	3717	
VECTRA B Hatchback (38_)	2.2 DTI 16V	88	09/00 – 04/02	3665	
VECTRA B Hatchback (38_)	2.2 DTI 16V	88	09/00 – 04/02	3717	
VECTRA B Hatchback (38_)	2.2 DTI 16V	92	09/00 – 07/03	3665	
VECTRA B Hatchback (38_)	2.2 DTI 16V	92	09/00 – 07/03	3717	
VECTRA B Hatchback (38_)	2.2 i 16V	108	09/00 – 07/03	3665	
VECTRA B Hatchback (38_)	2.2 i 16V	108	09/00 – 07/03	3717	
VECTRA B Hatchback (38_)	2.5	144	10/99 – 06/00	3665	
VECTRA B Hatchback (38_)	2.5	144	10/99 – 06/00	3717	
VECTRA B Hatchback (38_)	2.5 i V6	125	10/95 – 09/00	3665	
VECTRA B Hatchback (38_)	2.5 i V6	125	10/95 – 09/00	3717	
VECTRA B Hatchback (38_)	2.6 i V6	125	09/00 – 07/03	3665	
VECTRA B Hatchback (38_)	2.6 i V6	125	09/00 – 07/03	3717	
VECTRA C	1.6 (Z 16 XEP)	77	01/06 -	4211	3853/1
VECTRA C	1.6 (Z 16 XE)	74	08/05 -	4211	
VECTRA C	1.6 16V (Z 16 XE)	74	06/04 -	4211	3853/1
VECTRA C	1.8	81	04/02 -		3853/1
VECTRA C	1.8	103	01/06 -		3853/1
VECTRA C	1.8 (Z 18 XEL)	81	04/02 -	4211	
VECTRA C	1.8 (Z 18 XER)	103	01/06 -	4211	
VECTRA C	1.8 (Z 18 XE)	90	10/03 -	4211	
VECTRA C	1.8 16V (Z 18 XE)	90	04/02 -	4211	3853/1
VECTRA C	1.8 16V (Z 18 XEL)	81	08/02 – 12/06	4211	
VECTRA C	1.9 CDTI	74	10/05 -		3853/1
VECTRA C	1.9 CDTI	88	04/04 -		3853/1
VECTRA C	1.9 CDTI	110	04/04 -		3853/1
VECTRA C	1.9 CDTI (Z 19 DT)	74	10/05 -	4211	
VECTRA C	1.9 CDTI (Z 19 DT)	88	04/04 -	4211	
VECTRA C	1.9 CDTI (Z 19 DTH)	110	04/04 -	4211	
VECTRA C	1.9 CDTI (Z 19 DTL)	74	10/05 -	4211	
VECTRA C	2.0 16V Turbo (Z 20 NET)	129	03/03 -	4211	3853/1
VECTRA C	2.0 DTI (Y 20 DTH)	74	10/03 -	4211	
VECTRA C	2.0 DTI 16V (Y 20 DTH)	74	04/02 -	4211	3853/1
VECTRA C	2.0 Turbo (Z 20 NET)	129	10/03 -	4211	
VECTRA C	2.2 16V (Z 22 SE)	108	04/02 -	4211	3853/1
VECTRA C	2.2 direct (Z 22 YH)	114	10/03 -	4211	3853/1
VECTRA C	2.2 DTI (Y 22 DTR)	92	10/03 -	4211	
VECTRA C	2.2 DTI 16V (Y 22 DTR)	86	04/02 – 12/04	4211	3853/1
VECTRA C	2.2 DTI 16V (Y 22 DTR)	92	04/02 -	4211	
VECTRA C	2.2 DTI 16V (Y 22 DTR)	92	08/02 -	4211	
VECTRA C	2.8 V6 Turbo	169	08/05 -		3853/1
VECTRA C	2.8 V6 Turbo	184	08/06 -		3853/1
VECTRA C	2.8 V6 Turbo	188	08/05 -		3853/1
VECTRA C	2.8 V6 Turbo OPC	206	09/06 – 09/08		3853/1
VECTRA C	3.0 CDTI	130	06/03 -		3853/1
VECTRA C	3.0 CDTi	135	08/05 -		3853/1
VECTRA C	3.2 V6	155	08/02 -		3853/1
VECTRA C Estate	1.6	77	01/06 -		3853/1
VECTRA C Estate	1.6 16V	74	06/04 -		3853/1
VECTRA C Estate	1.8	90	10/03 -		3853/1
VECTRA C Estate	1.8	103	01/06 -		3853/1
VECTRA C Estate	1.9 CDTI	74	10/05 -		3853/1
VECTRA C Estate	1.9 CDTI	88	04/04 -		3853/1
VECTRA C Estate	1.9 CDTI	110	04/04 -		3853/1
VECTRA C Estate	2.0 DTI	74	10/03 -		3853/1
VECTRA C Estate	2.0 Turbo	129	10/03 -		3853/1
VECTRA C Estate	2.2 direct	114	10/03 -		3853/1
VECTRA C Estate	2.2 DTI	86	10/03 – 06/08		3853/1
VECTRA C Estate	2.2 DTI	92	10/03 -		3853/1
VECTRA C Estate	2.8 V6 Turbo	169	08/05 -		3853/1
VECTRA C Estate	2.8 V6 Turbo	184	01/07 -		3853/1
VECTRA C Estate	2.8 V6 Turbo	188	08/05 -		3853/1
VECTRA C Estate	2.8 V6 Turbo	206	01/07 -		3853/1
VECTRA C Estate	3.0 V6 CDTI	130	10/03 -		3853/1
VECTRA C Estate	3.0 V6 CDTI	135	08/05 -		3853/1
VECTRA C Estate	3.2 V6	155	10/03 -		3853/1
VECTRA C GTS	1.6	74	08/05 -		3853/1
VECTRA C GTS	1.6	77	01/06 -		3853/1
VECTRA C GTS	1.8	103	01/06 -		3853/1
VECTRA C GTS	1.8 16V	81	08/02 – 12/06		3853/1

MAKE & MODEL   		KW	YEAR		
OPEL					
VECTRA C GTS	1.8 16V	90	08/02 -		3853/1
VECTRA C GTS	1.9 CDTI	74	10/05 -		3853/1
VECTRA C GTS	1.9 CDTI	88	04/04 -		3853/1
VECTRA C GTS	1.9 CDTI	110	04/04 -		3853/1
VECTRA C GTS	2.0 16V Turbo	129	03/03 -		3853/1
VECTRA C GTS	2.0 DTI 16V	74	08/02 -		3853/1
VECTRA C GTS	2.2 16V	108	08/02 -		3853/1
VECTRA C GTS	2.2 direct	114	10/03 -		3853/1
VECTRA C GTS	2.2 DTI 16V	86	08/02 – 06/08		3853/1
VECTRA C GTS	2.2 DTI 16V	92	08/02 -		3853/1
VECTRA C GTS	2.8 V6 Turbo	169	08/05 -		3853/1
VECTRA C GTS	2.8 V6 Turbo	184	08/06 -		3853/1
VECTRA C GTS	2.8 V6 Turbo	188	08/05 -		3853/1
VECTRA C GTS	2.8 V6 Turbo	206	08/06 -		3853/1
VECTRA C GTS	3.0 CDTI	130	06/03 -		3853/1
VECTRA C GTS	3.0 CDTi	135	08/05 -		3853/1
VECTRA C GTS	3.2 V6	155	08/02 -		3853/1
VIVARO Box	1.6 CDTI	66	06/14 -	4227	3795/1
VIVARO Box	1.6 CDTI	70	08/16 -	4227	3795/1
VIVARO Box	1.6 CDTI	85	06/14 -	4227	3795/1
VIVARO Box	1.6 CDTI	88	06/14 -	4227	3795/1
VIVARO Box	1.6 CDTI	92	03/16 -	4227	3795/1
VIVARO Box	1.6 CDTI	103	06/14 -	4227	3795/1
VIVARO Box	1.6 CDTI	107	03/16 -	4227	3795/1
VIVARO Box (F7)	1.9 DI	60	08/01 -	3848	3795/1
VIVARO Box (F7)	1.9 DTI	74	08/01 -	3848	3795/1
VIVARO Box (F7)	2.0 16V	88	08/01 -	3848	3795/1
VIVARO Box (F7)	2.0 CDTI	66	08/06 -	3848	3795/1
VIVARO Box (F7)	2.0 CDTI	84	08/06 -	3848	3795/1
VIVARO Box (F7)	2.0 ECOTEC	86	08/06 -	3848	3795/1
VIVARO Box (F7)	2.5 CDTI	84	08/06 -	3848	3795/1
VIVARO Box (F7)	2.5 CDTI	107	08/06 -	3848	3795/1
VIVARO Box (F7)	2.5 DTI	99	05/03 -	3848	3795/1
VIVARO C Minibüs/Otobüs (K0)	1.5	75	03.2019 -	4369	4370
VIVARO C Minibüs/Otobüs (K0)	1.5	88	03.2019 -	4369	4370
VIVARO C Minibüs/Otobüs (K0)	2.0	90	03.2019 -	4369	4370
VIVARO C Minibüs/Otobüs (K0)	2.0	106	09.2020 -	4369	4370
VIVARO C Minibüs/Otobüs (K0)	2.0	110	03.2019 -	4369	4370
VIVARO C Panelvan/Van (K0)	1.5	75	03.2019 -		4370
VIVARO C Panelvan/Van (K0)	1.5	88	03.2019 -		4370
VIVARO C Panelvan/Van (K0)	1.5 4x4	88	03.2019 -		4370
VIVARO C Panelvan/Van (K0)	2.0	90	03.2019 -		4370
VIVARO C Panelvan/Van (K0)	2.0	110	03.2019 -		4370
VIVARO C Panelvan/Van (K0)	2.0	130	03.2019 -		4370
VIVARO C Panelvan/Van (K0)	2.0 4x4	110	03.2019 -		4370
VIVARO C Panelvan/Van (K0) 1.	5	75	03.2019 -	4369	
VIVARO C Panelvan/Van (K0) 1.	5	88	03.2019 -	4369	
VIVARO C Panelvan/Van (K0) 1.	5 4x4	88	03.2019 -	4369	
VIVARO C Panelvan/Van (K0) 2.	0	90	03.2019 -	4369	
VIVARO C Panelvan/Van (K0) 2.	0	110	03.2019 -	4369	
VIVARO C Panelvan/Van (K0) 2.	0	130	03.2019 -	4369	
VIVARO C Panelvan/Van (K0) 2.	0 4x4	110	03.2019 -	4369	
VIVARO C Platform Cabin (K0)	2.0	90	03.2019 -	4369	4370
VIVARO C Platform Cabin (K0)	2.0	110	03.2019 -	4369	4370
VIVARO Combi	1.6 CDTI	66	06/14 -	4227	3795/1
VIVARO Combi	1.6 CDTI	70	04/15 -	4227	3795/1
VIVARO Combi	1.6 CDTI	85	06/14 -	4227	3795/1
VIVARO Combi	1.6 CDTI	88	06/14 -	4227	3795/1
VIVARO Combi	1.6 CDTI	92	04/15 -	4227	3795/1
VIVARO Combi	1.6 CDTI	103	06/14 -	4227	3795/1
VIVARO Combi	1.6 CDTI	107	04/15 -	4227	3795/1
VIVARO Combi (J7)	1.9 DI	60	08/01 -	3848	3795/1
VIVARO Combi (J7)	1.9 DTI	74	08/01 -	3848	3795/1
VIVARO Combi (J7)	2.0 16V	88	08/01 -	3848	3795/1
VIVARO Combi (J7)	2.0 CDTI	66	08/06 -	3848	3795/1
VIVARO Combi (J7)	2.0 CDTI	84	08/06 -	3848	3795/1
VIVARO Combi (J7)	2.0 ECOTEC	86	08/06 -	3848	3795/1
VIVARO Combi (J7)	2.5 CDTI	84	08/06 -	3848	3795/1
VIVARO Combi (J7)	2.5 CDTI	107	08/06 -	3848	3795/1
VIVARO Combi (J7)	2.5 DTI	99	05/03 -	3848	3795/1
VIVARO Platform/Chassis	1.6 CDTI	66	06/14 -	4227	3795/1
VIVARO Platform/Chassis	1.6 CDTI	85	06/14 -	4227	3795/1
VIVARO Platform/Chassis	1.6 CDTI	88	08/15 -	4227	3795/1
VIVARO Platform/Chassis	1.6 CDTI	103	08/15 -	4227	3795/1
VIVARO Platform/Chassis (E7)	1.9 Di	60	08/06 -	3848	3795/1
VIVARO Platform/Chassis (E7)	1.9 DTI	74	08/06 -	3848	3795/1

MAKE & MODEL		KW	YEAR		
OPEL					
VIVARO Platform/Chassis (E7)	2.0 16V	88	08/06 -	3848	3795/1
VIVARO Platform/Chassis (E7)	2.0 CDTI	66	01/06 -	3848	3795/1
VIVARO Platform/Chassis (E7)	2.0 CDTI	84	08/06 -	3848	3795/1
VIVARO Platform/Chassis (E7)	2.0 ECOTEC	86	08/06 -	3848	3795/1
VIVARO Platform/Chassis (E7)	2.5 CDTI	84	08/06 -	3848	3795/1
VIVARO Platform/Chassis (E7)	2.5 CDTI	107	08/06 -	3848	3795/1
VIVARO Platform/Chassis (E7)	2.5 DTi	99	08/06 -	3848	3795/1
ZAFIRA A (F75_)	1.6 16V	74	04/99 – 06/05	4042	4040
ZAFIRA A (F75_)	1.6 CNG	71	09/01 – 06/05	4042	4040
ZAFIRA A (F75_)	1.8	81	02/03 – 06/05	4042	4040
ZAFIRA A (F75_)	1.8 16V	85	04/99 – 09/00	4042	4040
ZAFIRA A (F75_)	1.8 16V	92	09/00 – 06/05	4042	4040
ZAFIRA A (F75_)	2.0 DI	63	07/99 – 06/00	4042	4040
ZAFIRA A (F75_)	2.0 DI 16V	60	07/99 – 06/05	4042	4040
ZAFIRA A (F75_)	2.0 DTI 16V	74	09/00 – 06/05	4042	4040
ZAFIRA A (F75_)	2.0 OPC	141	09/01 – 06/05		4040
ZAFIRA A (F75_)	2.0 OPC	147	11/02 – 06/05		4040
ZAFIRA A (F75_)	2.2 16V	108	09/00 – 06/05	4042	4040
ZAFIRA A (F75_)	2.2 DTI 16V	86	01/02 – 06/05	4042	4040
ZAFIRA A (F75_)	2.2 DTI 16V	92	01/02 – 06/05		4040
ZAFIRA B (A05)	1.6	77	07/05 -	4042	
ZAFIRA B (A05)	1.6	85	01/08 -	4042	
ZAFIRA B (A05)	1.6 CNG	69	01/06 -	4042	
ZAFIRA B (A05)	1.6 CNG Turbo	110	02/09 -	4042	
ZAFIRA B (A05)	1.7 CDTI	81	01/08 -	4042	
ZAFIRA B (A05)	1.7 CDTI	92	01/08 -	4042	
ZAFIRA B (A05)	1.8	88	06/13 -	4042	
ZAFIRA B (A05)	1.8	103	07/05 -	4042	
ZAFIRA B (A05)	2.0	147	07/05 -	4042	
ZAFIRA B (A05)	2.2	110	07/05 -	4042	
ZAFIRA B Van	1.7 CDTI	92	01/08 -	4042	
ZAFIRA B Van	1.9 CDTI	74	07/05 -	4042	
ZAFIRA B Van	1.9 CDTI	88	07/05 -	4042	
ZAFIRA B Van	1.9 CDTI	110	07/05 -	4042	
ZAFIRA LIFE Minibüs/Otobüs (K0)	1.5	75	03.2019 -	4369	4370
ZAFIRA LIFE Minibüs/Otobüs (K0)	1.5	88	03.2019 -	4369	4370
ZAFIRA LIFE Minibüs/Otobüs (K0)	2.0	90	08.2019 -	4369	4370
ZAFIRA LIFE Minibüs/Otobüs (K0)	2.0	106	09.2020 -	4369	4370
ZAFIRA LIFE Minibüs/Otobüs (K0)	2.0	110	03.2019 -	4369	4370
ZAFIRA LIFE Minibüs/Otobüs (K0)	2.0	130	03.2019 -	4369	4370
ZAFIRA LIFE Minibüs/Otobüs (K0)	2.0 4x4	110	03.2019 -	4369	4370
ZAFIRA LIFE Minibüs/Otobüs (K0)	E LIFE	100	09.2020 -	4369	4370
ZAFIRA TOURER C (P12)	1.4	88	10/11 -	4014	
ZAFIRA TOURER C (P12)	1.4	88	10/11 -	4008	
ZAFIRA TOURER C (P12)	1.4	88	10/11 -	4149	
ZAFIRA TOURER C (P12)	1.4	103	10/11 -	4014	
ZAFIRA TOURER C (P12)	1.4	103	10/11 -	4008	
ZAFIRA TOURER C (P12)	1.4	103	10/11 -	4149	
ZAFIRA TOURER C (P12)	1.4 LPG	103	10/11 -	4014	
ZAFIRA TOURER C (P12)	1.4 LPG	103	10/11 -	4008	
ZAFIRA TOURER C (P12)	1.4 LPG	103	10/11 -	4149	
ZAFIRA TOURER C (P12)	1.6 CDTI	88	07/14 -	4014	
ZAFIRA TOURER C (P12)	1.6 CDTI	88	07/14 -	4008	
ZAFIRA TOURER C (P12)	1.6 CDTI	88	07/14 -	4149	
ZAFIRA TOURER C (P12)	1.6 CDTI	88	07/14 -	4230	
ZAFIRA TOURER C (P12)	1.6 CDTI	100	02/13 -	4014	
ZAFIRA TOURER C (P12)	1.6 CDTI	100	02/13 -	4008	
ZAFIRA TOURER C (P12)	1.6 CDTI	100	02/13 -	4149	
ZAFIRA TOURER C (P12)	1.6 CNG	110	10/11 -	4014	
ZAFIRA TOURER C (P12)	1.6 CNG	110	10/11 -	4008	
ZAFIRA TOURER C (P12)	1.6 CNG	110	10/11 -	4149	
ZAFIRA TOURER C (P12)	1.6 SIDI	125	12/12 -	4014	
ZAFIRA TOURER C (P12)	1.6 SIDI	125	12/12 -	4008	
ZAFIRA TOURER C (P12)	1.6 SIDI	125	12/12 -	4149	
ZAFIRA TOURER C (P12)	1.6 SIDI	147	07/13 -	4014	
ZAFIRA TOURER C (P12)	1.6 SIDI	147	07/13 -	4008	
ZAFIRA TOURER C (P12)	1.6 SIDI	147	07/13 -	4149	
ZAFIRA TOURER C (P12)	1.8	85	10/11 -	4014	
ZAFIRA TOURER C (P12)	1.8	85	10/11 -	4008	
ZAFIRA TOURER C (P12)	1.8	85	10/11 -	4149	
ZAFIRA TOURER C (P12)	1.8	103	10/11 -	4014	
ZAFIRA TOURER C (P12)	1.8	103	10/11 -	4008	
ZAFIRA TOURER C (P12)	1.8	103	10/11 -	4149	
ZAFIRA TOURER C (P12)	1.8 LPG	101	10/11 -	4014	
ZAFIRA TOURER C (P12)	1.8 LPG	101	10/11 -	4008	
ZAFIRA TOURER C (P12)	1.8 LPG	101	10/11 -	4149	

MAKE & MODEL		KW	YEAR		
OPEL					
ZAFIRA TOURER C (P12)	2.0 BiTurbo CDTI	143	01/13 -	4014	
ZAFIRA TOURER C (P12)	2.0 BiTurbo CDTI	143	01/13 -	4008	
ZAFIRA TOURER C (P12)	2.0 BiTurbo CDTI	143	01/13 -	4149	
ZAFIRA TOURER C (P12)	2.0 CDTi	81	10/11 -	4014	
ZAFIRA TOURER C (P12)	2.0 CDTi	81	10/11 -	4008	
ZAFIRA TOURER C (P12)	2.0 CDTi	81	10/11 -	4149	
ZAFIRA TOURER C (P12)	2.0 CDTi	96	10/11 -	4014	
ZAFIRA TOURER C (P12)	2.0 CDTi	96	10/11 -	4008	
ZAFIRA TOURER C (P12)	2.0 CDTi	96	10/11 -	4149	
ZAFIRA TOURER C (P12)	2.0 CDTi	118	10/11 -	4014	
ZAFIRA TOURER C (P12)	2.0 CDTi	118	10/11 -	4008	
ZAFIRA TOURER C (P12)	2.0 CDTi	118	10/11 -	4149	
ZAFIRA TOURER C (P12)	2.0 CDTi	121	10/11 -	4014	
ZAFIRA TOURER C (P12)	2.0 CDTi	121	10/11 -	4008	
ZAFIRA TOURER C (P12)	2.0 CDTi	121	10/11 -	4149	
ZAFIRA TOURER C (P12)	2.0 CDTi	125	01/15 -	4014	
ZAFIRA TOURER C (P12)	2.0 CDTi	125	01/15 -	4008	
ZAFIRA TOURER C (P12)	2.0 CDTi	125	01/15 -	4149	
OPTARE					
TORO	TORO	115	01/08 -	3679	
PERODUA					
KANCIL	7	23	03/03 -	3746	
KANCIL	7	33	10/98 -	3746	
KANCIL	8	30	08/94 -	3746	
KENARI (L9_)	1.0	41	10/00 -	3901	
MYVI	1.3	63	01/06 – 06/11	3928	
VIVA	8	39	07/07 -	3928	
VIVA	66	35	07/07 -	3928	
VIVA	1.0	45	07/07 -	3928	
PEUGEOT					
104	0.9	33	10/79 – 10/83	3329	
104	0.9	33	10/79 – 10/83	3806/1	
104	0.9	34	10/72 – 10/79	3329	
104	0.9	34	10/72 – 10/79	3806/1	
104	1.0	32	09/83 – 06/88	3329	
104	1.1	37	08/80 – 06/88	3329	
104	1.1	37	08/80 – 06/88	3806/1	
104	1.1	42	07/76 – 08/82	3329	
104	1.1	42	07/76 – 08/82	3806/1	
104	1.1	48	09/78 – 09/79	3329	
104	1.1	48	09/78 – 09/79	3806/1	
104	1.2	42	08/79 – 06/83	3329	
104	1.2	42	08/79 – 06/83	3806/1	
104	1.4	53	08/79 – 06/83	3329	
104	1.4	53	08/79 – 06/83	3806/1	
107	1.0	50	06/05 -	3987	
107	1.4 HDi	40	06/05 -	3987	
108	1.0 VTi	51	05/14 -	3987	
108	1.2	60	05/14 -	3987	
204	1.1	40	01/67 -	3377	
204	1.1 (XK)	39	10/65 – 07/69	3377	
204	1.1 (XK4)	40	07/69 – 07/77	3377	
204	1.1 (XK5)	43	09/75 – 07/77	3377	
204	1.1 Grand Luxe	40	05/69 – 10/77	3403	
204	1.2 D (XLD)	29	05/68 – 05/73	3377	
204	1.3 D (XL4D)	33	01/73 – 10/77	3377	
204	1.4 D (XL4D)	33	09/73 – 12/77	3377	
204	1.4 D BD, U4D	33	01/67 -	3377	
205	1.6 GTI (180A (XU5J)	76	12/84 – 10/87	3372	
205	1.6 GTI (180A (XU5J)	76	12/84 – 10/87	3599	
205	1.9	96	08/90 – 07/92	3372	
205	1.9	96	08/90 – 07/92	3599	
205	1.9 (DFZ (XU9J1)	77	08/92 – 05/97	3372	
205	1.9 (DFZ (XU9J1)	77	08/92 – 05/97	3599	
205	1.9 (DKZ (XU9JAZ)	89	08/90 – 05/97	3372	
205	1.9 (DKZ (XU9JAZ)	89	08/90 – 05/97	3599	
205	1.9 GTI (D6B (XU9JA)	94	10/87 – 09/98	3372	
205	1.9 GTI (D6B (XU9JA)	94	10/87 – 09/98	3599	
205	1.9 GTI (DKZ (XU9JAZ)	88	10/87 – 10/94	3372	
205	1.9 GTI (DKZ (XU9JAZ)	88	10/87 – 10/94	3599	
205	1.9 GTI Cat (DFZ (XU9J1)	75	10/87 – 07/94	3372	
205	1.9 GTI Cat (DFZ (XU9J1)	75	10/87 – 07/94	3599	
208	1.0	50	03/12 -		3529/1
208	1.2	60	03/12 -		3529/1

MAKE & MODEL		KW	YEAR		
PEUGEOT					
208	1.2 THP	81	01/13 -		3529/1
208	1.4 GPL	70	10/13 -		3529/1
208	1.4 HDi	50	03/12 -		3529/1
208	1.4 VTi	70	03/12 -		3529/1
208	1.6	88	03/12 -		3529/1
208	1.6	115	03/12 -		3529/1
208	1.6 BlueHDi 100	73	01/15 -		3529/1
208	1.6 BlueHDi 120	88	11/13 -		3529/1
208	1.6 GTi	147	08/12 -		3529/1
208	1.6 GTi	153	10/14 -		3529/1
208	1.6 HDi	68	03/12 -		3529/1
208	1.6 HDi	84	03/12 -		3529/1
208	1.6 HDi	85	04/14 -		3529/1
208	1.6 HDi / BlueHDi 75	55	01/13 -		3529/1
208	1.6 THP 165	121	03/15 -		3529/1
301	1.2 VTi 72	53	11/12 -	4201	
301	1.2 VTi 82	60	12/14 -	4201	
301	1.6 BlueHDi 100	73	04/14 -	4201	
301	1.6 HDI 90	68	11/12 -	4201	
301	1.6 VTi 115	85	11/12 -	4201	
304	1.3 (XL5S)	55	08/72 – 09/75	3377	
304	1.3 GL (XL5)	48	09/72 – 10/79	3377	
304	1.3 GT (XL3)	48	10/69 – 09/75	3377	
304	1.4 D (XL4D)	33	10/76 – 10/79	3377	
309	1.6	69	01/86 – 07/89	3372	
309	1.6	69	01/86 – 07/89	3599	
309	1.6 (180Z (XU5J)	76	11/85 – 09/88	3372	
309	1.6 (180Z (XU5J)	76	11/85 – 09/88	3599	
309	1.6 (B1A (XU51C)	59	10/85 – 07/89	3372	
309	1.6 (B1A (XU51C)	59	10/85 – 07/89	3599	
309	1.6 (B1D (XU51C)	59	10/85 – 07/89	3372	
309	1.6 (B1D (XU51C)	59	10/85 – 07/89	3599	
309	1.6 (B6B (XU5J)	76	11/85 – 09/88	3372	
309	1.6 (B6B (XU5J)	76	11/85 – 09/88	3599	
309	1.6 GTI	85	09/89 – 10/93	3372	
309	1.6 GTI	85	09/89 – 10/93	3599	
309	1.9 (D2B (XU9S)	75	10/85 – 07/89	3372	
309	1.9 (D2B (XU9S)	75	10/85 – 07/89	3599	
309	1.9 (DDZ (XU9M)	80	07/88 – 07/89	3372	
309	1.9 (DDZ (XU9M)	80	07/88 – 07/89	3599	
309	1.9 (DDZ (XU9M)	80	10/90 – 12/93	3372	
309	1.9 (DDZ (XU9M)	80	10/90 – 12/93	3599	
309	1.9 (DFZ (XU9J1)	72	03/86 – 07/89	3372	
309	1.9 (DFZ (XU9J1)	72	03/86 – 07/89	3599	
309	1.9 (DFZ (XU9J1)	72	08/89 – 12/93	3372	
309	1.9 (DFZ (XU9J1)	72	08/89 – 12/93	3599	
309	1.9 GTI (D6B (XU9JA)	94	10/86 – 07/89	3372	
309	1.9 GTI (D6B (XU9JA)	94	10/86 – 07/89	3599	
309	1.9 GTI (DKZ (XU9JAZ)	88	07/88 – 12/93	3372	
309	1.9 GTI (DKZ (XU9JAZ)	88	07/88 – 12/93	3599	
309	1.9 GTI 16V (D6C (XU9J4)	116	08/89 – 07/90	3372	
309	1.9 GTI 16V (D6C (XU9J4)	116	08/89 – 07/90	3599	
309	1.9 GTI 16V (DFW (XU9J4Z)	108	10/90 – 12/93	3372	
309	1.9 GTI 16V (DFW (XU9J4Z)	108	10/90 – 12/93	3599	
404	1.6 (XC6)	48	04/63 – 12/71	3377	
404	1.6 (XC6)	54	11/67 – 12/71	3377	
404	1.6 GT (XC6)	50	07/71 – 12/71	3377	
404	1.9 L, U10	48	04/63 -	3377	
408	1.6 16V	80	02/10 -	3970	
408	1.6 Turbo	122	02/10 -	3970	
408	2.0	105	03/11 -	3970	
408	2.0 16V	108	02/10 -	3970	
2008	1.2 THP 110	81	01/15 -		3529/1
2008	1.2 THP 130	96	01/15 -		3529/1
2008	1.2 VTi	60	03/13 -		3529/1
2008	1.4 HDi	50	06/13 -		3529/1
2008	1.6 BlueHDi 100	73	01/15 -		3529/1
2008	1.6 BlueHDi 120	88	07/14 -		3529/1
2008	1.6 BlueHDi 75	55	01/15 -		3529/1
2008	1.6 HDi	68	03/13 -		3529/1
2008	1.6 HDi	84	03/13 -		3529/1
2008	1.6 HDi	85	07/14 -		3529/1
2008	1.6 VTi	88	03/13 -		3529/1
3008	1.2	96	01/15 -	3970	
3008	1.6 BlueHDi 115	85	02/13 -	3970	
3008	1.6 BlueHDi 120	88	05/14 -	3970	

MAKE & MODEL		KW	YEAR		
PEUGEOT					
3008	1.6 HDi	80	06/09 -	3970	
3008	1.6 HDi	82	08/10 -	3970	
3008	1.6 HDi	84	03/13 -	3970	
3008	1.6 Turbo	121	05/14 -	3970	
3008	1.6 VTi	88	06/09 -	3970	
4008	1.6 HDi AWC	84	05/12 -		3893
4008	1.8 HDi AWC	110	05/12 -		3893
4008	2.0 AWC	110	05/12 -		3893
5008	1.6 16V	88	09/09 -	3964	
5008	1.6 HDi	80	09/09 -	3964	
5008	1.6 HDi	82	08/10 -	3964	
5008	1.6 HDi	84	03/13 -	3964	
(DF-PSA) 206 44348	TU5JP4	78	01/2006 - 02/2009	3820/1	
(DF-PSA) 207 44348	TU5JP4	78	03/2009 - 12/2014		3984/1
(DF-PSA) 207 Sedan 44348	TU5JP4	78	11/2008 - 12/2014		3984/1
(DF-PSA) 301 44348	NFP	75	10/2014 -	4201/1	
(DF-PSA) 307 Cross Hatchback 44348	N6A 10FX3A PSA	78	09/2011 - 12/2013	3820/1	
(DF-PSA) 307 Hatchback 44348	TU5JP4	78	02/2008 - 12/2014	3820/1	
1007 (KM_)	1.4	54	04/05 -	3820	
1007 (KM_)	1.4 16V	65	10/05 -	3820	
1007 (KM_)	1.4 HDi	50	04/05 -	3820	
1007 (KM_)	1.6 16V	80	04/05 -	3820	3529/1
1007 (KM_)	1.6 HDi	80	06/07 -	3800	3529/1
1007 (KM_) 44287	KFV (TU3A), KFV (TU3JP)	54	04/2005 -	3820/1	
1007 (KM_) 44287 16V	KFU (ET3J4)	65	10/2005 -	3820/1	
1007 (KM_) 44287 HDi	8HX (DV4TD), 8HZ (DV4TD)	50	04/2005 -	3820/1	
1007 (KM_) 44348 16V	NFU (TU5JP4)	80	04/2005 -	3820/1	
1007 (KM_) 44348 HDi	9HZ (DV6TED4)	80	06/2007 -	3820/1	
104 1.0	108C (XV8)	32	09/1983 - 06/1988	3806	
104 44197	109F (XW7)	37	08/1980 - 06/1988	3806	
104 44287	150 (XY6B)	53	08/1979 - 06/1983	3806	
104 Coupe	0.9	33	09/73 – 10/83	3329	
104 Coupe	0.9	33	09/73 – 10/83	3806/1	
104 Coupe	1.1	37	08/79 – 06/88	3329	
104 Coupe	1.1	37	08/79 – 06/88	3806/1	
104 Coupe	1.1	42	08/79 – 06/83	3329	
104 Coupe	1.1	42	08/79 – 06/83	3806/1	
104 Coupe	1.1	48	09/73 – 09/79	3329	
104 Coupe	1.1	48	09/73 – 09/79	3806/1	
104 Coupe	1.1	49	08/75 – 06/80	3329	
104 Coupe	1.1	49	08/75 – 06/80	3806/1	
104 Coupe	1.4	53	08/79 – 06/84	3329	
104 Coupe	1.4	53	08/79 – 06/84	3806/1	
104 Coupe 44197	109 (XW3)	42	08/1979 - 06/1983	3806	
104 Coupe 44197	109F (XW7)	37	08/1979 - 06/1988	3806	
104 Coupe 44287	150 (XY6B)	53	08/1979 - 06/1984	3806	
106 I (1A, 1C)	1.0	33	09.1991 - 04.1996	3487	
106 I (1A, 1C)	1.0	37	09.1991 - 04.1996	3487	
106 I (1A, 1C)	1.1	44	09.1991 - 04.1996	3487	
106 I (1A, 1C)	1.3	72	10.1993 - 04.1996	3487	
106 I (1A, 1C)	1.4	51	08.1991 - 03.1996	3487	
106 I (1A, 1C)	1.4	55	09.1991 - 04.1996	3487	
106 I (1A, 1C)	1.4	69	09.1991 - 04.1996	3487	
106 I (1A, 1C)	1.4 D	37	09.1992 - 04.1996	3487	
106 I (1A, 1C)	1.5 D	40	06.1994 - 04.1996	3487	
106 I (1A, 1C)	1.5 D	43	06.1994 - 04.1996	3487	
106 I (1A, 1C)	1.6	65	06.1993 - 04.1996	3487	
106 I (1A, 1C)	1.6	76	01.1994 - 04.1996	3487	
106 I (1A, 1C)	1.0	33	09/91 – 04/96	3380	
106 I (1A, 1C)	1.0	33	09/91 – 04/96	3381	
106 I (1A, 1C)	1.0	37	09/91 – 04/96	3380	
106 I (1A, 1C)	1.0	37	09/91 – 04/96	3381	
106 I (1A, 1C)	1.1	44	09/91 – 04/96	3380	
106 I (1A, 1C)	1.1	44	09/91 – 04/96	3381	
106 I (1A, 1C)	1.3	72	10/93 – 04/96	3380	
106 I (1A, 1C)	1.3	72	10/93 – 04/96	3381	
106 I (1A, 1C)	1.4	51	08/91 – 03/96	3380	
106 I (1A, 1C)	1.4	51	08/91 – 03/96	3381	
106 I (1A, 1C)	1.4	55	09/91 – 04/96	3380	
106 I (1A, 1C)	1.4	55	09/91 – 04/96	3381	
106 I (1A, 1C)	1.4	69	09/91 – 04/96	3380	
106 I (1A, 1C)	1.4	69	09/91 – 04/96	3381	
106 I (1A, 1C)	1.4	72	08/91 – 03/96	3380	
106 I (1A, 1C)	1.4	72	08/91 – 03/96	3381	
106 I (1A, 1C)	1.4 D	37	09/92 – 04/96	3380	
106 I (1A, 1C)	1.4 D	37	09/92 – 04/96	3381	

MAKE & MODEL		KW	YEAR		
PEUGEOT					
106 I (1A, 1C)	1.5 D	40	06/94 – 04/96	3380	
106 I (1A, 1C)	1.5 D	40	06/94 – 04/96	3381	
106 I (1A, 1C)	1.5 D	43	06/94 – 04/96	3380	
106 I (1A, 1C)	1.5 D	43	06/94 – 04/96	3381	
106 I (1A, 1C)	1.6	65	06/93 – 04/96	3380	
106 I (1A, 1C)	1.6	65	06/93 – 04/96	3381	
106 I (1A, 1C)	1.6	76	01/94 – 04/96	3380	
106 I (1A, 1C)	1.6	76	01/94 – 04/96	3381	
106 II (1)	1.0 i	33	05/96 -	3380	
106 II (1)	1.0 i	33	05/96 -	3381	
106 II (1)	1.0 i	37	01/97 -	3380	
106 II (1)	1.0 i	37	01/97 -	3381	
106 II (1)	1.1 i	44	05/96 -	3380	
106 II (1)	1.1 i	44	05/96 -	3381	
106 II (1)	1.4 i	55	05/96 -	3380	
106 II (1)	1.4 i	55	05/96 -	3381	
106 II (1)	1.5 D	40	05/96 -	3380	
106 II (1)	1.5 D	40	05/96 -	3381	
106 II (1)	1.5 D	42	04/98 -	3380	
106 II (1)	1.5 D	42	04/98 -	3381	
106 II (1)	1.6 i	65	05/96 -	3380	
106 II (1)	1.6 i	65	05/96 -	3381	
106 II (1)	1.6 i	65	05/96 -	3528	
106 II (1)	1.6 i	74	05/96 -	3528	3496
106 II (1)	1.6 S16	87	05/96 -	3528	3496
106 II (1)	Electric	20	04/96 – 07/04	3380	
106 II (1)	Electric	20	04/96 – 07/04	3381	
106 II (1A_, 1C_)	1.0 i	33	05.1996 - 10.1999	3487	
106 II (1A_, 1C_)	1.0 i	37	04.1996 - 03.2001	3487	
106 II (1A_, 1C_)	1.1 i	40	01.1997 - 03.2001	3487	
106 II (1A_, 1C_)	1.1 i	44	05.1996 - 07.2004	3487	
106 II (1A_, 1C_)	1.4 i	55	05.1996 - 07.2004	3487	
106 II (1A_, 1C_)	1.5 D	40	05.1996 - 03.2001	3487	
106 II (1A_, 1C_)	1.5 D	42	04.1998 - 07.2004	3487	
106 II (1A_, 1C_)	1.6 i	65	05.1996 - 10.1999	3487	
106 II (1A_, 1C_)	1.6 i	74	05.1996 - 01.2001	3487	
106 II (1A_, 1C_)	1.6 S16	87	05.1996 - 07.2004	3487	
106 II (1A_, 1C_)	Electric	20	04.1996 - 07.2004	3487	
106 Van (1_)	1.0	33	09/91 – 03/01	3380	
106 Van (1_)	1.0	33	09/91 – 03/01	3381	
106 Van (1_)	1.5 D	40	05/96 – 03/01	3380	
106 Van (1_)	1.5 D	40	05/96 – 03/01	3381	
106 Van (1_)	1.5 D	42	10/00 – 03/01	3380	
106 Van (1_)	1.5 D	42	10/00 – 03/01	3381	
106 Van (1_)	Electric	20	04/96 – 03/01	3380	
106 Van (1_)	Electric	20	04/96 – 03/01	3381	
2008 I (CU_) 44228 THP 110	HNP (EB2ADT), HNV (EB2DTM), HNZ (EB2DT)	81	01/2015 -	3820/1	
2008 I (CU_) 44228 VTi	HMZ (EB2), HMZ (EB2F)	60	03/2013 - 12/2018	3820/1	
2008 I (CU_) 44287 HDi	8HR (DV4C)	50	06/2013 -	3820/1	
2008 I (CU_) 44348 BlueHDi 100	BHY (DV6FD)	73	01/2015 -	3820/1	
2008 I (CU_) 44348 BlueHDi 75	BHW (DV6FE)	55	01/2015 -	3820/1	
2008 I (CU_) 44348 HDi	9HP (DV6DTED)	68	03/2013 -	3820/1	
205 (741A/C) 02.83-10.87	1.6 GTI (180A (XU5J)	76	12/84 – 10/87	3592	
205 (741A/C) 02.83-10.87	1.6 GTI (B6D (XU5JA)	85	02/83 – 07/87	3592	
205 Box	1.1	36	02/83 – 07/87	3380	
205 Box	1.1	36	02/83 – 07/87	3381	
205 Box	1.1	36	02/83 – 07/87	3474	
205 Box	1.1	36	02/83 – 07/87	3580	
205 Box	1.1	40	08/87 – 07/90	3380	
205 Box	1.1	40	08/87 – 07/90	3381	
205 Box	1.1	40	08/87 – 07/90	3474	
205 Box	1.1	40	08/87 – 07/90	3580	
205 Box	1.4	44	02/83 – 07/87	3380	
205 Box	1.4	44	02/83 – 07/87	3381	
205 Box	1.4	44	02/83 – 07/87	3474	
205 Box	1.4	44	02/83 – 07/87	3580	
205 Box	1.8 D	44	02/83 – 07/90	3380	
205 Box	1.8 D	44	02/83 – 07/90	3381	
205 Box	1.8 D	44	02/83 – 07/90	3474	
205 Box	1.8 D	44	02/83 – 07/90	3580	
205 I (741A/C	1.0	33	02.1983 - 10.1987	3488	
205 I (741A/C	1.1	36	02.1983 - 10.1987	3488	
205 I (741A/C	1.1	37	02.1983 - 10.1987	3488	
205 I (741A/C	1.4	44	02.1983 - 10.1987	3488	
205 I (741A/C	1.4	58	10.1985 - 10.1987	3488	
205 I (741A/C	1.4	59	02.1983 - 10.1987	3488	

BESER®

MAKE & MODEL		KW	YEAR		
PEUGEOT					
205 I (741A/C	1.5	63	02.1984 - 10.1987	3488	
205 I (741A/C	1.6	53	03.1987 - 10.1987	3488	
205 I (741A/C	1.6	55	08.1986 - 10.1987	3488	
205 I (741A/C	1.6 GTI	76	12.1984 - 10.1987	3488	
205 I (741A/C	1.7 Diesel	44	08.1983 - 10.1987	3488	
205 I (741A/C	1.9 GTI	75	03.1987 - 10.1987	3488	
205 I (741A/C	1.9 GTI	94	10.1986 - 10.1987	3488	
205 I (741A/C)	1.9 GTI	75	03.1987 - 10.1987	3503/1	
205 I (741A/C)	1.9 GTI	94	10.1986 - 10.1987	3503/1	
205 I (741A/C)	1.0	33	02/83 – 10/87	3380	
205 I (741A/C)	1.0	33	02/83 – 10/87	3381	
205 I (741A/C)	1.0	33	02/83 – 10/87	3474	
205 I (741A/C)	1.0	33	02/83 – 10/87	3580	
205 I (741A/C)	1.1	36	02/83 – 10/87	3380	
205 I (741A/C)	1.1	36	02/83 – 10/87	3381	
205 I (741A/C)	1.1	36	02/83 – 10/87	3474	
205 I (741A/C)	1.1	36	02/83 – 10/87	3580	
205 I (741A/C)	1.1	37	02/83 – 10/87	3380	
205 I (741A/C)	1.1	37	02/83 – 10/87	3381	
205 I (741A/C)	1.1	37	02/83 – 10/87	3474	
205 I (741A/C)	1.1	37	02/83 – 10/87	3580	
205 I (741A/C)	1.3	47	02/84 – 10/87	3380	
205 I (741A/C)	1.3	47	02/84 – 10/87	3381	
205 I (741A/C)	1.3	47	02/84 – 10/87	3474	
205 I (741A/C)	1.3	47	02/84 – 10/87	3580	
205 I (741A/C)	1.4	44	02/83 – 10/87	3380	
205 I (741A/C)	1.4	44	02/83 – 10/87	3381	
205 I (741A/C)	1.4	44	02/83 – 10/87	3474	
205 I (741A/C)	1.4	44	02/83 – 10/87	3580	
205 I (741A/C)	1.4	53	02/83 – 10/87	3474	
205 I (741A/C)	1.4	53	02/83 – 10/87	3580	
205 I (741A/C)	1.4	58	10/85 – 10/87	3380	
205 I (741A/C)	1.4	58	10/85 – 10/87	3381	
205 I (741A/C)	1.4	58	10/85 – 10/87	3474	
205 I (741A/C)	1.4	58	10/85 – 10/87	3580	
205 I (741A/C)	1.4	59	02/83 – 10/87	3380	
205 I (741A/C)	1.4	59	02/83 – 10/87	3381	
205 I (741A/C)	1.4	59	02/83 – 10/87	3474	
205 I (741A/C)	1.4	59	02/83 – 10/87	3580	
205 I (741A/C)	1.5	63	02/84 – 10/87	3380	
205 I (741A/C)	1.5	63	02/84 – 10/87	3381	
205 I (741A/C)	1.5	63	02/84 – 10/87	3474	
205 I (741A/C)	1.5	63	02/84 – 10/87	3580	
205 I (741A/C)	1.6	53	03/87 – 10/87	3380	
205 I (741A/C)	1.6	53	03/87 – 10/87	3381	
205 I (741A/C)	1.6	53	03/87 – 10/87	3474	
205 I (741A/C)	1.6	53	03/87 – 10/87	3580	
205 I (741A/C)	1.6	55	08/86 – 10/87	3380	
205 I (741A/C)	1.6	55	08/86 – 10/87	3381	
205 I (741A/C)	1.6	55	08/86 – 10/87	3474	
205 I (741A/C)	1.6	55	08/86 – 10/87	3580	
205 I (741A/C)	1.6 GTI	76	12/84 – 10/87	3380	
205 I (741A/C)	1.6 GTI	76	12/84 – 10/87	3381	
205 I (741A/C)	1.6 GTI	76	12/84 – 10/87	3474	
205 I (741A/C)	1.6 GTI	76	12/84 – 10/87	3580	
205 I (741A/C)	1.7 Diesel	44	08/83 – 10/87	3380	
205 I (741A/C)	1.7 Diesel	44	08/83 – 10/87	3381	
205 I (741A/C)	1.7 Diesel	44	08/83 – 10/87	3474	
205 I (741A/C)	1.7 Diesel	44	08/83 – 10/87	3580	
205 I (741A/C)	1.9 GTI	75	03/87 – 10/87	3380	
205 I (741A/C)	1.9 GTI	75	03/87 – 10/87	3381	
205 I (741A/C)	1.9 GTI	75	03/87 – 10/87	3474	
205 I (741A/C)	1.9 GTI	75	03/87 – 10/87	3580	
205 I (741A/C)	1.9 GTI	94	10/86 – 10/87	3503	3496
205 I (741A/C)	1.9 GTI	94	10/86 – 10/87	3380	
205 I (741A/C)	1.9 GTI	94	10/86 – 10/87	3381	
205 I (741A/C)	1.9 GTI	94	10/86 – 10/87	3431	
205 I (741A/C)	1.9 GTI	94	10/86 – 10/87	3580	
205 I (741A/C)	2.0 (YN57)	53	02/83 – 10/87	3380	
205 I (741A/C)	2.0 (YN57)	53	02/83 – 10/87	3381	
205 I Cabrio (741B, 20D	1.1 CJ	44	10.1989 - 12.1994	3488	
205 I Cabrio (741B, 20D	1.4	50	08.1987 - 07.1990	3488	
205 I Cabrio (741B, 20D	1.4 CJ	44	03.1988 - 05.1989	3488	
205 I Cabrio (741B, 20D	1.4 CJ	49	03.1989 - 12.1994	3488	
205 I Cabrio (741B, 20D	1.4 CJ	55	05.1991 - 12.1994	3488	
205 I Cabrio (741B, 20D	1.4 CJ Cat	44	01.1989 - 09.1993	3488	

MAKE & MODEL		KW	YEAR		
PEUGEOT					
205 I Cabrio (741B, 20D	1.4 CT	58	04.1986 - 12.1988	3488	
205 I Cabrio (741B, 20D	1.6 CJ	65	08.1992 - 12.1994	3488	
205 I Cabrio (741B, 20D	1.6 CTI	76	03.1986 - 10.1990	3488	
205 I Cabrio (741B, 20D	1.9 CTI	75	10.1987 - 12.1994	3488	
205 I Cabrio (741B, 20D	1.9 CTi	74	08.1987 - 07.1990	3488	
205 I Cabrio (741B, 20D)	1.9 CTI	75	10.1987 - 12.1994	3503/1	
205 I Cabrio (741B, 20D)	1.9 Cti	74	08.1987 - 07.1990	3503/1	
205 I Convertible (741B, 20D)	1.1 CJ	44	10/89 – 12/94	3380	
205 I Convertible (741B, 20D)	1.1 CJ	44	10/89 – 12/94	3381	
205 I Convertible (741B, 20D)	1.1 CJ	44	10/89 – 12/94	3474	
205 I Convertible (741B, 20D)	1.1 CJ	44	10/89 – 12/94	3580	
205 I Convertible (741B, 20D)	1.4	50	08/87 – 07/90	3380	
205 I Convertible (741B, 20D)	1.4	50	08/87 – 07/90	3381	
205 I Convertible (741B, 20D)	1.4	50	08/87 – 07/90	3474	
205 I Convertible (741B, 20D)	1.4	50	08/87 – 07/90	3580	
205 I Convertible (741B, 20D)	1.4	62	08/87 – 06/94	3380	
205 I Convertible (741B, 20D)	1.4	62	08/87 – 06/94	3381	
205 I Convertible (741B, 20D)	1.4	62	08/87 – 06/94	3474	
205 I Convertible (741B, 20D)	1.4	62	08/87 – 06/94	3580	
205 I Convertible (741B, 20D)	1.4 CJ	44	03/88 – 05/89	3380	
205 I Convertible (741B, 20D)	1.4 CJ	44	03/88 – 05/89	3381	
205 I Convertible (741B, 20D)	1.4 CJ	44	03/88 – 05/89	3474	
205 I Convertible (741B, 20D)	1.4 CJ	44	03/88 – 05/89	3580	
205 I Convertible (741B, 20D)	1.4 CJ	49	03/89 – 12/94	3380	
205 I Convertible (741B, 20D)	1.4 CJ	49	03/89 – 12/94	3381	
205 I Convertible (741B, 20D)	1.4 CJ	49	03/89 – 12/94	3474	
205 I Convertible (741B, 20D)	1.4 CJ	49	03/89 – 12/94	3580	
205 I Convertible (741B, 20D)	1.4 CJ	55	05/91 – 12/94	3380	
205 I Convertible (741B, 20D)	1.4 CJ	55	05/91 – 12/94	3381	
205 I Convertible (741B, 20D)	1.4 CJ	55	05/91 – 12/94	3474	
205 I Convertible (741B, 20D)	1.4 CJ	55	05/91 – 12/94	3580	
205 I Convertible (741B, 20D)	1.4 CJ CAT	44	01/89 – 09/93	3380	
205 I Convertible (741B, 20D)	1.4 CJ CAT	44	01/89 – 09/93	3381	
205 I Convertible (741B, 20D)	1.4 CJ CAT	44	01/89 – 09/93	3474	
205 I Convertible (741B, 20D)	1.4 CJ CAT	44	01/89 – 09/93	3580	
205 I Convertible (741B, 20D)	1.4 CT	58	04/86 – 12/88	3380	
205 I Convertible (741B, 20D)	1.4 CT	58	04/86 – 12/88	3381	
205 I Convertible (741B, 20D)	1.4 CT	58	04/86 – 12/88	3474	
205 I Convertible (741B, 20D)	1.4 CT	58	04/86 – 12/88	3580	
205 I Convertible (741B, 20D)	1.6 CJ	65	08/92 – 12/94	3380	
205 I Convertible (741B, 20D)	1.6 CJ	65	08/92 – 12/94	3381	
205 I Convertible (741B, 20D)	1.6 CJ	65	08/92 – 12/94	3474	
205 I Convertible (741B, 20D)	1.6 CJ	65	08/92 – 12/94	3580	
205 I Convertible (741B, 20D)	1.6 CTI	76	04/86 – 10/90	3380	
205 I Convertible (741B, 20D)	1.6 CTI	76	04/86 – 10/90	3381	
205 I Convertible (741B, 20D)	1.6 CTI	76	04/86 – 10/90	3474	
205 I Convertible (741B, 20D)	1.6 CTI	76	04/86 – 10/90	3580	
205 I Convertible (741B, 20D)	1.9	77	05/86 – 07/87	3380	
205 I Convertible (741B, 20D)	1.9	77	05/86 – 07/87	3381	
205 I Convertible (741B, 20D)	1.9	77	05/86 – 07/87	3474	
205 I Convertible (741B, 20D)	1.9	77	05/86 – 07/87	3580	
205 I Convertible (741B, 20D)	1.9 CTI	74	08/87 – 07/90	3380	
205 I Convertible (741B, 20D)	1.9 CTI	74	08/87 – 07/90	3381	
205 I Convertible (741B, 20D)	1.9 CTI	74	08/87 – 07/90	3474	
205 I Convertible (741B, 20D)	1.9 CTI	74	08/87 – 07/90	3580	
205 I Convertible (741B, 20D)	1.9 CTI	75	10/87 – 12/94	3380	
205 I Convertible (741B, 20D)	1.9 CTI	75	10/87 – 12/94	3381	
205 I Convertible (741B, 20D)	1.9 CTI	75	10/87 – 12/94	3431	
205 I Convertible (741B, 20D)	1.9 CTi	75	10/87 – 12/94	3503	3496
205 I Convertible (741B, 20D)	1.9 CTi	75	10/87 – 12/94	3474	
205 I Convertible (741B, 20D)	1.9 CTi	75	10/87 – 12/94	3580	
205 II (20A/C	1.0	33	10.1987 - 09.1998	3488	
205 II (20A/C	1.1	36	10.1987 - 10.1990	3488	
205 II (20A/C	1.1	40	10.1987 - 07.1992	3488	
205 II (20A/C	1.1	44	07.1989 - 09.1998	3488	
205 II (20A/C	1.1 XA	40	07.1987 - 10.1988	3488	
205 II (20A/C	1.2	47	01.1987 - 12.1990	3488	
205 II (20A/C	1.3	47	08.1990 - 07.1992	3488	
205 II (20A/C	1.3 Rallye	74	10.1987 - 10.1990	3488	
205 II (20A/C	1.4	44	10.1987 - 05.1989	3488	
205 II (20A/C	1.4	49	10.1987 - 10.1990	3488	
205 II (20A/C	1.4	55	07.1988 - 09.1998	3488	
205 II (20A/C	1.4	55	07.1988 - 09.1998	3488	
205 II (20A/C	1.4	58	07.1988 - 05.1989	3488	
205 II (20A/C	1.4	62	06.1987 - 12.1989	3488	
205 II (20A/C	1.4	63	06.1987 - 12.1989	3488	

MAKE & MODEL   		KW	YEAR		
PEUGEOT					
205 II (20A/C	1.4 Cat	44	08.1987 - 09.1993	3488	
205 II (20A/C	1.6	53	10.1987 - 09.1998	3488	
205 II (20A/C	1.6	55	10.1987 - 09.1998	3488	
205 II (20A/C	1.6	66	08.1990 - 07.1992	3488	
205 II (20A/C	1.6 Aut.	65	05.1990 - 09.1998	3488	
205 II (20A/C	1.6 GTI	76	10.1987 - 12.1989	3488	
205 II (20A/C	1.6 GTX	69	01.1987 - 10.1991	3488	
205 II (20A/C	1.7 Diesel	44	07.1987 - 09.1998	3488	
205 II (20A/C	1.8 XDT	58	08.1990 - 05.1997	3488	
205 II (20A/C	1.9 Diesel	47	10.1987 - 09.1998	3488	
205 II (20A/C	1.9 GTI	75	10.1987 - 05.1989	3488	
205 II (20A/C	1.9 GTI	88	10.1987 - 10.1994	3488	
205 II (20A/C	1.9 GTI	94	10.1987 - 09.1998	3488	
205 II (20A/C	1.9 GTI Cat	75	10.1987 - 07.1994	3488	
205 II (20A/C)	1.9 GTI	75	10.1987 - 05.1989	3503/1	
205 II (20A/C)	1.9 GTI	88	10.1987 - 10.1994	3503/1	
205 II (20A/C)	1.9 GTI	94	10.1987 - 09.1998	3503/1	
205 II (20A/C)	1.9 GTI Cat	75	10.1987 - 07.1994	3503/1	
205 II (20A/C)	1.0	33	10/87 – 09/98	3380	
205 II (20A/C)	1.0	33	10/87 – 09/98	3381	
205 II (20A/C)	1.0	33	10/87 – 09/98	3474	
205 II (20A/C)	1.0	33	10/87 – 09/98	3580	
205 II (20A/C)	1.0	37	08/92 – 05/97	3380	
205 II (20A/C)	1.0	37	08/92 – 05/97	3381	
205 II (20A/C)	1.0	37	08/92 – 05/97	3474	
205 II (20A/C)	1.0	37	08/92 – 05/97	3580	
205 II (20A/C)	1.1	36	10/87 – 10/90	3380	
205 II (20A/C)	1.1	36	10/87 – 10/90	3381	
205 II (20A/C)	1.1	36	10/87 – 10/90	3474	
205 II (20A/C)	1.1	36	10/87 – 10/90	3580	
205 II (20A/C)	1.1	40	10/87 – 10/90	3380	
205 II (20A/C)	1.1	40	10/87 – 10/90	3381	
205 II (20A/C)	1.1	40	10/87 – 10/90	3474	
205 II (20A/C)	1.1	40	10/87 – 10/90	3580	
205 II (20A/C)	1.1	44	07/89 - 09/98	3380	
205 II (20A/C)	1.1	44	07/89 - 09/98	3381	
205 II (20A/C)	1.1	44	07/89 – 09/98	3474	
205 II (20A/C)	1.1	44	07/89 – 09/98	3580	
205 II (20A/C)	1.1 XA	40	07/87 – 10/88	3380	
205 II (20A/C)	1.1 XA	40	07/87 – 10/88	3381	
205 II (20A/C)	1.1 XA	40	07/87 – 10/88	3474	
205 II (20A/C)	1.1 XA	40	07/87 – 10/88	3580	
205 II (20A/C)	1.2	47	01/87 – 12/90	3380	
205 II (20A/C)	1.2	47	01/87 – 12/90	3381	
205 II (20A/C)	1.2	47	01/87 – 12/90	3474	
205 II (20A/C)	1.2	47	01/87 – 12/90	3580	
205 II (20A/C)	1.3	47	08/90 – 07/92	3380	
205 II (20A/C)	1.3	47	08/90 – 07/92	3381	
205 II (20A/C)	1.3	47	08/90 – 07/92	3474	
205 II (20A/C)	1.3	47	08/90 – 07/92	3580	
205 II (20A/C)	1.3 Rallye	74	10/87 – 10/90	3380	
205 II (20A/C)	1.3 Rallye	74	10/87 – 10/90	3381	
205 II (20A/C)	1.3 Rallye	74	10/87 – 10/90	3474	
205 II (20A/C)	1.3 Rallye	74	10/87 – 10/90	3580	
205 II (20A/C)	1.4	44	10/87 – 05/89	3380	
205 II (20A/C)	1.4	44	10/87 – 05/89	3381	
205 II (20A/C)	1.4	44	10/87 – 05/89	3474	
205 II (20A/C)	1.4	44	10/87 – 05/89	3580	
205 II (20A/C)	1.4	49	10/87 – 10/90	3380	
205 II (20A/C)	1.4	49	10/87 – 10/90	3381	
205 II (20A/C)	1.4	49	10/87 – 10/90	3474	
205 II (20A/C)	1.4	49	10/87 – 10/90	3580	
205 II (20A/C)	1.4	50	08/90 – 07/92	3380	
205 II (20A/C)	1.4	50	08/90 – 07/92	3381	
205 II (20A/C)	1.4	50	08/90 – 07/92	3474	
205 II (20A/C)	1.4	50	08/90 – 07/92	3580	
205 II (20A/C)	1.4	53	01/87 – 07/88	3380	
205 II (20A/C)	1.4	53	01/87 – 07/88	3381	
205 II (20A/C)	1.4	53	01/87 – 07/88	3474	
205 II (20A/C)	1.4	53	01/87 – 07/88	3580	
205 II (20A/C)	1.4	55	07/88 – 09/98	3380	
205 II (20A/C)	1.4	55	07/88 – 09/98	3381	
205 II (20A/C)	1.4	55	07/88 – 09/98	3474	
205 II (20A/C)	1.4	55	07/88 – 09/98	3580	
205 II (20A/C)	1.4	58	07/88 – 05/89	3380	
205 II (20A/C)	1.4	58	07/88 – 05/89	3381	

MAKE & MODEL		KW	YEAR		
PEUGEOT					
205 II (20A/C)	1.4	58	07/88 – 05/89	3474	
205 II (20A/C)	1.4	58	07/88 – 05/89	3580	
205 II (20A/C)	1.4	62	06/87 – 12/89	3380	
205 II (20A/C)	1.4	62	06/87 – 12/89	3381	
205 II (20A/C)	1.4	62	06/87 – 12/89	3474	
205 II (20A/C)	1.4	62	06/87 – 12/89	3580	
205 II (20A/C)	1.4	63	06/87 – 12/89	3380	
205 II (20A/C)	1.4	63	06/87 – 12/89	3381	
205 II (20A/C)	1.4	63	06/87 – 12/89	3474	
205 II (20A/C)	1.4	63	06/87 – 12/89	3580	
205 II (20A/C)	1.4 CAT	44	08/87 – 09/93	3380	
205 II (20A/C)	1.4 CAT	44	08/87 – 09/93	3381	
205 II (20A/C)	1.4 CAT	44	08/87 – 09/93	3474	
205 II (20A/C)	1.4 CAT	44	08/87 – 09/93	3580	
205 II (20A/C)	1.6	53	10/87 – 09/98	3380	
205 II (20A/C)	1.6	53	10/87 – 09/98	3381	
205 II (20A/C)	1.6	53	10/87 – 09/98	3474	
205 II (20A/C)	1.6	53	10/87 – 09/98	3580	
205 II (20A/C)	1.6	55	10/87 – 09/98	3380	
205 II (20A/C)	1.6	55	10/87 – 09/98	3381	
205 II (20A/C)	1.6	55	10/87 – 09/98	3474	
205 II (20A/C)	1.6	55	10/87 – 09/98	3580	
205 II (20A/C)	1.6	66	08/90 – 07/92	3380	
205 II (20A/C)	1.6	66	08/90 – 07/92	3381	
205 II (20A/C)	1.6	66	08/90 – 07/92	3474	
205 II (20A/C)	1.6	66	08/90 – 07/92	3580	
205 II (20A/C)	1.6 Aut.	58	10/87 – 09/98	3380	
205 II (20A/C)	1.6 Aut.	58	10/87 – 09/98	3381	
205 II (20A/C)	1.6 Aut.	58	10/87 – 09/98	3474	
205 II (20A/C)	1.6 Aut.	58	10/87 – 09/98	3580	
205 II (20A/C)	1.6 Aut.	65	05/90 – 09/98	3380	
205 II (20A/C)	1.6 Aut.	65	05/90 – 09/98	3381	
205 II (20A/C)	1.6 Aut.	65	05/90 – 09/98	3474	
205 II (20A/C)	1.6 Aut.	65	05/90 – 09/98	3580	
205 II (20A/C)	1.6 GTI	76	10/87 – 12/89	3380	
205 II (20A/C)	1.6 GTI	76	10/87 – 12/89	3381	
205 II (20A/C)	1.6 GTI	76	10/87 – 12/89	3474	
205 II (20A/C)	1.6 GTI	76	10/87 – 12/89	3580	
205 II (20A/C)	1.6 GTI	85	10/87 – 12/89	3380	
205 II (20A/C)	1.6 GTI	85	10/87 – 12/89	3381	
205 II (20A/C)	1.6 GTI	85	10/87 – 12/89	3474	
205 II (20A/C)	1.6 GTI	85	10/87 – 12/89	3580	
205 II (20A/C)	1.6 GTX	69	01/87 – 10/91	3380	
205 II (20A/C)	1.6 GTX	69	01/87 – 10/91	3381	
205 II (20A/C)	1.6 GTX	69	01/87 – 10/91	3474	
205 II (20A/C)	1.6 GTX	69	01/87 – 10/91	3580	
205 II (20A/C)	1.7 Diesel	44	07/87 – 09/98	3380	
205 II (20A/C)	1.7 Diesel	44	07/87 – 09/98	3381	
205 II (20A/C)	1.7 Diesel	44	07/87 – 09/98	3474	
205 II (20A/C)	1.7 Diesel	44	07/87 – 09/98	3580	
205 II (20A/C)	1.8 TD	57	01/90 – 09/98	3380	
205 II (20A/C)	1.8 TD	57	01/90 – 09/98	3381	
205 II (20A/C)	1.8 TD	57	01/90 – 09/98	3474	
205 II (20A/C)	1.8 TD	57	01/90 – 09/98	3580	
205 II (20A/C)	1.8 XDT	58	08/90 – 05/97	3380	
205 II (20A/C)	1.8 XDT	58	08/90 – 05/97	3381	
205 II (20A/C)	1.8 XDT	58	08/90 – 05/97	3474	
205 II (20A/C)	1.8 XDT	58	08/90 – 05/97	3580	
205 II (20A/C)	1.9	77	08/92 – 05/97	3380	
205 II (20A/C)	1.9	77	08/92 – 05/97	3381	
205 II (20A/C)	1.9	77	08/92 – 05/97	3474	
205 II (20A/C)	1.9	77	08/92 – 05/97	3580	
205 II (20A/C)	1.9	89	08/90 – 05/97	3380	
205 II (20A/C)	1.9	89	08/90 – 05/97	3381	
205 II (20A/C)	1.9	89	08/90 – 05/97	3474	
205 II (20A/C)	1.9	89	08/90 – 05/97	3580	
205 II (20A/C)	1.9	96	08/90 – 07/92	3380	
205 II (20A/C)	1.9	96	08/90 – 07/92	3381	
205 II (20A/C)	1.9	96	08/90 – 07/92	3474	
205 II (20A/C)	1.9	96	08/90 – 07/92	3580	
205 II (20A/C)	1.9 Diesel	47	10/87 – 09/98	3380	
205 II (20A/C)	1.9 Diesel	47	10/87 – 09/98	3381	
205 II (20A/C)	1.9 Diesel	47	10/87 – 09/98	3474	
205 II (20A/C)	1.9 Diesel	47	10/87 – 09/98	3580	
205 II (20A/C)	1.9 Diesel	51	08/87 – 06/94	3380	
205 II (20A/C)	1.9 Diesel	51	08/87 – 06/94	3381	

MAKE & MODEL		KW	YEAR		
PEUGEOT					
205 II (20A/C)	1.9 Diesel	51	08/87 – 06/94	3474	
205 II (20A/C)	1.9 Diesel	51	08/87 – 06/94	3580	
205 II (20A/C)	1.9 GTI	75	10/87 – 05/89	3380	
205 II (20A/C)	1.9 GTI	75	10/87 – 05/89	3381	
205 II (20A/C)	1.9 GTI	75	10/87 – 05/89	3474	
205 II (20A/C)	1.9 GTI	75	10/87 – 05/89	3580	
205 II (20A/C)	1.9 GTI	88	10/87 – 10/94	3503	3496
205 II (20A/C)	1.9 GTI	88	10/87 – 10/94	3380	
205 II (20A/C)	1.9 GTI	88	10/87 – 10/94	3381	
205 II (20A/C)	1.9 GTI	88	10/87 – 10/94	3431	
205 II (20A/C)	1.9 GTI	88	10/87 – 10/94	3474	
205 II (20A/C)	1.9 GTI	88	10/87 – 10/94	3580	
205 II (20A/C)	1.9 GTI	94	10/87 – 09/98	3474	3496
205 II (20A/C)	1.9 GTI	94	10/87 – 09/98	3380	
205 II (20A/C)	1.9 GTI	94	10/87 – 09/98	3381	
205 II (20A/C)	1.9 GTI	94	10/87 – 09/98	3431	
205 II (20A/C)	1.9 GTI	94	10/87 – 09/98	3503	
205 II (20A/C)	1.9 GTI	94	10/87 – 09/98	3580	
205 II (20A/C)	1.9 GTI CAT	75	10/87 – 07/94	3474	3496
205 II (20A/C)	1.9 GTI CAT	75	10/87 – 07/94	3380	
205 II (20A/C)	1.9 GTI CAT	75	10/87 – 07/94	3381	
205 II (20A/C)	1.9 GTI CAT	75	10/87 – 07/94	3431	
205 II (20A/C)	1.9 GTI CAT	75	10/87 – 07/94	3503	
205 II (20A/C)	1.9 GTI CAT	75	10/87 – 07/94	3580	
205 Kasa/eğik arka	1.1	36	02.1983 - 07.1987	3488	
205 Kasa/eğik arka	1.1	40	08.1987 - 07.1990	3488	
205 Kasa/eğik arka	1.4	44	02.1983 - 07.1987	3488	
205 Kasa/eğik arka	1.8 D	44	02.1983 - 07.1990	3488	
206 CC (2D)	1.6 16V	80	09/00 -		3496
206 CC (2D)	1.6 HDi 110	80	04/05 -		3496
206 CC (2D)	2.0 S16	100	09/00 -		3496
206 CC (2D) 2.0 S16	RFN (EW10J4)	100	09/2000 - 12/2007	3820/1	
206 CC (2D) 44348	NFU (TU5JP4)	81	09/2001 - 12/2008	3820/1	
206 CC (2D) 44348 16V	NFU (TU5JP4)	80	09/2000 - 12/2007	3820/1	
206 CC (2D) 44348 HDi 110	9HZ (DV6TED4)	80	04/2005 - 02/2007	3820/1	
206 Hatchback (2A/C)	1.0	48	09/02 – 02/07	3759	3496
206 Hatchback (2A/C)	1.0	48	09/02 – 02/07	3938	
206 Hatchback (2A/C)	1.1	40	08/98 – 07/00	3759	
206 Hatchback (2A/C)	1.1	40	08/98 – 07/00	3938	
206 Hatchback (2A/C)	1.1 i	44	09/98 -	3759	
206 Hatchback (2A/C)	1.1 i	44	09/98 -	3938	
206 Hatchback (2A/C)	1.4 16V	65	10/03 -		3496
206 Hatchback (2A/C)	1.4 HDi	51	09/02 – 02/07	3938	3496
206 Hatchback (2A/C)	1.4 HDi eco 70	50	09/01 -	3938	
206 Hatchback (2A/C)	1.4 i	55	09/98 -	3938	
206 Hatchback (2A/C)	1.4 LPG	55	05/06 – 09/07	3938	
206 Hatchback (2A/C)	1.6	81	05/05 – 07/08		3496
206 Hatchback (2A/C)	1.6 16V	80	12/00 -		3496
206 Hatchback (2A/C)	1.6 HDi 110	80	05/04 -		3496
206 Hatchback (2A/C)	1.6 i	65	09/98 – 12/00	3938	3496
206 Hatchback (2A/C)	1.9 D	51	09/98 – 11/01	3938	3496
206 Hatchback (2A/C)	2.0 HDI 90	66	12/99 -		3496
206 Hatchback (2A/C)	2.0 RC	130	07/03 -	3800	3496
206 Hatchback (2A/C)	2.0 S16	99	04/99 – 10/00		3496
206 Hatchback (2A/C)	2.0 S16	100	06/99 -		3496
206 Hatchback (2A/C) 2.0 S16	RFN (EW10J4)	100	06/1999 - 12/2007	3820/1	
206 Hatchback (2A/C) 44287 16V	KFU (ET3J4)	65	10/2003 - 02/2008	3820/1	
206 Hatchback (2A/C) 44348	NFU (TU5JP4)	81	05/2005 - 07/2008	3820/1	
206 Hatchback (2A/C) 44348 16V	NFU (TU5JP4)	79	06/2001 - 04/2009	3820/1	
206 Hatchback (2A/C) 44348 16V	NFU (TU5JP4)	80	07/2000 - 04/2009	3820/1	
206 Hatchback (2A/C) 44348 HDi 110	9HY (DV6TED4), 9HZ (DV6TED4)	80	05/2004 - 02/2007	3820/1	
206 Saloon	1.4	55	03/07 -	3938	
206 Saloon	1.4 HDi eco 70	50	09/08 -	3938	
206 Saloon	1.6 16V	80	03/07 -		3496
206 Sedan 44348 16V	NFU (TU5JP4)	80	03/2007 -	3820/1	
206 SW (2E/K)	1.1	44	07/02 -	3759	
206 SW (2E/K)	1.1	44	07/02 -	3938	
206 SW (2E/K)	1.4	55	07/02 -	3938	
206 SW (2E/K)	1.4 16V	65	10/03 -		3496
206 SW (2E/K)	1.4 HDi	50	07/02 -	3938	
206 SW (2E/K)	1.6	81	05/05 – 07/08		3496
206 SW (2E/K)	1.6 16V	80	07/02 -		3496
206 SW (2E/K)	1.6 HDi 110	80	05/04 -		3496
206 SW (2E/K)	2.0 16V	100	07/02 -		3496
206 SW (2E/K)	2.0 HDi	66	07/02 -		3496
206 SW (2E/K) 2.0 16V	RFN (EW10J4)	100	07/2002 - 02/2007	3820/1	

MAKE & MODEL		KW	YEAR		
PEUGEOT					
206 SW (2E/K) 2.0 HDi	RHY (DW10TD)	66	07/2002 - 02/2007	3820/1	
206 SW (2E/K) 44287 16V	KFU (ET3J4)	65	10/2003 -	3820/1	
206 SW (2E/K) 44348	NFU (TU5JP4)	81	05/2005 - 07/2008	3820/1	
206 SW (2E/K) 44348 16V	NFU (TU5JP4)	80	07/2002 -	3820/1	
206 SW (2E/K) 44348 HDi 110	9HZ (DV6TED4)	80	05/2004 -	3820/1	
206 Van	1.4 HDi	50	09/01 – 03/09	3938	3496
206 Van	1.9 D	51	04/99 – 05/07	3938	3496
206+ (2L_, 2M_) 44348 16V	NFU (TU5JP4)	80	07/2010 -	3820/1	
206+ (T3E)	1.1	44	01/09 -	3938	
206+ (T3E)	1.4 HDi eco 70	50	01/09 -	3938	
206+ (T3E)	1.4 i	54	09/10 -	3938	
206+ (T3E)	1.4 i	55	01/09 -	3938	
207 (WA_, WC_)	1.4	53	02/06 -		3529/1
207 (WA_, WC_)	1.4	53	02/06 -		3984
207 (WA_, WC_)	1.4 16V	65	02/06 -		3529/1
207 (WA_, WC_)	1.4 16V	65	02/06 -		3984
207 (WA_, WC_)	1.4 16V	70	06/07 -	3800	3529/1
207 (WA_, WC_)	1.4 16V	70	06/07 -		3984
207 (WA_, WC_)	1.4 16V	72	10/09 -	3800	3529/1
207 (WA_, WC_)	1.4 16V	72	10/09 -		3984
207 (WA_, WC_)	1.4 HDi	50	02/06 -		3529/1
207 (WA_, WC_)	1.4 HDi	50	02/06 -		3984
207 (WA_, WC_)	1.6	81	08/08 -	3800	3529/1
207 (WA_, WC_)	1.6	90	09/07 – 12/13	3800	3529/1
207 (WA_, WC_)	1.6 16V	80	02/06 -	3800	3529/1
207 (WA_, WC_)	1.6 16V	80	02/06 -		3984
207 (WA_, WC_)	1.6 16V RC	128	02/07 -		3529/1
207 (WA_, WC_)	1.6 16V RC	128	02/07 -		3984
207 (WA_, WC_)	1.6 16V Turbo	110	02/06 -	3800	3529/1
207 (WA_, WC_)	1.6 16V Turbo	110	02/06 -		3984
207 (WA_, WC_)	1.6 16V Turbo	115	10/09 -	3800	3529/1
207 (WA_, WC_)	1.6 16V VTi	88	02/07 -	3800	3529/1
207 (WA_, WC_)	1.6 16V VTi	88	02/07 -		3984
207 (WA_, WC_)	1.6 HDi	66	02/06 -	3800	3529/1
207 (WA_, WC_)	1.6 HDi	66	02/06 -		3984
207 (WA_, WC_)	1.6 HDi	68	11/09 -	3800	3529/1
207 (WA_, WC_)	1.6 HDi	80	02/06 -	3800	3529/1
207 (WA_, WC_)	1.6 HDi	80	02/06 -		3984
207 (WA_, WC_)	1.6 HDi 110	82	08/09 -	3800	3529/1
207 (WA_, WC_) 2.0 HDi	RHY (DW10TD)	66	10/2008 - 10/2011		3984/1
207 (WA_, WC_) 44287	KFT (TU3A), KFT (TU3AE5), KFV (TU3A)	54	04/2006 - 10/2013	3820/1	
207 (WA_, WC_) 44287	KFV (TU3A)	53	02/2006 - 10/2013	3820/1	
207 (WA_, WC_) 44287	KFV (TU3A), KFW (TU3A)	55	08/2008 - 12/2015	3820/1	
207 (WA_, WC_) 44287 16V	KFU (ET3J4)	65	02/2006 - 10/2013	3820/1	
207 (WA_, WC_) 44287 Bioflex	KFW (TU3JP)	60	08/2008 - 12/2014	3820/1	
207 (WA_, WC_) 44287 HDi	8HR (DV4C), 8HZ (DV4TD)	50	02/2006 - 12/2015	3820/1	
207 (WA_, WC_) 44287 HDi	8HZ (DV4TD)	52	02/2011 - 12/2015	3820/1	
207 (WA_, WC_) 44348	-	90	09/2007 - 12/2013		3984/1
207 (WA_, WC_) 44348	N6A (TU5JP4)	81	08/2008 - 12/2013		3984/1
207 (WA_, WC_) 44348 16V	NFU (TU5JP4)	80	02/2006 - 10/2013		3984/1
207 (WA_, WC_) 44348 16v	NFU(TU5JP4)	79	08/2008 -		3984/1
207 (WA_, WC_) 44348 16V RC	5FY (EP6DTS)	128	02/2007 - 12/2012		3984/1
207 (WA_, WC_) 44348 16V Turbo	5FR (EP6DT)	115	10/2009 - 12/2012		3984/1
207 (WA_, WC_) 44348 16V Turbo	5FX (EP6DT)	110	02/2006 - 10/2013		3984/1
207 (WA_, WC_) 44348 16V VTi	5FS (EP6C), 5FW (EP6), EP6	88	02/2007 - 12/2012		3984/1
207 (WA_, WC_) 44348 HDi	9HV (DV6TED4B), 9HV (DV6TED4BU), 9HX (DV6ATED4)	66	02/2006 - 10/2013		3984/1
207 (WA_, WC_) 44348 HDi	9HY (DV6TED4), 9HZ (DV6TED4)	80	02/2006 - 10/2013		3984/1
207 (WA_, WC_) 44348 HDi 110	9HR (DV6C)	82	08/2009 - 12/2012		3984/1
207 CC (WD_)	1.6	90	09/10 – 12/11	3800	3529/1
207 CC (WD_)	1.6 16V	88	02/07 -	3800	3529/1
207 CC (WD_)	1.6 16V	88	02/07 -		3984
207 CC (WD_)	1.6 16V Turbo	110	02/07 -	3800	3529/1
207 CC (WD_)	1.6 16V Turbo	110	02/07 -		3984
207 CC (WD_)	1.6 16V Turbo	115	10/09 -	3800	3529/1
207 CC (WD_)	1.6 HDi	80	02/07 -	3800	3529/1
207 CC (WD_)	1.6 HDi	80	02/07 -		3984
207 CC (WD_)	1.6 HDi	82	08/09 -	3800	3529/1
207 CC (WD_) 44348	-	90	09/2010 - 12/2011		3984/1
207 CC (WD_) 44348 16V	5FS (EP6C), 5FW (EP6), EP6	88	02/2007 - 10/2013		3984/1
207 CC (WD_) 44348 16V Turbo	5FR (EP6DT), 5FV (EP6CDT)	115	10/2009 - 12/2013		3984/1
207 CC (WD_) 44348 16V Turbo	5FX (EP6DT)	110	02/2007 - 12/2012		3984/1
207 CC (WD_) 44348 HDi	9HR (DV6C)	82	08/2009 - 10/2013		3984/1
207 CC (WD_) 44348 HDi	9HZ (DV6TED4)	80	02/2007 - 01/2015		3984/1
207 Saloon	1.6 Bioflex	83	01/08 -	3800	3529/1
207 Saloon	1.6 Bioflex	83	01/08 -		3984
207 Sedan 44287	KFT (TU3A), KFV (TU3A)	54	12/2007 - 12/2012	3820/1	

BESER®

MAKE & MODEL   		KW	YEAR		
PEUGEOT					
207 Sedan 44287 Flex	KFW (TU3JP)	60	11/2008 - 12/2014	3820/1	
207 Sedan 44348	TU5JP4	81	09/2009 - 10/2013		3984/1
207 Sedan 44348 Bioflex	N6A (TU5JP4)	83	01/2008 - 12/2013		3984/1
207 SW (WK_)	1.4	54	06/07 -		3529/1
207 SW (WK_)	1.4	54	06/07 -		3984
207 SW (WK_)	1.4 16V	70	06/07 -	3800	3529/1
207 SW (WK_)	1.4 16V	70	06/07 -		3984
207 SW (WK_)	1.4 16V	72	11/09 -	3800	3529/1
207 SW (WK_)	1.4 16V	72	11/09 -		3984
207 SW (WK_)	1.6 16V	88	06/07 -	3800	3529/1
207 SW (WK_)	1.6 16V	88	06/07 -		3984
207 SW (WK_)	1.6 16V RC	128	02/07 -		3529/1
207 SW (WK_)	1.6 16V RC	128	02/07 -		3984
207 SW (WK_)	1.6 16V Turbo	110	02/07 -	3800	3529/1
207 SW (WK_)	1.6 16V Turbo	110	02/07 -		3984
207 SW (WK_)	1.6 HDi	66	06/07 -	3800	3529/1
207 SW (WK_)	1.6 HDi	66	06/07 -		3984
207 SW (WK_)	1.6 HDi	68	11/09 -	3800	3529/1
207 SW (WK_)	1.6 HDi	80	06/07 -	3800	3529/1
207 SW (WK_)	1.6 HDi	80	06/07 -		3984
207 SW (WK_)	1.6 HDi	82	08/09 -	3800	3529/1
207 SW (WK_) 44287	KFT (TU3A), KFV (TU3A)	54	06/2007 - 12/2012	3820/1	
207 SW (WK_) 44287 Flex	KFW (TU3JP)	59	08/2008 - 01/2013	3820/1	
207 SW (WK_) 44287 LPG	KFV (TU3A)	54	08/2007 - 12/2012	3820/1	
207 SW (WK_) 44348	N6A (TU5JP4), NFU (TU5JP4)	81	11/2008 - 10/2013		3984/1
207 SW (WK_) 44348 16V	5FS (EP6C), 5FW (EP6), EP6	88	06/2007 - 10/2013		3984/1
207 SW (WK_) 44348 16V RC	5FY (EP6DTS)	128	02/2007 - 12/2012		3984/1
207 SW (WK_) 44348 16V Turbo	5FX (EP6DT)	110	02/2007 - 12/2012		3984/1
207 SW (WK_) 44348 HDi	9HR (DV6C)	82	08/2009 - 10/2013		3984/1
207 SW (WK_) 44348 HDi	9HV (DV6TED4B), 9HV (DV6TED4BU)	66	06/2007 - 12/2012		3984/1
207 SW (WK_) 44348 HDi	9HZ (DV6TED4)	80	06/2007 - 12/2012		3984/1
207 Van	1.6 HDi	66	04/07 -	3800	3529/1
207 Van	1.6 HDi	66	04/07 -		3984
208 I (CA_, CC_) 1.0	ZMZ (EB0)	50	03/2012 -	3820/1	
208 I (CA_, CC_) 44228	HMZ (EB2), HMZ (EB2F)	60	03/2012 -	3820/1	
208 I (CA_, CC_) 44228 PureTech 82	HMR (EB2FA), HMZ (EB2F)	61	03/2018 -	3820/1	
208 I (CA_, CC_) 44228 THP	HNP (EB2ADT), HNV (EB2DTM), HNZ (EB2DT)	81	01/2013 -	3820/1	
208 I (CA_, CC_) 44287 GPL	EP3C	70	10/2013 -	3820/1	
208 I (CA_, CC_) 44287 HDi	8HP (DV4C), 8HR (DV4C)	50	03/2012 -	3820/1	
208 I (CA_, CC_) 44287 VTi	8FS (EP3), EP3C	70	03/2012 -	3820/1	
208 I (CA_, CC_) 44348	5FS (EP6C)	88	03/2012 -	3820/1	
208 I (CA_, CC_) 44348 BlueHDi 100	BHY (DV6FD)	73	01/2015 -	3820/1	
208 I (CA_, CC_) 44348 BlueHDi 120	BHZ (DV6FC)	88	11/2013 -	3820/1	
208 I (CA_, CC_) 44348 HDi	9HD (DV6C)	84	03/2012 -	3820/1	
208 I (CA_, CC_) 44348 HDi	9HJ (DV6DTEDM), 9HP (DV6DTED)	68	03/2012 -	3820/1	
208 I (CA_, CC_) 44348 HDi	9HP (DV6DTED)	69	09/2016 -	3820/1	
208 I (CA_, CC_) 44348 HDi	BHX (DV6FC)	85	04/2014 -	3820/1	
208 I (CA_, CC_) 44348 HDi / BlueHDi 75	9HK (DV6ETEDM), BHW (DV6FE)	55	01/2013 -	3820/1	
208 II (UB_, UP_, UW_, UJ_)	e-208	100	06.2019 -		4372
208 II (UB_, UP_, UW_, UJ_) 44228 PureTech 100	HNK (EB2ADT)	74	06/2019 -	3820/1	
208 II (UB_, UP_, UW_, UJ_) 44228 PureTech 75	HMH (EB2FAD)	55	06/2019 -	3820/1	
208 II (UB_, UP_, UW_, UJ_) 44317 BlueHDI 100	YHY (DV5RD)	75	06/2019 -	3820/1	
3008 MPV (0U_)	1.6 HDi 115 / BlueHDi 115	85	02.2013 - 08.2016		4374
3008 SUV (M_) 2.0 BlueHDi 136	AHV (DW10FD)	100	11/2016 -		4374
3008 SUV (M_) 2.0 BlueHDi 150	AHX (DW10FD)	110	05/2016 -		4374
3008 SUV (M_) 2.0 BlueHDi 180	AHW (DW10FC)	133	05/2016 -		4374
3008 SUV (M_) 2.0 BlueHDi 180	EHZ (DW10FC)	130	01/2018 -		4374
3008 SUV (M_) 44228	HNS (EB2ADTS), HNY (EB2DTS)	96	05/2016 -		4374
3008 SUV (M_) 44317 BlueHDi 130	YHZ (DV5RC)	96	02/2018 -		4374
3008 SUV (M_) 44348 BlueHDi 100	BHY (DV6FD)	73	11/2016 -		4374
3008 SUV (M_) 44348 BlueHDi 115	BHX (DV6FC)	85	11/2016 -		4374
3008 SUV (M_) 44348 BlueHDi 120	BHZ (DV6FC)	88	05/2016 -		4374
3008 SUV (M_) 44348 PureTech 180	5GF (EP6FADTXD)	133	07/2018 -		4374
3008 SUV (M_) 44348 THP 150	5GX (EP6FDTMD)	110	11/2017 -		4374
3008 SUV (M_) 44348 THP 163	-	120	05/2016 -		4374
3008 SUV (M_) 44348 THP 165	5GY (EP6FDTM) (11.17-.), 5GZ (EP6FDT)	121	05/2016 -		4374
3008 SUV (M_) Hybrid	5GQ (EP6FADTXHPD)	133	10/2019 -		4374
3008 SUV (M_) Hybrid	5GQ (EP6FADTXHPD)	165	10/2019 -		4374
3008 SUV (M_) Hybrid4	5GB (EP6FADTXHPA)	147	10/2019 -		4374
3008 SUV (M_) Hybrid4	5GB (EP6FADTXHPA)	220	10/2019 -		4374
3008 SUV (MC_, MR_, MJ_, M4_)	1.2 THP/ PureTech 130	96	05.2016 -	4371	4373
3008 SUV (MC_, MR_, MJ_, M4_)	1.6 BlueHDi 100	73	11.2016 -	4371	4373
3008 SUV (MC_, MR_, MJ_, M4_)	1.6 BlueHDi 120	88	05.2016 -	4371	4373
3008 SUV (MC_, MR_, MJ_, M4_)	1.6 PureTech 180	133	07.2018 -	4371	4373
3008 SUV (MC_, MR_, MJ_, M4_)	2.0 BlueHDi 150	110	05.2016 -	4371	4373
3008 SUV (MC_, MR_, MJ_, M4_)	2.0 BlueHDi 180	130	01.2018 -	4371	4373

MAKE & MODEL		KW	YEAR		
PEUGEOT					
3008 SUV (MC_, MR_, MJ_, M4_)	2.0 BlueHDi 180	133	05.2016 -	4371	4373
3008 SUV (MC_, MR_, MJ_, M4_)	Hybrid	133	10.2019 -	4371	4373
3008 SUV (MC_, MR_, MJ_, M4_)	Hybrid4 (M45GBU)	147	10.2019 -	4371	4373
3008 SUV (MC_, MR_, MJ_, M4_)	1.2 THP/ PureTech 130	96	05.2016 -		4372
3008 SUV (MC_, MR_, MJ_, M4_)	1.2 THP/ PureTech 130	96	05.2016 -		4374
3008 SUV (MC_, MR_, MJ_, M4_)	1.5 BlueHDi 130	96	02.2018 -	4371	4373
3008 SUV (MC_, MR_, MJ_, M4_)	1.5 BlueHDi 130	96	02.2018 -		4372
3008 SUV (MC_, MR_, MJ_, M4_)	1.5 BlueHDi 130	96	02.2018 -		4374
3008 SUV (MC_, MR_, MJ_, M4_)	1.6 BlueHDi 100	73	11.2016 -		4372
3008 SUV (MC_, MR_, MJ_, M4_)	1.6 BlueHDi 100	73	11.2016 -		4374
3008 SUV (MC_, MR_, MJ_, M4_)	1.6 BlueHDi 115	85	11.2016 -	4371	4373
3008 SUV (MC_, MR_, MJ_, M4_)	1.6 BlueHDi 115	85	11.2016 -		4372
3008 SUV (MC_, MR_, MJ_, M4_)	1.6 BlueHDi 115	85	11.2016 -		4374
3008 SUV (MC_, MR_, MJ_, M4_)	1.6 BlueHDi 120	88	05.2016 -		4372
3008 SUV (MC_, MR_, MJ_, M4_)	1.6 BlueHDi 120	88	05.2016 -		4374
3008 SUV (MC_, MR_, MJ_, M4_)	1.6 PureTech 180	133	07.2018 -		4372
3008 SUV (MC_, MR_, MJ_, M4_)	1.6 PureTech 180	133	07.2018 -		4374
3008 SUV (MC_, MR_, MJ_, M4_)	1.6 THP 165	121	05.2016 -	4371	4373
3008 SUV (MC_, MR_, MJ_, M4_)	1.6 THP 165	121	05.2016 -		4372
3008 SUV (MC_, MR_, MJ_, M4_)	1.6 THP 165	121	05.2016 -		4374
3008 SUV (MC_, MR_, MJ_, M4_)	2.0 BlueHDi 150	110	05.2016 -		4372
3008 SUV (MC_, MR_, MJ_, M4_)	2.0 BlueHDi 150	110	05.2016 -		4374
3008 SUV (MC_, MR_, MJ_, M4_)	2.0 BlueHDi 180	130	01.2018 -		4372
3008 SUV (MC_, MR_, MJ_, M4_)	2.0 BlueHDi 180	130	01.2018 -		4374
3008 SUV (MC_, MR_, MJ_, M4_)	2.0 BlueHDi 180	133	05.2016 -		4372
3008 SUV (MC_, MR_, MJ_, M4_)	2.0 BlueHDi 180	133	05.2016 -		4374
3008 SUV (MC_, MR_, MJ_, M4_)	Hybrid	133	10.2019 -		4372
3008 SUV (MC_, MR_, MJ_, M4_)	Hybrid	133	10.2019 -		4374
3008 SUV (MC_, MR_, MJ_, M4_)	Hybrid4 (M45GBU)	147	10.2019 -		4372
3008 SUV (MC_, MR_, MJ_, M4_)	Hybrid4 (M45GBU)	147	10.2019 -		4374
3008 Van (MR_, MC_, MJ_)	BlueHDi 130 (MCYHZB)	96	02.2018 -	4371	
3008 Van (MR_, MC_, MJ_)	BlueHDi 130 (MCYHZB)	96	02.2018 -		4372
3008 Van (MR_, MC_, MJ_)	BlueHDi 130 (MCYHZB)	96	02.2018 -		4373
3008 Van (MR_, MC_, MJ_)	BlueHDi 130 (MCYHZB)	96	02.2018 -		4374
3008 Van (MR_, MC_, MJ_)	BlueHDi 130 (MCYHZB)	96	02.2018 -	4371	4374
301 44228 PureTech 82	HMR (EB2FA)	61	02/2018 -	3820/1	
301 44228 PureTech 82	HMR (EB2FA)	61	02/2018 -	4201/1	
301 44228 VTi 72	HMY (EB2M)	53	11/2012 -	3820/1	
301 44228 VTi 72	HMY (EB2M)	53	11/2012 -	4201/1	
301 44228 VTi 82	HMZ (EB2F)	60	12/2014 -	3820/1	
301 44228 VTi 82	HMZ (EB2F)	60	12/2014 -	4201/1	
301 44317	YHY (DV5RD)	75	05/2018 -	3820/1	
301 44317	YHY (DV5RD)	75	05/2018 -	4201/1	
301 44348 BlueHDi 100	BHY (DV6FD)	73	04/2014 -	3820/1	
301 44348 BlueHDi 100	BHY (DV6FD)	73	04/2014 -	4201/1	
301 44348 HDI 90	9HF (DV6DTED), 9HJ (DV6DTEDM)	68	11/2012 -	3820/1	
301 44348 HDI 90	9HF (DV6DTED), 9HJ (DV6DTEDM)	68	11/2012 -	4201/1	
301 44348 LPG	NFP (EC5)	85	07/2014 -	3820/1	
301 44348 LPG	NFP (EC5)	85	07/2014 -	4201/1	
301 44348 VTi 115	NFP (EC5)	85	11/2012 - 10/2017	3820/1	
301 44348 VTi 115	NFP (EC5)	85	11/2012 - 10/2017	4201/1	
301 44348 VTi 115	NFP (EC5)	86	09/2016 -	3820/1	
301 44348 VTi 115	NFP (EC5)	86	09/2016 -	4201/1	
304 (_04B_)	1.3 (XL3)	48	03/70 – 09/73	3403	
304 (_04B_)	1.3 (XL3S)	55	09/72 – 07/76	3403	
304 (_04C_)	1.3 (XL3)	48	03/70 – 09/73	3403	
304 (_04C_)	1.3 (XL3S)	55	03/72 – 04/75	3403	
304 (_04D_)	1.1 (XK5)	43	10/76 – 10/80	3403	
304 (_04D_)	1.3 (XL5)	48	09/70 – 10/80	3403	
304 (_04D_)	1.4 D (XL4D)	33	10/76 – 10/79	3403	
304 (_04M_)	1.3 (XL5S)	55	08/72 – 09/75	3403	
304 (_04M_)	1.3 GL (M01)	48	09/72 – 10/79	3329	
304 (_04M_)	1.3 GL (M01)	48	09/72 – 10/79	3806/1	
304 (_04M_)	1.3 GL (XL5)	48	09/72 – 10/79	3403	
304 (_04M_)	1.3 GT (XL3)	48	10/69 – 09/75	3403	
304 (_04M_)	1.4 D (XL4D)	33	10/76 – 10/79	3403	
304 (_04M_)	1.4 D (M20)	33	10/76 – 10/79	3329	
304 (_04M_)	1.4 D (M20)	33	10/76 – 10/79	3806/1	
304 Break (_04D_)	1.1 (D11)	43	10/76 – 10/80	3329	
304 Break (_04D_)	1.1 (D11)	43	10/76 – 10/80	3806/1	
304 Break (_04D_)	1.3 (D01)	48	09/70 – 10/80	3329	
304 Break (_04D_)	1.3 (D01)	48	09/70 – 10/80	3806/1	
304 Break (_04D_)	1.4 D	33	10/76 – 10/79	3329	
304 Break (_04D_)	1.4 D	33	10/76 – 10/79	3806/1	
305 I (581A)	1.3	44	11/77 – 09/82	3329	
305 I (581A)	1.3	44	11/77 – 09/82	3806/1	

MAKE & MODEL		KW	YEAR		
PEUGEOT					
305 I (581A)	1.3	48	11/77 – 09/82	3329	
305 I (581A)	1.3	48	11/77 – 09/82	3806/1	
305 I (581A)	1.5	54	11/79 – 09/82	3329	
305 I (581A)	1.5	54	11/79 – 09/82	3806/1	
305 I (581A)	1.5	65	05/80 – 09/82	3329	
305 I (581A)	1.5	65	05/80 – 09/82	3806/1	
305 I (581A)	1.5 Diesel	36	11/77 – 09/82	3329	
305 I (581A)	1.5 Diesel	36	11/77 – 09/82	3806/1	
305 I Break (581D)	1.3	44	08/80 – 09/82	3329	
305 I Break (581D)	1.3	44	08/80 – 09/82	3806/1	
305 I Break (581D)	1.5	54	08/80 – 09/82	3329	
305 I Break (581D)	1.5	54	08/80 – 09/82	3806/1	
305 I Break (581D)	1.5 Diesel	36	08/80 – 09/82	3329	
305 I Break (581D)	1.5 Diesel	36	08/80 – 09/82	3806/1	
305 II (581M	1.3	44	10.1982 - 08.1985	3488	
305 II (581M	1.5	50	09.1985 - 07.1990	3488	
305 II (581M	1.5	54	10.1982 - 08.1985	3488	
305 II (581M	1.6	54	11.1986 - 12.1988	3488	
305 II (581M	1.6	55	10.1982 - 07.1988	3488	
305 II (581M	1.6	66	07.1984 - 08.1987	3488	
305 II (581M	1.6	69	10.1982 - 06.1988	3488	
305 II (581M	1.6	71	10.1982 - 06.1984	3488	
305 II (581M	1.9	72	11.1986 - 12.1988	3488	
305 II (581M	1.9	75	10.1982 - 08.1985	3488	
305 II (581M	1.9 D	47	10.1982 - 07.1988	3488	
305 II (581M	1.9 D	48	10.1982 - 07.1988	3488	
305 II (581M)	1.9	72	11.1986 - 12.1988	3503/1	
305 II (581M)	1.9	75	10.1982 - 08.1985	3503/1	
305 II (581M)	1.9 D	47	10.1982 - 07.1988	3503/1	
305 II (581M)	1.9 D	48	10.1982 - 07.1988	3503/1	
305 II (581M)	1.3	44	10/82 – 08/85	3380	
305 II (581M)	1.3	44	10/82 – 08/85	3381	
305 II (581M)	1.3	44	10/82 – 08/85	3474	
305 II (581M)	1.3	44	10/82 – 08/85	3580	
305 II (581M)	1.5	50	09/85 – 07/90	3380	
305 II (581M)	1.5	50	09/85 – 07/90	3381	
305 II (581M)	1.5	50	09/85 – 07/90	3474	
305 II (581M)	1.5	50	09/85 – 07/90	3580	
305 II (581M)	1.5	54	10/82 – 08/85	3380	
305 II (581M)	1.5	54	10/82 – 08/85	3381	
305 II (581M)	1.5	54	10/82 – 08/85	3474	
305 II (581M)	1.5	54	10/82 – 08/85	3580	
305 II (581M)	1.6	54	11/86 – 12/88	3380	
305 II (581M)	1.6	54	11/86 – 12/88	3381	
305 II (581M)	1.6	54	11/86 – 12/88	3474	
305 II (581M)	1.6	54	11/86 – 12/88	3580	
305 II (581M)	1.6	55	10/82 – 07/88	3380	
305 II (581M)	1.6	55	10/82 – 07/88	3381	
305 II (581M)	1.6	55	10/82 – 07/88	3474	
305 II (581M)	1.6	55	10/82 – 07/88	3580	
305 II (581M)	1.6	66	07/84 – 08/87	3380	
305 II (581M)	1.6	66	07/84 – 08/87	3381	
305 II (581M)	1.6	66	07/84 – 08/87	3474	
305 II (581M)	1.6	66	07/84 – 08/87	3580	
305 II (581M)	1.6	69	10/82 – 06/88	3380	
305 II (581M)	1.6	69	10/82 – 06/88	3381	
305 II (581M)	1.6	69	10/82 – 06/88	3474	
305 II (581M)	1.6	69	10/82 – 06/88	3580	
305 II (581M)	1.6	71	10/82 – 06/84	3380	
305 II (581M)	1.6	71	10/82 – 06/84	3381	
305 II (581M)	1.6	71	10/82 – 06/84	3474	
305 II (581M)	1.6	71	10/82 – 06/84	3580	
305 II (581M)	1.9	72	11/86 – 12/88	3380	
305 II (581M)	1.9	72	11/86 – 12/88	3381	
305 II (581M)	1.9	72	11/86 – 12/88	3474	
305 II (581M)	1.9	72	11/86 – 12/88	3580	
305 II (581M)	1.9	75	10/82 – 08/85	3380	
305 II (581M)	1.9	75	10/82 – 08/85	3381	
305 II (581M)	1.9	75	10/82 – 08/85	3474	
305 II (581M)	1.9	75	10/82 – 08/85	3580	
305 II (581M)	1.9 D	47	10/82 – 07/88	3380	
305 II (581M)	1.9 D	47	10/82 – 07/88	3381	
305 II (581M)	1.9 D	47	10/82 – 07/88	3474	
305 II (581M)	1.9 D	47	10/82 – 07/88	3580	
305 II (581M)	1.9 D	48	10/82 – 07/88	3380	
305 II (581M)	1.9 D	48	10/82 – 07/88	3381	

MAKE & MODEL		KW	YEAR		
PEUGEOT					
305 II (581M)	1.9 D	48	10/82 – 07/88	3474	
305 II (581M)	1.9 D	48	10/82 – 07/88	3580	
305 II Break (581E	1.3	44	10.1982 - 08.1986	3488	
305 II Break (581E	1.5	50	09.1985 - 10.1986	3488	
305 II Break (581E	1.5	54	10.1982 - 08.1986	3488	
305 II Break (581E	1.6	54	11.1986 - 12.1988	3488	
305 II Break (581E	1.6	55	02.1986 - 12.1988	3488	
305 II Break (581E	1.6	66	07.1984 - 12.1987	3488	
305 II Break (581E	1.6	71	09.1983 - 06.1984	3488	
305 II Break (581E	1.9	72	11.1986 - 12.1988	3488	
305 II Break (581E	1.9	75	09.1984 - 10.1987	3488	
305 II Break (581E	1.9 Diesel	47	10.1982 - 12.1988	3488	
305 II Break (581E	1.9 Diesel	48	10.1982 - 12.1988	3488	
305 II Break (581E)	1.9	72	11.1986 - 12.1988	3503/1	
305 II Break (581E)	1.9	75	09.1984 - 10.1987	3503/1	
305 II Break (581E)	1.9 Diesel	47	10.1982 - 12.1988	3503/1	
305 II Break (581E)	1.9 Diesel	48	10.1982 - 12.1988	3503/1	
305 II Break (581E)	1.3	44	10/82 – 08/86	3380	
305 II Break (581E)	1.3	44	10/82 – 08/86	3381	
305 II Break (581E)	1.3	44	10/82 – 08/86	3474	
305 II Break (581E)	1.3	44	10/82 – 08/86	3580	
305 II Break (581E)	1.5	50	09/85 – 10/86	3380	
305 II Break (581E)	1.5	50	09/85 – 10/86	3381	
305 II Break (581E)	1.5	50	09/85 – 10/86	3474	
305 II Break (581E)	1.5	50	09/85 – 10/86	3580	
305 II Break (581E)	1.5	54	10/82 – 08/86	3380	
305 II Break (581E)	1.5	54	10/82 – 08/86	3381	
305 II Break (581E)	1.5	54	10/82 – 08/86	3474	
305 II Break (581E)	1.5	54	10/82 – 08/86	3580	
305 II Break (581E)	1.6	54	11/86 – 12/88	3380	
305 II Break (581E)	1.6	54	11/86 – 12/88	3381	
305 II Break (581E)	1.6	54	11/86 – 12/88	3474	
305 II Break (581E)	1.6	54	11/86 – 12/88	3580	
305 II Break (581E)	1.6	55	02/86 – 12/88	3380	
305 II Break (581E)	1.6	55	02/86 – 12/88	3381	
305 II Break (581E)	1.6	55	02/86 – 12/88	3474	
305 II Break (581E)	1.6	55	02/86 – 12/88	3580	
305 II Break (581E)	1.6	66	07/84 – 12/87	3380	
305 II Break (581E)	1.6	66	07/84 – 12/87	3381	
305 II Break (581E)	1.6	66	07/84 – 12/87	3474	
305 II Break (581E)	1.6	66	07/84 – 12/87	3580	
305 II Break (581E)	1.6	71	09/83 – 06/84	3380	
305 II Break (581E)	1.6	71	09/83 – 06/84	3381	
305 II Break (581E)	1.6	71	09/83 – 06/84	3474	
305 II Break (581E)	1.6	71	09/83 – 06/84	3580	
305 II Break (581E)	1.9	72	11/86 – 12/88	3380	
305 II Break (581E)	1.9	72	11/86 – 12/88	3381	
305 II Break (581E)	1.9	72	11/86 – 12/88	3474	
305 II Break (581E)	1.9	72	11/86 – 12/88	3580	
305 II Break (581E)	1.9	75	09/84 – 10/87	3380	
305 II Break (581E)	1.9	75	09/84 – 10/87	3381	
305 II Break (581E)	1.9	75	09/84 – 10/87	3474	
305 II Break (581E)	1.9	75	09/84 – 10/87	3580	
305 II Break (581E)	1.9 Diesel	47	10/82 – 12/88	3380	
305 II Break (581E)	1.9 Diesel	47	10/82 – 12/88	3381	
305 II Break (581E)	1.9 Diesel	47	10/82 – 12/88	3474	
305 II Break (581E)	1.9 Diesel	47	10/82 – 12/88	3580	
305 II Break (581E)	1.9 Diesel	48	10/82 – 12/88	3380	
305 II Break (581E)	1.9 Diesel	48	10/82 – 12/88	3381	
305 II Break (581E)	1.9 Diesel	48	10/82 – 12/88	3474	
305 II Break (581E)	1.9 Diesel	48	10/82 – 12/88	3580	
306 (7B, N3, N5)	2.0 ST	89	07.1994 - 05.2001	3557	
306 (7B, N3, N5)	1.1	44	06/94 – 05/01	3380	
306 (7B, N3, N5)	1.1	44	06/94 – 05/01	3381	
306 (7B, N3, N5)	1.1	44	06/94 – 05/01	3528	
306 (7B, N3, N5)	1.1	44	06/94 – 05/01	3759	
306 (7B, N3, N5)	1.4 SL	55	06/94 – 05/01	3380	
306 (7B, N3, N5)	1.4 SL	55	06/94 – 05/01	3381	
306 (7B, N3, N5)	1.4 SL	55	06/94 – 05/01	3528	
306 (7B, N3, N5)	1.4 SL	55	06/94 – 05/01	3636	
306 (7B, N3, N5)	1.4 SL	55	06/94 – 05/01	3644	
306 (7B, N3, N5)	1.4 SL	55	06/94 – 05/01	3759	
306 (7B, N3, N5)	1.6	66	07/00 – 05/01	3636	
306 (7B, N3, N5)	1.6	66	07/00 – 05/01	3644	
306 (7B, N3, N5)	1.6	72	10/00 – 05/01	3636	
306 (7B, N3, N5)	1.6	72	10/00 – 05/01	3644	

MAKE & MODEL		KW	YEAR		
PEUGEOT					
306 (7B, N3, N5)	1.6 SR	65	06/94 – 10/00	3528	
306 (7B, N3, N5)	1.6 SR	65	06/94 – 10/00	3636	
306 (7B, N3, N5)	1.6 SR	65	06/94 – 10/00	3644	
306 (7B, N3, N5)	1.8	74	10/95 – 04/97	3528	3496
306 (7B, N3, N5)	1.8 16V	81	03/97 – 05/01	3636	3496
306 (7B, N3, N5)	1.8 16V	81	03/97 – 05/01	3644	
306 (7B, N3, N5)	1.8 ST	74	06/94 – 05/01	3528	3496
306 (7B, N3, N5)	1.9 D	51	09/98 – 05/01	3528	
306 (7B, N3, N5)	1.9 D	51	09/98 – 05/01	3636	
306 (7B, N3, N5)	1.9 D	51	09/98 – 05/01	3644	
306 (7B, N3, N5)	1.9 D	55	03/98 – 05/01	3528	
306 (7B, N3, N5)	1.9 D	69	02/94 – 04/97	3528	
306 (7B, N3, N5)	1.9 SLD	47	06/94 – 05/01	3528	
306 (7B, N3, N5)	1.9 SLD	50	06/94 – 05/01	3528	
306 (7B, N3, N5)	1.9 SRDT	66	06/94 – 05/01	3528	
306 (7B, N3, N5)	1.9 STD	51	02/94 – 10/95	3528	
306 (7B, N3, N5)	1.9 STD	51	02/94 – 10/95	3636	
306 (7B, N3, N5)	1.9 STD	51	02/94 – 10/95	3644	
306 (7B, N3, N5)	2.0	97	03/97 – 05/01	3636	3496
306 (7B, N3, N5)	2.0	97	03/97 – 05/01	3644	
306 (7B, N3, N5)	2.0 HDI 90	66	06/99 – 05/01	3636	3496
306 (7B, N3, N5)	2.0 HDI 90	66	06/99 – 05/01	3644	
306 (7B, N3, N5)	2.0 S16	110	06/94 – 05/01	3610	3496
306 (7B, N3, N5)	2.0 S16	110	06/94 – 05/01	3636	
306 (7B, N3, N5)	2.0 S16	110	06/94 – 05/01	3644	
306 (7B, N3, N5)	2.0 S16	112	06/94 – 05/01	3610	3496
306 (7B, N3, N5)	2.0 S16	112	06/94 – 05/01	3636	
306 (7B, N3, N5)	2.0 S16	112	06/94 – 05/01	3644	
306 (7B, N3, N5)	2.0 ST	89	07/94 – 05/01	3610	3496
306 (7B, N3, N5)	2.0 ST	89	07/94 – 05/01	3636	
306 (7B, N3, N5)	2.0 ST	89	07/94 – 05/01	3644	
306 (7B, N3, N5) 44197	HDZ (TU1M)	44	06/1994 - 05/2001	3489	
306 (7B, N3, N5) 44287	-	48	04/1993 - 10/1994	3489	
306 (7B, N3, N5) 44287 SL	KDX (TU3MC), KFW (TU3JP) (10.00-.), KFX (TU3JP) (0	55	06/1994 - 05/2001	3489	
306 Break (7E, N3, N5)	2.0	97	03.1997 - 04.2002	3557	
306 Break (7E, N3, N5)	1.6	65	03/97 – 10/00	3636	
306 Break (7E, N3, N5)	1.6	65	03/97 – 10/00	3644	
306 Break (7E, N3, N5)	1.6	72	10/00 – 04/02	3636	
306 Break (7E, N3, N5)	1.6	72	10/00 – 04/02	3644	
306 Break (7E, N3, N5)	1.8	74	03/97 – 04/02	3636	3496
306 Break (7E, N3, N5)	1.8	74	03/97 – 04/02	3644	
306 Break (7E, N3, N5)	1.8 16V	81	03/97 – 04/02	3636	3496
306 Break (7E, N3, N5)	1.8 16V	81	03/97 – 04/02	3644	
306 Break (7E, N3, N5)	1.9 D	50	03/97 – 04/02	3636	3496
306 Break (7E, N3, N5)	1.9 D	50	03/97 – 04/02	3644	
306 Break (7E, N3, N5)	1.9 D	51	05/97 – 04/02	3636	3496
306 Break (7E, N3, N5)	1.9 D	51	05/97 – 05/99	3636	
306 Break (7E, N3, N5)	1.9 D	51	09/98 – 04/02	3636	
306 Break (7E, N3, N5)	1.9 D	55	03/98 – 04/02	3636	3496
306 Break (7E, N3, N5)	1.9 D	55	03/98 – 04/02	3644	
306 Break (7E, N3, N5)	1.9 TD	66	02/97 – 04/02	3636	3496
306 Break (7E, N3, N5)	1.9 TD	66	02/97 – 04/02	3644	
306 Break (7E, N3, N5)	2.0	97	03/97 – 04/02	3636	3496
306 Break (7E, N3, N5)	2.0	97	03/97 – 04/02	3644	
306 Break (7E, N3, N5)	2.0 HDI 90	66	06/99 – 04/02	3636	3496
306 Break (7E, N3, N5)	2.0 HDI 90	66	06/99 – 04/02	3644	
306 Convertible (7D, N3, N5)	1.6	65	04/96 – 10/00	3528	
306 Convertible (7D, N3, N5)	1.6	65	04/96 – 10/00	3636	
306 Convertible (7D, N3, N5)	1.6	65	04/96 – 10/00	3644	
306 Convertible (7D, N3, N5)	1.6	72	10/00 – 04/02	3636	
306 Convertible (7D, N3, N5)	1.6	72	10/00 – 04/02	3644	
306 Convertible (7D, N3, N5)	1.8	74	03/94 – 04/02	3528	3496
306 Convertible (7D, N3, N5)	1.8 16V	81	07/00 – 04/02	3636	3496
306 Convertible (7D, N3, N5)	1.8 16V	81	07/00 – 04/02	3644	
306 Convertible (7D, N3, N5)	2.0	89	03/94 – 04/02	3610	3496
306 Convertible (7D, N3, N5)	2.0	89	03/94 – 04/02	3636	
306 Convertible (7D, N3, N5)	2.0	89	03/94 – 04/02	3644	
306 Convertible (7D, N3, N5)	2.0 16V	97	03/97 – 04/02	3636	3496
306 Convertible (7D, N3, N5)	2.0 16V	97	03/97 – 04/02	3644	
306 Convertible (7D, N3, N5)	2.0 16V	99	03/97 – 04/02	3636	3496
306 Convertible (7D, N3, N5)	2.0 16V	99	03/97 – 04/02	3644	
306 Hatchback (7A, 7C, N3, N5)	2.0 S16	110	06.1994 - 05.2001	3557	
306 Hatchback (7A, 7C, N3, N5)	2.0 S16	112	05.1993 - 05.2001	3557	
306 Hatchback (7A, 7C, N3, N5)	2.0 S16	120	06.1996 - 05.2001	3557	
306 Hatchback (7A, 7C, N3, N5)	2.0 XSi	89	05.1993 - 05.2001	3557	
306 Hatchback (7A, 7C, N3, N5)	1.1	44	05/93 – 05/01	3380	

MAKE & MODEL		KW	YEAR		
PEUGEOT					
306 Hatchback (7A, 7C, N3, N5)	1.1	44	05/93 – 05/01	3381	
306 Hatchback (7A, 7C, N3, N5)	1.1	44	05/93 – 05/01	3528	
306 Hatchback (7A, 7C, N3, N5)	1.1	44	05/93 – 05/01	3759	
306 Hatchback (7A, 7C, N3, N5)	1.4	55	05/93 – 05/01	3380	
306 Hatchback (7A, 7C, N3, N5)	1.4	55	05/93 – 05/01	3381	
306 Hatchback (7A, 7C, N3, N5)	1.4	55	05/93 – 05/01	3528	
306 Hatchback (7A, 7C, N3, N5)	1.4	55	05/93 – 05/01	3636	
306 Hatchback (7A, 7C, N3, N5)	1.4	55	05/93 – 05/01	3644	
306 Hatchback (7A, 7C, N3, N5)	1.4	55	05/93 – 05/01	3759	
306 Hatchback (7A, 7C, N3, N5)	1.6	65	05/93 – 10/00	3528	
306 Hatchback (7A, 7C, N3, N5)	1.6	65	05/93 – 10/00	3636	
306 Hatchback (7A, 7C, N3, N5)	1.6	65	05/93 – 10/00	3644	
306 Hatchback (7A, 7C, N3, N5)	1.6	66	07/00 – 05/01	3636	
306 Hatchback (7A, 7C, N3, N5)	1.6	66	07/00 – 05/01	3644	
306 Hatchback (7A, 7C, N3, N5)	1.6	72	10/00 – 05/01	3636	
306 Hatchback (7A, 7C, N3, N5)	1.6	72	10/00 – 05/01	3644	
306 Hatchback (7A, 7C, N3, N5)	1.8	74	05/93 – 05/01	3528	3496
306 Hatchback (7A, 7C, N3, N5)	1.8	74	05/97 – 04/99	3636	
306 Hatchback (7A, 7C, N3, N5)	1.8	74	05/97 – 04/99	3644	
306 Hatchback (7A, 7C, N3, N5)	1.8 16V	81	03/97 – 05/01	3528	3496
306 Hatchback (7A, 7C, N3, N5)	1.8 16V	81	03/97 – 05/01	3636	
306 Hatchback (7A, 7C, N3, N5)	1.8 16V	81	03/97 – 05/01	3644	
306 Hatchback (7A, 7C, N3, N5)	1.8 D	43	05/93 – 05/01	3528	
306 Hatchback (7A, 7C, N3, N5)	1.8 D	43	05/93 – 05/01	3636	
306 Hatchback (7A, 7C, N3, N5)	1.8 D	43	05/93 – 05/01	3644	
306 Hatchback (7A, 7C, N3, N5)	1.9 D	47	05/93 – 05/01	3528	
306 Hatchback (7A, 7C, N3, N5)	1.9 D	50	06/94 – 05/01	3528	
306 Hatchback (7A, 7C, N3, N5)	1.9 D	51	04/93 – 05/01	3636	
306 Hatchback (7A, 7C, N3, N5)	1.9 D	51	04/93 – 05/01	3644	
306 Hatchback (7A, 7C, N3, N5)	1.9 D	51	04/93 – 05/99	3528	
306 Hatchback (7A, 7C, N3, N5)	1.9 D	55	03/98 – 05/01	3636	
306 Hatchback (7A, 7C, N3, N5)	1.9 D	55	03/98 – 05/01	3644	
306 Hatchback (7A, 7C, N3, N5)	1.9 D	69	04/93 – 04/97	3528	
306 Hatchback (7A, 7C, N3, N5)	1.9 D	69	04/93 – 04/97	3636	
306 Hatchback (7A, 7C, N3, N5)	1.9 D	69	04/93 – 04/97	3644	
306 Hatchback (7A, 7C, N3, N5)	1.9 DT	66	05/93 – 05/01	3528	3496
306 Hatchback (7A, 7C, N3, N5)	2.0 16V	97	03/97 – 05/01	3528	
306 Hatchback (7A, 7C, N3, N5)	2.0 16V	97	03/97 – 05/01	3636	
306 Hatchback (7A, 7C, N3, N5)	2.0 16V	97	03/97 – 05/01	3644	
306 Hatchback (7A, 7C, N3, N5)	2.0 16V	99	03/97 – 06/00	3528	3496
306 Hatchback (7A, 7C, N3, N5)	2.0 16V	99	03/97 – 06/00	3636	
306 Hatchback (7A, 7C, N3, N5)	2.0 16V	99	03/97 – 06/00	3644	
306 Hatchback (7A, 7C, N3, N5)	2.0 HDI 90	66	06/99 – 05/01	3636	3496
306 Hatchback (7A, 7C, N3, N5)	2.0 HDI 90	66	06/99 – 05/01	3644	
306 Hatchback (7A, 7C, N3, N5)	2.0 S16	110	06/94 – 05/01	3610	3496
306 Hatchback (7A, 7C, N3, N5)	2.0 S16	110	06/94 – 05/01	3636	
306 Hatchback (7A, 7C, N3, N5)	2.0 S16	110	06/94 – 05/01	3644	
306 Hatchback (7A, 7C, N3, N5)	2.0 S16	112	05/93 – 05/01	3610	3496
306 Hatchback (7A, 7C, N3, N5)	2.0 S16	112	05/93 – 05/01	3636	
306 Hatchback (7A, 7C, N3, N5)	2.0 S16	112	05/93 – 05/01	3644	
306 Hatchback (7A, 7C, N3, N5)	2.0 S16	120	03/96 – 05/01		3496
306 Hatchback (7A, 7C, N3, N5)	2.0 XSi	89	05/93 – 05/01	3610	3496
306 Hatchback (7A, 7C, N3, N5)	2.0 XSi	89	05/93 – 05/01	3636	
306 Hatchback (7A, 7C, N3, N5)	2.0 XSi	89	05/93 – 05/01	3644	
306 Hatchback (7A, 7C, N3, N5) 44197	HDZ (TU1M)	44	05/1993 - 05/2001	3489	
306 Hatchback (7A, 7C, N3, N5) 44287	KDX (TU3MC), KFW (TU3JP) (10.00-.), KFX (TU3JP) (0	55	04/1993 - 07/2001	3489	
306 Van (N_, 7_)	1.9 D	69	02/94 – 04/99	3528	
306 Van (N_, 7_)	1.9 D	69	02/94 – 04/99	3636	
306 Van (N_, 7_)	1.9 D	69	02/94 – 04/99	3644	
306 Van (N_, 7_)	1.9 STD	51	02/94 – 10/95	3528	
306 Van (N_, 7_)	1.9 STD	51	02/94 – 10/95	3636	
306 Van (N_, 7_)	1.9 STD	51	02/94 – 10/95	3644	
306 Van (N_, 7_)	1.9 STD	51	02/94 – 10/95	3644	
307 (3A/C)	1.4	55	08/00 -		3529/1
307 (3A/C)	1.4	55	08/00 -		3984
307 (3A/C)	1.4 16V	65	11/03 -	3800	3529/1
307 (3A/C)	1.4 16V	65	11/03 -		3984
307 (3A/C)	1.4 HDi	50	10/01 -		3529/1
307 (3A/C)	1.4 HDi	50	10/01 -		3984
307 (3A/C)	1.6	81	07/06 -	3800	3529/1
307 (3A/C)	1.6	81	07/06 -		3984
307 (3A/C)	1.6 16V	80	08/00 -	3800	3529/1
307 (3A/C)	1.6 16V	80	08/00 -		3984
307 (3A/C)	1.6 BioFlex	80	09/07 -	3800	3529/1
307 (3A/C)	1.6 BioFlex	80	09/07 -		3984
307 (3A/C)	1.6 HDi	66	04/05 -	3800	3529/1

MAKE & MODEL   		KW	YEAR		
PEUGEOT					
307 (3A/C)	1.6 HDi	66	04/05 -		3984
307 (3A/C)	1.6 HDi 110	80	02/04 -	3800	3529/1
307 (3A/C)	1.6 HDi 110	80	02/04 -		3984
307 (3A/C)	2.0	105	08/08 -	3800	3529/1
307 (3A/C)	2.0	105	08/08 -		3984
307 (3A/C)	2.0 16V	100	08/00 -	3800	3529/1
307 (3A/C)	2.0 16V	100	08/00 -		3984
307 (3A/C)	2.0 16V	103	03/05 -	3800	3529/1
307 (3A/C)	2.0 16V	103	03/05 -		3984
307 (3A/C)	2.0 16V	130	06/05 -		3529/1
307 (3A/C)	2.0 16V	130	06/05 -		3984
307 (3A/C)	2.0 HDi 110	79	08/00 -	3800	3529/1
307 (3A/C)	2.0 HDi 110	79	08/00 -		3984
307 (3A/C)	2.0 HDi 135	100	10/03 -		3529/1
307 (3A/C)	2.0 HDi 135	100	10/03 -		3984
307 (3A/C)	2.0 HDi 90	66	08/00 -	3800	3529/1
307 (3A/C)	2.0 HDi 90	66	08/00 -		3984
307 (3A/C) 2.0 16V	RFJ (EW10A)	103	03/2005 - 11/2007		3984/1
307 (3A/C) 2.0 16V	RFK (EW10J4S)	130	06/2005 - 11/2007		3984/1
307 (3A/C) 2.0 16V	RFN (EW10J4)	100	08/2000 - 06/2005		3984/1
307 (3A/C) 2.0 HDi 110	RHS (DW10ATED)	79	08/2000 - 03/2007		3984/1
307 (3A/C) 2.0 HDi 135	RHR (DW10BTED4)	100	10/2003 - 11/2007		3984/1
307 (3A/C) 2.0 HDi 90	RHY (DW10TD)	66	08/2000 - 03/2007		3984/1
307 (3A/C) 44287	KFW (TU3JP)	55	08/2000 - 09/2003	3820/1	3984/1
307 (3A/C) 44287 16V	KFU (ET3J4)	65	11/2003 - 07/2007	3820/1	3984/1
307 (3A/C) 44287 HDi	8HX (DV4TD), 8HZ (DV4TD)	50	10/2001 - 06/2005	3820/1	3984/1
307 (3A/C) 44348 16V	NFU (TU5JP4)	80	08/2000 - 11/2007	3820/1	3984/1
307 (3A/C) 44348 BioFlex	NFU (TU5JP4)	80	09/2007 - 04/2009	3820/1	3984/1
307 (3A/C) 44348 HDi	9HV (DV6TED4B), 9HV (DV6TED4BU), 9HX (DV6ATED4)	66	04/2005 - 03/2009	3820/1	3984/1
307 (3A/C) 44348 HDi 110	9HY (DV6TED4), 9HZ (DV6TED4)	80	02/2004 - 03/2009	3820/1	3984/1
307 Break (3E)	1.4	55	04/02 – 09/03	3800	3529/1
307 Break (3E)	1.4	55	04/02 – 09/03		3984
307 Break (3E)	1.4 16V	65	11/03 -	3800	3529/1
307 Break (3E)	1.4 16V	65	11/03 -		3984
307 Break (3E)	1.4 HDi	50	03/02 -		3529/1
307 Break (3E)	1.4 HDi	50	03/02 -		3984
307 Break (3E)	1.6 16V	80	03/02 -	3800	3529/1
307 Break (3E)	1.6 16V	80	03/02 -		3984
307 Break (3E)	1.6 BioFlex	80	09/07 -	3800	3529/1
307 Break (3E)	1.6 BioFlex	80	09/07 -		3984
307 Break (3E)	1.6 HDi	66	04/05 -	3800	3529/1
307 Break (3E)	1.6 HDi	66	04/05 -		3984
307 Break (3E)	1.6 HDi 110	80	02/04 -	3800	3529/1
307 Break (3E)	1.6 HDi 110	80	02/04 -		3984
307 Break (3E)	2.0	100	03/02 -	3800	3529/1
307 Break (3E)	2.0	100	03/02 -		3984
307 Break (3E)	2.0 16V	103	03/05 -	3800	3529/1
307 Break (3E)	2.0 16V	103	03/05 -		3984
307 Break (3E)	2.0 16V	130	06/05 -		3529/1
307 Break (3E)	2.0 16V	130	06/05 -		3984
307 Break (3E)	2.0 HDI 90	66	03/02 -	3800	3529/1
307 Break (3E)	2.0 HDI 90	66	03/02 -		3984
307 Break (3E)	2.0 HDI 110	79	03/02 -	3800	3529/1
307 Break (3E)	2.0 HDI 110	79	03/02 -		3984
307 Break (3E)	2.0 HDi 135	100	02/04 -		3529/1
307 Break (3E)	2.0 HDi 135	100	02/04 -		3984
307 Break (3E) 2.0	RFN (EW10J4)	100	03/2002 - 06/2005		3984/1
307 Break (3E) 2.0 16V	RFJ (EW10A)	103	03/2005 - 04/2008		3984/1
307 Break (3E) 2.0 16V	RFK (EW10J4S)	130	06/2005 - 04/2008		3984/1
307 Break (3E) 2.0 HDI 110	RHS (DW10ATED)	79	03/2002 - 12/2009		3984/1
307 Break (3E) 2.0 HDI 90	RHY (DW10TD)	66	03/2002 - 04/2008		3984/1
307 Break (3E) 2.0 HDi 135	RHR (DW10BTED4)	100	02/2004 - 04/2008		3984/1
307 Break (3E) 44287	KFW (TU3JP)	55	04/2002 - 09/2003	3820/1	3984/1
307 Break (3E) 44287 16V	KFU (ET3J4)	65	11/2003 - 07/2007	3820/1	3984/1
307 Break (3E) 44287 HDi	8HZ (DV4TD)	50	03/2002 - 06/2005	3820/1	3984/1
307 Break (3E) 44348 16V	NFU (TU5JP4)	80	03/2002 - 04/2008	3820/1	3984/1
307 Break (3E) 44348 BioFlex	NFU (TU5JP4)	80	09/2007 - 04/2008	3820/1	3984/1
307 Break (3E) 44348 HDi	9HV (DV6TED4B), 9HV (DV6TED4BU), 9HX (DV6ATED4), 9	66	04/2005 - 04/2008	3820/1	3984/1
307 Break (3E) 44348 HDi 110	9HY (DV6TED4), 9HZ (DV6TED4)	80	02/2004 - 04/2008	3820/1	3984/1
307 CC (3B)	1.6 16V	80	02/05 -	3800	3529/1
307 CC (3B)	1.6 16V	80	02/05 -		3984
307 CC (3B)	2.0 16V	100	10/03 -	3800	3529/1
307 CC (3B)	2.0 16V	100	10/03 -		3984
307 CC (3B)	2.0 16V	103	03/05 -	3800	3529/1
307 CC (3B)	2.0 16V	103	03/05 -		3984
307 CC (3B)	2.0 16V	130	10/03 -		3529/1

MAKE & MODEL   		KW	YEAR		
PEUGEOT					
307 CC (3B)	2.0 16V	130	10/03 -		3984
307 CC (3B)	2.0 HDi 135	100	06/05 -		3529/1
307 CC (3B)	2.0 HDi 135	100	06/05 -		3984
307 CC (3B) 2.0 16V	RFJ (EW10A)	103	12/2004 - 04/2009		3984/1
307 CC (3B) 2.0 16V	RFK (EW10J4S)	130	10/2003 - 04/2009		3984/1
307 CC (3B) 2.0 16V	RFN (EW10J4)	100	10/2003 - 06/2005		3984/1
307 CC (3B) 2.0 Flex	RFJ (EW10A)	109	01/2005 -		3984/1
307 CC (3B) 2.0 HDi 135	RHR (DW10BTED4)	100	06/2005 - 04/2009		3984/1
307 CC (3B) 44348 16V	NFU (TU5JP4)	80	03/2003 - 04/2009	3820/1	3984/1
307 SW (3H)	1.4	55	04/02 – 09/03	3800	3529/1
307 SW (3H)	1.4	55	04/02 – 09/03		3984
307 SW (3H)	1.4 16V	65	11/03 -	3800	3529/1
307 SW (3H)	1.4 16V	65	11/03 -		3984
307 SW (3H)	1.4 HDi 70	50	03/02 – 01/05	3800	3529/1
307 SW (3H)	1.4 HDi 70	50	03/02 – 01/05		3984
307 SW (3H)	1.6 16V	80	03/02 -	3800	3529/1
307 SW (3H)	1.6 16V	80	03/02 -		3984
307 SW (3H)	1.6 BioFlex	80	09/07 -	3800	3529/1
307 SW (3H)	1.6 BioFlex	80	09/07 -		3984
307 SW (3H)	1.6 HDI 90	66	12/06 -	3800	3529/1
307 SW (3H)	1.6 HDI 90	66	12/06 -		3984
307 SW (3H)	1.6 HDI 110	80	02/04 -	3800	3529/1
307 SW (3H)	1.6 HDI 110	80	02/04 -		3984
307 SW (3H)	2.0 16V	100	03/02 -	3800	3529/1
307 SW (3H)	2.0 16V	100	03/02 -		3984
307 SW (3H)	2.0 16V	103	03/05 -	3800	3529/1
307 SW (3H)	2.0 16V	103	03/05 -		3984
307 SW (3H)	2.0 HDI 90	66	03/02 -	3800	3529/1
307 SW (3H)	2.0 HDI 90	66	03/02 -		3984
307 SW (3H)	2.0 HDI 110	79	03/02 -	3800	3529/1
307 SW (3H)	2.0 HDI 110	79	03/02 -		3984
307 SW (3H)	2.0 HDi 135	100	02/04 -		3529/1
307 SW (3H)	2.0 HDi 135	100	02/04 -		3984
307 SW (3H) 2.0 16V	RFJ (EW10A)	103	03/2005 - 04/2008		3984/1
307 SW (3H) 2.0 16V	RFN (EW10J4)	100	03/2002 - 06/2005		3984/1
307 SW (3H) 2.0 HDI 110	RHS (DW10ATED)	79	03/2002 - 12/2009		3984/1
307 SW (3H) 2.0 HDI 90	RHY (DW10TD)	66	03/2002 - 04/2008		3984/1
307 SW (3H) 2.0 HDi 135	RHR (DW10BTED4)	100	02/2004 - 04/2008		3984/1
307 SW (3H) 44287	KFW (TU3JP)	55	04/2002 - 09/2003	3820/1	3984/1
307 SW (3H) 44287 16V	KFU (ET3J4)	65	11/2003 - 07/2007	3820/1	3984/1
307 SW (3H) 44287 HDi 70	8HZ (DV4TD)	50	03/2002 - 06/2005	3820/1	3984/1
307 SW (3H) 44348 16V	NFU (TU5JP4)	80	03/2002 - 04/2008	3820/1	3984/1
307 SW (3H) 44348 BioFlex	NFU (TU5JP4)	80	09/2007 - 04/2008	3820/1	3984/1
307 SW (3H) 44348 HDI 110	9HY (DV6TED4), 9HZ (DV6TED4)	80	11/2003 - 12/2007	3820/1	3984/1
307 SW (3H) 44348 HDI 90	9HV (DV6TED4B), 9HV (DV6TED4BU), 9HX (DV6ATED4), 9	66	04/2005 - 04/2008	3820/1	3984/1
308 (4A_, 4C_)	1.4 16V	70	09/07 -	3970	3529/1
308 (4A_, 4C_)	1.4 16V	72	12/09 -	3970	3529/1
308 (4A_, 4C_)	1.6	88	09/07 -	3970	3529/1
308 (4A_, 4C_)	1.6 16V	103	09/07 -	3970	3529/1
308 (4A_, 4C_)	1.6 16V	110	09/07 -	3970	3529/1
308 (4A_, 4C_)	1.6 16V	115	10/09 -		3529/1
308 (4A_, 4C_)	1.6 16V	120	01/12 -		3529/1
308 (4A_, 4C_)	1.6 16V	128	03/08 -	3970	3529/1
308 (4A_, 4C_)	1.6 BioFlex	80	04/08 -	3970	3529/1
308 (4A_, 4C_)	1.6 GTi	147	07/10 -		3971
308 (4A_, 4C_)	1.6 HDi	66	09/07 -	3970	3529/1
308 (4A_, 4C_)	1.6 HDi	68	11/09 -	3970	3529/1
308 (4A_, 4C_)	1.6 HDi	80	09/07 -	3970	3529/1
308 (4A_, 4C_)	1.6 HDi	82	12/09 -	3970	3529/1
308 (4A_, 4C_)	1.6 HDi	84	03/13 -	3970	3529/1
308 (4A_, 4C_)	2.0 HDi	100	09/07 -	3970	3529/1
308 (4A_, 4C_)	2.0 HDi	103	07/10 -	3970	3529/1
308 (4A_, 4C_)	2.0 HDi	103	07/10 -		3971
308 (4A_, 4C_)	2.0 HDi	110	10/11 -		3529/1
308 (4A_, 4C_)	2.0 HDi	110	10/11 -		3971
308 (4A_, 4C_)	2.0 HDi	120	04/12 -		3529/1
308 CC	1.6 16V	88	06/09 -	3970	3529/1
308 CC	1.6 16V	103	06/09 -		3529/1
308 CC	1.6 16V	110	06/09 -		3529/1
308 CC	1.6 16V	115	06/09 -		3529/1
308 CC	1.6 HDi	82	06/09 -	3970	3529/1
308 CC	1.6 HDi	84	03/13 -	3970	3529/1
308 CC	2.0 HDi	100	04/09 -		3529/1
308 CC	2.0 HDi	103	04/09 -		3529/1
308 CC	2.0 HDi	120	06/09 -		3529/1
308 II	1.2 THP 110	81	11/13 -	4201	

MAKE & MODEL		KW	YEAR		
PEUGEOT					
308 II	1.2 THP 130	96	11/13 -	4201	
308 II	1.2 VTi 72	60	09/13 -	4201	
308 II	1.6	115	09/13 -	4201	
308 II	1.6 BlueHDi 120	88	11/13 -	4201	
308 II	1.6 GT 205	151	06/14 -	4201	
308 II	1.6 GTi	200	06/15 -	4201	
308 II	1.6 HDi	68	09/13 -	4201	
308 II	1.6 HDi / BlueHDi 115	85	09/13 -	4201	
308 II	1.6 HDi 100	73	04/14 -	4201	
308 II	1.6 THP 125	92	09/13 -	4201	
308 II	1.6 THP 150	110	03/14 -	4201	
308 II	1.6 THP 163	120	06/14 -	4201	
308 II	1.6 VTi	85	03/14 -	4201	
308 II	2.0 BlueHDi 150	110	11/13 -	4201	
308 II	2.0 GT HDi 180	133	06/14 -	4201	
308 II (LB_, LP_, LW_, LH_, L3_)	1.2 THP 110	81	11.2013 -		4372
308 II (LB_, LP_, LW_, LH_, L3_)	1.2 THP 110	81	11.2013 -		4374
308 II (LB_, LP_, LW_, LH_, L3_)	1.2 THP 130	96	11.2013 -		4372
308 II (LB_, LP_, LW_, LH_, L3_)	1.2 THP 130	96	11.2013 -		4374
308 II (LB_, LP_, LW_, LH_, L3_)	1.2 VTi 72	60	09.2013 -		4372
308 II (LB_, LP_, LW_, LH_, L3_)	1.2 VTi 72	60	09.2013 -		4374
308 II (LB_, LP_, LW_, LH_, L3_)	1.5 BlueHDI 100	75	05.2018 -		4372
308 II (LB_, LP_, LW_, LH_, L3_)	1.5 BlueHDI 100	75	05.2018 -		4373
308 II (LB_, LP_, LW_, LH_, L3_)	1.5 BlueHDI 100	75	05.2018 -		4374
308 II (LB_, LP_, LW_, LH_, L3_)	1.5 BlueHDi 130	96	06.2017 -		4372
308 II (LB_, LP_, LW_, LH_, L3_)	1.5 BlueHDi 130	96	06.2017 -		4373
308 II (LB_, LP_, LW_, LH_, L3_)	1.5 BlueHDi 130	96	06.2017 -		4374
308 II (LB_, LP_, LW_, LH_, L3_)	1.6 BlueHDi 120	88	11.2013 -		4372
308 II (LB_, LP_, LW_, LH_, L3_)	1.6 BlueHDi 120	88	11.2013 -		4374
308 II (LB_, LP_, LW_, LH_, L3_)	1.6 GT 205	151	06.2014 -		4372
308 II (LB_, LP_, LW_, LH_, L3_)	1.6 GT 205	151	06.2014 -		4374
308 II (LB_, LP_, LW_, LH_, L3_)	1.6 GTi	184	08.2015 -		4373
308 II (LB_, LP_, LW_, LH_, L3_)	1.6 GTi	184	08.2015 -		4374
308 II (LB_, LP_, LW_, LH_, L3_)	1.6 GTi (L35GNH)	200	06.2015 -		4373
308 II (LB_, LP_, LW_, LH_, L3_)	1.6 GTi (L35GNH)	200	06.2015 -		4374
308 II (LB_, LP_, LW_, LH_, L3_)	1.6 GTi PureTech 263 (L3EGXP)	193	07.2018 -		4373
308 II (LB_, LP_, LW_, LH_, L3_)	1.6 GTi PureTech 263 (L3EGXP)	193	07.2018 -		4374
308 II (LB_, LP_, LW_, LH_, L3_)	1.6 HDi	68	09.2013 -		4372
308 II (LB_, LP_, LW_, LH_, L3_)	1.6 HDi	68	09.2013 -		4374
308 II (LB_, LP_, LW_, LH_, L3_)	1.6 HDi / BlueHDi 115	85	09.2013 -		4372
308 II (LB_, LP_, LW_, LH_, L3_)	1.6 HDi / BlueHDi 115	85	09.2013 -		4374
308 II (LB_, LP_, LW_, LH_, L3_)	1.6 HDi 100	73	04.2014 -		4372
308 II (LB_, LP_, LW_, LH_, L3_)	1.6 HDi 100	73	04.2014 -		4374
308 II (LB_, LP_, LW_, LH_, L3_)	1.6 PureTech 225	165	01.2018 -		4372
308 II (LB_, LP_, LW_, LH_, L3_)	1.6 PureTech 225	165	01.2018 -		4373
308 II (LB_, LP_, LW_, LH_, L3_)	1.6 PureTech 225	165	01.2018 -		4374
308 II (LB_, LP_, LW_, LH_, L3_)	1.6 THP	115	09.2013 -		4372
308 II (LB_, LP_, LW_, LH_, L3_)	1.6 THP	115	09.2013 -		4374
308 II (LB_, LP_, LW_, LH_, L3_)	1.6 THP 125	92	09.2013 -		4372
308 II (LB_, LP_, LW_, LH_, L3_)	1.6 THP 125	92	09.2013 -		4374
308 II (LB_, LP_, LW_, LH_, L3_)	1.6 THP 150	110	03.2014 -		4372
308 II (LB_, LP_, LW_, LH_, L3_)	1.6 THP 150	110	03.2014 -		4374
308 II (LB_, LP_, LW_, LH_, L3_)	1.6 THP 163	120	06.2014 -		4372
308 II (LB_, LP_, LW_, LH_, L3_)	1.6 THP 163	120	06.2014 -		4374
308 II (LB_, LP_, LW_, LH_, L3_)	2.0 BlueHDi 150	110	11.2013 -		4372
308 II (LB_, LP_, LW_, LH_, L3_)	2.0 BlueHDi 150	110	11.2013 -		4374
308 II (LB_, LP_, LW_, LH_, L3_)	2.0 GT BlueHDi 180	133	06.2014 -		4372
308 II (LB_, LP_, LW_, LH_, L3_)	2.0 GT BlueHDi 180	133	06.2014 -		4374
308 II 2.0 BlueHDi 150	AHX (DW10FCD), AHX (DW10FD)	110	11/2013 -	4373	
308 II 2.0 GT BlueHDi 180	AHW (DW10FC)	132	06/2017 -		4374
308 II 2.0 GT BlueHDi 180	EHZ (DW10FC)	130	06/2017 -		4374
308 II 2.0 GT HDi 180 / BlueHDi 180	AHW (DW10FC)	133	06/2014 -		4374
308 II 44228 VTi 72	HMZ (EB2F)	60	09/2013 -	4201/1	
308 II 44348	5FV (EP6CDT)	115	09/2013 -	4373	
308 II 44348 GT 205	5GT (EP6FDTX)	151	06/2014 -		4374
308 II 44348 GTi	5GN (EP6FDTR)	200	06/2015 -		4374
308 II 44348 GTi	5GP (EP6FDTR)	184	08/2015 -		4374
308 II 44348 HDi	9HP (DV6DTED)	68	09/2013 -	4201/1	
308 II 44348 THP 150	5GX (EP6FDTMD)	110	03/2014 -	4373	
308 II 44348 THP 163	5FM (EP6CDTM)	120	06/2014 -	4373	
308 II SW 2.0 BlueHDi 150	AHX (DW10FCD)	110	03/2014 -	4373	
308 II SW 2.0 GT BlueHDi 180	AHW (DW10FC)	132	06/2017 -		4374
308 II SW 2.0 GT BlueHDi 180	EHZ (DW10FC)	130	06/2017 -		4374
308 II SW 2.0 GT HDi 180 / BlueHDi 180	AHW (DW10FC)	133	06/2014 -		4374
308 II SW 44348 GT 205	5GT (EP6FDTX)	151	02/2015 -		4374
308 II SW 44348 HDi 92	9HP (DV6DTED)	68	03/2014 -	4201/1	

MAKE & MODEL   		KW	YEAR		
PEUGEOT					
308 II SW 44348 THP 150	5GX (EP6FDTMD)	110	03/2014 -	4373	
308 II SW 44348 THP 155	5FV (EP6CDT)	115	03/2014 -	4373	
308 SW	1.4 16V	70	09/07 -	3970	3529/1
308 SW	1.4 16V	70	09/07 -		3971
308 SW	1.4 16V	72	12/09 -	3970	3529/1
308 SW	1.4 16V	72	12/09 -		3971
308 SW	1.6 16V	88	09/07 -	3970	3529/1
308 SW	1.6 16V	88	09/07 -		3971
308 SW	1.6 16V	103	09/07 -	3970	3529/1
308 SW	1.6 16V	103	09/07 -		3971
308 SW	1.6 16V	110	09/07 -	3970	3529/1
308 SW	1.6 16V	110	09/07 -		3971
308 SW	1.6 16V	115	10/09 -	3970	3529/1
308 SW	1.6 16V	115	10/09 -		3971
308 SW	1.6 16V	128	03/08 -	3970	3529/1
308 SW	1.6 16V	128	03/08 -		3971
308 SW	1.6 Bioflex	82	03/09 -	3970	3529/1
308 SW	1.6 Bioflex	82	03/09 -		3971
308 SW	1.6 HDi	66	09/07 -	3970	3529/1
308 SW	1.6 HDi	66	09/07 -		3971
308 SW	1.6 HDi	68	11/09 -	3970	3529/1
308 SW	1.6 HDi	68	11/09 -		3971
308 SW	1.6 HDi	80	09/07 -	3970	3529/1
308 SW	1.6 HDi	80	09/07 -		3971
308 SW	1.6 HDi	82	12/09 -	3970	3529/1
308 SW	1.6 HDi	82	12/09 -		3971
308 SW	1.6 HDi	84	03/13 -	4201	3971
308 SW	1.6 HDi	84	03/13 -		3529/1
308 SW	2.0 Bioflex	103	01/08 -	3970	3529/1
308 SW	2.0 Bioflex	103	01/08 -		3971
308 SW	2.0 HDi	100	09/07 -		3529/1
308 SW	2.0 HDi	100	09/07 -		3971
308 SW	2.0 HDi	103	09/07 -		3529/1
308 SW	2.0 HDi	103	09/07 -		3971
308 SW	2.0 HDi	110	04/11 -		3529/1
308 SW	2.0 HDi	110	04/11 -		3971
308 SW	2.0 HDi	120	06/09 -		3529/1
308 SW	2.0 HDi	120	06/09 -		3971
308 SW II	1.2 THP 110	81	03/14 -	4201	
308 SW II	1.2 THP 130	96	03/14 -	4201	
308 SW II	1.6 BlueHDi 100	73	04/14 -	4201	
308 SW II	1.6 BlueHDi 120	88	03/14 -	4201	
308 SW II	1.6 GT 205	151	06/14 -	4201	
308 SW II	1.6 HDi / BlueHDi 115	85	03/14 -	4201	
308 SW II	1.6 THP 125	92	03/14 -	4201	
308 SW II	1.6 THP 150	110	03/14 -	4201	
308 SW II	1.6 THP 155	115	03/14 -	4201	
308 SW II	1.6 THP 163	120	06/14 -	4201	
308 SW II	1.6 VTi	85	03/14 -	4201	
308 SW II	2.0 BlueHDi 150	110	03/14 -	4201	
308 SW II	2.0 BlueHDi 180	132	06/14 -	4201	
308 SW II	2.0 GT BlueHDi 180	133	06/14 -	4201	
308 SW II (LC_, LJ_, LR_, LX_, L4_)	1.2 THP 110	81	03.2014 -		4372
308 SW II (LC_, LJ_, LR_, LX_, L4_)	1.2 THP 110	81	03.2014 -		4374
308 SW II (LC_, LJ_, LR_, LX_, L4_)	1.2 THP 130	96	03.2014 -		4372
308 SW II (LC_, LJ_, LR_, LX_, L4_)	1.2 THP 130	96	03.2014 -		4374
308 SW II (LC_, LJ_, LR_, LX_, L4_)	1.5 BlueHDi 100	75	04.2018 -		4372
308 SW II (LC_, LJ_, LR_, LX_, L4_)	1.5 BlueHDi 100	75	04.2018 -		4373
308 SW II (LC_, LJ_, LR_, LX_, L4_)	1.5 BlueHDi 100	75	04.2018 -		4374
308 SW II (LC_, LJ_, LR_, LX_, L4_)	1.6 BlueHDi 100	73	04.2014 -		4372
308 SW II (LC_, LJ_, LR_, LX_, L4_)	1.6 BlueHDi 100	73	04.2014 -		4374
308 SW II (LC_, LJ_, LR_, LX_, L4_)	1.6 BlueHDi 120	88	03.2014 -		4372
308 SW II (LC_, LJ_, LR_, LX_, L4_)	1.6 BlueHDi 120	88	03.2014 -		4374
308 SW II (LC_, LJ_, LR_, LX_, L4_)	1.6 GT 205	151	02.2015 -		4373
308 SW II (LC_, LJ_, LR_, LX_, L4_)	1.6 GT 205	151	02.2015 -		4374
308 SW II (LC_, LJ_, LR_, LX_, L4_)	1.6 HDi / BlueHDi 115	85	03.2014 -		4372
308 SW II (LC_, LJ_, LR_, LX_, L4_)	1.6 HDi / BlueHDi 115	85	03.2014 -		4374
308 SW II (LC_, LJ_, LR_, LX_, L4_)	1.6 HDi 92	68	03.2014 -		4372
308 SW II (LC_, LJ_, LR_, LX_, L4_)	1.6 HDi 92	68	03.2014 -		4374
308 SW II (LC_, LJ_, LR_, LX_, L4_)	1.6 PureTech 225 (L45GGR)	165	01.2018 -		4372
308 SW II (LC_, LJ_, LR_, LX_, L4_)	1.6 PureTech 225 (L45GGR)	165	01.2018 -		4373
308 SW II (LC_, LJ_, LR_, LX_, L4_)	1.6 PureTech 225 (L45GGR)	165	01.2018 -		4374
308 SW II (LC_, LJ_, LR_, LX_, L4_)	1.6 PureTech 225 (L45GGR)	165	01.2018 -		4374
308 SW II (LC_, LJ_, LR_, LX_, L4_)	1.6 THP 125	92	03.2014 -		4372
308 SW II (LC_, LJ_, LR_, LX_, L4_)	1.6 THP 125	92	03.2014 -		4374
308 SW II (LC_, LJ_, LR_, LX_, L4_)	1.6 THP 150 (L45GXA)	110	03.2014 -		4372

MAKE & MODEL		KW	YEAR		
PEUGEOT					
308 SW II (LC_, LJ_, LR_, LX_, L4_)	1.6 THP 150 (L45GXA)	110	03.2014 -		4374
308 SW II (LC_, LJ_, LR_, LX_, L4_)	1.6 THP 155	115	03.2014 -		4372
308 SW II (LC_, LJ_, LR_, LX_, L4_)	1.6 THP 155	115	03.2014 -		4374
308 SW II (LC_, LJ_, LR_, LX_, L4_)	1.6 VTi (LWNFPA)	85	03.2014 -		4372
308 SW II (LC_, LJ_, LR_, LX_, L4_)	1.6 VTi (LWNFPA)	85	03.2014 -		4374
308 SW II (LC_, LJ_, LR_, LX_, L4_)	2.0 BlueHDi 150	110	03.2014 -		4372
308 SW II (LC_, LJ_, LR_, LX_, L4_)	2.0 BlueHDi 150	110	03.2014 -		4374
308 SW II (LC_, LJ_, LR_, LX_, L4_)	2.0 GT HDi 180 / BlueHDi 180	133	06.2014 -		4373
308 SW II (LC_, LJ_, LR_, LX_, L4_)	2.0 GT HDi 180 / BlueHDi 180	133	06.2014 -		4374
309 I (10C, 10A	1.1	40	10.1985 - 07.1989	3488	
309 I (10C, 10A	1.3	47	10.1985 - 07.1989	3488	
309 I (10C, 10A	1.4	49	03.1989 - 07.1989	3488	
309 I (10C, 10A	1.4	55	03.1989 - 07.1989	3488	
309 I (10C, 10A	1.4	62	08.1988 - 08.1989	3488	
309 I (10C, 10A	1.6	53	08.1987 - 07.1989	3488	
309 I (10C, 10A	1.6	55	10.1985 - 07.1989	3488	
309 I (10C, 10A	1.6	59	10.1985 - 07.1989	3488	
309 I (10C, 10A	1.6	69	01.1986 - 07.1989	3488	
309 I (10C, 10A	1.6 Cat	55	09.1986 - 12.1989	3488	
309 I (10C, 10A	1.9	75	10.1985 - 07.1989	3488	
309 I (10C, 10A	1.9	80	07.1988 - 07.1989	3488	
309 I (10C, 10A	1.9 D	47	06.1986 - 07.1989	3488	
309 I (10C, 10A)	1.9	72	03.1986 - 07.1989	3503/1	
309 I (10C, 10A)	1.9	75	10.1985 - 07.1989	3503/1	
309 I (10C, 10A)	1.9	80	07.1988 - 07.1989	3503/1	
309 I (10C, 10A)	1.9 GTI	88	07.1988 - 07.1989	3503/1	
309 I (10C, 10A)	1.9 GTI	94	10.1986 - 07.1989	3503/1	
309 I (10C, 10A)	1.1	40	10/85 – 07/89	3380	
309 I (10C, 10A)	1.1	40	10/85 – 07/89	3381	
309 I (10C, 10A)	1.1	40	10/85 – 07/89	3474	
309 I (10C, 10A)	1.1	40	10/85 – 07/89	3580	
309 I (10C, 10A)	1.3	47	10/85 – 07/89	3380	
309 I (10C, 10A)	1.3	47	10/85 – 07/89	3381	
309 I (10C, 10A)	1.3	47	10/85 – 07/89	3474	
309 I (10C, 10A)	1.3	47	10/85 – 07/89	3580	
309 I (10C, 10A)	1.4	49	03/89 – 07/89	3380	
309 I (10C, 10A)	1.4	49	03/89 – 07/89	3381	
309 I (10C, 10A)	1.4	49	03/89 – 07/89	3474	
309 I (10C, 10A)	1.4	49	03/89 – 07/89	3580	
309 I (10C, 10A)	1.4	55	03/89 – 07/89	3380	
309 I (10C, 10A)	1.4	55	03/89 – 07/89	3381	
309 I (10C, 10A)	1.4	55	03/89 – 07/89	3474	
309 I (10C, 10A)	1.4	55	03/89 – 07/89	3580	
309 I (10C, 10A)	1.4	62	03/89 – 07/89	3380	
309 I (10C, 10A)	1.4	62	03/89 – 07/89	3381	
309 I (10C, 10A)	1.4	62	03/89 – 07/89	3474	
309 I (10C, 10A)	1.4	62	03/89 – 07/89	3580	
309 I (10C, 10A)	1.5	63	06/87 – 12/89	3380	
309 I (10C, 10A)	1.5	63	06/87 – 12/89	3381	
309 I (10C, 10A)	1.5	63	06/87 – 12/89	3474	
309 I (10C, 10A)	1.5	63	06/87 – 12/89	3580	
309 I (10C, 10A)	1.6	53	08/87 – 07/89	3380	
309 I (10C, 10A)	1.6	53	08/87 – 07/89	3381	
309 I (10C, 10A)	1.6	53	08/87 – 07/89	3474	
309 I (10C, 10A)	1.6	53	08/87 – 07/89	3580	
309 I (10C, 10A)	1.6	55	10/85 – 07/89	3380	
309 I (10C, 10A)	1.6	55	10/85 – 07/89	3381	
309 I (10C, 10A)	1.6	55	10/85 – 07/89	3474	
309 I (10C, 10A)	1.6	55	10/85 – 07/89	3580	
309 I (10C, 10A)	1.6	59	10/85 – 07/89	3380	
309 I (10C, 10A)	1.6	59	10/85 – 07/89	3381	
309 I (10C, 10A)	1.6	59	10/85 – 07/89	3474	
309 I (10C, 10A)	1.6	59	10/85 – 07/89	3580	
309 I (10C, 10A)	1.6	69	01/86 – 07/89	3380	
309 I (10C, 10A)	1.6	69	01/86 – 07/89	3381	
309 I (10C, 10A)	1.6	69	01/86 – 07/89	3474	
309 I (10C, 10A)	1.6	69	01/86 – 07/89	3580	
309 I (10C, 10A)	1.6	76	11/85 – 09/88	3431	
309 I (10C, 10A)	1.6	76	11/85 – 09/88	3503	
309 I (10C, 10A)	1.6	83	07/86 – 06/89	3431	
309 I (10C, 10A)	1.6	83	07/86 – 06/89	3503	
309 I (10C, 10A)	1.6 CAT	55	09/86 – 12/89	3380	
309 I (10C, 10A)	1.6 CAT	55	09/86 – 12/89	3381	
309 I (10C, 10A)	1.6 CAT	55	09/86 – 12/89	3474	
309 I (10C, 10A)	1.6 CAT	55	09/86 – 12/89	3580	
309 I (10C, 10A)	1.9	72	03/86 – 07/89	3431	3496

MAKE & MODEL		KW	YEAR		
PEUGEOT					
309 I (10C, 10A)	1.9	72	03/86 – 07/89	3503	
309 I (10C, 10A)	1.9	75	10/85 – 07/89	3380	
309 I (10C, 10A)	1.9	75	10/85 – 07/89	3381	
309 I (10C, 10A)	1.9	75	10/85 – 07/89	3474	
309 I (10C, 10A)	1.9	75	10/85 – 07/89	3580	
309 I (10C, 10A)	1.9	80	07/88 – 07/89	3380	
309 I (10C, 10A)	1.9	80	07/88 – 07/89	3381	
309 I (10C, 10A)	1.9	80	07/88 – 07/89	3474	
309 I (10C, 10A)	1.9	80	07/88 – 07/89	3580	
309 I (10C, 10A)	1.9 D	47	06/86 – 07/89	3380	
309 I (10C, 10A)	1.9 D	47	06/86 – 07/89	3381	
309 I (10C, 10A)	1.9 D	47	06/86 – 07/89	3474	
309 I (10C, 10A)	1.9 D	47	06/86 – 07/89	3580	
309 I (10C, 10A)	1.9 GTI	88	07/88 – 07/89	3431	3496
309 I (10C, 10A)	1.9 GTI	88	07/88 – 07/89	3503	
309 I (10C, 10A)	1.9 GTI	94	10/86 – 07/89	3431	3496
309 I (10C, 10A)	1.9 GTI	94	10/86 – 07/89	3503	
309 II (3C, 3A	1.1	44	08.1990 - 12.1993	3488	
309 II (3C, 3A	1.4	49	07.1990 - 12.1993	3488	
309 II (3C, 3A	1.4	55	07.1989 - 12.1993	3488	
309 II (3C, 3A	1.6	65	07.1989 - 12.1993	3488	
309 II (3C, 3A	1.6	68	07.1989 - 12.1993	3488	
309 II (3C, 3A	1.6	69	07.1989 - 12.1993	3488	
309 II (3C, 3A	1.6 GTi	85	09.1989 - 10.1993	3488	
309 II (3C, 3A	1.8 Diesel	44	07.1989 - 12.1993	3488	
309 II (3C, 3A	1.9	72	08.1989 - 12.1993	3488	
309 II (3C, 3A	1.9	80	10.1990 - 12.1993	3488	
309 II (3C, 3A	1.9 D	50	09.1989 - 10.1993	3488	
309 II (3C, 3A	1.9 Diesel	47	07.1989 - 12.1993	3488	
309 II (3C, 3A)	1.6	74	09.1989 - 10.1993	3503/1	
309 II (3C, 3A)	1.9	72	08.1989 - 12.1993	3503/1	
309 II (3C, 3A)	1.9	80	10.1990 - 12.1993	3503/1	
309 II (3C, 3A)	1.9 GTI	88	07.1989 - 12.1993	3503/1	
309 II (3C, 3A)	1.9 GTI 16V	108	10.1990 - 12.1993	3503/1	
309 II (3C, 3A)	1.9 GTI 16V	116	08.1989 - 07.1990	3503/1	
309 II (3C, 3A)	1.1	40	09/89 – 10/93	3380	
309 II (3C, 3A)	1.1	40	09/89 – 10/93	3381	
309 II (3C, 3A)	1.1	40	09/89 – 10/93	3474	
309 II (3C, 3A)	1.1	40	09/89 – 10/93	3580	
309 II (3C, 3A)	1.1	44	08/90 – 12/93	3380	
309 II (3C, 3A)	1.1	44	08/90 – 12/93	3381	
309 II (3C, 3A)	1.1	44	08/90 – 12/93	3474	
309 II (3C, 3A)	1.1	44	08/90 – 12/93	3580	
309 II (3C, 3A)	1.4	49	07/90 – 12/93	3380	
309 II (3C, 3A)	1.4	49	07/90 – 12/93	3381	
309 II (3C, 3A)	1.4	49	07/90 – 12/93	3474	
309 II (3C, 3A)	1.4	49	07/90 – 12/93	3580	
309 II (3C, 3A)	1.4	55	07/89 – 12/93	3380	
309 II (3C, 3A)	1.4	55	07/89 – 12/93	3381	
309 II (3C, 3A)	1.4	55	07/89 – 12/93	3474	
309 II (3C, 3A)	1.4	55	07/89 – 12/93	3580	
309 II (3C, 3A)	1.6	65	07/89 – 12/93	3380	
309 II (3C, 3A)	1.6	65	07/89 – 12/93	3381	
309 II (3C, 3A)	1.6	65	07/89 – 12/93	3474	
309 II (3C, 3A)	1.6	65	07/89 – 12/93	3580	
309 II (3C, 3A)	1.6	68	07/89 – 12/93	3380	
309 II (3C, 3A)	1.6	68	07/89 – 12/93	3381	
309 II (3C, 3A)	1.6	68	07/89 – 12/93	3474	
309 II (3C, 3A)	1.6	68	07/89 – 12/93	3580	
309 II (3C, 3A)	1.6	69	07/89 – 12/93	3380	
309 II (3C, 3A)	1.6	69	07/89 – 12/93	3381	
309 II (3C, 3A)	1.6	69	07/89 – 12/93	3474	
309 II (3C, 3A)	1.6	69	07/89 – 12/93	3580	
309 II (3C, 3A)	1.6 GTi	85	09/89 – 10/93	3431	3496
309 II (3C, 3A)	1.6 GTi	85	09/89 – 10/93	3503	
309 II (3C, 3A)	1.8 Diesel	44	07/89 – 12/93	3380	
309 II (3C, 3A)	1.8 Diesel	44	07/89 – 12/93	3381	
309 II (3C, 3A)	1.8 Diesel	44	07/89 – 12/93	3474	
309 II (3C, 3A)	1.8 Diesel	44	07/89 – 12/93	3580	
309 II (3C, 3A)	1.8 TD	57	08/89 – 12/93	3380	
309 II (3C, 3A)	1.8 TD	57	08/89 – 12/93	3381	
309 II (3C, 3A)	1.8 TD	57	08/89 – 12/93	3474	
309 II (3C, 3A)	1.8 TD	57	08/89 – 12/93	3580	
309 II (3C, 3A)	1.9	72	08/89 – 12/93	3380	
309 II (3C, 3A)	1.9	72	08/89 – 12/93	3381	
309 II (3C, 3A)	1.9	72	08/89 – 12/93	3474	

MAKE & MODEL		KW	YEAR		
PEUGEOT					
309 II (3C, 3A)	1.9	72	08/89 – 12/93	3580	
309 II (3C, 3A)	1.9	80	10/90 – 12/93	3380	
309 II (3C, 3A)	1.9	80	10/90 – 12/93	3381	
309 II (3C, 3A)	1.9	80	10/90 – 12/93	3474	
309 II (3C, 3A)	1.9	80	10/90 – 12/93	3580	
309 II (3C, 3A)	1.9 Diesel	47	07/89 – 12/93	3380	
309 II (3C, 3A)	1.9 Diesel	47	07/89 – 12/93	3381	
309 II (3C, 3A)	1.9 Diesel	47	07/89 – 12/93	3474	
309 II (3C, 3A)	1.9 Diesel	47	07/89 – 12/93	3580	
309 II (3C, 3A)	1.9 GTI	88	07/89 – 12/93	3431	3496
309 II (3C, 3A)	1.9 GTI	88	07/89 – 12/93	3503	
309 II (3C, 3A)	1.9 GTI 16V	108	10/90 – 12/93	3431	3496
309 II (3C, 3A)	1.9 GTI 16V	108	10/90 – 12/93	3503	
309 II (3C, 3A)	1.9 GTI 16V	116	08/89 – 07/90	3431	3496
309 II (3C, 3A)	1.9 GTI 16V	116	08/89 – 07/90	3503	
4007 (GP_)	2.0	108	11/10 -	3685	3893
4007 (GP_)	2.0 4x4	108	11/10 -	3685	3893
4007 (GP_)	2.2 HDi	115	02/07 -	3685	3893
4007 (GP_)	2.4 16V	125	01/08 -	3685	3893
4008 2.0	4B11	110	05/2013 -		4316
4008 2.0 AWC	4B11	110	05/2012 -		4316
4008 44348	-	86	05/2012 -		4316
4008 44348 HDi	9HD (DV6C)	84	05/2012 -		4316
4008 44348 HDi AWC	9HD (DV6C)	84	05/2012 -		4316
4008 44348 HDi AWC	9HD(DV6C)	85	05/2012 -		4316
4008 44409 HDi	-	110	05/2012 -		4316
4008 44409 HDi AWC	6HZ (4N13)	110	05/2012 -		4316
405 I (15B	1.4	47	01.1987 - 07.1992	3488	
405 I (15B	1.6	53	07.1987 - 12.1992	3488	
405 I (15B	1.6	55	07.1987 - 06.1988	3488	
405 I (15B	1.6	65	07.1987 - 12.1992	3488	
405 I (15B	1.6	66	10.1989 - 12.1992	3488	
405 I (15B	1.6	69	01.1987 - 12.1992	3488	
405 I (15B	1.8 Turbo Diesel	66	03.1988 - 12.1992	3488	
405 I (15B	1.9	70	07.1987 - 12.1992	3488	
405 I (15B	1.9	80	06.1987 - 07.1992	3488	
405 I (15B	1.9	88	06.1987 - 07.1992	3488	
405 I (15B	1.9	90	01.1989 - 12.1992	3488	
405 I (15B	1.9 4x4	80	07.1988 - 12.1992	3488	
405 I (15B	1.9 Diesel	47	07.1988 - 09.1992	3488	
405 I (15B	1.9 Diesel	51	03.1988 - 12.1992	3488	
405 I (15B	1.9 Injection	77	07.1987 - 12.1992	3488	
405 I (15B	1.9 Sport MI-16	108	06.1987 - 07.1992	3488	
405 I (15B	1.9 Sport MI-16	116	07.1987 - 11.1992	3488	
405 I (15B	1.9 SPort MI-16 4x4	108	06.1987 - 07.1992	3488	
405 I (15B)	1.8 D 4x4	66	10.1987 - 07.1992	3557	
405 I (15B)	1.9	72	06.1987 - 07.1992	3557	
405 I (15B)	1.9 Injection 4x4	77	06.1987 - 07.1992	3557	
405 I (15B)	1.4	47	01/87 – 07/92	3380	
405 I (15B)	1.4	47	01/87 – 07/92	3381	
405 I (15B)	1.4	47	01/87 – 07/92	3457	
405 I (15B)	1.4	47	01/87 – 07/92	3580	
405 I (15B)	1.6	53	07/87 – 12/92	3380	
405 I (15B)	1.6	53	07/87 – 12/92	3381	
405 I (15B)	1.6	53	07/87 – 12/92	3457	
405 I (15B)	1.6	53	07/87 – 12/92	3580	
405 I (15B)	1.6	55	07/87 – 06/88	3380	
405 I (15B)	1.6	55	07/87 – 06/88	3381	
405 I (15B)	1.6	55	07/87 – 06/88	3457	
405 I (15B)	1.6	55	07/87 – 06/88	3580	
405 I (15B)	1.6	65	07/87 – 12/92	3380	
405 I (15B)	1.6	65	07/87 – 12/92	3381	
405 I (15B)	1.6	65	07/87 – 12/92	3457	
405 I (15B)	1.6	65	07/87 – 12/92	3580	
405 I (15B)	1.6	66	10/89 – 12/92	3380	
405 I (15B)	1.6	66	10/89 – 12/92	3381	
405 I (15B)	1.6	66	10/89 – 12/92	3457	
405 I (15B)	1.6	66	10/89 – 12/92	3580	
405 I (15B)	1.6	69	01/87 – 12/92	3380	
405 I (15B)	1.6	69	01/87 – 12/92	3381	
405 I (15B)	1.6	69	01/87 – 12/92	3457	
405 I (15B)	1.6	69	01/87 – 12/92	3580	
405 I (15B)	1.8 Turbo Diesel	66	03/88 – 12/92	3580	3529
405 I (15B)	1.8 Turbo Diesel	66	03/88 – 12/92	3380	
405 I (15B)	1.8 Turbo Diesel	66	03/88 – 12/92	3381	
405 I (15B)	1.8 Turbo Diesel	66	03/88 – 12/92	3457	

MAKE & MODEL		KW	YEAR		
PEUGEOT					
405 I (15B)	1.9	70	07/87 – 12/92	3380	
405 I (15B)	1.9	70	07/87 – 12/92	3381	
405 I (15B)	1.9	70	07/87 – 12/92	3457	
405 I (15B)	1.9	70	07/87 – 12/92	3580	
405 I (15B)	1.9	80	07/88 – 12/92	3457	3529
405 I (15B)	1.9	80	07/88 – 12/92	3380	
405 I (15B)	1.9	80	07/88 – 12/92	3381	
405 I (15B)	1.9	80	07/88 – 12/92	3580	
405 I (15B)	1.9	88	07/88 – 12/92	3580	3529
405 I (15B)	1.9	88	07/88 – 12/92	3380	
405 I (15B)	1.9	88	07/88 – 12/92	3381	
405 I (15B)	1.9	88	07/88 – 12/92	3457	
405 I (15B)	1.9	90	01/89 – 12/92	3457	3529
405 I (15B)	1.9	90	01/89 – 12/92	3380	
405 I (15B)	1.9	90	01/89 – 12/92	3381	
405 I (15B)	1.9	90	01/89 – 12/92	3580	
405 I (15B)	1.9	93	07/87 – 12/93	3381	3457
405 I (15B)	1.9	93	07/87 – 12/93	3580	3529
405 I (15B)	1.9	93	07/87 – 12/93	3380	
405 I (15B)	1.9 4x4	80	07/88 – 12/92	3457	3529
405 I (15B)	1.9 4x4	80	07/88 – 12/92	3380	
405 I (15B)	1.9 4x4	80	07/88 – 12/92	3381	
405 I (15B)	1.9 4x4	80	07/88 – 12/92	3580	
405 I (15B)	1.9 4x4	93	07/90 – 07/92	3457	3529
405 I (15B)	1.9 4x4	93	07/90 – 07/92	3380	
405 I (15B)	1.9 4x4	93	07/90 – 07/92	3381	
405 I (15B)	1.9 4x4	93	07/90 – 07/92	3580	
405 I (15B)	1.9 Diesel	47	07/88 – 09/92	3380	
405 I (15B)	1.9 Diesel	47	07/88 – 09/92	3381	
405 I (15B)	1.9 Diesel	47	07/88 – 09/92	3457	
405 I (15B)	1.9 Diesel	47	07/88 – 09/92	3580	
405 I (15B)	1.9 Diesel	51	03/88 – 12/92	3380	
405 I (15B)	1.9 Diesel	51	03/88 – 12/92	3381	
405 I (15B)	1.9 Diesel	51	03/88 – 12/92	3457	
405 I (15B)	1.9 Diesel	51	03/88 – 12/92	3580	
405 I (15B)	1.9 Injection	77	07/87 – 12/92	3457	3529
405 I (15B)	1.9 Injection	77	07/87 – 12/92	3380	
405 I (15B)	1.9 Injection	77	07/87 – 12/92	3381	
405 I (15B)	1.9 Injection	77	07/87 – 2/92	3580	
405 I (15B)	1.9 Sport MI-16	108	04/88 – 12/92	3457	3529
405 I (15B)	1.9 Sport MI-16	108	04/88 – 12/92	3380	
405 I (15B)	1.9 Sport MI-16	108	04/88 – 12/92	3381	
405 I (15B)	1.9 Sport MI-16	108	04/88 – 12/92	3580	
405 I (15B)	1.9 Sport MI-16	116	07/87 – 11/91	3457	3529
405 I (15B)	1.9 Sport MI-16	116	07/87 – 11/91	3380	
405 I (15B)	1.9 Sport MI-16	116	07/87 – 11/91	3381	
405 I (15B)	1.9 Sport MI-16	116	07/87 – 11/91	3580	
405 I (15B)	1.9 SPort MI-16 4x4	108	04/88 – 12/92	3457	3529
405 I (15B)	1.9 SPort MI-16 4x4	108	04/88 – 12/92	3380	
405 I (15B)	1.9 SPort MI-16 4x4	108	04/88 – 12/92	3381	
405 I (15B)	1.9 SPort MI-16 4x4	108	04/88 – 12/92	3580	
405 I Break (15E	1.6	53	10.1988 - 08.1992	3488	
405 I Break (15E	1.6	55	10.1988 - 08.1992	3488	
405 I Break (15E	1.6	65	10.1988 - 08.1992	3488	
405 I Break (15E	1.6	66	10.1988 - 08.1992	3488	
405 I Break (15E	1.6	68	05.1988 - 07.1992	3488	
405 I Break (15E	1.8 GLD	44	04.1990 - 07.1992	3488	
405 I Break (15E	1.8 TD	66	10.1988 - 08.1992	3488	
405 I Break (15E	1.9	70	10.1988 - 08.1992	3488	
405 I Break (15E	1.9	72	05.1988 - 07.1992	3488	
405 I Break (15E	1.9 D	47	10.1988 - 08.1992	3488	
405 I Break (15E	1.9 D	51	10.1988 - 08.1992	3488	
405 I Break (15E)	1.8 DT 4x4	66	05.1990 - 07.1992	3557	
405 I Break (15E)	1.9	116	06.1987 - 07.1992	3557	
405 I Break (15E)	1.6	53	10/88 – 08/92	3380	
405 I Break (15E)	1.6	53	10/88 – 08/92	3381	
405 I Break (15E)	1.6	53	10/88 – 08/92	3457	
405 I Break (15E)	1.6	53	10/88 – 08/92	3580	
405 I Break (15E)	1.6	55	10/88 – 08/92	3380	
405 I Break (15E)	1.6	55	10/88 – 08/92	3381	
405 I Break (15E)	1.6	55	10/88 – 08/92	3457	
405 I Break (15E)	1.6	55	10/88 – 08/92	3580	
405 I Break (15E)	1.6	65	10/88 – 08/92	3380	
405 I Break (15E)	1.6	65	10/88 – 08/92	3381	
405 I Break (15E)	1.6	65	10/88 – 08/92	3457	
405 I Break (15E)	1.6	65	10/88 – 08/92	3580	

MAKE & MODEL			KW	YEAR		
PEUGEOT						
405 I Break (15E)	1.6		66	10/88 – 08/92	3380	
405 I Break (15E)	1.6		66	10/88 – 08/92	3381	
405 I Break (15E)	1.6		66	10/88 – 08/92	3457	
405 I Break (15E)	1.6		66	10/88 – 08/92	3580	
405 I Break (15E)	1.6		68	05/88 – 07/92	3380	
405 I Break (15E)	1.6		68	05/88 – 07/92	3381	
405 I Break (15E)	1.6		68	05/88 – 07/92	3457	
405 I Break (15E)	1.6		68	05/88 – 07/92	3580	
405 I Break (15E)	1.6		69	10/88 – 08/92	3380	
405 I Break (15E)	1.6		69	10/88 – 08/92	3381	
405 I Break (15E)	1.6		69	10/88 – 08/92	3457	
405 I Break (15E)	1.6		69	10/88 – 08/92	3580	
405 I Break (15E)	1.8 GLD		44	04/90 – 07/92	3380	
405 I Break (15E)	1.8 GLD		44	04/90 – 07/92	3381	
405 I Break (15E)	1.8 GLD		44	04/90 – 07/92	3457	
405 I Break (15E)	1.8 GLD		44	04/90 – 07/92	3580	
405 I Break (15E)	1.8 TD		66	10/88 – 08/92	3457	3529
405 I Break (15E)	1.8 TD		66	10/88 – 08/92	3380	
405 I Break (15E)	1.8 TD		66	10/88 – 08/92	3381	
405 I Break (15E)	1.8 TD		66	10/88 – 08/92	3580	
405 I Break (15E)	1.9		70	10/88 – 08/92	3380	
405 I Break (15E)	1.9		70	10/88 – 08/92	3381	
405 I Break (15E)	1.9		70	10/88 – 08/92	3457	
405 I Break (15E)	1.9		70	10/88 – 08/92	3580	
405 I Break (15E)	1.9		72	05/88 – 07/92	3380	
405 I Break (15E)	1.9		72	05/88 – 07/92	3381	
405 I Break (15E)	1.9		72	05/88 – 07/92	3457	
405 I Break (15E)	1.9		72	05/88 – 07/92	3580	
405 I Break (15E)	1.9		77	10/88 – 08/92	3457	3529
405 I Break (15E)	1.9		80	10/88 – 08/92	3457	3529
405 I Break (15E)	1.9		88	10/88 – 08/92	3457	3529
405 I Break (15E)	1.9 4x4		80	10/88 – 08/92	3457	3529
405 I Break (15E)	1.9 4x4		88	07/90 – 07/92	3457	3529
405 I Break (15E)	1.9 4x4		108	07/90 – 07/92	3457	3529
405 I Break (15E)	1.9 All-wheel Drive		77	09/88 – 07/92	3457	3529
405 I Break (15E)	1.9 All-wheel Drive		116	06/87 – 07/92	3457	3529
405 I Break (15E)	1.9 D		47	10/88 – 08/92	3380	
405 I Break (15E)	1.9 D		47	10/88 – 08/92	3381	
405 I Break (15E)	1.9 D		47	10/88 – 08/92	3457	
405 I Break (15E)	1.9 D		47	10/88 – 08/92	3580	
405 I Break (15E)	1.9 D		51	10/88 – 08/92	3380	
405 I Break (15E)	1.9 D		51	10/88 – 08/92	3381	
405 I Break (15E)	1.9 D		51	10/88 – 08/92	3457	
405 I Break (15E)	1.9 D		51	10/88 – 08/92	3580	
405 II (4B	1.4		55	08.1992 - 10.1995	3488	
405 II (4B	1.6		65	08.1992 - 10.1995	3488	
405 II (4B	1.6		66	08.1992 - 05.1997	3488	
405 II (4B	1.6		68	08.1992 - 08.1994	3488	
405 II (4B	1.8		74	08.1992 - 10.1995	3488	
405 II (4B	1.8		76	08.1996 - 11.1999	3488	
405 II (4B	1.9 D		47	08.1992 - 10.1995	3488	
405 II (4B	1.9 D		50	06.1994 - 10.1995	3488	
405 II (4B	1.9 D		51	08.1992 - 08.1994	3488	
405 II (4B	1.9 D		52	08.1997 - 11.1999	3488	
405 II (4B	1.9 TD		66	08.1992 - 10.1995	3488	
405 II (4B	1.9 TD		69	08.1992 - 05.1997	3488	
405 II (4B)	1.9 D		52	08.1997 - 11.1999	3557	
405 II (4B)	1.9 TD		69	08.1992 - 05.1997	3557	
405 II (4B)	1.4		55	08/92 – 10/95	3380	
405 II (4B)	1.4		55	08/92 – 10/95	3381	
405 II (4B)	1.4		55	08/92 – 10/95	3457	
405 II (4B)	1.4		55	08/92 – 10/95	3580	
405 II (4B)	1.6		65	08/92 – 10/95	3380	
405 II (4B)	1.6		65	08/92 – 10/95	3381	
405 II (4B)	1.6		65	08/92 – 10/95	3457	
405 II (4B)	1.6		65	08/92 – 10/95	3580	
405 II (4B)	1.8		74	08/92 – 10/95	3457	3529
405 II (4B)	1.8		74	08/92 – 10/95	3380	
405 II (4B)	1.8		74	08/92 – 10/95	3381	
405 II (4B)	1.8		74	08/92 – 10/95	3580	
405 II (4B)	1.9 D		47	08/92 – 10/95	3380	
405 II (4B)	1.9 D		47	08/92 – 10/95	3381	
405 II (4B)	1.9 D		47	08/92 – 10/95	3457	
405 II (4B)	1.9 D		47	08/92 – 10/95	3580	
405 II (4B)	1.9 D		50	06/94 – 10/95	3380	
405 II (4B)	1.9 D		50	06/94 – 10/95	3381	

MAKE & MODEL		KW	YEAR		
PEUGEOT					
405 II (4B)	1.9 D	50	06/94 – 10/95	3457	
405 II (4B)	1.9 D	50	06/94 – 10/95	3580	
405 II (4B)	1.9 TD	66	08/92 – 10/95	3457	3529
405 II (4B)	1.9 TD	66	08/92 – 10/95	3380	
405 II (4B)	1.9 TD	66	08/92 – 10/95	3381	
405 II (4B)	1.9 TD	66	08/92 – 10/95	3580	
405 II (4B)	2.0	89	08/92 – 10/95	3457	3529
405 II (4B)	2.0 16V	110	06/94 – 10/95	3457	3529
405 II (4B)	2.0 MI-16	112	08/92 – 10/95	3457	3529
405 II (4B)	2.0 T 16 X4	144	08/92 – 10/95		3529
405 II (4B)	2.0 X4	89	08/92 – 10/95	3457	3529
405 II Break (4E	1.4	55	08.1992 - 10.1996	3488	
405 II Break (4E	1.4	58	07.1993 - 06.1994	3488	
405 II Break (4E	1.6	65	08.1992 - 10.1996	3488	
405 II Break (4E	1.6	68	08.1992 - 08.1994	3488	
405 II Break (4E	1.8	74	08.1992 - 10.1996	3488	
405 II Break (4E	1.9 D	47	08.1992 - 10.1996	3488	
405 II Break (4E	1.9 D	50	06.1994 - 10.1996	3488	
405 II Break (4E	1.9 D	51	09.1993 - 12.1995	3488	
405 II Break (4E	1.9 TD	66	08.1992 - 10.1996	3488	
405 II Break (4E	1.9 TD	69	08.1992 - 10.1996	3488	
405 II Break (4E)	1.9	80	08.1992 - 12.1995	3557	
405 II Break (4E)	1.9 TD	69	08.1992 - 10.1996	3557	
405 II Break (4E)	1.4	55	08/92 – 10/96	3380	
405 II Break (4E)	1.4	55	08/92 – 10/96	3381	
405 II Break (4E)	1.4	55	08/92 – 10/96	3457	
405 II Break (4E)	1.4	55	08/92 – 10/96	3580	
405 II Break (4E)	1.4	58	07/93 – 06/94	3380	
405 II Break (4E)	1.4	58	07/93 – 06/94	3381	
405 II Break (4E)	1.4	58	07/93 – 06/94	3457	
405 II Break (4E)	1.4	58	07/93 – 06/94	3580	
405 II Break (4E)	1.6	65	08/92 – 10/96	3380	
405 II Break (4E)	1.6	65	08/92 – 10/96	3381	
405 II Break (4E)	1.6	65	08/92 – 10/96	3457	
405 II Break (4E)	1.6	65	08/92 – 10/96	3580	
405 II Break (4E)	1.8	74	08/92 – 10/96	3457	3529
405 II Break (4E)	1.8	74	08/92 – 10/96	3380	
405 II Break (4E)	1.8	74	08/92 – 10/96	3381	
405 II Break (4E)	1.8	74	08/92 – 10/96	3580	
405 II Break (4E)	1.9 D	47	08/92 – 10/96	3380	
405 II Break (4E)	1.9 D	47	08/92 – 10/96	3381	
405 II Break (4E)	1.9 D	47	08/92 – 10/96	3457	
405 II Break (4E)	1.9 D	47	08/92 – 10/96	3580	
405 II Break (4E)	1.9 D	50	06/94 – 10/96	3380	
405 II Break (4E)	1.9 D	50	06/94 – 10/96	3381	
405 II Break (4E)	1.9 D	50	06/94 – 10/96	3457	
405 II Break (4E)	1.9 D	50	06/94 – 10/96	3580	
405 II Break (4E)	1.9 D	51	09/93 – 12/95	3380	
405 II Break (4E)	1.9 D	51	09/93 – 12/95	3381	
405 II Break (4E)	1.9 D	51	09/93 – 12/95	3457	
405 II Break (4E)	1.9 D	51	09/93 – 12/95	3580	
405 II Break (4E)	1.9 TD	66	08/92 – 10/96	3457	3529
405 II Break (4E)	1.9 TD	66	08/92 – 10/96	3380	
405 II Break (4E)	1.9 TD	66	08/92 – 10/96	3381	
405 II Break (4E)	1.9 TD	66	08/92 – 10/96	3580	
405 II Break (4E)	2.0	89	08/92 – 10/96	3457	3529
405 II Break (4E)	2.0 4x4	89	08/92 – 10/96	3457	3529
405 II Break (4E)	2.0 4x4	144	08/92 – 12/95		3529
405 II Kombi van (4E_)	1.9 D	51	08.1992 - 12.1995	3557	
406 (8B)	1.6	65	11/95 – 05/04	3750	
406 (8B)	1.8	66	05/97 – 05/04	3750	
406 (8B)	1.8 16V	81	11/95 – 10/00	3750	
406 (8B)	1.8 16V	85	10/00 – 05/04	3750	
406 (8B)	1.9 D	55	10/96 – 05/04	3750	
406 Break (8E/F)	1.8	66	05/97 – 10/04	3750	
406 Break (8E/F)	1.8 16V	81	10/96 – 10/00	3750	
406 Break (8E/F)	1.8 16V	85	10/00 – 10/04	3750	
406 Break (8E/F)	1.9 D	55	10/96 – 10/04	3750	
406 Coupe (8C)	2.0 16V	99	04/99 – 09/04		3680
407 (6C_)	2.0 Hdi (RHR (DW10BTED4)	100	10/05 -	3939	
407 (6D_)	1.6 HDi 110	80	05/04 -		3946
407 (6D_)	1.8	85	05/04 -	3939	3946
407 (6D_)	1.8 16V	92	09/05 -		3946
407 (6D_)	2.0	100	05/04 -		3946
407 (6D_)	2.0 16V	103	09/05 -		3946
407 (6D_)	2.0 Bioflex	103	09/07 -		3946

MAKE & MODEL		KW	YEAR		
PEUGEOT					
407 (6D_)	2.0 HDi	103	08/08 -		3946
407 (6D_)	2.0 HDi	110	02/10 -		3946
407 (6D_)	2.0 HDi	120	07/09 -		3946
407 (6D_)	2.0 HDi 135	100	05/04 -		3946
407 (6D_)	2.2	116	05/04 -	3940	3946
407 (6D_)	2.2 16V	120	09/05 -	3940	3946
407 (6D_)	2.2 HDi	120	06/08 -	3940	3946
407 (6D_)	2.2 HDi 170	125	05/06 -	3940	3946
407 (6D_)	2.7 HDi	150	10/05 -	3940	3946
407 (6D_)	3.0	155	05/04 -	3940	3946
407 (6E_)	1.8 (6FZ (EW7J4)	85	05/04 -	3939	
407 Coupe (6C_)	2.0 HDi	100	10/05 -		3946
407 Coupe (6C_)	2.0 HDi	103	09/08 – 12/09	3940	3946
407 Coupe (6C_)	2.0 HDi	110	02/10 -		3946
407 Coupe (6C_)	2.0 HDi	120	06/09 -		3946
407 Coupe (6C_)	2.2 16V	120	10/05 -	3940	3946
407 Coupe (6C_)	2.7 HDi	150	10/05 -	3940	3946
407 Coupe (6C_)	3.0 HDi	177	06/09 -	3940	3946
407 Coupe (6C_)	3.0 V6	155	10/05 -	3940	3946
407 SW (6E_)	1.6 HDi 110	80	05/04 -		3946
407 SW (6E_)	1.8	85	05/04 -		3946
407 SW (6E_)	1.8 16V	92	09/05 -		3946
407 SW (6E_)	2.0	100	05/04 -		3946
407 SW (6E_)	2.0 16V	103	09/05 -		3946
407 SW (6E_)	2.0 Bioflex	103	01/08 -		3946
407 SW (6E_)	2.0 HDi	103	08/08 -		3946
407 SW (6E_)	2.0 HDi	110	02/10 -		3946
407 SW (6E_)	2.0 HDi	120	07/09 -		3946
407 SW (6E_)	2.0 HDi 135	100	05/04 -		3946
407 SW (6E_)	2.2	116	05/04 -	3940	3946
407 SW (6E_)	2.2 16V	120	09/05 -	3940	3946
407 SW (6E_)	2.2 HDi	120	06/08 -	3940	3946
407 SW (6E_)	2.2 HDi 170	125	05/06 -	3940	3946
407 SW (6E_)	2.7 HDi	150	10/05 -	3940	3946
407 SW (6E_)	3.0	155	05/04 -	3940	3946
408 (6D_)	1.8 16V (6FY (EW7A)	92	09/05 -	3939	
408 (6E_)	1.8 16V (6FY (EW7A)	92	09/05 -	3939	
409 (6D_)	2.0 (RFN (EW10J4)	100	05/04 -	3939	
409 (6E_)	2.0 (RFN (EW10J4)	100	05/04 -	3939	
410 (6D_)	2.0 16V (RFJ (EW10A)	103	09/05 -	3939	
410 (6E_)	2.0 16V (RFJ (EW10A)	103	09/05 -	3939	
411 (6D_)	1.6 HDi 110 (9HY (DV6TED4)	80	05/04 -	3939	
411 (6E_)	2.0 Bioflex (RFJ (EW10A)	103	01/08 -	3939	
412 (6E_)	1.6 HDi 110 (9HY (DV6TED4)	80	05/04 -	3939	
413 (6E_)	2.0 HDi 135 (RHR (DW10BTED4)	100	05/04 -	3939	
414 (6E_)	2.0 Hdi (RHR (DW10BTED4)	103	08/08 -	3939	
5008 II (MC_, MJ_, MR_, M4_)	1.2 (MRHNYH, MRHNYW, MRHNSJ)	96	12.2016 -	4371	
5008 II (MC_, MJ_, MR_, M4_)	1.2 (MRHNYH, MRHNYW, MRHNSJ)	96	12.2016 -		4373
5008 II (MC_, MJ_, MR_, M4_)	1.2 (MRHNYH, MRHNYW, MRHNSJ)	96	12.2016 -		4374
5008 II (MC_, MJ_, MR_, M4_)	1.2 (MRHNYH, MRHNYW, MRHNSJ)	96	12.2016 -	4371	4374
5008 II (MC_, MJ_, MR_, M4_)	1.5 BlueHDi 130	96	02.2018 -	4371	
5008 II (MC_, MJ_, MR_, M4_)	1.5 BlueHDi 130	96	02.2018 -		4373
5008 II (MC_, MJ_, MR_, M4_)	1.5 BlueHDi 130	96	02.2018 -		4374
5008 II (MC_, MJ_, MR_, M4_)	1.5 BlueHDi 130	96	02.2018 -	4371	4374
5008 II (MC_, MJ_, MR_, M4_)	1.6	110	07.2018 -	4371	
5008 II (MC_, MJ_, MR_, M4_)	1.6	110	07.2018 -		4373
5008 II (MC_, MJ_, MR_, M4_)	1.6	110	07.2018 -		4374
5008 II (MC_, MJ_, MR_, M4_)	1.6	110	07.2018 -	4371	4374
5008 II (MC_, MJ_, MR_, M4_)	1.6 BlueHDi 100	73	12.2016 -	4371	
5008 II (MC_, MJ_, MR_, M4_)	1.6 BlueHDi 100	73	12.2016 -		4373
5008 II (MC_, MJ_, MR_, M4_)	1.6 BlueHDi 100	73	12.2016 -		4374
5008 II (MC_, MJ_, MR_, M4_)	1.6 BlueHDi 100	73	12.2016 -	4371	4374
5008 II (MC_, MJ_, MR_, M4_)	1.6 BlueHDi 115	85	12.2016 -	4371	
5008 II (MC_, MJ_, MR_, M4_)	1.6 BlueHDi 115	85	12.2016 -		4373
5008 II (MC_, MJ_, MR_, M4_)	1.6 BlueHDi 115	85	12.2016 -		4374
5008 II (MC_, MJ_, MR_, M4_)	1.6 BlueHDi 115	85	12.2016 -	4371	4374
5008 II (MC_, MJ_, MR_, M4_)	1.6 BlueHDi 120	88	12.2016 -	4371	
5008 II (MC_, MJ_, MR_, M4_)	1.6 BlueHDi 120	88	12.2016 -		4373
5008 II (MC_, MJ_, MR_, M4_)	1.6 BlueHDi 120	88	12.2016 -		4374
5008 II (MC_, MJ_, MR_, M4_)	1.6 BlueHDi 120	88	12.2016 -	4371	4374
5008 II (MC_, MJ_, MR_, M4_)	1.6 PureTech 180	133	07.2018 -	4371	
5008 II (MC_, MJ_, MR_, M4_)	1.6 PureTech 180	133	07.2018 -		4373
5008 II (MC_, MJ_, MR_, M4_)	1.6 PureTech 180	133	07.2018 -		4374
5008 II (MC_, MJ_, MR_, M4_)	1.6 PureTech 180	133	07.2018 -	4371	4374
5008 II (MC_, MJ_, MR_, M4_)	1.6 THP 165	121	12.2016 -	4371	
5008 II (MC_, MJ_, MR_, M4_)	1.6 THP 165	121	12.2016 -		4373

MAKE & MODEL		KW	YEAR		
PEUGEOT					
5008 II (MC_, MJ_, MR_, M4_)	1.6 THP 165	121	12.2016 -		4374
5008 II (MC_, MJ_, MR_, M4_)	1.6 THP 165	121	12.2016 -	4371	4374
5008 II (MC_, MJ_, MR_, M4_)	2.0 BlueHDi 136	100	12.2016 -	4371	
5008 II (MC_, MJ_, MR_, M4_)	2.0 BlueHDi 136	100	12.2016 -		4373
5008 II (MC_, MJ_, MR_, M4_)	2.0 BlueHDi 136	100	12.2016 -		4374
5008 II (MC_, MJ_, MR_, M4_)	2.0 BlueHDi 136	100	12.2016 -	4371	4374
5008 II (MC_, MJ_, MR_, M4_)	2.0 BlueHDi 150	110	12.2016 -	4371	
5008 II (MC_, MJ_, MR_, M4_)	2.0 BlueHDi 150	110	12.2016 -		4373
5008 II (MC_, MJ_, MR_, M4_)	2.0 BlueHDi 150	110	12.2016 -		4374
5008 II (MC_, MJ_, MR_, M4_)	2.0 BlueHDi 150	110	12.2016 -	4371	4374
5008 II (MC_, MJ_, MR_, M4_)	2.0 BlueHDi 180	130	01.2018 -	4371	
5008 II (MC_, MJ_, MR_, M4_)	2.0 BlueHDi 180	130	01.2018 -		4373
5008 II (MC_, MJ_, MR_, M4_)	2.0 BlueHDi 180	130	01.2018 -		4374
5008 II (MC_, MJ_, MR_, M4_)	2.0 BlueHDi 180	130	01.2018 -	4371	4374
5008 II (MC_, MJ_, MR_, M4_)	2.0 BlueHDi 180	133	12.2016 -	4371	
5008 II (MC_, MJ_, MR_, M4_)	2.0 BlueHDi 180	133	12.2016 -		4373
5008 II (MC_, MJ_, MR_, M4_)	2.0 BlueHDi 180	133	12.2016 -		4374
5008 II (MC_, MJ_, MR_, M4_)	2.0 BlueHDi 180	133	12.2016 -	4371	4374
5008 II 2.0 BlueHDi 136	AHS (DW10FD), AHV (DW10FD)	100	12/2016 -		4374
5008 II 2.0 BlueHDi 150	AHX (DW10FD)	110	12/2016 -		4374
5008 II 2.0 BlueHDi 180	AHW (DW10FC)	133	12/2016 -		4374
5008 II 44228	HNS (EB2ADTS), HNY (EB2DTS)	96	12/2016 -		4374
5008 II 44317 BlueHDi 130	YHZ (DV5RC)	96	02/2018 -		4374
5008 II 44348 BlueHDi 100	BHY (DV6FD)	73	12/2016 -		4374
5008 II 44348 BlueHDi 115	BHX (DV6FC)	85	12/2016 -		4374
5008 II 44348 BlueHDi 120	BHZ (DV6FC)	88	12/2016 -		4374
5008 II 44348 THP 165	5GY (EP6FDTM), 5GZ (EP6FDT)	121	12/2016 -		4374
5008 II Van (MC_, MJ_)	BlueHDi 130 (MCYHZW)	96	02.2018 -	4371	
5008 II Van (MC_, MJ_)	BlueHDi 130 (MCYHZW)	96	02.2018 -		4373
5008 II Van (MC_, MJ_)	BlueHDi 130 (MCYHZW)	96	02.2018 -		4374
5008 II Van (MC_, MJ_)	BlueHDi 130 (MCYHZW)	96	02.2018 -	4371	4374
5008 II Van (MC_, MJ_)	BlueHDi 180 (MJEHZW)	130	01.2018 -	4371	
5008 II Van (MC_, MJ_)	BlueHDi 180 (MJEHZW)	130	01.2018 -		4373
5008 II Van (MC_, MJ_)	BlueHDi 180 (MJEHZW)	130	01.2018 -		4374
5008 II Van (MC_, MJ_)	BlueHDi 180 (MJEHZW)	130	01.2018 -	4371	4374
504 (A_, M_)	1.8	55	09/79 – 08/82	3321	
504 (A_, M_)	1.8	55	09/79 – 08/82	3340	
504 (A_, M_)	1.8 (A01, A03)	60	07/68 – 02/71	3321	
504 (A_, M_)	1.8 (A01, A03)	60	07/68 – 02/71	3340	
504 (A_, M_)	1.8 (M03)	58	01/71 – 06/83	3321	
504 (A_, M_)	1.8 (M03)	58	01/71 – 06/83	3340	
504 (A_, M_)	1.8 Injection (A02)	71	07/68 – 02/71	3321	
504 (A_, M_)	1.8 Injection (A02)	71	07/68 – 02/71	3340	
504 (A_, M_)	1.9 D (M20)	40	03/73 – 07/86	3321	
504 (A_, M_)	1.9 D (M20)	40	03/73 – 07/86	3340	
504 (A_, M_)	2.0 (A1, A13, MY1, MY3)	71	03/71 – 06/86	3321	
504 (A_, M_)	2.0 (A1, A13, MY1, MY3)	71	03/71 – 06/86	3340	
504 (A_, M_)	2.0 TI (A12, A14)	78	01/71 – 06/83	3321	3323
504 (A_, M_)	2.0 TI (A12, A14)	78	01/71 – 06/83	3340	
504 (A_, M_)	2.1 D (A20, M20)	48	02/71 – 07/86	3321	
504 (A_, M_)	2.1 D (A20, M20)	48	02/71 – 07/86	3340	
504 (A_, M_)	2.3 D (A40, A45)	51	07/75 – 12/83	3321	
504 (A_, M_)	2.3 D (A40, A45)	51	07/75 – 12/83	3340	
504 Break (D_, F_)	1.8 (F01, E01)	54	04/71 – 07/86	3321	
504 Break (D_, F_)	1.8 (F01, E01)	54	04/71 – 07/86	3340	
504 Break (D_, F_)	2.0 (D11, F11)	68	04/71 – 07/86	3321	
504 Break (D_, F_)	2.0 (D11, F11)	68	04/71 – 07/86	3340	
504 Break (D_, F_)	2.1 D (E20, F20)	48	04/71 – 07/86	3321	
504 Break (D_, F_)	2.1 D (E20, F20)	48	04/71 – 07/86	3340	
504 Break (D_, F_)	2.3 D (D40, F40)	51	07/75 – 07/86	3321	
504 Break (D_, F_)	2.3 D (D40, F40)	51	07/75 – 07/86	3340	
504 Cabrio	2.0	75	10/74 – 08/82		3322
504 Cabrio	2.0	78	08/82 – 12/89		3322
504 Convertible	2.0	75	10/74 – 08/82	3321	3323
504 Convertible	2.0	75	10/74 – 08/82	3340	
504 Convertible	2.0	78	08/82 – 08/84	3321	3323
504 Convertible	2.0	78	08/82 – 08/84	3340	
504 Coupe	2.0	75	10/74 – 08/82	3321	3323
504 Coupe	2.0	75	10/74 – 08/82	3340	3322
504 Coupe	2.0	78	08/82 – 08/84		3323
504 Coupe	2.0	78	08/82 – 08/84		3322
504 Coupe	2.7	106	10/77 – 08/84	3321	
504 Coupe	2.7	106	10/77 – 08/84	3340	
504 Coupe	2.7	106	10/77 – 08/84		3322
504 Coupe	2.7	106	10/77 – 08/84	3340	3322
504 Pick-up	2.3 D	51	01/80 – 12/89		3322

MAKE & MODEL		KW	YEAR		
PEUGEOT					
504 Sedan	1.8	71	07/68 – 02/71		3322
504 Sedan	2.0	69	09/79 – 08/82		3322
504 Sedan	2.0	71	03/71 – 06/86		3322
504 Sedan	2.0	78	01/71 – 06/83		3322
504 Sedan	2.3	51	07/75 – 12/83		3322
504 Staion Wagon	2.0	51	07/75 – 07/86		3322
504 Staion Wagon	2.0	68	04/71 – 07/86		3322
505 (551A)	1.8	55	06/81 – 10/85	3405	3323
505 (551A)	1.8	55	06/81 – 10/85	3442	
505 (551A)	1.8	60	01/82 – 10/85	3405	3323
505 (551A)	1.8	60	01/82 – 10/85	3442	
505 (551A)	1.8	62	09/85 – 10/86	3405	3323
505 (551A)	1.8	62	09/85 – 10/86	3442	
505 (551A)	2.0	69	09/83 – 09/85	3405	3323
505 (551A)	2.0	69	09/83 – 09/85	3442	
505 (551A)	2.0	71	11/80 – 12/85	3405	3323
505 (551A)	2.0	71	11/80 – 12/85	3442	
505 (551A)	2.0	72	09/85 – 09/95	3405	3323
505 (551A)	2.0	72	09/85 – 09/95	3442	
505 (551A)	2.0	79	09/80 – 11/82	3405	3323
505 (551A)	2.0	79	09/80 – 11/82	3442	
505 (551A)	2.0 GTi	83	10/89 – 08/91	3405	3323
505 (551A)	2.0 GTi	83	10/89 – 08/91	3442	
505 (551A)	2.0 TI,STI	81	08/79 – 10/86	3405	3323
505 (551A)	2.0 TI,STI	81	08/79 – 10/86	3442	
505 (551A)	2.2	84	03/86 – 12/93	3405	3323
505 (551A)	2.2	84	03/86 – 12/93	3442	
505 (551A)	2.2	85	05/81 – 10/84	3405	3323
505 (551A)	2.2	85	05/81 – 10/84	3442	
505 (551A)	2.2	89	10/85 – 08/91	3405	3323
505 (551A)	2.2	89	10/85 – 08/91	3442	
505 (551A)	2.2 GTI	90	08/83 – 12/93	3405	3323
505 (551A)	2.2 GTI	90	08/83 – 12/93	3442	
505 (551A)	2.2 GTI	96	08/83 – 12/93	3405	3323
505 (551A)	2.2 GTI	96	08/83 – 12/93	3442	
505 (551A)	2.2 Turbo	132	07/85 – 09/88	3405	3323
505 (551A)	2.2 Turbo	132	07/85 – 09/88	3442	
505 (551A)	2.2 Turbo Injection	110	01/86 – 12/87	3405	3323
505 (551A)	2.2 Turbo Injection	110	01/86 – 12/87	3442	
505 (551A)	2.2 Turbo Injection	114	03/84 – 10/88	3405	3323
505 (551A)	2.2 Turbo Injection	114	03/84 – 10/88	3442	
505 (551A)	2.2 Turbo Injection	128	06/87 – 12/88	3405	3323
505 (551A)	2.2 Turbo Injection	128	06/87 – 12/88	3442	
505 (551A)	2.3 Turbo Diesel	59	09/80 – 06/86	3405	3323
505 (551A)	2.3 Turbo Diesel	59	09/80 – 06/86	3442	
505 (551A)	2.5 Diesel	51	10/81 – 11/90	3405	3323
505 (551A)	2.5 Diesel	51	10/81 – 11/90	3442	
505 (551A)	2.5 Diesel	55	06/81 – 12/93	3405	3323
505 (551A)	2.5 Diesel	55	06/81 – 12/93	3442	
505 (551A)	2.5 Turbo Diesel	66	10/83 – 12/93	3405	3323
505 (551A)	2.5 Turbo Diesel	66	10/83 – 12/93	3442	
505 (551A)	2.5 Turbo Diesel	70	10/83 – 12/90	3405	3323
505 (551A)	2.5 Turbo Diesel	70	10/83 – 12/90	3442	
505 (551A)	2.5 Turbo Diesel	77	10/86 – 12/93	3405	3323
505 (551A)	2.5 Turbo Diesel	77	10/86 – 12/93	3442	
505 (551A)	2.8 GTI V6	105	06/86 – 12/93	3405	3323
505 (551A)	2.8 GTI V6	105	06/86 – 12/93	3442	
505 Break (551D)	2.0	60	04/82 – 11/87	3405	3323
505 Break (551D)	2.0	60	04/82 – 11/87	3442	
505 Break (551D)	2.0	69	08/83 – 12/85	3405	3323
505 Break (551D)	2.0	69	08/83 – 12/85	3442	
505 Break (551D)	2.0	72	09/85 – 11/87	3405	3323
505 Break (551D)	2.0	72	09/85 – 11/87	3442	
505 Break (551D)	2.2	84	01/86 – 12/93	3405	3323
505 Break (551D)	2.2	84	01/86 – 12/93	3442	
505 Break (551D)	2.2 GTI	90	09/85 – 12/86	3405	3323
505 Break (551D)	2.2 GTI	90	09/85 – 12/86	3442	
505 Break (551D)	2.3 Diesel	59	04/82 – 06/86	3405	3323
505 Break (551D)	2.3 Diesel	59	04/82 – 06/86	3442	
505 Break (551D)	2.5 Diesel	51	01/86 – 12/93	3405	3323
505 Break (551D)	2.5 Diesel	51	01/86 – 12/93	3442	
505 Break (551D)	2.5 Diesel	55	08/83 – 12/93	3405	3323
505 Break (551D)	2.5 Diesel	55	08/83 – 12/93	3442	
505 Break (551D)	2.5 Turbo Diesel	66	10/85 – 11/87	3405	3323
505 Break (551D)	2.5 Turbo Diesel	66	10/85 – 11/87	3442	
505 Break (551D)	2.5 Turbo Diesel	77	10/86 – 12/93	3405	3323

MAKE & MODEL   		KW	YEAR		
PEUGEOT					
505 Break (551D)	2.5 Turbo Diesel	77	10/86 – 12/93	3442	
508 II (FB_, FH_, F3_)	1.5 BlueHDI 130 (FBYHZJ, FBYHZR)	96	10.2018 -	4371	
508 II (FB_, FH_, F3_)	1.5 BlueHDI 130 (FBYHZJ, FBYHZR)	96	10.2018 -		4372
508 II (FB_, FH_, F3_)	1.5 BlueHDI 130 (FBYHZJ, FBYHZR)	96	10.2018 -		4373
508 II (FB_, FH_, F3_)	1.5 BlueHDI 130 (FBYHZJ, FBYHZR)	96	10.2018 -		4374
508 II (FB_, FH_, F3_)	1.5 BlueHDI 130 (FBYHZJ, FBYHZR)	96	10.2018 -	4371	4374
508 II (FB_, FH_, F3_)	1.6 PureTech 180 (F35GFR)	133	10.2018 -	4371	
508 II (FB_, FH_, F3_)	1.6 PureTech 180 (F35GFR)	133	10.2018 -		4372
508 II (FB_, FH_, F3_)	1.6 PureTech 180 (F35GFR)	133	10.2018 -		4373
508 II (FB_, FH_, F3_)	1.6 PureTech 180 (F35GFR)	133	10.2018 -		4374
508 II (FB_, FH_, F3_)	1.6 PureTech 180 (F35GFR)	133	10.2018 -	4371	4374
508 II (FB_, FH_, F3_)	1.6 PureTech 225 (F35GGR)	165	10.2018 -	4371	
508 II (FB_, FH_, F3_)	1.6 PureTech 225 (F35GGR)	165	10.2018 -		4372
508 II (FB_, FH_, F3_)	1.6 PureTech 225 (F35GGR)	165	10.2018 -		4373
508 II (FB_, FH_, F3_)	1.6 PureTech 225 (F35GGR)	165	10.2018 -		4374
508 II (FB_, FH_, F3_)	1.6 PureTech 225 (F35GGR)	165	10.2018 -	4371	4374
508 II (FB_, FH_, F3_)	1.6 THP 150 (F35GXV)	110	09.2018 -	4371	
508 II (FB_, FH_, F3_)	1.6 THP 150 (F35GXV)	110	09.2018 -		4372
508 II (FB_, FH_, F3_)	1.6 THP 150 (F35GXV)	110	09.2018 -		4373
508 II (FB_, FH_, F3_)	1.6 THP 150 (F35GXV)	110	09.2018 -		4374
508 II (FB_, FH_, F3_)	1.6 THP 150 (F35GXV)	110	09.2018 -	4371	4374
508 II (FB_, FH_, F3_)	1.6 THP 165 (F35GYV)	121	09.2018 -	4371	
508 II (FB_, FH_, F3_)	1.6 THP 165 (F35GYV)	121	09.2018 -		4372
508 II (FB_, FH_, F3_)	1.6 THP 165 (F35GYV)	121	09.2018 -		4373
508 II (FB_, FH_, F3_)	1.6 THP 165 (F35GYV)	121	09.2018 -		4374
508 II (FB_, FH_, F3_)	1.6 THP 165 (F35GYV)	121	09.2018 -	4371	4374
508 II (FB_, FH_, F3_)	2.0 BlueHDI 160 (FHEHYR)	120	10.2018 -	4371	
508 II (FB_, FH_, F3_)	2.0 BlueHDI 160 (FHEHYR)	120	10.2018 -		4372
508 II (FB_, FH_, F3_)	2.0 BlueHDI 160 (FHEHYR)	120	10.2018 -		4373
508 II (FB_, FH_, F3_)	2.0 BlueHDI 160 (FHEHYR)	120	10.2018 -		4374
508 II (FB_, FH_, F3_)	2.0 BlueHDI 160 (FHEHYR)	120	10.2018 -	4371	4374
508 II (FB_, FH_, F3_)	2.0 BlueHDI 180 (FHEHZR, FHEHZN)	130	10.2018 -	4371	
508 II (FB_, FH_, F3_)	2.0 BlueHDI 180 (FHEHZR, FHEHZN)	130	10.2018 -		4372
508 II (FB_, FH_, F3_)	2.0 BlueHDI 180 (FHEHZR, FHEHZN)	130	10.2018 -		4373
508 II (FB_, FH_, F3_)	2.0 BlueHDI 180 (FHEHZR, FHEHZN)	130	10.2018 -		4374
508 II (FB_, FH_, F3_)	2.0 BlueHDI 180 (FHEHZR, FHEHZN)	130	10.2018 -	4371	4374
508 II (FB_, FH_, F3_)	Hybrid (F35GQU)	133	08.2019 -	4371	
508 II (FB_, FH_, F3_)	Hybrid (F35GQU)	133	08.2019 -		4372
508 II (FB_, FH_, F3_)	Hybrid (F35GQU)	133	08.2019 -		4373
508 II (FB_, FH_, F3_)	Hybrid (F35GQU)	133	08.2019 -		4374
508 II (FB_, FH_, F3_)	Hybrid (F35GQU)	133	08.2019 -	4371	4374
508 II (FB_, FH_, F3_)	Hybrid (F35GQU)	165	08.2019 -	4371	
508 II (FB_, FH_, F3_)	Hybrid (F35GQU)	165	08.2019 -		4372
508 II (FB_, FH_, F3_)	Hybrid (F35GQU)	165	08.2019 -		4373
508 II (FB_, FH_, F3_)	Hybrid (F35GQU)	165	08.2019 -		4374
508 II (FB_, FH_, F3_)	Hybrid (F35GQU)	165	08.2019 -	4371	4374
508 II (FB_, FH_, F3_)	PureTech 130	96	06.2020 -	4371	
508 II (FB_, FH_, F3_)	PureTech 130	96	06.2020 -		4372
508 II (FB_, FH_, F3_)	PureTech 130	96	06.2020 -		4373
508 II (FB_, FH_, F3_)	PureTech 130	96	06.2020 -		4374
508 II (FB_, FH_, F3_)	PureTech 130	96	06.2020 -	4371	4374
508 II (FB_, FH_, F3_) 2.0 BlueHDI 180	EHZ (DW10FC)	130	10/2018 -		4374
508 II (FB_, FH_, F3_) 44348 PureTech 225	5GG (EP6FADTX)	165	10/2018 -		4374
508 II (FB_, FH_, F3_) Hybrid	5GQ (EP6FADTXHPD)	165	08/2019 -		4374
508 II (FB_, FH_, F3_) PSE Hybrid4 360	-	147	10/2020 -		4374
508 II (FB_, FH_, F3_) PSE Hybrid4 360	-	265	02/2021 -		4374
508 II SW (FC_, FJ_, F4_) 2.0 BlueHDi 180	EHZ (DW10FC)	130	09/2018 -		4374
508 II SW (FC_, FJ_, F4_) 44348 PureTech 225	GCR (EP6FADTX)	165	09/2018 -		4374
508 II SW (FC_, FJ_, F4_) Hybrid	5GQ (EP6FADTXHPD)	165	08/2019 -		4374
508 II SW (FC_, FJ_, F4_) PSE Hybrid4 360	-	147	10/2020 -		4374
508 II SW (FC_, FJ_, F4_) PSE Hybrid4 360	-	265	02/2021 -		4374
508 SW II (FC_, FJ_, F4_)	1.5 BlueHDi 130	96	09.2018 -	4371	
508 SW II (FC_, FJ_, F4_)	1.5 BlueHDi 130	96	09.2018 -		4372
508 SW II (FC_, FJ_, F4_)	1.5 BlueHDi 130	96	09.2018 -		4373
508 SW II (FC_, FJ_, F4_)	1.5 BlueHDi 130	96	09.2018 -		4374
508 SW II (FC_, FJ_, F4_)	1.5 BlueHDi 130	96	09.2018 -	4371	4374
508 SW II (FC_, FJ_, F4_)	1.6 PureTech 180	133	09.2018 -	4371	
508 SW II (FC_, FJ_, F4_)	1.6 PureTech 180	133	09.2018 -		4372
508 SW II (FC_, FJ_, F4_)	1.6 PureTech 180	133	09.2018 -		4373
508 SW II (FC_, FJ_, F4_)	1.6 PureTech 180	133	09.2018 -		4374
508 SW II (FC_, FJ_, F4_)	1.6 PureTech 180	133	09.2018 -	4371	4374
508 SW II (FC_, FJ_, F4_)	1.6 PureTech 225 (F45GGR)	165	09.2018 -	4371	
508 SW II (FC_, FJ_, F4_)	1.6 PureTech 225 (F45GGR)	165	09.2018 -		4372
508 SW II (FC_, FJ_, F4_)	1.6 PureTech 225 (F45GGR)	165	09.2018 -		4373
508 SW II (FC_, FJ_, F4_)	1.6 PureTech 225 (F45GGR)	165	09.2018 -		4374
508 SW II (FC_, FJ_, F4_)	1.6 PureTech 225 (F45GGR)	165	09.2018 -	4371	4374

MAKE & MODEL		KW	YEAR		
PEUGEOT					
508 SW II (FC_, FJ_, F4_)	1.6 THP 165 (F45GYV)	121	09.2018 -	4371	
508 SW II (FC_, FJ_, F4_)	1.6 THP 165 (F45GYV)	121	09.2018 -		4372
508 SW II (FC_, FJ_, F4_)	1.6 THP 165 (F45GYV)	121	09.2018 -		4373
508 SW II (FC_, FJ_, F4_)	1.6 THP 165 (F45GYV)	121	09.2018 -		4374
508 SW II (FC_, FJ_, F4_)	1.6 THP 165 (F45GYV)	121	09.2018 -	4371	4374
508 SW II (FC_, FJ_, F4_)	2.0 BlueHDi 160	120	09.2018 -	4371	
508 SW II (FC_, FJ_, F4_)	2.0 BlueHDi 160	120	09.2018 -		4372
508 SW II (FC_, FJ_, F4_)	2.0 BlueHDi 160	120	09.2018 -		4373
508 SW II (FC_, FJ_, F4_)	2.0 BlueHDi 160	120	09.2018 -		4374
508 SW II (FC_, FJ_, F4_)	2.0 BlueHDi 160	120	09.2018 -	4371	4374
508 SW II (FC_, FJ_, F4_)	2.0 BlueHDi 180	130	09.2018 -	4371	
508 SW II (FC_, FJ_, F4_)	2.0 BlueHDi 180	130	09.2018 -		4372
508 SW II (FC_, FJ_, F4_)	2.0 BlueHDi 180	130	09.2018 -		4373
508 SW II (FC_, FJ_, F4_)	2.0 BlueHDi 180	130	09.2018 -		4374
508 SW II (FC_, FJ_, F4_)	2.0 BlueHDi 180	130	09.2018 -	4371	4374
508 SW II (FC_, FJ_, F4_)	Hybrid (F45GQU)	133	08.2019 -	4371	
508 SW II (FC_, FJ_, F4_)	Hybrid (F45GQU)	133	08.2019 -		4372
508 SW II (FC_, FJ_, F4_)	Hybrid (F45GQU)	133	08.2019 -		4373
508 SW II (FC_, FJ_, F4_)	Hybrid (F45GQU)	133	08.2019 -		4374
508 SW II (FC_, FJ_, F4_)	Hybrid (F45GQU)	133	08.2019 -	4371	4374
508 SW II (FC_, FJ_, F4_)	Hybrid (F45GQU)	165	08.2019 -	4371	
508 SW II (FC_, FJ_, F4_)	Hybrid (F45GQU)	165	08.2019 -		4372
508 SW II (FC_, FJ_, F4_)	Hybrid (F45GQU)	165	08.2019 -		4373
508 SW II (FC_, FJ_, F4_)	Hybrid (F45GQU)	165	08.2019 -		4374
508 SW II (FC_, FJ_, F4_)	Hybrid (F45GQU)	165	08.2019 -	4371	4374
508 SW II (FC_, FJ_, F4_)	PureTech 130	96	06.2020 -	4371	
508 SW II (FC_, FJ_, F4_)	PureTech 130	96	06.2020 -		4372
508 SW II (FC_, FJ_, F4_)	PureTech 130	96	06.2020 -		4373
508 SW II (FC_, FJ_, F4_)	PureTech 130	96	06.2020 -		4374
508 SW II (FC_, FJ_, F4_)	PureTech 130	96	06.2020 -	4371	4374
604 (561A_)	2.3 TD	59	09/79 – 05/83	3405	3323
604 (561A_)	2.3 TD	59	09/79 – 05/83	3442	
604 (561A_)	2.5 TD	66	08/83 – 12/86	3405	3323
604 (561A_)	2.5 TD	66	08/83 – 12/86	3442	
604 (561A_)	2.7 SL	100	08/77 – 05/83	3405	3323
604 (561A_)	2.7 SL	100	08/77 – 05/83	3442	
604 (561A_)	2.7 TI,STI	106	08/77 – 05/83	3405	3323
604 (561A_)	2.7 TI,STI	106	08/77 – 05/83	3442	
604 (561A_)	2.8 GTI	110	09/83 – 07/87	3405	3323
604 (561A_)	2.8 GTI	110	09/83 – 07/87	3442	
605 (6B)	2.0	79	02/90 – 09/99		3680
605 (6B)	2.0	84	06/89 – 09/99		3680
605 (6B)	2.0	89	06/89 – 09/99		3680
605 (6B)	2.0 16V	97	07/94 – 09/99		3680
605 (6B)	2.0 Turbo	104	07/92 – 09/99		3680
605 (6B)	2.0 Turbo	108	07/91 – 09/99		3680
605 (6B)	2.1 D	60	06/89 – 07/95		3680
605 (6B)	2.1 TD 12V	80	08/94 – 09/99		3680
605 (6B)	2.1 Turbo Diesel	80	06/89 – 09/99		3680
605 (6B)	2.5 Turbo Diesel	95	07/94 – 09/99		3680
605 (6B)	3.0	123	08/89 – 09/99		3680
605 (6B)	3.0	147	08/89 – 06/94		3680
605 (6B)	3.0 SV 24	147	08/89 – 09/99		3680
605 (6B)	3.0 V6	140	04/97 – 09/99		3680
607 (9D, 9U)	2.0	100	02/00 -		3946
607 (9D, 9U)	2.0 HDI	80	05/00 -		3946
607 (9D, 9U)	2.0 HDI	100	09/05 -		3946
607 (9D, 9U)	2.2 16V	116	02/00 -		3946
607 (9D, 9U)	2.2 16V	120	09/05 -		3946
607 (9D, 9U)	2.2 HDI	98	02/00 -		3946
607 (9D, 9U)	2.2 HDi	125	05/06 -		3946
607 (9D, 9U)	2.7 HDi 24V	150	12/04 -		3946
607 (9D, 9U)	3.0 V6 24V	152	02/00 -		3946
607 (9D, 9U)	3.0 V6 24V	155	03/04 -		3946
806 (221)	1.8	73	07/95 – 08/02	3799	
807 (E)	2.0	100	06/02 -	3986	
807 (E)	2.0 16V	103	09/05 -	3986	
807 (E)	2.0 HDI	79	06/02 -	3986	
807 (E)	2.0 HDi	80	04/04 – 05/06	3986	
807 (E)	2.0 HDi	88	02/06 -	3986	
807 (E)	2.0 HDi	100	06/06 -	3986	
807 (E)	2.0 HDi	120	06/09 -	3986	
807 (E)	2.2	116	06/02 -	3986	
807 (E)	2.2 HDi	94	06/02 -	3986	
807 (E)	2.2 HDi	100	04/04 -	3986	
BIPPER (AA_)	1.3 HDi 75	55	10/10 -	3826/3	

MAKE & MODEL		KW	YEAR		
PEUGEOT					
BIPPER Tepee	1.3 HDi 75	55	10/10 -	3826/3	
BIPPER Tepee	1.3 HDi 80	59	12/15 -	3826/3	
BOXER Box	2.0 BlueHDi 110	81	07/15 -	3922	4224
BOXER Box	2.0 BlueHDi 110	81	07/15 -	3981	
BOXER Box	2.0 BlueHDi 110	81	07/15 -	4171	
BOXER Box	2.0 BlueHDi 130	96	07/15 -	3922	4224
BOXER Box	2.0 BlueHDi 130	96	07/15 -	3981	
BOXER Box	2.0 BlueHDi 130	96	07/15 -	4171	
BOXER Box	2.0 BlueHDi 160	120	07/15 -	3922	4224
BOXER Box	2.0 BlueHDi 160	120	07/15 -	3981	
BOXER Box	2.0 BlueHDi 160	120	07/15 -	4171	
BOXER Box	2.2 HDi 100	74	04/06 -	3922	
BOXER Box	2.2 HDi 100	74	04/06 -	3981	
BOXER Box	2.2 HDi 100	74	04/06 -	4171	
BOXER Box	2.2 HDi 110	81	03/11 -	3922	
BOXER Box	2.2 HDi 110	81	03/11 -	3981	
BOXER Box	2.2 HDi 110	81	03/11 -	4171	
BOXER Box	2.2 HDi 120	88	04/06 -	3922	
BOXER Box	2.2 HDi 120	88	04/06 -	3981	
BOXER Box	2.2 HDi 120	88	04/06 -	4171	
BOXER Box	2.2 HDi 130	96	03/11 -	3922	
BOXER Box	2.2 HDi 130	96	03/11 -	3981	
BOXER Box	2.2 HDi 130	96	03/11 -	4171	
BOXER Box	2.2 HDi 150	110	03/11 -	3922	
BOXER Box	2.2 HDi 150	110	03/11 -	3981	
BOXER Box	2.2 HDi 150	110	03/11 -	4171	
BOXER Box	3.0 HDi	115	07/06 -	3922	
BOXER Box	3.0 HDi	115	07/06 -	3981	
BOXER Box	3.0 HDi	115	07/06 -	4171	
BOXER Box	3.0 HDi 145	107	04/10 -	3922	
BOXER Box	3.0 HDi 145	107	04/10 -	3981	
BOXER Box	3.0 HDi 145	107	04/10 -	4171	
BOXER Box	3.0 HDi 160	116	04/06 -	3922	
BOXER Box	3.0 HDi 160	116	04/06 -	3981	
BOXER Box	3.0 HDi 160	116	04/06 -	4171	
BOXER Box	3.0 HDi 175	130	03/11 -	3922	
BOXER Box	3.0 HDi 175	130	03/11 -	3981	
BOXER Box	3.0 HDi 175	130	03/11 -	4171	
BOXER Box (230L)	1.9 D	50	07/99 – 04/02	3835	3914
BOXER Box (230L)	1.9 D	50	07/99 – 04/02	3559	
BOXER Box (230L)	1.9 D	50	07/99 – 04/02	3595	
BOXER Box (230L)	1.9 D	50	07/99 – 04/02	3834	
BOXER Box (230L)	1.9 D	51	03/94 – 04/02	3835	3914
BOXER Box (230L)	1.9 D	51	03/94 – 04/02	3559	
BOXER Box (230L)	1.9 D	51	03/94 – 04/02	3595	
BOXER Box (230L)	1.9 D	51	03/94 – 04/02	3834	
BOXER Box (230L)	1.9 DT 4x4	66	03/96 – 09/98	3835	3914
BOXER Box (230L)	1.9 DT 4x4	66	03/96 – 09/98	3559	
BOXER Box (230L)	1.9 DT 4x4	66	03/96 – 09/98	3595	
BOXER Box (230L)	1.9 DT 4x4	66	03/96 – 09/98	3834	
BOXER Box (230L)	1.9 TD	66	07/99 – 04/02	3835	3914
BOXER Box (230L)	1.9 TD	66	07/99 – 04/02	3559	
BOXER Box (230L)	1.9 TD	66	07/99 – 04/02	3595	
BOXER Box (230L)	1.9 TD	66	07/99 – 04/02	3834	
BOXER Box (230L)	1.9 TD	68	03/94 – 04/02	3835	3914
BOXER Box (230L)	1.9 TD	68	03/94 – 04/02	3559	
BOXER Box (230L)	1.9 TD	68	03/94 – 04/02	3595	
BOXER Box (230L)	1.9 TD	68	03/94 – 04/02	3834	
BOXER Box (230L)	2.0 4x4	80	03/96 – 09/98	3835	3914
BOXER Box (230L)	2.0 4x4	80	03/96 – 09/98	3559	
BOXER Box (230L)	2.0 4x4	80	03/96 – 09/98	3595	
BOXER Box (230L)	2.0 4x4	80	03/96 – 09/98	3834	
BOXER Box (230L)	2.0 HDI	62	08/01 – 04/02	3835	3914
BOXER Box (230L)	2.0 HDI	62	08/01 – 04/02	3559	
BOXER Box (230L)	2.0 HDI	62	08/01 – 04/02	3595	
BOXER Box (230L)	2.0 HDI	62	08/01 – 04/02	3834	
BOXER Box (230L)	2.0 i	80	06/94 – 04/02	3835	3914
BOXER Box (230L)	2.0 i	80	06/94 – 04/02	3559	
BOXER Box (230L)	2.0 i	80	06/94 – 04/02	3595	
BOXER Box (230L)	2.0 i	80	06/94 – 04/02	3834	
BOXER Box (230L)	2.5 D	63	03/94 – 04/02	3835	3914
BOXER Box (230L)	2.5 D	63	03/94 – 04/02	3559	
BOXER Box (230L)	2.5 D	63	03/94 – 04/02	3595	
BOXER Box (230L)	2.5 D	63	03/94 – 04/02	3834	
BOXER Box (230L)	2.5 D 4x4	63	07/99 – 04/02	3835	3914
BOXER Box (230L)	2.5 D 4x4	63	07/99 – 04/02	3559	

BESER®

MAKE & MODEL   		KW	YEAR		
PEUGEOT					
BOXER Box (230L)	2.5 D 4x4	63	07/99 – 04/02	3595	
BOXER Box (230L)	2.5 D 4x4	63	07/99 – 04/02	3834	
BOXER Box (230L)	2.5 DT	62	10/97 – 11/01	3835	3914
BOXER Box (230L)	2.5 DT	62	10/97 – 11/01	3559	
BOXER Box (230L)	2.5 DT	62	10/97 – 11/01	3595	
BOXER Box (230L)	2.5 DT	62	10/97 – 11/01	3834	
BOXER Box (230L)	2.5 TD	76	03/94 – 04/02	3835	3914
BOXER Box (230L)	2.5 TD	76	03/94 – 04/02	3559	
BOXER Box (230L)	2.5 TD	76	03/94 – 04/02	3595	
BOXER Box (230L)	2.5 TD	76	03/94 – 04/02	3834	
BOXER Box (230L)	2.5 TDI	79	01/97 – 04/02	3835	3914
BOXER Box (230L)	2.5 TDI	79	01/97 – 04/02	3559	
BOXER Box (230L)	2.5 TDI	79	01/97 – 04/02	3595	
BOXER Box (230L)	2.5 TDI	79	01/97 – 04/02	3834	
BOXER Box (230L)	2.5 TDI 4x4	79	07/99 – 04/02	3835	3914
BOXER Box (230L)	2.5 TDI 4x4	79	07/99 – 04/02	3559	
BOXER Box (230L)	2.5 TDI 4x4	79	07/99 – 04/02	3595	
BOXER Box (230L)	2.5 TDI 4x4	79	07/99 – 04/02	3834	
BOXER Box (230L)	2.8 D	64	01/99 – 02/02	3835	3914
BOXER Box (230L)	2.8 D	64	01/99 – 02/02	3559	
BOXER Box (230L)	2.8 D	64	01/99 – 02/02	3595	
BOXER Box (230L)	2.8 D	64	01/99 – 02/02	3834	
BOXER Box (230L)	2.8 HDI	93	10/00 – 11/01	3835	3914
BOXER Box (230L)	2.8 HDI	93	10/00 – 11/01	3559	
BOXER Box (230L)	2.8 HDI	93	10/00 – 11/01	3595	
BOXER Box (230L)	2.8 HDI	93	10/00 – 11/01	3834	
BOXER Box (230L)	2.8 HDi	94	11/00 – 04/02	3835	3914
BOXER Box (230L)	2.8 HDi	94	11/00 – 04/02	3559	
BOXER Box (230L)	2.8 HDi	94	11/00 – 04/02	3595	
BOXER Box (230L)	2.8 HDi	94	11/00 – 04/02	3834	
BOXER Box (230L)	2.8 HDi 4x4	93	10/00 – 11/01	3835	3914
BOXER Box (230L)	2.8 HDi 4x4	93	10/00 – 11/01	3559	
BOXER Box (230L)	2.8 HDi 4x4	93	10/00 – 11/01	3595	
BOXER Box (230L)	2.8 HDi 4x4	93	10/00 – 11/01	3834	
BOXER Box (230L)	2.8 HDi 4x4	94	10/00 – 04/02	3835	3914
BOXER Box (230L)	2.8 HDi 4x4	94	10/00 – 04/02	3559	
BOXER Box (230L)	2.8 HDi 4x4	94	10/00 – 04/02	3595	
BOXER Box (230L)	2.8 HDi 4x4	94	10/00 – 04/02	3834	
BOXER Box (244)	2.0	81	04/02 -	3835	3914
BOXER Box (244)	2.0	81	04/02 -	3834	
BOXER Box (244)	2.0 HDi	62	04/02 -	3835	3914
BOXER Box (244)	2.0 HDi	62	04/02 -	3834	
BOXER Box (244)	2.2 HDi	74	04/02 -	3835	3914
BOXER Box (244)	2.2 HDi	74	04/02 -	3834	
BOXER Box (244)	2.8 HDi	93	09/05 – 09/09	3835	3914
BOXER Box (244)	2.8 HDi	93	09/05 – 09/09	3834	
BOXER Box (244)	2.8 HDi	94	04/02 -	3835	3914
BOXER Box (244)	2.8 HDi	94	04/02 -	3834	
BOXER Box (244)	2.8 HDi	107	04/04 -	3835	3914
BOXER Box (244)	2.8 HDi	107	04/04 -	3834	
BOXER Box (244)	2.8 HDi 4x4	94	04/02 -	3835	3914
BOXER Box (244)	2.8 HDi 4x4	94	04/02 -	3834	
BOXER Bus	2.0 BlueHDi 110	81	07/15 -	3922	4224
BOXER Bus	2.0 BlueHDi 110	81	07/15 -	3981	
BOXER Bus	2.0 BlueHDi 110	81	07/15 -	4171	
BOXER Bus	2.0 BlueHDi 130	96	07/15 -	3922	4224
BOXER Bus	2.0 BlueHDi 130	96	07/15 -	3981	
BOXER Bus	2.0 BlueHDi 130	96	07/15 -	4171	
BOXER Bus	2.0 BlueHDi 160	120	07/15 -	3922	4224
BOXER Bus	2.0 BlueHDi 160	120	07/15 -	3981	
BOXER Bus	2.0 BlueHDi 160	120	07/15 -	4171	
BOXER Bus	2.2 HDi 100	74	04/06 -	3922	
BOXER Bus	2.2 HDi 100	74	04/06 -	3981	
BOXER Bus	2.2 HDi 100	74	04/06 -	4171	
BOXER Bus	2.2 HDi 110	81	03/11 -	3922	
BOXER Bus	2.2 HDi 110	81	03/11 -	3981	
BOXER Bus	2.2 HDi 110	81	03/11 -	4171	
BOXER Bus	2.2 HDi 120	88	04/06 -	3922	
BOXER Bus	2.2 HDi 120	88	04/06 -	3981	
BOXER Bus	2.2 HDi 120	88	04/06 -	4171	
BOXER Bus	2.2 HDi 130	96	03/11 -	3922	
BOXER Bus	2.2 HDi 130	96	03/11 -	3981	
BOXER Bus	2.2 HDi 130	96	03/11 -	4171	
BOXER Bus	2.2 HDi 150	110	03/11 -	3922	
BOXER Bus	2.2 HDi 150	110	03/11 -	3981	
BOXER Bus	2.2 HDi 150	110	03/11 -	4171	

MAKE & MODEL		KW	YEAR		
PEUGEOT					
BOXER Bus	3.0 HDi 145	107	04/10 -	3922	
BOXER Bus	3.0 HDi 145	107	04/10 -	3981	
BOXER Bus	3.0 HDi 145	107	04/10 -	4171	
BOXER Bus	3.0 HDi 160	116	04/06 -	3922	
BOXER Bus	3.0 HDi 160	116	04/06 -	3981	
BOXER Bus	3.0 HDi 160	116	04/06 -	4171	
BOXER Bus	3.0 HDi 175	130	03/11 -	3922	
BOXER Bus	3.0 HDi 175	130	03/11 -	3981	
BOXER Bus	3.0 HDi 175	130	03/11 -	4171	
BOXER Bus (230P)	1.9 D	51	03/94 – 04/02	3835	3914
BOXER Bus (230P)	1.9 D	51	03/94 – 04/02	3559	
BOXER Bus (230P)	1.9 D	51	03/94 – 04/02	3595	
BOXER Bus (230P)	1.9 D	51	03/94 – 04/02	3834	
BOXER Bus (230P)	1.9 TD	66	08/94 – 04/02	3835	3914
BOXER Bus (230P)	1.9 TD	66	08/94 – 04/02	3559	
BOXER Bus (230P)	1.9 TD	66	08/94 – 04/02	3595	
BOXER Bus (230P)	1.9 TD	66	08/94 – 04/02	3834	
BOXER Bus (230P)	1.9 TD	68	03/94 – 04/02	3835	3914
BOXER Bus (230P)	1.9 TD	68	03/94 – 04/02	3559	
BOXER Bus (230P)	1.9 TD	68	03/94 – 04/02	3595	
BOXER Bus (230P)	1.9 TD	68	03/94 – 04/02	3834	
BOXER Bus (230P)	1.9 TD 4x4	68	07/96 – 04/02	3835	3914
BOXER Bus (230P)	1.9 TD 4x4	68	07/96 – 04/02	3559	
BOXER Bus (230P)	1.9 TD 4x4	68	07/96 – 04/02	3595	
BOXER Bus (230P)	1.9 TD 4x4	68	07/96 – 04/02	3834	
BOXER Bus (230P)	2.0 i	80	03/94 – 04/02	3835	3914
BOXER Bus (230P)	2.0 i	80	03/94 – 04/02	3559	
BOXER Bus (230P)	2.0 i	80	03/94 – 04/02	3595	
BOXER Bus (230P)	2.0 i	80	03/94 – 04/02	3834	
BOXER Bus (230P)	2.0 i 4x4	80	08/96 – 04/02	3835	3914
BOXER Bus (230P)	2.0 i 4x4	80	08/96 – 04/02	3559	
BOXER Bus (230P)	2.0 i 4x4	80	08/96 – 04/02	3595	
BOXER Bus (230P)	2.0 i 4x4	80	08/96 – 04/02	3834	
BOXER Bus (230P)	2.5 D	63	08/94 – 04/02	3835	3914
BOXER Bus (230P)	2.5 D	63	08/94 – 04/02	3559	
BOXER Bus (230P)	2.5 D	63	08/94 – 04/02	3595	
BOXER Bus (230P)	2.5 D	63	08/94 – 04/02	3834	
BOXER Bus (230P)	2.5 D 4x4	63	07/96 – 04/02	3835	3914
BOXER Bus (230P)	2.5 D 4x4	63	07/96 – 04/02	3559	
BOXER Bus (230P)	2.5 D 4x4	63	07/96 – 04/02	3595	
BOXER Bus (230P)	2.5 D 4x4	63	07/96 – 04/02	3834	
BOXER Bus (230P)	2.5 DT	62	10/97 – 11/01	3835	3914
BOXER Bus (230P)	2.5 DT	62	10/97 – 11/01	3559	
BOXER Bus (230P)	2.5 DT	62	10/97 – 11/01	3595	
BOXER Bus (230P)	2.5 DT	62	10/97 – 11/01	3834	
BOXER Bus (230P)	2.5 TD	76	07/94 – 04/02	3835	3914
BOXER Bus (230P)	2.5 TD	76	07/94 – 04/02	3559	
BOXER Bus (230P)	2.5 TD	76	07/94 – 04/02	3595	
BOXER Bus (230P)	2.5 TD	76	07/94 – 04/02	3834	
BOXER Bus (230P)	2.5 TD 4x4	76	07/96 – 04/02	3835	3914
BOXER Bus (230P)	2.5 TD 4x4	76	07/96 – 04/02	3559	
BOXER Bus (230P)	2.5 TD 4x4	76	07/96 – 04/02	3595	
BOXER Bus (230P)	2.5 TD 4x4	76	07/96 – 04/02	3834	
BOXER Bus (230P)	2.5 TDI	79	01/97 – 04/02	3835	3914
BOXER Bus (230P)	2.5 TDI	79	01/97 – 04/02	3559	
BOXER Bus (230P)	2.5 TDI	79	01/97 – 04/02	3595	
BOXER Bus (230P)	2.5 TDI	79	01/97 – 04/02	3834	
BOXER Bus (230P)	2.5 TDI 4x4	79	01/97 – 04/02	3835	3914
BOXER Bus (230P)	2.5 TDI 4x4	79	01/97 – 04/02	3559	
BOXER Bus (230P)	2.5 TDI 4x4	79	01/97 – 04/02	3595	
BOXER Bus (230P)	2.5 TDI 4x4	79	01/97 – 04/02	3834	
BOXER Bus (230P)	2.8 D	64	01/99 – 02/02	3835	3914
BOXER Bus (230P)	2.8 D	64	01/99 – 02/02	3559	
BOXER Bus (230P)	2.8 D	64	01/99 – 02/02	3595	
BOXER Bus (230P)	2.8 D	64	01/99 – 02/02	3834	
BOXER Bus (230P)	2.8 HDI	93	10/00 – 11/01	3835	3914
BOXER Bus (230P)	2.8 HDI	93	10/00 – 11/01	3559	
BOXER Bus (230P)	2.8 HDI	93	10/00 – 11/01	3595	
BOXER Bus (230P)	2.8 HDI	93	10/00 – 11/01	3834	
BOXER Bus (230P)	2.8 HDi	94	11/00 – 04/02	3835	3914
BOXER Bus (230P)	2.8 HDi	94	11/00 – 04/02	3559	
BOXER Bus (230P)	2.8 HDi	94	11/00 – 04/02	3595	
BOXER Bus (230P)	2.8 HDi	94	11/00 – 04/02	3834	
BOXER Bus (230P)	2.8 HDi 4x4	94	10/00 – 04/02	3835	3914
BOXER Bus (230P)	2.8 HDi 4x4	94	10/00 – 04/02	3559	
BOXER Bus (230P)	2.8 HDi 4x4	94	10/00 – 04/02	3595	

MAKE & MODEL   		KW	YEAR		
PEUGEOT					
BOXER Bus (230P)	2.8 HDi 4x4	94	10/00 – 04/02	3834	
BOXER Bus (230P)	2.8 HDi All-wheel Drive	93	10/00 – 11/01	3835	3914
BOXER Bus (230P)	2.8 HDi All-wheel Drive	93	10/00 – 11/01	3559	
BOXER Bus (230P)	2.8 HDi All-wheel Drive	93	10/00 – 11/01	3595	
BOXER Bus (230P)	2.8 HDi All-wheel Drive	93	10/00 – 11/01	3834	
BOXER Bus (244, Z_)	2.0	81	04/02 -	3835	3914
BOXER Bus (244, Z_)	2.0	81	04/02 -	3834	
BOXER Bus (244, Z_)	2.0 HDi	62	04/02 -	3835	3914
BOXER Bus (244, Z_)	2.0 HDi	62	04/02 -	3834	
BOXER Bus (244, Z_)	2.2 HDi	74	04/02 -	3835	3914
BOXER Bus (244, Z_)	2.2 HDi	74	04/02 -	3834	
BOXER Bus (244, Z_)	2.8 HDi	94	04/02 -	3835	3914
BOXER Bus (244, Z_)	2.8 HDi	94	04/02 -	3834	
BOXER Bus (244, Z_)	2.8 HDi	107	04/04 -	3835	3914
BOXER Bus (244, Z_)	2.8 HDi	107	04/04 -	3834	
BOXER Bus (244, Z_)	2.8 HDi 4x4	94	04/02 -	3835	3914
BOXER Bus (244, Z_)	2.8 HDi 4x4	94	04/02 -	3834	
BOXER Platform/Chassis	2.0 BlueHDi 110	81	07/15 -	3922	4224
BOXER Platform/Chassis	2.0 BlueHDi 110	81	07/15 -	3981	
BOXER Platform/Chassis	2.0 BlueHDi 110	81	07/15 -	4171	
BOXER Platform/Chassis	2.0 BlueHDi 130	96	07/15 -	3922	4224
BOXER Platform/Chassis	2.0 BlueHDi 130	96	07/15 -	3981	
BOXER Platform/Chassis	2.0 BlueHDi 130	96	07/15 -	4171	
BOXER Platform/Chassis	2.0 BlueHDi 160	120	07/15 -	3922	4224
BOXER Platform/Chassis	2.0 BlueHDi 160	120	07/15 -	3981	
BOXER Platform/Chassis	2.0 BlueHDi 160	120	07/15 -	4171	
BOXER Platform/Chassis	2.2 HDi 100	74	04/06 -	3922	
BOXER Platform/Chassis	2.2 HDi 100	74	04/06 -	3981	
BOXER Platform/Chassis	2.2 HDi 100	74	04/06 -	4171	
BOXER Platform/Chassis	2.2 HDi 110	81	03/11 -	3922	
BOXER Platform/Chassis	2.2 HDi 110	81	03/11 -	3981	
BOXER Platform/Chassis	2.2 HDi 110	81	03/11 -	4171	
BOXER Platform/Chassis	2.2 HDi 120	88	04/06 -	3922	
BOXER Platform/Chassis	2.2 HDi 120	88	04/06 -	3981	
BOXER Platform/Chassis	2.2 HDi 120	88	04/06 -	4171	
BOXER Platform/Chassis	2.2 HDi 130	96	03/11 -	3922	
BOXER Platform/Chassis	2.2 HDi 130	96	03/11 -	3981	
BOXER Platform/Chassis	2.2 HDi 130	96	03/11 -	4171	
BOXER Platform/Chassis	2.2 HDi 150	110	03/11 -	3922	
BOXER Platform/Chassis	2.2 HDi 150	110	03/11 -	3981	
BOXER Platform/Chassis	2.2 HDi 150	110	03/11 -	4171	
BOXER Platform/Chassis	3.0 HDi	115	02/07 -	3922	
BOXER Platform/Chassis	3.0 HDi	115	02/07 -	3981	
BOXER Platform/Chassis	3.0 HDi	115	02/07 -	4171	
BOXER Platform/Chassis	3.0 HDi 145	107	04/10 -	3922	
BOXER Platform/Chassis	3.0 HDi 145	107	04/10 -	3981	
BOXER Platform/Chassis	3.0 HDi 145	107	04/10 -	4171	
BOXER Platform/Chassis	3.0 HDi 160	116	04/06 -	3922	
BOXER Platform/Chassis	3.0 HDi 160	116	04/06 -	3981	
BOXER Platform/Chassis	3.0 HDi 160	116	04/06 -	4171	
BOXER Platform/Chassis	3.0 HDi 175	130	03/11 -	3922	
BOXER Platform/Chassis	3.0 HDi 175	130	03/11 -	3981	
BOXER Platform/Chassis	3.0 HDi 175	130	03/11 -	4171	
BOXER Platform/Chassis (244)	2.0 HDi	62	04/02 -	3835	3914
BOXER Platform/Chassis (244)	2.0 HDi	62	04/02 -	3834	
BOXER Platform/Chassis (244)	2.2 HDi	74	04/02 -	3835	3914
BOXER Platform/Chassis (244)	2.2 HDi	74	04/02 -	3834	
BOXER Platform/Chassis (244)	2.8 HDi	94	04/02 -	3835	3914
BOXER Platform/Chassis (244)	2.8 HDi	94	04/02 -	3834	
BOXER Platform/Chassis (244)	2.8 HDi	107	04/04 -	3835	3914
BOXER Platform/Chassis (244)	2.8 HDi	107	04/04 -	3834	
BOXER Platform/Chassis (244)	2.8 HDi 4x4	94	04/02 -	3835	3914
BOXER Platform/Chassis (244)	2.8 HDi 4x4	94	04/02 -	3834	
BOXER Platform/Chassis (ZCT_)	1.9 TD	66	06/94 – 04/02	3559	
BOXER Platform/Chassis (ZCT_)	1.9 TD	66	06/94 – 04/02	3595	
BOXER Platform/Chassis (ZCT_)	1.9 TD	66	06/94 – 04/02	3834	
BOXER Platform/Chassis (ZCT_)	1.9 TD	66	06/94 – 04/02	3835	
BOXER Platform/Chassis (ZCT_)	1.9 TD	68	07/94 – 04/02	3835	3914
BOXER Platform/Chassis (ZCT_)	1.9 TD	68	07/94 – 04/02	3559	
BOXER Platform/Chassis (ZCT_)	1.9 TD	68	07/94 – 04/02	3595	
BOXER Platform/Chassis (ZCT_)	1.9 TD	68	07/94 – 04/02	3834	
BOXER Platform/Chassis (ZCT_)	2.0	81	12/01 – 04/02	3835	3914
BOXER Platform/Chassis (ZCT_)	2.0	81	12/01 – 04/02	3559	
BOXER Platform/Chassis (ZCT_)	2.0	81	12/01 – 04/02	3595	
BOXER Platform/Chassis (ZCT_)	2.0	81	12/01 – 04/02	3834	
BOXER Platform/Chassis (ZCT_)	2.0 i	80	06/94 – 04/02	3835	3914

MAKE & MODEL	  	KW	YEAR		
PEUGEOT					
BOXER Platform/Chassis (ZCT_)	2.0 i	80	06/94 – 04/02	3559	
BOXER Platform/Chassis (ZCT_)	2.0 i	80	06/94 – 04/02	3595	
BOXER Platform/Chassis (ZCT_)	2.0 i	80	06/94 – 04/02	3834	
BOXER Platform/Chassis (ZCT_)	2.5 D	63	03/94 – 04/02	3835	3914
BOXER Platform/Chassis (ZCT_)	2.5 D	63	03/94 – 04/02	3559	
BOXER Platform/Chassis (ZCT_)	2.5 D	63	03/94 – 04/02	3595	
BOXER Platform/Chassis (ZCT_)	2.5 D	63	03/94 – 04/02	3834	
BOXER Platform/Chassis (ZCT_)	2.5 D 4x4	63	07/99 – 04/02	3835	3914
BOXER Platform/Chassis (ZCT_)	2.5 D 4x4	63	07/99 – 04/02	3559	
BOXER Platform/Chassis (ZCT_)	2.5 D 4x4	63	07/99 – 04/02	3595	
BOXER Platform/Chassis (ZCT_)	2.5 D 4x4	63	07/99 – 04/02	3834	
BOXER Platform/Chassis (ZCT_)	2.5 TD	76	03/94 – 04/02	3835	3914
BOXER Platform/Chassis (ZCT_)	2.5 TD	76	03/94 – 04/02	3559	
BOXER Platform/Chassis (ZCT_)	2.5 TD	76	03/94 – 04/02	3595	
BOXER Platform/Chassis (ZCT_)	2.5 TD	76	03/94 – 04/02	3834	
BOXER Platform/Chassis (ZCT_)	2.5 TDI	79	01/97 – 04/02	3835	3914
BOXER Platform/Chassis (ZCT_)	2.5 TDI	79	01/97 – 04/02	3559	
BOXER Platform/Chassis (ZCT_)	2.5 TDI	79	01/97 – 04/02	3595	
BOXER Platform/Chassis (ZCT_)	2.5 TDI	79	01/97 – 04/02	3834	
BOXER Platform/Chassis (ZCT_)	2.5 TDI 4x4	79	07/99 – 04/02	3835	3914
BOXER Platform/Chassis (ZCT_)	2.5 TDI 4x4	79	07/99 – 04/02	3559	
BOXER Platform/Chassis (ZCT_)	2.5 TDI 4x4	79	07/99 – 04/02	3595	
BOXER Platform/Chassis (ZCT_)	2.5 TDI 4x4	79	07/99 – 04/02	3834	
BOXER Platform/Chassis (ZCT_)	2.8 D	64	01/99 – 02/02	3835	3914
BOXER Platform/Chassis (ZCT_)	2.8 D	64	01/99 – 02/02	3559	
BOXER Platform/Chassis (ZCT_)	2.8 D	64	01/99 – 02/02	3595	
BOXER Platform/Chassis (ZCT_)	2.8 D	64	01/99 – 02/02	3834	
BOXER Platform/Chassis (ZCT_)	2.8 HDI	94	11/00 – 04/02	3835	3914
BOXER Platform/Chassis (ZCT_)	2.8 HDI	94	11/00 – 04/02	3559	
BOXER Platform/Chassis (ZCT_)	2.8 HDI	94	11/00 – 04/02	3595	
BOXER Platform/Chassis (ZCT_)	2.8 HDI	94	11/00 – 04/02	3834	
BOXER Platform/Chassis (ZCT_)	2.8 HDi	93	10/00 – 11/01	3835	3914
BOXER Platform/Chassis (ZCT_)	2.8 HDi	93	10/00 – 11/01	3559	
BOXER Platform/Chassis (ZCT_)	2.8 HDi	93	10/00 – 11/01	3595	
BOXER Platform/Chassis (ZCT_)	2.8 HDi	93	10/00 – 11/01	3834	
BOXER Platform/Chassis (ZCT_)	2.8 HDi All-wheel Drive	93	10/00 – 11/01	3835	3914
BOXER Platform/Chassis (ZCT_)	2.8 HDi All-wheel Drive	93	10/00 – 11/01	3559	
BOXER Platform/Chassis (ZCT_)	2.8 HDi All-wheel Drive	93	10/00 – 11/01	3595	
BOXER Platform/Chassis (ZCT_)	2.8 HDi All-wheel Drive	93	10/00 – 11/01	3834	
EXPERT (224)	1.6	58	02/96 – 12/06	3799	
EXPERT (224)	1.6	58	02/96 – 12/06	3986	
EXPERT (224)	1.8	74	10/96 – 09/00	3799	
EXPERT (224)	1.8	74	10/96 – 09/00	3986	
EXPERT (224)	1.9 D	51	02/96 – 12/06	3799	
EXPERT (224)	1.9 D	51	02/96 – 12/06	3986	
EXPERT (224)	1.9 TD	66	02/96 – 12/06	3799	
EXPERT (224)	1.9 TD	66	02/96 – 12/06	3986	
EXPERT (224)	1.9 TD	68	02/96 – 12/06	3799	
EXPERT (224)	1.9 TD	68	02/96 – 12/06	3986	
EXPERT (224)	2.0	100	07/00 – 12/06	3799	
EXPERT (224)	2.0	100	07/00 – 12/06	3986	
EXPERT (224)	2.0 HDI	80	07/00 – 12/06	3799	
EXPERT (224)	2.0 HDI	80	07/00 – 12/06	3986	
EXPERT (224)	2.0 HDI 16V	80	07/00 – 12/06	3799	
EXPERT (224)	2.0 HDI 16V	80	07/00 – 12/06	3986	
EXPERT (224)	2.0 HDi	69	10/00 – 11/03	3799	
EXPERT (224)	2.0 HDi	69	10/00 – 11/03	3986	
EXPERT Box (222)	1.6	58	02/96 – 12/06	3799	
EXPERT Box (222)	1.6	58	02/96 – 12/06	3986	
EXPERT Box (222)	1.8	74	10/96 – 09/00	3799	
EXPERT Box (222)	1.9 D	51	02/96 – 12/06	3799	
EXPERT Box (222)	1.9 D	51	02/96 – 12/06	3986	
EXPERT Box (222)	1.9 D 70	51	12/98 – 12/06	3799	
EXPERT Box (222)	1.9 D 70	51	12/98 – 12/06	3986	
EXPERT Box (222)	1.9 TD	66	02/96 – 12/06	3799	
EXPERT Box (222)	1.9 TD	66	02/96 – 12/06	3986	
EXPERT Box (222)	1.9 TD	68	02/96 – 12/06	3799	
EXPERT Box (222)	1.9 TD	68	02/96 – 12/06	3986	
EXPERT Box (222)	2.0	100	09/02 – 12/06	3799	
EXPERT Box (222)	2.0	100	09/02 – 12/06	3986	
EXPERT Box (222)	2.0 HDI	69	07/00 – 12/06	3799	
EXPERT Box (222)	2.0 HDI	69	07/00 – 12/06	3986	
EXPERT Box (222)	2.0 HDI	80	07/00 – 12/06	3799	
EXPERT Box (222)	2.0 HDI	80	07/00 – 12/06	3986	
EXPERT Box (VF3A_, VF3U_, VF3X_)	1.6 HDi 90 16V	66	01/07 -	3972	4151
EXPERT Box (VF3A_, VF3U_, VF3X_)	1.6 HDi 90 8V	66	01/07 -	3972	4151

MAKE & MODEL   		KW	YEAR		
PEUGEOT					
EXPERT Box (VF3A_, VF3U_, VF3X_)	2.0 16V	103	01/07 -	3972	4151
EXPERT Box (VF3A_, VF3U_, VF3X_)	2.0 HDi 100	72	03/11 -	3972	4151
EXPERT Box (VF3A_, VF3U_, VF3X_)	2.0 HDi 120	88	01/07 -	3972	4151
EXPERT Box (VF3A_, VF3U_, VF3X_)	2.0 HDi 120 4x4	88	01/10 -	3972	4151
EXPERT Box (VF3A_, VF3U_, VF3X_)	2.0 HDi 130	94	03/11 -	3972	4151
EXPERT Box (VF3A_, VF3U_, VF3X_)	2.0 HDi 130 4x4	94	01/12 -	3972	4151
EXPERT Box (VF3A_, VF3U_, VF3X_)	2.0 HDi 140	100	01/07 -	3972	4151
EXPERT Box (VF3A_, VF3U_, VF3X_)	2.0 HDi 165	120	09/09 -	3972	4151
EXPERT Minibüs/Otobüs (V_)	1.5 BlueHDi 100	75	06.2018 -	4369	4370
EXPERT Minibüs/Otobüs (V_)	1.5 BlueHDi 120	88	06.2018 -	4369	4370
EXPERT Minibüs/Otobüs (V_)	2.0 BlueHDi 120	90	09.2019 -	4369	4370
EXPERT Minibüs/Otobüs (V_)	2.0 BlueHDi 150	110	04.2016 -	4369	4370
EXPERT Minibüs/Otobüs (V_)	2.0 BlueHDi 180	130	04.2016 -	4369	4370
EXPERT Panelvan/Van (V_)	1.5 BlueHDi 100	75	06.2018 -	4369	4370
EXPERT Panelvan/Van (V_)	1.5 BlueHDi 120	88	06.2018 -	4369	4370
EXPERT Panelvan/Van (V_)	1.6 BlueHDi 115	85	04.2016 -	4369	4370
EXPERT Panelvan/Van (V_)	1.6 BlueHDi 95	70	04.2016 -	4369	4370
EXPERT Panelvan/Van (V_)	2.0 BlueHDi 120	90	04.2016 -	4369	4370
EXPERT Panelvan/Van (V_)	2.0 BlueHDi 150	110	04.2016 -	4369	4370
EXPERT Panelvan/Van (V_)	2.0 BlueHDi 180	130	04.2016 -	4369	4370
EXPERT Panelvan/Van (V_)	E-EXPERT	100	09.2020 -	4369	4370
EXPERT Platform şasi (V_)	1.6 BlueHDi 95	70	09.2016 -	4369	
EXPERT Platform şasi (V_)	2.0 BlueHDi 120	90	09.2016 -	4369	
EXPERT Platform şasi (V_)	2.0 BlueHDi 150	110	09.2016 -	4369	
EXPERT Platform şasi (V_)	E-EXPERT	100	09.2020 -	4369	
EXPERT Platform şasi (V_)	1.6 BlueHDi 95	70	09.2016 -		4370
EXPERT Platform şasi (V_)	2.0 BlueHDi 120	90	09.2016 -		4370
EXPERT Platform şasi (V_)	2.0 BlueHDi 150	110	09.2016 -		4370
EXPERT Platform şasi (V_)	E-EXPERT	100	09.2020 -		4370
EXPERT Platform/Chassis	1.6 HDi 90 16V	66	01/07 -	3972	4151
EXPERT Platform/Chassis	2.0 HDi 120	88	01/07 -	3972	4151
EXPERT Platform/Chassis	2.0 HDi 140	100	01/07 -	3972	4151
EXPERT Platform/Chassis (223)	1.6	58	02/96 – 12/06	3986	
EXPERT Platform/Chassis (223)	1.9 D	51	02/96 – 12/06	3986	
EXPERT Platform/Chassis (223)	1.9 TD	66	02/96 – 12/06	3986	
EXPERT Platform/Chassis (223)	1.9 TD	68	02/96 – 12/06	3986	
EXPERT Platform/Chassis (223)	2.0 HDi	80	10/00 – 10/06	3986	
EXPERT Tepee (VF3V_)	1.6 HDi 90 16V	66	01/07 -	3972	4151
EXPERT Tepee (VF3V_)	1.6 HDi 90 8V	66	01/07 -	3972	4151
EXPERT Tepee (VF3V_)	2.0 16V	103	01/07 -	3972	4151
EXPERT Tepee (VF3V_)	2.0 HDi 100	72	03/11 -	3972	4151
EXPERT Tepee (VF3V_)	2.0 HDi 120	88	01/07 -	3972	4151
EXPERT Tepee (VF3V_)	2.0 HDi 120 4x4	88	01/07 -	3972	4151
EXPERT Tepee (VF3V_)	2.0 HDi 130	94	03/11 -	3972	4151
EXPERT Tepee (VF3V_)	2.0 HDi 130 4x4	94	03/11 -	3972	4151
EXPERT Tepee (VF3V_)	2.0 HDi 140	100	01/07 -	3972	4151
EXPERT Tepee (VF3V_)	2.0 HDi 165	120	09/09 -	3972	4151
Expert Tepee (VF3X_) 2.0	-	86	10/2009 - 03/2016		4151/1
Expert Tepee (VF3X_) 2.0	-	86	10/2009 - 03/2016		4170
Expert Tepee (VF3X_) 2.0 16V	RFH (EW10A), RFJ (EW10A)	103	01/2007 - 03/2016		4151/1
Expert Tepee (VF3X_) 2.0 16V	RFH (EW10A), RFJ (EW10A)	103	01/2007 - 03/2016		4170
Expert Tepee (VF3X_) 2.0 HDi 100	AHY (DW10CE)	72	03/2011 - 03/2016		4151/1
Expert Tepee (VF3X_) 2.0 HDi 100	AHY (DW10CE)	72	03/2011 - 03/2016		4170
Expert Tepee (VF3X_) 2.0 HDi 120	RHK (DW10UTED4)	88	01/2007 - 03/2016		4151/1
Expert Tepee (VF3X_) 2.0 HDi 120	RHK (DW10UTED4)	88	01/2007 - 03/2016		4170
Expert Tepee (VF3X_) 2.0 HDi 120 4x4	RHK (DW10UTED4)	88	01/2007 -		4151/1
Expert Tepee (VF3X_) 2.0 HDi 120 4x4	RHK (DW10UTED4)	88	01/2007 -		4170
Expert Tepee (VF3X_) 2.0 HDi 130	AHZ (DW10CD)	94	03/2011 -		4151/1
Expert Tepee (VF3X_) 2.0 HDi 130	AHZ (DW10CD)	94	03/2011 -		4170
Expert Tepee (VF3X_) 2.0 HDi 130 4x4	AHZ (DW10CD)	94	03/2011 -		4151/1
Expert Tepee (VF3X_) 2.0 HDi 130 4x4	AHZ (DW10CD)	94	03/2011 -		4170
Expert Tepee (VF3X_) 2.0 HDi 140	RHR (DW10BTED4)	100	01/2007 -		4151/1
Expert Tepee (VF3X_) 2.0 HDi 140	RHR (DW10BTED4)	100	01/2007 -		4170
Expert Tepee (VF3X_) 2.0 HDi 165	RHH (DW10CTED4)	120	09/2009 -		4151/1
Expert Tepee (VF3X_) 2.0 HDi 165	RHH (DW10CTED4)	120	09/2009 -		4170
Expert Tepee (VF3X_) 44348 HDi 90 16V	9HU (DV6UTED4)	66	01/2007 - 03/2016		4151/1
Expert Tepee (VF3X_) 44348 HDi 90 16V	9HU (DV6UTED4)	66	01/2007 - 03/2016		4170
Expert Tepee (VF3X_) 44348 HDi 90 8V	9HH (DV6DUM), 9HM (DV6UC)	66	01/2007 - 03/2016		4151/1
Expert Tepee (VF3X_) 44348 HDi 90 8V	9HH (DV6DUM), 9HM (DV6UC)	66	01/2007 - 03/2016		4170
HCV Boxer III Bus 2.0 BlueHDi 130	AHN (DW10FUD)	96	07/2015 - 09/2019	4171/1	
HCV Boxer III Bus 2.0 BlueHDi 160	AHP (DW10FUC)	120	07/2015 - 09/2019	4171/1	
HCV Boxer III Bus 3.0 Hdi	F30DT	133	12/2014 -	4171/1	
HCV Boxer III Bus 3.0 HDi 145	F1CE3481N (F30DTE)	107	04/2010 -	3922/1	
HCV Boxer III Bus 3.0 HDi 160	F1CE0481D (F30DT)	116	04/2006 -	3922/1	
HCV Boxer III Bus 3.0 HDi 175	F1CE3481E (F30DTE)	130	03/2011 -	4171/1	
HCV Boxer III Bus 44229 BlueHDi	4HJ (DW12RUD)	103	07/2019 -	4171/1	

MAKE & MODEL		KW	YEAR		
PEUGEOT					
HCV Boxer III Bus 44229 BlueHDi 120	4HK (DW12RUE)	88	07/2019 -	4171/1	
HCV Boxer III Bus 44229 BlueHDi 165	4HH (DW12RUC)	121	08/2019 -	4171/1	
HCV Boxer III Bus 44229 Hdi	4H03	110	12/2014 -	4171/1	
HCV Boxer III Bus 44229 Hdi	4H03	96	12/2014 -	4171/1	
HCV Boxer III Bus 44229 HDi 120	4HU (P22DTE)	88	04/2006 -	3922/1	
HCV Boxer III Bus 44229 HDi 130	4HH (P22DTE)	96	03/2011 -	4171/1	
HCV Boxer III Bus 44229 HDi 150	4HJ (P22DTE)	110	03/2011 -	4171/1	
HCV Boxer III Platform/Chassis 2.0 BlueHDi 130	AHN (DW10FUD)	96	07/2015 - 09/2019	4171/1	
HCV Boxer III Platform/Chassis 2.0 BlueHDi 160	AHP (DW10FUC)	120	07/2015 - 09/2019	4171/1	
HCV Boxer III Platform/Chassis 3.0 HDi	F1CE0481D (F30DT)	115	04/2006 -	3922/1	
HCV Boxer III Platform/Chassis 3.0 Hdi	F30DT	133	12/2014 -	4171/1	
HCV Boxer III Platform/Chassis 3.0 HDi 145	F1CE3481N (F30DTE)	107	04/2010 -	3922/1	
HCV Boxer III Platform/Chassis 3.0 HDi 160	F1CE0481D (F30DT)	116	04/2006 -	3922/1	
HCV Boxer III Platform/Chassis 3.0 HDi 175	F1CE3481E (F30DTE)	130	03/2011 -	4171/1	
HCV Boxer III Platform/Chassis 44229 BlueHDi 120	4HK (DW12RUE)	88	08/2019 -	4171/1	
HCV Boxer III Platform/Chassis 44229 BlueHDi 140	4HJ (DW12RUD)	103	08/2019 -	4171/1	
HCV Boxer III Platform/Chassis 44229 BlueHDi 165	4HH (DW12RUC)	121	08/2019 -	4171/1	
HCV Boxer III Platform/Chassis 44229 Hdi	4H03	110	12/2014 -	4171/1	
HCV Boxer III Platform/Chassis 44229 Hdi	4H03	96	12/2014 -	4171/1	
HCV Boxer III Platform/Chassis 44229 HDi 120	4HU (P22DTE)	88	04/2006 -	3922/1	
HCV Boxer III Platform/Chassis 44229 HDi 130	4HH (P22DTE)	96	03/2011 -	4171/1	
HCV Boxer III Platform/Chassis 44229 HDi 150	4HJ (P22DTE)	110	03/2011 -	4171/1	
HCV Boxer III Van 2.0 BlueHDi 130	AHN (DW10FUD)	96	07/2015 - 09/2019	4171/1	
HCV Boxer III Van 2.0 BlueHDi 130 4x4	AHN (DW10FUD)	96	07/2015 - 09/2019	4171/1	
HCV Boxer III Van 2.0 BlueHDi 160	-	118	04/2017 - 09/2019	4171/1	
HCV Boxer III Van 2.0 BlueHDi 160	AHP (DW10FUC)	120	07/2015 - 09/2019	4171/1	
HCV Boxer III Van 2.0 BlueHDi 160 4x4	AHP (DW10FUC)	120	07/2015 - 09/2019	4171/1	
HCV Boxer III Van 3.0 D	-	116	09/2008 - 12/2009	3922/1	
HCV Boxer III Van 3.0 HDi	F1CE0481D (F30DT)	115	07/2006 -	3922/1	
HCV Boxer III Van 3.0 Hdi	F30DT	133	12/2014 -	4171/1	
HCV Boxer III Van 3.0 HDi 145	F1CE3481N (F30DTE)	107	04/2010 -	3922/1	
HCV Boxer III Van 3.0 HDi 160	F1CE0481D (F30DT)	116	04/2006 -	3922/1	
HCV Boxer III Van 3.0 HDi 175	F1CE3481E (F30DTE)	130	03/2011 -	4171/1	
HCV Boxer III Van 44229 BlueHDi 120	4HK (DW12RUE)	88	07/2019 -	4171/1	
HCV Boxer III Van 44229 BlueHDi 165	4HH (DW12RUC)	121	07/2019 -	4171/1	
HCV Boxer III Van 44229 Hdi	4H03	110	12/2014 -	4171/1	
HCV Boxer III Van 44229 Hdi	4H03	96	12/2014 -	4171/1	
HCV Boxer III Van 44229 HDi 120	4HU (P22DTE)	88	04/2006 -	3922/1	
HCV Boxer III Van 44229 HDi 130	4HH (P22DTE)	96	03/2011 -	4171/1	
HCV Boxer III Van 44229 HDi 130 4x4	4HH (P22DTE)	96	03/2011 -	4171/1	
HCV Boxer III Van 44229 HDi 150	4HJ (P22DTE)	110	03/2011 -	4171/1	
HCV Boxer III Van 44229 HDi 150 4x4	4HJ (P22DTE)	110	03/2011 -	4171/1	
J5 Box (280L)	1.8	51	01/83 – 11/88	3440	
J5 Box (280L)	2.0	55	09/87 – 08/90	3440	
J5 Box (280L)	2.0	58	09/81 – 08/90	3440	
J5 Box (280L)	2.5 D	54	09/81 – 08/90	3440	
J5 Box (290L)	1.8	51	09/90 – 01/94	3440	
J5 Box (290L)	1.9 D	51	10/90 – 03/94	3440	
J5 Box (290L)	2.0	62	09/90 – 01/94	3440	
J5 Box (290L)	2.5 D	54	09/90 – 01/94	3440	
J5 Box (290L)	2.5 D 4x4	54	10/90 – 03/94	3440	
J5 Bus (280P)	1.9 D	51	10/90 – 02/94	3440	
J5 Bus (280P)	2.0	55	09/81 – 09/90	3440	
J5 Bus (280P)	2.0	58	01/83 – 09/90	3440	
J5 Bus (280P)	2.0	62	10/90 – 02/94	3440	
J5 Bus (290P)	2.5 D	54	09/81 – 09/90	3440	
J5 Bus (290P)	2.5 D	54	10/90 – 02/94	3440	
J5 Bus (290P)	2.5 D 4x4	54	10/90 – 02/94	3440	
J5 Platform/Chassis (280L)	1.9 D	51	10/90 – 02/94	3440	
J5 Platform/Chassis (280L)	2.0	55	01/86 – 11/88	3440	
J5 Platform/Chassis (280L)	2.0	58	01/83 – 11/88	3440	
J5 Platform/Chassis (280L)	2.0	62	10/90 – 02/94	3440	
J5 Platform/Chassis (280L)	2.5 D	54	09/81 – 09/90	3440	
J5 Platform/Chassis (280L)	2.5 D	54	10/90 – 02/94	3440	
J5 Platform/Chassis (290L)	2.5 D 4x4	54	09/81 – 08/90	3440	
J5 Platform/Chassis (290L)	2.5 D 4x4	54	10/90 – 02/94	3440	
J9 Box	1.6	44	03/80 – 06/87	3366/1	
J9 Box	2.0	57	03/80 – 06/87	3366/1	
J9 Box	2.1 D	41	03/80 – 06/87	3366	
J9 Box	2.1 D	41	03/80 – 06/87	3366/1	
J9 Box	2.3 D	49	03/80 – 07/82	3366/1	
J9 Box	2.5 D	53	07/82 – 06/87	3366/1	
J9 Bus	2.0	57	03/80 – 06/87	3366/1	
J9 Bus	2.3 D	49	03/80 – 07/82	3366/1	
J9 Bus	2.5 D	53	08/82 – 06/87	3366/1	
J9 Platform/Chassis	2.0	57	03/80 – 06/87	3366/1	

MAKE & MODEL		KW	YEAR		
PEUGEOT					
J9 Platform/Chassis	2.3 D	49	03/80 – 07/82	3366/1	
J9 Platform/Chassis	2.5 D	53	07/82 – 06/87	3366/1	
LCV 207 Van (WA_, WC_) 44287 HDi	8HR (DV4C), 8HZ (DV4TD)	50	04/2007 -	3820/1	
LCV 207 Van (WA_, WC_) 44348 HDi	9HX (DV6ATED4)	66	04/2007 - 10/2012		3984/1
LCV 307 SW Box body / Van / SW Van (3E_, 3H_) 44287 HDi	8HZ (DV4TD)	51	04/2002 - 06/2005	3820/1	
LCV 307 SW Box body / Van / SW Van (3E_, 3H_) 44348 HDi	DV6TED4	80	02/2004 - 09/2009	3820/1	
LCV Expert II Platform/Chassis 2.0 HDi 120	RHK (DW10UTED4)	88	01/2007 -		4151/1
LCV Expert II Platform/Chassis 2.0 HDi 120	RHK (DW10UTED4)	88	01/2007 -		4170
LCV Expert II Platform/Chassis 2.0 HDi 130	AHZ (DW10CD)	94	03/2011 -		4151/1
LCV Expert II Platform/Chassis 2.0 HDi 130	AHZ (DW10CD)	94	03/2011 -		4170
LCV Expert II Platform/Chassis 2.0 HDi 140	RHR (DW10BTED4)	100	01/2007 -		4151/1
LCV Expert II Platform/Chassis 2.0 HDi 140	RHR (DW10BTED4)	100	01/2007 -		4170
LCV Expert II Platform/Chassis 2.0 HDi 165	RHH (DW10CTED4)	120	09/2009 -		4151/1
LCV Expert II Platform/Chassis 2.0 HDi 165	RHH (DW10CTED4)	120	09/2009 -		4170
LCV Expert II Platform/Chassis 44348 HDi 90 16V	9HU (DV6UTED4)	66	01/2007 -		4151/1
LCV Expert II Platform/Chassis 44348 HDi 90 16V	9HU (DV6UTED4)	66	01/2007 -		4170
LCV Expert II Platform/Chassis 44348 HDi 90 8V	9HH (DV6DUM), 9HM (DV6UC)	66	01/2007 -		4151/1
LCV Expert II Platform/Chassis 44348 HDi 90 8V	9HH (DV6DUM), 9HM (DV6UC)	66	01/2007 -		4170
LCV Expert II Van (VF3A_, VF3U_, VF3X_) 2.0 16V	RFH (EW10A), RFJ (EW10A)	103	01/2007 -		4151/1
LCV Expert II Van (VF3A_, VF3U_, VF3X_) 2.0 16V	RFH (EW10A), RFJ (EW10A)	103	01/2007 -		4170
LCV Expert II Van (VF3A_, VF3U_, VF3X_) 2.0 HDi 100	-	72	03/2011 -		4151/1
LCV Expert II Van (VF3A_, VF3U_, VF3X_) 2.0 HDi 100	-	72	03/2011 -		4170
LCV Expert II Van (VF3A_, VF3U_, VF3X_) 2.0 HDi 120	RHK (DW10UTED4)	88	01/2007 -		4151/1
LCV Expert II Van (VF3A_, VF3U_, VF3X_) 2.0 HDi 120	RHK (DW10UTED4)	88	01/2007 -		4170
LCV Expert II Van (VF3A_, VF3U_, VF3X_) 2.0 HDi 120 4x4	RHK (DW10UTED4)	88	01/2010 -		4151/1
LCV Expert II Van (VF3A_, VF3U_, VF3X_) 2.0 HDi 120 4x4	RHK (DW10UTED4)	88	01/2010 -		4170
LCV Expert II Van (VF3A_, VF3U_, VF3X_) 2.0 HDi 130	AHZ (DW10CD)	94	03/2011 -		4151/1
LCV Expert II Van (VF3A_, VF3U_, VF3X_) 2.0 HDi 130	AHZ (DW10CD)	94	03/2011 -		4170
LCV Expert II Van (VF3A_, VF3U_, VF3X_) 2.0 HDi 130 4x4	AHZ (DW10CD)	94	01/2012 -		4151/1
LCV Expert II Van (VF3A_, VF3U_, VF3X_) 2.0 HDi 130 4x4	AHZ (DW10CD)	94	01/2012 -		4170
LCV Expert II Van (VF3A_, VF3U_, VF3X_) 2.0 HDi 140	RHR (DW10BTED4)	100	01/2007 -		4151/1
LCV Expert II Van (VF3A_, VF3U_, VF3X_) 2.0 HDi 140	RHR (DW10BTED4)	100	01/2007 -		4170
LCV Expert II Van (VF3A_, VF3U_, VF3X_) 2.0 HDi 165	RHH (DW10CTED4)	120	09/2009 -		4151/1
LCV Expert II Van (VF3A_, VF3U_, VF3X_) 2.0 HDi 165	RHH (DW10CTED4)	120	09/2009 -		4170
LCV Expert II Van (VF3A_, VF3U_, VF3X_) 44348 HDi 90 16V	9HU (DV6UTED4)	66	01/2007 -		4151/1
LCV Expert II Van (VF3A_, VF3U_, VF3X_) 44348 HDi 90 16V	9HU (DV6UTED4)	66	01/2007 -		4170
LCV Expert II Van (VF3A_, VF3U_, VF3X_) 44348 HDi 90 8V	9HH (DV6DUM), 9HM (DV6UC)	66	01/2007 -		4151/1
LCV Expert II Van (VF3A_, VF3U_, VF3X_) 44348 HDi 90 8V	9HH (DV6DUM), 9HM (DV6UC)	66	01/2007 -		4170
LCV Partner I Platform/Chassis 2.0 HDi	-	66	11/2002 - 07/2008	3820/1	
LCV Partner I Platform/Chassis 44440 D	WJY (DW8B), WJZ (DW8)	51	01/1999 - 07/2008	3820/1	
LCV Partner I Van (5)/ Ranch 2.0 HDi	RHY (DW10TD)	66	04/2000 - 07/2008	3820/1	
LCV Partner I Van (5)/ Ranch 2.0 HDi 4x4	RHY (DW10TD)	66	04/2004 - 08/2005	3820/1	
LCV Partner I Van (5)/ Ranch 44197	HDZ (TU1M)	44	06/1996 - 09/2005	3820/1	
LCV Partner I Van (5)/ Ranch 44287	KDY(TU3A/ AN/ S/ M/ 2/ 2K)	47	01/1996 - 03/2008	3820/1	
LCV Partner I Van (5)/ Ranch 44287	KFV (TU3A)	54	11/2002 - 10/2006	3820/1	
LCV Partner I Van (5)/ Ranch 44287	KFW (TU3A) (05.10-12.15), KFX (TU3JP) (06.96-.), T	55	06/1996 - 12/2015	3820/1	
LCV Partner I Van (5)/ Ranch 44287 BiFuel	KFW (TU3JP)	55	04/2003 - 10/2006	3820/1	
LCV Partner I Van (5)/ Ranch 44348	NFU (TU5JP4)	80	09/2000 - 10/2002	3820/1	
LCV Partner I Van (5)/ Ranch 44348 HDi 75	9HK (DV6ETEDM)	55	08/2005 - 07/2008	3820/1	
LCV Partner I Van (5)/ Ranch 44348 HDi 75	9HW (DV6BTED4)	55	08/2005 - 07/2008	3820/1	
LCV Partner I Van (5)/ Ranch 44348 HDi 90	9HX (DV6ATED4)	66	08/2005 - 12/2015	3820/1	
LCV Partner I Van (5)/ Ranch 44409	LFX (XU7JB)	66	03/1997 - 08/2000	3820/1	
LCV Partner I Van (5)/ Ranch 44440 D	DJY (XUD9A)	51	06/1996 - 12/2002	3820/1	
LCV Partner I Van (5)/ Ranch 44440 D	WJY (DW8B), WJZ (DW8) (06.98-.)	51	06/1996 - 12/2015	3820/1	
LCV Partner I Van (5)/ Ranch 44440 D 4x4	WJY (DW8B)	51	04/2004 - 07/2011	3820/1	
PARTNER Box (5) / RANCH Box (5)	1.1	44	06/96 -	3636	
PARTNER Box (5) / RANCH Box (5)	1.1	44	06/96 -	3644	
PARTNER Box (5) / RANCH Box (5)	1.1	44	06/96 -	3820	
PARTNER Box (5) / RANCH Box (5)	1.4	54	11/02 – 10/06	3820	
PARTNER Box (5) / RANCH Box (5)	1.4	55	06/96 -	3636	
PARTNER Box (5) / RANCH Box (5)	1.4	55	06/96 -	3644	
PARTNER Box (5) / RANCH Box (5)	1.4	55	06/96 -	3820	
PARTNER Box (5) / RANCH Box (5)	1.4 BiFuel	55	04/03 -	3820	
PARTNER Box (5) / RANCH Box (5)	1.6	80	09/00 – 10/02	3636	
PARTNER Box (5) / RANCH Box (5)	1.6	80	09/00 – 10/02	3644	
PARTNER Box (5) / RANCH Box (5)	1.6	80	09/00 – 10/02	3820	
PARTNER Box (5) / RANCH Box (5)	1.6 HDi 75	55	02/06 -	3820	3529/1
PARTNER Box (5) / RANCH Box (5)	1.6 HDi 90	66	02/06 -	3820	3529/1
PARTNER Box (5) / RANCH Box (5)	1.8	66	03/97 – 08/00	3636	
PARTNER Box (5) / RANCH Box (5)	1.8	66	03/97 – 08/00	3644	
PARTNER Box (5) / RANCH Box (5)	1.8	66	03/97 – 08/00	3820	
PARTNER Box (5) / RANCH Box (5)	1.8 D	43	06/96 -	3636	
PARTNER Box (5) / RANCH Box (5)	1.8 D	43	06/96 -	3644	
PARTNER Box (5) / RANCH Box (5)	1.8 D	43	06/96 -	3820	
PARTNER Box (5) / RANCH Box (5)	1.8 D	44	11/96 – 02/98	3636	
PARTNER Box (5) / RANCH Box (5)	1.8 D	44	11/96 – 02/98	3644	

MAKE & MODEL   		KW	YEAR		
PEUGEOT					
PARTNER Box (5) / RANCH Box (5)	1.9 D	50	05/96 – 12/98	3636	
PARTNER Box (5) / RANCH Box (5)	1.9 D	50	05/96 – 12/98	3644	
PARTNER Box (5) / RANCH Box (5)	1.9 D	51	06/96 -	3636	
PARTNER Box (5) / RANCH Box (5)	1.9 D	51	06/96 -	3644	
PARTNER Box (5) / RANCH Box (5)	1.9 D	51	06/96 -	3820	
PARTNER Box (5) / RANCH Box (5)	1.9 D 4x4	51	04/04 -	3820	
PARTNER Box (5) / RANCH Box (5)	2.0 HDi	66	04/00 -	3636	3529/1
PARTNER Box (5) / RANCH Box (5)	2.0 HDi	66	04/00 -	3644	
PARTNER Box (5) / RANCH Box (5)	2.0 HDi	66	04/00 -	3820	
PARTNER Box (5) / RANCH Box (5)	2.0 HDi 4x4	66	04/04 -	3820	3529/1
PARTNER Box (5) / RANCH Box (5)	Electric	25	04/96 – 12/02	3636	
PARTNER Box (5) / RANCH Box (5)	Electric	25	04/96 – 12/02	3644	
PARTNER Box (5) / RANCH Box (5)	Electric	25	04/96 – 12/02	3820	
PARTNER Box / RANCH Box	1.6	66	04/08 -	3964	3971
PARTNER Box / RANCH Box	1.6	72	11/10 -	3964	3971
PARTNER Box / RANCH Box	1.6	80	04/08 -	3964	3971
PARTNER Box / RANCH Box	1.6	88	04/10 -	3964	3971
PARTNER Box / RANCH Box	1.6 BlueHDi 100	73	04/15 -	3964	3971
PARTNER Box / RANCH Box	1.6 BlueHDi 120	88	04/15 -	3964	3971
PARTNER Box / RANCH Box	1.6 HDi	55	04/08 -	3964	3971
PARTNER Box / RANCH Box	1.6 HDi	66	03/13 -	3964	3971
PARTNER Box / RANCH Box	1.6 HDi	80	04/08 -	3964	3971
PARTNER Box / RANCH Box	1.6 HDi	82	08/10 -	3964	3971
PARTNER Box / RANCH Box	1.6 HDi	84	03/13 -	3964	3971
PARTNER Box / RANCH Box	1.6 HDi / BlueHDi 75	55	01/14 -	3964	3971
PARTNER Box / RANCH Box	1.6 HDi 16V	66	04/08 -	3964	3971
PARTNER Box / RANCH Box	1.6 HDi 16V 4x4	66	04/12 -	3964	3971
PARTNER Box / RANCH Box	1.6 HDi 90	68	04/10 -	3964	3971
PARTNER Box / RANCH Box	Électrique	49	06/13 -	3964	3971
PARTNER Combispace (5F) / RANCH Combispace (5F)	1.1	44	06/96 -	3636	
PARTNER Combispace (5F) / RANCH Combispace (5F)	1.1	44	06/96 -	3644	
PARTNER Combispace (5F) / RANCH Combispace (5F)	1.1	44	06/96 -	3820	
PARTNER Combispace (5F) / RANCH Combispace (5F)	1.4	54	11/02 – 10/06	3820	
PARTNER Combispace (5F) / RANCH Combispace (5F)	1.4	55	06/96 -	3636	
PARTNER Combispace (5F) / RANCH Combispace (5F)	1.4	55	06/96 -	3644	
PARTNER Combispace (5F) / RANCH Combispace (5F)	1.4	55	06/96 -	3820	
PARTNER Combispace (5F) / RANCH Combispace (5F)	1.6 16V	80	07/01 -	3636	3529/1
PARTNER Combispace (5F) / RANCH Combispace (5F)	1.6 16V	80	07/01 -	3644	
PARTNER Combispace (5F) / RANCH Combispace (5F)	1.6 16V	80	07/01 -	3820	
PARTNER Combispace (5F) / RANCH Combispace (5F)	1.6 HDi	55	01/09 -	3964	3971
PARTNER Combispace (5F) / RANCH Combispace (5F)	1.6 HDi	66	03/13 -	3964	3971
PARTNER Combispace (5F) / RANCH Combispace (5F)	1.6 HDi 16V	66	01/09 -	3964	3971
PARTNER Combispace (5F) / RANCH Combispace (5F)	1.6 HDi 75	55	02/06 -	3820	3529/1
PARTNER Combispace (5F) / RANCH Combispace (5F)	1.6 HDi 90	66	10/05 -	3820	3529/1
PARTNER Combispace (5F) / RANCH Combispace (5F)	1.8	66	05/97 -	3636	
PARTNER Combispace (5F) / RANCH Combispace (5F)	1.8	66	05/97 -	3644	
PARTNER Combispace (5F) / RANCH Combispace (5F)	1.8	66	05/97 -	3820	
PARTNER Combispace (5F) / RANCH Combispace (5F)	1.9 D	50	06/96 -	3636	
PARTNER Combispace (5F) / RANCH Combispace (5F)	1.9 D	50	06/96 -	3644	
PARTNER Combispace (5F) / RANCH Combispace (5F)	1.9 D	50	06/96 -	3820	
PARTNER Combispace (5F) / RANCH Combispace (5F)	1.9 D	51	05/96 – 12/98	3636	
PARTNER Combispace (5F) / RANCH Combispace (5F)	1.9 D	51	05/96 – 12/98	3644	
PARTNER Combispace (5F) / RANCH Combispace (5F)	1.9 D	51	12/98 -	3820	
PARTNER Combispace (5F) / RANCH Combispace (5F)	1.9 D 4x4	51	04/04 – 08/05	3820	
PARTNER Combispace (5F) / RANCH Combispace (5F)	2.0 HDI	66	02/00 -	3636	3529/1
PARTNER Combispace (5F) / RANCH Combispace (5F)	2.0 HDI	66	02/00 -	3644	
Partner Combispace (5F)/ Ranch 2.0 HDI	RHY (DW10TD)	66	02/2000 - 07/2008	3820/1	
Partner Combispace (5F)/ Ranch 2.0 HDi 4x4	RHY (DW10TD)	66	04/2004 - 08/2005	3820/1	
Partner Combispace (5F)/ Ranch 44197	HDZ (TU1M), HFX (TU1JP)	44	06/1996 - 10/2002	3820/1	
Partner Combispace (5F)/ Ranch 44287	KDY(TU3A/ AN/ S/ M/ 2/ 2K)	47	01/1996 - 03/2008	3820/1	
Partner Combispace (5F)/ Ranch 44287	KFW (TU3A), KFW (TU3JP), KFX (TU3JP) (06.96-.)	55	06/1996 - 12/2015	3820/1	
Partner Combispace (5F)/ Ranch 44287	KFW (TU3JP)	54	11/2002 - 10/2006	3820/1	
Partner Combispace (5F)/ Ranch 44348 16V	NFU (TU5JP4)	80	07/2001 - 03/2008	3820/1	
Partner Combispace (5F)/ Ranch 44348 16V	NFU (TU5JP4)	81	09/2000 - 12/2015	3820/1	
Partner Combispace (5F)/ Ranch 44348 HDi 75	9HW (DV6BTED4)	55	08/2005 - 07/2008	3820/1	
Partner Combispace (5F)/ Ranch 44348 HDi 90	9HX (DV6ATED4)	66	08/2005 - 12/2015	3820/1	
Partner Combispace (5F)/ Ranch 44409	LFX (XU7JB)	66	05/1997 - 12/2002	3820/1	
Partner Combispace (5F)/ Ranch 44440 D	DJY (XUD9A)	50	06/1996 - 12/2002	3820/1	
Partner Combispace (5F)/ Ranch 44440 D	WJY (DW8B), WJZ (DW8) (12.98-.)	51	01/1999 - 07/2008	3820/1	
Partner Combispace (5F)/ Ranch 44440 D 4x4	WJY (DW8B)	51	04/2004 - 08/2005	3820/1	
PARTNER Kasa/büyük limuzin (K9)	1.2 PureTech 110	81	07.2019 -	4371	4372
PARTNER Kasa/büyük limuzin (K9)	1.2 PureTech 130	96	07.2019 -	4371	4372
PARTNER Kasa/büyük limuzin (K9)	1.5 BlueHDI 130	96	09.2018 -	4371	4372
PARTNER Kasa/büyük limuzin (K9)	1.5 BlueHDI 130 4x4	96	09.2018 -	4371	4372
PARTNER Kasa/büyük limuzin (K9)	1.5 BlueHDi 100	75	07.2019 -	4371	4372
PARTNER Kasa/büyük limuzin (K9)	1.5 BlueHDi 75	55	07.2019 -	4371	4372

MAKE & MODEL   		KW	YEAR		
PEUGEOT					
PARTNER Kasa/büyük limuzin (K9)	1.6 BlueHDI 100	73	09.2018 -	4371	4372
PARTNER Kasa/büyük limuzin (K9)	1.6 BlueHDI 75	55	09.2018 -	4371	4372
PARTNER Platform/Chassis / RANCH Platform/Chassis	2.0 HDI	66	02/00 -	3820	
PARTNER Platform/Chassis / RANCH Platform/Chassis	2.0 HDi 4x4	66	04/04 – 08/05	3820	3529/1
PARTNER Platform/Chassis / RANCH Platform/Chassis	Electric	28	01/98 – 12/01	3636	
PARTNER Platform/Chassis / RANCH Platform/Chassis	Electric	28	01/98 – 12/01	3644	
PARTNER Platform/Chassis / RANCH Platform/Chassis	Electric	28	01/98 – 12/01	3820	
PARTNER Platform/Chassis / RANCH Platform/Chassis	Electric	28	01/98 – 12/01	3820	
PARTNER Tepee / RANCH Tepee	1.2 THP	81	02/16 -	3964	3971
PARTNER Tepee / RANCH Tepee	1.6	66	04/08 -	3964	3971
PARTNER Tepee / RANCH Tepee	1.6	72	08/10 -	3964	3971
PARTNER Tepee / RANCH Tepee	1.6	80	04/08 -	3964	3971
PARTNER Tepee / RANCH Tepee	1.6	81	09/08 -	3964	3971
PARTNER Tepee / RANCH Tepee	1.6	88	04/10 -	3964	3971
PARTNER Tepee / RANCH Tepee	1.6 BlueHDi 100	73	12/14 -	3964	3971
PARTNER Tepee / RANCH Tepee	1.6 BlueHDi 120	88	12/14 -	3964	3971
PARTNER Tepee / RANCH Tepee	1.6 BlueHDi 75	55	01/15 -	3964	3971
PARTNER Tepee / RANCH Tepee	1.6 HDi	55	04/08 -	3964	3971
PARTNER Tepee / RANCH Tepee	1.6 HDi	66	03/13 -	3964	3971
PARTNER Tepee / RANCH Tepee	1.6 HDi	80	04/08 -	3964	3971
PARTNER Tepee / RANCH Tepee	1.6 HDi	82	08/10 -	3964	3971
PARTNER Tepee / RANCH Tepee	1.6 HDi	84	03/13 -	3964	3971
PARTNER Tepee / RANCH Tepee	1.6 HDi 16V	66	04/08 -	3964	3971
PARTNER Tepee / RANCH Tepee	1.6 HDi 90	68	04/10 -	3964	3971
RIFTER	1.2 PureTech 110	81	09.2018 -	4371	4372
RIFTER	1.2 PureTech 130	96	07.2019 -	4371	4372
RIFTER	1.5 BlueHDi 100	75	09.2018 -	4371	4372
RIFTER	1.5 BlueHDi 130	96	09.2018 -	4371	4372
RIFTER	1.5 BlueHDi 75 (ECYHW)	55	09.2018 -	4371	4372
RIFTER	1.6 BlueHDi 100	73	09.2018 -	4371	4372
RIFTER	1.6 HDi 75 / BlueHDi 75	55	09.2018 -	4371	4372
RIFTER	1.6 HDi 92	68	09.2018 -	4371	4372
TRAVELLER Minibüs/Otobüs (V_)	1.5 BlueHDi 100	75	06.2018 -	4369	4370
TRAVELLER Minibüs/Otobüs (V_)	1.5 BlueHDi 120	88	06.2018 -	4369	4370
TRAVELLER Minibüs/Otobüs (V_)	1.6 BlueHDi 115	85	04.2016 -	4369	4370
TRAVELLER Minibüs/Otobüs (V_)	1.6 BlueHDi 95	70	04.2016 -	4369	4370
TRAVELLER Minibüs/Otobüs (V_)	2.0 BlueHDi 120	90	09.2019 -	4369	4370
TRAVELLER Minibüs/Otobüs (V_)	2.0 BlueHDi 145	106	09.2020 -	4369	4370
TRAVELLER Minibüs/Otobüs (V_)	2.0 BlueHDi 150	110	04.2016 -	4369	4370
TRAVELLER Minibüs/Otobüs (V_)	2.0 BlueHDi 180	130	04.2016 -	4369	4370
TRAVELLER Minibüs/Otobüs (V_)	E-TRAVELLER	100	09.2020 -	4369	4370
PEUGEOT (DF-PSA)					
206	1.4	56	07/06 – 02/09	3938	
206	1.6	78	01/06 – 02/09	3820	3496
207	1.4	56	03/09 – 12/14	3820	
207	1.6	78	03/09 -	3820	
207 Saloon	1.4	56	11/08 -	3938	
207 Saloon	1.6	78	11/08 -	3938	
307 Hatchback	1.6	78	02/08 – 12/14	3800	
307 Hatchback	2.0	108	02/08 -	3800	
307 Saloon	1.6	78	08/04 – 12/14	3800	
307 Saloon	2.0	99	08/04 – 05/06	3800	
307 Saloon	2.0	108	05/06 – 12/10	3800	
408 Saloon	1.6	78	01/10 -	3800	
408 Saloon	1.6	78	01/10 -	3970	
408 Saloon	2.0	108	01/10 -	3800	
408 Saloon	2.0	108	01/10 -	3970	
PIAGGIO					
PORTER Box	1.0	33	02/93 – 05/98	3746	
PORTER Box	1.0	35	07/94 – 07/02	3746	
PORTER Box	1.2 D	26	05/95 -	3746	
PORTER Box	1.2 D	47	01/11 -	3746	
PORTER Box	1.3	52	01/11 -	3746	
PORTER Box	1.3	53	01/11 -	3746	
PORTER Box	1.3 16V	48	06/98 -	3746	
PORTER Box	1.3 16V 4x4	48	06/98 -	3746	
PORTER Box	1.3 i 16V	48	05/98 -	3746	
PORTER Box	1.3 i 16V 4x4	48	05/98 -	3746	
PORTER Box	1.3 LPG	48	06/98 -	3746	
PORTER Box	1.3 LPG	52	01/11 -	3746	
PORTER Box	1.3 LPG	53	01/11 -	3746	
PORTER Box	1.4 D	28	04/98 -	3746	
PORTER Box	ELECTRO	11	06/98 -	3746	
PORTER Box	Elektro	18	01/11 -	3746	

MAKE & MODEL		KW	YEAR		
PIAGGIO					
PORTER Bus	1.2 D	47	01/11 -	3746	
PORTER Bus	1.3	47	08/04 -	3746	
PORTER Bus	1.3	52	01/11 -	3746	
PORTER Bus	1.3	53	01/11 -	3746	
PORTER Bus	1.3 LPG	52	01/11 -	3746	
PORTER Bus	1.3 LPG	53	01/11 -	3746	
PORTER Bus	Elektro	11	01/95 -	3746	
PORTER Bus	Elektro	18	01/11 -	3746	
PORTER Dumptruck	1.2 D	47	01/11 -	3746	
PORTER Dumptruck	1.3	52	01/11 -	3746	
PORTER Dumptruck	1.3	53	01/11 -	3746	
PORTER Dumptruck	1.3 LPG	52	01/11 -	3746	
PORTER Dumptruck	1.3 LPG	53	01/11 -	3746	
PORTER Dumptruck	Elektro	18	01/11 -	3746	
PORTER Platform/Chassis	1.0	33	02/93 – 06/94	3746	
PORTER Platform/Chassis	1.0	35	07/94 -	3746	
PORTER Platform/Chassis	1.2 D	26	05/95 -	3746	
PORTER Platform/Chassis	1.2 D	47	01/11 -	3746	
PORTER Platform/Chassis	1.3	52	01/11 -	3746	
PORTER Platform/Chassis	1.3	53	01/11 -	3746	
PORTER Platform/Chassis	1.3 16V	48	06/98 -	3746	
PORTER Platform/Chassis	1.3 16V 4x4	48	06/98 -	3746	
PORTER Platform/Chassis	1.3 CNG	52	01/11 -	3746	
PORTER Platform/Chassis	1.3 i 16V	48	05/98 -	3746	
PORTER Platform/Chassis	1.3 i 16V 4x4	48	05/98 -	3746	
PORTER Platform/Chassis	1.3 LPG	48	06/98 -	3746	
PORTER Platform/Chassis	1.3 LPG	52	01/11 -	3746	
PORTER Platform/Chassis	1.3 LPG	53	01/11 -	3746	
PORTER Platform/Chassis	1.4 D	28	04/98 -	3746	
PORTER Platform/Chassis	ELECTRIC	11	06/98 -	3746	
PORTER Platform/Chassis	Elektro	18	01/11 -	3746	
PININFARINA					
SPIDEREUROPA (DS)	2000	76	11/84 – 11/85		3317
SPIDEREUROPA (DS)	2000	76	11/84 – 11/85	3466	
SPIDEREUROPA (DS)	2000	76	11/84 – 11/85	3468	
SPIDEREUROPA (DS)	2000	76	11/84 – 11/85	3468	3317
SPIDEREUROPA (DS)	2000	77	03/82 – 09/85		3317
SPIDEREUROPA (DS)	2000	77	03/82 – 09/85	3466	
SPIDEREUROPA (DS)	2000	77	03/82 – 09/85	3468	
SPIDEREUROPA (DS)	2000	77	03/82 – 09/85		3317
SPIDEREUROPA (DS)	2000 Volumex	99	06/83 – 11/85	3466	3317
PLYMOUTH					
Laser 44409 8v	-		01/1988 - 12/1994	3401	
NEON Coupe	2.0	98	10/94 – 09/99	4197	
NEON Coupe	2.0	107	10/94 – 09/99	4197	
NEON II Saloon	2.0 16V	98	08/99 -	4197	
NEON II Saloon	2.0 16V	112	09/99 -	4197	
NEON Saloon	2.0 16V	98	05/94 – 08/99	4197	
NEON Saloon	2.0 16V	107	06/94 – 08/99	4197	
NEON Saloon	2.0 16V	112	04/96 – 08/99	4197	
SOLSTICE Convertible	2.4 VVTi	132	03/05 – 12/09		3853/1
SUNDANCE Coupe	2.2	67	10/89 – 09/94	3867	
SUNDANCE Coupe	2.2 Turbo	129	10/89 – 09/91	3867	
SUNDANCE Saloon	2.2	67	10/89 – 09/94	3867	
SUNDANCE Saloon	2.2 Turbo	129	10/89 – 09/91	3867	
VOYAGER / GRAND VOYAGER	2.0 i	98	01/95 – 03/01	4197	
VOYAGER / GRAND VOYAGER	2.4 i	111	01/95 – 03/01	4197	
VOYAGER / GRAND VOYAGER	2.5 TD	85	01/95 – 03/01	4197	
VOYAGER / GRAND VOYAGER	3.0	112	01/95 – 03/01	4197	
VOYAGER / GRAND VOYAGER	3.3 Flex-Fuel	116	01/98 – 03/01	4197	
VOYAGER / GRAND VOYAGER	3.3 i	116	01/95 – 03/01	4197	
VOYAGER / GRAND VOYAGER	3.8 i	122	01/95 – 03/01	4197	
VOYAGER / GRAND VOYAGER	3.8 i	131	01/95 – 03/01	4197	
VOYAGER / GRAND VOYAGER	3.8 i AWD	122	01/95 – 03/01	4197	
PONTIAC					
BONNEVILLE Sedan	3.8 V6	123	09.1986 - 12.1991	3866	
BONNEVILLE Sedan	3.8 V6	149	09.1991 - 12.1999	3866	
FIREBIRD	5.0	112	12.1981 - 10.1989	3840	
FIREBIRD	5.0	127	09.1987 - 12.1989	3840	
GTO I-II (U.S.A.)	All models		09/63 -	4189	
TRANS SPORT (UM06)	3.1	90	07.1989 - 03.1997	3866	
TRANS SPORT (UM06)	3.8	123	07.1989 - 03.1997	3866	
TRANS SPORT (UM06)	3.8	127	07.1989 - 03.1997	3866	
VOYAGER / GRAND VOYAGER	3.8 i AWD	131	01/95 – 03/01	4197	

MAKE & MODEL   		KW	YEAR		
PORSCHE					
911	2.0 L	96	01/63 – 08/67		3326
911	2.0 L	110	08/67 – 11/68		3326
911	2.7	110	09/73 – 08/75	3320	
911	2.7	110	09/73 – 08/75	3350	
911	2.7	121	09/75 – 06/77	3320	
911	2.7	121	09/75 – 06/77	3350	
911	2.7 S Carrera	129	08/73 – 01/76	3320	
911	2.7 S Carrera	129	08/73 – 01/76	3350	
911	2.7 SC Carrera RS	154	08/72 – 01/79	3320	
911	2.7 SC Carrera RS	154	08/72 – 01/79	3350	
911	3.0 SC	150	08/80 – 07/83	3320	
911	3.0 SC	150	08/80 – 07/83	3350	
911	3.0 SC Carrera	132	07/77 – 06/80	3320	
911	3.0 SC Carrera	132	07/77 – 06/80	3350	
911	3.0 SC Carrera	138	09/79 – 06/80	3320	
911	3.0 SC Carrera	138	09/79 – 06/80	3350	
911	3.0 SC Carrera	147	09/75 – 06/77	3320	
911	3.0 SC Carrera	147	09/75 – 06/77	3350	
911	3.0 SC Carrera	152	02/84 – 06/87	3320	
911	3.0 SC Carrera	154	03/74 – 10/83	3350	
911	3.2	160	08/86 – 08/89	3320	
911	3.2	160	08/86 – 08/89	3350	
911	3.2 SC Carrera	152	02/84 – 06/87	3350	
911	3.2 SC Carrera	154	03/74 – 10/83	3320	
911	3.2 SC Carrera	170	08/83 – 08/89	3320	
911	3.2 SC Carrera	170	08/83 – 08/89	3350	
914	1.7	59	01/69 – 12/73	3318	
914	1.8	63	08/73 – 02/76	3318	
914	2.0	74	01/72 – 12/75	3318	
914	2.0	81	11/69 – 12/73	3318	
911 Convertible	3.0 SC	150	08/82 – 07/83	3320	
911 Convertible	3.0 SC	150	08/82 – 07/83	3350	
911 Convertible	3.2 Carrera Speedster	160	08/86 – 08/89	3320	
911 Convertible	3.2 Carrera Speedster	160	08/86 – 08/89	3350	
911 Convertible	3.2 Carrera Speedster	170	08/86 – 08/89	3320	
911 Convertible	3.2 Carrera Speedster	170	08/86 – 08/89	3350	
911 Convertible	3.2 SC Carrera	152	10/84 – 08/89	3320	
911 Convertible	3.2 SC Carrera	152	10/84 – 08/89	3350	
911 Convertible	3.2 SC Carrera	170	08/83 – 08/84	3320	
911 Convertible	3.2 SC Carrera	170	08/83 – 08/84	3350	
911 Targa	2.7	110	09/73 – 08/75	3320	
911 Targa	2.7	110	09/73 – 08/75	3350	
911 Targa	2.7	121	09/75 – 06/77	3320	
911 Targa	2.7	121	09/75 – 06/77	3350	
911 Targa	2.7 S	129	08/73 – 01/76	3320	
911 Targa	2.7 S	129	08/73 – 01/76	3350	
911 Targa	3.0 SC Carrera	132	07/77 – 06/80	3320	
911 Targa	3.0 SC Carrera	132	07/77 – 06/80	3350	
911 Targa	3.0 SC Carrera	138	09/79 – 06/80	3320	
911 Targa	3.0 SC Carrera	138	09/79 – 06/80	3350	
911 Targa	3.0 SC Carrera	147	09/75 – 06/77	3320	
911 Targa	3.0 SC Carrera	147	09/75 – 06/77	3350	
CAYENNE (92A)	3.0 Diesel	155	06.2010 -		4310
CAYENNE (92A)	3.0 Diesel	176	06.2010 -		4310
CAYENNE (92A)	3.0 Diesel	180	06.2011 -		4310
CAYENNE (92A)	3.0 Diesel	184	08.2014 -		4310
CAYENNE (92A)	3.0 Diesel	193	10.2014 -		4310
CAYENNE (92A)	3.0 S E-Hybrid	245	06.2010 -		4310
CAYENNE (92A)	3.0 S E-Hybrid	306	10.2014 -		4310
CAYENNE (92A)	3.6	220	06.2010 -		4310
CAYENNE (92A)	3.6 GTS	324	02.2015 -		4310
CAYENNE (92A)	3.6 S	309	10.2014 -		4310
CAYENNE (92A)	4.2 S Diesel	281	10.2012 -		4310
CAYENNE (92A)	4.2 S Diesel	283	10.2014 -		4310
CAYENNE (92A)	4.8 GTS	309	06.2012 -		4310
CAYENNE (92A)	4.8 S	294	06.2010 -		4310
CAYENNE (92A)	4.8 Turbo	368	06.2010 -		4310
CAYENNE (92A)	4.8 Turbo	382	10.2014 -		4310
CAYENNE (92A)	4.8 Turbo	397	06.2010 -		4310
CAYENNE (92A)	4.8 Turbo S	405	10.2012 -		4310
CAYENNE (9PA)	3.0 TDI	176	02/09 – 09/10	4075	4076
CAYENNE (9PA)	3.2	184	10/03 – 09/07	4075	4076
CAYENNE (9PA)	3.6	213	02/07 – 09/10	4075	4076
CAYENNE (9PA)	GTS 4.8	298	10/07 – 09/10	4075	4076
CAYENNE (9PA)	S 4.5	250	09/02 – 09/07	4075	4076
CAYENNE (9PA)	S 4.8	283	02/07 – 09/10	4075	4076

MAKE & MODEL   		KW	YEAR		
PORSCHE					
CAYENNE (9PA)	Turbo 4.5	331	09/02 – 09/07	4075	4076
Cayenne I (9PA) 3.0 TDI	M 05.9D	176	02/2009 - 09/2010	4309	
Cayenne I (9PA) 44230	M02.2Y	177	08/2003 - 09/2007	4309	
Cayenne I (9PA) 44230	M02.2Y	184	10/2003 - 09/2007	4309	
Cayenne I (9PA) 44350	M 55.01	213	02/2007 - 09/2010	4075/1	
Cayenne I (9PA) 44350	M 55.01	213	02/2007 - 09/2010	4309	
Cayenne I (9PA) GTS 44412	M 48.01	298	10/2007 - 09/2010	4309	
Cayenne I (9PA) S 44320	M 48.00	250	09/2002 - 09/2007	4075/1	
Cayenne I (9PA) S 44320	M 48.00	250	09/2002 - 09/2007	4309	
Cayenne I (9PA) S 44412	M 48.01	283	02/2007 - 09/2010	4075/1	
Cayenne I (9PA) S 44412	M 48.01	283	02/2007 - 09/2010	4309	
Cayenne I (9PA) Turbo 44320	M 48.50	331	09/2002 - 09/2007	4075/1	
Cayenne I (9PA) Turbo 44320	M 48.50	331	09/2002 - 09/2007	4309	
Cayenne I (9PA) Turbo S 44320	M 48.50S	368	01/2004 - 09/2007	4309	
Cayenne I (9PA) Turbo S 44320	M 48.50T	383	03/2006 - 09/2007	4309	
Cayenne I (9PA) Turbo S 44412	M 48.51	368	02/2007 - 09/2010	4309	
Cayenne I (9PA) Turbo S 44412	M 48.51	397	02/2007 - 09/2010	4309	
Cayenne I (9PA) Turbo S 44412	M 48.51	404	08/2008 - 09/2010	4309	
Cayenne II (92A) 44412 Turbo	M 48.52	368	06/2010 -	4309	
Panamera I -970 3.0 4S	MCW.DA	309	07/2013 - 10/2016	4309	
PROTON					
AEROBACK Hatchback (C2_A, C9_L)	1.3	50	01/91 – 09/93	3604	
AEROBACK Hatchback (C2_A, C9_L)	1.3	50	10/88 – 06/91	3604	
AEROBACK Hatchback (C2_A, C9_L)	1.3	55	10/88 – 11/96	3604	
AEROBACK Hatchback (C2_A, C9_L)	1.5	55	01/91 – 09/93	3604	
AEROBACK Hatchback (C2_A, C9_L)	1.5	55	10/88 – 06/91	3604	
AEROBACK Hatchback (C2_A, C9_L)	1.5	66	01/91 – 11/96	3604	
AEROBACK Hatchback (C2_A, C9_L)	1.5 LX	66	10/88 – 11/96	3604	
AEROBACK Hatchback (C2_A, C9_L)	1.6 EX	70	10/88 – 11/96	3604	
GEN 2 (CM_)	1.3	60	06/04 -	3604	
GEN 2 (CM_)	1.3	70	06/04 -	3604	
GEN 2 (CM_)	1.6	82	06/04 -	3604	
IMPIAN	1.6	76	09/01 -	3604	4062
JUMBUCK Pickup	1.5	64	05/02 -	3604	
PERDANA	2.0 i 16V	101	02/95 -	3622	4108
PERDANA	2.0 i V6	110	02/99 -	3622	4108
PERSONA 300 (C9_M)	316	70	03/96 -	3622	
PERSONA 300 (C9_M)	413	55	01/94 -	3604	
PERSONA 300 (C9_M)	418	85	05/96 -	3622	
PERSONA 300 (C9_M)	1.3	55	08/00 -	3604	
PERSONA 300 (C9_M)	1.3	57	10/05 -	3604	
PERSONA 300 (C9_M)	1.8 GTi	103	08/00 -	3622	
PERSONA 300 (C9_M)	313i	55	03/96 -	3604	
PERSONA 300 (C9_M)	315 GLi/GLSi	66	03/96 -	3604	
PERSONA 400 (C9_S)	315 GLSi	64	09/96 -	3604	
PERSONA 400 (C9_S)	316 GLXi	83	03/96 -	3622	
PERSONA 400 (C9_S)	318 16V GTI	99	03/96 -	3622	
PERSONA 400 (C9_S)	415 GLi/GLSi	66	01/94 -	3604	
PERSONA 400 (C9_S)	416 GLXi	83	01/94 -	3622	
PERSONA 400 (C9_S)	420 GLS D	48	05/96 -	3604	
PERSONA 400 (C9_S)	420 TD	60	09/96 -	3604	
PERSONA 400 Hatchback (C9_C, C9_S)	1.8	99	08/00 – 12/01	3622	
PERSONA 400 Hatchback (C9_C, C9_S)	413 GLSi	55	01/94 -	3604	
PERSONA 400 Hatchback (C9_C, C9_S)	415 GLi/GLSi	66	01/94 -	3604	
PERSONA 400 Hatchback (C9_C, C9_S)	416 GLXi	83	01/94 -	3622	
PERSONA 400 Hatchback (C9_C, C9_S)	418 GLXi	85	05/96 -	3622	
PERSONA 400 Hatchback (C9_C, C9_S)	420 D	60	09/96 -	3604	
PERSONA 400 Hatchback (C9_C, C9_S)	420 GLS D	48	05/96 -	3604	
PUTRA Coupe	1.8 EXi	103	01/95 11/00	3622	
SALOON Saloon (C2_S)	1.3	50	01/91 – 09/93	3604	
SALOON Saloon (C2_S)	1.3	55	10/92 – 06/96	3604	
SALOON Saloon (C2_S)	1.5	55	01/91 – 09/93	3604	
SALOON Saloon (C2_S)	1.5	66	01/91 – 11/96	3604	
SATRIA (C9_M)	1.3	55	07/96 -	3604	
SATRIA (C9_M)	1.5	64	07/00 -	3604	
SATRIA (C9_M)	1.5	66	04/96 -	3604	
SATRIA (C9_M)	1.6	70	07/97 -	3622	
SATRIA (C9_M)	1.6	83	07/97 -	3622	
SATRIA (C9_M)	1.8 GTi	103	08/00 -	3622	
SAVVY	1.2	55	10/05 -	3951	
WIRA	1.3	55	08/00 -	3604	
WIRA	1.3	57	10/05 -	3604	
WIRA	1.5	64	08/00 -	3604	
WIRA	1.5	67	10/05 -	3604	
WIRA	1.6	70	08/00 – 02/02	3622	
WIRA	1.8	99	08/00 – 12/01	3622	

MAKE & MODEL		KW	YEAR		
PROTON					
WIRA	2.0 D	48	01/00 -	3604	
WIRA Hatchback	1.3	55	08/00 -	3604	
WIRA Hatchback	1.3	57	10/05 -	3604	
WIRA Hatchback	1.5	64	08/00 -	3604	
WIRA Hatchback	1.5	67	10/05 -	3604	
WIRA Hatchback	1.8	99	08/00 – 12/01	3622	
WIRA Hatchback	2.0 D	48	01/00 -	3604	
PUCH					
G-MODELL (W 460)	230 G	75	02/80 – 07/87	3513	3804
G-MODELL (W 460)	230 GE	92	04/82 – 08/92	3513	3804
G-MODELL (W 460)	240 GD	53	03/79 – 08/87	3513	3804
G-MODELL (W 460)	250 GD	62	10/87 – 12/92	3513	3804
G-MODELL (W 460)	280 GE	110	08/84 – 08/89	3513	3804
G-MODELL (W 460)	300 GD	65	12/79 – 12/91	3513	3804
G-MODELL (W 461)	230 GE	92	06/93 -	3513	3804
G-MODELL (W 461)	290 GD/G 290 D	70	04/92 – 08/97	3513	3804
G-MODELL (W 461)	G 290 TD	88	07/97 – 12/99	3513	3804
G-MODELL (W 463)	230 GE	93	06/90 – 06/93	3513	3804
G-MODELL (W 463)	300 GD	83	09/89 -	3513	3804
G-MODELL (W 463)	300 GE	125	06/90 – 08/93	3513	3804
G-MODELL (W 463)	350 G Turbo D	100	09/91 – 08/96	3513	3804
G-MODELL (W 463)	G 300 TD	130	08/96 – 12/99	3513	3804
G-MODELL (W 463)	G 320	155	09/94 – 12/97	3513	3804
G-MODELL (W 463)	G 36 AMG	200	01/95 – 04/98	3513	3804
G-MODELL (W 463)	G 500	218	04/98 – 12/99	3513	3804
G-MODELL (W 463)	G 55 AMG	260	04/99 – 12/99	3513	3804
RAM					
LCV Promaster City MPV/Space Wagon 44288	ED6	133	09/2014 -	4121/1	
LCV Promaster City Van (VM) 44288	ED6	133	09/2014 -	4121/1	
RELIANT					
SCIMITAR SABRE Roadster	1800 Ti	99	01/92 – 08/94	3624	
SCIMITAR SABRE Roadster	2.0 i	99	08/94 – 12/95	3624	
RELY					
V5	1.8	97	09/09 -		3911
V5	1.9 TD	93	09/09 -		3911
V5	2.0	102	09/09 -		3911
RENAULT					
11 (B/C37_	1.1 (B/C371)	35	03.1983 - 06.1986	3488	
11 (B/C37_	1.2 (B37S, C375)	40	10.1984 - 12.1988	3488	
11 (B/C37_	1.4 (B/C372, B/C37C)	44	03.1983 - 12.1988	3488	
11 (B/C37_	1.4 (B/C373)	50	03.1983 - 12.1985	3488	
11 (B/C37_	1.4 (B/C373)	53	05.1983 - 12.1985	3488	
11 (B/C37_	1.4 (B/C373, B/C37R)	49	03.1983 - 12.1988	3488	
11 (B/C37_	1.4 Turbo (B/C375)	77	04.1984 - 12.1986	3488	
11 (B/C37_	1.4 Turbo (B/C375)	85	10.1986 - 12.1988	3488	
11 (B/C37_	1.6 D (B/C374)	40	08.1983 - 12.1988	3488	
11 (B/C37_	1.7 (B/C376)	59	10.1983 - 12.1987	3488	
11 (B/C37_	1.7 (B/C37D)	64	06.1987 - 12.1988	3488	
11 (B/C37_	1.7 (B/C37E)	69	06.1987 - 12.1988	3488	
11 (B/C37_	1.7 (B/C37F)	55	10.1984 - 12.1988	3488	
11 (B/C37_	1.7 (B/C37L)	54	10.1986 - 12.1988	3488	
11 (B/C37_	1.7 (B37N, C73N)	65	10.1986 - 12.1988	3488	
11 (B/C37_)	1.1 (B/C371)	35	03.1983 - 06.1986	3503/1	
11 (B/C37_)	1.2 (B37S, C375)	40	10.1984 - 12.1988	3503/1	
11 (B/C37_)	1.4 (B/C372, B/C37C)	44	03.1983 - 12.1988	3503/1	
11 (B/C37_)	1.4 (B/C373)	50	03.1983 - 12.1985	3503/1	
11 (B/C37_)	1.4 (B/C373)	53	05.1983 - 12.1985	3503/1	
11 (B/C37_)	1.4 (B/C373, B/C37R)	49	03.1983 - 12.1988	3503/1	
11 (B/C37_)	1.4 Turbo (B/C375)	77	04.1984 - 12.1986	3503/1	
11 (B/C37_)	1.4 Turbo (B/C375)	85	10.1986 - 12.1988	3503/1	
11 (B/C37_)	1.6 D (B/C374)	40	08.1983 - 12.1988	3503/1	
11 (B/C37_)	1.7 (B/C376)	59	10.1983 - 12.1987	3503/1	
11 (B/C37_)	1.7 (B/C37D)	64	06.1987 - 12.1988	3503/1	
11 (B/C37_)	1.7 (B/C37E)	69	06.1987 - 12.1988	3503/1	
11 (B/C37_)	1.7 (B/C37F)	55	10.1984 - 12.1988	3503/1	
11 (B/C37_)	1.7 (B/C37L)	54	10.1986 - 12.1988	3503/1	
11 (B/C37_)	1.7 (B37N, C73N)	65	10.1986 - 12.1988	3503/1	
11 (B/C37_)	1.1 (B/C371)	35	03/83 – 06/86	3380	
11 (B/C37_)	1.1 (B/C371)	35	03/83 – 06/86	3381	
11 (B/C37_)	1.1 (B/C371)	35	03/83 – 06/86	3431	
11 (B/C37_)	1.1 (B/C371)	35	03/83 – 06/86	3503	
11 (B/C37_)	1.1 (B/C371)	35	03/83 – 06/86	3580	
11 (B/C37_)	1.2 (B/C37S)	40	10/84 – 12/88	3380	
11 (B/C37_)	1.2 (B/C37S)	40	10/84 – 12/88	3381	

MAKE & MODEL		KW	YEAR		
RENAULT					
11 (B/C37_)	1.2 (B/C37S)	40	10/84 – 12/88	3431	
11 (B/C37_)	1.2 (B/C37S)	40	10/84 – 12/88	3503	
11 (B/C37_)	1.2 (B/C37S)	40	10/84 – 12/88	3580	
11 (B/C37_)	1.4 (B/C372, B/C37C)	44	03/83 – 12/88	3380	
11 (B/C37_)	1.4 (B/C372, B/C37C)	44	03/83 – 12/88	3381	
11 (B/C37_)	1.4 (B/C372, B/C37C)	44	03/83 – 12/88	3431	
11 (B/C37_)	1.4 (B/C372, B/C37C)	44	03/83 – 12/88	3503	
11 (B/C37_)	1.4 (B/C372, B/C37C)	44	03/83 – 12/88	3580	
11 (B/C37_)	1.4 (B/C373)	50	03/83 – 12/85	3380	
11 (B/C37_)	1.4 (B/C373)	50	03/83 – 12/85	3381	
11 (B/C37_)	1.4 (B/C373)	50	03/83 – 12/85	3431	
11 (B/C37_)	1.4 (B/C373)	50	03/83 – 12/85	3503	
11 (B/C37_)	1.4 (B/C373)	50	03/83 – 12/85	3580	
11 (B/C37_)	1.4 (B/C373)	53	05/83 – 12/85	3380	
11 (B/C37_)	1.4 (B/C373)	53	05/83 – 12/85	3381	
11 (B/C37_)	1.4 (B/C373)	53	05/83 – 12/85	3431	
11 (B/C37_)	1.4 (B/C373)	53	05/83 – 12/85	3503	
11 (B/C37_)	1.4 (B/C373)	53	05/83 – 12/85	3580	
11 (B/C37_)	1.4 (B/C373, B/C37R)	49	03/83 – 12/88	3380	
11 (B/C37_)	1.4 (B/C373, B/C37R)	49	03/83 – 12/88	3381	
11 (B/C37_)	1.4 (B/C373, B/C37R)	49	03/83 – 12/88	3431	
11 (B/C37_)	1.4 (B/C373, B/C37R)	49	03/83 – 12/88	3503	
11 (B/C37_)	1.4 (B/C373, B/C37R)	49	03/83 – 12/88	3580	
11 (B/C37_)	1.4 Turbo (B/C375)	77	04/84 – 12/86	3431	3496
11 (B/C37_)	1.4 Turbo (B/C375)	77	04/84 – 12/86	3380	
11 (B/C37_)	1.4 Turbo (B/C375)	77	04/84 – 12/86	3381	
11 (B/C37_)	1.4 Turbo (B/C375)	77	04/84 – 12/86	3503	
11 (B/C37_)	1.4 Turbo (B/C375)	77	04/84 – 12/86	3580	
11 (B/C37_)	1.4 Turbo (B/C375)	85	10/86 – 12/88	3431	3496
11 (B/C37_)	1.4 Turbo (B/C375)	85	10/86 – 12/88	3380	
11 (B/C37_)	1.4 Turbo (B/C375)	85	10/86 – 12/88	3381	
11 (B/C37_)	1.4 Turbo (B/C375)	85	10/86 – 12/88	3503	
11 (B/C37_)	1.4 Turbo (B/C375)	85	10/86 – 12/88	3580	
11 (B/C37_)	1.6 D (B/C374)	40	08/83 – 12/88	3380	
11 (B/C37_)	1.6 D (B/C374)	40	08/83 – 12/88	3381	
11 (B/C37_)	1.6 D (B/C374)	40	08/83 – 12/88	3431	
11 (B/C37_)	1.6 D (B/C374)	40	08/83 – 12/88	3503	
11 (B/C37_)	1.6 D (B/C374)	40	08/83 – 12/88	3580	
11 (B/C37_)	1.7 (B/C376)	59	10/83 – 12/87	3380	
11 (B/C37_)	1.7 (B/C376)	59	10/83 – 12/87	3381	
11 (B/C37_)	1.7 (B/C376)	59	10/83 – 12/87	3431	
11 (B/C37_)	1.7 (B/C376)	59	10/83 – 12/87	3503	
11 (B/C37_)	1.7 (B/C376)	59	10/83 – 12/87	3580	
11 (B/C37_)	1.7 (B/C37D)	64	06/87 – 12/88	3380	
11 (B/C37_)	1.7 (B/C37D)	64	06/87 – 12/88	3381	
11 (B/C37_)	1.7 (B/C37D)	64	06/87 – 12/88	3431	
11 (B/C37_)	1.7 (B/C37D)	64	06/87 – 12/88	3503	
11 (B/C37_)	1.7 (B/C37D)	64	06/87 – 12/88	3580	
11 (B/C37_)	1.7 (B/C37E)	69	06/87 – 12/88	3380	
11 (B/C37_)	1.7 (B/C37E)	69	06/87 – 12/88	3381	
11 (B/C37_)	1.7 (B/C37E)	69	06/87 – 12/88	3431	
11 (B/C37_)	1.7 (B/C37E)	69	06/87 – 12/88	3503	
11 (B/C37_)	1.7 (B/C37E)	69	06/87 – 12/88	3580	
11 (B/C37_)	1.7 (B/C37F)	55	10/84 – 12/88	3380	
11 (B/C37_)	1.7 (B/C37F)	55	10/84 – 12/88	3381	
11 (B/C37_)	1.7 (B/C37F)	55	10/84 – 12/88	3431	
11 (B/C37_)	1.7 (B/C37F)	55	10/84 – 12/88	3503	
11 (B/C37_)	1.7 (B/C37F)	55	10/84 – 12/88	3580	
11 (B/C37_)	1.7 (B/C37L)	54	10/86 – 12/88	3380	
11 (B/C37_)	1.7 (B/C37L)	54	10/86 – 12/88	3381	
11 (B/C37_)	1.7 (B/C37L)	54	10/86 – 12/88	3431	
11 (B/C37_)	1.7 (B/C37L)	54	10/86 – 12/88	3503	
11 (B/C37_)	1.7 (B/C37L)	54	10/86 – 12/88	3580	
11 (B/C37_)	1.7 (B/C37N)	65	10/86 – 12/88	3380	
11 (B/C37_)	1.7 (B/C37N)	65	10/86 – 12/88	3381	
11 (B/C37_)	1.7 (B/C37N)	65	10/86 – 12/88	3431	
11 (B/C37_)	1.7 (B/C37N)	65	10/86 – 12/88	3503	
11 (B/C37_)	1.7 (B/C37N)	65	10/86 – 12/88	3580	
11 Box (S37_)	1.1 (S371)	35	03/83 – 06/86	3380	
11 Box (S37_)	1.1 (S371)	35	03/83 – 06/86	3381	
11 Box (S37_)	1.1 (S371)	35	03/83 – 06/86	3431	
11 Box (S37_)	1.1 (S371)	35	03/83 – 06/86	3503	
11 Box (S37_)	1.1 (S371)	35	03/83 – 06/86	3580	
11 Box (S37_)	1.2 (S37S)	40	10/84 – 12/88	3380	
11 Box (S37_)	1.2 (S37S)	40	10/84 – 12/88	3381	
11 Box (S37_)	1.2 (S37S)	40	10/84 – 12/88	3431	

MAKE & MODEL   		KW	YEAR		
RENAULT					
11 Box (S37_)	1.2 (S37S)	40	10/84 – 12/88	3503	
11 Box (S37_)	1.2 (S37S)	40	10/84 – 12/88	3580	
11 Box (S37_)	1.4 (S372)	44	03/83 – 09/86	3380	
11 Box (S37_)	1.4 (S372)	44	03/83 – 09/86	3381	
11 Box (S37_)	1.4 (S372)	44	03/83 – 09/86	3431	
11 Box (S37_)	1.4 (S372)	44	03/83 – 09/86	3503	
11 Box (S37_)	1.4 (S372)	44	03/83 – 09/86	3580	
11 Box (S37_)	1.4 (S373)	50	03/83 – 12/86	3380	
11 Box (S37_)	1.4 (S373)	50	03/83 – 12/86	3381	
11 Box (S37_)	1.4 (S373)	50	03/83 – 12/86	3431	
11 Box (S37_)	1.4 (S373)	50	03/83 – 12/86	3503	
11 Box (S37_)	1.4 (S373)	50	03/83 – 12/86	3580	
11 Box (S37_)	1.6 D (S374)	40	08/83 – 12/88	3380	
11 Box (S37_)	1.6 D (S374)	40	08/83 – 12/88	3381	
11 Box (S37_)	1.6 D (S374)	40	08/83 – 12/88	3431	
11 Box (S37_)	1.6 D (S374)	40	08/83 – 12/88	3503	
11 Box (S37_)	1.6 D (S374)	40	08/83 – 12/88	3580	
14 (121_)	1.2 (1210)	42	05/76 – 01/80	3329	
14 (121_)	1.2 (1210)	42	05/76 – 01/80	3806/1	
14 (121_)	1.2 (1210)	43	01/80 – 12/83	3329	
14 (121_)	1.2 (1210)	43	01/80 – 12/83	3806/1	
14 (121_)	1.4 (1212)	52	09/79 – 06/83	3329	
14 (121_)	1.4 (1212)	52	09/79 – 06/83	3806/1	
14 (121_)	1.4 (1213)	44	12/81 – 12/83	3329	
14 (121_)	1.4 (1213)	44	12/81 – 12/83	3806/1	
18 (134_	1.4 (1340)	47	04.1978 - 07.1986	3488	
18 (134_	1.6 (1341)	54	04.1982 - 07.1986	3488	
18 (134_	1.6 TS (1342)	71	05.1982 - 07.1986	3488	
18 (134_	1.6 Turbo (1345)	80	10.1980 - 09.1982	3488	
18 (134_	1.6 Turbo (1345)	92	10.1982 - 07.1986	3488	
18 (134_	2.0 (1343)	77	05.1982 - 07.1986	3488	
18 (134_	2.1 Diesel	53	11.1981 - 07.1986	3488	
18 (134_	2.1 Diesel (1344)	49	11.1981 - 07.1986	3488	
18 (134_	2.1 TD	65	11.1981 - 07.1986	3488	
18 (134_)	1.4 (1340)	47	04.1978 - 07.1986	3503/1	
18 (134_)	1.6 (1341)	58	04.1978 - 09.1982	3503/1	
18 (134_)	1.6 TS (1342)	71	05.1982 - 07.1986	3503/1	
18 (134_)	1.6 Turbo (1345)	80	10.1980 - 09.1982	3503/1	
18 (134_)	1.6 Turbo (1345)	92	10.1982 - 07.1986	3503/1	
18 (134_)	2.0 (1343)	77	05.1982 - 07.1986	3503/1	
18 (134_)	2.1 Diesel	53	11.1981 - 07.1986	3503/1	
18 (134_)	2.1 Diesel (1344)	49	11.1981 - 07.1986	3503/1	
18 (134_)	2.1 TD	65	11.1981 - 07.1986	3503/1	
18 (134_)	1.4 (1340)	47	04/78 – 07/86	3329/1	
18 (134_)	1.4 (1340)	47	04/78 – 07/86	3380	
18 (134_)	1.4 (1340)	47	04/78 – 07/86	3381	
18 (134_)	1.4 (1340)	47	04/78 – 07/86	3431	
18 (134_)	1.4 (1340)	47	04/78 – 07/86	3503	
18 (134_)	1.4 (1340)	47	04/78 – 07/86	3580	
18 (134_)	1.6 (1341)	54	04/82 – 07/86	3329/1	
18 (134_)	1.6 (1341)	54	04/82 – 07/86	3380	
18 (134_)	1.6 (1341)	54	04/82 – 07/86	3381	
18 (134_)	1.6 (1341)	54	04/82 – 07/86	3431	
18 (134_)	1.6 (1341)	54	04/82 – 07/86	3503	
18 (134_)	1.6 (1341)	54	04/82 – 07/86	3580	
18 (134_)	1.6 (1341)	58	04/78 – 09/82	3329/1	
18 (134_)	1.6 TS (1342)	71	05/82 – 07/86	3380	
18 (134_)	1.6 TS (1342)	71	05/82 – 07/86	3381	
18 (134_)	1.6 TS (1342)	71	05/82 – 07/86	3431	
18 (134_)	1.6 TS (1342)	71	05/82 – 07/86	3503	
18 (134_)	1.6 TS (1342)	71	05/82 – 07/86	3580	
18 (134_)	1.6 Turbo (1345)	80	10/80 – 09/82	3380	3333
18 (134_)	1.6 Turbo (1345)	80	10/80 – 09/82	3381	
18 (134_)	1.6 Turbo (1345)	80	10/80 – 09/82	3431	
18 (134_)	1.6 Turbo (1345)	80	10/80 – 09/82	3503	
18 (134_)	1.6 Turbo (1345)	80	10/80 – 09/82	3580	
18 (134_)	1.6 Turbo (1345)	92	10/82 – 07/86	3380	3333
18 (134_)	1.6 Turbo (1345)	92	10/82 – 07/86	3381	
18 (134_)	1.6 Turbo (1345)	92	10/82 – 07/86	3431	
18 (134_)	1.6 Turbo (1345)	92	10/82 – 07/86	3503	
18 (134_)	1.6 Turbo (1345)	92	10/82 – 07/86	3580	
18 (134_)	2.0 (1343)	77	05/82 – 07/86	3380	
18 (134_)	2.0 (1343)	77	05/82 – 07/86	3381	
18 (134_)	2.0 (1343)	77	05/82 – 07/86	3431	
18 (134_)	2.0 (1343)	77	05/82 – 07/86	3503	
18 (134_)	2.0 (1343)	77	05/82 – 07/86	3580	

MAKE & MODEL		KW	YEAR		
RENAULT					
18 (134_)	2.1 Diesel	53	11/81 – 07/86	3380	
18 (134_)	2.1 Diesel	53	11/81 – 07/86	3381	
18 (134_)	2.1 Diesel	53	11/81 – 07/86	3431	
18 (134_)	2.1 Diesel	53	11/81 – 07/86	3503	
18 (134_)	2.1 Diesel	53	11/81 – 07/86	3580	
18 (134_)	2.1 Diesel (1344)	49	11/81 – 07/86	3380	
18 (134_)	2.1 Diesel (1344)	49	11/81 – 07/86	3381	
18 (134_)	2.1 Diesel (1344)	49	11/81 – 07/86	3431	
18 (134_)	2.1 Diesel (1344)	49	11/81 – 07/86	3503	
18 (134_)	2.1 Diesel (1344)	49	11/81 – 07/86	3580	
18 (134_)	2.1 TD	65	11/81 – 07/86	3380	
18 (134_)	2.1 TD	65	11/81 – 07/86	3381	
18 (134_)	2.1 TD	65	11/81 – 07/86	3431	
18 (134_)	2.1 TD	65	11/81 – 07/86	3503	
18 (134_)	2.1 TD	65	11/81 – 07/86	3580	
18 (134_)	2.2 i	76	06/84 – 07/86	3380	
18 (134_)	2.2 i	76	06/84 – 07/86	3381	
18 (134_)	2.2 i	76	06/84 – 07/86	3431	
18 (134_)	2.2 i	76	06/84 – 07/86	3503	
18 (134_)	2.2 i	76	06/84 – 07/86	3580	
18 Variable (135_	1.4 (1350)	47	05.1979 - 07.1986	3488	
18 Variable (135_	1.6 (1351)	54	01.1982 - 07.1986	3488	
18 Variable (135_	1.6 (1351)	58	05.1979 - 09.1982	3488	
18 Variable (135_	1.6 4x4	54	01.1983 - 07.1986	3488	
18 Variable (135_	1.6 TS	71	05.1982 - 07.1986	3488	
18 Variable (135_	2.0 (1353)	77	10.1981 - 07.1986	3488	
18 Variable (135_	2.0 4x4	76	05.1983 - 12.1986	3488	
18 Variable (135_	2.1 Diesel (1354)	49	11.1980 - 07.1986	3488	
18 Variable (135_)	1.4 (1350)	47	05.1979 - 07.1986	3503/1	
18 Variable (135_)	1.6 (1351)	54	01.1982 - 07.1986	3503/1	
18 Variable (135_)	1.6 (1351)	58	05.1979 - 09.1982	3503/1	
18 Variable (135_)	1.6 4x4	54	01.1983 - 07.1986	3503/1	
18 Variable (135_)	1.6 TS	71	05.1982 - 07.1986	3503/1	
18 Variable (135_)	1.6 Turbo	92	10.1982 - 07.1986	3503/1	
18 Variable (135_)	2.0 (1353)	77	10.1981 - 07.1986	3503/1	
18 Variable (135_)	2.0 4x4	76	05.1983 - 12.1986	3503/1	
18 Variable (135_)	2.1 Diesel (1354)	49	11.1980 - 07.1986	3503/1	
18 Variable (135_)	1.4 (1350)	47	05/79 – 07/86	3329/1	
18 Variable (135_)	1.4 (1350)	47	05/79 – 07/86	3380	
18 Variable (135_)	1.4 (1350)	47	05/79 – 07/86	3381	
18 Variable (135_)	1.4 (1350)	47	05/79 – 07/86	3431	
18 Variable (135_)	1.4 (1350)	47	05/79 – 07/86	3503	
18 Variable (135_)	1.4 (1350)	47	05/79 – 07/86	3580	
18 Variable (135_)	1.6 (1351)	54	01/82 – 07/86	3329/1	
18 Variable (135_)	1.6 (1351)	54	01/82 – 07/86	3380	
18 Variable (135_)	1.6 (1351)	54	01/82 – 07/86	3381	
18 Variable (135_)	1.6 (1351)	54	01/82 – 07/86	3431	
18 Variable (135_)	1.6 (1351)	54	01/82 – 07/86	3503	
18 Variable (135_)	1.6 (1351)	54	01/82 – 07/86	3580	
18 Variable (135_)	1.6 (1351)	58	05/79 – 09/82	3329/1	
18 Variable (135_)	1.6 (1351)	58	05/79 – 09/82	3380	
18 Variable (135_)	1.6 (1351)	58	05/79 – 09/82	3381	
18 Variable (135_)	1.6 (1351)	58	05/79 – 09/82	3431	
18 Variable (135_)	1.6 (1351)	58	05/79 – 09/82	3503	
18 Variable (135_)	1.6 (1351)	58	05/79 – 09/82	3580	
18 Variable (135_)	1.6 4x4	54	01/83 – 07/86	3380	
18 Variable (135_)	1.6 4x4	54	01/83 – 07/86	3381	
18 Variable (135_)	1.6 4x4	54	01/83 – 07/86	3431	
18 Variable (135_)	1.6 4x4	54	01/83 – 07/86	3503	
18 Variable (135_)	1.6 4x4	54	01/83 – 07/86	3580	
18 Variable (135_)	1.6 TS	71	05/82 – 07/86	3380	
18 Variable (135_)	1.6 TS	71	05/82 – 07/86	3381	
18 Variable (135_)	1.6 TS	71	05/82 – 07/86	3431	
18 Variable (135_)	1.6 TS	71	05/82 – 07/86	3503	
18 Variable (135_)	1.6 TS	71	05/82 – 07/86	3580	
18 Variable (135_)	2.0 (1353)	77	10/81 – 07/86	3380	
18 Variable (135_)	2.0 (1353)	77	10/81 – 07/86	3381	
18 Variable (135_)	2.0 (1353)	77	10/81 – 07/86	3431	
18 Variable (135_)	2.0 (1353)	77	10/81 – 07/86	3503	
18 Variable (135_)	2.0 (1353)	77	10/81 – 07/86	3580	
18 Variable (135_)	2.0 4x4	76	05/83 – 12/86	3380	
18 Variable (135_)	2.0 4x4	76	05/83 – 12/86	3381	
18 Variable (135_)	2.0 4x4	76	05/83 – 12/86	3431	
18 Variable (135_)	2.0 4x4	76	05/83 – 12/86	3503	
18 Variable (135_)	2.0 4x4	76	05/83 – 12/86	3580	
18 Variable (135_)	2.1 Diesel	53	05/79 – 07/86	3329/1	

MAKE & MODEL   		KW	YEAR		
RENAULT					
18 Variable (135_)	2.1 Diesel	53	05/79 – 07/86	3380	
18 Variable (135_)	2.1 Diesel	53	05/79 – 07/86	3381	
18 Variable (135_)	2.1 Diesel	53	05/79 – 07/86	3431	
18 Variable (135_)	2.1 Diesel	53	05/79 – 07/86	3503	
18 Variable (135_)	2.1 Diesel	53	05/79 – 07/86	3580	
18 Variable (135_)	2.1 Diesel (1354)	49	11/80 – 07/86	3329/1	
18 Variable (135_)	2.1 Diesel (1354)	49	11/80 – 07/86	3380	
18 Variable (135_)	2.1 Diesel (1354)	49	11/80 – 07/86	3381	
18 Variable (135_)	2.1 Diesel (1354)	49	11/80 – 07/86	3431	
18 Variable (135_)	2.1 Diesel (1354)	49	11/80 – 07/86	3503	
18 Variable (135_)	2.1 Diesel (1354)	49	11/80 – 07/86	3580	
19 I (B/C53_	1.2	40	01.1988 - 12.1992	3488	
19 I (B/C53_	1.4	59	01.1988 - 12.1992	3488	
19 I (B/C53_	1.4 (B/C53P)	43	01.1989 - 05.1993	3488	
19 I (B/C53_	1.4 Cat (B/C532)	43	01.1989 - 04.1992	3488	
19 I (B/C53_	1.7 (B/C53B)	54	09.1988 - 04.1992	3488	
19 I (B/C53_	1.7 (B/C53C)	66	09.1988 - 04.1992	3488	
19 I (B/C53_	1.8 16V (B/C53D)	99	06.1989 - 04.1992	3488	
19 I (B/C53_	1.9 D (B/C534, B/C53J)	47	09.1988 - 04.1992	3488	
19 I (B/C53_	1.9 DT	68	09.1990 - 04.1992	3488	
19 I (B/C53_)	1.2	40	01.1988 - 12.1992	3503/1	
19 I (B/C53_)	1.4	59	01.1988 - 12.1992	3503/1	
19 I (B/C53_)	1.4 (B/C53P)	43	01.1989 - 05.1993	3503/1	
19 I (B/C53_)	1.4 Cat (B/C532)	43	01.1989 - 04.1992	3503/1	
19 I (B/C53_)	1.7	68	09.1988 - 04.1992	3503/1	
19 I (B/C53_)	1.7	69	07.1988 - 04.1992	3503/1	
19 I (B/C53_)	1.7	79	06.1989 - 04.1992	3503/1	
19 I (B/C53_)	1.7 (B/C53B)	54	09.1988 - 04.1992	3503/1	
19 I (B/C53_)	1.7 (B/C53C)	66	09.1988 - 04.1992	3503/1	
19 I (B/C53_)	1.8	67	05.1992 - 09.1994	3503/1	
19 I (B/C53_)	1.8 16V	101	06.1989 - 04.1992	3503/1	
19 I (B/C53_)	1.8 16V (B/C53D)	99	06.1989 - 04.1992	3503/1	
19 I (B/C53_)	1.9 D (B/C534, B/C53J)	47	09.1988 - 04.1992	3503/1	
19 I (B/C53_)	1.9 DT	66	09.1990 - 04.1992	3503/1	
19 I (B/C53_)	1.9 DT	68	09.1990 - 04.1992	3503/1	
19 I (B/C53_)	1.2	40	01/88 – 12/92	3380	
19 I (B/C53_)	1.2	40	01/88 – 12/92	3381	
19 I (B/C53_)	1.2	40	01/88 – 12/92	3431	
19 I (B/C53_)	1.2	40	01/88 – 12/92	3503	
19 I (B/C53_)	1.2	40	01/88 – 12/92	3580	
19 I (B/C53_)	1.4	55	09/90 – 04/92	3380	
19 I (B/C53_)	1.4	55	09/90 – 04/92	3381	
19 I (B/C53_)	1.4	55	09/90 – 04/92	3431	
19 I (B/C53_)	1.4	55	09/90 – 04/92	3503	
19 I (B/C53_)	1.4	55	09/90 – 04/92	3580	
19 I (B/C53_)	1.4	59	01/88 – 12/92	3380	
19 I (B/C53_)	1.4	59	01/88 – 12/92	3381	
19 I (B/C53_)	1.4	59	01/88 – 12/92	3431	
19 I (B/C53_)	1.4	59	01/88 – 12/92	3503	
19 I (B/C53_)	1.4	59	01/88 – 12/92	3580	
19 I (B/C53_)	1.4 (B/C532) CAT	43	01/89 – 04/92	3380	
19 I (B/C53_)	1.4 (B/C532) CAT	43	01/89 – 04/92	3381	
19 I (B/C53_)	1.4 (B/C532) CAT	43	01/89 – 04/92	3431	
19 I (B/C53_)	1.4 (B/C532) CAT	43	01/89 – 04/92	3503	
19 I (B/C53_)	1.4 (B/C532) CAT	43	01/89 – 04/92	3580	
19 I (B/C53_)	1.4 (B/C53P)	43	01/89 – 12/89	3380	
19 I (B/C53_)	1.4 (B/C53P)	43	01/89 – 12/89	3381	
19 I (B/C53_)	1.4 (B/C53P)	43	01/89 – 12/89	3431	
19 I (B/C53_)	1.4 (B/C53P)	43	01/89 – 12/89	3503	
19 I (B/C53_)	1.4 (B/C53P)	43	01/89 – 12/89	3580	
19 I (B/C53_)	1.7 (B/C53B)	54	09/88 – 04/92	3431	3496
19 I (B/C53_)	1.7 (B/C53B)	54	09/88 – 04/92	3380	
19 I (B/C53_)	1.7 (B/C53B)	54	09/88 – 04/92	3381	
19 I (B/C53_)	1.7 (B/C53B)	54	09/88 – 04/92	3503	
19 I (B/C53_)	1.7 (B/C53B)	54	09/88 – 04/92	3580	
19 I (B/C53_)	1.7 (B/C53C)	66	09/88 – 04/92	3431	3496
19 I (B/C53_)	1.7 (B/C53C)	66	09/88 – 04/92	3380	
19 I (B/C53_)	1.7 (B/C53C)	66	09/88 – 04/92	3381	
19 I (B/C53_)	1.7 (B/C53C)	66	09/88 – 04/92	3503	
19 I (B/C53_)	1.7 (B/C53C)	66	09/88 – 04/92	3580	
19 I (B/C53_)	1.8 16V (B/C53D)	99	06/89 – 04/92	3380	
19 I (B/C53_)	1.8 16V (B/C53D)	99	06/89 – 04/92	3381	
19 I (B/C53_)	1.8 16V (B/C53D)	99	06/89 – 04/92	3431	
19 I (B/C53_)	1.8 16V (B/C53D)	99	06/89 – 04/92	3503	
19 I (B/C53_)	1.8 16V (B/C53D)	99	06/89 – 04/92	3580	
19 I (B/C53_)	1.9 D (B/C534, B/C53J)	47	09/88 – 04/92	3431	3496

MAKE & MODEL		KW	YEAR		
RENAULT					
19 I (B/C53_)	1.9 D (B/C534, B/C53J)	47	09/88 – 04/92	3380	
19 I (B/C53_)	1.9 D (B/C534, B/C53J)	47	09/88 – 04/92	3381	
19 I (B/C53_)	1.9 D (B/C534, B/C53J)	47	09/88 – 04/92	3503	
19 I (B/C53_)	1.9 D (B/C534, B/C53J)	47	09/88 – 04/92	3580	
19 I (B/C53_)	1.9 DT	68	09/90 – 04/92	3431	3496
19 I (B/C53_)	1.9 DT	68	09/90 – 04/92	3380	
19 I (B/C53_)	1.9 DT	68	09/90 – 04/92	3381	
19 I (B/C53_)	1.9 DT	68	09/90 – 04/92	3503	
19 I (B/C53_)	1.9 DT	68	09/90 – 04/92	3580	
19 I Box (S53_)	1.2	40	01/88 – 12/92	3431	3496
19 I Box (S53_)	1.2	40	01/88 – 12/92	3380	
19 I Box (S53_)	1.2	40	01/88 – 12/92	3381	
19 I Box (S53_)	1.2	40	01/88 – 12/92	3503	
19 I Box (S53_)	1.2	40	01/88 – 12/92	3580	
19 I Box (S53_)	1.4	59	01/88 – 12/92	3431	3496
19 I Box (S53_)	1.4	59	01/88 – 12/92	3380	
19 I Box (S53_)	1.4	59	01/88 – 12/92	3381	
19 I Box (S53_)	1.4	59	01/88 – 12/92	3503	
19 I Box (S53_)	1.4	59	01/88 – 12/92	3580	
19 I Box (S53_)	1.9 D	48	01/88 – 12/92	3431	3496
19 I Box (S53_)	1.9 D	48	01/88 – 12/92	3380	
19 I Box (S53_)	1.9 D	48	01/88 – 12/92	3381	
19 I Box (S53_)	1.9 D	48	01/88 – 12/92	3503	
19 I Box (S53_)	1.9 D	48	01/88 – 12/92	3580	
19 I Cabriolet (D53_	1.7	55	07.1991 - 04.1992	3488	
19 I Cabriolet (D53_	1.7	70	07.1991 - 04.1992	3488	
19 I Cabriolet (D53_	1.8 16V (D53D)	101	07.1991 - 04.1992	3488	
19 I Cabriolet (D53_)	1.7	55	07.1991 - 04.1992	3503/1	
19 I Cabriolet (D53_)	1.7	66	07.1991 - 04.1992	3503/1	
19 I Cabriolet (D53_)	1.7	70	07.1991 - 04.1992	3503/1	
19 I Cabriolet (D53_)	1.8 16V (D53D)	101	07.1991 - 04.1992	3503/1	
19 I Cabriolet (D53_)	1.7	55	07/91 – 04/92	3431	3496
19 I Cabriolet (D53_)	1.7	55	07/91 – 04/92	3380	
19 I Cabriolet (D53_)	1.7	55	07/91 – 04/92	3381	
19 I Cabriolet (D53_)	1.7	55	07/91 – 04/92	3503	
19 I Cabriolet (D53_)	1.7	55	07/91 – 04/92	3580	
19 I Cabriolet (D53_)	1.7	70	07/91 – 04/92	3431	3496
19 I Cabriolet (D53_)	1.7	70	07/91 – 04/92	3380	
19 I Cabriolet (D53_)	1.7	70	07/91 – 04/92	3381	
19 I Cabriolet (D53_)	1.7	70	07/91 – 04/92	3503	
19 I Cabriolet (D53_)	1.7	70	07/91 – 04/92	3580	
19 I Cabriolet (D53_)	1.8 16V (D53D)	101	07/91 – 04/92	3380	
19 I Cabriolet (D53_)	1.8 16V (D53D)	101	07/91 – 04/92	3381	
19 I Cabriolet (D53_)	1.8 16V (D53D)	101	07/91 – 04/92	3431	
19 I Cabriolet (D53_)	1.8 16V (D53D)	101	07/91 – 04/92	3503	
19 I Cabriolet (D53_)	1.8 16V (D53D)	101	07/91 – 04/92	3580	
19 I Chamade (L53_	1.2	40	01.1988 - 12.1992	3488	
19 I Chamade (L53_	1.4	58	06.1989 - 08.1990	3488	
19 I Chamade (L53_	1.4 (L532, L53P)	43	07.1988 - 04.1992	3488	
19 I Chamade (L53_	1.7 (L53B)	54	10.1989 - 04.1992	3488	
19 I Chamade (L53_	1.7 (L53C)	66	07.1988 - 04.1992	3488	
19 I Chamade (L53_	1.7 (L53F)	79	08.1988 - 12.1992	3488	
19 I Chamade (L53_	1.8 16V (L53D)	99	10.1989 - 04.1992	3488	
19 I Chamade (L53_	1.9 D (L534, L53J)	47	10.1989 - 04.1992	3488	
19 I Chamade (L53_	1.9 TD (L53K)	68	09.1990 - 04.1992	3488	
19 I Chamade (L53_)	1.2	40	01.1988 - 12.1992	3503/1	
19 I Chamade (L53_)	1.4	58	06.1989 - 08.1990	3503/1	
19 I Chamade (L53_)	1.4 (L532, L53P)	43	07.1988 - 04.1992	3503/1	
19 I Chamade (L53_)	1.7	69	09.1990 - 04.1992	3503/1	
19 I Chamade (L53_)	1.7 (L533)	68	09.1988 - 12.1992	3503/1	
19 I Chamade (L53_)	1.7 (L53B)	54	10.1989 - 04.1992	3503/1	
19 I Chamade (L53_)	1.7 (L53C)	66	07.1988 - 04.1992	3503/1	
19 I Chamade (L53_)	1.7 (L53F)	79	08.1988 - 12.1992	3503/1	
19 I Chamade (L53_)	1.8 16V	101	06.1989 - 08.1990	3503/1	
19 I Chamade (L53_)	1.8 16V (L53D)	99	10.1989 - 04.1992	3503/1	
19 I Chamade (L53_)	1.9 D (L534, L53J)	47	10.1989 - 04.1992	3503/1	
19 I Chamade (L53_)	1.9 DT	66	09.1990 - 04.1992	3503/1	
19 I Chamade (L53_)	1.9 TD (L53K)	68	09.1990 - 04.1992	3503/1	
19 I Chamade (L53_)	1.2	40	01/88 – 12/92	3431	3496
19 I Chamade (L53_)	1.2	40	01/88 – 12/92	3380	
19 I Chamade (L53_)	1.2	40	01/88 – 12/92	3381	
19 I Chamade (L53_)	1.2	40	01/88 – 12/92	3503	
19 I Chamade (L53_)	1.2	40	01/88 – 12/92	3580	
19 I Chamade (L53_)	1.4	55	09/90 – 04/92	3431	3496
19 I Chamade (L53_)	1.4	55	09/90 – 04/92	3380	
19 I Chamade (L53_)	1.4	55	09/90 – 04/92	3381	

MAKE & MODEL		KW	YEAR		
RENAULT					
19 I Chamade (L53_)	1.4	55	09/90 – 04/92	3503	
19 I Chamade (L53_)	1.4	55	09/90 – 04/92	3580	
19 I Chamade (L53_)	1.4	57	07/88 – 08/90	3431	3496
19 I Chamade (L53_)	1.4	57	07/88 – 08/90	3380	
19 I Chamade (L53_)	1.4	57	07/88 – 08/90	3381	
19 I Chamade (L53_)	1.4	57	07/88 – 08/90	3503	
19 I Chamade (L53_)	1.4	57	07/88 – 08/90	3580	
19 I Chamade (L53_)	1.4 (L532, L53P)	43	07/88 – 04/92	3431	3496
19 I Chamade (L53_)	1.4 (L532, L53P)	43	07/88 – 04/92	3380	
19 I Chamade (L53_)	1.4 (L532, L53P)	43	07/88 – 04/92	3381	
19 I Chamade (L53_)	1.4 (L532, L53P)	43	07/88 – 04/92	3503	
19 I Chamade (L53_)	1.4 (L532, L53P)	43	07/88 – 04/92	3580	
19 I Chamade (L53_)	1.7 (L53B)	54	10/89 – 04/92	3431	3496
19 I Chamade (L53_)	1.7 (L53B)	54	10/89 – 04/92	3380	
19 I Chamade (L53_)	1.7 (L53B)	54	10/89 – 04/92	3381	
19 I Chamade (L53_)	1.7 (L53B)	54	10/89 – 04/92	3503	
19 I Chamade (L53_)	1.7 (L53B)	54	10/89 – 04/92	3580	
19 I Chamade (L53_)	1.7 (L53C)	66	07/88 – 04/92	3431	3496
19 I Chamade (L53_)	1.7 (L53C)	66	07/88 – 04/92	3380	
19 I Chamade (L53_)	1.7 (L53C)	66	07/88 – 04/92	3381	
19 I Chamade (L53_)	1.7 (L53C)	66	07/88 – 04/92	3503	
19 I Chamade (L53_)	1.7 (L53C)	66	07/88 – 04/92	3580	
19 I Chamade (L53_)	1.7 (L53F)	79	08/88 – 12/92	3431	3496
19 I Chamade (L53_)	1.7 (L53F)	79	08/88 – 12/92	3380	
19 I Chamade (L53_)	1.7 (L53F)	79	08/88 – 12/92	3381	
19 I Chamade (L53_)	1.7 (L53F)	79	08/88 – 12/92	3503	
19 I Chamade (L53_)	1.7 (L53F)	79	08/88 – 12/92	3580	
19 I Chamade (L53_)	1.8 16V (L53D)	99	10/89 – 04/92	3380	
19 I Chamade (L53_)	1.8 16V (L53D)	99	10/89 – 04/92	3381	
19 I Chamade (L53_)	1.8 16V (L53D)	99	10/89 – 04/92	3431	
19 I Chamade (L53_)	1.8 16V (L53D)	99	10/89 – 04/92	3503	
19 I Chamade (L53_)	1.8 16V (L53D)	99	10/89 – 04/92	3580	
19 I Chamade (L53_)	1.9 D (L534, L53J)	47	10/89 – 04/92	3431	3496
19 I Chamade (L53_)	1.9 D (L534, L53J)	47	10/89 – 04/92	3380	
19 I Chamade (L53_)	1.9 D (L534, L53J)	47	10/89 – 04/92	3381	
19 I Chamade (L53_)	1.9 D (L534, L53J)	47	10/89 – 04/92	3503	
19 I Chamade (L53_)	1.9 D (L534, L53J)	47	10/89 – 04/92	3580	
19 I Chamade (L53_)	1.9 TD (L53K)	68	09/90 – 04/92	3431	3496
19 I Chamade (L53_)	1.9 TD (L53K)	68	09/90 – 04/92	3380	
19 I Chamade (L53_)	1.9 TD (L53K)	68	09/90 – 04/92	3381	
19 I Chamade (L53_)	1.9 TD (L53K)	68	09/90 – 04/92	3503	
19 I Chamade (L53_)	1.9 TD (L53K)	68	09/90 – 04/92	3580	
19 I Kasa/eğik arka (S53_	1.2	40	01.1988 - 12.1992	3488	
19 I Kasa/eğik arka (S53_	1.4	59	01.1988 - 12.1992	3488	
19 I Kasa/eğik arka (S53_	1.9 D	48	01.1988 - 12.1992	3488	
19 I Kasa/eğik arka (S53_)	1.2	40	01.1988 - 12.1992	3503/1	
19 I Kasa/eğik arka (S53_)	1.4	59	01.1988 - 12.1992	3503/1	
19 I Kasa/eğik arka (S53_)	1.9 D	48	01.1988 - 12.1992	3503/1	
19 II (B/C53_	1.2	40	04.1992 - 12.1995	3488	
19 II (B/C53_	1.4	59	01.1992 - 12.1995	3488	
19 II (B/C53_	1.4 (B/C532)	43	04.1992 - 12.1995	3488	
19 II (B/C53_	1.4 (B/C535)	55	01.1992 - 12.1995	3488	
19 II (B/C53_	1.7 (B/C53B)	54	04.1992 - 12.1995	3488	
19 II (B/C53_	1.7 (B/C53C)	66	04.1992 - 12.1995	3488	
19 II (B/C53_	1.8 (5/353A)	66	04.1992 - 12.1995	3488	
19 II (B/C53_	1.8 (5/353F, B/C538)	79	05.1994 - 12.1995	3488	
19 II (B/C53_	1.8 (B/C538)	81	04.1992 - 05.1994	3488	
19 II (B/C53_	1.8 (B/C53Y)	65	04.1992 - 12.1995	3488	
19 II (B/C53_	1.8 16V (B/C53D)	99	04.1992 - 12.1995	3488	
19 II (B/C53_	1.9 D (B/C53J)	47	04.1992 - 12.1995	3488	
19 II (B/C53_	1.9 dT (B/C53T)	66	04.1992 - 12.1995	3488	
19 II (B/C53_)	1.2	40	04.1992 - 12.1995	3503/1	
19 II (B/C53_)	1.4	57	05.1993 - 12.1998	3503/1	
19 II (B/C53_)	1.4	59	01.1992 - 12.1995	3503/1	
19 II (B/C53_)	1.4 (B/C532)	43	04.1992 - 12.1995	3503/1	
19 II (B/C53_)	1.4 (B/C535)	55	01.1992 - 12.1995	3503/1	
19 II (B/C53_)	1.7 (B/C53B)	54	04.1992 - 12.1995	3503/1	
19 II (B/C53_)	1.7 (B/C53C)	66	04.1992 - 12.1995	3503/1	
19 II (B/C53_)	1.8 (5/353A)	66	04.1992 - 12.1995	3503/1	
19 II (B/C53_)	1.8 (5/353F, B/C538)	79	05.1994 - 12.1995	3503/1	
19 II (B/C53_)	1.8 (B/C538)	81	04.1992 - 05.1994	3503/1	
19 II (B/C53_)	1.8 (B/C53Y)	65	04.1992 - 12.1995	3503/1	
19 II (B/C53_)	1.8 16V (B/C53D)	99	04.1992 - 12.1995	3503/1	
19 II (B/C53_)	1.9 D (B/C53J)	47	04.1992 - 12.1995	3503/1	
19 II (B/C53_)	1.9 dT (B/C53T)	66	04.1992 - 12.1995	3503/1	
19 II (B/C53_)	1.2	40	04/92 – 12/95	3431	3496

MAKE & MODEL		KW	YEAR		
RENAULT					
19 II (B/C53_)	1.2	40	04/92 – 12/95	3380	
19 II (B/C53_)	1.2	40	04/92 – 12/95	3381	
19 II (B/C53_)	1.2	40	04/92 – 12/95	3503	
19 II (B/C53_)	1.2	40	04/92 – 12/95	3580	
19 II (B/C53_)	1.2	44	05/92 – 09/94	3431	3496
19 II (B/C53_)	1.2	44	05/92 – 09/94	3380	
19 II (B/C53_)	1.2	44	05/92 – 09/94	3381	
19 II (B/C53_)	1.2	44	05/92 – 09/94	3503	
19 II (B/C53_)	1.2	44	05/92 – 09/94	3580	
19 II (B/C53_)	1.4	59	01/92 – 12/95	3431	3496
19 II (B/C53_)	1.4	59	01/92 – 12/95	3380	
19 II (B/C53_)	1.4	59	01/92 – 12/95	3381	
19 II (B/C53_)	1.4	59	01/92 – 12/95	3503	
19 II (B/C53_)	1.4	59	01/92 – 12/95	3580	
19 II (B/C53_)	1.4	60	10/96 – 06/01	3503	3496
19 II (B/C53_)	1.4	60	10/96 – 06/01	3380	
19 II (B/C53_)	1.4	60	10/96 – 06/01	3381	
19 II (B/C53_)	1.4	60	10/96 – 06/01	3431	
19 II (B/C53_)	1.4	60	10/96 – 06/01	3580	
19 II (B/C53_)	1.4 (B/C532)	43	04/92 – 12/95	3431	3496
19 II (B/C53_)	1.4 (B/C532)	43	04/92 – 12/95	3380	
19 II (B/C53_)	1.4 (B/C532)	43	04/92 – 12/95	3381	
19 II (B/C53_)	1.4 (B/C532)	43	04/92 – 12/95	3503	
19 II (B/C53_)	1.4 (B/C532)	43	04/92 – 12/95	3580	
19 II (B/C53_)	1.4 (B/C535)	55	01/92 – 12/95	3431	3496
19 II (B/C53_)	1.4 (B/C535)	55	01/92 – 12/95	3380	
19 II (B/C53_)	1.4 (B/C535)	55	01/92 – 12/95	3381	
19 II (B/C53_)	1.4 (B/C535)	55	01/92 – 12/95	3503	
19 II (B/C53_)	1.4 (B/C535)	55	01/92 – 12/95	3580	
19 II (B/C53_)	1.7	69	10/96 – 06/01	3431	3496
19 II (B/C53_)	1.7	69	10/96 – 06/01	3380	
19 II (B/C53_)	1.7	69	10/96 – 06/01	3381	
19 II (B/C53_)	1.7	69	10/96 – 06/01	3503	
19 II (B/C53_)	1.7	69	10/96 – 06/01	3580	
19 II (B/C53_)	1.7	79	05/92 – 09/94	3431	3496
19 II (B/C53_)	1.7	79	05/92 – 09/94	3380	
19 II (B/C53_)	1.7	79	05/92 – 09/94	3381	
19 II (B/C53_)	1.7	79	05/92 – 09/94	3503	
19 II (B/C53_)	1.7	79	05/92 – 09/94	3580	
19 II (B/C53_)	1.7 (B/C53B)	54	04/92 – 12/95	3431	3496
19 II (B/C53_)	1.7 (B/C53B)	54	04/92 – 12/95	3380	
19 II (B/C53_)	1.7 (B/C53B)	54	04/92 – 12/95	3381	
19 II (B/C53_)	1.7 (B/C53B)	54	04/92 – 12/95	3503	
19 II (B/C53_)	1.7 (B/C53B)	54	04/92 – 12/95	3580	
19 II (B/C53_)	1.7 (B/C53C)	66	04/92 – 12/95	3431	3496
19 II (B/C53_)	1.7 (B/C53C)	66	04/92 – 12/95	3380	
19 II (B/C53_)	1.7 (B/C53C)	66	04/92 – 12/95	3381	
19 II (B/C53_)	1.7 (B/C53C)	66	04/92 – 12/95	3503	
19 II (B/C53_)	1.7 (B/C53C)	66	04/92 – 12/95	3580	
19 II (B/C53_)	1.8 (5/353A)	66	04/92 – 12/95	3431	3496
19 II (B/C53_)	1.8 (5/353A)	66	04/92 – 12/95	3380	
19 II (B/C53_)	1.8 (5/353A)	66	04/92 – 12/95	3381	
19 II (B/C53_)	1.8 (5/353A)	66	04/92 – 12/95	3503	
19 II (B/C53_)	1.8 (5/353A)	66	04/92 – 12/95	3580	
19 II (B/C53_)	1.8 (5/353F, B/C538)	79	05/94 – 12/95	3431	3496
19 II (B/C53_)	1.8 (5/353F, B/C538)	79	05/94 – 12/95	3380	
19 II (B/C53_)	1.8 (5/353F, B/C538)	79	05/94 – 12/95	3381	
19 II (B/C53_)	1.8 (5/353F, B/C538)	79	05/94 – 12/95	3503	
19 II (B/C53_)	1.8 (5/353F, B/C538)	79	05/94 – 12/95	3580	
19 II (B/C53_)	1.8 (B/C538)	81	04/92 – 05/94	3431	3496
19 II (B/C53_)	1.8 (B/C538)	81	04/92 – 05/94	3380	
19 II (B/C53_)	1.8 (B/C538)	81	04/92 – 05/94	3381	
19 II (B/C53_)	1.8 (B/C538)	81	04/92 – 05/94	3503	
19 II (B/C53_)	1.8 (B/C538)	81	04/92 – 05/94	3580	
19 II (B/C53_)	1.8 (B/C53Y)	65	04/92 – 12/95	3431	3496
19 II (B/C53_)	1.8 (B/C53Y)	65	04/92 – 12/95	3380	
19 II (B/C53_)	1.8 (B/C53Y)	65	04/92 – 12/95	3381	
19 II (B/C53_)	1.8 (B/C53Y)	65	04/92 – 12/95	3503	
19 II (B/C53_)	1.8 (B/C53Y)	65	04/92 – 12/95	3580	
19 II (B/C53_)	1.8 16V (B/C53D)	99	04/92 – 12/95	3380	
19 II (B/C53_)	1.8 16V (B/C53D)	99	04/92 – 12/95	3381	
19 II (B/C53_)	1.8 16V (B/C53D)	99	04/92 – 12/95	3431	
19 II (B/C53_)	1.8 16V (B/C53D)	99	04/92 – 12/95	3503	
19 II (B/C53_)	1.8 16V (B/C53D)	99	04/92 – 12/95	3580	
19 II (B/C53_)	1.9 D (B/C53J)	47	04/92 – 12/95	3431	3496
19 II (B/C53_)	1.9 D (B/C53J)	47	04/92 – 12/95	3380	

MAKE & MODEL   		KW	YEAR		
RENAULT					
19 II (B/C53_)	1.9 D (B/C53J)	47	04/92 – 12/95	3381	
19 II (B/C53_)	1.9 D (B/C53J)	47	04/92 – 12/95	3503	
19 II (B/C53_)	1.9 D (B/C53J)	47	04/92 – 12/95	3580	
19 II (B/C53_)	1.9 dT (B/C53T)	66	04/92 – 12/95	3431	3496
19 II (B/C53_)	1.9 dT (B/C53T)	66	04/92 – 12/95	3380	
19 II (B/C53_)	1.9 dT (B/C53T)	66	04/92 – 12/95	3381	
19 II (B/C53_)	1.9 dT (B/C53T)	66	04/92 – 12/95	3503	
19 II (B/C53_)	1.9 dT (B/C53T)	66	04/92 – 12/95	3580	
19 II Box (S53_)	1.2	40	03/92 – 12/95	3431	3496
19 II Box (S53_)	1.2	40	03/92 – 12/95	3380	
19 II Box (S53_)	1.2	40	03/92 – 12/95	3381	
19 II Box (S53_)	1.2	40	03/92 – 12/95	3503	
19 II Box (S53_)	1.2	40	03/92 – 12/95	3580	
19 II Box (S53_)	1.4	59	03/92 – 12/95	3431	3496
19 II Box (S53_)	1.4	59	03/92 – 12/95	3380	
19 II Box (S53_)	1.4	59	03/92 – 12/95	3381	
19 II Box (S53_)	1.4	59	03/92 – 12/95	3503	
19 II Box (S53_)	1.4	59	03/92 – 12/95	3580	
19 II Box (S53_)	1.9 D	48	03/92 – 12/95	3431	3496
19 II Box (S53_)	1.9 D	48	03/92 – 12/95	3380	
19 II Box (S53_)	1.9 D	48	03/92 – 12/95	3381	
19 II Box (S53_)	1.9 D	48	03/92 – 12/95	3503	
19 II Box (S53_)	1.9 D	48	03/92 – 12/95	3580	
19 II Box (S53_)	1.9 dT	68	03/92 – 12/95	3431	3496
19 II Box (S53_)	1.9 dT	68	03/92 – 12/95	3380	
19 II Box (S53_)	1.9 dT	68	03/92 – 12/95	3381	
19 II Box (S53_)	1.9 dT	68	03/92 – 12/95	3503	
19 II Box (S53_)	1.9 dT	68	03/92 – 12/95	3580	
19 II Cabriolet (D53_, 853_	1.7 (D53C)	66	04.1992 - 09.1993	3488	
19 II Cabriolet (D53_, 853_	1.8 (853A)	66	09.1993 - 06.1996	3488	
19 II Cabriolet (D53_, 853_	1.8 (D53V, 853F, D53C)	79	07.1994 - 06.1996	3488	
19 II Cabriolet (D53_, 853_	1.8 (D53Y)	65	04.1992 - 06.1996	3488	
19 II Cabriolet (D53_, 853_	1.8 16V (D53D)	99	04.1992 - 06.1996	3488	
19 II Cabriolet (D53_, 853_)	1.7 (D53C)	66	04.1992 - 09.1993	3503/1	
19 II Cabriolet (D53_, 853_)	1.8 (853A)	66	09.1993 - 06.1996	3503/1	
19 II Cabriolet (D53_, 853_)	1.8 (D53V, 853F, D53C)	79	07.1994 - 06.1996	3503/1	
19 II Cabriolet (D53_, 853_)	1.8 (D53Y)	65	04.1992 - 06.1996	3503/1	
19 II Cabriolet (D53_, 853_)	1.8 16V	101	05.1992 - 04.1994	3503/1	
19 II Cabriolet (D53_, 853_)	1.8 16V (D53D)	99	04.1992 - 06.1996	3503/1	
19 II Cabriolet (D53_, 853_)	1.7 (D53C)	66	04/92 – 09/93	3431	3496
19 II Cabriolet (D53_, 853_)	1.7 (D53C)	66	04/92 – 09/93	3380	
19 II Cabriolet (D53_, 853_)	1.7 (D53C)	66	04/92 – 09/93	3381	
19 II Cabriolet (D53_, 853_)	1.7 (D53C)	66	04/92 – 09/93	3503	
19 II Cabriolet (D53_, 853_)	1.7 (D53C)	66	04/92 – 09/93	3580	
19 II Cabriolet (D53_, 853_)	1.8 (853A)	66	09/93 – 06/96	3431	3496
19 II Cabriolet (D53_, 853_)	1.8 (853A)	66	09/93 – 06/96	3380	
19 II Cabriolet (D53_, 853_)	1.8 (853A)	66	09/93 – 06/96	3381	
19 II Cabriolet (D53_, 853_)	1.8 (853A)	66	09/93 – 06/96	3503	
19 II Cabriolet (D53_, 853_)	1.8 (853A)	66	09/93 – 06/96	3580	
19 II Cabriolet (D53_, 853_)	1.8 (D53V, 853F, D53C)	79	07/94 – 06/96	3380	
19 II Cabriolet (D53_, 853_)	1.8 (D53V, 853F, D53C)	79	07/94 – 06/96	3381	
19 II Cabriolet (D53_, 853_)	1.8 (D53V, 853F, D53C)	79	07/94 – 06/96	3431	
19 II Cabriolet (D53_, 853_)	1.8 (D53V, 853F, D53C)	79	07/94 – 06/96	3503	
19 II Cabriolet (D53_, 853_)	1.8 (D53V, 853F, D53C)	79	07/94 – 06/96	3580	
19 II Cabriolet (D53_, 853_)	1.8 (D53Y)	65	04/92 – 06/96	3431	3496
19 II Cabriolet (D53_, 853_)	1.8 (D53Y)	65	04/92 – 06/96	3380	
19 II Cabriolet (D53_, 853_)	1.8 (D53Y)	65	04/92 – 06/96	3381	
19 II Cabriolet (D53_, 853_)	1.8 (D53Y)	65	04/92 – 06/96	3503	
19 II Cabriolet (D53_, 853_)	1.8 (D53Y)	65	04/92 – 06/96	3580	
19 II Cabriolet (D53_, 853_)	1.8 16V (D53D)	99	04/92 – 06/96	3380	
19 II Cabriolet (D53_, 853_)	1.8 16V (D53D)	99	04/92 – 06/96	3381	
19 II Cabriolet (D53_, 853_)	1.8 16V (D53D)	99	04/92 – 06/96	3431	
19 II Cabriolet (D53_, 853_)	1.8 16V (D53D)	99	04/92 – 06/96	3503	
19 II Cabriolet (D53_, 853_)	1.8 16V (D53D)	99	04/92 – 06/96	3580	
19 II Chamade (L53_	1.4	44	05.1992 - 09.1994	3488	
19 II Chamade (L53_	1.4	57	10.1994 - 11.1995	3488	
19 II Chamade (L53_	1.4	59	10.1994 - 11.1995	3488	
19 II Chamade (L53_	1.4 (532)	43	04.1992 - 12.1995	3488	
19 II Chamade (L53_	1.4 (L535)	55	11.1993 - 12.1995	3488	
19 II Chamade (L53_	1.7 (L53B)	54	04.1992 - 12.1995	3488	
19 II Chamade (L53_	1.7 (L53C)	66	04.1992 - 12.1995	3488	
19 II Chamade (L53_	1.8	67	05.1992 - 09.1994	3488	
19 II Chamade (L53_	1.8	79	05.1992 - 11.1995	3488	
19 II Chamade (L53_	1.8 (453A/F)	66	04.1992 - 12.1995	3488	
19 II Chamade (L53_	1.8 (L538)	81	04.1992 - 05.1994	3488	
19 II Chamade (L53_	1.8 (L53V, L538)	79	05.1994 - 12.1995	3488	

MAKE & MODEL		KW	YEAR		
RENAULT					
19 II Chamade (L53_	1.8 (L53Y)	65	04.1992 - 12.1995	3488	
19 II Chamade (L53_	1.8 16V (L53D)	99	04.1992 - 12.1995	3488	
19 II Chamade (L53_	1.9 D	68	05.1992 - 11.1995	3488	
19 II Chamade (L53_	1.9 D (L53J)	47	04.1992 - 12.1995	3488	
19 II Chamade (L53_	1.9 dT (L53T)	66	04.1992 - 12.1995	3488	
19 II Chamade (L53_)	1.4	44	05.1992 - 09.1994	3503/1	
19 II Chamade (L53_)	1.4	57	10.1994 - 11.1995	3503/1	
19 II Chamade (L53_)	1.4	59	10.1994 - 11.1995	3503/1	
19 II Chamade (L53_)	1.4 (532)	43	04.1992 - 12.1995	3503/1	
19 II Chamade (L53_)	1.4 (L535)	55	11.1993 - 12.1995	3503/1	
19 II Chamade (L53_)	1.6	66	10.1996 - 06.2001	3503/1	
19 II Chamade (L53_)	1.6 (L53S)	57	01.1994 - 11.2001	3503/1	
19 II Chamade (L53_)	1.7 (L533)	68	01.1993 - 08.1995	3503/1	
19 II Chamade (L53_)	1.7 (L53B)	54	04.1992 - 12.1995	3503/1	
19 II Chamade (L53_)	1.7 (L53C)	66	04.1992 - 12.1995	3503/1	
19 II Chamade (L53_)	1.8	79	05.1992 - 11.1995	3503/1	
19 II Chamade (L53_)	1.8 (453A/F)	66	04.1992 - 12.1995	3503/1	
19 II Chamade (L53_)	1.8 (L538)	81	04.1992 - 05.1994	3503/1	
19 II Chamade (L53_)	1.8 (L53V, L538)	79	05.1994 - 12.1995	3503/1	
19 II Chamade (L53_)	1.8 (L53Y)	65	04.1992 - 12.1995	3503/1	
19 II Chamade (L53_)	1.8 16V (L53D)	99	04.1992 - 12.1995	3503/1	
19 II Chamade (L53_)	1.9 D	68	05.1992 - 11.1995	3503/1	
19 II Chamade (L53_)	1.9 D (L53J)	47	04.1992 - 12.1995	3503/1	
19 II Chamade (L53_)	1.9 dT (L53T)	66	04.1992 - 12.1995	3503/1	
19 II Chamade (L53_)	1.4	44	05/92 – 09/94	3431	3496
19 II Chamade (L53_)	1.4	44	05/92 – 09/94	3380	
19 II Chamade (L53_)	1.4	44	05/92 – 09/94	3381	
19 II Chamade (L53_)	1.4	44	05/92 – 09/94	3503	
19 II Chamade (L53_)	1.4	44	05/92 – 09/94	3580	
19 II Chamade (L53_)	1.4	57	10/94 – 11/95	3431	3496
19 II Chamade (L53_)	1.4	57	10/94 – 11/95	3380	
19 II Chamade (L53_)	1.4	57	10/94 – 11/95	3381	
19 II Chamade (L53_)	1.4	57	10/94 – 11/95	3503	
19 II Chamade (L53_)	1.4	57	10/94 – 11/95	3580	
19 II Chamade (L53_)	1.4	59	10/94 – 11/95	3431	3496
19 II Chamade (L53_)	1.4	59	10/94 – 11/95	3380	
19 II Chamade (L53_)	1.4	59	10/94 – 11/95	3381	
19 II Chamade (L53_)	1.4	59	10/94 – 11/95	3503	
19 II Chamade (L53_)	1.4	59	10/94 – 11/95	3580	
19 II Chamade (L53_)	1.4 (532)	43	04/92 – 12/95	3431	3496
19 II Chamade (L53_)	1.4 (532)	43	04/92 – 12/95	3380	
19 II Chamade (L53_)	1.4 (532)	43	04/92 – 12/95	3381	
19 II Chamade (L53_)	1.4 (532)	43	04/92 – 12/95	3503	
19 II Chamade (L53_)	1.4 (532)	43	04/92 – 12/95	3580	
19 II Chamade (L53_)	1.4 (L535)	55	11/93 – 12/95	3431	3496
19 II Chamade (L53_)	1.4 (L535)	55	11/93 – 12/95	3380	
19 II Chamade (L53_)	1.4 (L535)	55	11/93 – 12/95	3381	
19 II Chamade (L53_)	1.4 (L535)	55	11/93 – 12/95	3503	
19 II Chamade (L53_)	1.4 (L535)	55	11/93 – 12/95	3580	
19 II Chamade (L53_)	1.7	55	05/92 – 11/95	3431	3496
19 II Chamade (L53_)	1.7	55	05/92 – 11/95	3380	
19 II Chamade (L53_)	1.7	55	05/92 – 11/95	3381	
19 II Chamade (L53_)	1.7	55	05/92 – 11/95	3503	
19 II Chamade (L53_)	1.7	55	05/92 – 11/95	3580	
19 II Chamade (L53_)	1.7 (L533)	68	01/93 – 08/95	3431	3496
19 II Chamade (L53_)	1.7 (L533)	68	01/93 – 08/95	3380	
19 II Chamade (L53_)	1.7 (L533)	68	01/93 – 08/95	3381	
19 II Chamade (L53_)	1.7 (L533)	68	01/93 – 08/95	3503	
19 II Chamade (L53_)	1.7 (L533)	68	01/93 – 08/95	3580	
19 II Chamade (L53_)	1.7 (L53B)	54	04/92 – 12/95	3431	3496
19 II Chamade (L53_)	1.7 (L53B)	54	04/92 – 12/95	3380	
19 II Chamade (L53_)	1.7 (L53B)	54	04/92 – 12/95	3381	
19 II Chamade (L53_)	1.7 (L53B)	54	04/92 – 12/95	3503	
19 II Chamade (L53_)	1.7 (L53B)	54	04/92 – 12/95	3580	
19 II Chamade (L53_)	1.7 (L53C)	66	04/92 – 12/95	3431	3496
19 II Chamade (L53_)	1.7 (L53C)	66	04/92 – 12/95	3380	
19 II Chamade (L53_)	1.7 (L53C)	66	04/92 – 12/95	3381	
19 II Chamade (L53_)	1.7 (L53C)	66	04/92 – 12/95	3503	
19 II Chamade (L53_)	1.7 (L53C)	66	04/92 – 12/95	3580	
19 II Chamade (L53_)	1.8	67	05/92 – 09/94	3431	3496
19 II Chamade (L53_)	1.8	67	05/92 – 09/94	3380	
19 II Chamade (L53_)	1.8	67	05/92 – 09/94	3381	
19 II Chamade (L53_)	1.8	67	05/92 – 09/94	3503	
19 II Chamade (L53_)	1.8	67	05/92 – 09/94	3580	
19 II Chamade (L53_)	1.8	79	05/92 – 11/95	3431	3496
19 II Chamade (L53_)	1.8	79	05/92 – 11/95	3380	

MAKE & MODEL   		KW	YEAR		
RENAULT					
19 II Chamade (L53_)	1.8	79	05/92 – 11/95	3381	
19 II Chamade (L53_)	1.8	79	05/92 – 11/95	3503	
19 II Chamade (L53_)	1.8	79	05/92 – 11/95	3580	
19 II Chamade (L53_)	1.8 (453A/F)	66	04/92 – 12/95	3431	3496
19 II Chamade (L53_)	1.8 (453A/F)	66	04/92 – 12/95	3380	
19 II Chamade (L53_)	1.8 (453A/F)	66	04/92 – 12/95	3381	
19 II Chamade (L53_)	1.8 (453A/F)	66	04/92 – 12/95	3503	
19 II Chamade (L53_)	1.8 (453A/F)	66	04/92 – 12/95	3580	
19 II Chamade (L53_)	1.8 (L538)	81	04/92 – 05/94	3431	3496
19 II Chamade (L53_)	1.8 (L538)	81	04/92 – 05/94	3380	
19 II Chamade (L53_)	1.8 (L538)	81	04/92 – 05/94	3381	
19 II Chamade (L53_)	1.8 (L538)	81	04/92 – 05/94	3503	
19 II Chamade (L53_)	1.8 (L538)	81	04/92 – 05/94	3580	
19 II Chamade (L53_)	1.8 (L53V, L538)	79	05/94 – 12/95	3431	3496
19 II Chamade (L53_)	1.8 (L53V, L538)	79	05/94 – 12/95	3380	
19 II Chamade (L53_)	1.8 (L53V, L538)	79	05/94 – 12/95	3381	
19 II Chamade (L53_)	1.8 (L53V, L538)	79	05/94 – 12/95	3503	
19 II Chamade (L53_)	1.8 (L53V, L538)	79	05/94 – 12/95	3580	
19 II Chamade (L53_)	1.8 (L53Y)	65	04/92 – 12/95	3431	3496
19 II Chamade (L53_)	1.8 (L53Y)	65	04/92 – 12/95	3380	
19 II Chamade (L53_)	1.8 (L53Y)	65	04/92 – 12/95	3381	
19 II Chamade (L53_)	1.8 (L53Y)	65	04/92 – 12/95	3503	
19 II Chamade (L53_)	1.8 (L53Y)	65	04/92 – 12/95	3580	
19 II Chamade (L53_)	1.8 16V (L53D)	99	04/92 – 12/95	3380	
19 II Chamade (L53_)	1.8 16V (L53D)	99	04/92 – 12/95	3381	
19 II Chamade (L53_)	1.8 16V (L53D)	99	04/92 – 12/95	3431	
19 II Chamade (L53_)	1.8 16V (L53D)	99	04/92 – 12/95	3503	
19 II Chamade (L53_)	1.8 16V (L53D)	99	04/92 – 12/95	3580	
19 II Chamade (L53_)	1.9 D	68	05/92 – 11/95	3431	3496
19 II Chamade (L53_)	1.9 D	68	05/92 – 11/95	3380	
19 II Chamade (L53_)	1.9 D	68	05/92 – 11/95	3381	
19 II Chamade (L53_)	1.9 D	68	05/92 – 11/95	3503	
19 II Chamade (L53_)	1.9 D	68	05/92 – 11/95	3580	
19 II Chamade (L53_)	1.9 D (L53J)	47	04/92 – 12/95	3431	3496
19 II Chamade (L53_)	1.9 D (L53J)	47	04/92 – 12/95	3380	
19 II Chamade (L53_)	1.9 D (L53J)	47	04/92 – 12/95	3381	
19 II Chamade (L53_)	1.9 D (L53J)	47	04/92 – 12/95	3503	
19 II Chamade (L53_)	1.9 D (L53J)	47	04/92 – 12/95	3580	
19 II Chamade (L53_)	1.9 dT (L53T)	66	04/92 – 12/95	3431	3496
19 II Chamade (L53_)	1.9 dT (L53T)	66	04/92 – 12/95	3380	
19 II Chamade (L53_)	1.9 dT (L53T)	66	04/92 – 12/95	3381	
19 II Chamade (L53_)	1.9 dT (L53T)	66	04/92 – 12/95	3503	
19 II Chamade (L53_)	1.9 dT (L53T)	66	04/92 – 12/95	3580	
19 II Kasa/eğik arka (S53_	1.2	40	03.1992 - 12.1995	3488	
19 II Kasa/eğik arka (S53_	1.4	59	03.1992 - 12.1995	3488	
19 II Kasa/eğik arka (S53_	1.9 D	48	03.1992 - 12.1995	3488	
19 II Kasa/eğik arka (S53_	1.9 Dt	68	03.1992 - 12.1995	3488	
19 II Kasa/eğik arka (S53_)	1.2	40	03.1992 - 12.1995	3503/1	
19 II Kasa/eğik arka (S53_)	1.4	59	03.1992 - 12.1995	3503/1	
19 II Kasa/eğik arka (S53_)	1.9 D	48	03.1992 - 12.1995	3503/1	
19 II Kasa/eğik arka (S53_)	1.9 dT	68	03.1992 - 12.1995	3503/1	
20 (127_	1.6 (1271)	71	05.1977 - 12.1983	3488	
20 (127_	2.0 (1277)	76	10.1980 - 12.1983	3488	
20 (127_	2.1 Diesel (1276)	47	10.1980 - 12.1983	3488	
20 (127_	2.1 TD	63	01.1982 - 12.1983	3488	
20 (127_	2.2 (1279)	85	10.1980 - 12.1983	3488	
20 (127_)	2.0 (1272)	80	10.1977 - 10.1980	3503/1	
20 (127_)	2.0 (1277)	76	10.1980 - 12.1983	3503/1	
20 (127_)	2.1 Diesel (1276)	47	10.1980 - 12.1983	3503/1	
20 (127_)	2.1 TD	63	01.1982 - 12.1983	3503/1	
20 (127_)	2.2 (1279)	85	10.1980 - 12.1983	3503/1	
20 (127_)	1.6 (843 720)	71	05/77 – 12/83	3372	
20 (127_)	1.6 (843 720)	71	05/77 – 12/83	3599	
20 (127_)	1.6 (843 721)	71	05/77 – 12/83	3372	
20 (127_)	1.6 (843 721)	71	05/77 – 12/83	3599	
20 (127_)	1.6 (1271)	66	10/75 – 05/77	3329/1	
20 (127_)	1.6 (1271)	71	05/77 – 12/83	3329/1	
20 (127_)	1.6 (1271)	71	05/77 – 12/83	3380	
20 (127_)	1.6 (1271)	71	05/77 – 12/83	3381	
20 (127_)	1.6 (1271)	71	05/77 – 12/83	3431	
20 (127_)	1.6 (1271)	71	05/77 – 12/83	3503	
20 (127_)	1.6 (1271)	71	05/77 – 12/83	3580	
20 (127_)	2.0 (829 702)	76	10/80 – 12/83	3372	
20 (127_)	2.0 (829 702)	76	10/80 – 12/83	3599	
20 (127_)	2.0 (829 703)	76	10/80 – 12/83	3372	
20 (127_)	2.0 (829 703)	76	10/80 – 12/83	3599	

MAKE & MODEL		KW	YEAR		
RENAULT					
20 (127_)	2.0 (1272)	80	10/77 – 10/80	3527	
20 (127_)	2.0 (1277)	76	10/80 – 12/83	3380	
20 (127_)	2.0 (1277)	76	10/80 – 12/83	3381	
20 (127_)	2.0 (1277)	76	10/80 – 12/83	3431	
20 (127_)	2.0 (1277)	76	10/80 – 12/83	3503	
20 (127_)	2.0 (1277)	76	10/80 – 12/83	3527	
20 (127_)	2.0 (1277)	76	10/80 – 12/83	3580	
20 (127_)	2.1 Diesel (852)	47	10/80 – 12/83	3372	
20 (127_)	2.1 Diesel (852)	47	10/80 – 12/83	3599	
20 (127_)	2.1 Diesel (1276)	47	10/80 – 12/83	3380	
20 (127_)	2.1 Diesel (1276)	47	10/80 – 12/83	3381	
20 (127_)	2.1 Diesel (1276)	47	10/80 – 12/83	3431	
20 (127_)	2.1 Diesel (1276)	47	10/80 – 12/83	3503	
20 (127_)	2.1 Diesel (1276)	47	10/80 – 12/83	3580	
20 (127_)	2.1 TD	63	01/82 – 12/83	3380	
20 (127_)	2.1 TD	63	01/82 – 12/83	3381	
20 (127_)	2.1 TD	63	01/82 – 12/83	3431	
20 (127_)	2.1 TD	63	01/82 – 12/83	3503	
20 (127_)	2.1 TD	63	01/82 – 12/83	3580	
20 (127_)	2.1 TD (J8S 702)	63	01/82 – 12/83	3372	
20 (127_)	2.1 TD (J8S 702)	63	01/82 – 12/83	3599	
20 (127_)	2.2 (1279)	85	10/80 – 12/83	3380	
20 (127_)	2.2 (1279)	85	10/80 – 12/83	3381	
20 (127_)	2.2 (1279)	85	10/80 – 12/83	3431	
20 (127_)	2.2 (1279)	85	10/80 – 12/83	3503	
20 (127_)	2.2 (1279)	85	10/80 – 12/83	3527	
20 (127_)	2.2 (1279)	85	10/80 – 12/83	3580	
21 (B48_	1.7 (B48E)	66	09.1989 - 06.1994	3488	
21 (B48_	1.7 (B48F)	54	09.1989 - 10.1992	3488	
21 (B48_	1.9 D (B48H, B48I)	47	09.1989 - 01.1994	3488	
21 (B48_)	1.7 (B48E)	66	09.1989 - 06.1994	3503/1	
21 (B48_)	1.7 (B48F)	54	09.1989 - 10.1992	3503/1	
21 (B48_)	1.9 D (B48H, B48I)	47	09.1989 - 01.1994	3503/1	
21 (B48_)	2.1 D (B480)	51	04.1992 - 06.1994	3503/1	
21 (B48_)	2.1 D (B48V/B48O)	53	09.1989 - 12.1992	3503/1	
21 (B48_)	2.1 Turbo-D (B486, B488, B48V)	65	09.1989 - 06.1994	3503/1	
21 (B48_)	1.4 (B48D)	51	09/89 – 05/93	3380	
21 (B48_)	1.4 (B48D)	51	09/89 – 05/93	3381	
21 (B48_)	1.4 (B48D)	51	09/89 – 05/93	3431	
21 (B48_)	1.4 (B48D)	51	09/89 – 05/93	3503	
21 (B48_)	1.4 (B48D)	51	09/89 – 05/93	3580	
21 (B48_)	1.7	55	07/89 – 05/93	3380	
21 (B48_)	1.7	55	07/89 – 05/93	3381	
21 (B48_)	1.7	55	07/89 – 05/93	3431	
21 (B48_)	1.7	55	07/89 – 05/93	3503	
21 (B48_)	1.7	55	07/89 – 05/93	3580	
21 (B48_)	1.7	65	07/89 – 05/93	3380	
21 (B48_)	1.7	65	07/89 – 05/93	3381	
21 (B48_)	1.7	65	07/89 – 05/93	3431	
21 (B48_)	1.7	65	07/89 – 05/93	3503	
21 (B48_)	1.7	65	07/89 – 05/93	3580	
21 (B48_)	1.7 (B48E)	66	09/89 – 06/94	3380	
21 (B48_)	1.7 (B48E)	66	09/89 – 06/94	3381	
21 (B48_)	1.7 (B48E)	66	09/89 – 06/94	3431	
21 (B48_)	1.7 (B48E)	66	09/89 – 06/94	3503	
21 (B48_)	1.7 (B48E)	66	09/89 – 06/94	3580	
21 (B48_)	1.7 (B48F)	54	09/89 – 10/92	3380	
21 (B48_)	1.7 (B48F)	54	09/89 – 10/92	3381	
21 (B48_)	1.7 (B48F)	54	09/89 – 10/92	3431	
21 (B48_)	1.7 (B48F)	54	09/89 – 10/92	3503	
21 (B48_)	1.7 (B48F)	54	09/89 – 10/92	3580	
21 (B48_)	1.9 D (B48H, B48I)	47	09/89 – 01/94	3380	
21 (B48_)	1.9 D (B48H, B48I)	47	09/89 – 01/94	3381	
21 (B48_)	1.9 D (B48H, B48I)	47	09/89 – 01/94	3431	
21 (B48_)	1.9 D (B48H, B48I)	47	09/89 – 01/94	3503	
21 (B48_)	1.9 D (B48H, B48I)	47	09/89 – 01/94	3580	
21 (B48_)	2.0 (B48C)	88	09/89 – 12/93	3428	3333
21 (B48_)	2.0 (B48C)	88	09/89 – 12/93		3596
21 (B48_)	2.0 (B48R/Y)	99	02/90 – 10/92	3428	3333
21 (B48_)	2.0 (B48R/Y)	99	02/90 – 10/92		3596
21 (B48_)	2.0 4x4 (B48R/Y)	99	09/90 – 10/92	3428	3333
21 (B48_)	2.0 4x4 (B48R/Y)	99	09/90 – 10/92		3596
21 (B48_)	2.0 TXi	100	07/89 – 05/93	3428	3333
21 (B48_)	2.0 TXi	100	07/89 – 05/93		3596
21 (B48_)	2.1 D (B480)	51	04/92 – 06/94	3428	3333
21 (B48_)	2.1 D (B480)	51	04/92 – 06/94		3596

MAKE & MODEL   		KW	YEAR		
RENAULT					
21 (B48_)	2.1 D (B48V/B48O)	53	09/89 – 12/92	3428	3333
21 (B48_)	2.1 D (B48V/B48O)	53	09/89 – 12/92		3596
21 (B48_)	2.1 Turbo-D (B486, B488, B48V)	65	09/89 – 06/94	3428	3333
21 (B48_)	2.1 Turbo-D (B486, B488, B48V)	65	09/89 – 06/94		3596
21 (B48_)	2.2 (B48K)	79	09/89 – 06/94	3428	3333
21 (B48_)	2.2 (B48K)	79	09/89 – 06/94		3596
21 (B48_)	2.2 4x4 (B48K)	79	07/90 – 06/94	3428	3333
21 (B48_)	2.2 4x4 (B48K)	79	07/90 – 06/94		3596
21 Box (S48_)	1.7	65	06/86 – 04/95	3380	
21 Box (S48_)	1.7	65	06/86 – 04/95	3381	
21 Box (S48_)	1.7	65	06/86 – 04/95	3431	
21 Box (S48_)	1.7	65	06/86 – 04/95	3503	
21 Box (S48_)	1.7	65	06/86 – 04/95	3580	
21 Box (S48_)	1.9 D	47	06/86 – 08/94	3428	
21 Box (S48_)	2.1 D	49	06/86 – 08/94	3428	3333
21 Box (S48_)	2.1 D	49	06/86 – 08/94		3596
21 Estate (K48_)	1.7 (K/S481)	55	06/86 – 03/93	3380	
21 Estate (K48_)	1.7 (K/S481)	55	06/86 – 03/93	3381	
21 Estate (K48_)	1.7 (K/S481)	55	06/86 – 03/93	3431	
21 Estate (K48_)	1.7 (K/S481)	55	06/86 – 03/93	3503	
21 Estate (K48_)	1.7 (K/S481)	55	06/86 – 03/93	3580	
21 Estate (K48_)	1.7 (K/S482)	65	10/86 – 12/88	3380	
21 Estate (K48_)	1.7 (K/S482)	65	10/86 – 12/88	3381	
21 Estate (K48_)	1.7 (K/S482)	65	10/86 – 12/88	3431	
21 Estate (K48_)	1.7 (K/S482)	65	10/86 – 12/88	3503	
21 Estate (K48_)	1.7 (K/S482)	65	10/86 – 12/88	3580	
21 Estate (K48_)	1.7 (K48E)	66	10/89 – 12/93	3380	
21 Estate (K48_)	1.7 (K48E)	66	10/89 – 12/93	3381	
21 Estate (K48_)	1.7 (K48E)	66	10/89 – 12/93	3431	
21 Estate (K48_)	1.7 (K48E)	69	06/86 – 12/89	3380	
21 Estate (K48_)	1.7 (K48E)	69	06/86 – 12/89	3381	
21 Estate (K48_)	1.7 (K48E)	69	06/86 – 12/89	3431	
21 Estate (K48_)	1.7 (K48E)	69	06/86 – 12/89	3503	
21 Estate (K48_)	1.7 (K48E)	69	06/86 – 12/89	3580	
21 Estate (K48_)	1.7 (K48F) CAT	54	05/88 – 06/93	3380	
21 Estate (K48_)	1.7 (K48F) CAT	54	05/88 – 06/93	3381	
21 Estate (K48_)	1.7 (K48F) CAT	54	05/88 – 06/93	3431	
21 Estate (K48_)	1.7 (K48F) CAT	54	05/88 – 06/93	3503	
21 Estate (K48_)	1.7 (K48F) CAT	54	05/88 – 06/93	3580	
21 Estate (K48_)	1.7 (K48M)	54	06/86 – 12/89	3380	
21 Estate (K48_)	1.7 (K48M)	54	06/86 – 12/89	3381	
21 Estate (K48_)	1.7 (K48M)	54	06/86 – 12/89	3431	
21 Estate (K48_)	1.7 (K48M)	54	06/86 – 12/89	3503	
21 Estate (K48_)	1.7 (K48M)	54	06/86 – 12/89	3580	
21 Estate (K48_)	1.7 (K48N)	64	06/87 – 04/89	3380	
21 Estate (K48_)	1.7 (K48N)	64	06/87 – 04/89	3381	
21 Estate (K48_)	1.7 (K48N)	64	06/87 – 04/89	3431	
21 Estate (K48_)	1.7 (K48N)	64	06/87 – 04/89	3503	
21 Estate (K48_)	1.7 (K48N)	64	06/87 – 04/89	3580	
21 Estate (K48_)	1.9 D	47	03/86 – 08/94	3380	
21 Estate (K48_)	1.9 D	47	03/86 – 08/94	3381	
21 Estate (K48_)	1.9 D	47	03/86 – 08/94	3431	
21 Estate (K48_)	1.9 D	47	03/86 – 08/94	3503	
21 Estate (K48_)	1.9 D	47	03/86 – 08/94	3580	
21 Estate (K48_)	2.0	75	06/91 – 05/93	3428	3333
21 Estate (K48_)	2.0	75	06/91 – 05/93		3596
21 Estate (K48_)	2.0	86	07/89 – 06/92	3428	3333
21 Estate (K48_)	2.0	86	07/89 – 06/92		3596
21 Estate (K48_)	2.0 (K483)	85	06/86 – 12/88	3428	3333
21 Estate (K48_)	2.0 (K483)	85	06/86 – 12/88		3596
21 Estate (K48_)	2.0 (K48C)	88	03/86 – 12/93	3428	3333
21 Estate (K48_)	2.0 (K48C)	88	03/86 – 12/93		3596
21 Estate (K48_)	2.0 (K48R)	99	06/90 – 02/94	3428	3333
21 Estate (K48_)	2.0 (K48R)	99	06/90 – 02/94		3596
21 Estate (K48_)	2.0 4x4	88	03/89 – 12/93	3428	3333
21 Estate (K48_)	2.0 4x4	88	03/89 – 12/93		3596
21 Estate (K48_)	2.1 D (K/S486)	48	10/86 – 09/90	3428	3333
21 Estate (K48_)	2.1 D (K/S486)	48	10/86 – 09/90		3596
21 Estate (K48_)	2.1 D (K/S48V, K/S48O)	53	08/89 – 12/92	3428	3333
21 Estate (K48_)	2.1 D (K/S48V, K/S48O)	53	08/89 – 12/92		3596
21 Estate (K48_)	2.1 D (K480)	51	02/92 – 09/95	3428	3333
21 Estate (K48_)	2.1 D (K480)	51	02/92 – 09/95	3428	3596
21 Estate (K48_)	2.1 Turbo-D (K48A, K48W, K487, K488)	65	10/86 – 11/93	3428	3333
21 Estate (K48_)	2.1 Turbo-D (K48A, K48W, K487, K488)	65	10/86 – 11/93		3596
21 Estate (K48_)	2.2 (K48K)	79	06/86 – 11/93	3428	3333
21 Estate (K48_)	2.2 (K48K)	79	06/86 – 11/93		3596

MAKE & MODEL		KW	YEAR		
RENAULT					
21 Estate (K48_)	2.2 4x4 (K48K)	79	06/86 – 12/93	3428	3333
21 Estate (K48_)	2.2 4x4 (K48K)	79	06/86 – 12/93		3596
21 Saloon (L48_)	1.4 (L48D)	51	06/88 – 10/93	3428	
21 Saloon (L48_)	1.7 (L481)	55	03/86 – 12/87	3380	
21 Saloon (L48_)	1.7 (L481)	55	03/86 – 12/87	3381	
21 Saloon (L48_)	1.7 (L481)	55	03/86 – 12/87	3431	
21 Saloon (L48_)	1.7 (L481)	55	03/86 – 12/87	3503	
21 Saloon (L48_)	1.7 (L481)	55	03/86 – 12/87	3580	
21 Saloon (L48_)	1.7 (L482)	65	03/86 – 03/93	3380	
21 Saloon (L48_)	1.7 (L482)	65	03/86 – 03/93	3381	
21 Saloon (L48_)	1.7 (L482)	65	03/86 – 03/93	3431	
21 Saloon (L48_)	1.7 (L482)	65	03/86 – 03/93	3503	
21 Saloon (L48_)	1.7 (L482)	65	03/86 – 03/93	3580	
21 Saloon (L48_)	1.7 (L48E)	69	03/86 – 02/94	3380	
21 Saloon (L48_)	1.7 (L48E)	69	03/86 – 02/94	3381	
21 Saloon (L48_)	1.7 (L48E)	69	03/86 – 02/94	3431	
21 Saloon (L48_)	1.7 (L48E)	69	03/86 – 02/94	3503	
21 Saloon (L48_)	1.7 (L48E)	69	03/86 – 02/94	3580	
21 Saloon (L48_)	1.7 (L48M, L48F)	54	07/86 – 02/94	3380	
21 Saloon (L48_)	1.7 (L48M, L48F)	54	07/86 – 02/94	3381	
21 Saloon (L48_)	1.7 (L48M, L48F)	54	07/86 – 02/94	3431	
21 Saloon (L48_)	1.7 (L48M, L48F)	54	07/86 – 02/94	3503	
21 Saloon (L48_)	1.7 (L48M, L48F)	54	07/86 – 02/94	3580	
21 Saloon (L48_)	1.7 (L48N)	64	06/87 – 04/89	3380	
21 Saloon (L48_)	1.7 (L48N)	64	06/87 – 04/89	3381	
21 Saloon (L48_)	1.7 (L48N)	64	06/87 – 04/89	3431	
21 Saloon (L48_)	1.7 (L48N)	64	06/87 – 04/89	3503	
21 Saloon (L48_)	1.7 (L48N)	64	06/87 – 04/89	3580	
21 Saloon (L48_)	1.9 D (L48H, L48I)	47	08/89 – 10/93	3380	
21 Saloon (L48_)	1.9 D (L48H, L48I)	47	08/89 – 10/93	3381	
21 Saloon (L48_)	1.9 D (L48H, L48I)	47	08/89 – 10/93	3431	
21 Saloon (L48_)	1.9 D (L48H, L48I)	47	08/89 – 10/93	3503	
21 Saloon (L48_)	1.9 D (L48H, L48I)	47	08/89 – 10/93	3580	
21 Saloon (L48_)	2.0	76	04/88 – 06/89	3428	3333
21 Saloon (L48_)	2.0	76	04/88 – 06/89		3596
21 Saloon (L48_)	2.0	78	05/91 – 10/93	3428	3333
21 Saloon (L48_)	2.0	78	05/91 – 10/93		3596
21 Saloon (L48_)	2.0	86	04/86 – 06/89	3428	3333
21 Saloon (L48_)	2.0	86	04/86 – 06/89		3596
21 Saloon (L48_)	2.0 (L483)	85	03/86 – 12/88	3428	3333
21 Saloon (L48_)	2.0 (L483)	85	03/86 – 12/88		3596
21 Saloon (L48_)	2.0 (L489)	75	03/86 – 10/93	3428	3333
21 Saloon (L48_)	2.0 (L489)	75	03/86 – 10/93		3596
21 Saloon (L48_)	2.0 (L48C)	88	03/86 – 12/93	3428	3333
21 Saloon (L48_)	2.0 (L48C)	88	03/86 – 12/93		3596
21 Saloon (L48_)	2.0 (L48R)	99	02/90 – 06/94	3428	3333
21 Saloon (L48_)	2.0 (L48R)	99	02/90 – 06/94		3596
21 Saloon (L48_)	2.0 4x4 (L48R)	99	12/89 – 02/94	3428	3333
21 Saloon (L48_)	2.0 4x4 (L48R)	99	12/89 – 02/94		3596
21 Saloon (L48_)	2.0 Turbo (L485)	129	04/87 – 03/90	3428	3333
21 Saloon (L48_)	2.0 Turbo (L485)	129	04/87 – 03/90		3596
21 Saloon (L48_)	2.0 Turbo (L48L)	119	02/90 – 10/92	3428	3333
21 Saloon (L48_)	2.0 Turbo (L48L)	119	02/90 – 10/92		3596
21 Saloon (L48_)	2.0 Turbo 4x4	129	08/89 – 10/93	3428	3333
21 Saloon (L48_)	2.0 Turbo 4x4	129	08/89 – 10/93		3596
21 Saloon (L48_)	2.0 Turbo 4x4 (L48L)	119	02/90 – 10/92	3428	3333
21 Saloon (L48_)	2.0 Turbo 4x4 (L48L)	119	02/90 – 10/92		3596
21 Saloon (L48_)	2.1 D (L480)	51	10/92 – 06/94	3428	3333
21 Saloon (L48_)	2.1 D (L480)	51	10/92 – 06/94		3596
21 Saloon (L48_)	2.1 D (L486)	48	03/86 – 12/89	3428	3333
21 Saloon (L48_)	2.1 D (L486)	48	03/86 – 12/89		3596
21 Saloon (L48_)	2.1 D (L48V, L48O)	53	05/89 – 06/94	3428	3333
21 Saloon (L48_)	2.1 D (L48V, L48O)	53	05/89 – 06/94		3596
21 Saloon (L48_)	2.1 TD	50	04/86 – 06/89	3428	3333
21 Saloon (L48_)	2.1 TD	50	04/86 – 06/89		3596
21 Saloon (L48_)	2.1 Turbo-D (L48A, L48W, L487, L488)	65	03/86 – 06/94	3428	3333
21 Saloon (L48_)	2.1 Turbo-D (L48A, L48W, L487, L488)	65	03/86 – 06/94		3596
21 Saloon (L48_)	2.2 (L48K)	79	07/86 – 02/94	3428	3333
21 Saloon (L48_)	2.2 (L48K)	79	07/86 – 02/94		3596
21 Saloon (L48_)	2.2 4x4 (L48K)	79	07/90 – 02/94	3428	3333
21 Saloon (L48_)	2.2 4x4 (L48K)	79	07/90 – 02/94		3596
21 Sedan (L48_	1.7 (L481)	55	03.1986 - 12.1987	3488	
21 Sedan (L48_	1.7 (L482)	65	03.1986 - 03.1993	3488	
21 Sedan (L48_	1.7 (L48E)	66	09.1989 - 02.1994	3488	
21 Sedan (L48_	1.7 (L48E)	69	03.1986 - 02.1994	3488	
21 Sedan (L48_	1.7 (L48M, L48F)	54	07.1986 - 02.1994	3488	

MAKE & MODEL   		KW	YEAR		
RENAULT					
21 Sedan (L48_	1.7 (L48N)	64	06.1987 - 04.1989	3488	
21 Sedan (L48_	1.9 D (L48H, L48I)	47	08.1989 - 10.1993	3488	
21 Sedan (L48_)	1.4 (L48D)	51	06.1988 - 10.1993	3503/1	
21 Sedan (L48_)	1.7	70	04.1986 - 06.1989	3503/1	
21 Sedan (L48_)	1.7 (L481)	55	03.1986 - 12.1987	3503/1	
21 Sedan (L48_)	1.7 (L482)	65	03.1986 - 03.1993	3503/1	
21 Sedan (L48_)	1.7 (L48E)	66	09.1989 - 02.1994	3503/1	
21 Sedan (L48_)	1.7 (L48E)	69	03.1986 - 02.1994	3503/1	
21 Sedan (L48_)	1.7 (L48M, L48F)	54	07.1986 - 02.1994	3503/1	
21 Sedan (L48_)	1.7 (L48N)	64	06.1987 - 04.1989	3503/1	
21 Sedan (L48_)	1.9 D (L48H, L48I)	47	08.1989 - 10.1993	3503/1	
21 Sedan (L48_)	2.1 D (L480)	51	10.1992 - 06.1994	3503/1	
21 Sedan (L48_)	2.1 D (L486)	48	03.1986 - 12.1989	3503/1	
21 Sedan (L48_)	2.1 D (L48V, L48O)	53	05.1989 - 06.1994	3503/1	
21 Sedan (L48_)	2.1 TD	50	04.1986 - 06.1989	3503/1	
21 Sedan (L48_)	2.1 Turbo-D (L48A, L48W, L487, L488)	65	03.1986 - 06.1994	3503/1	
21 Station wagon (K48_	1.7 (K/S481)	55	06.1986 - 03.1993	3488	
21 Station wagon (K48_	1.7 (K/S482)	65	10.1986 - 12.1988	3488	
21 Station wagon (K48_	1.7 (K48E)	66	10.1989 - 12.1993	3488	
21 Station wagon (K48_	1.7 (K48E)	69	06.1986 - 12.1989	3488	
21 Station wagon (K48_	1.7 (K48M)	54	06.1986 - 12.1989	3488	
21 Station wagon (K48_	1.7 (K48N)	64	06.1987 - 04.1989	3488	
21 Station wagon (K48_	1.7 Cat (K48F)	54	05.1988 - 06.1993	3488	
21 Station wagon (K48_)	1.7 (K/S481)	55	06.1986 - 03.1993	3503/1	
21 Station wagon (K48_)	1.7 (K/S482)	65	10.1986 - 12.1988	3503/1	
21 Station wagon (K48_)	1.7 (K48E)	66	10.1989 - 12.1993	3503/1	
21 Station wagon (K48_)	1.7 (K48E)	69	06.1986 - 12.1989	3503/1	
21 Station wagon (K48_)	1.7 (K48M)	54	06.1986 - 12.1989	3503/1	
21 Station wagon (K48_)	1.7 (K48N)	64	06.1987 - 04.1989	3503/1	
21 Station wagon (K48_)	1.7 Cat (K48F)	54	05.1988 - 06.1993	3503/1	
21 Station wagon (K48_)	1.9 D	47	03.1986 - 08.1994	3503/1	
21 Station wagon (K48_)	2.1 D (K/S486)	48	10.1986 - 09.1990	3503/1	
21 Station wagon (K48_)	2.1 D (K/S48V, K/S48O)	53	08.1989 - 12.1992	3503/1	
21 Station wagon (K48_)	2.1 D (K480)	51	02.1992 - 09.1995	3503/1	
21 Station wagon (K48_)	2.1 Turbo-D (K48A, K48W, K487, K488)	65	10.1986 - 11.1993	3503/1	
25 (B29_)	2.0 (B297)	74	04.1984 - 12.1992	3503/1	
25 (B29_)	2.0 12V	103	06.1988 - 12.1993	3503/1	
25 (B29_)	2.0 12V (B294)	99	06.1989 - 12.1992	3503/1	
25 (B29_)	2.1 Diesel (B296)	46	04.1984 - 05.1989	3503/1	
25 (B29_)	2.1 Diesel (B296)	51	06.1989 - 12.1992	3503/1	
25 (B29_)	2.1 Turbo-D FWD (B290, B29W)	63	04.1984 - 12.1992	3503/1	
25 (B29_)	2.2 (B29)	76	11.1985 - 03.1989	3503/1	
25 (B29_)	2.2 (B29B)	79	09.1986 - 12.1992	3503/1	
25 (B29_)	2.2 (B29E)	89	04.1984 - 12.1989	3503/1	
25 (B29_)	2.2 (B29E)	91	04.1984 - 12.1989	3503/1	
25 (B29_)	2.0	88	03/87 – 12/93	3431	3333
25 (B29_)	2.0	88	03/87 – 12/93	3503	
25 (B29_)	2.0 (J6R 706)	74	04/84 – 12/92	3372	
25 (B29_)	2.0 (J6R 706)	74	04/84 – 12/92	3599	
25 (B29_)	2.0 (J6R 707)	74	04/84 – 12/92	3372	
25 (B29_)	2.0 (J6R 707)	74	04/84 – 12/92	3599	
25 (B29_)	2.0 (J6R 760)	74	04/84 – 12/92	3372	
25 (B29_)	2.0 (J6R 760)	74	04/84 – 12/92	3599	
25 (B29_)	2.0 (J6R 762)	74	04/84 – 12/92	3372	
25 (B29_)	2.0 (J6R 762)	74	04/84 – 12/92	3599	
25 (B29_)	2.0 (J6R 763)	74	04/84 – 12/92	3372	
25 (B29_)	2.0 (J6R 763)	74	04/84 – 12/92	3599	
25 (B29_)	2.0 (J7R 722)	88	03/87 – 12/93	3372	
25 (B29_)	2.0 (J7R 722)	88	03/87 – 12/93	3599	
25 (B29_)	2.0 (J7R 723)	88	03/87 – 12/93	3372	
25 (B29_)	2.0 (J7R 723)	88	03/87 – 12/93	3599	
25 (B29_)	2.0 (B297)	74	04/84 – 12/92	3431	3333
25 (B29_)	2.0 (B297)	74	04/84 – 12/92	3503	
25 (B29_)	2.0 12V	103	06/88 – 12/93	3431	3333
25 (B29_)	2.0 12V	103	06/88 – 12/93	3503	
25 (B29_)	2.0 12V (J7R 720)	103	06/88 – 12/93	3372	
25 (B29_)	2.0 12V (J7R 720)	103	06/88 – 12/93	3599	
25 (B29_)	2.0 12V (J7R 721)	103	06/88 – 12/93	3372	
25 (B29_)	2.0 12V (J7R 721)	103	06/88 – 12/93	3599	
25 (B29_)	2.0 12V (J7R 726)	99	06/89 – 12/92	3372	
25 (B29_)	2.0 12V (J7R 726)	99	06/89 – 12/92	3599	
25 (B29_)	2.0 12V (B294)	99	06/89 – 12/92	3431	3333
25 (B29_)	2.0 12V (B294)	99	06/89 – 12/92	3503	
25 (B29_)	2.1 Diesel (J8S 706)	46	04/84 – 05/89	3372	
25 (B29_)	2.1 Diesel (J8S 706)	46	04/84 – 05/89	3599	
25 (B29_)	2.1 Diesel (J8S 736)	51	06/89 – 12/92	3372	

MAKE & MODEL   		KW	YEAR		
RENAULT					
25 (B29_)	2.1 Diesel (J8S 736)	51	06/89 – 12/92	3599	
25 (B29_)	2.1 Diesel (B296)	46	04/84 – 05/89	3431	3333
25 (B29_)	2.1 Diesel (B296)	46	04/84 – 05/89	3503	
25 (B29_)	2.1 Diesel (B296)	51	06/89 – 12/92	3431	3333
25 (B29_)	2.1 Diesel (B296)	51	06/89 – 12/92	3503	
25 (B29_)	2.1 Turbo-D (J8S 708)	63	04/84 – 12/92	3372	
25 (B29_)	2.1 Turbo-D (J8S 708)	63	04/84 – 12/92	3599	
25 (B29_)	2.1 Turbo-D (J8S 738)	63	04/84 – 12/92	3372	
25 (B29_)	2.1 Turbo-D (J8S 738)	63	04/84 – 12/92	3599	
25 (B29_)	2.1 Turbo-D FWD (B290, B29W)	63	04/84 – 12/92	3431	3333
25 (B29_)	2.1 Turbo-D FWD (B290, B29W)	63	04/84 – 12/92	3503	
25 (B29_)	2.2 (J7T 706)	89	04/84 – 12/89	3372	
25 (B29_)	2.2 (J7T 706)	89	04/84 – 12/89	3599	
25 (B29_)	2.2 (J7T 707)	89	04/84 – 12/89	3372	
25 (B29_)	2.2 (J7T 707)	89	04/84 – 12/89	3599	
25 (B29_)	2.2 (J7T 708)	76	11/85 – 03/89	3372	
25 (B29_)	2.2 (J7T 708)	76	11/85 – 03/89	3599	
25 (B29_)	2.2 (J7T 708)	76	11/85 – 03/89	3372	
25 (B29_)	2.2 (J7T 708)	79	09/86 – 12/92	3372	
25 (B29_)	2.2 (J7T 708)	79	09/86 – 12/92	3599	
25 (B29_)	2.2 (J7T 708)	79	09/86 – 12/92	3372	
25 (B29_)	2.2 (J7T 714)	89	04/84 – 12/89	3372	
25 (B29_)	2.2 (J7T 714)	89	04/84 – 12/89	3599	
25 (B29_)	2.2 (J7T 730)	91	04/84 – 12/89	3372	
25 (B29_)	2.2 (J7T 730)	91	04/84 – 12/89	3599	
25 (B29_)	2.2 (J7T 731)	91	04/84 – 12/89	3372	
25 (B29_)	2.2 (J7T 731)	91	04/84 – 12/89	3599	
25 (B29_)	2.2 (J7T 732)	76	11/85 – 03/89	3372	
25 (B29_)	2.2 (J7T 732)	76	11/85 – 03/89	3599	
25 (B29_)	2.2 (J7T 732)	79	09/86 – 12/92	3372	
25 (B29_)	2.2 (J7T 732)	79	09/86 – 12/92	3599	
25 (B29_)	2.2 (J7T 733)	79	09/86 – 12/92	3372	
25 (B29_)	2.2 (J7T 733)	79	09/86 – 12/92	3599	
25 (B29_)	2.2 (B29)	76	11/85 – 03/89	3431	3333
25 (B29_)	2.2 (B29)	76	11/85 – 03/89	3503	
25 (B29_)	2.2 (B29B)	79	09/86 – 12/92	3431	3333
25 (B29_)	2.2 (B29B)	79	09/86 – 12/92	3503	
25 (B29_)	2.2 (B29B)	79	09/86 – 12/92	3539	
25 (B29_)	2.2 (B29B)	79	09/86 – 12/92	3546	
25 (B29_)	2.2 (B29E)	89	04/84 – 12/89	3431	3333
25 (B29_)	2.2 (B29E)	89	04/84 – 12/89	3503	
25 (B29_)	2.2 (B29E)	89	04/84 – 12/89	3539	
25 (B29_)	2.2 (B29E)	89	04/84 – 12/89	3546	
25 (B29_)	2.2 (B29E)	91	04/84 – 12/89	3431	3333
25 (B29_)	2.2 (B29E)	91	04/84 – 12/89	3503	
25 (B29_)	2.2 (B29E)	91	04/84 – 12/89	3539	
25 (B29_)	2.2 (B29E)	91	04/84 – 12/89	3546	
25 (B29_)	2.2 (J7T 715)	89	04/84 – 12/89	3372	
25 (B29_)	2.2 (J7T 715)	89	04/84 – 12/89	3599	
25 (B29_)	2.4 V6 Turbo (B295)	133	10/84 – 05/90	3539	3333
25 (B29_)	2.4 V6 Turbo (B295)	133	10/84 – 05/90	3546	
25 (B29_)	2.5 V6 Turbo (B29G)	151	01/90 – 12/92	3539	3333
25 (B29_)	2.5 V6 Turbo (B29G)	151	01/90 – 12/92	3546	
25 (B29_)	2.7 V6 Injection (B298)	104	04/84 – 08/89	3539	3333
25 (B29_)	2.7 V6 Injection (B298)	104	04/84 – 08/89	3546	
25 (B29_)	2.8 V6 (B293)	115	06/87 – 02/90	3539	3333
25 (B29_)	2.8 V6 (B293)	115	06/87 – 02/90	3546	
25 (B29_)	2.8 V6 Injection (B29A)	100	06/86 – 02/88	3539	3333
25 (B29_)	2.8 V6 Injection (B29A)	100	06/86 – 02/88	3546	
25 (B29_)	2.8 V6 Injection (B29F)	110	06/87 – 12/92	3539	3333
25 (B29_)	2.8 V6 Injection (B29F)	110	06/87 – 12/92	3546	
30 (127_	2.1 Turbo-D (1270)	63	02.1982 - 03.1986	3488	
30 (127_)	2.1 Turbo-D (1270)	63	02.1982 - 03.1986	3503/1	
30 (127_)	2.1 Turbo-D (1270)	63	02/82 – 03/86	3380	
30 (127_)	2.1 Turbo-D (1270)	63	02/82 – 03/86	3381	
30 (127_)	2.1 Turbo-D (1270)	63	02/82 – 03/86	3431	
30 (127_)	2.1 Turbo-D (1270)	63	02/82 – 03/86	3503	
30 (127_)	2.1 Turbo-D (1270)	63	02/82 – 03/86	3580	
30 (127_)	2.6 (1273)	92	08/76 – 08/78		3333
30 (127_)	2.6 (1273)	96	02/75 – 07/76		3333
30 (127_)	2.6 TS (1275)	94	07/78 – 01/84		3333
30 (127_)	2.6 TX (1278)	105	10/78 – 12/83		3333
4 (112_)	0.8 (1123)	21	10/83 – 10/88	3329	
4 (112_)	0.8 (1123)	21	10/83 – 10/88	3374	
4 (112_)	0.8 (1123)	25	09/71 – 12/88	3329	
4 (112_)	0.8 (1123)	25	09/71 – 12/88	3374	

MAKE & MODEL   		KW	YEAR		
RENAULT					
4 (112_)	1.0	31	12/85 – 06/93	3329	
4 (112_)	1.0	31	12/85 – 06/93	3374	
4 (112_)	1.0 (112C)	25	06/87 – 06/93	3329	
4 (112_)	1.0 (112C)	25	06/87 – 06/93	3374	
4 (112_)	1.1	32	06/86 – 06/90	3329	
4 (112_)	1.1	32	06/86 – 06/90	3374	
4 (112_)	1.1 (1128, S128)	25	06/78 – 06/90	3329	
4 (112_)	1.1 (1128, S128)	25	06/78 – 06/90	3374	
4 Box (R21_, R23_)	0.8	19	09/71 – 08/82	3329	
4 Box (R21_, R23_)	0.8	19	09/71 – 08/82	3374	
4 Box (R21_, R23_)	0.8 (2106)	25	09/66 – 12/88	3329	
4 Box (R21_, R23_)	0.8 (2106)	25	09/66 – 12/88	3374	
4 Box (R21_, R23_)	0.8 (2391)	21	04/83 – 07/89	3329	
4 Box (R21_, R23_)	0.8 (2391)	21	04/83 – 07/89	3374	
4 Box (R21_, R23_)	1.0	25	06/87 – 12/93	3329	
4 Box (R21_, R23_)	1.0	25	06/87 – 12/93	3374	
4 Box (R21_, R23_)	1.1 (239B)	26	07/82 – 05/89	3329	
4 Box (R21_, R23_)	1.1 (239B)	26	07/82 – 05/89	3374	
5 (122_)	1.0 (1222, 1392)	32	01/72 – 12/85	3329	
5 (122_)	1.0 (1222, 1392)	32	01/72 – 12/85	3374	
5 (122_)	1.1 (1227, 1397)	33	09/80 – 12/85	3329	
5 (122_)	1.1 (1227, 1397)	33	09/80 – 12/85	3374	
5 (122_)	1.3 (1224, 1394)	47	09/75 – 09/84	3329	
5 (122_)	1.3 (1224, 1394)	47	09/75 – 09/84	3374	
5 (122_)	1.3 (1225)	31	09/76 – 09/79	3329	
5 (122_)	1.3 (1225)	31	09/76 – 09/79	3374	
5 (122_)	1.3 (1225, 1395)	33	06/79 – 09/84	3329	
5 (122_)	1.3 (1225, 1395)	33	06/79 – 09/84	3374	
5 (122_)	1.3 Automatik (1225, 1395)	40	06/79 – 09/84	3329	
5 (122_)	1.3 Automatik (1225, 1395)	40	06/79 – 09/84	3374	
5 (122_)	1.4	81	06/84 – 01/85	3329/1	3333
5 (122_)	1.4 (1229, 1399)	46	01/82 – 12/85	3329	
5 (122_)	1.4 (1229, 1399)	46	01/82 – 12/85	3374	
5 (122_)	1.4 Alpine A5 (1223)	68	09/77 – 09/81	3329	
5 (122_)	1.4 Alpine A5 (1223)	68	09/77 – 09/81	3374	
5 (122_)	1.4 Alpine Turbo (122B)	79	10/81 – 01/85	3329/1	3333
5 (122_)	1.4 Automatik (1229, 1399)	43	06/82 – 09/84	3329	
5 (122_)	1.4 Automatik (1229, 1399)	43	06/82 – 09/84	3374	
9 (L42_	1.1 (L421)	35	09.1981 - 05.1987	3488	
9 (L42_	1.2 (L42S)	40	09.1985 - 12.1988	3488	
9 (L42_	1.4 (L422, L42C)	44	12.1981 - 12.1988	3488	
9 (L42_	1.4 (L423)	53	09.1981 - 12.1985	3488	
9 (L42_	1.4 (L423, L42R)	49	09.1985 - 12.1988	3488	
9 (L42_	1.4 Automatik (L423)	50	09.1981 - 12.1985	3488	
9 (L42_	1.4 Turbo	85	12.1986 - 12.1989	3488	
9 (L42_	1.4 Turbo (L425)	77	04.1984 - 12.1986	3488	
9 (L42_	1.6 D (L424)	40	10.1982 - 12.1988	3488	
9 (L42_	1.7 (L426)	59	09.1984 - 12.1989	3488	
9 (L42_	1.7 (L42E)	69	06.1987 - 12.1988	3488	
9 (L42_	1.7 (L42F)	54	10.1986 - 12.1988	3488	
9 (L42_	1.7 (L42L)	55	10.1986 - 12.1988	3488	
9 (L42_	1.7 (L42N)	65	10.1986 - 12.1988	3488	
9 (L42_)	1.1 (L421)	35	09.1981 - 05.1987	3503/1	
9 (L42_)	1.4 (L423, L42R)	49	09.1985 - 12.1988	3503/1	
9 (L42_)	1.4 Automatik (L423)	50	09.1981 - 12.1985	3503/1	
9 (L42_)	1.4 Turbo (L425)	77	04.1984 - 12.1986	3503/1	
9 (L42_)	1.4 Turbo)	85	12.1986 - 12.1989	3503/1	
9 (L42_)	1.6 D (L424)	40	10.1982 - 12.1988	3503/1	
9 (L42_)	1.7 (L426)	59	09.1984 - 12.1989	3503/1	
9 (L42_)	1.7 (L42E)	69	06.1987 - 12.1988	3503/1	
9 (L42_)	1.7 (L42F)	54	10.1986 - 12.1988	3503/1	
9 (L42_)	1.7 (L42L)	55	10.1986 - 12.1988	3503/1	
9 (L42_)	1.7 (L42N)	65	10.1986 - 12.1988	3503/1	
9 (L42_)	1.1 (L421)	35	09/81 – 05/87	3380	
9 (L42_)	1.1 (L421)	35	09/81 – 05/87	3381	
9 (L42_)	1.1 (L421)	35	09/81 – 05/87	3431	
9 (L42_)	1.1 (L421)	35	09/81 – 05/87	3503	
9 (L42_)	1.1 (L421)	35	09/81 – 05/87	3580	
9 (L42_)	1.2 (L42S)	40	09/85 – 12/88	3380	
9 (L42_)	1.2 (L42S)	40	09/85 – 12/88	3381	
9 (L42_)	1.2 (L42S)	40	09/85 – 12/88	3431	
9 (L42_)	1.2 (L42S)	40	09/85 – 12/88	3503	
9 (L42_)	1.2 (L42S)	40	09/85 – 12/88	3580	
9 (L42_)	1.4 (L422, L42C)	44	12/81 – 12/88	3380	
9 (L42_)	1.4 (L422, L42C)	44	12/81 – 12/88	3381	
9 (L42_)	1.4 (L422, L42C)	44	12/81 – 12/88	3431	

MAKE & MODEL		KW	YEAR		
RENAULT					
9 (L42_)	1.4 (L422, L42C)	44	12/81 – 12/88	3503	
9 (L42_)	1.4 (L422, L42C)	44	12/81 – 12/88	3580	
9 (L42_)	1.4 (L423)	53	09/81 – 12/85	3380	
9 (L42_)	1.4 (L423)	53	09/81 – 12/85	3381	
9 (L42_)	1.4 (L423)	53	09/81 – 12/85	3431	
9 (L42_)	1.4 (L423)	53	09/81 – 12/85	3503	
9 (L42_)	1.4 (L423)	53	09/81 – 12/85	3580	
9 (L42_)	1.4 (L423, L42R)	49	09/85 – 12/88	3380	
9 (L42_)	1.4 (L423, L42R)	49	09/85 – 12/88	3381	
9 (L42_)	1.4 (L423, L42R)	49	09/85 – 12/88	3431	
9 (L42_)	1.4 (L423, L42R)	49	09/85 – 12/88	3503	
9 (L42_)	1.4 (L423, L42R)	49	09/85 – 12/88	3580	
9 (L42_)	1.4 Automatik (L423)	50	09/81 – 12/85	3380	
9 (L42_)	1.4 Automatik (L423)	50	09/81 – 12/85	3381	
9 (L42_)	1.4 Automatik (L423)	50	09/81 – 12/85	3431	
9 (L42_)	1.4 Automatik (L423)	50	09/81 – 12/85	3503	
9 (L42_)	1.4 Automatik (L423)	50	09/81 – 12/85	3580	
9 (L42_)	1.4 Turbo	85	12/86 – 12/89	3431	3496
9 (L42_)	1.4 Turbo	85	12/86 – 12/89	3380	
9 (L42_)	1.4 Turbo	85	12/86 – 12/89	3381	
9 (L42_)	1.4 Turbo	85	12/86 – 12/89	3503	
9 (L42_)	1.4 Turbo	85	12/86 – 12/89	3580	
9 (L42_)	1.4 Turbo (L425)	77	04/84 – 12/86	3431	3496
9 (L42_)	1.4 Turbo (L425)	77	04/84 – 12/86	3380	
9 (L42_)	1.4 Turbo (L425)	77	04/84 – 12/86	3381	
9 (L42_)	1.4 Turbo (L425)	77	04/84 – 12/86	3503	
9 (L42_)	1.4 Turbo (L425)	77	04/84 – 12/86	3580	
9 (L42_)	1.6 D (L424)	40	10/82 – 12/88	3380	
9 (L42_)	1.6 D (L424)	40	10/82 – 12/88	3381	
9 (L42_)	1.6 D (L424)	40	10/82 – 12/88	3431	
9 (L42_)	1.6 D (L424)	40	10/82 – 12/88	3503	
9 (L42_)	1.6 D (L424)	40	10/82 – 12/88	3580	
9 (L42_)	1.7 (L426)	59	09/84 – 12/89	3380	
9 (L42_)	1.7 (L426)	59	09/84 – 12/89	3381	
9 (L42_)	1.7 (L426)	59	09/84 – 12/89	3431	
9 (L42_)	1.7 (L426)	59	09/84 – 12/89	3503	
9 (L42_)	1.7 (L426)	59	09/84 – 12/89	3580	
9 (L42_)	1.7 (L42E)	69	06/87 – 12/88	3380	
9 (L42_)	1.7 (L42E)	69	06/87 – 12/88	3381	
9 (L42_)	1.7 (L42E)	69	06/87 – 12/88	3431	
9 (L42_)	1.7 (L42E)	69	06/87 – 12/88	3503	
9 (L42_)	1.7 (L42E)	69	06/87 – 12/88	3580	
9 (L42_)	1.7 (L42F)	54	10/86 – 12/88	3380	
9 (L42_)	1.7 (L42F)	54	10/86 – 12/88	3381	
9 (L42_)	1.7 (L42F)	54	10/86 – 12/88	3431	
9 (L42_)	1.7 (L42F)	54	10/86 – 12/88	3503	
9 (L42_)	1.7 (L42F)	54	10/86 – 12/88	3580	
9 (L42_)	1.7 (L42L)	55	10/86 – 12/88	3380	
9 (L42_)	1.7 (L42L)	55	10/86 – 12/88	3381	
9 (L42_)	1.7 (L42L)	55	10/86 – 12/88	3431	
9 (L42_)	1.7 (L42L)	55	10/86 – 12/88	3503	
9 (L42_)	1.7 (L42L)	55	10/86 – 12/88	3580	
9 (L42_)	1.7 (L42N)	65	10/86 – 12/88	3380	
9 (L42_)	1.7 (L42N)	65	10/86 – 12/88	3381	
9 (L42_)	1.7 (L42N)	65	10/86 – 12/88	3431	
9 (L42_)	1.7 (L42N)	65	10/86 – 12/88	3503	
9 (L42_)	1.7 (L42N)	65	10/86 – 12/88	3580	
AVANTIME (DE0_)	2.0 16V Turbo (DE0U, DE0V)	120	11/01 – 05/03		3529
AVANTIME (DE0_)	2.0 16V Turbo (DE0U, DE0V)	120	11/01 – 05/03		3529/2
AVANTIME (DE0_)	2.2 dCi (DE01)	110	05/02 – 05/03		3529
AVANTIME (DE0_)	2.2 dCi (DE01)	110	05/02 – 05/03		3529/2
AVANTIME (DE0_)	3.0 V6 (DE04, DE0T)	152	09/01 – 05/03		3529
AVANTIME (DE0_)	3.0 V6 (DE04, DE0T)	152	09/01 – 05/03		3529/2
CAPTUR (J5_)	0.9 TCe 90	66	06/13 -	3983	
CAPTUR (J5_)	1.2 T	85	06/15 -	3964/1	
CAPTUR (J5_)	1.2 TCe 120	87	01/16 -	3964/1	
CAPTUR (J5_)	1.2 TCe 120	88	06/13 -	3964/1	
CAPTUR (J5_)	1.5 dCi 110	81	01/15 -	3964/1	
CAPTUR (J5_)	1.5 dCi 90	66	06/13 -	3964/1	
CLIO IV Grandtour (K98)	0.9 TCe 90 (H4B 400)	66	01/13 -	4253	
CLIO IV Grandtour (K98)	1.2 16V (D4F 740)	54	01/13 -	4253	
CLIO IV Grandtour (K98)	1.2 TCe 120 (H5F 403)	88	03/13 -	4253	
CLIO IV Grandtour (K98)	1.2 TCe 120 (H5F 412)	87	01/16 -	4253	
CLIO IV Grandtour (K98)	1.5 dCi 75 (K9K 612)	55	01/13 -	4253	
CLIO IV Grandtour (K98)	1.5 dCi 90 (K9K 608)	66	01/13 -	4253	
CLIO (B/C57_, 5/357_)	1.1 (C1E 700)	49	04/92 – 08/92	3372	

MAKE & MODEL		KW	YEAR		
RENAULT					
CLIO (B/C57_, 5/357_)	1.1 (C1E 700)	49	04/92 – 08/92	3599	
CLIO (B/C57_, 5/357_)	1.2 (E5F 710)	60	05/90 – 03/96	3372	
CLIO (B/C57_, 5/357_)	1.2 (E5F 710)	60	05/90 – 03/96	3599	
CLIO (B/C57_, 5/357_)	1.2 (E7F 700)	58	05/90 – 09/98	3372	
CLIO (B/C57_, 5/357_)	1.2 (E7F 700)	58	05/90 – 09/98	3599	
CLIO (B/C57_, 5/357_)	1.2 (E7F 708)	58	05/90 – 09/98	3372	
CLIO (B/C57_, 5/357_)	1.2 (E7F 708)	58	05/90 – 09/98	3599	
CLIO (B/C57_, 5/357_)	1.2 (E7F 750)	58	05/90 – 09/98	3372	
CLIO (B/C57_, 5/357_)	1.2 (E7F 750)	58	05/90 – 09/98	3599	
CLIO (B/C57_, 5/357_)	1.2 (B/C57R) (E7F 706)	54	01/91 – 06/96	3372	
CLIO (B/C57_, 5/357_)	1.2 (B/C57R) (E7F 706)	54	01/91 – 06/96	3599	
CLIO (B/C57_, 5/357_)	1.4 (E6J 712)	78	05/90 – 02/98	3372	
CLIO (B/C57_, 5/357_)	1.4 (E6J 712)	78	05/90 – 02/98	3599	
CLIO (B/C57_, 5/357_)	1.4 (E6J 713)	78	05/90 – 02/98	3372	
CLIO (B/C57_, 5/357_)	1.4 (E6J 713)	78	05/90 – 02/98	3599	
CLIO (B/C57_, 5/357_)	1.4 (E6J 760)	78	05/90 – 02/98	3372	
CLIO (B/C57_, 5/357_)	1.4 (E6J 760)	78	05/90 – 02/98	3599	
CLIO (B/C57_, 5/357_)	1.4 (E7J 601)	79	01/91 – 09/98	3372	
CLIO (B/C57_, 5/357_)	1.4 (E7J 601)	79	01/91 – 09/98	3599	
CLIO (B/C57_, 5/357_)	1.4 (E7J 710)	80	01/91 – 09/98	3372	
CLIO (B/C57_, 5/357_)	1.4 (E7J 710)	80	01/91 – 09/98	3599	
CLIO (B/C57_, 5/357_)	1.4 (E7J 718)	79	01/91 – 09/98	3372	
CLIO (B/C57_, 5/357_)	1.4 (E7J 718)	79	01/91 – 09/98	3599	
CLIO (B/C57_, 5/357_)	1.4 (E7J 719)	79	01/91 – 09/98	3372	
CLIO (B/C57_, 5/357_)	1.4 (E7J 719)	79	01/91 – 09/98	3599	
CLIO (B/C57_, 5/357_)	1.4 (E7J 754)	79	01/91 – 09/98	3372	
CLIO (B/C57_, 5/357_)	1.4 (E7J 754)	79	01/91 – 09/98	3599	
CLIO (B/C57_, 5/357_)	1.4 (E7J 756)	75	01/91 – 09/98	3372	
CLIO (B/C57_, 5/357_)	1.4 (E7J 756)	75	01/91 – 09/98	3599	
CLIO (B/C57_, 5/357_)	1.4 (E7J 757)	75	01/91 – 09/98	3372	
CLIO (B/C57_, 5/357_)	1.4 (E7J 757)	75	01/91 – 09/98	3599	
CLIO (B/C57_, 5/357_)	1.7 (F2N 770)	92	01/91 – 12/93	3372	
CLIO (B/C57_, 5/357_)	1.7 (F2N 770)	92	01/91 – 12/93	3599	
CLIO (B/C57_, 5/357_)	1.8 (F3P 710)	88	01/91 – 09/98	3372	
CLIO (B/C57_, 5/357_)	1.8 (F3P 710)	88	01/91 – 09/98	3599	
CLIO (B/C57_, 5/357_)	1.8 (F3P 710)	95	01/91 – 09/98	3372	
CLIO (B/C57_, 5/357_)	1.8 (F3P 710)	95	01/91 – 09/98	3599	
CLIO (B/C57_, 5/357_)	1.8 (F3P 714)	88	01/91 – 09/98	3372	
CLIO (B/C57_, 5/357_)	1.8 (F3P 714)	88	01/91 – 09/98	3599	
CLIO (B/C57_, 5/357_)	1.9 D (F8Q 730)	64	01/91 – 09/98	3372	
CLIO (B/C57_, 5/357_)	1.9 D (F8Q 730)	64	01/91 – 09/98	3599	
CLIO (B/C57_, 5/357_)	1.9 D (F8Q 732)	64	01/91 – 09/98	3372	
CLIO (B/C57_, 5/357_)	1.9 D (F8Q 732)	64	01/91 – 09/98	3599	
CLIO Grandtour (KR0/1_)	1.2 16V	76	09/10 -	3983	3529/2
CLIO Grandtour (KR0/1_)	1.2 16V (KR02, KR0J)	55	02/08 -	3983	3529/2
CLIO Grandtour (KR0/1_)	1.2 16V (KR0E)	58	02/08 -	3983	3529/2
CLIO Grandtour (KR0/1_)	1.2 16V (KR0P)	74	02/08 -	3983	3529/2
CLIO Grandtour (KR0/1_)	1.2 16V Hi-Flex (KR0S)	55	07/08 -	3983	3529/2
CLIO Grandtour (KR0/1_)	1.4 16V	72	02/10 -	3983	3529/2
CLIO Grandtour (KR0/1_)	1.5 dCi	48	02/10 -	3983	3529/2
CLIO Grandtour (KR0/1_)	1.5 dCi	55	08/10 -	3983	3529/2
CLIO Grandtour (KR0/1_)	1.5 dCi	65	08/10 -	3983	3529/2
CLIO Grandtour (KR0/1_)	1.5 dCi (KR0F)	63	02/08 -	3983	3529/2
CLIO Grandtour (KR0/1_)	1.5 dCi (KR0G)	50	02/08 -	3983	3529/2
CLIO Grandtour (KR0/1_)	1.5 dCi (KR0H)	78	02/08 -	3983	3529/2
CLIO Grandtour (KR0/1_)	1.5 dCi (KR1C, KR1N)	76	02/08 -	3983	3529/2
CLIO Grandtour (KR0/1_)	1.6 16V (KR0B)	82	02/08 -	3983	3529/2
CLIO Grandtour (KR0/1_)	1.6 16V (KR10)	94	11/08 -	3983	3529/2
CLIO I (B/C57_, 5/357_	1.2 (5/357Y, 5/357K)	40	01.1996 - 09.1998	3488	
CLIO I (B/C57_, 5/357_	1.2 (5/357Y, 5/357K)	43	01.1996 - 09.1998	3488	
CLIO I (B/C57_, 5/357_	1.2 (B/C/S572)	44	05.1990 - 03.1996	3488	
CLIO I (B/C57_, 5/357_	1.2 (B/C/S577)	40	01.1996 - 12.1996	3488	
CLIO I (B/C57_, 5/357_	1.2 (B/C/S57A, B/C57S, 5/357F, 5/357J, 5/357L, 5/357R)	43	05.1990 - 09.1998	3488	
CLIO I (B/C57_, 5/357_	1.2 (B/C57R)	40	01.1991 - 06.1996	3488	
CLIO I (B/C57_, 5/357_	1.4	57	05.1990 - 02.1998	3488	
CLIO I (B/C57_, 5/357_	1.4	59	01.1991 - 09.1998	3488	
CLIO I (B/C57_, 5/357_	1.4 (B/C57T, B/C57Y)	58	01.1991 - 09.1998	3488	
CLIO I (B/C57_, 5/357_	1.4 (B57J, C57J, B57P)	55	01.1991 - 09.1998	3488	
CLIO I (B/C57_, 5/357_	1.9 D	48	05.1996 - 02.1998	3488	
CLIO I (B/C57_, 5/357_	1.9 D (B/C/S576, B/C/S57L)	47	01.1991 - 09.1998	3488	
CLIO I (B/C57_, 5/357_	Electric	21	05.1996 - 02.1998	3488	
CLIO I (B/C57_, 5/357_)	1.2 (5/357Y, 5/357K)	40	01.1996 - 09.1998	3503/1	
CLIO I (B/C57_, 5/357_)	1.2 (5/357Y, 5/357K)	43	01.1996 - 09.1998	3503/1	
CLIO I (B/C57_, 5/357_)	1.2 (B/C/S572)	44	05.1990 - 03.1996	3503/1	
CLIO I (B/C57_, 5/357_)	1.2 (B/C/S577)	40	01.1996 - 12.1996	3503/1	
CLIO I (B/C57_, 5/357_)	1.2 (B/C/S57A, B/C57S, 5/357F, 5/357J, 5/357L, 5/357R)	43	05.1990 - 09.1998	3503/1	

MAKE & MODEL		KW	YEAR		
RENAULT					
CLIO I (B/C57_, 5/357_)	1.2 (B/C57R)	40	01.1991 - 06.1996	3503/1	
CLIO I (B/C57_, 5/357_)	1.4	57	05.1990 - 02.1998	3503/1	
CLIO I (B/C57_, 5/357_)	1.4	59	01.1991 - 09.1998	3503/1	
CLIO I (B/C57_, 5/357_)	1.4 (B/C57T, B/C57Y)	58	01.1991 - 09.1998	3503/1	
CLIO I (B/C57_, 5/357_)	1.4 (B57J, C57J, B57P)	55	01.1991 - 09.1998	3503/1	
CLIO I (B/C57_, 5/357_)	1.7 (B/C574)	68	01.1991 - 12.1993	3503/1	
CLIO I (B/C57_, 5/357_)	1.8	66	08.1990 - 04.1996	3503/1	
CLIO I (B/C57_, 5/357_)	1.8 (B/C578)	66	08.1994 - 09.1998	3503/1	
CLIO I (B/C57_, 5/357_)	1.8 (B/C57C, B/C57U)	65	01.1991 - 09.1998	3503/1	
CLIO I (B/C57_, 5/357_)	1.8 16V (C57D)	99	01.1991 - 03.1996	3503/1	
CLIO I (B/C57_, 5/357_)	1.8 Rsi (B/C579)	80	01.1993 - 08.1995	3503/1	
CLIO I (B/C57_, 5/357_)	1.8 Rsi (B/C57H)	79	08.1995 - 09.1998	3503/1	
CLIO I (B/C57_, 5/357_)	1.9 D (B/C/S576, B/C/S57L)	47	01.1991 - 09.1998	3503/1	
CLIO I (B/C57_, 5/357_)	1.9 D)	48	05.1996 - 02.1998	3503/1	
CLIO I (B/C57_, 5/357_)	Electric)	21	05.1996 - 02.1998	3503/1	
CLIO I (B/C57_, 5/357_)	Williams (B/C57M)	108	01.1994 - 09.1998	3503/1	
CLIO I (B/C57_, 5/357_)	1.1	34	01/91 – 09/98	3380	
CLIO I (B/C57_, 5/357_)	1.1	34	01/91 – 09/98	3381	
CLIO I (B/C57_, 5/357_)	1.1	34	01/91 – 09/98	3431	
CLIO I (B/C57_, 5/357_)	1.1	34	01/91 – 09/98	3495	
CLIO I (B/C57_, 5/357_)	1.1	34	01/91 – 09/98	3503	
CLIO I (B/C57_, 5/357_)	1.1	34	01/91 – 09/98	3580	
CLIO I (B/C57_, 5/357_)	1.1	36	04/92 – 08/92	3380	
CLIO I (B/C57_, 5/357_)	1.1	36	04/92 – 08/92	3381	
CLIO I (B/C57_, 5/357_)	1.1	36	04/92 – 08/92	3431	
CLIO I (B/C57_, 5/357_)	1.1	36	04/92 – 08/92	3495	
CLIO I (B/C57_, 5/357_)	1.1	36	04/92 – 08/92	3503	
CLIO I (B/C57_, 5/357_)	1.1	36	04/92 – 08/92	3580	
CLIO I (B/C57_, 5/357_)	1.2 (5/357Y, 5/357K)	40	01/96 – 09/98	3431	3496
CLIO I (B/C57_, 5/357_)	1.2 (5/357Y, 5/357K)	40	01/96 – 09/98	3380	
CLIO I (B/C57_, 5/357_)	1.2 (5/357Y, 5/357K)	40	01/96 – 09/98	3381	
CLIO I (B/C57_, 5/357_)	1.2 (5/357Y, 5/357K)	40	01/96 – 09/98	3503	
CLIO I (B/C57_, 5/357_)	1.2 (5/357Y, 5/357K)	40	01/96 – 09/98	3580	
CLIO I (B/C57_, 5/357_)	1.2 (5/357Y, 5/357K)	43	01/96 – 09/98	3431	3496
CLIO I (B/C57_, 5/357_)	1.2 (5/357Y, 5/357K)	43	01/96 – 09/98	3380	
CLIO I (B/C57_, 5/357_)	1.2 (5/357Y, 5/357K)	43	01/96 – 09/98	3381	
CLIO I (B/C57_, 5/357_)	1.2 (5/357Y, 5/357K)	43	01/96 – 09/98	3503	
CLIO I (B/C57_, 5/357_)	1.2 (5/357Y, 5/357K)	43	01/96 – 09/98	3580	
CLIO I (B/C57_, 5/357_)	1.2 (B/C/S572)	44	05/90 – 03/96	3431	3496
CLIO I (B/C57_, 5/357_)	1.2 (B/C/S572)	44	05/90 – 03/96	3380	
CLIO I (B/C57_, 5/357_)	1.2 (B/C/S572)	44	05/90 – 03/96	3381	
CLIO I (B/C57_, 5/357_)	1.2 (B/C/S572)	44	05/90 – 03/96	3503	
CLIO I (B/C57_, 5/357_)	1.2 (B/C/S572)	44	05/90 – 03/96	3580	
CLIO I (B/C57_, 5/357_)	1.2 (B/C/S577)	40	01/96 – 12/96	3431	3496
CLIO I (B/C57_, 5/357_)	1.2 (B/C/S577)	40	01/96 – 12/96	3380	
CLIO I (B/C57_, 5/357_)	1.2 (B/C/S577)	40	01/96 – 12/96	3381	
CLIO I (B/C57_, 5/357_)	1.2 (B/C/S577)	40	01/96 – 12/96	3503	
CLIO I (B/C57_, 5/357_)	1.2 (B/C/S577)	40	01/96 – 12/96	3580	
CLIO I (B/C57_, 5/357_)	1.2 (B/C/S57A, B/C57S,5/357F, 5/357J, 5/357L,5/357R)	43	05/90 – 09/98	3431	3496
CLIO I (B/C57_, 5/357_)	1.2 (B/C/S57A, B/C57S,5/357F, 5/357J, 5/357L,5/357R)	43	05/90 – 09/98	3380	
CLIO I (B/C57_, 5/357_)	1.2 (B/C/S57A, B/C57S,5/357F, 5/357J, 5/357L,5/357R)	43	05/90 – 09/98	3381	
CLIO I (B/C57_, 5/357_)	1.2 (B/C/S57A, B/C57S,5/357R,5/357F, 5/357J, 5/357L,	43	05/90 – 09/98	3503	
CLIO I (B/C57_, 5/357_)	1.2 (B/C/S57A, B/C57S,5/357R,5/357F, 5/357J, 5/357L,	43	05/90 – 09/98	3580	
CLIO I (B/C57_, 5/357_)	1.2 (B/C57R)	40	01/91 – 06/96	3431	3496
CLIO I (B/C57_, 5/357_)	1.2 (B/C57R)	40	01/91 – 06/96	3380	
CLIO I (B/C57_, 5/357_)	1.2 (B/C57R)	40	01/91 – 06/96	3381	
CLIO I (B/C57_, 5/357_)	1.2 (B/C57R)	40	01/91 – 06/96	3503	
CLIO I (B/C57_, 5/357_)	1.2 (B/C57R)	40	01/91 – 06/96	3580	
CLIO I (B/C57_, 5/357_)	1.4	57	05/90 – 02/98	3431	3496
CLIO I (B/C57_, 5/357_)	1.4	57	05/90 – 02/98	3380	
CLIO I (B/C57_, 5/357_)	1.4	57	05/90 – 02/98	3381	
CLIO I (B/C57_, 5/357_)	1.4	57	05/90 – 02/98	3503	
CLIO I (B/C57_, 5/357_)	1.4	57	05/90 – 02/98	3580	
CLIO I (B/C57_, 5/357_)	1.4	59	01/91 – 09/98	3431	3496
CLIO I (B/C57_, 5/357_)	1.4	59	01/91 – 09/98	3380	
CLIO I (B/C57_, 5/357_)	1.4	59	01/91 – 09/98	3381	
CLIO I (B/C57_, 5/357_)	1.4	59	01/91 – 09/98	3503	
CLIO I (B/C57_, 5/357_)	1.4	59	01/91 – 09/98	3580	
CLIO I (B/C57_, 5/357_)	1.4 (B/C57T, B/C57Y)	58	01/91 – 09/98	3431	3496
CLIO I (B/C57_, 5/357_)	1.4 (B/C57T, B/C57Y)	58	01/91 – 09/98	3380	
CLIO I (B/C57_, 5/357_)	1.4 (B/C57T, B/C57Y)	58	01/91 – 09/98	3381	
CLIO I (B/C57_, 5/357_)	1.4 (B/C57T, B/C57Y)	58	01/91 – 09/98	3503	
CLIO I (B/C57_, 5/357_)	1.4 (B/C57T, B/C57Y)	58	01/91 – 09/98	3580	
CLIO I (B/C57_, 5/357_)	1.4 (B57J, C57J)	55	01/91 – 09/98	3431	3496
CLIO I (B/C57_, 5/357_)	1.4 (B57J, C57J)	55	01/91 – 09/98	3380	
CLIO I (B/C57_, 5/357_)	1.4 (B57J, C57J)	55	01/91 – 09/98	3381	

BESER®

MAKE & MODEL		KW	YEAR		
RENAULT					
CLIO I (B/C57_, 5/357_)	1.4 (B57J, C57J)	55	01/91 – 09/98	3503	
CLIO I (B/C57_, 5/357_)	1.4 (B57J, C57J)	55	01/91 – 09/98	3580	
CLIO I (B/C57_, 5/357_)	1.7 (B/C574)	68	01/91 – 12/93	3431	3496
CLIO I (B/C57_, 5/357_)	1.7 (B/C574)	68	01/91 – 12/93	3503	
CLIO I (B/C57_, 5/357_)	1.8	66	08/90 – 04/96	3431	3496
CLIO I (B/C57_, 5/357_)	1.8	66	08/90 – 04/96	3503	
CLIO I (B/C57_, 5/357_)	1.8	70	01/91 – 09/98	3431	3496
CLIO I (B/C57_, 5/357_)	1.8	70	01/91 – 09/98	3503	
CLIO I (B/C57_, 5/357_)	1.8 (B/C578)	66	08/94 – 09/98	3431	3496
CLIO I (B/C57_, 5/357_)	1.8 (B/C578)	66	08/94 – 09/98	3503	
CLIO I (B/C57_, 5/357_)	1.8 (B/C57C, B/C57U)	65	01/91 – 09/98	3431	3496
CLIO I (B/C57_, 5/357_)	1.8 (B/C57C, B/C57U)	65	01/91 – 09/98	3503	
CLIO I (B/C57_, 5/357_)	1.8 16V (C57D)	99	01/91 – 03/96	3431	
CLIO I (B/C57_, 5/357_)	1.8 16V (C57D)	99	01/91 – 03/96	3503	
CLIO I (B/C57_, 5/357_)	1.8 Rsi (B/C579)	80	01/93 – 08/95	3431	3496
CLIO I (B/C57_, 5/357_)	1.8 Rsi (B/C579)	80	01/93 – 08/95	3503	
CLIO I (B/C57_, 5/357_)	1.8 Rsi (B/C57H)	79	08/95 – 09/98	3431	3496
CLIO I (B/C57_, 5/357_)	1.8 Rsi (B/C57H)	79	08/95 – 09/98	3503	
CLIO I (B/C57_, 5/357_)	1.9 D	40	01/97 – 09/98	3431	3496
CLIO I (B/C57_, 5/357_)	1.9 D	40	01/97 – 09/98	3380	
CLIO I (B/C57_, 5/357_)	1.9 D	40	01/97 – 09/98	3381	
CLIO I (B/C57_, 5/357_)	1.9 D	40	01/97 – 09/98	3503	
CLIO I (B/C57_, 5/357_)	1.9 D	40	01/97 – 09/98	3580	
CLIO I (B/C57_, 5/357_)	1.9 D	48	05/96 – 02/98	3431	3496
CLIO I (B/C57_, 5/357_)	1.9 D	48	05/96 – 02/98	3380	
CLIO I (B/C57_, 5/357_)	1.9 D	48	05/96 – 02/98	3381	
CLIO I (B/C57_, 5/357_)	1.9 D	48	05/96 – 02/98	3503	
CLIO I (B/C57_, 5/357_)	1.9 D	48	05/96 – 02/98	3580	
CLIO I (B/C57_, 5/357_)	1.9 D (B/C/S576, B/C/S57L)	47	01/91 – 09/98	3431	3496
CLIO I (B/C57_, 5/357_)	1.9 D (B/C/S576, B/C/S57L)	47	01/91 – 09/98	3380	
CLIO I (B/C57_, 5/357_)	1.9 D (B/C/S576, B/C/S57L)	47	01/91 – 09/98	3381	
CLIO I (B/C57_, 5/357_)	1.9 D (B/C/S576, B/C/S57L)	47	01/91 – 09/98	3503	
CLIO I (B/C57_, 5/357_)	1.9 D (B/C/S576, B/C/S57L)	47	01/91 – 09/98	3580	
CLIO I (B/C57_, 5/357_)	Electric	21	05/96 – 02/98	3380	
CLIO I (B/C57_, 5/357_)	Electric	21	05/96 – 02/98	3381	
CLIO I (B/C57_, 5/357_)	Electric	21	05/96 – 02/98	3431	
CLIO I (B/C57_, 5/357_)	Electric	21	05/96 – 02/98	3503	
CLIO I (B/C57_, 5/357_)	Electric	21	05/96 – 02/98	3580	
CLIO I (B/C57_, 5/357_)	Williams (B/C57M)	108	01/94 – 09/98	3431	
CLIO I (B/C57_, 5/357_)	Williams (B/C57M)	108	01/94 – 09/98	3503	
CLIO I Box (S57_)	1.1	34	01/91 – 09/98	3495	3496
CLIO I Box (S57_)	1.1	34	01/91 – 09/98	3380	
CLIO I Box (S57_)	1.1	34	01/91 – 09/98	3381	
CLIO I Box (S57_)	1.1	34	01/91 – 09/98	3431	
CLIO I Box (S57_)	1.1	34	01/91 – 09/98	3503	
CLIO I Box (S57_)	1.1	34	01/91 – 09/98	3580	
CLIO I Box (S57_)	1.2	40	01/91 – 09/98	3431	3496
CLIO I Box (S57_)	1.2	40	01/91 – 09/98	3380	
CLIO I Box (S57_)	1.2	40	01/91 – 09/98	3381	
CLIO I Box (S57_)	1.2	40	01/91 – 09/98	3503	
CLIO I Box (S57_)	1.2	40	01/91 – 09/98	3580	
CLIO I Box (S57_)	1.2	40	06/94 – 02/98	3431	3496
CLIO I Box (S57_)	1.2	40	06/94 – 02/98	3380	
CLIO I Box (S57_)	1.2	40	06/94 – 02/98	3381	
CLIO I Box (S57_)	1.2	40	06/94 – 02/98	3503	
CLIO I Box (S57_)	1.2	40	06/94 – 02/98	3580	
CLIO I Box (S57_)	1.2	44	01/91 – 09/98	3431	3496
CLIO I Box (S57_)	1.2	44	01/91 – 09/98	3380	
CLIO I Box (S57_)	1.2	44	01/91 – 09/98	3381	
CLIO I Box (S57_)	1.2	44	01/91 – 09/98	3503	
CLIO I Box (S57_)	1.2	44	01/91 – 09/98	3580	
CLIO I Box (S57_)	1.9 D	48	01/91 – 09/98	3431	3496
CLIO I Box (S57_)	1.9 D	48	01/91 – 09/98	3380	
CLIO I Box (S57_)	1.9 D	48	01/91 – 09/98	3381	
CLIO I Box (S57_)	1.9 D	48	01/91 – 09/98	3503	
CLIO I Box (S57_)	1.9 D	48	01/91 – 09/98	3580	
CLIO I Box (S57_)	1.9 RND	40	04/96 – 02/98	3431	3496
CLIO I Box (S57_)	1.9 RND	40	04/96 – 02/98	3380	
CLIO I Box (S57_)	1.9 RND	40	04/96 – 02/98	3381	
CLIO I Box (S57_)	1.9 RND	40	04/96 – 02/98	3503	
CLIO I Box (S57_)	1.9 RND	40	04/96 – 02/98	3580	
CLIO I Kasa/eğik arka (S57_	1.1	34	01.1991 - 09.1998	3488	
CLIO I Kasa/eğik arka (S57_	1.2	40	01.1991 - 09.1998	3488	
CLIO I Kasa/eğik arka (S57_	1.2	44	01.1991 - 09.1998	3488	
CLIO I Kasa/eğik arka (S57_	1.9 D	48	01.1991 - 09.1998	3488	
CLIO I Kasa/eğik arka (S57_	1.9 RND	40	04.1996 - 02.1998	3488	

MAKE & MODEL		KW	YEAR		
RENAULT					
CLIO I Kasa/eğik arka (S57_)	1.2	40	01.1991 - 09.1998	3503/1	
CLIO I Kasa/eğik arka (S57_)	1.2	44	01.1991 - 09.1998	3503/1	
CLIO I Kasa/eğik arka (S57_)	1.9 D	48	01.1991 - 09.1998	3503/1	
CLIO I Kasa/eğik arka (S57_)	1.9 RND	40	04.1996 - 02.1998	3503/1	
CLIO II (BB_, CB_)	1.2 (BB0A, BB0F, BB10, BB1K, BB28, BB2D, BB2H, CB0A,...)	43	09.1998 - 02.2010	3503/1	
CLIO II (BB_, CB_)	1.2 16V (BB05, BB0W, BB11, BB27, BB2T, BB2U, BB2V, CB05,...)	55	06.2001 - 08.2016	3503/1	
CLIO II (BB_, CB_)	1.2 LPG	43	09.1998 - 06.2009	3503/1	
CLIO II (BB_, CB_)	1.2 LPG (BB0A, CB0A)	44	03.1999 - 05.2001	3503/1	
CLIO II (BB_, CB_)	1.4 (B/CB0C, B/CB0S)	55	09.1998 - 05.2005	3503/1	
CLIO II (BB_, CB_)	1.4 16V (B/CB0L)	70	10.1999 - 09.2004	3503/1	
CLIO II (BB_, CB_)	1.4 16V (B/CB0P, BB13)	72	02.2000 - 07.2008	3503/1	
CLIO II (BB_, CB_)	1.5 dCi	42	06.2001 - 12.2006	3503/1	
CLIO II (BB_, CB_)	1.5 dCi	74	10.2003 - 04.2005	3503/1	
CLIO II (BB_, CB_)	1.5 dCi (B/C2J)	50	08.2004 - 12.2012	3503/1	
CLIO II (BB_, CB_)	1.5 dCi (B/CB03)	59	06.2001 - 10.2003	3503/1	
CLIO II (BB_, CB_)	1.5 dCi (B/CB07)	48	06.2001 - 07.2009	3503/1	
CLIO II (BB_, CB_)	1.5 dCi (B/CB08)	60	06.2001 - 04.2005	3503/1	
CLIO II (BB_, CB_)	1.5 dCi (B/CB3M)	47	06.2005 - 12.2010	3503/1	
CLIO II (BB_, CB_)	1.5 dCi (BB3N, CB3N)	62	02.2007 - 06.2009	3503/1	
CLIO II (BB_, CB_)	1.6 (B/CB0D, BB00)	66	09.1998 - 05.2005	3503/1	
CLIO II (BB_, CB_)	1.6 16V (BB01, BB0H, BB0T, BB14, BB1D, BB1R, BB2KL, BB3G...)	79	09.1998 - 04.2005	3503/1	
CLIO II (BB_, CB_)	1.9 D (B/CB0E)	47	09.1998 - 05.2005	3503/1	
CLIO II (BB_, CB_)	1.9 D (B/CB0J)	48	02.2000 - 05.2001	3503/1	
CLIO II (BB_, CB_)	1.9 dTi (B/CB0U)	59	12.1999 - 05.2005	3503/1	
CLIO II (BB0/1/2_, CB0/1/2_)	1.0	40	02/00 – 05/01	3431	
CLIO II (BB0/1/2_, CB0/1/2_)	1.0	40	02/00 – 05/01	3503	
CLIO II (BB0/1/2_, CB0/1/2_)	1.0	52	06/01 – 04/05	3431	
CLIO II (BB0/1/2_, CB0/1/2_)	1.0	52	06/01 – 04/05	3503	
CLIO II (BB0/1/2_, CB0/1/2_)	1.2	55	06/01 -	3431	3496
CLIO II (BB0/1/2_, CB0/1/2_)	1.2	55	06/01 -	3503	
CLIO II (BB0/1/2_, CB0/1/2_)	1.2 (BB0A, BB0F, BB10, BB1K, BB28, BB2D, BB2H, CB0A...)	43	09/98 -	3503	3496
CLIO II (BB0/1/2_, CB0/1/2_)	1.2 (BB0A, BB0F, BB10, BB1K, BB28, BB2D, BB2H, CB0A...)	43	09/98 -	3431	
CLIO II (BB0/1/2_, CB0/1/2_)	1.2 (BB0A, CB0A)	44	03/99 – 05/01	3503	3496
CLIO II (BB0/1/2_, CB0/1/2_)	1.2 (BB0A, CB0A)	44	03/99 – 05/01	3431	
CLIO II (BB0/1/2_, CB0/1/2_)	1.2 16V	54	06/06 -	3431	3496
CLIO II (BB0/1/2_, CB0/1/2_)	1.2 16V	54	06/06 -	3503	
CLIO II (BB0/1/2_, CB0/1/2_)	1.2 16V (BB05, BB0W, BB11, BB27, BB2T, BB2U, BB2V,CB05...)	55	06/01 -	3431	3496
CLIO II (BB0/1/2_, CB0/1/2_)	1.2 16V (BB05, BB0W, BB11, BB27, BB2T, BB2U, BB2V,CB05...)	55	06/01 -	3503	
CLIO II (BB0/1/2_, CB0/1/2_)	1.2 LPG	43	09/98 – 06/09	3431	3496
CLIO II (BB0/1/2_, CB0/1/2_)	1.2 LPG	43	09/98 – 06/09	3503	
CLIO II (BB0/1/2_, CB0/1/2_)	1.4 (B/CB0C)	55	09/98 – 05/05	3431	3496
CLIO II (BB0/1/2_, CB0/1/2_)	1.4 (B/CB0C)	55	09/98 – 05/05	3503	
CLIO II (BB0/1/2_, CB0/1/2_)	1.4 16V (B/CB0L)	70	10/99 – 09/04	3431	3496
CLIO II (BB0/1/2_, CB0/1/2_)	1.4 16V (B/CB0L)	70	10/99 – 09/04	3503	
CLIO II (BB0/1/2_, CB0/1/2_)	1.4 16V (B/CB0P)	72	08/00 -	3431	3496
CLIO II (BB0/1/2_, CB0/1/2_)	1.4 16V (B/CB0P)	72	08/00 -	3503	
CLIO II (BB0/1/2_, CB0/1/2_)	1.5 dCi	42	06/01 – 12/06	3431	
CLIO II (BB0/1/2_, CB0/1/2_)	1.5 dCi	42	06/01 – 12/06	3503	
CLIO II (BB0/1/2_, CB0/1/2_)	1.5 dCi	74	01/04 -	3431	3496
CLIO II (BB0/1/2_, CB0/1/2_)	1.5 dCi	74	01/04 -	3503	
CLIO II (BB0/1/2_, CB0/1/2_)	1.5 dCi (B/C2J)	50	08/04 -	3431	3496
CLIO II (BB0/1/2_, CB0/1/2_)	1.5 dCi (B/C2J)	50	08/04 -	3503	
CLIO II (BB0/1/2_, CB0/1/2_)	1.5 dCi (B/CB03)	59	06/01 – 10/03	3431	3496
CLIO II (BB0/1/2_, CB0/1/2_)	1.5 dCi (B/CB03)	59	06/01 – 10/03	3503	
CLIO II (BB0/1/2_, CB0/1/2_)	1.5 dCi (B/CB07)	48	06/01 -	3431	3496
CLIO II (BB0/1/2_, CB0/1/2_)	1.5 dCi (B/CB07)	48	06/01 -	3503	
CLIO II (BB0/1/2_, CB0/1/2_)	1.5 dCi (B/CB08)	60	06/01 -	3431	3496
CLIO II (BB0/1/2_, CB0/1/2_)	1.5 dCi (B/CB08)	60	06/01 -	3503	
CLIO II (BB0/1/2_, CB0/1/2_)	1.5 dCi (B/CB3M)	47	06/05 -	3431	3496
CLIO II (BB0/1/2_, CB0/1/2_)	1.5 dCi (B/CB3M)	47	06/05 -	3503	
CLIO II (BB0/1/2_, CB0/1/2_)	1.5 dCi (B/CB3N)	62	02/07 -	3431	3496
CLIO II (BB0/1/2_, CB0/1/2_)	1.5 dCi (B/CB3N)	62	02/07 -	3503	
CLIO II (BB0/1/2_, CB0/1/2_)	1.6	81	11/04 – 02/09	3431	3496
CLIO II (BB0/1/2_, CB0/1/2_)	1.6	81	11/04 – 02/09	3503	
CLIO II (BB0/1/2_, CB0/1/2_)	1.6 (B/CB0D)	66	09/98 – 05/05	3503	3496
CLIO II (BB0/1/2_, CB0/1/2_)	1.6 (B/CB0D)	66	09/98 – 05/05	3431	
CLIO II (BB0/1/2_, CB0/1/2_)	1.6 16V (BB01, BB0H, BB0T, BB14, BB1D, BB1R, BB2KL...)	79	09/98 -	3431	3496
CLIO II (BB0/1/2_, CB0/1/2_)	1.6 16V (BB01, BB0H, BB0T, BB14, BB1D, BB1R, BB2KL...)	79	09/98 -	3503	
CLIO II (BB0/1/2_, CB0/1/2_)	1.6 Flex	81	05/00 – 12/06	3431	3496
CLIO II (BB0/1/2_, CB0/1/2_)	1.6 Flex	81	05/00 – 12/06	3503	
CLIO II (BB0/1/2_, CB0/1/2_)	1.6 Hi-Flex (CB0H)	86	01/05 – 02/10	3431	3496
CLIO II (BB0/1/2_, CB0/1/2_)	1.6 Hi-Flex (CB0H)	86	01/05 – 02/10	3503	
CLIO II (BB0/1/2_, CB0/1/2_)	1.9 D (B/CB0E)	47	09/98 – 05/05	3431	3496
CLIO II (BB0/1/2_, CB0/1/2_)	1.9 D (B/CB0E)	47	09/98 – 05/05	3503	
CLIO II (BB0/1/2_, CB0/1/2_)	1.9 D (B/CB0J)	48	02/00 – 05/01	3431	3496
CLIO II (BB0/1/2_, CB0/1/2_)	1.9 D (B/CB0J)	48	02/00 – 05/01	3503	

MAKE & MODEL		KW	YEAR		
RENAULT					
CLIO II (BB0/1/2_, CB0/1/2_)	1.9 dTi (B/CB0U)	59	12/99 – 05/05	3431	3496
CLIO II (BB0/1/2_, CB0/1/2_)	1.9 dTi (B/CB0U)	59	12/99 – 05/05	3503	
CLIO II (BB0/1/2_, CB0/1/2_)	2.0 16V Sport	132	01/04 -		3496
CLIO II (BB0/1/2_, CB0/1/2_)	2.0 16V Sport (CB0M)	70	02/00 -		3496
CLIO II Box (SB0/1/2_)	1.1 (SB0A, SB0F, SB1K, SB2D)	43	09/98 -	3431	
CLIO II Box (SB0/1/2_)	1.1 (SB0A, SB0F, SB1K, SB2D)	43	09/98 -	3503	
CLIO II Box (SB0/1/2_)	1.2 (SB0A, SB0F, SB10)	44	03/99 – 10/03	3431	
CLIO II Box (SB0/1/2_)	1.2 (SB0A, SB0F, SB10)	44	03/99 – 10/03	3503	
CLIO II Box (SB0/1/2_)	1.5 dCi	50	04/04 -	3431	
CLIO II Box (SB0/1/2_)	1.5 dCi	50	04/04 -	3503	
CLIO II Box (SB0/1/2_)	1.5 dCi	59	06/01 – 10/04	3431	
CLIO II Box (SB0/1/2_)	1.5 dCi	59	06/01 – 10/04	3503	
CLIO II Box (SB0/1/2_)	1.5 dCi	60	11/03 -	3431	
CLIO II Box (SB0/1/2_)	1.5 dCi	60	11/03 -	3503	
CLIO II Box (SB0/1/2_)	1.5 dCi (SB07)	48	06/01 -	3431	
CLIO II Box (SB0/1/2_)	1.5 dCi (SB07)	48	06/01 -	3503	
CLIO II Box (SB0/1/2_)	1.9 D (SB0E)	47	09/98 -	3431	
CLIO II Box (SB0/1/2_)	1.9 D (SB0E)	47	09/98 -	3503	
CLIO II Box (SB0/1/2_)	1.9 D (SB0J)	48	02/00 – 05/01	3431	
CLIO II Box (SB0/1/2_)	1.9 D (SB0J)	48	02/00 – 05/01	3503	
CLIO II Box (SB0/1/2_)	1.9 D (SB0R)	40	03/99 – 01/00	3431	
CLIO II Box (SB0/1/2_)	1.9 D (SB0R)	40	03/99 – 01/00	3503	
CLIO II Box (SB0/1/2_)	1.9 DTi (SB0U)	59	02/00 – 05/01	3431	
CLIO II Box (SB0/1/2_)	1.9 DTi (SB0U)	59	02/00 – 05/01	3503	
CLIO II Kasa/eğik arka (SB0/1/2_)	1.2 (SB0A, SB0F, SB10)	44	03.1999 - 10.2003	3503/1	
CLIO II Kasa/eğik arka (SB0/1/2_)	1.2 (SB0A, SB0F, SB1K, SB2D)	43	09.1998 -	3503/1	
CLIO II Kasa/eğik arka (SB0/1/2_)	1.5 dCi	59	06.2001 - 10.2004	3503/1	
CLIO II Kasa/eğik arka (SB0/1/2_)	1.5 dCi	60	11.2003 -	3503/1	
CLIO II Kasa/eğik arka (SB0/1/2_)	1.5 dCi (SB07)	48	06.2001 -	3503/1	
CLIO II Kasa/eğik arka (SB0/1/2_)	1.6 (SB0H)	79	11.2003 -	3503/1	
CLIO II Kasa/eğik arka (SB0/1/2_)	1.9 D (SB0E)	47	09.1998 -	3503/1	
CLIO II Kasa/eğik arka (SB0/1/2_)	1.9 D (SB0J)	48	02.2000 - 05.2001	3503/1	
CLIO II Kasa/eğik arka (SB0/1/2_)	1.9 D (SB0R)	40	03.1999 - 01.2000	3503/1	
CLIO II Kasa/eğik arka (SB0/1/2_)	1.9 DTi (SB0U)	59	02.2000 - 05.2001	3503/1	
CLIO III (BR0/1, CR0/1)	1.2 (BR01, BR03, BR0E, CR0E)	57	10/05 -	3983	3529/2
CLIO III (BR0/1, CR0/1)	1.2 16V	58	06/05 -	3983	3529/2
CLIO III (BR0/1, CR0/1)	1.2 16V	76	09/10 -	3983	3529/2
CLIO III (BR0/1, CR0/1)	1.2 16V (BR02, BR0J, BR11, CR02, CR0J, CR11)	55	06/05 -	3983	3529/2
CLIO III (BR0/1, CR0/1)	1.2 16V (BR0P, CR0P)	74	05/07 -	3983	3529/2
CLIO III (BR0/1, CR0/1)	1.2 16V (BR0R, BR1D, BR1L, CR0R)	48	06/05 -	3983	
CLIO III (BR0/1, CR0/1)	1.2 16V (BR0R, BR1D, BR1L, CR0R)	74	05/07 -		3529/2
CLIO III (BR0/1, CR0/1)	1.2 16V Hi-Flex (BR1U, CR1U)	55	07/08 -	3983	3529/2
CLIO III (BR0/1, CR0/1)	1.2 Ethanol	55	07/08 -	3983	3529/2
CLIO III (BR0/1, CR0/1)	1.4 16V	72	06/05 -	3983	3529/2
CLIO III (BR0/1, CR0/1)	1.5 dCi	47	06/05 -	3983	3529/2
CLIO III (BR0/1, CR0/1)	1.5 dCi	48	05/05 -	3983	3529/2
CLIO III (BR0/1, CR0/1)	1.5 dCi	55	08/10 -	3983	3529/2
CLIO III (BR0/1, CR0/1)	1.5 dCi	60	11/07 -	3983	3529/2
CLIO III (BR0/1, CR0/1)	1.5 dCi	65	08/10 -	3983	3529/2
CLIO III (BR0/1, CR0/1)	1.5 dCi (BR0H, CR0H)	78	06/05 -	3983	3529/2
CLIO III (BR0/1, CR0/1)	1.5 dCi (BR17, CR17)	63	06/05 -	3983	3529/2
CLIO III (BR0/1, CR0/1)	1.5 dCi (BR1C, CR1C)	76	06/05 -	3983	3529/2
CLIO III (BR0/1, CR0/1)	1.5 dCi (C/BR0G, C/BR1G)	50	06/05 -	3983	3529/2
CLIO III (BR0/1, CR0/1)	1.6 16V (BR05, BR0B, BR0Y,BR15, BR1J, BR1M, BR1Y, CR0B...)	82	06/05 -	3983	3529/2
CLIO III (BR0/1, CR0/1)	1.6 16V (BR09, BR0T, CR09, CR0T)	65	06/05 -	3983	
CLIO III (BR0/1, CR0/1)	1.6 16V (BR09, BR0T, CR09, CR0T)	76	06/05 -		3529/2
CLIO III (BR0/1, CR0/1)	1.6 16V GT (BR10, CR10)	94	06/09 -	3983	3529/2
CLIO III (BR0/1, CR0/1)	1.6 Hi-Flex	86	05/05 – 02/10	3983	3529/2
CLIO III (BR0/1, CR0/1)	2.0 16V (BR0C, BR0K, CR0C, CR0K)	102	09/06 -	3983	3529/2
CLIO III (BR0/1, CR0/1)	2.0 16V Sport	145	02/06 -	4137	3529/2
CLIO III (BR0/1, CR0/1)	2.0 16V Sport	148	09/08 -	4137	3529/2
CLIO IV	1.6 RS	147	03/13 -		3529/2
CLIO IV	1.6 RS Trophy	162	03/15 -		3529/2
CLIO IV (B98)	0.9 TCe 90 (H4B 400)	66	11/12 -	4253	
CLIO IV (B98)	1.2 16V (D4F 740)	54	11/12 -	4253	
CLIO IV (B98)	1.2 TCe 120 (H5F 403)	88	03/13 -	4253	
CLIO IV (B98)	1.2 TCe 120 (H5F 412)	87	01/16 -	4253	
CLIO IV (B98)	1.5 dCi 110 (K9K 646)	81	06/16 -	4253	
CLIO IV (B98)	1.5 dCi 75 (K9K 612)	55	11/12 -	4253	
CLIO IV (B98)	1.5 dCi 90 (K9K 608)	66	11/12 -	4253	
CLIO IV (B98)	1.6 RS (M5M 400)	147	03/13 -	4253	
CLIO IV (B98)	1.6 RS (M5M 450)	147	03/13 -	4253	
CLIO IV (B98)	1.6 RS Trophy	162	03/15 -	4253	
CLIO IV (BH_)	0.9 TCe 90	66	11/12 -	3983	
CLIO IV (BH_)	1.2 16V	54	11/12 -	3983	
CLIO IV (BH_)	1.2 TCe 120	87	01/16 -	3983	

MAKE & MODEL		KW	YEAR		
RENAULT					
CLIO IV (BH_)	1.2 TCe 120	88	03/13 -	3983	
CLIO IV (BH_)	1.2 TCe 120	88	03/13 -	4140	
CLIO IV (BH_)	1.5 dCi 110	81	06/16 -	3983	
CLIO IV (BH_)	1.5 dCi 75	55	11/12 -	3983	
CLIO IV (BH_)	1.5 dCi 75	55	11/12 -	4140	
CLIO IV (BH_)	1.5 dCi 90	66	11/12 -	3983	
CLIO IV (BH_)	1.5 dCi 90	66	11/12 -	4140	
CLIO IV Grandtour (KH_)	0.9 TCe 90	54	01/13 -	3983	
CLIO IV Grandtour (KH_)	0.9 TCe 90	54	01/13 -	4140	
CLIO IV Grandtour (KH_)	1.2 16V	55	01/13 -	3983	
CLIO IV Grandtour (KH_)	1.2 16V	55	01/13 -	4140	
CLIO IV Grandtour (KH_)	1.2 TCe 120	66	01/13 -	3983	
CLIO IV Grandtour (KH_)	1.2 TCe 120	66	01/13 -	4140	
CLIO IV Grandtour (KH_)	1.5 dCi 110	66	01/13 -	4140	
CLIO IV Grandtour (KH_)	1.5 dCi 75	81	06/16 -	3983	
CLIO IV Grandtour (KH_)	1.5 dCi 75	87	01/16 -	3983	
CLIO IV Grandtour (KH_)	1.5 dCi 90	88	03/13 -	3983	
CLIO IV Grandtour (KH_)	1.5 dCi 90	88	03/13 -	4140	
CLIO SYMBOL I (LB_)	1.2 16V	55	04.2002 -	3503/1	
CLIO SYMBOL I (LB_)	1.4	55	08.2000 -	3503/1	
CLIO SYMBOL I (LB_)	1.4 (LB17)	72	05.2000 - 02.2009	3503/1	
CLIO SYMBOL I (LB_)	1.4 16V	72	08.2000 -	3503/1	
CLIO SYMBOL I (LB_)	1.5 dCi	47	06.2005 -	3503/1	
CLIO SYMBOL I (LB_)	1.5 dCi	48	04.2002 -	3503/1	
CLIO SYMBOL I (LB_)	1.5 dCi	50	02.2003 -	3503/1	
CLIO SYMBOL I (LB_)	1.5 dCi	58	04.2004 - 11.2009	3503/1	
CLIO SYMBOL I (LB_)	1.5 dCi	60	06.2001 - 02.2009	3503/1	
CLIO SYMBOL I (LB_)	1.6	66	03.1998 -	3503/1	
CLIO SYMBOL I (LB_)	1.6	82	01.2004 - 12.2008	3503/1	
CLIO SYMBOL I (LB_)	1.6 16V	79	07.2000 - 02.2009	3503/1	
CLIO SYMBOL I (LB_)	1.9 D	48	02.1998 - 05.2001	3503/1	
CLIO V (B7_)	1.0 LPG (B7MT)	74	06.2019 -	4363	
CLIO V (B7_)	1.0 SCe 75 (B7M5)	53	06.2019 -	4363	
CLIO V (B7_)	1.0 TCe 100 (B7MT)	74	06.2019 -	4363	
CLIO V (B7_)	1.5 Blue dCi 115 (B7AD)	85	06.2019 -	4363	
CLIO V (B7_)	1.5 Blue dCi 85 (B7AG)	63	06.2019 -	4363	
Clio II (BB_, CB_)/ Lutecia 2.0 16V Sport	F4R 738	132	01/2004 -	3539/1	3496/1
Clio II (BB_, CB_)/ Lutecia 2.0 16V Sport (CB0M)	F4R 730, F4R 736	124	02/2000 -	3539/1	3496/1
Clio II (BB_, CB_)/ Lutecia 44317 dCi	K9K 712	74	01/2004 -		3496/1
Clio II (BB_, CB_)/ Lutecia 44348 16v	-	82	03/1999 - 12/2008		3496/1
Clio II (BB_, CB_)/ Lutecia 44348 16V (BB01, BB0H, BB0T, BB14, BB1D, BB1R, BB2KL	K4M 708, K4M 740, K4M 742, K4M 743, K4M 744, K4M 7	79	09/1998 -		3496/1
DUSTER (HS_)	1.5 dCi	66	06/11 -	3964/1	
DUSTER (HS_)	1.5 dCi	66	06/11 -	3983	
DUSTER (HS_)	1.6 16V (HSAT)	75	02/12 -	3964/1	
DUSTER (HS_)	1.6 16V (HSAT)	75	02/12 -	3983	
DUSTER (HS_)	2.0	98	02/12 -	3964/1	
DUSTER (HS_)	2.0	98	02/12 -	3983	
DUSTER (HS_)	2.0 4x4	99	02/12 -	3964/1	
DUSTER (HS_)	2.0 4x4	99	02/12 -	3983	
ESPACE	2.0 (J6R 234)	80	07/84 – 12/90	3599	
ESPACE	2.0 (J6R 236)	80	07/84 – 12/90	3372	
ESPACE	2.0 (J6R 236)	80	07/84 – 12/90	3599	
ESPACE	2.0 i (J7R 760)	87	03/88 – 12/92	3372	
ESPACE	2.0 i (J7R 760)	87	03/88 – 12/92	3599	
ESPACE	2.1 TD (J8S 240)	65	10/84 – 12/90	3372	
ESPACE	2.1 TD (J8S 240)	65	10/84 – 12/90	3599	
ESPACE	2.1 TD (J8S 774)	65	10 84 – 12/90	3372	
ESPACE	2.1 TD (J8S 774)	65	10 84 – 12/90	3599	
ESPACE	2.2 (J7T 770)	79	07/86 – 12/90	3372	
ESPACE	2.2 (J7T 770)	79	07/86 – 12/90	3599	
ESPACE I (J11_	2.0 (J/S112)	74	01.1988 - 12.1990	3488	
ESPACE I (J11_	2.0 (J/S112)	80	07.1984 - 12.1990	3488	
ESPACE I (J11_	2.0 i (J116)	87	01.1989 - 12.1990	3488	
ESPACE I (J11_	2.0 i Quadra (J116)	87	03.1988 - 12.1992	3488	
ESPACE I (J11_	2.1 TD (J/S115)	65	10.1984 - 12.1990	3488	
ESPACE I (J11_	2.2 (J117)	79	07.1986 - 12.1990	3488	
ESPACE I (J11_	2.2 Quadra (J117)	79	01.1988 - 12.1990	3488	
ESPACE I (J11_)	2.0 (J/S112)	74	01.1988 - 12.1990	3503/1	
ESPACE I (J11_)	2.0 (J/S112)	80	07.1984 - 12.1990	3503/1	
ESPACE I (J11_)	2.0 i (J116)	87	01.1989 - 12.1990	3503/1	
ESPACE I (J11_)	2.0 i Quadra (J116)	87	03.1988 - 12.1992	3503/1	
ESPACE I (J11_)	2.1 TD (J/S115)	65	10.1984 - 12.1990	3503/1	
ESPACE I (J11_)	2.2 (J117)	79	07.1986 - 12.1990	3503/1	
ESPACE I (J11_)	2.2 Quadra	81	06.1987 - 12.1987	3503/1	
ESPACE I (J11_)	2.2 Quadra (J117)	79	01.1988 - 12.1990	3503/1	
ESPACE I (J11_)	2.0 (J/S112)	74	01/88 – 12/90	3380	3333

BESER®

MAKE & MODEL		KW	YEAR		
RENAULT					
ESPACE I (J11_)	2.0 (J/S112)	74	01/88 – 12/90	3381	
ESPACE I (J11_)	2.0 (J/S112)	74	01/88 – 12/90	3431	
ESPACE I (J11_)	2.0 (J/S112)	74	01/88 – 12/90	3503	
ESPACE I (J11_)	2.0 (J/S112)	74	01/88 – 12/90	3580	
ESPACE I (J11_)	2.0 (J/S112)	80	07/84 – 12/90	3380	3333
ESPACE I (J11_)	2.0 (J/S112)	80	07/84 – 12/90	3381	
ESPACE I (J11_)	2.0 (J/S112)	80	07/84 – 12/90	3431	
ESPACE I (J11_)	2.0 (J/S112)	80	07/84 – 12/90	3503	
ESPACE I (J11_)	2.0 (J/S112)	80	07/84 – 12/90	3580	
ESPACE I (J11_)	2.0 i (J116)	87	01/89 – 12/90	3380	3333
ESPACE I (J11_)	2.0 i (J116)	87	01/89 – 12/90	3381	
ESPACE I (J11_)	2.0 i (J116)	87	01/89 – 12/90	3431	
ESPACE I (J11_)	2.0 i (J116)	87	01/89 – 12/90	3503	
ESPACE I (J11_)	2.0 i (J116)	87	01/89 – 12/90	3580	
ESPACE I (J11_)	2.0 i Quadra (J116)	87	03/88 – 12/92	3380	3333
ESPACE I (J11_)	2.0 i Quadra (J116)	87	03/88 – 12/92	3381	
ESPACE I (J11_)	2.0 i Quadra (J116)	87	03/88 – 12/92	3431	
ESPACE I (J11_)	2.0 i Quadra (J116)	87	03/88 – 12/92	3503	
ESPACE I (J11_)	2.0 i Quadra (J116)	87	03/88 – 12/92	3580	
ESPACE I (J11_)	2.1 TD (J/S115)	65	10/84 – 12/90	3380	3333
ESPACE I (J11_)	2.1 TD (J/S115)	65	10/84 – 12/90	3381	
ESPACE I (J11_)	2.1 TD (J/S115)	65	10/84 – 12/90	3431	
ESPACE I (J11_)	2.1 TD (J/S115)	65	10/84 – 12/90	3503	
ESPACE I (J11_)	2.1 TD (J/S115)	65	10/84 – 12/90	3580	
ESPACE I (J11_)	2.2 (J117)	79	07/86 – 12/90	3380	3333
ESPACE I (J11_)	2.2 (J117)	79	07/86 – 12/90	3381	
ESPACE I (J11_)	2.2 (J117)	79	07/86 – 12/90	3431	
ESPACE I (J11_)	2.2 (J117)	79	07/86 – 12/90	3503	
ESPACE I (J11_)	2.2 (J117)	79	07/86 – 12/90	3580	
ESPACE I (J11_)	2.2 Quadra (J117)	79	01/88 – 12/90	3380	3333
ESPACE I (J11_)	2.2 Quadra (J117)	79	01/88 – 12/90	3381	
ESPACE I (J11_)	2.2 Quadra (J117)	79	01/88 – 12/90	3431	
ESPACE I (J11_)	2.2 Quadra (J117)	79	01/88 – 12/90	3503	
ESPACE I (J11_)	2.2 Quadra (J117)	79	01/88 – 12/90	3580	
ESPACE I (J11_)	2.2 Quadra (J117)	79	01/88 – 12/90	3580	
ESPACE II (J/S63_)	2.0 (J636)	76	01.1991 - 10.1996	3503/1	
ESPACE II (J/S63_)	2.1 TD (J633, J634, J/S635, J/S63D)	65	01.1991 - 10.1996	3503/1	
ESPACE II (J/S63_)	2.1 TD (J63E)	66	11.1994 - 10.1996	3503/1	
ESPACE II (J/S63_)	2.2 (J/S637, J63G)	79	01.1991 - 10.1996	3503/1	
ESPACE II (J/S63_)	2.0 (J636)	76	01/91 – 10/96		3333
ESPACE II (J/S63_)	2.1 RTDT Quadra	65	01/91 – 05/92		3333
ESPACE II (J/S63_)	2.1 TD (J633, J634, J/S635, J/S63D)	65	01/91 – 10/96		3333
ESPACE II (J/S63_)	2.1 TD (J63E)	66	11/94 – 10/96		3333
ESPACE II (J/S63_)	2.2 (J/S637, J63G)	79	01/91 – 10/96		3333
ESPACE II (J/S63_)	2.2 4x4 (J/S637, J63G)	79	03/91 – 12/96		3333
ESPACE II (J/S63_)	2.8 V6 (J638, J63J)	110	01/91 – 10/96	3539	3333
ESPACE II (J/S63_)	2.8 V6 (J638, J63J)	110	01/91 – 10/96	3546	
ESPACE III (JE0_)	1.9 dTi (JE0M)	72	02/99 – 10/02		3529
ESPACE III (JE0_)	1.9 dTi (JE0M)	72	02/99 – 10/02		3596
ESPACE III (JE0_)	2.0	102	09/01 – 10/02		3529
ESPACE III (JE0_)	2.0 (JE0A)	84	11/96 – 10/00		3529
ESPACE III (JE0_)	2.0 (JE0A)	84	11/96 – 10/00		3596
ESPACE III (JE0_)	2.0 16V (JE0N, JE0L, JE02)	103	10/98 – 10/02		3529
ESPACE III (JE0_)	2.0 16V (JE0N, JE0L, JE02)	103	10/98 – 10/02		3529/2
ESPACE III (JE0_)	2.0 16V (JE0N, JE0L, JE02)	103	10/98 – 10/02		3596
ESPACE III (JE0_)	2.0 16V (JE0N, JE0L, JE02)	103	10/98 – 10/02		3596
ESPACE III (JE0_)	2.2 12V TD (JE0E, JE0H, JE0P)	83	11/96 – 10/00		3529
ESPACE III (JE0_)	2.2 12V TD (JE0E, JE0H, JE0P)	83	11/96 – 10/00		3596
ESPACE III (JE0_)	2.2 D	84	11/97 – 01/00		3596
ESPACE III (JE0_)	2.2 dCi (JE0K)	95	10/00 – 10/02	3848	3529/2
ESPACE III (JE0_)	2.2 dCi (JE0K)	95	10/00 – 10/02		3529
ESPACE III (JE0_)	2.2 dCi (JEOS)	85	07/00 – 10/02	3848	3529/2
ESPACE III (JE0_)	2.2 dCi (JEOS)	85	07/00 – 10/02		3529
ESPACE III (JE0_)	3.0 (JE0D)	123	11/96 – 10/98		3596
ESPACE III (JE0_)	3.0 V6 24V (JE0G, JE0R)	140	10/98 – 10/02	3848	3596
ESPACE III (JE0_)	3.0 V6 24V (JE0G, JE0R)	140	10/98 – 10/02		3529
ESPACE III (JE0_)	3.0 V6 24V (JE0G, JE0R)	140	10/98 – 10/02		3529/2
ESPACE IV (JK0/1_)	1.9 dCi (JK0U)	85	04/03 – 02/05		3853
ESPACE IV (JK0/1_)	1.9 dCi (JK0U, JK0G)	88	11/02 -		3853
ESPACE IV (JK0/1_)	2.0 (JK09)	100	11/02 -		3853
ESPACE IV (JK0/1_)	2.0 (JK0A, JK1D, JK0N)	125	04/05 -		3853
ESPACE IV (JK0/1_)	2.0 (JK0K)	98	11/02 – 02/05		3853
ESPACE IV (JK0/1_)	2.0 dCi (JK01, JK02, JK1J, JK1K)	110	01/06 -		3853
ESPACE IV (JK0/1_)	2.0 dCi (JK02, JK03)	96	01/06 -		3853
ESPACE IV (JK0/1_)	2.0 dCi (JK03, JK04)	127	01/06 -		3853
ESPACE IV (JK0/1_)	2.0 Turbo (JK0A, JK0B, JK0N)	120	11/02 -		3853

MAKE & MODEL		KW	YEAR		
RENAULT					
ESPACE IV (JK0/1_)	2.2 dCi (JK07)	102	02/06 -		3853
ESPACE IV (JK0/1_)	2.2 dCi (JK0H)	110	11/02 -		3853
ESPACE IV (JK0/1_)	3.0 dCi	120	09/05 -		3853
ESPACE IV (JK0/1_)	3.0 dCi (JK0E, JK0Y)	133	01/06 -		3853
ESPACE IV (JK0/1_)	3.0 dCi (JK0J, JK0V)	130	11/02 -		3853
ESPACE IV (JK0/1_)	3.5 V6 (JK00, JK0F, JK0P, JK0S, JK0W)	177	11/02 -		3853
ESPACE V (JR_)	1.6 dCi 130	96	06/15 -		4287
ESPACE V (JR_)	1.6 dCi 160	118	06/15 -		4287
ESPACE V (JR_)	1.6 TCe 200	147	02/15 -		4287
EXPRESS Kasa/büyük limuzin (F40_, G40_	1.0	27	02.1986 - 05.1992	3488	
EXPRESS Kasa/büyük limuzin (F40_, G40_	1.0	31	09.1985 - 08.1991	3488	
EXPRESS Kasa/büyük limuzin (F40_, G40_	1.1	34	09.1985 - 08.1991	3488	
EXPRESS Kasa/büyük limuzin (F40_, G40_	1.1	35	09.1993 - 04.1995	3488	
EXPRESS Kasa/büyük limuzin (F40_, G40_	1.2	40	09.1991 - 08.1993	3488	
EXPRESS Kasa/büyük limuzin (F40_, G40_	1.2 (F406, G40A)	40	09.1991 - 03.1998	3488	
EXPRESS Kasa/büyük limuzin (F40_, G40_	1.4	54	09.1991 - 08.1993	3488	
EXPRESS Kasa/büyük limuzin (F40_, G40_	1.4	59	05.1995 - 08.1997	3488	
EXPRESS Kasa/büyük limuzin (F40_, G40_	1.4 (F402)	43	07.1985 - 08.1991	3488	
EXPRESS Kasa/büyük limuzin (F40_, G40_	1.4 (F40D)	58	01.1994 - 03.1998	3488	
EXPRESS Kasa/büyük limuzin (F40_, G40_	1.4 (F40M)	44	03.1986 - 08.1991	3488	
EXPRESS Kasa/büyük limuzin (F40_, G40_	1.4 (F40U, F40V)	55	09.1991 - 03.1998	3488	
EXPRESS Kasa/büyük limuzin (F40_, G40_	1.4 Cat (F407)	43	08.1988 - 03.1998	3488	
EXPRESS Kasa/büyük limuzin (F40_, G40_	1.4 RN	44	09.1991 - 08.1993	3488	
EXPRESS Kasa/büyük limuzin (F40_, G40_	1.6 D	40	09.1993 - 04.1995	3488	
EXPRESS Kasa/büyük limuzin (F40_, G40_	1.6 D (F404)	40	03.1986 - 08.1998	3488	
EXPRESS Kasa/büyük limuzin (F40_, G40_	1.9 D (F40P, F40N, F40E)	47	09.1991 - 03.1998	3488	
EXPRESS Kasa/büyük limuzin (F40_, G40_	1.9 D (F40R)	40	09.1994 - 03.1998	3488	
EXPRESS Kasa/büyük limuzin (F40_, G40_)	1.0	27	02.1986 - 05.1992	3503/1	
EXPRESS Kasa/büyük limuzin (F40_, G40_)	1.0	31	09.1985 - 08.1991	3503/1	
EXPRESS Kasa/büyük limuzin (F40_, G40_)	1.1	34	09.1985 - 08.1991	3503/1	
EXPRESS Kasa/büyük limuzin (F40_, G40_)	1.1	35	09.1993 - 04.1995	3503/1	
EXPRESS Kasa/büyük limuzin (F40_, G40_)	1.2	40	09.1991 - 08.1993	3503/1	
EXPRESS Kasa/büyük limuzin (F40_, G40_)	1.2 (F406, G40A)	40	09.1991 - 03.1998	3503/1	
EXPRESS Kasa/büyük limuzin (F40_, G40_)	1.4	54	09.1991 - 08.1993	3503/1	
EXPRESS Kasa/büyük limuzin (F40_, G40_)	1.4	59	05.1995 - 08.1997	3503/1	
EXPRESS Kasa/büyük limuzin (F40_, G40_)	1.4 (F402)	43	07.1985 - 08.1991	3503/1	
EXPRESS Kasa/büyük limuzin (F40_, G40_)	1.4 (F40D)	58	01.1994 - 03.1998	3503/1	
EXPRESS Kasa/büyük limuzin (F40_, G40_)	1.4 (F40M)	44	03.1986 - 08.1991	3503/1	
EXPRESS Kasa/büyük limuzin (F40_, G40_)	1.4 (F40U, F40V)	55	09.1991 - 03.1998	3503/1	
EXPRESS Kasa/büyük limuzin (F40_, G40_)	1.4 (F40Y, F40A, F40V)	43	09.1991 - 08.1997	3503/1	
EXPRESS Kasa/büyük limuzin (F40_, G40_)	1.4 Cat (F407)	43	08.1988 - 03.1998	3503/1	
EXPRESS Kasa/büyük limuzin (F40_, G40_)	1.4 Cat (F407)	43	08.1988 - 03.1998	3503/1	
EXPRESS Kasa/büyük limuzin (F40_, G40_)	1.4 RN	44	09.1991 - 08.1993	3503/1	
EXPRESS Kasa/büyük limuzin (F40_, G40_)	1.6 D	40	09.1993 - 04.1995	3503/1	
EXPRESS Kasa/büyük limuzin (F40_, G40_)	1.6 D (F404)	40	03.1986 - 08.1998	3503/1	
EXPRESS Kasa/büyük limuzin (F40_, G40_)	1.9 D (F40P, F40N, F40E)	47	09.1991 - 03.1998	3503/1	
EXPRESS Kasa/büyük limuzin (F40_, G40_)	1.9 D (F40R)	40	09.1994 - 03.1998	3503/1	
EXPRESS Kombi van 1.9 D)		47	07.1995 - 03.1998	3503/1	
FLUENCE (L30_)	1.5 dCi	70	07/14 -	3964/1	3529/2
FLUENCE (L30_)	1.5 dCi (L30A)	63	02/10 -	3964/1	3529/2
FLUENCE (L30_)	1.5 dCi (L30A)	63	02/10 -		4142
FLUENCE (L30_)	1.5 dCi (L30B)	78	02/10 -	3964/1	3529/2
FLUENCE (L30_)	1.5 dCi (L30B)	78	02/10 -		4142
FLUENCE (L30_)	1.5 dCi (L30D, L30L)	81	02/10 -	3964/1	3529/2
FLUENCE (L30_)	1.5 dCi (L30D, L30L)	81	02/10 -		4142
FLUENCE (L30_)	1.5 dCi (L30S)	66	02/10 -	3964/1	3529/2
FLUENCE (L30_)	1.5 dCi (L30S)	66	02/10 -		4142
FLUENCE (L30_)	1.6	86	01/13 -	3964/1	
FLUENCE (L30_)	1.6 16V	82	02/10 -	3964/1	3529/2
FLUENCE (L30_)	1.6 16V	82	02/10 -		4142
FLUENCE (L30_)	1.6 16V (L301, L30F, L30P, L30R)	81	02/10 -	3964/1	3529/2
FLUENCE (L30_)	1.6 16V (L301, L30F, L30P, L30R)	81	02/10 -		4142
FLUENCE (L30_)	1.6 dCi	96	07/14 -	3964/1	3529/2
FLUENCE (L30_)	2.0 16V	101	05/11 -	3964/1	3529/2
FLUENCE (L30_)	2.0 16V	101	05/11 -		4142
FLUENCE (L30_)	2.0 16V (L30C, L30G, L30T, L30V)	103	02/10 -	3964/1	3529/2
FLUENCE (L30_)	2.0 16V (L30C, L30G, L30T, L30V)	103	02/10 -		4142
FLUENCE (L30_)	Z.E.	70	02/12 -	3964/1	3529/2
FLUENCE (L30_)	Z.E.	70	02/12 -		4142
FUEGO (136_	1.4 TL/GTL	47	02.1980 - 10.1985	3488	
FUEGO (136_	1.6 TS/GTS (1362)	71	10.1980 - 10.1985	3488	
FUEGO (136_	1.6 Turbo (1365)	97	08.1983 - 10.1985	3488	
FUEGO (136_	2.0 TX/GTX (1363)	81	10.1980 - 10.1985	3488	
FUEGO (136_)	1.6	52	04.1983 - 10.1985	3503/1	
FUEGO (136_)	1.6 TS/GTS (1362)	71	10.1980 - 10.1985	3503/1	
FUEGO (136_)	1.6 Turbo (1365)	97	08.1983 - 10.1985	3503/1	

MAKE & MODEL		KW	YEAR		
RENAULT					
FUEGO (136_)	2.0 TX/GTX (1363)	81	10.1980 - 10.1985	3503/1	
FUEGO (136_)	2.1 TD	65	08.1982 - 10.1985	3503/1	
FUEGO (136_)	1.4 TL/GTL	47	02/80 – 10/85	3380	
FUEGO (136_)	1.4 TL/GTL	47	02/80 – 10/85	3381	
FUEGO (136_)	1.4 TL/GTL	47	02/80 – 10/85	3431	
FUEGO (136_)	1.4 TL/GTL	47	02/80 – 10/85	3503	
FUEGO (136_)	1.4 TL/GTL	47	02/80 – 10/85	3580	
FUEGO (136_)	1.6 (A2M 723)	52	04/83 – 10/85	3372	
FUEGO (136_)	1.6 (A2M 723)	52	04/83 – 10/85	3599	
FUEGO (136_)	1.6 TS/GTS (843 723)	71	10/80 – 10/85	3372	
FUEGO (136_)	1.6 TS/GTS (843 723)	71	10/80 – 10/85	3599	
FUEGO (136_)	1.6 TS/GTS (843 724)	71	10/80 – 10/85	3372	
FUEGO (136_)	1.6 TS/GTS (843 724)	71	10/80 – 10/85	3599	
FUEGO (136_)	1.6 TS/GTS (A6M 725)	71	10/80 – 10/85	3372	
FUEGO (136_)	1.6 TS/GTS (A6M 725)	71	10/80 – 10/85	3599	
FUEGO (136_)	1.6 TS/GTS (A6M 726)	71	10/80 – 10/85	3372	
FUEGO (136_)	1.6 TS/GTS (A6M 726)	71	10/80 – 10/85	3599	
FUEGO (136_)	1.6 TS/GTS (1362)	71	10/80 – 10/85	3380	
FUEGO (136_)	1.6 TS/GTS (1362)	71	10/80 – 10/85	3381	
FUEGO (136_)	1.6 TS/GTS (1362)	71	10/80 – 10/85	3431	
FUEGO (136_)	1.6 TS/GTS (1362)	71	10/80 – 10/85	3503	
FUEGO (136_)	1.6 TS/GTS (1362)	71	10/80 – 10/85	3580	
FUEGO (136_)	1.6 Turbo (A5L 750)	97	08/83 – 10/85	3372	
FUEGO (136_)	1.6 Turbo (A5L 750)	97	08/83 – 10/85	3599	
FUEGO (136_)	1.6 Turbo (1365)	97	08/83 – 10/85	3380	3333
FUEGO (136_)	1.6 Turbo (1365)	97	08/83 – 10/85	3381	
FUEGO (136_)	1.6 Turbo (1365)	97	08/83 – 10/85	3431	
FUEGO (136_)	1.6 Turbo (1365)	97	08/83 – 10/85	3503	
FUEGO (136_)	1.6 Turbo (1365)	97	08/83 – 10/85	3580	
FUEGO (136_)	2.0 TX/GTX (829 710)	81	10/80 – 10/85	3372	
FUEGO (136_)	2.0 TX/GTX (829 710)	81	10/80 – 10/85	3599	
FUEGO (136_)	2.0 TX/GTX (J6R 710)	81	10/80 – 10/85	3372	
FUEGO (136_)	2.0 TX/GTX (J6R 710)	81	10/80 – 10/85	3599	
FUEGO (136_)	2.0 TX/GTX (J6R 712)	81	10/80 – 10/85	3372	
FUEGO (136_)	2.0 TX/GTX (J6R 712)	81	10/80 – 10/85	3599	
FUEGO (136_)	2.0 TX/GTX (J6R 713)	81	10/80 – 10/85	3372	
FUEGO (136_)	2.0 TX/GTX (J6R 713)	81	10/80 – 10/85	3599	
FUEGO (136_)	2.0 TX/GTX (J6R 715)	81	10/80 – 10/85	3372	
FUEGO (136_)	2.0 TX/GTX (J6R 715)	81	10/80 – 10/85	3599	
FUEGO (136_)	2.0 TX/GTX (J6R 726)	81	10/80 – 10/85	3372	
FUEGO (136_)	2.0 TX/GTX (J6R 726)	81	10/80 – 10/85	3599	
FUEGO (136_)	2.0 TX/GTX (1363)	81	10/80 – 10/85	3380	
FUEGO (136_)	2.0 TX/GTX (1363)	81	10/80 – 10/85	3381	
FUEGO (136_)	2.0 TX/GTX (1363)	81	10/80 – 10/85	3431	
FUEGO (136_)	2.0 TX/GTX (1363)	81	10/80 – 10/85	3503	
FUEGO (136_)	2.0 TX/GTX (1363)	81	10/80 – 10/85	3580	
FUEGO (136_)	2.1 TD (J8S 712)	65	08/82 – 10/85	3372	
FUEGO (136_)	2.1 TD (J8S 712)	65	08/82 – 10/85	3599	
GRAND SCÉNIC II (JM0/1_)	1.5 dCi	60	04/04 -	3849	3529/2
GRAND SCÉNIC II (JM0/1_)	1.5 dCi	76	06/06 – 11/08		3529/2
GRAND SCÉNIC II (JM0/1_)	1.5 dCi (JM02, JM13)	74	04/04 -	3849	
GRAND SCÉNIC II (JM0/1_)	1.5 dCi (JM1E)	78	05/05 -	3849	
GRAND SCÉNIC II (JM0/1_)	1.6	82	06/06 – 11/08		3529/2
GRAND SCÉNIC II (JM0/1_)	1.6	83	04/04 -	3849	
GRAND SCÉNIC II (JM0/1_)	1.9 dCi	85	05/05 – 01/09	3849	3529/2
GRAND SCÉNIC II (JM0/1_)	1.9 dCi (JM0G, JM12, JM1G JM2C)	88	04/04 -	3849	
GRAND SCÉNIC II (JM0/1_)	1.9 dCi (JM14)	96	05/05 -	3849	
GRAND SCÉNIC II (JM0/1_)	1.9 dCi (JM15)	81	05/05 -	3849	
GRAND SCÉNIC II (JM0/1_)	2.0	99	04/04 -	3849	
GRAND SCÉNIC II (JM0/1_)	2.0	120	04/04 -	3849	
GRAND SCÉNIC II (JM0/1_)	2.0 dCi (JM1K)	110	09/05 -	3849	
GRAND SCÉNIC III (JZ0/1_)	1.2 TCe	85	04/12 -		3529/2
GRAND SCÉNIC III (JZ0/1_)	1.2 TCe	85	04/12 -		4287
GRAND SCÉNIC III (JZ0/1_)	1.2 TCe (JZ16)	97	01/13 -		3529/2
GRAND SCÉNIC III (JZ0/1_)	1.2 TCe (JZ16)	97	01/13 -		4287
GRAND SCÉNIC III (JZ0/1_)	1.4 16V (JZ0F)	96	02/09 -		3529/2
GRAND SCÉNIC III (JZ0/1_)	1.4 16V (JZ0F)	96	02/09 -		4287
GRAND SCÉNIC III (JZ0/1_)	1.5 dCi	63	04/09 -	3964/1	3529/2
GRAND SCÉNIC III (JZ0/1_)	1.5 dCi	63	04/09 -		4287
GRAND SCÉNIC III (JZ0/1_)	1.5 dCi	70	11/10 -		3529/2
GRAND SCÉNIC III (JZ0/1_)	1.5 dCi	70	11/10 -		4287
GRAND SCÉNIC III (JZ0/1_)	1.5 dCi	78	02/09 -		3529/2
GRAND SCÉNIC III (JZ0/1_)	1.5 dCi	78	02/09 -		4287
GRAND SCÉNIC III (JZ0/1_)	1.5 dCi	81	04/09 -		3529/2
GRAND SCÉNIC III (JZ0/1_)	1.5 dCi	81	04/09 -		4287
GRAND SCÉNIC III (JZ0/1_)	1.6 16V (JZ0U)	81	02/09 -		3529/2

MAKE & MODEL		KW	YEAR		
RENAULT					
GRAND SCÉNIC III (JZ0/1_)	1.6 16V (JZ0U)	81	02/09 -		4287
GRAND SCÉNIC III (JZ0/1_)	1.6 16V Bifuel	81	02/09 -	3964/1	4287
GRAND SCÉNIC III (JZ0/1_)	1.6 16V Bifuel	81	02/09 -		3529/2
GRAND SCÉNIC III (JZ0/1_)	1.6 dCi (JZ00, JZ12)	96	04/11 -		3529/2
GRAND SCÉNIC III (JZ0/1_)	1.6 dCi (JZ00, JZ12)	96	04/11 -		4287
GRAND SCÉNIC III (JZ0/1_)	1.9 dCi	96	02/09 -		3529/2
GRAND SCÉNIC III (JZ0/1_)	1.9 dCi	96	02/09 -		4287
GRAND SCÉNIC III (JZ0/1_)	2.0 16V (JZ0G)	103	02/09 -		3529/2
GRAND SCÉNIC III (JZ0/1_)	2.0 16V (JZ0G)	103	02/09 -		4287
GRAND SCÉNIC III (JZ0/1_)	2.0 dCi (JZ0L)	118	04/09 -		3529/2
GRAND SCÉNIC III (JZ0/1_)	2.0 dCi (JZ0L)	118	04/09 -		4142
GRAND SCÉNIC III (JZ0/1_)	2.0 dCi (JZ0Y)	110	02/09 -		3529/2
GRAND SCÉNIC III (JZ0/1_)	2.0 dCi (JZ0Y)	110	02/09 -		4142
HCV Mascott Box body / Van / SW Van 110.35	8140.43.B.3586, 8140.43.B.3588, 8140.43.C.2586	78	01/1999 - 06/2004	3942/A	
HCV Mascott Box body / Van / SW Van 110.50	8140.43.B.3586, 8140.43.B.3588, 8140.43.C.2586	78	01/1999 - 06/2004	3942/A	
HCV Mascott Box body / Van / SW Van 110.55	8140.43.B.3586, 8140.43.B.3588, 8140.43.C.2586	78	01/1999 - 06/2004	3942/A	
HCV Mascott Box body / Van / SW Van 120.55 (A02300005)	DXi 3, ZD3 A 600	85	05/2004 - 10/2010	3942/A	
HCV Mascott Box body / Van / SW Van 130.35	8140.43.S.2585, 8140.43.S.3585	92	01/1999 - 06/2004	3942/A	
HCV Mascott Box body / Van / SW Van 130.55	8140.43.S.2585, 8140.43.S.3585	92	01/1999 - 06/2004	3942/A	
HCV Mascott Box body / Van / SW Van 140.35	8140.43K	103	01/2001 - 06/2004	3942/A	
HCV Mascott Box body / Van / SW Van 140.55	8140.43K	103	01/2001 - 06/2004	3942/A	
HCV Mascott Box body / Van / SW Van 150.35 (A02300161)	8140.43N.3585	107	10/2001 - 06/2004	3942/A	
HCV Mascott Box body / Van / SW Van 150.55 (A02300164)	8140.43N.3585	107	10/2001 - 06/2004	3942/A	
HCV Mascott Box body / Van / SW Van 150.65 (A00300166)	8140.43N.3585	107	10/2001 - 06/2004	3942/A	
HCV Mascott Box body / Van / SW Van 160.55 (A02300015)	DXi 3, ZD3 A 604	115	05/2004 - 10/2010	3942/A	
HCV Mascott Dumper body 110	8140.43.B.3586, 8140.43.B.3588, 8140.43.C.2586	78	01/2000 - 06/2004	3942/A	
HCV Mascott Platform/Chassis (UH_, HH_) 110	8140.43.B.3586, 8140.43.B.3588, 8140.43.C.2586	78	01/1999 - 06/2004	3942/A	
HCV Mascott Platform/Chassis (UH_, HH_) 120.55 (A00300005, A01300005)	DXi 3, ZD3 A 600	85	05/2004 - 12/2010	3942/A	
HCV Mascott Platform/Chassis (UH_, HH_) 120.65 (A00500007)	DXi 3, ZD3 A 600	85	05/2004 - 12/2010	3942/A	
HCV Mascott Platform/Chassis (UH_, HH_) 130	8140.43.S.2585, 8140.43.S.3585	92	01/1999 - 06/2004	3942/A	
HCV Mascott Platform/Chassis (UH_, HH_) 140	8140.43K	103	01/2001 - 06/2004	3942/A	
HCV Mascott Platform/Chassis (UH_, HH_) 150.35 (A00300161)	8140.43N.3585	107	10/2001 - 06/2004	3942/A	
HCV Mascott Platform/Chassis (UH_, HH_) 150.35 (A00300164)	8140.43N.3585	107	10/2001 - 06/2004	3942/A	
HCV Mascott Platform/Chassis (UH_, HH_) 160.55 (A00300015, A01300015)	DXi 3, ZD3 A 604	115	05/2004 - 12/2010	3942/A	
HCV Mascott Platform/Chassis (UH_, HH_) 160.65 (A00500017, A01500017, B03200017)	DXi 3, ZD3 A 604	115	05/2004 - 12/2010	3942/A	
HCV Master III Bus (JV) 44257 dCi 100 FWD (JV0A, JV0B)	M9T 670, M9T 672, M9T 676, M9T 870	74	02/2011 -		4172/1
HCV Master III Bus (JV) 44257 dCi 110 FWD	M9T 704, M9T 870	81	09/2014 -		4172/1
HCV Master III Bus (JV) 44257 dCi 125 FWD (JV0C, JV0D, JV0H)	M9T 670, M9T 672, M9T 676, M9T 680, M9T 870, M9T 8	92	02/2011 -		4172/1
HCV Master III Bus (JV) 44257 dCi 135 FWD	M9T 702, M9T 716 (03.20-.)	100	07/2014 -		4172/1
HCV Master III Bus (JV) 44257 dCi 145 FWD (JV0F, JV0H)	M9T 680, M9T 706, M9T 708	107	02/2011 -		4172/1
HCV Master III Bus (JV) 44257 dCi 150 FWD	M9T 716 (03.20-.), M9T 880	110	10/2012 -		4172/1
HCV Master III Bus (JV) 44257 dCi 165 FWD	M9T 702, M9T 708	120	07/2014 -		4172/1
HCV Master III Bus (JV) 44257 dCi 170 FWD	M9T 706	125	07/2015 -		4172/1
HCV Master III Platform/Chassis (EV, HV, UV) 44257 dCi 100 FWD (EV0A, EV0B, HV0A, HV0B, HV0G, UV0	M9T 670, M9T 672, M9T 676, M9T 870, M9T 876	74	02/2010 -		4172/1
HCV Master III Platform/Chassis (EV, HV, UV) 44257 dCi 100 RWD (UV0C, UV0D, HV0C, HV0D)	M9T 690	74	02/2010 -		4172/1
HCV Master III Platform/Chassis (EV, HV, UV) 44257 dCi 110 FWD	M9T 704, M9T 870	81	09/2014 -		4172/1
HCV Master III Platform/Chassis (EV, HV, UV) 44257 dCi 125 FWD (EV0C, EV0D, EV0J, HV0C, HV0D, HV0	M9T 670, M9T 672, M9T 676, M9T 680, M9T 870, M9T 8	92	02/2010 -		4172/1
HCV Master III Platform/Chassis (EV, HV, UV) 44257 dCi 125 RWD (HV0C, HV0D, UV0C, UV0D, UV0H, UV0	M9T 686, M9T 690, M9T 692, M9T 696, M9T 698, M9T 8	92	02/2010 -		4172/1
HCV Master III Platform/Chassis (EV, HV, UV) 44257 dCi 135 FWD	M9T 702, M9T 716 (07.19-.)	100	07/2014 -		4172/1
HCV Master III Platform/Chassis (EV, HV, UV) 44257 dCi 135 RWD	M9T 700	100	07/2014 -		4172/1
HCV Master III Platform/Chassis (EV, HV, UV) 44257 dCi 145 FWD (EV0E, EV0F, HV0E, HV0F, UV0E, UV0	M9T 678, M9T 680, M9T 706, M9T 708	107	02/2010 -		4172/1
HCV Master III Platform/Chassis (EV, HV, UV) 44257 dCi 145 RWD (UV0F, UV0E)	M9T 694, M9T 696, M9T 698, M9T 710	107	02/2010 -		4172/1
HCV Master III Platform/Chassis (EV, HV, UV) 44257 dCi 150 FWD	M9T 716 (07.19-.), M9T 880	110	03/2013 -		4172/1
HCV Master III Platform/Chassis (EV, HV, UV) 44257 dCi 150 RWD	M9T 896, M9T 898	110	03/2013 -		4172/1
HCV Master III Platform/Chassis (EV, HV, UV) 44257 dCi 165 FWD	M9T 702, M9T 708	120	07/2014 -		4172/1
HCV Master III Platform/Chassis (EV, HV, UV) 44257 dCi 165 RWD	M9T 700, M9T 710	120	07/2014 -		4172/1
HCV Master III Platform/Chassis (EV, HV, UV) 44257 dCi 170 FWD	M9T 706	125	06/2016 -		4172/1
HCV Master III Van (FV) 44257 dCi 100 FWD (FV0A, FV0B, FV0G, FV0K)	M9T 670, M9T 672, M9T 676, M9T 870, M9T 876	74	02/2010 -		4172/1
HCV Master III Van (FV) 44257 dCi 100 RWD (FV0B, FV0C, FV0D)	M9T 690, M9T 890	74	02/2010 -		4172/1
HCV Master III Van (FV) 44257 dCi 110 FWD	M9T 704, M9T 870	81	09/2014 -		4172/1
HCV Master III Van (FV) 44257 dCi 125 FWD (FV0C, FV0D)	M9T 670, M9T 672, M9T 676, M9T 680, M9T 870, M9T 8	92	02/2010 -		4172/1
HCV Master III Van (FV) 44257 dCi 125 RWD (FV0C, FV0D, FV0H, FV0J)	M9T 686, M9T 690, M9T 692, M9T 696, M9T 698, M9T 8	92	02/2010 -		4172/1
HCV Master III Van (FV) 44257 dCi 135 FWD	M9T 702, M9T 716 (07.19-.)	100	07/2014 -		4172/1
HCV Master III Van (FV) 44257 dCi 135 RWD	M9T 700	100	07/2014 -		4172/1
HCV Master III Van (FV) 44257 dCi 145 FWD (FV0E, FV0F, FV0H, FV0J)	M9T 678, M9T 680, M9T 706, M9T 708	107	02/2010 -		4172/1
HCV Master III Van (FV) 44257 dCi 145 RWD (FV0E, FV0F, FV0J)	M9T 694, M9T 696, M9T 698, M9T 710	107	02/2010 -		4172/1
HCV Master III Van (FV) 44257 dCi 150 FWD	M9T 716 (07.19-.), M9T 880	110	03/2013 -		4172/1
HCV Master III Van (FV) 44257 dCi 150 RWD	M9T 896, M9T 898	110	03/2013 -		4172/1
HCV Master III Van (FV) 44257 dCi 165 FWD	M9T 702, M9T 708	120	07/2014 -		4172/1
HCV Master III Van (FV) 44257 dCi 165 RWD	M9T 700, M9T 710	120	07/2014 -		4172/1
HCV Master III Van (FV) 44257 dCi 170 FWD	M9T 706	125	07/2015 -		4172/1
KADJAR (HA_, HL_)	1.2 TCe 130	96	06/15 -	4282	4283
KADJAR (HA_, HL_)	1.2 TCe 130	96/130	06/15	4282/1	
KADJAR (HA_, HL_)	1.5 dCi 110	81	06/15 -	4282	4283
KADJAR (HA_, HL_)	1.5 dCi 110 (HLA3)	81/110	06/15	4282/1	
KADJAR (HA_, HL_)	1.6 dCi 130	96	06/15 -	4282	4283

BESER®

MAKE & MODEL   		KW	YEAR		
RENAULT					
KADJAR (HA_, HL_)	1.6 dCi 130	96/130	06/15	4282/1	
KADJAR (HA_, HL_)	1.6 dCi 130 4x4	96	06/15 -	4282	4283
KADJAR (HA_, HL_)	1.6 dCi 130 4x4	96/130	11/16	4282/1	
KADJAR (HA_, HL_)	1.6 TCe 165	120/163	08/16	4282/1	
Kadjar (HA_, HL_) 44228 TCe 130	H5F 408	96	06/2015 -		4283/1
Kadjar (HA_, HL_) 44317 dCi 110	K9K 646, K9K 647, K9K 648, K9K 649	81	06/2015 -		4283/1
Kadjar (HA_, HL_) 44348 dCi 130	R9M 414	96	06/2015 -		4283/1
Kadjar (HA_, HL_) 44348 dCi 130 4x4	R9M 414	96	06/2015 -		4283/1
KANGOO (KC0/1_)	1.2 (KCOA, KCOK, KCOF,KCOI)	43	08/97 -	3659	
KANGOO (KC0/1_)	1.2 16V (KC05, KC06, KC03, KCOT, KCOW, KCID)	55	06/01 -	3659	
KANGOO (KC0/1_)	1.4 (KCOC, KCOH, KCOB, KCOM)	55	08/97 -	3659	
KANGOO (KC0/1_)	1.5 dCI	42	07/03 -	3659	
KANGOO (KC0/1_)	1.5 dCi	45	04/05 – 06/10	3659	
KANGOO (KC0/1_)	1.5 dCi	50	06/05 -	3659	
KANGOO / GRAND KANGOO (KW0/1_)	1.2 TCe 115	84	07/13 -	3966	3967
KANGOO / GRAND KANGOO (KW0/1_)	1.2 TCe 115	84	07/13 -	3983	
KANGOO / GRAND KANGOO (KW0/1_)	1.5 dCi	55	11/12 -	3966	3967
KANGOO / GRAND KANGOO (KW0/1_)	1.5 dCi	55	11/12 -	3983	
KANGOO / GRAND KANGOO (KW0/1_)	1.5 dCi	66	11/12 -	3966	3967
KANGOO / GRAND KANGOO (KW0/1_)	1.5 dCi	66	11/12 -	3983	
KANGOO / GRAND KANGOO (KW0/1_)	1.5 dCi	78	02/08 -	3966	3967
KANGOO / GRAND KANGOO (KW0/1_)	1.5 dCi	78	02/08 -	3983	
KANGOO / GRAND KANGOO (KW0/1_)	1.5 dCi (KW0A)	50	02/08 -	3966	3967
KANGOO / GRAND KANGOO (KW0/1_)	1.5 dCi (KW0A)	50	02/08 -	3983	
KANGOO / GRAND KANGOO (KW0/1_)	1.5 dCi (KW0B)	63	02/08 -	3966	3967
KANGOO / GRAND KANGOO (KW0/1_)	1.5 dCi (KW0B)	63	02/08 -	3983	
KANGOO / GRAND KANGOO (KW0/1_)	1.5 dCi (KW0C, KW0F)	76	02/08 -	3966	3967
KANGOO / GRAND KANGOO (KW0/1_)	1.5 dCi (KW0C, KW0F)	76	02/08 -	3983	
KANGOO / GRAND KANGOO (KW0/1_)	1.5 dCi 110	80	09/10 -	3966	3967
KANGOO / GRAND KANGOO (KW0/1_)	1.5 dCi 110	80	09/10 -	3983	
KANGOO / GRAND KANGOO (KW0/1_)	1.5 dCi 110	81	03/13 -	3966	3967
KANGOO / GRAND KANGOO (KW0/1_)	1.5 dCi 110	81	03/13 -	3983	
KANGOO / GRAND KANGOO (KW0/1_)	1.6 (KW00, KW0Y)	64	02/08 -	3966	3967
KANGOO / GRAND KANGOO (KW0/1_)	1.6 (KW00, KW0Y)	64	02/08 -	3983	
KANGOO / GRAND KANGOO (KW0/1_)	1.6 16V (KW0D)	78	02/08 -	3966	3967
KANGOO / GRAND KANGOO (KW0/1_)	1.6 16V (KW0D)	78	02/08 -	3983	
KANGOO / GRAND KANGOO (KW0/1_)	1.6 16V Hi-Flex	78	02/08 -	3966	3967
KANGOO / GRAND KANGOO (KW0/1_)	1.6 16V Hi-Flex	78	02/08 -	3983	
KANGOO BE BOP (KW0/1_)	1.5 dCi	80	06/09 -	3966	3967
KANGOO BE BOP (KW0/1_)	1.5 dCi	80	06/09 -	3983	
KANGOO BE BOP (KW0/1_)	1.5 dCi (KW0F)	76	02/09 -	3966	3967
KANGOO BE BOP (KW0/1_)	1.5 dCi (KW0F)	76	02/09 -	3983	
KANGOO BE BOP (KW0/1_)	1.5 dCi (KW0G)	66	06/09 -	3966	3967
KANGOO BE BOP (KW0/1_)	1.5 dCi (KW0G)	66	06/09 -	3983	
KANGOO BE BOP (KW0/1_)	1.5 dCi 75	55	09/10 -	3966	3967
KANGOO BE BOP (KW0/1_)	1.5 dCi 75	55	09/10 -	3983	
KANGOO BE BOP (KW0/1_)	1.6 (KW0D)	78	02/09 -	3966	3967
KANGOO BE BOP (KW0/1_)	1.6 (KW0D)	78	02/09 -	3983	
Kangoo Be Bop (KW0/1_) 44317 dCi	K9K 804	80	06/2009 -	3966/1	
Kangoo Be Bop (KW0/1_) 44317 dCi (KW0F)	K9K 806	76	02/2009 - 12/2012	3966/1	
Kangoo Be Bop (KW0/1_) 44317 dCi (KW0G)	K9K 808	66	06/2009 - 12/2012	3966/1	
Kangoo Be Bop (KW0/1_) 44317 dCi 75	K9K 802	55	09/2010 -	3966/1	
Kangoo Be Bop (KW0/1_) 44348 (KW0D)	K4M 830	78	02/2009 - 12/2012	3966/1	
KANGOO Express (FC0/1_)	1.2 (FCIA)	44	07/98 – 07/01	3659	
KANGOO Express (FC0/1_)	1.2 (FCOI,FCOA,FCOF)	43	08/97 -	3659	
KANGOO Express (FC0/1_)	1.2 16V (FC05)	55	10/01-	3659	
KANGOO Express (FC0/1_)	1.2 TCe 115	84	07/13 -	3966	3967
KANGOO Express (FC0/1_)	1.2 TCe 115	84	07/13 -	3983	
KANGOO Express (FW0/1_)	1.5 dCi	50	02/08 -	3966	3967
KANGOO Express (FW0/1_)	1.5 dCi	50	02/08 -	3983	
KANGOO Express (FW0/1_)	1.5 dCi (FW0F)	76	02/08 -	3966	3967
KANGOO Express (FW0/1_)	1.5 dCi (FW0F)	76	02/08 -	3983	
KANGOO Express (FW0/1_)	1.5 dCi 110	80	09/10 -	3966	3967
KANGOO Express (FW0/1_)	1.5 dCi 110	80	09/10 -	3983	
KANGOO Express (FW0/1_)	1.5 dCi 110	81	09/13 -	3966	3967
KANGOO Express (FW0/1_)	1.5 dCi 110	81	09/13 -	3983	
KANGOO Express (FW0/1_)	1.5 dCi 75	55	09/10 -	3966	3967
KANGOO Express (FW0/1_)	1.5 dCi 75	55	09/10 -	3983	
KANGOO Express (FW0/1_)	1.5 dCi 85 (FW0A, FW0B)	63	02/08 -	3966	3967
KANGOO Express (FW0/1_)	1.5 dCi 85 (FW0A, FW0B)	63	02/08 -	3983	
KANGOO Express (FW0/1_)	1.5 dCi 90 (FW0G)	66	06/09 -	3966	3967
KANGOO Express (FW0/1_)	1.5 dCi 90 (FW0G)	66	06/09 -	3983	
KANGOO Express (FW0/1_)	1.6 16V	78	02/08 -	3966	3967
KANGOO Express (FW0/1_)	1.6 16V	78	02/08 -	3983	
KANGOO Express (FW0/1_)	1.6 16V 4x4 (FC0L, FC0P, FC0S)	70	10/01 -	3849	4093
KANGOO Express (FW0/1_)	1.6 16V LPG	72	02/08 -	3966	3967

MAKE & MODEL		KW	YEAR		
RENAULT					
KANGOO Express (FW0/1_)	1.6 16V LPG	72	02/08 -	3983	
KANGOO Express (FW0/1_)	1.9 dCi 4x4 (FC0V)	59	10/01 -	3849	4093
KANGOO Express (FW0/1_)	1.9 dCi 4x4 (FC0V)	62	07/03 -	3849	4093
KANGOO Express (FW0/1_)	Z.E.	44	10/11 -	3966	3967
KANGOO Express (FW0/1_)	Z.E.	44	10/11 -	3983	
Kangoo/ Grand Kangoo (KW0/1_) 44228 TCe 115	H5F 400, H5F 408, H5F 412	84	07/2013 -	3966/1	
Kangoo/ Grand Kangoo (KW0/1_) 44317 dCi	K9K 608, K9K 628, K9K 808	55	11/2012 -	3966/1	
Kangoo/ Grand Kangoo (KW0/1_) 44317 dCi	K9K 608, K9K 628, K9K 808	66	06/2008 -	3966/1	
Kangoo/ Grand Kangoo (KW0/1_) 44317 dCi	K9K 647	67	08/2017 -	3966/1	
Kangoo/ Grand Kangoo (KW0/1_) 44317 dCi	K9K 804	78	02/2008 -	3966/1	
Kangoo/ Grand Kangoo (KW0/1_) 44317 DCi	K9K700	48	01/2009 -	3966/1	
Kangoo/ Grand Kangoo (KW0/1_) 44317 dCi (KW0A)	K9K 800, K9K 802	50	02/2008 -	3966/1	
Kangoo/ Grand Kangoo (KW0/1_) 44317 dCi (KW0B)	K9K 802, K9K 812	63	02/2008 -	3966/1	
Kangoo/ Grand Kangoo (KW0/1_) 44317 dCi (KW0F)	K9K 806	76	02/2008 -	3966/1	
Kangoo/ Grand Kangoo (KW0/1_) 44317 dCi 110	K9K 636, K9K 646, K9K 647, K9K 648	81	03/2013 -	3966/1	
Kangoo/ Grand Kangoo (KW0/1_) 44317 dCi 110	K9K 804, K9K 816	80	09/2010 -	3966/1	
Kangoo/ Grand Kangoo (KW0/1_) 44348	K4M 730, K4M 830	70	01/2010 -	3966/1	
Kangoo/ Grand Kangoo (KW0/1_) 44348 (KW00, KW0Y)	K7M 750	64	02/2008 -	3966/1	
Kangoo/ Grand Kangoo (KW0/1_) 44348 16V (KW0D)	K4M 830, K4M 831, K4M 834, K4M 835, K4M 836	78	02/2008 -	3966/1	
Kangoo/ Grand Kangoo (KW0/1_) 44348 16V Hi-Flex	K4M 834, K4M 835	78	02/2008 -	3966/1	
KOLEOS (HY_)	2.0	103	08/13 -	4143	3933
KOLEOS (HY_)	2.0 dCi (HY0K)	110	09/08 -	4143	3933
KOLEOS (HY_)	2.0 dCi 4x4 (HY0B)	127	09/08 -	4143	3933
KOLEOS (HY_)	2.0 dCi 4x4 (HY0K)	110	09/08 -	4143	3933
KOLEOS (HY_)	2.5 (HY0C, HY0N)	126	09/08 -	4143	3933
KOLEOS (HY_)	2.5 4x4 (HY0C, HY0N)	126	09/08 -	4143	3933
KOLEOS II (HC_)	1.6 dCi 130	96/130	08/16	4282/1	
KOLEOS II (HC_)	2.5 Sce	126/170	08/16	4282/1	
KOLEOS II (HC_)	2.5 Sce 4WD	126/170		4282/1	
Koleos II (HC_) 2.0 BLUE dCi 190 4WD	M9R 730	140	06/2019 -		4283/1
Koleos II (HC_) 2.0 dCi 175 (HCAK)	M9R 868	130	08/2016 -		4283/1
Koleos II (HC_) 2.0 dCi 175 4WD	M9R 868	130	08/2016 -		4283/1
Koleos II (HC_) 44318 Sce	-	126	08/2016 -		4283/1
Koleos II (HC_) 44318 Sce 4WD	-	126	08/2016 -		4283/1
Koleos II (HC_) 44348 dCi 130	R9M 409, R9M 414	96	08/2016 -		4283/1
Koleos II (HC_) 44378 BLUE dCi 150	R9N 401	110	06/2019 -		4283/1
LAGUNA Coupe (DT0/1)	1.5 dCi	81	03/12 -	3950	3853/1
LAGUNA Coupe (DT0/1)	2.0 16V Turbo	125	09/08 -	4134	3853/1
LAGUNA Coupe (DT0/1)	2.0 dCi	127	09/08 -	4134	3853/1
LAGUNA Coupe (DT0/1)	2.0 dCi (DT01, DT09, DT12, DT1D)	110	09/08 -	4134	3853/1
LAGUNA Coupe (DT0/1)	2.0 dCi GT (DT11, DT1E, DT1N)	131	09/08 -	4134	3853/1
LAGUNA Coupe (DT0/1)	2.0 GT	150	09/08 -		3853/1
LAGUNA Coupe (DT0/1)	3.0 dCi	177	01/12 -	4134	3853/1
LAGUNA Coupe (DT0/1)	3.0 dCi (DT03)	173	09/08 -	4134	3853/1
LAGUNA Coupe (DT0/1)	3.5 V6 (DT0P)	175	09/08 -	4134	3853/1
LAGUNA I (B56_, 556_)	1.6 16V (B568, B561)	79	11/97 – 03/01	3539	
LAGUNA I (B56_, 556_)	1.6 16V (B568, B561)	79	11/97 – 03/01	3546	
LAGUNA I (B56_, 556_)	1.8	69	06/95 – 02/01	3546	3596
LAGUNA I (B56_, 556_)	1.8	69	06/95 – 02/01	3539	
LAGUNA I (B56_, 556_)	1.8	70	06/95 – 06/98	3546	3596
LAGUNA I (B56_, 556_)	1.8	70	06/95 – 06/98	3539	
LAGUNA I (B56_, 556_)	1.8 (B56A/B)	66	11/93 – 03/01	3546	3596
LAGUNA I (B56_, 556_)	1.8 (B56A/B)	66	11/93 – 03/01	3539	
LAGUNA I (B56_, 556_)	1.8 (B56S/T/0)	66	08/95 – 03/01	3546	3596
LAGUNA I (B56_, 556_)	1.8 (B56S/T/0)	66	08/95 – 03/01	3539	
LAGUNA I (B56_, 556_)	1.8 (B56Z)	69	08/95 – 03/01	3546	3596
LAGUNA I (B56_, 556_)	1.8 (B56Z)	69	08/95 – 03/01	3539	
LAGUNA I (B56_, 556_)	1.8 16V (B563, B564)	88	04/98 – 03/01	3539	
LAGUNA I (B56_, 556_)	1.8 16V (B563, B564)	88	04/98 – 03/01	3546	
LAGUNA I (B56_, 556_)	1.9 dTi (B56J)	72	10/97 – 03/01	3539	
LAGUNA I (B56_, 556_)	1.9 dTi (B56J)	72	10/97 – 03/01	3546	
LAGUNA I (B56_, 556_)	2.0	70	11/93 – 03/01	3546	3596
LAGUNA I (B56_, 556_)	2.0	70	11/93 – 03/01	3539	
LAGUNA I (B56_, 556_)	2.0	80	03/99 – 03/01	3539	
LAGUNA I (B56_, 556_)	2.0	80	03/99 – 03/01	3546	
LAGUNA I (B56_, 556_)	2.0	84	06/95 – 02/01	3546	3596
LAGUNA I (B56_, 556_)	2.0	84	06/95 – 02/01	3539	
LAGUNA I (B56_, 556_)	2.0	103	06/95 – 02/01	3546	3596
LAGUNA I (B56_, 556_)	2.0	103	06/95 – 02/01	3539	
LAGUNA I (B56_, 556_)	2.0 (B56C/H/N)	83	11/93 – 03/01	3546	3596
LAGUNA I (B56_, 556_)	2.0 (B56C/H/N)	83	11/93 – 03/01	3539	
LAGUNA I (B56_, 556_)	2.0 16V (B56D/M)	102	06/95 – 03/01	3546	3596
LAGUNA I (B56_, 556_)	2.0 16V (B56D/M)	102	06/95 – 03/01	3539	
LAGUNA I (B56_, 556_)	2.2 D (B56F/2)	61	11/93 – 03/01	3546	3596
LAGUNA I (B56_, 556_)	2.2 D (B56F/2)	61	11/93 – 03/01	3539	
LAGUNA I (B56_, 556_)	2.2 dT (B569)	83	03/96 – 03/01	3546	3596

MAKE & MODEL		KW	YEAR		
RENAULT					
LAGUNA I (B56_, 556_)	2.2 dT (B569)	83	03/96 – 03/01	3539	
LAGUNA I (B56_, 556_)	3.0 (B56E/R, B565)	123	11/93 – 03/01	3546	3596
LAGUNA I (B56_, 556_)	3.0 (B56E/R, B565)	123	11/93 – 03/01	3539	
LAGUNA I (B56_, 556_)	3.0 24V (B56V)	140	03/97 – 03/01	3539	
LAGUNA I (B56_, 556_)	3.0 24V (B56V)	140	03/97 – 03/01	3546	
Laguna I (B56_, 556_) 2.0	N7Q 700, N7Q 704	103	06/1995 - 02/2001	3539/1	
Laguna I (B56_, 556_) 2.0 (556A)	F4R 780	102	09/1999 - 02/2001	3539/1	
Laguna I (B56_, 556_) 2.0 16V (556A/B)	F4R 780	103	09/1999 - 03/2001	3539/1	
Laguna I (B56_, 556_) 2.0 16V (B56D/M)	N7Q 700 (08.95-.), N7Q 704 (08.95-.)	102	06/1995 - 03/2001	3539/1	
Laguna I (B56_, 556_) 3.0 (B56E/R, B565)	Z7X 760 (11.93-.), Z7X 765 (11.93-.)	123	11/1993 - 03/2001	3539/1	
Laguna I (B56_, 556_) 3.0 24V (B56V)	L7X 700, L7X 701	140	03/1997 - 03/2001	3539/1	
Laguna I (B56_, 556_) 44229 D (B56F/2)	G8T 706 (.-11.95), G8T 752 (11.95-.), G8T 790 (.-1	61	11/1993 - 03/2001	3539/1	
Laguna I (B56_, 556_) 44229 dT (B569)	G8T 760 (03.96-.)	83	03/1996 - 03/2001	3539/1	
Laguna I (B56_, 556_) 44348 16V (B568, B561)	K4M 720, K4M 724	79	11/1997 - 03/2001	3539/1	
Laguna I (B56_, 556_) 44409 16V (B563, B564)	F4P 760, F4P 770	88	04/1998 - 03/2001	3539/1	
Laguna I (B56_, 556_) 44440 dCi (B56W)	F9Q 718	79	09/1999 - 03/2001	3539/1	
Laguna I (B56_, 556_) 44440 dTi (B56J)	F9Q 710, F9Q 716, F9Q 717	72	10/1997 - 03/2001	3539/1	
LAGUNA I Grandtour (K56_)	1.6 16V (K568)	79	11/97 – 03/01	3539	
LAGUNA I Grandtour (K56_)	1.6 16V (K568)	79	11/97 – 03/01	3546	
LAGUNA I Grandtour (K56_)	1.8 (K56S/T/0)	66	09/95 – 03/01	3546	3596
LAGUNA I Grandtour (K56_)	1.8 (K56S/T/0)	66	09/95 – 03/01	3539	
LAGUNA I Grandtour (K56_)	1.8 (K56Z)	69	09/95 – 03/01	3546	3596
LAGUNA I Grandtour (K56_)	1.8 (K56Z)	69	09/95 – 03/01	3539	
LAGUNA I Grandtour (K56_)	1.8 16V (K563, K564)	88	04/98 – 03/01	3539	
LAGUNA I Grandtour (K56_)	1.8 16V (K563, K564)	88	04/98 – 03/01	3546	
LAGUNA I Grandtour (K56_)	1.9 dTi (K56J)	72	10/97 – 03/01	3539	
LAGUNA I Grandtour (K56_)	1.9 dTi (K56J)	72	10/97 – 03/01	3546	
LAGUNA I Grandtour (K56_)	2.0	84	10/98 – 01/01	3539	
LAGUNA I Grandtour (K56_)	2.0	84	10/98 – 01/01	3546	
LAGUNA I Grandtour (K56_)	2.0 (K56C/H)	83	09/95 – 03/01	3546	3596
LAGUNA I Grandtour (K56_)	2.0 (K56C/H)	83	09/95 – 03/01	3539	
LAGUNA I Grandtour (K56_)	2.0 16V (K56D/M)	102	09/95 – 03/01	3546	3596
LAGUNA I Grandtour (K56_)	2.0 16V (K56D/M)	102	09/95 – 03/01	3539	
LAGUNA I Grandtour (K56_)	2.2 D (K56F/2, S56F)	61	09/95 – 03/01	3546	3596
LAGUNA I Grandtour (K56_)	2.2 D (K56F/2, S56F)	61	09/95 – 03/01	3539	
LAGUNA I Grandtour (K56_)	2.2 dT (K569)	83	03/96 – 03/01	3546	3596
LAGUNA I Grandtour (K56_)	2.2 dT (K569)	83	03/96 – 03/01	3539	
LAGUNA I Grandtour (K56_)	3.0 (K56R, K565)	123	02/96 – 03/01	3546	3596
LAGUNA I Grandtour (K56_)	3.0 (K56R, K565)	123	02/96 – 03/01	3539	
LAGUNA I Grandtour (K56_)	3.0 24V (K56V)	140	03/97 – 03/01	3546	3596
LAGUNA I Grandtour (K56_)	3.0 24V (K56V)	140	03/97 – 03/01	3539	
Laguna I Grandtour (K56_) 2.0 16V (A56A/B)	F4R 780	103	09/1999 - 03/2001	3539/1	
Laguna I Grandtour (K56_) 2.0 16V (K56D/M)	N7Q 700 (09.95-.), N7Q 704 (09.95-.)	102	09/1995 - 03/2001	3539/1	
Laguna I Grandtour (K56_) 3.0 (K56R, K565)	Z7X 765 (02.96-.)	123	02/1996 - 03/2001	3539/1	
Laguna I Grandtour (K56_) 3.0 24V (K56V)	L7X 700, L7X 701	140	03/1997 - 03/2001	3539/1	
Laguna I Grandtour (K56_) 44229 dT (K569)	G8T 760 (03.96-.)	83	03/1996 - 03/2001	3539/1	
Laguna I Grandtour (K56_) 44348 16V (K568)	K4M 720, K4M 724	79	11/1997 - 03/2001	3539/1	
Laguna I Grandtour (K56_) 44409 16V (K563, K564)	F4P 760	88	04/1998 - 03/2001	3539/1	
Laguna I Grandtour (K56_) 44440 dCi (K56W)	F9Q 718	79	09/1999 - 03/2001	3539/1	
Laguna I Grandtour (K56_) 44440 dTi (K56J)	F9Q 710, F9Q 716, F9Q 717	72	10/1997 - 03/2001	3539/1	
LAGUNA II (BG0/1_)	1.6 16V (BG0A, BG0L)	79	03/01 -	3852	3853
LAGUNA II (BG0/1_)	1.6 16V (BG0A, BG0L)	79	03/01 -	3950	
LAGUNA II (BG0/1_)	1.6 16V (BG1G, BG1H)	82	02/05 -	3852	3853
LAGUNA II (BG0/1_)	1.6 16V (BG1G, BG1H)	82	02/05 -	3950	
LAGUNA II (BG0/1_)	1.8 16V (BG04, BG0B, BG0C BG0V)	86	03/01 -	3852	3853
LAGUNA II (BG0/1_)	1.8 16V (BG04, BG0B, BG0C BG0V)	86	03/01 -	3950	
LAGUNA II (BG0/1_)	1.8 16V (BG06, BG0J, BG0M)	85	03/01 -	3950	
LAGUNA II (BG0/1_)	1.8 16V (BG06, BG0J, BG0M)	85	03/01 -	3852	3853
LAGUNA II (BG0/1_)	1.8 16V (BG0B, BG0C, BG0J, BG0M, BG0V)	89	03/01 -	3852	3853
LAGUNA II (BG0/1_)	1.8 16V (BG0B, BG0C, BG0J, BG0M, BG0V)	89	03/01 -	3950	
LAGUNA II (BG0/1_)	1.8 16V (BG0B, BG0M)	88	03/01 -	3852	3853
LAGUNA II (BG0/1_)	1.8 16V (BG0B, BG0M)	88	03/01 -	3950	
LAGUNA II (BG0/1_)	1.9 dCI (BG0E)	77	06/01 -	3852	3853
LAGUNA II (BG0/1_)	1.9 dCI (BG0E)	77	06/01 -	3950	
LAGUNA II (BG0/1_)	1.9 dCi	79	03/01 -	3852	3853
LAGUNA II (BG0/1_)	1.9 dCi	79	03/01 -	3950	
LAGUNA II (BG0/1_)	1.9 dCi	85	09/05 -	3852	3853
LAGUNA II (BG0/1_)	1.9 dCi	85	09/05 -	3950	
LAGUNA II (BG0/1_)	1.9 dCi	92	09/05 -	3852	3853
LAGUNA II (BG0/1_)	1.9 dCi	92	09/05 -	3950	
LAGUNA II (BG0/1_)	1.9 dCi (BG05)	68	03/04 -	3852	3853
LAGUNA II (BG0/1_)	1.9 dCi (BG05)	68	03/04 -	3950	
LAGUNA II (BG0/1_)	1.9 dCi (BG08, BG0G)	88	03/01 -	3852	3853
LAGUNA II (BG0/1_)	1.9 dCi (BG08, BG0G)	88	03/01 -	3950	
LAGUNA II (BG0/1_)	1.9 dCi (BG0R)	74	10/01 -	3852	3853
LAGUNA II (BG0/1_)	1.9 dCi (BG0R)	74	10/01 -	3950	

MAKE & MODEL		KW	YEAR		
RENAULT					
LAGUNA II (BG0/1_)	1.9 dCi (BG1A, BG1V)	96	05/05 -	3852	3853
LAGUNA II (BG0/1_)	1.9 dCi (BG1A, BG1W)	81	01/05 -	3852	3853
LAGUNA II (BG0/1_)	1.9 dCi (BG1A, BG1W)	81	01/05 -	3950	
LAGUNA II (BG0/1_)	2.0 16V	98	08/02 -	3852	3853
LAGUNA II (BG0/1_)	2.0 16V	98	08/02 -	3950	3853
LAGUNA II (BG0/1_)	2.0 16V	150	01/05 -		3853
LAGUNA II (BG0/1_)	2.0 16V (BG00, BG0K, BG0P,BG0W)	99	08/02 -	3950	
LAGUNA II (BG0/1_)	2.0 16V (BG00, BG0K, BG0P,BG0W)	99	08/02 -	3852	3853
LAGUNA II (BG0/1_)	2.0 16V IDE (BG0N)	103	04/01 -	3950	
LAGUNA II (BG0/1_)	2.0 16V IDE (BG0N)	103	04/01 -	3852	3853
LAGUNA II (BG0/1_)	2.0 16V Turbo (BG0S, BG0Z, BG1L, BG1M)	120	01/03 -	3852	3853
LAGUNA II (BG0/1_)	2.0 dCi (BG14, BG1S)	127	01/06 -		3853
LAGUNA II (BG0/1_)	2.0 dCi (BG1T)	110	08/05 -	3852	3853
LAGUNA II (BG0/1_)	2.2 dCi	102	05/05 -	3852	3853
LAGUNA II (BG0/1_)	2.2 dCi (BG09)	85	04/04 – 10/05	3852	3853
LAGUNA II (BG0/1_)	2.2 dCi (BG0F)	110	10/01 -	3852	3853
LAGUNA II (BG0/1_)	3.0 V6 24V (BG01, BG02, BG0D, BG0Y)	152	03/01 -		3853
LAGUNA II Grandtour (KG0/1_)	1.6 16V	82	02/05 -	3852	3853
LAGUNA II Grandtour (KG0/1_)	1.6 16V	82	02/05 -	3950	
LAGUNA II Grandtour (KG0/1_)	1.6 16V (KG0A, KG0L)	79	03/01 -	3852	3853
LAGUNA II Grandtour (KG0/1_)	1.6 16V (KG0A, KG0L)	79	03/01 -	3950	
LAGUNA II Grandtour (KG0/1_)	1.6 FlexFuel	76	06/01 – 10/03	3852	3853
LAGUNA II Grandtour (KG0/1_)	1.6 FlexFuel	76	06/01 – 10/03	3950	
LAGUNA II Grandtour (KG0/1_)	1.8 16V	86	03/01 -	3852	3853
LAGUNA II Grandtour (KG0/1_)	1.8 16V	86	03/01 -	3950	
LAGUNA II Grandtour (KG0/1_)	1.8 16V	89	03/01 -	3852	3853
LAGUNA II Grandtour (KG0/1_)	1.8 16V	89	03/01 -	3950	
LAGUNA II Grandtour (KG0/1_)	1.8 16V (KG0B, KG0M)	88	03/01 -	3852	3853
LAGUNA II Grandtour (KG0/1_)	1.8 16V (KG0J)	85	03/01 -	3852	3853
LAGUNA II Grandtour (KG0/1_)	1.8 16V (KG0J)	85	03/01 -	3950	
LAGUNA II Grandtour (KG0/1_)	1.9 dCI (KG0E)	77	06/01 -	3852	3853
LAGUNA II Grandtour (KG0/1_)	1.9 dCI (KG0E)	77	06/01 -	3950	
LAGUNA II Grandtour (KG0/1_)	1.9 dCi	66	08/03 – 09/07	3852	3853
LAGUNA II Grandtour (KG0/1_)	1.9 dCi	66	08/03 – 09/07	3950	
LAGUNA II Grandtour (KG0/1_)	1.9 dCi	79	03/01 -	3852	3853
LAGUNA II Grandtour (KG0/1_)	1.9 dCi	79	03/01 -	3950	
LAGUNA II Grandtour (KG0/1_)	1.9 dCi	92	09/05 -	3852	3853
LAGUNA II Grandtour (KG0/1_)	1.9 dCi (KG05)	68	03/04 -	3852	3853
LAGUNA II Grandtour (KG0/1_)	1.9 dCi (KG05)	68	03/04 -	3950	
LAGUNA II Grandtour (KG0/1_)	1.9 dCi (KG0E, KG0R)	74	10/01 -	3852	3853
LAGUNA II Grandtour (KG0/1_)	1.9 dCi (KG0E, KG0R)	74	10/01 -	3950	
LAGUNA II Grandtour (KG0/1_)	1.9 dCi (KG0G)	88	03/01 -	3852	3853
LAGUNA II Grandtour (KG0/1_)	1.9 dCi (KG0G)	88	03/01 -	3950	
LAGUNA II Grandtour (KG0/1_)	1.9 dCi (KG12)	85	08/05 – 09/07	3852	3853
LAGUNA II Grandtour (KG0/1_)	1.9 dCi (KG1A, KG1W)	81	01/05 -	3950	3853
LAGUNA II Grandtour (KG0/1_)	1.9 dCi (KG1A, KG1W)	81	01/05 -	3852	
LAGUNA II Grandtour (KG0/1_)	1.9 dCi (KG1V)	96	05/05 -	3950	3853
LAGUNA II Grandtour (KG0/1_)	1.9 dCi (KG1V)	96	05/05 -	3852	
LAGUNA II Grandtour (KG0/1_)	2.0 16V	98	10/04 – 09/07	3950	3853
LAGUNA II Grandtour (KG0/1_)	2.0 16V	98	10/04 – 09/07	3852	
LAGUNA II Grandtour (KG0/1_)	2.0 16V	125	01/05 -		3853
LAGUNA II Grandtour (KG0/1_)	2.0 16V	150	01/05 -		3853
LAGUNA II Grandtour (KG0/1_)	2.0 16V (KG00, KG0K, KG0W)	99	08/02 -	3852	3853
LAGUNA II Grandtour (KG0/1_)	2.0 16V (KG00, KG0K, KG0W)	99	08/02 -	3950	
LAGUNA II Grandtour (KG0/1_)	2.0 16V IDE (KG0N)	103	04/01 -	3852	3853
LAGUNA II Grandtour (KG0/1_)	2.0 16V Turbo (KG0S, KG0Z, KG1L, KG1M)	120	01/03 -	3852	3853
LAGUNA II Grandtour (KG0/1_)	2.0 dCi (KG1S)	127	01/06 -		3853
LAGUNA II Grandtour (KG0/1_)	2.0 dCi (KG1T)	110	08/05 -	3852	3853
LAGUNA II Grandtour (KG0/1_)	2.0 Flex	95	09/02 – 05/05	3852	3853
LAGUNA II Grandtour (KG0/1_)	2.0 Flex	95	09/02 – 05/05	3950	
LAGUNA II Grandtour (KG0/1_)	2.2 dCi	102	05/05 -	3852	3853
LAGUNA II Grandtour (KG0/1_)	2.2 dCi (KG09)	85	04/04 – 10/05	3852	3853
LAGUNA II Grandtour (KG0/1_)	2.2 dCi (KG0F)	110	10/01 -	3852	3853
LAGUNA II Grandtour (KG0/1_)	3.0 V6 24V (KG0D)	152	03/01 -		3853
LAGUNA III (BT0/1)	1.5 dCi (BT00, BT0A, BT0T, BT1J)	81	10/07 -	3950	3853/1
LAGUNA III (BT0/1)	1.6 16V (BT04, BT0D, BT0U)	81	10/07 -	3950	3853/1
LAGUNA III (BT0/1)	2.0 16V (BT05, BT0F, BT0W)	103	10/07 -	4134	3853/1
LAGUNA III (BT0/1)	2.0 16V Hi-Flex (BT1H)	103	10/07 -	4134	3853/1
LAGUNA III (BT0/1)	2.0 16V Turbo	125	10/07 -	4134	3853/1
LAGUNA III (BT0/1)	2.0 dCi (BT01, BT09, BT12, BT1S)	110	10/07 -	4134	3853/1
LAGUNA III (BT0/1)	2.0 dCi (BT08, BT0K, BT0J, BT14, BT1A, BT1D)	96	10/07 -	4134	3853/1
LAGUNA III (BT0/1)	2.0 dCi (BT0M, BT0N, BT19)	127	01/08 -	4134	3853/1
LAGUNA III (BT0/1)	2.0 dCi GT (BT1E, BT1N)	131	03/08 -	4134	3853/1
LAGUNA III (BT0/1)	2.0 GT	150	03/08 -		3853/1
LAGUNA III (BT0/1)	3.0 dCi (BT03, BT13)	173	09/08 -		3853/1
LAGUNA III (BT0/1)	3.5 V6 (BT0C, BT0P)	175	04/08 -		3853/1

MAKE & MODEL   		KW	YEAR		
RENAULT					
LAGUNA III Grandtour (KT0/1)	1.5 dCi (KT0A)	81	10/07 -	3950	3853/1
LAGUNA III Grandtour (KT0/1)	1.6 16V (KT0D)	81	10/07 -	3950	3853/1
LAGUNA III Grandtour (KT0/1)	2.0 16V (KT0F, KT0W)	103	10/07 -	4134	3853/1
LAGUNA III Grandtour (KT0/1)	2.0 16V Hi-Flex (KT1H)	103	10/07 -	4134	3853/1
LAGUNA III Grandtour (KT0/1)	2.0 16V Turbo	125	10/07 -	4134	
LAGUNA III Grandtour (KT0/1)	2.0 dCi (KT01, KT08, KT0K, KT0J, KT1A, KT1D)	96	10/07 -	4134	3853/1
LAGUNA III Grandtour (KT0/1)	2.0 dCi (KT01, KT09, KT12, KT1S)	110	10/07 -	4134	3853/1
LAGUNA III Grandtour (KT0/1)	2.0 dCi (KT0M, KT0N, KT19)	127	01/08 -	4134	3853/1
LAGUNA III Grandtour (KT0/1)	2.0 dCi GT (KT11, KT1E, KT1N)	131	03/08 -	4134	3853/1
LAGUNA III Grandtour (KT0/1)	2.0 GT	150	03/08 -		3853/1
LAGUNA III Grandtour (KT0/1)	3.0 dCi (KT03, KT13)	173	09/08 -		3853/1
LAGUNA III Grandtour (KT0/1)	3.5 V6 (KT0C, KT0P)	175	04/08 -		3853/1
LATITUDE (L70_)	1.5 dCi (L70R)	81	07/10 -	4134	
LATITUDE (L70_)	2.0 16V (L70B)	103	02/11 -	4134	
LATITUDE (L70_)	2.0 16V eco2 Flexfuel (L70B)	103	02/11 -	4134	
LATITUDE (L70_)	2.0 dCi	130	02/11 -	4134	
LATITUDE (L70_)	2.0 dCi 150 (L70H)	110	02/11 -	4134	
LATITUDE (L70_)	2.0 dCi 175 (L70Y)	127	05/11 -	4134	
LATITUDE (L70_)	2.5 V6 (L702, L703, L704, L707)	130	05/11 -	4134	
LCV Kangoo Express II (FW0/1_) 44317 dCi	K9K 800	50	02/2008 -	3966/1	
LCV Kangoo Express II (FW0/1_) 44317 DCi	K9K700	48	01/2009 -	3966/1	
LCV Kangoo Express II (FW0/1_) 44317 dCi (FW0F)	K9K 806	76	02/2008 -	3966/1	
LCV Kangoo Express II (FW0/1_) 44317 dCi 110	K9K 636, K9K 646, K9K 647, K9K 648	81	09/2013 -	3966/1	
LCV Kangoo Express II (FW0/1_) 44317 dCi 110	K9K 804, K9K 816	80	09/2010 -	3966/1	
LCV Kangoo Express II (FW0/1_) 44317 dCi 75	K9K 608, K9K 628, K9K 808	55	09/2010 -	3966/1	
LCV Kangoo Express II (FW0/1_) 44317 dCi 85 (FW0A, FW0B)	K9K 802, K9K 812	63	02/2008 -	3966/1	
LCV Kangoo Express II (FW0/1_) 44317 dCi 90 (FW0G)	K9K 608, K9K 628, K9K 808	66	06/2009 -	3966/1	
LCV Kangoo Express II (FW0/1_) 44348	-	76	10/2010 -	3966/1	
LCV Kangoo Express II (FW0/1_) 44348	-	81	09/2008 -	3966/1	
LCV Kangoo Express II (FW0/1_) 44348	K7M 750	64	02/2008 -	3966/1	
LCV Kangoo Express II (FW0/1_) 44348 16V	K4M 830, K4M 831, K4M 834	78	02/2008 -	3966/1	
LCV Kangoo Express II (FW0/1_) 44348 16V LPG	K4M 834	72	02/2008 -	3966/1	
LOGAN II MCV / TONDAR (K52)	1.5 DCI (K9K 838)	62	12/13 -	4253	
LOGAN II / TONDAR (L52)	1.6 (K4M 842)	75	04/14 -	4253	
LOGAN EXPRESS (US_)	1.5 dCi	50	04/07 -	3983	
LOGAN EXPRESS (US_)	1.5 dCi	50	04/07 -	4141/1	
LOGAN EXPRESS (US_)	1.6	64	04/07 -	3983	
LOGAN EXPRESS (US_)	1.6	64	04/07 -	4141/1	
LOGAN I (LS_)	1.4	55	09.2004 -	3503/1	
LOGAN I (LS_)	1.5 dCi	48	06.2011 -	3503/1	
LOGAN I (LS_)	1.5 dCi	50	04.2007 -	3503/1	
LOGAN I (LS_)	1.5 dCi	63	02.2008 - 06.2015	3503/1	
LOGAN I (LS_)	1.6	64	09.2004 -	3503/1	
LOGAN I (LS_)	1.6 (LS0L, LS09, LS0V, LS0P, LS18, LS1S, LS1V, LS1Y,...)	77	04.2007 - 10.2013	3503/1	
LOGAN I (LS_)	1.4	55	09/04 -	3431	
LOGAN I (LS_)	1.4	55	09/04 -	3503	
LOGAN I (LS_)	1.5 dCi	48	06/11 -	3431	
LOGAN I (LS_)	1.5 dCi	48	06/11 -	3503	
LOGAN I (LS_)	1.5 dCi	50	04/07 -	3431	
LOGAN I (LS_)	1.5 dCi	50	04/07 -	3503	
LOGAN I (LS_)	1.5 dCi	63	02/08 -	3431	
LOGAN I (LS_)	1.5 dCi	63	02/08 -	3503	
LOGAN I (LS_)	1.6	64	09/04 -	3431	
LOGAN I (LS_)	1.6	64	09/04 -	3503	
LOGAN I (LS_)	1.6	77	04/07 -	3431	
LOGAN I (LS_)	1.6	77	04/07 -	3503	
LOGAN I Estate (KS_)	1.4	55	10/07 -	3431	
LOGAN I Estate (KS_)	1.4	55	10/07 -	3503	
LOGAN I Estate (KS_)	1.5 dCi	48	06/11 -	3431	
LOGAN I Estate (KS_)	1.5 dCi	48	06/11 -	3503	
LOGAN I Estate (KS_)	1.5 dCi	50	04/07 -	3431	
LOGAN I Estate (KS_)	1.5 dCi	50	04/07 -	3503	
LOGAN I Estate (KS_)	1.5 dCi	63	02/08 -	3431	
LOGAN I Estate (KS_)	1.5 dCi	63	02/08 -	3503	
LOGAN I Estate (KS_)	1.5 dCi	63	02/08 -	3983	
LOGAN I Estate (KS_)	1.5 dCi	63	02/08 -	4141/1	
LOGAN I Estate (KS_)	1.5 dCi	66	06/11 -	3431	
LOGAN I Estate (KS_)	1.5 dCi	66	06/11 -	3503	
LOGAN I Estate (KS_)	1.6	64	04/07 -	3431	
LOGAN I Estate (KS_)	1.6	64	04/07 -	3503	
LOGAN I Estate (KS_)	1.6	77	04/07 -	3431	
LOGAN I Estate (KS_)	1.6	77	04/07 -	3503	
LOGAN I Station wagon (KS_)	1.4	55	10.2007 -	3503/1	
LOGAN I Station wagon (KS_)	1.5 dCi	50	04.2007 -	3503/1	
LOGAN I Station wagon (KS_)	1.5 dCi	63	02.2008 - 06.2015	3503/1	
LOGAN I Station wagon (KS_)	1.5 dCi	63	02.2008 - 06.2015	3503/1	

MAKE & MODEL		KW	YEAR		
RENAULT					
LOGAN I Station wagon (KS_)	1.6	64	04.2007 -	3503/1	
LOGAN I Station wagon (KS_)	1.6 (KS0L, KS0M, KS0P, KS1S)	77	04.2007 -	3503/1	
LOGAN II (B8_)	1.6	75	04/14 -	4140	
LOGAN II Estate (K8_)	1.2 16V	54	12/13 -	4140	
LOGAN II Estate (K8_)	1.2 16V LPG	53	12/13 -	4140	
LOGAN II Estate (K8_)	1.5 dCi	62	12/13 -	3983	
LOGAN II Estate (K8_)	1.5 dCi	62	12/13 -	4141/1	
LOGAN II Estate (K8_)	1.6	59	12/13 -	3983	
LOGAN II Estate (K8_)	1.6	59	12/13 -	4141/1	
MASTER I Box (T	2.0	60	06/85 – 10/89	3526	
MASTER I Box (T	2.1 D	44	11/89 – 04/95	3526	
MASTER I Box (T	2.4 D	52	07/83 – 08/86	3526	
MASTER I Box (T	2.4 D	53	09/86 – 12/92	3526	
MASTER I Box (T	28-35 2,5 D	55	08/89 – 07/98	3526	
MASTER I Box (T	28-35 2,5 TD	72	08/89 – 07/98	3526	
MASTER I Box (T	28-35 2.0	58	10/86 – 07/98	3526	
MASTER I Bus (T	28-35 2.0	59	08/80 – 10/86	3526	
MASTER I Bus (T	28-35 2.1 D	44	08/80 – 07/98	3526	
MASTER I Bus (T	28-35 2.4 D	52	08/80 – 08/89	3526	
MASTER I Bus (T	28-35 2.5 D	55	08/89 – 07/98	3526	
MASTER I Bus (T	30 2,2	67	08/80 – 07/98	3526	
MASTER I Bus (T	35 2,5 TD	69	08/89 – 07/98	3526	
MASTER I Platform/Chassis (P	28-35 2.0	59	10/82 – 09/86	3526	
MASTER I Platform/Chassis (P	2.0	60	11/89 – 12/95	3526	
MASTER I Platform/Chassis (P	2.0	71	08/93 – 02/98	3526	
MASTER I Platform/Chassis (P	2.1 D	46	11/89 – 07/93	3526	
MASTER I Platform/Chassis (P	2.4 D	52	08/93 – 02/98	3526	
MASTER I Platform/Chassis (P	2.5 D	55	07/80 – 10/89	3526	
MASTER I Platform/Chassis (P	2.5 DT	69	11/89 – 10/93	3526	
MASTER I Platform/Chassis (P	2.5 DT	70	08/93 – 02/98	3526	
MASTER I Platform/Chassis (P	28-35 2.0	58	10/86 – 07/98	3526	
MASTER I Platform/Chassis (P	28-35 2.5 D	52	09/80 – 07/98	3526	
MASTER II Box (FD)	1.9 dCi 80	60	11/01 -	3856	3855
MASTER II Box (FD)	1.9 dTI	59	09/00 -	3856	3855
MASTER II Box (FD)	2.2 dCI 90	66	09/00 -	3856	3855
MASTER II Box (FD)	2.5 D	59	07/98 – 01/01	3856	3855
MASTER II Box (FD)	2.5 dCi	74	08/06 -	3856	3855
MASTER II Box (FD)	2.5 dCi	88	08/06 -	3856	3855
MASTER II Box (FD)	2.5 dCi	107	08/06 -	3856	3855
MASTER II Box (FD)	2.5 dCi 100 (FD0U, FD0V)	73	10/03 -	3856	3855
MASTER II Box (FD)	2.5 dCi 120	84	10/01 -	3856	3855
MASTER II Box (FD)	2.8 dTI	84	07/98 – 10/01	3856	3855
MASTER II Box (FD)	3.0 dCi 120	85	06/05 -	3856	3855
MASTER II Box (FD)	3.0 dCi 140 (HD0S, FD0S, HD1S)	100	10/03 -	3856	3855
MASTER II Box (FD)	3.0 dCi 160	115	06/05 -	3856	3855
MASTER II Bus (JD)	1.9 dCi 80	60	11/01 -	3856	3855
MASTER II Bus (JD)	1.9 dTI	59	09/00 -	3856	3855
MASTER II Bus (JD)	2.2 dCI 90	66	09/00 -	3856	3855
MASTER II Bus (JD)	2.5 D	59	07/98 – 01/01	3856	3855
MASTER II Bus (JD)	2.5 dCi	74	08/06 -	3856	3855
MASTER II Bus (JD)	2.5 dCi	88	08/06 -	3856	3855
MASTER II Bus (JD)	2.5 dCi	107	08/06 -	3856	3855
MASTER II Bus (JD)	2.5 dCi 100 (JDCV)	73	10/03 -	3856	3855
MASTER II Bus (JD)	2.5 dCi 120	84	10/01 -	3856	3855
MASTER II Bus (JD)	2.8 dTI	84	07/98 – 10/01	3856	3855
MASTER II Bus (JD)	3.0 dCi 140 (JD0T)	100	10/03 -	3856	3855
MASTER II Platform/Chassis (ED/HD/UD)	2.2 dCI 90	66	09/00 -	3856	3855
MASTER II Platform/Chassis (ED/HD/UD)	2.5 D	59	07/98 – 01/01	3856	3855
MASTER II Platform/Chassis (ED/HD/UD)	2.5 dCi	74	08/06 -	3856	3855
MASTER II Platform/Chassis (ED/HD/UD)	2.5 dCi	88	08/06 -	3856	3855
MASTER II Platform/Chassis (ED/HD/UD)	2.5 dCi	107	08/06 -	3856	3855
MASTER II Platform/Chassis (ED/HD/UD)	2.5 dCi 100 (ED4V, ED8V)	73	10/03 -	3856	3855
MASTER II Platform/Chassis (ED/HD/UD)	2.5 dCi 120	84	10/01 -	3856	3855
MASTER II Platform/Chassis (ED/HD/UD)	2.8 dTI	84	07/98 – 10/01	3856	3855
MASTER II Platform/Chassis (ED/HD/UD)	3.0 dCi 120	85	06/05 -	3856	3855
MASTER II Platform/Chassis (ED/HD/UD)	3.0 dCi 140 (ED0S, UD0S)	100	10/03 -	3856	3855
MASTER II Platform/Chassis (ED/HD/UD)	3.0 dCi 160	115	06/05 -	3856	3855
MASTER III Box (FV)	2.3 dCi 100 [RWD] (FV0B, FV0C, FV0D)	74	02/10 -		4172
MASTER III Box (FV)	2.3 dCi 100 [RWD] (FV0B, FV0C, FV0D)	74	02/10 -		4132
MASTER III Box (FV)	2.3 dCi 100 [RWD] (FV0B, FV0C, FV0D)	74	02/10 -	4056	4057
MASTER III Box (FV)	2.3 dCi 100 FWD (FV0A, FV0B, FV0G, FV0K)	74	02/10 -	4056	4057
MASTER III Box (FV)	2.3 dCi 110 FWD	81	09/14 -		4172
MASTER III Box (FV)	2.3 dCi 110 FWD	81	09/14 -		4132
MASTER III Box (FV)	2.3 dCi 110 FWD	81	09/14 -	4056	4057
MASTER III Box (FV)	2.3 dCi 125 [RWD] (FV0C, FV0D, FV0H, FV0J)	92	02/10 -	4056	4132
MASTER III Box (FV)	2.3 dCi 125 [RWD] (FV0C, FV0D, FV0H, FV0J)	92	02/10 -		4172

MAKE & MODEL   		KW	YEAR		
RENAULT					
MASTER III Box (FV)	2.3 dCi 125 [RWD] (FV0C, FV0D, FV0H, FV0J)	92	02/10 -		4057
MASTER III Box (FV)	2.3 dCi 125 FWD (FV0C, FV0D)	92	02/10 -		4057
MASTER III Box (FV)	2.3 dCi 130 [RWD]	96	03/12 -	4056	
MASTER III Box (FV)	2.3 dCi 130 FWD	96	06/16 -	4056	4057
MASTER III Box (FV)	2.3 dCi 130 FWD	96	06/16 -		4172
MASTER III Box (FV)	2.3 dCi 130 FWD	96	06/16 -		4132
MASTER III Box (FV)	2.3 dCi 135 [RWD]	100	07/14 -	4056	4057
MASTER III Box (FV)	2.3 dCi 135 [RWD]	100	07/14 -		4172
MASTER III Box (FV)	2.3 dCi 135 [RWD]	100	07/14 -		4132
MASTER III Box (FV)	2.3 dCi 135 FWD	100	07/14 -	4056	4057
MASTER III Box (FV)	2.3 dCi 135 FWD	100	07/14 -		4172
MASTER III Box (FV)	2.3 dCi 135 FWD	100	07/14 -		4132
MASTER III Box (FV)	2.3 dCi 145 [RWD] (FV0E, FV0F, FV0J)	107	02/10 -	4056	4057
MASTER III Box (FV)	2.3 dCi 145 [RWD] (FV0E, FV0F, FV0J)	107	02/10 -		4172
MASTER III Box (FV)	2.3 dCi 145 [RWD] (FV0E, FV0F, FV0J)	107	02/10 -		4132
MASTER III Box (FV)	2.3 dCi 145 FWD (FV0E, FV0F, FV0H, FV0J)	107	02/10 -	4056	4057
MASTER III Box (FV)	2.3 dCi 150 [RWD]	110	03/13 -	4056	4057
MASTER III Box (FV)	2.3 dCi 150 [RWD]	110	03/13 -		4172
MASTER III Box (FV)	2.3 dCi 150 [RWD]	110	03/13 -		4132
MASTER III Box (FV)	2.3 dCi 150 FWD	110	03/13 -	4056	4057
MASTER III Box (FV)	2.3 dCi 150 FWD	110	03/13 -		4172
MASTER III Box (FV)	2.3 dCi 150 FWD	110	03/13 -		4132
MASTER III Box (FV)	2.3 dCi 165 [RWD]	120	07/14 -	4056	4057
MASTER III Box (FV)	2.3 dCi 165 [RWD]	120	07/14 -		4172
MASTER III Box (FV)	2.3 dCi 165 [RWD]	120	07/14 -		4132
MASTER III Box (FV)	2.3 dCi 165 FWD	120	07/14 -	4056	4057
MASTER III Box (FV)	2.3 dCi 165 FWD	120	07/14 -		4172
MASTER III Box (FV)	2.3 dCi 165 FWD	120	07/14 -		4132
MASTER III Box (FV)	2.3 dCi 170 FWD	125	07/15 -	4056	4057
MASTER III Box (FV)	2.3 dCi 170 FWD	125	07/15 -		4172
MASTER III Box (FV)	2.3 dCi 170 FWD	125	07/15 -		4132
MASTER III Box (FV)	2.3 dCi 125 FWD (FV0C, FV0D)	92	02/10 -	4056	
MASTER III Bus (JV)	2.3 dCi 100 FWD (JV0A, JV0B)	74	02/11 -	4056	4057
MASTER III Bus (JV)	2.3 dCi 110 FWD	81	09/14 -	4056	4057
MASTER III Bus (JV)	2.3 dCi 125 FWD (JV0C, JV0D, JV0H)	92	02/11 -	4056	4057
MASTER III Bus (JV)	2.3 dCi 130 FWD	96	05/13 -	4056	
MASTER III Bus (JV)	2.3 dCi 135 FWD	100	07/14 -	4056	4057
MASTER III Bus (JV)	2.3 dCi 145 FWD (JV0F, JV0H)	107	02/11 -	4056	4057
MASTER III Bus (JV)	2.3 dCi 150 FWD	110	10/12 -	4056	4057
MASTER III Bus (JV)	2.3 dCi 165 FWD	120	07/14 -	4056	4057
MASTER III Bus (JV)	2.3 dCi 170 FWD	125	07/15 -	4056	4057
MASTER III Platform/Chassis (EV, HV, UV)	2.3 dCi 100 [RWD] (UV0C, UV0D, HV0C, HV0D)	74	02/10 -	4056	4132
MASTER III Platform/Chassis (EV, HV, UV)	2.3 dCi 100 [RWD] (UV0C, UV0D, HV0C, HV0D)	74	02/10 -		4057
MASTER III Platform/Chassis (EV, HV, UV)	2.3 dCi 100 [RWD] (UV0C, UV0D, HV0C, HV0D)	74	02/10 -		4172
MASTER III Platform/Chassis (EV, HV, UV)	2.3 dCi 100 FWD (EV0A,EV0B, HV0A, HV0B, HV0G, UV0A...)	74	02/10 -	4056	4057
MASTER III Platform/Chassis (EV, HV, UV)	2.3 dCi 110 FWD	81	09/14 -		4172
MASTER III Platform/Chassis (EV, HV, UV)	2.3 dCi 110 FWD	81	09/14 -		4057
MASTER III Platform/Chassis (EV, HV, UV)	2.3 dCi 110 FWD	81	09/14 -	4056	4132
MASTER III Platform/Chassis (EV, HV, UV)	2.3 dCi 125 [RWD] (HV0C,HV0D, UV0C, UV0D, UV0H, UV0J)	92	02/10 -	4056	4057
MASTER III Platform/Chassis (EV, HV, UV)	2.3 dCi 125 [RWD] (HV0C,HV0D, UV0C, UV0D, UV0H, UV0J)	92	02/10 -	4056	4132
MASTER III Platform/Chassis (EV, HV, UV)	2.3 dCi 125 [RWD] (HV0C,HV0D, UV0C, UV0D, UV0H, UV0J)	92	02/10 -		4172
MASTER III Platform/Chassis (EV, HV, UV)	2.3 dCi 125 FWD (EV0C,EV0D, EV0J, HV0C, HV0D, HV0H...)	92	02/10 -		4057
MASTER III Platform/Chassis (EV, HV, UV)	2.3 dCi 130 FWD	96	03/12 -	4056	
MASTER III Platform/Chassis (EV, HV, UV)	2.3 dCi 135 [RWD]	100	07/14 -		4172
MASTER III Platform/Chassis (EV, HV, UV)	2.3 dCi 135 [RWD]	100	07/14 -		4132
MASTER III Platform/Chassis (EV, HV, UV)	2.3 dCi 135 [RWD]	100	07/14 -	4056	4057
MASTER III Platform/Chassis (EV, HV, UV)	2.3 dCi 135 FWD	100	07/14 -	4056	
MASTER III Platform/Chassis (EV, HV, UV)	2.3 dCi 145 [RWD] (UV0F, UV0E)	107	02/10 -		4057
MASTER III Platform/Chassis (EV, HV, UV)	2.3 dCi 145 [RWD] (UV0F, UV0E)	107	02/10 -		4172
MASTER III Platform/Chassis (EV, HV, UV)	2.3 dCi 145 [RWD] (UV0F, UV0E)	107	02/10 -	4056	4132
MASTER III Platform/Chassis (EV, HV, UV)	2.3 dCi 145 FWD (EV0E, EV0F, HV0E, HV0F, UV0E,UV0F)	107	02/10 -	4056	4057
MASTER III Platform/Chassis (EV, HV, UV)	2.3 dCi 150 [RWD]	110	03/13 -	4056	4057
MASTER III Platform/Chassis (EV, HV, UV)	2.3 dCi 150 [RWD]	110	03/13 -		4132
MASTER III Platform/Chassis (EV, HV, UV)	2.3 dCi 150 [RWD]	110	03/13 -		4172
MASTER III Platform/Chassis (EV, HV, UV)	2.3 dCi 150 FWD	110	03/13 -	4056	4057
MASTER III Platform/Chassis (EV, HV, UV)	2.3 dCi 150 FWD	110	03/13 -		4132
MASTER III Platform/Chassis (EV, HV, UV)	2.3 dCi 150 FWD	110	03/13 -		4172
MASTER III Platform/Chassis (EV, HV, UV)	2.3 dCi 165 [RWD]	120	07/14 -	4056	4057
MASTER III Platform/Chassis (EV, HV, UV)	2.3 dCi 165 [RWD]	120	07/14 -		4132
MASTER III Platform/Chassis (EV, HV, UV)	2.3 dCi 165 [RWD]	120	07/14 -		4172
MASTER III Platform/Chassis (EV, HV, UV)	2.3 dCi 165 FWD	120	07/14 -	4056	4057
MASTER III Platform/Chassis (EV, HV, UV)	2.3 dCi 165 FWD	120	07/14 -		4132
MASTER III Platform/Chassis (EV, HV, UV)	2.3 dCi 165 FWD	120	07/14 -		4172
MASTER III Platform/Chassis (EV, HV, UV)	2.3 dCi 170 FWD	125	06/16 -	4056	4057
MASTER III Platform/Chassis (EV, HV, UV)	2.3 dCi 170 FWD	125	06/16 -		4132
MASTER III Platform/Chassis (EV, HV, UV)	2.3 dCi 170 FWD	125	06/16 -		4172

MAKE & MODEL		KW	YEAR		
RENAULT					
MEGANE CC (EZ0/1_)	1.2 TCe (EZ16)	97	01/13 -	3964/1	3529/2
MEGANE CC (EZ0/1_)	1.4 TCe (EZ0F, EZ1V)	96	06/10 -	3964/1	3529/2
MEGANE CC (EZ0/1_)	1.5 dCi (EZ09, EZ1G, EZ0D)	81	06/10 -	3964/1	3529/2
MEGANE CC (EZ0/1_)	1.6 16V (EZ0U, EZ1U)	81	06/10 -	3964/1	3529/2
MEGANE CC (EZ0/1_)	1.6 dCi (EZ00)	96	04/11 -	3964/1	3529/2
MEGANE CC (EZ0/1_)	1.9 dCi (EZ0J, EZ1S)	96	06/10 -	3964/1	3529/2
MEGANE CC (EZ0/1_)	2.0 CVT (EZ0G, EZ1E, EZ1P)	103	06/10 -	3964/1	3529/2
MEGANE CC (EZ0/1_)	2.0 dCi (EZ0L)	118	06/10 -		3529/2
MEGANE CC (EZ0/1_)	2.0 TCe (EZ1T)	132	06/10 -	4137	3529/2
MEGANE CC (EZ0/1_)	2.0 Turbo	195	10/11 -		3529/2
MEGANE I (BA0/1_)	1.4 16V (BA0D, BA1H, BA0W, BA10)	70	03.1999 - 08.2003	3503/1	
MEGANE I (BA0/1_)	1.4 e (BA0E, BA0V)	55	01.1996 - 08.2003	3503/1	
MEGANE I (BA0/1_)	1.4 Eco (BA0T)	52	01.1996 - 03.1999	3503/1	
MEGANE I (BA0/1_)	1.6 e (BA0F, BA0S)	66	01.1996 - 03.1999	3503/1	
MEGANE I (BA0/1_)	1.6 i (BA0L)	55	01.1996 - 03.1999	3503/1	
MEGANE I (BA0/1_)	1.6 LPG	66	08.1995 - 03.1999	3503/1	
MEGANE I (BA0/1_)	1.9 D Eco (BA0A, BA0U, BA0R)	47	01.1996 - 08.2003	3503/1	
MEGANE I (BA0/1_)	1.9 dT (B/SA0K, B/SA0Y)	66	01.1996 - 08.2003	3503/1	
MEGANE I (BA0/1_)	1.9 dTi (BA08, BA0N)	72	03.1997 - 02.2001	3503/1	
MEGANE I (BA0/1_)	1.9 TDI	69	09.1996 - 08.2003	3503/1	
MEGANE I (BA0/1_)	2.0	85	05.1998 - 05.2001	3503/1	
MEGANE I (BA0/1_)	2.0 16V (BA0H)	108	07.1996 - 08.2003	3503/1	
MEGANE I (BA0/1_)	2.0 i	80	03.1999 - 08.2003	3503/1	
MEGANE I (BA0/1_)	2.0 i (BA0G)	84	01.1996 - 08.2003	3503/1	
MEGANE I (BA0/1_)	1.4 16V (BA0D, BA1H, BA0W, BA10)	70	03/99 – 08/03	3431	3496
MEGANE I (BA0/1_)	1.4 16V (BA0D, BA1H, BA0W, BA10)	70	03/99 – 08/03	3503	
MEGANE I (BA0/1_)	1.4 e (BA0E, BA0V)	55	01/96 – 08/03	3431	
MEGANE I (BA0/1_)	1.4 e (BA0E, BA0V)	55	01/96 – 08/03	3503	
MEGANE I (BA0/1_)	1.4 Eco (BA0T)	52	01/96 – 03/99	3503	3496
MEGANE I (BA0/1_)	1.4 Eco (BA0T)	52	01/96 – 03/99	3431	
MEGANE I (BA0/1_)	1.6 16V (BA11, BA04, BA0B, BA1J)	70	03/99 – 08/03		3496
MEGANE I (BA0/1_)	1.6 e (BA0F, BA0S)	66	01/96 – 03/99	3431	
MEGANE I (BA0/1_)	1.6 e (BA0F, BA0S)	66	01/96 – 03/99	3503	
MEGANE I (BA0/1_)	1.6 i (BA0L)	55	01/96 – 03/99	3431	
MEGANE I (BA0/1_)	1.6 i (BA0L)	55	01/96 – 03/99	3503	
MEGANE I (BA0/1_)	1.6 LPG	80	10/00 – 08/02		3496
MEGANE I (BA0/1_)	1.8 16V (BA06, BA12, BA1A, BA1M, BA1R)	77	02/00 – 05/01		3496
MEGANE I (BA0/1_)	1.9 D	69	04/96 – 02/01	3431	
MEGANE I (BA0/1_)	1.9 D	69	04/96 – 02/01	3503	
MEGANE I (BA0/1_)	1.9 D Eco (B/SA0U, BA0A)	47	01/96 – 08/03	3431	
MEGANE I (BA0/1_)	1.9 D Eco (B/SA0U, BA0A)	47	01/96 – 08/03	3503	
MEGANE I (BA0/1_)	1.9 DCi	77	03/99 – 08/03	3431	3496
MEGANE I (BA0/1_)	1.9 DCi	77	03/99 – 08/03	3503	
MEGANE I (BA0/1_)	1.9 dCi (BA05, BA1F)	75	02/01 – 08/03		3496
MEGANE I (BA0/1_)	1.9 dT (B/SA0K, B/SA0Y)	66	01/96 – 08/03	3431	3496
MEGANE I (BA0/1_)	1.9 dT (B/SA0K, B/SA0Y)	66	01/96 – 08/03	3503	
MEGANE I (BA0/1_)	1.9 DTi	60	02/00 – 09/00	3431	3496
MEGANE I (BA0/1_)	1.9 DTi	60	02/00 – 09/00	3503	
MEGANE I (BA0/1_)	1.9 dTi (BA08, BA0N)	72	03/97 – 02/01	3431	3496
MEGANE I (BA0/1_)	1.9 dTi (BA08, BA0N)	72	03/97 – 02/01	3503	
MEGANE I (BA0/1_)	1.9 dTi (BA1U)	59	02/01 – 08/03		3496
MEGANE I (BA0/1_)	1.9 TDI	69	09/96 – 08/03	3431	3496
MEGANE I (BA0/1_)	1.9 TDI	69	09/96 – 08/03	3503	
MEGANE I (BA0/1_)	2.0	85	05/98 – 05/01	3431	
MEGANE I (BA0/1_)	2.0	85	05/98 – 05/01	3503	
MEGANE I (BA0/1_)	2.0 16V (BA0H)	108	07/96 – 08/03	3539	3496
MEGANE I (BA0/1_)	2.0 16V (BA0H)	108	07/96 – 08/03	3546	
MEGANE I (BA0/1_)	2.0 i	80	03/99 – 08/03	3431	
MEGANE I (BA0/1_)	2.0 i	80	03/99 – 08/03	3503	
MEGANE I (BA0/1_)	2.0 i (BA0G)	84	01/96 – 08/03	3431	
MEGANE I (BA0/1_)	2.0 i (BA0G)	84	01/96 – 08/03	3503	
Megane I (BA0/1_) 2.0 16V (BA0H)	F7R 710, F7R 714	108	07/1996 - 08/2003	3539/1	3496/1
Megane I (BA0/1_) 44287 16V (BA0D, BA1H, BA0W, BA10)	K4J 714, K4J 750	70	03/1999 - 08/2003	3539/1	
Megane I (BA0/1_) 44348	K4M 704	64	02/2000 - 09/2000	3539/1	
Megane I (BA0/1_) 44348 16V (BA04, BA0B, BA11, BA1J, BA16, BA19, BA1K,	K4M 700, K4M 701, K4M 706, K4M 708, K4M 709	79	03/1999 - 08/2002	3539/1	
Megane I (BA0/1_) 44409 16V (BA06, BA12, BA1A, BA1M, BA1R)	F4P 720, F4P 722	85	01/2001 - 08/2003	3539/1	
Megane I (BA0/1_) 44440 DCi	F9Q 732, F9Q 738	77	03/1999 - 08/2003	3539/1	
Megane I (BA0/1_) 44440 dCi (BA05, BA1F)	F9Q 732, F9Q 733	75	02/2001 - 08/2003	3539/1	
Megane I (BA0/1_) 44440 DTi	F9Q 730	60	02/2000 - 09/2000	3539/1	
Megane I (BA0/1_) 44440 dTi (BA08, BA0N)	F9Q 730, F9Q 731, F9Q 734, F9Q 736	72	03/1997 - 02/2001	3539/1	
Megane I (BA0/1_) 44440 dTi (BA1U)	F9Q 744	59	02/2001 - 08/2003	3539/1	
Megane I Cabrio (EA0/1_) 2.0 16V	F4R 746, F4R 770	102	01/2002 - 08/2003	3539/1	
Megane I Cabrio (EA0/1_) 2.0 16V (EA0H)	F7R 710, F7R 714	108	10/1996 - 11/1999		3496/1
Megane I Cabrio (EA0/1_) 2.0 16V IDE (EA03, EA0P, EA14)	F5R 740	103	11/1999 - 08/2003	3539/1	
Megane I Cabrio (EA0/1_) 44287 16V (EA0D, EA1H, EA0W, EA10)	K4J 714, K4J 750	70	03/1999 - 08/2003	3539/1	
Megane I Cabrio (EA0/1_) 44348 16V (EA04, EA0B, EA11, EA1J)	K4M 700, K4M 701, K4M 708, K4M 709	79	03/1999 - 07/2003	3539/1	

MAKE & MODEL		KW	YEAR		
RENAULT					
MEGANE I Cabriolet (EA0/1_)	1.4 16V (EA0D, EA1H, EA0W, EA10)	70	03.1999 - 08.2003	3503/1	
MEGANE I Cabriolet (EA0/1_)	1.6 e (EA0F)	66	10.1996 - 03.1999	3503/1	
MEGANE I Cabriolet (EA0/1_)	2.0 (EA0G)	84	04.1997 - 08.2003	3503/1	
MEGANE I Cabriolet (EA0/1_)	2.0 i (EA0G)	80	03.1999 - 08.2003	3503/1	
MEGANE I Cabriolet (EA0/1_)	1.4 16V (EA0D, EA1H, EA0W, EA10)	70	03/99 – 08/03	3431	3496
MEGANE I Cabriolet (EA0/1_)	1.4 16V (EA0D, EA1H, EA0W, EA10)	70	03/99 – 08/03	3503	
MEGANE I Cabriolet (EA0/1_)	1.6 16V (EA0B, EA04, EA11)	79	03/99 – 08/03		3496
MEGANE I Cabriolet (EA0/1_)	1.6 e (EA0F)	66	10/96 – 03/99	3431	
MEGANE I Cabriolet (EA0/1_)	1.6 e (EA0F)	66	10/96 – 03/99	3503	
MEGANE I Cabriolet (EA0/1_)	2.0 (EA0G)	84	04/97 – 08/03	3431	
MEGANE I Cabriolet (EA0/1_)	2.0 (EA0G)	84	04/97 – 08/03	3503	
MEGANE I Cabriolet (EA0/1_)	2.0 16V	102	01/02 – 08/03		3496
MEGANE I Cabriolet (EA0/1_)	2.0 16V (EA0H)	108	10/96 – 11/99	3539	3496
MEGANE I Cabriolet (EA0/1_)	2.0 16V (EA0H)	108	10/96 – 11/99	3546	
MEGANE I Cabriolet (EA0/1_)	2.0 16V IDE (EA03, EA0P, EA14)	103	11/99 – 08/03		3496
MEGANE I Cabriolet (EA0/1_)	2.0 i (EA0G)	80	03/99 – 08/03	3431	
MEGANE I Cabriolet (EA0/1_)	2.0 i (EA0G)	80	03/99 – 08/03	3503	
MEGANE I Classic (LA0/1_)	1.4 (LA0E, LA0V)	55	09.1996 - 08.2003	3503/1	
MEGANE I Classic (LA0/1_)	1.4 16V (LA0D, LA1H, lA0W, LA10)	70	03.1999 - 08.2003	3503/1	
MEGANE I Classic (LA0/1_)	1.6	64	02.2000 - 09.2000	3503/1	
MEGANE I Classic (LA0/1_)	1.6 e (LA0F, LA0S)	66	09.1996 - 03.1999	3503/1	
MEGANE I Classic (LA0/1_)	1.6 i (LA0L)	55	09.1996 - 03.1999	3503/1	
MEGANE I Classic (LA0/1_)	1.9 D (LA0A, LA0U, LA0R)	47	09.1996 - 08.2003	3503/1	
MEGANE I Classic (LA0/1_)	1.9 dT (LA0K, LA0Y)	66	09.1996 - 08.2003	3503/1	
MEGANE I Classic (LA0/1_)	1.9 dTi (LA08, LA0N)	72	03.1997 - 02.2001	3503/1	
MEGANE I Classic (LA0/1_)	1.9 TDI	69	09.1996 - 08.2003	3503/1	
MEGANE I Classic (LA0/1_)	2.0	85	05.1998 - 05.2001	3503/1	
MEGANE I Classic (LA0/1_)	2.0 i (LA07, LA0G)	84	09.1996 - 08.2003	3503/1	
MEGANE I Classic (LA0/1_)	2.0 i (LA0G)	80	03.1999 - 08.2003	3503/1	
MEGANE I Classic (LA0/1_)	2.0 RT	112	10.1996 - 02.1999	3503/1	
MEGANE I Classic (LA0/1_)	1.4 (LA0E, LA0V)	55	09/96 – 08/03	3431	
MEGANE I Classic (LA0/1_)	1.4 (LA0E, LA0V)	55	09/96 – 08/03	3503	
MEGANE I Classic (LA0/1_)	1.4 16V (LA0D, LA1H, lA0W, LA10)	59	03/99 – 08/03		3496
MEGANE I Classic (LA0/1_)	1.4 16V (LA0D, LA1H, lA0W, LA10)	70	03/99 – 08/03	3431	
MEGANE I Classic (LA0/1_)	1.4 16V (LA0D, LA1H, lA0W, LA10)	70	03/99 – 08/03	3503	
MEGANE I Classic (LA0/1_)	1.6 16V (La04, LA11, LA0B, LA1C, LA1J)	69	03/99 – 08/03		3496
MEGANE I Classic (LA0/1_)	1.6 e (LA0F, LA0S)	66	09/96 – 03/99	3431	
MEGANE I Classic (LA0/1_)	1.6 e (LA0F, LA0S)	66	09/96 – 03/99	3503	
MEGANE I Classic (LA0/1_)	1.6 i (LA0L)	55	09/96 – 03/99	3431	
MEGANE I Classic (LA0/1_)	1.6 i (LA0L)	55	09/96 – 03/99	3503	
MEGANE I Classic (LA0/1_)	1.8 16V (LA06, LA12, LA1A, LA1M, LA1R)	70	01/01 – 08/03		3496
MEGANE I Classic (LA0/1_)	1.9 D (LA0A, LA0U)	47	09/96 – 08/03	3431	
MEGANE I Classic (LA0/1_)	1.9 D (LA0A, LA0U)	47	09/96 – 08/03	3503	
MEGANE I Classic (LA0/1_)	1.9 dCi	77	03/99 – 09/00		3496
MEGANE I Classic (LA0/1_)	1.9 dCi (LA05, LA1F)	75	02/01 – 08/03		3496
MEGANE I Classic (LA0/1_)	1.9 dT (LA0K, LA0Y)	66	09/96 – 08/03	3431	
MEGANE I Classic (LA0/1_)	1.9 dT (LA0K, LA0Y)	66	09/96 – 08/03	3503	
MEGANE I Classic (LA0/1_)	1.9 dTi (LA08, LA0N)	72	03/97 – 02/01	3431	3496
MEGANE I Classic (LA0/1_)	1.9 dTi (LA08, LA0N)	72	03/97 – 02/01	3503	
MEGANE I Classic (LA0/1_)	1.9 dTi (LA1U)	59	02/01 – 08/03		3496
MEGANE I Classic (LA0/1_)	1.9 TDI	69	09/96 – 08/03	3431	3496
MEGANE I Classic (LA0/1_)	1.9 TDI	69	09/96 – 08/03	3503	
MEGANE I Classic (LA0/1_)	2.0	85	05/98 – 05/01	3431	
MEGANE I Classic (LA0/1_)	2.0	85	05/98 – 05/01	3503	
MEGANE I Classic (LA0/1_)	2.0 i (LA07, LA0G)	84	09/96 – 08/03	3431	
MEGANE I Classic (LA0/1_)	2.0 i (LA07, LA0G)	84	09/96 – 08/03	3503	
MEGANE I Classic (LA0/1_)	2.0 i (LA0G)	80	03/99 – 08/03	3431	
MEGANE I Classic (LA0/1_)	2.0 i (LA0G)	80	03/99 – 08/03	3503	
Megane I Classic (LA0/1_) 2.0	F3R 750, F3R 752, F3R 791, F3R 796, F3R 797, F3R 7	85	05/1998 - 05/2001	3539/1	
Megane I Classic (LA0/1_) 2.0 i (LA07, LA0G)	F3R 750 (09.96-.), F3R 751, F3R 752, F3R 791, F3R	84	09/1996 - 08/2003	3539/1	
Megane I Classic (LA0/1_) 2.0 i (LA0G)	F3R 750, F3R 751, F3R 752, F3R 791, F3R 796, F3R 7	80	03/1999 - 08/2003	3539/1	
Megane I Classic (LA0/1_) 44287 16V (LA0D, LA1H, lA0W, LA10)	K4J 714, K4J 750	70	03/1999 - 08/2003	3539/1	
Megane I Classic (LA0/1_) 44348 16V	-	81	09/1999 - 12/2001	3539/1	
Megane I Classic (LA0/1_) 44348 16V (LA00, LA04, LA0B, LA11, LA16, LA19, LA1J,	K4M 700, K4M 701, K4M 706, K4M 708, K4M 709	79	03/1999 - 07/2003	3539/1	
Megane I Classic (LA0/1_) 44409 16V (LA06, LA12, LA1A, LA1M, LA1R)	F4P 720, F4P 722	85	01/2001 - 08/2003	3539/1	
Megane I Classic (LA0/1_) 44440 dCi (LA05)	F9Q 732, F9Q 733	77	03/1999 - 07/2003	3539/1	
Megane I Classic (LA0/1_) 44440 dCi (LA05, LA1F)	F9Q 732, F9Q 733, F9Q 738	75	02/2001 - 08/2003	3539/1	
Megane I Classic (LA0/1_) 44440 dT (LA0K, LA0Y)	F8Q 784 (09.96-.), F8Q 786	66	09/1996 - 08/2003	3539/1	
Megane I Classic (LA0/1_) 44440 dTi (LA08, LA0N)	F9Q 730, F9Q 731, F9Q 734, F9Q 736	72	03/1997 - 02/2001	3539/1	
Megane I Classic (LA0/1_) 44440 dTi (LA1U)	F9Q 744	59	02/2001 - 08/2003	3539/1	
MEGANE I Coach (DA0/1_)	1.4 16V (DA0D, DA1H, DA0W, DA10)	70	03.1999 - 07.2003	3503/1	
MEGANE I Coach (DA0/1_)	1.6 e (DA0F)	66	03.1996 - 03.1999	3503/1	
MEGANE I Coach (DA0/1_)	1.9 dTi (DA0N)	72	03.1997 - 02.2001	3503/1	
MEGANE I Coach (DA0/1_)	2.0 16V (DA0H)	108	03.1996 - 11.1999	3503/1	
MEGANE I Coach (DA0/1_)	2.0 i	80	03.1999 - 08.2003	3503/1	
MEGANE I Coach (DA0/1_)	2.0 i (DA0G)	84	03.1996 - 08.2003	3503/1	

MAKE & MODEL		KW	YEAR		
RENAULT					
MEGANE I Coach (DA0/1_)	1.4 16V (DA0D, DA1H, DA0W, DA10)	70	03/99 – 08/03	3503	3496
MEGANE I Coach (DA0/1_)	1.4 16V (DA0D, DA1H, DA0W,DA10)	70	03/99 – 08/03	3431	
MEGANE I Coach (DA0/1_)	1.6 16V (DA0B, DA04, DA11)	79	03/99 – 08/03		3496
MEGANE I Coach (DA0/1_)	1.6 e (DA0F)	66	03/96 – 03/99	3431	
MEGANE I Coach (DA0/1_)	1.6 e (DA0F)	66	03/96 – 03/99	3503	
MEGANE I Coach (DA0/1_)	1.9 dCi (DA05, DA1F)	75	02/01 – 08/03	3539	3496
MEGANE I Coach (DA0/1_)	1.9 dCi (DA05, DA1F)	75	02/01 – 08/03	3546	
MEGANE I Coach (DA0/1_)	1.9 dTi (DA0N)	72	03/97 – 02/01	3431	
MEGANE I Coach (DA0/1_)	1.9 dTi (DA0N)	72	03/97 – 02/01	3503	
MEGANE I Coach (DA0/1_)	1.9 dTi (DA0N)	72	03/97 – 02/01	3539	
MEGANE I Coach (DA0/1_)	1.9 dTi (DA0N)	72	03/97 – 02/01	3546	
MEGANE I Coach (DA0/1_)	2.0 16V	102	01/02 – 08/03		3496
MEGANE I Coach (DA0/1_)	2.0 16V (DA0H)	108	03/96 – 11/99	3539	3496
MEGANE I Coach (DA0/1_)	2.0 16V (DA0H)	108	03/96 – 11/99	3546	
MEGANE I Coach (DA0/1_)	2.0 16V IDE (DA03, DA0P, DA14)	103	11/99 – 08/03		3496
MEGANE I Coach (DA0/1_)	2.0 i	80	03/99 – 08/03	3431	
MEGANE I Coach (DA0/1_)	2.0 i	80	03/99 – 08/03	3503	
MEGANE I Coach (DA0/1_)	2.0 i (DA0G)	84	03/96 – 08/03	3431	
MEGANE I Coach (DA0/1_)	2.0 i (DA0G)	84	03/96 – 08/03	3503	
Megane I Coach (DA0/1_) 2.0 16V	F4R 746	102	01/2002 - 08/2003	3539/1	
Megane I Coach (DA0/1_) 2.0 16V (DA0H)	F7R 710, F7R 714	108	03/1996 - 11/1999		3496/1
Megane I Coach (DA0/1_) 2.0 16V IDE (DA03, DA0P, DA14)	F5R 740	103	11/1999 - 08/2003	3539/1	
Megane I Coach (DA0/1_) 44287 16V (DA0D, DA1H, DA0W, DA10)	K4J 700, K4J 714, K4J 750	70	03/1999 - 07/2003	3539/1	
Megane I Coach (DA0/1_) 44348 16V (DA0B, DA04, DA11)	K4M 700, K4M 701, K4M 708, K4M 709	79	03/1999 - 07/2003	3539/1	
Megane I Coach (DA0/1_) 44440 DCi	F9Q 732, F9Q 733	77	03/1999 - 09/2000	3539/1	
Megane I Coach (DA0/1_) 44440 dCi (DA05, DA1F)	F9Q 732, F9Q 733	75	02/2001 - 08/2003	3539/1	
Megane I Coach (DA0/1_) 44440 dTi (DA0N)	F9Q 731, F9Q 734, F9Q 736	72	03/1997 - 02/2001	3539/1	
MEGANE I Grandtour (KA0/1_)	1.4 16V (KA0D, KA1H, KA0W, KA10)	70	03.1999 - 08.2003	3503/1	
MEGANE I Grandtour (KA0/1_)	1.4 e (KA0V)	55	03.1999 - 08.2003	3503/1	
MEGANE I Grandtour (KA0/1_)	1.9 D (KA0J, KA0R)	47	04.1999 - 08.2003	3503/1	
MEGANE I Grandtour (KA0/1_)	1.9 dTi (KA0N)	72	03.1999 - 02.2001	3503/1	
MEGANE I Grandtour (KA0/1_)	1.4 16V (KA0D, KA1H, KA0W, KA10)	70	03/99 – 08/03	3431	3529
MEGANE I Grandtour (KA0/1_)	1.4 16V (KA0D, KA1H, KA0W,KA10)	70	03/99 – 08/03	3503	
MEGANE I Grandtour (KA0/1_)	1.4 e (KA0V)	55	03/99 – 08/03	3431	
MEGANE I Grandtour (KA0/1_)	1.4 e (KA0V)	55	03/99 – 08/03	3503	
MEGANE I Grandtour (KA0/1_)	1.6 16V (KA0B, KA04, KA11)	79	03/99 – 08/03		3529
MEGANE I Grandtour (KA0/1_)	1.6 e (KA0F)	66	03/99 – 08/03	3431	
MEGANE I Grandtour (KA0/1_)	1.6 e (KA0F)	66	03/99 – 08/03	3503	
MEGANE I Grandtour (KA0/1_)	1.8 16V (KA0S, KA12, KA1A, KA1M, KA1R)	85	01/01 – 08/03		3529
MEGANE I Grandtour (KA0/1_)	1.9 D (KA0J, KA0R)	47	04/99 – 08/03	3431	
MEGANE I Grandtour (KA0/1_)	1.9 D (KA0J, KA0R)	47	04/99 – 08/03	3503	
MEGANE I Grandtour (KA0/1_)	1.9 dCi (KA05, KA1F)	75	02/01 – 08/03		3529
MEGANE I Grandtour (KA0/1_)	1.9 dTi (KA0N)	72	03/99 – 02/01		3529
MEGANE I Grandtour (KA0/1_)	1.9 dTi (KA1U)	59	02/01 – 08/03		3529
Megane I Grandtour (KA0/1_) 44287 16V (KA0D, KA1H, KA0W, KA10)	K4J 714, K4J 750	70	03/1999 - 08/2003	3539/1	
Megane I Grandtour (KA0/1_) 44348 16V (KA0B, KA04, KA11)	K4M 700, K4M 701, K4M 708, K4M 709, K4M 712	79	03/1999 - 08/2003	3539/1	
Megane I Grandtour (KA0/1_) 44409 16V (KA0S, KA12, KA1A, KA1M, KA1R)	F4P 720, F4P 722	85	01/2001 - 08/2003	3539/1	
Megane I Grandtour (KA0/1_) 44440 dCi	F9Q 732	77	03/1999 - 09/2000	3539/1	
Megane I Grandtour (KA0/1_) 44440 dCi (KA05, KA1F)	F9Q 732, F9Q 733, F9Q 738	75	02/2001 - 08/2003	3539/1	
Megane I Grandtour (KA0/1_) 44440 dTi (KA0N)	F9Q 731, F9Q 736	72	03/1999 - 02/2001	3539/1	
Megane I Grandtour (KA0/1_) 44440 dTi (KA1U)	F9Q 744	59	02/2001 - 08/2003	3539/1	
MEGANE I Hatchback Van (SA0/1_)	1.9 (SA0U, SA0R, SA0A)	47	08.1995 - 09.2000	3503/1	
Megane I Kombi van (KA_)	1.4 (KA0D)	70	04.2001 - 07.2003	3503/1	
Megane I Kombi van (KA_)	1.9 D (KA0R)	47	02.2000 - 09.2000	3503/1	
MEGANE II (BM0/1_, CM0/1_)	1.4 16V	60	10/03 – 02/08	3850	3529
MEGANE II (BM0/1_, CM0/1_)	1.4 16V (K4J 732)	60	10.03 – 02.08	3827	
MEGANE II (BM0/1_, CM0/1_)	1.4 16V (BM0B, CM0B)	72	11/02 – 02/08	3850	3529
MEGANE II (BM0/1_, CM0/1_)	1.5 dCi	63	05/05 – 02/08	3849	3529
MEGANE II (BM0/1_, CM0/1_)	1.5 dCi	74	10/03 – 03/06	3849	3529
MEGANE II (BM0/1_, CM0/1_)	1.5 dCi	76	01/07 – 02/08		3529
MEGANE II (BM0/1_, CM0/1_)	1.5 dCi	78	05/05 – 06/08	3849	3529
MEGANE II (BM0/1_, CM0/1_)	1.5 dCi (BM0F, CM0F)	60	11/02 – 02/08	3849	3529
MEGANE II (BM0/1_, CM0/1_)	1.6	77	06/05 – 02/08	3849	3529
MEGANE II (BM0/1_, CM0/1_)	1.6 16V	82	01/06 – 06/08		3529
MEGANE II (BM0/1_, CM0/1_)	1.6 16V (BM0C, CM0C)	83	11/02 – 02/08	3849	3529
MEGANE II (BM0/1_, CM0/1_)	1.6 Flex-Fuel	77	01/07 – 02/08		3529
MEGANE II (BM0/1_, CM0/1_)	1.9 dCi	66	11/02 – 12/05	3849	3529
MEGANE II (BM0/1_, CM0/1_)	1.9 dCi	68	03/04 – 08/06	3849	3529
MEGANE II (BM0/1_, CM0/1_)	1.9 dCi	81	05/05 – 02/08	3849	3529
MEGANE II (BM0/1_, CM0/1_)	1.9 dCi	85	11/02 – 02/08	3849	3529
MEGANE II (BM0/1_, CM0/1_)	1.9 dCi	96	05/05 – 12/09	3849	3529
MEGANE II (BM0/1_, CM0/1_)	1.9 dCi (BM0G, CM0G)	88	11/02 – 02/08	3849	3529
MEGANE II (BM0/1_, CM0/1_)	2.0	102	06/06 – 12/10		3529/2
MEGANE II (BM0/1_, CM0/1_)	2.0	169	08/06 – 02/08	4137	3853
MEGANE II (BM0/1_, CM0/1_)	2.0 16V (BM0U, CM0U)	99	11/02 – 02/08	3849	3529
MEGANE II (BM0/1_, CM0/1_)	2.0 16V Turbo	120	05/04 – 02/08	3849	3529

BESER®

MAKE & MODEL   		KW	YEAR		
RENAULT					
MEGANE II (BM0/1_, CM0/1_)	2.0 dCi	127	01/07 – 02/08	4137	3529
MEGANE II (BM0/1_, CM0/1_)	2.0 dCi (BM1K, CM1K)	110	09/05 – 02/08	3849	3529
MEGANE II (BM0/1_, CM0/1_)	2.0 Renault Sport	165	05/04 – 10/09	4137	3853
MEGANE II (LM0/1_L84)	1.4 (K4J 730)	72	09/03 -	3827	
MEGANE II (LM0/1_L84)	1.4 (K4J 732)	60	09/03 -	3827	
MEGANE II (LM0/1_L84)	1.4 (K4J 740)	72	09/03 -	3827	
MEGANE II (LM0/1_L84)	1.6 (K4M 762)	77	05/05 -	3827	
MEGANE II (LM0/1_L84)	1.6 (K4M 768)	75	09/03 -	3827	
MEGANE II Coupé-Cabriolet (EM0/1_)	1.5 dCi (EM16)	76	01/07 – 06/09		3529
MEGANE II Coupé-Cabriolet (EM0/1_)	1.5 dCi (EM1E)	78	03/06 – 06/08		3529
MEGANE II Coupé-Cabriolet (EM0/1_)	1.6	83	09/03 – 03/09	3849	3529
MEGANE II Coupé-Cabriolet (EM0/1_)	1.6 16V	82	01/06 – 06/08		3529
MEGANE II Coupé-Cabriolet (EM0/1_)	1.9 dCi	81	05/05 – 03/09	3849	3529
MEGANE II Coupé-Cabriolet (EM0/1_)	1.9 dCi	85	09/03 – 03/09	3849	3529
MEGANE II Coupé-Cabriolet (EM0/1_)	1.9 dCi	88	09/03 – 03/09	3849	3529
MEGANE II Coupé-Cabriolet (EM0/1_)	1.9 dCi	96	05/05 – 02/07	3849	3529
MEGANE II Coupé-Cabriolet (EM0/1_)	2.0	99	09/03 – 12/09	3849	3529
MEGANE II Coupé-Cabriolet (EM0/1_)	2.0	102	09/03 – 02/07	3849	3529/2
MEGANE II Coupé-Cabriolet (EM0/1_)	2.0 16V Turbo	120	05/04 – 03/09	3849	3529
MEGANE II Coupé-Cabriolet (EM0/1_)	2.0 dCi	110	09/05 – 03/09	3849	3529
MEGANE II Estate (KM0/1_)	1.4	72	08/03 – 07/09	3849	3529
MEGANE II Estate (KM0/1_)	1.4	72	08/03 – 07/09	3850	
MEGANE II Estate (KM0/1_)	1.5 dCi	60	08/03 – 05/06	3849	3529
MEGANE II Estate (KM0/1_)	1.5 dCi	63	05/05 – 07/09	3849	3529
MEGANE II Estate (KM0/1_)	1.5 dCi	74	02/04 – 03/06	3849	3529
MEGANE II Estate (KM0/1_)	1.5 dCi (KM13)	76	01/07 – 07/09		3529
MEGANE II Estate (KM0/1_)	1.5 dCi (KM16, KM1E)	78	05/05 – 06/08	3849	3529
MEGANE II Estate (KM0/1_)	1.6	83	08/03 – 07/09	3849	3529
MEGANE II Estate (KM0/1_)	1.6 16V	77	05/05 – 07/09	3849	3529/2
MEGANE II Estate (KM0/1_)	1.6 16V	82	01/06 – 08/09		3529
MEGANE II Estate (KM0/1_)	1.6 16V Hi-Flex	77	02/08 – 07/09		3529
MEGANE II Estate (KM0/1_)	1.9 dCi	66	04/04 – 12/05	3849	3529/2
MEGANE II Estate (KM0/1_)	1.9 dCi	68	03/04 – 02/07	3849	3529
MEGANE II Estate (KM0/1_)	1.9 dCi	81	05/05 – 07/09	3849	3529
MEGANE II Estate (KM0/1_)	1.9 dCi	85	05/05 – 07/09	3849	3529
MEGANE II Estate (KM0/1_)	1.9 dCi	88	08/03 – 07/09	3849	3529
MEGANE II Estate (KM0/1_)	1.9 dCi	96	05/05 – 07/09	3849	3529
MEGANE II Estate (KM0/1_)	2.0	99	08/03 – 07/09	3849	3529
MEGANE II Estate (KM0/1_)	2.0	102	12/06 – 01/11		3529/2
MEGANE II Estate (KM0/1_)	2.0 dCi	110	09/05 – 07/09	3849	3529
MEGANE II Grandtour (KM0/1_K84)	1.4 (K4J 730)	72	08/03 – 07/09	3827	
MEGANE II Grandtour (KM0/1_K84)	1.4 (K4J 740)	72	08/03 – 07/09	3827	
MEGANE II Saloon (LM0/1_)	1.4	60	09/03 -	3850	3529
MEGANE II Saloon (LM0/1_)	1.4	72	09/03 -	3850	3529
MEGANE II Saloon (LM0/1_)	1.5 dCi	60	09/03 -	3849	3529
MEGANE II Saloon (LM0/1_)	1.5 dCi	63	05/05 -	3849	3529
MEGANE II Saloon (LM0/1_)	1.5 dCi	74	02/04 -	3849	3529
MEGANE II Saloon (LM0/1_)	1.5 dCi	76	01/07 -		3529
MEGANE II Saloon (LM0/1_)	1.5 dCi	78	05/05 -	3849	3529
MEGANE II Saloon (LM0/1_)	1.6	75	09/03 -	3849	3529
MEGANE II Saloon (LM0/1_)	1.6	77	05/05 -	3849	3529
MEGANE II Saloon (LM0/1_)	1.6	81	09/03 – 11/08	3849	3529/2
MEGANE II Saloon (LM0/1_)	1.6	83	09/03 -	3849	3529
MEGANE II Saloon (LM0/1_)	1.6 16V	82	01/06 -		3529
MEGANE II Saloon (LM0/1_)	1.6 Hi-Flex	85	03/06 -		3529
MEGANE II Saloon (LM0/1_)	1.9 dCi	66	09/03 – 12/05	3849	3529
MEGANE II Saloon (LM0/1_)	1.9 dCi	68	03/04 -	3849	3529
MEGANE II Saloon (LM0/1_)	1.9 dCi	96	05/05 -	3849	3529
MEGANE II Saloon (LM0/1_)	1.9 dCi (LM0G, LM1G, LM2C)	88	09/03 -	3849	3529
MEGANE II Saloon (LM0/1_)	1.9 dCi (LM14, LM1D)	81	05/05 -	3849	3529
MEGANE II Saloon (LM0/1_)	2.0	99	09/03 -	3849	3529
MEGANE II Saloon (LM0/1_)	2.0 dCi	110	09/05 -	3849	3529
MEGANE III Coupe (DZ0/1_)	1.2 TCe	85	03/12 -	3964/1	3529/2
MEGANE III Coupe (DZ0/1_)	1.2 TCe (DZ16)	97	01/13 -	3964/1	3529/2
MEGANE III Coupe (DZ0/1_)	1.4 TCe (DZ0F, DZ1V)	96	04/09 -	3964/1	3529/2
MEGANE III Coupe (DZ0/1_)	1.5 dCi	70	07/14 -	3964/1	3529/2
MEGANE III Coupe (DZ0/1_)	1.5 dCi (DZ09, DZ0D, DZ1F, DZ1G)	81	02/09 -	3964/1	
MEGANE III Coupe (DZ0/1_)	1.5 dCi (DZ09, DZ0D, DZ1F, DZ1G)	85	07/14 -		3529/2
MEGANE III Coupe (DZ0/1_)	1.5 dCi (DZ0A)	63	11/08 -	3964/1	3529/2
MEGANE III Coupe (DZ0/1_)	1.5 dCi (DZ0B)	78	02/09 -	3964/1	3529/2
MEGANE III Coupe (DZ0/1_)	1.5 dCi (DZ0C, DZ1A)	66	11/08 -	3964/1	3529/2
MEGANE III Coupe (DZ0/1_)	1.6 16V (DZ0H)	74	11/08 -	3964/1	3529/2
MEGANE III Coupe (DZ0/1_)	1.6 16V (DZ0U, DZ1B, DZ1H)	81	11/08 -	3964/1	3529/2
MEGANE III Coupe (DZ0/1_)	1.6 16V Bifuel (DZ03, DZ1Y)	81	11/08 -	3964/1	3529/2
MEGANE III Coupe (DZ0/1_)	1.6 dCi (DZ00)	96	04/11 -	3964/1	3529/2
MEGANE III Coupe (DZ0/1_)	1.9 dCi (DZ0N, DZ0J, DZ1J, DZ1K)	96	11/08 -	3964/1	3529/2

MAKE & MODEL		KW	YEAR		
RENAULT					
MEGANE III Coupe (DZ0/1_)	2.0 CVT (DZ0G, DZ1E)	103	05/09 -	3964/1	3529/2
MEGANE III Coupe (DZ0/1_)	2.0 dCi	120	07/12 -		3529/2
MEGANE III Coupe (DZ0/1_)	2.0 dCi (DZ0L)	118	04/09 -		3529/2
MEGANE III Coupe (DZ0/1_)	2.0 dCi (DZ0Y)	110	04/09 -		3529/2
MEGANE III Coupe (DZ0/1_)	2.0 R.S.	195	11/08 -		3529/2
MEGANE III Coupe (DZ0/1_)	2.0 R.S.	201	07/14 -		3529/2
MEGANE III Coupe (DZ0/1_)	2.0 TCe	140	06/12 -		3529/2
MEGANE III Coupe (DZ0/1_)	2.0 TCe (DZ0K)	132	11/08 -		3529/2
MEGANE III Coupe (DZ0/1_)	2.0 TCe (DZ1N)	184	05/09 -		3529/2
MEGANE III Coupe (DZ0/1_)	2.0 TCe 220	162	11/13 -	4137	3529/2
MEGANE III Grandtour (KZ0/1)	1.2 TCe	85	03/12 -	3964/1	3529/2
MEGANE III Grandtour (KZ0/1)	1.2 TCe (KZ16)	97	01/13 -	3964/1	3529/2
MEGANE III Grandtour (KZ0/1)	1.4 TCe (KZ0F, KZ1V)	96	05/09 -	3964/1	3529/2
MEGANE III Grandtour (KZ0/1)	1.5 dCi	63	03/09 -	3964/1	4142
MEGANE III Grandtour (KZ0/1)	1.5 dCi	63	03/09 -		3529/2
MEGANE III Grandtour (KZ0/1)	1.5 dCi	70	11/13 -	3964/1	3529/2
MEGANE III Grandtour (KZ0/1)	1.5 dCi (KZ09, KZ0D, KZ1G, KZ1M, KZ1W)	81	02/09 -	3964/1	3529/2
MEGANE III Grandtour (KZ0/1)	1.5 dCi (KZ0C, KZ1A)	66	05/09 -	3964/1	3529/2
MEGANE III Grandtour (KZ0/1)	1.5 dCi (KZ1M, KZ1W)	78	02/09 -	3964/1	3529/2
MEGANE III Grandtour (KZ0/1)	1.6 16V (KZ0H)	74	05/09 -	3964/1	3529/2
MEGANE III Grandtour (KZ0/1)	1.6 16V (KZ0U, KZ1B, KZ1U)	81	05/09 -	3964/1	3529/2
MEGANE III Grandtour (KZ0/1)	1.6 16V Bifuel (KZ03)	81	11/08 -	3964/1	3529/2
MEGANE III Grandtour (KZ0/1)	1.6 dCi (KZ00, KZ12)	96	04/11 -	3964/1	3529/2
MEGANE III Grandtour (KZ0/1)	1.9 dCi (KZ0J, KZ0N, KZ1S)	96	05/09 -	3964/1	3529/2
MEGANE III Grandtour (KZ0/1)	2.0 CVT (KZ0G, KZ1P)	103	05/09 -	3964/1	3529/2
MEGANE III Grandtour (KZ0/1)	2.0 dCi	120	07/12 -		3529/2
MEGANE III Grandtour (KZ0/1)	2.0 dCi (KZ0L)	118	04/09 -		3529/2
MEGANE III Grandtour (KZ0/1)	2.0 dCi (KZ0Y)	110	10/10 -		3529/2
MEGANE III Grandtour (KZ0/1)	2.0 TCe	140	09/12 -		3529/2
MEGANE III Grandtour (KZ0/1)	2.0 TCe	162	09/12 -	3964/1	3529/2
MEGANE III Grandtour (KZ0/1)	2.0 TCe (KZ0K, KZ1T)	132	11/08 -		3529/2
MEGANE III Hatchback (BZ0_)	1.2 TCe	85	03/12 -	3964/1	3529/2
MEGANE III Hatchback (BZ0_)	1.2 TCe (BZ16)	97	01/13 -	3964/1	3529/2
MEGANE III Hatchback (BZ0_)	1.4 TCe (BZ0F, BZ1V)	96	04/09 -	3964/1	3529/2
MEGANE III Hatchback (BZ0_)	1.5 dCi	63	12/09 -	3964/1	3529/2
MEGANE III Hatchback (BZ0_)	1.5 dCi	70	11/13 -	3964/1	3529/2
MEGANE III Hatchback (BZ0_)	1.5 dCi	78	02/09 -	3964/1	3529/2
MEGANE III Hatchback (BZ0_)	1.5 dCi (BZ09, BZ0D)	81	02/09 -	3964/1	3529/2
MEGANE III Hatchback (BZ0_)	1.5 dCi (BZ0C)	66	11/08 -	3964/1	3529/2
MEGANE III Hatchback (BZ0_)	1.6 16V	82	11/08 -	3964/1	3529/2
MEGANE III Hatchback (BZ0_)	1.6 16V (BZ0H)	74	11/08 -	3964/1	3529/2
MEGANE III Hatchback (BZ0_)	1.6 16V (BZ1B, BZ1H)	81	11/08 -	3964/1	3529/2
MEGANE III Hatchback (BZ0_)	1.6 16V Bifuel (BZ03)	81	11/08 -	3964/1	3529/2
MEGANE III Hatchback (BZ0_)	1.6 dCi (BZ00, BZ12)	96	04/11 -	3964/1	3529/2
MEGANE III Hatchback (BZ0_)	1.9 dCi (BZ0N, BZ0J)	96	11/08 -	3964/1	3529/2
MEGANE III Hatchback (BZ0_)	2.0	105	01/11 -	3964/1	3529/2
MEGANE III Hatchback (BZ0_)	2.0 CVT (BZ0G, BZ1P)	103	02/09 -	3964/1	3529/2
MEGANE III Hatchback (BZ0_)	2.0 dCi	120	07/12 -		3529/2
MEGANE III Hatchback (BZ0_)	2.0 dCi (BZ0L)	118	04/09 -		3529/2
MEGANE III Hatchback (BZ0_)	2.0 dCi (BZ0Y)	110	10/10 -		3529/2
MEGANE III Hatchback (BZ0_)	2.0 TCe	140	06/12 -		3529/2
MEGANE III Hatchback (BZ0_)	2.0 TCe (BZ0K)	132	11/08 -		3529/2
MEGANE III Hatchback (BZ0_)	2.0 TCe 220	162	11/13 -	3964/1	3529/2
MEGANE IV			2015-		4280
MEGANE IV (B9A/M_)	1.2 TCe 100 (B9MS)	74	11/15 -		3529/2
MEGANE IV (B9A/M_)	1.2 TCe 130 (B9MR)	97	11/15 -		3529/2
MEGANE IV (B9A/M_)	1.5 dCi 110 (B9A3)	81	11/15 -		3529/2
MEGANE IV (B9A/M_)	1.5 dCi 90 (B9A1)	66	11/15 -		3529/2
MEGANE IV (B9A/M_)	1.6 dCi 130 (B9A4)	96	11/15 -		3529/2
MEGANE IV (B9A/M_)	1.6 TCe 205 (B9MV)	151	11/15 -		4287
MEGANE IV Grandtour (K9A/M_)	1.6 TCe 205	151	04/16 -		4287
MEGANE Scenic (JA0/1_)	1.4 i (JA0E)	55	01.1997 - 09.1999	3503/1	
MEGANE Scenic (JA0/1_)	1.6 e (JA0F)	66	10.1996 - 10.1999	3503/1	
MEGANE Scenic (JA0/1_)	1.6 i (JA0L)	55	01.1997 - 09.1999	3503/1	
MEGANE Scenic (JA0/1_)	1.4 i (JA0E)	55	01/97 – 09/99	3431	
MEGANE Scenic (JA0/1_)	1.4 i (JA0E)	55	01/97 – 09/99	3503	
MEGANE Scenic (JA0/1_)	1.4 i (JA0E)	55	01/97 – 09/99	3539	
MEGANE Scenic (JA0/1_)	1.4 i (JA0E)	55	01/97 – 09/99	3546	
MEGANE Scenic (JA0/1_)	1.6 16V (JA0B, JA04, JA11)	79	04/98 – 10/99		3529
MEGANE Scenic (JA0/1_)	1.6 e (JA0F)	66	10/96 – 10/99	3431	
MEGANE Scenic (JA0/1_)	1.6 e (JA0F)	66	10/96 – 10/99	3503	
MEGANE Scenic (JA0/1_)	1.6 e (JA0F)	66	10/96 – 10/99	3539	
MEGANE Scenic (JA0/1_)	1.6 e (JA0F)	66	10/96 – 10/99	3546	
MEGANE Scenic (JA0/1_)	1.6 i (JA0L)	55	01/97 – 09/99	3431	
MEGANE Scenic (JA0/1_)	1.6 i (JA0L)	55	01/97 – 09/99	3503	
MEGANE Scenic (JA0/1_)	1.6 i (JA0L)	55	01/97 – 09/99	3539	

MAKE & MODEL   		KW	YEAR		
RENAULT					
MEGANE Scenic (JA0/1_)	1.6 i (JA0L)	55	01/97 – 09/99	3546	
MEGANE Scenic (JA0/1_)	1.6 i (JA0L)	55	01/97 – 09/99	3546	
MEGANE Scenic (JA0/1_)	1.9 D (JA0J)	47	03/97 – 09/99	3539	3529
MEGANE Scenic (JA0/1_)	1.9 D (JA0J)	47	03/97 – 09/99	3546	
MEGANE Scenic (JA0/1_)	1.9 dT (JA0K, JA0Y)	66	01/97 – 09/99	3539	3529
MEGANE Scenic (JA0/1_)	1.9 dT (JA0K, JA0Y)	66	01/97 – 09/99	3546	
MEGANE Scenic (JA0/1_)	1.9 dTi (JA0N)	72	04/97 – 09/99	3539	3529
MEGANE Scenic (JA0/1_)	1.9 dTi (JA0N)	72	04/97 – 09/99	3546	
MEGANE Scenic (JA0/1_)	2.0 i (JA0G)	80	01/99 – 09/99		3529
MEGANE Scenic (JA0/1_)	2.0 i (JA0G)	80	01/99 – 09/99	3539	
MEGANE Scenic (JA0/1_)	2.0 i (JA0G)	80	01/99 – 09/99	3546	
MEGANE Scenic (JA0/1_)	2.0 i (JA0G)	80	01/99 – 09/99	3546	3529
MEGANE Scenic (JA0/1_)	2.0 i (JA0G)	84	01/97 – 09/99		3529
MEGANE Scenic (JA0/1_)	2.0 i (JA0G)	84	01/97 – 09/99	3539	
MEGANE Scenic (JA0/1_)	2.0 i (JA0G)	84	01/97 – 09/99	3546	
MEGANE Scenic (JA0/1_)	2.0 i (JA0G)	84	01/97 – 09/99		3529
MEGANE Scenic (JA0/1_)	2.0 RXE 4x4	84	05/97 – 10/99	3539	3529
MEGANE Scenic (JA0/1_)	2.0 RXE 4x4	84	05/97 – 10/99	3546	
MODUS / GRAND MODUS (F/JP0_)	1.2	76	04/11 -	3983	3529/2
MODUS / GRAND MODUS (F/JP0_)	1.2 (FP0C, FP0K, FP0P)	48	05/05 -	3983	3529/2
MODUS / GRAND MODUS (F/JP0_)	1.2 (JP0C, JP0K, FP0C, FP0K FP0P, JP0P, JP0T)	55	12/04 -	3983	3529/2
MODUS / GRAND MODUS (F/JP0_)	1.2 (JP0S)	58	12/04 -	3983	3529/2
MODUS / GRAND MODUS (F/JP0_)	1.2 16V (JP0W)	74	05/07 -	3983	3529/2
MODUS / GRAND MODUS (F/JP0_)	1.2 16V Hi-Flex	55	10/08 -	3983	3529/2
MODUS / GRAND MODUS (F/JP0_)	1.4 (JP01, JP0J)	72	12/04 -	3983	3529/2
MODUS / GRAND MODUS (F/JP0_)	1.5 dCi (FP0D, JP0D)	60	09/04 -	3983	3529/2
MODUS / GRAND MODUS (F/JP0_)	1.5 dCi (FP0E, JP0E)	48	12/04 -	3983	3529/2
MODUS / GRAND MODUS (F/JP0_)	1.5 dCi (FP0F, JP0F)	63	12/04 -	3983	3529/2
MODUS / GRAND MODUS (F/JP0_)	1.5 dCi (FP0G, JP0G)	50	12/04 -	3983	3529/2
MODUS / GRAND MODUS (F/JP0_)	1.5 dCi (JP02)	76	05/07 -	3983	3529/2
MODUS / GRAND MODUS (F/JP0_)	1.5 dCi (JP0G, JP0H)	78	05/05 -	3983	3529/2
MODUS / GRAND MODUS (F/JP0_)	1.5 dCi 75	55	10/10 -	3983	3529/2
MODUS / GRAND MODUS (F/JP0_)	1.5 dCi 90	65	10/10 -	3983	3529/2
MODUS / GRAND MODUS (F/JP0_)	1.6 (JP03, JP0B, JP0U, JP0Y, JP1G)	82	12/04 -	3983	3529/2
MODUS / GRAND MODUS (F/JP0_)	1.6 (JP0L, JP0V)	65	12/04 -	3983	3529/2
R 11	1.1 (C1E 720)	35	03/83 – 06/86	3372	
R 11	1.1 (C1E 720)	35	03/83 – 06/86	3599	
R 11	1.2 (C1G 700)	40	10/84 – 12/88	3372	
R 11	1.2 (C1G 700)	40	10/84 – 12/88	3599	
R 11	1.2 (C1G 710)	40	10/84 – 12/88	3372	
R 11	1.2 (C1G 710)	40	10/84 – 12/88	3599	
R 11	1.4 (C1J 715)	44	03/83 – 12/88	3372	
R 11	1.4 (C1J 715)	44	03/83 – 12/88	3599	
R 11	1.4 (C2J 717)	53	05/83 – 12/85	3372	
R 11	1.4 (C2J 717)	53	05/83 – 12/85	3599	
R 11	1.4 (C2J 718)	50	03/83 – 12/85	3372	
R 11	1.4 (C2J 718)	50	03/83 – 12/85	3599	
R 11	1.4 (C2J 720)	49	03/83 – 12/88	3372	
R 11	1.4 (C2J 720)	49	03/83 – 12/88	3599	
R 11	1.4 (C2J 730)	44	03/83 – 12/88	3372	
R 11	1.4 (C2J 730)	44	03/83 – 12/88	3599	
R 11	1.4 (C2J 755)	53	05/83 – 12/85	3372	
R 11	1.4 (C2J 755)	53	05/83 – 12/85	3599	
R 11	1.4 (C2J 757)	50	03/83 – 12/85	3372	
R 11	1.4 (C2J 757)	50	03/83 – 12/85	3599	
R 11	1.4 (C2J 766)	49	03/83 – 12/88	3372	
R 11	1.4 (C2J 766)	49	03/83 – 12/88	3599	
R 11	1.4 (C2J 767)	49	03/83 – 12/88	3372	
R 11	1.4 (C2J 767)	49	03/83 – 12/88	3599	
R 11	1.4 (C2J 768)	49	03/83 – 12/88	3372	
R 11	1.4 (C2J 768)	49	03/83 – 12/88	3599	
R 11	1.4 Turbo (C1J 760)	77	04/84 – 12/86	3372	
R 11	1.4 Turbo (C1J 760)	77	04/84 – 12/86	3599	
R 11	1.4 Turbo (C1J 764)	77	04/84 – 12/86	3372	
R 11	1.4 Turbo (C1J 764)	77	04/84 – 12/86	3599	
R 11	1.4 Turbo (C1J 764)	87	02/84 – 06/86	3372	
R 11	1.4 Turbo (C1J 764)	87	02/84 – 06/86	3599	
R 11	1.4 Turbo (C1J 770)	85	10/86 – 12/88	3372	
R 11	1.4 Turbo (C1J 770)	85	10/86 – 12/88	3599	
R 11	1.4 Turbo (C1J 782)	85	10/86 – 12/88	3372	
R 11	1.4 Turbo (C1J 782)	85	10/86 – 12/88	3599	
R 11	1.6 D (F8M 700)	40	08/83 – 12/88	3372	
R 11	1.6 D (F8M 700)	40	08/83 – 12/88	3599	
R 11	1.6 D (F8M 720)	40	08/83 – 12/88	3372	
R 11	1.6 D (F8M 720)	40	08/83 – 12/88	3599	
R 11	1.6 D (F8M 730)	40	08/83 – 12/88	3372	

MAKE & MODEL		KW	YEAR		
RENAULT					
R 11	1.6 D (F8M 730)	40	08/83 – 12/88	3599	
R 11	1.7 (F2N 700)	59	10/83 – 12/87	3372	
R 11	1.7 (F2N 700)	59	10/83 – 12/87	3599	
R 11	1.7 (F2N 704)	59	10/83 – 12/87	3372	
R 11	1.7 (F2N 704)	59	10/83 – 12/87	3599	
R 11	1.7 (F2N 708)	65	10/86 – 12/88	3372	
R 11	1.7 (F2N 708)	65	10/86 – 12/88	3599	
R 11	1.7 (F2N 710)	65	10/86 – 12/88	3372	
R 11	1.7 (F2N 710)	65	10/86 – 12/88	3599	
R 11	1.7 (F2N 730)	54	10/86 – 12/88	3372	
R 11	1.7 (F2N 730)	54	10/86 – 12/88	3599	
R 11	1.7 (F2N 732)	64	06/87 – 12/88	3372	
R 11	1.7 (F2N 732)	64	06/87 – 12/88	3599	
R 11	1.7 (F2N 742)	64	06/87 – 12/88	3372	
R 11	1.7 (F2N 742)	64	06/87 – 12/88	3599	
R 11	1.7 (F2N 798)	65	10/86 – 12/88	3372	
R 11	1.7 (F2N 798)	65	10/86 – 12/88	3599	
R 11	1.7 (F3N 718)	55	10/84 – 12/88	3372	
R 11	1.7 (F3N 718)	55	10/84 – 12/88	3599	
R 12	1.3	40	10/69 – 08/80	3330	
R 12	1.3 (810.05)	44	08/73 – 08/80	3330	
R 12	1.3 (810.06)	44	08/73 – 08/80	3330	
R 12	1.3 TS (810.05)	44	08/72 – 08/80	3330	
R 12	1.3 TS (810.06)	44	08/72 – 08/80	3330	
R 12	1.6 (821.10)	50	08/70 – 08/76	3330	
R 12	1.6 (821.11)	50	08/70 – 08/76	3330	
R 18	1.4 (847 720)	47	04/78 – 07/86	3330	
R 18	1.4 (847 720)	47	05/79 – 07/86	3599	
R 18	1.4 (847 722)	47	04/78 – 07/86	3330	
R 18	1.4 (847 722)	47	05/79 – 07/86	3599	
R 18	1.6 (841 717)	54	01/82 – 07/86	3372	
R 18	1.6 (841 717)	54	01/82 – 07/86	3599	
R 18	1.6 (841 725)	58	04/78 – 09/82	3330	
R 18	1.6 (841 726)	58	04/78 – 09/82	3330	
R 18	1.6 (A7L 752)	82	10/83 – 09/86	3372	
R 18	1.6 (A7L 752)	82	10/83 – 09/86	3599	
R 18	1.6 (841 725)	58	05/79 – 09/82	3330	
R 18	1.6 (841 726)	58	05/79 – 09/82	3330	
R 18	1.6 (A2M 723)	54	01/82 – 07/86	3372	
R 18	1.6 (A2M 723)	54	01/82 – 07/86	3599	
R 18	1.6 TS (A6M 725)	71	05/82 – 07/86	3372	
R 18	1.6 TS (A6M 725)	71	05/82 – 07/86	3599	
R 18	1.6 TS (A6M 726)	71	05/82 – 07/86	3372	
R 18	1.6 TS (A6M 726)	71	05/82 – 07/86	3599	
R 18	1.6 Turbo (A5L 717)	92	10/82 – 07/86	3372	
R 18	1.6 Turbo (A5L 717)	92	10/82 – 07/86	3599	
R 18	1.6 Turbo (A5L 718)	92	10/82 – 07/86	3372	
R 18	1.6 Turbo (A5L 718)	92	10/82 – 07/86	3599	
R 18	2.0 (J6R 714)	76	05/83 – 12/86	3372	
R 18	2.0 (J6R 714)	76	05/83 – 12/86	3599	
R 18	2.0 (J6R 716)	76	05/83 – 12/86	3372	
R 18	2.0 (J6R 716)	76	05/83 – 12/86	3599	
R 18	2.0 (J6R 716)	77	10/81 – 07/86	3372	
R 18	2.0 (J6R 716)	77	10/81 – 07/86	3599	
R 18	2.1 Diesel (852 710)	49	11/80 – 07/86	3372	
R 18	2.1 Diesel (852 710)	49	11/80 – 07/86	3599	
R 18	2.1 Diesel (J8S 711)	49	11/80 – 07/86	3372	
R 18	2.1 Diesel (J8S 711)	49	11/80 – 07/86	3599	
R 18	2.1 Diesel (J8S 711)	53	05/79 – 07/86	3372	
R 18	2.1 Diesel (J8S 711)	53	05/79 – 07/86	3599	
R 18	1.6 Turbo (807 727)	80	09/82 – 07/86	3599	
R 18	1.6 Turbo (807 727)	80	10/80 – 09/82	3330	
R 19	1.2 (C1G 730)	40	01/88 – 12/92	3372	
R 19	1.2 (C1G 730)	40	01/88 – 12/92	3599	
R 19	1.4 (C2J 772)	43	07/88 – 04/92	3372	
R 19	1.4 (C2J 772)	43	07/88 – 04/92	3599	
R 19	1.4 (C3J 710)	43	07/88 – 04/92	3372	
R 19	1.4 (C3J 710)	43	07/88 – 04/92	3599	
R 19	1.4 (E6J 700)	57	07/88 – 08/90	3372	
R 19	1.4 (E6J 700)	57	07/88 – 08/90	3599	
R 19	1.4 (E6J 701)	57	07/88 – 08/90	3372	
R 19	1.4 (E6J 701)	57	07/88 – 08/90	3599	
R 19	1.4 (E7J 700)	55	09/90 – 04/92	3372	
R 19	1.4 (E7J 700)	55	09/90 – 04/92	3599	
R 19	1.7 (F2N 720)	68	09/88 – 12/92	3372	
R 19	1.7 (F2N 720)	68	09/88 – 12/92	3599	

MAKE & MODEL	  	KW	YEAR		
RENAULT					
R 19	1.7 (F2N 721)	68	09/88 – 12/92	3372	
R 19	1.7 (F2N 721)	68	09/88 – 12/92	3599	
R 19	1.7 (F3N 740)	54	10/89 – 04/92	3372	
R 19	1.7 (F3N 740)	54	10/89 – 04/92	3599	
R 19	1.7 (F3N 741)	54	10/89 – 04/92	3372	
R 19	1.7 (F3N 741)	54	10/89 – 04/92	3599	
R 19	1.7 (F3N 742)	66	07/88 – 04/92	3372	
R 19	1.7 (F3N 742)	66	07/88 – 04/92	3599	
R 19	1.7 (F3N 743)	66	07/88 – 04/92	3372	
R 19	1.7 (F3N 743)	66	07/88 – 04/92	3599	
R 19	1.7 (F3N 746)	79	08/88 – 12/92	3372	
R 19	1.7 (F3N 746)	79	08/88 – 12/92	3599	
R 19	1.8 16V (F7P 704)	99	10/89 – 04/92	3372	
R 19	1.8 16V (F7P 704)	99	10/89 – 04/92	3599	
R 19	1.9 D (F8Q 706)	47	10/89 – 04/92	3372	
R 19	1.9 D (F8Q 706)	47	10/89 – 04/92	3599	
R 19	1.9 D (F8Q 742)	47	10/89 – 04/92	3372	
R 19	1.9 D (F8Q 742)	47	10/89 – 04/92	3599	
R 19	1.9 dT	66	09/90 – 04/92	3372	
R 19	1.9 dT	66	09/90 – 04/92	3599	
R 19	1.9 TD (F8Q 740)	68	09/90 – 04/92	3372	
R 19	1.9 TD (F8Q 740)	68	09/90 – 04/92	3599	
R 21	1.4 (C2J 770)	51	06/88 – 10/93	3372	
R 21	1.4 (C2J 770)	51	06/88 – 10/93	3599	
R 21	1.7	70	04/86 – 06/89	3372	
R 21	1.7	70	04/86 – 06/89	3599	
R 21	1.7 (F2N 710)	65	03/86 – 03/93	3372	
R 21	1.7 (F2N 710)	65	03/86 – 03/93	3599	
R 21	1.7 (F2N 712)	55	03/86 – 12/87	3372	
R 21	1.7 (F2N 712)	55	03/86 – 12/87	3599	
R 21	1.7 (F2N 750)	54	07/86 – 02/94	3372	
R 21	1.7 (F2N 750)	54	07/86 – 02/94	3599	
R 21	1.7 (F2N 752)	64	06/87 – 04/89	3372	
R 21	1.7 (F2N 752)	64	06/87 – 04/89	3599	
R 21	1.7 (F3N 722)	66	09/89 – 02/94	3372	
R 21	1.7 (F3N 722)	66	09/89 – 02/94	3599	
R 21	1.7 (F3N 722)	69	03/86 – 02/94	3372	
R 21	1.7 (F3N 722)	69	03/86 – 02/94	3599	
R 21	1.7 (F3N 723)	66	09/89 – 02/94	3372	
R 21	1.7 (F3N 723)	66	09/89 – 02/94	3599	
R 21	1.7 (F3N 723)	69	03/86 – 02/94	3372	
R 21	1.7 (F3N 723)	69	03/86 – 02/94	3599	
R 21	1.7 (F3N 726)	54	07/86 – 02/94	3372	
R 21	1.7 (F3N 726)	54	07/86 – 02/94	3599	
R 21	1.9 D (F8Q 710)	47	08/89 – 10/93	3372	
R 21	1.9 D (F8Q 710)	47	08/89 – 10/93	3599	
R 5	1.4 (840 730)	118	09/80 – 03/85	3330	
R 5	1.4 Alpine A5 (840 725)	68	09/77 – 09/81	3330	
R 5	1.4 Alpine Turbo (840 726)	79	10/81 – 01/85	3330	
R 5	1.4 Alpine Turbo (C6J 750)	79	10/81 – 01/85	3330	
R 5	1.4 Turbo (840 730)	118	06/80 – 01/85	3330	
R 5 / LE CAR (122_)	1.4 Alpine Turbo (840 726)	79	10/81 – 01/85	3592	
R 5 / LE CAR (122_)	1.4 Alpine Turbo (C6J 750)	79	10/81 – 01/85	3592	
RAPID Box (F40_, G40_)	1.0	27	02/86 – 05/92	3380	
RAPID Box (F40_, G40_)	1.0	27	02/86 – 05/92	3381	
RAPID Box (F40_, G40_)	1.0	27	02/86 – 05/92	3431	
RAPID Box (F40_, G40_)	1.0	27	02/86 – 05/92	3495	
RAPID Box (F40_, G40_)	1.0	27	02/86 – 05/92	3503	
RAPID Box (F40_, G40_)	1.0	27	02/86 – 05/92	3580	
RAPID Box (F40_, G40_)	1.0	31	09/85 – 08/91	3380	
RAPID Box (F40_, G40_)	1.0	31	09/85 – 08/91	3381	
RAPID Box (F40_, G40_)	1.0	31	09/85 – 08/91	3431	
RAPID Box (F40_, G40_)	1.0	31	09/85 – 08/91	3495	
RAPID Box (F40_, G40_)	1.0	31	09/85 – 08/91	3503	
RAPID Box (F40_, G40_)	1.0	31	09/85 – 08/91	3580	
RAPID Box (F40_, G40_)	1.1	34	09/85 – 08/91	3380	
RAPID Box (F40_, G40_)	1.1	34	09/85 – 08/91	3381	
RAPID Box (F40_, G40_)	1.1	34	09/85 – 08/91	3431	
RAPID Box (F40_, G40_)	1.1	34	09/85 – 08/91	3495	
RAPID Box (F40_, G40_)	1.1	34	09/85 – 08/91	3503	
RAPID Box (F40_, G40_)	1.1	34	09/85 – 08/91	3580	
RAPID Box (F40_, G40_)	1.1	35	09/93 – 04/95	3380	
RAPID Box (F40_, G40_)	1.1	35	09/93 – 04/95	3381	
RAPID Box (F40_, G40_)	1.1	35	09/93 – 04/95	3431	
RAPID Box (F40_, G40_)	1.1	35	09/93 – 04/95	3503	
RAPID Box (F40_, G40_)	1.1	35	09/93 – 04/95	3580	

MAKE & MODEL		KW	YEAR		
RENAULT					
RAPID Box (F40_, G40_)	1.1 (F401)	33	07/85 – 04/95	3380	
RAPID Box (F40_, G40_)	1.1 (F401)	33	07/85 – 04/95	3381	
RAPID Box (F40_, G40_)	1.1 (F401)	33	07/85 – 04/95	3431	
RAPID Box (F40_, G40_)	1.1 (F401)	33	07/85 – 04/95	3495	
RAPID Box (F40_, G40_)	1.1 (F401)	33	07/85 – 04/95	3503	
RAPID Box (F40_, G40_)	1.1 (F401)	33	07/85 – 04/95	3580	
RAPID Box (F40_, G40_)	1.1 (F40H)	33	06/87 – 09/91	3380	
RAPID Box (F40_, G40_)	1.1 (F40H)	33	06/87 – 09/91	3381	
RAPID Box (F40_, G40_)	1.1 (F40H)	33	06/87 – 09/91	3431	
RAPID Box (F40_, G40_)	1.1 (F40H)	33	06/87 – 09/91	3495	
RAPID Box (F40_, G40_)	1.1 (F40H)	33	06/87 – 09/91	3503	
RAPID Box (F40_, G40_)	1.1 (F40H)	33	06/87 – 09/91	3580	
RAPID Box (F40_, G40_)	1.2	40	09/91 – 08/93	3380	
RAPID Box (F40_, G40_)	1.2	40	09/91 – 08/93	3381	
RAPID Box (F40_, G40_)	1.2	40	09/91 – 08/93	3431	
RAPID Box (F40_, G40_)	1.2	40	09/91 – 08/93	3503	
RAPID Box (F40_, G40_)	1.2	40	09/91 – 08/93	3580	
RAPID Box (F40_, G40_)	1.2	48	05/95 – 11/98	3380	
RAPID Box (F40_, G40_)	1.2	48	05/95 – 11/98	3381	
RAPID Box (F40_, G40_)	1.2	48	05/95 – 11/98	3431	
RAPID Box (F40_, G40_)	1.2	48	05/95 – 11/98	3503	
RAPID Box (F40_, G40_)	1.2	48	05/95 – 11/98	3580	
RAPID Box (F40_, G40_)	1.2 (F406, G40A)	40	09/91 – 03/98	3380	
RAPID Box (F40_, G40_)	1.2 (F406, G40A)	40	09/91 – 03/98	3381	
RAPID Box (F40_, G40_)	1.2 (F406, G40A)	40	09/91 – 03/98	3431	
RAPID Box (F40_, G40_)	1.2 (F406, G40A)	40	09/91 – 03/98	3503	
RAPID Box (F40_, G40_)	1.2 (F406, G40A)	40	09/91 – 03/98	3580	
RAPID Box (F40_, G40_)	1.4	43	09/91 – 08/93	3380	
RAPID Box (F40_, G40_)	1.4	43	09/91 – 08/93	3381	
RAPID Box (F40_, G40_)	1.4	43	09/91 – 08/93	3431	
RAPID Box (F40_, G40_)	1.4	43	09/91 – 08/93	3503	
RAPID Box (F40_, G40_)	1.4	43	09/91 – 08/93	3580	
RAPID Box (F40_, G40_)	1.4	54	09/91 – 08/93	3380	
RAPID Box (F40_, G40_)	1.4	54	09/91 – 08/93	3381	
RAPID Box (F40_, G40_)	1.4	54	09/91 – 08/93	3431	
RAPID Box (F40_, G40_)	1.4	54	09/91 – 08/93	3503	
RAPID Box (F40_, G40_)	1.4	54	09/91 – 08/93	3580	
RAPID Box (F40_, G40_)	1.4	59	05/95 – 08/97	3380	
RAPID Box (F40_, G40_)	1.4	59	05/95 – 08/97	3381	
RAPID Box (F40_, G40_)	1.4	59	05/95 – 08/97	3431	
RAPID Box (F40_, G40_)	1.4	59	05/95 – 08/97	3503	
RAPID Box (F40_, G40_)	1.4	59	05/95 – 08/97	3580	
RAPID Box (F40_, G40_)	1.4 (F402)	43	07/85 – 08/91	3380	
RAPID Box (F40_, G40_)	1.4 (F402)	43	07/85 – 08/91	3381	
RAPID Box (F40_, G40_)	1.4 (F402)	43	07/85 – 08/91	3431	
RAPID Box (F40_, G40_)	1.4 (F402)	43	07/85 – 08/91	3503	
RAPID Box (F40_, G40_)	1.4 (F402)	43	07/85 – 08/91	3580	
RAPID Box (F40_, G40_)	1.4 (F407) CAT	43	08/88 – 03/98	3380	
RAPID Box (F40_, G40_)	1.4 (F407) CAT	43	08/88 – 03/98	3381	
RAPID Box (F40_, G40_)	1.4 (F407) CAT	43	08/88 – 03/98	3431	
RAPID Box (F40_, G40_)	1.4 (F407) CAT	43	08/88 – 03/98	3503	
RAPID Box (F40_, G40_)	1.4 (F407) CAT	43	08/88 – 03/98	3580	
RAPID Box (F40_, G40_)	1.4 (F40D)	58	01/94 – 03/98	3380	
RAPID Box (F40_, G40_)	1.4 (F40D)	58	01/94 – 03/98	3381	
RAPID Box (F40_, G40_)	1.4 (F40D)	58	01/94 – 03/98	3431	
RAPID Box (F40_, G40_)	1.4 (F40D)	58	01/94 – 03/98	3503	
RAPID Box (F40_, G40_)	1.4 (F40D)	58	01/94 – 03/98	3580	
RAPID Box (F40_, G40_)	1.4 (F40M)	44	03/86 – 08/91	3380	
RAPID Box (F40_, G40_)	1.4 (F40M)	44	03/86 – 08/91	3381	
RAPID Box (F40_, G40_)	1.4 (F40M)	44	03/86 – 08/91	3431	
RAPID Box (F40_, G40_)	1.4 (F40M)	44	03/86 – 08/91	3503	
RAPID Box (F40_, G40_)	1.4 (F40M)	44	03/86 – 08/91	3580	
RAPID Box (F40_, G40_)	1.4 (F40U, F40V)	55	09/91 – 03/98	3380	
RAPID Box (F40_, G40_)	1.4 (F40U, F40V)	55	09/91 – 03/98	3381	
RAPID Box (F40_, G40_)	1.4 (F40U, F40V)	55	09/91 – 03/98	3431	
RAPID Box (F40_, G40_)	1.4 (F40U, F40V)	55	09/91 – 03/98	3503	
RAPID Box (F40_, G40_)	1.4 (F40U, F40V)	55	09/91 – 03/98	3580	
RAPID Box (F40_, G40_)	1.6 D	40	09/93 – 04/95	3380	
RAPID Box (F40_, G40_)	1.6 D	40	09/93 – 04/95	3381	
RAPID Box (F40_, G40_)	1.6 D	40	09/93 – 04/95	3431	
RAPID Box (F40_, G40_)	1.6 D	40	09/93 – 04/95	3503	
RAPID Box (F40_, G40_)	1.6 D	40	09/93 – 04/95	3580	
RAPID Box (F40_, G40_)	1.6 D (F404)	40	03/86 – 08/98	3380	
RAPID Box (F40_, G40_)	1.6 D (F404)	40	03/86 – 08/98	3381	
RAPID Box (F40_, G40_)	1.6 D (F404)	40	03/86 – 08/98	3431	
RAPID Box (F40_, G40_)	1.6 D (F404)	40	03/86 – 08/98	3503	

MAKE & MODEL   		KW	YEAR		
RENAULT					
RAPID Box (F40_, G40_)	1.6 D (F404)	40	03/86 – 08/98	3580	
RAPID Box (F40_, G40_)	1.9 D (F40P, F40N, F40E)	47	09/91 – 03/98	3380	
RAPID Box (F40_, G40_)	1.9 D (F40P, F40N, F40E)	47	09/91 – 03/98	3381	
RAPID Box (F40_, G40_)	1.9 D (F40P, F40N, F40E)	47	09/91 – 03/98	3431	
RAPID Box (F40_, G40_)	1.9 D (F40P, F40N, F40E)	47	09/91 – 03/98	3503	
RAPID Box (F40_, G40_)	1.9 D (F40P, F40N, F40E)	47	09/91 – 03/98	3580	
RAPID Box (F40_, G40_)	1.9 D (F40R)	40	09/94 – 03/98	3380	
RAPID Box (F40_, G40_)	1.9 D (F40R)	40	09/94 – 03/98	3381	
RAPID Box (F40_, G40_)	1.9 D (F40R)	40	09/94 – 03/98	3431	
RAPID Box (F40_, G40_)	1.9 D (F40R)	40	09/94 – 03/98	3503	
RAPID Box (F40_, G40_)	1.9 D (F40R)	40	09/94 – 03/98	3580	
SAFRANE (B54_) 04.92-10.97	3.0 Biturbo (Z7X 726)	193	02/93 – 07/96	3592	
SAFRANE (B54_) 04.92-10.97	3.0 V6 (Z7X 721)	123	12/92 – 07/96	3592	
SAFRANE (B54_) 04.92-10.97	3.0 V6 (Z7X 722)	123	12/92 – 07/96	3592	
SAFRANE (B54_) 04.92-10.97	3.0 V6 (Z7X 723)	123	12/92 – 07/96	3592	
SAFRANE I (B54_)	2.0 (B540)	77	11/92 – 07/96	3546	3596
SAFRANE I (B54_)	2.0 (B540)	77	11/92 – 07/96	3539	
SAFRANE I (B54_)	2.0 12V (B542, B54E)	97	04/92 – 07/96	3546	3596
SAFRANE I (B54_)	2.0 12V (B542, B54E)	97	04/92 – 07/96	3539	
SAFRANE I (B54_)	2.1 dT (B546)	65	11/93 – 07/96	3546	3596
SAFRANE I (B54_)	2.1 dT (B546)	65	11/93 – 07/96	3539	
SAFRANE I (B54_)	2.2 (B541)	79	04/92 – 07/96	3546	3596
SAFRANE I (B54_)	2.2 (B541)	79	04/92 – 07/96	3539	
SAFRANE I (B54_)	2.2 (B543)	101	04/92 – 07/96	3546	3596
SAFRANE I (B54_)	2.2 (B543)	101	04/92 – 07/96	3539	
SAFRANE I (B54_)	2.5 dT (B548)	83	12/92 – 07/96	3546	3596
SAFRANE I (B54_)	2.5 dT (B548)	83	12/92 – 07/96	3539	
SAFRANE I (B54_)	3.0	125	02/93 – 06/96	3546	3596
SAFRANE I (B54_)	3.0	125	02/93 – 06/96	3539	
SAFRANE I (B54_)	3.0 Biturbo 4x4 (B545)	193	02/93 – 07/96		3596
SAFRANE I (B54_)	3.0 V6 (B54B, B544)	123	12/92 – 07/96	3546	3596
SAFRANE I (B54_)	3.0 V6 (B54B, B544)	123	12/92 – 07/96	3539	
SAFRANE I (B54_)	3.0 V6 4x4 (B54B, B544)	123	12/92 – 07/96	3546	3596
SAFRANE I (B54_)	3.0 V6 4x4 (B54B, B544)	123	12/92 – 07/96	3539	
SAFRANE II (B54_)	2.0 16V (B54L)	100	07/96 – 12/00	3546	3596
SAFRANE II (B54_)	2.0 16V (B54L)	100	07/96 – 12/00	3539	
SAFRANE II (B54_)	2.2 dT (B54G)	83	07/96 – 12/00	3546	3596
SAFRANE II (B54_)	2.2 dT (B54G)	83	07/96 – 12/00	3539	
SAFRANE II (B54_)	2.5 20V (B54F)	121	07/96 – 12/00	3546	3596
SAFRANE II (B54_)	2.5 20V (B54F)	121	07/96 – 12/00	3539	
SAFRANE II (B54_)	2.9 24V (B54N)	140	03/99 – 12/00	3546	3596
SAFRANE II (B54_)	2.9 24V (B54N)	140	03/99 – 12/00	3539	
SAFRANE II (B54_)	3.0 V6 (B54M)	123	07/96 – 12/00	3546	3596
SAFRANE II (B54_)	3.0 V6 (B54M)	123	07/96 – 12/00	3539	
Safrane II (B54_) 2.0 16V (B54L)	N7Q 710 (07.96-.), N7Q 711 (07.96-.)	100	07/1996 - 12/2000	3539/1	
Safrane II (B54_) 3.0 V6 (B54M)	Z7X 755	123	07/1996 - 12/2000	3539/1	
Safrane II (B54_) 44229 dT (B54G)	G8T 740 (07.96-.)	83	07/1996 - 12/2000	3539/1	
Safrane II (B54_) 44318 20V (B54F)	N7U 700 (07.96-.), N7U 701 (07.96-.)	121	07/1996 - 12/2000	3539/1	
Safrane II (B54_) 44441 24V (B54N)	L7X 713	140	03/1999 - 12/2000	3539/1	
SANDERO II /STEPWAY II (B52)	1.6	75	04/14 -	4253	
SANDERO II /STEPWAY II (B52)	1.6	78	09/16 -	4253	
SANDERO/STEPWAY I	1.4	55	02/09 -	3431	
SANDERO/STEPWAY I	1.4	55	02/09 -	3503	
SANDERO/STEPWAY I	1.6	62	11/10 -	3431	
SANDERO/STEPWAY I	1.6	62	11/10 -	3503	
SANDERO/STEPWAY I	1.6	64	02/09 -	3431	
SANDERO/STEPWAY I	1.6	64	02/09 -	3503	
SANDERO/STEPWAY I	1.6	75	12/07 -	3431	
SANDERO/STEPWAY I	1.6	75	12/07 -	3503	
SANDERO/STEPWAY I	1.6	76	12/07 -	3431	
SANDERO/STEPWAY I	1.6	76	12/07 -	3503	
SANDERO/STEPWAY I (BS_)	1.4 LPG	53	02.2009 -	3503/1	
SANDERO/STEPWAY II (B8_)	1.2 16V	54	12/13 -	4140	
SANDERO/STEPWAY II (B8_)	1.2 16V LPG	53	12/13 -	4140	
SANDERO/STEPWAY II (B8_)	1.5 dCi	62	12/13 -	4140	
SANDERO/STEPWAY II (B8_)	1.6	59	11/13 -	4140	
SANDERO/STEPWAY II (B8_)	1.6	75	04/14 -	4140	
SCÉNIC I (JA0/1_)	1.4 16V (JA0D, JA1H, Ja0W, JA10)	70	09/99 – 08/03		3529
SCÉNIC I (JA0/1_)	1.6	75	03/01 – 08/03		3529
SCÉNIC I (JA0/1_)	1.6	79	09/99 – 09/03		3529
SCÉNIC I (JA0/1_)	1.6	81	06/01 – 09/03		3529
SCÉNIC I (JA0/1_)	1.6 16V	85	09/99 – 08/03		3529
SCÉNIC I (JA0/1_)	1.6 BiFuel	79	09/99 – 04/01		3529
SCÉNIC I (JA0/1_)	1.8 16V (JA12, JA1R, JA1M, JA1A)	85	01/01 – 08/03		3529
SCÉNIC I (JA0/1_)	1.8 4x4	85	07/00 – 04/01		3529
SCÉNIC I (JA0/1_)	1.9 D	47	09/99 – 03/01		3529

BESER®

MAKE & MODEL		KW	YEAR		
RENAULT					
SCÉNIC I (JA0/1_)	1.9 dCi (JA05, JA1F)	75	09/99 – 08/03		3529
SCÉNIC I (JA0/1_)	1.9 dCi RX4	74	12/02 – 08/03		3529
SCÉNIC I (JA0/1_)	1.9 dCi RX4	75	11/00 – 08/03		3529
SCÉNIC I (JA0/1_)	1.9 dTi (JA0N)	72	09/99 – 08/03		3529
SCÉNIC I (JA0/1_)	1.9 dTi (JA1U)	59	02/01 – 08/03		3529
SCÉNIC I (JA0/1_)	2.0 16V	103	09/99 – 08/03		3529
SCÉNIC I (JA0/1_)	2.0 16V (JA1B, JA1D)	102	07/00 – 08/03		3529
SCÉNIC I (JA0/1_)	2.0 16V RX4	102	06/00 – 08/03		3529
SCÉNIC II (JM0/1_)	1.4 (JM0B, JM0H, JM1A)	72	06/03 -	3849	3529/2
SCÉNIC II (JM0/1_)	1.5 dCi (JM02, JM13)	74	11/03 -	3849	3529/2
SCÉNIC II (JM0/1_)	1.5 dCi (JM0F)	60	06/03 -	3849	3529/2
SCÉNIC II (JM0/1_)	1.5 dCi (JM16)	76	01/07 -		3529/2
SCÉNIC II (JM0/1_)	1.5 dCi (JM1E)	78	05/05 -	3849	3529/2
SCÉNIC II (JM0/1_)	1.5 dCi (JM1F)	63	05/05 -	3849	3529/2
SCÉNIC II (JM0/1_)	1.6	77	06/06 -		3529/2
SCÉNIC II (JM0/1_)	1.6 (JM0C, JM0J, JM1B)	83	06/03 -	3849	3529/2
SCÉNIC II (JM0/1_)	1.6 16V (JM1R)	82	10/05 -		3529/2
SCÉNIC II (JM0/1_)	1.9 D	85	06/06 -		3529/2
SCÉNIC II (JM0/1_)	1.9 dCi	92	06/03 -		3529/2
SCÉNIC II (JM0/1_)	1.9 dCi (JM0G, JM12, JM1G, JM2C)	88	06/03 -	3849	3529/2
SCÉNIC II (JM0/1_)	1.9 dCi (JM14)	96	05/05 -	3849	3529/2
SCÉNIC II (JM0/1_)	1.9 dCi (JM15)	81	05/05 -		3529/2
SCÉNIC II (JM0/1_)	2.0	101	02/08 – 04/09		3529/2
SCÉNIC II (JM0/1_)	2.0 (JM05, JM0U, JM1N, JM1U, JM2V)	99	06/03 -	3849	
SCÉNIC II (JM0/1_)	2.0 (JM05, JM0U, JM1N, JM1U, JM2V)	110	05/04 -		3529/2
SCÉNIC II (JM0/1_)	2.0 16V Turbo (JM0W)	120	05/04 -	3849	3529/2
SCÉNIC II (JM0/1_)	2.0 dCi (JM1K)	110	09/05 -	3849	
SCÉNIC II (JM0/1_J84)	1.4 (K4J 730)	72	06/03 -	3827	
SCÉNIC II (JM0/1_J84)	1.4 (K4J 740)	72	06/03 -	3827	
SCÉNIC II (JM0/1_J84)	1.4 (K4J 770)	72	06/03 -	3827	
SCÉNIC II (JM0/1_J84)	1.5 Dci (K9K 722)	60	06/03 -	3827	
SCÉNIC II (JM0/1_J84)	1.5 Dci (K9K 728)	74	11/03 -	3827	
SCÉNIC II (JM0/1_J84)	1.5 Dci (K9K 729)	74	11/03 -	3827	
SCÉNIC II (JM0/1_J84)	1.6 (K4M 761)	83	06/03 -	3827	
SCÉNIC II (JM0/1_J84)	1.6 (K4M 782)	83	06/03 -	3827	
SCÉNIC III (JZ0/1_)	1.2 TCe	85	04/12 -		3529/2
SCÉNIC III (JZ0/1_)	1.2 TCe (JZ16)	97	01/13 -		3529/2
SCÉNIC III (JZ0/1_)	1.4 16V (JZ0F)	96	02/09 -		3529/2
SCÉNIC III (JZ0/1_)	1.5 dCi	63	04/09 -	3964/1	3529/2
SCÉNIC III (JZ0/1_)	1.5 dCi	70	11/10 -	3964/1	3529/2
SCÉNIC III (JZ0/1_)	1.5 dCi	78	02/09 -	3964/1	3529/2
SCÉNIC III (JZ0/1_)	1.5 dCi	81	04/09 -	3964/1	3529/2
SCÉNIC III (JZ0/1_)	1.6 16V (JZ0U)	81	02/09 -	3964/1	3529/2
SCÉNIC III (JZ0/1_)	1.6 dCi (JZ00, JZ12)	96	04/11 -		3529/2
SCÉNIC III (JZ0/1_)	1.6 E85 (JZ03)	81	02/09 -	3964/1	3529/2
SCÉNIC III (JZ0/1_)	1.9 dCi	96	02/09 -		3529/2
SCÉNIC III (JZ0/1_)	2.0 16V (JZ0G, JZ1E)	103	02/09 -		3529/2
SCÉNIC III (JZ0/1_)	2.0 dCi (JZ0L)	118	04/09 -		3529/2
SCÉNIC III (JZ0/1_)	2.0 dCi (JZ0Y)	110	02/09 -		3529/2
Scenic I MPV/ Space wagon (JA0/1_, FA0_) 2.0 16V	F4R 740, F4R 741, F4R 744, F4R 747	103	09/1999 - 08/2003	3539/1	
Scenic I MPV/ Space wagon (JA0/1_, FA0_) 2.0 16V (JA1B, JA1D)	F4R 740, F4R 741, F4R 746	102	07/2000 - 08/2003	3539/1	
Scenic I MPV/ Space wagon (JA0/1_, FA0_) 2.0 16V RX4	F4R 744, F4R 746	102	06/2000 - 08/2003	3539/1	
Scenic I MPV/ Space wagon (JA0/1_, FA0_) 44287 16V (JA0D, JA1H, Ja0W, JA10)	K4J 714, K4J 750	70	09/1999 - 08/2003	3539/1	
Scenic I MPV/ Space wagon (JA0/1_, FA0_) 44348	K4M 700, K4M 701, K4M 708	81	06/2001 - 09/2003	3539/1	
Scenic I MPV/ Space wagon (JA0/1_, FA0_) 44348	K4M 708, K4M 709	75	03/2001 - 08/2003	3539/1	
Scenic I MPV/ Space wagon (JA0/1_, FA0_) 44348 (JA00, JA16, JA15, JA19, JA1V, JA2B, JA2C, JA0	K4M 700, K4M 706, K4M 707, K4M 776	79	09/1999 - 09/2003	3539/1	
Scenic I MPV/ Space wagon (JA0/1_, FA0_) 44348 BiFuel	-	75	03/2001 - 08/2003	3539/1	
Scenic I MPV/ Space wagon (JA0/1_, FA0_) 44348 BiFuel (JA04)	K4M 704, K4M 712	79	09/1999 - 04/2001	3539/1	
Scenic I MPV/ Space wagon (JA0/1_, FA0_) 44348 e (JA0F)	K7M702/ 703	66	09/1999 - 06/2003	3539/1	
Scenic I MPV/ Space wagon (JA0/1_, FA0_) 44348 i (JA0L)	K7M720	55	09/1999 - 06/2003	3539/1	
Scenic I MPV/ Space wagon (JA0/1_, FA0_) 44409 16V (JA12, JA1R, JA1M, JA1A)	F4P 720, F4P 722	85	01/2001 - 08/2003	3539/1	
Scenic I MPV/ Space wagon (JA0/1_, FA0_) 44409 4x4	F4P 722	85	07/2000 - 04/2001	3539/1	
Scenic I MPV/ Space wagon (JA0/1_, FA0_) 44440 D (JA0J, FA0J)	F8Q 788, F8Q 790	47	09/1999 - 03/2001	3539/1	
Scenic I MPV/ Space wagon (JA0/1_, FA0_) 44440 dCi (JA05, JA1F)	F9Q 732, F9Q 733	75	09/1999 - 08/2003	3539/1	
Scenic I MPV/ Space wagon (JA0/1_, FA0_) 44440 dCi RX4	F9Q 732, F9Q 748, F9Q 796	74	12/2002 - 08/2003	3539/1	
Scenic I MPV/ Space wagon (JA0/1_, FA0_) 44440 dCi RX4	F9Q 740	75	11/2000 - 08/2003	3539/1	
Scenic I MPV/ Space wagon (JA0/1_, FA0_) 44440 dTi (JA0N)	F9Q 731, F9Q 734, F9Q 736	72	09/1999 - 08/2003	3539/1	
Scenic I MPV/ Space wagon (JA0/1_, FA0_) 44440 dTi (JA1U)	F9Q 744	59	02/2001 - 08/2003	3539/1	
SPORT SPIDER (EF0_)	2.0	108	12/95 – 08/96	3539	
SPORT SPIDER (EF0_)	2.0	108	12/95 – 08/96	3546	
SPORT SPIDER (EF0_)	2.0 16V	110	03/95 – 10/99	3539	
SPORT SPIDER (EF0_)	2.0 16V	110	03/95 – 10/99	3546	
SUPER 5	1.1 (C1E 750)	35	10/89 – 12/90	3372	
SUPER 5	1.1 (C1E 750)	35	10/89 – 12/90	3599	
SUPER 5	1.2 (C1G 702)	40	01/87 – 08/90	3372	
SUPER 5	1.2 (C1G 702)	40	01/87 – 08/90	3599	

BESER®

MAKE & MODEL		KW	YEAR		
RENAULT					
SUPER 5	1.2 (C1G 720)	40	01/87 – 08/90	3372	
SUPER 5	1.2 (C1G 720)	40	01/87 – 08/90	3599	
SUPER 5	1.2 (C1G 722)	40	01/87 – 08/90	3372	
SUPER 5	1.2 (C1G 722)	40	01/87 – 08/90	3599	
SUPER 5	1.4 (C2J 700)	52	10/84 – 07/89	3372	
SUPER 5	1.4 (C2J 700)	52	10/84 – 07/89	3599	
SUPER 5	1.4 (C2J 780)	52	10/84 – 07/89	3372	
SUPER 5	1.4 (C2J 780)	52	10/84 – 07/89	3599	
SUPER 5	1.4 (C2J 781)	52	10/84 – 07/89	3372	
SUPER 5	1.4 (C2J 781)	52	10/84 – 07/89	3599	
SUPER 5	1.4 (C2J 782)	49	06/87 – 07/89	3372	
SUPER 5	1.4 (C2J 782)	49	06/87 – 07/89	3599	
SUPER 5	1.4 (C2J 784)	44	06/87 – 08/90	3372	
SUPER 5	1.4 (C2J 784)	44	06/87 – 08/90	3599	
SUPER 5	1.4 (C2J 788)	52	10/84 – 07/89	3372	
SUPER 5	1.4 (C2J 788)	52	10/84 – 07/89	3599	
SUPER 5	1.4 (C2J 789)	52	10/84 – 07/89	3372	
SUPER 5	1.4 (C2J 789)	52	10/84 – 07/89	3599	
SUPER 5	1.4 (C2J 798)	52	10/84 – 07/89	3372	
SUPER 5	1.4 (C2J 798)	52	10/84 – 07/89	3599	
SUPER 5	1.4 (C1J 768)	43	10/84 – 06/88	3372	
SUPER 5	1.4 (C1J 768)	43	10/84 – 06/88	3599	
SUPER 5	1.4 (C1J 780)	43	10/84 – 06/88	3372	
SUPER 5	1.4 (C1J 780)	43	10/84 – 06/88	3599	
SUPER 5	1.4 Cat (B/C/407) (C3J 700)	43	10/85 – 12/96	3372	
SUPER 5	1.4 Cat (B/C/407) (C3J 700)	43	10/85 – 12/96	3599	
SUPER 5	1.4 Cat (B/C/407) (C3J 702)	43	10/85 – 12/96	3372	
SUPER 5	1.4 Cat (B/C/407) (C3J 702)	43	10/85 – 12/96	3599	
SUPER 5	1.4 Cat (B/C/407) (C3J 760)	43	10/85 – 12/96	3372	
SUPER 5	1.4 Cat (B/C/407) (C3J 760)	43	10/85 – 12/96	3599	
SUPER 5	1.4 Turbo (C1J 782)	88	04/85 – 08/90	3372	
SUPER 5	1.4 Turbo (C1J 782)	88	04/85 – 08/90	3599	
SUPER 5	1.4 Turbo (C1J 784)	88	04/85 – 08/90	3372	
SUPER 5	1.4 Turbo (C1J 784)	88	04/85 – 08/90	3599	
SUPER 5	1.4 Turbo (C1J 788)	85	08/85 – 06/89	3372	
SUPER 5	1.4 Turbo (C1J 788)	85	08/85 – 06/89	3599	
SUPER 5	1.4 Turbo (C1J 788)	88	04/85 – 08/90	3372	
SUPER 5	1.4 Turbo (C1J 788)	88	04/85 – 08/90	3599	
SUPER 5	1.4 Turbo GT (840 730)	118	01/85 – 05/91	3372	
SUPER 5	1.4 Turbo GT (840 730)	118	01/85 – 05/91	3599	
SUPER 5	1.6 D (F8M 720)	40	08/85 – 12/96	3372	
SUPER 5	1.6 D (F8M 720)	40	08/85 – 12/96	3599	
SUPER 5	1.6 D (F8M 730)	40	04/85 – 12/90	3372	
SUPER 5	1.6 D (F8M 730)	40	04/85 – 12/90	3599	
SUPER 5	1.6 D (F8M 730)	40	08/85 – 12/96	3372	
SUPER 5	1.6 D (F8M 730)	40	08/85 – 12/96	3599	
SUPER 5	1.7 (F2N 740)	64	06/87 – 03/95	3372	
SUPER 5	1.7 (F2N 740)	64	06/87 – 03/95	3599	
SUPER 5	1.7 (F2N 742)	64	06/87 – 03/95	3372	
SUPER 5	1.7 (F2N 742)	64	06/87 – 03/95	3599	
SUPER 5	1.7 (F3N 716)	54	10/86 – 03/95	3372	
SUPER 5	1.7 (F3N 716)	54	10/86 – 03/95	3599	
SUPER 5	1.7 (F3N 717)	54	10/86 – 03/95	3372	
SUPER 5	1.7 (F3N 717)	54	10/86 – 03/95	3599	
SUPER 5 (B/C40_	1.2 (B/C40F)	40	01.1987 - 08.1990	3488	
SUPER 5 (B/C40_	1.4 (B/C402)	43	10.1984 - 06.1988	3488	
SUPER 5 (B/C40_	1.4 (B/C403)	52	10.1984 - 07.1989	3488	
SUPER 5 (B/C40_	1.4 (B/C40J)	49	06.1987 - 07.1989	3488	
SUPER 5 (B/C40_	1.4 (B/C40M)	44	06.1987 - 08.1990	3488	
SUPER 5 (B/C40_	1.4 Cat (B/C/407)	43	10.1985 - 12.1996	3488	
SUPER 5 (B/C40_	1.4 Turbo (C405)	88	04.1985 - 08.1990	3488	
SUPER 5 (B/C40_	1.6 D (B/C/404)	40	08.1985 - 12.1996	3488	
SUPER 5 (B/C40_	1.7 (B/C408)	54	10.1986 - 03.1995	3488	
SUPER 5 (B/C40_	1.7 (B/C40K, B/C40G)	64	06.1987 - 03.1995	3488	
SUPER 5 (B/C40_	1.7 i (C409)	69	10.1986 - 08.1991	3488	
SUPER 5 (B/C40_)	1.4	43	08.1986 - 12.1996	3503/1	
SUPER 5 (B/C40_)	1.4	43	08.1986 - 12.1996	3503/1	
SUPER 5 (B/C40_)	1.4 (B/C402)	43	10.1984 - 06.1988	3503/1	
SUPER 5 (B/C40_)	1.4 (B/C402)	43	10.1984 - 06.1988	3503/1	
SUPER 5 (B/C40_)	1.4 (B/C403)	52	10.1984 - 07.1989	3503/1	
SUPER 5 (B/C40_)	1.4 (B/C40J)	49	06.1987 - 07.1989	3503/1	
SUPER 5 (B/C40_)	1.4 (B/C40M)	44	06.1987 - 08.1990	3503/1	
SUPER 5 (B/C40_)	1.4 Cat (B/C/407)	43	10.1985 - 12.1996	3503/1	
SUPER 5 (B/C40_)	1.4 Cat (B/C/407)	43	10.1985 - 12.1996	3503/1	
SUPER 5 (B/C40_)	1.4 Turbo (C405)	88	04.1985 - 08.1990	3503/1	
SUPER 5 (B/C40_)	1.6 D (B/C/404)	40	08.1985 - 12.1996	3503/1	

MAKE & MODEL		KW	YEAR		
RENAULT					
SUPER 5 (B/C40_)	1.7 (B/C408)	54	10.1986 - 03.1995	3503/1	
SUPER 5 (B/C40_)	1.7 (B/C40K, B/C40G)	64	06.1987 - 03.1995	3503/1	
SUPER 5 (B/C40_)	1.7 i (C409)	69	10.1986 - 08.1991	3503/1	
SUPER 5 (B/C40_)	1.0 (B/C/400)	30	10/84 – 10/88	3495	
SUPER 5 (B/C40_)	1.1	35	10/89 – 12/90	3495	
SUPER 5 (B/C40_)	1.1 (B/C/401)	34	10/84 – 10/88	3495	
SUPER 5 (B/C40_)	1.1 (B/C/401, B/C40H)	33	01/86 – 03/95	3495	
SUPER 5 (B/C40_)	1.2 (B/C40F)	40	01/87 – 08/90	3380	
SUPER 5 (B/C40_)	1.2 (B/C40F)	40	01/87 – 08/90	3381	
SUPER 5 (B/C40_)	1.2 (B/C40F)	40	01/87 – 08/90	3431	
SUPER 5 (B/C40_)	1.2 (B/C40F)	40	01/87 – 08/90	3503	
SUPER 5 (B/C40_)	1.2 (B/C40F)	40	01/87 – 08/90	3580	
SUPER 5 (B/C40_)	1.4 (B/C/407) CAT	43	10/85 – 12/96	3380	
SUPER 5 (B/C40_)	1.4 (B/C/407) CAT	43	10/85 – 12/96	3381	
SUPER 5 (B/C40_)	1.4 (B/C/407) CAT	43	10/85 – 12/96	3431	
SUPER 5 (B/C40_)	1.4 (B/C/407) CAT	43	10/85 – 12/96	3503	
SUPER 5 (B/C40_)	1.4 (B/C/407) CAT	43	10/85 – 12/96	3580	
SUPER 5 (B/C40_)	1.4 (B/C402)	43	10/84 – 06/88	3380	
SUPER 5 (B/C40_)	1.4 (B/C402)	43	10/84 – 06/88	3381	
SUPER 5 (B/C40_)	1.4 (B/C402)	43	10/84 – 06/88	3431	
SUPER 5 (B/C40_)	1.4 (B/C402)	43	10/84 – 06/88	3503	
SUPER 5 (B/C40_)	1.4 (B/C402)	43	10/84 – 06/88	3580	
SUPER 5 (B/C40_)	1.4 (B/C403)	52	10/84 – 07/89	3380	
SUPER 5 (B/C40_)	1.4 (B/C403)	52	10/84 – 07/89	3381	
SUPER 5 (B/C40_)	1.4 (B/C403)	52	10/84 – 07/89	3431	
SUPER 5 (B/C40_)	1.4 (B/C403)	52	10/84 – 07/89	3503	
SUPER 5 (B/C40_)	1.4 (B/C403)	52	10/84 – 07/89	3580	
SUPER 5 (B/C40_)	1.4 (B/C40J)	49	06/87 – 07/89	3380	
SUPER 5 (B/C40_)	1.4 (B/C40J)	49	06/87 – 07/89	3381	
SUPER 5 (B/C40_)	1.4 (B/C40J)	49	06/87 – 07/89	3431	
SUPER 5 (B/C40_)	1.4 (B/C40J)	49	06/87 – 07/89	3503	
SUPER 5 (B/C40_)	1.4 (B/C40J)	49	06/87 – 07/89	3580	
SUPER 5 (B/C40_)	1.4 (B/C40M)	44	06/87 – 08/90	3380	
SUPER 5 (B/C40_)	1.4 (B/C40M)	44	06/87 – 08/90	3381	
SUPER 5 (B/C40_)	1.4 (B/C40M)	44	06/87 – 08/90	3431	
SUPER 5 (B/C40_)	1.4 (B/C40M)	44	06/87 – 08/90	3503	
SUPER 5 (B/C40_)	1.4 (B/C40M)	44	06/87 – 08/90	3580	
SUPER 5 (B/C40_)	1.4 Turbo	85	08/85 – 06/89	3503	3496
SUPER 5 (B/C40_)	1.4 Turbo	85	08/85 – 06/89	3380	
SUPER 5 (B/C40_)	1.4 Turbo	85	08/85 – 06/89	3381	
SUPER 5 (B/C40_)	1.4 Turbo	85	08/85 – 06/89	3431	
SUPER 5 (B/C40_)	1.4 Turbo	85	08/85 – 06/89	3580	
SUPER 5 (B/C40_)	1.4 Turbo (C405)	88	04/85 – 08/90	3431	3496
SUPER 5 (B/C40_)	1.4 Turbo (C405)	88	04/85 – 08/90	3380	
SUPER 5 (B/C40_)	1.4 Turbo (C405)	88	04/85 – 08/90	3381	
SUPER 5 (B/C40_)	1.4 Turbo (C405)	88	04/85 – 08/90	3503	
SUPER 5 (B/C40_)	1.4 Turbo (C405)	88	04/85 – 08/90	3580	
SUPER 5 (B/C40_)	1.4 Turbo GT (C405)	118	01/85 – 05/91	3431	3496
SUPER 5 (B/C40_)	1.4 Turbo GT (C405)	118	01/85 – 05/91	3380	
SUPER 5 (B/C40_)	1.4 Turbo GT (C405)	118	01/85 – 05/91	3381	
SUPER 5 (B/C40_)	1.4 Turbo GT (C405)	118	01/85 – 05/91	3503	
SUPER 5 (B/C40_)	1.4 Turbo GT (C405)	118	01/85 – 05/91	3580	
SUPER 5 (B/C40_)	1.6 D	40	04/85 – 12/90	3380	
SUPER 5 (B/C40_)	1.6 D	40	04/85 – 12/90	3381	
SUPER 5 (B/C40_)	1.6 D	40	04/85 – 12/90	3431	
SUPER 5 (B/C40_)	1.6 D	40	04/85 – 12/90	3503	
SUPER 5 (B/C40_)	1.6 D	40	04/85 – 12/90	3580	
SUPER 5 (B/C40_)	1.6 D (B/C/404)	40	08/85 – 12/96	3380	
SUPER 5 (B/C40_)	1.6 D (B/C/404)	40	08/85 – 12/96	3381	
SUPER 5 (B/C40_)	1.6 D (B/C/404)	40	08/85 – 12/96	3431	
SUPER 5 (B/C40_)	1.6 D (B/C/404)	40	08/85 – 12/96	3503	
SUPER 5 (B/C40_)	1.6 D (B/C/404)	40	08/85 – 12/96	3580	
SUPER 5 (B/C40_)	1.7	66	09/88 – 09/90	3431	3496
SUPER 5 (B/C40_)	1.7	66	09/88 – 09/90	3380	
SUPER 5 (B/C40_)	1.7	66	09/88 – 09/90	3381	
SUPER 5 (B/C40_)	1.7	66	09/88 – 09/90	3503	
SUPER 5 (B/C40_)	1.7	66	09/88 – 09/90	3580	
SUPER 5 (B/C40_)	1.7 (B/C408)	54	10/86 – 03/95	3380	
SUPER 5 (B/C40_)	1.7 (B/C408)	54	10/86 – 03/95	3381	
SUPER 5 (B/C40_)	1.7 (B/C408)	54	10/86 – 03/95	3431	
SUPER 5 (B/C40_)	1.7 (B/C408)	54	10/86 – 03/95	3503	
SUPER 5 (B/C40_)	1.7 (B/C408)	54	10/86 – 03/95	3580	
SUPER 5 (B/C40_)	1.7 (B/C40K, B/C40G)	64	06/87 – 03/95	3431	3496
SUPER 5 (B/C40_)	1.7 (B/C40K, B/C40G)	64	06/87 – 03/95	3380	
SUPER 5 (B/C40_)	1.7 (B/C40K, B/C40G)	64	06/87 – 03/95	3381	
SUPER 5 (B/C40_)	1.7 (B/C40K, B/C40G)	64	06/87 – 03/95	3503	

MAKE & MODEL   		KW	YEAR		
RENAULT					
SUPER 5 (B/C40_)	1.7 (B/C40K, B/C40G)	64	06/87 – 03/95	3580	
SUPER 5 (B/C40_)	1.7 i (C409)	69	10/86 – 08/91	3431	3496
SUPER 5 (B/C40_)	1.7 i (C409)	69	10/86 – 08/91	3380	
SUPER 5 (B/C40_)	1.7 i (C409)	69	10/86 – 08/91	3381	
SUPER 5 (B/C40_)	1.7 i (C409)	69	10/86 – 08/91	3503	
SUPER 5 (B/C40_)	1.7 i (C409)	69	10/86 – 08/91	3580	
SUPER 5 Box (S40_)	1.0 (S400)	30	10/84 – 10/88	3495	
SUPER 5 Box (S40_)	1.1 (S401)	34	10/84 – 12/96	3495	
SUPER 5 Box (S40_)	1.2 (S40F, S407)	44	01/87 – 12/96	3380	
SUPER 5 Box (S40_)	1.2 (S40F, S407)	44	01/87 – 12/96	3381	
SUPER 5 Box (S40_)	1.2 (S40F, S407)	44	01/87 – 12/96	3431	
SUPER 5 Box (S40_)	1.2 (S40F, S407)	44	01/87 – 12/96	3503	
SUPER 5 Box (S40_)	1.2 (S40F, S407)	44	01/87 – 12/96	3580	
SUPER 5 Box (S40_)	1.4	44	09/85 – 07/86	3380	
SUPER 5 Box (S40_)	1.4	44	09/85 – 07/86	3381	
SUPER 5 Box (S40_)	1.4	44	09/85 – 07/86	3431	
SUPER 5 Box (S40_)	1.4	44	09/85 – 07/86	3503	
SUPER 5 Box (S40_)	1.4	44	09/85 – 07/86	3580	
SUPER 5 Box (S40_)	1.4	85	04/85 – 10/87	3380	
SUPER 5 Box (S40_)	1.4	85	04/85 – 10/87	3381	
SUPER 5 Box (S40_)	1.4	85	04/85 – 10/87	3431	
SUPER 5 Box (S40_)	1.4	85	04/85 – 10/87	3503	
SUPER 5 Box (S40_)	1.4	85	04/85 – 10/87	3580	
SUPER 5 Box (S40_)	1.6 D (S404)	40	10/84 – 12/96	3380	
SUPER 5 Box (S40_)	1.6 D (S404)	40	10/84 – 12/96	3381	
SUPER 5 Box (S40_)	1.6 D (S404)	40	10/84 – 12/96	3431	
SUPER 5 Box (S40_)	1.6 D (S404)	40	10/84 – 12/96	3503	
SUPER 5 Box (S40_)	1.6 D (S404)	40	10/84 – 12/96	3580	
SYMBOL II (LU_)	1.2 16V (LU2V)	55	09.2008 - 06.2014	3503/1	
SYMBOL II (LU_)	1.2 LPG)	55	01.2010 - 12.2013	3503/1	
SYMBOL II (LU_)	1.4	55	09.2008 - 06.2014	3503/1	
SYMBOL II (LU_)	1.5 dCi)	47	09.2008 -	3503/1	
SYMBOL II (LU_)	1.5 dCi)	48	01.2009 -	3503/1	
SYMBOL II (LU_)	1.5 dCi)	62	09.2008 -	3503/1	
SYMBOL II (LU_)	1.6 16V)	77	09.2008 -	3503/1	
TALISMAN (L2M_)	1.5 dCi 110	81	11/15 -	4134	
TALISMAN (L2M_)	1.6 dCi 130	96	11/15 -	4134	
TALISMAN (L2M_)	1.6 dCi 160	118	06/15 -	4134	
TALISMAN (L2M_)	1.6 TCe 150	110	11/15 -	4134	
TALISMAN (L2M_)	1.6 TCe 200	147	11/15 -	4134	
TALISMAN (L2M_)	2.5	140	07/13 -	4134	
TALISMAN (L2M_)	3.5	190	07/13 -	4134	
TALISMAN Grandtour (KP_)	1.5 dCi 110	81	03/16 -	4134	
TALISMAN Grandtour (KP_)	1.6 dCi 130	96	03/16 -	4134	
TALISMAN Grandtour (KP_)	1.6 dCi 160	118	03/16 -	4134	
TALISMAN Grandtour (KP_)	1.6 TCe 150	110	03/16 -	4134	
TALISMAN Grandtour (KP_)	1.6 TCe 200	147	03/16 -	4134	
THALIA I (LB0/1/2_)	1.2	43	02/98 – 10/03	3431	
THALIA I (LB0/1/2_)	1.2	43	02/98 – 10/03	3503	
THALIA I (LB0/1/2_)	1.2 16V	55	04/02 -	3431	
THALIA I (LB0/1/2_)	1.2 16V	55	04/02 -	3503	
THALIA I (LB0/1/2_)	1.4	55	08/00 -	3431	
THALIA I (LB0/1/2_)	1.4	55	08/00 -	3503	
THALIA I (LB0/1/2_)	1.4 16V	72	08/00 -	3431	
THALIA I (LB0/1/2_)	1.4 16V	72	08/00 -	3503	
THALIA I (LB0/1/2_)	1.5 dCi	47	06/05 -	3431	
THALIA I (LB0/1/2_)	1.5 dCi	47	06/05 -	3503	
THALIA I (LB0/1/2_)	1.5 dCi	48	04/02 -	3431	
THALIA I (LB0/1/2_)	1.5 dCi	48	04/02 -	3503	
THALIA I (LB0/1/2_)	1.5 dCi	50	02/03 -	3431	
THALIA I (LB0/1/2_)	1.5 dCi	50	02/03 -	3503	
THALIA I (LB0/1/2_)	1.5 dCi	59	06/01 – 10/03	3431	
THALIA I (LB0/1/2_)	1.5 dCi	59	06/01 – 10/03	3503	
THALIA I (LB0/1/2_)	1.5 dCi	60	06/01 -	3431	
THALIA I (LB0/1/2_)	1.5 dCi	60	06/01 -	3503	
THALIA I (LB0/1/2_)	1.6	66	03/98 -	3431	
THALIA I (LB0/1/2_)	1.6	66	03/98 -	3503	
THALIA I (LB0/1/2_)	1.6 16V	79	04/02 -	3431	
THALIA I (LB0/1/2_)	1.6 16V	79	04/02 -	3503	
THALIA I (LB0/1/2_)	1.9 D	48	02/98 – 05/01	3431	
THALIA I (LB0/1/2_)	1.9 D	48	02/98 – 05/01	3503	
THALIA I (LB0/1/2_)	2.0	124	09/01 -	3431	3496
THALIA I (LB0/1/2_)	2.0	124	09/01 -	3503	
THALIA II (LU1/2_)	0.9 TCe	66	09/14 -	4140	
THALIA II (LU1/2_)	1.2 16V (LU2V)	55	09/08 -	3983	3529/2
THALIA II (LU1/2_)	1.2 LPG	55	01/10 – 12/13	3431	

MAKE & MODEL   		KW	YEAR		
RENAULT					
THALIA II (LU1/2_)	1.2 LPG	55	01/10 – 12/13	3503	
THALIA II (LU1/2_)	1.4	55	09/08 – 06/14	3431	
THALIA II (LU1/2_)	1.4	55	09/08 – 06/14	3503	
THALIA II (LU1/2_)	1.5 dCi	47	09/08 -	3983	3529/2
THALIA II (LU1/2_)	1.5 dCi	48	01/09 -	3983	3529/2
THALIA II (LU1/2_)	1.5 dCi	55	11/12 – 06/14	3983	3529/2
THALIA II (LU1/2_)	1.5 dCi	62	09/08 -	3983	3529/2
THALIA II (LU1/2_)	1.5 dCi	66	01/09 -	3983	3529/2
THALIA II (LU1/2_)	1.6 16V	77	09/08 -	3983	3529/2
THALIA III	1.2 16V	55	12/13 -	3431	
THALIA III	1.2 16V	55	12/13 -	3503	
THALIA III	1.5 dCi	66	12/13 -	3431	
THALIA III	1.5 dCi	66	12/13 -	3503	
TRAFIC Box (T1, T3, T4)	1.4	35	03/80 – 04/89	3482	
TRAFIC Box (T1, T3, T4)	1.4	35	03/80 – 04/89	3527	
TRAFIC Box (T1, T3, T4)	1.6	48	01/83 – 06/86	3482	
TRAFIC Box (T1, T3, T4)	1.6	48	01/83 – 06/86	3527	
TRAFIC Box (T1, T3, T4)	1.6 4x4	48	08/85 – 06/86	3482	
TRAFIC Box (T1, T3, T4)	1.6 4x4	48	08/85 – 06/86	3527	
TRAFIC Box (T1, T3, T4)	1.7	50	06/86 – 04/89	3482	
TRAFIC Box (T1, T3, T4)	1.7	50	06/86 – 04/89	3527	
TRAFIC Box (T1, T3, T4)	2.0	58	07/80 – 04/85	3482	
TRAFIC Box (T1, T3, T4)	2.0	58	07/80 – 04/85	3527	
TRAFIC Box (T1, T3, T4)	2.0	59	06/86 – 04/89	3482	
TRAFIC Box (T1, T3, T4)	2.0	59	06/86 – 04/89	3527	
TRAFIC Box (T1, T3, T4)	2.0	60	05/85 – 02/89	3482	
TRAFIC Box (T1, T3, T4)	2.0	60	05/85 – 02/89	3527	
TRAFIC Box (T1, T3, T4)	2.0 4x4	59	06/86 – 04/89	3482	
TRAFIC Box (T1, T3, T4)	2.0 4x4	59	06/86 – 04/89	3527	
TRAFIC Box (T1, T3, T4)	2.1 D	43	09/80 – 04/89	3482	
TRAFIC Box (T1, T3, T4)	2.1 D	43	09/80 – 04/89	3527	
TRAFIC Box (T1, T3, T4)	2.1 D 4x4	43	11/86 – 04/89	3482	
TRAFIC Box (T1, T3, T4)	2.1 D 4x4	43	11/86 – 04/89	3527	
TRAFIC Box (TXX)	1.4	35	05/89 – 06/91	3482	
TRAFIC Box (TXX)	1.4	35	05/89 – 06/91	3527	
TRAFIC Box (TXX)	1.7	50	08/92 – 08/94	3482	
TRAFIC Box (TXX)	1.7	50	08/92 – 08/94	3527	
TRAFIC Box (TXX)	1.7	51	03/89 – 08/94	3482	
TRAFIC Box (TXX)	1.7	51	03/89 – 08/94	3527	
TRAFIC Box (TXX)	1.9 D	44	06/97 – 03/01	3482	
TRAFIC Box (TXX)	1.9 D	44	06/97 – 03/01	3527	
TRAFIC Box (TXX)	2.0	59	05/89 – 08/90	3482	
TRAFIC Box (TXX)	2.0	59	05/89 – 08/90	3527	
TRAFIC Box (TXX)	2.1 D	43	05/89 – 06/94	3482	
TRAFIC Box (TXX)	2.1 D	43	05/89 – 06/94	3527	
TRAFIC Box (TXX)	2.1 D	47	06/94 – 10/97	3482	
TRAFIC Box (TXX)	2.1 D	47	06/94 – 10/97	3527	
TRAFIC Box (TXX)	2.2	70	05/89 – 06/94	3482	
TRAFIC Box (TXX)	2.2	70	05/89 – 06/94	3527	
TRAFIC Box (TXX)	2.2	74	06/94 – 10/97	3482	
TRAFIC Box (TXX)	2.2	74	06/94 – 10/97	3527	
TRAFIC Box (TXX)	2.2 4x4	70	05/89 – 06/94	3482	
TRAFIC Box (TXX)	2.2 4x4	70	05/89 – 06/94	3527	
TRAFIC Box (TXX)	2.2 4x4	74	06/94 – 10/97	3482	
TRAFIC Box (TXX)	2.2 4x4	74	06/94 – 10/97	3527	
TRAFIC Box (TXX)	2.5 D	55	05/89 – 03/01	3482	
TRAFIC Box (TXX)	2.5 D	55	05/89 – 03/01	3527	
TRAFIC Box (TXX)	2.5 D	56	03/89 – 08/94	3482	
TRAFIC Box (TXX)	2.5 D	56	03/89 – 08/94	3527	
TRAFIC Box (TXX)	2.5 D 4x4	55	05/89 – 03/01	3482	
TRAFIC Box (TXX)	2.5 D 4x4	55	05/89 – 03/01	3527	
TRAFIC Bus (T5, T6, T7)	1.4	35	03/80 – 04/89	3482	
TRAFIC Bus (T5, T6, T7)	1.4	35	03/80 – 04/89	3527	
TRAFIC Bus (T5, T6, T7)	1.6	48	01/84 – 06/86	3482	
TRAFIC Bus (T5, T6, T7)	1.6	48	01/84 – 06/86	3527	
TRAFIC Bus (T5, T6, T7)	1.6 4x4	48	03/80 – 08/86	3482	
TRAFIC Bus (T5, T6, T7)	1.6 4x4	48	03/80 – 08/86	3527	
TRAFIC Bus (T5, T6, T7)	1.7	50	06/86 – 04/89	3482	
TRAFIC Bus (T5, T6, T7)	1.7	50	06/86 – 04/89	3527	
TRAFIC Bus (T5, T6, T7)	2.0	58	07/80 – 04/85	3482	
TRAFIC Bus (T5, T6, T7)	2.0	58	07/80 – 04/85	3527	
TRAFIC Bus (T5, T6, T7)	2.0	59	06/86 – 04/89	3482	
TRAFIC Bus (T5, T6, T7)	2.0	59	06/86 – 04/89	3527	
TRAFIC Bus (T5, T6, T7)	2.0 4x4	59	06/86 – 04/89	3482	
TRAFIC Bus (T5, T6, T7)	2.0 4x4	59	06/86 – 04/89	3527	
TRAFIC Bus (T5, T6, T7)	2.1 D	43	03/80 – 04/89	3482	

MAKE & MODEL   		KW	YEAR		
RENAULT					
TRAFIC Bus (T5, T6, T7)	2.1 D	43	03/80 – 04/89	3527	
TRAFIC Bus (T5, T6, T7)	2.1 D 4x4	43	05/85 – 02/89	3482	
TRAFIC Bus (T5, T6, T7)	2.1 D 4x4	43	05/85 – 02/89	3527	
TRAFIC Bus (TXW)	1.7	50	08/92 – 08/94	3482	
TRAFIC Bus (TXW)	1.7	50	08/92 – 08/94	3527	
TRAFIC Bus (TXW)	1.9 D	44	06/97 – 03/01	3482	
TRAFIC Bus (TXW)	1.9 D	44	06/97 – 03/01	3527	
TRAFIC Bus (TXW)	2.0	59	05/89 – 08/90	3482	
TRAFIC Bus (TXW)	2.0	59	05/89 – 08/90	3527	
TRAFIC Bus (TXW)	2.1 D	43	05/89 – 06/94	3482	
TRAFIC Bus (TXW)	2.1 D	43	05/89 – 06/94	3527	
TRAFIC Bus (TXW)	2.1 D	47	06/94 – 10/97	3482	
TRAFIC Bus (TXW)	2.1 D	47	06/94 – 10/97	3527	
TRAFIC Bus (TXW)	2.2	70	05/89 – 06/94	3482	
TRAFIC Bus (TXW)	2.2	70	05/89 – 06/94	3527	
TRAFIC Bus (TXW)	2.2	74	06/94 – 10/97	3482	
TRAFIC Bus (TXW)	2.2	74	06/94 – 10/97	3527	
TRAFIC Bus (TXW)	2.2 4x4	70	05/89 – 06/94	3482	
TRAFIC Bus (TXW)	2.2 4x4	70	05/89 – 06/94	3527	
TRAFIC Bus (TXW)	2.2 4x4	74	06/94 – 10/97	3482	
TRAFIC Bus (TXW)	2.2 4x4	74	06/94 – 10/97	3527	
TRAFIC Bus (TXW)	2.5 D	55	05/89 – 03/01	3482	
TRAFIC Bus (TXW)	2.5 D	55	05/89 – 03/01	3527	
TRAFIC Bus (TXW)	2.5 D 4x4	55	08/89 – 03/01	3482	
TRAFIC Bus (TXW)	2.5 D 4x4	55	08/89 – 03/01	3527	
TRAFIC II Box (FL)	1.9 dCi	59	04/01 – 07/03	3848	3795/1
TRAFIC II Box (FL)	1.9 dCi	75	03/01 -	3848	3795/1
TRAFIC II Box (FL)	1.9 dCi 100 (FL0C)	74	03/01 -	3848	3795/1
TRAFIC II Box (FL)	1.9 dCi 80 (FL0B)	60	03/01 -	3848	3795/1
TRAFIC II Box (FL)	2.0 (FL0A)	88	03/01 -	3848	3795/1
TRAFIC II Box (FL)	2.0 16V	86	08/06 -	3848	3795/1
TRAFIC II Box (FL)	2.0 dCi 115 (FL01, FL0U)	84	08/06 -	3848	3795/1
TRAFIC II Box (FL)	2.0 dCi 90 (FL0H)	66	08/06 -	3848	3795/1
TRAFIC II Box (FL)	2.5 dCi	84	08/07 -	3848	3795/1
TRAFIC II Box (FL)	2.5 dCi 135 (FL0D)	99	05/03 -	3848	3795/1
TRAFIC II Box (FL)	2.5 dCi 145 (FL0J)	107	08/06 -	3848	3795/1
TRAFIC II Box (FL)	2.5 DTi	99	03/03 – 07/03	3848	3795/1
TRAFIC II Bus (JL)	1.9 dCI 100 (JL0C)	74	03/01 -	3848	3795/1
TRAFIC II Bus (JL)	1.9 dCI 80 (JL0B)	60	03/01 -	3848	3795/1
TRAFIC II Bus (JL)	1.9 dCi	59	04/01 – 07/03	3848	3795/1
TRAFIC II Bus (JL)	2.0 (JL0A)	88	03/01 -	3848	3795/1
TRAFIC II Bus (JL)	2.0 16V	86	08/06 -	3848	3795/1
TRAFIC II Bus (JL)	2.0 dCi 115 (JL0H)	84	08/06 -	3848	3795/1
TRAFIC II Bus (JL)	2.0 dCi 90 (JL0H)	66	08/06 -	3848	3795/1
TRAFIC II Bus (JL)	2.5 dCi 115	84	02/08 -	3848	3795/1
TRAFIC II Bus (JL)	2.5 dCi 135 (JL0D)	99	05/03 -	3848	3795/1
TRAFIC II Bus (JL)	2.5 dCi 145 (JL0J)	107	08/06 -	3848	3795/1
TRAFIC II Bus (JL)	2.5 DTi	99	03/03 – 07/03	3848	3795/1
TRAFIC II Platform/Chassis (EL)	1.9 dCi	59	09/01 – 07/03	3848	3795/1
TRAFIC II Platform/Chassis (EL)	1.9 dCi 100 (EL0C)	74	03/01 -	3848	3795/1
TRAFIC II Platform/Chassis (EL)	1.9 dCi 80 (EL0B)	60	03/01 -	3848	3795/1
TRAFIC II Platform/Chassis (EL)	2.0 (EL0A)	88	03/01 -	3848	3795/1
TRAFIC II Platform/Chassis (EL)	2.0 16V	86	08/06 -	3848	3795/1
TRAFIC II Platform/Chassis (EL)	2.0 dCi 115 (EL0H)	84	08/06 -	3848	3795/1
TRAFIC II Platform/Chassis (EL)	2.0 dCi 90 (EL0H)	66	08/06 -	3848	3795/1
TRAFIC II Platform/Chassis (EL)	2.5 dCi	84	08/07 -	3848	3795/1
TRAFIC II Platform/Chassis (EL)	2.5 dCi 135 (EL0D)	99	03/01 -	3848	3795/1
TRAFIC II Platform/Chassis (EL)	2.5 dCi 145 (EL0J)	107	08/06 -	3848	3795/1
TRAFIC III Box (FG_)	1.6 dCi 115	85	05/14 -	4227	
TRAFIC III Box (FG_)	1.6 dCi 120	88	05/14 -	4227	
TRAFIC III Box (FG_)	1.6 dCi 125	92	07/15 -	4227	3795/1
TRAFIC III Box (FG_)	1.6 dCi 140	103	05/14 -	4227	
TRAFIC III Box (FG_)	1.6 dCi 145	107	07/15 -	4227	3795/1
TRAFIC III Box (FG_)	1.6 dCi 90	66	05/14 -	4227	
TRAFIC III Box (FG_)	1.6 dCi 95	70	07/15 -	4227	3795/1
TRAFIC III Bus (JG_)	1.6 dCi 115	85	05/14 -	4227	3795/1
TRAFIC III Bus (JG_)	1.6 dCi 120	88	05/14 -	4227	3795/1
TRAFIC III Bus (JG_)	1.6 dCi 125	92	07/15 -	4227	3795/1
TRAFIC III Bus (JG_)	1.6 dCi 140	103	05/14 -	4227	3795/1
TRAFIC III Bus (JG_)	1.6 dCi 145	107	07/15 -	4227	3795/1
TRAFIC III Bus (JG_)	1.6 dCi 90	66	05/14 -	4227	3795/1
TRAFIC III Bus (JG_)	1.6 dCi 95	70	07/15 -	4227	3795/1
TRAFIC III Platform/Chassis (EG_)	1.6 dCi 125	92	07/15 -	4227	3795/1
TRAFIC III Platform/Chassis (EG_)	1.6 dCi 145	107	07/15 -	4227	3795/1
TRAFIC III Platform/Chassis (EG_)	1.6 dCi 90	66	05/14 -	4227	
TRAFIC Panelvan/Van {TXX) 2.1D		43	05/89 – 06/94	3537	

MAKE & MODEL		KW	YEAR		
RENAULT					
TRAFIC Platform/Chassis (P6)	1.4	35	03/80 – 04/89	3482	
TRAFIC Platform/Chassis (P6)	1.4	35	03/80 – 04/89	3527	
TRAFIC Platform/Chassis (P6)	1.6	48	03/80 – 06/86	3482	
TRAFIC Platform/Chassis (P6)	1.6	48	03/80 – 06/86	3527	
TRAFIC Platform/Chassis (P6)	1.7	50	06/86 – 04/89	3482	
TRAFIC Platform/Chassis (P6)	1.7	50	06/86 – 04/89	3527	
TRAFIC Platform/Chassis (P6)	2.0	59	03/80 – 04/89	3482	
TRAFIC Platform/Chassis (P6)	2.0	59	03/80 – 04/89	3527	
TRAFIC Platform/Chassis (P6)	2.0	63	03/80 – 12/86	3482	
TRAFIC Platform/Chassis (P6)	2.0	63	03/80 – 12/86	3527	
TRAFIC Platform/Chassis (P6)	2.0 4x4	60	05/85 – 02/89	3482	
TRAFIC Platform/Chassis (P6)	2.0 4x4	60	05/85 – 02/89	3527	
TRAFIC Platform/Chassis (P6)	2.1 D	43	03/80 – 04/89	3482	
TRAFIC Platform/Chassis (P6)	2.1 D	43	03/80 – 04/89	3527	
TRAFIC Platform/Chassis (P6)	2.1 D	44	05/85 – 02/89	3482	
TRAFIC Platform/Chassis (P6)	2.1 D	44	05/85 – 02/89	3527	
TRAFIC Platform/Chassis (P6)	2.1 D 4x4	43	05/85 – 02/89	3482	
TRAFIC Platform/Chassis (P6)	2.1 D 4x4	43	05/85 – 02/89	3527	
TRAFIC Platform/Chassis (P6)	2.5 D	51	03/80 – 04/89	3482	
TRAFIC Platform/Chassis (P6)	2.5 D	51	03/80 – 04/89	3527	
TRAFIC Platform/Chassis (PXX)	1.7	50	05/89 – 08/94	3482	
TRAFIC Platform/Chassis (PXX)	1.7	50	05/89 – 08/94	3527	
TRAFIC Platform/Chassis (PXX)	2.0	60	03/89 – 12/91	3482	
TRAFIC Platform/Chassis (PXX)	2.0	60	03/89 – 12/91	3527	
TRAFIC Platform/Chassis (PXX)	2.0 [RWD]	59	05/89 – 10/97	3482	
TRAFIC Platform/Chassis (PXX)	2.0 [RWD]	59	05/89 – 10/97	3527	
TRAFIC Platform/Chassis (PXX)	2.1 D	47	09/94 – 04/98	3482	
TRAFIC Platform/Chassis (PXX)	2.1 D	47	09/94 – 04/98	3527	
TRAFIC Platform/Chassis (PXX)	2.1 D [RWD]	43	05/89 – 06/94	3482	
TRAFIC Platform/Chassis (PXX)	2.1 D [RWD]	43	05/89 – 06/94	3527	
TRAFIC Platform/Chassis (PXX)	2.1 D [RWD]	47	06/94 – 10/97	3482	
TRAFIC Platform/Chassis (PXX)	2.1 D [RWD]	47	06/94 – 10/97	3527	
TRAFIC Platform/Chassis (PXX)	2.2	70	05/89 – 06/94	3482	
TRAFIC Platform/Chassis (PXX)	2.2	70	05/89 – 06/94	3527	
TRAFIC Platform/Chassis (PXX)	2.2	74	09/94 – 04/98	3482	
TRAFIC Platform/Chassis (PXX)	2.2	74	09/94 – 04/98	3527	
TRAFIC Platform/Chassis (PXX)	2.2 4x4	74	09/94 – 04/98	3482	
TRAFIC Platform/Chassis (PXX)	2.2 4x4	74	09/94 – 04/98	3527	
TRAFIC Platform/Chassis (PXX)	2.5 D	51	05/89 – 03/01	3482	
TRAFIC Platform/Chassis (PXX)	2.5 D	51	05/89 – 03/01	3527	
TRAFIC Platform/Chassis (PXX)	2.5 D	55	05/98 – 03/01	3482	
TRAFIC Platform/Chassis (PXX)	2.5 D	55	05/98 – 03/01	3527	
TRAFIC Platform/Chassis (PXX)	2.5 D	56	03/89 – 08/94	3482	
TRAFIC Platform/Chassis (PXX)	2.5 D	56	03/89 – 08/94	3527	
TRAFIC Platform/Chassis (PXX)	2.5 D	58	09/94 – 04/98	3482	
TRAFIC Platform/Chassis (PXX)	2.5 D	58	09/94 – 04/98	3527	
TRAFIC Platform/Chassis (PXX)	2.5 D 4x4	56	03/89 – 08/94	3482	
TRAFIC Platform/Chassis (PXX)	2.5 D 4x4	56	03/89 – 08/94	3527	
TRAFIC Platform/Chassis (PXX)	2.5 D 4x4	58	09/94 – 01/99	3482	
TRAFIC Platform/Chassis (PXX)	2.5 D 4x4	58	09/94 – 01/99	3527	
TWINGO I (C06_)	1.2 (C063, C064)	40	03.1993 - 10.1996	3503/1	
TWINGO I (C06_)	1.2 (C066, C068)	43	05.1996 - 06.2007	3503/1	
TWINGO I (C06_)	1.2 (C067)	40	05.1996 - 03.2007	3503/1	
TWINGO I (C06_)	1.2 16V (C060)	44	08.2004 - 06.2007	3503/1	
TWINGO I (C06_)	1.2 16V (C06C, C06D, C06K)	55	01.2001 - 06.2007	3503/1	
TWINGO I (C06_)	1.2 LPG	44	10.2003 - 06.2007	3503/1	
TWINGO I (C06_)	1.2	44	09/98 – 08/00	3431	
TWINGO I (C06_)	1.2	44	09/98 – 08/00	3503	
TWINGO I (C06_)	1.2 (C063, C064)	40	03/93 – 10/96	3495	
TWINGO I (C06_)	1.2 (C066, C068)	43	05/96 -	3431	
TWINGO I (C06_)	1.2 (C066, C068)	43	05/96 -	3495	
TWINGO I (C06_)	1.2 (C066, C068)	43	05/96 -	3503	
TWINGO I (C06_)	1.2 (C067)	40	05/96 -	3431	
TWINGO I (C06_)	1.2 (C067)	40	05/96 -	3495	
TWINGO I (C06_)	1.2 (C067)	40	05/96 -	3503	
TWINGO I (C06_)	1.2 16V (C060)	44	08/04 – 06/07	3431	
TWINGO I (C06_)	1.2 16V (C060)	44	08/04 – 06/07	3503	
TWINGO I (C06_)	1.2 16V (C06C, C06D, C06K)	55	01/01 -	3431	
TWINGO I (C06_)	1.2 16V (C06C, C06D, C06K)	55	01/01 -	3503	
TWINGO I (C06_)	1.2 LPG	44	10/03 -	3431	
TWINGO I (C06_)	1.2 LPG	44	10/03 -	3503	
TWINGO I Box (S06_)	1.2 (S063, S064)	40	03/93 – 05/96	3495	
TWINGO I Box (S06_)	1.2 (S066, S068)	43	05/96 -	3431	
TWINGO I Box (S06_)	1.2 (S066, S068)	43	05/96 -	3495	
TWINGO I Box (S06_)	1.2 (S066, S068)	43	05/96 -	3503	
TWINGO I Kasa/eğik arka (S06_)	1.2	55	01.2001 - 06.2012	3503/1	

MAKE & MODEL		KW	YEAR		
RENAULT					
TWINGO I Kasa/eğik arka (S06_)	1.2 (S066, S068)	43	05.1996 - 08.2004	3503/1	
TWINGO II (CN0_)	1.2 (CN0D)	43	03.2007 - 09.2014	3503/1	
TWINGO II (CN0_)	1.2 16V	55	03.2008 -	3503/1	
TWINGO II (CN0_)	1.2 16V (CN04, CN0A, CN0B)	55	03.2007 - 09.2014	3503/1	
TWINGO II (CN0_)	1.2 16V (CN0K, CN0V)	56	03.2007 -	3503/1	
TWINGO II (CN0_)	1.2 TCe 100 (CN0P)	75	02.2011 -	3503/1	
TWINGO II (CN0_)	1.2 Turbo (CN0C, CN0F)	74	03.2007 - 09.2014	3503/1	
TWINGO II (CN0_)	1.5 dCi (CN0E)	47	03.2007 - 09.2014	3503/1	
TWINGO II (CN0_)	1.5 dCi (CN0U)	62	04.2008 - 09.2014	3503/1	
TWINGO II (CN0_)	1.5 dCi 75	55	10.2010 -	3503/1	
TWINGO II (CN0_)	1.5 dCi 90	63	10.2010 -	3503/1	
TWINGO II (CN0_)	1.6 RS (CN0N, CN0R, CN0S)	98	05.2008 - 09.2014	3503/1	
TWINGO II (CN0_)	1.2 (CN0D)	43	03/07 -	3431	
TWINGO II (CN0_)	1.2 (CN0D)	43	03/07 -	3503	
TWINGO II (CN0_)	1.2 16V (CN04, CN0A, CN0B)	55	03/07 -	3431	
TWINGO II (CN0_)	1.2 16V (CN04, CN0A, CN0B)	55	03/07 -	3503	
TWINGO II (CN0_)	1.2 16V (CN0K, CN0V)	56	03/07 -	3431	
TWINGO II (CN0_)	1.2 16V (CN0K, CN0V)	56	03/07 -	3503	
TWINGO II (CN0_)	1.2 TCe 100 (CN0P)	75	02/11 -	3431	
TWINGO II (CN0_)	1.2 TCe 100 (CN0P)	75	02/11 -	3503	
TWINGO II (CN0_)	1.2 Turbo (CN0C, CN0F)	74	03/07 -	3431	
TWINGO II (CN0_)	1.2 Turbo (CN0C, CN0F)	74	03/07 -	3503	
TWINGO II (CN0_)	1.5 dCi (CN0E)	47	03/07 -	3431	
TWINGO II (CN0_)	1.5 dCi (CN0E)	47	03/07 -	3503	
TWINGO II (CN0_)	1.5 dCi (CN0U)	62	04/08 -	3431	
TWINGO II (CN0_)	1.5 dCi (CN0U)	62	04/08 -	3503	
TWINGO II (CN0_)	1.5 dCi 75	55	10/10 -	3431	
TWINGO II (CN0_)	1.5 dCi 75	55	10/10 -	3503	
TWINGO II (CN0_)	1.5 dCi 90	63	10/10 -	3431	
TWINGO II (CN0_)	1.5 dCi 90	63	10/10 -	3503	
TWINGO II (CN0_)	1.6 RS (CN0N, CN0R, CN0S)	98	05/08 -	3950	3529/2
TWINGO III (BCM_)	0.9 TCe 90	66	09/14 -	4140	
TWINGO III (BCM_)	1.0 SCe 70	51	09/15 -	4140	
TWINGO III (BCM_)	1.0 SCe 70	52	09/14 -	4140	
VEL SATIS (BJ0_)	2.0 16 V Turbo	125	04/04 -		3853
VEL SATIS (BJ0_)	2.0 16V Turbo (BJ0K)	120	06/02 -		3853
VEL SATIS (BJ0_)	2.0 dCi (BJ03)	110	08/05 -		3853
VEL SATIS (BJ0_)	2.0 dCi (BJ03, BJ0B)	127	01/06 -		3853
VEL SATIS (BJ0_)	2.0 Turbo	108	04/05 -		3853
VEL SATIS (BJ0_)	2.2 dCi	83	12/04 -		3853
VEL SATIS (BJ0_)	2.2 dCi (BJ0E, BJ0F)	110	06/02 -		3853
VEL SATIS (BJ0_)	2.2 dCi (BJ0E, BJ0F, BJ0G, BJ0H)	102	09/04 -		3853
VEL SATIS (BJ0_)	2.2 dCi (BJ0H)	85	04/04 -		3853
VEL SATIS (BJ0_)	3.0 dCi (BJ0J, BJ0N)	130	06/02 -		3853
VEL SATIS (BJ0_)	3.0 dCi (BJ0S)	133	06/06 -		3853
VEL SATIS (BJ0_)	3.5 (BJ01)	170	10/04 -		3853
VEL SATIS (BJ0_)	3.5 V6 (BJ0R, BJ0V, BJ0U)	177	06/02 -		3853
WIND (E4M_)	1.2 (E4MF)	74	07/10 -	3950	3529/2
WIND (E4M_)	1.2 TCe 100 (E4MA)	75	02/11 -	3950	3529/2
WIND (E4M_)	1.6 (E4MB, E4MC)	98	07/10 -	3950	3529/2
ZOE (BFM_)	ZOE	65	06/12 -	3983	
KANGOO (KC0/1)	1.9 dTi (KCOU)	59	02/00 -	3659	
KANGOO (KC0/1)	1.6 16V bivalent	60	06/05 -	3659	
KANGOO (KC0/1)	1.9 (KCOD)	40	08/97 -	3659	
KANGOO (KC0/1)	1.9 (KCOE, KC02, KCOJ, KCON)	47	08/97 -	3659	
KANGOO (KC0/1)	1.9 dCi 4x4	62	10/03 -	3849	4093
KANGOO (KC0/1)	1.5 dCi	62	06/05 -	3659	
KANGOO (KC0/1)	1.5 dCi (KC08,KC09)	60	07/02 -	3659	
KANGOO (KC0/1) D 55	1.9 dCi 4x4 (KC0V)	59	10/01 -	3849	4093
KANGOO (KCO/1)	1.5 dCi (KC07)	48	12/01 -	3659	
KANGOO (KCO/I)	1.6 16V 4x4 (KC0P, KC0S, KC0L)	70	10/01 -	3849	4093
KANGOO Express (FC0/1)	1.4 (FCOC, FCOB, FCOH, FCOM)	55	08/97 -	3659	
KANGOO Express (FC0/1)	1.5 dCi	45	10/05 -	3659	
KANGOO Express (FC0/1)	1.5 dCi (FCIE)	50	06/05 -	3659	
KANGOO Express (FC0/1)	1.5 dCi (FCIR)	42	12/02 -	3659	
KANGOO Express (FC0/1)	1.6	64	02/08 -	3966	3967
KANGOO Express (FC0/1)	1.6	64	02/08 -	3983	
KANGOO Express (FC0/1)	1.9 D (FCOJ)	48	09/99 – 06/03	3659	
KANGOO Express (FC0/1)	1.9 dTi (FCOU)	59	02/00 -	3659	
KANGOO Express (FC0/1) D 55	1.9 (FCOD)	40	08/97 -	3659	
KANGOO Express (FC0/1) D 65	1.9 (FCOE, FC02,FCOJ,FCON)	47	08/97 -	3659	
KANGOO Express (FC0/1)	1.5 dCi (FC07, FCIR)	48	12/01 -	3659	
RENAULT SAMSUNG					
QM5	2.0 dCi 4x4	127	09/07 -	4143	3933

MAKE & MODEL   		KW	YEAR		
RENAULT TRUCKS					
D-Serie	12 P 210	154-155	01/13 -		
D-Serie	12 P 240	176-177	01/13 -		
D-Serie	12 P 250	184	01/13 -		
D-Serie	12 P 280	206	01/13 -		
MASCOTT Box Body / Estate	11055	78	01/99 – 06/04	3645	
MASCOTT Box Body / Estate	13035	92	01/99 – 06/04	3645	
MASCOTT Box Body / Estate	13055	92	01/99 – 06/04	3645	
MASCOTT Box Body / Estate	14035	103	01/01 – 06/04	3645	
MASCOTT Box Body / Estate	14055	103	01/01 – 06/04	3645	
MASCOTT Box Body / Estate	120.35 (A02100003)	85	05/04 – 10/10	3645	
MASCOTT Box Body / Estate	120.55 (A02300005)	85	05/04 – 10/10	3645	
MASCOTT Box Body / Estate	150.35 (A02300161)	107	10/01 – 06/04	3645	
MASCOTT Box Body / Estate	150.55 (A02300164)	107	10/01 – 06/04	3645	
MASCOTT Box Body / Estate	150.65 (A00300166)	107	10/01 – 06/04	3645	
MASCOTT Box Body / Estate	160.35 (A02100013)	115	05/04 – 10/10	3645	
MASCOTT Box Body / Estate	160.55 (A02300015)	115	05/04 – 10/10	3645	
MASCOTT Dumptruck	90	78	01/00 – 06/04	3575	
MASCOTT Dumptruck	90	78	01/00 – 06/04	3645	
MASCOTT Dumptruck	110	78	01/00 – 06/04	3575	
MASCOTT Dumptruck	110	78	01/00 – 06/04	3645	
MASCOTT Platform/Chassis	90	63	01/99 – 12/01	3575	
MASCOTT Platform/Chassis	90	63	01/99 – 12/01	3645	
MASCOTT Platform/Chassis	110	78	01/99 – 06/04	3575	
MASCOTT Platform/Chassis	110	78	01/99 – 06/04	3645	
MASCOTT Platform/Chassis	130	92	01/99 – 06/04	3575	
MASCOTT Platform/Chassis	130	92	01/99 – 06/04	3645	
MASCOTT Platform/Chassis	140	103	01/01 – 06/04	3575	
MASCOTT Platform/Chassis	140	103	01/01 – 06/04	3645	
MASCOTT Platform/Chassis	120.35 (A00100003, A01100003)	85	05/04 – 12/10	3575	
MASCOTT Platform/Chassis	120.35 (A00100003, A01100003)	85	05/04 – 12/10	3645	
MASCOTT Platform/Chassis	120.55 (A00300005, A01300005)	85	05/04 – 12/10	3575	
MASCOTT Platform/Chassis	120.55 (A00300005, A01300005)	85	05/04 – 12/10	3645	
MASCOTT Platform/Chassis	120.65 (A00500007)	85	05/04 – 12/10	3575	
MASCOTT Platform/Chassis	120.65 (A00500007)	85	05/04 – 12/10	3645	
MASCOTT Platform/Chassis	150.35 (A00300161)	107	10/01 – 06/04	3575	
MASCOTT Platform/Chassis	150.35 (A00300161)	107	10/01 – 06/04	3645	
MASCOTT Platform/Chassis	150.35 (A00300164)	107	10/01 – 06/04	3575	
MASCOTT Platform/Chassis	150.35 (A00300164)	107	10/01 – 06/04	3645	
MASCOTT Platform/Chassis	160.35 (A00100013, A01100013)	115	05/04 – 12/10	3575	
MASCOTT Platform/Chassis	160.35 (A00100013, A01100013)	115	05/04 – 12/10	3645	
MASCOTT Platform/Chassis	160.55 (A00300015, A01300015)	115	05/04 – 12/10	3575	
MASCOTT Platform/Chassis	160.55 (A00300015, A01300015)	115	05/04 – 12/10	3645	
MASCOTT Platform/Chassis	160.65 (A00500017, A01500017, B03200017)	115	05/04 – 12/10	3575	
MASCOTT Platform/Chassis	160.65 (A00500017, A01500017, B03200017)	115	05/04 – 12/10	3645	
Maxity	11028	81	03/07 -	3965/1	
Maxity	11032	81	03/07 -	3965/1	
Maxity	11035	81	03/07 -	3965/1	
Maxity	13035	96	03/07 -	3965/1	
Maxity	15035	110	03/07 -	3965/1	
MESSENGER Damper1i arac; B 120.35		90	09/96 – 06/99	3537	
MESSENGER Damper1i arac; B 120.65		90	09/96 – 06/99	3537	
MESSENGER Damperli arac; B 120.55		90	09/96 – 06/99	3537	
MESSENGER Kombi Van B 120.55 (FN60F5)		85	01/94 – 09/96	3537	
MESSENGER Kombi Van B 80.35 (FN40B5)		55	09/90 – 06/99	3537	
MESSENGER Kombi Van B 80.45 (FN40A5)		55	09/90 – 06/99	3537	
MESSENGER Kornbi Van B 110.45 4x4 (4x4F06)		78	09/96 – 06/99	3537	
MESSENGER Kornbi Van B 120.35		90	09/96 – 06/99	3537	
MESSENGER Kornbi Van B 120.55 (FN60F7)		90	09/96 – 06/99	3537	
MESSENGER Platform si B 120.55 (FNGOFS)		85	01/94 – 09/96	3537	
MESSENGER Platform si B 110.45 4x4 (4x4F06)		78	09/96 – 06/99	3537	
MESSENGER Platform sasi B 120.35 (FN40B5)		85	10/91 – 07/96	3537	
MESSENGER Platform sasi B 120.35 (FN40B7)		90	09/96 – 06/99	3537	
MESSENGER Platform sasi B 120.55 (FN60F7)		90	09/96 – 06/99	3537	
MESSENGER Platform sasi B 120.65 (FN60F6)		85	01/94 – 09/96	3537	
MESSENGER Platform sasi B 80.35 (FN40B5)		55	09/90 – 06/99	3537	
MESSENGER Platform sasi B 80.45 (FN40A5)		55	09/90 – 06/99	3537	
MESSENGER Platform sasl B 120.65 (FN60F8)		90	09/96 – 06/99	3537	
Midliner	S 160.09/B (MIDS 06.02.12 B)	117	01/90 – 09/93	3773	
Midliner	S 180.08/A (MIDR 06.02.26 V/41)	132	05/96 – 01/00	3773	
Midliner	S 180.08/A,S 180.08/B (MIDR 06.02.26 V)	129	11/92 – 10/96	3773	
Midliner	S 180.09/B (MIDR 06.02.26 V)	129	11/92 – 10/96	3773	
Midliner	S 180.09/B (MIDR 06.02.26 V/41)	132	05/96 – 01/00	3773	
Midliner	S 210.08/A (MIDR 06.02.26 W)	151	04/95 – 01/00	3773	
Midliner	S 210.08/A (MIDR 06.02.26 W/41)	151	04/95 – 01/00	3773	
Midliner	S 210.09/B (MIDR 06.02.26 W)	151	04/95 – 01/00	3773	
Midliner	S 210.09/B (MIDR 06.02.26 W/41)	151	04/95 – 01/00	3773	

MAKE & MODEL   		KW	YEAR		
RENAULT TRUCKS					
Midlum	160.08	118	05/06 -		
Midlum	160.12	118	05/06 -		
Midlum	190.08	140	05/06 -		
Midlum	190.12	140	05/06 -		
Midlum	190.13	140	05/06 -		
Midlum	190.14	140	05/06 -		
Midlum	190.16	140	05/06 -		
Midlum	220.08	158	05/06 -		
Midlum	220.13	158	05/06 -		
Midlum	220.16	158	05/06 -		
Midlum	240.12	177	05/06 -		
Midlum	240.13	177	05/06 -		
Midlum	240.14	177	05/06 -		
Midlum	240.15	177	05/06 -		
Midlum	240.16	177	05/06 -		
Midlum	240.18	177	05/06 -		
Midlum	280.12	206	05/06 -		
Midlum	280.13	206	05/06 -		
Midlum	280.14	206	05/06 -		
Midlum	280.16	206	05/06 -		
Midlum	280.18	206	05/06 -		
B Kombi Van 70		53	01/83 – 12/90	3537	
B Kombi Van 90		68	04/86 – 09/90	3537	
B Kombi Van 90		71	08/90 – 01/92	3537	
B Platform sasi 70		53	01/83 – 12/90	3537	
B Platform sasi 90		71	08/90 – 01/92	3537	
B Platform sasl 90		68	04/86 – 09/90	3537	
MASCOTT Box Body / Estate	9035	63	01/99 – 12/01	3575	
MASCOTT Box Body / Estate	9035	63	01/99 – 12/01	3645	
MASCOTT Box Body / Estate	11035	78	01/99 – 06/04	3575	
MASCOTT Box Body / Estate	11035	78	01/99 – 06/04	3645	
MASCOTT Box Body / Estate	11050	78	01/99 – 06/04	3575	
MASCOTT Box Body / Estate	11050	78	01/99 – 06/04	3645	
MASCOTT Box Body / Estate	11055	78	01/99 – 06/04	3575	
MASCOTT Box Body / Estate	13035	92	01/99 – 06/04	3575	
MASCOTT Box Body / Estate	13055	92	01/99 – 06/04	3575	
MASCOTT Box Body / Estate	14035	103	01/01 – 06/04	3575	
MASCOTT Box Body / Estate	14055	103	01/01 – 06/04	3575	
MASCOTT Box Body / Estate	120.35 (A02100003)	85	05/04 – 10/10	3575	
MASCOTT Box Body / Estate	120.55 (A02300005)	85	05/04 – 10/10	3575	
MASCOTT Box Body / Estate	150.35 (A02300161)	107	10/01 – 06/04	3575	
MASCOTT Box Body / Estate	150.55 (A02300164)	107	10/01 – 06/04	3575	
MASCOTT Box Body / Estate	150.65 (A00300166)	107	10/01 – 06/04	3575	
MASCOTT Box Body / Estate	160.35 (A02100013)	115	05/04 – 10/10	3575	
MASCOTT Box Body / Estate	160.55 (A02300015)	115	05/04 – 10/10	3575	
Midliner	S 120.08/A (T 4.40 A/3)	88	11/92 – 10/94	3773	
Midliner	S 120.08/A (T 4.40 CC)	88	11/92 – 10/94	3773	
Midliner	S 120.08/A (T 4.40)	82	09/90 – 11/92	3773	
Midliner	S 135.08/A (T 4.40 B/3)	102	02/94 – 05/96	3773	
Midliner	S 135.08/A,S 150.08/A (MIDR 04.02.26 A/41)	100	05/96 – 01/00	3773	
Midliner	S 135.08/A,S 150.08/A (MIDR 04.02.26 B/41)	100	05/96 – 01/00	3773	
Midliner	S 140.08/A,S 140.08/B (MIDS 06.02.12 C)	103	01/90 – 09/93	3773	
Midliner	S 140.09/B (MIDS 06.02.12 C)	103	01/90 – 09/93	3773	
Midliner	S 150.08/A,S 150.08/B (MIDR 06.02.26 U)	110	11/92 – 01/94	3773	
Midliner	S 150.08/A,S 150.08/B (MIDS 06.02.12 D/3)	110	01/94 – 05/96	3773	
Midliner	S 150.08/B (MIDR 06.02.26 U)	110	11/92 – 01/94	3773	
Midliner	S 150.08/B (MIDS 06.02.12 D/3)	110	01/94 – 05/96	3773	
Midliner	S 150.09/B (MIDR 06.02.26 U)	110	11/92 – 01/94	3773	
Midliner	S 150.09/B (MIDS 06.02.12 D/3)	110	01/94 – 05/96	3773	
Midliner	S 150.09/B,S 135.09/B (MIDR 04.02.26 A/41)	100	05/96 – 01/00	3773	
Midliner	S 150.09/B,S 135.09/B (MIDR 04.02.26 B/41)	100	05/96 – 01/00	3773	
Midliner	S 160.08/A,S 160.08/B (MIDS 06.02.12 B)	117	01/90 – 09/93	3773	
REX MOTORCYCLES					
ESCAPE	Escape 25	1	01/03 – 12/06		4270
ESCAPE	Escape 50	2	01/03 – 12/06		4270
ROEWE (SAIC)					
550	1.8 Turbo	118	06/08 -	3943	
750	1.8 Turbo	118	03/08 -	3943	
750	2.5	135	01/07 -	3943	
ROLLS-ROYCE					
PHANTOM	6.75	338	08/02 -	4208	
PHANTOM (RR1)	6.75 (N73 B68 A)	338	08/02 -		4179
PHANTOM (RR2)	6.8 V12 (N73 B68 A)	338	03/06 -		4179
PHANTOM (RR3)	6.8 V12 (N73 B68 A)	338	01/07 -		4179
PHANTOM Coupe	6.75 V12	338	01/07 -	4208	
PHANTOM Drophead Coupe	6.75 V12	338	03/06 -	4208	

MAKE & MODEL   		KW	YEAR		
ROVER					
200 (RF)	211	44	01/98 – 03/00	3683	
200 (RF)	214 i	55	11/95 – 03/00	3683	
200 (RF)	214 Si	76	11/95 – 03/00	3683	
200 (RF)	216 Si	82	11/95 – 03/00	3683	
200 (RF)	218 K Vi	107	11/95 – 03/00	3683	
200 (RF)	218 Si	88	08/99 – 03/00	3683	
200 (RF)	220 D/SD	63	11/95 – 03/00	3683	
200 (RF)	220 SDi	77	11/95 – 03/00	3683	
200 Convertible (XW)	214 1.4	66	01/92 – 11/99	3872	4212
200 Convertible (XW)	214 1.4	70	04/90 – 09/92	3872	4212
200 Convertible (XW)	214 1.4i 16V	76	01/93 – 11/99	3872	4212
200 Convertible (XW)	216 1.6	82	04/90 – 02/96	3872	4212
200 Convertible (XW)	216 1.6i	90	01/92 – 11/99	3872	4212
200 Convertible (XW)	216 1.6i 16V	82	01/96 – 11/99	3872	4212
200 Coupe (XW)	216	82	01/96 – 12/97	3872	4212
200 Coupe (XW)	216	90	10/92 – 06/99	3872	4212
200 Coupe (XW)	216	90	10/92 – 06/99	3683	
200 Coupe (XW)	2.0	152	10/92 – 09/97	3683	4212
200 Coupe (XW)	2.0	152	10/92 – 09/97	3872	
200 Coupe (XW)	220 GSi	100	05/94 – 06/99	3872	4212
200 Coupe (XW)	220 GSi	100	05/94 – 06/99	3683	
200 Coupe (XW)	220 Turbo	147	10/92 – 06/99	3872	4212
200 Coupe (XW)	220 Turbo	147	10/92 – 06/99	3683	
200 Coupe (XW) 216	16 K4F	82	01/1996 - 12/1997	3872/1	
200 Coupe (XW) 216	D 16 A8	90	10/1992 - 06/1999	3872/1	
200 Coupe (XW) 220 GSi	20 T4H	100	05/1994 - 06/1999	3872/1	
200 Coupe (XW) 220 GTi T.	-	132	01/1994 - 11/1999	3872/1	
200 Coupe (XW) 220 Turbo	20 T4G	147	10/1992 - 06/1999	3872/1	
200 Hatchback (RF)	211	44	01/98 – 03/00	3872	4212
200 Hatchback (RF)	214 i	55	11/95 – 03/00	3872	4212
200 Hatchback (RF)	214 Si	76	11/95 – 03/00	3872	4212
200 Hatchback (RF)	216 Si	82	11/95 – 03/00	3872	4212
200 Hatchback (RF)	218 K Vi	107	11/95 – 03/00	3872	4212
200 Hatchback (RF)	218 Si	88	08/99 – 03/00	3872	4212
200 Hatchback (RF)	220 D/SD	63	11/95 – 03/00	3872	4212
200 Hatchback (RF)	220 SDi	77	11/95 – 03/00	3872	4212
200 Hatchback (XW)	214	55	09/93 – 10/95	3872	4212
200 Hatchback (XW)	214	55	09/93 – 10/95	3683	
200 Hatchback (XW)	214 GSi/Si	66	10/89 – 10/95	3872	4212
200 Hatchback (XW)	214 GSi/Si	66	10/89 – 10/95	3683	
200 Hatchback (XW)	214 GSi/Si	70	01/90 – 10/95	3872	4212
200 Hatchback (XW)	214 GSi/Si	70	01/90 – 10/95	3683	
200 Hatchback (XW)	214 Si/Gsi	76	12/92 – 10/95	3872	4212
200 Hatchback (XW)	214 Si/Gsi	76	12/92 – 10/95	3683	
200 Hatchback (XW)	216 GSi	82	10/89 – 10/95	3872	4212
200 Hatchback (XW)	216 GSi	82	10/89 – 10/95	3683	
200 Hatchback (XW)	216 GSi	85	10/89 – 10/95	3872	4212
200 Hatchback (XW)	216 GSi	85	10/89 – 10/95	3683	
200 Hatchback (XW)	216 GTi	90	09/90 – 10/95	3872	4212
200 Hatchback (XW)	216 GTi	90	09/90 – 10/95	3683	
200 Hatchback (XW)	216 GTi	96	09/90 – 10/95	3872	4212
200 Hatchback (XW)	216 GTi	96	09/90 – 10/95	3683	
200 Hatchback (XW)	218 D	52	09/91 – 10/95	3872	4212
200 Hatchback (XW)	218 D	52	09/91 – 10/95	3683	
200 Hatchback (XW)	218 TD	65	09/91 – 10/95	3872	4212
200 Hatchback (XW)	218 TD	65	09/91 – 10/95	3683	
200 Hatchback (XW)	220 GTi	100	01/93 – 10/95	3872	4212
200 Hatchback (XW)	220 GTi	100	01/93 – 10/95	3683	
200 Hatchback (XW)	220 GTi	103	09/91 – 10/95	3872	4212
200 Hatchback (XW)	220 GTi	103	09/91 – 10/95	3683	
200 Hatchback (XW)	220 Turbo	147	01/93 – 10/95	3872	4212
200 Hatchback (XW)	220 Turbo	147	01/93 – 10/95	3683	
200 II Cabrio (XW) 214 1.4i 16V	14 K4F	76	01/1993 - 11/1999	3872/1	
200 II Cabrio (XW) 214 44287	14 K4C	70	04/1990 - 09/1992	3872/1	
200 II Cabrio (XW) 214 44287	14 K4C, 14 K4D	66	01/1992 - 11/1999	3872/1	
200 II Cabrio (XW) 214 44287	14 K4C, 14 K4D	66	01/1992 - 11/1999	3872/1	
200 II Cabrio (XW) 216 1.6i	D 16 A8	90	01/1992 - 11/1999	3872/1	
200 II Cabrio (XW) 216 1.6i 16V	16 K4F	82	01/1996 - 11/1999	3872/1	
200 II Cabrio (XW) 216 44348	D 16 Z2	82	04/1990 - 02/1996	3872/1	
200 II Hatchback (RF) 211	11 K2D	44	01/1998 - 03/2000	3872/1	
200 II Hatchback (RF) 214	14 K4D	66	01/1996 - 12/1997	3872/1	
200 II Hatchback (RF) 214 i	14 K2F	55	11/1995 - 03/2000	3872/1	
200 II Hatchback (RF) 214 i	14 K2F	55	11/1995 - 03/2000	3872/1	
200 II Hatchback (RF) 214 Si	14 K4F	76	11/1995 - 03/2000	3872/1	
200 II Hatchback (RF) 214 Si	14 K4F	76	11/1995 - 03/2000	3872/1	
200 II Hatchback (RF) 216 Si	16 K4F	82	11/1995 - 06/1999	3872/1	

MAKE & MODEL		KW	YEAR		
ROVER					
200 II Hatchback (RF) 218 K Vi	18 K4K (11.95-.)	107	11/1995 - 03/2000	3872/1	
200 II Hatchback (RF) 218 Si	18 K4F	88	08/1999 - 03/2000	3872/1	
200 II Hatchback (RF) 220 D/SD	20 T2R (04.96-.)	63	11/1995 - 03/2000	3872/1	
200 II Hatchback (RF) 220 SDi	20 T2N (11.95-.)	77	11/1995 - 03/2000	3872/1	
200 II Hatchback (XW) 214 GSi/Si	14 K4C	70	01/1990 - 10/1995	3872/1	
200 II Hatchback (XW) 214 GSi/Si	14 K4F	76	12/1992 - 10/1995	3872/1	
200 II Hatchback (XW) 214 Si/Gsi	14 K4C, 14 K4D	66	10/1989 - 10/1995	3872/1	
200 II Hatchback (XW) 214 Si/Gsi	14 K4C, 14 K4D	66	10/1989 - 10/1995	3872/1	
200 II Hatchback (XW) 216 GSi	D 16 A7	85	10/1989 - 10/1995	3872/1	
200 II Hatchback (XW) 216 GSi	D 16 Z2	82	01/1990 - 12/1995	3872/1	
200 II Hatchback (XW) 216 GTi	D 16 A8	90	01/1990 - 10/1995	3872/1	
200 II Hatchback (XW) 216 GTi	D 16 A9	96	09/1990 - 10/1995	3872/1	
200 II Hatchback (XW) 218 D	XUD9	47	09/1991 - 09/1992	3872/1	
200 II Hatchback (XW) 218 D	XUD9	52	09/1991 - 10/1995	3872/1	
200 II Hatchback (XW) 218 TD	XUD 7TE	65	09/1991 - 10/1995	3872/1	
200 II Hatchback (XW) 220 GTi	20 M4F	103	09/1991 - 10/1995	3872/1	
200 II Hatchback (XW) 220 GTi	20 T4H	100	01/1993 - 10/1995	3872/1	
200 II Hatchback (XW) 220 GTi T.	-	132	01/1994 - 11/1999	3872/1	
200 II Hatchback (XW) 220 Turbo	20 T4G	147	01/1993 - 12/1995	3872/1	
2000-3500 (P6)	3500	104	04/68 – 05/76	3416	
2000-3500 (P6)	3500	110	04/68 – 05/76	3416	
2000-3500 (P6)	2200 (TC)	83	09/63 – 05/76	3416	
2000-3500 Hatchback (SD1)	2000	74	10/82 – 10/86	3423/1	
2000-3500 Hatchback (SD1)	2300	88	09/77 – 10/86	3416	
2000-3500 Hatchback (SD1)	2300	88	09/77 – 10/86	3423/1	
2000-3500 Hatchback (SD1)	2600	99	09/77 – 10/82	3416	
2000-3500 Hatchback (SD1)	3500	115	06/76 – 10/86	3416	
2000-3500 Hatchback (SD1)	3500	115	06/76 – 10/86	3423/1	
2000-3500 Hatchback (SD1)	2400 TD	67	05/82 – 10/86	3416	
2000-3500 Hatchback (SD1)	2400 TD	67	05/82 – 10/86	3423/1	
2000-3500 Hatchback (SD1)	2600 S	93	10/82 – 10/86	3423/1	
2000-3500 Hatchback (SD1)	3500 Vitesse	142	10/82 – 10/86	3423/1	
25 (RF)	1.1	44	11/99 – 05/05	3872	4212
25 (RF)	1.1	44	11/99 – 05/05	3683	
25 (RF)	1.1	55	09/99 – 06/01	3872	4212
25 (RF)	1.1	55	09/99 – 06/01	3683	
25 (RF)	1.1 16V	55	01/04 – 05/05	3872	4212
25 (RF)	1.1 16V	55	01/04 – 05/05	3683	
25 (RF)	1.4 16V	62	10/99 – 05/05	3872	4212
25 (RF)	1.4 16V	62	10/99 – 05/05	3683	
25 (RF)	1.4 16V	76	10/99 – 05/05	3872	4212
25 (RF)	1.4 16V	76	10/99 – 05/05	3683	
25 (RF)	1.6 16V	80	10/99 – 05/05	3872	4212
25 (RF)	1.6 16V	80	10/99 – 05/05	3683	
25 (RF)	1.8 16V	85	10/99 – 05/05	3872	4212
25 (RF)	1.8 16V	85	10/99 – 05/05	3683	
25 (RF)	1.8 16V	107	02/00 – 05/05	3872	4212
25 (RF)	1.8 16V	107	02/00 – 05/05	3683	
25 (RF)	2.0 iDT	74	10/99 – 05/05	3872	4212
25 (RF)	2.0 iDT	74	10/99 – 05/05	3683	
25 (RF)	2.0 iDT	83	01/02 – 12/04	3872	4212
25 (RF)	2.0 iDT	83	01/02 – 12/04	3683	
25 Hatchback (RF) 2.0 iDT	20 T2N	74	10/1999 - 05/2005	3872/1	
25 Hatchback (RF) 2.0 iDT	20 T2N	83	01/2002 - 12/2004	3872/1	
25 Hatchback (RF) 44197	-	44	11/1999 - 05/2005	3872/1	
25 Hatchback (RF) 44197 16V	11 K4F	55	01/2004 - 05/2005	3872/1	
25 Hatchback (RF) 44287 16V	14 K4F	76	10/1999 - 05/2005	3872/1	
25 Hatchback (RF) 44287 16V	14 K4M	62	10/1999 - 05/2005	3872/1	
25 Hatchback (RF) 44348 16V	16 K4F	80	10/1999 - 05/2005	3872/1	
25 Hatchback (RF) 44409 16V	18 K4F	85	10/1999 - 05/2005	3872/1	
25 Hatchback (RF) 44409 16V	18 K4K	107	02/2000 - 05/2005	3872/1	
400 (RT)	414	55	03/96 – 12/99	3872	4212
400 (RT)	414	55	03/96 – 12/99	3683	
400 (RT)	414 Si	76	05/95 – 03/00	3872	4212
400 (RT)	414 Si	76	05/95 – 03/00	3683	
400 (RT)	416 Si	82	05/95 – 03/00	3872	4212
400 (RT)	416 Si	82	05/95 – 03/00	3683	
400 (RT)	416 Si	83	05/95 – 03/00	3872	4212
400 (RT)	416 Si	83	05/95 – 03/00	3683	
400 (RT)	416 Si	85	05/95 – 03/00	3872	4212
400 (RT)	416 Si	85	05/95 – 03/00	3683	
400 (RT)	420 D	63	11/95 – 03/00	3872	4212
400 (RT)	420 D	63	11/95 – 03/00	3683	
400 (RT)	420 Di	77	05/95 – 03/00	3872	4212
400 (RT)	420 Di	77	05/95 – 03/00	3683	
400 (RT)	420 Si Lux	100	12/95 – 03/00	3872	4212

MAKE & MODEL		KW	YEAR		
ROVER					
400 (RT)	420 Si Lux	100	12/95 – 03/00	3683	
400 (XW)	414	70	01/93 – 04/95	3872	4212
400 (XW)	414	70	01/93 – 04/95	3683	
400 (XW)	2.0 Turbo GSi Sport	152	10/92 – 04/95	3872	4212
400 (XW)	2.0 Turbo GSi Sport	152	10/92 – 04/95	3683	
400 (XW)	414 GSI/SI	66	04/90 – 04/95	3872	4212
400 (XW)	414 GSI/SI	66	04/90 – 04/95	3683	
400 (XW)	414 GSI/SI CAT	76	01/93 – 04/95	3683	
400 (XW)	414 GSI/SI Cat	76	10/92 – 04/95	3872	4212
400 (XW)	416 GSI	82	04/90 – 04/95	3872	4212
400 (XW)	416 GSI	82	04/90 – 04/95	3683	
400 (XW)	416 GSI/GSE	85	04/90 – 04/95	3872	4212
400 (XW)	416 GSI/GSE	85	04/90 – 04/95	3683	
400 (XW)	416 GTI	90	04/90 – 04/95	3872	4212
400 (XW)	416 GTI	90	04/90 – 04/95	3683	
400 (XW)	416 GTI/GTE	96	04/90 – 04/95	3872	4212
400 (XW)	416 GTI/GTE	96	04/90 – 04/95	3683	
400 (XW)	418 D	49	09/91 – 04/95	3872	4212
400 (XW)	418 D	49	09/91 – 04/95	3683	
400 (XW)	418 TD	65	09/91 – 04/95	3872	4212
400 (XW)	418 TD	65	09/91 – 04/95	3683	
400 (XW)	420 GSI/SLI/GTI/Vite	100	01/93 – 04/95	3872	4212
400 (XW)	420 GSI/SLI/GTI/Vite	100	01/93 – 04/95	3683	
400 (XW)	420 GTI/GSI/Vitesse	103	02/92 – 04/95	3872	4212
400 (XW)	420 GTI/GSI/Vitesse	103	02/92 – 04/95	3683	
400 (XW)	420 Turbo	147	01/93 – 04/95	3872	4212
400 (XW)	420 Turbo	147	01/93 – 04/95	3683	
400 Hatchback (RT)	414	55	03/96 – 12/97	3872	4212
400 Hatchback (RT)	414	55	03/96 – 12/97	3683	
400 Hatchback (RT)	414 Si	76	05/95 – 03/00	3872	4212
400 Hatchback (RT)	414 Si	76	05/95 – 03/00	3683	
400 Hatchback (RT)	416 Si	82	05/95 – 03/00	3872	4212
400 Hatchback (RT)	416 Si	82	05/95 – 03/00	3683	
400 Hatchback (RT)	416 Si	83	06/95 – 03/00	3872	4212
400 Hatchback (RT)	416 Si	83	06/95 – 03/00	3683	
400 Hatchback (RT)	416 Si	85	06/95 – 03/00	3872	4212
400 Hatchback (RT)	416 Si	85	06/95 – 03/00	3683	
400 Hatchback (RT)	420 D	63	11/95 – 03/00	3872	4212
400 Hatchback (RT)	420 D	63	11/95 – 03/00	3683	
400 Hatchback (RT)	420 Di	77	05/95 – 03/00	3872	4212
400 Hatchback (RT)	420 Di	77	05/95 – 03/00	3683	
400 Hatchback (RT)	420 Si Lux	100	12/95 – 03/00	3872	4212
400 Hatchback (RT)	420 Si Lux	100	12/95 – 03/00	3683	
400 II (RT) 414	14 K2F	55	03/1996 - 12/1999	3872/1	
400 II (RT) 414 Si	14 K4F	76	05/1995 - 03/2000	3872/1	
400 II (RT) 416 Si	16 K4F	82	05/1995 - 03/2000	3872/1	
400 II (RT) 416 Si	D 16 Y3	83	03/1995 - 06/1999	3872/1	
400 II (RT) 416 Si	D16B2	85	05/1995 - 03/2000	3872/1	
400 II (RT) 420 D	20 T2R (04.96-.)	63	11/1995 - 03/2000	3872/1	
400 II (RT) 420 Di	20 T2N (05.95-.)	77	05/1995 - 03/2000	3872/1	
400 II (RT) 420 Si Lux	20 T4H	100	12/1995 - 03/2000	3872/1	
400 II (XW) 414	14 K4C	70	01/1993 - 04/1995	3872/1	
400 II (XW) 414 GSI/SI	14 K4C, 14 K4D	66	04/1990 - 04/1995	3872/1	
400 II (XW) 414 GSI/SI Cat	14 K4F	76	10/1992 - 04/1995	3872/1	
400 II (XW) 416 GSI	D 16 Z2	82	04/1990 - 04/1995	3872/1	
400 II (XW) 416 GSI/GSE	D 16 A7	85	04/1990 - 04/1995	3872/1	
400 II (XW) 416 GTI	D 16 A8	90	04/1990 - 04/1995	3872/1	
400 II (XW) 416 GTI/GTE	D 16 A9	96	04/1990 - 04/1995	3872/1	
400 II (XW) 418 D	XUD9	49	09/1991 - 04/1995	3872/1	
400 II (XW) 418 TD	XUD 7TE	65	09/1991 - 04/1995	3872/1	
400 II (XW) 420 GSI/SLI/GTI/Vite	20 T4H	100	01/1993 - 04/1995	3872/1	
400 II (XW) 420 GTI/GSI/Vitesse	20 M4F	103	02/1992 - 04/1995	3872/1	
400 II (XW) 420 T GSi	-	152	10/1992 - 04/1995	3872/1	
400 II (XW) 420 Turbo	20 T4G	147	01/1993 - 04/1995	3872/1	
400 II Hatchback (RT) 414	14 K2F	55	03/1996 - 12/1997	3872/1	
400 II Hatchback (RT) 414 Si	14 K4F	76	05/1995 - 03/2000	3872/1	
400 II Hatchback (RT) 416 Si	16 K4F	82	05/1995 - 03/2000	3872/1	
400 II Hatchback (RT) 416 Si	D 16 Y3	83	06/1995 - 03/2000	3872/1	
400 II Hatchback (RT) 416 Si	D16B2	85	06/1995 - 03/2000	3872/1	
400 II Hatchback (RT) 420 D	20 T2R (04.96-.)	63	11/1995 - 03/2000	3872/1	
400 II Hatchback (RT) 420 Di	20 T2N (05.95-.)	77	05/1995 - 03/2000	3872/1	
400 II Hatchback (RT) 420 Si Lux	20 T4H	100	12/1995 - 03/2000	3872/1	
400 Tourer (XW)	1.6 i	82	05/94 – 11/98	3872	4212
400 Tourer (XW)	1.6 i	82	05/94 – 11/98	3683	
400 Tourer (XW)	1.6 i	90	05/94 – 11/98	3872	4212
400 Tourer (XW)	1.6 i	90	05/94 – 11/98	3683	

MAKE & MODEL		KW	YEAR		
ROVER					
400 Tourer (XW)	1.8 i	107	06/96 – 11/98	3872	4212
400 Tourer (XW)	1.8 i	107	06/96 – 11/98	3683	
400 Tourer (XW)	1.8 TD	65	09/93 – 11/98	3872	4212
400 Tourer (XW)	1.8 TD	65	09/93 – 11/98	3683	
400 Tourer (XW)	2.0 i	100	05/94 – 11/98	3872	4212
400 Tourer (XW)	2.0 i	100	05/94 – 11/98	3683	
400 Tourer (XW) 2.0 i	20 T4H	100	05/1994 - 11/1998	3872/1	
400 Tourer (XW) 44348 i	D 16 A8	90	05/1994 - 11/1998	3872/1	
400 Tourer (XW) 44348 i	D 16 Z2	82	05/1994 - 11/1998	3872/1	
400 Tourer (XW) 44409 TD	XUD 7TE	65	09/1993 - 11/1998	3872/1	
45 (RT)	1.4	76	02/00 – 05/05	3872	4212
45 (RT)	1.4	76	02/00 – 05/05	3683	
45 (RT)	1.6	80	02/00 – 05/05	3872	4212
45 (RT)	1.6	80	02/00 – 05/05	3683	
45 (RT)	1.8	86	02/00 – 05/05	3872	4212
45 (RT)	1.8	86	02/00 – 05/05	3683	
45 (RT)	2.0 iDT	74	02/00 – 05/05	3872	4212
45 (RT)	2.0 iDT	74	02/00 – 05/05	3683	
45 (RT)	2.0 iDT	83	01/04 – 05/05	3872	4212
45 (RT)	2.0 iDT	83	01/04 – 05/05	3683	
45 (RT)	2.0 V6	110	02/00 – 05/05	3872	4212
45 (RT)	2.0 V6	110	02/00 – 05/05	3683	
45 Hatchback (RT) 2.0 iDT	20 T2N	74	02/2000 - 05/2005	3872/1	
45 Hatchback (RT) 2.0 iDT	20 T2N	83	01/2004 - 05/2005	3872/1	
45 Hatchback (RT) 2.0 TD	20T2	83	02/2000 - 12/2005	3872/1	
45 Hatchback (RT) 2.0 V6	20 K4F	110	02/2000 - 05/2005	3872/1	
45 Hatchback (RT) 44287	14 K4F	76	02/2000 - 05/2005	3872/1	
45 Hatchback (RT) 44348	16 K4F	80	02/2000 - 05/2005	3872/1	
45 Hatchback (RT) 44409	18 K4F	86	02/2000 - 05/2005	3872/1	
45 Saloon (RT)	16	80	02/00 – 05/05	3683	
45 Saloon (RT)	1.4	76	02/00 – 05/05	3872	4212
45 Saloon (RT)	1.4	76	02/00 – 05/05	3683	
45 Saloon (RT)	1.6	80	02/00 – 05/05	3872	4212
45 Saloon (RT)	1.8	86	02/00 – 05/05	3872	4212
45 Saloon (RT)	1.8	86	02/00 – 05/05	3683	
45 Saloon (RT)	2.0 iDT	74	02/00 – 05/05	3872	4212
45 Saloon (RT)	2.0 iDT	74	02/00 – 05/05	3683	
45 Saloon (RT)	2.0 iDT	83	01/04 – 05/05	3872	4212
45 Saloon (RT)	2.0 iDT	83	01/04 – 05/05	3683	
45 Saloon (RT)	2.0 V6	110	02/00 – 05/05	3872	4212
45 Saloon (RT)	2.0 V6	110	02/00 – 05/05	3683	
45 Sedan (RT) 2.0 iDT	20 T2N	74	02/2000 - 05/2005	3872/1	
45 Sedan (RT) 2.0 iDT	20 T2N	83	01/2004 - 05/2005	3872/1	
45 Sedan (RT) 2.0 TD	20T2	83	02/2000 - 12/2005	3872/1	
45 Sedan (RT) 2.0 V6	20 K4F	110	02/2000 - 05/2005	3872/1	
45 Sedan (RT) 44287	14 K4F	76	02/2000 - 05/2005	3872/1	
45 Sedan (RT) 44348	16 K4F	80	02/2000 - 05/2005	3872/1	
45 Sedan (RT) 44409	18 K4F	86	02/2000 - 05/2005	3872/1	
600 (RH)	618 i/Si	85	03/96 – 02/99	3704	4148
600 (RH)	620 i	85	08/93 – 06/96	3704	4148
600 (RH)	620 Sdi	77	12/94 – 02/99	3704	4148
600 (RH)	620 Si	96	08/93 – 02/99	3704	4148
600 (RH)	620 Ti Vitesse	147	07/94 – 02/99	3704	4148
600 (RH)	623 Si	116	08/93 – 02/99	3704	4148
600 I (RH) 618 i/Si	F 18 A3 (03.96-.)	85	03/1996 - 02/1999		4148/1
600 I (RH) 620 i	F 20 Z2	85	08/1993 - 06/1996		4148/1
600 I (RH) 620 Sdi	20 T2N (12.94-.)	77	05/1994 - 06/1999		4148/1
600 I (RH) 620 SDi	20T2N	74	12/1994 - 02/1999		4148/1
600 I (RH) 620 Si	F 20 Z1	96	08/1993 - 02/1999		4148/1
600 I (RH) 620 Ti Vitesse	20 T4G	147	05/1994 - 08/1998		4148/1
600 I (RH) 623 Si	H 23 A3	116	08/1993 - 06/1999		4148/1
75 (RJ)	1.8	88	02/99 – 05/05	3943	
75 (RJ)	1.8 Turbo	110	05/03 – 05/05	3943	
75 (RJ)	2.0 CDT	85	02/99 – 05/05	3943	
75 (RJ)	2.0 CDTi	96	02/03 – 05/05	3943	
75 (RJ)	2.0 V6	110	02/99 – 05/05	3943	
75 (RJ)	2.5 V6	129	02/99 – 10/01	3943	
75 (RJ)	2.5 V6	130	10/01 – 05/05	3943	
75 Tourer (RJ)	1.8	88	08/01 – 05/05	3943	
75 Tourer (RJ)	1.8 Turbo	110	05/03 – 05/05	3943	
75 Tourer (RJ)	2.0 CDT	85	08/01 – 05/05	3943	
75 Tourer (RJ)	2.0 CDTi	96	02/03 – 05/05	3943	
75 Tourer (RJ)	2.0 V6	110	08/01 – 05/05	3943	
75 Tourer (RJ)	2.5 V6	130	08/01 – 05/05	3943	
800 (XS)	820	74	10/88 – 10/91	3631	
800 (XS)	2.0 E	84	10/88 – 10/91	3631	

MAKE & MODEL		KW	YEAR		
ROVER					
800 (XS)	2.7	127	10/87 – 09/88	3683	
800 (XS)	2.7	127	10/87 – 09/88	3872	
800 (XS)	820 16 V I/SI (XS)	103	10/86 – 10/88	3631	
800 (XS)	820 16V Turbo (RS)	132	01/92 – 02/99	3683	
800 (XS)	820 16V Turbo (RS)	132	01/92 – 02/99	3872	
800 (XS)	820 I/SI (RS)	100	01/92 – 02/99	3631	
800 (XS)	820 I/SI (RS)	100	01/92 – 02/99	3683	
800 (XS)	820 I/SI (RS)	100	01/92 – 02/99	3872	
800 (XS)	820 SE/SI	88	10/86 – 12/91	3631	
800 (XS)	820 SI (XS)	98	10/88 – 12/91	3631	
800 (XS)	820 Sport	145	04/94 – 03/96	3683	
800 (XS)	820 Sport	145	04/94 – 03/96	3872	
800 (XS)	820e	88	10/86 – 10/91	3631	
800 (XS)	825 D/SD (XS)	87	01/90 – 02/99	3683	
800 (XS)	825 D/SD (XS)	87	01/90 – 02/99	3872	
800 (XS)	825 SI/Sterling (XS)	123	10/86 – 10/88	3683	
800 (XS)	825 SI/Sterling (XS)	123	10/86 – 10/88	3872	
800 (XS)	825 SI/Sterling (XS)	127	01/87 – 12/91	3683	
800 (XS)	825 SI/Sterling (XS)	127	01/87 – 12/91	3872	
800 (XS)	825 SI/Sterling (XS) CAT	110	10/86 – 12/91	3683	
800 (XS)	825 SI/Sterling Catalytic-Conv(XS)	110	10/86 – 12/91	3872	
800 (XS)	825 Si Lux (RS)	129	04/96 – 02/99	3683	
800 (XS)	825 Si Lux (RS)	129	04/96 – 02/99	3872	
800 (XS)	827 SI/Sterling (XS)	130	02/88 – 12/91	3683	
800 (XS)	827 SI/Sterling (XS)	130	02/88 – 12/91	3872	
800 (XS)	827 SI/Sterling (XS) CAT	124	02/88 – 02/99	3683	
800 (XS)	827 SI/Sterling Catalytic-Conv (XS)	124	02/88 – 02/99	3872	
800 (XS) 2.0 Turbo	20 HT	120	10/1988 - 10/1991	3872/1	
800 (XS) 820 16V Turbo (RS)	T 16	132	01/1992 - 02/1999	3872/1	
800 (XS) 820 I/SI (RS)	20 T4H	100	01/1992 - 02/1999	3872/1	
800 (XS) 820 Sport	20 T4G	145	04/1994 - 03/1996	3872/1	
800 (XS) 825 D/SD (XS)	425 SL1RR, 492 4 SHIRG	87	01/1990 - 02/1999	3872/1	
800 (XS) 825 Si Lux (RS)	25 K4F	129	04/1996 - 02/1999	3872/1	
800 (XS) 825 TD	VM84A	89	01/1990 - 02/1999	3872/1	
800 (XS) 827 SI/Sterling Catalytic-Conv (XS)	C 27 A1	124	02/1988 - 02/1999	3872/1	
800 Coupe	825 SD	87	09/93 – 02/99	3683	
800 Coupe	825 SD	87	09/93 – 02/99	3872	
800 Coupe	825 Si (RS)	129	04/96 – 02/99	3683	
800 Coupe	825 Si (RS)	129	04/96 – 02/99	3872	
800 Coupe	827 24V (RS)	124	08/92 – 02/99	3683	
800 Coupe	827 24V (RS)	124	08/92 – 02/99	3872	
800 Coupe 820	20 T4G	145	12/1996 - 02/1999	3872/1	
800 Coupe 825 SD	425 SL1RR, 492 4 SHIRG	87	09/1993 - 02/1999	3872/1	
800 Coupe 825 Si (RS)	25 K4F	129	04/1996 - 02/1999	3872/1	
800 Coupe 827 24V (RS)	C 27 A1	124	08/1992 - 02/1999	3872/1	
800 Hatchback (XS)	2.0	74	08/87 – 10/91	3631	
800 Hatchback (XS)	2.0	100	08/87 – 09/88	3631	
800 Hatchback (XS)	2.5 Si	129	02/96 – 10/98	3683	
800 Hatchback (XS)	2.5 Si	129	02/96 – 10/98	3872	
800 Hatchback (XS)	820 16V Turbo (RS)	132	01/92 – 02/99	3683	
800 Hatchback (XS)	820 16V Turbo (RS)	132	01/92 – 02/99	3872	
800 Hatchback (XS)	820 I/SI (XS)	100	01/93 – 02/99	3683	
800 Hatchback (XS)	820 I/SI (XS)	100	01/93 – 02/99	3872	
800 Hatchback (XS)	820 i/Si (XS)	103	10/88 – 12/91	3631	
800 Hatchback (XS)	820 SE/SI	88	10/86 – 12/91	3631	
800 Hatchback (XS)	820 SI (XS)	98	10/88 – 12/91	3631	
800 Hatchback (XS)	820 Sport	145	04/94 – 03/96	3683	
800 Hatchback (XS)	820 Sport	145	04/94 – 03/96	3872	
800 Hatchback (XS)	825 D/SD (XS)	87	01/92 – 02/99	3683	
800 Hatchback (XS)	825 D/SD (XS)	87	01/92 – 02/99	3872	
800 Hatchback (XS)	827 24V I/SI (RS) CAT	124	01/92 – 02/99	3683	
800 Hatchback (XS)	827 24V I/SI Cat (RS)	124	01/92 – 02/99	3872	
800 Hatchback (XS)	827 Vitesse (XS) CAT	124	10/88 – 12/91	3683	
800 Hatchback (XS)	827 Vitesse Catalytic-Conv (XS)	124	10/88 – 12/91	3872	
800 Hatchback (XS)	827 Vitesse/SLI	130	10/88 – 12/91	3683	
800 Hatchback (XS)	827 Vitesse/SLI	130	10/88 – 12/91	3872	
800 Hatchback (XS) 44318	25 K4F	129	02/1996 - 10/1998	3872/1	
800 Hatchback (XS) 44318 Si	25 K4F	129	02/1996 - 10/1998	3872/1	
800 Hatchback (XS) 820 16V Turbo (RS)	T 16	132	11/1991 - 02/1999	3872/1	
800 Hatchback (XS) 820 I/SI (XS)	20 T4H	100	01/1991 - 02/1999	3872/1	
800 Hatchback (XS) 820 Sport	20 T4G	145	04/1994 - 03/1996	3872/1	
800 Hatchback (XS) 825 D/SD (XS)	425 SL1RR, 492 4 SHIRG	87	01/1992 - 02/1999	3872/1	
800 Hatchback (XS) 825 TD	VM84A	89	01/1990 - 02/1999	3872/1	
800 Hatchback (XS) 827 24V I/SI Cat (RS)	C 27 A1	124	01/1992 - 02/1999	3872/1	
CABRIOLET (XW)	1.6	82	04/90 – 02/96	3683	
CABRIOLET (XW)	214 1.4	66	01/92 – 11/99	3683	

MAKE & MODEL   		KW	YEAR		
ROVER					
CABRIOLET (XW)	214 1.4	70	04/90 – 09/92	3683	
CABRIOLET (XW)	214 1.4i 16V	76	01/93 – 11/99	3683	
CABRIOLET (XW)	216 1.6i	90	01/92 – 11/99	3683	
CABRIOLET (XW)	216 1.6i 16V	82	01/96 – 11/99	3683	
COUPE	1.6 16 V	82	03/96 – 11/99	3872	4212
COUPE	1.6 16 V	82	03/96 – 11/99	3683	
COUPE	1.8 16 V	107	03/96 – 11/99	3872	4212
COUPE	1.8 16 V	107	03/96 – 11/99	3683	
MAESTRO	1.3	49	09/90 – 01/95	3624	
MAESTRO	1.3	51	09/90 – 01/95	3624	
MAESTRO	1.6	63	09/90 – 01/95	3624	
MAESTRO	2.0 D	44	09/90 – 10/92	3624	
MAESTRO	2.0 TD	60	09/90 – 01/95	3624	
MONTEGO	1.6	61	10/90 – 09/92	3624	
MONTEGO	2.0 D Turbo	60	10/88 – 10/95	3624	
MONTEGO	2.0 GTi	86	10/88 – 10/91	3624	
MONTEGO	2.0 i CAT	75	12/90 – 10/94	3624	
MONTEGO Estate (XE)	1.3	50	10/84 – 10/88	3624	
MONTEGO Estate (XE)	1.6	61	10/90 – 09/92	3624	
MONTEGO Estate (XE)	2.0 GTI/LXI	75	12/90 – 12/93	3624	
MONTEGO Estate (XE)	2.0 GTi	86	10/88 – 10/91	3624	
MONTEGO Estate (XE)	2.0 Turbo-D	60	01/93 – 12/93	3624	
Spitfire Mk VI 44317	GFM11	51-53	01/1975 - 12/1980	3311	
STREETWISE	1.4	62	08/03 – 05/05	3872	4212
STREETWISE	1.4	62	08/03 – 05/05	3683	
STREETWISE	1.4	76	08/03 – 05/05	3872	4212
STREETWISE	1.4	76	08/03 – 05/05	3683	
STREETWISE	1.6	80	01/04 – 05/05	3872	4212
STREETWISE	1.6	80	01/04 – 05/05	3683	
STREETWISE	1.8	86	08/03 – 05/05	3872	4212
STREETWISE	1.8	86	08/03 – 05/05	3683	
STREETWISE	2.0 TD	74	08/03 – 05/05	3872	4212
STREETWISE	2.0 TD	74	08/03 – 05/05	3683	
Streetwise Hatchback 2.0 TD	20 T2N	74	08/2003 - 05/2005	3872/1	
Streetwise Hatchback 44287	14 K4F	76	08/2003 - 05/2005	3872/1	
Streetwise Hatchback 44287	14 K4M	62	08/2003 - 05/2005	3872/1	
SAAB					
90	2.0	74	08/84 – 08/87		3326
99	2.0	70	10/72 – 08/74	3318	3326
99	2.0 EMS	81	04/72 – 08/74	3318	3326
99	2.0 EMS	87	09/74 – 12/78		3326
99	2.0 GL	74	09/74 – 12/84		3326
9000	2.0	99	10/88 – 08/90		3583
9000	2.0 -16	94	01/89 – 01/93		3583
9000	2.0 -16 CD	96	09/93 – 12/98		3583
9000	2.0 -16 CD	110	09/93 – 12/98		3583
9000	2.0 -16 Turbo	118	05/88 – 08/93		3583
9000	2.0 -16 Turbo	127	03/90 – 09/93		3583
9000	2.0 -16 Turbo	129	04/85 – 12/91		3583
9000	2.0 -16 Turbo CD	108	09/92 – 12/98		3583
9000	2.0 -16 Turbo CD	120	09/88 – 08/93		3583
9000	2.0 -16 Turbo CD	136	09/89 – 12/98		3583
9000	2.0 Carlsson	143	09/89 – 08/90		3583
9000	2.0 T16	150	06/89 – 10/90		3583
9000	2.3	110	10/89 – 01/92		3583
9000	2.3	165	09/90 – 10/98		3583
9000	2.3 -16 CD	107	08/89 – 12/98		3583
9000	2.3 -16 CD Turbo	147	07/90 – 12/98		3583
9000	2.3 -16 CDE	108	09/93 – 12/98		3583
9000	2.3 -16 CDE Eco-Power	125	09/93 – 12/98		3583
9000	2.3 -16 Turbo	143	09/90 – 08/93		3583
9000	3.0 -24 V6 CD/CDE	155	07/94 – 12/98		3583
900 I (AC4, AM4)	2.0	74	10/85 – 09/88		3326
900 I (AC4, AM4)	2.0	74	10/85 – 09/88		3583
900 I (AC4, AM4)	2.0	80	09/83 – 03/84		3326
900 I (AC4, AM4)	2.0	98	10/87 – 10/91		3583
900 I (AC4, AM4)	2.0 -16	92	01/86 – 12/88		3326
900 I (AC4, AM4)	2.0 -16	92	01/86 – 12/88		3583
900 I (AC4, AM4)	2.0 -16	93	01/89 – 12/93		3583
900 I (AC4, AM4)	2.0 8V Turbo	114	01/88 – 12/90		3583
900 I (AC4, AM4)	2.0 c	74	07/82 – 12/88		3326
900 I (AC4, AM4)	2.0 c	74	07/82 – 12/88		3583
900 I (AC4, AM4)	2.0 c	79	11/80 – 08/84		3326
900 I (AC4, AM4)	2.0 EMS	87	01/79 – 12/80		3326
900 I (AC4, AM4)	2.0 i	81	09/85 - 08/90		3326
900 I (AC4, AM4)	2.0 i	81	09/85 – 08/90		3583

MAKE & MODEL		KW	YEAR		
SAAB					
900 I (AC4, AM4)	2.0 i	85	11/80 – 08/90		3326
900 I (AC4, AM4)	2.0 i	85	11/80 – 08/90		3583
900 I (AC4, AM4)	2.0 S Turbo-16	104	07/91 – 12/93		3583
900 I (AC4, AM4)	2.0 S Turbo-16	107	01/92 – 12/93		3583
900 I (AC4, AM4)	2.0 Turbo	103	10/86 – 12/91		3326
900 I (AC4, AM4)	2.0 Turbo	103	10/86 – 12/91		3583
900 I (AC4, AM4)	2.0 Turbo	107	10/80 – 07/85		3326
900 I (AC4, AM4)	2.0 Turbo	110	01/86 – 12/88		3326
900 I (AC4, AM4)	2.0 Turbo	110	01/86 – 12/88		3583
900 I (AC4, AM4)	2.0 Turbo-16	118	11/85 – 12/93		3326
900 I (AC4, AM4)	2.0 Turbo-16	118	11/85 – 12/93		3583
900 I (AC4, AM4)	2.0 Turbo-16 S	129	01/84 – 12/88		3326
900 I (AC4, AM4)	2.0 Turbo-16 S	129	01/84 – 12/88		3583
900 I (AC4, AM4)	2.0 Turbo-16 S CAT	129	01/89 – 12/93		3583
900 I (AC4, AM4)	2.1 -16	100	08/90 – 12/93		3583
900 I (AC4, AM4)	2.1 16 S	107	10/89 – 07/92		3583
900 I Combi Coupe	2.0	74	04/84 – 10/91		3326
900 I Combi Coupe	2.0	74	04/84 – 10/91		3583
900 I Combi Coupe	2.0	80	06/78 – 03/84		3326
900 I Combi Coupe	2.0 -16	92	01/86 – 12/88		3326
900 I Combi Coupe	2.0 -16	92	01/86 – 12/88		3583
900 I Combi Coupe	2.0 -16	93	01/89 – 08/92		3583
900 I Combi Coupe	2.0 -16	107	05/91 – 10/93		3583
900 I Combi Coupe	2.0 c	74	09/79 – 12/88		3326
900 I Combi Coupe	2.0 c	74	09/79 – 12/88		3583
900 I Combi Coupe	2.0 c	79	09/78 – 08/84		3326
900 I Combi Coupe	2.0 EMS	87	09/78 – 08/79		3326
900 I Combi Coupe	2.0 i	81	09/85 – 08/90		3326
900 I Combi Coupe	2.0 i	81	09/85 – 08/90		3583
900 I Combi Coupe	2.0 i	85	11/80 – 12/88		3326
900 I Combi Coupe	2.0 i	85	11/80 – 12/88		3583
900 I Combi Coupe	2.0 S Turbo-16	104	09/91 – 07/93		3583
900 I Combi Coupe	2.0 T8	114	10/86 – 09/89		3326
900 I Combi Coupe	2.0 T8	114	10/86 – 09/89		3583
900 I Combi Coupe	2.0 Turbo	103	10/86 – 12/91		3326
900 I Combi Coupe	2.0 Turbo	103	10/86 – 12/91		3583
900 I Combi Coupe	2.0 Turbo	107	09/78 – 07/85		3326
900 I Combi Coupe	2.0 Turbo	110	01/86 – 12/88		3326
900 I Combi Coupe	2.0 Turbo	110	01/86 – 12/88		3583
900 I Combi Coupe	2.0 Turbo-16	118	11/85 – 06/94		3326
900 I Combi Coupe	2.0 Turbo-16	118	11/85 – 06/94		3583
900 I Combi Coupe	2.0 Turbo-16	132	01/93 – 06/94		3583
900 I Combi Coupe	2.0 Turbo-16 S	129	02/84 – 12/88		3326
900 I Combi Coupe	2.0 Turbo-16 S	129	02/84 – 12/88		3583
900 I Combi Coupe	2.0 Turbo-16 S CAT	125	01/89 – 12/93		3583
900 I Combi Coupe	2.1 -16	100	09/90 – 07/93		3583
900 I Combi Coupe	2.1 16 S	107	10/89 – 07/92		3583
900 I Convertible	2.0	81	10/85 – 09/89		3583
900 I Convertible	2.0	81	10/85 – 09/89		3326
900 I Convertible	2.0	107	05/91 – 10/93		3583
900 I Convertible	2.0	125	10/89 – 10/93		3583
900 I Convertible	2.0 -16	93	01/90 – 06/94		3583
900 I Convertible	2.0 16v	98	04/90 – 12/90		3583
900 I Convertible	2.0 S Turbo-16	104	09/91 – 06/94		3583
900 I Convertible	2.0 Turbo-16	118	11/86 – 06/94		3326
900 I Convertible	2.0 Turbo-16	118	11/86 – 06/94		3583
900 I Convertible	2.0 Turbo-16 S	129	11/86 – 06/94		3326
900 I Convertible	2.0 Turbo-16 S	129	11/86 – 06/94		3583
900 I Convertible	2.1 -16	100	08/90 – 06/94		3583
900 I Convertible	2.1 16 S	107	10/89 – 07/92		3583
900 II	2.0 -16 Turbo	136	07/93 – 02/98	3717	3469
900 II	2.0 -16 Turbo	136	07/93 – 02/98	3736	
900 II	2.0 i	96	08/94 – 02/98	3717	3469
900 II	2.0 i	96	08/94 – 02/98	3736	
900 II	2.0 i	98	07/93 – 07/94	3736	3469
900 II	2.3 -16	110	07/93 – 02/98	3717	3469
900 II	2.3 -16	110	07/93 – 02/98	3736	
900 II	2.5 -24 V6	125	07/93 – 02/98	3717	3469
900 II	2.5 -24 V6	125	07/93 – 02/98	3736	
900 II Convertible	2.0 -16 Turbo	136	12/93 – 02/98	3717	3469
900 II Convertible	2.0 -16 Turbo	136	12/93 – 02/98	3736	
900 II Convertible	2.0 i	96	12/93 – 02/98	3717	3469
900 II Convertible	2.0 i	96	12/93 – 02/98	3736	
900 II Convertible	2.3 -16	110	12/93 – 02/98	3717	3469
900 II Convertible	2.3 -16	110	12/93 – 02/98	3736	
900 II Convertible	2.5 -24 V6	125	12/93 – 02/98	3717	3469

MAKE & MODEL		KW	YEAR		
SAAB					
900 II Convertible	2.5 -24 V6	125	12/93 – 02/98	3736	
900 II Coupe	2.0 -16 Turbo	136	12/93 – 02/98	3717	3469
900 II Coupe	2.0 -16 Turbo	136	12/93 – 02/98	3736	
900 II Coupe	2.0 i	96	08/94 – 02/98	3717	3469
900 II Coupe	2.0 i	96	08/94 – 02/98	3736	
900 II Coupe	2.0 i	98	12/93 – 07/94	3736	3469
900 II Coupe	2.3 -16	110	12/93 – 02/98	3717	3469
900 II Coupe	2.3 -16	110	12/93 – 02/98	3736	
900 II Coupe	2.5 -24 V6	125	12/93 – 02/98	3717	3469
900 II Coupe	2.5 -24 V6	125	12/93 – 02/98	3736	
9000 Hatchback	2.0	99	10/88 – 01/90		3583
9000 Hatchback	2.0 -16	92	12/85 – 12/88		3583
9000 Hatchback	2.0 -16	94	12/85 – 08/88		3583
9000 Hatchback	2.0 -16 CS	94	01/89 – 12/98		3583
9000 Hatchback	2.0 -16 CS	96	09/93 – 12/98		3583
9000 Hatchback	2.0 -16 ND Turbo	110	09/93 – 12/98		3583
9000 Hatchback	2.0 -16 Turbo	118	09/84 – 08/93		3583
9000 Hatchback	2.0 -16 Turbo	120	05/88 – 08/93		3583
9000 Hatchback	2.0 -16 Turbo	127	06/89 – 12/92		3583
9000 Hatchback	2.0 -16 Turbo	129	09/84 – 12/91		3583
9000 Hatchback	2.0 -16 Turbo CS	136	09/88 – 12/98		3583
9000 Hatchback	2.0 16v	143	09/89 – 01/90		3583
9000 Hatchback	2.0 T16	150	06/89 – 10/90		3583
9000 Hatchback	2.3	110	01/90 – 12/93		3583
9000 Hatchback	2.3 -16 Aero CS	162	02/93 – 12/98		3583
9000 Hatchback	2.3 -16 Aero CS	165	02/93 – 12/98		3583
9000 Hatchback	2.3 -16 CS	107	09/89 – 12/98		3583
9000 Hatchback	2.3 -16 CSE	108	09/93 – 12/98		3583
9000 Hatchback	2.3 -16 CSE Eco Power	125	09/93 – 12/98		3583
9000 Hatchback	2.3 -16 Turbo	143	09/90 – 12/98		3583
9000 Hatchback	2.3 -16 Turbo CSE	147	09/93 – 12/98		3583
9000 Hatchback	3.0 -24 V6 CS/CSE	155	07/94 – 12/98		3583
9-3 II (YS3F)	1,8t (B207E)	110	08/03 – 02/15	4211	
9-3 II (YS3F)	1,8t (B207E)	110	09/02 – 02/15	4211	
9-3 II (YS3F)	1,8t BioPower (B207E)	110	01/07 – 02/15	4211	
9-3 II (YS3F)	1,8t BioPower (B207L)	129	01/07 – 02/15	4211	
9-3 II (YS3F)	1.8 i (Z 18 XE)	90	01/04 – 02/15	4211	
9-3 II (YS3F)	1.8 i (Z 18 XE)	90	03/05 – 02/15	4211	
9-3 II (YS3F)	1.8t 2.0 (B207E)	110	03/05 – 02/15	4211	
9-3 II (YS3F)	1.9 TiD (Z 19 DT)	88	09/04 – 02/15	4211	
9-3 II (YS3F)	1.9 TiD (Z 19 DTH)	110	09/04 – 02/15	4211	
9-3 II (YS3F)	1.9 TiD (Z 19 DTJ)	88	03/05 – 02/15	4211	
9-3 II (YS3F)	1.9 TTiD (A 19 DTR)	132	12/07 – 02/15	4211	
9-3 II (YS3F)	1.9 TTiD (Z 19 DTR)	132	12/07 – 02/15	4211	
9-3 II (YS3F)	2.0 (B207L)	143	04/06 – 09/07	4211	
9-3 II (YS3F)	2.0 T (B207E)	110	03/05 – 02/15	4211	
9-3 II (YS3F)	2.0 T (B207L)	129	09/02 – 02/15	4211	
9-3 II (YS3F)	2.0 T (B207R)	154	09/02 – 02/15	4211	
9-3 II (YS3F)	2.0 t BioPower	145	06/07 -	4211	
9-3 II (YS3F)	2.0 t BioPower (B207E)	110	01/07 – 02/15	4211	
9-3 II (YS3F)	2.0 t BioPower (B207L)	129	01/07 – 02/15	4211	
9-3 II (YS3F)	2.0 t BioPower (B207M)	147	06/07 – 02/15	4211	
9-3 II (YS3F)	2.0 t BioPower (B207R)	145	06/07 – 02/15	4211	
9-3 II (YS3F)	2.0 t BioPower (B207R)	154	09/02 – 02/15	4211	
9-3 II (YS3F)	2.0 Turbo (B207R)	154	01/08 – 02/15	4211	
9-3 II (YS3F)	2.0 Turbo Performance (B207R)	185	04/04 – 02/15	4211	
9-3 II (YS3F)	2.2 TiD (D223L)	92	09/02 – 02/15	4211	
9-3 II (YS3F)	2.8 Turbo V6 (B284L)	188	12/07 – 02/15	4211	
9-3 II (YS3F)	2.8 Turbo V6 (LP9)	184	03/05 – 02/15	4211	
9-3 (YS3D)	1,8t	110	09/02 – 02/15		3853/1
9-3 (YS3D)	1,8t BioPower	110	01/07 – 02/15		3853/1
9-3 (YS3D)	1,8t BioPower	129	05/09 – 02/15		3853/1
9-3 (YS3D)	1.8 i	90	01/04 – 02/15		3853/1
9-3 (YS3D)	1.9 TiD	88	09/04 – 02/15		3853/1
9-3 (YS3D)	1.9 TiD	110	09/04 – 02/15		3853/1
9-3 (YS3D)	1.9 TTiD	96	12/07 – 02/15		3853/1
9-3 (YS3D)	1.9 TTiD	118	12/07 – 02/15		3853/1
9-3 (YS3D)	1.9 TTiD	132	12/07 – 02/15		3853/1
9-3 (YS3D)	2.0 i	96	02/98 – 09/02	3717	
9-3 (YS3D)	2.3	169	09/99 – 01/02	3717	
9-3 (YS3F)	2.0 SE Turbo	147	02/98 – 09/02	3717	
9-3 (YS3F)	2.0 t	120	01/07 – 02/15		3853/1
9-3 (YS3F)	2.0 t	129	09/02 – 02/15		3853/1
9-3 (YS3F)	2.0 t	154	09/02 – 02/15		3853/1
9-3 (YS3F)	2.0 t	162	01/11 – 02/15		3853/1
9-3 (YS3F)	2.0 t	177	05/09 – 02/15		3853/1

MAKE & MODEL		KW	YEAR		
SAAB					
9-3 (YS3F)	2.0 t Bio Power	120	01/07 – 02/15		3853/1
9-3 (YS3F)	2.0 t Bio Power	129	01/07 – 02/15		3853/1
9-3 (YS3F)	2.0 t BioPower	145	06/07 – 02/15		3853/1
9-3 (YS3F)	2.0 t BioPower	147	05/09 – 02/15		3853/1
9-3 (YS3F)	2.0 t BioPower	154	09/02 – 02/15		3853/1
9-3 (YS3F)	2.0 t BioPower	162	01/11 – 02/15		3853/1
9-3 (YS3F)	2.0 t BioPower XWD	120	01/08 – 02/15		3853/1
9-3 (YS3F)	2.0 t BioPower XWD	154	01/08 – 02/15		3853/1
9-3 (YS3F)	2.0 t BioPower XWD	162	01/08 – 02/15		3853/1
9-3 (YS3F)	2.0 t XWD	120	01/07 – 02/15		3853/1
9-3 (YS3F)	2.0 t XWD	162	01/08 – 02/15		3853/1
9-3 (YS3F)	2.0 t XWD	177	05/09 – 02/15		3853/1
9-3 (YS3F)	2.0 Turbo	110	01/01 – 09/02	3717	
9-3 (YS3F)	2.0 Turbo	113	10/98 – 09/02	3717	
9-3 (YS3F)	2.0 Turbo	136	02/98 – 09/02	3717	
9-3 (YS3F)	2.0 Turbo	151	10/99 – 09/02	3717	
9-3 (YS3F)	2.0 Turbo Performance	185	04/04 – 02/15		3853/1
9-3 (YS3F)	2.0 Turbo XWD	154	01/08 – 02/15		3853/1
9-3 (YS3F)	2.2 TiD	85	02/98 – 11/00	3717	
9-3 (YS3F)	2.2 TiD	92	09/02 – 02/15		3853/1
9-3 (YS3F)	2.2 TiD	92	11/00 – 09/02	3717	
9-3 (YS3F)	2.3 i	110	02/98 – 09/02	3717	
9-3 (YS3F)	2.3 Turbo	165	10/98 – 09/02	3717	
9-3 (YS3F)	2.8 Turbo V6	169	03/05 – 02/15		3853/1
9-3 (YS3F)	2.8 Turbo V6	184	03/05 – 02/15		3853/1
9-3 (YS3F)	2.8 Turbo V6	188	12/07 – 02/15		3853/1
9-3 (YS3F)	2.8 Turbo V6	203	04/08 – 02/15		3853/1
9-3 (YS3F)	2.8 Turbo V6 XWD	206	05/08 – 02/15		3853/1
9-3 Cabriolet (YS3D)	2.0 i	96	02/98 – 08/03	3717	
9-3 Cabriolet (YS3D)	2.0 SE Turbo	147	02/98 – 08/03	3717	
9-3 Cabriolet (YS3D)	2.0 Turbo	110	01/01 – 08/03	3717	
9-3 Cabriolet (YS3D)	2.0 Turbo	113	10/98 – 08/03	3717	
9-3 Cabriolet (YS3D)	2.0 Turbo	136	02/98 – 08/03	3717	
9-3 Cabriolet (YS3D)	2.0 Turbo	151	10/99 – 08/03	3717	
9-3 Cabriolet (YS3D)	2.3	169	09/99 – 01/02	3717	
9-3 Cabriolet (YS3D)	2.3 i	110	02/98 – 08/03	3717	
9-3 Cabriolet (YS3D)	2.3 Turbo	165	10/99 – 08/03	3717	
9-3 Convertible (YS3F)	1,8t	110	08/03 – 02/15		3853/1
9-3 Convertible (YS3F)	1,8t BioPower	110	01/07 – 02/15		3853/1
9-3 Convertible (YS3F)	1,8t BioPower	129	01/07 – 02/15		3853/1
9-3 Convertible (YS3F)	1.8 i	90	01/04 – 02/15		3853/1
9-3 Convertible (YS3F)	1.9 TiD	88	09/04 – 02/15		3853/1
9-3 Convertible (YS3F)	1.9 TiD	110	01/06 – 02/15		3853/1
9-3 Convertible (YS3F)	1.9 TTiD	96	12/07 – 02/15		3853/1
9-3 Convertible (YS3F)	1.9 TTiD	118	12/07 – 02/15		3853/1
9-3 Convertible (YS3F)	1.9 TTiD	132	12/07 – 02/15		3853/1
9-3 Convertible (YS3F)	2.0 t	120	01/11 – 02/15		3853/1
9-3 Convertible (YS3F)	2.0 t	129	08/03 – 02/15		3853/1
9-3 Convertible (YS3F)	2.0 t	154	08/03 – 02/15		3853/1
9-3 Convertible (YS3F)	2.0 t	162	01/11 – 02/15		3853/1
9-3 Convertible (YS3F)	2.0 t BioPower	120	01/11 – 02/15		3853/1
9-3 Convertible (YS3F)	2.0 t BioPower	129	01/07 – 02/15		3853/1
9-3 Convertible (YS3F)	2.0 t BioPower	147	06/07 – 02/15		3853/1
9-3 Convertible (YS3F)	2.0 t BioPower	162	01/11 – 02/15		3853/1
9-3 Convertible (YS3F)	2.0 Turbo Performance	185	04/04 – 02/15		3853/1
9-3 Convertible (YS3F)	2.8 Turbo V6	169	02/06 – 02/15		3853/1
9-3 Convertible (YS3F)	2.8 Turbo V6	184	02/06 – 02/15		3853/1
9-3 Convertible (YS3F)	2.8 Turbo V6	188	12/07 – 02/15		3853/1
9-3 Convertible (YS3F)	2.8 Turbo V6	203	02/09 – 02/15		3853/1
9-3 Convertible (YS3F)	2.8 Turbo V6	206	02/09 – 02/15		3853/1
9-3 Estate (YS3F)	1.8 i	90	03/05 – 02/15		3853/1
9-3 Estate (YS3F)	1.8t 2.0	110	03/05 – 02/15		3853/1
9-3 Estate (YS3F)	1.9 TiD	88	03/05 – 02/15		3853/1
9-3 Estate (YS3F)	1.9 TiD	110	03/05 – 02/15		3853/1
9-3 Estate (YS3F)	1.9 TTiD	96	12/07 – 02/15		3853/1
9-3 Estate (YS3F)	1.9 TTiD	118	12/07 – 02/15		3853/1
9-3 Estate (YS3F)	1.9 TTiD	132	12/07 – 02/15		3853/1
9-3 Estate (YS3F)	2.0 t	110	03/05 – 02/15		3853/1
9-3 Estate (YS3F)	2.0 t	120	01/07 – 02/15		3853/1
9-3 Estate (YS3F)	2.0 t	129	03/05 – 02/15		3853/1
9-3 Estate (YS3F)	2.0 t	147	02/09 – 02/15		3853/1
9-3 Estate (YS3F)	2.0 t	154	03/05 – 02/15		3853/1
9-3 Estate (YS3F)	2.0 t	162	01/11 – 02/15		3853/1
9-3 Estate (YS3F)	2.0 t	177	05/09 – 02/15		3853/1
9-3 Estate (YS3F)	2.0 t Bio Power	147	02/09 – 02/15		3853/1
9-3 Estate (YS3F)	2.0 t Bio Power XWD	154	06/08 – 02/15		3853/1

MAKE & MODEL   		KW	YEAR		
SAAB					
9-3 Estate (YS3F)	2.0 t BioPower	110	01/07 – 02/15		3853/1
9-3 Estate (YS3F)	2.0 t BioPower	120	01/11 – 02/15		3853/1
9-3 Estate (YS3F)	2.0 t BioPower	129	01/07 – 02/15		3853/1
9-3 Estate (YS3F)	2.0 t BioPower	145	06/07 – 02/15		3853/1
9-3 Estate (YS3F)	2.0 t BioPower	162	01/11 – 02/15		3853/1
9-3 Estate (YS3F)	2.0 t BioPower XWD	120	01/11 – 02/15		3853/1
9-3 Estate (YS3F)	2.0 t BioPower XWD	162	01/11 – 02/15		3853/1
9-3 Estate (YS3F)	2.0 t XWD	120	01/07 – 02/15		3853/1
9-3 Estate (YS3F)	2.0 t XWD	154	06/08 – 02/15		3853/1
9-3 Estate (YS3F)	2.0 t XWD	162	01/11 – 02/15		3853/1
9-3 Estate (YS3F)	2.0 t XWD	177	05/09 – 02/15		3853/1
9-3 Estate (YS3F)	2.8 Turbo V6	169	03/05 – 02/15		3853/1
9-3 Estate (YS3F)	2.8 Turbo V6	184	03/05 – 02/15		3853/1
9-3 Estate (YS3F)	2.8 Turbo V6	188	12/07 – 02/15		3853/1
9-3 Estate (YS3F)	2.8 Turbo V6	203	05/08 – 02/15		3853/1
9-3 Estate (YS3F)	2.8 Turbo V6 XWD	206	05/08 – 02/15		3853/1
9-3X	1.9 TTiD	132	02/09 – 12/12		3853/1
9-3X	2.0 t BioPower XWD	154	02/09 – 12/12		3853/1
9-3X	2.0 t BioPower XWD	162	01/11 – 12/12		3853/1
9-3X	2.0 t XWD	154	02/09 – 12/12		3853/1
9-5 (YS3E)	2.3 Turbo	162	07/03 – 12/09	3665	
9-5 (YS3E)	2.3 Turbo	184	09/01 – 12/09	3665	
9-5 (YS3E)	2.3 Turbo	191	11/05 – 12/09	3665	
9-5 (YS3G)	1.6 Turbo	132	05/10 – 01/12	4149	4150
9-5 (YS3G)	2.0 t BioPower	162	05/10 – 01/12	4149	4150
9-5 (YS3G)	2.0 t BioPower XWD	162	05/10 – 01/12	4149	4150
9-5 (YS3G)	2.0 TiD	118	05/10 – 01/12	4149	4150
9-5 (YS3G)	2.0 TTiD	140	05/10 – 01/12	4149	4150
9-5 (YS3G)	2.0 TTiD XWD	140	05/10 – 01/12	4149	4150
9-5 (YS3G)	2.0 Turbo	162	05/10 – 01/12	4149	4150
9-5 (YS3G)	2.0 Turbo XWD	162	05/10 – 01/12	4149	4150
9-5 (YS3G)	2.8 Turbo V6 XWD	221	05/10 – 01/12	4149	4150
9-5 Estate (YS3E)	2.3 Turbo	162	07/03 – 12/09	3665	
9-5 Estate (YS3E)	2.3 Turbo	184	09/01 – 12/09	3665	
9-5 Estate (YS3E)	2.3 Turbo	191	01/06 – 12/09	3665	
9-7X	5.3 AWD	220	06.2004 - 07.2012	4221	4219
9-7X	4.2 AWD	213	12.2005 - 07.2012	4221	4219
99 Combi Coupe	2.0	79	03/76 – 05/78		3326
99 Combi Coupe	2.0 i	87	01/81 – 12/84		3326
99 Combi Coupe	2.0 Turbo	107	10/77 – 06/80		3326
SAMSUNG					
QM5	2.0 dCi	110	12/06 -	4143	3933
QM5	2.0 dCi 4WD	110	12/06 -	4143	3933
QM5	2.5	126	12/06 -	4143	3933
QM5	2.5 4WD	126	12/06 -	4143	3933
SEAT					
1500	1.5	55	01/66 -	3346	
ALHAMBRA (7V8, 7V9)	1.8 T 20V	110	10/97 – 03/10	3506	
ALHAMBRA (7V8, 7V9)	1.8 T 20V	110	10/97 – 03/10	4095	
ALHAMBRA (7V8, 7V9)	1.9 TDI	66	04/96 – 03/10	3506	
ALHAMBRA (7V8, 7V9)	1.9 TDI	81	08/96 – 06/00	3506	
ALHAMBRA (7V8, 7V9)	1.9 TDI	85	06/00 – 03/10	3506	
ALHAMBRA (7V8, 7V9)	1.9 TDI	96	11/02 – 11/08	4095	
ALHAMBRA (7V8, 7V9)	1.9 TDI	110	05/05 – 05/07	4095	
ALHAMBRA (7V8, 7V9)	1.9 TDI 4motion	85	06/00 – 03/10	4095	
ALHAMBRA (7V8, 7V9)	2.0 i	85	04/96 – 03/10	3506	
ALHAMBRA (7V8, 7V9)	2.0 TDI	103	11/05 – 03/10	4095	
ALHAMBRA (7V8, 7V9)	2.8 V6	150	06/00 – 03/10	4095	
ALHAMBRA (7V8, 7V9)	2.8 V6 4motion	150	06/00 – 03/10	4095	
Alhambra II (710, 711) 1.4 TSI	CAVA, CNWB, CTHA	110	06/2010 -		4390
Alhambra II (710, 711) 1.4 TSI	CZDA, DJKA	110	05/2015 -		4390
Alhambra II (710, 711) 1.8 TSI	CDAA	118	11/2012 -		4390
Alhambra II (710, 711) 2.0 TDI	CFFA	100	06/2010 - 05/2011		4390
Alhambra II (710, 711) 2.0 TDI	CFFB	103	06/2010 -		4390
Alhambra II (710, 711) 2.0 TDI	CFFE, CUVA, DFLD, DLTC	85	05/2011 -		4390
Alhambra II (710, 711) 2.0 TDI	CFGB	125	06/2010 - 02/2013		4390
Alhambra II (710, 711) 2.0 TDI	CFGC, DLUB	130	11/2012 -		4390
Alhambra II (710, 711) 2.0 TDI	CUVC, DFLA, DLTA	110	05/2015 -		4390
Alhambra II (710, 711) 2.0 TDI	CUWA, DFMA	135	05/2015 -		4390
Alhambra II (710, 711) 2.0 TDI 4Drive	CFFB	103	05/2011 -		4390
Alhambra II (710, 711) 2.0 TDI 4Drive	CUVC, DFLA	110	05/2015 -		4390
Alhambra II (710, 711) 2.0 TSI	CCZA	147	11/2010 - 05/2012		4390
Alhambra II (710, 711) 2.0 TSI	DEDA	162	05/2015 -		4390
ALTEA (5P1)	1.2 TSI	77	04/10 -	3782	3529/1
ALTEA (5P1)	1.2 TSI	77	04/10 -		4135

MAKE & MODEL		KW	YEAR		
SEAT					
ALTEA (5P1)	1.4 16V	63	05/06 -	3782	3529/1
ALTEA (5P1)	1.4 16V	63	05/06 -		4135
ALTEA (5P1)	1.4 TSI	92	11/07 -	3904	3529/1
ALTEA (5P1)	1.4 TSI	92	11/07 -		4135
ALTEA (5P1)	1.6	75	03/04 -	3782	3529/1
ALTEA (5P1)	1.6	75	03/04 -		4135
ALTEA (5P1)	1.6 LPG	75	09/09 -	3782	3529/1
ALTEA (5P1)	1.6 LPG	75	09/09 -		4135
ALTEA (5P1)	1.6 TDI	66	11/10 -	3782	3529/1
ALTEA (5P1)	1.6 TDI	66	11/10 -		4135
ALTEA (5P1)	1.6 TDI	77	10/09 -	3782	3529/1
ALTEA (5P1)	1.6 TDI	77	10/09 -	3904	4135
ALTEA (5P1)	1.8 TFSI	118	01/07 -	3904	3529/1
ALTEA (5P1)	1.8 TFSI	118	01/07 -		4135
ALTEA (5P1)	1.9 TDI	66	08/09 -	3782	3529/1
ALTEA (5P1)	1.9 TDI	66	08/09 -		4135
ALTEA (5P1)	1.9 TDI	77	04/04 -	3782	3529/1
ALTEA (5P1)	1.9 TDI	77	04/04 -	3904	4135
ALTEA (5P1)	2.0 FSI	110	05/04 – 03/09	3904	3529/1
ALTEA (5P1)	2.0 FSI	110	05/04 – 03/09		4135
ALTEA (5P1)	2.0 TDI	100	03/04 – 05/09	3904	3529/1
ALTEA (5P1)	2.0 TDI	100	03/04 – 05/09		4135
ALTEA (5P1)	2.0 TDI	103	11/05 -	3904	3529/1
ALTEA (5P1)	2.0 TDI	103	11/05 -		4135
ALTEA (5P1)	2.0 TDI	125	03/06 -	3904	3529/1
ALTEA (5P1)	2.0 TDI 16V	103	03/04 -	3904	3529/1
ALTEA (5P1)	2.0 TDI 16V	103	03/04 -		4135
ALTEA (5P1)	2.0 TFSI	147	04/06 – 05/09	3904	3529/1
ALTEA XL (5P5, 5P8)	1.2 TSI	77	04/10 -	3782	3529/1
ALTEA XL (5P5, 5P8)	1.2 TSI	77	04/10 -		4135
ALTEA XL (5P5, 5P8)	1.4 16V	63	10/06 -	3782	3529/1
ALTEA XL (5P5, 5P8)	1.4 16V	63	10/06 -		4135
ALTEA XL (5P5, 5P8)	1.4 TSI	92	11/07 -	3904	3529/1
ALTEA XL (5P5, 5P8)	1.4 TSI	92	11/07 -		4135
ALTEA XL (5P5, 5P8)	1.6	75	10/06 -	3782	3529/1
ALTEA XL (5P5, 5P8)	1.6	75	10/06 -		4135
ALTEA XL (5P5, 5P8)	1.6 LPG	75	09/09 -	3782	3529/1
ALTEA XL (5P5, 5P8)	1.6 LPG	75	09/09 -		4135
ALTEA XL (5P5, 5P8)	1.6 Multifuel	75	10/06 -	3782	3529/1
ALTEA XL (5P5, 5P8)	1.6 Multifuel	75	10/06 -		4135
ALTEA XL (5P5, 5P8)	1.6 TDI	66	11/10 -	3782	3529/1
ALTEA XL (5P5, 5P8)	1.6 TDI	66	11/10 -		4135
ALTEA XL (5P5, 5P8)	1.6 TDI	77	10/09 -	3782	3529/1
ALTEA XL (5P5, 5P8)	1.6 TDI	77	10/09 -		4135
ALTEA XL (5P5, 5P8)	1.8 TFSI	118	01/07 -	3904	3529/1
ALTEA XL (5P5, 5P8)	1.8 TFSI	118	01/07 -		4135
ALTEA XL (5P5, 5P8)	1.9 TDI	66	08/09 -	3782	3529/1
ALTEA XL (5P5, 5P8)	1.9 TDI	66	08/09 -		4135
ALTEA XL (5P5, 5P8)	1.9 TDI	77	10/06 -	3782	3529/1
ALTEA XL (5P5, 5P8)	1.9 TDI	77	10/06 -	3904	4135
ALTEA XL (5P5, 5P8)	1.9 TDI 4x4	77	06/09 – 12/10	3782	3905
ALTEA XL (5P5, 5P8)	1.9 TDI 4x4	77	06/09 – 12/10	3904	4135
ALTEA XL (5P5, 5P8)	2.0 FSI	110	10/06 – 03/09	3904	3529/1
ALTEA XL (5P5, 5P8)	2.0 FSI	110	10/06 – 03/09		4135
ALTEA XL (5P5, 5P8)	2.0 TDI	100	11/06 – 03/09	3904	3529/1
ALTEA XL (5P5, 5P8)	2.0 TDI	100	11/06 – 03/09		4135
ALTEA XL (5P5, 5P8)	2.0 TDI	103	10/06 -	3904	3529/1
ALTEA XL (5P5, 5P8)	2.0 TDI	103	10/06 -		4135
ALTEA XL (5P5, 5P8)	2.0 TDI	125	06/07 -	3904	3529/1
ALTEA XL (5P5, 5P8)	2.0 TDI 16V	103	10/06 -	3904	3529/1
ALTEA XL (5P5, 5P8)	2.0 TDI 16V	103	10/06 -		4135
ALTEA XL (5P5, 5P8)	2.0 TDI 16V 4x4	103	10/10 -	3782	3529/1
ALTEA XL (5P5, 5P8)	2.0 TDI 16V 4x4	103	10/10 -	3904	4135
ALTEA XL (5P5, 5P8)	2.0 TDI 4x4	103	06/07 -	3904	3529/1
ALTEA XL (5P5, 5P8)	2.0 TDI 4x4	103	06/07 -		4135
ALTEA XL (5P5, 5P8)	2.0 TDI 4x4	125	06/07 -	3904	3529/1
ALTEA XL (5P5, 5P8)	2.0 TFSI	147	10/06 – 05/09	3904	3529/1
ALTEA XL (5P5, 5P8)	2.0 TFSI 4x4	147	06/07 – 05/09	3904	3529/1
ALTEA XL (5P5, 5P8)	2.0 TFSI 4x4	155	05/09 -	3904	3529/1
AROSA (6H)	1.0	37	05/97 – 06/04	3566	
AROSA (6H)	1.4	44	05/97 – 06/04	3566	
AROSA (6H)	1.4 16V	74	01/00 – 06/04	3566	3529/1
AROSA (6H)	1.4 TDI	55	01/00 – 06/04	3566	
AROSA (6H)	1.7 SDI	44	08/97 – 06/04	3566	
ATECA (KH7)	1.0 TSI (CHZD)	85	05/16 -	4228	4241
ATECA (KH7)	1.0 TSI (CHZJ)	85	05/16 -	4228	4241

MAKE & MODEL   		KW	YEAR		
SEAT					
ATECA (KH7)	1.4 TSI (CZEA)	110	06/16 -	4228	4241
ATECA (KH7)	1.6 TDI (DDYA)	85	04/16 -	4228	4241
ATECA (KH7)	2.0 TDI (DFFA)	110	04/16 -	4228	4241
ATECA (KH7)	2.0 TDI (DFHA)	140	06/16 -	4228	4241
Ateca (KH7) 1.0 TSI	CHZJ, DKRF	85	05/2016 -	4228/1	
Ateca (KH7) 2.0 TDI	CRVA	81	10/2016 -	4228/1	
Ateca (KH7) 2.0 TDI	CRVC	105	10/2016 -	4228/1	
Ateca (KH7) 2.0 TDI	DFFA	110	04/2016 -	4228/1	
Ateca (KH7) 2.0 TDI 4Drive	DFFA	110	04/2016 -	4228/1	
Ateca (KH7) 2.0 TDI 4Drive	DFHA	140	06/2016 -	4228/1	
Ateca (KH7) 2.0 TSI 4Drive	CZPB, DKZA	140	05/2017 -	4228/1	
Ateca (KH7) 44287 TSI	CZEA	110	06/2016 -	4228/1	
Ateca (KH7) 44287 TSI 4Drive	CZEA	110	06/2016 -	4228/1	
Ateca (KH7) 44317 TSI	DADA, DPCA	110	07/2018 -	4228/1	
Ateca (KH7) 44317 TSI 4Drive	DADA, DPCA	110	07/2018 -	4228/1	
Ateca (KH7) 44348 TDI	DDYA (04.16-07.18), DGTE (07.18-.)	85	04/2016 - 07/2018	4228/1	
CORDOBA II (6K2)	1.6 (AEH)	74	06/99 – 10/02	3682	
CORDOBA II (6K2)	1.6 (AKL)	74	06/99 – 10/02	3682	
CORDOBA II (6K2)	1.6 (APF)	74	06/99 – 10/02	3682	
CORDOBA II (6K2)	1.6 (AUR)	74	06/99 – 10/02	3682	
CORDOBA II (6K2)	1.9 TDI (AGR)	66	06/99 – 10/02	3682	
CORDOBA II (6K2)	1.9 TDI (AHU)	66	06/99 – 10/02	3682	
CORDOBA II (6K2)	1.9 TDI (ALH)	66	06/99 – 10/02	3682	
CORDOBA II (6K2)	1.9 TDI (ASK)	81	06/99 – 10/02	3682	
CORDOBA II (6K2)	1.9 TDI (ASV)	81	06/99 – 10/02	3682	
CORDOBA (6K1, 6K2	1.9 TD	55	02.1993 - 08.1996	3444/1	
CORDOBA (6K1, 6K2)	1.4 i	44	06.1994 - 10.2002	3444/1	
CORDOBA (6K1, 6K2)	1.6 i	55	02.1993 - 10.2002	3444/1	
CORDOBA (6K1, 6K2)	1.6 i	55	05.1994 - 06.1999	3486/1	
CORDOBA (6K1, 6K2)	1.8 i	66	02.1993 - 09.2002	3444/1	
CORDOBA (6K1, 6K2)	1.8 i	66	02.1993 - 09.2002	3486/1	
CORDOBA (6K1, 6K2)	1.9 D	50	02.1993 - 08.1996	3444/1	
CORDOBA (6K1, 6K2)	1.9 D	50	02.1993 - 08.1996	3486/1	
CORDOBA (6K1, 6K2)	1.9 TD	55	02.1993 - 08.1996	3486/1	
CORDOBA (6K1, 6K2)	1.0 i	37	09/96 – 06/99	3538	
CORDOBA (6K1, 6K2)	1.0 i	37	09/96 – 06/99	3637	
CORDOBA (6K1, 6K2)	1.3	40	02/93 – 08/94	3441	
CORDOBA (6K1, 6K2)	1.3	40	02/93 – 08/94	3444	
CORDOBA (6K1, 6K2)	1.3	40	02/93 – 08/94	3538	
CORDOBA (6K1, 6K2)	1.3	40	02/93 – 08/94	3585	
CORDOBA (6K1, 6K2)	1.3	40	02/93 – 08/94	3637	
CORDOBA (6K1, 6K2)	1.4	40	12/97 – 04/99	3441	
CORDOBA (6K1, 6K2)	1.4	40	12/97 – 04/99	3444	
CORDOBA (6K1, 6K2)	1.4	40	12/97 – 04/99	3538	
CORDOBA (6K1, 6K2)	1.4	40	12/97 – 04/99	3585	
CORDOBA (6K1, 6K2)	1.4	40	12/97 – 04/99	3637	
CORDOBA (6K1, 6K2)	1.4 i	44	06/94 – 06/99	3441	
CORDOBA (6K1, 6K2)	1.4 i	44	06/94 – 06/99	3444	
CORDOBA (6K1, 6K2)	1.4 i	44	06/94 – 06/99	3538	
CORDOBA (6K1, 6K2)	1.4 i	44	06/94 – 06/99	3585	
CORDOBA (6K1, 6K2)	1.4 i	44	06/94 – 06/99	3637	
CORDOBA (6K1, 6K2)	1.4 i 16V	74	09/96 – 06/99	3538	
CORDOBA (6K1, 6K2)	1.4 i 16V	74	09/96 – 06/99	3637	
CORDOBA (6K1, 6K2)	1.6 i	55	02/93 – 06/99	3444	
CORDOBA (6K1, 6K2)	1.6 i	55	02/93 – 06/99	3538	
CORDOBA (6K1, 6K2)	1.6 i	55	02/93 – 06/99	3585	
CORDOBA (6K1, 6K2)	1.6 i	55	02/93 – 06/99	3637	
CORDOBA (6K1, 6K2)	1.6 i	55	05/94 – 06/99	3486	
CORDOBA (6K1, 6K2)	1.8 i	66	02/93 – 06/99	3444	
CORDOBA (6K1, 6K2)	1.8 i	66	02/93 – 06/99	3486	
CORDOBA (6K1, 6K2)	1.8 i	66	02/93 – 06/99	3538	
CORDOBA (6K1, 6K2)	1.8 i	66	02/93 – 06/99	3585	
CORDOBA (6K1, 6K2)	1.8 i	66	02/93 – 06/99	3637	
CORDOBA (6K1, 6K2)	1.8 i 16V	95	10/93 – 08/96	3531	3529
CORDOBA (6K1, 6K2)	1.9 D	47	01/96 – 08/96	3538	
CORDOBA (6K1, 6K2)	1.9 D	47	01/96 – 08/96	3637	
CORDOBA (6K1, 6K2)	1.9 D	50	02/93 – 08/96	3444	
CORDOBA (6K1, 6K2)	1.9 D	50	02/93 – 08/96	3486	
CORDOBA (6K1, 6K2)	1.9 D	50	02/93 – 08/96	3538	
CORDOBA (6K1, 6K2)	1.9 D	50	02/93 – 08/96	3585	
CORDOBA (6K1, 6K2)	1.9 D	50	02/93 – 08/96	3637	
CORDOBA (6K1, 6K2)	1.9 SDI	47	08/96 – 06/99	3538	
CORDOBA (6K1, 6K2)	1.9 SDI	47	08/96 – 06/99	3637	
CORDOBA (6K1, 6K2)	1.9 TD	55	02/93 – 08/96	3444	
CORDOBA (6K1, 6K2)	1.9 TD	55	02/93 – 08/96	3486	
CORDOBA (6K1, 6K2)	1.9 TD	55	02/93 – 08/96	3538	

MAKE & MODEL		KW	YEAR		
SEAT					
CORDOBA (6K1, 6K2)	1.9 TD	55	02/93 – 08/96	3585	
CORDOBA (6K1, 6K2)	1.9 TD	55	02/93 – 08/96	3637	
CORDOBA (6K1, 6K2)	1.9 TDI	66	08/96 – 06/99		3529
CORDOBA (6K1, 6K2)	1.9 TDI	81	03/97 – 06/99		3529
CORDOBA (6K1, 6K2)	2.0 i	85	02/93 – 06/99	3531	3529
CORDOBA (6K1, 6K2)	2.0 i 16V	110	08/96 – 06/99	3551	3529/1
CORDOBA (6K2)	1.0	37	06/99 – 10/02	3637	3529/1
CORDOBA (6K2)	1.2	47	10/02 – 06/06	3782/1	3529/1
CORDOBA (6K2)	1.2 12V	51	05/06 – 11/09	3782/1	3529/1
CORDOBA (6K2)	1.4	44	06/99 – 10/02	3637	3529/1
CORDOBA (6K2)	1.4 16V	55	05/00 – 10/02	3637	3529/1
CORDOBA (6K2)	1.4 16V	55	09/02 – 12/07	3782/1	3529/1
CORDOBA (6K2)	1.4 16V	63	05/06 – 11/09	3782/1	3529/1
CORDOBA (6K2)	1.4 16V	74	02/00 – 10/02	3637	3529/1
CORDOBA (6K2)	1.4 16V	74	10/02 – 11/09	3782/1	3529/1
CORDOBA (6K2)	1.4 TDI	51	05/05 – 11/09	3782/1	3529/1
CORDOBA (6L2)	1.4 TDI	55	10/02 – 12/05	3782/1	3529/1
CORDOBA (6L2)	1.4 TDI	59	06/05 – 11/09	3782/1	3529/1
CORDOBA (6L2)	1.6	55	06/99 – 10/02	3637	3529/1
CORDOBA (6L2)	1.6	74	04/03 – 11/09	3782/1	3529/1
CORDOBA (6L2)	1.6	74	06/99 – 10/02	3637	3529/1
CORDOBA (6L2)	1.6 16V	77	11/06 – 11/09	3782/1	3529/1
CORDOBA (6L2)	1.8 T 20V Cupra	115	07/00 – 10/02	3551	3529/1
CORDOBA (6L2)	1.9 SDI	47	09/02 – 11/09	3782/1	3529/1
CORDOBA (6L2)	1.9 SDI	50	06/99 – 10/02	3637	3529/1
CORDOBA (6L2)	1.9 TDI	66	06/99 – 10/02	3637	3529/1
CORDOBA (6L2)	1.9 TDI	74	09/02 – 11/09	3782/1	3529/1
CORDOBA (6L2)	1.9 TDI	81	06/99 – 10/02	3551	3529/1
CORDOBA (6L2)	1.9 TDI	96	10/02 – 11/09	3782/1	3529/1
CORDOBA (6L2)	2.0	85	09/02 – 11/09		3529/1
Cordoba I (6K1, 6K2) 44287 i	ABD (06.94-12.95), AEX (12.95-12.97), AKK, AKV (12	44	06/1994 - 10/2002	3441/1	
Cordoba I Vario (6K5) 44287 i	AEX (09.96-12.97), AKK, AKV (12.97-.), ANW, APQ (1	44	09/1996 - 12/2002	3441/1	
Cordoba II (6L2) 44228	AZQ, BME	47	10/2002 - 06/2006	3782/1	
Cordoba II (6L2) 44228 12V	BXV	51	05/2006 - 11/2009	3782/1	
Cordoba II (6L2) 44287 16V	BBY, BKY	55	09/2002 - 12/2007	3782/1	
Cordoba II (6L2) 44287 16V	BBZ	74	10/2002 - 11/2009	3782/1	
Cordoba II (6L2) 44287 16V	BXW	63	05/2006 - 11/2009	3782/1	
Cordoba II (6L2) 44287 TDI	AMF	55	10/2002 - 12/2005	3782/1	
Cordoba II (6L2) 44287 TDI	BMS, BNV	59	06/2005 - 11/2009	3782/1	
Cordoba II (6L2) 44287 TDI	BNM	51	05/2005 - 11/2009	3782/1	
Cordoba II (6L2) 44440 SDI	ASY	47	09/2002 - 11/2009	3782/1	
Cordoba II (6L2) 44440 TDI	ASZ, BLT	96	10/2002 - 11/2009	4138/1	
Cordoba II (6L2) 44440 TDI	ATD, AXR, BMT	74	09/2002 - 11/2009	3782/1	
CORDOBA Vario (6K5)	1.4	44	06/99 – 12/02	3637	3529/1
CORDOBA Vario (6K5)	1.4 16V	55	06/99 – 12/02	3637	3529/1
CORDOBA Vario (6K5)	1.4 i	44	09/96 – 06/99	3538	
CORDOBA Vario (6K5)	1.4 i	44	09/96 – 06/99	3637	
CORDOBA Vario (6K5)	1.6	55	06/99 – 12/02	3637	3529/1
CORDOBA Vario (6K5)	1.6	74	06/99 – 12/02		3529/1
CORDOBA Vario (6K5)	1.6 i	55	05/97 – 06/99	3637	
CORDOBA Vario (6K5)	1.6 i	55	09/96 – 06/99	3538	
CORDOBA Vario (6K5)	1.6 i	55	09/96 – 06/99	3637	
CORDOBA Vario (6K5)	1.9 SDI	47	09/96 – 06/99	3538	
CORDOBA Vario (6K5)	1.9 SDI	47	09/96 – 06/99	3637	
CORDOBA Vario (6K5)	1.9 SDI	50	06/99 – 12/02	3637	3529/1
CORDOBA Vario (6K5)	1.9 TDI	66	06/99 – 12/02	3637	3529/1
CORDOBA Vario (6K5)	1.9 TDI	66	08/96 – 06/99		3529
CORDOBA Vario (6K5)	1.9 TDI	81	06/99 – 12/02		3529/1
CORDOBA Vario (6K5)	1.9 TDI	81	07/97 – 06/99		3529
EXEO (3R2)	1.6	75	03/09 – 09/10	3896	3529
EXEO (3R2)	1.8 T	110	12/08 – 05/10		3529
EXEO (3R2)	1.8 TSI	88	09/10 -	3896	3529
EXEO (3R2)	1.8 TSI	118	05/10 -		3529
EXEO (3R2)	2.0 TDI	88	12/08 -	3896	3529
EXEO (3R2)	2.0 TDI	105	12/08 -	3896	3529
EXEO (3R2)	2.0 TDI	125	02/09 -		3529
EXEO (3R2)	2.0 TFSI	147	03/09 -		3905
EXEO (3R2)	2.0 TFSI	155	05/10 -		3905
EXEO ST (3R5)	1.6	75	06/09 – 09/10	3896	3529
EXEO ST (3R5)	1.8 T	110	06/09 – 05/10		3529
EXEO ST (3R5)	1.8 TSI	88	09/10 -	3896	3529
EXEO ST (3R5)	1.8 TSI	118	05/10 -		3529
EXEO ST (3R5)	2.0 TDI	88	07/09 -	3896	3529
EXEO ST (3R5)	2.0 TDI	105	05/09 -	3896	3529
EXEO ST (3R5)	2.0 TDI	125	05/09 -		3529
EXEO ST (3R5)	2.0 TFSI	147	06/09 -		3905

MAKE & MODEL   		KW	YEAR		
SEAT					
EXEO ST (3R5)	2.0 TFSI	155	05/10 -		3905
FURA (025A)	0.9	29	03/84 – 12/86	3316	
FURA (025A)	0.9	29	03/84 – 12/86	3424/1	
FURA (025A)	0.9	31	01/82 – 06/86	3316	
FURA (025A)	0.9	31	01/82 – 06/86	3424/1	
FURA (025A)	0.9	33	01/82 – 06/86	3316	
FURA (025A)	0.9	33	01/82 – 06/86	3424/1	
FURA (025A)	1.4	55	01/82 – 06/86	3316	
FURA (025A)	1.4	55	01/82 – 06/86	3424/1	
IBIZA I (021A)	0.9	29	08/90 – 05/93	3424/1	
IBIZA I (021A)	0.9	32	08/86 – 05/93	3424/1	
IBIZA I (021A)	1.2	44	11/84 – 12/93	3424/1	
IBIZA I (021A)	1.2	46	11/84 – 12/93	3424/1	
IBIZA I (021A)	1.2 i	52	01/89 – 05/93	3424/1	
IBIZA I (021A)	1.5	63	11/84 – 05/93	3424/1	
IBIZA I (021A)	1.5 i	65	10/86 – 05/93	3424/1	
IBIZA I (021A)	1.5 i	74	10/86 – 05/93	3424/1	
IBIZA I (021A)	1.5 i CAT	66	10/86 – 05/93	3424/1	
IBIZA I (021A)	1.7	72	01/91 – 05/93	3424/1	
IBIZA I (021A)	1.7	76	01/91 – 05/93	3424/1	
IBIZA I (021A)	1.7 D	40	06/84 – 05/93	3424/1	
IBIZA I (021A)	1.7 D	42	08/90 – 05/93	3424/1	
IBIZA II (6K1)	1.4	40	12.1997 - 04.1999	3444/1	
IBIZA II (6K1)	1.4 i	44	09.1993 - 02.2002	3444/1	
IBIZA II (6K1)	1.6 i	55	03.1993 - 02.2002	3444/1	
IBIZA II (6K1)	1.6 i	55	09.1994 - 06.1999	3486/1	
IBIZA II (6K1)	1.8 i	66	03.1993 - 08.1999	3444/1	
IBIZA II (6K1)	1.8 i	66	03.1993 - 08.1999	3486/1	
IBIZA II (6K1)	1.9 TD	55	03.1993 - 08.1996	3444/1	
IBIZA II (6K1)	1.9 TD	55	03.1993 - 08.1996	3486/1	
IBIZA II (6K1)	1.0	33	03/93 – 09/96	3538	
IBIZA II (6K1)	1.0	33	03/93 – 09/96	3637	
IBIZA II (6K1)	1.0 i	37	09/96 – 08/99	3538	
IBIZA II (6K1)	1.0 i	37	09/96 – 08/99	3637	
IBIZA II (6K1)	1.3 i	40	03/93 – 08/99	3538	
IBIZA II (6K1)	1.3 i	40	03/93 – 08/99	3637	
IBIZA II (6K1)	1.4	40	12/97 – 04/99	3441	
IBIZA II (6K1)	1.4	40	12/97 – 04/99	3444	
IBIZA II (6K1)	1.4	40	12/97 – 04/99	3538	
IBIZA II (6K1)	1.4	40	12/97 – 04/99	3585	
IBIZA II (6K1)	1.4	40	12/97 – 04/99	3637	
IBIZA II (6K1)	1.4 i	44	09/93 – 08/99	3441	
IBIZA II (6K1)	1.4 i	44	09/93 – 08/99	3444	
IBIZA II (6K1)	1.4 i	44	09/93 – 08/99	3538	
IBIZA II (6K1)	1.4 i	44	09/93 – 08/99	3585	
IBIZA II (6K1)	1.4 i	44	09/93 – 08/99	3637	
IBIZA II (6K1)	1.4 i 16V	74	06/97 – 08/99	3538	
IBIZA II (6K1)	1.4 i 16V	74	06/97 – 08/99	3637	
IBIZA II (6K1)	1.6 i	55	03/93 – 08/99	3444	
IBIZA II (6K1)	1.6 i	55	03/93 – 08/99	3538	
IBIZA II (6K1)	1.6 i	55	03/93 – 08/99	3585	
IBIZA II (6K1)	1.6 i	55	03/93 – 08/99	3637	
IBIZA II (6K1)	1.6 i	55	09/94 – 06/99	3486	
IBIZA II (6K1)	1.6 i	74	04/96 – 08/99	3637	
IBIZA II (6K1)	1.8 i	66	03/93 – 08/99	3444	
IBIZA II (6K1)	1.8 i	66	03/93 – 08/99	3486	
IBIZA II (6K1)	1.8 i	66	03/93 – 08/99	3538	
IBIZA II (6K1)	1.8 i	66	03/93 – 08/99	3585	
IBIZA II (6K1)	1.8 i	66	03/93 – 08/99	3637	
IBIZA II (6K1)	1.8 i 16V	95	11/93 – 08/96	3531	3529
IBIZA II (6K1)	1.9 D	47	04/93 – 08/96	3538	
IBIZA II (6K1)	1.9 D	47	04/93 – 08/96	3637	
IBIZA II (6K1)	1.9 D	50	10/94 – 08/96	3444	
IBIZA II (6K1)	1.9 D	50	10/94 – 08/96	3486	
IBIZA II (6K1)	1.9 D	50	10/94 – 08/96	3538	
IBIZA II (6K1)	1.9 D	50	10/94 – 08/96	3585	
IBIZA II (6K1)	1.9 D	50	10/94 – 08/96	3637	
IBIZA II (6K1)	1.9 SDI	47	08/96 – 08/99	3538	
IBIZA II (6K1)	1.9 SDI	47	08/96 – 08/99	3637	
IBIZA II (6K1)	1.9 TD	55	03/93 – 08/96	3444	
IBIZA II (6K1)	1.9 TD	55	03/93 – 08/96	3486	
IBIZA II (6K1)	1.9 TD	55	03/93 – 08/96	3538	
IBIZA II (6K1)	1.9 TD	55	03/93 – 08/96	3585	
IBIZA II (6K1)	1.9 TD	55	03/93 – 08/96	3637	
IBIZA II (6K1)	1.9 TD	55	03/93 – 08/96	3637	
IBIZA II (6K1)	1.9 TDI	66	08/96 – 08/99		3529

MAKE & MODEL		KW	YEAR		
SEAT					
IBIZA II (6K1)	1.9 TDI	81	02/97 – 08/99		3529
IBIZA II (6K1)	2.0 i	85	03/93 – 08/99	3531	3529
IBIZA II (6K1)	2.0 i 16V	110	08/96 – 08/99	3551	3529/1
IBIZA III (6K1)	1.0	37	08/99 – 02/02	3637	3529/1
IBIZA III (6K1)	1.0 16V	51	10/99 – 02/02	3637	3529/1
IBIZA III (6K1)	1.4	44	08/99 – 02/02	3637	3529/1
IBIZA III (6K1)	1.4 16V	55	05/00 – 02/02	3637	3529/1
IBIZA III (6K1)	1.4 16V	74	08/99 – 02/02	3637	3529/1
IBIZA III (6K1)	1.6	55	08/99 – 02/02	3637	3529/1
IBIZA III (6K1)	1.6	74	08/99 – 02/02	3637	3529/1
IBIZA III (6K1)	1.8 T 20V Cupra	115	07/00 – 02/02	3551	3529/1
IBIZA III (6K1)	1.9 SDI	50	08/99 – 02/02	3637	3529/1
IBIZA III (6K1)	1.9 TDI	66	08/99 – 02/02	3637	3529/1
IBIZA III (6K1)	1.9 TDI	81	08/99 – 02/02	3551	3529/1
IBIZA IV (6L1)	1.2	44	06/07 – 05/08	3782	3529/1
IBIZA IV (6L1)	1.2	44	06/07 – 05/08	3782/1	4152
IBIZA IV (6L1)	1.2	47	02/02 – 06/06	3782	3529/1
IBIZA IV (6L1)	1.2	47	02/02 – 06/06	3782/1	4152
IBIZA IV (6L1)	1.2 12V	51	05/06 – 1/09	3782/1	4152
IBIZA IV (6L1)	1.2 12V	51	05/06 – 11/09	3782	3529/1
IBIZA IV (6L1)	1.4 16V	55	02/02 – 12/07	3782	3529/1
IBIZA IV (6L1)	1.4 16V	55	02/02 – 12/07	4138	4152
IBIZA IV (6L1)	1.4 16V	55	02/02 – 12/07	3782/1	
IBIZA IV (6L1)	1.4 16V	63	05/06 – 11/09	3782	3529/1
IBIZA IV (6L1)	1.4 16V	63	05/06 – 11/09	4138	4152
IBIZA IV (6L1)	1.4 16V	63	05/06 – 11/09	3782/1	
IBIZA IV (6L1)	1.4 16V	74	02/02 – 11/09	3782	3529/1
IBIZA IV (6L1)	1.4 16V	74	02/02 – 11/09	4138	4152
IBIZA IV (6L1)	1.4 16V	74	02/02 – 11/09	3782/1	
IBIZA IV (6L1)	1.4 TDI	51	05/05 – 11/09	3782	3529/1
IBIZA IV (6L1)	1.4 TDI	51	05/05 – 11/09	3782/1	4152
IBIZA IV (6L1)	1.4 TDI	55	05/02 – 12/05	3782	3529/1
IBIZA IV (6L1)	1.4 TDI	55	05/02 – 12/05	3782/1	4152
IBIZA IV (6L1)	1.4 TDI	59	06/05 – 11/09	3782	3529/1
IBIZA IV (6L1)	1.4 TDI	59	06/05 – 11/09	3782/1	4152
IBIZA IV (6L1)	1.6	74	02/03 – 11/09	3782	3529/1
IBIZA IV (6L1)	1.6	74	02/03 – 11/09	3782/1	4152
IBIZA IV (6L1)	1.6 16V	77	11/06 – 11/09	3782	3529/1
IBIZA IV (6L1)	1.6 16V	77	11/06 – 11/09	4138	4152
IBIZA IV (6L1)	1.6 16V	77	11/06 – 11/09	3782/1	
IBIZA IV (6L1)	1.8 T Cupra R	132	01/04 – 02/08		3529/1
IBIZA IV (6L1)	1.8 T Cupra R	132	01/04 – 02/08		4152
IBIZA IV (6L1)	1.8 T FR	110	12/03 – 05/08	4138	3529/1
IBIZA IV (6L1)	1.8 T FR	110	12/03 – 05/08		4152
IBIZA IV (6L1)	1.9 SDI	47	02/02 – 12/05	3782	3529/1
IBIZA IV (6L1)	1.9 SDI	47	02/02 – 12/05	3782/1	4152
IBIZA IV (6L1)	1.9 TDI	74	02/02 – 11/09	3782	3529/1
IBIZA IV (6L1)	1.9 TDI	74	02/02 – 11/09	3782/1	4152
IBIZA IV (6L1)	1.9 TDI	96	02/02 – 11/09	3782	3529/1
IBIZA IV (6L1)	1.9 TDI	96	02/02 – 11/09	4138	4152
IBIZA IV (6L1)	1.9 TDI	96	02/02 – 11/09	3782/1	
IBIZA IV (6L1)	1.9 TDI Cupra R	118	03/04 – 02/08		3529/1
IBIZA IV (6L1)	1.9 TDI Cupra R	118	03/04 – 02/08		4152
IBIZA IV (6L1)	2.0	85	04/02 – 11/09	4138	4152
IBIZA IV (6L1)	2.0	85	04/02 – 11/09		3529/1
IBIZA IV (6L1)	2.0	85	04/02 – 11/09	3782	
IBIZA IV (6L1)	2.0	85	04/02 – 11/09	3782/1	
IBIZA IV (6L1)	2.0	85	04/02 – 11/09		3529/1
IBIZA V (6J5, 6P1)	1.0	55	05/15 -	3782/1	3529/1
IBIZA V (6J5, 6P1)	1.0	55	05/15 -	3904	3529/1
IBIZA V (6J5, 6P1)	1.0 TSI	70	05/15 -	3782/1	
IBIZA V (6J5, 6P1)	1.0 TSI	70	05/15 -	3904	
IBIZA V (6J5, 6P1)	1.0 TSI	81	05/15 -	3782/1	3529/1
IBIZA V (6J5, 6P1)	1.0 TSI	81	05/15 -	3904	
IBIZA V (6J5, 6P1)	1.2	44	07/09 -	3782	3529/1
IBIZA V (6J5, 6P1)	1.2	44	07/09 -	3782/1	
IBIZA V (6J5, 6P1)	1.2	51	03/08 -	3782	3529/1
IBIZA V (6J5, 6P1)	1.2	51	03/08 -	3782/1	
IBIZA V (6J5, 6P1)	1.2 TDI	55	05/10 -	3782	3529/1
IBIZA V (6J5, 6P1)	1.2 TDI	55	05/10 -	3782/1	
IBIZA V (6J5, 6P1)	1.2 TSI	63	08/12 -	3782	3529/1
IBIZA V (6J5, 6P1)	1.2 TSI	63	08/12 -	3782/1	
IBIZA V (6J5, 6P1)	1.2 TSI	66	05/15 -	3782/1	3529/1
IBIZA V (6J5, 6P1)	1.2 TSI	66	05/15 -	3904	
IBIZA V (6J5, 6P1)	1.2 TSI	77	09/10 -	3782	3529/1
IBIZA V (6J5, 6P1)	1.2 TSI	77	09/10 -	3782/1	

MAKE & MODEL		KW	YEAR		
SEAT					
IBIZA V (6J5, 6P1)	1.2 TSI	81	09/15 -	3782/1	3529/1
IBIZA V (6J5, 6P1)	1.2 TSI	81	09/15 -	3904	
IBIZA V (6J5, 6P1)	1.4	63	03/08 -	3782	3529/1
IBIZA V (6J5, 6P1)	1.4	63	03/08 -	3782/1	
IBIZA V (6J5, 6P1)	1.4 TDI	55	05/15 -	3782/1	3529/1
IBIZA V (6J5, 6P1)	1.4 TDI	55	05/15 -	3904	
IBIZA V (6J5, 6P1)	1.4 TDI	59	07/08 – 06/10	3782	3529/1
IBIZA V (6J5, 6P1)	1.4 TDI	59	07/08 – 06/10	3782/1	
IBIZA V (6J5, 6P1)	1.4 TDI	66	05/15 -	3782/1	3529/1
IBIZA V (6J5, 6P1)	1.4 TDI	66	05/15 -	3904	
IBIZA V (6J5, 6P1)	1.4 TDI	77	05/15 -	3782/1	3529/1
IBIZA V (6J5, 6P1)	1.4 TDI	77	05/15 -	3904	
IBIZA V (6J5, 6P1)	1.4 TSI	103	10/13 -	3782/1	3529/1
IBIZA V (6J5, 6P1)	1.4 TSI	103	10/13 -	3904	
IBIZA V (6J5, 6P1)	1.4 TSI	110	06/09 -	3904	3529/1
IBIZA V (6J5, 6P1)	1.4 TSI	110	11/15 -	3782/1	3529/1
IBIZA V (6J5, 6P1)	1.6	77	05/08 -	3782	3529/1
IBIZA V (6J5, 6P1)	1.6	77	05/08 -	3782/1	
IBIZA V (6J5, 6P1)	1.6 LPG	60	05/11 -	3782	3529/1
IBIZA V (6J5, 6P1)	1.6 LPG	60	05/11 -	3782/1	
IBIZA V (6J5, 6P1)	1.6 TDI	66	05/09 -	3782	3529/1
IBIZA V (6J5, 6P1)	1.6 TDI	66	05/09 -	3782/1	
IBIZA V (6J5, 6P1)	1.6 TDI	77	05/09 -	3782/1	3529/1
IBIZA V (6J5, 6P1)	1.9 TDI	66	07/08 – 06/10	3782	3529/1
IBIZA V (6J5, 6P1)	1.9 TDI	66	07/08 – 06/10	3782/1	
IBIZA V (6J5, 6P1)	1.9 TDI	77	03/08 – 06/10	3782/1	3529/1
IBIZA V (6J5, 6P1)	1.9 TDI	77	03/08 – 06/10	3904	
IBIZA V (6J5, 6P1)	2.0	85	10/08 -	3782/1	3529/1
IBIZA V (6J5, 6P1)	2.0	85	10/08 -	3904	
IBIZA V (6J5, 6P1)	2.0 TDI	105	01/10 -	3782/1	3529/1
IBIZA V (6J5, 6P1)	2.0 TDI	105	01/10 -	3904	
IBIZA V SPORTCOUPE (6J1, 6P5)	1.0	55	05/15 -	3782/1	3529/1
IBIZA V SPORTCOUPE (6J1, 6P5)	1.0	55	05/15 -	3904	
IBIZA V SPORTCOUPE (6J1, 6P5)	1.0 TSI	70	05/15 -	3782/1	3529/1
IBIZA V SPORTCOUPE (6J1, 6P5)	1.0 TSI	70	05/15 -	3904	
IBIZA V SPORTCOUPE (6J1, 6P5)	1.0 TSI	81	05/15 -	3782/1	3529/1
IBIZA V SPORTCOUPE (6J1, 6P5)	1.0 TSI	81	05/15 -	3904	
IBIZA V SPORTCOUPE (6J1, 6P5)	1.2	44	07/09 -	3782	3529/1
IBIZA V SPORTCOUPE (6J1, 6P5)	1.2	44	07/09 -	3782/1	
IBIZA V SPORTCOUPE (6J1, 6P5)	1.2	51	07/08 -	3782	3529/1
IBIZA V SPORTCOUPE (6J1, 6P5)	1.2	51	07/08 -	3782/1	
IBIZA V SPORTCOUPE (6J1, 6P5)	1.2 TDI	55	05/10 -	3782	3529/1
IBIZA V SPORTCOUPE (6J1, 6P5)	1.2 TDI	55	05/10 -	3782/1	
IBIZA V SPORTCOUPE (6J1, 6P5)	1.2 TSI	63	08/12 -	3782/1	3529/1
IBIZA V SPORTCOUPE (6J1, 6P5)	1.2 TSI	63	08/12 -	3904	
IBIZA V SPORTCOUPE (6J1, 6P5)	1.2 TSI	66	05/15 -	3782/1	3529/1
IBIZA V SPORTCOUPE (6J1, 6P5)	1.2 TSI	66	05/15 -	3904	
IBIZA V SPORTCOUPE (6J1, 6P5)	1.2 TSI	77	09/10 -	3782	3529/1
IBIZA V SPORTCOUPE (6J1, 6P5)	1.2 TSI	77	09/10 -	3782/1	
IBIZA V SPORTCOUPE (6J1, 6P5)	1.2 TSI	81	09/15 -	3782/1	3529/1
IBIZA V SPORTCOUPE (6J1, 6P5)	1.2 TSI	81	09/15 -	3904	
IBIZA V SPORTCOUPE (6J1, 6P5)	1.4	63	07/08 -	3782	3529/1
IBIZA V SPORTCOUPE (6J1, 6P5)	1.4	63	07/08 -	3782/1	
IBIZA V SPORTCOUPE (6J1, 6P5)	1.4 TDI	55	05/15 -	3782/1	3529/1
IBIZA V SPORTCOUPE (6J1, 6P5)	1.4 TDI	55	05/15 -	3904	
IBIZA V SPORTCOUPE (6J1, 6P5)	1.4 TDI	59	07/08 – 06/10	3782	3529/1
IBIZA V SPORTCOUPE (6J1, 6P5)	1.4 TDI	59	07/08 – 06/10	3782/1	
IBIZA V SPORTCOUPE (6J1, 6P5)	1.4 TDI	66	05/15 -	3782/1	3529/1
IBIZA V SPORTCOUPE (6J1, 6P5)	1.4 TDI	66	05/15 -	3904	
IBIZA V SPORTCOUPE (6J1, 6P5)	1.4 TDI	77	05/15 -	3782/1	3529/1
IBIZA V SPORTCOUPE (6J1, 6P5)	1.4 TDI	77	05/15 -	3904	
IBIZA V SPORTCOUPE (6J1, 6P5)	1.4 TSI	103	10/13 -	3782/1	3529/1
IBIZA V SPORTCOUPE (6J1, 6P5)	1.4 TSI	103	10/13 -	3904	
IBIZA V SPORTCOUPE (6J1, 6P5)	1.4 TSI	110	06/09 -	3904	3529/1
IBIZA V SPORTCOUPE (6J1, 6P5)	1.4 TSI	110	11/15 -	3782/1	3529/1
IBIZA V SPORTCOUPE (6J1, 6P5)	1.4 TSI Cupra	132	06/09 -	3904	3529/1
IBIZA V SPORTCOUPE (6J1, 6P5)	1.6	77	07/08 -	3782	3529/1
IBIZA V SPORTCOUPE (6J1, 6P5)	1.6	77	07/08 -	3782/1	
IBIZA V SPORTCOUPE (6J1, 6P5)	1.6 LPG	60	05/11 -	3782	3529/1
IBIZA V SPORTCOUPE (6J1, 6P5)	1.6 LPG	60	05/11 -	3782/1	3529/1
IBIZA V SPORTCOUPE (6J1, 6P5)	1.6 TDI	66	05/09 -	3782	
IBIZA V SPORTCOUPE (6J1, 6P5)	1.6 TDI	66	05/09 -	3782/1	
IBIZA V SPORTCOUPE (6J1, 6P5)	1.6 TDI	77	05/09 -	3782/1	3529/1
IBIZA V SPORTCOUPE (6J1, 6P5)	1.6 TDI	77	05/09 -	3904	
IBIZA V SPORTCOUPE (6J1, 6P5)	1.8 TSI Cupra	141	11/15 -	3782/1	3529/1
IBIZA V SPORTCOUPE (6J1, 6P5)	1.8 TSI Cupra	141	11/15 -	3904	

MAKE & MODEL		KW	YEAR		
SEAT					
IBIZA V SPORTCOUPE (6J1, 6P5)	1.9 TDI	66	07/08 – 06/10	3782	3529/1
IBIZA V SPORTCOUPE (6J1, 6P5)	1.9 TDI	66	07/08 – 06/10	3782/1	
IBIZA V SPORTCOUPE (6J1, 6P5)	1.9 TDI	77	07/08 – 06/10	3782/1	3529/1
IBIZA V SPORTCOUPE (6J1, 6P5)	1.9 TDI	77	07/08 – 06/10	3904	
IBIZA V SPORTCOUPE (6J1, 6P5)	2.0	85	10/08 -	3782/1	3529/1
IBIZA V SPORTCOUPE (6J1, 6P5)	2.0	85	10/08 -	3904	3529/1
IBIZA V SPORTCOUPE (6J1, 6P5)	2.0 TDI	105	01/10 -	3782/1	
IBIZA V SPORTCOUPE (6J1, 6P5)	2.0 TDI	105	01/10 -	3904	
IBIZA V ST (6J8, 6P8)	1.0	55	05/15 -	3782/1	3529/1
IBIZA V ST (6J8, 6P8)	1.0	55	05/15 -	3904	
IBIZA V ST (6J8, 6P8)	1.0 TSI	70	05/15 -	3782/1	3529/1
IBIZA V ST (6J8, 6P8)	1.0 TSI	70	05/15 -	3904	
IBIZA V ST (6J8, 6P8)	1.0 TSI	81	05/15 -	3782/1	3529/1
IBIZA V ST (6J8, 6P8)	1.0 TSI	81	05/15 -	3904	
IBIZA V ST (6J8, 6P8)	1.2	44	05/10 -	3782	3529/1
IBIZA V ST (6J8, 6P8)	1.2	44	05/10 -	3782/1	
IBIZA V ST (6J8, 6P8)	1.2	51	05/10 -	3782	3529/1
IBIZA V ST (6J8, 6P8)	1.2	51	05/10 -	3782/1	
IBIZA V ST (6J8, 6P8)	1.2 TDI	55	04/10 -	3782	3529/1
IBIZA V ST (6J8, 6P8)	1.2 TDI	55	04/10 -	3782/1	
IBIZA V ST (6J8, 6P8)	1.2 TSI	63	09/12 -	3782	3529/1
IBIZA V ST (6J8, 6P8)	1.2 TSI	63	09/12 -	3782/1	
IBIZA V ST (6J8, 6P8)	1.2 TSI	66	05/15 -	3782/1	3529/1
IBIZA V ST (6J8, 6P8)	1.2 TSI	66	05/15 -	3904	
IBIZA V ST (6J8, 6P8)	1.2 TSI	77	09/10 -	3782	3529/1
IBIZA V ST (6J8, 6P8)	1.2 TSI	77	09/10 -	3782/1	
IBIZA V ST (6J8, 6P8)	1.2 TSI	81	09/15 -	3782/1	3529/1
IBIZA V ST (6J8, 6P8)	1.2 TSI	81	09/15 -	3904	
IBIZA V ST (6J8, 6P8)	1.4	63	03/10 -	3782	3529/1
IBIZA V ST (6J8, 6P8)	1.4	63	03/10 -	3782/1	
IBIZA V ST (6J8, 6P8)	1.4 TDI	55	05/15 -	3782/1	3529/1
IBIZA V ST (6J8, 6P8)	1.4 TDI	55	05/15 -	3904	
IBIZA V ST (6J8, 6P8)	1.4 TDI	66	05/15 -	3782/1	3529/1
IBIZA V ST (6J8, 6P8)	1.4 TDI	66	05/15 -	3904	
IBIZA V ST (6J8, 6P8)	1.4 TDI	77	05/15 -	3782/1	3529/1
IBIZA V ST (6J8, 6P8)	1.4 TDI	77	05/15 -	3904	
IBIZA V ST (6J8, 6P8)	1.4 TSI	103	10/13 -	3782/1	3529/1
IBIZA V ST (6J8, 6P8)	1.4 TSI	103	10/13 -	3904	
IBIZA V ST (6J8, 6P8)	1.4 TSI	110	02/12 -	3904	3529/1
IBIZA V ST (6J8, 6P8)	1.4 TSI	110	11/15 -	3782/1	3529/1
IBIZA V ST (6J8, 6P8)	1.6 TDI	66	03/10 -	3782	3529/1
IBIZA V ST (6J8, 6P8)	1.6 TDI	66	03/10 -	3782/1	
IBIZA V ST (6J8, 6P8)	1.6 TDI	77	03/10 -	3782/1	3529/1
IBIZA V ST (6J8, 6P8)	1.6 TDI	77	03/10 -	3904	
Ibiza II (6K1) 1.0	AAU	33	03/1993 - 09/1996	3441/1	
Ibiza II (6K1) 1.0 i	AER, ALD, ANV, AUC	37	09/1996 - 02/2002	3585/1	
Ibiza II (6K1) 44256 i	2G, AAV	40	03/1993 - 08/1999	3441/1	
Ibiza II (6K1) 44287 i	ABD (09.93-12.95), AEX (12.95-12.97), AKK, AKV (12	44	09/1993 - 02/2002	3441/1	
Ibiza III (6L1) 2.0	AZL, BBX	85	04/2002 - 11/2009	4138/1	
Ibiza III (6L1) 44228	-	40	07/2007 - 06/2008	3782/1	
Ibiza III (6L1) 44228	AZQ, BME	47	02/2002 - 06/2006	3782/1	
Ibiza III (6L1) 44228	BBM	44	06/2007 - 05/2008	3782/1	
Ibiza III (6L1) 44228 12V	BXV	51	05/2006 - 11/2009	3782/1	
Ibiza III (6L1) 44287 16V	AUB, BBZ	74	02/2002 - 11/2009	3782/1	
Ibiza III (6L1) 44287 16V	BBY, BKY	55	02/2002 - 12/2007	3782/1	
Ibiza III (6L1) 44287 TDI	AMF	55	05/2002 - 12/2005	3782/1	
Ibiza III (6L1) 44287 TDI	BMS, BNV	59	06/2005 - 11/2009	3782/1	
Ibiza III (6L1) 44287 TDI	BNM	51	05/2005 - 11/2009	3782/1	
Ibiza III (6L1) 44348	BAH	74	02/2003 - 11/2009	3782/1	
Ibiza III (6L1) 44348 16V	BTS	77	11/2006 - 11/2009	3782/1	
Ibiza III (6L1) 44409 T FR	BJX (12.03-.), BKV (12.03-.)	110	12/2003 - 05/2008	4138/1	
Ibiza III (6L1) 44440 SDI	ASY	47	02/2002 - 12/2005	3782/1	
Ibiza III (6L1) 44440 TDI	ASZ, BLT	96	02/2002 - 11/2009	4138/1	
Ibiza III (6L1) 44440 TDI	ATD, AXR, BMT	74	02/2002 - 11/2009	3782/1	
Ibiza IV (6J5, 6P1) 2.0	CEKA	85	10/2008 - 05/2015	3782/1	
Ibiza IV (6J5, 6P1) 44228	BZG, CGPA, CJLB	51	03/2008 - 05/2015	3782/1	
Ibiza IV (6J5, 6P1) 44228	CGPB	44	07/2009 - 05/2011	3782/1	
Ibiza IV (6J5, 6P1) 44228 TDI	CFWA	55	06/2010 - 03/2012	3782/1	
Ibiza IV (6J5, 6P1) 44228 TSI	CBZA	63	08/2012 - 05/2015	3782/1	
Ibiza IV (6J5, 6P1) 44228 TSI	CBZB	77	09/2010 - 03/2012	3782/1	
Ibiza IV (6J5, 6P1) 44228 TSI	CJZC	66	05/2015 - 06/2017	3782/1	
Ibiza IV (6J5, 6P1) 44228 TSI	CJZD	81	09/2015 - 06/2017	3782/1	
Ibiza IV (6J5, 6P1) 44287	BXW, CGGB	63	03/2008 - 05/2015	3782/1	
Ibiza IV (6J5, 6P1) 44287 TDI	BMS	59	07/2008 - 06/2010	3782/1	
Ibiza IV (6J5, 6P1) 44287 TDI	CUSA	55	05/2015 - 06/2017	3782/1	
Ibiza IV (6J5, 6P1) 44287 TDI	CUSB	66	05/2015 - 06/2017	3782/1	

MAKE & MODEL		KW	YEAR		
SEAT					
Ibiza IV (6J5, 6P1) 44287 TDI	CUTA, CYZA	77	05/2015 - 06/2017	3782/1	
Ibiza IV (6J5, 6P1) 44348	BTS	77	05/2008 - 03/2012	3782/1	
Ibiza IV (6J5, 6P1) 44348 LPG	CNKA	60	05/2011 - 05/2015	3782/1	
Ibiza IV (6J5, 6P1) 44440 TDI	BXJ	66	07/2008 - 06/2010	3782/1	
Ibiza IV Sportcoupe (6J1, 6P5) 2.0	CEKA	85	10/2008 - 05/2015	3782/1	
Ibiza IV Sportcoupe (6J1, 6P5) 44228	BZG, CGPA	51	07/2008 - 05/2015	3782/1	
Ibiza IV Sportcoupe (6J1, 6P5) 44228	CGPB	44	07/2009 - 05/2015	3782/1	
Ibiza IV Sportcoupe (6J1, 6P5) 44228 TDI	CFWA	55	05/2010 - 05/2015	3782/1	
Ibiza IV Sportcoupe (6J1, 6P5) 44228 TSI	CBZA	63	08/2012 - 05/2015	3782/1	
Ibiza IV Sportcoupe (6J1, 6P5) 44228 TSI	CBZB	77	09/2010 - 05/2015	3782/1	
Ibiza IV Sportcoupe (6J1, 6P5) 44228 TSI	CJZC	66	05/2015 - 12/2016	3782/1	
Ibiza IV Sportcoupe (6J1, 6P5) 44228 TSI	CJZD	81	09/2015 - 12/2016	3782/1	
Ibiza IV Sportcoupe (6J1, 6P5) 44287	BXW, CGGB	63	07/2008 - 05/2015	3782/1	
Ibiza IV Sportcoupe (6J1, 6P5) 44287 TDI	BMS	59	07/2008 - 06/2010	3782/1	
Ibiza IV Sportcoupe (6J1, 6P5) 44287 TDI	CUSA	55	05/2015 - 12/2016	3782/1	
Ibiza IV Sportcoupe (6J1, 6P5) 44287 TDI	CUSB	66	05/2015 - 12/2016	3782/1	
Ibiza IV Sportcoupe (6J1, 6P5) 44287 TDI	CUTA, CYZA	77	05/2015 - 12/2016	3782/1	
Ibiza IV Sportcoupe (6J1, 6P5) 44348	BTS	77	07/2008 - 05/2015	3782/1	
Ibiza IV Sportcoupe (6J1, 6P5) 44348 LPG	CNKA	60	05/2011 - 05/2015	3782/1	
Ibiza IV Sportcoupe (6J1, 6P5) 44440 TDI	BXJ	66	06/2008 - 06/2010	3782/1	
Ibiza IV ST (6J8, 6P8) 44228	BZG, CGPA, CJLB	51	05/2010 - 05/2015	3782/1	
Ibiza IV ST (6J8, 6P8) 44228	CGPB	44	05/2010 - 05/2015	3782/1	
Ibiza IV ST (6J8, 6P8) 44228 TDI	CFWA	55	04/2010 - 05/2015	3782/1	
Ibiza IV ST (6J8, 6P8) 44228 TSI	CBZA	63	09/2012 - 05/2015	3782/1	
Ibiza IV ST (6J8, 6P8) 44228 TSI	CBZB	77	09/2010 - 05/2015	3782/1	
Ibiza IV ST (6J8, 6P8) 44228 TSI	CJZC	66	05/2015 - 07/2016	3782/1	
Ibiza IV ST (6J8, 6P8) 44228 TSI	CJZD	81	09/2015 - 07/2016	3782/1	
Ibiza IV ST (6J8, 6P8) 44287	CGGB	63	03/2010 - 05/2015	3782/1	
Ibiza IV ST (6J8, 6P8) 44287 TDI	CUSA	55	05/2015 - 07/2016	3782/1	
Ibiza IV ST (6J8, 6P8) 44287 TDI	CUSB	66	05/2015 - 07/2016	3782/1	
Ibiza IV ST (6J8, 6P8) 44287 TDI	CUTA, CYZA	77	05/2015 - 07/2016	3782/1	
Ibiza IV ST (6J8, 6P8) 44348	BTS	77	02/2012 - 05/2015	3782/1	
Ibiza V (KJ1) 1.0	CHYB	55	01/2017 -	3782/1	
Ibiza V (KJ1) 1.0	CHYC, DFNB	48	07/2017 -	3782/1	
Ibiza V (KJ1) 1.0 MPi	DFNA, DSGB (07.19-.)	59	07/2018 -	3782/1	
Ibiza V (KJ1) 1.0 TGI	DBYA	66	11/2017 -	3782/1	
Ibiza V (KJ1) 1.0 TSI	CHZL, DKLA	70	01/2017 -	3782/1	
INCA (6K9)	1.4 i	44	11/95 – 06/03	3551	
INCA (6K9)	1.6 i	55	11/95 – 05/98	3551	
INCA (6K9)	1.9 D	47	11/95 – 06/03	3551	
INCA (6K9)	1.9 SDI	47	11/95 – 06/03	3551	
LCV Leon Box body / Hatchback (5F1) 2.0 TDI	CKFC, CRMB	110	10/2012 -	4228/1	4336
LCV Leon Box body / Hatchback (5F1) 2.0 TDI	CUNA, CUPA	135	02/2013 -	4228/1	4336
LCV Leon Box body / Hatchback (5F1) 44287 TSI	CHPA, CPTA	103	09/2012 - 10/2016	4228/1	
LCV Leon Box body / Hatchback (5F1) 44287 TSI	CMBA, CXSA	90	09/2012 - 10/2016	4228/1	
LCV Leon Box body / Hatchback (5F1) 44287 TSI	CZEA	110	05/2014 -	4228/1	
LCV Leon Box body / Hatchback (5F1) 44409 TFSI	CJSA	132	02/2013 -	4228/1	4336
LCV Leon ST Box body / Van / SW Van (5F8) 2.0 TDI	CKFC, CRBC, CRLB, CRMB	110	04/2013 -	4228/1	4336
LCV Leon ST Box body / Van / SW Van (5F8) 2.0 TDI	CUNA, CUPA	135	08/2013 -	4228/1	4336
LCV Leon ST Box body / Van / SW Van (5F8) 2.0 TDI 4Drive	CRBC, CRLB	110	09/2014 -	4228/1	4336
LCV Leon ST Box body / Van / SW Van (5F8) 2.0 TDI 4Drive	CUNA	135	10/2014 -	4228/1	4336
LCV Leon ST Box body / Van / SW Van (5F8) 44287 TSI	CZDA, CZEA	110	05/2014 -	4228/1	
LCV Leon ST Box body / Van / SW Van (5F8) 44409 TFSI	CJSA	132	10/2013 -	4228/1	4336
LEON III ST (5F8)	1.0 TSI (CHZD)	85	05/15 -	4228	
LEON III ST (5F8)	1.2 TSI (CJZA)	77	08/13 -	4228	
LEON III ST (5F8)	1.2 TSI (CJZB)	63	11/13 -	4228	
LEON III ST (5F8)	1.2 TSI (CYVB)	81	05/14 -	4228	
LEON III ST (5F8)	1.4 TGI (CPWA)	81	10/13 -	4228	
LEON III ST (5F8)	1.4 TSI (CHPA)	103	10/13 -	4228	
LEON III ST (5F8)	1.4 TSI (CPTA)	103	10/13 -	4228	
LEON III ST (5F8)	1.4 TSI (CXSA)	90	10/13 -	4228	
LEON III ST (5F8)	1.4 TSI (CZCA)	92	05/14 -	4228	
LEON III ST (5F8)	1.4 TSI (CZEA)	110	05/14 -	4228	
LEON III ST (5F8)	1.6 TDI (CLHA)	77	10/13 -	4228	
LEON III ST (5F8)	1.6 TDI (CLHB)	66	11/13 -	4228	
LEON III ST (5F8)	1.6 TDI (CRKB)	81	09/13 -	4228	
LEON III ST (5F8)	1.8 TFSI (CJSA)	132	10/13 -	4228	
LEON III ST (5F8)	1.8 TSI (CJSA)	132	11/14 -	4228	
LEON III ST (5F8)	1.8 TSI (CJSB)	132	11/14 -	4228	
LEON III ST (5F8)	2.0 TDI (CRBC)	110	04/14 -	4228	
LEON III ST (5F8)	2.0 TDI (CRVC)	105	10/13 -	4228	
LEON III ST (5F8)	2.0 TDI (CKFC)	110	10/13 -	4228	
LEON III ST (5F8)	2.0 TDI (CRLB)	110	04/14 -	4228	
LEON III ST (5F8)	2.0 TDI (CRMB)	110	10/13 -	4228	
LEON III ST (5F8)	2.0 TDI (CRVA)	81	11/13 -	4228	
LEON III ST (5F8)	2.0 TDI (CUNA)	135	08/13 -	4228	

MAKE & MODEL		KW	YEAR		
SEAT					
LEON III ST (5F8)	2.0 TDI (CUPA)	135	08/13 -	4228	
LEON (1M1)	1.4 16V	55	11/99 – 06/06	3782	3529/1
LEON (1M1)	1.4 16V	55	11/99 – 06/06	3782/1	
LEON (1M1)	1.6	74	11/99 – 06/06	3782	3529/1
LEON (1M1)	1.6	74	11/99 – 06/06	3782/1	
LEON (1M1)	1.6	75	10/05 – 06/06	3782	3529/1
LEON (1M1)	1.6	75	10/05 – 06/06	3782/1	
LEON (1M1)	1.6 16 V	77	09/00 – 06/06	3782	3529/1
LEON (1M1)	1.6 16 V	77	09/00 – 06/06	3782/1	
LEON (1M1)	1.8 20V	92	11/99 – 06/06	3782	3529/1
LEON (1M1)	1.8 20V	92	11/99 – 06/06	3782/1	
LEON (1M1)	1.8 20V T	132	11/99 – 06/06	3590/1	3529/1
LEON (1M1)	1.8 20V T 4	132	11/99 – 06/06	3590/1	3529/1
LEON (1M1)	1.8 T Cupra R	154	02/02 – 06/06	3590/1	3529/1
LEON (1M1)	1.8 T Cupra R	165	07/03 – 06/06		3529/1
LEON (1M1)	1.9 SDI	50	11/99 – 06/06	3782	3529/1
LEON (1M1)	1.9 SDI	50	11/99 – 06/06	3782/1	
LEON (1M1)	1.9 TDI	66	11/99 – 06/06	3782	3529/1
LEON (1M1)	1.9 TDI	66	11/99 – 06/06	3782/1	
LEON (1M1)	1.9 TDI	74	10/05 – 06/06	3782	3529/1
LEON (1M1)	1.9 TDI	74	10/05 – 06/06	3782/1	
LEON (1M1)	1.9 TDI	81	11/99 – 06/06	3782	3529/1
LEON (1M1)	1.9 TDI	81	11/99 – 06/06	3782/1	
LEON (1M1)	1.9 TDI	96	05/03 – 06/06	3590/1	3529/1
LEON (1M1)	1.9 TDI	110	09/00 – 06/06	3590/1	3529/1
LEON (1M1)	1.9 TDI Syncro	110	05/02 – 06/06	3590/1	3529/1
LEON (1M1)	2.8	150	05/02 – 06/04	3590/1	3529/1
LEON (1M1)	2.8 Cupra 4	150	02/01 – 06/06	3590/1	3529/1
LEON (1P1)	1.0 TSI	85	05/15 -		3529/1
LEON (1P1)	1.2 TSI	63	12/12 -		3529/1
LEON (1P1)	1.2 TSI	77	01/13 -		3529/1
LEON (1P1)	1.2 TSI	77	02/10 – 12/12	3782	3529/1
LEON (1P1)	1.2 TSI	77	02/10 – 12/12		3905
LEON (1P1)	1.2 TSI	77	02/10 – 12/12		4135
LEON (1P1)	1.2 TSI	81	04/14 -		3529/1
LEON (1P1)	1.4 16V	63	06/06 – 12/12	3782	3529/1
LEON (1P1)	1.4 16V	63	06/06 – 12/12		3905
LEON (1P1)	1.4 16V	63	06/06 – 12/12		4135
LEON (1P1)	1.4 TGI	81	02/13 -		3529/1
LEON (1P1)	1.4 TSI	90	11/12 -		3529/1
LEON (1P1)	1.4 TSI	92	05/14 -		3529/1
LEON (1P1)	1.4 TSI	92	11/07 – 12/12	3904	3529/1
LEON (1P1)	1.4 TSI	92	11/07 – 12/12		3905
LEON (1P1)	1.4 TSI	92	11/07 – 12/12		4135
LEON (1P1)	1.4 TSI	103	09/12 -		3529/1
LEON (1P1)	1.4 TSI	110	05/14 -		3905
LEON (1P1)	1.4 TSI	110	05/14 -		3529/1
LEON (1P1)	1.6	75	07/05 – 12/12	3782	3529/1
LEON (1P1)	1.6	75	07/05 – 12/12		3905
LEON (1P1)	1.6	75	07/05 – 12/12		4135
LEON (1P1)	1.6 LPG	75	12/09 – 12/12	3904	3529/1
LEON (1P1)	1.6 LPG	75	12/09 – 12/12		4135
LEON (1P1)	1.6 MultiFuel	75	11/10 – 12/12	3782	3529/1
LEON (1P1)	1.6 MultiFuel	75	11/10 – 12/12	3904	4135
LEON (1P1)	1.6 TDI	66	11/10 – 12/12	3782	3529/1
LEON (1P1)	1.6 TDI	66	11/12 -		3529/1
LEON (1P1)	1.6 TDI	77	02/10 – 12/12	3782	3529/1
LEON (1P1)	1.6 TDI	77	02/10 – 12/12	3904	4135
LEON (1P1)	1.6 TDI	77	11/12 -		3529/1
LEON (1P1)	1.6 TDI	81	09/13 -		3529/1
LEON (1P1)	1.6 TDI 4Drive	77	04/14 -		3529/1
LEON (1P1)	1.6 TDI 4Drive	77	04/14 -		3905
LEON (1P1)	1.6 TDI 4Drive	81	11/14 -		3529/1
LEON (1P1)	1.8 TSI	118	06/07 – 12/12	3904	3529/1
LEON (1P1)	1.8 TSI	118	06/07 – 12/12		3905
LEON (1P1)	1.8 TSI	118	06/07 – 12/12		4135
LEON (1P1)	1.8 TSI	132	02/13 -		3529/1
LEON (1P1)	1.8 TSI	132	02/13 -		3905
LEON (5F1)	1.0 TSI	85	05/15 -	4295	
LEON (5F1)	1.2 TSI	63	12/12 -	4295	
LEON (5F1)	1.2 TSI	77	01/13 -	4295	
LEON (5F1)	1.2 TSI	81	04/14 -	4295	
LEON (5F1)	1.4 TGI	81	02/13 -	4295	
LEON (5F1)	1.6 TDI	66	11/12 -	4295	
LEON (5F1)	1.6 TDI	77	11/12 -	4295	
LEON (5F1)	1.6 TDI	81	09/13 -	4295	

MAKE & MODEL   		KW	YEAR		
SEAT					
LEON (5F1)	1.6 TDI	85	01/17 -	4295	
LEON (5F1)	1.8 TSI	132	10/13 -		3529/1
LEON (5F1)	1.8 TSI	132	10/13 -		3905
LEON (5F1)	1.8 TSI 4Drive	132	11/14 -		3529/1
LEON (5F1)	1.8 TSI 4Drive	132	11/14 -		3905
LEON (5F1)	1.9 TDI	66	06/07 – 12/10	3782	3529/1
LEON (5F1)	1.9 TDI	66	06/07 – 12/10		3905
LEON (5F1)	1.9 TDI	66	06/07 – 12/10		4135
LEON (5F1)	1.9 TDI	77	07/05 – 12/10	3782	3529/1
LEON (5F1)	1.9 TDI	77	07/05 – 12/10		3905
LEON (5F1)	1.9 TDI	77	07/05 – 12/10		4135
LEON (5F1)	1.9 TDi	81	10/05 – 12/12		3529/1
LEON (5F1)	2.0 Cupra	195	10/13 -		3905
LEON (5F1)	2.0 Cupra	206	10/13 -		3905
Leon I (1M1) 44287 16V	AHW (11.99-.), APE (.-05.00), AXP (06.00-.), BCA	55	11/1999 - 06/2006	3782/1	
Leon I (1M1) 44348	AEH, AKL	74	11/1999 - 06/2006	3782/1	
Leon I (1M1) 44348 16 V	AUS, AZD, BCB	77	09/2000 - 06/2006	3782/1	
Leon I (1M1) 44409 20V	AGN, APG (11.99-.)	92	11/1999 - 06/2006	3782/1	
Leon I (1M1) 44440 SDI	AQM	50	11/1999 - 06/2006	3782/1	
Leon I (1M1) 44440 TDI	AGR, ALH	66	11/1999 - 06/2006	3782/1	
Leon I (1M1) 44440 TDI	AHF, ASV	81	11/1999 - 06/2006	3782/1	
LEON III (5F1)	1.0 TSI (CHZD)	85	05/15 -	4228	
LEON III (5F1)	1.2 TSI (CJZA)	77	01/13 -	4228	
LEON III (5F1)	1.2 TSI (CYVB)	81	04/14 -	4228	
LEON III (5F1)	1.2 TSI (CJZB)	63	12/12 -	4228	
LEON III (5F1)	1.4 TGI (CPWA)	81	02/13 -	4228	
LEON III (5F1)	1.4 TSI (CHPA)	103	09/12 -	4228	
LEON III (5F1)	1.4 TSI (CMBA)	90	11/12 -	4228	
LEON III (5F1)	1.4 TSI (CPTA)	103	09/12 -	4228	
LEON III (5F1)	1.4 TSI (CZCA)	92	05/14 -	4228	
LEON III (5F1)	1.4 TSI (CZEA)	110	05/14 -	4228	
LEON III (5F1)	1.6 TDI (CLHA)	77	11/12 -	4228	
LEON III (5F1)	1.6 TDI (CLHB)	66	11/12 -	4228	
LEON III (5F1)	1.6 TDI (CRKB)	81	09/13 -	4228	
LEON III (5F1)	1.8 TFSI (CJSA)	132	02/13 -	4228	
LEON III (5F1)	2.0 TDI (CRVC)	105	05/13 -	4228	
LEON III (5F1)	2.0 TDI (CKFC)	110	10/12 -	4228	
LEON III (5F1)	2.0 TDI (CRMB)	110	10/12 -	4228	
LEON III (5F1)	2.0 TDI (CRVA)	81	05/13 -	4228	
LEON III (5F1)	2.0 TDI (CUNA)	135	09/12 -	4228	
LEON III (5F1)	2.0 TDI (CUPA)	135	09/12 -	4228	
Leon III (5F1) 2.0 TDI	CKFC, CRMB, DFFA	110	10/2012 -	4228/1	4336
Leon III (5F1) 2.0 TDI	CRLD, CRVA	81	05/2013 -	4228/1	4336
Leon III (5F1) 2.0 TDI	CRVC	105	05/2013 -	4228/1	4336
Leon III (5F1) 2.0 TDI	CUNA, CUPA, DJGA	135	09/2012 -	4228/1	4336
Leon III (5F1) 44287 TGI	CPWA	81	02/2013 -	4228/1	
Leon III (5F1) 44287 TSI	CHPA, CPTA	103	09/2012 -	4228/1	
Leon III (5F1) 44287 TSI	CMBA, CXSA	90	11/2012 -	4228/1	
Leon III (5F1) 44287 TSI	CZCA	92	05/2014 -	4228/1	
Leon III (5F1) 44287 TSI	CZDA, CZEA	110	05/2014 -	4228/1	
Leon III (5F1) 44409 TSI	CJSA	132	02/2013 -	4228/1	4336
LEON III SC (5F5)	1.0 TSI (CHZD)	85	05/15 -	4228	
LEON III SC (5F5)	1.2 TSI (CJZA)	77	02/13 -	4228	
LEON III SC (5F5)	1.2 TSI (CYVB)	81	05/14 -	4228	
LEON III SC (5F5)	1.2 TSI (CJZB)	63	01/13 -	4228	
LEON III SC (5F5)	1.4 TSI (CHPA)	103	02/13 -	4228	
LEON III SC (5F5)	1.4 TSI (CMBA)	90	02/13 -	4228	
LEON III SC (5F5)	1.4 TSI (CPTA)	103	02/13 -	4228	
LEON III SC (5F5)	1.4 TSI (CZCA)	92	05/14 -	4228	
LEON III SC (5F5)	1.4 TSI (CZEA)	110	05/14 -	4228	
LEON III SC (5F5)	1.6 TDI (CLHA)	77	02/13 -	4228	
LEON III SC (5F5)	1.6 TDI (CLHB)	66	02/13 -	4228	
LEON III SC (5F5)	1.6 TDI (CRKB)	81	09/13 -	4228	
LEON III SC (5F5)	1.8 TFSI (CJSA)	132	02/13 -	4228	
LEON III SC (5F5)	2.0 TDI (CKFC)	110	02/13 -	4228	
LEON III SC (5F5)	2.0 TDI (CRMB)	110	02/13 -	4228	
LEON III SC (5F5)	2.0 TDI (CRVA)	81	02/13 -	4228	
LEON III SC (5F5)	2.0 TDI (CUNA)	135	03/13 -	4228	
LEON III SC (5F5)	2.0 TDI (CUPA)	135	03/13 -	4228	
LEON III SC (5F5)	2.0 TDI (CRVC)	105	05/13 -	4228	
Leon III SC (5F5) 2.0 TDI	CKFC, CRMB	110	02/2013 -	4228/1	4336
Leon III SC (5F5) 2.0 TDI	CRVA	81	02/2013 -	4228/1	
Leon III SC (5F5) 2.0 TDI	CRVA	81	02/2013 -	4228/1	
Leon III SC (5F5) 2.0 TDI	CRVA	81	02/2013 -		4336
Leon III SC (5F5) 2.0 TDI	CRVA	81	02/2013 -		4336
Leon III SC (5F5) 2.0 TDI	CRVA	81	02/2013 -	4228/1	

MAKE & MODEL		KW	YEAR		
SEAT					
Leon III SC (5F5) 2.0 TDI	CRVC	105	05/2013 -	4228/1	4336
Leon III SC (5F5) 2.0 TDI	CUNA, CUPA	135	03/2013 -	4228/1	4336
Leon III SC (5F5) 44287 TSI	CHPA, CPTA	103	02/2013 - 11/2016	4228/1	
Leon III SC (5F5) 44287 TSI	CMBA, CXSA	90	02/2013 - 06/2015	4228/1	
Leon III SC (5F5) 44287 TSI	CZCA	92	05/2014 - 08/2018	4228/1	
Leon III SC (5F5) 44287 TSI	CZEA	110	05/2014 - 08/2018	4228/1	
Leon III SC (5F5) 44409 TSI	CJSA	132	02/2013 - 08/2018	4228/1	4336
Leon III ST (5F8) 2.0 TDI	CKFC, CRBC, CRLB, CRMB, DFFA, DFGA	110	10/2013 -	4228/1	4336
Leon III ST (5F8) 2.0 TDI	CRVA	81	11/2013 -	4228/1	4336
Leon III ST (5F8) 2.0 TDI	CRVC	105	10/2013 -	4228/1	4336
Leon III ST (5F8) 2.0 TDI	CUNA, CUPA, DJGA	135	08/2013 -	4228/1	4336
Leon III ST (5F8) 2.0 TDI 4Drive	CRBC, CRLB, CRMB, DCYA, DFGA	110	04/2014 -	4228/1	4336
Leon III ST (5F8) 2.0 TDI 4Drive	CUNA, DJGA	135	11/2014 -	4228/1	4336
Leon III ST (5F8) 44287 TGI	CPWA	81	10/2013 -	4228/1	
Leon III ST (5F8) 44287 TSI	CHPA, CPTA	103	10/2013 -	4228/1	
Leon III ST (5F8) 44287 TSI	CMBA, CXSA	90	09/2012 -	4228/1	
Leon III ST (5F8) 44287 TSI	CZCA	92	05/2014 -	4228/1	
Leon III ST (5F8) 44287 TSI	CZEA	110	05/2014 -	4228/1	
Leon III ST (5F8) 44409 TSI	CJSA	132	10/2013 -	4228/1	4336
Leon III ST (5F8) 44409 TSI 4Drive	CJSA, CJSB	132	11/2014 -	4228/1	4336
LEON SC (5F5)	1.0 TSI	85	05/15 -	4295	
LEON SC (5F5)	1.2 TSI	63	01/13 -	4295	
LEON SC (5F5)	1.2 TSI	77	02/13 -	4295	
LEON SC (5F5)	1.2 TSI	81	05/14 -	4295	
LEON SC (5F5)	1.6 TDI	66	02/13 -	4295	
LEON SC (5F5)	1.6 TDI	77	02/13 -	4295	
LEON SC (5F5)	1.6 TDI	81	09/13 -	4295	
LEON SC (5F5)	2.0 Cupra	213	10/15 -		3529/1
LEON SC (5F5)	2.0 Cupra R	195	09/09 – 12/12		3529/1
LEON SC (5F5)	2.0 Cupra R	195	09/09 – 12/12		3905
LEON SC (5F5)	2.0 Cupra R	195	09/09 – 12/12		4135
LEON SC (5F5)	2.0 Cupra R	195	09/09 – 12/12		4135
LEON SC (5F5)	2.0 FSI	110	07/05 – 05/10	3904	3905
LEON SC (5F5)	2.0 FSI	110	07/05 – 05/10		3529/1
LEON SC (5F5)	2.0 FSI	110	07/05 – 05/10		4135
LEON SC (5F5)	2.0 TDI	81	02/13 -		3529/1
LEON SC (5F5)	2.0 TDI	100	07/05 – 05/10	3904	3529/1
LEON SC (5F5)	2.0 TDI	100	07/05 – 05/10		3905
LEON SC (5F5)	2.0 TDI	100	07/05 – 05/10		4135
LEON SC (5F5)	2.0 TDI	103	10/05 – 10/10	3904	3905
LEON SC (5F5)	2.0 TDI	103	10/05 – 10/10		3529/1
LEON SC (5F5)	2.0 TDI	103	10/05 – 10/10		4135
LEON ST (5F8)	1.0 TSI	85	05/15 -	4295	
LEON ST (5F8)	1.2 TSI	63	11/13 -	4295	
LEON ST (5F8)	1.2 TSI	77	08/13 -	4295	
LEON ST (5F8)	1.2 TSI	81	05/14 -	4295	
LEON ST (5F8)	1.4 TGI	81	10/13 -	4295	
LEON ST (5F8)	1.6 TDI	66	11/13 -	4295	
LEON ST (5F8)	1.6 TDI	77	10/13 -	4295	
LEON ST (5F8)	1.6 TDI	81	09/13 -	4295	
LEON ST (5F8)	1.6 TDI	85	01/17 -	4295	
LEON ST (5F8)	1.6 TDI 4Drive	77	04/14 -	4295	
LEON ST (5F8)	1.6 TDI 4Drive	81	11/14 -	4295	
LEON ST (5F8)	2.0 Cupra	213	10/15 -	4295	
LEON ST (5F8)	2.0 TDI	105	05/13 -		3529/1
LEON ST (5F8)	2.0 TDI	110	10/12 -		3529/1
LEON ST (5F8)	2.0 TDI	125	05/06 – 12/12	3904	3529/1
LEON ST (5F8)	2.0 TDI	125	05/06 – 12/12		3905
LEON ST (5F8)	2.0 TDI	125	05/06 – 12/12		4135
LEON ST (5F8)	2.0 TDI	135	09/12 -		3529/1
LEON ST (5F8)	2.0 TDI 16V	103	07/05 – 12/12	3904	3529/1
LEON ST (5F8)	2.0 TDI 16V	103	07/05 – 12/12		3905
LEON ST (5F8)	2.0 TDI 16V	103	07/05 – 12/12		4135
LEON ST (5F8)	2.0 TDI 4Drive	110	04/14 -		3529/1
LEON ST (5F8)	2.0 TDI 4Drive	135	11/14 -		3529/1
LEON ST (5F8)	2.0 TDI 4Drive	135	11/14 -		3905
LEON ST (5F8)	2.0 TFSI	136	09/05 – 05/06	3904	3529/1
LEON ST (5F8)	2.0 TFSI	136	09/05 – 05/06		3905
LEON ST (5F8)	2.0 TFSI	136	09/05 – 05/06		4135
LEON ST (5F8)	2.0 TFSI	147	05/05 – 03/09	3904	3529/1
LEON ST (5F8)	2.0 TFSI	147	05/05 – 03/09		3905
LEON ST (5F8)	2.0 TFSI	147	05/05 – 03/09		4135
LEON ST (5F8)	2.0 TFSI	155	06/09 – 12/12	3904	3905
LEON ST (5F8)	2.0 TFSI	177	11/06 – 05/11		3905
MALAGA (023A)	1.2	44	05/85 – 12/93	3424/1	
MALAGA (023A)	1.2	47	11/84 – 12/93	3424/1	

MAKE & MODEL		KW	YEAR		
SEAT					
MALAGA (023A)	1.2 i	52	12/89 – 12/93	3424/1	
MALAGA (023A)	1.5	63	05/85 – 12/93	3424/1	
MALAGA (023A)	1.5 i	74	01/87 – 12/93	3424/1	
MALAGA (023A)	1.5 i CAT	66	10/86 – 12/93	3424/1	
MALAGA (023A)	1.7 D	40	05/85 – 12/93	3424/1	
MALAGA (023A)	1.7 D	42	05/90 – 12/93	3424/1	
MARBELLA (28)	8	25	08/86 – 12/93	3424/1	
MARBELLA (28)	9	29	01/87 – 12/93	3424/1	
MARBELLA (28)	9	32	07/97 – 10/98	3424/1	
MARBELLA (28)	0.9 CAT	29	01/90 – 11/96	3424/1	
MARBELLA (28)	0.9 CAT	30	11/96 – 10/98	3424/1	
MARBELLA Box (028A)	8	25	01/87 – 12/93	3424/1	
MARBELLA Box (028A)	9	29	01/87 – 12/93	3424/1	
MARBELLA Box (028A)	0.9 CAT	29	01/87 – 12/93	3424/1	
Mii (KF1) 1.0	CHYA	44	10/2011 - 07/2019	3782/1	
Mii (KF1) 1.0	CHYB	55	10/2011 - 07/2019	3782/1	
Mii (KF1) 1.0 EcoFuel	CPGA	50	10/2012 - 07/2019	3782/1	
Mii (KF1) electric	EBMA	61	01/2020 -	3782/1	
Mii (KF1_)	1.0	44	10/11 -	3782/1	
Mii (KF1_)	1.0	55	10/11 -	3782/1	
Mii (KF1_)	1.0 EcoFuel	50	11/12 -	3782/1	
RITMO (138)	1.7 D	41	10/79 – 09/83	3316	
RITMO (138)	1.7 D	41	10/79 – 09/83	3424/1	
RONDA (022A)	1.2	44	10/84 – 12/86	3424/1	
RONDA (022A)	1.2	47	08/83 – 05/85	3424/1	
RONDA (022A)	1.4	54	06/82 – 11/88	3424/1	
RONDA (022A)	1.5	63	09/84 – 12/86	3424/1	
RONDA (022A)	1.6	68	08/83 – 09/85	3424/1	
RONDA (022A)	1.7 Diesel	40	06/82 – 12/86	3424/1	
RONDA (022A)	1.7 Diesel	41	06/82 – 12/86	3424/1	
TERRA (24)	9	29	02/87 – 12/96	3424/1	
TERRA (24)	0.9 CAT	29	02/92 – 12/94	3424/1	
TERRA (24)	1.3 D	33	03/90 – 12/94	3424/1	
TERRA (24)	1.4 D	35	10/90 – 12/95	3424/1	
TERRA Box (024A)	9	29	01/87 – 12/95	3424/1	
TERRA Box (024A)	0.9 CAT	29	01/90 – 12/95	3424/1	
TERRA Box (024A)	1.3 D	33	03/90 – 02/92	3424/1	
TERRA Box (024A)	1.4 D	35	10/90 – 02/92	3424/1	
TOLEDO II (1M2)	1.4 16V (AHW)	55	01/00 – 05/02	3682	
TOLEDO II (1M2)	1.4 16V (APE)	55	01/00 – 05/02	3682	
TOLEDO II (1M2)	1.4 16V (AUA)	55	01/00 – 05/02	3682	
TOLEDO II (1M2)	1.4 16V (AXP)	55	01/00 – 05/02	3682	
TOLEDO II (1M2)	1.4 16V (BCA)	55	01/00 – 05/02	3682	
TOLEDO II (1M2)	1.6 (AEH)	74	10/98 – 07/04	3682	
TOLEDO II (1M2)	1.6 (AKL)	74	10/98 – 07/04	3682	
TOLEDO II (1M2)	1.6 (APF)	74	10/98 – 07/04	3682	
TOLEDO II (1M2)	1.9 SDI (AQM)	50	11/99 – 06/04	3682	
TOLEDO II (1M2)	1.9 TDI (ASV)	81	10/98 – 07/04	3682	
TOLEDO II (1M2)	1.9 TDI (AGR)	66	03/99 – 07/04	3682	
TOLEDO II (1M2)	1.9 TDI (AHF)	81	10/98 – 07/04	3682	
TOLEDO II (1M2)	1.9 TDI (ALH)	66	03/99 – 07/04	3682	
TOLEDO I (1L)	1.6 i	52	05/91 – 12/93	3444	
TOLEDO I (1L)	1.6 i	52	05/91 – 12/93	3538	
TOLEDO I (1L)	1.6 i	52	05/91 – 12/93	3551	
TOLEDO I (1L)	1.6 i	52	05/91 – 12/93	3585	
TOLEDO I (1L)	1.6 i	52	05/91 – 12/93	3637	
TOLEDO I (1L)	1.6 i	54	05/91 – 03/99	3444	
TOLEDO I (1L)	1.6 i	54	05/91 – 03/99	3538	
TOLEDO I (1L)	1.6 i	54	05/91 – 03/99	3551	
TOLEDO I (1L)	1.6 i	54	05/91 – 03/99	3585	
TOLEDO I (1L)	1.6 i	54	05/91 – 03/99	3637	
TOLEDO I (1L)	1.6 i	55	01/93 – 03/99	3444	
TOLEDO I (1L)	1.6 i	55	01/93 – 03/99	3538	
TOLEDO I (1L)	1.6 i	55	01/93 – 03/99	3551	
TOLEDO I (1L)	1.6 i	55	01/93 – 03/99	3585	
TOLEDO I (1L)	1.6 i	55	01/93 – 03/99	3637	
TOLEDO I (1L)	1.6 i	74	11/96 – 03/99	3444	
TOLEDO I (1L)	1.6 i	74	11/96 – 03/99	3538	
TOLEDO I (1L)	1.6 i	74	11/96 – 03/99	3551	
TOLEDO I (1L)	1.6 i	74	11/96 – 03/99	3585	
TOLEDO I (1L)	1.6 i	74	11/96 – 03/99	3637	
TOLEDO I (1L)	1.8 16V	92	05/91 – 03/99	3531	3529/1
TOLEDO I (1L)	1.8 16V	92	05/91 – 03/99		3529
TOLEDO I (1L)	1.8 16V	98	05/91 – 03/99	3531	3529/1
TOLEDO I (1L)	1.8 16V	98	05/91 – 03/99		3529
TOLEDO I (1L)	1.8 GT	102	05/91 – 11/92	3531	3529/1

MAKE & MODEL		KW	YEAR		
SEAT					
TOLEDO I (1L)	1.8 GT	102	05/91 – 11/92		3529
TOLEDO I (1L)	1.8 i	65	05/91 – 12/96	3444	
TOLEDO I (1L)	1.8 i	65	05/91 – 12/96	3538	
TOLEDO I (1L)	1.8 i	65	05/91 – 12/96	3585	
TOLEDO I (1L)	1.8 i	65	05/91 – 12/96	3637	
TOLEDO I (1L)	1.8 i	66	11/93 – 12/96	3444	
TOLEDO I (1L)	1.8 i	66	11/93 – 12/96	3538	
TOLEDO I (1L)	1.8 i	66	11/93 – 12/96	3585	
TOLEDO I (1L)	1.8 i	66	11/93 – 12/96	3637	
TOLEDO I (1L)	1.9 D	47	12/95 – 03/99	3444	
TOLEDO I (1L)	1.9 D	47	12/95 – 03/99	3538	
TOLEDO I (1L)	1.9 D	47	12/95 – 03/99	3585	
TOLEDO I (1L)	1.9 D	47	12/95 – 03/99	3637	
TOLEDO I (1L)	1.9 D	50	05/91 – 03/99	3444	
TOLEDO I (1L)	1.9 D	50	05/91 – 03/99	3538	
TOLEDO I (1L)	1.9 D	50	05/91 – 03/99	3585	
TOLEDO I (1L)	1.9 D	50	05/91 – 03/99	3637	
TOLEDO I (1L)	1.9 TD	55	05/91 – 03/99	3444	
TOLEDO I (1L)	1.9 TD	55	05/91 – 03/99	3538	
TOLEDO I (1L)	1.9 TD	55	05/91 – 03/99	3585	
TOLEDO I (1L)	1.9 TD	55	05/91 – 03/99	3637	
TOLEDO I (1L)	1.9 TDI	66	08/95 – 03/99	3531	
TOLEDO I (1L)	1.9 TDI	66	08/95 – 03/99	3551	
TOLEDO I (1L)	1.9 TDI	81	11/96 – 03/99	3531	
TOLEDO I (1L)	1.9 TDI	81	11/96 – 03/99	3551	
TOLEDO I (1L)	2.0 i	85	05/91 – 03/99	3531	3529/1
TOLEDO I (1L)	2.0 i	85	05/91 – 03/99		3529
TOLEDO I (1L)	2.0 i 16V	110	11/93 – 03/99	3551	3529/1
TOLEDO I (1L2)	1.6 i	52	05.1991 - 12.1993	3444/1	
TOLEDO I (1L2)	1.6 i	54	05.1991 - 03.1999	3444/1	
TOLEDO I (1L2)	1.6 i	55	01.1993 - 03.1999	3444/1	
TOLEDO I (1L2)	1.6 i	74	11.1996 - 03.1999	3444/1	
TOLEDO I (1L2)	1.8 i	65	05.1991 - 12.1996	3444/1	
TOLEDO I (1L2)	1.8 i	66	11.1993 - 12.1996	3444/1	
TOLEDO I (1L2)	1.9 D	47	12.1995 - 03.1999	3444/1	
TOLEDO I (1L2)	1.9 D	50	05.1991 - 03.1999	3444/1	
TOLEDO I (1L2)	1.9 TD	55	05.1991 - 03.1999	3444/1	
TOLEDO II (1M2)	1.4 16V	55	01/00 – 05/02	3782	3529/1
TOLEDO II (1M2)	1.4 16V	55	01/00 – 05/02	3782/1	
TOLEDO II (1M2)	1.6	74	10/98 – 07/04	3782	3529/1
TOLEDO II (1M2)	1.6	74	10/98 – 07/04	3782/1	
TOLEDO II (1M2)	1.6	75	08/05 – 05/06	3782	3529/1
TOLEDO II (1M2)	1.6	75	08/05 – 05/06	3782/1	
TOLEDO II (1M2)	1.6 16V	77	06/00 – 05/06	3782	3529/1
TOLEDO II (1M2)	1.6 16V	77	06/00 – 05/06	3782/1	
TOLEDO II (1M2)	1.8 20V	92	10/98 – 07/04	3782	3529/1
TOLEDO II (1M2)	1.8 20V	92	10/98 – 07/04	3782/1	
TOLEDO II (1M2)	1.8 20VT	132	09/00 – 07/04	3590/1	3529/1
TOLEDO II (1M2)	1.9 SDI	50	11/99 – 06/04		3529/1
TOLEDO II (1M2)	1.9 TDI	66	03/99 – 07/04	3782	3529/1
TOLEDO II (1M2)	1.9 TDI	66	03/99 – 07/04	3782/1	
TOLEDO II (1M2)	1.9 TDI	81	10/98 – 07/04	3782	3529/1
TOLEDO II (1M2)	1.9 TDI	81	10/98 – 07/04	3782/1	
TOLEDO II (1M2)	1.9 TDI	96	05/03 – 05/06	3590/1	3529/1
TOLEDO II (1M2)	1.9 TDI	110	10/00 – 07/04	3590/1	3529/1
TOLEDO II (1M2)	2.3 V5	110	10/98 – 11/00	3590/1	3529/1
TOLEDO II (1M2)	2.3 V5 20V	125	09/00 – 11/03	3590/1	3529/1
Toledo II (1M2) 44348 16V	AUS, AZD, BCB	77	06/2000 - 05/2006	3782/1	
Toledo II (1M2) 44409 20V	AGN, APG (05.99-.)	92	10/1998 - 07/2004	3782/1	
Toledo II (1M2) 44440 TDI	AGR, ALH (04.99-.)	66	03/1999 - 07/2004	3782/1	
Toledo II (1M2) 44440 TDI	AHF, ASV	81	10/1998 - 07/2004	3782/1	
TOLEDO III (5P2)	1.4 16V	63	05/06 – 05/09	3782	3529/1
TOLEDO III (5P2)	1.4 16V	63	05/06 – 05/09		3905
TOLEDO III (5P2)	1.6	75	10/04 – 05/09	3782	3529/1
TOLEDO III (5P2)	1.8 TFSI	118	01/07 – 05/09	3904	3529/1
TOLEDO III (5P2)	1.9 TDI	77	10/04 – 05/09	3782	3529/1
TOLEDO III (5P2)	1.9 TDI	77	10/04 – 05/09	3904	
TOLEDO III (5P2)	2.0 FSI	110	10/04 – 05/09	3904	3529/1
TOLEDO III (5P2)	2.0 TDI	100	09/04 – 05/09	3904	3529/1
TOLEDO III (5P2)	2.0 TDI	103	11/05 – 05/09	3904	3529/1
TOLEDO III (5P2)	2.0 TDI	125	01/06 – 05/09	3904	3529/1
TOLEDO III (5P2)	2.0 TDI 16V	103	04/04 – 05/09	3904	3529/1
TOLEDO III (5P2)	2.0 TFSI	147	11/05 – 05/09	3904	3529/1
TOLEDO IV (KG3)	1.2	55	07/12 -	3782/1	3529/1
TOLEDO IV (KG3)	1.2	55	07/12 -	3904	
TOLEDO IV (KG3)	1.2 TSI	63	07/12 -	3782/1	3529/1

MAKE & MODEL   		KW	YEAR		
SEAT					
TOLEDO IV (KG3)	1.2 TSI	63	07/12 -	3904	3529/1
TOLEDO IV (KG3)	1.2 TSI	66	05/15 -	3782/1	
TOLEDO IV (KG3)	1.2 TSI	66	05/15 -	3904	
TOLEDO IV (KG3)	1.2 TSI	77	07/12 -	3782/1	3529/1
TOLEDO IV (KG3)	1.2 TSI	77	07/12 -	3904	
TOLEDO IV (KG3)	1.2 TSI	81	05/15 -	3782/1	3529/1
TOLEDO IV (KG3)	1.2 TSI	81	05/15 -	3904	
TOLEDO IV (KG3)	1.4 TDI	66	05/15 -	3782/1	3529/1
TOLEDO IV (KG3)	1.4 TDI	66	05/15 -	3904	
TOLEDO IV (KG3)	1.4 TSI	90	07/12 -	3782/1	3529/1
TOLEDO IV (KG3)	1.4 TSI	90	07/12 -	3904	
TOLEDO IV (KG3)	1.4 TSI	92	05/15 -	3782/1	3529/1
TOLEDO IV (KG3)	1.4 TSI	92	05/15 -	3904	
TOLEDO IV (KG3)	1.6	77	07/13 -	3782/1	3529/1
TOLEDO IV (KG3)	1.6	77	07/13 -	3904	
TOLEDO IV (KG3)	1.6 TDI	66	06/13 -	3782/1	3529/1
TOLEDO IV (KG3)	1.6 TDI	66	06/13 -	3904	
TOLEDO IV (KG3)	1.6 TDI	77	07/12 -	3782/1	3529/1
TOLEDO IV (KG3)	1.6 TDI	77	07/12 -	3904	
TOLEDO IV (KG3)	1.6 TDI	85	05/15 -	3782/1	3529/1
TOLEDO IV (KG3)	1.6 TDI	85	05/15 -	3904	
Toledo IV (KG3) 44228	CGPC	55	07/2012 - 06/2015	3782/1	
Toledo IV (KG3) 44228 TSI	CBZA	63	07/2012 - 06/2015	3782/1	
Toledo IV (KG3) 44228 TSI	CBZB	77	07/2012 - 06/2015	3782/1	
Toledo IV (KG3) 44228 TSI	CJZC	66	05/2015 - 05/2017	3782/1	
Toledo IV (KG3) 44228 TSI	CJZD	81	05/2015 - 05/2017	3782/1	
Toledo IV (KG3) 44287 TDI	CUSB	66	05/2015 - 04/2019	3782/1	
Toledo IV (KG3) 44287 TSI	CAXA	90	07/2012 - 06/2015	3782/1	
Toledo IV (KG3) 44287 TSI	CZCA	92	05/2015 - 04/2019	3782/1	
Toledo IV (KG3) 44348	CFNA	77	07/2013 - 06/2015	3782/1	
SKODA					
130	G,GL (S136)	46	05/88 – 10/91	3404	
130	GL	39	08/87 – 10/91	3404	
130	GL (S135)	43	05/88 – 10/91	3404	
130	L,GL	45	02/85 – 10/91	3404	
(SVW) Superb II 280 TSI 44287	CSS	110	10/2015 -	4228/1	
(SVW) Superb II 330 TSI 44409	CUF	132	10/2015 -	4228/1	
(SVW) Superb II 380 TSI 2.0	CUG	162	10/2015 -	4228/1	
105,120 (742)	1.0 105 S,L	32	02/88 – 12/90	3406	
105,120 (742)	1.0 105 S,L	33	08/76 – 08/83	3406	
105,120 (742)	1.0 105 S,L,GL	33	10/83 – 12/90	3406	
105,120 (742)	1.0 105 S,L,LS	34	08/76 – 12/90	3406	
105,120 (744)	1.2 120 GLS	35	08/87 – 12/90	3406	
105,120 (744)	1.2 120 L	38	08/76 – 12/90	3406	
105,120 (744)	1.2 120 L	43	02/83 – 12/90	3406	
105,120 (744)	1.2 120 LS	43	08/76 – 12/90	3406	
CITIGO	1.0	44	10/11 -	3782/1	
CITIGO	1.0	55	10/11 -	3782/1	
CITIGO	1.0 CNG	50	11/12 -	3782	
CITIGO	1.0 CNG	50	11/12 -	3782/1	
Citigo (NF1) 1.0	CHYA	44	10/2011 -	3782/1	
Citigo (NF1) 1.0	CHYB	55	10/2011 -	3782/1	
Citigo (NF1) 1.0 CNG	CPGA	50	11/2012 -	3782/1	
E-Citigo (NE1) e iV	EBMA	61	09/2019 -	3782/1	
FABIA	1.2	44	12/06 – 12/14	3566	3529/1
FABIA	1.2	51	01/07 – 12/14	3566	3529/1
FABIA	1.2 TDI	55	05/10 – 12/14		3529/1
FABIA	1.2 TSI	63	03/10 – 12/14		3529/1
FABIA	1.2 TSI	77	03/10 – 12/14		3529/1
FABIA	1.4	63	01/07 – 12/14		3529/1
FABIA	1.4 TDI	51	02/07 – 03/10	3566	3529/1
FABIA	1.4 TDI	59	01/07 – 03/10		3529/1
FABIA	1.4 TSI RS	132	05/10 – 12/14		3529/1
FABIA	1.6	77	04/07 – 12/14		3529/1
FABIA	1.6 TDI	55	04/10 – 12/14		3529/1
FABIA	1.6 TDI	66	03/10 – 12/14		3529/1
FABIA	1.6 TDI	77	03/10 – 12/14		3529/1
FABIA	1.9 TDI	77	04/07 – 03/10		3529/1
FABIA (542)	1.2	44	12/06 – 12/14	3782	
FABIA (542)	1.2	44	12/06 – 12/14	3782/1	
FABIA (542)	1.2	51	01/07 – 12/14	3782	
FABIA (542)	1.2	51	01/07 – 12/14	3782/1	
FABIA (542)	1.2 12V	44	11/11 – 12/14	3782/1	
FABIA (542)	1.2 12V	44	11/11 – 12/14	4200	
FABIA (542)	1.2 TDI	55	05/10 – 12/14	3782/1	
FABIA (542)	1.2 TDI	55	05/10 – 12/14	3904	

MAKE & MODEL		KW	YEAR		
SKODA					
FABIA (542)	1.2 TSI	63	03/10 – 12/14	3782	
FABIA (542)	1.2 TSI	63	03/10 – 12/14	3782/1	
FABIA (542)	1.2 TSI	63	03/10 – 12/14	4138	
FABIA (542)	1.2 TSI	77	03/10 – 12/14	3782/1	
FABIA (542)	1.2 TSI	77	03/10 – 12/14	3904	
FABIA (542)	1.4	63	01/07 – 12/14	3782	
FABIA (542)	1.4	63	01/07 – 12/14	3782/1	
FABIA (542)	1.4	63	01/07 – 12/14	4138	
FABIA (542)	1.4 TDI	51	02/07 – 03/10	3782	
FABIA (542)	1.4 TDI	51	02/07 – 03/10	3782/1	
FABIA (542)	1.4 TDI	59	01/07 – 03/10	3782	
FABIA (542)	1.4 TDI	59	01/07 – 03/10	3782/1	
FABIA (542)	1.4 TDI	59	01/07 – 03/10	4138	
FABIA (542)	1.4 TSI RS	132	05/10 – 12/14	3904	
FABIA (542)	1.6	77	04/07 – 12/14	3782	
FABIA (542)	1.6	77	04/07 – 12/14	3782/1	
FABIA (542)	1.6	77	04/07 – 12/14	4138	
FABIA (542)	1.6 TDI	55	04/10 – 12/14	3782/1	
FABIA (542)	1.6 TDI	55	04/10 – 12/14	3904	
FABIA (542)	1.6 TDI	66	03/10 – 12/14	3782	
FABIA (542)	1.6 TDI	66	03/10 – 12/14	3782/1	
FABIA (542)	1.6 TDI	66	03/10 – 12/14	4138	
FABIA (542)	1.6 TDI	77	03/10 – 12/14	3782	
FABIA (542)	1.6 TDI	77	03/10 – 12/14	3782/1	
FABIA (542)	1.6 TDI	77	03/10 – 12/14	4138	
FABIA (542)	1.9 TDI	77	04/07 – 03/10	3782	
FABIA (542)	1.9 TDI	77	04/07 – 03/10	3782/1	
FABIA (542)	1.9 TDI	77	04/07 – 03/10	4138	
FABIA (5J_)	1.4	63	12/08 -	3782	3529/1
FABIA (6Y2)	1.0	37	12/99 – 08/02	3566	
FABIA (6Y2)	1.2	40	08/02 – 03/08	3566	
FABIA (6Y2)	1.2	47	01/03 – 03/08	3782	
FABIA (6Y2)	1.2	47	01/03 – 03/08	3782/1	
FABIA (6Y2)	1.4	44	08/00 – 08/02	3782	
FABIA (6Y2)	1.4	44	08/00 – 08/02	3782/1	
FABIA (6Y2)	1.4	50	08/99 – 05/03	3782	
FABIA (6Y2)	1.4	50	08/99 – 05/03	3782/1	
FABIA (6Y2)	1.4 16V	55	12/99 – 03/08	3782	3529/1
FABIA (6Y2)	1.4 16V	55	12/99 – 03/08	3782/1	4152
FABIA (6Y2)	1.4 16V	74	12/99 – 03/08	3782	3529/1
FABIA (6Y2)	1.4 16V	74	12/99 – 03/08	3782/1	4152
FABIA (6Y2)	1.4 TDI	51	10/05 – 03/08	3782	3529/1
FABIA (6Y2)	1.4 TDI	51	10/05 – 03/08	3782/1	4152
FABIA (6Y2)	1.4 TDI	55	04/03 – 03/08	3782	3529/1
FABIA (6Y2)	1.4 TDI	55	04/03 – 03/08	3782/1	4152
FABIA (6Y2)	1.4 TDI	59	10/05 – 03/08	3782	3529/1
FABIA (6Y2)	1.4 TDI	59	10/05 – 03/08	3782/1	4152
FABIA (6Y2)	1.9 SDI	47	12/99 – 03/08	3782	
FABIA (6Y2)	1.9 SDI	47	12/99 – 03/08	3782/1	
FABIA (6Y2)	1.9 TDI	74	01/00 – 03/08	3782	3529/1
FABIA (6Y2)	1.9 TDI	74	01/00 – 03/08	3782/1	4152
FABIA (6Y2)	1.9 TDI RS	96	06/03 – 03/08	4138	3529/1
FABIA (6Y2)	2.0	85	12/99 – 03/08	4138	3529/1
FABIA (6Y2)	2.0	85	12/99 – 03/08		4152
FABIA (NJ3)	1.0	44	08/14 -	3782/1	3529/1
FABIA (NJ3)	1.0	44	08/14 -	3904	
FABIA (NJ3)	1.0	44	08/14 -	4200	
FABIA (NJ3)	1.0	55	08/14 -	3782/1	3529/1
FABIA (NJ3)	1.0	55	08/14 -	3904	
FABIA (NJ3)	1.0	55	08/14 -	4200	
FABIA (NJ3)	1.2 TSI	66	08/14 -	3782/1	3529/1
FABIA (NJ3)	1.2 TSI	66	08/14 -	3904	
FABIA (NJ3)	1.2 TSI	66	08/14 -	4200	
FABIA (NJ3)	1.2 TSI	81	08/14 -	3782/1	3529/1
FABIA (NJ3)	1.2 TSI	81	08/14 -	3904	
FABIA (NJ3)	1.2 TSI	81	08/14 -	4200	
FABIA (NJ3)	1.4 TDI	55	05/15 -	3782/1	3529/1
FABIA (NJ3)	1.4 TDI	55	05/15 -	3904	
FABIA (NJ3)	1.4 TDI	66	08/14 -	3782/1	3529/1
FABIA (NJ3)	1.4 TDI	66	08/14 -	3904	
FABIA (NJ3)	1.4 TDI	66	08/14 -	4200	
FABIA (NJ3)	1.4 TDI	77	08/14 -	3782/1	3529/1
FABIA (NJ3)	1.4 TDI	77	08/14 -	3904	
FABIA (NJ3)	1.4 TDI	77	08/14 -	4200	
FABIA (NJ3)	1.6	81	01/15 -	3782/1	3529/1
FABIA (NJ3)	1.6	81	01/15 -	3904	

MAKE & MODEL   		KW	YEAR		
SKODA					
FABIA Combi	1.2	44	10/07 – 11/14	3566	3529/1
FABIA Combi	1.2	51	10/07 – 12/14	3566	3529/1
FABIA Combi	1.2 TDI	55	05/10 – 12/14		3529/1
FABIA Combi	1.2 TSI	63	03/10 – 12/14		3529/1
FABIA Combi	1.2 TSI	77	03/10 – 12/14		3529/1
FABIA Combi	1.4	63	10/07 – 12/14		3529/1
FABIA Combi	1.4 TDI	51	10/07 – 03/10	3566	3529/1
FABIA Combi	1.4 TDI	59	10/07 – 03/10		3529/1
FABIA Combi	1.4 TSI RS	132	05/10 – 12/14		3529/1
FABIA Combi	1.6	77	10/07 – 12/14		3529/1
FABIA Combi	1.6 TDI	55	04/10 – 12/14		3529/1
FABIA Combi	1.6 TDI	66	03/10 – 12/14		3529/1
FABIA Combi	1.6 TDI	77	03/10 – 12/14		3529/1
FABIA Combi	1.9 TDI	77	10/07 – 03/10		3529/1
FABIA Combi (545)	1.2	44	10/07 – 11/14	3782	
FABIA Combi (545)	1.2	44	10/07 – 11/14	3782/1	
FABIA Combi (545)	1.2	51	10/07 – 12/14	3782	
FABIA Combi (545)	1.2	51	10/07 – 12/14	3782/1	
FABIA Combi (545)	1.2 12V	44	11/11 – 12/14	3782/1	
FABIA Combi (545)	1.2 12V	44	11/11 – 12/14	4200	
FABIA Combi (545)	1.2 TDI	55	05/10 – 12/14	3782	
FABIA Combi (545)	1.2 TDI	55	05/10 – 12/14	3782/1	
FABIA Combi (545)	1.2 TDI	55	05/10 – 12/14	3904	
FABIA Combi (545)	1.2 TSI	63	03/10 – 12/14	3782	
FABIA Combi (545)	1.2 TSI	63	03/10 – 12/14	3782/1	
FABIA Combi (545)	1.2 TSI	63	03/10 – 12/14	3904	
FABIA Combi (545)	1.2 TSI	77	03/10 – 12/14	3782	
FABIA Combi (545)	1.2 TSI	77	03/10 – 12/14	3782/1	
FABIA Combi (545)	1.2 TSI	77	03/10 – 12/14	3904	
FABIA Combi (545)	1.4	63	10/07 – 12/14	3782	
FABIA Combi (545)	1.4	63	10/07 – 12/14	3782/1	
FABIA Combi (545)	1.4	63	10/07 – 12/14	3904	
FABIA Combi (545)	1.4 TDI	51	10/07 – 03/10	3782	
FABIA Combi (545)	1.4 TDI	51	10/07 – 03/10	3782/1	
FABIA Combi (545)	1.4 TDI	59	10/07 – 03/10	3782	
FABIA Combi (545)	1.4 TDI	59	10/07 – 03/10	3782/1	
FABIA Combi (545)	1.4 TDI	59	10/07 – 03/10	3904	
FABIA Combi (545)	1.4 TSI RS	132	05/10 – 12/14	3904	
FABIA Combi (545)	1.6	77	10/07 – 12/14	3782	
FABIA Combi (545)	1.6	77	10/07 – 12/14	3782/1	
FABIA Combi (545)	1.6	77	10/07 – 12/14	3904	
FABIA Combi (545)	1.6 TDI	55	04/10 – 12/14	3782	
FABIA Combi (545)	1.6 TDI	55	04/10 – 12/14	3782/1	
FABIA Combi (545)	1.6 TDI	55	04/10 – 12/14	3904	
FABIA Combi (545)	1.6 TDI	66	03/10 – 12/14	3782	
FABIA Combi (545)	1.6 TDI	66	03/10 – 12/14	3782/1	
FABIA Combi (545)	1.6 TDI	66	03/10 – 12/14	3904	
FABIA Combi (545)	1.6 TDI	77	03/10 – 12/14	3782	
FABIA Combi (545)	1.6 TDI	77	03/10 – 12/14	3782/1	
FABIA Combi (545)	1.6 TDI	77	03/10 – 12/14	3904	
FABIA Combi (545)	1.9 TDI	77	10/07 – 03/10	3782	
FABIA Combi (545)	1.9 TDI	77	10/07 – 03/10	4138	
FABIA Combi (6Y5)	1.2	40	07/01 – 12/07	3566	
FABIA Combi (6Y5)	1.2	47	01/03 – 12/07	3782	
FABIA Combi (6Y5)	1.2	47	01/03 – 12/07	3782/1	
FABIA Combi (6Y5)	1.4	44	04/00 – 03/03	3782	
FABIA Combi (6Y5)	1.4	44	04/00 – 03/03	3782/1	
FABIA Combi (6Y5)	1.4	50	04/00 – 05/03	3782	
FABIA Combi (6Y5)	1.4	50	04/00 – 05/03	3782/1	
FABIA Combi (6Y5)	1.4 16V	55	05/00 – 12/07	3782	3529/1
FABIA Combi (6Y5)	1.4 16V	55	05/00 – 12/07	3782/1	4152
FABIA Combi (6Y5)	1.4 16V	59	04/06 – 12/07	3782	3529/1
FABIA Combi (6Y5)	1.4 16V	59	04/06 – 12/07	3782/1	4152
FABIA Combi (6Y5)	1.4 16V	74	04/00 – 12/07	3782	3529/1
FABIA Combi (6Y5)	1.4 16V	74	04/00 – 12/07	3782/1	4152
FABIA Combi (6Y5)	1.4 TDI	51	10/05 – 12/07	3782	3529/1
FABIA Combi (6Y5)	1.4 TDI	51	10/05 – 12/07	3782/1	4152
FABIA Combi (6Y5)	1.4 TDI	55	04/03 – 12/07	3782	3529/1
FABIA Combi (6Y5)	1.4 TDI	55	04/03 – 12/07	3782/1	4152
FABIA Combi (6Y5)	1.4 TDI	59	10/05 – 12/07	3782	3529/1
FABIA Combi (6Y5)	1.4 TDI	59	10/05 – 12/07	3782/1	4152
FABIA Combi (6Y5)	1.9 SDI	47	04/00 – 12/07	3782	
FABIA Combi (6Y5)	1.9 SDI	47	04/00 – 12/07	3782/1	
FABIA Combi (6Y5)	1.9 TDI	74	04/00 – 12/07	3782	3529/1
FABIA Combi (6Y5)	1.9 TDI	74	04/00 – 12/07	3782/1	4152
FABIA Combi (6Y5)	2.0	85	04/00 – 12/07	4138	3529/1

MAKE & MODEL   		KW	YEAR		
SKODA					
FABIA Combi (6Y5)	2.0	85	04/00 – 12/07		4152
FABIA Estate (NJ5)	1.0	44	10/14 -	3782/1	3529/1
FABIA Estate (NJ5)	1.0	44	10/14 -	3904	
FABIA Estate (NJ5)	1.0	44	10/14 -	4200	
FABIA Estate (NJ5)	1.0	55	10/14 -	3782/1	3529/1
FABIA Estate (NJ5)	1.0	55	10/14 -	3904	
FABIA Estate (NJ5)	1.0	55	10/14 -	4200	
FABIA Estate (NJ5)	1.2 TSI	66	10/14 -	3782/1	3529/1
FABIA Estate (NJ5)	1.2 TSI	66	10/14 -	3904	
FABIA Estate (NJ5)	1.2 TSI	66	10/14 -	4200	
FABIA Estate (NJ5)	1.2 TSI	81	10/14 -	3782/1	3529/1
FABIA Estate (NJ5)	1.2 TSI	81	10/14 -	3904	
FABIA Estate (NJ5)	1.2 TSI	81	10/14 -	4200	
FABIA Estate (NJ5)	1.4 TDI	51	10/05 – 12/07		3529/1
FABIA Estate (NJ5)	1.4 TDI	55	05/15 -	3782/1	3529/1
FABIA Estate (NJ5)	1.4 TDI	55	05/15 -	3904	
FABIA Estate (NJ5)	1.4 TDI	66	10/14 -	3782/1	3529/1
FABIA Estate (NJ5)	1.4 TDI	66	10/14 -	3904	
FABIA Estate (NJ5)	1.4 TDI	66	10/14 -	4200	
FABIA Estate (NJ5)	1.4 TDI	77	10/14 -	3782/1	3529/1
FABIA Estate (NJ5)	1.4 TDI	77	10/14 -	3904	
FABIA Estate (NJ5)	1.6	81	01/15 -	3782/1	3529/1
FABIA Estate (NJ5)	1.6	81	01/15 -	3904	
FABIA Praktik	1.2	40	07/01 – 12/07	3566	
FABIA Praktik	1.2	47	01/03 – 12/07	3782	
FABIA Praktik	1.2	47	01/03 – 12/07	3782/1	
FABIA Praktik	1.4	50	07/01 – 05/03	3782	
FABIA Praktik	1.4	50	07/01 – 05/03	3782/1	
FABIA Praktik	1.4 TDI	51	10/05 – 12/07	3782/1	4152
FABIA Praktik	1.4 TDI	51	10/05 – 12/07	3782	
FABIA Praktik	1.4 TDI	77	10/14 -	4200	
FABIA Praktik	1.9 SDI	47	07/01 – 12/07	3782	
FABIA Praktik	1.9 SDI	47	07/01 – 12/07	3782/1	
FABIA Saloon (6Y3)	1.2	40	07/01 – 12/07	3566	
FABIA Saloon (6Y3)	1.2	47	01/03 – 12/07	3782	
FABIA Saloon (6Y3)	1.2	47	01/03 – 12/07	3782/1	
FABIA Saloon (6Y3)	1.4	44	04/00 – 08/02	3782	
FABIA Saloon (6Y3)	1.4	44	04/00 – 08/02	3782/1	
FABIA Saloon (6Y3)	1.4	50	07/01 – 05/03	3782	
FABIA Saloon (6Y3)	1.4	50	07/01 – 05/03	3782/1	
FABIA Saloon (6Y3)	1.4 16V	55	10/99 – 12/07	3782	3529/1
FABIA Saloon (6Y3)	1.4 16V	55	10/99 – 12/07	3782/1	4152
FABIA Saloon (6Y3)	1.4 16V	59	04/06 – 12/07	3782	3529/1
FABIA Saloon (6Y3)	1.4 16V	59	04/06 – 12/07	3782/1	4152
FABIA Saloon (6Y3)	1.4 16V	74	12/99 – 12/07	3782	3529/1
FABIA Saloon (6Y3)	1.4 16V	74	12/99 – 12/07	3782/1	4152
FABIA Saloon (6Y3)	1.4 TDI	51	10/05 – 12/07	3782	3529/1
FABIA Saloon (6Y3)	1.4 TDI	51	10/05 – 12/07	3782/1	4152
FABIA Saloon (6Y3)	1.4 TDI	55	04/03 – 12/07	3782	3529/1
FABIA Saloon (6Y3)	1.4 TDI	55	04/03 – 12/07	3782/1	4152
FABIA Saloon (6Y3)	1.4 TDI	59	10/05 – 12/07	3782	3529/1
FABIA Saloon (6Y3)	1.4 TDI	59	10/05 – 12/07	3782/1	4152
FABIA Saloon (6Y3)	1.9 SDI	47	11/99 – 12/07	3782	
FABIA Saloon (6Y3)	1.9 SDI	47	11/99 – 12/07	3782/1	
FABIA Saloon (6Y3)	1.9 TDI	74	01/00 – 12/07	3782	3529/1
FABIA Saloon (6Y3)	1.9 TDI	74	01/00 – 12/07	3782/1	4152
FABIA Saloon (6Y3)	2.0	85	12/99 – 12/07	4138	3529/1
FABIA Saloon (6Y3)	2.0	85	12/99 – 12/07		4152
Fabia I (6Y2) 1.0	AQV, ARV	37	12/1999 - 08/2002	3782/1	
Fabia I (6Y2) 2.0	AZL	85	12/1999 - 03/2008	4138/1	
Fabia I (6Y2) 44228	AWY, BMD	40	07/2001 - 04/2007	3782/1	
Fabia I (6Y2) 44228	AZQ (01.03-.), BME	47	01/2003 - 03/2008	3782/1	
Fabia I (6Y2) 44287	AME, AQW, ATZ	50	08/1999 - 05/2003	3782/1	
Fabia I (6Y2) 44287	AZE, AZF	44	08/2000 - 08/2002	3782/1	
Fabia I (6Y2) 44287	BUD	59	02/2006 - 10/2006	3782/1	
Fabia I (6Y2) 44287 16V	AUA, BBY, BKY	55	12/1999 - 03/2008	3782/1	
Fabia I (6Y2) 44287 16V	AUB, BBZ	74	12/1999 - 03/2008	3782/1	
Fabia I (6Y2) 44287 TDI	AMF	55	04/2003 - 03/2008	3782/1	
Fabia I (6Y2) 44287 TDI	BNM	51	10/2005 - 03/2008	3782/1	
Fabia I (6Y2) 44287 TDI	BNV	59	10/2005 - 03/2008	3782/1	
Fabia I (6Y2) 44440 SDI	ASY	47	12/1999 - 03/2008	3782/1	
Fabia I (6Y2) 44440 TDI	ATD, AXR	74	01/2000 - 03/2008	3782/1	
Fabia I (6Y2) 44440 TDI RS	ASZ, BLT	96	06/2003 - 03/2008	4138/1	
Fabia I Combi (6Y5) 1.0	ARV	37	11/2000 - 08/2002	3782/1	
Fabia I Combi (6Y5) 2.0	AZL	85	04/2000 - 12/2007	4138/1	
Fabia I Combi (6Y5) 44228	AWY, BMD	40	07/2001 - 12/2007	3782/1	

MAKE & MODEL		KW	YEAR		
SKODA					
Fabia I Combi (6Y5) 44228	AZQ (01.03-.), BME	47	01/2003 - 12/2007	3782/1	
Fabia I Combi (6Y5) 44287	AME, AQW, ATZ	50	04/2000 - 05/2003	3782/1	
Fabia I Combi (6Y5) 44287	AZE, AZF	44	04/2000 - 03/2003	3782/1	
Fabia I Combi (6Y5) 44287 16V	AUA, BBY, BKY	55	05/2000 - 12/2007	3782/1	
Fabia I Combi (6Y5) 44287 16V	AUB, BBZ	74	04/2000 - 12/2007	3782/1	
Fabia I Combi (6Y5) 44287 16V	BUD	59	04/2006 - 12/2007	3782/1	
Fabia I Combi (6Y5) 44287 TDI	AMF	55	04/2003 - 12/2007	3782/1	
Fabia I Combi (6Y5) 44287 TDI	BNM	51	10/2005 - 12/2007	3782/1	
Fabia I Combi (6Y5) 44287 TDI	BNV	59	10/2005 - 12/2007	3782/1	
Fabia I Combi (6Y5) 44440 SDI	ASY	47	04/2000 - 12/2007	3782/1	
Fabia I Combi (6Y5) 44440 TDI	ATD, AXR	74	04/2000 - 12/2007	3782/1	
Fabia I Sedan (6Y3) 1.0	AQV, ARV	37	12/1999 - 08/2002	3782/1	
Fabia I Sedan (6Y3) 2.0	AZL	85	12/1999 - 12/2007	4138/1	
Fabia I Sedan (6Y3) 44228	AWY, BMD	40	07/2001 - 12/2007	3782/1	
Fabia I Sedan (6Y3) 44228	AZQ (01.03-.), BME	47	01/2003 - 12/2007	3782/1	
Fabia I Sedan (6Y3) 44287	AME, AQW, ATZ	50	07/2001 - 05/2003	3782/1	
Fabia I Sedan (6Y3) 44287	AZE, AZF	44	04/2000 - 08/2002	3782/1	
Fabia I Sedan (6Y3) 44287 16V	AUA, BBY, BKY	55	10/1999 - 12/2007	3782/1	
Fabia I Sedan (6Y3) 44287 16V	AUB, BBZ	74	12/1999 - 12/2007	3782/1	
Fabia I Sedan (6Y3) 44287 16V	BUD	59	04/2006 - 12/2007	3782/1	
Fabia I Sedan (6Y3) 44287 TDI	AMF	55	04/2003 - 12/2007	3782/1	
Fabia I Sedan (6Y3) 44287 TDI	BNM	51	10/2005 - 12/2007	3782/1	
Fabia I Sedan (6Y3) 44287 TDI	BNV	59	10/2005 - 12/2007	3782/1	
Fabia I Sedan (6Y3) 44440 SDI	ASY	47	11/1999 - 12/2007	3782/1	
Fabia I Sedan (6Y3) 44440 TDI	ATD, AXR	74	01/2000 - 12/2007	3782/1	
Fabia II (5J, 542) 44228	AWY, BMD	40	05/2007 - 12/2014	3782/1	
Fabia II (5J, 542) 44228	BBM, CHFA	44	12/2006 - 12/2014	3782/1	
Fabia II (5J, 542) 44228	BZG, CEVA, CGPA, CHTA	51	01/2007 - 12/2014	3782/1	
Fabia II (5J, 542) 44228 12V	CGPB	44	11/2011 - 12/2014	3782/1	
Fabia II (5J, 542) 44228 TSI	CBZA	63	03/2010 - 12/2014	3782/1	
Fabia II (5J, 542) 44287	BXW, CGGB	63	01/2007 - 12/2014	3782/1	
Fabia II (5J, 542) 44287 TDI	BMS, BNV	59	01/2007 - 03/2010	3782/1	
Fabia II (5J, 542) 44287 TDI	BNM	51	02/2007 - 03/2010	3782/1	
Fabia II (5J, 542) 44348	BTS, CFNA, CLSA	77	04/2007 - 12/2014	4138/1	
Fabia II (5J, 542) 44440 TDI	BLS, BSW	77	04/2007 - 03/2010	4138/1	
Fabia II Combi (5J, 545) 44228	AWY, BMD	40	05/2007 - 12/2014	3782/1	
Fabia II Combi (5J, 545) 44228	BBM, CHFA	44	10/2007 - 11/2014	3782/1	
Fabia II Combi (5J, 545) 44228	BZG, CEVA, CGPA, CHTA	51	10/2007 - 12/2014	3782/1	
Fabia II Combi (5J, 545) 44228 12V	CGPB	44	11/2011 - 12/2014	3782/1	
Fabia II Combi (5J, 545) 44228 TDI	CFWA	55	05/2010 - 12/2014	3782/1	
Fabia II Combi (5J, 545) 44228 TSI	CBZA	63	03/2010 - 12/2014	3782/1	
Fabia II Combi (5J, 545) 44287	BXW, CGGB	63	10/2007 - 12/2014	3782/1	
Fabia II Combi (5J, 545) 44287 TDI	BMS, BNV	59	10/2007 - 03/2010	3782/1	
Fabia II Combi (5J, 545) 44287 TDI	BNM	51	10/2007 - 03/2010	3782/1	
Fabia II Combi (5J, 545) 44348	BTS, CFNA	77	10/2007 - 12/2014	4138/1	
Fabia II Combi (5J, 545) 44440 TDI	BLS, BSW	77	10/2007 - 03/2010	4138/1	
Fabia III (NJ3) 1.0	CHYA, CHYE	44	08/2014 -	3782/1	
Fabia III (NJ3) 44228 TSI	CJZC	66	08/2014 -	3782/1	
Fabia III (NJ3) 44287 TDI	CUSB	66	08/2014 -	3782/1	
Fabia III (NJ3) 44287 TDI	CUTA	77	08/2014 -	3782/1	
Fabia III SW (NJ5) 1.0	CHYA, CHYE	44	10/2014 -	3782/1	
Fabia III SW (NJ5) 44228 TSI	CJZC	66	10/2014 -	3782/1	
Fabia III SW (NJ5) 44287 TDI	CUSB	66	10/2014 -	3782/1	
Fabia III SW (NJ5) 44287 TDI	CUTA	77	10/2014 -	3782/1	
FAVORIT (781)	1.3 (781)	50	01/94 – 09/94	3731	
FAVORIT (781)	1.3 135 (781)	42	12/91 – 09/94	3731	
FAVORIT (781)	1.3 135 (781)	43	12/91 – 09/94	3731	
FAVORIT (781)	1.3 135 (781)	44	10/90 – 09/94	3731	
FAVORIT (781)	1.3 135 X,LX,GLX (781)	40	01/90 – 09/94	3731	
FAVORIT (781)	1.3 135L (781)	43	05/89 – 09/94	3731	
FAVORIT (781)	1.3 136 (781)	45	10/90 – 09/94	3731	
FAVORIT Forman (785)	1.3	50	01/94 – 06/95	3731	
FAVORIT Forman (785)	1.3 (135 E)	40	09/91 – 06/95	3731	
FAVORIT Forman (785)	1.3 (135)	44	12/91 – 06/95	3731	
FAVORIT Forman (785)	1.3 (136)	45	08/91 – 06/95	3731	
FAVORIT Pickup (787)	1.3	40	12/92 – 06/97	3731	
FAVORIT Pickup (787)	1.3	42	12/92 – 06/97	3731	
FAVORIT Pickup (787)	1.3	50	12/92 – 06/97	3731	
FELICIA I (6U1)	1.3	40	10/94 – 03/98	3731	
FELICIA I (6U1)	1.3	43	10/94 – 03/98	3731	
FELICIA I (6U1)	1.3	50	10/94 – 03/98	3731	
FELICIA I (6U1)	1.6 LX	55	08/95 – 03/98	3731	
FELICIA I (6U1)	1.9 D	47	10/95 – 03/98	3731	
FELICIA I Estate (6U5)	1.3	43	08/95 – 03/98	3731	
FELICIA I Estate (6U5)	1.3 LX	40	08/95 – 03/98	3731	
FELICIA I Estate (6U5)	1.3 LXI	50	08/95 – 03/98	3731	

MAKE & MODEL		KW	YEAR		
SKODA					
FELICIA I Estate (6U5)	1.6 GLX	55	08/95 – 03/98	3731	
FELICIA I Estate (6U5)	1.9 D	47	10/95 – 03/98	3731	
FELICIA I Fun (797)	1.3	40	06/97 – 04/02	3731	
FELICIA I Fun (797)	1.3	50	06/97 – 04/02	3731	
FELICIA I Fun (797)	1.6	55	06/97 – 04/02	3731	
FELICIA I Fun (797)	1.9 D	47	06/97 – 04/02	3731	
FELICIA II (6U1)	1.3	40	01/98 – 06/01	3731	
FELICIA II (6U1)	1.3	43	01/98 – 06/01	3731	
FELICIA II (6U1)	1.3	50	01/98 – 06/01	3731	
FELICIA II (6U1)	1.6	55	01/98 – 06/01	3731	
FELICIA II (6U1)	1.9 D	47	01/98 – 06/01	3731	
FELICIA II Estate (6U5)	1.3	50	01/98 – 06/01	3731	
FELICIA II Estate (6U5)	1.6	55	01/98 – 06/01	3731	
FELICIA II Estate (6U5)	1.9 D	47	01/98 – 06/01	3731	
Kamiq (NW4) 1.0 TGI CNG	DBYA	66	11/2019 -	3782/1	
KODIAQ (NS7)	1.4 TSI	92	03/17 -	4228	
KODIAQ (NS7)	1.4 TSI	110	03/17 -	4228	
KODIAQ (NS7)	1.4 TSI (CZEA)	110	03/17 -	4228	
KODIAQ (NS7)	2.0 TDI	110	03/17 -	4228	
KODIAQ (NS7)	2.0 TDI (DFGA)	110	03/17 -	4228	
KODIAQ (NS7)	2.0 TDI (DFHA)	140	03/17 -	4228	
KODIAQ (NS7)	2.0 TSI (CZPA)	132	03/17 -	4228	
LCV Fabia Praktik (6Y5) 44228	AWY, BMD	40	07/2001 - 12/2007	3782/1	
LCV Fabia Praktik (6Y5) 44228	AZQ (05.03-.), BME	47	01/2003 - 12/2007	3782/1	
LCV Fabia Praktik (6Y5) 44287	AME, AQW, ATZ	50	07/2001 - 05/2003	3782/1	
LCV Fabia Praktik (6Y5) 44287 TDI	BNM	51	10/2005 - 12/2007	3782/1	
LCV Fabia Praktik (6Y5) 44440 SDI	ASY (05.03-.)	47	07/2001 - 12/2007	3782/1	
LCV Roomster Praktik (5J) 44228	BZG, CGPA	51	03/2007 - 05/2015	3782/1	
LCV Roomster Praktik (5J) 44228 TDI	CFWA	55	03/2010 - 05/2015	3782/1	
LCV Roomster Praktik (5J) 44228 TSI	CBZA	63	03/2010 - 05/2015	3782/1	
LCV Roomster Praktik (5J) 44287	BXW, CGGB	63	03/2007 - 05/2015	3782/1	
LCV Roomster Praktik (5J) 44287 TDI	BMS, BNV	59	03/2007 - 03/2010	3782/1	
LCV Roomster Praktik (5J) 44287 TDI	BNM	51	03/2007 - 03/2010	3782/1	
OCTAVIA (1U2)	1.4	44	04/99 – 03/01	3782	
OCTAVIA (1U2)	1.4	44	04/99 – 03/01	3782/1	
OCTAVIA (1U2)	1.4 (AMD)	44	04/99 – 03/01	3682	
OCTAVIA (1U2)	1.4 16V	55	09/00 – 12/10	3782	3529/1
OCTAVIA (1U2)	1.4 16V	55	09/00 – 12/10	3782/1	
OCTAVIA (1U2)	1.6	55	09/96 – 09/04	3782	3529/1
OCTAVIA (1U2)	1.6	55	09/96 – 09/04	3782/1	
OCTAVIA (1U2)	1.6	74	02/97 – 12/07	3782	3529/1
OCTAVIA (1U2)	1.6	74	02/97 – 12/07	3782/1	
OCTAVIA (1U2)	1.6	75	11/00 – 12/10	3782	3529/1
OCTAVIA (1U2)	1.6	75	11/00 – 12/10	3782/1	
OCTAVIA (1U2)	1.6 (AEE)	55	09/96 – 09/04	3682	
OCTAVIA (1U2)	1.6 (AEH)	74	02/97 – 12/07	3682	
OCTAVIA (1U2)	1.6 (AKL)	74	02/97 – 12/07	3682	
OCTAVIA (1U2)	1.8	92	09/96 – 07/00	3782	3529/1
OCTAVIA (1U2)	1.8	92	09/96 – 07/00	3782/1	
OCTAVIA (1U2)	1.8 T	110	08/97 – 12/10	3590/1	3529/1
OCTAVIA (1U2)	1.8 T 4x4	110	05/01 – 05/06	3590/1	3529/1
OCTAVIA (1U2)	1.9 SDI	50	06/97 – 12/03	3782	
OCTAVIA (1U2)	1.9 SDI	50	06/97 – 12/03	3782/1	
OCTAVIA (1U2)	1.9 TDI	66	09/96 – 03/10	3782	3529/1
OCTAVIA (1U2)	1.9 TDI	66	09/96 – 03/10	3782/1	
OCTAVIA (1U2)	1.9 TDI	74	10/05 – 12/10	3782	3529/1
OCTAVIA (1U2)	1.9 TDI	74	10/05 – 12/10	3782/1	
OCTAVIA (1U2)	1.9 TDI	81	08/97 – 01/06	3782	3529/1
OCTAVIA (1U2)	1.9 TDI	81	08/97 – 01/06	3782/1	
OCTAVIA (1U2)	1.9 TDI	96	09/02 – 09/04	3590/1	3529/1
OCTAVIA (1U2)	2.0	85	04/99 – 05/07	3782/1	
OCTAVIA (1U2)	RS 1.8 T	132	05/01 – 01/06	3590/1	
OCTAVIA (1U5)	1.9 TDI	96	09/02 – 09/04	3782	3529/1
OCTAVIA (1U5)	1.9 TDI	96	09/02 – 09/04	3782/1	
OCTAVIA (1U5)	2.0	85	04/99 – 05/07	3782	3529/1
OCTAVIA (1Z3)	1.2 TSI	77	02/10 – 06/13	3782	3529/1
OCTAVIA (1Z3)	1.2 TSI	77	02/10 – 06/13		3905
OCTAVIA (1Z3)	1.2 TSI	77	02/10 – 06/13		4135
OCTAVIA (1Z3)	1.4	55	05/04 – 05/06	3782	3529/1
OCTAVIA (1Z3)	1.4	55	05/04 – 05/06		3905
OCTAVIA (1Z3)	1.4	55	05/04 – 05/06		4135
OCTAVIA (1Z3)	1.4	59	06/04 – 04/13	3782	3529/1
OCTAVIA (1Z3)	1.4	59	06/04 – 04/13		3905
OCTAVIA (1Z3)	1.4	59	06/04 – 04/13		4135
OCTAVIA (1Z3)	1.4 TSI	90	11/08 – 06/13	3782	3529/1
OCTAVIA (1Z3)	1.4 TSI	90	11/08 – 06/13		3905

MAKE & MODEL   		KW	YEAR		
SKODA					
OCTAVIA (1Z3)	1.4 TSI	90	11/08 – 06/13		4135
OCTAVIA (1Z3)	1.6	75	06/04 – 06/13	3782	3529/1
OCTAVIA (1Z3)	1.6	75	06/04 – 06/13		3905
OCTAVIA (1Z3)	1.6	75	06/04 – 06/13		4135
OCTAVIA (1Z3)	1.6 FSI	85	02/04 – 10/08	3782	3529/1
OCTAVIA (1Z3)	1.6 FSI	85	02/04 – 10/08		3905
OCTAVIA (1Z3)	1.6 FSI	85	02/04 – 10/08		4135
OCTAVIA (1Z3)	1.6 LPG	75	08/09 – 11/12	3782	3529/1
OCTAVIA (1Z3)	1.6 LPG	75	08/09 – 11/12		3905
OCTAVIA (1Z3)	1.6 LPG	75	08/09 – 11/12		4135
OCTAVIA (1Z3)	1.6 MultiFuel	75	01/08 – 06/13	3782	3529/1
OCTAVIA (1Z3)	1.6 MultiFuel	75	01/08 – 06/13		3905
OCTAVIA (1Z3)	1.6 MultiFuel	75	01/08 – 06/13		4135
OCTAVIA (1Z3)	1.6 TDI	77	06/09 – 04/13	3782	3529/1
OCTAVIA (1Z3)	1.6 TDI	77	06/09 – 04/13		3905
OCTAVIA (1Z3)	1.6 TDI	77	06/09 – 04/13		4135
OCTAVIA (1Z3)	1.8 TSI	112	03/09 – 06/13	3904	3529/1
OCTAVIA (1Z3)	1.8 TSI	112	03/09 – 06/13		3905
OCTAVIA (1Z3)	1.8 TSI	112	03/09 – 06/13		4135
OCTAVIA (1Z3)	1.8 TSI	118	06/07 – 04/13	3904	3529/1
OCTAVIA (1Z3)	1.8 TSI	118	06/07 – 04/13		3905
OCTAVIA (1Z3)	1.8 TSI	118	06/07 – 04/13		4135
OCTAVIA (1Z3)	1.9 TDI	77	06/04 – 12/10	3782	3529/1
OCTAVIA (1Z3)	1.9 TDI	77	06/04 – 12/10		3905
OCTAVIA (1Z3)	1.9 TDI	77	06/04 – 12/10		4135
OCTAVIA (1Z3)	2.0 FSI	110	11/04 – 10/08	3904	3529/1
OCTAVIA (1Z3)	2.0 FSI	110	11/04 – 10/08		3905
OCTAVIA (1Z3)	2.0 FSI	110	11/04 – 10/08		4135
OCTAVIA (1Z3)	2.0 RS	147	10/05 – 02/13	3904	3905
OCTAVIA (1Z3)	2.0 TDI	81	03/10 – 06/13	3904	4135
OCTAVIA (1Z3)	2.0 TDI	100	02/04 – 05/10	3904	3529/1
OCTAVIA (1Z3)	2.0 TDI	100	02/04 – 05/10		3905
OCTAVIA (1Z3)	2.0 TDI	100	02/04 – 05/10		4135
OCTAVIA (1Z3)	2.0 TDI	103	11/05 – 05/10	3904	3529/1
OCTAVIA (1Z3)	2.0 TDI	103	11/05 – 05/10		3905
OCTAVIA (1Z3)	2.0 TDI	103	11/05 – 05/10		4135
OCTAVIA (1Z3)	2.0 TDI 16V	103	02/04 – 04/13	3904	3529/1
OCTAVIA (1Z3)	2.0 TDI 16V	103	02/04 – 04/13		3905
OCTAVIA (1Z3)	2.0 TDI 16V	103	02/04 – 04/13		4135
OCTAVIA (1Z3)	2.0 TDI RS	125	04/06 – 02/13	3904	3905
OCTAVIA (5E3)	1.0 TSI	85	05/16 -	4295	
OCTAVIA (5E3)	1.2 TSI	63	11/12 -	4295	3529/1
OCTAVIA (5E3)	1.2 TSI	77	11/12 -	4295	3529/1
OCTAVIA (5E3)	1.2 TSI	81	05/15 -	4295	3529/1
OCTAVIA (5E3)	1.4 TSI	103	11/12 -	4295	3529/1
OCTAVIA (5E3)	1.4 TSI	110	08/14 -	4295	3529/1
OCTAVIA (5E3)	1.4 TSI G-TEC	81	11/13 -	4295	3529/1
OCTAVIA (5E3)	1.6	81	01/14 -	4295	3529/1
OCTAVIA (5E3)	1.6 TDI	66	11/12 -	4295	3529/1
OCTAVIA (5E3)	1.6 TDI	77	11/12 -	4295	3529/1
OCTAVIA (5E3)	1.6 TDI	81	05/13 -	4295	3529/1
OCTAVIA (5E3)	1.6 TDI	81	05/13 -	3782	3905
OCTAVIA (5E3)	1.6 TDI	81	05/13 -	3904	4135
OCTAVIA (5E3)	1.6 TDI 4x4	77	09/14 -	4295	3529/1
OCTAVIA (5E3)	1.6 TDI 4x4	81	05/15 -	4295	3529/1
OCTAVIA (5E3)	1.8 TSI	132	11/12 -	4295	3529/1
OCTAVIA (5E3)	1.8 TSI 4x4	132	09/14 -		3529/1
OCTAVIA (5E3)	2.0 TDI	105	11/12 -	4295	3529/1
OCTAVIA (5E3)	2.0 TDI	110	11/12 -	4295	3529/1
OCTAVIA (5E3)	2.0 TDI / TDI RS 4x4	135	09/14 -	4295	3529/1
OCTAVIA (5E3)	2.0 TDI 4x4	110	09/14 -	4295	3529/1
OCTAVIA (5E3)	2.0 TDI RS	135	05/13 -		3529/1
OCTAVIA (5E3)	2.0 TSI RS	162	05/13 -		3529/1
OCTAVIA (5E3)	2.0 TSI RS	169	05/15 -	4295	3529/1
OCTAVIA Combi (1U5)	1.4 16V	55	08/00 – 12/10	3782	
OCTAVIA Combi (1U5)	1.4 16V	55	08/00 – 12/10	3782/1	
OCTAVIA Combi (1U5)	1.6	55	07/98 – 09/04	3782	3529/1
OCTAVIA Combi (1U5)	1.6	55	07/98 – 09/04	3782/1	
OCTAVIA Combi (1U5)	1.6	74	07/98 – 12/07	3782	3529/1
OCTAVIA Combi (1U5)	1.6	74	07/98 – 12/07	3782/1	
OCTAVIA Combi (1U5)	1.6	75	09/00 – 12/10	3782	3529/1
OCTAVIA Combi (1U5)	1.6	75	09/00 – 12/10	3782/1	
OCTAVIA Combi (1U5)	1.8 20V	92	07/98 – 07/00	3782	3529/1
OCTAVIA Combi (1U5)	1.8 20V	92	07/98 – 07/00	3782/1	
OCTAVIA Combi (1U5)	1.8 T	110	07/98 – 12/10	3590/1	3529/1
OCTAVIA Combi (1U5)	1.8 T 4x4	110	05/01 – 05/06	3590/1	3529/1

MAKE & MODEL   		KW	YEAR		
SKODA					
OCTAVIA Combi (1U5)	1.9 SDI	50	07/98 – 12/03	3782	
OCTAVIA Combi (1U5)	1.9 SDI	50	07/98 – 12/03	3782/1	
OCTAVIA Combi (1U5)	1.9 TDI	66	07/98 – 03/10	3782	3529/1
OCTAVIA Combi (1U5)	1.9 TDI	66	07/98 – 03/10	3782/1	
OCTAVIA Combi (1U5)	1.9 TDI	74	08/00 – 12/10	3782	3529/1
OCTAVIA Combi (1U5)	1.9 TDI	74	08/00 – 12/10	3782/1	
OCTAVIA Combi (1U5)	1.9 TDI	81	07/98 – 01/06	3782	3529/1
OCTAVIA Combi (1U5)	1.9 TDI	81	07/98 – 01/06	3782/1	
OCTAVIA Combi (1U5)	1.9 TDI	96	09/02 – 09/04	3590/1	3529/1
OCTAVIA Combi (1U5)	1.9 TDI	96	09/02 – 09/04	3782	
OCTAVIA Combi (1U5)	1.9 TDI	96	09/02 – 09/04	3782/1	
OCTAVIA Combi (1U5)	1.9 TDI 4x4	66	11/99 – 02/06	3782	3529/1
OCTAVIA Combi (1U5)	1.9 TDI 4x4	66	11/99 – 02/06	3782/1	
OCTAVIA Combi (1U5)	1.9 TDI 4x4	74	09/00 – 01/06	3782	3529/1
OCTAVIA Combi (1U5)	1.9 TDI 4x4	74	09/00 – 01/06	3782/1	
OCTAVIA Combi (1U5)	2.0	85	04/99 – 05/07	3782	3529/1
OCTAVIA Combi (1U5)	2.0	85	04/99 – 05/07	3782/1	
OCTAVIA Combi (1U5)	2.0 4x4	85	08/00 – 09/04	3782	3529/1
OCTAVIA Combi (1U5)	2.0 4x4	85	08/00 – 09/04	3782/1	
OCTAVIA Combi (1U5)	2.0 4x4	88	01/00 – 12/10	3782	3529/1
OCTAVIA Combi (1U5)	2.0 4x4	88	01/00 – 12/10	3782/1	
OCTAVIA Combi (1U5)	RS 1.8 T	132	08/02 – 01/06	3590/1	3529/1
OCTAVIA Combi (1Z5)	1.2 TSI	77	02/10 – 04/13	3782	3529/1
OCTAVIA Combi (1Z5)	1.2 TSI	77	02/10 – 04/13		3905
OCTAVIA Combi (1Z5)	1.2 TSI	77	02/10 – 04/13		4135
OCTAVIA Combi (1Z5)	1.4	55	05/04 – 05/06	3782	3529/1
OCTAVIA Combi (1Z5)	1.4	55	05/04 – 05/06		3905
OCTAVIA Combi (1Z5)	1.4	55	05/04 – 05/06		4135
OCTAVIA Combi (1Z5)	1.4	59	05/06 – 06/13	3782	3529/1
OCTAVIA Combi (1Z5)	1.4	59	05/06 – 06/13		3905
OCTAVIA Combi (1Z5)	1.4	59	05/06 – 06/13		4135
OCTAVIA Combi (1Z5)	1.4 TSI	90	11/08 – 06/13	3782	3529/1
OCTAVIA Combi (1Z5)	1.4 TSI	90	11/08 – 06/13		3905
OCTAVIA Combi (1Z5)	1.4 TSI	90	11/08 – 06/13		4135
OCTAVIA Combi (1Z5)	1.6	75	09/04 – 06/13	3782	3529/1
OCTAVIA Combi (1Z5)	1.6	75	09/04 – 06/13		3905
OCTAVIA Combi (1Z5)	1.6	75	09/04 – 06/13		4135
OCTAVIA Combi (1Z5)	1.6 FSI	85	02/04 – 10/08	3782	3529/1
OCTAVIA Combi (1Z5)	1.6 FSI	85	02/04 – 10/08		3905
OCTAVIA Combi (1Z5)	1.6 FSI	85	02/04 – 10/08		4135
OCTAVIA Combi (1Z5)	1.6 LPG	75	08/09 – 11/12	3782	3529/1
OCTAVIA Combi (1Z5)	1.6 LPG	75	08/09 – 11/12		3905
OCTAVIA Combi (1Z5)	1.6 LPG	75	08/09 – 11/12		4135
OCTAVIA Combi (1Z5)	1.6 MultiFuel	75	01/08 – 06/13	3782	3529/1
OCTAVIA Combi (1Z5)	1.6 MultiFuel	75	01/08 – 06/13		3905
OCTAVIA Combi (1Z5)	1.6 MultiFuel	75	01/08 – 06/13		4135
OCTAVIA Combi (1Z5)	1.6 TDI	77	06/09 – 04/13	3782	3529/1
OCTAVIA Combi (1Z5)	1.6 TDI	77	06/09 – 04/13		3905
OCTAVIA Combi (1Z5)	1.6 TDI	77	06/09 – 04/13		4135
OCTAVIA Combi (1Z5)	1.6 TDI 4x4	77	06/09 – 02/13	3782	3529/1
OCTAVIA Combi (1Z5)	1.6 TDI 4x4	77	06/09 – 02/13		3905
OCTAVIA Combi (1Z5)	1.6 TDI 4x4	77	06/09 – 02/13		4135
OCTAVIA Combi (1Z5)	1.8 TSI	112	03/09 – 06/13	3782	3529/1
OCTAVIA Combi (1Z5)	1.8 TSI	112	03/09 – 06/13		3905
OCTAVIA Combi (1Z5)	1.8 TSI	112	03/09 – 06/13		4135
OCTAVIA Combi (1Z5)	1.8 TSI	118	06/07 – 04/13	3904	3529/1
OCTAVIA Combi (1Z5)	1.8 TSI	118	06/07 – 04/13		3905
OCTAVIA Combi (1Z5)	1.8 TSI	118	06/07 – 04/13		4135
OCTAVIA Combi (1Z5)	1.8 TSI 4x4	112	03/09 – 02/13	3904	3529/1
OCTAVIA Combi (1Z5)	1.8 TSI 4x4	112	03/09 – 02/13		3905
OCTAVIA Combi (1Z5)	1.8 TSI 4x4	112	03/09 – 02/13		4135
OCTAVIA Combi (1Z5)	1.8 TSI 4x4	118	11/08 – 02/13	3904	3529/1
OCTAVIA Combi (1Z5)	1.8 TSI 4x4	118	11/08 – 02/13		3905
OCTAVIA Combi (1Z5)	1.8 TSI 4x4	118	11/08 – 02/13		4135
OCTAVIA Combi (1Z5)	1.9 TDI	77	09/04 – 12/10	3782	3529/1
OCTAVIA Combi (1Z5)	1.9 TDI	77	09/04 – 12/10		3905
OCTAVIA Combi (1Z5)	1.9 TDI	77	09/04 – 12/10		4135
OCTAVIA Combi (1Z5)	1.9 TDI 4x4	77	11/04 – 12/10	3782	3529/1
OCTAVIA Combi (1Z5)	1.9 TDI 4x4	77	11/04 – 12/10		3905
OCTAVIA Combi (1Z5)	1.9 TDI 4x4	77	11/04 – 12/10		4135
OCTAVIA Combi (1Z5)	2.0 FSI	110	11/04 – 10/08	3904	3529/1
OCTAVIA Combi (1Z5)	2.0 FSI	110	11/04 – 10/08		3905
OCTAVIA Combi (1Z5)	2.0 FSI	110	11/04 – 10/08		4135
OCTAVIA Combi (1Z5)	2.0 FSI 4x4	110	11/04 – 10/08	3904	3529/1
OCTAVIA Combi (1Z5)	2.0 FSI 4x4	110	11/04 – 10/08		3905
OCTAVIA Combi (1Z5)	2.0 FSI 4x4	110	11/04 – 10/08		4135

MAKE & MODEL		KW	YEAR		
SKODA					
OCTAVIA Combi (1Z5)	2.0 RS	147	10/05 – 02/13	3904	3905
OCTAVIA Combi (1Z5)	2.0 TDI	81	03/10 – 06/13	3904	3529/1
OCTAVIA Combi (1Z5)	2.0 TDI	81	03/10 – 06/13		3905
OCTAVIA Combi (1Z5)	2.0 TDI	81	03/10 – 06/13		4135
OCTAVIA Combi (1Z5)	2.0 TDI	103	11/05 – 05/10	3904	3529/1
OCTAVIA Combi (1Z5)	2.0 TDI	103	11/05 – 05/10		3905
OCTAVIA Combi (1Z5)	2.0 TDI	103	11/05 – 05/10		4135
OCTAVIA Combi (1Z5)	2.0 TDI 16V	100	02/04 – 05/10	3904	3529/1
OCTAVIA Combi (1Z5)	2.0 TDI 16V	100	02/04 – 05/10		3905
OCTAVIA Combi (1Z5)	2.0 TDI 16V	100	02/04 – 05/10		4135
OCTAVIA Combi (1Z5)	2.0 TDI 16V	103	02/04 – 05/13	3904	3529/1
OCTAVIA Combi (1Z5)	2.0 TDI 16V	103	02/04 – 05/13		3905
OCTAVIA Combi (1Z5)	2.0 TDI 16V	103	02/04 – 05/13		4135
OCTAVIA Combi (1Z5)	2.0 TDI 16V 4x4	103	05/10 – 02/13	3904	3529/1
OCTAVIA Combi (1Z5)	2.0 TDI 16V 4x4	103	05/10 – 02/13		3905
OCTAVIA Combi (1Z5)	2.0 TDI 16V 4x4	103	05/10 – 02/13		4135
OCTAVIA Combi (1Z5)	2.0 TDI 4x4	81	05/11 – 02/13	3904	3529/1
OCTAVIA Combi (1Z5)	2.0 TDI 4x4	81	05/11 – 02/13		3905
OCTAVIA Combi (1Z5)	2.0 TDI 4x4	81	05/11 – 02/13		4135
OCTAVIA Combi (1Z5)	2.0 TDI 4x4	103	07/06 – 05/10	3904	3529/1
OCTAVIA Combi (1Z5)	2.0 TDI 4x4	103	07/06 – 05/10		3905
OCTAVIA Combi (1Z5)	2.0 TDI 4x4	103	07/06 – 05/10		4135
OCTAVIA Combi (1Z5)	2.0 TDI RS	125	04/06 – 02/13	3904	3905
OCTAVIA Combi (5E5)	1.0 TSI	85	05/16 -	4295	
OCTAVIA Combi (5E5)	1.2 TSI	63	11/12 -	4295	3529/1
OCTAVIA Combi (5E5)	1.2 TSI	77	11/12 -	4295	3529/1
OCTAVIA Combi (5E5)	1.2 TSI	81	05/15 -	4295	3529/1
OCTAVIA Combi (5E5)	1.4 TSI	103	11/12 -	4295	3529/1
OCTAVIA Combi (5E5)	1.4 TSI	110	08/14 -	4295	3529/1
OCTAVIA Combi (5E5)	1.4 TSI G-TEC	81	11/13 -	4295	3529/1
OCTAVIA Combi (5E5)	1.6	81	01/14 -	4295	3529/1
OCTAVIA Combi (5E5)	1.6 TDI	66	11/12 -	4295	3529/1
OCTAVIA Combi (5E5)	1.6 TDI	77	11/12 -	4295	3529/1
OCTAVIA Combi (5E5)	1.6 TDI	81	05/13 -	4295	3529/1
OCTAVIA Combi (5E5)	1.6 TDI	81	05/13 -	3782	3905
OCTAVIA Combi (5E5)	1.6 TDI	81	05/13 -	3904	4135
OCTAVIA Combi (5E5)	1.6 TDI 4x4	77	11/12 -	4295	3529/1
OCTAVIA Combi (5E5)	1.6 TDI 4x4	81	05/15 -	4295	3529/1
OCTAVIA Combi (5E5)	1.8 TSI	132	11/12 -		3529/1
OCTAVIA Combi (5E5)	1.8 TSI 4x4	132	11/12 -		3529/1
OCTAVIA Combi (5E5)	2.0 TDI	105	11/12 -	4295	3529/1
OCTAVIA Combi (5E5)	2.0 TDI	110	11/12 -	4295	3529/1
OCTAVIA Combi (5E5)	2.0 TDI / TDI RS 4x4	135	09/14 -	4295	3529/1
OCTAVIA Combi (5E5)	2.0 TDI 4x4	110	11/12 -	4295	3529/1
OCTAVIA Combi (5E5)	2.0 TDI RS	135	05/13 -		3529/1
OCTAVIA Combi (5E5)	2.0 TSI RS	162	11/12 -		3529/1
OCTAVIA Combi (5E5)	2.0 TSI RS	169	05/15 -	4295	3529/1
OCTAVIA III (5E3)	1.0 TSI (CHZD)	85	05/16 -	4228	
OCTAVIA III (5E3)	1.2 TSI (CJZA)	77	11/12 -	4228	
OCTAVIA III (5E3)	1.2 TSI (CJZB)	63	11/12 -	4228	
OCTAVIA III (5E3)	1.2 TSI (CYVB)	81	05/15 -	4228	
OCTAVIA III (5E3)	1.4 TSI (CHPA)	103	11/12 -	4228	
OCTAVIA III (5E3)	1.4 TSI (CHPB)	110	08/14 -	4228	
OCTAVIA III (5E3)	1.4 TSI (CZDA)	110	08/14 -	4228	
OCTAVIA III (5E3)	1.4 TSI G-TEC (CPWA)	81	11/13 -	4228	
OCTAVIA III (5E3)	1.6 (CWVA)	81	01/14 -	4228	
OCTAVIA III (5E3)	1.6 TDI (CLHA)	77	11/12 -	4228	
OCTAVIA III (5E3)	1.6 TDI (CLHB)	66	11/12 -	4228	
OCTAVIA III (5E3)	1.6 TDI (CRKB)	81	05/13 -	4228	
OCTAVIA III (5E3)	1.8 TSI (CJSA)	132	11/12 -	4228	
OCTAVIA III (5E3)	2.0 TDI (CRVC)	105	11/12 -	4228	
OCTAVIA III (5E3)	2.0 TDI (CKFB)	105	11/12 -	4228	
OCTAVIA III (5E3)	2.0 TDI (CKFC)	110	11/12 -	4228	
OCTAVIA III (5E3)	2.0 TDI (CUPA)	135	05/13 -	4228	
OCTAVIA III (5E3)	2.0 TDI / TDI RS (CUNA)	135	09/14 -	4228	
OCTAVIA III (5E3)	2.0 TDI / TDI RS (CUPA)	135	09/14 -	4228	
OCTAVIA III (5E3)	2.0 TSI RS (CHHA)	169	05/15 -	4228	
OCTAVIA III (5E3)	2.0 TSI RS (CHHB)	162	05/13 -	4228	
OCTAVIA III (5E5)	1.0 TSI (CHZD)	85	05/16 -	4228	
OCTAVIA III (5E5)	1.2 TSI (CJZA)	77	11/12 -	4228	
OCTAVIA III (5E5)	1.2 TSI (CJZB)	63	11/12 -	4228	
OCTAVIA III (5E5)	1.2 TSI (CYVB)	81	05/15 -	4228	
OCTAVIA III (5E5)	1.4 TSI (CHPA)	103	11/12 -	4228	
OCTAVIA III (5E5)	1.4 TSI (CHPB)	110	08/14 -	4228	
OCTAVIA III (5E5)	1.4 TSI (CZDA)	110	08/14 -	4228	
OCTAVIA III (5E5)	1.4 TSI G-TEC (CPWA)	81	11/13 -	4228	

MAKE & MODEL		KW	YEAR		
SKODA					
OCTAVIA III (5E5)	1.6 (CWVA)	81	01/14 -	4228	
OCTAVIA III (5E5)	1.6 TDI (CLHA)	77	11/12 -	4228	
OCTAVIA III (5E5)	1.6 TDI (CLHB)	66	11/12 -	4228	
OCTAVIA III (5E5)	1.6 TDI (CRKB)	81	05/13 -	4228	
OCTAVIA III (5E5)	1.8 TSI (CJSA)	132	11/12 -	4228	
OCTAVIA III (5E5)	1.8 TSI (CJSB)	132	11/12 -	4228	
OCTAVIA III (5E5)	2.0 TDI (CRVC)	105	11/12 -	4228	
OCTAVIA III (5E5)	2.0 TDI (CKFB)	105	11/12 -	4228	
OCTAVIA III (5E5)	2.0 TDI (CKFC)	110	11/12 -	4228	
OCTAVIA III (5E5)	2.0 TDI (CUPA)	135	05/13 -	4228	
OCTAVIA III (5E5)	2.0 TDI / TDI RS (CUNA)	135	09/14 -	4228	
OCTAVIA III (5E5)	2.0 TDI / TDI RS (CUPA)	135	09/14 -	4228	
OCTAVIA III (5E5)	2.0 TSI RS (CHHA)	169	05/15 -	4228	
OCTAVIA III (5E5)	2.0 TSI RS (CHHB)	162	11/12 -	4228	
Octavia II (1U2) 2.0	AEG, APK, AQY, AZH, AZJ	85	04/1999 - 05/2007	3782/1	
Octavia II (1U2) 44348	AEE	55	09/1996 - 09/2004	3782/1	
Octavia II (1U2) 44348	AEH, AKL	74	02/1997 - 12/2007	3782/1	
Octavia II (1U2) 44409	AGN	92	09/1996 - 07/2000	3782/1	
Octavia II (1U2) 44440 SDI	AGP, AQM	50	06/1997 - 12/2003	3782/1	
Octavia II (1U2) 44440 SDi	AEY	47	09/1996 - 06/2004	3782/1	
Octavia II (1U2) 44440 TDI	AGR, ALH	66	09/1996 - 03/2010	3782/1	
Octavia II (1U2) 44440 TDI	AHF, ASV	81	08/1997 - 01/2006	3782/1	
Octavia II Combi (1U5) 2.0	AEG, APK, AQY, AZH, AZJ	85	04/1999 - 05/2007	3782/1	
Octavia II Combi (1U5) 2.0 4x4	AZH, AZJ	85	08/2000 - 09/2004	3782/1	
Octavia II Combi (1U5) 44348	AEE	55	07/1998 - 09/2004	3782/1	
Octavia II Combi (1U5) 44348	AEH, AKL	74	07/1998 - 12/2007	3782/1	
Octavia II Combi (1U5) 44409 20V	AGN	92	07/1998 - 07/2000	3782/1	
Octavia II Combi (1U5) 44440 SDI	AGP, AQM	50	07/1998 - 12/2003	3782/1	
Octavia II Combi (1U5) 44440 TDI	AGR, ALH	66	07/1998 - 03/2010	3782/1	
Octavia II Combi (1U5) 44440 TDI	AHF, ASV	81	07/1998 - 01/2006	3782/1	
Octavia II Combi (1U5) 44440 TDI 4x4	AGR	66	11/1999 - 02/2006	3782/1	
Octavia IV (5E3, NL3, NR3) 2.0 TDI	CKFB, CRVC	105	11/2012 -	4228/1	4336
Octavia IV (5E3, NL3, NR3) 2.0 TDI	CKFC, CRMB, CYKA, DCYA, DFFA	110	11/2012 -	4228/1	4336
Octavia IV (5E3, NL3, NR3) 2.0 TDI / TDI RS 4x4	CUNA, CUPA, DJGA	135	05/2013 -	4228/1	4336
Octavia IV (5E3, NL3, NR3) 2.0 TDI 4x4	CKFC, CRMB, DCYA, DFFA (01.17-.)	110	09/2014 -	4228/1	4336
Octavia IV (5E3, NL3, NR3) 2.0 TDI RS	CUNA, CUPA, DJGA	135	05/2013 -	4228/1	4336
Octavia IV (5E3, NL3, NR3) 2.0 TSI RS	CHHA	169	05/2015 -		4336
Octavia IV (5E3, NL3, NR3) 2.0 TSI RS	CHHB	162	05/2013 -		4336
Octavia IV (5E3, NL3, NR3) 44287 TSI	CHPA	103	11/2012 -	4228/1	
Octavia IV (5E3, NL3, NR3) 44287 TSI	CHPB, CZDA	110	08/2014 -	4228/1	
Octavia IV (5E3, NL3, NR3) 44287 TSI	CPWA	81	07/2015 -	4228/1	
Octavia IV (5E3, NL3, NR3) 44287 TSI G-TEC	CPWA	81	11/2013 -	4228/1	
Octavia IV (5E3, NL3, NR3) 44409 TSI	CJSA	132	11/2012 -	4228/1	4336
Octavia IV (5E3, NL3, NR3) 44409 TSI 4x4	CJSB	132	09/2014 -	4228/1	4336
Octavia IV Combi -500000 2.0 TDI	CKFB, CRVC	105	11/2012 -	4228/1	4336
Octavia IV Combi -500000 2.0 TDI	CKFC, CRMB, CYKA, DCYA, DFFA	110	11/2012 -	4228/1	4336
Octavia IV Combi -500000 2.0 TDI / TDI RS 4x4	CUNA, CUPA, DJGA	135	09/2014 -	4228/1	4336
Octavia IV Combi -500000 2.0 TDI 4x4	CKFC, CRMB, DCYA, DFFA	110	11/2012 -	4228/1	4336
Octavia IV Combi -500000 2.0 TDI RS	CUNA, CUPA, DJGA	135	05/2013 -	4228/1	4336
Octavia IV Combi -500000 2.0 TSI RS	CHHA	169	05/2015 -		4336
Octavia IV Combi -500000 2.0 TSI RS	CHHB	162	11/2012 -		4336
Octavia IV Combi -500000 44287 TSI	CHPA	103	11/2012 -	4228/1	
Octavia IV Combi -500000 44287 TSI	CHPB, CZDA	110	08/2014 -	4228/1	
Octavia IV Combi -500000 44287 TSI	CPWA	81	07/2015 -	4228/1	
Octavia IV Combi -500000 44287 TSI G-TEC	CPWA	81	11/2013 -	4228/1	
Octavia IV Combi -500000 44409 TSI	CJSA, CJSB	132	11/2012 -	4228/1	4336
Octavia IV Combi -500000 44409 TSI 4x4	CJSB	132	11/2012 -	4228/1	4336
Octavia V (NX3) 1.0 TSI	DLAA	81	06/2020 -	4228/1	
Octavia V (NX3) 1.0 TSI e-TEC	DLAA	81	06/2020 -	4228/1	
Octavia V (NX3) 2.0 TDI	CRVC	105	06/2020 -	4228/1	
Octavia V (NX3) 2.0 TDi	DSTB	110	01/2020 -	4228/1	
Octavia V (NX3) 2.0 TDi	DSUD	85	03/2020 -	4228/1	
Octavia V (NX3) 44287 TSI Hybrid	DGEA	110	06/2020 -	4228/1	
Octavia V (NX3) 44287 TSI IV RS	DJKA	110	06/2020 -	4228/1	
Octavia V (NX3) 44317 TSI G-TEC	DHFA	96	06/2020 -	4228/1	
Octavia V (NX3) 44317 TSi	DPCA	110	01/2020 -	4228/1	
Octavia V (NX3) 44348 SRE	CWVA	81	07/2020 -	4228/1	
Octavia V Combi (NX5) 1.0 TSI	DLAA	81	06/2020 -	4228/1	
Octavia V Combi (NX5) 1.0 TSI e-TEC	DLAA	81	06/2020 -	4228/1	
Octavia V Combi (NX5) 2.0 TDI	CRVC	105	06/2020 -	4228/1	
Octavia V Combi (NX5) 2.0 TDi	DSTB	110	11/2019 -	4228/1	
Octavia V Combi (NX5) 2.0 TDi	DSUD	85	11/2019 -	4228/1	
Octavia V Combi (NX5) 44287 TSI Hybrid	DGEA	110	06/2020 -	4228/1	
Octavia V Combi (NX5) 44287 TSI IV RS	DJKA	110	06/2020 -	4228/1	
Octavia V Combi (NX5) 44317 TSI G-TEC	DHFA	96	06/2020 -	4228/1	
Octavia V Combi (NX5) 44317 TSi	DPCA	110	11/2019 -	4228/1	

MAKE & MODEL   		KW	YEAR		
SKODA					
Octavia V Combi (NX5) 44348 SRE	CWVA	81	06/2020 -	4228/1	
RAPID (120G, 130G, 135G)	1.2 (120G)	43	02/83 – 12/90	3406	
RAPID (120G, 130G, 135G)	1.3 (130G)	39	08/87 – 10/91	3404	
RAPID (120G, 130G, 135G)	1.3 (130G)	45	03/85 – 08/88	3404	
RAPID (120G, 130G, 135G)	1.3 S (135GL)	43	09/84 – 12/90	3404	
RAPID (NH3)	1.2	55	07/12 -	3782/1	3529/1
RAPID (NH3)	1.2	55	07/12 -	3904	
RAPID (NH3)	1.2 TSI	63	07/12 -	3782/1	3529/1
RAPID (NH3)	1.2 TSI	63	07/12 -	3904	
RAPID (NH3)	1.2 TSI	66	05/15 -	3782/1	3529/1
RAPID (NH3)	1.2 TSI	77	07/12 -	3782/1	3529/1
RAPID (NH3)	1.2 TSI	77	07/12 -	3904	
RAPID (NH3)	1.2 TSI	81	05/15 -	3782/1	3529/1
RAPID (NH3)	1.4 TDI	66	05/15 -	3782/1	3529/1
RAPID (NH3)	1.4 TSI	90	07/12 -	3782/1	3529/1
RAPID (NH3)	1.4 TSI	90	07/12 -	3904	
RAPID (NH3)	1.4 TSI	92	05/15 -	3782/1	3529/1
RAPID (NH3)	1.6	77	07/12 -	3782/1	3529/1
RAPID (NH3)	1.6	77	07/12 -	3904	
RAPID (NH3)	1.6 TDI	66	08/13 -	3782/1	3529/1
RAPID (NH3)	1.6 TDI	66	08/13 -	3904	
RAPID (NH3)	1.6 TDI	77	07/12 -	3782/1	3529/1
RAPID (NH3)	1.6 TDI	77	07/12 -	3904	
RAPID (NH3)	1.6 TDI	85	05/15 -	3782/1	3529/1
RAPID Spaceback (NH1)	1.2	55	07/12 -	3782/1	3529/1
RAPID Spaceback (NH1)	1.2	55	07/12 -	3904	
RAPID Spaceback (NH1)	1.2 TSI	63	07/12 -	3782/1	3529/1
RAPID Spaceback (NH1)	1.2 TSI	63	07/12 -	3904	
RAPID Spaceback (NH1)	1.2 TSI	66	05/15 -	3782/1	3529/1
RAPID Spaceback (NH1)	1.2 TSI	77	07/12 -	3782/1	3529/1
RAPID Spaceback (NH1)	1.2 TSI	77	07/12 -	3904	
RAPID Spaceback (NH1)	1.2 TSI	81	05/15 -	3782/1	3529/1
RAPID Spaceback (NH1)	1.4 TDI	66	05/15 -	3782/1	3529/1
RAPID Spaceback (NH1)	1.4 TSI	90	07/12 -	3782/1	3529/1
RAPID Spaceback (NH1)	1.4 TSI	90	07/12 -	3904	
RAPID Spaceback (NH1)	1.4 TSI	92	05/15 -	3782/1	3529/1
RAPID Spaceback (NH1)	1.6	77	07/12 -	3782/1	3529/1
RAPID Spaceback (NH1)	1.6	77	07/12 -	3904	
RAPID Spaceback (NH1)	1.6 TDI	66	08/13 -	3782/1	3529/1
RAPID Spaceback (NH1)	1.6 TDI	66	08/13 -	3904	
RAPID Spaceback (NH1)	1.6 TDI	77	07/12 -	3782/1	3529/1
RAPID Spaceback (NH1)	1.6 TDI	77	07/12 -	3904	
RAPID Spaceback (NH1)	1.6 TDI	85	05/15 -	3782/1	3529/1
Rapid II (NH3) 44228	CGPC	55	07/2012 -	3782/1	
Rapid II Spaceback (NH1) 44228	CGPC	55	07/2012 -	3782/1	
ROOMSTER (5J)	1.2	47	05/06 – 01/07	3782	3529/1
ROOMSTER (5J)	1.2	47	05/06 – 01/07	3782/1	
ROOMSTER (5J)	1.2	47	05/06 – 01/07	4138	
ROOMSTER (5J)	1.2	51	01/07 – 05/15	3782	3529/1
ROOMSTER (5J)	1.2	51	01/07 – 05/15	3782/1	
ROOMSTER (5J)	1.2	51	01/07 – 05/15	4138	
ROOMSTER (5J)	1.2 TDI	55	03/10 – 05/15	3782/1	3529/1
ROOMSTER (5J)	1.2 TDI	55	03/10 – 05/15	3904	
ROOMSTER (5J)	1.2 TSI	63	03/10 – 05/15	3782/1	3529/1
ROOMSTER (5J)	1.2 TSI	63	03/10 – 05/15	3904	
ROOMSTER (5J)	1.2 TSI	77	03/10 – 05/15	3782/1	3529/1
ROOMSTER (5J)	1.2 TSI	77	03/10 – 05/15	3904	
ROOMSTER (5J)	1.4	63	09/06 – 05/15	3782	3529/1
ROOMSTER (5J)	1.4	63	09/06 – 05/15	3782/1	
ROOMSTER (5J)	1.4	63	09/06 – 05/15	4138	
ROOMSTER (5J)	1.4 TDI	51	07/06 – 03/10	3782	3529/1
ROOMSTER (5J)	1.4 TDI	51	07/06 – 03/10	3782/1	
ROOMSTER (5J)	1.4 TDI	51	07/06 – 03/10	4138	
ROOMSTER (5J)	1.4 TDI	59	09/06 – 03/10	3782	3529/1
ROOMSTER (5J)	1.4 TDI	59	09/06 – 03/10	3782/1	
ROOMSTER (5J)	1.4 TDI	59	09/06 – 03/10	4138	
ROOMSTER (5J)	1.6	77	09/06 – 05/15	3782	3529/1
ROOMSTER (5J)	1.6	77	09/06 – 05/15	3782/1	
ROOMSTER (5J)	1.6	77	09/06 – 05/15	4138	
ROOMSTER (5J)	1.6 TDI	66	03/10 – 05/15	3782/1	3529/1
ROOMSTER (5J)	1.6 TDI	66	03/10 – 05/15	3904	
ROOMSTER (5J)	1.6 TDI	77	03/10 – 05/15	3782/1	3529/1
ROOMSTER (5J)	1.6 TDI	77	03/10 – 05/15	3904	
ROOMSTER (5J)	1.9 TDI	74	03/06 – 05/06	3782	3529/1
ROOMSTER (5J)	1.9 TDI	74	03/06 – 05/06	3782/1	
ROOMSTER (5J)	1.9 TDI	74	03/06 – 05/06	4138	

MAKE & MODEL		KW	YEAR		
SKODA					
ROOMSTER (5J)	1.9 TDI	77	09/06 – 03/10	3782	3529/1
ROOMSTER (5J)	1.9 TDI	77	09/06 – 03/10	3782/1	
ROOMSTER (5J)	1.9 TDI	77	09/06 – 03/10	4138	
Roomster (5J) 44228	BME	47	05/2006 - 01/2007	3782/1	
Roomster (5J) 44228	BZG, CGPA	51	01/2007 - 05/2015	3782/1	
Roomster (5J) 44228 TDI	CFWA	55	03/2010 - 05/2015	3782/1	
Roomster (5J) 44228 TSI	CBZA	63	03/2010 - 05/2015	3782/1	
Roomster (5J) 44287	BXW, CGGB	63	09/2006 - 05/2015	3782/1	
Roomster (5J) 44287 TDI	BMS, BNV	59	09/2006 - 03/2010	3782/1	
Roomster (5J) 44287 TDI	BNM	51	07/2006 - 03/2010	3782/1	
Roomster (5J) 44348	BTS, CFNA	77	09/2006 - 05/2015	3782/1	
Roomster (5J) 44440 TDI	AXR	74	03/2006 - 05/2006	3782/1	
Roomster (5J) 44440 TDI	BLS, BSW	77	09/2006 - 03/2010	3782/1	
ROOMSTER Praktik (5J)	1.2	51	03/07 – 05/15	3566	3529/1
ROOMSTER Praktik (5J)	1.2	51	03/07 – 05/15	3782	
ROOMSTER Praktik (5J)	1.2	51	03/07 – 05/15	3782/1	
ROOMSTER Praktik (5J)	1.2	51	03/07 – 05/15	4138	
ROOMSTER Praktik (5J)	1.2 TDI	55	03/10 – 05/15	3782/1	3529/1
ROOMSTER Praktik (5J)	1.2 TDI	55	03/10 – 05/15	3904	
ROOMSTER Praktik (5J)	1.2 TSI	63	03/10 – 05/15	3782/1	3529/1
ROOMSTER Praktik (5J)	1.2 TSI	63	03/10 – 05/15	3904	
ROOMSTER Praktik (5J)	1.4	63	03/07 – 05/15	3566	3529/1
ROOMSTER Praktik (5J)	1.4	63	03/07 – 05/15	3782	
ROOMSTER Praktik (5J)	1.4	63	03/07 – 05/15	3782/1	
ROOMSTER Praktik (5J)	1.4	63	03/07 – 05/15	4138	
ROOMSTER Praktik (5J)	1.4 TDI	51	03/07 – 03/10	3566	3529/1
ROOMSTER Praktik (5J)	1.4 TDI	51	03/07 – 03/10	3782	
ROOMSTER Praktik (5J)	1.4 TDI	51	03/07 – 03/10	3782/1	
ROOMSTER Praktik (5J)	1.4 TDI	51	03/07 – 03/10	4138	
ROOMSTER Praktik (5J)	1.4 TDI	59	03/07 – 03/10	3566	3529/1
ROOMSTER Praktik (5J)	1.4 TDI	59	03/07 – 03/10	3782	
ROOMSTER Praktik (5J)	1.4 TDI	59	03/07 – 03/10	3782/1	
ROOMSTER Praktik (5J)	1.4 TDI	59	03/07 – 03/10	4138	
ROOMSTER Praktik (5J)	1.6 TDI	66	03/10 – 05/15	3782/1	3529/1
ROOMSTER Praktik (5J)	1.6 TDI	66	03/10 – 05/15	3904	
Scala (NW1) 1.0 TGI CNG	DBYA	66	11/2019 -	3782/1	
SUPERB III (3V3)	1.4 TSI (CZCA)	92	03/15 -	4228	4270
SUPERB III (3V3)	1.4 TSI (CZDA)	110	03/15 -	4228	4270
SUPERB III (3V3)	1.4 TSI (CZEA)	110	03/15 -	4228	4270
SUPERB III (3V3)	1.6 TDI (DCXA)	88	03/15 -	4228	4270
SUPERB III (3V3)	1.6 TDI (DCZA)	88	03/15 -	4228	4270
SUPERB III (3V3)	2.0 TSI (CJXA)	206	03/15 -	4228	4270
SUPERB III (3V5)	1.8 TSI (CJSA)	132	03/15 -	4228	4270
SUPERB III (3V5)	1.8 TSI (CJSC)	132	03/15 -	4228	4270
SUPERB III (3V5)	2.0 TDI (CRLB)	110	03/15 -	4228	4270
SUPERB III (3V5)	2.0 TDI (DDAA)	140	03/15 -	4228	4270
SUPERB III (3V5)	2.0 TDI (DFCA)	140	03/15 -	4228	4270
SUPERB III (3V5)	2.0 TDI (DFEA)	110	03/15 -	4228	4270
SUPERB III (3V5)	2.0 TSI (CHHB)	162	03/15 -	4228	4270
SUPERB (3T4)	1.4 TSI	92	07/08 – 05/15	3904	3905
SUPERB (3T4)	1.4 TSI	92	07/08 – 05/15		4135
SUPERB (3T4)	1.6 TDI	77	09/10 – 05/15	3904	3905
SUPERB (3T4)	1.6 TDI	77	09/10 – 05/15		4135
SUPERB (3T4)	1.8 TSI	112	03/09 – 05/15	3904	3905
SUPERB (3T4)	1.8 TSI	112	03/09 – 05/15		4135
SUPERB (3T4)	1.8 TSI	118	03/08 – 05/15	3904	3905
SUPERB (3T4)	1.8 TSI	118	03/08 – 05/15		4135
SUPERB (3T4)	1.8 TSI 4x4	112	03/09 – 05/15	3904	4135
SUPERB (3T4)	1.8 TSI 4x4	118	11/08 – 05/15	3904	4135
SUPERB (3T4)	1.9 TDI	77	03/08 – 11/10	3904	3905
SUPERB (3T4)	1.9 TDI	77	03/08 – 11/10		4135
SUPERB (3T4)	2.0 TDI	103	03/08 – 05/10	3904	3905
SUPERB (3T4)	2.0 TDI	103	03/08 – 05/10		4135
SUPERB (3T4)	2.0 TDI	125	07/08 – 05/15	3904	3905
SUPERB (3T4)	2.0 TDI	125	07/08 – 05/15		4135
SUPERB (3T4)	2.0 TDI 16V	103	01/09 – 05/15	3904	3905
SUPERB (3T4)	2.0 TDI 16V	103	01/09 – 05/15		4135
SUPERB (3T4)	2.0 TDI 16V 4x4	103	11/10 – 05/15	3904	4135
SUPERB (3T4)	2.0 TDI 4x4	125	09/08 – 05/15	3904	3905
SUPERB (3T4)	2.0 TDI 4x4	125	09/08 – 05/15		4135
SUPERB (3T4)	2.0 TSI	147	05/10 – 05/15		3905
SUPERB (3U4)	1.8 T	110	12/01 – 03/08		3529/1
SUPERB (3U4)	1.9 TDI	74	08/02 – 10/05		3529/1
SUPERB (3U4)	1.9 TDI	77	10/05 – 05/07		3529/1
SUPERB (3U4)	1.9 TDI	85	01/07 – 03/08		3529/1
SUPERB (3U4)	1.9 TDI	96	12/01 – 03/08		3529/1

MAKE & MODEL   		KW	YEAR		
SKODA					
SUPERB (3U4)	2.0	85	12/01 – 03/08		3529/1
SUPERB (3U4)	2.0 TDI	103	10/05 – 03/08		3529/1
SUPERB (3U4)	2.5 TDI	114	12/01 – 08/03		3529/1
SUPERB (3U4)	2.5 TDI	120	06/03 – 03/08		3529/1
SUPERB (3U4)	2.8 V6	140	06/02 – 03/08		3529/1
SUPERB (3U4)	2.8 V6	142	12/01 – 03/08		3529/1
SUPERB Estate (3T5)	1.4 TSI	92	10/09 – 05/15	3904	3905
SUPERB Estate (3T5)	1.4 TSI	92	10/09 – 05/15		4135
SUPERB Estate (3T5)	1.6 TDI	77	09/10 – 05/15	3904	3905
SUPERB Estate (3T5)	1.6 TDI	77	09/10 – 05/15		4135
SUPERB Estate (3T5)	1.8 TSI	112	10/09 – 05/15	3904	3905
SUPERB Estate (3T5)	1.8 TSI	112	10/09 – 05/15		4135
SUPERB Estate (3T5)	1.8 TSI	118	10/09 – 05/15	3904	3905
SUPERB Estate (3T5)	1.8 TSI	118	10/09 – 05/15		4135
SUPERB Estate (3T5)	1.8 TSI 4x4	112	10/09 – 05/15	3904	4135
SUPERB Estate (3T5)	1.8 TSI 4x4	118	10/09 – 05/15	3904	4135
SUPERB Estate (3T5)	1.9 TDI	77	10/09 – 11/10	3904	3905
SUPERB Estate (3T5)	1.9 TDI	77	10/09 – 11/10		4135
SUPERB Estate (3T5)	2.0 TDI	103	10/09 – 03/10	3904	3905
SUPERB Estate (3T5)	2.0 TDI	103	10/09 – 03/10		4135
SUPERB Estate (3T5)	2.0 TDI	125	10/09 – 05/15	3904	3905
SUPERB Estate (3T5)	2.0 TDI	125	10/09 – 05/15		4135
SUPERB Estate (3T5)	2.0 TDI 16V	103	10/09 – 05/15	3904	3905
SUPERB Estate (3T5)	2.0 TDI 16V	103	10/09 – 05/15		4135
SUPERB Estate (3T5)	2.0 TDI 16V 4x4	103	11/10 – 05/15	3904	4135
SUPERB Estate (3T5)	2.0 TDI 4x4	125	10/09 – 05/15	3904	4135
SUPERB Estate (3T5)	2.0 TSI	147	05/10 – 05/15		3905
Superb III (3V3) 2.0 TDI	CRLB, DFEA, DFGA, DSRA, DSRB	110	03/2015 -	4228/1	
Superb III (3V3) 2.0 TDI	DDAA, DFCA, DFHA	140	03/2015 -	4228/1	
Superb III (3V3) 2.0 TDI 4x4	CRLB, DFEA, DFGA	110	03/2015 -	4228/1	
Superb III (3V3) 2.0 TDI 4x4	DDAA, DFCA, DFHA	140	03/2015 -	4228/1	
Superb III (3V3) 2.0 TSI	CHHB	162	03/2015 -	4228/1	
Superb III (3V3) 44287 TSI	CZCA	92	03/2015 -	4228/1	
Superb III (3V3) 44287 TSI	CZDA, CZEA	110	03/2015 -	4228/1	
Superb III (3V3) 44287 TSI 4x4	CZEA	110	03/2015 -	4228/1	
Superb III (3V3) 44348 TDI	-	110	07/2015 -	4228/1	
Superb III (3V3) 44348 TDI	DCXA, DCZA	88	03/2015 -	4228/1	
Superb III (3V3) 44409 TSI	CJSA, CJSC	132	03/2015 -	4228/1	
Superb III SW (3V5) 2.0 TDI	CRLB, DFEA, DFGA, DSRA, DSRB	110	03/2015 -	4228/1	
Superb III SW (3V5) 2.0 TDI	DDAA, DFCA, DFHA	140	03/2015 -	4228/1	
Superb III SW (3V5) 2.0 TDI 4x4	CRLB, DFEA, DFGA	110	03/2015 -	4228/1	
Superb III SW (3V5) 2.0 TDI 4x4	DDAA, DFCA, DFHA	140	03/2015 -	4228/1	
Superb III SW (3V5) 2.0 TSI	CHHB	162	03/2015 -	4228/1	
Superb III SW (3V5) 44287 TSI	CZCA	92	03/2015 -	4228/1	
Superb III SW (3V5) 44287 TSI	CZDA, CZEA	110	03/2015 -	4228/1	
Superb III SW (3V5) 44287 TSI 4x4	CZEA	110	03/2015 -	4228/1	
Superb III SW (3V5) 44348 TDI	-	110	07/2015 -	4228/1	
Superb III SW (3V5) 44348 TDI	DCXA, DCZA	88	03/2015 -	4228/1	
Superb III SW (3V5) 44409 TSI	CJSA, CJSC	132	03/2015 -	4228/1	
YETI (5L)	1.2 TSI	77	09/09 -	3782	3529/1
YETI (5L)	1.2 TSI	77	09/09 -	3904	
YETI (5L)	1.2 TSI	81	05/15 -	3782	3529/1
YETI (5L)	1.2 TSI	81	05/15 -	3904	4135
YETI (5L)	1.4 TSI	90	06/10 -	3782	3529/1
YETI (5L)	1.4 TSI	90	06/10 -	3904	
YETI (5L)	1.4 TSI	92	05/15 -	3782	3529/1
YETI (5L)	1.4 TSI	92	05/15 -	3904	4135
YETI (5L)	1.4 TSI 4x4	110	05/15 -	3782	3529/1
YETI (5L)	1.4 TSI 4x4	110	05/15 -	3904	4135
YETI (5L)	1.6	81	04/14 -	3782	3529/1
YETI (5L)	1.6	81	04/14 -	3904	4135
YETI (5L)	1.6 TDI	77	11/10 -	3782	3905
YETI (5L)	1.6 TDI	77	11/10 -	3904	4135
YETI (5L)	1.8 TSI 4x4	112	11/09 -	3904	3905
YETI (5L)	1.8 TSI 4x4	112	11/09 -		4135
YETI (5L)	1.8 TSI 4x4	118	05/09 -	3904	3905
YETI (5L)	1.8 TSI 4x4	118	05/09 -		4135
YETI (5L)	2.0 TDI	81	11/09 -	3782	3905
YETI (5L)	2.0 TDI	81	11/09 -	3904	4135
YETI (5L)	2.0 TDI	103	11/11 -	3904	3905
YETI (5L)	2.0 TDI	103	11/11 -		4135
YETI (5L)	2.0 TDI	110	05/15 -	3782	3529/1
YETI (5L)	2.0 TDI	110	05/15 -	3904	4135
YETI (5L)	2.0 TDI 4x4	81	11/09 -	3782	3905
YETI (5L)	2.0 TDI 4x4	81	11/09 -	3904	4135
YETI (5L)	2.0 TDI 4x4	103	05/09 -	3904	3905

MAKE & MODEL   		KW	YEAR		
SKODA					
YETI (5L)	2.0 TDI 4x4	103	05/09 -		4135
YETI (5L)	2.0 TDI 4x4	110	05/15 -	3782	3529/1
YETI (5L)	2.0 TDI 4x4	110	05/15 -	3904	4135
YETI (5L)	2.0 TDI 4x4	125	11/09 -	3904	3905
YETI (5L)	2.0 TDI 4x4	125	11/09 -		4135
SKODA (SVW)					
FABIA (5J_)	1.4	63	12/08 -	3782/1	
FABIA (5J_)	1.6	77	12/08 – 12/15	3782	3529/1
FABIA (5J_)	1.6	77	12/08 – 12/15	3782/1	
OCTAVIA (1Z3)	1.6	77	06/07 – 04/10	3904	
OCTAVIA (1Z3)	2.0	85	06/07 – 04/10	3904	
SUPERB	1.8 TSI	118	08/09 -	3904	
SUPERB	2.0 TSI	147	08/09 -	3904	
SKODA (SW)					
OCTAVIA (5E3)	1.4 TSI	110	05/14 -	4295	
OCTAVIA (5E3)	1.6	77	01/14 -	4295	
OCTAVIA (5E3)	1.6	81	05/14 -	4295	
SMART					
CABRIO (450)	0.6 (450.432)	52	06/02 – 01/04	4281	
CABRIO (450)	0.6 (S1OLA1, 450.441,450.442, 450.443)	40	03/00 – 01/04	4281	
CABRIO (450)	0.6 (S1OLD2, 450.452)	45	01/01 – 01/04	4281	
CABRIO (450)	0.7 (450.433)	55	01/03 – 01/04	4281	
CABRIO (450)	0.7 (450.452, 450.432)	45	01/03 – 01/04	4281	
CABRIO (450)	0.8 CDI (S1OLC1, 450.401,450.402, 450.403, 450.400)	30	03/01 – 01/04	4281	
CITY-COUPE (450)	0.6 (450.330, 450.332)	52	06/02 – 01/04	4281	
CITY-COUPE (450)	0.6 (450.352, 450.353)	45	01/01 – 01/04	4281	
CITY-COUPE (450)	0.6 (S1CLA1, 450.341)	40	07/98 – 01/04	4281	
CITY-COUPE (450)	0.6 (S1CLB1, 450.331,450.336)	33	07/98 – 01/04	4281	
CITY-COUPE (450)	0.7 (450.330)	37	01/03 – 01/04	4281	
CITY-COUPE (450)	0.7 (450.333)	55	01/03 – 01/04	4281	
CITY-COUPE (450)	0.7 (450.352, 450.353)	45	01/03 – 01/04	4281	
CITY-COUPE (450)	0.8 CDI (S1CLC1, 450.300,450.301, 450.302, 450.303...)	30	11/99 – 01/04	4281	
CROSSBLADE (450)	0.6 (450.418)	52	06/02 – 12/03	4281	
FORFOUR (454)	1.1 (454.030)	55	01/04 – 06/06		4062
FORFOUR (454)	1.1 (454.033)	47	02/05 – 06/06		4062
FORFOUR (454)	1.3 (454.031)	70	01/04 – 06/06		4062
FORFOUR (454)	1.5 (454.032)	80	01/04 – 06/06		4062
FORFOUR (454)	1.5 (454.032)	90	01/04 – 06/06		4062
FORFOUR (454)	1.5 BRABUS (454.034)	130	05/05 – 06/06		4062
FORFOUR (454)	1.5 CDI (454.000)	50	09/04 – 06/06		4062
FORFOUR (454)	1.5 CDI (454.001)	70	09/04 – 06/06		4062
FORFOUR Hatchback (453)	0.9 (453.044, 453.053)	66	11/14 -	4140	
FORFOUR Hatchback (453)	0.9 (453.444, 453.453)	66	09/15 -	4140	
FORFOUR Hatchback (453)	0.9 Brabus (453.062)	80	07/16 -	4140	
FORFOUR Hatchback (453)	0.9 Brabus (453.462)	80	07/16 -	4140	
FORTWO Cabrio (450)	0.7 (450.433)	30	01/04 – 01/07	4281	
FORTWO Cabrio (450)	0.7 (450.452)	45	01/04 – 01/07	4281	
FORTWO Cabrio (450)	0.8 CDI (450.401, 450.402,450.403, 450.400)	55	01/04 – 01/07	4281	
FORTWO Cabrio (451)	0.8 CDi (451.400)	33	01/07 -	4281	
FORTWO Cabrio (451)	0.8 CDi (451.401)	40	08/09 -	4281	
FORTWO Cabrio (451)	1.0 (451.431, 451.480)	52	01/07 -	4281	
FORTWO Cabrio (451)	1.0 Brabus	88	04/12 -	4281	
FORTWO Cabrio (451)	1.0 Brabus (451.433)	72	01/08 -	4281	
FORTWO Cabrio (451)	1.0 Turbo (451.432)	62	01/07 -	4281	
FORTWO Cabrio (451)	1.0 Turbo Brabus (451.433)	75	07/10 -	4281	
FORTWO Cabrio (451)	electric drive (451.490)	30	11/09 – 12/11	4281	
FORTWO Cabrio (451)	electric drive (451.490,451.491)	20	12/10 – 12/12	4281	
FORTWO Cabrio (451)	electric drive (451.490,451.491)	55	01/13 -	4281	
FORTWO Cabrio (451)	electric drive (451.491)	35	12/11 – 12/12	4281	
FORTWO Cabrio (451)	electric drive Brabus (451.492)	60	01/13 -	4281	
FORTWO Convertible (453)	1.0 (453.041)	45	11/14 -	4140	
FORTWO Convertible (453)	1.0 (453.042)	52	07/14 -	4140	
FORTWO Convertible (453)	1.0 (453.442, 453.443)	52	09/15 -	4140	
FORTWO Coupe (450)	0.7 (450.330)	30	01/04 – 01/07	4281	
FORTWO Coupe (450)	0.7 (450.333)	37	01/04 – 01/07	4281	
FORTWO Coupe (450)	0.7 (450.352, 450.332)	45	01/04 – 01/07	4281	
FORTWO Coupe (450)	0.8 CDI (450.300, 450.301,450.302, 450.303, 450.306)	55	01/04 – 01/07	4281	
FORTWO Coupe (451)	0.8 CDi (451.300)	33	01/07 -	4281	
FORTWO Coupe (451)	0.8 CDi (451.301)	40	08/09 -	4281	
FORTWO Coupe (451)	1.0 (451.330, 451.334)	45	01/07 -	4281	
FORTWO Coupe (451)	1.0 (451.331, 451.380)	52	01/07 -	4281	
FORTWO Coupe (451)	1.0 Brabus (451.333)	72	01/08 -	4281	
FORTWO Coupe (451)	1.0 Turbo (451.332)	62	01/07 -	4281	
FORTWO Coupe (451)	1.0 Turbo Brabus (451.333)	75	07/10 -	4281	
FORTWO Coupe (451)	electric drive (451.390)	35	12/11 – 12/12	4281	

MAKE & MODEL   		KW	YEAR		
SMART					
FORTWO Coupe (451)	electric drive (451.390,451.391)	55	01/13 -	4281	
FORTWO Coupe (451)	electric drive (451.391)	30	11/09 – 12/11	4281	
FORTWO Coupe (451)	electric drive (451.391,451.390)	20	12/10 – 12/12	4281	
FORTWO Coupe (451)	electric drive Brabus (451.392)	60	01/13 -	4281	
FORTWO Coupe (453)	0.9 (453.344, 453.353)	66	09/14 -	4140	
FORTWO Coupe (453)	0.9 Brabus (453.362)	80	07/16 -	4140	
FORTWO Coupe (453)	1.0 (453.341)	45	11/14 -	4140	
FORTWO Coupe (453)	1.0 (453.342, 453.343)	52	07/14 -	4140	
ROADSTER (452)	0.7 (452.332)	45	06/03 – 11/05	4281	
ROADSTER (452)	0.7 (452.334)	60	04/03 – 11/05	4281	
ROADSTER (452)	0.7 (452.432)	45	04/03 – 11/05	4281	
ROADSTER Coupe (452)	0.7 (452.434)	60	04/03 – 11/05	4281	
ROADSTER Coupe (452)	0.7 Brabus (452.337)	74	12/03 – 11/05	4281	
ROADSTER Coupe (452)	0.7 Brabus (452.437)	74	12/03 – 11/05	4281	
SSANGYONG					
ACTYON I	2.0 Xdi	100	07/07 -	3843	3895
ACTYON I	2.0 Xdi	104	11/05 -	3843	3895
ACTYON I	2.3	110	11/06 -	3843	3895
ACTYON I	2.3 4x4	110	11/06 -	3843	3895
ACTYON I	200 Xdi 4WD	100	07/07 -	3843	3895
ACTYON I	200 Xdi 4WD	104	10/06 -	3843	3895
ACTYON II	2.0	110	08/12 -	3960	4061
ACTYON II	2.0 4x4	110	08/12 -	3960	4061
ACTYON II	2.0 XDi	110	08/12 -	3960	4061
ACTYON II	2.0 XDi 4x4	110	08/12 -	3960	4061
ACTYON II	2.0 XDi 4x4	129	03/13 -	3960	4061
ACTYON SPORTS I (QJ)	2.0 Xdi	104	04/07 -	3843	3895
ACTYON SPORTS I (QJ)	2.0 Xdi	114	09/11 -	3960	4061
ACTYON SPORTS I (QJ)	2.0 Xdi 4WD	104	04/07 -	3843	3895
ACTYON SPORTS I (QJ)	2.0 Xdi 4WD	114	09/11 -	3960	4061
ACTYON SPORTS II	2.0 Xdi	114	10/12 -		3895
ACTYON SPORTS II	2.0 Xdi 4WD	114	10/12 -		3895
ISTANA Box	2.9 D	70	10/92 – 05/95	3689	
ISTANA Box	2.9 D	90	06/95 -	3689	
ISTANA Bus	2.3	110	06/95 -	3689	
ISTANA Bus	2.9 D	90	06/95 -	3689	
ISTANA Bus	2.9 TD	70	10/92 – 05/95	3689	
KORANDO	2.0	110	02/12 -	3960	4061
KORANDO	2.0 4WD	110	02/12 -	3960	
KORANDO	2.0 e-XDi	110	02/12 -	3960	4061
KORANDO	2.0 e-XDi	129	11/10 -	3960	4061
KORANDO	2.0 e-XDi 4WD	110	02/12 -	3960	4061
KORANDO	2.0 e-XDi 4WD	129	11/10 -	3960	4061
KORANDO	2.2 Xdi	131	07/15 -	3960	4061
KORANDO	2.2 Xdi 4WD	131	07/15 -	3960	4061
KYRON	2.0 Xdi	100	01/10 -	3843	3895
KYRON	2.0 Xdi	104	05/05 -	3843	3895
KYRON	2.0 Xdi 4x4	100	01/10 -	3843	3895
KYRON	2.0 Xdi 4x4	104	05/05 -	3843	3895
KYRON	2.3	110	01/10 -	3843	3895
KYRON	2.7 Xdi	120	03/06 -	3843	3895
KYRON	2.7 Xdi	121	05/05 -	3843	3895
KYRON	3.2 M320 4x4	162	03/08 -	3843	
REXTON (GAB_)	2.3 RX230 4x4	110	05/02 -	3843	3895
REXTON (GAB_)	2.7 D 4x4	137	05/06 -	3843	3895
REXTON (GAB_)	2.7 Xdi	120	08/04 -	3843	3895
REXTON (GAB_)	2.7 Xdi	121	03/05 – 08/06	3843	3895
REXTON (GAB_)	2.7 Xdi 4x4	118	03/11 -	3843	3895
REXTON (GAB_)	2.7 Xdi Turbo 4x4	132	03/11 -	3843	3895
REXTON (GAB_)	2.8 4x4	201	03/03 – 06/06	3843	3895
REXTON (GAB_)	2.8 RX280 4x4	142	03/03 -	3843	3895
REXTON (GAB_)	2.9 TD	88	04/02 -	3843	3895
REXTON (GAB_)	3.2	162	04/02 -	3843	3895
REXTON W	2.0 Xdi All-wheel Drive	114	07/12 -		3895
REXTON W	2.2 Xdi	131	07/15 -		3895
REXTON W	2.2 Xdi All-wheel Drive	131	07/15 -		3895
REXTON W	2.7 Xdi All-wheel Drive	121	07/12 -		3895
REXTON W	2.7 Xdi All-wheel Drive	137	10/12 -		3895
REXTON W	3.2	114	07/12 -		3895
RODIUS	2.7 Xdi	120	05/05 -	3976/1	
RODIUS	2.7 Xdi	121	05/05 -	3976/1	
RODIUS	2.7 Xdi 4WD	120	05/05 -	3976/1	
RODIUS	2.7 Xdi 4WD	121	05/05 -	3976/1	
RODIUS	3.2	162	05/05 -	3976/1	
RODIUS	3.2 4WD	162	07/07 -	3976/1	
RODIUS II	2.0 Xdi	114	07/13 -	3976/1	

MAKE & MODEL		KW	YEAR		
SSANGYONG					
RODIUS II	2.0 Xdi 4WD	114	07/13 -	3976/1	
RODIUS II	2.2 Xdi	131	07/15 -	3976/1	
RODIUS II	2.2 Xdi 4WD	131	07/15 -	3976/1	
STAVIC	2.7 270 sXDi	121	02/05 -	3976/1	
STAVIC	2.7 270 sXDi 4x4	121	02/05 -	3976/1	
STAVIC	3.2 4x4	162	02/05 -	3976/1	
TIVOLI	1.6	94	04/15 -		4061
TIVOLI	1.6 XDi 160	85	04/15 -		4061
Tivoli/ Tivolan 44348	G16DF	93	04/2015 -		4343
Tivoli/ Tivolan 44348	G16DF	94	04/2015 -		4343
Tivoli/ Tivolan 44348 4WD	G16DF	93	04/2015 -		4343
Tivoli/ Tivolan 44348 4WD	G16DF	94	03/2015 -		4343
Tivoli/ Tivolan 44348 GPL	G16DF	94	04/2015 -		4343
Tivoli/ Tivolan 44348 GPL 4WD	G16DF	94	03/2015 -		4343
Tivoli/ Tivolan 44348 XDi 160	D16DTF	85	04/2015 -		4343
Tivoli/ Tivolan 44348 XDi 160 4WD	D16DTF	85	04/2015 -		4343
XLV Close Off-Road/Tivoli Air 44348 CNG	G16DF	94	07/2018 -		4343
XLV Close Off-Road/Tivoli Air 44348 GPL	G16DF	94	05/2016 -		4343
XLV Close Off-Road/Tivoli Air 44348 GPL 4WD	G16DF	94	05/2016 -		4343
XLV Close Off-Road/Tivoli Air e-XDi 160	D16DTF	85	04/2016 -		4343
XLV Close Off-Road/Tivoli Air e-XDi 160 4WD	D16DTF	85	04/2016 -		4343
XLV Close Off-Road/Tivoli Air e-XGi 160	G16DF	93	05/2016 -		4343
XLV Close Off-Road/Tivoli Air e-XGi 160	G16DF	94	04/2016 -		4343
XLV Close Off-Road/Tivoli Air e-XGi 160 4WD	G16DF	93	05/2016 -		4343
XLV Close Off-Road/Tivoli Air e-XGi 160 4WD	G16DF	94	04/2016 -		4343
XLV Closed Off-Road Vehicle	1.6 GPL	94	05/16 -		4061
XLV Closed Off-Road Vehicle	1.6 GPL All-wheel Drive	94	05/16 -		4061
XLV Closed Off-Road Vehicle	e-XDi 160	85	04/16 -		4061
XLV Closed Off-Road Vehicle	e-XDi 160 All-wheel Drive	85	04/16 -		4061
XLV Closed Off-Road Vehicle	e-XGi 160	94	04/16 -		4061
XLV Closed Off-Road Vehicle	e-XGi 160 All-wheel Drive	94	04/16 -		4061
SUBARU					
1400	1.4 GL, GSR		01/72 -	3601	
1600	1.6 4WD		01/76 -	3601	
BRZ	2.0	147	06/12 -	3912	4213
BRZ	2.0 (FA20)	147	06/12 -		4258
FORESTER (SF)	2.0 AWD	90	08/97 – 09/02	4079	3913
FORESTER (SF)	2.0 AWD	92	06/98 – 09/02	4079	3913
FORESTER (SF)	2.0 S Turbo AWD	125	06/98 – 04/01	4079	3913
FORESTER (SF)	2.0 S Turbo AWD	130	04/01 – 09/02	4079	3913
FORESTER (SF)	2.5 AWD	123	07/97 – 05/02	4079	3913
FORESTER (SG)	2.0 AWD	92	09/02 -	3912	3913
FORESTER (SG)	2.0 S Turbo AWD	130	09/02 -	3912	3913
FORESTER (SG)	2.0 X AWD	116	09/05 -	3912	3913
FORESTER (SG)	2.5 AWD	121	07/05 -	3912	3913
FORESTER (SG)	2.5 AWD	155	12/03 -	3912	3913
FORESTER (SG)	2.5 AWD	171	01/05 -	3912	
FORESTER (SG)	2.5 AWD	185	05/05 – 09/05	3912	
FORESTER (SG)	2.5 RX Nato AWD	115	11/02 – 08/05	3912	3913
FORESTER (SG)	2.5 XT AWD	169	09/05 -	3912	
FORESTER (SH)	2.0 AWD	110	01/08 -	3912	4213
FORESTER (SH)	2.0 D AWD	108	09/08 -	3912	4213
FORESTER (SH)	2.5 AWD	126	01/09 -	3912	4213
FORESTER (SH)	2.5 AWD	169	06/08 -	3912	4213
FORESTER (SH)	2.5 Turbo AWD	193	02/11 -		4213
FORESTER (SJ)	2.0 D AWD	108	03/13 -	3912	4213
FORESTER (SJ)	2.0 i AWD	110	03/13 -	3912	4213
FORESTER (SJ)	2.0 XT AWD	177	03/13 -	3912	4213
FORESTER (SJ)	2.5 AWD	126	07/14 -		4213
FORESTER III (SH)	2.0 D (EE20)	108	09/08 – 09/13	4081	
FORESTER III (SH)	2.0 D (EE20Z)	108	09/08 – 09/13	4081	
FORESTER IV (SJ)	2.0 D (EE20)	108	03/13 -	4081	4258
FORESTER IV (SJ)	2.0 D (EE20Z)	108	03/13 -	4081	4258
FORESTER IV (SJ)	2.0 i (FB 20)	110	03/13 -		4258
FORESTER IV (SJ)	2.0 XT (FA20)	177	03/13 -		4258
IMPREZA III (GR, GH, G3)	2.5 (EJ257)	221	01/08 -		4258
IMPREZA Coupe (GFC)	1.6	66	12/96 – 12/00	3764	4080
IMPREZA Coupe (GFC)	1.6	66	12/96 – 12/00	3426	
IMPREZA Coupe (GFC)	1.6	70	09/98 – 09/00	3426	4080
IMPREZA Coupe (GFC)	1.6 AWD	66	12/96 – 12/00	3764	4080
IMPREZA Coupe (GFC)	1.6 AWD	66	12/96 – 12/00	3426	
IMPREZA Coupe (GFC)	2.0	92	09/98 – 09/00	3426	3913
IMPREZA Coupe (GFC)	2.0	92	09/98 – 09/00	3764	4080
IMPREZA Coupe (GFC)	2.0 AWD	85	12/95 – 12/00	3426	3913
IMPREZA Coupe (GFC)	2.0 AWD	85	12/95 – 12/00	3764	4080
IMPREZA Coupe (GFC)	2.0 AWD	206	09/98 – 09/00		3913

MAKE & MODEL   		KW	YEAR		
SUBARU					
IMPREZA Coupe (GFC)	2.0 i	85	11/95 – 09/00	3426	3913
IMPREZA Coupe (GFC)	2.0 i	85	11/95 – 09/00	3764	4080
IMPREZA Coupe (GFC)	2.0 Turbo AWD	155	12/96 – 12/00	4079	4080
IMPREZA Coupe (GFC)	2.0 Turbo AWD	155	12/96 – 12/00	4078	
IMPREZA Coupe (GFC)	2.2 AWD	96	09/98 – 09/00	3764	
IMPREZA Coupe (GFC)	2.2 AWD	97	11/95 – 08/98	3764	
IMPREZA Coupe (GFC)	2.2 i	96	09/98 – 09/00	3764	
IMPREZA Estate (GF)	1.5 L	66	09/98 – 09/00	3764	4080
IMPREZA Estate (GF)	1.5 L	70	11/95 – 08/98	3764	4080
IMPREZA Estate (GF)	1.5 L	70	11/95 – 08/98	3426	
IMPREZA Estate (GF)	1.6	66	01/93 – 08/98	3764	4080
IMPREZA Estate (GF)	1.6	66	01/93 – 08/98	3426	
IMPREZA Estate (GF)	1.6 i	70	06/98 – 12/00	3764	4080
IMPREZA Estate (GF)	1.6 i AWD	66	08/92 – 12/00	3764	4080
IMPREZA Estate (GF)	1.6 i AWD	66	08/92 – 12/00	3426	
IMPREZA Estate (GF)	1.6 i AWD	70	06/98 – 12/00	3764	4080
IMPREZA Estate (GF)	1.8 i	76	11/95 – 06/96	3426	4080
IMPREZA Estate (GF)	1.8 i AWD	76	08/92 – 12/00	3764	4080
IMPREZA Estate (GF)	1.8 i AWD	76	08/92 – 12/00	3426	
IMPREZA Estate (GF)	2.0	85	09/96 – 08/98	3764	4080
IMPREZA Estate (GF)	2.0 i	92	09/98 – 09/00	3764	4080
IMPREZA Estate (GF)	2.0 i 16V AWD	92	06/98 – 12/00	3426	3913
IMPREZA Estate (GF)	2.0 i 16V AWD	92	06/98 – 12/00	3764	4080
IMPREZA Estate (GF)	2.0 i AWD	85	12/95 – 12/00	3426	3913
IMPREZA Estate (GF)	2.0 i AWD	85	12/95 – 12/00	3764	4080
IMPREZA Estate (GF)	2.0 i Turbo AWD	155	03/94 – 12/00	4078	3913
IMPREZA Estate (GF)	2.0 i Turbo AWD	155	03/94 – 12/00	4079	
IMPREZA Estate (GF)	2.0 Turbo GT AWD	160	06/98 – 12/00	4078	3913
IMPREZA Estate (GF)	2.0 Turbo GT AWD	160	06/98 – 12/00	4079	
IMPREZA Estate (GF)	2.2 GX AWD	96	09/98 – 09/00	3764	
IMPREZA Estate (GF)	2.2 GX AWD	97	11/95 – 08/98	3764	
IMPREZA Estate (GG)	1.5	74	06/01 – 08/05	4036	3913
IMPREZA Estate (GG)	1.5	81	10/05 -	4036	3913
IMPREZA Estate (GG)	1.5 AWD	77	05/06 -	3912	3913
IMPREZA Estate (GG)	1.5 AWD	77	05/06 -	4036	
IMPREZA Estate (GG)	1.5 AWD	81	10/05 -	4036	3913
IMPREZA Estate (GG)	1.6 AWD	70	12/00 -	3912	3913
IMPREZA Estate (GG)	1.6 AWD	70	12/00 -	3764	
IMPREZA Estate (GG)	1.6 AWD	70	12/00 -	4079	
IMPREZA Estate (GG)	2.0 AWD	92	12/00 -	4079	3913
IMPREZA Estate (GG)	2.0 AWD	92	12/00 -	3764	
IMPREZA Estate (GG)	2.0 AWD	92	12/00 -	3912	
IMPREZA Estate (GG)	2.0 i R AWD	118	09/05 – 06/07	3912	
IMPREZA Estate (GG)	2.2	94	06/01 – 08/05	3912	3913
IMPREZA Hatchback	2.0 i AWD	92	12/02 – 12/07	4079	3913
IMPREZA Hatchback	2.0 i AWD	118	10/05 – 12/07	4079	3913
IMPREZA Hatchback	2.0 i WRX AWD	168	12/02 – 09/05	4079	3913
IMPREZA Hatchback	2.0 WRX STi AWD	195	12/02 – 09/05	4079	3913
IMPREZA Hatchback	2.5 AWD	112	12/02 – 09/05	4079	3913
IMPREZA Hatchback (GP)	1.6 i	84	06/12 -	4036	4213
IMPREZA Hatchback (GP)	1.6 i	84	06/12 -	3912	
IMPREZA Hatchback (GP)	1.6 i AWD	84	06/12 -	4036	4213
IMPREZA Hatchback (GP)	1.6 i AWD	84	06/12 -	3912	
IMPREZA Hatchback (GP)	2.0 AWD	110	01/12 -		4213
IMPREZA Hatchback (GP)	2.0 Hybrid AWD	110	04/16 -		4213
IMPREZA Hatchback (GR, GH, G3)	1.5 AWD	79	02/08 -	3912	4213
IMPREZA Hatchback (GR, GH, G3)	1.5 F	79	02/08 -	3912	4213
IMPREZA Hatchback (GR, GH, G3)	2.0 D AWD	80	01/11 -	3912	4213
IMPREZA Hatchback (GR, GH, G3)	2.0 D AWD	110	01/09 -	3912	4213
IMPREZA Hatchback (GR, GH, G3)	2.0 R AWD	110	01/08 -	3912	4213
IMPREZA Hatchback (GR, GH, G3)	2.5 AWD	169	01/08 -	3912	4213
IMPREZA Hatchback (GR, GH, G3)	2.5 WRX S AWD	188	02/09 – 12/10	3912	4213
IMPREZA Hatchback (GR, GH, G3)	2.5 WRX SE AWD	195	09/08 -	3912	4213
IMPREZA IV / WRX (GP)	1.6 i (FB16)	84	06/12 -		4258
IMPREZA IV / WRX (GP)	2.5 WRX	171	09/12 -	4081	4258
IMPREZA IV / WRX (GP)	2.5 WRX SE	195	06/12 -		4258
IMPREZA IV / WRX (GP)	2.5 WRX STI (EJ257)	224	06/12 -	4081	4258
IMPREZA Saloon (GC)	1.5	70	11/94 – 08/98	3764	4080
IMPREZA Saloon (GC)	1.5	70	11/94 – 08/98	3426	
IMPREZA Saloon (GC)	1.6 i	66	08/92 – 12/00	3764	4080
IMPREZA Saloon (GC)	1.6 i	66	08/92 – 12/00	3426	
IMPREZA Saloon (GC)	1.6 i	70	06/98 – 12/00	3764	4080
IMPREZA Saloon (GC)	1.6 i	70	06/98 – 12/00	3426	
IMPREZA Saloon (GC)	1.6 i AWD	66	08/92 – 12/00	3764	4080
IMPREZA Saloon (GC)	1.6 i AWD	66	08/92 – 12/00	3426	
IMPREZA Saloon (GC)	1.6 i AWD	70	06/98 – 12/00	3764	4080

MAKE & MODEL		KW	YEAR		
SUBARU					
IMPREZA Saloon (GC)	1.6 i AWD	70	06/98 – 12/00	3426	
IMPREZA Saloon (GC)	1.8 i	76	11/95 – 06/96	3426	4080
IMPREZA Saloon (GC)	1.8 i AWD	76	08/92 – 12/00	3764	4080
IMPREZA Saloon (GC)	1.8 i AWD	76	08/92 – 12/00	3426	
IMPREZA Saloon (GC)	2.0 AWD	206	09/98 – 09/00		3913
IMPREZA Saloon (GC)	2.0 i	85	07/96 – 08/98	3426	4080
IMPREZA Saloon (GC)	2.0 i	92	09/98 – 09/00	3426	4080
IMPREZA Saloon (GC)	2.0 i AWD	85	10/95 – 12/00	3426	3913
IMPREZA Saloon (GC)	2.0 i AWD	85	10/95 – 12/00	3764	4080
IMPREZA Saloon (GC)	2.0 i AWD	92	06/98 – 12/00	3426	3913
IMPREZA Saloon (GC)	2.0 i AWD	92	06/98 – 12/00	3764	4080
IMPREZA Saloon (GC)	2.0 Turbo GT AWD	155	03/94 – 12/00	4079	3913
IMPREZA Saloon (GC)	2.0 Turbo GT AWD	155	03/94 – 12/00		4080
IMPREZA Saloon (GC)	2.0 Turbo GT AWD	160	06/98 – 12/00		3913
IMPREZA Saloon (GC)	2.0 Turbo GT AWD	160	06/98 – 12/00		4080
IMPREZA Saloon (GC)	2.2 GX AWD	96	09/98 – 09/00	3764	
IMPREZA Saloon (GC)	2.2 GX AWD	97	11/95 – 08/98	3764	
IMPREZA Saloon (GD)	1.5	74	06/01 – 09/05	3912	3913
IMPREZA Saloon (GD)	1.5	74	06/01 – 09/05	4036	
IMPREZA Saloon (GD)	1.5	81	10/05 -	4036	3913
IMPREZA Saloon (GD)	1.5 AWD	77	05/06 -	4036	3913
IMPREZA Saloon (GD)	1.5 AWD	81	10/05 -	4036	3913
IMPREZA Saloon (GD)	1.6 AWD	70	12/00 -	3912	3913
IMPREZA Saloon (GD)	1.6 AWD	70	12/00 -	4036	
IMPREZA Saloon (GD)	2.0 i AWD	92	12/00 -	4079	3913
IMPREZA Saloon (GD)	2.0 i AWD	150	12/01 – 11/02	4079	3913
IMPREZA Saloon (GD)	2.0 i R AWD	118	09/05 -	3912	
IMPREZA Saloon (GD)	2.0 i WRX AWD	168	12/02 – 09/05	4079	3913
IMPREZA Saloon (GD)	2.2	94	06/01 – 08/05	3912	3913
IMPREZA Saloon (GD)	2.5 AWD	130	03/01 – 09/05	3912	3913
IMPREZA Saloon (GD)	2.5 AWD	130	03/01 – 09/05	4079	
IMPREZA Saloon (GD)	2.5 i AWD	112	12/02 – 09/05	3912	3913
IMPREZA Saloon (GR)	1.5	79	02/08 -	3912	4213
IMPREZA Saloon (GR)	1.5 AWD	79	02/08 -	3912	4213
IMPREZA Saloon (GR)	2.0 i AWD	110	01/11 -	3912	4213
JUSTY I (KAD)	1000	37	05/87 – 10/95	3394	
JUSTY I (KAD)	1000	40	11/84 – 06/89	3394	
JUSTY I (KAD)	1200	49	05/87 – 10/95	3394	
JUSTY I (KAD)	1000 4WD (KAD-A)	37	05/87 – 11/94	3394	
JUSTY I (KAD)	1000 4WD (KAD-A)	40	11/84 – 12/90	3394	
JUSTY I (KAD)	1200 4WD	50	10/86 – 12/90	3394	
JUSTY I (KAD)	1200 4WD	55	10/90 – 12/94	3394	
JUSTY I (KAD)	1200 4WD (KAD-A)	49	05/87 – 05/91	3394	
Justy II (JMA, MS) 44256 GX 4x4	EF13 (10.95-.)	50	10/1995 - 11/2003	3721	
JUSTY IV	1.0	51	01/07 -	3928	
JUSTY IV	1.0	51	01/07 -	4122	
JUSTY IV	1.3 AWD	67	03/08 -	3928	
LEGACY IV / LIBERTY (BL, BP)	2.0 (EJ20)	101	09/03 – 10/05	4081	
LEGACY IV / LIBERTY (BL, BP)	2.0 (EJ20)	121	06/05 – 04/09	4081	
LEGACY IV / LIBERTY (BL, BP)	2.0 (EJ20Y)	132	06/05 – 04/09	4081	
LEGACY IV / LIBERTY (BL, BP)	2.0 (EJ20Y)	140	06/05 – 04/09	4081	
LEGACY IV / LIBERTY (BL, BP)	2.0 D (EE20)	110	02/08 – 12/09	4081	
LEGACY IV / LIBERTY (BL, BP)	2.0 D (EE20Z)	110	02/08 – 12/09	4081	
LEGACY IV / LIBERTY (BL, BP)	2.0 R (EJ204)	110	09/07 – 12/09	4081	
LEGACY IV / LIBERTY (BL, BP)	2.0 Turbo	180	09/03 – 11/06	4081	
LEGACY IV / LIBERTY (BL, BP)	2.5 (EJ25)	121	09/03 – 04/09	4081	
LEGACY IV / LIBERTY (BL, BP)	3.0 R (EZ30)	180	09/03 – 06/09	4081	
LEGACY IV / LIBERTY (BL, BP, B13_)	2.0	121	09/03 -	4081	
LEGACY IV / LIBERTY (BL, BP, B13_)	2.0 (EJ20)	101	09/03 – 10/05	4081	
LEGACY IV / LIBERTY (BL, BP, B13_)	2.0 (EJ20)	121	06/05 – 04/09	4081	
LEGACY IV / LIBERTY (BL, BP, B13_)	2.0 (EJ20Y)	132	06/05 – 04/09	4081	
LEGACY IV / LIBERTY (BL, BP, B13_)	2.0 (EJ20Y)	140	06/05 – 04/09	4081	
LEGACY IV / LIBERTY (BL, BP, B13_)	2.0 D (EE20)	110	02/08 – 12/09	4081	
LEGACY IV / LIBERTY (BL, BP, B13_)	2.0 D (EE20Z)	110	02/08 – 12/09	4081	
LEGACY IV / LIBERTY (BL, BP, B13_)	2.0 R (EJ204)	110	09/07 – 12/09	4081	
LEGACY IV / LIBERTY (BL, BP, B13_)	2.0 Turbo	180	09/03 – 11/06	4081	
LEGACY IV / LIBERTY (BL, BP, B13_)	2.5 (EJ25)	121	09/03 – 04/09	4081	
LEGACY IV / LIBERTY (BL, BP, B13_)	3.0 R (EZ30)	180	09/03 – 04/09	4081	
LEGACY V / LIBERTY (BM, BR)	3.6 (EZ36D)	191	09/09 – 12/14		4258
LEGACY I (BC)	1800	76	01/89 – 12/93	3426	4080
LEGACY I (BC)	1.6	70	05/89 – 12/93	3426	4080
LEGACY I (BC)	1800 4WD	76	01/89 – 09/91	3426	4080
LEGACY I (BC)	2.0	85	08/91 – 12/93	3426	4080
LEGACY I (BC)	2.0 GL	103	08/91 – 12/93	3426	4080
LEGACY I (BC)	2000 4WD	85	08/91 – 07/94	3426	4080
LEGACY I (BC)	2000 Turbo 4WD	147	05/92 – 07/94	4078	4080

MAKE & MODEL   		KW	YEAR		
SUBARU					
LEGACY I (BC)	2200 4WD	100	01/89 – 07/94	3426	4080
LEGACY I Estate (BC, BJF)	1800	76	01/89 – 07/94	3426	4080
LEGACY I Estate (BC, BJF)	2000	85	09/91 – 12/93	3426	4080
LEGACY I Estate (BC, BJF)	1.6 GL	70	05/89 – 12/93	3426	4080
LEGACY I Estate (BC, BJF)	1800 4WD	76	01/89 – 07/94	3426	4080
LEGACY I Estate (BC, BJF)	2000 4WD	85	09/91 – 07/94	3426	4080
LEGACY I Estate (BC, BJF)	2000 Turbo Super 4WD	147	05/92 – 07/94	4078	4080
LEGACY I Estate (BC, BJF)	2200 Super 4WD	100	01/89 – 07/94	3426	4080
LEGACY II (BD)	1.8 4WD	76	05/96 – 09/98		4080
LEGACY II (BD)	2.0 i	85	09/94 – 03/99		4080
LEGACY II (BD)	2.0 i 4WD	85	09/94 – 03/99		4080
LEGACY II (BD)	2.2	94	07/94 – 11/98		4080
LEGACY II (BD)	2.2 i 4WD	94	09/94 – 03/99		4080
LEGACY II (BD)	2.2 i 4WD	96	06/96 – 03/99		4080
LEGACY II (BD)	2.5 i 4WD	110	06/96 – 03/99	4079	4080
LEGACY II (BD, BG)	1.8 4WD	76	05/96 – 09/98	3426	
LEGACY II (BD, BG)	1.8 4WD	76	05/96 – 09/98	3764	
LEGACY II (BD, BG)	2.0 i	85	09/94 – 03/99	3426	
LEGACY II (BD, BG)	2.0 i	85	09/94 – 03/99	3764	
LEGACY II (BD, BG)	2.0 i 4WD	85	09/94 – 03/99	3426	
LEGACY II (BD, BG)	2.0 i 4WD	85	09/94 – 03/99	3764	
LEGACY II (BD, BG)	2.2	94	07/94 – 11/98	3426	
LEGACY II (BD, BG)	2.2	94	07/94 – 11/98	3764	
LEGACY II (BD, BG)	2.2 i 4WD	94	09/94 – 03/99	3426	
LEGACY II (BD, BG)	2.2 i 4WD	94	09/94 – 03/99	3764	
LEGACY II (BD, BG)	2.2 i 4WD	96	06/96 – 03/99	3426	
LEGACY II (BD, BG)	2.2 i 4WD	96	06/96 – 03/99	3764	
LEGACY II Estate (BD, BG)	2.0 i	85	09/94 – 11/98	3426	
LEGACY II Estate (BD, BG)	2.0 i	85	09/94 – 11/98	3764	
LEGACY II Estate (BD, BG)	2.0 i 4WD	85	09/94 – 11/98	3426	
LEGACY II Estate (BD, BG)	2.0 i 4WD	85	09/94 – 11/98	3764	
LEGACY II Estate (BD, BG)	2.2 i 4WD	94	02/94 – 12/98	3426	
LEGACY II Estate (BD, BG)	2.2 i 4WD	94	02/94 – 12/98	3764	
LEGACY II Estate (BD, BG)	2.2 i 4WD	96	06/96 – 11/98	3764	
LEGACY II Estate (BG)	2.0 i	85	09/94 – 11/98		4080
LEGACY II Estate (BG)	2.0 i 4WD	85	09/94 – 11/98		4080
LEGACY II Estate (BG)	2.2 i 4WD	94	02/94 – 12/98		4080
LEGACY II Estate (BG)	2.2 i 4WD	96	06/96 – 11/98		4080
LEGACY II Estate (BG)	2.5 i 4WD	110	06/96 – 11/98	4079	4080
LEGACY III (BE)	2.0 AWD	92	04/99 – 08/03	4079	4080
LEGACY III (BE)	2.0 AWD	206	06/02 – 08/03	4079	3913
LEGACY III (BE)	2.0 RSK AWD	191	08/00 – 08/03	4079	3913
LEGACY III (BE)	2.5 AWD	115	10/98 – 08/03	4079	3913
LEGACY III (BE)	2.5 AWD	115	10/98 – 08/03		4080
LEGACY III (BE)	3.0 H6 AWD	154	08/00 – 08/03	4079	3913
LEGACY III (BE, BH)	2.0 AWD	92	04/99 – 08/03	3764	3913
LEGACY III Estate (BE, BH)	2.0 AWD	92	12/98 – 08/03	3764	3913
LEGACY III Estate (BH)	2.0 AWD	92	12/98 – 08/03	4079	4080
LEGACY III Estate (BH)	2.0 AWD	206	06/02 – 08/03	4079	3913
LEGACY III Estate (BH)	2.0 RSK AWD	191	08/00 – 08/03	4079	3913
LEGACY III Estate (BH)	2.5 AWD	115	12/98 – 08/03	4079	3913
LEGACY III Estate (BH)	2.5 AWD	115	12/98 – 08/03		4080
LEGACY III Estate (BH)	3.0 H6 AWD	154	08/00 – 08/03	4079	3913
LEGACY IV (BL)	2.0 AWD	101	09/03 -	3912	4213
LEGACY IV (BL)	2.0 AWD	121	06/05 -	3912	4213
LEGACY IV (BL)	2.0 AWD	132	06/05 -		3913
LEGACY IV (BL)	2.0 AWD	140	06/05 -		3913
LEGACY IV (BL)	2.0 D AWD	110	02/08 -	3912	4213
LEGACY IV (BL)	2.0 R AWD	110	09/07 -	3912	4213
LEGACY IV (BL)	2.5 AWD	121	09/03 -	3912	4213
LEGACY IV (BL)	2.5 i AWD	127	09/07 -	3912	4213
LEGACY IV (BL)	3.0 R AWD	180	09/03 -		3913
LEGACY IV Estate (BP)	2.0 AWD	101	09/03 -	3912	4213
LEGACY IV Estate (BP)	2.0 AWD	121	06/05 -		3913
LEGACY IV Estate (BP)	2.0 AWD	132	06/05 -		3913
LEGACY IV Estate (BP)	2.0 AWD	140	06/05 -		3913
LEGACY IV Estate (BP)	2.0 D AWD	110	02/08 -	3912	4213
LEGACY IV Estate (BP)	2.0 R AWD	110	09/07 -	3912	4213
LEGACY IV Estate (BP)	2.5 AWD	121	09/03 -	3912	4213
LEGACY IV Estate (BP)	2.5 i AWD	127	01/08 -	3912	4213
LEGACY IV Estate (BP)	3.0 R AWD	180	09/03 -		3913
LEGACY OUTBACK (BG)	2.5	110	01/96 – 12/99	4079	4080
LEGACY OUTBACK (BG)	2.5	110	01/96 – 12/99	4078	
LEGACY V (BM)	2.0 D AWD	110	09/09 -	3912	4213
LEGACY V (BM)	2.0 i AWD	110	09/09 -	3912	4213
LEGACY V (BM)	2.5 i AWD	123	09/09 -	3912	4213

MAKE & MODEL		KW	YEAR		
SUBARU					
LEGACY V / LIBERTY (BM, BR)	2.5 GT (EJ255)	195	07/10 – 12/14	4081	
LEGACY V / LIBERTY (BM, BR)	2.5 i	125	01/12 -	4081	
LEGACY V / LIBERTY (BM, BR)	2.5 i (EJ253)	123	09/09 – 12/14	4081	
LEGACY V / LIBERTY (BM, BR)	2.5 i (FB25)	127	07/12 – 12/14	4081	
LEGACY V / LIBERTY (BM, BR)	2.5 i (FB25A)	127	07/12 – 12/14	4081	
LEGACY V / LIBERTY (BM, BR)	2.5 i (FB25B)	127	07/12 – 12/14	4081	
LEGACY V / LIBERTY (BM, BR)	3.6 (EZ36D)	191	09/09 – 12/14	4081	
LEGACY V Estate (BR)	2.0 D AWD	108	01/13 -	3912	4213
LEGACY V Estate (BR)	2.0 D AWD	110	09/09 -	3912	4213
LEGACY V Estate (BR)	2.0 i AWD	110	09/09 -	3912	4213
LEGACY V Estate (BR)	2.5 i AWD	123	09/09 -	3912	4213
LEGACY V Estate (BR)	2.5 i AWD	127	07/12 -		4213
LEGACY VI (BN, BS)	2.5 (FB25)	129	01/15 -	4081	
LEONE I	1.4 1400 DL, GL	48	01/72 -	3601	
LEONE I	1.4 1400 GFT	48	01/72 -	3601	
LEONE II	1.6 1600 (EA71)	63	03/79 – 10/84	3601	
LEONE III	1.3 1300 (EA65)	48	11/84 – 09/91	3395	
LEONE III	1.6 (EA71)	52	06/85 – 07/90	3395	
LEONE III	1.6 1600 (EA71)	55	11/84 – 09/91	3395	
LEONE III	1.8 (EA82)	66	06/85 – 07/87	3395	
LEONE III	1.8 (EA82)	77	06/85 – 07/86	3395	
LEONE III	1.8 1800 (EA82)	66	11/84 – 12/90	3395	
LEONE III	1.8 1800 (EA82)	72	01/88 – 12/90	3395	
LEONE III	1.8 1800 (EA82)	88	01/88 – 12/90	3395	
LEONE III	1.8 1800 Turbo (EA82)	96	03/89 – 12/90	3395	
LEONE III	1.8 1800 Turbo (EA82)	100	11/84 – 12/90	3395	
LEONE III	1.8 GL (EA81)	59	08/86 – 07/89	3395	
LEONE III	1.8 Turbo (EA82)	100	06/85 – 07/86	3395	
LEONE III	1800 (EA82)	66	01/85 – 12/89	3395	
LEONE III	1800 Cat (EA82)	70	07/86 – 09/91	3395	
LEVORG	1.6 (FB16)	125	09/15 -	4081	
LEVORG	2.0 (FA20)	221	03/15 -	4081	
LIBERO Bus (E10, E12)	1.0 4WD (E10, KJ6)	37	01/83 – 12/87	3394	
LIBERO Bus (E10, E12)	1.2 4WD (E12, KJ8)	38	08/86 – 02/00	3394	
LIBERO Bus (E10, E12)	1.2 i 4WD (E12, FA)	40	08/91 – 02/00	3394	
MV / BRAT / BRUMBY (AS_)	1.6 (EA71)	52	06/78 – 04/81	3601	
OUTBACK (BE, BH)	2.5 AWD	115	10/00 – 08/03	4079	3913
OUTBACK (BE, BH)	3.0 H6 AWD	154	10/00 – 08/03	4079	3913
OUTBACK (BL, BP)	2.0 AWD	101	09/03 – 10/05	3912	3913
OUTBACK (BL, BP)	2.0 AWD	101	09/03 – 10/05		4213
OUTBACK (BL, BP)	2.0 D (EE20Z)	110	03/15 -	4081	
OUTBACK (BL, BP)	2.0 D AWD	110	09/08 – 09/09	3912	3913
OUTBACK (BL, BP)	2.0 D AWD	110	09/08 – 09/09	3912	4213
OUTBACK (BL, BP)	2.0 DIT	177	10/14 -	4081	
OUTBACK (BL, BP)	2.5 (FB25)	129	03/15 -	4081	
OUTBACK (BL, BP)	2.5 (FB25A)	127	10/14 -	4081	
OUTBACK (BL, BP)	2.5 AWD	121	11/03 – 09/09	4079	3913
OUTBACK (BL, BP)	2.5 AWD	121	11/03 – 09/09	3912	4213
OUTBACK (BL, BP)	2.5 AWD	127	09/08 – 09/09		3913
OUTBACK (BL, BP)	2.5 AWD	127	09/08 – 09/09		4213
OUTBACK (BL, BP)	3.0 (EZ30)	180	11/03 – 09/09	4081	
OUTBACK (BL, BP)	3.0 AWD	180	11/03 – 09/09	3912	3913
OUTBACK (BL, BP)	3.0 AWD	180	11/03 – 09/09		4213
OUTBACK (BL, BP)	3.6	182	06/11 -	4081	
OUTBACK (BL, BP)	3.6	206	01/10 -	4081	
OUTBACK (BL, BP)	3.6 (EZ36D)	191	10/14 -	4081	
OUTBACK (BL, BP)	3.6 R (EZ36D)	191	09/09 -	4081	
OUTBACK (BL, BP)	3.6 R (EZ36D)	188	01/12 -	4081	
OUTBACK (BM, BR)	3.6	182	06/11 -		4258
OUTBACK (BM, BR)	3.6	206	01/10 -		4258
OUTBACK (BM, BR)	3.6 R (EZ36D)	188	01/12 -		4258
OUTBACK (BM, BR)	3.6 R (EZ36D)	191	09/09 -		4258
OUTBACK (BR)	2.0 D AWD	108	01/13 -	3912	4213
OUTBACK (BR)	2.0 D AWD	110	09/09 -	3912	4213
OUTBACK (BR)	2.5 i AWD	123	09/09 -	3912	4213
OUTBACK (BR)	2.5 i AWD	127	01/13 -	3912	4213
OUTBACK (BS)	2.5 AWD	127	10/14 -		4213
OUTBACK (BS)	3.6 AWD	191	10/14 -		4213
REX II	700	27	08/82 – 06/89	3394	
SVX (CX)	3.3 AWD	184	02/94 – 12/97	3760	4080
SVX (CX)	3.3 AWD	184	02/94 – 12/97	3692	
SVX (CX)	3.3 i 24V 4WD (CXW)	162	09/94 – 12/97	3760	4080
SVX (CX)	3.3 i 24V 4WD (CXW)	162	09/94 – 12/97	3692	
SVX (CX)	3.3 i 24V 4WD (CXW)	169	09/92 – 09/94	3760	4080
SVX (CX)	3.3 i 24V 4WD (CXW)	169	09/92 – 09/94	3692	
TREZIA	1.3 (NSP120X)	73	03/11 -	3953	3954

MAKE & MODEL   		KW	YEAR		
SUBARU					
TREZIA	1.4 D	66	03/11 -	3953	3954
TRIBECA (B9)	3.0 (EZ30)	180	10/06 -		4258
TRIBECA (B9)	3.0 (EZ30)	184	01/05 -		4258
TRIBECA (B9)	3.0 (EZ30)	180	10/06 -	4081	
TRIBECA (B9)	3.0 (EZ30)	184	01/05 -	4081	
TRIBECA (B9)	3.6 (EZ36D)	188	09/09 -		4258
TRIBECA (B9)	3.6 (EZ36D)	190	09/07 -	4081	4258
WRX / IMPREZA IV (GJ)	STi (EJ257)	221	06/14 -	4081	4258
XV	1.6 i AWD	84	03/12 -		4213
XV	2.0 D AWD	80	03/12 -		4213
XV	2.0 D AWD	108	03/12 -		4213
XV	2.0 i AWD	110	03/12 -		4213
SUZUKI					
ALTO	0.8	29	10/83 – 08/84	3509	
ALTO (FF)	1.1 (RF410)	46	09/04 – 12/08	3928	
ALTO (HA12, HA23)	1.3	63	10/98 – 09/00	3602	
ALTO (HA12, HA23)	1.6	71	10/98 – 09/00	3602	
ALTO (SS80)	0.8 (SB308/CA)	29	01/86 – 12/88	3509	
ALTO (SS80)	0.8 (SS80F, SS80G)	29	06/82 – 08/84	3509	
Alto IV (EF) 1.0 (SH410)	-	39	09/1994 - 09/1998	3721	
Alto V (HA12, HA23) 1.0	G10BB	43	01/2000 - 06/2002	3721	
APV (GD) 44317	G15A	68	06/2005 -	3927	
BALENO (EG)	1.3	52	09/96 – 05/02	3602	
BALENO (EG)	1.3 i 16V	63	07/95 – 05/02	3602	
BALENO (EG)	1.5	71	03/95 – 12/09	3602	
BALENO (EG)	1.6 i 16V	72	07/95 – 05/02	3602	
BALENO (EG)	1.6 i 16V 4x4	72	07/95 – 05/02	3602	
BALENO (EG)	1.8 GTX	89	03/96 – 05/02	3602	
BALENO (EG)	1.8 i 4x4	89	03/96 – 05/02	3602	
BALENO Estate (EG)	1.3 16V	63	03/97 – 05/02	3602	
BALENO Estate (EG)	1.6 i 16V	72	08/96 – 05/02	3602	
BALENO Estate (EG)	1.6 i 16V	73	08/96 – 05/02	3602	
BALENO Estate (EG)	1.6 i 16V 4x4	72	08/96 – 05/02	3602	
BALENO Estate (EG)	1.6 i 16V 4x4	73	08/96 – 05/02	3602	
BALENO Estate (EG)	1.8 i 16V	89	08/96 – 05/02	3602	
BALENO Estate (EG)	1.8 i 16V 4x4	89	08/96 – 05/02	3602	
BALENO Estate (EG)	1.9 TD	55	04/98 – 05/02	3602	
BALENO Hatchback (EG)	1.3	52	09/96 – 05/02	3602	
BALENO Hatchback (EG)	1.3 i 16V	63	07/95 – 05/02	3602	
BALENO Hatchback (EG)	1.6 i 16V	72	07/95 – 05/02	3602	
BALENO Hatchback (EG)	1.6 i 16V 4x4	72	07/95 – 05/02	3602	
BALENO Hatchback (EG)	1.8 GTX	89	03/96 – 05/02	3602	
BALENO Hatchback (EG)	1.8 i 4x4	89	03/96 – 05/02	3602	
Cappuccino (EE) 0.7 (SX306)	F6A	47	02/1992 - 08/1995	3721	
Cappuccino (EE) 0.7 (SX306)	F6A	47	08/1995 - 08/1998	3721	
CAPPUCINO (EA)	0.7 (EA11)	47	02/92 – 08/95	3511	
CARRY Box (FD)	1.3	58	03/99 -	3928	
CARRY Box (FD)	1.3 16 V	58	03/00 -	3928	
CARRY Box (FD)	1.3 4x4	56	02/99 – 09/04	3928	
CARRY Pickup (FD, DA5_T, DA6_T)	1.3 4x4	58	10/00 – 07/05	3928	
CELERIO (LF)	1.0 (AVK310)	50	03/14 -	3928	
GRAND VITARA I (FT, HT)	1.6 4x4 (SQ 416)	69	03/98 – 07/03	3883	
GRAND VITARA I (FT, HT)	1.6 4x4 (SQ 416)	69	03/98 – 07/03	3884	
GRAND VITARA I (FT, HT)	1.6 4x4 (SQ 416)	73	02/00 – 09/02	3884	
GRAND VITARA I (FT, HT)	2.0 4x4 (SQ 420)	94	03/98 – 07/03	3883	
GRAND VITARA I (FT, HT)	2.0 4x4 (SQ 420)	94	03/98 – 07/03	3884	
GRAND VITARA I (FT, HT)	2.0 HDI 110 16V 4x4 (SQ 420D)	80	07/01 – 09/05	3884	
GRAND VITARA I (FT, HT)	2.0 HDI 110 4x4 (SQ 420D)	80	07/01 – 09/05	3884	
GRAND VITARA I (FT, HT)	2.0 TD 4x4 (SQ 420D)	63	04/00 – 09/05	3884	
GRAND VITARA I (FT, HT)	2.0 TD 4x4 (SQ 420D)	64	03/98 – 07/03	3884	
GRAND VITARA I (FT, HT)	2.5 V6 24V 4x4 (SQ 625)	106	04/98 – 07/03	3884	
GRAND VITARA I (FT, HT)	2.5 V6 24V 4x4 (SQ 625)	116	04/01 – 07/03	3884	
GRAND VITARA I (FT, HT)	2.7 4x4 (JA 627)	127	09/01 – 07/03	3884	
GRAND VITARA I (FT, HT)	2.7 4x4 (JA 627)	135	04/03 – 07/03	3884	
GRAND VITARA I (FT, HT)	2.0 HDI 110 16V 4x4 (SQ 420D)	80	07/01 – 09/05	4000	
GRAND VITARA II (JT, TE, TD)	1.6 All-wheel Drive (JB416)	73	09/05 – 02/15	3929	
GRAND VITARA II (JT, TE, TD)	1.6 All-wheel Drive (JB416)	78	04/05 -	3929	
GRAND VITARA II (JT, TE, TD)	1.9 DDiS All-wheel Drive (JB419D)	95	10/05 – 02/15	3929	
GRAND VITARA II (JT, TE, TD)	2.0 All-wheel Drive (JB420)	103	10/05 – 02/15	3929	
GRAND VITARA II (JT, TE, TD)	2.0 HDi All-wheel Drive	80	01/06 – 02/15	3929	
GRAND VITARA II (JT, TE, TD)	2.4 All-wheel Drive (JB424)	120	09/13 – 02/15	3929	
GRAND VITARA II (JT, TE, TD)	2.4 All-wheel Drive (JB424)	122	01/09 -	3929	
GRAND VITARA II (JT, TE, TD)	2.4 All-wheel Drive (JB424)	124	01/09 -	3929	
GRAND VITARA II (JT, TE, TD)	3.2 All-wheel Drive (JB632)	171	01/09 – 02/15	3929	
IGNIS (FH)	1.3 (RG413)	61	10/00 – 09/03	3928	

MAKE & MODEL		KW	YEAR		
SUZUKI					
IGNIS (FH)	1.3 4WD (RG413)	61	10/00 – 09/03	3928	
IGNIS II (MH)	1.3 (RM413)	69	09/03 -	3928	
IGNIS II (MH)	1.3 4x4 (RM413)	69	09/03 -	3928	
IGNIS II (MH)	1.3 DDiS (RM413D)	51	09/03 -	3928	
IGNIS II (MH)	1.5 (RM415)	73	09/03 -	3928	
IGNIS II (MH)	1.5 4x4 (RM415)	73	09/03 -	3928	
IGNIS II (MH)	1.5 Sport (RM415)	80	12/03 -	3928	
Ignis II (MH) 44317 Sport (RM415)	M15A	80	12/2003 - 12/2005		4303
JIMNY (FJ)	1.5 DDiS 4WD (SN415D)	48	12/03 -	3883	
JIMNY (FJ)	1.5 DDiS 4x4	63	08/05 -	3883	
Kizashi (FR) 44288 (A6B 424)	J24B	131	10/2010 -		4148/1
Kizashi (FR) 44288 (A6B 424)	J24B	138	04/2012 -		4148/1
Kizashi (FR) 44288 4WD (A6B 424)	J24B	138	10/2010 -		4148/1
Kizashi (FR) 44288 4x4 (A6B 424)	J24B	131	10/2010 -		4148/1
LANDY (SC26)	2.0	106	01/10 -	3952	
LANDY (SC26)	2.0	108	01/10 -	3952	
LCV APV Van 44348 16V (GD416)	G16A (16V)	68	06/2005 -	3927	
LCV Carry III Van 1.0	F10A	29	11/1996 - 03/1999	4034/1	
LCV Super Carry Bus (ED) 1.0 (SK410)	F10A	30	09/1994 - 03/1999	4034/1	
LCV Super Carry Bus (ED) 1.0 (SK410)	F10A	31	10/1992 - 03/1999	4034/1	
LCV Super Carry Bus (ED) 1.0 (SK410)	F10A	33	10/1985 - 03/1999	4034/1	
LIANA (ER, RH_)	1.3 (RH 413)	66	03.2002 -	3899	
LIANA (ER, RH_)	1.4 DDiS (RH 414D)	66	04.2004 -	3899	
LIANA (ER, RH_)	1.6 (RH 416)	76	03.2002 -	3899	
LIANA (ER, RH_)	1.6 (RH 416)	79	01.2005 -	3899	
LIANA (ER, RH_)	1.6 4WD (RH 416)	76	03.2002 -	3899	
LIANA (ER, RH_)	1.6 4WD (RH 416)	78	04.2002 -	3899	
LIANA (ER, RH_)	1.6 4WD (RH 416)	79	01.2005 - 12.2007	3899	
LIANA (ER, RH_)	1.6 i (RH416)	78	04.2002 -	3899	
LIANA Hatchback	1.3	66	07.2001 - 12.2007	3899	
LIANA Hatchback	1.4 DDiS	66	04.2004 - 12.2007	3899	
LIANA Hatchback	1.6	76	07.2001 - 12.2007	3899	
LIANA Hatchback	1.6	79	01.2005 - 12.2007	3899	
LIANA Hatchback	1.6 4WD	76	07.2001 - 12.2007	3899	
LIANA Hatchback	1.6 4WD	78	04.2002 - 12.2007	3899	
LIANA Hatchback	1.6 4WD	79	01.2005 - 12.2007	3899	
LIANA Hatchback	1.6 i (RH416)	78	04.2002 - 12.2007	3899	
SPLASH (EX)	1.0 (A5B 310)	48	01/08 -	3983/1	
SPLASH (EX)	1.0 (A5B 310)	50	06/11 -	3983/1	
SPLASH (EX)	1.2 (A5B 412)	63	01/08 -	3983/1	
SPLASH (EX)	1.2 VVT (A5B 412)	66	06/11 -	3983/1	
SPLASH (EX)	1.2 VVT (A5B 412)	67	08/12 -	3983/1	
SPLASH (EX)	1.2 VVT (A5B 412)	69	09/10 -	3983/1	
SPLASH (EX)	1.3 CDTI (A5B 413D)	55	01/08 -	3983/1	
SUPER CARRY Bus (ED)	1.0	30	09/94 – 03/99	3509	
SUPER CARRY Bus (ED)	1.0	31	10/92 – 03/99	3509	
SUPER CARRY Bus (ED)	1.0	33	10/85 – 03/99	3509	
SUPER CARRY Bus (ED)	1.0 (SK410)	30	09/94 – 03/99	4034	
SUPER CARRY Bus (ED)	1.0 (SK410)	31	10/92 – 03/99	4034	
SUPER CARRY Bus (ED)	1.0 (SK410)	33	10/85 – 03/99	4034	
Swace (AMZ_) 44409 Hybrid	2ZR-FXE	72	10/2020 -	4360	
Swace (AMZ_) 44409 Hybrid	2ZR-FXE	75	10/2020 -	4360	
Swace (AMZ_) 44409 Hybrid	2ZR-FXE	90	10/2020 -	4360	
SWIFT Convertible (SF413)	1.3 i (SF413, AK35)	50	09/91 – 10/96	3745	
SWIFT II Hatchback (EA, MA)	1.0 (SF310, AA44)	37	03/89 – 05/01	3745	
SWIFT II Hatchback (EA, MA)	1.0 i (SF310, AA44)	39	01/95 – 12/05	3745	
SWIFT II Hatchback (EA, MA)	1.0 i (SF310, AA44)	40	03/89 – 12/91	3745	3933
SWIFT II Hatchback (EA, MA)	1.3	51	03/89 – 10/96	3745	3933
SWIFT II Hatchback (EA, MA)	1.3 (SF413, AB35)	50	03/89 – 05/01	3745	
SWIFT II Hatchback (EA, MA)	1.3 (SF413, AB35)	52	03/89 – 12/91	3745	
SWIFT II Hatchback (EA, MA)	1.3 4WD (SF413, AA35)	50	03/89 – 05/01	3745	
SWIFT II Hatchback (EA, MA)	1.3 4WD (SF413, AF35)	52	10/89 – 12/91	3745	
SWIFT II Saloon (AH, AJ)	1.3 (SF413, AH35)	52	03/89 – 12/91	3745	
SWIFT II Saloon (AH, AJ)	1.3 (SF413, AH35, MA)	50	01/91 – 12/95	3745	
SWIFT III (MZ, EZ)	1.3 (RS 413)	68	02/05 -	3983/1	
SWIFT III (MZ, EZ)	1.3 4x4 (RS 413)	66	01/06 -	3983/1	
SWIFT III (MZ, EZ)	1.3 4x4 (RS 413)	68	02/05 -	3983/1	
SWIFT III (MZ, EZ)	1.3 DDiS (RS 413D)	51	08/05 -	3983/1	
SWIFT III (MZ, EZ)	1.3 DDiS (RS 413D)	55	08/05 -	3983/1	
SWIFT III (MZ, EZ)	1.5 (RS 415)	75	02/05 -	3983/1	
SWIFT III (MZ, EZ)	1.5 4x4 (RS 415)	74	02/05 -	3983/1	
SWIFT III (MZ, EZ)	1.6 (RS 416)	92	05/06 -	3983/1	
SWIFT IV (FZ, NZ)	1.2 (AZG 412)	66	10/10 -	4122	
SWIFT IV (FZ, NZ)	1.2 (AZH 412)	69	10/10 -	4122	
SWIFT IV (FZ, NZ)	1.2 (AZH 412, AZG 412)	67	08/12 -	4122	
SWIFT IV (FZ, NZ)	1.2 4WD (AZH 412, AZG 412)	67	08/12 -	4122	

MAKE & MODEL   		KW	YEAR		
SUZUKI					
SWIFT IV (FZ, NZ)	1.2 4x4 (AZG 412)	66	10/10 -	4122	
SWIFT IV (FZ, NZ)	1.2 4x4 (AZH 412)	69	10/10 -	4122	
SWIFT IV (FZ, NZ)	1.3 DDiS (AZG 413D)	55	10/10 -	4122	
SWIFT IV (FZ, NZ)	1.6 (AZG 416, AZH 416)	100	01/12 -	4122	
Swift I (AA) 44256 GTi/GXi (SA413, AA33)	G13B	74	08/1985 - 03/1989	3721	
Swift II Hatchback (EA, MA) 1.0 (SF310, AA44)	G10, G10A	37	03/1989 - 05/2001	3721	
Swift II Hatchback (EA, MA) 1.0 i (SF310, AA44)	G10A	39	01/1995 - 12/2005	3721	
Swift II Hatchback (EA, MA) 1.0 i (SF310, AA44)	G10A	40	03/1989 - 12/1991	3721	
Swift II Hatchback (EA, MA) 44256 (SF 413)	G13BA	51	03/1989 - 10/1996	3721	
Swift II Hatchback (EA, MA) 44256 (SF413, AB35)	-	50	03/1989 - 05/2001	3721	
Swift II Hatchback (EA, MA) 44256 (SF413, AB35)	G13A	52	03/1989 - 12/1991	3721	
Swift II Hatchback (EA, MA) 44256 4WD (SF413, AA35)	G13A	50	03/1989 - 05/2001	3721	
Swift II Hatchback (EA, MA) 44256 4WD (SF413, AF35)	G13A	52	10/1989 - 12/1991	3721	
Swift II Hatchback (EA, MA) 44348 4x4 (SF 416)	G16B	68	03/1989 - 10/1996	3721	
Swift II Sedan (AH, AJ) 1.0	G10A	39	01/1994 - 05/2001	3721	
Swift II Sedan (AH, AJ) 44256 (SF413, AH35)	G13B	52	03/1989 - 12/1991	3721	
Swift II Sedan (AH, AJ) 44256 (SF413, AH35, MA)	G13B	50	01/1991 - 12/1995	3721	
Swift II Sedan (AH, AJ) 44348 (SF416, AH14)	G16B	70	11/1989 - 12/1991	3721	
Swift II Sedan (AH, AJ) 44348 4WD (SF416, AJ14)	G16B	70	11/1989 - 12/1991	3721	
Swift II Sedan (AH, AJ) 44348 i (SF416, AH14, SF406)	G16B	68	01/1990 - 05/2001	3721	
Swift II Sedan (AH, AJ) 44348 i 4WD (SF416, AJ14)	G16B	68	01/1990 - 05/2001	3721	
Swift III (MZ, EZ) 44348 (RS 416)	M16A	92	05/2006 -		4148/1
SX4 (EY, GY)	1.6 (RW 416)	74	06/06 -		4148
SX4 (EY, GY)	1.6 DDIS (RW 416D)	66	04/07 -		4148
SX4 (EY, GY)	1.6 VVT (RW 416)	79	06/06 -		4148
SX4 (EY, GY)	1.6 VVT (RW 416)	88	07/09 -		4148
SX4 (EY, GY)	1.6 VVT 4x4 (RW 416)	79	06/06 -		4148
SX4 (EY, GY) 2.0	J20B	112	01/2010 -		4148/1
SX4 (EY, GY) 2.0 (RW415, RW416, RW420)	J20A	107	06/2006 -		4148/1
SX4 (EY, GY) 2.0 16V 4x4	J20B	112	01/2010 -		4148/1
SX4 (EY, GY) 2.0 4x4 (RW415, RW416, RW420)	J20A	107	06/2006 -		4148/1
SX4 (EY, GY) 2.0 DDiS (RW 420D)	D20AA	99	07/2009 -		4148/1
SX4 (EY, GY) 2.0 DDiS 4x4 (RW 420D)	D20AA	99	07/2009 -		4148/1
SX4 (EY, GY) 44317 (RW 415)	M15A	73	06/2006 - 07/2010		4148/1
SX4 (EY, GY) 44317 VVT (RW 415)	M15A	82	07/2010 -		4148/1
SX4 (EY, GY) 44317 VVT 4x4 (RW 415)	M15A	82	07/2010 -		4148/1
SX4 (EY, GY) 44317 VVTi	M15A	81	07/2007 - 12/2015		4148/1
SX4 (EY, GY) 44317 VVTi 4x4 (RW 415)	-	81	01/2008 - 06/2009		4148/1
SX4 (EY, GY) 44348	M16A	81	03/2013 - 12/2015		4148/1
SX4 (EY, GY) 44348 4WD	M16A	81	01/2012 - 12/2015		4148/1
SX4 (EY, GY) 44348 DDIS (RW 416D)	9HX	66	04/2007 -		4148/1
SX4 (EY, GY) 44348 VVT	M16A	82	11/2010 - 12/2015		4148/1
SX4 (EY, GY) 44348 VVT (RW 416)	M16A	79	06/2006 -		4148/1
SX4 (EY, GY) 44348 VVT (RW 416)	M16A	88	07/2009 -		4148/1
SX4 (EY, GY) 44348 VVT 4x4 (RW 416)	M16A	79	06/2006 -		4148/1
SX4 (EY, GY) 44348 VVT 4x4 (RW 416)	M16A	82	07/2009 -		4148/1
SX4 (EY, GY) 44348 VVT 4x4 (RW 416)	M16A	88	07/2009 -		4148/1
SX4 (EY, GY) 44440 DDiS (RW 419D)	D19AA	88	06/2006 -		4148/1
SX4 (EY, GY) 44440 DDiS 4x4 (RW 419D)	D19AA	88	06/2006 -		4148/1
SX4 Saloon (GY)	1.6 (RW 416)	74	10/07 -		4148
SX4 Saloon (GY)	1.6 (RW 416)	75	10/07 -		4148
SX4 Saloon (GY)	1.6 (RW 416)	79	10/07 -		4148
SX4 Saloon (GY)	1.6 (RW 416)	88	10/07 -		4148
SX4 Saloon (GY)	1.6 AWD (RW 416)	88	10/07 -		4148
SX4 Sedan (GY) 2.0	J20B	112	09/2011 -		4148/1
SX4 Sedan (GY) 2.0 (RW 415 RW 416 RW 420)	J20A	107	10/2007 - 01/2010		4148/1
SX4 Sedan (GY) 2.0 (RW 415 RW 416 RW 420)	J20B	112	01/2010 -		4148/1
SX4 Sedan (GY) 2.0 AWD	J20A	107	10/2007 - 12/2009		4148/1
SX4 Sedan (GY) 44348 (RW 416)	M16A	79	10/2007 -		4148/1
SX4 Sedan (GY) 44348 (RW 416)	M16A	88	10/2007 -		4148/1
SX4 Sedan (GY) 44348 AWD (RW 416)	M16A	79	10/2007 - 12/2011		4148/1
SX4 Sedan (GY) 44348 AWD (RW 416)	M16A	88	10/2007 -		4148/1
VITARA (ET, TA)	1.6 (SE 416)	70	02/91 – 03/98	3882	4148
VITARA (ET, TA)	1.6 All-wheel Drive (SE 416)	60	07/88 – 12/91	3882	4148
VITARA (ET, TA)	1.6 All-wheel Drive (SE 416)	60	07/88 – 12/91	3884	4148
VITARA (ET, TA)	1.6 All-wheel Drive (TA, TA01)	59	07/88 – 03/98	3882	4148
VITARA (ET, TA)	1.6 All-wheel Drive (TA, TA01)	59	07/88 – 03/98	3884	4148
VITARA (ET, TA)	1.6 i 16V All-wheel Drive (ET, TA02)	71	07/90 – 03/98	3882	4148
VITARA (ET, TA)	1.6 i 16V All-wheel Drive (ET, TA02)	71	07/90 – 03/98	3884	4148
VITARA (ET, TA)	1.9 D All-wheel Drive (SE419TD)	50	01/95 – 03/98	3882	4148
VITARA (ET, TA)	1.9 D All-wheel Drive (SE419TD)	55	08/96 – 03/98	3882	4148
VITARA (ET, TA)	2.0 16V All-wheel Drive	97	12/96 – 03/98	3884	4148
VITARA (ET, TA)	2.0 TD All-wheel Drive (SV 420D)	52	12/94 – 03/98	3884	4148
VITARA (ET, TA)	2.0 TD Intercooler All-wheel Drive (SV 420D)	64	12/95 – 03/98	3884	4148
VITARA (ET, TA)	2.0 V6 24V All-wheel Drive (SV620)	100	12/94 – 03/98	3884	4148
VITARA (ET, TA)	2.5 V6 24V All-wheel Drive (FT)	118	12/95 – 03/98	3884	4148

MAKE & MODEL		KW	YEAR		
SUZUKI					
VITARA Cabrio (ET, TA)	1.6	59	07/88 – 01/95	3882	4148
VITARA Cabrio (ET, TA)	1.6 i 16V	71	07/90 – 03/99	3882	4148
VITARA Cabrio (ET, TA)	1.9 D (SE 419TD)	50	01/95 – 03/98	3882	
VITARA Cabrio (ET, TA)	1.9 D (SE 419TD)	55	08/96 – 03/99	3882	
VITARA Cabrio (ET, TA)	2.0 16V	97	12/96 – 03/99	3884	
WAGON R+ (EM)	1.0	51	08/00 – 07/03	4027	
WAGON R+ (EM)	1.0 (SR410)	48	02/98 – 05/00	4027	
WAGON R+ (EM)	1.0 XT Plus	74	08/00 – 07/01	4027	
WAGON R+ (MM)	1.2 (SR412)	51	02/98 – 05/00	4027	
WAGON R+ (MM)	1.2 4WD (SR412)	51	02/98 – 05/00	4027	
X-90 (EL)	1.6 i 16V (SZ 416)	71	09/95 – 12/97	3882	
X-90 (EL)	1.6 i 16V 4x4	71	09/95 – 12/97	3882	
XL7 (DA, DB)	3.6 All-wheel Drive	185	01/07 – 12/09	3929	
SUZUKI (CHANGAN)					
SX4 Hatchback	1.6	80	04/07 – 12/15	3699	
SX4 Hatchback	1.6	92	03/09 -	3699	
SX4 Hatchback	1.8	80	04/07 – 12/15	3779	
SX4 Hatchback	1.8	92	03/09 -	3779	
SX4 Saloon	1.6	80	11/06 – 12/15	3699	
SX4 Saloon	1.6	92	03/09 – 12/10	3779	
SX4 Saloon	1.8	80	11/06 – 12/15	3779	
SX4 Saloon	1.8	92	03/09 – 12/10	3699	
SX4 Saloon	1.8	96	12/10 -	3699	
SX4 Saloon	1.8	96	12/10 -	3779	
WAGON R (CH_)	1.0	34	04/02 – 07/04	4027	
WAGON R (CH_)	1.0	48	06/00 – 07/04	4027	
WAGON R (CH_)	1.1	37	01/03 – 07/04	4027	
WAGON R (CH_)	1.2	51	01/01 – 09/05	4027	
WAGON R (CH_)	1.4	67	09/05 – 03/06	4027	
TALBOT					
1307-1510	Simca 1510 1.4	51	01/80 – 04/84	3318	
AVENGER	1.6	51	09/73 – 04/75	3380	
AVENGER	1.6	51	09/73 – 04/75	3381	
AVENGER	1.6	51	09/73 – 04/75	3580	
EXPRESS 1000 -1500 Bus	1.8	51	07/83 – 10/90	3440	
EXPRESS 1000 -1500 Bus	1.9 D	51	07/87 – 10/90	3440	
EXPRESS 1000 -1500 Bus	2.0	57	07/82 – 10/90	3440	
EXPRESS 1000 -1500 Bus	2.5 D	54	07/82 – 10/94	3440	
EXPRESS 1000 -1500 Platform/Chassis	2.0	57	07/82 – 10/94	3440	
EXPRESS 1000 -1500 Platform/Chassis	2.5 D	54	07/82 – 10/94	3440	
EXPRESS 1000 -1500 Platform/Chassis	2.5 D All-wheel Drive	54	11/88 – 10/94	3440	
EXPRESS 1000 -1800 Box	1.8	51	07/81 – 10/90	3440	
EXPRESS 1000 -1800 Box	1.9 D	51	07/87 – 10/90	3440	
EXPRESS 1000 -1800 Box	2.0	57	07/82 – 10/90	3440	
EXPRESS 1000 -1800 Box	2.5 D	54	07/82 – 10/94	3440	
EXPRESS 1000 -1800 Box	2.5 D All-wheel Drive	54	11/88 – 10/94	3440	
HORIZON	1.1	40	01/79 – 09/84	3318	
HORIZON	1.3	43	09/78 – 09/84	3318	
HORIZON	1.3	50	02/78 – 01/80	3318	
HORIZON	1.4	51	07/79 – 06/86	3318	
HORIZON	1.4	61	07/79 – 06/86	3318	
MURENA	1.6	66	08/81 – 01/85		3333
MURENA	2.1	85	09/80 – 07/84		3333
MURENA	2.1 S	103	04/83 – 01/85		3333
RANCHO	1.4	59	01/77 – 07/84	3318	
SAMBA (51A)	0.9	31	01/81 – 12/85	3329	
SAMBA (51A)	1.1	37	01/81 – 06/86	3329	
SAMBA (51A)	1.2 Rallye	65	01/83 – 10/86	3329	
SAMBA (51A)	1.4	44	06/83 – 10/86	3329	
SAMBA (51A)	1.4	53	01/81 – 06/86	3329	
SAMBA (51A)	1.4 Rallye	58	01/83 – 10/86	3329	
Samba (51A) 0.9	5C1(XV5) (.-03.83), 5C1(XV8) (03.83-.)	31	01/1981 - 12/1985	3806	
Samba (51A) 44197	XW7	37	01/1981 - 06/1986	3806	
Samba (51A) 44287	150 D	44	06/1983 - 10/1986	3806	
Samba (51A) 44287	XY7, XY8	53	01/1981 - 06/1986	3806	
Samba (51A) 44287 Rallye	XY8	58	01/1983 - 10/1986	3806	
Samba Cabrio (51E) 44287	XY8	58	01/1981 - 06/1986	3806	
SAMBA Convertible (51E)	1.4	58	01/81 – 06/86	3329	
SIMCA 1100 Break/Tourisme	1.1	44	10/76 – 09/79		3326
SIMCA 1100 Break/Tourisme	1.3 Spezial	55	07/74 – 11/76		3326
SIMCA 1100 Hatchback	1.1 LE,LX,GLS,ES	37	10/76 – 01/80		3326
SIMCA 1100 Hatchback	1.1 LE,LX,GLS,ES	43	10/76 – 01/80		3326
SIMCA 1100 Hatchback	1.1 LS,GLS	40	11/73 – 09/77		3326
SIMCA 1100 Hatchback	1.1 LS,GLS	44	10/68 – 05/76		3326
Simca Sunbeam 0.9	CB	31	07/1977 - 04/1981	3311	

MAKE & MODEL		KW	YEAR		
TALBOT					
Simca Sunbeam 44256	-	44	07/1977 - 04/1981	3311	
Simca Sunbeam 44256	JB	40	07/1977 - 04/1981	3311	
Simca Sunbeam 44348	-	51	07/1977 - 04/1981	3311	
Simca Sunbeam 44348	TB	59	10/1978 - 04/1981	3311	
Simca Sunbeam 44348 Ti	TB	74	10/1978 - 03/1983	3311	
SPITFIRE	1.2 MK I	46	10/62 – 12/65	3311	
TAGORA	2.1	85	06/80 – 12/83	3405	
TAGORA	2.3 Turbo Diesel	59	08/81 – 12/87	3405	
TAGORA	2.6	122	08/81 – 10/83	3405	3323
TATA					
Indica (40_V2)/ B-Line 44228	-	48	01/2006 -	3721	
Indica (40_V2)/ B-Line 44287 D	-	52	01/2008 -	3721	
Indica (40_V2)/ B-Line 44287 D	475 DL	37	07/2003 - 02/2008	3721	
Indica (40_V2)/ B-Line 44287 D	475 DL	39	10/1998 - 02/2008	3721	
Indica (40_V2)/ B-Line 44287 Elegance	475 Si	62	07/2003 -	3721	
Indica (40_V2)/ B-Line 44287 i	475 Si	55	10/1998 -	3721	
Indica (40_V2)/ B-Line 44287 L	475 Si	44	06/1998 - 09/2002	3721	
Indica (40_V2)/ B-Line 44287 TD	475 DL	52	07/2003 -	3721	
Indica Vista 44287	192 B2.000	63	10/2010 -	3721	
Indica Vista 44287	192 B2.000	65	10/2010 -	3721	
Indica Vista 44287 IDI	475 DL	52	08/2008 -	3721	
Indigo (4_V2) 44228	-	48	01/2006 -	3721	
Indigo (4_V2) 44287	474 SI	63	09/2005 -	3721	
Indigo (4_V2) 44287	475 Si	62	01/2003 -	3721	
Indigo (4_V2) 44287 D	475 DL	46	01/2003 -	3721	
Indigo (4_V2) 44287 D	475 DL	52	07/2003 -	3721	
Indigo Marina (4_V2) 44287	475 Si	62	01/2003 - 12/2010	3721	
Indigo Marina (4_V2) 44287 D	475 DL	46	01/2003 - 12/2010	3721	
Indigo Marina (4_V2) 44287 DICOR	480DI	52	02/2007 - 02/2012	3721	
Indigo Marina (4_V2) 44287 TD	475 DL	52	07/2003 - 12/2010	3721	
TOYOTA					
(FAW) Corolla II (E140) 2.0 (ZRE153)	3ZR-FE	106	10/2010 - 12/2013		4037/1
(FAW) Corolla II (E140) 44348 (ZRE151)	1ZR-FE	90	05/2007 - 12/2014		4037/1
4 RUNNER (KZN18_, VZN18_, RZN18_)	1.8 2WD	83	08/00 – 11/02	3560	
4 RUNNER (KZN18_, VZN18_, RZN18_)	2.7	112	11/95 – 07/02	3560	
4 RUNNER (KZN18_, VZN18_, RZN18_)	2.7 4WD	112	11/95 – 08/02	3560	
4 RUNNER (KZN18_, VZN18_, RZN18_)	3.0 Turbo-D	92	11/95 – 11/02	3560	
4 RUNNER (KZN18_, VZN18_, RZN18_)	3.4	136	11/95 - 07/02	3560	
4 RUNNER (KZN18_, VZN18_, RZN18_)	3.4 4WD	136	09/98 – 11/02	3560	
4 RUNNER (KZN18_, VZN18_, RZN18_)	4.0 VVTi	183	08/02 – 11/02	3693	
4 RUNNER (RN1_, VZN1_)	2.4 D	66	08/89 – 11/95	3560	
4 RUNNER (RN1_, VZN1_)	2.7 i	112	11/95 – 03/96	3560	
4 RUNNER (RN1_, VZN1_)	3.0 (VZN130_, VZN131_)	105	07/90 – 11/95	3560	
4 RUNNER (RN1_, VZN1_)	3.0 4WD (VZN100_, VZN110_, VZN130_, VZN131_)	112	08/88 – 10/95	3560	
4 RUNNER (RN1_, VZN1_)	3.0 Turbo-D (KZN130_)	92	10/93 – 03/96	3560	
4 RUNNER (RN1_, VZN1_)	3.4 i	136	11/95 – 03/96	3560	
4 RUNNER (RN5_, LN5_, VZN6_, RN7_, RN6_)	2.4 4WD	82	08/87 – 07/89	3371	
4 RUNNER (RN5_, LN5_, VZN6_, RN7_, RN6_)	2.4 4WD	82	08/87 – 07/89	3560	
4 RUNNER (UZN21_, KZN21_, GRN21_)	4.0 4WD	183	11/02 – 07/09	3693	
ALLION II (_T26_)	1.5	81	07/07 -	3953	
ALLION II (_T26_)	1.8	106	07/07 -	3953	
ALLION II (_T26_)	1.8 4WD	98	07/07 -	3953	
ALLION II (_T26_)	2.0	116	07/07 -	3953	
ALPHARD / VELLFIRE (_H2_)	2.4	123	04/08 – 12/14		4154
ALPHARD / VELLFIRE (_H2_)	2.4	125	04/08 – 12/14		4154
ALPHARD / VELLFIRE (_H2_)	2.4 4WD	125	04/08 – 12/14		4154
ALPHARD / VELLFIRE (_H2_)	2.4 Hybrid	110	12/11 – 12/14		4154
ALPHARD / VELLFIRE (_H2_)	3.5	202	04/08 – 12/14		4154
ALPHARD / VELLFIRE (_H2_)	3.5	206	04/08 – 12/14		4154
ALPHARD / VELLFIRE (_H2_)	3.5 4WD	206	04/08 – 12/14		4154
ALTEZZA (_E1_)	2.0	114	01/99 – 07/05	4086	
ALTEZZA (_E1_)	2.0 VVTi	118	01/99 – 07/05	4086	
ALTEZZA (_E1_)	2.0 VVTi	147	02/99 – 07/05	4086	
ALTEZZA (_E1_)	3.0	157	07/01 – 07/05	4086	
ALTEZZA GITA (_XE1_)	2.0	114	01/99 – 06/01	3915	
ALTEZZA GITA (_XE1_)	3.0	157	07/01 – 06/05	3915	
Altis Sedan (_E15_) 44256 VVT-i	2NZ-FE	63	03/2008 -		4037/1
ARISTO (_S14_)	3.0	169	10/90 – 07/97	3915	4099
ARISTO (_S14_)	3.0	205	10/90 – 09/96	3915	4099
ARISTO (_S14_)	4.0 4WD	173	10/92 – 07/97	3915	4099
ARISTO (_S16_)	3.0	170	08/97 – 09/04	3915	
ARISTO (_S16_)	3.0	206	08/97 – 09/04	3915	
ARISTO (_S16_)	4.3	224	04/99 – 09/04	3915	
AURION II (ACV5_, GSV5_)	3.5 (GSV50) (2GR-FE)	200	09/11 -		4202
AURION (_V4_)	2.4	116	03/06 – 07/09	3948	

BESER

MAKE & MODEL   		KW	YEAR		
TOYOTA					
AURION (_V4_)	3.5	200	03/06 – 09/11	3948	
AURION (_V4_)	3.5	235	03/06 – 09/11	3948	
AURION (_V5_)	3.5 (GSV50)	200	09/11 -	3948	3949
AURIS (_E15_)	1.33 Dual-VVTi (NRE150_)	73	01/10 – 09/12	3953	4037
AURIS (_E15_)	1.33 Dual-VVTi (NRE150_)	74	05/09 – 09/12	3953	3954
AURIS (_E15_)	1.33 Dual-VVTi (NRE150_)	74	05/09 – 09/12		4037
AURIS (_E15_)	1.4 (ZZE150_)	71	03/07 – 09/12	3953	3954
AURIS (_E15_)	1.4 (ZZE150_)	71	03/07 – 09/12		4037
AURIS (_E15_)	1.4 D-4D (NDE150_)	66	03/07 – 09/12	3953	3954
AURIS (_E15_)	1.4 D-4D (NDE150_)	66	03/07 – 09/12		4037
AURIS (_E15_)	1.5 (NZE151_)	81	09/09 – 09/12	3953	3954
AURIS (_E15_)	1.5 4WD (NZE154_)	77	09/09 – 09/12	3953	3954
AURIS (_E15_)	1.6 (ZRE151_)	91	03/07 – 09/12	3953	3954
AURIS (_E15_)	1.6 (ZRE151_)	91	03/07 – 09/12		4037
AURIS (_E15_)	1.6 (ZRE151_)	97	05/09 – 09/12	3953	3954
AURIS (_E15_)	1.6 (ZRE151_)	97	05/09 – 09/12		4037
AURIS (_E15_)	1.8 (ZRE152_)	100	10/06 – 09/12	3953	3954
AURIS (_E15_)	1.8 (ZRE152_)	100	10/06 – 09/12		4037
AURIS (_E15_)	1.8 (ZRE152_)	106	02/09 – 09/12	3953	3954
AURIS (_E15_)	1.8 (ZRE152_)	108	02/09 – 09/12		4037
AURIS (_E15_)	1.8 4WD (ZRE154_)	100	02/09 – 09/12	3953	3954
AURIS (_E15_)	1.8 Hybrid (ZWE150_)	73	09/10 – 09/12	4077	3954
AURIS (_E15_)	2.0 D-4D (ADE150_)	93	03/07 – 09/12	4147	4037
AURIS (_E15_)	2.2 D (ADE157_)	130	03/07 – 09/12	4147	4037
AURIS (_E18_)	1.2 (NRE185_)	85	03/15 -	4176	4037
AURIS (_E18_)	1.3 (NRE180_)	73	10/12 -	4176	4037
AURIS (_E18_)	1.4 D-4D (NDE180_)	66	10/12 -	4176	4037
AURIS (_E18_)	1.5 (NZE181_)	80	10/12 -	4176	4037
AURIS (_E18_)	1.5 4WD (NZE184_)	77	10/12 -	4176	4037
AURIS (_E18_)	1.6 (ZRE181_, ZRE185_)	97	10/12 -	4176	4037
AURIS (_E18_)	1.6 D4-D (WWE185_)	82	04/15 -	4176	4037
AURIS (_E18_)	1.8 (ZRE182)	103	10/12 -	4176	4037
AURIS (_E18_)	1.8 (ZRE186_)	106	10/12 -	4176	4037
AURIS (_E18_)	1.8 Hybrid (ZWE186_)	73	10/12 -	4077	4037
AURIS (_E18_)	1.8 Hybrid (ZWE186_)	73	10/12 -	4176	
AURIS (_E18_)	2.0 D-4D (ADE186_)	91	10/12 -	4147	4037
AURIS (_E18_)	2.0 D-4D (ADE186_)	91	10/12 -	4176	
AURIS (NDE15_)	1.4 D-4D (1ND-TV)	66	03/07 – 04/13	3956	
AURIS / BLADE (NRE15_, ZZE15_, ADE15_, ZRE15_, NDE15_)	1.33 Dual-VVTi (1NR-FE)	73	01/10 – 09/12	3956	
AURIS / BLADE (NRE15_, ZZE15_, ADE15_, ZRE15_, NDE15_)	1.33 Dual-VVTi (1NR-FE)	74	05/09 – 09/12	3956	
AURIS / BLADE (NRE15_, ZZE15_, ADE15_, ZRE15_, NDE15_)	1.4 (ZZE150_) (4ZZ-FE)	71	03/07 – 09/12	3956	
AURIS / BLADE (NRE15_, ZZE15_, ADE15_, ZRE15_, NDE15_)	1.5 (1NZ-FE)	77	09/09 – 09/12	3956	
AURIS / BLADE (NRE15_, ZZE15_, ADE15_, ZRE15_, NDE15_)	1.5 (1NZ-FE)	81	09/09 – 09/12	3956	
AURIS / BLADE (NRE15_, ZZE15_, ADE15_, ZRE15_, NDE15_)	1.6 (1ZR-FAE)	97	05/09 – 09/12	3956	
AURIS / BLADE (NRE15_, ZZE15_, ADE15_, ZRE15_, NDE15_)	1.6 (ZRE151_) (1ZR-FE)	91	03/07 – 09/12	3956	
AURIS / BLADE (NRE15_, ZZE15_, ADE15_, ZRE15_, NDE15_)	1.8 (2ZR-FAE)	100	02/09 – 09/12	3956	
AURIS / BLADE (NRE15_, ZZE15_, ADE15_, ZRE15_, NDE15_)	1.8 (2ZR-FAE)	106	02/09 – 09/12	3956	
AURIS / BLADE (NRE15_, ZZE15_, ADE15_, ZRE15_, NDE15_)	1.8 (2ZR-FAE)	108	02/09 – 09/12	3956	
AURIS / BLADE (NRE15_, ZZE15_, ADE15_, ZRE15_, NDE15_)	1.8 (ZRE152_) (2ZR-FE)	100	10/06 – 09/12	3956	
AURIS / BLADE (NRE15_, ZZE15_, ADE15_, ZRE15_, NDE15_)	1.8 Hybrid (2ZR-FXE)	73	09/10 – 09/12	3956	
AURIS II (ZRE18_, NZE18_)	1.4 D-4D (1ND-TV)	66	03/13 -	3956	
AURIS TOURING SPORTS (_E18_)	1.2 (NRE185_)	85	03/15 -	4176	4037
AURIS TOURING SPORTS (_E18_)	1.3 (NRE180_)	73	07/13 -	4176	4037
AURIS TOURING SPORTS (_E18_)	1.4 D-4D (NDE180_)	66	07/13 -	4176	4037
AURIS TOURING SPORTS (_E18_)	1.6 (ZRE185_)	97	07/13 -	4176	4037
AURIS TOURING SPORTS (_E18_)	1.6 D4-D (WWE185_)	82	04/15 -	4176	4037
AURIS TOURING SPORTS (_E18_)	1.8 Hybrid (ZWE186_)	73	07/13 -	4176	4037
AURIS TOURING SPORTS (_E18_)	2.0 D-4D (ADE186_)	91	07/13 -	4147	4037
AURIS VAN Box (_E18_)	1.4 D-4D (NDE180_)	66	03/13 -	4176	4037
Auris I (_E15_)/ Corolla/ Blade 12055 Dual-VVTi (NRE150_)	1NR-FE	73	01/2010 - 09/2012		4037/1
Auris I (_E15_)/ Corolla/ Blade 12055 Dual-VVTi (NRE150_)	1NR-FE	74	05/2009 - 09/2012		4037/1
Auris I (_E15_)/ Corolla/ Blade 2.0 D-4D (ADE150_)	1AD-FTV	93	10/2006 - 09/2012		4037/1
Auris I (_E15_)/ Corolla/ Blade 44229 D (ADE157_, ADE151_)	2AD-FHV	130	11/2006 - 09/2012		4037/1
Auris I (_E15_)/ Corolla/ Blade 44287 (ZZE150_)	4ZZ-FE	71	03/2007 - 09/2012		4037/1
Auris I (_E15_)/ Corolla/ Blade 44287 D-4D (NDE150_)	1ND-TV	66	03/2007 - 09/2012		4037/1
Auris I (_E15_)/ Corolla/ Blade 44317 (NZE151_)	1NZ-FE	81	09/2009 - 09/2012		4037/1
Auris I (_E15_)/ Corolla/ Blade 44317 4WD (NZE154_)	1NZ-FE	77	09/2009 - 09/2012		4037/1
Auris I (_E15_)/ Corolla/ Blade 44348 (ZRE151_)	1ZR-FAE	97	05/2009 - 09/2012		4037/1
Auris I (_E15_)/ Corolla/ Blade 44348 (ZRE151_)	1ZR-FE	91	03/2007 - 09/2012		4037/1
Auris I (_E15_)/ Corolla/ Blade 44409 (ZRE152_)	2ZR-FAE	106	02/2009 - 09/2012		4037/1
Auris I (_E15_)/ Corolla/ Blade 44409 (ZRE152_)	2ZR-FAE	108	02/2009 - 09/2012		4037/1
Auris I (_E15_)/ Corolla/ Blade 44409 (ZRE152_, ZZE122)	2ZR-FAE, 2ZR-FE	100	10/2006 - 09/2012		4037/1
Auris I (_E15_)/ Corolla/ Blade 44409 4WD (ZRE154_)	2ZR-FE	100	02/2009 - 09/2012		4037/1
Auris II (_E18_) 2.0 D-4D (ADE186_)	1AD-FTV	91	10/2012 - 04/2015		4037/1
Auris II (_E18_) 44256 (NRE180_)	1NR-FE	73	10/2012 - 12/2018	4176/1	4037/1
Auris II (_E18_) 44287 D-4D (NDE180_)	1ND-TV	66	10/2012 - 12/2018	4176/1	4037/1

MAKE & MODEL		KW	YEAR		
TOYOTA					
Auris II (_E18_) 44348 (ZRE181_, ZRE185_)	1ZR-FAE	97	10/2012 - 12/2018	4176/1	4037/1
Auris II (_E18_) 44409 Hybrid	2ZRFE	100	02/2013 -		4037/1
Auris II (_E18_) 44409 Hybrid (ZWE186_)	2ZR-FXE	73	10/2012 - 12/2018		4037/1
Auris Touring Sports SW (_E18_) 2.0 D-4D (ADE186_)	1AD-FTV	91	07/2013 - 04/2015		4037/1
Auris Touring Sports SW (_E18_) 44256 (NRE180_)	1NR-FE	73	07/2013 - 12/2018	4176/1	4037/1
Auris Touring Sports SW (_E18_) 44287 D-4D (NDE180_)	1ND-TV	66	07/2013 - 12/2018	4176/1	4037/1
Auris Touring Sports SW (_E18_) 44348 (ZRE185_)	1ZR-FAE	97	07/2013 - 12/2018	4176/1	4037/1
Auris Touring Sports SW (_E18_) 44409 Hybrid (ZWE186_)	2ZR-FXE	73	07/2013 - 12/2018		4037/1
AVALON Saloon (_X1_)	3.0 (MCX10_)	140	03/95 – 05/05		4098
AVALON Saloon (_X2_)	2.4	112	08/01 – 04/05	3822	4032
AVALON Saloon (_X2_)	3.0	137	08/01 – 04/05	3822	4032
AVALON Saloon (_X2_)	3.0	145	04/00 – 06/05		4032
AVALON Saloon (_X3_)	3.5 (GSX30_)	206	01/05 – 09/12		4032
Avanza I (F60_) 44256 (F601)	K3-VE	63	12/2003 - 10/2011	3927	
Avanza I (F60_) 44256 (F601)	K3-VE	65	09/2002 - 10/2011	3927	
Avanza I (F60_) 44256 (F601)	K3-VE	67	08/2006 - 12/2011	3927	
Avanza I (F60_) 44317 (F602)	3SZ-VE	76	08/2006 - 12/2011	3927	
Avanza I (F60_) 44317 (F602)	3SZ-VE	80	09/2006 - 12/2011	3927	
AVENSIS (_T22_)	1.6 (AT220_)	74	09/97 – 10/00		3776
AVENSIS (_T22_)	1.6 (AT220_)	81	09/97 – 10/00		3776
AVENSIS (_T22_)	1.6 VVT-i (ZZT220_)	81	10/00 – 02/03		3776
AVENSIS (_T22_)	1.8 (AT221_)	81	09/97 – 10/00		3776
AVENSIS (_T22_)	1.8 VVT-i (ZZT221_)	95	10/00 – 02/03		3776
AVENSIS (_T22_)	2.0 (ST220_)	94	09/97 – 10/00		3776
AVENSIS (_T22_)	2.0 D (CT220_)	61	10/97 – 05/98		3776
AVENSIS (_T22_)	2.0 D-4D (CDT220_)	81	10/99 – 02/03		3776
AVENSIS (_T22_)	2.0 TD (CT220_)	66	09/97 – 02/03		3776
AVENSIS (_T22_)	2.0 VVT-i (AZT220_)	110	10/00 – 02/03		3776
AVENSIS (_T25_)	1.6 VVT-i (ZZT250_)	81	04/03 – 11/08	3890	4154
AVENSIS (_T25_)	1.8 (ZZT251_)	95	04/03 – 11/08	3890	4154
AVENSIS (_T25_)	2.0 (AZT250_)	108	04/03 – 11/08	3890	4154
AVENSIS (_T25_)	2.0 D-4D (ADT250_)	85	04/03 – 11/08	3890	4154
AVENSIS (_T25_)	2.0 D-4D (CDT250_)	93	03/06 – 11/08	3890	4154
AVENSIS (_T25_)	2.2 D-4D (ADT251_)	110	10/05 – 11/08	3890	4154
AVENSIS (_T25_)	2.2 D-CAT (ADT251_)	130	07/05 – 11/08	3890	4154
AVENSIS (_T25_)	2.2 TD	74	04/05 – 11/08	3890	4154
AVENSIS (_T25_)	2.4 (AZT251_)	120	10/03 – 11/08	3890	4154
AVENSIS (_T25_)	2.4 (AZT251_)	125	09/03 – 11/08	3890	4154
AVENSIS Estate (_T25_)	1.6 (ZRT270_)	97	02/09 -	4147	4146
AVENSIS Estate (_T25_)	1.6 D4-D (WWT270_)	82	04/15 -	4147	4146
AVENSIS Estate (_T25_)	1.6 VVT-i (ZZT250_)	81	04/03 – 11/08	3890	4154
AVENSIS Estate (_T25_)	1.8 (ZRT271_)	95	04/03 – 11/08	3890	4154
AVENSIS Estate (_T25_)	1.8 (ZZT251_)	108	02/09 -	4147	4146
AVENSIS Estate (_T25_)	2.0 (AZT250_)	108	04/03 – 11/08	3890	4154
AVENSIS Estate (_T25_)	2.0 (ZRT272_)	112	02/09 -	4147	4146
AVENSIS Estate (_T25_)	2.0 D-4D (ADT250_)	93	03/06 – 11/08	3890	4154
AVENSIS Estate (_T25_)	2.0 D-4D (ADT270_)	91	11/11 -	4147	4146
AVENSIS Estate (_T25_)	2.0 D-4D (ADT270_)	93	02/09 -	4147	4146
AVENSIS Estate (_T25_)	2.0 D-4D (CDT250_)	85	04/03 – 11/08	3890	4154
AVENSIS Estate (_T27_)	2.0 D-4D (WWT271_)	105	04/15 -	4147	4146
AVENSIS Estate (_T27_)	2.0 VVTi (AZT250_)	114	04/03 – 11/08	3890	4154
AVENSIS Estate (_T27_)	2.2 D-4D (ADT251_)	110	10/05 – 11/08	3890	4154
AVENSIS Estate (_T27_)	2.2 D-4D (ADT271_)	110	02/09 -		4146
AVENSIS Estate (_T27_)	2.2 D-4D (ADT271_)	130	02/09 -	3890	4146
AVENSIS Estate (_T27_)	2.2 D-CAT (ADT251_)	130	07/05 – 11/08		4154
AVENSIS Estate (_T27_)	2.2 TD	74	04/05 – 11/08	3890	4154
AVENSIS Estate (_T27_)	2.4 (AZT251_)	120	10/03 – 11/08	3890	4154
AVENSIS Estate (_T27_)	2.4 (AZT251_)	125	09/03 – 11/08	3890	4154
AVENSIS Liftback (_T22_)	1.6 (AT220_)	74	09/97 – 10/00		3776
AVENSIS Liftback (_T22_)	1.6 (AT220_)	81	09/97 – 10/00		3776
AVENSIS Liftback (_T22_)	1.6 (ZZT220_)	81	10/00 – 02/03		3776
AVENSIS Liftback (_T22_)	1.8 (AT221_)	81	09/97 – 10/00		3776
AVENSIS Liftback (_T22_)	1.8 (ZZT221_)	95	10/00 – 02/03		3776
AVENSIS Liftback (_T22_)	2.0 (AZT220_)	110	10/00 – 02/03		3776
AVENSIS Liftback (_T22_)	2.0 (ST220_)	94	09/97 – 10/00		3776
AVENSIS Liftback (_T22_)	2.0 D-4D (CDT220_)	81	10/99 – 02/03		3776
AVENSIS Liftback (_T22_)	2.0 TD (CT220_)	66	09/97 – 02/03		3776
AVENSIS Saloon (_T25_)	1.6 VVT-i (ZZT250_)	81	04/03 – 11/08	3890	4154
AVENSIS Saloon (_T25_)	1.8 (ZZT251_)	95	04/03 – 11/08	3890	4154
AVENSIS Saloon (_T25_)	2.0 (AZT250_)	108	04/03 – 11/08	3890	4154
AVENSIS Saloon (_T25_)	2.0 D-4D (ADT250_)	93	03/06 – 11/08	3890	4154
AVENSIS Saloon (_T25_)	2.0 D-4D (CDT250_)	85	04/03 – 11/08	3890	4154
AVENSIS Saloon (_T25_)	2.0 VVTi (AZT250_)	114	04/03 – 11/08	3890	4154
AVENSIS Saloon (_T25_)	2.2 D-4D (ADT251_)	110	10/05 – 11/08	3890	4154
AVENSIS Saloon (_T25_)	2.2 D-CAT (ADT251_)	130	07/05 – 11/08	3890	4154
AVENSIS Saloon (_T25_)	2.2 TD	74	04/05 – 11/08	3890	4154

MAKE & MODEL		KW	YEAR		
TOYOTA					
AVENSIS Saloon (_T25_)	2.4 (AZT251_)	120	10/03 – 11/08	3890	4154
AVENSIS Saloon (_T25_)	2.4 (AZT251_)	125	09/03 – 11/08	3890	4154
AVENSIS Saloon (_T27_)	1.6 (ZRT270_)	97	11/08 -	4147	4146
AVENSIS Saloon (_T27_)	1.6 D4-D (WWT270_)	82	04/15 -	4147	4146
AVENSIS Saloon (_T27_)	1.8 (ZRT271_)	108	11/08 -	4147	4146
AVENSIS Saloon (_T27_)	2.0 (ZRT272_)	112	11/08 -	4147	4146
AVENSIS Saloon (_T27_)	2.0 D-4D (ADT270_)	91	11/11 -	4147	4146
AVENSIS Saloon (_T27_)	2.0 D-4D (ADT270_)	93	11/08 -	4147	4146
AVENSIS Saloon (_T27_)	2.0 D-4D (WWT271_)	105	04/15 -		4146
AVENSIS Saloon (_T27_)	2.2 D-4D (ADT271_)	110	11/08 -		4146
AVENSIS Saloon (_T27_)	2.2 D-4D (ADT271_)	130	11/08 -		4146
AVENSIS Station Wagon (_T22_)	1.6 (AT220_)	74	09/97 – 10/00		3776
AVENSIS Station Wagon (_T22_)	1.6 (AT220_, ZZT220_)	81	09/97 – 10/00		3776
AVENSIS Station Wagon (_T22_)	1.6 (ZZT250_)	81	10/00 – 02/03		3776
AVENSIS Station Wagon (_T22_)	1.8 (AT221_)	81	09/97 – 10/00		3776
AVENSIS Station Wagon (_T22_)	1.8 (ZZT221_)	95	10/00 – 02/03		3776
AVENSIS Station Wagon (_T22_)	2.0 (AZT220_)	110	10/00 – 02/03		3776
AVENSIS Station Wagon (_T22_)	2.0 (ST220_)	94	09/97 – 10/00		3776
AVENSIS Station Wagon (_T22_)	2.0 D (CT220_)	61	10/97 – 05/98		3776
AVENSIS Station Wagon (_T22_)	2.0 D-4D (CDT220_)	81	10/99 – 02/03		3776
AVENSIS Station Wagon (_T22_)	2.0 TD (CT220_)	66	09/97 – 02/03		3776
AVENSIS VERSO (_M2_)	2.0 D-4D (CLM20_)	85	08/01 – 08/05	4013	
AVENSIS VERSO (_M2_)	2.0 VVT-i (ACM20_)	110	08/01 – 11/09	4013	
AVENSIS VERSO (_M2_)	2.4 VVTi 4WD (ACM21_)	115	11/03 – 08/06	4013	
AVENSIS VERSO (_M2_)	2.4 VVTi GLS (ACM21)	115	10/03 – 11/09	4013	
AYGO (_B1_)	1.0 (KGB10_)	50	07/05 -	3987	
AYGO (_B1_)	1.0 (KGB40_)	51	05/14 -	3987	
AYGO (_B1_)	1.0 GPL (KGB10_)	50	07/05 -	3987	
AYGO (_B4_)	1.2 (PAB40_)	60	05/14 -	3987	
AYGO (_B4_)	1.4 HDi (WNB10_)	40	07/05 – 08/10	3987	
bB II (QNC2_)	1.3	68	12/05 -	3928	
bB II (QNC2_)	1.3 4WD	68	12/05 -	3928	
bB II (QNC2_)	1.5	80	12/05 -	3928	
CAMRY (_CV1_, _XV1_, _V1_)	2.2	93	02/93 – 04/95	3554	
CAMRY (_CV1_, _XV1_, _V1_)	2.2	93	02/93 – 04/95	3651	
CAMRY (_CV1_, _XV1_, _V1_)	2.2 (SXV10_)	100	06/91 – 08/96	3554	
CAMRY (_CV1_, _XV1_, _V1_)	2.2 (SXV10_)	100	06/91 – 08/96	3651	
CAMRY (_V1_)	2.2	93	02/93 – 04/95	4086	3776
CAMRY (_V1_)	2.2 (SXV10_)	100	06/91 – 08/96	4086	3776
CAMRY (_V1_)	3.0	135	09/93 – 07/96	4086	3776
CAMRY (_V1_)	3.0	136	02/93 – 09/95	4086	3776
CAMRY (_V1_)	3.0 (VCV10_)	138	06/91 – 08/96	4086	3776
CAMRY (_V2_)	1.8 i (SV20_)	66	10/86 – 08/88		3776
CAMRY (_V2_)	2.0 (SV21_)	94	11/86 – 05/91		3776
CAMRY (_V2_)	2.0 Gli 16V (SV21_)	89	11/86 – 05/91		3776
CAMRY (_V2_)	2.2 (SXV20_)	93	11/00 – 11/01	3822	3876
CAMRY (_V2_)	2.2 (SXV20_)	93	11/00 – 11/01	4086	3776
CAMRY (_V2_)	2.2 (SXV20_)	96	08/96 – 11/01	3822	3776
CAMRY (_V2_)	2.2 (SXV20_)	96	08/96 – 11/01	4086	3876
CAMRY (_V2_)	3.0 (VDV10)	140	08/96 – 07/01	3822	3776
CAMRY (_V2_)	3.0 (VDV10)	140	08/96 – 07/01	4086	3876
CAMRY (_V2_)	3.0 24V (MCV20_)	140	08/96 – 11/01	3822	3776
CAMRY (_V2_)	3.0 24V (MCV20_)	140	08/96 – 11/01	4086	3876
CAMRY (_V2_)	3.0 V6 (MCV20_)	135	08/96 – 11/01	3822	3776
CAMRY (_V2_)	3.0 V6 (MCV20_)	135	08/96 – 11/01	4086	3876
CAMRY (AVV5_, XV5_)	2.0 (1AZ-FE)	109	09/11 -		4202
CAMRY (AVV5_, XV5_)	2.5 (ASV50)	135	01/12 -		4202
CAMRY (AVV5_, XV5_)	2.5 (ASV50) (2AR-FE)	133	09/11 -		4202
CAMRY (AVV5_, XV5_)	2.5 Hybrid (2AR-FXE)	118	09/11 -		4202
CAMRY (AVV5_, XV5_)	2.5 Hybrid (2JM)	118	09/11 -		4202
CAMRY (AVV5_, XV5_)	3.5 (2GR-FE)	204	09/11 -		4202
CAMRY Liftback (CV1_, SV1_)	1.8 (SV10_)	66	02/83 – 10/86	3402	
CAMRY Liftback (CV1_, SV1_)	1.8 (SV10_)	66	02/83 – 10/86	3472	
CAMRY Liftback (CV1_, SV1_)	1.8 Turbo-D (CV10_)	54	10/84 – 01/88	3402	
CAMRY Liftback (CV1_, SV1_)	1.8 Turbo-D (CV10_)	54	10/84 – 01/88	3472	
CAMRY Liftback (CV1_, SV1_)	2.0 (SV11_)	73	04/86 – 01/88	3402	
CAMRY Liftback (CV1_, SV1_)	2.0 (SV11_)	73	04/86 – 01/88	3472	
CAMRY Saloon (_V3_)	2.0	110	08/01 – 11/06	3910	3911
CAMRY Saloon (_V3_)	2.0	110	08/01 – 11/06	3948	
CAMRY Saloon (_V3_)	2.4 (ACV30_)	112	11/01 – 11/06	3910	3776
CAMRY Saloon (_V3_)	2.4 (ACV30_)	112	11/01 – 11/06	3948	3911
CAMRY Saloon (_V3_)	2.4 Hybrid	105	01/06 – 11/06	3948	3949
CAMRY Saloon (_V3_)	3.0	141	09/02 – 11/06	3910	3911
CAMRY Saloon (_V3_)	3.0	141	09/02 – 11/06	3948	
CAMRY Saloon (_V3_)	3.0 (MCV30_)	137	08/01 – 11/06	3910	3776
CAMRY Saloon (_V3_)	3.0 (MCV30_)	137	08/01 – 11/06	3948	3911

MAKE & MODEL   		KW	YEAR		
TOYOTA					
CAMRY Saloon (_V3_)	3.3 (MCV31_)	165	07/03 – 01/06	3910	3911
CAMRY Saloon (_V3_)	3.5	197	01/06 – 11/06	3948	3949
CAMRY Saloon (_V4_)	2.0	108	01/06 – 09/11	3948	3949
CAMRY Saloon (_V4_)	2.4	127	10/06 – 09/11	3948	3949
CAMRY Saloon (_V4_)	2.4 (ACV40)	116	01/06 – 09/11	3948	3949
CAMRY Saloon (_V4_)	2.4 (ACV40)	123	01/06 – 09/11	3948	3949
CAMRY Saloon (_V4_)	2.4 Hybrid	105	01/06 – 09/11	3948	3949
CAMRY Saloon (_V4_)	2.4 Hybrid	110	01/06 – 09/11	3948	3949
CAMRY Saloon (_V4_)	2.5	129	01/10 – 09/11	3948	3949
CAMRY Saloon (_V4_)	3.5 (GSV40_)	204	01/08 – 09/11	3948	3949
CAMRY Saloon (_V5_)	2.0 (ACV51_)	109	09/11 -	3948	3949
CAMRY Saloon (_V5_)	2.5 (ASV50_)	133	09/11 -	3948	3949
CAMRY Saloon (_V5_)	2.5 Hybrid (AVV50_)	115	09/11 -	3948	3949
CAMRY Saloon (_V5_)	2.5 Hybrid (AVV50_)	118	09/11 -	3948	3949
CAMRY Saloon (_V5_)	3.5 (GSV50_)	183	12/12 -	3948	3949
CAMRY Saloon (_V5_)	3.5 (GSV50_)	204	09/11 -	3948	3949
CAMRY Saloon (CV1_, SV1_)	1.8	66	02/83 – 10/86	3402	
CAMRY Saloon (CV1_, SV1_)	1.8	66	02/83 – 10/86	3472	
CAMRY Saloon (CV1_, SV1_)	1.8 Turbo-D (CV10_)	54	11/83 – 01/88	3402	
CAMRY Saloon (CV1_, SV1_)	1.8 Turbo-D (CV10_)	54	11/83 – 01/88	3472	
CAMRY Saloon (CV1_, SV1_)	2.0 (SV11_)	73	04/86 – 01/88	3402	
CAMRY Saloon (CV1_, SV1_)	2.0 (SV11_)	73	04/86 – 01/88	3472	
CAMRY Saloon (CV1_, SV1_)	2.0 GLI (SV11_)	79	03/83 – 10/86	3402	
CAMRY Saloon (CV1_, SV1_)	2.0 GLI (SV11_)	79	03/83 – 10/86	3472	
CAMRY Sedan (_V3_)	2.4 (ACV30, ACV36	112	11.2001 - 11.2006	4019	
CAMRY Station Wagon (_V1_)	2.2 (SXV10, SDV10)	93	02/93 – 04/95		3776
CAMRY Station Wagon (_V1_)	2.2 (SXV10_)	100	03/92 – 07/96	4086	3776
CAMRY Station Wagon (_V1_)	3.0 (VCV10_)	138	03/92 – 07/96	4086	3776
CAMRY Station Wagon (_XV1_, _CV1_, _V10)	2.2 (SXV10, SDV10)	93	02/93 – 04/95	3554	
CAMRY Station Wagon (_XV1_, _CV1_, _V10)	2.2 (SXV10, SDV10)	93	02/93 – 04/95	3651	
CAMRY Station Wagon (_XV1_, _CV1_, _V10)	2.2 (SXV10_)	100	03/92 – 07/96	3554	
CAMRY Station Wagon (_XV1_, _CV1_, _V10)	2.2 (SXV10_)	100	03/92 – 07/96	3651	
CARINA II-III (TA4K, TA6K)	1.6 (2T)	54	03/81 – 01/82	3336	
CARINA II-III (TA4K, TA6K)	1.6 (2T)	54	03/81 – 01/82	3314	
CARINA II-III (TA4K, TA6K)	1.6 (2T)	55	04/78 – 09/83	3336	
CARINA II-III (TA4K, TA6K)	1.6 (2T)	55	04/78 – 09/83	3314	
CARINA II-III (TA4K, TA6K)	1.8 (3T-C)	57	08/82 – 12/82	3336	
CARINA II-III (TA4K, TA6K)	1.8 (3T-C)	57	08/82 – 12/82	3314	
CARINA II-III (TA4L, TA6_L)	1.6 (2T)	55	01/78 – 09/83	3314	
CARINA II-III (TA4L, TA6_L)	1.6 (2T)	55	01/78 – 09/83	3336	
CARINA II-III (TA4L, TA6_L)	1.8 (3T)	57	01/78 – 05/83	3314	
CARINA II-III (TA4L, TA6_L)	1.8 (3T)	57	01/78 – 05/83	3336	
CARINA II-III (TA4L, TA6_L)	1.8 (3T-C)	57	01/78 – 05/83	3314	
CARINA II-III (TA4L, TA6_L)	1.8 (3T-C)	57	01/78 – 05/83	3336	
CARINA (TA1_)	1.6 (2T)	55	02/76 – 03/78	3314	
CARINA (TA1_)	1.6 (2T)	55	02/76 – 03/78	3336	
CARINA (TA1_)	1.6 (2T)	58	05/73 – 03/78	3314	
CARINA (TA1_)	1.6 (2T)	58	05/73 – 03/78	3336	
CARINA (TA1_)	1.6 (2TB)	63	10/75 – 03/78	3314	
CARINA (TA1_)	1.6 (2TB)	63	10/75 – 03/78	3336	
CARINA (TA4L, TA6_L)	1.8 (TA62_)	57	01/78 – 05/83	3579	
CARINA (TA4L, TA6_L)	1.8 (TA62_)	63	01/82 – 09/83	3579	
CARINA E (_T19_)	1.6 (AT190)	73	12/93 – 09/97	3554	
CARINA E (_T19_)	1.6 (AT190)	73	12/93 – 09/97	3651	
CARINA E (AT19_)	1.6 (AT190)	85	12/93 – 09/97	3554	
CARINA E (AT19_)	1.6 (AT190)	85	12/93 – 09/97	3651	
CARINA E (AT19_)	1.6 16V (AT190_)	78	10/95 – 09/97	3554	
CARINA E (AT19_)	1.6 16V (AT190_)	78	10/95 – 09/97	3651	
CARINA E (AT19_)	1.6 GLI (AT190)	79	04/92 – 09/97	3554	
CARINA E (AT19_)	1.6 GLI (AT190)	79	04/92 – 09/97	3651	
CARINA E (AT19_)	1.8 (AT191)	79	01/95 – 09/97	3554	
CARINA E (AT19_)	1.8 (AT191)	79	01/95 – 09/97	3651	
CARINA E (AT19_)	2.0 D (CT190)	54	04/92 – 01/96	3554	
CARINA E (AT19_)	2.0 D (CT190)	54	04/92 – 01/96	3651	
CARINA E (AT19_)	2.0 GLI (ST191)	98	04/92 – 09/97	3554	
CARINA E (AT19_)	2.0 GLI (ST191)	98	04/92 – 09/97	3651	
CARINA E (AT19_)	2.0 GTi (ST191)	116	04/92 – 02/94		3776
CARINA E (AT19_)	2.0 GTi 16V (ST191_)	129	03/94 – 09/97		3776
CARINA E (AT19_)	2.0 i (ST191)	93	12/93 – 09/97	3554	
CARINA E (AT19_)	2.0 i (ST191)	93	12/93 – 09/97	3651	
CARINA E (AT19_)	2.0 TD (CT190)	61	01/96 – 09/97	3554	
CARINA E (AT19_)	2.0 TD (CT190)	61	01/96 – 09/97	3651	
CARINA E Saloon (_T19_)	1.6 (AT190)	73	01/95 – 09/97	3554	
CARINA E Saloon (_T19_)	1.6 (AT190)	73	01/95 – 09/97	3651	
CARINA E Saloon (_T19_)	1.6 (AT190)	78	10/95 – 09/97	3554	
CARINA E Saloon (_T19_)	1.6 (AT190)	78	10/95 – 09/97	3651	

MAKE & MODEL		KW	YEAR		
TOYOTA					
CARINA E Saloon (_T19_)	1.6 (AT190)	79	01/93 – 09/97	3554	
CARINA E Saloon (_T19_)	1.6 (AT190)	79	01/93 – 09/97	3651	
CARINA E Saloon (_T19_)	1.6 16V (AT190_)	85	12/94 – 09/97	3554	
CARINA E Saloon (_T19_)	1.6 16V (AT190_)	85	12/94 – 09/97	3651	
CARINA E Saloon (_T19_)	1.8 i 16V (AT191)	79	01/95 – 09/97	3554	
CARINA E Saloon (_T19_)	1.8 i 16V (AT191)	79	01/95 – 09/97	3651	
CARINA E Saloon (_T19_)	2.0 (ST191)	98	01/93 – 09/97	3554	
CARINA E Saloon (_T19_)	2.0 (ST191)	98	01/93 – 09/97	3651	
CARINA E Saloon (_T19_)	2.0 D (CT190)	54	08/92 – 01/96	3554	
CARINA E Saloon (_T19_)	2.0 D (CT190)	54	08/92 – 01/96	3651	
CARINA E Saloon (_T19_)	2.0 GTi (ST191_)	116	04/92 – 02/94		3776
CARINA E Saloon (_T19_)	2.0 GTi 16V (ST191_)	129	03/94 – 09/97		3776
CARINA E Saloon (_T19_)	2.0 i (ST191)	93	12/92 – 09/97	3554	
CARINA E Saloon (_T19_)	2.0 i (ST191)	93	12/92 – 09/97	3651	
CARINA E Saloon (_T19_)	2.0 TD (CT190_)	61	01/96 – 09/97	3554	
CARINA E Saloon (_T19_)	2.0 TD (CT190_)	61	01/96 – 09/97	3651	
CARINA E Sportswagon (_T19_)	1.6	85	04/92 – 09/97	3554	
CARINA E Sportswagon (_T19_)	1.6	85	04/92 – 09/97	3651	
CARINA E Sportswagon (_T19_)	1.6 GLI (AT190_)	79	01/93 – 09/97	3554	
CARINA E Sportswagon (_T19_)	1.6 GLI (AT190_)	79	01/93 – 09/97	3651	
CARINA E Sportswagon (_T19_)	1.6 i (AT190_)	73	02/95 – 09/97	3554	
CARINA E Sportswagon (_T19_)	1.6 i (AT190_)	73	02/95 – 09/97	3651	
CARINA E Sportswagon (_T19_)	1.8 GL	92	10/94 – 09/97	3554	
CARINA E Sportswagon (_T19_)	1.8 GL	92	10/94 – 09/97	3651	
CARINA E Sportswagon (_T19_)	1.8 i (AT191_)	79	02/95 – 09/97	3554	
CARINA E Sportswagon (_T19_)	1.8 i (AT191_)	79	02/95 – 09/97	3651	
CARINA E Sportswagon (_T19_)	2.0 D (CT190_)	54	01/93 – 01/96	3554	
CARINA E Sportswagon (_T19_)	2.0 D (CT190_)	54	01/93 – 01/96	3651	
CARINA E Sportswagon (_T19_)	2.0 GLI (ST191_)	98	01/93 – 09/97	3554	
CARINA E Sportswagon (_T19_)	2.0 GLI (ST191_)	98	01/93 – 09/97	3651	
CARINA E Sportswagon (_T19_)	2.0 i (ST191_)	93	05/95 – 09/97	3554	
CARINA E Sportswagon (_T19_)	2.0 i (ST191_)	93	05/95 – 09/97	3651	
CARINA E Sportswagon (_T19_)	2.0 TD (CT190_)	61	01/96 – 09/97	3554	
CARINA E Sportswagon (_T19_)	2.0 TD (CT190_)	61	01/96 – 09/97	3651	
CARINA II (_T17_)	1.6 (AT171_)	66	12/87 – 11/89	3402	
CARINA II (_T17_)	1.6 (AT171_)	66	12/87 – 11/89	3472	
CARINA II (_T17_)	1.6 (AT171_)	72	12/87 – 03/92	3402	
CARINA II (_T17_)	1.6 (AT171_)	72	12/87 – 03/92	3472	
CARINA II (_T17_)	1.6 (AT171_)	75	12/87 – 03/92	3402	
CARINA II (_T17_)	1.6 (AT171_)	75	12/87 – 03/92	3472	
CARINA II (_T17_)	2.0 D (CT170_)	54	03/88 – 06/92	3402	
CARINA II (_T17_)	2.0 D (CT170_)	54	03/88 – 06/92	3472	
CARINA II (_T17_)	2.0 GLI (ST171)	89	12/87 – 03/92	3472	3776
CARINA II (_T17_)	2.0 GLI (ST171)	89	12/87 – 03/92	3402	
CARINA II (ST151_, ST150_, AT151_)	1.6 (AT151_)	55	10/83 – 11/87	3402	
CARINA II (ST151_, ST150_, AT151_)	1.6 (AT151_)	55	10/83 – 11/87	3472	
CARINA II (ST151_, ST150_, AT151_)	1.6 (AT151_)	62	10/83 – 11/87	3402	
CARINA II (ST151_, ST150_, AT151_)	1.6 (AT151_)	62	10/83 – 11/87	3472	
CARINA II (ST151_, ST150_, AT151_)	1.6 (AT151_)	63	10/86 – 11/87	3402	
CARINA II (ST151_, ST150_, AT151_)	1.6 (AT151_)	63	10/86 – 11/87	3472	
CARINA II (ST151_, ST150_, AT151_)	1.8 GLI (ST150)	74	10/83 – 11/87	3402	
CARINA II (ST151_, ST150_, AT151_)	1.8 GLI (ST150)	74	10/83 – 11/87	3472	
CARINA II (ST151_, ST150_, AT151_)	2.0 D (CT150)	51	12/85 – 11/87	3402	
CARINA II (ST151_, ST150_, AT151_)	2.0 D (CT150)	51	12/85 – 11/87	3472	
CARINA II (ST151_, ST150_, AT151_)	2.0 D (CT150_)	50	02/84 – 05/88	3402	
CARINA II (ST151_, ST150_, AT151_)	2.0 D (CT150_)	50	02/84 – 05/88	3472	
CARINA II Saloon (_T17_)	2.0 GLI (ST171)	89	12/87 – 03/92		3776
CARINA II Saloon (CT15_)	1.6 (AT151_)	55	10/83 – 11/87	3402	
CARINA II Saloon (CT15_)	1.6 (AT151_)	55	10/83 – 11/87	3472	
CARINA II Saloon (CT15_)	1.6 (AT151_)	62	10/83 – 11/87	3402	
CARINA II Saloon (CT15_)	1.6 (AT151_)	62	10/83 – 11/87	3472	
CARINA II Saloon (CT15_)	1.8 GLI (ST150)	74	10/83 – 11/87	3402	
CARINA II Saloon (CT15_)	1.8 GLI (ST150)	74	10/83 – 11/87	3472	
CARINA II Saloon (CT15_)	2.0 D (CT150_)	50	02/84 – 05/88	3402	
CARINA II Saloon (CT15_)	2.0 D (CT150_)	50	02/84 – 05/88	3472	
CARINA II Saloon (ST17_, AT17, CT17_)	1.6 (AT171_)	66	12/87 – 08/90	3402	
CARINA II Saloon (ST17_, AT17, CT17_)	1.6 (AT171_)	66	12/87 – 08/90	3472	
CARINA II Saloon (ST17_, AT17, CT17_)	1.6 (AT171_)	72	12/87 – 03/92	3402	
CARINA II Saloon (ST17_, AT17, CT17_)	1.6 (AT171_)	72	12/87 – 03/92	3472	
CARINA II Saloon (ST17_, AT17, CT17_)	1.6 (AT171_)	75	12/87 – 03/92	3402	
CARINA II Saloon (ST17_, AT17, CT17_)	1.6 (AT171_)	75	12/87 – 03/92	3472	
CARINA II Saloon (ST17_, AT17, CT17_)	2.0 D (CT170_)	54	03/88 – 06/92	3402	
CARINA II Saloon (ST17_, AT17, CT17_)	2.0 D (CT170_)	54	03/88 – 06/92	3472	
CARINA II Saloon (ST17_, AT17, CT17_)	2.0 GLI (ST171)	89	12/87 – 03/92	3472	3776
CARINA II Saloon (ST17_, AT17, CT17_)	2.0 GLI (ST171)	89	12/87 – 03/92	3402	
CARINA II Station Wagon (AT17_, CT17_, ST17_)	1.6 (AT171_)	66	12/87 – 12/89	3402	

MAKE & MODEL		KW	YEAR		
TOYOTA					
CARINA II Station Wagon (AT17_, CT17_, ST17_)	1.6 (AT171_)	66	12/87 – 12/89	3472	
CARINA II Station Wagon (AT17_, CT17_, ST17_)	1.6 (AT171_)	72	12/87 – 03/92	3402	
CARINA II Station Wagon (AT17_, CT17_, ST17_)	1.6 (AT171_)	72	12/87 – 03/92	3472	
CARINA II Station Wagon (AT17_, CT17_, ST17_)	1.6 (AT171_)	75	12/87 – 03/92	3402	
CARINA II Station Wagon (AT17_, CT17_, ST17_)	1.6 (AT171_)	75	12/87 – 03/92	3472	
CARINA II Station Wagon (AT17_, CT17_, ST17_)	2.0 (ST171_)	89	12/87 – 04/92	3402	
CARINA II Station Wagon (AT17_, CT17_, ST17_)	2.0 (ST171_)	89	12/87 – 04/92	3472	
CARINA II Station Wagon (AT17_, CT17_, ST17_)	2.0 D (CT170_)	54	12/87 – 01/92	3402	
CARINA II Station Wagon (AT17_, CT17_, ST17_)	2.0 D (CT170_)	54	12/87 – 01/92	3472	
CARINA Station Wagon (CA6_, TA6_)	1.8 (TA62_)	57	08/82 – 12/82	3579	
CELICA II (RA4_, TA4_)	1.6 GT (TA4C) (2T-G)	80	04/78 – 07/81	3376	
CELICA II (RA4_, TA4_)	1.6 GT (TA4C) (2T-G)	81	04/80 – 07/81	3376	
CELICA II (RA4_, TA4_)	1.6 LT (TA4C) (2TB)	55	02/79 – 07/81	3376	
CELICA II (RA4_, TA4_)	1.6 ST (TA4C, TA60) (2TB)	63	08/77 – 07/81	3376	
CELICA II (RA4_, TA4_)	1.6 ST (TA4C, TA60) (4A-L)	63	08/77 – 07/81	3376	
CELICA II (RA4_, TA4_)	1.6 ST (TA60) (2T)	66	02/79 – 07/81	3376	
CELICA II (TA60, RA40, RA6_)	1.6 ST (TA60) (2TB)	63	08/77 – 07/81	3376	
CELICA II (TA60, RA40, RA6_)	2.0 XT (RA40) (18R)	65	01/80 – 07/81	3376	
CELICA II (TA60, RA40, RA6_)	2.0 XT (RA40) (18R)	66	02/79 – 07/81	3376	
CELICA (_T16_)	2.0 (ST162_)	110	01/87 – 08/89		3776
CELICA (_T20_)	2.0 i 16V (ST202/GT)	129	11/93 – 11/99	4086	
CELICA (_T20_)	2.0 i 16V (ST202_)	125	04/96 – 11/99	4086	
CELICA (_T23_)	1.8 16V TS (ZZT231_)	141	08/99 – 09/05		3788
CELICA (_T23_)	1.8 16V VT-i (ZZT230_)	105	08/99 – 07/05		3788
CELICA (AT16_, ST16_)	1.6 (AT160_)	63	04/86 – 08/89	3402	
CELICA (AT16_, ST16_)	1.6 (AT160_)	63	04/86 – 08/89	3472	
CELICA (AT16_, ST16_)	1.6 GT 16V (AT160_)	91	04/86 – 08/89	3402	
CELICA (AT16_, ST16_)	1.6 GT 16V (AT160_)	91	04/86 – 08/89	3472	
CELICA (AT16_, ST16_)	2.0 (ST162_)	110	01/87 – 08/89	3402	
CELICA (AT16_, ST16_)	2.0 (ST162_)	110	01/87 – 08/89	3472	
CELICA (RA2_, TA2_)	1.6	76	11/71 – 06/76	3314	
CELICA (RA2_, TA2_)	1.6	76	11/71 – 06/76	3336	
CELICA (RA2_, TA2_)	1.6 GT (2T-G)	79	12/74 – 03/78	3314	
CELICA (RA2_, TA2_)	1.6 GT (2T-G)	79	12/74 – 03/78	3336	
CELICA (RA2_, TA2_)	1.6 LT (2T)	55	02/76 – 03/78	3314	
CELICA (RA2_, TA2_)	1.6 LT (2T)	55	02/76 – 03/78	3336	
CELICA (RA2_, TA2_)	1.6 LT (2TJ)	58	05/73 – 03/78	3314	
CELICA (RA2_, TA2_)	1.6 LT (2TJ)	58	05/73 – 03/78	3336	
CELICA (RA2_, TA2_)	1.6 ST (2TB)	63	05/73 – 03/78	3314	
CELICA (RA2_, TA2_)	1.6 ST (2TB)	63	05/73 – 03/78	3336	
CELICA (RA2_, TA2_)	2.0 (18R)	63	10/75 – 07/77	3376	
CELICA (ST20_, AT20_)	1.8 i 16V (AT200/ST)	85	11/93 – 11/99	3554	
CELICA (ST20_, AT20_)	1.8 i 16V (AT200/ST)	85	11/93 – 11/99	3651	
CELICA (ZZT23_)	1.8 16V TS (ZZT231_)	141	08/99 – 09/05	3769	
CELICA (ZZT23_)	1.8 16V VT-i (ZZT230_)	105	08/99 – 07/05	3769	
CELICA Convertible (_T16_)	2.0 GT (ST162)	103	08/85 – 08/89		3776
CELICA Convertible (_T16_)	2.0 GT (ST162)	110	10/86 – 08/89		3776
CELICA Convertible (_T18_)	2.0 GTi (ST182)	115	10/89 – 11/93		3776
CELICA Convertible (_T20_)	2.0 GTi	129	08/94 – 08/99	4086	
CELICA Convertible (_T20_)	2.0 i 16V	125	11/93 – 08/99	4086	
CELICA Convertible (ST16_, AT16_)	2.0 GT (ST162)	103	08/85 – 08/89	3402	
CELICA Convertible (ST16_, AT16_)	2.0 GT (ST162)	103	08/85 – 08/89	3472	
CELICA Convertible (ST16_, AT16_)	2.0 GT (ST162)	110	10/86 – 08/89	3402	
CELICA Convertible (ST16_, AT16_)	2.0 GT (ST162)	110	10/86 – 08/89	3472	
CELICA Coupe	(_T18J 1.6 STI (AT180)	77	10/89 – 11/93	3701	
CELICA Coupe (_A6_)	1.6 (AA63_)	91	12/83 – 12/85	3579	
CELICA Coupe (_T16_)	2.0 Turbo 4WD (ST165_)	136	03/88 – 08/89		3776
CELICA Coupe (_T18_)	1.6 STI (AT180)	77	10/89 – 11/93		3776
CELICA Coupe (_T18_)	2.0 GTi (ST182)	115	10/89 – 11/93		3776
CELICA Coupe (_T18_)	2.0 Turbo 4WD (ST185)	150	10/89 – 11/93		3776
CELICA Coupe (_T18_)	2.0 Turbo 4WD (ST185)	153	10/89 – 11/93		3776
CELICA Coupe (_T18_)	2.2	100	10/89 – 10/93		3776
CELICA Coupe (AT18_, ST18_)	1.6 STI (AT180)	77	10/89 – 11/93	3402	
CELICA Coupe (AT18_, ST18_)	1.6 STI (AT180)	77	10/89 – 11/93	3472	
CELICA Coupe (ST16_, AT16_)	2.0 Turbo 4WD (ST165_)	136	03/88 – 08/89	3402	
CELICA Coupe (ST16_, AT16_)	2.0 Turbo 4WD (ST165_)	136	03/88 – 08/89	3472	
CELICA Hatchback (_T16_)	2.0 GT	110	08/85 – 08/89		3776
CELICA Hatchback (_T16_)	2.0 GT (ST162_)	103	09/85 – 08/89		3776
CELICA Hatchback (ST16_, AT16_)	1.6 (AT160_)	63	04/86 – 08/89	3402	
CELICA Hatchback (ST16_, AT16_)	1.6 (AT160_)	63	04/86 – 08/89	3472	
CELICA Hatchback (ST16_, AT16_)	1.6 GT (AT160_)	85	08/87 – 08/89	3402	
CELICA Hatchback (ST16_, AT16_)	1.6 GT (AT160_)	85	08/87 – 08/89	3472	
CELICA Hatchback (ST16_, AT16_)	1.6 GT 16V (AT160_)	91	09/85 – 08/89	3402	
CELICA Hatchback (ST16_, AT16_)	1.6 GT 16V (AT160_)	91	09/85 – 08/89	3472	
CELICA Hatchback (ST16_, AT16_)	2.0 GT	110	08/85 – 08/89	3402	
CELICA Hatchback (ST16_, AT16_)	2.0 GT	110	08/85 – 08/89	3472	

MAKE & MODEL		KW	YEAR		
TOYOTA					
CELICA Hatchback (ST16_, AT16_)	2.0 GT (ST162_)	103	09/85 – 08/89	3402	
CELICA Hatchback (ST16_, AT16_)	2.0 GT (ST162_)	103	09/85 – 08/89	3472	
CELICA III SUPRA	2.8	104	08/81 – 12/85	3418	
CELICA III SUPRA	2.8 (MA61_)	125	08/81 – 12/85	3418	
CELSIOR (UCF2_)	4.0	206	10/96 – 08/00	3915	
CELSIOR (UCF3_)	4.3 VVTi	208	09/00 – 08/06	3915	
CHASER III-IV	1.8 D		08/84 -	3418	
CHASER III-IV	2.0	77	08/84 – 09/91	3418	
CHASER III-IV	2.0	107	08/84 -	3418	
CHASER III-IV	2.0	110	08/84 -	3418	
CHASER III-IV	2.0 24V	110	08/86 – 08/91	3418	
CHASER III-IV	2.2 D	49	08/84 -	3418	
CHASER III-IV	2.4 TD	69	08/84 -	3418	
CHASER III-IV (_X7_, _X8_)	2.0 (1G-FE)	110	08/86 – 08/91	3666	
CHASER III-IV (_X7_, _X8_)	2.0 (1G-FE)	110	08/86 – 08/91	3672	
CHASER III-IV (_X7_, _X8_)	2.0 (21R)	77	08/84 – 09/91	3666	
CHASER III-IV (_X7_, _X8_)	2.0 (21R)	77	08/84 – 09/91	3672	
CHASER III-IV (_X7_, _X8_)	2.0 24V (1G-FE)	110	08/86 – 08/91	3666	
CHASER III-IV (_X7_, _X8_)	2.0 24V (1G-FE)	110	08/86 – 08/91	3672	
CHASER (_X10_)	2.5 VVTi	147	10/96 – 05/01	4086	4099
CHASER (_X10_)	2.5 VVTi	206	10/96 – 05/01	3915	
CHASER (_X9_)	1.8	94	10/93 – 08/96	3554	
CHASER (_X9_)	1.8	94	10/93 – 08/96	3651	
CHASER (_X9_)	2.0	110	10/92 – 08/96	3554	
CHASER (_X9_)	2.0	110	10/92 – 08/96	3651	
CHASER (_X9_)	2.4 D	63	10/92 – 08/96	3554	
CHASER (_X9_)	2.4 D	63	10/92 – 08/96	3651	
CHASER (_X9_)	2.4 TD	69	10/92 – 08/96	3554	
CHASER (_X9_)	2.4 TD	69	10/92 – 08/96	3651	
CHASER V (_X9_)	2.4 D (2L)	63	10/92 – 08/96	3666	
COASTER II (FB3_, HB3_, BB2_, RB2_)	2.4 (22R)	72	05/82 – 09/89	3930	
COASTER II (FB3_, HB3_, BB2_, RB2_)	3.4 BB 21, 26V		05/82 -	3930	
COASTER II (FB3_, HB3_, BB2_, RB2_)	4.2 D (1H-Z)	59	10/87 – 01/93	3930	
COASTER II (FB3_, HB3_, BB2_, RB2_)	4.2 D (1H-Z)	92	10/87 – 01/93	3930	
COASTER (BB1_, RB1_)	2.0 (5R)	64	08/77 – 04/82	3930	
COASTER (BB1_, RB1_)	2.4 (22R)	72	08/77 – 04/82	3930	
COASTER (BB1_, RB1_)	3.2 D (2B)	56	08/77 – 04/82	3930	
COASTER III (TRB5_, XZB5_, RZB4_, HZB5_, BZB5_, BB4_)	4.2 D (1H-Z)	96	02/93 – 10/03	3930	
COROLLA III (KE)	1.2 (3K)	40	07/75 – 01/80	3346	
COROLLA III (KE)	1.2 (3K)	40	07/75 – 01/80	3710	
COROLLA III (KE)	1.2 (3K-B)	40	07/75 – 01/80	3346	
COROLLA III (KE)	1.2 (3K-B)	40	07/75 – 01/80	3710	
COROLLA III (KE)	1.2 (3K-H)	40	07/75 – 01/80	3346	
COROLLA III (KE)	1.2 (3K-H)	40	07/75 – 01/80	3710	
COROLLA II-III (KE, TE)	1.2 (3K-B)	40	09/76 – 01/80	3346	
COROLLA II-III (KE, TE)	1.2 (3K-B)	40	09/76 – 01/80	3710	
COROLLA II-III (KE, TE)	1.2 (3K-C)	40	09/76 – 01/80	3346	
COROLLA II-III (KE, TE)	1.2 (3K-C)	40	09/76 – 01/80	3710	
COROLLA II-III (KE, TE)	1.2 (3K-H)	40	09/76 – 01/80	3346	
COROLLA II-III (KE, TE)	1.2 (3K-H)	40	09/76 – 01/80	3710	
COROLLA II-III (KE, TE)	1.6 (2T)	54	09/76 – 01/80	3709	
COROLLA II-III (KE, TE)	1.6 (2TB)	62	09/76 – 01/80	3709	
COROLLA III-IV (KE)	1.2 (3K-B)	40	07/75 – 01/80	3346	
COROLLA III-IV (KE)	1.2 (3K-B)	40	07/75 – 01/80	3710	
COROLLA III-IV (KE)	1.2 (3K-C)	40	07/75 – 01/80	3346	
COROLLA III-IV (KE)	1.2 (3K-C)	40	07/75 – 01/80	3710	
COROLLA III-IV (KE)	1.2 (3K-H)	40	07/75 – 01/80	3346	
COROLLA III-IV (KE)	1.2 (3K-H)	40	07/75 – 01/80	3710	
COROLLA II-IV (KE)	1.2 (3K-B)	40	08/74 – 12/80	3346	
COROLLA II-IV (KE)	1.2 (3K-B)	40	08/74 – 12/80	3710	
COROLLA II-IV (KE)	1.2 (3K-B)	43	10/72 – 07/79	3710	
COROLLA II-IV (KE)	1.2 (3K-C)	40	08/74 – 12/80	3346	
COROLLA II-IV (KE)	1.2 (3K-C)	40	08/74 – 12/80	3710	
COROLLA II-IV (KE)	1.2 (3K-C)	43	10/72 – 07/79	3710	
COROLLA II-IV (KE)	1.2 (3K-H)	40	08/74 – 12/80	3346	
COROLLA II-IV (KE)	1.2 (3K-H)	40	08/74 – 12/80	3710	
COROLLA II-IV (KE)	1.2 (3K-H)	43	10/72 – 07/79	3710	
COROLLA IV (_E7_)	1.3 (4K)	44	09/79 – 06/83	3709	
COROLLA IV (_E7_)	1.3 (4K)	48	02/82 – 08/87	3709	
COROLLA IV (_E7_)	1.3 (4K-C)	44	12/79 – 01/82	3709	
COROLLA IV (_E7_)	1.6 (2T)	55	10/82 – 09/83	3709	
COROLLA IV (_E7_)	1.6 GT (2T-G)	81	05/80 – 09/83	3709	
COROLLA IV (_E7_)	1.8 D (1C)	43	01/83 – 09/83	3709	
COROLLA IV (_E7_)	1.8 D (1C)	44	05/83 – 08/87	3709	
COROLLA IV / T18	1.3 (4K)	44	09/79 – 01/82	3709	
COROLLA IV / T18	1.3 (4K)	48	02/82 – 05/83	3709	

BESER®

MAKE & MODEL		KW	YEAR		
TOYOTA					
COROLLA IV / T18	1.6 (2T)	54	09/79 – 05/83	3709	
COROLLA IV / T18	1.6 (2T)	55	09/79 – 05/83	3709	
COROLLA IV / T18	1.6 (2TB)	63	09/79 – 05/83	3709	
COROLLA IV / T18	1.6 GT (2T-G)	81	05/80 – 09/83	3709	
COROLLA IV / T18	1.8 (3T-C)	57	09/79 – 05/82	3709	
COROLLA IV / T18	1.8 D (1C)	48	01/83 – 09/83	3709	
COROLLA (_E10_)	1.3 12V (EE100_)	53	07/92 – 04/97	3554	
COROLLA (_E10_)	1.3 12V (EE100_)	53	07/92 – 04/97	3651	
COROLLA (_E10_)	1.3 XLI (EE101_)	55	09/95 – 04/97	3554	
COROLLA (_E10_)	1.3 XLI (EE101_)	55	09/95 – 04/97	3651	
COROLLA (_E10_)	1.3 XLI 16V (EE101)	65	07/92 – 09/95	3554	
COROLLA (_E10_)	1.3 XLI 16V (EE101)	65	07/92 – 09/95	3651	
COROLLA (_E10_)	1.6	76	07/92 – 07/95	3554	
COROLLA (_E10_)	1.6	76	07/92 – 07/95	3651	
COROLLA (_E10_)	1.6	85	05/92 – 07/95	3554	
COROLLA (_E10_)	1.6	85	05/92 – 07/95	3651	
COROLLA (_E10_)	1.6 Si (AE101_)	84	09/95 – 04/97	3554	
COROLLA (_E10_)	1.6 Si (AE101_)	84	09/95 – 04/97	3651	
COROLLA (_E10_)	1.8 i	85	11/92 – 09/94	3554	
COROLLA (_E10_)	1.8 i	85	11/92 – 09/94	3651	
COROLLA (_E10_)	2.0 D (CE100_)	53	07/92 – 04/97	3554	
COROLLA (_E10_)	2.0 D (CE100_)	53	07/92 – 04/97	3651	
COROLLA (_E11_)	1.4 (EE111_)	63	04/97 – 02/00	3651	3776
COROLLA (_E11_)	1.4 (EE111_)	63	04/97 – 02/00	3554	
COROLLA (_E11_)	1.4 16V (ZZE111_)	71	02/00 – 11/01	3651	3776
COROLLA (_E11_)	1.4 16V (ZZE111_)	71	02/00 – 11/01	3554	
COROLLA (_E11_)	1.6 16V (ZZE112_)	81	02/00 – 11/01		3776
COROLLA (_E11_)	1.6 Aut. (AE111_)	79	04/97 – 02/00	3651	3776
COROLLA (_E11_)	1.6 Aut. (AE111_)	79	04/97 – 02/00	3554	
COROLLA (_E11_)	1.8	85	08/98 – 06/02	3554	
COROLLA (_E11_)	1.8	85	08/98 – 06/02	3651	
COROLLA (_E11_)	1.9 D (WZE110_)	51	02/00 – 11/01	3651	3776
COROLLA (_E11_)	1.9 D (WZE110_)	51	02/00 – 11/01	3554	
COROLLA (_E11_)	2.0 D (CE110_)	53	04/97 – 02/00	3651	3776
COROLLA (_E11_)	2.0 D (CE110_)	53	04/97 – 02/00	3554	
COROLLA (_E11_)	2.0 D-4D (CDE110_)	66	09/00 – 11/01	3817	3825
COROLLA (_E11_)	2.0 D-4D (CDE110_)	66	09/00 – 11/01		3776
COROLLA (_E12_)	1.4 D (NDE120_)	66	07/04 – 02/07		3825
COROLLA (_E12_)	1.4 VVT-i (ZZE120_)	71	01/02 – 12/06	3817	3788
COROLLA (_E12_)	1.4 VVT-i (ZZE120_)	71	01/02 – 12/06		3825
COROLLA (_E12_)	1.6 VVT-i (ZZE121_)	81	01/02 – 12/06	3817	3788
COROLLA (_E12_)	1.6 VVT-i (ZZE121_)	81	01/02 – 12/06		3825
COROLLA (_E12_)	1.8 VVTi	100	06/04 – 02/07		3788
COROLLA (_E12_)	1.8 VVTL-i TS	141	01/02 – 02/07	3817	3788
COROLLA (_E12_)	1.8 VVTL-i TS	141	01/02 – 02/07		3825
COROLLA (_E12_)	1.8 VVTL-i TS (ZZE123_)	160	10/05 – 12/06	3817	3825
COROLLA (_E12_)	1.8 VVTL-i TS (ZZE123_)	165	02/05 – 02/07	3817	3788
COROLLA (_E12_)	1.8 VVTL-i TS (ZZE123_)	165	02/05 – 02/07		3825
COROLLA (_E12_)	2.0 D-4D (CDE120_)	66	01/02 – 12/06	3817	3788
COROLLA (_E12_)	2.0 D-4D (CDE120_)	66	01/02 – 12/06		3825
COROLLA (_E12_)	2.0 D-4D (CDE120R_, CDE120L_)	81	01/02 – 12/06	3817	3825
COROLLA (_E12_)	2.0 D-4D (CDE120R_, CDE120L_)	85	05/03 – 02/07	3817	3825
COROLLA (_E8_)	1.3 (AE80)	51	06/83 – 10/84	3402	
COROLLA (_E8_)	1.3 (AE80)	51	06/83 – 10/84	3472	
COROLLA (_E8_)	1.3 (AE80/EE80)	55	10/84 – 08/87	3402	
COROLLA (_E8_)	1.3 (AE80/EE80)	55	10/84 – 08/87	3472	
COROLLA (_E8_)	1.6 (AE82)	54	12/85 – 05/88	3402	
COROLLA (_E8_)	1.6 (AE82)	54	12/85 – 05/88	3472	
COROLLA (_E8_)	1.6 (AE82)	62	06/83 – 08/87	3402	
COROLLA (_E8_)	1.6 (AE82)	62	06/83 – 08/87	3472	
COROLLA (_E8_)	1.6 (AE82_)	53	08/85 – 08/87	3402	
COROLLA (_E8_)	1.6 (AE82_)	53	08/85 – 08/87	3472	
COROLLA (_E8_)	1.8 D (CE80_)	43	06/83 – 05/88	3402	
COROLLA (_E8_)	1.8 D (CE80_)	43	06/83 – 05/88	3472	
COROLLA (_E8_)	1.8 D (CE80_)	47	06/83 – 06/89	3402	
COROLLA (_E8_)	1.8 D (CE80_)	47	06/83 – 06/89	3472	
COROLLA (_E9_)	1.3	60	05/87 – 04/92	3402	
COROLLA (_E9_)	1.3	60	05/87 – 04/92	3472	
COROLLA (_E9_)	1.3 i (EE90)	55	08/87 – 12/92	3402	
COROLLA (_E9_)	1.3 i (EE90)	55	08/87 – 12/92	3472	
COROLLA (_E9_)	1.6 (AE92)	66	08/87 – 12/89	3402	
COROLLA (_E9_)	1.6 (AE92)	66	08/87 – 12/89	3472	
COROLLA (_E9_)	1.6 i	77	11/89 – 06/93	3402	
COROLLA (_E9_)	1.6 i	77	11/89 – 06/93	3472	
COROLLA (_E9_)	1.6 i 4WD (AE92_)	77	10/87 – 08/90	3402	
COROLLA (_E9_)	1.6 i 4WD (AE92_)	77	10/87 – 08/90	3472	

BESER®

MAKE & MODEL   		KW	YEAR		
TOYOTA					
COROLLA (_E9_)	1.8 D (CE90_)	47	07/87 – 06/93	3402	
COROLLA (_E9_)	1.8 D (CE90_)	47	07/87 – 06/93	3472	
COROLLA (_E9_)	1.8 D (CE90_)	49	11/89 – 06/93	3402	
COROLLA (_E9_)	1.8 D (CE90_)	49	11/89 – 06/93	3472	
COROLLA (CDE12_, ZZE12_, NDE12_, ZDE12_)	1.8 VVTi	100	06/04 – 02/07	3769	
COROLLA (CDE12_, ZZE12_, NDE12_, ZDE12_)	1.8 VVTL-i TS (ZZE123_)	165	02/05 – 02/07	3769	
COROLLA Compact (_E10_)	1.3 12V (EE100_)	53	07/92 – 05/95	3554	
COROLLA Compact (_E10_)	1.3 12V (EE100_)	53	07/92 – 05/95	3651	
COROLLA Compact (_E10_)	1.3 XLI (EE101_)	55	09/95 – 04/97	3554	
COROLLA Compact (_E10_)	1.3 XLI (EE101_)	55	09/95 – 04/97	3651	
COROLLA Compact (_E10_)	1.3 XLI 16V (EE101)	65	07/92 – 09/95	3554	
COROLLA Compact (_E10_)	1.3 XLI 16V (EE101)	65	07/92 – 09/95	3651	
COROLLA Compact (_E10_)	1.6 Si (AE101_)	84	07/92 – 04/97	3554	
COROLLA Compact (_E10_)	1.6 Si (AE101_)	84	07/92 – 04/97	3651	
COROLLA Compact (_E10_)	1.8 GT (AE102_)	86	11/92 – 05/95	3554	
COROLLA Compact (_E10_)	1.8 GT (AE102_)	86	11/92 – 05/95	3651	
COROLLA Compact (_E10_)	1.8 GTi 4WD	81	11/92 – 04/95	3554	
COROLLA Compact (_E10_)	1.8 GTi 4WD	81	11/92 – 04/95	3651	
COROLLA Compact (_E10_)	2.0 D (CE100_)	53	07/92 – 04/97	3554	
COROLLA Compact (_E10_)	2.0 D (CE100_)	53	07/92 – 04/97	3651	
COROLLA Compact (_E11_)	1.4 (EE111_)	63	04/97 – 02/00	3651	3776
COROLLA Compact (_E11_)	1.4 (EE111_)	63	04/97 – 02/00	3554	
COROLLA Compact (_E11_)	1.4 (ZZE111_)	71	02/00 – 01/02	3651	3776
COROLLA Compact (_E11_)	1.4 (ZZE111_)	71	02/00 – 01/02	3554	
COROLLA Compact (_E11_)	1.6 (AE111_)	81	04/97 – 02/00	3651	3776
COROLLA Compact (_E11_)	1.6 (AE111_)	81	04/97 – 02/00	3554	
COROLLA Compact (_E11_)	1.6 (ZZE112_)	81	02/00 – 01/02		3776
COROLLA Compact (_E11_)	1.6 Aut. (AE111_)	79	04/97 – 02/00	3651	3776
COROLLA Compact (_E11_)	1.6 Aut. (AE111_)	79	04/97 – 02/00	3554	
COROLLA Compact (_E11_)	1.9 D (WZE110_)	51	02/00 – 01/02	3651	3776
COROLLA Compact (_E11_)	1.9 D (WZE110_)	51	02/00 – 01/02	3554	
COROLLA Compact (_E11_)	2.0 D (CE110_)	53	04/97 – 02/00	3651	3776
COROLLA Compact (_E11_)	2.0 D (CE110_)	53	04/97 – 02/00	3554	
COROLLA Compact (_E11_)	2.0 D-4D (CDE110_)	66	09/00 – 01/02		3776
COROLLA Compact (_E9_)	1.3 (EE90)	55	08/87 – 12/89	3402	
COROLLA Compact (_E9_)	1.3 (EE90)	55	08/87 – 12/89	3472	
COROLLA Compact (_E9_)	1.6 (AE92)	66	08/87 – 04/92	3402	
COROLLA Compact (_E9_)	1.6 (AE92)	66	08/87 – 04/92	3472	
COROLLA Compact (_E9_)	1.6 GTi (AE92, AE93)	85	08/87 – 04/92	3402	
COROLLA Compact (_E9_)	1.6 GTi (AE92, AE93)	85	08/87 – 04/92	3472	
COROLLA Compact (_E9_)	1.6 i (AE92)	77	08/89 – 04/92	3402	
COROLLA Compact (_E9_)	1.6 i (AE92)	77	08/89 – 04/92	3472	
COROLLA Compact (_E9_)	1.8 D (CE90)	47	08/87 – 04/92	3402	
COROLLA Compact (_E9_)	1.8 D (CE90)	47	08/87 – 04/92	3472	
COROLLA Compact (_E9_)	1.8 D (CE90)	49	08/89 – 04/92	3402	
COROLLA Compact (_E9_)	1.8 D (CE90)	49	08/89 – 04/92	3472	
COROLLA Coupe (AE86)	1.6 16V (AE86_)	85	12/85 – 04/87	3579	
COROLLA Coupe (AE86)	1.6 GT 16V (AE86)	91	08/83 – 07/87	3579	
COROLLA Coupe (AE86)	1.6 SR 16V	57	05/83 – 04/87	3402	
COROLLA Coupe (AE86)	1.6 SR 16V	57	05/83 – 04/87	3472	
COROLLA Estate (_E12_)	1.4 D4-D (NDE120_)	66	07/04 – 02/07	3817	3825
COROLLA Estate (_E12_)	1.4 VVT-i (ZZE120_)	71	01/02 – 02/07	3817	3788
COROLLA Estate (_E12_)	1.4 VVT-i (ZZE120_)	71	01/02 – 02/07		3825
COROLLA Estate (_E12_)	1.6 VVT-i (ZZE121_)	81	01/02 – 02/07	3817	3788
COROLLA Estate (_E12_)	1.6 VVT-i (ZZE121_)	81	01/02 – 02/07		3825
COROLLA Estate (_E12_)	1.8	100	06/04 – 02/07		3788
COROLLA Estate (_E12_)	1.8 4WD	100	12/01 – 02/07		3788
COROLLA Estate (_E12_)	2.0 D-4D (CDE120_)	66	01/02 – 02/07	3817	3788
COROLLA Estate (_E12_)	2.0 D-4D (CDE120_)	66	01/02 – 02/07	3769	3825
COROLLA Estate (_E12_)	2.0 D-4D (CDE120_)	85	04/04 – 02/07	3817	3788
COROLLA Estate (_E12J_, _E12T_)	1.4 D4-D (NDE120_)	85	04/04 – 02/07		3825
COROLLA Estate (_E12J_, _E12T_)	1.4 VVT-i (ZZE120_)	71	01/02 – 02/07	3769	
COROLLA Estate (_E12J_, _E12T_)	1.6 VVT-i (ZZE121_)	81	01/02 – 02/07	3769	
COROLLA Estate (_E12J_, _E12T_)	1.8	100	06/04 – 02/07	3769	
COROLLA Estate (_E12J_, _E12T_)	1.8 4WD	100	12/01 – 02/07	3769	
COROLLA FX Compact (E8B)	1.3 (EE80_)	55	08/85 – 08/87	3402	
COROLLA FX Compact (E8B)	1.3 (EE80_)	55	08/85 – 08/87	3472	
COROLLA FX Compact (E8B)	1.6	54	01/87 – 09/87	3402	
COROLLA FX Compact (E8B)	1.6	54	01/87 – 09/87	3472	
COROLLA FX Compact (E8B)	1.6	55	08/84 – 08/87	3402	
COROLLA FX Compact (E8B)	1.6	55	08/84 – 08/87	3472	
COROLLA FX Compact (E8B)	1.6 GT 16V (AE82_)	89	08/85 – 08/87	3402	
COROLLA FX Compact (E8B)	1.6 GT 16V (AE82_)	89	08/85 – 08/87	3472	
COROLLA FX Compact (E8B)	1.8 D (CE80_)	43	01/85 – 05/88	3402	
COROLLA FX Compact (E8B)	1.8 D (CE80_)	43	01/85 – 05/88	3472	
COROLLA FX Compact (E8B)	1.8 D (CE80_)	47	08/85 – 08/87	3402	

MAKE & MODEL		KW	YEAR		
TOYOTA					
COROLLA FX Compact (E8B)	1.8 D (CE80_)	47	08/85 – 08/87	3472	
COROLLA Liftback (_E10_)	1.3 12V (EE100_)	53	07/92 – 05/95	3554	
COROLLA Liftback (_E10_)	1.3 12V (EE100_)	53	07/92 – 05/95	3651	
COROLLA Liftback (_E10_)	1.3 XLI (EE101_)	65	07/92 – 04/97	3554	
COROLLA Liftback (_E10_)	1.3 XLI (EE101_)	65	07/92 – 04/97	3651	
COROLLA Liftback (_E10_)	1.6 GLI (AE101_)	84	07/92 – 04/97	3554	
COROLLA Liftback (_E10_)	1.6 GLI (AE101_)	84	07/92 – 04/97	3651	
COROLLA Liftback (_E10_)	1.8 GT (AE102_)	86	11/92 – 05/95	3554	
COROLLA Liftback (_E10_)	1.8 GT (AE102_)	86	11/92 – 05/95	3651	
COROLLA Liftback (_E10_)	2.0 D (CE100_)	53	07/92 – 04/97	3554	
COROLLA Liftback (_E10_)	2.0 D (CE100_)	53	07/92 – 04/97	3651	
COROLLA Liftback (_E11_)	1.4 (EE111_)	63	04/97 – 02/00	3651	3776
COROLLA Liftback (_E11_)	1.4 (EE111_)	63	04/97 – 02/00	3554	
COROLLA Liftback (_E11_)	1.4 (ZZE111_)	71	02/00 – 01/02	3651	3776
COROLLA Liftback (_E11_)	1.4 (ZZE111_)	71	02/00 – 01/02	3554	
COROLLA Liftback (_E11_)	1.6 (AE111_)	81	04/97 – 02/00	3651	3776
COROLLA Liftback (_E11_)	1.6 (AE111_)	81	04/97 – 02/00	3554	
COROLLA Liftback (_E11_)	1.6 (ZZE112_)	81	02/00 – 01/02		3776
COROLLA Liftback (_E11_)	1.6 Aut. (AE111_)	79	04/97 – 02/00	3651	3776
COROLLA Liftback (_E11_)	1.6 Aut. (AE111_)	79	04/97 – 02/00	3554	
COROLLA Liftback (_E11_)	1.8 (AE112)	85	09/98 – 11/01	3554	
COROLLA Liftback (_E11_)	1.8 (AE112)	85	09/98 – 11/01	3651	
COROLLA Liftback (_E11_)	1.9 D (WZE110_)	51	02/00 – 01/02	3651	3776
COROLLA Liftback (_E11_)	1.9 D (WZE110_)	51	02/00 – 01/02	3554	
COROLLA Liftback (_E11_)	2.0 D (CE110)	53	04/97 – 02/00	3651	3776
COROLLA Liftback (_E11_)	2.0 D (CE110)	53	04/97 – 02/00	3554	
COROLLA Liftback (_E11_)	2.0 D-4D (CDE110_)	66	09/00 – 01/02		3776
COROLLA Liftback (_E8_)	1.3 (AE80)	51	06/83 – 09/84	3402	
COROLLA Liftback (_E8_)	1.3 (AE80)	51	06/83 – 09/84	3472	
COROLLA Liftback (_E8_)	1.3 (EE80)	55	01/85 – 08/87	3402	
COROLLA Liftback (_E8_)	1.3 (EE80)	55	01/85 – 08/87	3472	
COROLLA Liftback (_E8_)	1.6 (AE82)	54	08/85 – 08/87	3402	
COROLLA Liftback (_E8_)	1.6 (AE82)	54	08/85 – 08/87	3472	
COROLLA Liftback (_E8_)	1.6 (AE82)	62	06/83 – 08/87	3402	
COROLLA Liftback (_E8_)	1.6 (AE82)	62	06/83 – 08/87	3472	
COROLLA Liftback (_E8_)	1.6 (AE82)	63	07/85 – 05/88	3402	
COROLLA Liftback (_E8_)	1.6 (AE82)	63	07/85 – 05/88	3472	
COROLLA Liftback (_E8_)	1.8 D (CE80)	47	06/83 – 08/87	3402	
COROLLA Liftback (_E8_)	1.8 D (CE80)	47	06/83 – 08/87	3472	
COROLLA Liftback (_E8_)	1.8 D (CE80_)	43	06/83 – 05/88	3402	
COROLLA Liftback (_E8_)	1.8 D (CE80_)	43	06/83 – 05/88	3472	
COROLLA Liftback (_E9_)	1.3	60	07/87 – 04/92	3402	
COROLLA Liftback (_E9_)	1.3	60	07/87 – 04/92	3472	
COROLLA Liftback (_E9_)	1.3 i (EE90)	55	08/87 – 04/92	3402	
COROLLA Liftback (_E9_)	1.3 i (EE90)	55	08/87 – 04/92	3472	
COROLLA Liftback (_E9_)	1.6	70	08/87 – 04/92	3402	
COROLLA Liftback (_E9_)	1.6	70	08/87 – 04/92	3472	
COROLLA Liftback (_E9_)	1.6 (AE92)	66	08/87 – 04/92	3402	
COROLLA Liftback (_E9_)	1.6 (AE92)	66	08/87 – 04/92	3472	
COROLLA Liftback (_E9_)	1.6 (AE92)	77	08/89 – 04/92	3402	
COROLLA Liftback (_E9_)	1.6 (AE92)	77	08/89 – 04/92	3472	
COROLLA Liftback (_E9_)	1.6 GTI (AE92_)	92	07/87 – 06/93	3402	
COROLLA Liftback (_E9_)	1.6 GTI (AE92_)	92	07/87 – 06/93	3472	
COROLLA Liftback (_E9_)	1.8 D (CE90)	47	08/87 – 04/92	3402	
COROLLA Liftback (_E9_)	1.8 D (CE90)	47	08/87 – 04/92	3472	
COROLLA Liftback (_E9_)	1.8 D (CE90)	49	08/89 – 04/92	3402	
COROLLA Liftback (_E9_)	1.8 D (CE90)	49	08/89 – 04/92	3472	
COROLLA Saloon (_E12_)	1.4 D-4D (NDE120_)	66	07/04 – 07/07	3817	3825
COROLLA Saloon (_E12_)	1.4 VVT-i (ZZE120_)	71	08/02 – 07/07	3817	3788
COROLLA Saloon (_E12_)	1.4 VVT-i (ZZE120_)	71	08/02 – 07/07	3953	3825
COROLLA Saloon (_E12_)	1.6 VVT-i (ZZE121_)	81	08/02 – 07/07	3817	3825
COROLLA Saloon (_E12_)	1.8	100	11/01 – 07/07		3788
COROLLA Saloon (_E12_)	2.0 D-4D (CDE120_)	66	08/02 – 07/07	3817	3788
COROLLA Saloon (_E12_)	2.0 D-4D (CDE120_)	66	08/02 – 07/07		3825
COROLLA Saloon (_E12_)	2.0 D-4D (CDE120_)	85	06/04 – 07/07	3817	3825
COROLLA Saloon (_E12J_, _E12T_)	1.6 VVT-i (ZZE121_)	81	08/02 – 07/07	3769	
COROLLA Saloon (_E12J_, _E12T_)	1.8	100	11/01 – 07/07	3769	
COROLLA Saloon (_E15_)	133	74	01/07 -	3953	3954
COROLLA Saloon (_E15_)	1.4 D-4D	66	10/06 -	3953	3954
COROLLA Saloon (_E15_)	1.4 VVT-i	71	01/07 -	3953	3954
COROLLA Saloon (_E15_)	1.6	97	01/09 -	3953	3954
COROLLA Saloon (_E15_)	1.6 Dual VVTi (ZRE141)	91	01/07 -	3953	3954
COROLLA Saloon (_E15_)	1.6 VVTi (ZRE141_)	90	07/10 – 05/14	3953	4037
COROLLA Saloon (_E15_)	1.6 VVTi (ZRE141_)	90	07/10 – 05/14	4176	
COROLLA Saloon (_E15_)	1.8	106	08/10 -	4147	4037
COROLLA Saloon (_E15_)	1.8	108	01/09 -	4147	4037

BESER®

MAKE & MODEL   		KW	YEAR		
TOYOTA					
COROLLA Saloon (_E15_)	1.8	111	08/10 -	3953	3954
COROLLA Saloon (_E15_)	1.8 VVTi	103	08/10 -	4147	4037
COROLLA Saloon (_E15_)	1.8 VVTL-i (ZZE152)	100	05/07 -	3953	3954
COROLLA Saloon (_E15_)	2.0 D-4D	93	01/07 -	3953	3954
COROLLA Saloon (_E18_, ZRE17_)	1.3 (NRE180_)	73	06/13 -	4176	3954
COROLLA Saloon (_E18_, ZRE17_)	1.4 D-4D (NDE180_)	66	06/13 -	4176	3954
COROLLA Saloon (_E18_, ZRE17_)	1.6 (ZRE171_)	90	06/13 -	3953	3954
COROLLA Saloon (_E18_, ZRE17_)	1.6 (ZRE171_)	90	06/13 -	4176	
COROLLA Saloon (_E18_, ZRE17_)	1.6 (ZRE181_)	97	06/13 -	3953	3954
COROLLA Saloon (_E18_, ZRE17_)	1.6 (ZRE181_)	97	06/13 -	4176	
COROLLA Saloon (_E18_, ZRE17_)	1.6 BiFuel	90	06/13 -	3953	3954
COROLLA Saloon (_E18_, ZRE17_)	1.6 BiFuel	90	06/13 -	4176	
COROLLA Saloon (_E18_, ZRE17_)	1.8 VVTi	103	06/13 -	3953	3954
COROLLA Saloon (_E18_, ZRE17_)	1.8 VVTi	103	06/13 -	4176	
COROLLA Saloon (_E18_, ZRE17_)	1.8 VVTi	111	12/13 -	3953	
COROLLA Saloon (_E18_, ZRE17_)	2.0 VVT-i (ZRE173_)	105	10/13 -	3953	3954
COROLLA Station Wagon (_E9_)	1.3 (EE90)	55	12/87 – 06/92	3402	
COROLLA Station Wagon (_E9_)	1.3 (EE90)	55	12/87 – 06/92	3472	
COROLLA Station Wagon (_E9_)	1.6 (AE92)	66	02/88 – 05/92	3402	
COROLLA Station Wagon (_E9_)	1.6 (AE92)	66	02/88 – 05/92	3472	
COROLLA Station Wagon (_E9_)	1.6 (AE92)	70	12/87 – 04/92	3402	
COROLLA Station Wagon (_E9_)	1.6 (AE92)	70	12/87 – 04/92	3472	
COROLLA Station Wagon (_E9_)	1.6 4WD	70	02/88 – 08/92	3402	
COROLLA Station Wagon (_E9_)	1.6 4WD	70	02/88 – 08/92	3472	
COROLLA Station Wagon (_E9_)	1.6 XLI (AE92_)	77	11/89 – 06/92	3402	
COROLLA Station Wagon (_E9_)	1.6 XLI (AE92_)	77	11/89 – 06/92	3472	
COROLLA Station Wagon (_E9_)	1.6 XLI 4WD (AE95)	77	08/88 – 06/92	3402	
COROLLA Station Wagon (_E9_)	1.6 XLI 4WD (AE95)	77	08/88 – 06/92	3472	
COROLLA Station Wagon (_E9_)	1.8 D (CE90)	47	12/87 – 06/92	3402	
COROLLA Station Wagon (_E9_)	1.8 D (CE90)	47	12/87 – 06/92	3472	
COROLLA Station Wagon (_E9_)	1.8 D (CE90)	49	08/89 – 06/92	3402	
COROLLA Station Wagon (_E9_)	1.8 D (CE90)	49	08/89 – 06/92	3472	
COROLLA Verso (_E12_)	1.6 VVT-i (ZZE121_)	81	01/02 – 05/04		3788
COROLLA Verso (_E12_)	1.8	92	09/01 – 05/04		3788
COROLLA Verso (_E12_)	1.8 VVT-i (ZZE122_)	99	01/02 – 05/04		3788
COROLLA Verso (_E12_)	1.8 VVTi 4WD	99	10/01 – 02/04	3890	4154
COROLLA Verso (_E12_)	2.0 D-4D	85	09/01 – 05/04	3890	4154
COROLLA Verso (_E12_)	2.0 D-4D (CDE120_)	66	01/02 – 05/04		3788
COROLLA Verso (ZDE12_, CDE12_)	1.6 VVT-i (ZZE121_)	81	01/02 – 05/04	3769	
COROLLA Verso (ZDE12_, CDE12_)	1.8	92	09/01 – 05/04	3769	
COROLLA Verso (ZER_, ZZE12_, R1_)	1.3 VVTi	64	03/04 – 03/09	3890	4154
COROLLA Verso (ZER_, ZZE12_, R1_)	1.4 D-4D	66	03/04 – 03/09	3890	4154
COROLLA Verso (ZER_, ZZE12_, R1_)	1.5	80	03/04 – 03/09	3890	4154
COROLLA Verso (ZER_, ZZE12_, R1_)	1.6 (ZNR10_)	81	04/04 – 03/09	3890	4154
COROLLA Verso (ZER_, ZZE12_, R1_)	1.8	92	03/04 – 03/09	3890	4154
COROLLA Verso (ZER_, ZZE12_, R1_)	1.8 (ZNR11_)	95	04/04 – 03/09	3890	4154
COROLLA Verso (ZER_, ZZE12_, R1_)	2.0 D-4D (CUR10_)	85	04/04 – 03/09	3890	4154
COROLLA Verso (ZER_, ZZE12_, R1_)	2.2 D-4D (AUR10_)	100	10/05 – 03/09	3890	4154
COROLLA Verso (ZER_, ZZE12_, R1_)	2.2 D-4D (AUR10_)	130	10/05 – 03/09	3890	4154
Corolla VII (_E12_) 44348 VVTi	1ZR-FE	91	01/2007 -		4037/1
Corolla VIII Rumion (_E15_) 44409 (ZRE152)	2ZR-FAE	105	01/2013 -		4037/1
Corolla VIII Rumion (_E15_) 44409 (ZRE152)	2ZR-FAE	106	09/2007 -		4037/1
Corolla VIII Sedan (_E15_, _E14_) 12055	1NR-FE	74	12/2008 - 07/2014		4037/1
Corolla VIII Sedan (_E15_, _E14_) 2.0 (ZRE143)	3ZR-FE	107	07/2010 - 06/2013		4037/1
Corolla VIII Sedan (_E15_, _E14_) 2.0 D-4D	1AD-FTV	93	11/2006 - 07/2014		4037/1
Corolla VIII Sedan (_E15_, _E14_) 2.0 VVTi	3ZR-FAE, 3ZR-FBE, 3ZR-FE	112	08/2010 -		4037/1
Corolla VIII Sedan (_E15_, _E14_) 2.0 VVTi	3ZR-FE	102	08/2010 - 11/2013		4037/1
Corolla VIII Sedan (_E15_, _E14_) 44287 D-4D (NDE150)	1ND-TV	66	10/2006 - 07/2014		4037/1
Corolla VIII Sedan (_E15_, _E14_) 44287 VVT-i (ZZE150_)	4ZZ-FE	71	11/2006 - 11/2013		4037/1
Corolla VIII Sedan (_E15_, _E14_) 44288	2AZ-FE	116	01/2008 -		4037/1
Corolla VIII Sedan (_E15_, _E14_) 44348	1ZR-FAE, 1ZR-FE	97	11/2006 - 11/2013		4037/1
Corolla VIII Sedan (_E15_, _E14_) 44348 Dual VVTi (ZRE141)	1ZR-FE	91	01/2007 - 07/2014		4037/1
Corolla VIII Sedan (_E15_, _E14_) 44348 VVTi (ZRE141_, ZRE151_)	1ZR-FE	90	07/2010 - 05/2014		4037/1
Corolla VIII Sedan (_E15_, _E14_) 44348 VVTi (ZZE141)	3ZZ-FE	80	12/2007 - 06/2013		4037/1
Corolla VIII Sedan (_E15_, _E14_) 44348 VVTi (ZZE141_)	3ZZ-FE	81	08/2007 - 06/2013		4037/1
Corolla VIII Sedan (_E15_, _E14_) 44409	2ZR-FAE	106	08/2010 -		4037/1
Corolla VIII Sedan (_E15_, _E14_) 44409 (ZRE142, ZRE152)	2ZR-FE	100	10/2006 - 07/2014		4037/1
Corolla VIII Sedan (_E15_, _E14_) 44409 (ZZE142_)	1ZZ-FE	97	12/2007 - 07/2014		4037/1
Corolla VIII Sedan (_E15_, _E14_) 44409 4WD	2ZR-FAE	98	08/2007 -		4037/1
Corolla VIII Sedan (_E15_, _E14_) 44409 VVTi	1ZZ-FE	101	10/2006 - 12/2008		4037/1
Corolla VIII Sedan (_E15_, _E14_) 44409 VVT-i	2ZR-FAE, 2ZR-FE	99	08/2008 - 04/2012		4037/1
Corolla VIII Sedan (_E15_, _E14_) 44409 VVTi (ZRE142)	2ZR-FBE, 2ZR-FE	103	08/2010 -		4037/1
Corolla VIII Sedan (_E15_, _E14_) 44409 VVTi (ZRE142)	2ZR-FE	97	01/2008 - 07/2014		4037/1
COROLLA Wagon (_E11_)	1.4 (EE111_)	63	04/97 – 02/00	3554	
COROLLA Wagon (_E11_)	1.4 (EE111_)	63	04/97 – 02/00	3651	
COROLLA Wagon (_E11_)	1.4 16V (ZZE111_)	71	02/00 – 10/01	3554	

BESER®

MAKE & MODEL		KW	YEAR		
TOYOTA					
COROLLA Wagon (E11_)	1.4 16V (ZZE111_)	71	02/00 – 10/01	3651	
COROLLA Wagon (E11_)	1.6 (AE111_)	81	04/97 – 02/00	3554	
COROLLA Wagon (E11_)	1.6 (AE111_)	81	04/97 – 02/00	3651	
COROLLA Wagon (E11_)	1.6 Aut. (AE111_)	79	04/97 – 02/00	3554	
COROLLA Wagon (E11_)	1.6 Aut. (AE111_)	79	04/97 – 02/00	3651	
COROLLA Wagon (E11_)	1.8 4WD (AE115_)	81	04/97 – 10/01	3554	
COROLLA Wagon (E11_)	1.8 4WD (AE115_)	81	04/97 – 10/01	3651	
COROLLA Wagon (E11_)	1.9 D (WZE110_)	51	02/00 – 10/01	3554	
COROLLA Wagon (E11_)	1.9 D (WZE110_)	51	02/00 – 10/01	3651	
COROLLA Wagon (E11_)	2.0 D (CE110_)	53	04/97 – 02/00	3554	
COROLLA Wagon (E11_)	2.0 D (CE110_)	53	04/97 – 02/00	3651	
COROLLA Wagon (_E10_)	1.3 12V (EE100_)	53	07/92 – 05/95	3554	
COROLLA Wagon (_E10_)	1.3 12V (EE100_)	53	07/92 – 05/95	3651	
COROLLA Wagon (_E10_)	1.3 XLI (EE101_)	55	09/95 – 04/97	3554	
COROLLA Wagon (_E10_)	1.3 XLI (EE101_)	55	09/95 – 04/97	3651	
COROLLA Wagon (_E10_)	1.3 XLI 16V (EE101_)	65	07/92 – 09/95	3554	
COROLLA Wagon (_E10_)	1.3 XLI 16V (EE101_)	65	07/92 – 09/95	3651	
COROLLA Wagon (_E10_)	1.6	76	07/92 – 07/95	3554	
COROLLA Wagon (_E10_)	1.6	76	07/92 – 07/95	3651	
COROLLA Wagon (_E10_)	1.6 Si (AE101_)	84	07/92 – 04/97	3554	
COROLLA Wagon (_E10_)	1.6 Si (AE101_)	84	07/92 – 04/97	3651	
COROLLA Wagon (_E10_)	1.8	81	09/92 – 04/97	3554	
COROLLA Wagon (_E10_)	1.8	81	09/92 – 04/97	3651	
COROLLA Wagon (_E10_)	1.8 16V 4WD (AE103_)	81	09/95 – 04/97	3554	
COROLLA Wagon (_E10_)	1.8 16V 4WD (AE103_)	81	09/95 – 04/97	3651	
COROLLA Wagon (_E10_)	1.8 4WD	92	08/95 – 04/97	3554	
COROLLA Wagon (_E10_)	1.8 4WD	92	08/95 – 04/97	3651	
COROLLA Wagon (_E10_)	1.8 XL	88	09/92 – 11/93	3554	
COROLLA Wagon (_E10_)	1.8 XL	88	09/92 – 11/93	3651	
COROLLA Wagon (_E10_)	1.8 XL 4WD	88	09/92 – 11/93	3554	
COROLLA Wagon (_E10_)	1.8 XL 4WD	88	09/92 – 11/93	3651	
COROLLA Wagon (_E10_)	2.0 D (CE100_)	53	07/92 – 04/97	3554	
COROLLA Wagon (_E10_)	2.0 D (CE100_)	53	07/92 – 04/97	3651	
COROLLA Wagon (_E11_)	1.4 (EE111_)	63	04/97 – 02/00		3776
COROLLA Wagon (_E11_)	1.4 16V (ZZE111_)	71	02/00 – 10/01		3776
COROLLA Wagon (_E11_)	1.6 (AE111_)	81	04/97 – 02/00		3776
COROLLA Wagon (_E11_)	1.6 16V (ZZE112_)	81	02/00 – 10/01		3776
COROLLA Wagon (_E11_)	1.6 Aut. (AE111_)	79	04/97 – 02/00		3776
COROLLA Wagon (_E11_)	1.8 4WD (AE115_)	81	04/97 – 10/01		3776
COROLLA Wagon (_E11_)	1.9 D (WZE110_)	51	02/00 – 10/01		3776
COROLLA Wagon (_E11_)	2.0 D (CE110_)	53	04/97 – 02/00		3776
COROLLA Wagon (_E11_)	2.0 D-4D	85	04/97 – 10/01	3817	3825
COROLLA Wagon (_E11_)	2.0 D-4D (CDE110_)	66	09/00 – 10/01		3776
Corolla X Sedan (_E18_, ZRE1_)/ Corolla Alti 2.0 VVT-i (ZRE173_, ZRE143_)	3ZR-FE	105	10/2013 - 12/2018		4037/1
Corolla X Sedan (_E18_, ZRE1_)/ Corolla Alti 44256 (NRE180_)	1NR-FE	73	06/2013 - 12/2018		4037/1
Corolla X Sedan (_E18_, ZRE1_)/ Corolla Alti 44287 D-4D (NDE180_)	1ND-TV	66	06/2013 - 12/2018		4037/1
Corolla X Sedan (_E18_, ZRE1_)/ Corolla Alti 44348 (ZRE171)	1ZR-FE	89	10/2013 - 12/2018		4037/1
Corolla X Sedan (_E18_, ZRE1_)/ Corolla Alti 44348 (ZRE171_)	1ZR-FE	90	06/2013 - 12/2018		4037/1
Corolla X Sedan (_E18_, ZRE1_)/ Corolla Alti 44348 (ZRE181_)	1ZR-FAE	97	06/2013 - 12/2018		4037/1
Corolla X Sedan (_E18_, ZRE1_)/ Corolla Alti 44409 VVTi	2ZRFAE/2ZRFE	98	08/2007 -		4037/1
Corolla XI Hatchback (_E21_) / Auris 44228 (NRE210)	8NR-FTS	85	01/2019 -	4360	
Corolla XI Hatchback (_E21_) / Auris 44228 4WD (NRE214H)	8NR-FTS	85	01/2019 -	4360	
Corolla XI Hatchback (_E21_) / Auris 44409 Hybrid (ZWE211)	2ZR-FXE	72	10/2018 -	4360	
Corolla XI Sedan (_E21_) 44348 VVTi (ZRE210)	1ZR-FAE, 1ZR-FE	90	01/2019 -	4360	
Corolla XI Sedan (_E21_) 44348 VVTi (ZRE210)	1ZR-FAE, 1ZR-FE	97	01/2019 -	4360	
Corolla XI Sedan (_E21_) 44409 VVTi (ZRE211)	2ZR-FE	111	01/2019 -	4360	
Corolla XI Sedan (_E21_) 44409 VVTi Hybrid (ZWE211)	2ZR-FXE	72	01/2019 -	4360	
Corolla XI SW (_E21_) 44228 (NRE210)	8NR-FTS	85	02/2019 -	4360	
Corolla XI SW (_E21_) 44409 Hybrid (ZWE211)	2ZR-FXE	72	02/2019 -	4360	
CORONA V (RT118)	1.5 DLX	48	02/70 -	3314	
CORONA V (RT118)	1.5 DLX	48	02/70 -	3336	
CORONA V (RT118)	1.6 (12R)	49	02/72 – 07/73	3336	
CORONA V (RT118)	1.6 (12R)	49	02/72 – 07/73	3314	
CORONA V (RT118)	1.6 DLX	50	02/70 -	3314	
CORONA V (RT118)	1.6 DLX	50	02/70 -	3336	
CORONA V (RT118)	2.0	55	02/70 -	3314	
CORONA V (RT118)	2.0	55	02/70 -	3336	
CORONA V (RT118)	2.0 (18R)	65	09/75 – 05/79	3336	
CORONA V (RT118)	2.0 (18R)	65	09/75 – 05/79	3314	
CORONA V (RT118)	2.0 (18R-G)	88	02/72 – 07/73	3336	
CORONA V (RT118)	2.0 (18R-G)	88	02/72 – 07/73	3314	
CORONA VI (RT1_)	1.8 DLX, Special	63	08/73 -	3314	
CORONA VI (RT1_)	1.8 DLX, Special	63	08/73 -	3336	
CORONA VI (RT1_)	2.0 (18R)	65	01/76 – 05/79	3314	
CORONA VI (RT1_)	2.0 (18R)	65	01/76 – 05/79	3336	
CORONA VI (RT1_)	2.0 (18R)	65	01/76 – 05/79	3375	

MAKE & MODEL		KW	YEAR		
TOYOTA					
CORONA VI (RT1_)	2.0 Mark II (18R)	65	12/75 – 10/77	3314	
CORONA VI (RT1_)	2.0 Mark II (18R)	65	12/75 – 10/77	3336	
CORONA VI (RT1_)	All models		08/73 -	3375	
CORONA VI (RT13_, TT13_)	1.8	63	09/78 -	3375	
CORONA VI (RT13_, TT13_)	1.8 (3T)	63	06/79 – 07/81	3709	
CORSA Hatchback	1.3	65	11/94 – 09/99	3402	
CORSA Hatchback	1.3	65	11/94 – 09/99	3472	
CORSA Hatchback	1.5	70	11/94 – 09/99	3402	
CORSA Hatchback	1.5	70	11/94 – 09/99	3472	
CORSA Hatchback	1.5 D	40	11/94 – 09/99	3402	
CORSA Hatchback	1.5 D	40	11/94 – 09/99	3472	
CORSA Saloon	1.3	65	11/94 – 09/99	3402	
CORSA Saloon	1.3	65	11/94 – 09/99	3472	
CORSA Saloon	1.5	70	11/94 – 09/99	3402	
CORSA Saloon	1.5	70	11/94 – 09/99	3472	
CORSA Saloon	1.5 D	40	11/94 – 09/99	3402	
CORSA Saloon	1.5 D	40	11/94 – 09/99	3472	
COSTA	All models		01/86 -	3930	
CRESSIDA IV (MX83)	2.0 (1G-FE)	125	10/88 – 09/91	3672	
CRESSIDA IV (MX83)	2.0 (1G-FE)	125	10/88 – 09/91	3666	
CRESSIDA IV (MX83)	2.4 TD (2L-TII)	69	10/88 – 01/93	3672	
CRESSIDA IV (MX83)	2.4 TD (2L-TII)	69	10/88 – 01/93	3666	
CRESSIDA IV (MX83)	2.5 Turbo (1JZ-GTE)	206	10/91 – 09/92	3672	
CRESSIDA IV (MX83)	2.5 Turbo (1JZ-GTE)	206	10/91 – 09/92	3666	
CRESSIDA IV (MX83)	3.0 (7M-GE)	147	10/88 – 09/92	3672	
CRESSIDA IV (MX83)	3.0 (7M-GE)	147	10/88 – 09/92	3666	
CRESSIDA IV (RX8_)	2.0 (1G-FE)	110	10/88 – 09/92	3666	
CRESSIDA IV (RX8_)	2.0 (1G-FE)	110	10/88 – 09/92	3672	
CRESSIDA IV (RX8_)	2.4 TD (2L-TII)	69	10/88 – 09/92	3666	
CRESSIDA IV (RX8_)	2.4 TD (2L-TII)	69	10/88 – 09/92	3672	
CRESSIDA IV (RX8_)	3.0 (7M-GE)	147	10/88 – 09/92	3666	
CRESSIDA IV (RX8_)	3.0 (7M-GE)	147	10/88 – 09/92	3672	
CRESTA II	2.0 (1G-GE)	110	08/84 – 08/88	3418	
CRESTA II	2.0 (21R)	77	08/84 – 05/87	3418	
CRESTA II	2.0 24V (1G-FE)	110	08/84 – 08/88	3418	
CRESTA II	2.4 (22R)	81	06/87 – 08/88	3418	
CRESTA II	2.8 (5M-GE)	125	11/84 – 08/88	3418	
CRESTA III-IV (_X8_)	2.0 (1G-GE)	110	09/88 – 10/96	3666	
CRESTA III-IV (_X8_)	2.4 D (2L)	63	09/88 – 10/96	3666	
CRESTA III-IV (_X8_)	2.8 (5M-E)	99	09/88 – 08/90	3666	
CRESTA III-IV (_X8_)	3.0 (7M-GE)	150	09/88 – 10/96	3666	
CROWN V (MS8_, RS8_)	All models		09/74 -	3375	
CROWN VI (_S1_)	2.2 D (L)	53	04/80 – 07/83	3369	
CROWN VI (_S1_)	2.8 i Super Saloon (5M-GE)	125	02/84 – 03/85	3369	
CROWN VI (_S1_)	2.8 SI (5M-E)	107	04/80 – 07/83	3369	
CROWN VI (_S1_)	2.8 SI (5M)	107	04/80 – 07/83	3369	
CROWN COMFORT X-XI-XII (_S1_)	2.0 LPG (1TR-FPE)	83	01/96 – 07/08	3666	
CROWN COMFORT X-XI-XII (_S1_)	2.0 LPG (1TR-FPE)	83	01/96 – 07/08	3672	
CROWN Saloon (_S17_)	4.0 (UZS171_, UZS173_, UZS175_)	206	09/99 – 05/04	4086	
CROWN Saloon (_S20_)	3.5 Hybrid	218	02/08 – 11/12		4113
CROWN Saloon (_S20_)	3.5 V6	232	02/08 – 11/12		4113
CROWN Saloon (_S20_)	4.3 V8 4WD	206	04/09 – 11/12	3910	
CROWN Saloon (CRS_, JZS_, GRS18_, UZS_)	4.3 Royal Saloon	206	09/03 – 02/08	3910	
CROWN Saloon (CRS_, JZS_, GRS18_, UZS_)	4.3 Royal Saloon 4WD	206	09/03 – 02/08	3910	
DUET (M11_, M10_)	1.0	40	09/98 – 04/04	3901	
DYNA	1.6	51	08/77 – 04/79	3379	
DYNA	2.0	72	08/77 – 08/84	3379	
DYNA	2.0	79	09/84 – 08/87	3379	
DYNA	2.4 D (2L)	55	08/77 – 04/79	3379	
DYNA	2.4 D (2J)	55	09/84 – 08/87	3379	
DYNA	3.0 D (11B)	75	08/77 – 04/79	3379	
DYNA	3.4 D (13B)	66	09/84 – 08/87	3379	
DYNA	3.7 D (14B)	71	08/77 – 04/79	3379	
DYNA 200	2.2 (4Y)	69	10/93 – 05/95	3930	
DYNA 200	3.0 D (11B)	75	01/85 – 05/95	3930	
DYNA 200	3.4 D (3B)	66	10/89 – 05/95	3930	
DYNA 200	3.7 D (14B)	71	08/88 – 05/95	3930	
DYNA Platform/Chassis (KD_, LY_, TRY2_, KDY2_,XZU4_, XZU3_,	2.0	98	09/06 -	3777	
DYNA Platform/Chassis (KD_, LY_, TRY2_, KDY2_,XZU4_, XZU3_,	2.0 LPG	85	09/06 -	3777	
DYNA Platform/Chassis (KD_, LY_, TRY2_, KDY2_,XZU4_, XZU3_,	2.0 LPG 4WD	85	09/06 -	3777	
DYNA Platform/Chassis (KD_, LY_, TRY2_, KDY2_,XZU4_, XZU3_,	2.0 LPG 4WD	98	09/06 -	3777	
DYNA Platform/Chassis (KD_, LY_, TRY2_, KDY2_,XZU4_, XZU3_,	2.5 D4d	65	08/01 -	3777	
DYNA Platform/Chassis (KD_, LY_, TRY2_, KDY2_,XZU4_, XZU3_,	2.5 D4d	75	08/01 -	3777	
DYNA Platform/Chassis (KD_, LY_, TRY2_, KDY2_,XZU4_, XZU3_,	3.0 D4d	65	08/01 -	3777	
DYNA Platform/Chassis (KD_, LY_, TRY2_, KDY2_,XZU4_, XZU3_,	3.0 D4d (KDY22_, KDY23_,KDY25_, KDY26_)	106	09/06 -	3777	
DYNA Platform/Chassis (KD_, LY_, TRY2_, KDY2_,XZU4_, XZU3_,	3.0 D4d (KDY261_, KDY251_,KDY231_, KDY221_)	80	09/06 -	3777	

MAKE & MODEL		KW	YEAR		
TOYOTA					
DYNA Platform/Chassis (KD_, LY_, TRY2_, KDY2_,XZU4_, XZU3_,	3.0 D4d 4WD	106	09/06 -	3777	
DYNA Platform/Chassis (KD_, LY_, TRY2_, KDY2_,XZU4_, XZU3_,	4.6 D4d	96	06/03 -	3777	
ECHO Saloon (NCP1_)	1.5 VVTi (NCP12_)	78	08/99 – 08/05	3768	
ESQUIRE (_R8_)	1.8 Hybrid	73	10/14 -	3953	
ESQUIRE (_R8_)	2.0	112	10/14 -	3953	
ESQUIRE (_R8_)	2.0 4WD	112	10/14 -	3953	
FJ CRUISER (GSJ1_)	4.0 (GSJ10_)	178	01/06 – 10/10	3693	
FJ CRUISER (GSJ1_)	4.0 4WD (GSJ15_)	178	01/06 – 10/10	3693	
FJ CRUISER (GSJ1_)	4.0 4WD (GSJ15_)	193	11/10 -	3693	
FJ CRUISER (GSJ1_)	4.0 4WD (GSJ15_)	200	12/10 -	3693	
FJ CRUISER (GSJ1_)	4.0 4WD (GSJ15_)	203	01/11 -	3693	
FORTUNER II / SW4 (_AN16_)	2.4 D (2GD-FTV)	110	05/15 -	4239	
FORTUNER II / SW4 (_AN16_)	2.7 (2TR-FE)	120	01/16 -	4239	
FORTUNER II / SW4 (_AN16_)	2.7 (2TR-FE)	122	05/15 -	4239	
FORTUNER II / SW4 (_AN16_)	2.8 D (1GD-FTV)	130	05/15 -	4239	
FORTUNER II / SW4 (_AN16_)	3.0 TDI (1KD-FTV)	130	10/15 -	4239	
FORTUNER II / SW4 (_AN16_)	4.0 V6	175	11/15 -	4239	
FORTUNER (_AN16_)	2.4 D	110	05/15 -	3891	
FORTUNER (_AN16_)	2.4 D 4WD	110	05/15 -	3891	
FORTUNER (_AN16_)	2.7	120	01/16 -	3891	
FORTUNER (_AN16_)	2.7	122	05/15 -	3891	
FORTUNER (_AN16_)	2.7 4WD	122	05/15 -	3891	
FORTUNER (_AN16_)	2.8 D	130	05/15 -	3891	
FORTUNER (_AN16_)	2.8 D 4WD	130	05/15 -	3891	
GAIA (CXM1_, SXM1_, ACM1_)	2.0 VVTi	112	05/98 – 10/03	3554	
GAIA (CXM1_, SXM1_, ACM1_)	2.0 VVTi	112	05/98 – 10/03	3651	
GAIA (CXM1_, SXM1_, ACM1_)	2.0 VVTi 4WD	112	05/98 – 10/03	3554	
GAIA (CXM1_, SXM1_, ACM1_)	2.0 VVTi 4WD	112	05/98 – 10/03	3651	
GAIA (CXM1_, SXM1_, ACM1_)	2.2 TD	69	10/98 – 10/03	3554	
GAIA (CXM1_, SXM1_, ACM1_)	2.2 TD	69	10/98 – 10/03	3651	
GRANVIA (_H2_, _H1_)	2.4	100	08/95 – 12/04	3777	4275
GRANVIA (_H2_, _H1_)	2.7	112	08/95 – 12/04	3777	4275
GRANVIA (_H2_, _H1_)	3.0 TDi	96	08/95 – 12/04	3777	4275
GRANVIA (_H2_, _H1_)	3.4	140	08/95 – 12/04	3777	4275
GT 86 Coupe (ZN6_)	2.0 GT (ZN6AC_, ZN6BC_)	147	03/12 -		4213
HARRIER (_U1_)	2.2 4WD	103	03/98 – 01/03	3822	3776
HARRIER (_U1_)	2.4	118	06/00 – 01/03	3822	3776
HARRIER (_U1_)	2.4 4WD	118	06/00 – 01/03	3822	3776
HARRIER (_U1_)	3.0 4WD	164	03/98 – 01/03	3822	3776
HARRIER (_U3_)	2.4 4WD (ACU35_)	118	10/03 – 06/12	4105	4111
HARRIER (_U3_)	3.0 4WD (MCU35_, MCU36_)	150	10/03 – 12/08	4105	4111
HARRIER (_U3_)	3.3 4WD	171	10/03 – 12/08	4105	4111
HARRIER (_U3_)	3.3 Hybrid (MHU38_)	155	04/05 – 05/12	4105	4111
HARRIER (_U3_)	3.5 4WD (GSU35_, GSU36_)	206	04/05 – 12/08	4105	4111
HARRIER (_U6_)	2.0 (ZSU60W)	111	10/13 -	4077	3949
HARRIER (_U6_)	2.0 4WD (ZSU65W)	111	10/13 -	4077	3949
HCV Dyna III Platform/Chassis (KD,LY,Y2,U3,U4,U6,U8) 4.0 D4d (XZU423_, XZU435_, XZU427_, XZU425_, XZU41	N04C-TQ, N04C-UL, N04C-UP	110	10/2006 -	4354	
HCV Dyna III Platform/Chassis (KD,LY,Y2,U3,U4,U6,U8) 4.0 D4d 4WD (XZU6_, XZU7_, XZU4_)	N04C-UL, N04C-UP	110	05/2011 -	4354	
HIACE Bus (Minibus-M2-Segment)	1.6 (RH20_, RH30_)	49	02/77 – 11/82	3379	
HIACE Bus (Minibus-M2-Segment)	1.8	58	02/77-	3379	
HIACE Bus (Minibus-M2-Segment)	2.2 D (LH20_, LH30_) (L)	49	09/79 – 10/82	3379	
HIACE Furgón (LCVs-N1 Segment)	1.6 (12R)	49	02/77 – 03/83	3379	
HIACE Furgón (LCVs-N1 Segment)	2.0 (18R)	65	07/77 – 03/83	3379	
HIACE Furgón (LCVs-N1 Segment)	2.2 D (L)	46	01/79 – 03/83	3379	
HIACE I Box (RH1_, LH3_, RH3_, RH2_, LH2_, LH1_)	1.6 (RH20-30)	49	02/77 – 03/83	3414	
HIACE I Box (RH1_, LH3_, RH3_, RH2_, LH2_, LH1_)	2.0 (RH25-32)	65	07/77 – 03/83	3414	
HIACE I Box (RH1_, LH3_, RH3_, RH2_, LH2_, LH1_)	2.2 D (LH20-30)	46	01/79 – 03/83	3414	
HIACE I Wagon (LH1_, RH1_, LH3_, RH3_, LH2_, RH2_)	1.6 (RH20_, RH30_)	49	02/77 – 11/82	3414	
HIACE II Box (LH5_, YH7_, LH7_, LH6_, YH6_, YH5_)	1.8	58	03/83 – 11/89	3414	
HIACE II Box (LH5_, YH7_, LH7_, LH6_, YH6_, YH5_)	1.8	58	03/83 – 11/89	3777	
HIACE II Box (LH5_, YH7_, LH7_, LH6_, YH6_, YH5_)	2.0	65	01/84 – 11/89	3414	
HIACE II Box (LH5_, YH7_, LH7_, LH6_, YH6_, YH5_)	2.0	65	01/84 – 11/89	3777	
HIACE II Box (LH5_, YH7_, LH7_, LH6_, YH6_, YH5_)	2.2 4WD	69	09/87 – 08/89	3414	
HIACE II Box (LH5_, YH7_, LH7_, LH6_, YH6_, YH5_)	2.2 4WD	69	09/87 – 08/89	3777	
HIACE II Box (LH5_, YH7_, LH7_, LH6_, YH6_, YH5_)	2.2 D	49	03/83 – 11/89	3414	
HIACE II Box (LH5_, YH7_, LH7_, LH6_, YH6_, YH5_)	2.2 D	49	03/83 – 11/89	3777	
HIACE II Box (LH5_, YH7_, LH7_, LH6_, YH6_, YH5_)	2.4 D	55	05/84 – 11/89	3414	
HIACE II Box (LH5_, YH7_, LH7_, LH6_, YH6_, YH5_)	2.4 D	55	05/84 – 11/89	3777	
HIACE II Box (LH5_, YH7_, LH7_,LH6_, YH6_,YH5_)	2.4 D 4WD	55	04/84 – 07/87	3414	
HIACE II Box (LH5_,YH7_, LH7_, LH6_, YH6_, YH5_)	2.4 D 4WD	55	04/84 – 07/87	3777	
HIACE II Wagon (LH7_, LH5_, LH6_, YH7_, YH6_,YH5_)	1.8	58	03/83 – 11/89	3777	
HIACE II Wagon (LH7_, LH5_, LH6_, YH7_, YH6_,YH5_)	1.8 (H5G)	58	03/83 – 11/89	3414	
HIACE II Wagon (LH7_, LH5_, LH6_, YH7_, YH6_,YH5_)	2.0 (YH51_, YH61_)	65	01/85 – 08/89	3414	
HIACE II Wagon (LH7_, LH5_, LH6_, YH7_, YH6_,YH5_)	2.0 (YH51_, YH61_)	65	01/85 – 08/89	3777	
HIACE II Wagon (LH7_, LH5_, LH6_, YH7_, YH6_,YH5_)	2.2 D (H5G)	49	03/83 – 11/89	3777	
HIACE II Wagon (LH7_, LH5_, LH6_, YH7_, YH6_,YH5_)	2.2 D (H5G)	49	03/83 – 11/89	3414	

BESER

MAKE & MODEL		KW	YEAR		
TOYOTA					
HIACE II Wagon (LH7_, LH5_, LH6_, YH7_, YH6_,YH5_)	2.4 D (H5G)	55	08/84 – 08/89	3777	
HIACE II Wagon (LH7_, LH5_, LH6_, YH7_, YH6_,YH5_)	2.4 D (H5G)	55	08/84 – 08/89	3414	
HIACE II Wagon (LH7_, LH5_, LH6_, YH7_, YH6_,YH5_)	2.4 D 4WD (H5F)	54	01/87 – 01/88	3777	
HIACE III Box (YH7_, LH6_, LH7_, LH5_, YH5_, YH6_)	2.0 (RCH102_, RCH112_)	74	02/90 – 08/95	3714	
HIACE III Box (YH7_, LH6_, LH7_, LH5_, YH5_, YH6_)	2.0 (RCH102_, RCH112_)	74	02/90 – 08/95	3777	
HIACE III Box (YH7_, LH6_, LH7_, LH5_, YH5_, YH6_)	2.4	88	08/89 – 08/95	3714	
HIACE III Box (YH7_, LH6_, LH7_, LH5_, YH5_, YH6_)	2.4	88	08/89 – 08/95	3777	
HIACE III Box (YH7_, LH6_, LH7_, LH5_, YH5_, YH6_)	2.4 4WD (RCH103_, RCH113_)	88	08/89 – 08/95	3714	
HIACE III Box (YH7_, LH6_, LH7_, LH5_, YH5_, YH6_)	2.4 4WD (RCH103_, RCH113_)	88	08/89 – 08/95	3777	
HIACE III Box (YH7_, LH6_, LH7_, LH5_, YH5_, YH6_)	2.4 D	57	09/89 – 08/95	3714	
HIACE III Box (YH7_, LH6_, LH7_, LH5_, YH5_, YH6_)	2.4 D	57	09/89 – 08/95	3777	
HIACE III Box (YH7_, LH6_, LH7_, LH5_, YH5_, YH6_)	2.4 D (LH10_, LH11_)	55	08/89 – 08/95	3714	
HIACE III Box (YH7_, LH6_, LH7_, LH5_, YH5_, YH6_)	2.4 D (LH10_, LH11_)	55	08/89 – 08/95	3777	
HIACE III Box (YH7_, LH6_, LH7_, LH5_, YH5_, YH6_)	2.4 D 4WD	57	09/89 – 08/95	3714	
HIACE III Box (YH7_, LH6_, LH7_, LH5_, YH5_, YH6_)	2.4 D 4WD	57	09/89 – 08/95	3777	
HIACE III Box (YH7_, LH6_, LH7_, LH5_, YH5_, YH6_)	2.4 D 4WD (LXH22_, LXH12_, LH114_, LH112_, LH104_,LH102_)	55	08/89 – 07/99	3777	
HIACE III Box (YH7_, LH6_, LH7_, LH5_, YH5_, YH6_)	2.4 D 4WD (LXH22_, LXH12_,LH114_, LH112_, LH104_,LH102_)	55	08/89 – 07/99	3714	
HIACE III Box (YH7_, LH6_, LH7_, LH5_, YH5_, YH6_)	2.5 D-4D 4WD	65	08/01 – 08/04	3777	
HIACE III Box (YH7_, LH6_, LH7_, LH5_, YH5_, YH6_)	2.8 D	61	08/89 – 08/00	3714	
HIACE III Box (YH7_, LH6_, LH7_, LH5_, YH5_, YH6_)	3.0 D	65	08/98 – 08/04	3777	
HIACE III Wagon (_H1_)	2.0 (RZH102)	74	08/89 – 04/98	3777	
HIACE III Wagon (_H1_)	2.4	85	11/96 – 08/04	3777	
HIACE III Wagon (_H1_)	2.4 (RZH103)	88	08/89 – 08/95	3777	
HIACE III Wagon (_H1_)	2.4 4WD (RZH103_, RZH109_, RZH113_, RZH115_)	88	08/89 – 07/95	3777	
HIACE III Wagon (_H1_)	2.4 D (LH102)	55	08/09 – 08/95	3777	
HIACE III Wagon (_H1_)	2.4 D (LH5_, LH6_, LH7_, LH10_, LH11_)	57	08/87 – 12/04	3777	
HIACE III Wagon (_H1_)	2.4 D 4WD (LH51_, LH61_, LH66_, LH71_)	55	08/87 – 08/95	3777	
HIACE III Wagon (_H1_)	2.5 D-4D 4WD	75	08/01 – 08/04	3777	
HIACE III Wagon (LH1_, RZH1_)	2.0 (RZH102)	74	08/89 – 04/98	3714	
HIACE III Wagon (LH1_, RZH1_)	2.4 (RZH103)	88	08/89 – 08/95	3714	
HIACE III Wagon (LH1_, RZH1_)	2.4 4WD (RZH103_, RZH109_, RZH113_, RZH115_)	88	08/89 – 07/95	3714	
HIACE III Wagon (LH1_, RZH1_)	2.4 D (LH5_, LH6_, LH7_, LH10_, LH11_)	57	08/87 – 12/04	3714	
HIACE III Wagon (LH1_, RZH1_)	2.4 D 4WD (LH51_, LH61_, LH66_, LH71_)	55	08/87 – 08/95	3714	
HIACE III Wagon (LH1_, RZH1_)	2.8 D	61	08/89 – 08/00	3714	
HIACE III Wagon (LH1_, RZH1_)	3.0 D	65	08/98 – 08/04	3714	
HIACE IV Box (LXH1_, RZH1_, LH1_)	2.4 (RCH12_, RCH22_)	85	08/95 – 02/05	3777	
HIACE IV Box (LXH1_, RZH1_, LH1_)	2.4 4WD (RCH18_, RCH28_)	85	08/95 – 04/98	3777	
HIACE IV Box (LXH1_, RZH1_, LH1_)	2.4 D (LXH12_, LXH22_)	55	09/95 – 08/01	3777	
HIACE IV Box (LXH1_, RZH1_, LH1_)	2.4 D (LXH12_, LXH22_)	58	08/95 – 08/06	3777	
HIACE IV Box (LXH1_, RZH1_, LH1_)	2.4 D (LXH12_, LXH22_)	61	08/95 – 07/01	3777	
HIACE IV Box (LXH1_, RZH1_, LH1_)	2.4 i (RZH10)	88	08/95 – 02/05	3777	
HIACE IV Box (LXH1_, RZH1_, LH1_)	2.4 TD (LXH12_, LXH22_)	66	08/95 – 08/06	3777	
HIACE IV Box (LXH1_, RZH1_, LH1_)	2.4 TD 4WD (LXH18_, LXH28_)	66	08/95 – 08/06	3777	
HIACE IV Box (LXH1_, RZH1_, LH1_)	2.5 D-4D (KLH12_, KLH22_)	65	11/01 – 08/06	3777	
HIACE IV Box (LXH1_, RZH1_, LH1_)	2.5 D-4D (KLH12_, KLH22_)	75	11/01 – 08/06	3777	
HIACE IV Box (LXH1_, RZH1_, LH1_)	2.5 D-4D 4WD (KLH12_, KLH22_)	75	11/01 – 08/06	3777	
HIACE IV Box (LXH1_, RZH1_, LH1_)	2.7 (RCH13_, RCH23_)	105	04/98 – 08/06	3777	
HIACE IV Box (LXH1_, RZH1_, LH1_)	2.7 4WD (RCH19_, RCH29_)	106	04/98 -	3777	
HIACE IV Bus (_H1_, _H2_)	2.4 (RCH12_, RCH22_)	85	08/95 – 04/98	3777	
HIACE IV Bus (_H1_, _H2_)	2.4 4WD (RCH18_)	85	08/95 – 04/98	3777	
HIACE IV Bus (_H1_, _H2_)	2.4 D	61	08/95 – 08/06	3777	
HIACE IV Bus (_H1_, _H2_)	2.4 D (LH10_, LH11_, LXH12_)	55	07/99 – 08/06	3777	
HIACE IV Bus (_H1_, _H2_)	2.4 D (LH10_, LH11_, LXH12_, LXH22_)	58	08/95 – 08/06	3777	
HIACE IV Bus (_H1_, _H2_)	2.4 TD (LXH12_, LXH22_)	66	08/95 – 08/06	3777	
HIACE IV Bus (_H1_, _H2_)	2.4 TD 4WD (H18/28)	66	08/95 – 08/06	3777	
HIACE IV Bus (_H1_, _H2_)	2.5 D-4D (KLH12_)	65	11/01 – 08/06	3777	
HIACE IV Bus (_H1_, _H2_)	2.5 D-4D (KLH12_, KLH22_)	75	11/01 – 08/06	3777	
HIACE IV Bus (_H1_, _H2_)	2.5 D-4D 4WD (KLH12_, KLH22_)	75	08/01 – 07/06	3777	
HIACE IV Bus (_H1_, _H2_)	2.7 (RCH13_, RCH23_)	105	04/98 – 11/01	3777	
HIACE IV Bus (_H1_, _H2_)	2.7 (RCH13_, RCH23_)	106	11/01 – 12/06	3777	
HIACE IV Bus (_H1_, _H2_)	2.7 4WD (RCH13_, RCH19_,RCH23_)	106	07/99 -	3777	
HIACE IV Bus (_H1_, _H2_)	2.7 4WD (RCH19_)	105	04/98 – 08/06	3777	
HIACE VI Minibüs/Otobüs (__H3__)	2.8 (GDH322)	120	05.2019 -	4367	
HILUX Closed Off-Road Vehicle (RZN1_, LN1_)	2.4 TD 4WD	66	08/97 – 07/01	3693	
HILUX Closed Off-Road Vehicle (RZN1_, LN1_)	2.7	107	08/01 – 07/04	3693	
HILUX Closed Off-Road Vehicle (RZN1_, LN1_)	3.0 D	67	08/02 – 07/04	3693	
HILUX Closed Off-Road Vehicle (RZN1_, LN1_)	3.4 4WD	131	08/00 – 07/04	3693	
HILUX Closed Off-Road Vehicle (RZN1_, LN1_)	3.4 4WD	136	11/95 – 07/00	3693	
HILUX Closed Off-Road Vehicle (ZN13_, LN9_, RN1_,YN8_, LN8_	2.4 TD 4WD	66	08/89 – 11/95	3560	
HILUX II Pickup (_N1_, LN8_, RN5_, LN6_, YN6_,YN5_, LN5_, R	1.8	58	08/83 – 07/88	3414	
HILUX II Pickup (_N1_, LN8_, RN5_, LN6_, YN6_,YN5_, LN5_, R	1.8 (YN85_, YN90_)	61	08/88 – 07/94	3414	
HILUX II Pickup (_N1_, LN8_, RN5_, LN6_, YN6_,YN5_, LN5_, R	2.0	81	08/97 – 07/05	3560	
HILUX II Pickup (_N1_, LN8_, RN5_, LN6_, YN6_,YN5_, LN5_, R	2.0 (YN57)	65	01/84 – 12/86	3371	
HILUX II Pickup (_N1_, LN8_, RN5_, LN6_, YN6_,YN5_, LN5_, R	2.0 (YN57)	65	01/84 – 12/86	3414	
HILUX II Pickup (_N1_, LN8_, RN5_, LN6_, YN6_,YN5_, LN5_, R	2.2 (YN106)	69	01/89 – 12/89	3560	
HILUX II Pickup (_N1_, LN8_, RN5_, LN6_, YN6_,YN5_, LN5_, R	2.2 4WD (YN106_, YN110_)	69	01/87 – 12/89	3560	

MAKE & MODEL		KW	YEAR		
TOYOTA					
HILUX II Pickup (_N1_, LN8_, RN5_, LN6_, YN6_,YN5_, LN5_, R	2.2 4WD (YN106_, YN110_)	69	01/87 – 12/89	3414	
HILUX II Pickup (_N1_, LN8_, RN5_, LN6_, YN6_,YN5_, LN5_, R	2.2 D	49	08/83 – 08/84	3414	
HILUX II Pickup (_N1_, LN8_, RN5_, LN6_, YN6_,YN5_, LN5_, R	2.4	75	10/88 – 12/97	3560	
HILUX II Pickup (_N1_, LN8_, RN5_, LN6_, YN6_,YN5_, LN5_, R	2.4 4WD	75	10/88 – 12/97	3560	
HILUX II Pickup (_N1_, LN8_, RN5_, LN6_, YN6_,YN5_, LN5_, R	2.4 D	56	10/88 – 08/91	3414	
HILUX II Pickup (_N1_, LN8_, RN5_, LN6_, YN6_,YN5_, LN5_, R	2.4 D (LN150, LN145)	55	07/98 – 01/02	3414	
HILUX II Pickup (_N1_, LN8_, RN5_, LN6_, YN6_,YN5_, LN5_, R	2.4 D (LN5_, LN8_, LN9_,LN14_, LN15_)	59	08/84 – 02/06	3414	
HILUX II Pickup (_N1_, LN8_, RN5_, LN6_, YN6_,YN5_, LN5_, R	2.4 D (LN85_)	58	03/95 – 07/05	3414	
HILUX II Pickup (_N1_, LN8_, RN5_, LN6_, YN6_,YN5_, LN5_, R	2.4 D (LN85_)	61	08/88 – 07/05	3414	
HILUX II Pickup (_N1_, LN8_, RN5_, LN6_, YN6_,YN5_, LN5_, R	2.4 D 4WD	55	01/84 – 08/88	3371	
HILUX II Pickup (_N1_, LN8_, RN5_, LN6_, YN6_,YN5_, LN5_, R	2.4 D 4WD (LN105_, LN108_)	61	08/88 – 07/05	3560	
HILUX II Pickup (_N1_, LN8_, RN5_, LN6_, YN6_,YN5_, LN5_, R	2.4 D 4WD (LN110_)	58	01/94 – 07/05	3560	
HILUX II Pickup (_N1_, LN8_, RN5_, LN6_, YN6_,YN5_, LN5_, R	2.4 D 4WD (LN110L-CRM)	73	08/91 – 07/97	3560	
HILUX II Pickup (_N1_, LN8_, RN5_, LN6_, YN6_,YN5_, LN5_, R	2.4 i 4WD (RN110_, RN106_)	84	08/89 – 07/97	3560	
HILUX II Pickup (_N1_, LN8_, RN5_, LN6_, YN6_,YN5_, LN5_, R	2.4 i 4WD (RN80_, RN85_, RN90_)	84	08/91 – 08/99	3560	
HILUX II Pickup (_N1_, LN8_, RN5_, LN6_, YN6_,YN5_, LN5_, R	2.4 i 4WD (RZN14_, RZN16_, RZN19_)	103	08/97 – 10/05	3560	
HILUX II Pickup (_N1_, LN8_, RN5_, LN6_, YN6_,YN5_, LN5_, R	2.4 TD 4WD (LN165_, LN170_, LN190_)	66	08/98 – 01/02	3560	
HILUX II Pickup (_N1_, LN8_, RN5_, LN6_, YN6_,YN5_, LN5_, R	2.5 D-4D (KDN145_,KDN150_, KDN16_, KDN19_)	65	11/01 – 07/05	3414	
HILUX II Pickup (_N1_, LN8_, RN5_, LN6_, YN6_,YN5_, LN5_, R	2.5 D-4D 4WD (KDN165_, KDN170_, KDN190_)	75	11/01 – 07/05	3560	
HILUX II Pickup (_N1_, LN8_, RN5_, LN6_, YN6_,YN5_, LN5_, R	2.7	107	08/01 – 07-04	3414	
HILUX II Pickup (_N1_, LN8_, RN5_, LN6_, YN6_,YN5_, LN5_, R	2.8 D	60	09/91 – 1197	3414	
HILUX II Pickup (_N1_, LN8_, RN5_, LN6_, YN6_,YN5_, LN5_, R	2.8 D 4WD	60	10/88 – 12/97	3714	
HILUX II Pickup (_N1_, LN8_, RN5_, LN6_, YN6_,YN5_, LN5_, R	3.0 D	65	11/97 – 04/05	3371	
HILUX II Pickup (_N1_, LN8_, RN5_, LN6_, YN6_,YN5_, LN5_, R	3.0 D 4WD	71	12/00 – 04/05	3371	
HILUX II Pickup (_N1_, LN8_, RN5_, LN6_, YN6_,YN5_, LN5_, R	3.4	131	08/01 – 07/05	3693	
HILUX II Pickup (_N1_, LN8_, RN5_, LN6_, YN6_,YN5_, LN5_, R	3.4 4WD	131	08/01 – 07/05	3693	
HILUX III Pickup (KUN_, TGN_, LAN_, GGN_)	2.7	118	08/05 -	3693	
HILUX III Pickup (KUN_, TGN_, LAN_, GGN_)	2.7 4WD	118	08/05 -	3693	
HILUX III Pickup (KUN_, TGN_, LAN_, GGN_)	3.0 D (KUN16)	120	08/05 – 09/06	3693	
HILUX III Pickup (KUN_, TGN_, LAN_, GGN_)	3.0 D (KUN16)	126	10/06 -	3693	
HILUX III Pickup (KUN_, TGN_, LAN_, GGN_)	3.0 D 4WD (KUN26)	120	08/05 -	3693	
HILUX III Pickup (KUN_, TGN_, LAN_, GGN_)	4.0	175	08/05 -	3693	
HILUX III Pickup (KUN_, TGN_, LAN_, GGN_)	4.0 4WD	175	08/05 -	3693	
HILUX Platform/Chassis (_N1_, _N2_)	2.7	118	02/05 -	3998	
HILUX Platform/Chassis (_N1_, _N2_)	2.7	118	02/05 -	3903	
HILUX Platform/Chassis (_N1_, _N2_)	3.0 D	126	02/05 -	3998	
HILUX Platform/Chassis (_N1_, _N2_)	3.0 D	126	02/05 -	3903	
HILUX Platform/Chassis (_N1_, _N2_)	3.0 D 4WD	126	02/05 -	3998	
HILUX Platform/Chassis (_N1_, _N2_)	3.0 D 4WD	126	02/05 -	3903	
HILUX Platform/Chassis (_N1_, _N2_)	4.0	175	02/05 -	3903	
HILUX Platform/Chassis (_N1_, _N2_)	4.0	175	02/05 -	3998	
HILUX Platform/Chassis (_N1_, _N2_)	4.0 4WD	175	02/05 -	3903	
HILUX Platform/Chassis (_N1_, _N2_)	4.0 4WD	175	02/05 -	3998	
HILUX VI Pickup (_N1_)	2.5 D-4D (KDN14_, KDN15_, KDN16_, KDN19_)	65	11/01 – 07/05	3982	
HILUX VII Pickup (_N1_, _N2_, _N3_)	2.0	98	02/05 -	3982	
HILUX VII Pickup (_N1_, _N2_, _N3_)	2.0	98	02/05 -	3998	
HILUX VII Pickup (_N1_, _N2_, _N3_)	2.0	98	02/05 -	3903	
HILUX VII Pickup (_N1_, _N2_, _N3_)	2.5 D 4WD (KUN25_)	75	10/05 -	3903	
HILUX VII Pickup (_N1_, _N2_, _N3_)	2.5 D 4WD (KUN25_)	75	10/05 -	3998	
HILUX VII Pickup (_N1_, _N2_, _N3_)	2.5 D-4D	106	01/10 -	4167	
HILUX VII Pickup (_N1_, _N2_, _N3_)	2.5 D-4D (KUN15_)	88	12/07 -	3903	
HILUX VII Pickup (_N1_, _N2_, _N3_)	2.5 D-4D (KUN15_)	88	12/07 -	3982	
HILUX VII Pickup (_N1_, _N2_, _N3_)	2.5 D-4D (KUN15_)	88	12/07 -	3998	
HILUX VII Pickup (_N1_, _N2_, _N3_)	2.5 D-4D (KUN15_, KUN25_, KUN35_)	75	10/05 -	3903	
HILUX VII Pickup (_N1_, _N2_, _N3_)	2.5 D-4D (KUN15_, KUN25_, KUN35_)	75	10/05 -	3982	
HILUX VII Pickup (_N1_, _N2_, _N3_)	2.5 D-4D (KUN15_, KUN25_, KUN35_)	75	10/05 -	3998	
HILUX VII Pickup (_N1_, _N2_, _N3_)	2.5 D-4D 4WD (KDN14_, KDN15_, KDN16_, KDN17_,KDN19_...)	106	01/10 -	4167	
HILUX VII Pickup (_N1_, _N2_, _N3_)	2.5 D-4D 4WD (KDN14_,KDN15_, KDN16_, KDN17_, KDN19_...)	106	01/10 -	3903	
HILUX VII Pickup (_N1_, _N2_, _N3_)	2.5 D-4D 4WD (KDN14_,KDN15_, KDN16_, KDN17_, KDN19_...)	106	01/10 -	3998	
HILUX VII Pickup (_N1_, _N2_, _N3_)	2.5 D-4D 4WD (KUN25_)	88	12/07 -	3998	
HILUX VII Pickup (_N1_, _N2_, _N3_)	2.5 D-4D 4WD (KUN25_)	88	12/07 -	3903	
HILUX VII Pickup (_N1_, _N2_, _N3_)	2.7	118	08/05 -	3982	
HILUX VII Pickup (_N1_, _N2_, _N3_)	2.7	118	08/05 -	3903	
HILUX VII Pickup (_N1_, _N2_, _N3_)	2.7	118	08/05 -	3998	
HILUX VII Pickup (_N1_, _N2_, _N3_)	2.7 4WD	118	08/05 -	3903	
HILUX VII Pickup (_N1_, _N2_, _N3_)	2.7 4WD	118	08/05 -	3982	
HILUX VII Pickup (_N1_, _N2_, _N3_)	2.7 4WD	118	08/05 -	3998	
HILUX VII Pickup (_N1_, _N2_, _N3_)	3.0 D (KUN16)	120	08/05 – 09/06	3903	
HILUX VII Pickup (_N1_, _N2_, _N3_)	3.0 D (KUN16)	120	08/05 – 09/06	3998	
HILUX VII Pickup (_N1_, _N2_, _N3_)	3.0 D (KUN16)	126	10/06 -	3903	
HILUX VII Pickup (_N1_, _N2_, _N3_)	3.0 D (KUN16)	126	10/06 -	3998	
HILUX VII Pickup (_N1_, _N2_, _N3_)	3.0 D 4WD (KUN26)	120	08/05 -	4167	
HILUX VII Pickup (_N1_, _N2_, _N3_)	3.0 D-4D 4WD	126	12/07 -	3903	
HILUX VII Pickup (_N1_, _N2_, _N3_)	3.0 D-4D 4WD	145	05/08 – 12/08	4167	
HILUX VII Pickup (_N1_, _N2_, _N3_)	4.0	175	08/05 -	3903	
HILUX VII Pickup (_N1_, _N2_, _N3_)	4.0	175	08/05 -	3998	

BESER

MAKE & MODEL		KW	YEAR		
TOYOTA					
HILUX VII Pickup (_N1_, _N2_, _N3_)	4.0 4WD	175	08/05 -	3903	
HILUX VII Pickup (_N1_, _N2_, _N3_)	4.0 4WD	175	08/05 -	3998	
HILUX VIII Pickup (_N1_)	2.0 (TGN110_, TGN120_)	102	08/15 -	3891	
HILUX VIII Pickup (_N1_)	2.4 D (GUN112_, GUN122_, GUN135_)	110	05/15 -	3891	
HILUX VIII Pickup (_N1_)	2.4 D 4WD (GUN125_)	110	05/15 -	3891	
HILUX VIII Pickup (_N1_)	2.5 D (KUN112_, KUN122_, KUN135_)	75	08/15 -	3891	
HILUX VIII Pickup (_N1_)	2.5 D 4WD (KUN125_)	106	08/15 -	3891	
HILUX VIII Pickup (_N1_)	2.7 (TGN111_, TGN121_)	122	05/15 -	3891	
HILUX VIII Pickup (_N1_)	2.7 4WD (TGN126_)	118	05/15 -	3891	
HILUX VIII Pickup (_N1_)	2.7 4WD (TGN126_)	122	05/15 -	3891	
HILUX VIII Pickup (_N1_)	2.8 D (GUN123_, GUN136_)	130	05/15 -	3891	
HILUX VIII Pickup (_N1_)	2.8 D 4WD (GUN126_)	130	05/15 -	3891	
HiLux II-III / PICKUP	1.6 (12R)	49	08/78 – 07/83	3379	
HiLux VIII (GUN1_)	2.4 D (GUN122) (2GD-FTV)	110	07/15 -	4239	
HiLux VIII (GUN1_)	2.7 (2TR-FE)	122	05/15 -	4239	
HiLux VIII (GUN1_)	2.8 D (GUN123) (1GD-FTV)	125	07/15 -	4239	
HiLux VIII (GUN1_)	2.8 D (GUN126) (1GD-FTV)	130	07/15 -	4239	
HiLux VIII (GUN1_M70/M80)	2.0 (1TR-FE)	102	08/15 -	4239	
HiLux VIII (GUN1_M70/M80)	2.4 D (2GD-FTV)	110	05/15 -	4239	
HiLux VIII (GUN1_M70/M80)	2.5 D (2KD-FTV)	75	08/15 -	4239	
HiLux VIII (GUN1_M70/M80)	2.5 D (2KD-FTV)	106	08/15 -	4239	
HiLux VIII (GUN1_M70/M80)	2.7 (2TR-FE)	121	05/15 -	4239	
HiLux VIII (GUN1_M70/M80)	2.7 (2TR-FE)	122	05/15 -	4239	
HiLux VIII (GUN1_M70/M80)	2.7 (TGN126_) (2TR-FE)	118	05/15 -	4239	
HiLux VIII (GUN1_M70/M80)	2.8 D (1GD-FTV)	130	05/15 -	4239	
HiLux VIII (GUN1_M70/M80)	2.8 D (GUN123) (1GD-FTV)	125	07/15 -	4239	
HiLux VIII (GUN1_M70/M80)	4.0 (1GR-FE)	175	07/15 -	4239	
INNOVA I (_N4_)	2.0 (TGN40_)	100	07/03 -	3982	
INNOVA I (_N4_)	2.5 D (KUN40_)	75	08/04 -	3982	
INNOVA I (_N4_)	2.7 (TGN41_)	118	08/04 -	3982	
IQ (_J1_)	1.0 (KGJ10_)	50	01/09 -		3954
IQ (_J1_)	1.33 (NGJ10_)	69	01/09 -		3954
IQ (_J1_)	1.33 (NGJ10_)	72	01/09 -		3954
IQ (_J1_)	1.4 D-4D (NUJ10_)	66	01/09 -		3954
ISIS (_M1_)	1.8 VVTi	97	07/04 -	3910	
ISIS (_M1_)	1.8 VVTi	106	04/07 -	3910	
ISIS (_M1_)	1.8 VVTi 4WD	98	04/07 -	3910	
ISIS (_M1_)	2.0 VVTi	114	07/04 -	3910	
ISIS (_M1_)	2.0 VVTi	116	04/07 -	3910	
ISIS (_M1_)	2.0 VVTi 4WD	114	07/04 -	3910	
IST (NCP6_)	1.3 VVTi	63	05/04 – 07/07	3769	
IST (NCP6_)	1.5 VVTi	80	05/04 – 07/07	3769	3788
KLUGER (_U3_)	2.4 (ACU20_)	115	06/00 – 05/07	4082	3911
KLUGER (_U3_)	2.4 (ACU20_)	115	06/00 – 05/07		4111
KLUGER (_U3_)	2.4 (ACU20_)	118	06/00 – 05/07	4082	3911
KLUGER (_U3_)	2.4 (ACU20_)	118	06/00 – 05/07		4111
KLUGER (_U3_)	2.4 4WD (ACU25_)	115	06/00 – 09/03	4082	3911
KLUGER (_U3_)	2.4 4WD (ACU25_)	118	06/00 – 09/03	4082	3911
KLUGER (_U3_)	3.0 (MCU20_)	164	11/00 – 07/03	4082	3911
KLUGER (_U3_)	3.0 (MCU20_)	164	11/00 – 07/03		4111
KLUGER (_U3_)	3.0 4WD (MCU25_)	150	10/03 – 05/07	4082	3911
KLUGER (_U3_)	3.0 4WD (MCU25_)	150	10/03 – 05/07		4111
KLUGER (_U3_)	3.0 4WD (MCU25_)	164	11/00 – 07/03	4082	3911
KLUGER (_U3_)	3.0 4WD (MCU25_)	164	11/00 – 07/03		4111
KLUGER (_U3_)	3.3 (MCU23_)	171	08/03 – 05/07	4082	4111
KLUGER (_U3_)	3.3 4WD (MCU28_)	171	08/03 – 05/07	4082	4111
KLUGER (_U3_)	3.3 Hybrid (MHU23_)	200	03/05 – 05/07	4082	4111
KLUGER (_U3_)	3.3 Hybrid 4WD (MHU28_)	200	03/05 – 05/07	4082	4111
KLUGER (_U4_)	2.7 VVTi	140	05/07 -	4255	4254
KLUGER (_U4_)	2.7 VVTi 4WD	140	05/07 -	4255	4254
KLUGER (_U4_)	3.5	201	05/07 -	4255	4254
KLUGER (_U4_)	3.5 4WD	201	05/07 -	4255	4254
KLUGER (_U5_)	3.5 Hybrid AWD (GVU58_)	209	09/13 -	4255	4256
LAND CRUISER (_J6_)	3.4 Diesel (BJ60_V)	66	10/81 – 08/87	3371	
LAND CRUISER (_J6_)	4.0 (FJ62_G)	115	08/87 – 12/89	3371	
LAND CRUISER (_J6_)	4.0 (FJ62_V)	101	11/84 – 08/87	3371	
LAND CRUISER (_J6_)	4.0 Diesel (HJ60)	74	01/82 – 12/85	3371	
LAND CRUISER (_J6_)	4.0 Diesel (HJ60)	76	01/85 – 12/87	3371	
LAND CRUISER (_J6_)	4.0 Diesel (HJ60_V)	77	10/81 – 01/88	3371	
LAND CRUISER (_J6_)	4.0 Turbo-D (HJ61_V)	100	10/85 – 12/89	3371	
LAND CRUISER (_J6_)	4.2 (FJ60_V)	88	10/81 – 01/88	3371	
LAND CRUISER (BJ4_)	3.6 D (HJ45_V)	66	04/79 – 07/80	3371	
LAND CRUISER (LJ12_, KZJ12_, TRJ12_, KDJ12_,GRJ12_)	2.7 (RZJ12)	112	09/02 – 08/04	3693	
LAND CRUISER (LJ12_, KZJ12_, TRJ12_, KDJ12_,GRJ12_)	2.7 (TRJ12)	120	11/03 – 07/09	3693	
LAND CRUISER (LJ12_, KZJ12_, TRJ12_, KDJ12_,GRJ12_)	3.0 D	70	09/02 – 07/09	3693	
LAND CRUISER (LJ12_, KZJ12_, TRJ12_, KDJ12_,GRJ12_)	3.0 D-4D (KDJ120, KDJ125)	122	08/04 – 07/09	3693	

MAKE & MODEL		KW	YEAR		
TOYOTA					
LAND CRUISER (LJ12_, KZJ12_, TRJ12_, KDJ12_,GRJ12_)	3.0 D-4D (KDJ120, KDJ125)	127	09/02 – 07/09	3693	
LAND CRUISER (LJ12_, KZJ12_, TRJ12_, KDJ12_,GRJ12_)	3.0 D-4D (KDJ120, KDJ150, KDJ125)	120	01/03 – 07/09	3693	
LAND CRUISER (LJ12_, KZJ12_, TRJ12_, KDJ12_,GRJ12_)	3.0 D-4D (KZJ12)	92	09/02 – 07/09	3693	
LAND CRUISER (LJ12_, KZJ12_, TRJ12_, KDJ12_,GRJ12_)	3.4	136	09/02 – 08/04	3693	
LAND CRUISER (LJ12_, KZJ12_, TRJ12_, KDJ12_,GRJ12_)	4.0	179	09/02 – 08/04	3693	
LAND CRUISER (LJ12_, KZJ12_, TRJ12_, KDJ12_,GRJ12_)	4.0 (GRJ12, GRJ125)	183	01/03 – 07/09	3693	
LAND CRUISER (LJ12_, KZJ12_, TRJ12_, KDJ12_,GRJ12_)	4.0 (GRJ120)	203	08/05 – 07/09	3693	
LAND CRUISER (PZJ7_, KZJ7_, HZJ7_, BJ7_, LJ7_,RJ7)	3.4 D (BJ70_V, BJ73_)	70	11/84 – 12/96	3371	
LAND CRUISER (PZJ7_, KZJ7_, HZJ7_, BJ7_, LJ7_,RJ7)	3.4 D (BJ70_V, BJ73_)	70	11/81 – 12/96	3560	
LAND CRUISER (PZJ7_, KZJ7_, HZJ7_, BJ7_, LJ7_,RJ7)	3.4 TD (BJ71_V)	91	10/85 – 08/86	3371	
LAND CRUISER (PZJ7_, KZJ7_, HZJ7_, BJ7_, LJ7_,RJ7)	3.5 D 4x4 (PZJ75, PZJ70)	85	01/90 – 12/94	3560	
LAND CRUISER (PZJ7_, KZJ7_, HZJ7_, BJ7_, LJ7_,RJ7)	4.0 D 4x4	74	08/87 – 12/89	3371	
LAND CRUISER (PZJ7_, KZJ7_, HZJ7_, BJ7_, LJ7_,RJ7)	4.2 D (HZJ7_V)	96	01/90 -	3560	
LAND CRUISER (PZJ7_, KZJ7_, HZJ7_, BJ7_, LJ7_,RJ7)	4.5 TD 24V 4x4 (VDJ76, VDJ78)	151	03/07 -	3829	
LAND CRUISER (PZJ7_, KZJ7_, HZJ7_, BJ7_, LJ7_,RJ7)	4.5 TD 24V 4x4 (VDJ76,VDJ78)	151	03/07 -	3693	
LAND CRUISER (PZJ7_, KZJ7_, HZJ7_, BJ7_, LJ7_,RJ7)	2.4 (RJ70_, RJ73_)	77	11/84 – 05/93	3371	
LAND CRUISER (PZJ7_, KZJ7_, HZJ7_, BJ7_, LJ7_,RJ7)	2.4 (RJ70_, RJ73_)	81	11/84 – 05/93	3371	
LAND CRUISER (PZJ7_, KZJ7_, HZJ7_, BJ7_, LJ7_,RJ7)	2.4 (RJ70_V, RJ73_V)	84	12/88 – 12/96	3560	
LAND CRUISER (PZJ7_, KZJ7_, HZJ7_, BJ7_, LJ7_,RJ7)	2.4 (RJ70_V, RJ73_V)	84	12/88 – 12/96	3371	
LAND CRUISER (PZJ7_, KZJ7_, HZJ7_, BJ7_, LJ7_,RJ7)	2.4 (RJ70_V, RJ73_V)	84	12/88 – 12/96	3693	
LAND CRUISER (PZJ7_, KZJ7_, HZJ7_, BJ7_, LJ7_,RJ7)	2.4 D (LJ70_)	53	11/84 – 10/85	3371	
LAND CRUISER (PZJ7_, KZJ7_, HZJ7_, BJ7_, LJ7_,RJ7)	2.4 TD (LJ70)	66	01/90 – 05/93	3560	
LAND CRUISER (PZJ7_, KZJ7_, HZJ7_, BJ7_, LJ7_,RJ7)	2.4 TD (LJ70)	66	01/90 – 05/93	3693	
LAND CRUISER (PZJ7_, KZJ7_, HZJ7_, BJ7_, LJ7_,RJ7)	2.4 TD (LJ70_, LJ73_)	63	10/85 – 05/90	3371	
LAND CRUISER (PZJ7_, KZJ7_, HZJ7_, BJ7_, LJ7_,RJ7)	2.7 4WD	108	11/97 – 04/05	3560	
LAND CRUISER (PZJ7_, KZJ7_, HZJ7_, BJ7_, LJ7_,RJ7)	3.0 D 4WD (KZN205)	87	11/01 – 04/05	3560	
LAND CRUISER (PZJ7_, KZJ7_, HZJ7_, BJ7_, LJ7_,RJ7)	3.0 TD (KZJ70_, KZJ73_,KZJ77_)	92	05/93 – 05/96	3560	
LAND CRUISER 100 (FZJ1_, UZJ1_)	4.2 D (HZJ105)	96	03/98 – 08/07	3829	
LAND CRUISER 100 (FZJ1_, UZJ1_)	4.2 D (HZJ105)	96	03/98 – 08/07	3830	
LAND CRUISER 100 (FZJ1_, UZJ1_)	4.2 TD (HDJ100_)	150	01/98 – 08/07	3829	
LAND CRUISER 100 (FZJ1_, UZJ1_)	4.2 TD (HDJ100_)	150	01/98 – 08/07	3830	
LAND CRUISER 100 (FZJ1_, UZJ1_)	4.7 (UZJ100)	175	02/02 – 08/07	3829	
LAND CRUISER 100 (FZJ1_, UZJ1_)	4.7 (UZJ100)	175	02/02 – 08/07	3830	
LAND CRUISER 100 (FZJ1_, UZJ1_)	4.7 (UZJ100_)	173	01/98 – 08/07	3829	
LAND CRUISER 100 (FZJ1_, UZJ1_)	4.7 (UZJ100_)	173	01/98 – 08/07	3830	
LAND CRUISER 150 (TRJ15_, KDJ15_, GRJ15_,GDJ15_)	2.7	120	01/10 -	3891	
LAND CRUISER 150 (TRJ15_, KDJ15_, GRJ15_,GDJ15_)	2.7	120	01/10 -	3693	
LAND CRUISER 150 (TRJ15_, KDJ15_, GRJ15_,GDJ15_)	2.8 D-4D (GDJ150_)	130	06/15 -	3891	
LAND CRUISER 150 (TRJ15_, KDJ15_, GRJ15_,GDJ15_)	2.8 D-4D (GDJ150_)	130	06/15 -	3693	
LAND CRUISER 150 (TRJ15_, KDJ15_, GRJ15_,GDJ15_)	3.0 D-4D	127	08/09 -	3693	
LAND CRUISER 150 (TRJ15_, KDJ15_, GRJ15_,GDJ15_)	3.0 D-4D (KDJ150_)	127	08/09 -	3891	
LAND CRUISER 150 (TRJ15_, KDJ15_, GRJ15_,GDJ15_)	3.0 D-4D (KDJ155_, KDJ150_)	140	08/09 -	3891	
LAND CRUISER 150 (TRJ15_, KDJ15_, GRJ15_,GDJ15_)	3.0 D-4D (KDJ155_, KDJ150_)	140	08/09 -	3693	
LAND CRUISER 150 (TRJ15_, KDJ15_, GRJ15_,GDJ15_)	4.0 V6 Dual VVTi	205	01/10 -	3891	
LAND CRUISER 150 (TRJ15_, KDJ15_, GRJ15_,GDJ15_)	4.0 V6 Dual VVTi	205	01/10 -	3693	
LAND CRUISER 150 (TRJ15_, KDJ15_, GRJ15_,GDJ15_)	4.0 V6 VVTi	183	01/10 -	3891	
LAND CRUISER 150 (TRJ15_, KDJ15_, GRJ15_,GDJ15_)	4.0 V6 VVTi	183	01/10 -	3693	
LAND CRUISER 150 (TRJ15_, KDJ15_, GRJ15_,GDJ15_)	4.0 V6 VVTi	203	01/10 -	3891	
LAND CRUISER 150 (TRJ15_, KDJ15_, GRJ15_,GDJ15_)	4.0 V6 VVTi	203	01/10 -	3693	
LAND CRUISER 150 (TRJ15_, KDJ15_, GRJ15_,GDJ15_)	4.0 V6 VVT-i (GRJ150_)	207	01/10 -	3891	
LAND CRUISER 150 (TRJ15_, KDJ15_, GRJ15_,GDJ15_)	4.0 V6 VVT-i (GRJ150_)	207	01/10 -	3693	
LAND CRUISER 200 (GRJ2_, UZJ2_, VDJ2_)	4.0 (GRJ200_)	176	01/10 -	3996	3997
LAND CRUISER 200 (GRJ2_, UZJ2_, VDJ2_)	4.5 D V8 (VDJ200)	195	01/08 -	3996	3997
LAND CRUISER 200 (GRJ2_, UZJ2_, VDJ2_)	4.5 D4-D	173	08/07 -	3996	3997
LAND CRUISER 200 (GRJ2_, UZJ2_, VDJ2_)	4.5 D4-D	200	01/12 -	3996	3997
LAND CRUISER 200 (GRJ2_, UZJ2_, VDJ2_)	4.5 D-4D (VDJ200)	210	01/08 -	3996	3997
LAND CRUISER 200 (GRJ2_, UZJ2_, VDJ2_)	4.6 V8	227	09/10 -	3996	3997
LAND CRUISER 200 (GRJ2_, UZJ2_, VDJ2_)	4.6 V8 (_URJ202W_)	234	01/12 -	3996	3997
LAND CRUISER 200 (GRJ2_, UZJ2_, VDJ2_)	4.7 V8 (UZJ200)	202	08/07 -	3996	3997
LAND CRUISER 200 (GRJ2_, UZJ2_, VDJ2_)	4.7 V8 (UZJ200)	212	01/08 -	3996	3997
LAND CRUISER 200 (GRJ2_, UZJ2_, VDJ2_)	5.7 V8 (URJ200_)	284	08/07 -	3996	3997
LAND CRUISER 80 (_J8_)	4.0 (FJ80_)	115	01/90 – 08/92	3673	
LAND CRUISER 80 (_J8_)	4.0 (FJ80_)	115	01/90 – 08/92	3693	
LAND CRUISER 80 (_J8_)	4.2 D (HZJ80_)	99	01/90 – 12/97	3673	
LAND CRUISER 80 (_J8_)	4.2 D (HZJ80_)	99	01/90 – 12/97	3693	
LAND CRUISER 80 (_J8_)	4.2 TD (HDJ80)	118	10/92 – 12/97	3673	
LAND CRUISER 80 (_J8_)	4.2 TD (HDJ80)	118	10/92 – 12/97	3693	
LAND CRUISER 80 (_J8_)	4.2 TD (HDJ80)	123	01/90 – 12/97	3673	
LAND CRUISER 80 (_J8_)	4.2 TD (HDJ80)	123	01/90 – 12/97	3693	
LAND CRUISER 80 (_J8_)	4.2 TD 24V (HDJ80_)	125	03/95 – 12/97	3673	
LAND CRUISER 80 (_J8_)	4.2 TD 24V (HDJ80_)	125	03/95 – 12/97	3693	
LAND CRUISER 80 (_J8_)	4.5 24V (FZJ80_)	151	08/92 – 12/97	3673	
LAND CRUISER 80 (_J8_)	4.5 24V (FZJ80_)	151	08/92 – 12/97	3693	
LAND CRUISER 90 (_J9_)	3.0 D-4D (KDJ90, KDJ95, KDJ 125)	120	10/00 -	3693	
LAND CRUISER 90 (_J9_)	3.0 D-4D (KDJ90, KDJ95, KDJ 125)	120	10/00 -	3560	
LAND CRUISER 90 (_J9_)	3.0 TD	103	04/95 – 07/00	3560	

MAKE & MODEL		KW	YEAR		
TOYOTA					
LAND CRUISER 90 (_J9_)	3.0 TD	103	04/95 – 07/00	3693	
LAND CRUISER 90 (_J9_)	3.0 TD (KZJ90_, KZJ95_)	92	04/96 -	3560	
LAND CRUISER 90 (_J9_)	3.0 TD (KZJ90_, KZJ95_)	92	04/96 -	3693	
LAND CRUISER 90 (_J9_)	3.4 i 24V (VZJ90_, VZJ95_)	131	04/96 -	3560	
LAND CRUISER 90 (_J9_)	3.4 i 24V (VZJ90_, VZJ95_)	131	04/96 -	3693	
LAND CRUISER 90 (_J9_)	4.7	175	08/02 -	3829	
LAND CRUISER 90 (_J9_)	4.7	175	08/02 -	3830	
LAND CRUISER 90 (_J9_)	CCCCC	110	04/95 – 07/02	3560	
LAND CRUISER Hardtop (_J7_)	2.4 TD (LJ70_)	66	07/90 – 05/96	3560	
LAND CRUISER Hardtop (_J7_)	3.0 TD (KZJ70_)	92	05/93 – 05/96	3560	
LAND CRUISER Hardtop (_J7_)	3.6 D (HJ45_P)	66	01/75 – 07/80	3371	
LAND CRUISER Hardtop (_J7_)	3.9 (FJ45_P)	96	03/69 – 01/75	3371	
LAND CRUISER Pickup (_J4_)	4.0 4x4	170	03/07 -	3996	
LAND CRUISER Pickup (_J7_)	4.2 D (HZJ80_)	123	07/90 – 07/92	3693	
LAND CRUISER Pickup (_J7_)	4.2 D 4x4	100	03/07 -	3693	
LAND CRUISER Pickup (_J7_)	4.2 D 4x4	100	03/07 -	3829	
LAND CRUISER Pickup (_J7_)	4.2 D 4x4 (HZJ7	96	01/90 -	3560	
LAND CRUISER Pickup (_J7_)	4.5 MPFi 4x4	179	03/07 -	3693	
LAND CRUISER Pickup (_J7_)	4.5 MPFi 4x4	179	03/07 -	3829	
LCV Auris II Van (_E18_) 44287 D-4D (NDE180_)	1ND-TV	66	03/2013 - 12/2018		4037/1
LCV Proace I Box body / Van / SW Van (MDX_) 2.0 D (MDX3_)	4WZ-FTW	94	06/2013 - 03/2016		4151/1
LCV Proace I Box body / Van / SW Van (MDX_) 2.0 D (MDX3_)	4WZ-FTW	94	06/2013 - 03/2016		4170
LCV Proace I Box body / Van / SW Van (MDX_) 2.0 D (MDX6_)	4WZ-FHV	120	06/2013 - 03/2016		4151/1
LCV Proace I Box body / Van / SW Van (MDX_) 2.0 D (MDX6_)	4WZ-FHV	120	06/2013 - 03/2016		4170
LCV Proace I Box body / Van / SW Van (MDX_) 2.0 D 4WD (MDX4_)	4WZ-FTW	94	06/2013 - 03/2016		4151/1
LCV Proace I Box body / Van / SW Van (MDX_) 2.0 D 4WD (MDX4_)	4WZ-FTW	94	06/2013 - 03/2016		4170
LCV Proace I Box body / Van / SW Van (MDX_) 44348 D (MDX9_)	3WZ-TV	66	06/2013 - 03/2016		4151/1
LCV Proace I Box body / Van / SW Van (MDX_) 44348 D (MDX9_)	3WZ-TV	66	06/2013 - 03/2016		4170
LITEACE / SPACIA (_R2_LG)	1.5 (KR21LG) (5K)	52	01/92 – 01/95	4088	
LITEACE / SPACIA (_R2_LG)	2.0 D (2C)	53	01/92 – 05/94	4088	
LITEACE / SPACIA (_R2_LG)	2.2 (4Y-EC)	72	01/92 – 01/95	4088	
LITEACE / SPACIA (_R2_LG)	2.2 D (3C-TE)	66	02/95 – 08/97	4088	
MARK II	1.8 (1S-L)	66	11/83 – 03/88	3418	
MARK II	1.8 (4S-FI)	77	04/88 – 09/92	3666	
MARK II	1.8 (4S-FI)	77	04/88 – 09/92	3672	
MARK II	1.8 (1S-U)	74	08/82 – 10/83	3418	
MARK II	1.8 (13T-U)	70	08/80 – 10/83	3418	
MARK II	2.0 (1G-FE)	99	04/88 – 09/92	3666	
MARK II	2.0 (1G-FE)	99	04/88 – 09/92	3672	
MARK II	2.0 (1G-GE)	110	04/88 – 09/92	3666	
MARK II	2.0 (1G-GE)	110	04/88 – 09/92	3672	
MARK II	2.0 (1G-GEU)	107	08/80 – 10/83	3418	
MARK II	2.0 (1G-GTEU)	107	11/84 – 03/88	3418	
MARK II	2.0 (2S-EL)	79	11/83 – 03/88	3418	
MARK II	2.0 (1G-EU)	92	08/80 – 10/83	3418	
MARK II	2.0 (1G-EU)	96	11/83 – 03/88	3418	
MARK II	2.2 DX (L)	53	08/80 – 10/83	3418	
MARK II	2.4 D (2L-TII)	61	11/84 – 03/88	3418	
MARK II	2.4 TD (2L-TE)	69	04/88 – 09/92	3666	
MARK II	2.4 TD (2L-TE)	69	04/88 – 09/96	3672	
MARK II	2.4 TD (2L-TE)	71	11/84 – 03/88	3418	
MARK II	2.4 TD (2L-TII)	65	08/81 – 10/83	3418	
MARK II (SXV2_, MCV2_, LX1_, JZX1_, GX1_)	2.0 (1G-FE)	100	04/88 – 09/96	3672	
MARK II (SXV2_, MCV2_, LX1_, JZX1_, GX1_)	2.0 (1G-FE)	100	04/88 – 09/96	3666	
MARK II (SXV2_, MCV2_, LX1_, JZX1_, GX1_)	2.4 D (2L)	54	04/88 – 09/96	3672	
MARK II (SXV2_, MCV2_, LX1_, JZX1_, GX1_)	2.4 D (2L)	54	04/88 – 09/96	3666	
MARK II Estate (SXV2_, MCV2_, LX1_, JZX1_, GX1_)	2.2	96	08/96 – 07/01	3651	3776
MARK II Estate (SXV2_, MCV2_, LX1_, JZX1_, GX1_)	2.2	96	08/96 – 07/01	3554	
MARK II Estate (SXV2_, MCV2_, LX1_, JZX1_, GX1_)	2.5	147	08/96 – 07/01	3651	3776
MARK II Estate (SXV2_, MCV2_, LX1_, JZX1_, GX1_)	2.5	147	08/96 – 07/01	3554	
MARK II Estate (SXV2_, MCV2_, LX1_, JZX1_, GX1_)	3.0	166	08/96 – 07/01		4099
MARK II Saloon	2.0 VVTi	118	10/96 – 09/01	3554	
MARK II Saloon	2.0 VVTi	118	10/96 – 09/01	3651	
MARK II Saloon (_X10_)	2.5 VVTi	206	10/96 – 09/01	3915	
MARK II Saloon (_X10_)	3.0 VVTi	162	10/96 – 09/01		4099
MARK X II (GRX13_)	3.5	234	10/09 -		4113
MARK X ZiO (_A1_)	2.4	120	09/07 -	4077	3949
MARK X ZiO (_A1_)	2.4 4WD	120	09/07 -	4077	3949
MARK X ZiO (_A1_)	3.5	206	09/07 -	4077	3949
MATRIX (_E13_)	1.8 VVTi	96	09/01 – 02/04		3788
MATRIX (_E13_)	1.8 VVTi 4WD	91	09/01 – 02/04		3788
MATRIX (_E14_)	1.8 (ZRE142_)	97	01/08 – 05/14	3953	3949
MATRIX (_E14_)	2.4 (AZE14_)	117	01/08 – 05/14	3953	3949
MIRAI (JPD1_)	FCV (JPD10_)	113	10/14 -	4077	4256
MR 2 I (AW1_)	1.6 16V (AW11)	85	11/84 – 06/90	3402	
MR 2 I (AW1_)	1.6 16V (AW11)	85	11/84 – 06/90	3472	

MAKE & MODEL		KW	YEAR		
TOYOTA					
MR 2 I (AW1_)	1.6 16V (AW11)	91	11/84 – 06/90	3402	
MR 2 I (AW1_)	1.6 16V (AW11)	91	11/84 – 06/90	3472	
NADIA	2.0	100	04/98 – 08/03	3822	
NADIA	2.0 4WD	107	04/98 – 08/03	3822	
NADIA	2.2 TD 4WD	66	04/98 – 08/03	3822	
NOAH/VOXY (_R6_)	2.0	112	12/01 – 06/07	4013	
NOAH/VOXY (_R6_)	2.0 4WD	112	12/01 – 06/07	4013	
NOAH/VOXY (_R7_)	2.0	116	06/07 -	3953	
NOAH/VOXY (_R7_)	2.0 4WD	114	06/07 – 09/13	3953	
NOAH/VOXY (_R8_)	1.8 Hybrid (ZWR80_)	73	10/13 -	3953	
NOAH/VOXY (_R8_)	2.0	111	10/13 -	3953	
NOAH/VOXY (_R8_)	2.0	116	10/13 -	3953	
NOAH/VOXY (_R8_)	2.0 4WD	111	10/13 -	3953	
OPA (ZCT1_, ACT1_)	1.8	100	04/00 – 08/03		3876
OPA (ZCT1_, ACT1_)	1.8 4WD	92	04/00 – 08/03		3876
OPA (ZCT1_, ACT1_)	2.0	112	08/00 – 04/05		3876
OPTIMO	All models		01/86 -	3930	
PASEO Convertible (EL54_)	1.5 (EL54_)	66	10/96 – 01/98	3402	
PASEO Convertible (EL54_)	1.5 (EL54_)	66	10/96 – 01/98	3472	
PASEO Convertible (EL54_)	1.5 (EL54_)	81	10/96 – 01/98	3402	
PASEO Convertible (EL54_)	1.5 (EL54_)	81	10/96 – 01/98	3472	
PASEO Coupe (EL44_)	1.3	65	08/95 – 06/99	3402	
PASEO Coupe (EL44_)	1.3	65	08/95 – 06/99	3472	
PASEO Coupe (EL44_)	1.5	74	04/91 – 08/95	3402	
PASEO Coupe (EL44_)	1.5	85	06/88 – 07/95	3402	
PASEO Coupe (EL54_)	1.5	74	04/91 – 08/95	3472	
PASEO Coupe (EL54_)	1.5	85	06/88 – 07/95	3472	
PASEO Coupe (EL54_)	1.5 (EL54_)	81	08/95 – 06/99	3402	
PASEO Coupe (EL54_)	1.5 (EL54_)	81	08/95 – 06/99	3472	
PASEO Coupe (EL54_)	1.5 (EL54_)	85	08/95 – 06/99	3402	
PASEO Coupe (EL54_)	1.5 (EL54_)	85	08/95 – 06/99	3472	
PASEO Coupe (EL54_)	1.5 16V (EL54_)	66	08/95 – 06/99	3402	
PASEO Coupe (EL54_)	1.5 16V (EL54_)	66	08/95 – 06/99	3472	
PASSO (_NC1_, _XC1_)	1.0	51	06/05 – 01/10	3928	
PASSO (_NC1_, _XC1_)	1.0 4WD	51	06/05 – 01/10	3928	
PASSO (_NC1_, _XC1_)	1.3	77	06/05 – 12/07	3928	
PICKUP II (U.S.A.)	2.2		09/78 -	3379	
PICKUP II (U.S.A.)	2.2 4WD		09/78 -	3379	
PICKUP II (U.S.A.)	2.2 D	59	07/78 -	3379	
PICKUP II (U.S.A.)	2.4		09/78 -	3379	
PICKUP II (U.S.A.)	2.4 4WD		09/78 -	3379	
PICNIC (CXM1_, SXM1_)	2.0 (SXM10_)	90	01/01 – 12/01	3554	
PICNIC (CXM1_, SXM1_)	2.0 (SXM10_)	90	01/01 – 12/01	3651	
PICNIC (CXM1_, SXM1_)	2.0 (SXM10_)	100	05/96 – 04/01	3554	
PICNIC (CXM1_, SXM1_)	2.0 (SXM10_)	100	05/96 – 04/01	3651	
PICNIC (CXM1_, SXM1_)	2.0 16V (SXM10_)	94	05/96 – 12/01	3554	
PICNIC (CXM1_, SXM1_)	2.0 16V (SXM10_)	94	05/96 – 12/01	3651	
PICNIC (CXM1_, SXM1_)	2.2 D (CMX10_)	66	08/97 – 12/01	3554	
PICNIC (CXM1_, SXM1_)	2.2 D (CMX10_)	66	08/97 – 12/01	3651	
PLATZ (NCP1_, SCP1_)	1.0 (SCP11_)	50	04/99 – 08/05	3768	
PLATZ (NCP1_, SCP1_)	1.3 (NCP16_)	63	08/99 – 08/05	3768	
PLATZ (NCP1_, SCP1_)	1.3 4WD (NCP16_)	63	08/99 – 08/05	3768	
PLATZ (NCP1_, SCP1_)	1.5 (NCP12_)	78	04/99 – 08/05	3768	
PLATZ (NCP1_, SCP1_)	1.5 4WD (NCP13_)	78	09/02 – 08/05	3768	
PORTE II (_P14_)	1.5	80	08/12 -	3958	
PORTE II (_P14_)	1.5 4WD	76	08/12 -	3958	
PREMIO (_T26_)	1.5 (NZT260)	81	07/07 -	3953	
PREMIO (_T26_)	1.5 (NZT260)	81	07/07 -	3958	
PREMIO (_T26_)	1.8	106	07/07 – 11/12	3953	
PREMIO (_T26_)	1.8 4WD	98	07/07 -	3953	
PREMIO (_T26_)	2.0	116	07/07 -	3953	
PREMIO (_T26_)	2.0 4WD	116	07/07 -	3953	
PREVIA (_R1_, _R2_)	2.4	97	05/90 – 08/00	4071	4072
PREVIA (_R1_, _R2_)	2.4 4WD	97	05/90 – 08/00	4071	4072
PREVIA (_R1_, _R2_)	2.4 4WD	110	05/90 – 12/99		4072
PREVIA (_R3_)	2.0	94	10/00 – 08/03	3822	
PREVIA (_R3_)	2.0 D-4D (CLR30_)	85	03/01 – 01/06	3822	
PREVIA (_R3_)	2.4	115	08/00 – 01/06	3822	
PREVIA (_R3_)	3.0 VVTi	162	08/00 – 12/05	3822	
PREVIA (_R3_)	3.0 VVTi 4WD	162	02/00 – 12/05	3822	
PREVIA (_R3_)	3.5	206	02/00 – 01/06		4154
PREVIA (_R3_)	3.5 4WD	206	02/00 – 01/06		4154
PREVIA (TCR2_, TCR1_)	2.4	97	05/90 – 08/00	3634	
PREVIA (TCR2_, TCR1_)	2.4 4WD	97	05/90 – 08/00	3634	
PREVIA (TCR2_, TCR1_)	2.4 4WD	110	05/90 – 12/99	3634	
PREVIA / ESTIMA / TARAGO (TCR2_, TCR1_)	2.4 (2TZ-FE)	97	05/90 – 08/00	4088	

MAKE & MODEL   		KW	YEAR		
TOYOTA					
PREVIA / ESTIMA / TARAGO (TCR2_, TCR1_)	2.4 (2TZ-FZE)	110	05/90 – 12/99	4088	
PREVIA / ESTIMA / TARAGO (TCR2_, TCR1_)	2.4 GX	110	01/94 – 07/97	4088	
PREVIA III (_R5_)	2.4	125	10/05 -		4154
PREVIA III (_R5_)	2.4 Hybrid (_AHR2_)	110	05/12 -		4154
PREVIA III (_R5_)	3.5	202	01/06 -		4154
PREVIA III (_R5_)	3.5	206	01/06 -		4154
PREVIA III (_R5_)	3.5 4WD	206	01/06 -		4154
PRIUS (_W5_)	1.8 Hybrid	90	09/15 -		3954
PRIUS (_W5_)	1.8 Hybrid (ZVW5_)	72	09/15 -		3954
PRIUS (_W5_)	1.8 Hybrid E-Four 4WD	72	09/15 -		3954
PRIUS Hatchback (_W2_)	1.5 (NHW2_)	57	08/03 – 03/09		3788
PRIUS Hatchback (_W2_)	1.5 (NHW2_)	57	08/03 – 03/09		3876
PRIUS Hatchback (NHW20_)	1.5 (NHW20_)	57	08/03 – 03/09	3769	
PRIUS Saloon (_W1_)	1.5 Hybrid (NHW1_)	53	05/00 – 01/04		3788
PRIUS Saloon (NHW11_)	1.5 Hybrid (NHW11_)	53	05/00 – 01/04	3769	
PROACE Box Body / Estate (MDX_)	1.6 D-4D (MDX921_, MDX931_)	66	06/13 – 03/16	3972	4151
PROACE Box Body / Estate (MDX_)	2.0 D-4D (MDX321_, MDX331_)	94	06/13 – 03/16	3972	4151
PROACE Box Body / Estate (MDX_)	2.0 D-4D (MDX621_, MDX631_)	120	06/13 – 03/16	3972	4151
PROACE CITY Kasa/büyük limuzin	1.2 VVT-i 110 (BPZNN)	81	10.2019 -	4371	4372
PROACE CITY Kasa/büyük limuzin	1.2 VVT-i 130 (BPZNP)	96	10.2019 -	4371	4372
PROACE CITY Kasa/büyük limuzin	1.5 D-4D 100 (BPZMD)	75	10.2019 -	4371	4372
PROACE CITY Kasa/büyük limuzin	1.5 D-4D 130 (BPZMA)	96	10.2019 -	4371	4372
PROACE CITY Kasa/büyük limuzin	1.5 D-4D 75 (BPZMJ)	55	10.2019 -	4371	4372
PROACE CITY VERSO MPV	1.2 VVT-i 110 (BKYNN)	81	10.2019 -	4371	4372
PROACE CITY VERSO MPV	1.2 VVT-i 130 (BKYNP)	96	10.2019 -	4371	4372
PROACE CITY VERSO MPV	1.5 D-4D 100 (BKYMD)	75	10.2019 -	4371	4372
PROACE CITY VERSO MPV	1.5 D-4D 130 (BKYMA)	96	10.2019 -	4371	4372
PROACE Minibüs/Otobüs (MDZ_)	1.5 D4d (MDZ1)	88	08.2018 -	4369	4370
PROACE Minibüs/Otobüs (MDZ_)	1.5 D4d (MDZ8)	75	08.2018 -	4369	4370
PROACE Minibüs/Otobüs (MDZ_)	1.6 D4d (MDZ2)	85	02.2016 -	4369	4370
PROACE Minibüs/Otobüs (MDZ_)	1.6 D4d (MDZ9)	70	02.2016 -	4369	4370
PROACE Minibüs/Otobüs (MDZ_)	2.0 D4d	106	09.2020 -	4369	4370
PROACE Minibüs/Otobüs (MDZ_)	2.0 D4d (MDZ3)	90	07.2019 -	4369	4370
PROACE Minibüs/Otobüs (MDZ_)	2.0 D4d (MDZ4)	110	02.2016 -	4369	4370
PROACE Minibüs/Otobüs (MDZ_)	2.0 D4d (MDZ6)	130	02.2016 -	4369	4370
PROACE Minibüs/Otobüs (MDZ_)	2.0 D4d 4x4 (MDZ4)	110	04.2018 -	4369	4370
PROACE Panelvan/Van (MDZ_)	1.5 D4d (MDZ1)	88	05.2019 -	4369	4370
PROACE Panelvan/Van (MDZ_)	1.5 D4d (MDZ8)	75	05.2019 -	4369	4370
PROACE Panelvan/Van (MDZ_)	1.6 D4d (MDZ2)	85	02.2016 -	4369	4370
PROACE Panelvan/Van (MDZ_)	1.6 D4d (MDZ9)	70	02.2016 -	4369	4370
PROACE Panelvan/Van (MDZ_)	2.0 D4d (MDZ3)	90	02.2016 -	4369	4370
PROACE Panelvan/Van (MDZ_)	2.0 D4d (MDZ4)	110	02.2016 -	4369	4370
PROACE Panelvan/Van (MDZ_)	2.0 D4d (MDZ6, MDZ5)	130	02.2016 -	4369	4370
PROACE Panelvan/Van (MDZ_)	2.0 D4d 4x4 (MDZ4)	110	04.2018 -	4369	4370
PROACE Platform şasi (MDZ_)	2.0 D4d (MDZ4)	110	02.2016 -		4370
PROACE Platform şasi (MDZ_)	2.0 D4d (MDZ4)	110	02.2016 -	4369	
PROACE VERSO Minibüs/Otobüs (MPY_)	1.5 D4d (MPY1)	88	06.2018 -	4369	4370
PROACE VERSO Minibüs/Otobüs (MPY_)	1.5 D4d (MPY8)	75	06.2018 -	4369	4370
PROACE VERSO Minibüs/Otobüs (MPY_)	1.6 D4d (MPY2)	85	02.2016 -	4369	4370
PROACE VERSO Minibüs/Otobüs (MPY_)	2.0 D4d	106	09.2020 -	4369	4370
PROACE VERSO Minibüs/Otobüs (MPY_)	2.0 D4d (MPY3)	90	11.2019 -	4369	4370
PROACE VERSO Minibüs/Otobüs (MPY_)	2.0 D4d (MPY4)	110	02.2016 -	4369	4370
PROACE VERSO Minibüs/Otobüs (MPY_)	2.0 D4d (MPY6, MPY5)	130	02.2016 -	4369	4370
PROACE VERSO Minibüs/Otobüs (MPY_)	2.0 D4d 4x4 (MPY4)	110	04.2018 -	4369	4370
PROGRES (JCG1_)	2.5	147	05/98 – 05/07	4086	
PROGRES (JCG1_)	3.0	162	05/98 – 05/07	4086	
RACTIS (_P10_)	1.5 4WD (NCP105_)	77	09/05 – 08/10		3954
RAUM MPV (EXZ1_)	1.5	66	05/97 – 03/03	3402	
RAUM MPV (EXZ1_)	1.5	66	05/97 – 03/03	3472	
RAUM MPV (EXZ1_)	1.5	69	08/97 – 04/03	3402	
RAUM MPV (EXZ1_)	1.5	69	08/97 – 04/03	3472	
RAUM MPV (EXZ1_)	1.5 4WD	67	08/97 – 04/03	3402	
RAUM MPV (EXZ1_)	1.5 4WD	67	08/97 – 04/03	3472	
RAV 4 I (SXA1_)	2.0	99	06/97 – 09/99	3554	
RAV 4 I (SXA1_)	2.0	99	06/97 – 09/99	3651	
RAV 4 I (SXA1_)	2.0 4WD	95	06/94 – 06/00	3554	
RAV 4 I (SXA1_)	2.0 4WD	95	06/94 – 06/00	3651	
RAV 4 I (SXA1_)	2.0 4WD	99	01/94 – 09/99	3554	
RAV 4 I (SXA1_)	2.0 4WD	99	01/94 – 09/99	3651	
RAV 4 I (SXA1_)	2.0 4WD	121	01/94 – 09/99	3554	
RAV 4 I (SXA1_)	2.0 4WD	121	01/94 – 09/99	3651	
RAV 4 I Cabrio (SXA1_)	2.0 16V 4WD	94	12/97 – 06/00	3554	
RAV 4 I Cabrio (SXA1_)	2.0 16V 4WD	94	12/97 – 06/00	3651	
RAV 4 II (_A2_)	1.8 VVTi (ZCA25_, ZCA26_)	92	08/03 – 11/05	4158	4153
RAV 4 II (_A2_)	2.0 D-4D 4WD (CLA20_, CLA21_)	85	05/01 – 11/05	4158	4153
RAV 4 II (_A2_)	2.0 VVTi 4WD	110	08/03 – 11/05	4158	4153

MAKE & MODEL		KW	YEAR		
TOYOTA					
RAV 4 II (_A2_)	2.4 VVTi 4WD	112	08/03 – 11/05	4158	4153
RAV 4 III (_A3_)	2.0 (ZSA35_)	116	12/08 -	3953	3949
RAV 4 III (_A3_)	2.0 (ZSA35_)	116	12/08 -	4077	
RAV 4 III (_A3_)	2.0 4WD (ZSA30_)	116	12/08 -	3953	3949
RAV 4 III (_A3_)	2.0 4WD (ZSA30_)	116	12/08 -	4077	
RAV 4 III (_A3_)	2.0 VVT-i	109	03/09 -	4077	3949
RAV 4 III (_A3_)	2.0 VVT-i 4WD	109	03/09 -	4077	3949
RAV 4 III (_A3_)	2.0 VVT-i 4WD (ACA30_)	112	03/06 -	3953	3949
RAV 4 III (_A3_)	2.0 VVT-i 4WD (ACA30_)	112	03/06 -	4077	
RAV 4 III (_A3_)	2.2 D-4D (ALA35_)	110	12/08 – 12/13	3953	3949
RAV 4 III (_A3_)	2.2 D-4D (ALA35_)	110	12/08 – 12/13	4077	
RAV 4 III (_A3_)	2.2 D-4D 4WD (ALA30_)	100	03/06 -	3953	3949
RAV 4 III (_A3_)	2.2 D-4D 4WD (ALA30_)	100	03/06 -	4077	
RAV 4 III (_A3_)	2.2 D-4D 4WD (ALA30_)	110	12/08 – 12/13	3953	3949
RAV 4 III (_A3_)	2.2 D-4D 4WD (ALA30_)	110	12/08 – 12/13	4077	
RAV 4 III (_A3_)	2.2 D-CAT 4WD (ALA30_)	130	03/06 -	3953	3949
RAV 4 III (_A3_)	2.2 D-CAT 4WD (ALA30_)	130	03/06 -	4077	
RAV 4 III (_A3_)	2.4 VVTi	125	11/05 -	3953	3949
RAV 4 III (_A3_)	2.4 VVTi	125	11/05 -	4077	3949
RAV 4 III (_A3_)	2.4 VVTi 4WD	125	11/05 -	4077	
RAV 4 III (_A3_)	3.5 4WD	206	08/07 -	3953	3949
RAV 4 III (_A3_)	3.5 VVTi 4WD	201	11/05 -	3953	3949
RAV 4 IV (_A4_)	2.0 D4-D (ALA40_)	91	12/12 -	4077	3949
RAV 4 IV (_A4_)	2.0 D4-D (ALA40_)	91	12/12 -	4255	
RAV 4 IV (_A4_)	2.0 D-4D (WWA42_)	105	10/15 -	4077	3949
RAV 4 IV (_A4_)	2.0 D-4D (WWA42_)	105	10/15 -	4255	
RAV 4 IV (_A4_)	2.0 D4-D 4WD (ALA41_)	91	01/13 -	4077	3949
RAV 4 IV (_A4_)	2.0 D4-D 4WD (ALA41_)	91	01/13 -	4255	
RAV 4 IV (_A4_)	2.0 VVT-i	107	12/12 -	4077	3949
RAV 4 IV (_A4_)	2.0 VVT-i 4WD (ZSA44_)	111	12/12 -	4077	3949
RAV 4 IV (_A4_)	2.0 VVT-i 4WD (ZSA44_)	111	12/12 -	4255	
RAV 4 IV (_A4_)	2.0 VVT-i 4WD (ZSA44_)	112	04/15 -	4077	3949
RAV 4 IV (_A4_)	2.0 VVT-i 4WD (ZSA44_)	112	04/15 -	4255	
RAV 4 IV (_A4_)	2.2 D4-D 4WD	110	12/12 -	4077	3949
RAV 4 IV (_A4_)	2.2 D4-D 4WD	110	12/12 -	4255	
RAV 4 IV (_A4_)	2.5 Hybrid (AVA42_, AVA44_)	114	10/15 -	4077	3949
RAV 4 IV (_A4_)	2.5 Hybrid (AVA42_, AVA44_)	114	10/15 -	4255	
RAV 4 IV (_A4_)	2.5 Hybrid 4WD (AVA44_)	114	10/15 -	4077	3949
RAV 4 IV (_A4_)	2.5 Hybrid 4WD (AVA44_)	114	10/15 -	4255	
RAV 4 IV (_A4_)	2.5 VVT-i	131	12/12 -	4077	3949
RAV 4 IV (_A4_)	2.5 VVT-i 4WD	131	12/12 -	4077	3949
RAV 4 IV (_A4_)	2.5 VVT-i 4WD	132	12/12 -	3953	3949
RAV 4 IV (_A4_)	2.5 VVT-i 4WD	132	12/12 -	4077	
RUSH Closed Off-Road Vehicle (F700_)	1.3	63	03/06 -	3604	
RUSH Closed Off-Road Vehicle (F700_)	1.5	80	03/06 -	3604	
RUSH Closed Off-Road Vehicle (F700_)	1.5 4WD	80	03/06 -	3604	3949
SAI (AZK1_)	2.4 Hybrid	110	11/09 -	3953	
SEQUOIA (_K3_, _K4_)	4.7 (UCK35_)	175	09/00 – 10/07	3996	3997
SEQUOIA (_K3_, _K4_)	4.7 4WD (UCK45_)	175	09/00 – 10/07	3996	3997
SEQUOIA (_K3_, _K4_)	4.7 4WD (UCK45_)	204	09/00 – 10/07	3996	3997
SEQUOIA (_K6_)	4.7 4WD (UCK65_)	206	11/07 -	3996	3997
SEQUOIA (_K6_)	5.7 4WD (USK65_)	284	11/07 -	3996	3997
SIENNA (_L3_)	2.7 (ASL30_)	140	09/10 – 07/13	4255	4256
SIENNA (_L3_)	3.5 (GSL30_)	196	01/10 -	4255	4256
SIENNA (_L3_)	3.5 (GSL30_)	198	01/10 -	4255	4256
SIENNA (_L3_)	3.5 4WD (GSL35_)	196	01/10 – 12/12	4255	4256
SIENNA (_L3_)	3.5 4WD (GSL35_)	198	01/10 -	4255	4256
SIENTA (_P17_)	1.5	79	01/16 -	3953	4256
SIENTA (_P17_)	1.5	81	06/15 -	3953	4256
SIENTA (_P17_)	1.5 4WD	76	06/15 -	3953	4256
SIENTA (_P17_)	1.5 Hybrid	54	06/15 -	3953	4256
SOARER Coupe (_Z3_)	2.5 Turbo	206	09/90 – 09/00		4099
SOARER Coupe (_Z3_)	3.0	166	09/90 – 09/00	4086	4099
SOARER Coupe (_Z3_)	4.0	191	05/92 – 09/00		4099
SOLARA Convertible (_V3_)	2.4	117	02/04 – 11/08	3822	3876
SOLARA Convertible (_V3_)	3.0	137	02/04 – 11/08	3822	3876
SOLARA Convertible (_V3_)	3.3 (MCV31_)	165	02/04 – 11/08	3822	3876
SOLARA Coupe (_V3_)	2.4 (ACV30_)	117	07/03 – 11/08	3822	3876
SOLARA Coupe (_V3_)	3.0	137	07/03 – 07/08	3822	3876
SOLARA Coupe (_V3_)	3.3 (MCV31_)	165	07/03 – 07/08	3822	3876
SPADE (_P14_)	1.5	80	08/12 -	3958	
SPADE (_P14_)	1.5 4WD	76	08/12 -	3958	
SPRINTER CARIB (AE11_)	1.3	65	06/92 – 11/00	3402	
SPRINTER CARIB (AE11_)	1.3	65	06/92 – 11/00	3472	
SPRINTER CARIB (AE11_)	1.6	81	08/95 – 10/01	3402	
SPRINTER CARIB (AE11_)	1.6	81	08/95 – 10/01	3472	

MAKE & MODEL		KW	YEAR		
TOYOTA					
SPRINTER CARIB (AE11_)	1.6	100	04/95 – 11/00	3402	
SPRINTER CARIB (AE11_)	1.6	100	04/95 – 11/00	3472	
SPRINTER CARIB (AE11_)	1.8	85	08/95 – 10/01	3402	
SPRINTER CARIB (AE11_)	1.8	85	08/95 – 10/01	3472	
SPRINTER Saloon (_E11_)	1.8 4WD	85	08/95 – 10/01	3402	
SPRINTER Saloon (_E11_)	1.8 4WD	85	08/95 – 10/01	3472	
SPRINTER Saloon (_E11_)	1.8 4WD	92	04/95 – 11/02	3402	
SPRINTER Saloon (_E11_)	1.8 4WD	92	04/95 – 11/02	3472	
STARLET (EP8_, NP8_)	1.0 (EP80_)	40	12/89 – 12/92	3402	
STARLET (EP8_, NP8_)	1.0 (EP80_)	40	12/89 – 12/92	3472	
STARLET (EP8_, NP8_)	1.3 12V (EP81) CAT	55	12/89 – 03/96	3402	
STARLET (EP8_, NP8_)	1.3 12V (EP81) CAT	55	12/89 – 03/96	3472	
STARLET (EP8_, NP8_)	1.3 12V (EP81_)	55	12/89 – 12/92	3402	
STARLET (EP8_, NP8_)	1.3 12V (EP81_)	55	12/89 – 12/92	3472	
STARLET (EP8_, NP8_)	1.3 XL	52	12/89 – 12/91	3402	
STARLET (EP8_, NP8_)	1.3 XL	52	12/89 – 12/91	3472	
STARLET (EP8_, NP8_)	1.5 D (NP80_)	40	12/89 – 03/96	3402	
STARLET (EP8_, NP8_)	1.5 D (NP80_)	40	12/89 – 03/96	3472	
STARLET (EP9_)	1.3 (EP91_, EP95_)	55	01/96 – 10/99	3402	
STARLET (EP9_)	1.3 (EP91_, EP95_)	55	01/96 – 10/99	3472	
SUPRA (A7)	3.0 24V (MA70)	150	01/86 – 08/88	3701	
SUPRA (A7)	3.0 Turbo (MA70)	173	09/87 – 04/93	3701	
SUPRA (A7)	3.0 Turbo (MA70)	175	08/88 – 05/93	3701	
SUPRA (_A8_)	3.0 i (JZA80_)	168	05/93 – 07/02	3915	
TACOMA (U.S.A.)	2.4 16V		01/95 – 12/06	3666	
TACOMA (U.S.A.)	2.4 16V		01/95 – 12/06	3672	
TACOMA (U.S.A.)	2.7 16V		01/95 – 12/06	3666	
TACOMA (U.S.A.)	2.7 16V		01/95 – 12/06	3672	
TACOMA (U.S.A.)	3.4 24V		01/95 – 12/06	3666	
TACOMA (U.S.A.)	3.4 24V		01/95 – 12/06	3672	
TACOMA (U.S.A.)	3.4 24V		09/94 – 12/00	3666	
TACOMA (U.S.A.)	3.4 24V		09/94 – 12/00	3672	
TACOMA (U.S.A.)	4.0 24V		09/94 – 12/00	3666	
TACOMA (U.S.A.)	4.0 24V		09/94 – 12/00	3672	
TERCEL (_L1_, _L2_)	1.3 (AL20, AL11)	48	03/79 – 01/88	3402	
TERCEL (_L1_, _L2_)	1.3 (AL20, AL11)	48	03/79 – 01/88	3472	
TERCEL (AL2_)	1.5 4WD (AL25)	50	09/82 – 07/84	3402	
TERCEL (AL2_)	1.5 4WD (AL25)	52	10/82 – 01/88	3402	
TERCEL (AL2_)	1.5 4WD (AL25_)	50	09/82 – 07/84	3472	
TERCEL (AL2_)	1.5 4WD (AL25_)	52	10/82 – 01/88	3472	
TERCEL Estate (AL2_)	1.5	52	08/82 – 10/86	3402	
TERCEL Estate (AL2_)	1.5	52	08/82 – 10/86	3472	
TERCEL Estate (AL2_)	1.5	60	09/86 – 10/87	3402	
TERCEL Estate (AL2_)	1.5	60	09/86 – 10/87	3472	
TERCEL Estate (AL2_)	1.5	61	08/82 – 10/87	3402	
TERCEL Estate (AL2_)	1.5	61	08/82 – 10/87	3472	
TUNDRA Pickup (_K5_)	4.0 (GSK50_, GSK51_)	176	11/06 – 12/11	3996	3997
TUNDRA Pickup (_K5_)	4.0 4WD (GSK50_, GSK51_)	176	11/06 – 12/11	3996	3997
TUNDRA Pickup (_K5_)	4.7 (UCK50_, UCK51_, UCK52_, UCK55_, UCK56_,UCK57_)	206	11/06 – 03/09	3996	3997
TUNDRA Pickup (_K5_)	4.7 4WD (UCK50_,UCK51_,UCK52_,UCK55_,UCK56_,UCK57_)	206	11/06 – 03/09	3996	3997
TUNDRA Pickup (_K5_)	5.7 (USK50_, USK51, USK52_, USK56_, USK57_)	284	01/07 -	3996	3997
TUNDRA Pickup (_K5_)	5.7 4WD (USK50_, USK51_, USK52_, USK56_, USK57_)	284	01/07 -	3996	3997
TUNDRA Pickup (_K5_)	5.7 Flexfuel 4WD (USK55_, USK56_, USK57_)	280	04/09 – 07/13	3996	3997
URBAN CRUISER (_P1_)	1.33 (NSP110_)	73	01/09 -	3953	3954
URBAN CRUISER (_P1_)	1.33 (NSP110_)	74	04/09 -	3953	3954
URBAN CRUISER (_P1_)	1.4 D-4D (NLP110_)	66	01/09 – 04/14	3953	3954
URBAN CRUISER (_P1_)	1.4 D-4D 4WD (NLP115_)	66	01/09 – 04/14	3953	3954
URBAN CRUISER (_P1_)	1.5 VVTi (NCP110_)	80	07/07 -	3953	
URBAN CRUISER (_P1_)	1.5 VVTi 4WD (NCP115_)	76	07/07 -	3953	
VEROSSA (_X11_)	2.5 VVTi	206	10/00 – 11/03	3915	
VERSO (_R2_)	1.6 (ZGR20_)	97	04/09 -	4147	
VERSO (_R2_)	1.6 D4-D (WAR20_)	82	11/13 -	4147	
VERSO (_R2_)	1.8 (ZGR21_)	108	04/09 -	4147	
VERSO (_R2_)	2.0 D-4D (AUR20_)	91	11/12 -	4147	
VERSO (_R2_)	2.0 D-4D (AUR20_)	93	04/09 -	4147	
VERSO S (_P12_)	1.33 (NSP120_)	73	11/10 – 10/16	3953	3954
VERSO S (_P12_)	1.4 D4-D (NLP121_)	66	11/10 – 10/16	3953	3954
VIOS III / YARIS (NCP15_)	1.5 (1NZ-FE)	79	09/13 -	4205	
VIOS III / YARIS (NCP15_)	1.5 (1NZ-FE)	80	05/13 -	4205	
VIOS/YARIS Saloon (_P15_)	1.5 (NCP150_)	80	05/13 -		3954
VIOS/YARIS Saloon (_P9_)	1.0 (KSP90_)	52	08/07 -	3958	
VIOS/YARIS Saloon (_P9_)	1.3 (NCP92_)	64	08/07 -	3958	3954
VIOS/YARIS Saloon (_P9_)	1.3 4WD (NCP92_)	64	08/07 -	3958	3954
VIOS/YARIS Saloon (_P9_)	1.5 (NCP93)	80	08/07 -	3958	
VIOS/YARIS Saloon (_P9_)	1.5 (NCP93_)	81	08/07 -	3958	
WILL CYPHA (NCP7_)	1.3 VVTi	62	05/01 – 07/05	3769	

MAKE & MODEL   		KW	YEAR		
TOYOTA					
WILL VS (ZZE12_, NZE12_)	1.5 VVTi 4WD	81	03/01 – 04/04	3769	
WINDOM (_V2_)	2.5	147	10/96 – 07/01	3822	3776
WINDOM (_V2_)	2.5	147	10/96 – 07/01		3876
WINDOM (_V2_)	3.0	155	10/96 – 07/01	3822	3776
WINDOM (_V2_)	3.0	155	10/96 – 07/01		3876
WINDOM (_V3_)	3.0 VVTi G	158	08/01 – 07/04		3911
WISH MPV (_E1_)	1.8 Hi	97	04/03 – 03/09	3910	3911
WISH MPV (_E1_)	1.8 Hi 4WD	92	04/03 – 03/09	3910	3911
WISH MPV (_E1_)	2.0 Zi	114	04/03 – 03/09	3910	3911
WISH MPV (_E2_)	1.8 (ZGE20_)	106	04/09 -	3953	
WISH MPV (_E2_)	1.8 4WD (ZGE25_)	98	04/09 -	3953	
WISH MPV (_E2_)	2.0 (ZGE21_, ZGE22_)	116	04/09 -	3953	3911
WISH MPV (_E2_)	2.0 4WD (ZGE21_, ZGE22_)	116	04/09 -	3953	3911
YARIS (_P1_)	1.0 (SCP10_)	48	03/03 – 09/05	4112	3788
YARIS (_P1_)	1.0 (SCP10_)	50	04/99 – 09/05	4112	3788
YARIS (_P1_)	1.3 (NCP10_, SCP12_)	63	11/99 – 10/05	4112	3788
YARIS (_P1_)	1.3 (SCP12_)	64	08/99 – 09/05	4112	3788
YARIS (_P1_)	1.4 D-4D (NLP10_)	55	10/01 – 09/05	4112	3788
YARIS (_P1_)	1.4 D-4D (NLP10_)	66	02/03 – 10/05	4112	3788
YARIS (_P1_)	1.5 (NCP13_)	77	01/03 – 11/05		3788
YARIS (_P1_)	1.5 (NCP13_)	78	04/01 – 09/05	4112	3788
YARIS (_P1_)	1.5 (NCP13_)	110	03/00 – 07/05		3788
YARIS (_P13_)	1.0 (KSP130_)	51	12/10 -	3958	3954
YARIS (_P13_)	1.3 (NCP130_)	63	08/11 -	3958	3954
YARIS (_P13_)	1.3 (NSP130_)	70	09/11 -		3954
YARIS (_P13_)	1.3 (NSP130_)	73	09/11 -		3954
YARIS (_P13_)	1.3 4WD (NSP135_)	70	12/10 -		3954
YARIS (_P13_)	1.5 Hybrid (NHP130_)	55	03/12 -	3953	
YARIS (_P15_)	1.2 (NSP152_)	63	10/13 -		3954
YARIS (_P15_)	1.5 (NCP150_)	80	03/14 -		3954
YARIS (_P9_)	1.0 GPL (KSP90_)	51	01/06 -	3958	
YARIS (_P9_)	1.0 VVT-i (KSP90_)	51	01/05 -	3958	
YARIS (_P9_)	1.3 4WD (NCP92_)	64	08/07 -	3958	
YARIS (_P9_)	1.3 VVT-i (NCP90_, SCP90_)	63	01/05 -	3958	
YARIS (_P9_)	1.3 VVT-i (SCP90_, NCP90_)	64	08/05 -	3958	
YARIS (_P9_)	1.33 VVT-i (NSP90_)	73	07/10 -	3958	
YARIS (_P9_)	1.33 VVT-i (NSP90_)	74	11/08 -	3958	
YARIS (_P9_)	1.4 D-4D (NLP90_)	66	08/05 -	3958	
YARIS (_P9_)	1.5 (NCP91_)	80	11/05 -	3958	
YARIS (_P9_)	1.8 VVTi	97	11/05 -		3954
YARIS (_P9_)	1.8 VVTi (ZSP90_)	98	01/07 -		3954
YARIS (NHP13_, NSP13_, NCP13_, KSP13_, NLP13_)	1.5 (NCP131_)	80	12/10 -	3768	
YARIS (SCP1_, NLP1_, NCP1_)	1.0 (SCP10_)	48	03/03 – 09/05	3769	
YARIS (SCP1_, NLP1_, NCP1_)	1.0 (SCP10_)	48	03/03 – 09/05	3768	
YARIS (SCP1_, NLP1_, NCP1_)	1.0 (SCP10_)	50	04/99 – 09/05	3769	
YARIS (SCP1_, NLP1_, NCP1_)	1.0 (SCP10_)	50	04/99 – 09/05	3768	
YARIS (SCP1_, NLP1_, NCP1_)	1.3 (NCP10_, NCP11_)	64	08/99 – 09/05	3769	
YARIS (SCP1_, NLP1_, NCP1_)	1.3 (NCP10_, NCP11_)	64	08/99 – 09/05	3768	
YARIS (SCP1_, NLP1_, NCP1_)	1.3 (NCP10_, NCP20_, NCP22_)	63	11/99 – 10/05	3769	
YARIS (SCP1_, NLP1_, NCP1_)	1.3 (NCP10_, NCP20_, NCP22_)	63	11/99 – 10/05	3768	
YARIS (SCP1_, NLP1_, NCP1_)	1.4 D-4D (NLP10_, NLP20_, NLP22_)	55	10/01 – 09/05	3769	
YARIS (SCP1_, NLP1_, NCP1_)	1.4 D-4D (NLP10_)	66	02/03 – 10/05	3769	
YARIS (SCP1_, NLP1_, NCP1_)	1.4 D-4D (NLP10_)	66	02/03 – 10/05	3768	
YARIS (SCP1_, NLP1_, NCP1_)	1.4 D-4D (NLP10_, NLP20_, NLP22_)	55	10/01 – 09/05	3768	
YARIS (SCP1_, NLP1_, NCP1_)	1.5 (NCP12_, NCP13_)	78	04/01 – 09/05	3769	
YARIS (SCP1_, NLP1_, NCP1_)	1.5 (NCP13_)	77	01/03 – 11/05	3769	
YARIS (SCP1_, NLP1_, NCP1_)	1.5 (NCP13_, NCP21_)	110	03/00 – 07/05	3769	
YARIS III / VITZ (NCP15_)	1.2 (3NR-FE)	63	10/13 -	4205	
YARIS III / VITZ (NCP15_)	1.5 (1NZ-FE)	80	03/14 -	4205	
YARIS VERSO (_P2_)	1.3 (NCP20_, NCP22_)	62	11/02 – 09/05		3788
YARIS VERSO (_P2_)	1.3 (NCP20_, NCP22_)	63	08/99 – 10/02		3788
YARIS VERSO (_P2_)	1.4 D-4D (NLP20_, NLP22_)	55	12/01 – 09/05		3788
YARIS VERSO (_P2_)	1.5 (NCP21_)	77	05/03 – 09/05		3788
YARIS VERSO (_P2_)	1.5 (NCP21_)	78	03/00 – 09/05		3788
YARIS VERSO (_P2_)	1.5 4WD (NCP21_)	78	03/00 – 09/05		3788
YARIS VERSO (NLP2_, NCP2_)	1.3 (NCP20_, NCP22_)	62	11/02 – 09/05	3769	
YARIS VERSO (NLP2_, NCP2_)	1.3 (NCP20_, NCP22_)	63	08/99 – 10/02	3769	
YARIS VERSO (NLP2_, NCP2_)	1.4 D-4D (NLP20_, NLP22_)	55	12/01 – 09/05	3769	
YARIS VERSO (NLP2_, NCP2_)	1.5 (NCP21_)	77	05/03 – 09/05	3769	
YARIS VERSO (NLP2_, NCP2_)	1.5 (NCP21_)	78	03/00 – 09/05	3769	
YARIS VERSO (NLP2_, NCP2_)	1.5 4WD (NCP21_)	78	03/00 – 09/05	3769	
ZELAS Coupe (AGT20_)	2.5 VVT-i (AGT20_)	131	08/10 -	4077	3954
ZELAS Coupe (AGT20_)	2.5 VVT-i (AGT20_)	133	02/11 -	4077	

MAKE & MODEL		KW	YEAR		
TOYOTA (FAW)					
COROLLA	1.6	90	10/10 -	3953	3954
COROLLA	1.8	93	02/04 – 01/07		3788
COROLLA	1.8	101	02/04 – 01/07	3953	3954
COROLLA	1.8	103	10/10 -	3953	3954
COROLLA	2.0	106	10/10 -	3953	3954
COROLLA EX	1.6	88	05/07 – 12/14		3876
COROLLA EX	1.6	90	05/07 – 12/14	3953	3954
DARIO TERIOS	1.3	63	01/03 – 12/06	3604	
DARIO TERIOS	1.3 All-wheel Drive	63	01/03 – 12/06	3604	
LAND CRUISER 100	4.5	155	10/03 – 04/07	3693	
LAND CRUISER 100	4.5	155	10/03 – 04/07	3829	
LAND CRUISER 100	4.7 All-wheel Drive	175	10/03 – 07/07	3829	
LAND CRUISER 100	4.7 All-wheel Drive	175	10/03 – 07/07	3830	
LAND CRUISER 200	4.0 All-wheel Drive	179	12/07 -	3996	
LAND CRUISER 200	4.7	202	12/07 -	3996	
LAND CRUISER PRADO (J15)	4.0	202	06/10 -	3693	
PRADO	4.0 All-wheel Drive	179	10/03 – 06/10	3693	
RAV4 Closed Off-Road Vehicle	2.0	110	04/09 – 08/13	4077	3949
RAV4 Closed Off-Road Vehicle	2.0 4x4	110	04/09 – 08/13	4077	3949
RAV4 Closed Off-Road Vehicle	2.4 4x4	125	04/09 – 08/13	4077	3949
VIOS	1.3	63	10/08 – 05/13		3788
VIOS	1.3	64	10/05 – 02/08		3788
VIOS	1.3	64	11/02 – 10/05		3788
VIOS	1.5	68	10/05 – 02/08		3788
VIOS	1.5	68	11/02 – 10/05		3788
VIOS	1.6	87	10/08 – 05/13		3788
TOYOTA (GAC)					
CAMRY (ACV4_)	200 (ACV41_)	108	06/06 – 12/15	3948	3949
CAMRY (ACV4_)	240 (ACV40_)	123	06/06 – 12/11	3948	3949
CAMRY (ACV4_)	240 H (ACV40_)	110	04/10 -	3948	3949
HIGHLANDER (ASU4_, GSU4_)	2.7 (ASU40_)	140	05/09 -		4254
HIGHLANDER (ASU4_, GSU4_)	3.5 4WD (GSU45_)	201	05/09 -		4254
YARIS	1.3	63	06/08 -	3958	
TRIUMPH					
SPITFIRE	1500	51	01/75 – 01/80	3311	
SPITFIRE	1.2 MK II	49	12/65 – 12/67	3311	
SPITFIRE	1.3 MK III	55	12/67 – 12/70	3311	
SPITFIRE	1.3 MK IV	55	01/71 – 12/72	3311	
SPITFIRE	1.5 MK IV	51	12/72 – 12/75	3311	
Spitfire 1500 (FM) 44317 MK IV	-	51	12/1972 - 12/1975	3311	
STAG	3.0	107	01/70 – 12/77	3416	
TVR					
CHIMAERA	3.9	177	01/93 – 10/03	3417	
CHIMAERA	3.9	177	01/93 – 10/03	3570	
CHIMAERA	4.3	206	01/93 – 12/93	3570	
CHIMAERA	5.0	217	11/92 – 12/96	3570	
CHIMAERA	5.0	243	11/92 – 12/96	3570	
CHIMAERA	5.0	250	01/93 – 10/03	3417	
CHIMAERA	5.0	250	01/93 – 10/03	3570	
GRIFFITH (TCT_)	4.0	177	01/90 – 12/93	3570	
GRIFFITH (TCT_)	4.3	206	01/90 – 12/93	3570	
GRIFFITH (TCT_)	5.0	217	10/92 – 09/97	3570	
GRIFFITH (TCT_)	5.0	243	01/93 – 03/02	3417	
GRIFFITH (TCT_)	5.0	243	01/93 – 03/02	3570	
GRIFFITH (TCT_)	5.0	254	10/92 – 09/97	3570	
S	2.8	110	01/86 – 12/88	3429	
S	2.8	118	08/86 – 04/89	3429	
S	2.9	125	01/88 – 12/96	3429	
S	4.0	177	01/88 – 12/96	3429	
UMM					
ALTER	2.0	64	01/85 – 12/96	3641	
ALTER	2.3 D	50	01/85 – 12/96	3641	
ALTER	2.5 D	56	01/85 – 12/96	3641	
ALTER	2.5 TD	81	01/86 – 12/96	3641	
VAUXHALL					
ADAM	1.0	85	07/14 -	3826/2	4286
ADAM	1.2	51	10/12 -	3826/2	
ADAM	1.4	64	10/12 -	3826/2	
ADAM	1.4	74	10/12 -	3826/2	
ADAM	1.4 LPG	64	07/13 -	3826/2	
ADAM	1.4 S	110	11/14 -	4042	4286
AGILA Mk II (B)	1.0 12V	48	01/08 – 11/14	3983/1	
AGILA Mk II (B)	1.0 i	50	08/11 – 11/14	3983/1	
AGILA Mk II (B)	1.2 i 16V	63	01/08 – 11/14	3983/1	
AGILA Mk II (B)	1.2 i 16V	69	01/08 – 11/14	3983/1	

MAKE & MODEL		KW	YEAR		
VAUXHALL					
AGILA Mk II (B)	1.3 CDTI	55	01/08 – 11/14	3983/1	
AMPERA	EV 150 (D1JOI)	111	03/12 -	4014	
AMPERA	EV 150 (D1JOI)	111	03/12 -	4008	
ANTARA (J26, H26)	2.0 CDTI	93	08/06 – 04/15	3976	
ANTARA (J26, H26)	2.0 CDTi	110	08/06 – 04/15	3976	
ANTARA (J26, H26)	2.2 CDTi	120	12/10 -	3976	
ANTARA (J26, H26)	2.2 CDTi	135	12/10 -	3976	
ANTARA (J26, H26)	2.2 CDTi FWD	120	12/10 -	3976	
ANTARA (J26, H26)	2.4	103	08/06 – 04/15	3976	
ANTARA (J26, H26)	2.4	123	12/10 – 04/15	3976	
ANTARA (J26, H26)	2.4	126	11/10 – 04/15	3976	
ANTARA (J26, H26)	3.0	188	11/10 – 04/15	3976	
ANTARA (J26, H26)	3.2 V6	167	11/06 – 04/15	3976	
ARENA Combi	1.9 D	44	03/98 – 08/01	3482	
ARENA Combi	2.5 D	55	03/98 – 08/01	3482	
ARENA Van	1.9 D	44	03/98 – 08/01	3482	
ARENA Van	2.5 D	55	03/98 – 08/01	3482	
ASTRA GTC Mk VI (J)	1.4	74	10/11 -	4014	
ASTRA GTC Mk VI (J)	1.4	74	10/11 -	4008	
ASTRA GTC Mk VI (J)	1.4	74	10/11 -	4149	
ASTRA GTC Mk VI (J)	1.4	88	10/11 -	4014	
ASTRA GTC Mk VI (J)	1.4	88	10/11 -	4008	
ASTRA GTC Mk VI (J)	1.4	88	10/11 -	4149	
ASTRA GTC Mk VI (J)	1.4	88	10/11 -	4230	
ASTRA GTC Mk VI (J)	1.4	103	10/11 -	4014	
ASTRA GTC Mk VI (J)	1.4	103	10/11 -	4008	
ASTRA GTC Mk VI (J)	1.4	103	10/11 -	4149	
ASTRA GTC Mk VI (J)	1.4	103	10/11 -	4230	
ASTRA GTC Mk VI (J)	1.6	132	10/11 -	4014	
ASTRA GTC Mk VI (J)	1.6	132	10/11 -	4008	
ASTRA GTC Mk VI (J)	1.6	132	10/11 -	4149	
ASTRA GTC Mk VI (J)	1.6	132	10/11 -	4230	
ASTRA GTC Mk VI (J)	1.6 CDTi	81	07/14 -	4014	
ASTRA GTC Mk VI (J)	1.6 CDTi	81	07/14 -	4008	
ASTRA GTC Mk VI (J)	1.6 CDTi	81	07/14 -	4149	
ASTRA GTC Mk VI (J)	1.6 CDTi	81	07/14 -	4230	
ASTRA GTC Mk VI (J)	1.6 CDTi	100	07/14 -	4014	
ASTRA GTC Mk VI (J)	1.6 CDTi	100	07/14 -	4008	
ASTRA GTC Mk VI (J)	1.6 CDTi	100	07/14 -	4149	
ASTRA GTC Mk VI (J)	1.6 CDTi	100	07/14 -	4230	
ASTRA GTC Mk VI (J)	1.6 SIDI	125	12/12 -	4014	
ASTRA GTC Mk VI (J)	1.6 SIDI	125	12/12 -	4008	
ASTRA GTC Mk VI (J)	1.6 SIDI	125	12/12 -	4230	
ASTRA GTC Mk VI (J)	1.6 SIDI	147	09/13 -	4014	
ASTRA GTC Mk VI (J)	1.6 SIDI	147	09/13 -	4008	
ASTRA GTC Mk VI (J)	1.6 SIDI	147	09/13 -	4230	
ASTRA GTC Mk VI (J)	1.7 CDTi	81	10/11 -	4014	
ASTRA GTC Mk VI (J)	1.7 CDTi	81	10/11 -	4008	
ASTRA GTC Mk VI (J)	1.7 CDTi	81	10/11 -	4149	
ASTRA GTC Mk VI (J)	1.7 CDTi	81	10/11 -	4230	
ASTRA GTC Mk VI (J)	1.7 CDTi	96	10/11 -	4014	
ASTRA GTC Mk VI (J)	1.7 CDTi	96	10/11 -	4008	
ASTRA GTC Mk VI (J)	1.7 CDTi	96	10/11 -	4149	
ASTRA GTC Mk VI (J)	1.7 CDTi	96	10/11 -	4230	
ASTRA GTC Mk VI (J)	2.0 BiTurbo CDTI	143	12/12 -	4014	
ASTRA GTC Mk VI (J)	2.0 BiTurbo CDTI	143	12/12 -	4008	
ASTRA GTC Mk VI (J)	2.0 BiTurbo CDTI	143	12/12 -	4230	
ASTRA GTC Mk VI (J)	2.0 CDTi	121	10/11 -	4014	
ASTRA GTC Mk VI (J)	2.0 CDTi	121	10/11 -	4008	
ASTRA GTC Mk VI (J)	2.0 CDTi	121	10/11 -	4149	
ASTRA GTC Mk VI (J)	2.0 CDTi	121	10/11 -	4230	
ASTRA GTC Mk VI (J)	2.0 VXR	206	04/12 -	4014	
ASTRA GTC Mk VI (J)	2.0 VXR	206	04/12 -	4008	
ASTRA GTC Mk VI (J)	2.0 VXR	206	04/12 -	4149	
ASTRA GTC Mk VI (J)	2.0 VXR	206	04/12 -	4230	
ASTRA Hatchback	1.8 GTE	85	03/83 – 08/86	3410	
ASTRA Hatchback	1.8 GTE	85	03/83 – 08/86	3470	
ASTRA Hatchback	1.8 GTE	85	03/83 – 08/86	3505	
ASTRA Hatchback	1.8 GTE	85	03/83 – 08/86	3615	
ASTRA Mk II Belmont	1.3	55	09/85 – 08/91	3410	
ASTRA Mk II Belmont	1.3 i CAT	44	09/85 – 08/91	3410	
ASTRA Mk II Belmont	1.4 i	44	01/90 – 12/91	3410	
ASTRA Mk II Belmont	1.5 DT	49	01/88 – 08/90	3410	
ASTRA Mk II Belmont	1.5 DT	53	01/87 – 08/89	3410	
ASTRA Mk II Belmont	1.6	66	09/85 – 08/91	3410	
ASTRA Mk II Belmont	1.6 D	40	09/85 – 08/91	3410	

MAKE & MODEL		KW	YEAR		
VAUXHALL					
ASTRA Mk II Belmont	1.6 S	60	01/89 – 12/91	3410	
ASTRA Mk II Belmont	1.7 D	42	01/89 – 12/91	3410	
ASTRA Mk II Belmont	1.8	82	01/86 – 12/90	3410	
ASTRA Mk II Belmont	1.8	82	01/86 – 12/90	3470	
ASTRA Mk II Belmont	1.8	82	01/86 – 12/90	3505	
ASTRA Mk II Belmont	1.8	82	01/86 – 12/90	3615	
ASTRA Mk II Belmont	1.8 i	85	09/85 – 08/91	3410	
ASTRA Mk II Belmont	1.8 i	85	09/85 – 08/91	3470	
ASTRA Mk II Belmont	1.8 i	85	09/85 – 08/91	3505	
ASTRA Mk II Belmont	1.8 i	85	09/85 – 08/91	3615	
ASTRA Mk II Convertible	1.6 i	55	01/91 – 08/93	3410	
ASTRA Mk II Convertible	1.6 i	60	01/87 – 12/91	3410	
ASTRA Mk II Convertible	1.6 i CAT	55	10/87 – 02/93	3410	
ASTRA Mk II Convertible	2.0 i	85	01/87 – 12/91	3410	
ASTRA Mk II Convertible	2.0 i	85	01/87 – 12/91	3470	
ASTRA Mk II Convertible	2.0 i	85	01/87 – 12/91	3505	
ASTRA Mk II Convertible	2.0 i	85	01/87 – 12/91	3615	
ASTRA Mk II Convertible	2.0 i CAT	85	01/91 – 08/93	3410	
ASTRA Mk II Convertible	2.0 i CAT	85	01/91 – 08/93	3470	
ASTRA Mk II Convertible	2.0 i CAT	85	01/91 – 08/93	3505	
ASTRA Mk II Convertible	2.0 i CAT	85	01/91 – 08/93	3615	
ASTRA Mk II Estate	1.2	44	09/84 – 12/88	3410	
ASTRA Mk II Estate	1.3	51	09/84 – 08/91	3410	
ASTRA Mk II Estate	1.3	55	09/84 – 08/91	3410	
ASTRA Mk II Estate	1.4 S	55	01/89 – 08/91	3410	
ASTRA Mk II Estate	1.5 DT	49	01/88 – 08/91	3410	
ASTRA Mk II Estate	1.6	60	09/84 – 08/91	3410	
ASTRA Mk II Estate	1.6 D	40	09/84 – 12/89	3410	
ASTRA Mk II Estate	1.6 S	66	09/84 – 08/86	3410	
ASTRA Mk II Estate	1.7 D	42	02/89 – 08/91	3410	
ASTRA Mk II Estate	1.8 i	83	01/90 – 08/91	3410	
ASTRA Mk II Hatchback	1.2	40	09/84 – 08/91	3410	
ASTRA Mk II Hatchback	1.2	44	09/84 – 08/91	3410	
ASTRA Mk II Hatchback	1.3	44	09/84 – 08/91	3410	
ASTRA Mk II Hatchback	1.3	55	09/84 – 08/91	3410	
ASTRA Mk II Hatchback	1.4 i	44	01/90 – 08/91	3410	
ASTRA Mk II Hatchback	1.4 S	55	01/90 – 08/91	3410	
ASTRA Mk II Hatchback	1.6	60	09/84 – 08/91	3410	
ASTRA Mk II Hatchback	1.6 D	40	09/84 – 12/89	3410	
ASTRA Mk II Hatchback	1.6 S	66	09/84 – 08/86	3410	
ASTRA Mk II Hatchback	1.7 D	42	01/89 – 08/91	3410	
ASTRA Mk II Hatchback	1.8 GTE	82	09/84 – 08/91	3410	
ASTRA Mk II Hatchback	1.8 GTE	82	09/84 – 08/91	3470	
ASTRA Mk II Hatchback	1.8 GTE	82	09/84 – 08/91	3505	
ASTRA Mk II Hatchback	1.8 GTE	82	09/84 – 08/91	3615	
ASTRA Mk II Hatchback	1.9	110	03/88 – 08/91	3470	3469
ASTRA Mk II Hatchback	1.9	110	03/88 – 08/91	3410	
ASTRA Mk II Hatchback	1.9	110	03/88 – 08/91	3505	
ASTRA Mk II Hatchback	1.9	110	03/88 – 08/91	3615	
ASTRA Mk II Hatchback	2.0	85	09/86 – 08/91	3410	3469
ASTRA Mk II Hatchback	2.0	85	09/86 – 08/91	3470	
ASTRA Mk II Hatchback	2.0	85	09/86 – 08/91	3505	
ASTRA Mk II Hatchback	2.0	85	09/86 – 08/91	3615	
ASTRA Mk II Hatchback	2.0 GTE	95	09/86 – 08/91	3470	3469
ASTRA Mk II Hatchback	2.0 GTE	95	09/86 – 08/91	3410	
ASTRA Mk II Hatchback	2.0 GTE	95	09/86 – 08/91	3505	
ASTRA Mk II Hatchback	2.0 GTE	95	09/86 – 08/91	3615	
ASTRA Mk II Hatchback	2.0 GTE 16V	115	05/88 – 08/91	3470	3469
ASTRA Mk II Hatchback	2.0 GTE 16V	115	05/88 – 08/91	3410	
ASTRA Mk II Hatchback	2.0 GTE 16V	115	05/88 – 08/91	3505	
ASTRA Mk II Hatchback	2.0 GTE 16V	115	05/88 – 08/91	3615	
ASTRA Mk III (F)	1.4 i	44	04/92 – 09/98	3623	
ASTRA Mk III (F)	1.4 i	60	04/92 – 09/98	3623	
ASTRA Mk III (F)	1.4 i 16V	66	02/96 – 09/98	3623	
ASTRA Mk III (F)	1.6 i	52	08/94 – 07/96	3623	
ASTRA Mk III (F)	1.6 i	55	03/92 – 09/98	3623	
ASTRA Mk III (F)	1.6 i	74	05/92 – 12/94	3623	
ASTRA Mk III (F)	1.6 i 16V	74	08/94 – 09/98	3470	
ASTRA Mk III (F)	1.6 i 16V	74	08/94 – 09/98	3505	
ASTRA Mk III (F)	1.6 i 16V	74	08/94 – 09/98	3615	
ASTRA Mk III (F)	1.7 D	42	03/92 – 09/92	3470	
ASTRA Mk III (F)	1.7 D	42	03/92 – 09/92	3505	
ASTRA Mk III (F)	1.7 D	42	03/92 – 09/92	3615	
ASTRA Mk III (F)	1.7 D	42	03/92 – 09/92	3623	
ASTRA Mk III (F)	1.7 D	44	07/92 – 09/98	3470	
ASTRA Mk III (F)	1.7 D	44	07/92 – 09/98	3505	

BESER®

MAKE & MODEL		KW	YEAR		
VAUXHALL					
ASTRA Mk III (F)	1.7 D	44	07/92 – 09/98	3615	
ASTRA Mk III (F)	1.7 D	44	07/92 – 09/98	3623	
ASTRA Mk III (F)	1.7 TD	50	08/94 – 09/98	3470	
ASTRA Mk III (F)	1.7 TD	50	08/94 – 09/98	3505	
ASTRA Mk III (F)	1.7 TD	50	08/94 – 09/98	3615	
ASTRA Mk III (F)	1.7 TD	50	08/94 – 09/98	3623	
ASTRA Mk III (F)	1.7 TD	60	12/91 – 09/98	3470	
ASTRA Mk III (F)	1.7 TD	60	12/91 – 09/98	3505	
ASTRA Mk III (F)	1.7 TD	60	12/91 – 09/98	3615	
ASTRA Mk III (F)	1.7 TD	60	12/91 – 09/98	3623	
ASTRA Mk III (F)	1.8 i	66	03/92 – 09/98	3623	
ASTRA Mk III (F)	1.8 i 16V	82	09/95 – 02/98	3470	3469
ASTRA Mk III (F)	1.8 i 16V	82	09/95 – 02/98	3505	
ASTRA Mk III (F)	1.8 i 16V	82	09/95 – 02/98	3615	
ASTRA Mk III (F)	1.8 i 16V	85	01/94 – 12/96	3470	3469
ASTRA Mk III (F)	1.8 i 16V	85	01/94 – 12/96	3505	
ASTRA Mk III (F)	1.8 i 16V	85	01/94 – 12/96	3615	
ASTRA Mk III (F)	1.8 i 16V	92	06/93 – 10/94	3470	3469
ASTRA Mk III (F)	1.8 i 16V	92	06/93 – 10/94	3505	
ASTRA Mk III (F)	1.8 i 16V	92	06/93 – 10/94	3615	
ASTRA Mk III (F)	2.0 i	85	03/92 – 09/98	3470	3469
ASTRA Mk III (F)	2.0 i	85	03/92 – 09/98	3505	
ASTRA Mk III (F)	2.0 i	85	03/92 – 09/98	3615	
ASTRA Mk III (F)	2.0 i 16V	100	02/95 – 09/98	3470	3469
ASTRA Mk III (F)	2.0 i 16V	100	02/95 – 09/98	3505	
ASTRA Mk III (F)	2.0 i 16V	100	02/95 – 09/98	3615	
ASTRA Mk III (F) Convertible	1.4	55	09/91 – 09/93	3623	
ASTRA Mk III (F) Convertible	1.4 i	44	05/93 – 02/98	3623	
ASTRA Mk III (F) Convertible	1.4 i	60	05/93 – 03/01	3623	
ASTRA Mk III (F) Convertible	1.4 i 16V	66	01/96 – 03/01	3623	
ASTRA Mk III (F) Convertible	1.6	74	03/94 – 08/95	3623	
ASTRA Mk III (F) Convertible	1.6 i	52	03/93 – 08/96	3623	
ASTRA Mk III (F) Convertible	1.6 i	55	01/96 – 03/01	3623	
ASTRA Mk III (F) Convertible	1.8	92	09/94 – 08/96	3470	3469
ASTRA Mk III (F) Convertible	1.8	92	09/94 – 08/96	3505	
ASTRA Mk III (F) Convertible	1.8	92	09/94 – 08/96	3615	
ASTRA Mk III (F) Convertible	1.8 16V	85	11/94 – 03/01	3470	3469
ASTRA Mk III (F) Convertible	1.8 16V	85	11/94 – 03/01	3505	
ASTRA Mk III (F) Convertible	1.8 16V	85	11/94 – 03/01	3615	
ASTRA Mk III (F) Convertible	1.8 i	66	05/93 – 02/98	3623	
ASTRA Mk III (F) Convertible	2.0 i	85	03/93 – 10/94	3470	3469
ASTRA Mk III (F) Convertible	2.0 i	85	03/93 – 10/94	3505	
ASTRA Mk III (F) Convertible	2.0 i	85	03/93 – 10/94	3615	
ASTRA Mk III (F) Convertible	2.0 i 16V	100	01/94 – 02/98	3470	3469
ASTRA Mk III (F) Convertible	2.0 i 16V	100	01/94 – 02/98	3505	
ASTRA Mk III (F) Convertible	2.0 i 16V	100	01/94 – 02/98	3615	
ASTRA Mk III (F) Estate	1.4 i	44	09/91 – 02/98	3623	
ASTRA Mk III (F) Estate	1.4 i	60	03/91 – 02/98	3623	
ASTRA Mk III (F) Estate	1.4 i 16V	66	02/96 – 01/98	3623	
ASTRA Mk III (F) Estate	1.4 S	55	09/91 – 02/98	3623	
ASTRA Mk III (F) Estate	1.6 i	52	07/94 – 02/98	3623	
ASTRA Mk III (F) Estate	1.6 i	55	09/91 – 02/98	3623	
ASTRA Mk III (F) Estate	1.6 i 16V	74	01/94 – 02/98	3470	
ASTRA Mk III (F) Estate	1.6 i 16V	74	01/94 – 02/98	3505	
ASTRA Mk III (F) Estate	1.6 i 16V	74	01/94 – 02/98	3615	
ASTRA Mk III (F) Estate	1.6 Si	74	03/91 – 12/94	3623	
ASTRA Mk III (F) Estate	1.7 D	42	12/91 – 02/98	3470	
ASTRA Mk III (F) Estate	1.7 D	42	12/91 – 02/98	3505	
ASTRA Mk III (F) Estate	1.7 D	42	12/91 – 02/98	3615	
ASTRA Mk III (F) Estate	1.7 D	42	12/91 – 02/98	3623	
ASTRA Mk III (F) Estate	1.7 D	44	03/91 – 12/94	3470	
ASTRA Mk III (F) Estate	1.7 D	44	03/91 – 12/94	3505	
ASTRA Mk III (F) Estate	1.7 D	44	03/91 – 12/94	3615	
ASTRA Mk III (F) Estate	1.7 D	44	03/91 – 12/94	3623	
ASTRA Mk III (F) Estate	1.7 TD	50	01/94 – 02/98	3470	
ASTRA Mk III (F) Estate	1.7 TD	50	01/94 – 02/98	3505	
ASTRA Mk III (F) Estate	1.7 TD	50	01/94 – 02/98	3615	
ASTRA Mk III (F) Estate	1.7 TD	50	01/94 – 02/98	3623	
ASTRA Mk III (F) Estate	1.7 TD	60	12/91 – 02/98	3470	
ASTRA Mk III (F) Estate	1.7 TD	60	12/91 – 02/98	3505	
ASTRA Mk III (F) Estate	1.7 TD	60	12/91 – 02/98	3615	
ASTRA Mk III (F) Estate	1.7 TD	60	12/91 – 02/98	3623	
ASTRA Mk III (F) Estate	1.8 i	66	09/91 – 02/98	3623	
ASTRA Mk III (F) Estate	1.8 i 16V	85	09/94 – 02/98	3470	3469
ASTRA Mk III (F) Estate	1.8 i 16V	85	09/94 – 02/98	3505	
ASTRA Mk III (F) Estate	1.8 i 16V	85	09/94 – 02/98	3615	

MAKE & MODEL		KW	YEAR		
VAUXHALL					
ASTRA Mk III (F) Estate	1.8 i 16V	92	09/94 – 02/98	3470	3469
ASTRA Mk III (F) Estate	1.8 i 16V	92	09/94 – 02/98	3505	
ASTRA Mk III (F) Estate	1.8 i 16V	92	09/94 – 02/98	3615	
ASTRA Mk III (F) Estate	2.0 i	85	09/91 – 02/98	3470	3469
ASTRA Mk III (F) Estate	2.0 i	85	09/91 – 02/98	3505	
ASTRA Mk III (F) Estate	2.0 i	85	09/91 – 02/98	3615	
ASTRA Mk III (F) Estate	2.0 i 16V	100	01/94 – 02/98	3470	3469
ASTRA Mk III (F) Estate	2.0 i 16V	100	01/94 – 02/98	3505	
ASTRA Mk III (F) Estate	2.0 i 16V	100	01/94 – 02/98	3615	
ASTRA Mk III (F) Hatchback	1.4 i	44	09/91 – 02/98	3623	
ASTRA Mk III (F) Hatchback	1.4 i	60	03/92 – 02/98	3623	
ASTRA Mk III (F) Hatchback	1.4 i 16V	66	02/96 – 02/98	3623	
ASTRA Mk III (F) Hatchback	1.4 S	55	09/91 – 02/98	3623	
ASTRA Mk III (F) Hatchback	1.6 i	52	02/93 – 12/96	3623	
ASTRA Mk III (F) Hatchback	1.6 i	55	09/91 – 02/98	3623	
ASTRA Mk III (F) Hatchback	1.6 i	74	03/92 – 02/98	3623	
ASTRA Mk III (F) Hatchback	1.6 i 16V	74	01/94 – 02/98	3470	
ASTRA Mk III (F) Hatchback	1.6 i 16V	74	01/94 – 02/98	3505	
ASTRA Mk III (F) Hatchback	1.6 i 16V	74	01/94 – 02/98	3615	
ASTRA Mk III (F) Hatchback	1.7 D	42	12/91 – 02/98	3470	
ASTRA Mk III (F) Hatchback	1.7 D	42	12/91 – 02/98	3505	
ASTRA Mk III (F) Hatchback	1.7 D	42	12/91 – 02/98	3615	
ASTRA Mk III (F) Hatchback	1.7 D	42	12/91 – 02/98	3623	
ASTRA Mk III (F) Hatchback	1.7 D	44	09/91 – 12/94	3470	
ASTRA Mk III (F) Hatchback	1.7 D	44	09/91 – 12/94	3505	
ASTRA Mk III (F) Hatchback	1.7 D	44	09/91 – 12/94	3615	
ASTRA Mk III (F) Hatchback	1.7 D	44	09/91 – 12/94	3623	
ASTRA Mk III (F) Hatchback	1.7 TD	50	08/94 – 02/98	3470	
ASTRA Mk III (F) Hatchback	1.7 TD	50	08/94 – 02/98	3505	
ASTRA Mk III (F) Hatchback	1.7 TD	50	08/94 – 02/98	3615	
ASTRA Mk III (F) Hatchback	1.7 TD	50	08/94 – 02/98	3623	
ASTRA Mk III (F) Hatchback	1.7 TD	60	12/91 – 02/98	3470	
ASTRA Mk III (F) Hatchback	1.7 TD	60	12/91 – 02/98	3505	
ASTRA Mk III (F) Hatchback	1.7 TD	60	12/91 – 02/98	3615	
ASTRA Mk III (F) Hatchback	1.7 TD	60	12/91 – 02/98	3623	
ASTRA Mk III (F) Hatchback	1.8 i	66	09/91 – 02/98	3623	
ASTRA Mk III (F) Hatchback	1.8 i 16V	85	09/94 – 02/98	3470	3469
ASTRA Mk III (F) Hatchback	1.8 i 16V	85	09/94 – 02/98	3505	
ASTRA Mk III (F) Hatchback	1.8 i 16V	85	09/94 – 02/98	3615	
ASTRA Mk III (F) Hatchback	1.8 i 16V	92	09/94 – 02/98	3470	3469
ASTRA Mk III (F) Hatchback	1.8 i 16V	92	09/94 – 02/98	3505	
ASTRA Mk III (F) Hatchback	1.8 i 16V	92	09/94 – 02/98	3615	
ASTRA Mk III (F) Hatchback	2.0 i	85	09/91 – 02/98	3470	3469
ASTRA Mk III (F) Hatchback	2.0 i	85	09/91 – 02/98	3505	
ASTRA Mk III (F) Hatchback	2.0 i	85	09/91 – 02/98	3615	
ASTRA Mk III (F) Hatchback	2.0 i 16V	100	01/94 – 02/98	3470	3469
ASTRA Mk III (F) Hatchback	2.0 i 16V	100	01/94 – 02/98	3505	
ASTRA Mk III (F) Hatchback	2.0 i 16V	100	01/94 – 02/98	3615	
ASTRA Mk III (F) Hatchback	2.0 i 16V	110	09/91 – 02/98	3470	3469
ASTRA Mk III (F) Hatchback	2.0 i 16V	110	09/91 – 02/98	3505	
ASTRA Mk III (F) Hatchback	2.0 i 16V	110	09/91 – 02/98	3615	
ASTRA Mk IV CC (G)	1.4 16V (X 14 XE)	66	02/98 – 05/05		3763
ASTRA Mk IV CC (G)	1.4 16V (Z 14 XE)	66	02/98 – 05/05		3763
ASTRA Mk IV CC (G)	1.6 (X 16 SZR)	55	02/98 – 09/00		3763
ASTRA Mk IV CC (G)	1.6 16V (X 16 XEL)	74	02/98 – 05/05		3763
ASTRA Mk IV CC (G)	1.6 16V (Z 16 XE)	74	02/98 – 05/05		3763
ASTRA Mk IV CC (G)	1.7 TD (X 17 DTL)	50	02/98 – 08/00		3763
ASTRA Mk IV CC (G)	1.8 16V (X 18 XE1)	85	02/98 – 09/00		3763
ASTRA Mk IV CC (G)	2.0 16V (X 20 XEV)	100	02/98 – 05/05		3763
ASTRA Mk IV CC (G)	2.0 DI (X 20 DTL)	60	02/98 – 05/05		3763
ASTRA Mk IV CC (G)	2.0 DTI 16V (X 20 DTH)	74	08/99 – 05/05		3763
ASTRA Mk IV CC (G)	2.0 DTI 16V (Y 20 DTH)	74	08/99 – 05/05		3763
ASTRA Mk IV (G)	1.2 16V (X 12 XE)	48	02/98 – 09/00		3763
ASTRA Mk IV (G)	1.2 16V (X 12 XE)	48	09/98 – 09/00		3763
ASTRA Mk IV (G)	1.4 16V (X 14 XE)	66	02/98 – 05/05		3763
ASTRA Mk IV (G)	1.4 16V (Z 14 XE)	66	09/98 – 05/05		3763
ASTRA Mk IV (G)	1.6 (X 16 SZR)	55	03/98 – 04/04		3763
ASTRA Mk IV (G)	1.6 (X 16 SZR)	55	09/98 – 09/00		3763
ASTRA Mk IV (G)	1.6 16V (C 16 SEL)	74	09/98 – 05/05		3763
ASTRA Mk IV (G)	1.6 16V (X 16 XEL)	74	09/98 – 05/05		3763
ASTRA Mk IV (G)	1.6 16V (Z 16 XE)	74	03/98 – 04/04		3763
ASTRA Mk IV (G)	1.6 16V (Z 16 XEP)	74	09/98 – 05/05		3763
ASTRA Mk IV (G)	1.7 TD (X 17 DTL)	50	02/98 – 08/00		3763
ASTRA Mk IV (G)	1.8 16V (X 18 XE1)	85	02/98 – 07/04		3763
ASTRA Mk IV (G)	2.0 16V (X 20 XEV)	100	02/98 – 05/05		3763
ASTRA Mk IV (G)	2.0 DI (X 20 DTL)	60	02/98 – 07/04		3763

MAKE & MODEL		KW	YEAR		
VAUXHALL					
ASTRA Mk IV (G)	2.0 DTI 16V (X 20 DTH)	74	02/98 – 07/04		3763
ASTRA Mk IV (G) Convertible	1.6 16V	74	03/01 – 10/05	3762	4040
ASTRA Mk IV (G) Convertible	1.6 16V	76	03/03 – 10/05	3762	4040
ASTRA Mk IV (G) Convertible	1.8 16V	92	03/01 – 10/05	4042	4040
ASTRA Mk IV (G) Convertible	2.0	147	09/02 – 10/05		4040
ASTRA Mk IV (G) Convertible	2.0 Turbo	141	03/02 – 10/05		4040
ASTRA Mk IV (G) Convertible	2.2 16V	108	03/01 – 10/05	4042	4040
ASTRA Mk IV (G) Coupe (F67)	1.6 16V	76	03/00 – 08/05	4042	4040
ASTRA Mk IV (G) Coupe (F67)	1.8 16V	85	03/00 – 08/05	4042	4040
ASTRA Mk IV (G) Coupe (F67)	1.8 16V	92	09/00 – 08/05	4042	4040
ASTRA Mk IV (G) Coupe (F67)	1.8 16V Dualfuel	87	09/02 – 08/05	4042	4040
ASTRA Mk IV (G) Coupe (F67)	2.0	147	08/02 – 05/05		4040
ASTRA Mk IV (G) Coupe (F67)	2.0 16V Turbo	140	09/00 – 08/05		4040
ASTRA Mk IV (G) Coupe (F67)	2.2 16V	108	03/00 – 08/05	4042	4040
ASTRA Mk IV (G) Estate	1.2 16V	48	02/98 – 09/00	3762	4040
ASTRA Mk IV (G) Estate	1.2 16V	55	09/00 – 05/05	3762	4040
ASTRA Mk IV (G) Estate	1.4 16V	66	02/98 – 05/05	3762	4040
ASTRA Mk IV (G) Estate	1.6	55	03/98 – 04/04	3762	4040
ASTRA Mk IV (G) Estate	1.6	62	03/98 – 04/04	3762	4040
ASTRA Mk IV (G) Estate	1.6	76	12/02 – 05/05	3762	4040
ASTRA Mk IV (G) Estate	1.6 16V	74	03/98 – 04/04	3762	4040
ASTRA Mk IV (G) Estate	1.6 Dualfuel	62	07/00 – 05/05	3762	4040
ASTRA Mk IV (G) Estate	1.6 Dualfuel	63	03/98 – 04/04	3762	4040
ASTRA Mk IV (G) Estate	1.7 CDTI 16V	59	04/03 – 05/05	3762	4040
ASTRA Mk IV (G) Estate	1.7 DTI 16V	55	02/00 – 05/05	3762	4040
ASTRA Mk IV (G) Estate	1.7 TD	50	02/98 – 08/00	3762	4040
ASTRA Mk IV (G) Estate	1.8 16V	85	02/98 – 08/00	3762	4040
ASTRA Mk IV (G) Estate	1.8 16V	85	02/98 – 08/00	4042	
ASTRA Mk IV (G) Estate	1.8 16V	92	09/00 – 05/05	3762	4040
ASTRA Mk IV (G) Estate	1.8 16V	92	09/00 – 05/05	4042	
ASTRA Mk IV (G) Estate	1.8 16V Dualfuel	87	09/02 – 05/05	4042	4040
ASTRA Mk IV (G) Estate	2.0 16V	100	02/98 – 05/05	4042	4040
ASTRA Mk IV (G) Estate	2.0 16V	118	10/99 – 05/05	4042	4040
ASTRA Mk IV (G) Estate	2.0 DI	60	03/98 – 04/04	3762	4040
ASTRA Mk IV (G) Estate	2.0 DI	60	03/98 – 04/04	4042	
ASTRA Mk IV (G) Estate	2.0 DTI 16V	74	03/98 – 04/04	4042	4040
ASTRA Mk IV (G) Estate	2.2 16V	108	03/01 – 05/05	4042	4040
ASTRA Mk IV (G) Hatchback	1.2 16V	48	02/98 – 09/00	3762	4040
ASTRA Mk IV (G) Hatchback	1.2 16V	55	09/00 – 05/05	3762	4040
ASTRA Mk IV (G) Hatchback	1.4 16V	66	02/98 – 05/05	3762	4040
ASTRA Mk IV (G) Hatchback	1.6	55	02/98 – 09/00	3762	4040
ASTRA Mk IV (G) Hatchback	1.6	62	09/00 – 05/05	3762	4040
ASTRA Mk IV (G) Hatchback	1.6	76	12/02 – 05/05	3762	4040
ASTRA Mk IV (G) Hatchback	1.6 16V	74	02/98 – 05/05	3762	4040
ASTRA Mk IV (G) Hatchback	1.6 Dualfuel	62	07/00 – 05/05	3762	4040
ASTRA Mk IV (G) Hatchback	1.6 Dualfuel	63	09/02 – 05/05	3762	4040
ASTRA Mk IV (G) Hatchback	1.7 CDTI 16V	59	04/03 – 05/05	3762	4040
ASTRA Mk IV (G) Hatchback	1.7 DTI 16V	55	02/00 – 05/05	3762	4040
ASTRA Mk IV (G) Hatchback	1.7 TD	50	02/98 – 08/00	3762	4040
ASTRA Mk IV (G) Hatchback	1.8 16V	85	02/98 – 09/00	3762	4040
ASTRA Mk IV (G) Hatchback	1.8 16V	85	02/98 – 09/00	4042	
ASTRA Mk IV (G) Hatchback	1.8 16V	92	09/00 – 05/05	3762	4040
ASTRA Mk IV (G) Hatchback	1.8 16V	92	09/00 – 05/05	4042	
ASTRA Mk IV (G) Hatchback	1.8 16V Dualfuel	87	09/02 – 05/05	4042	4040
ASTRA Mk IV (G) Hatchback	2.0	118	10/99 – 08/00	4042	4040
ASTRA Mk IV (G) Hatchback	2.0 16V	100	02/98 – 05/05	4042	4040
ASTRA Mk IV (G) Hatchback	2.0 DI	60	02/98 – 05/05	3762	4040
ASTRA Mk IV (G) Hatchback	2.0 DI	60	02/98 – 05/05	4042	
ASTRA Mk IV (G) Hatchback	2.0 DTI 16V	74	08/99 – 05/05	4042	4040
ASTRA Mk IV (G) Hatchback	2.0 SRI Turbo	141	11/01 – 05/05		4040
ASTRA Mk IV (G) Hatchback	2.2 16V	108	03/01 – 05/05	4042	4040
ASTRA Mk IV (G) Saloon	1.2 16V	48	09/98 – 09/00	3762	4040
ASTRA Mk IV (G) Saloon	1.2 16V	55	09/00 – 05/05	3762	4040
ASTRA Mk IV (G) Saloon	1.4 16V	66	09/98 – 05/05	3762	4040
ASTRA Mk IV (G) Saloon	1.6	55	09/98 – 09/00	3762	4040
ASTRA Mk IV (G) Saloon	1.6	62	09/00 – 05/05	3762	4040
ASTRA Mk IV (G) Saloon	1.6 16V	74	09/98 – 05/05	3762	4040
ASTRA Mk IV (G) Saloon	1.6 Dualfuel	62	07/00 – 05/05	3762	4040
ASTRA Mk IV (G) Saloon	1.6 Dualfuel	63	09/02 – 05/05	3762	4040
ASTRA Mk IV (G) Saloon	1.7 CDTI 16V	59	04/03 – 05/05	3762	4040
ASTRA Mk IV (G) Saloon	1.7 DTI 16V	55	02/00 – 05/05	3762	4040
ASTRA Mk IV (G) Saloon	1.7 TD	50	09/98 – 08/00	3762	4040
ASTRA Mk IV (G) Saloon	1.8 16V	85	02/98 – 07/04	3762	4040
ASTRA Mk IV (G) Saloon	1.8 16V	85	02/98 – 07/04	4042	
ASTRA Mk IV (G) Saloon	1.8 16V	92	02/98 – 07/04	3762	4040
ASTRA Mk IV (G) Saloon	1.8 16V	92	02/98 – 07/04	4042	

MAKE & MODEL		KW	YEAR		
VAUXHALL					
ASTRA Mk IV (G) Saloon	1.8 16V Dualfuel	87	02/98 – 07/04	4042	4040
ASTRA Mk IV (G) Saloon	2.0 16V	100	09/98 – 05/05	4042	4040
ASTRA Mk IV (G) Saloon	2.0 16V	118	10/99 – 05/05	4042	4040
ASTRA Mk IV (G) Saloon	2.0 DI	60	02/98 – 07/04	3762	4040
ASTRA Mk IV (G) Saloon	2.0 DI	60	02/98 – 07/04	4042	4040
ASTRA Mk IV (G) Saloon	2.0 DTI 16V	74	02/98 – 07/04	4042	
ASTRA Mk IV (G) Saloon	2.2 16V	108	03/01 – 05/05	4042	4040
ASTRA Mk IV (G) Saloon	2.2 DTI	92	09/02 – 05/05	4042	4040
ASTRA Mk V (H) Estate	1.3 CDTi	66	08/04 – 03/09	4042	4040
ASTRA Mk V (H) Estate	1.4	55	08/04 – 10/10	4042	4040
ASTRA Mk V (H) Estate	1.4	66	08/04 – 03/09	4042	4040
ASTRA Mk V (H) Estate	1.6	77	08/04 – 03/09	4042	4040
ASTRA Mk V (H) Estate	1.6	85	08/04 – 03/09	4042	4040
ASTRA Mk V (H) Estate	1.6	132	08/04 – 03/09	4042	4040
ASTRA Mk V (H) Estate	1.7 CDTI	59	08/04 – 05/09	4042	4040
ASTRA Mk V (H) Estate	1.7 CDTI	74	08/04 – 03/09	4042	4040
ASTRA Mk V (H) Estate	1.7 CDTi	81	08/04 – 03/09	4042	4040
ASTRA Mk V (H) Estate	1.7 CDTi	92	02/07 – 10/10	4042	4040
ASTRA Mk V (H) Estate	1.8	92	10/04 – 03/09	4042	4040
ASTRA Mk V (H) Estate	1.8	103	12/05 – 10/10	4042	4040
ASTRA Mk V (H) Estate	1.9 CDTi	74	08/04 – 03/09	4042	4040
ASTRA Mk V (H) Estate	1.9 CDTi	88	08/04 – 03/09	4042	4040
ASTRA Mk V (H) Estate	1.9 CDTi	110	08/04 – 03/09	4042	4040
ASTRA Mk V (H) Estate	2.0 Turbo	125	08/04 – 10/10	4042	4040
ASTRA Mk V (H) Estate	2.0 Turbo	147	08/04 – 10/10	4042	4040
ASTRA Mk V (H) Hatchback	1.3 CDTI	66	01/04 – 05/09	4042	4040
ASTRA Mk V (H) Hatchback	1.4	55	04/04 – 12/05	4042	4040
ASTRA Mk V (H) Hatchback	1.4	66	01/04 – 05/09	4042	4040
ASTRA Mk V (H) Hatchback	1.6	77	01/04 – 05/09	4042	4040
ASTRA Mk V (H) Hatchback	1.6	85	01/04 – 05/09	4042	4040
ASTRA Mk V (H) Hatchback	1.6 Turbo	132	09/06 – 09/09	4042	4040
ASTRA Mk V (H) Hatchback	1.7 CDTI	59	01/04 – 05/09	4042	4040
ASTRA Mk V (H) Hatchback	1.7 CDTI	74	01/04 – 05/09	4042	4040
ASTRA Mk V (H) Hatchback	1.7 CDTI	81	01/04 – 05/09	4042	4040
ASTRA Mk V (H) Hatchback	1.7 CDTi	92	02/07 – 09/09	4042	4040
ASTRA Mk V (H) Hatchback	1.8	92	01/04 – 05/09	4042	4040
ASTRA Mk V (H) Hatchback	1.8	103	01/04 – 05/09	4042	4040
ASTRA Mk V (H) Hatchback	1.9 CDTI	88	01/04 – 05/09	4042	4040
ASTRA Mk V (H) Hatchback	1.9 CDTI	110	01/04 – 05/09	4042	4040
ASTRA Mk V (H) Hatchback	1.9 CDTI 16V	88	01/04 – 05/09	4042	4040
ASTRA Mk V (H) Hatchback	2.0 Turbo	125	01/04 – 05/09	4042	4040
ASTRA Mk V (H) Hatchback	2.0 Turbo	147	01/04 – 05/09	4042	4040
ASTRA Mk V (H) Hatchback	2.0 Turbo	177	01/04 – 05/09		4040
ASTRA Mk V (H) Sport Hatch	1.3 CDTi	66	04/05 – 11/10	4042	4040
ASTRA Mk V (H) Sport Hatch	1.4	55	02/05 – 11/10	4042	4040
ASTRA Mk V (H) Sport Hatch	1.4 i 16V	66	03/05 – 11/10	4042	4040
ASTRA Mk V (H) Sport Hatch	1.6	77	02/05 – 11/10	4042	4040
ASTRA Mk V (H) Sport Hatch	1.6	132	10/06 – 11/10	4042	4040
ASTRA Mk V (H) Sport Hatch	1.6 i 16V	85	12/06 – 11/10	4042	4040
ASTRA Mk V (H) Sport Hatch	1.7 CDTI	74	02/05 – 11/10	4042	4040
ASTRA Mk V (H) Sport Hatch	1.7 CDTi	81	02/07 – 11/10	4042	4040
ASTRA Mk V (H) Sport Hatch	1.7 CDTi	92	02/07 – 11/10	4042	4040
ASTRA Mk V (H) Sport Hatch	1.8	92	02/05 – 11/10	4042	4040
ASTRA Mk V (H) Sport Hatch	1.8 i 16V	103	03/07 – 11/10	4042	4040
ASTRA Mk V (H) Sport Hatch	1.9 CDTi	74	08/05 – 11/10	4042	4040
ASTRA Mk V (H) Sport Hatch	1.9 CDTi	88	02/05 – 11/10	4042	4040
ASTRA Mk V (H) Sport Hatch	1.9 CDTi	110	02/05 – 11/10	4042	4040
ASTRA Mk V (H) Sport Hatch	2.0 Turbo	125	02/05 – 11/10	4042	4040
ASTRA Mk V (H) Sport Hatch	2.0 VXR	176	02/09 – 11/10		4040
ASTRA Mk VI (J)	1.3 CDTI	70	12/09 -	4014	
ASTRA Mk VI (J)	1.3 CDTI	70	12/09 -	4008	
ASTRA Mk VI (J)	1.3 CDTI	70	12/09 -	4230	
ASTRA Mk VI (J)	1.4	64	12/09 -	4014	
ASTRA Mk VI (J)	1.4	64	12/09 -	4008	
ASTRA Mk VI (J)	1.4	64	12/09 -	4230	
ASTRA Mk VI (J)	1.4	74	12/09 -	4014	
ASTRA Mk VI (J)	1.4	74	12/09 -	4008	
ASTRA Mk VI (J)	1.4	74	12/09 -	4230	
ASTRA Mk VI (J)	1.4 Turbo	88	08/11 -	4014	
ASTRA Mk VI (J)	1.4 Turbo	88	08/11 -	4008	
ASTRA Mk VI (J)	1.4 Turbo	88	08/11 -	4230	
ASTRA Mk VI (J)	1.4 Turbo	103	12/09 -	4014	
ASTRA Mk VI (J)	1.4 Turbo	103	12/09 -	4008	
ASTRA Mk VI (J)	1.4 Turbo	103	12/09 -	4230	
ASTRA Mk VI (J)	1.6	85	12/09 -	4014	
ASTRA Mk VI (J)	1.6	85	12/09 -	4008	

MAKE & MODEL   		KW	YEAR		
VAUXHALL					
ASTRA Mk VI (J)	1.6	85	12/09 -	4230	
ASTRA Mk VI (J)	1.6 CDTi	81	11/13 -	4014	
ASTRA Mk VI (J)	1.6 CDTi	81	11/13 -	4008	
ASTRA Mk VI (J)	1.6 CDTi	81	11/13 -	4230	
ASTRA Mk VI (J)	1.6 CDTi	100	11/13 -	4014	
ASTRA Mk VI (J)	1.6 CDTi	100	11/13 -	4008	
ASTRA Mk VI (J)	1.6 CDTi	100	11/13 -	4230	
ASTRA Mk VI (J)	1.6 SIDI	125	12/12 -	4014	
ASTRA Mk VI (J)	1.6 SIDI	125	12/12 -	4008	
ASTRA Mk VI (J)	1.6 SIDI	125	12/12 -	4230	
ASTRA Mk VI (J)	1.6 Turbo	132	12/09 -	4014	
ASTRA Mk VI (J)	1.6 Turbo	132	12/09 -	4008	
ASTRA Mk VI (J)	1.6 Turbo	132	12/09 -	4230	
ASTRA Mk VI (J)	1.7 CDTi	81	12/09 -	4014	
ASTRA Mk VI (J)	1.7 CDTi	81	12/09 -	4008	
ASTRA Mk VI (J)	1.7 CDTi	81	12/09 -	4230	
ASTRA Mk VI (J)	1.7 CDTi	92	12/09 -	4014	
ASTRA Mk VI (J)	1.7 CDTi	92	12/09 -	4008	
ASTRA Mk VI (J)	1.7 CDTi	92	12/09 -	4230	
ASTRA Mk VI (J)	1.7 CDTi	96	06/11 -	4014	
ASTRA Mk VI (J)	1.7 CDTi	96	06/11 -	4008	
ASTRA Mk VI (J)	1.7 CDTi	96	06/11 -	4230	
ASTRA Mk VI (J)	2.0 BiTurbo CDTI	143	12/12 -	4014	
ASTRA Mk VI (J)	2.0 BiTurbo CDTI	143	12/12 -	4008	
ASTRA Mk VI (J)	2.0 BiTurbo CDTI	143	12/12 -	4230	
ASTRA Mk VI (J)	2.0 CDTi	118	12/09 -	4014	
ASTRA Mk VI (J)	2.0 CDTi	118	12/09 -	4008	
ASTRA Mk VI (J)	2.0 CDTi	118	12/09 -	4230	
ASTRA Mk VI (J)	2.0 CDTi	121	08/11 -	4014	
ASTRA Mk VI (J)	2.0 CDTi	121	08/11 -	4008	
ASTRA Mk VI (J)	2.0 CDTi	121	08/11 -	4230	
ASTRA Mk VI (J) Estate	1.3 CDTI	70	06/12 -	4014	
ASTRA Mk VI (J) Estate	1.3 CDTI	70	06/12 -	4008	
ASTRA Mk VI (J) Estate	1.3 CDTI	70	06/12 -	4230	
ASTRA Mk VI (J) Estate	1.3 CDTi	70	10/10 -	4014	
ASTRA Mk VI (J) Estate	1.3 CDTi	70	10/10 -	4008	
ASTRA Mk VI (J) Estate	1.3 CDTi	70	10/10 -	4230	
ASTRA Mk VI (J) Estate	1.4	74	06/12 -	4014	
ASTRA Mk VI (J) Estate	1.4	74	06/12 -	4008	
ASTRA Mk VI (J) Estate	1.4	74	06/12 -	4230	
ASTRA Mk VI (J) Estate	1.4	74	10/10 -	4014	
ASTRA Mk VI (J) Estate	1.4	74	10/10 -	4008	
ASTRA Mk VI (J) Estate	1.4	74	10/10 -	4230	
ASTRA Mk VI (J) Estate	1.4 Turbo	88	10/10 -	4014	
ASTRA Mk VI (J) Estate	1.4 Turbo	88	10/10 -	4008	
ASTRA Mk VI (J) Estate	1.4 Turbo	88	10/10 -	4230	
ASTRA Mk VI (J) Estate	1.4 Turbo	103	06/12 -	4014	
ASTRA Mk VI (J) Estate	1.4 Turbo	103	06/12 -	4008	
ASTRA Mk VI (J) Estate	1.4 Turbo	103	06/12 -	4230	
ASTRA Mk VI (J) Estate	1.4 Turbo	103	10/10 -	4014	
ASTRA Mk VI (J) Estate	1.4 Turbo	103	10/10 -	4008	
ASTRA Mk VI (J) Estate	1.4 Turbo	103	10/10 -	4230	
ASTRA Mk VI (J) Estate	1.6	85	06/12 -	4014	
ASTRA Mk VI (J) Estate	1.6	85	06/12 -	4008	
ASTRA Mk VI (J) Estate	1.6	85	06/12 -	4230	
ASTRA Mk VI (J) Estate	1.6	85	10/10 -	4014	
ASTRA Mk VI (J) Estate	1.6	85	10/10 -	4008	
ASTRA Mk VI (J) Estate	1.6	85	10/10 -	4230	
ASTRA Mk VI (J) Estate	1.6 CDTi	81	01/14 -	4014	
ASTRA Mk VI (J) Estate	1.6 CDTi	81	01/14 -	4008	
ASTRA Mk VI (J) Estate	1.6 CDTi	81	01/14 -	4149	
ASTRA Mk VI (J) Estate	1.6 CDTi	100	01/14 -	4014	
ASTRA Mk VI (J) Estate	1.6 CDTi	100	01/14 -	4008	
ASTRA Mk VI (J) Estate	1.6 CDTi	100	01/14 -	4149	
ASTRA Mk VI (J) Estate	1.6 CDTi	100	01/14 -	4230	
ASTRA Mk VI (J) Estate	1.6 SIDI	125	12/12 -	4014	
ASTRA Mk VI (J) Estate	1.6 SIDI	125	12/12 -	4008	
ASTRA Mk VI (J) Estate	1.6 SIDI	125	12/12 -	4230	
ASTRA Mk VI (J) Estate	1.6 Turbo	132	06/12 -	4014	
ASTRA Mk VI (J) Estate	1.6 Turbo	132	06/12 -	4008	
ASTRA Mk VI (J) Estate	1.6 Turbo	132	06/12 -	4230	
ASTRA Mk VI (J) Estate	1.6 Turbo	132	10/10 -	4014	
ASTRA Mk VI (J) Estate	1.6 Turbo	132	10/10 -	4008	
ASTRA Mk VI (J) Estate	1.6 Turbo	132	10/10 -	4230	
ASTRA Mk VI (J) Saloon	1.7 CDTI	81	06/12 -	4014	
ASTRA Mk VI (J) Saloon	1.7 CDTI	81	06/12 -	4008	

MAKE & MODEL		KW	YEAR		
VAUXHALL					
ASTRA Mk VI (J) Saloon	1.7 CDTI	81	06/12 -	4230	
ASTRA Mk VI (J) Saloon	1.7 CDTI	81	10/10 -	4014	
ASTRA Mk VI (J) Saloon	1.7 CDTI	81	10/10 -	4008	
ASTRA Mk VI (J) Saloon	1.7 CDTI	81	10/10 -	4230	
ASTRA Mk VI (J) Saloon	1.7 CDTi	92	10/10 -	4014	
ASTRA Mk VI (J) Saloon	1.7 CDTi	92	10/10 -	4008	
ASTRA Mk VI (J) Saloon	1.7 CDTi	92	10/10 -	4230	
ASTRA Mk VI (J) Saloon	1.7 CDTi	96	06/11 – 05/14	4014	
ASTRA Mk VI (J) Saloon	1.7 CDTi	96	06/11 – 05/14	4008	
ASTRA Mk VI (J) Saloon	1.7 CDTi	96	06/11 – 05/14	4230	
ASTRA Mk VI (J) Saloon	1.7 CDTi	96	06/12 -	4014	
ASTRA Mk VI (J) Saloon	1.7 CDTi	96	06/12 -	4008	
ASTRA Mk VI (J) Saloon	1.7 CDTi	96	06/12 -	4230	
ASTRA Mk VI (J) Saloon	2.0 BiTurbo CDTI	143	12/12 -	4014	
ASTRA Mk VI (J) Saloon	2.0 BiTurbo CDTI	143	12/12 -	4008	
ASTRA Mk VI (J) Saloon	2.0 BiTurbo CDTI	143	12/12 -	4230	
ASTRA Mk VI (J) Saloon	2.0 CDTi	118	10/10 -	4014	
ASTRA Mk VI (J) Saloon	2.0 CDTi	118	10/10 -	4008	
ASTRA Mk VI (J) Saloon	2.0 CDTi	118	10/10 -	4230	
ASTRA Mk VI (J) Saloon	2.0 CDTi	121	08/11 -	4014	
ASTRA Mk VI (J) Saloon	2.0 CDTi	121	08/11 -	4008	
ASTRA Mk VI (J) Saloon	2.0 CDTi	121	08/11 -	4230	
ASTRA TwinTop Mk V (H)	1.6	77	09/05 – 11/10	4042	4040
ASTRA TwinTop Mk V (H)	1.6	132	10/06 – 11/10	4042	4040
ASTRA TwinTop Mk V (H)	1.6 i 16V	85	10/06 – 11/10	4042	4040
ASTRA TwinTop Mk V (H)	1.8	103	05/08 – 11/10	4042	4040
ASTRA TwinTop Mk V (H)	1.9 CDTi	110	01/06 – 11/10	4042	4040
ASTRA TwinTop Mk V (H)	2.0	125	02/06 – 11/10	4042	4040
ASTRA TwinTop Mk V (H)	2.0 Turbo	147	01/06 – 11/10	4042	4040
ASTRAMAX	1.3 N	44	08/85 – 12/89	3410	
ASTRAMAX	1.3 S	55	08/85 – 12/89	3410	
ASTRAMAX	1.4 i	44	08/91 – 07/94	3410	
ASTRAMAX	1.4 S	55	07/89 – 08/91	3410	
ASTRAMAX	1.6	60	09/85 – 12/91	3410	
ASTRAMAX	1.6 D	40	05/86 – 06/90	3410	
ASTRAMAX	1.6 i	55	08/91 – 10/94	3410	
ASTRAMAX	1.7 D	42	01/89 – 07/94	3410	
ASTRAVAN Mk III (F)	1.4 i	44	01/91 – 10/94	3623	
ASTRAVAN Mk III (F)	1.6 i	52	02/94 – 10/96	3623	
ASTRAVAN Mk III (F)	1.6 i	55	01/91 – 08/98	3623	
ASTRAVAN Mk III (F)	1.7 D	44	01/91 – 08/94	3470	
ASTRAVAN Mk III (F)	1.7 D	44	01/91 – 08/94	3505	
ASTRAVAN Mk III (F)	1.7 D	44	01/91 – 08/94	3615	
ASTRAVAN Mk III (F)	1.7 D	44	01/91 – 08/94	3623	
ASTRAVAN Mk III (F)	1.7 TD	50	01/94 – 08/98	3470	
ASTRAVAN Mk III (F)	1.7 TD	50	01/94 – 08/98	3505	
ASTRAVAN Mk III (F)	1.7 TD	50	01/94 – 08/98	3615	
ASTRAVAN Mk III (F)	1.7 TD	50	01/94 – 08/98	3623	
ASTRAVAN Mk IV (G)	1.6 Dualfuel (Z 16 XE)	74	07/00 – 08/05		3763
ASTRAVAN Mk IV (G)	1.6 i	55	08/98 – 09/00	3762	4040
ASTRAVAN Mk IV (G)	1.6 i	62	09/00 – 08/06	3762	4040
ASTRAVAN Mk IV (G)	1.6 i (X 16 SZR)	55	08/98 – 09/00		3763
ASTRAVAN Mk IV (G)	1.7 CDTI	59	04/04 – 08/06	3762	4040
ASTRAVAN Mk IV (G)	1.7 CDTI	59	04/04 – 08/06	4042	
ASTRAVAN Mk IV (G)	1.7 DTI 16V	55	04/01 – 08/06	3762	4040
ASTRAVAN Mk IV (G)	1.7 DTI 16V	55	04/01 – 08/06	4042	
ASTRAVAN Mk IV (G)	1.7 TD	50	08/98 – 08/06	3762	4040
ASTRAVAN Mk IV (G)	1.7 TD	50	08/98 – 08/06	4042	3763
ASTRAVAN Mk IV (G)	2.0 DI	60	08/98 – 08/06	3762	4040
ASTRAVAN Mk IV (G)	2.0 DI	60	08/98 – 08/06	4042	3763
ASTRAVAN Mk IV (G)	2.0 DTI	74	04/04 – 08/06	4042	4040
ASTRAVAN Mk V (H)	1.3 CDTi	66	08/05 -	4042	
ASTRAVAN Mk V (H)	1.4 i	66	03/05 -	4042	
ASTRAVAN Mk V (H)	1.6	76	03/05 -	4042	
ASTRAVAN Mk V (H)	1.7 CDTI	59	03/05 – 07/06	4042	
ASTRAVAN Mk V (H)	1.7 CDTi	74	03/05 – 11/11	4042	
ASTRAVAN Mk V (H)	1.7 CDTi	81	06/11 – 12/13	4042	
ASTRAVAN Mk V (H)	1.7 CDTi	92	11/11 -	4042	
ASTRAVAN Mk V (H)	1.9 CDTi	88	03/05 – 11/11	4042	
ASTRAVAN Mk V (H)	1.9 CDTi	110	03/05 – 11/11	4042	
BRAVA Pickup	2.2 D	45	07/90 – 09/92	3657	
BRAVA Pickup	2.2 D	45	07/90 – 09/92	3757	
BRAVA Pickup	2.2 D	45	07/90 – 09/92	3857	
BRAVA Pickup	2.2 D (TFR52)	39	12/88 – 09/96	3657	
BRAVA Pickup	2.2 D (TFR52)	39	12/88 – 09/96	3757	
BRAVA Pickup	2.2 D (TFR52)	39	12/88 – 09/96	3857	

MAKE & MODEL		KW	YEAR		
VAUXHALL					
BRAVA Pickup	2.2 D 4x4 (TFS52)	39	12/88 – 09/96	3657	
BRAVA Pickup	2.2 D 4x4 (TFS52)	39	12/88 – 09/96	3757	
BRAVA Pickup	2.2 D 4x4 (TFS52)	39	12/88 – 09/96	3857	
BRAVA Pickup	2.3 (TFR16)	69	08/91 – 08/94	3657	
BRAVA Pickup	2.3 (TFR16)	69	08/91 – 08/94	3757	
BRAVA Pickup	2.3 (TFR16)	69	08/91 – 08/94	3857	
BRAVA Pickup	2.3 (TFR16)	72	08/94 – 09/96	3657	
BRAVA Pickup	2.3 (TFR16)	72	08/94 – 09/96	3757	
BRAVA Pickup	2.3 (TFR16)	72	08/94 – 09/96	3857	
BRAVA Pickup	2.3 4x4 (TFS16)	69	06/90 – 08/94	3657	
BRAVA Pickup	2.3 4x4 (TFS16)	69	06/90 – 08/94	3757	
BRAVA Pickup	2.3 4x4 (TFS16)	69	06/90 – 08/94	3857	
BRAVA Pickup	2.3 4x4 (TFS16)	72	08/94 – 09/96	3657	
BRAVA Pickup	2.3 4x4 (TFS16)	72	08/94 – 09/96	3757	
BRAVA Pickup	2.3 4x4 (TFS16)	72	08/94 – 09/96	3857	
BRAVA Pickup	2.5 D (TFR54)	56	08/91 – 06/94	3657	
BRAVA Pickup	2.5 D (TFR54)	56	08/91 – 06/94	3757	
BRAVA Pickup	2.5 D (TFR54)	56	08/91 – 06/94	3857	
BRAVA Pickup	2.5 D 4x4 (TFS54)	56	06/90 – 06/94	3657	
BRAVA Pickup	2.5 D 4x4 (TFS54)	56	06/90 – 06/94	3757	
BRAVA Pickup	2.5 D 4x4 (TFS54)	56	06/90 – 06/94	3857	
BRAVA Pickup	2.5 DTI	74	08/01 – 12/02	3657	
BRAVA Pickup	2.5 DTI	74	08/01 – 12/02	3757	
BRAVA Pickup	2.5 DTI	74	08/01 – 12/02	3857	
BRAVA Pickup	2.5 DTI 4x4	74	08/01 – 12/02	3657	
BRAVA Pickup	2.5 DTI 4x4	74	08/01 – 12/02	3757	
BRAVA Pickup	2.5 DTI 4x4	74	08/01 – 12/02	3857	
BRAVA Pickup	2.5 TD (TFR54)	56	07/94 – 12/02	3657	
BRAVA Pickup	2.5 TD (TFR54)	56	07/94 – 12/02	3757	
BRAVA Pickup	2.5 TD (TFR54)	56	07/94 – 12/02	3857	
BRAVA Pickup	2.5 TD 4x4 (TFS54)	56	07/94 – 12/02	3657	
BRAVA Pickup	2.5 TD 4x4 (TFS54)	56	07/94 – 12/02	3757	
BRAVA Pickup	2.5 TD 4x4 (TFS54)	56	07/94 – 12/02	3857	
BRAVA Pickup	3.1 D	80	07/91 – 07/01	3657	
BRAVA Pickup	3.1 D	80	07/91 – 07/01	3757	
BRAVA Pickup	3.1 D	80	07/91 – 07/01	3857	
CALIBRA	2.0 i	85	06/90 – 07/97	3470	3469
CALIBRA	2.0 i	85	06/90 – 07/97	3505	
CALIBRA	2.0 i	85	06/90 – 07/97	3615	
CALIBRA	2.0 i 16V	100	06/90 – 07/97	3470	3469
CALIBRA	2.0 i 16V	100	06/90 – 07/97	3505	
CALIBRA	2.0 i 16V	100	06/90 – 07/97	3615	
CALIBRA	2.0 i 16V	110	06/90 – 02/94	3470	3469
CALIBRA	2.0 i 16V	110	06/90 – 02/94	3505	
CALIBRA	2.0 i 16V	110	06/90 – 02/94	3615	
CALIBRA	2.0 i 16V 4x4	100	02/94 – 07/97	3470	3469
CALIBRA	2.0 i 16V 4x4	100	02/94 – 07/97	3505	
CALIBRA	2.0 i 16V 4x4	100	02/94 – 07/97	3615	
CALIBRA	2.0 i 16V 4x4	110	06/90 – 02/94	3470	3469
CALIBRA	2.0 i 16V 4x4	110	06/90 – 02/94	3505	
CALIBRA	2.0 i 16V 4x4	110	06/90 – 02/94	3615	
CALIBRA	2.0 i 4x4	85	06/90 – 07/97	3470	3469
CALIBRA	2.0 i 4x4	85	06/90 – 07/97	3505	
CALIBRA	2.0 i 4x4	85	06/90 – 07/97	3615	
CALIBRA	2.0 i Turbo 4x4	150	03/92 – 07/97	3665	3469
CALIBRA	2.0 i Turbo 4x4	150	03/92 – 07/97	3736	
CALIBRA	2.5 i V6	125	04/93 – 07/97	3665	3469
CALIBRA	2.5 i V6	125	04/93 – 07/97	3736	
CARLTON Mk III	3000	115	03/87 – 12/87	3717	
CARLTON Mk III	1.8	65	09/87 – 03/94	3410	
CARLTON Mk III	1.8	65	09/87 – 03/94	3470	
CARLTON Mk III	1.8	65	09/87 – 03/94	3505	
CARLTON Mk III	1.8	65	09/87 – 03/94	3615	
CARLTON Mk III	1.8	65	09/87 – 03/94	3717	
CARLTON Mk III	1.8 i	85	09/86 – 03/94	3410	
CARLTON Mk III	1.8 i	85	09/86 – 03/94	3470	
CARLTON Mk III	1.8 i	85	09/86 – 03/94	3505	
CARLTON Mk III	1.8 i	85	09/86 – 03/94	3615	
CARLTON Mk III	1.8 i	85	09/86 – 03/94	3717	
CARLTON Mk III	1.8 N	60	09/86 – 08/87	3410	
CARLTON Mk III	1.8 S	66	09/86 – 03/94	3410	
CARLTON Mk III	1.8 S	66	09/86 – 03/94	3470	
CARLTON Mk III	1.8 S	66	09/86 – 03/94	3505	
CARLTON Mk III	1.8 S	66	09/86 – 03/94	3615	
CARLTON Mk III	1.8 S	66	09/86 – 03/94	3717	
CARLTON Mk III	2.0	73	09/90 – 03/94	3470	

MAKE & MODEL		KW	YEAR		
VAUXHALL					
CARLTON Mk III	2.0	73	09/90 – 03/94	3505	
CARLTON Mk III	2.0	73	09/90 – 03/94	3615	
CARLTON Mk III	2.0	73	09/90 – 03/94	3717	
CARLTON Mk III	2.0	74	09/90 – 03/94	3470	
CARLTON Mk III	2.0	74	09/90 – 03/94	3505	
CARLTON Mk III	2.0	74	09/90 – 03/94	3615	
CARLTON Mk III	2.0	74	09/90 – 03/94	3717	
CARLTON Mk III	2.0	85	09/86 – 03/94	3410	
CARLTON Mk III	2.0	85	09/86 – 03/94	3470	
CARLTON Mk III	2.0	85	09/86 – 03/94	3505	
CARLTON Mk III	2.0	85	09/86 – 03/94	3615	
CARLTON Mk III	2.0	85	09/86 – 03/94	3717	
CARLTON Mk III	2.0 i	90	09/86 – 03/94	3410	
CARLTON Mk III	2.0 i	90	09/86 – 03/94	3470	
CARLTON Mk III	2.0 i	90	09/86 – 03/94	3505	
CARLTON Mk III	2.0 i	90	09/86 – 03/94	3615	
CARLTON Mk III	2.0 i	90	09/86 – 03/94	3717	
CARLTON Mk III	2.2 TD	66	10/86 – 08/88	3410	
CARLTON Mk III	2.3 D	54	09/86 – 03/94	3410	
CARLTON Mk III	2.3 D	54	09/86 – 03/94	3470	
CARLTON Mk III	2.3 D	54	09/86 – 03/94	3505	
CARLTON Mk III	2.3 D	54	09/86 – 03/94	3615	
CARLTON Mk III	2.3 D	54	09/86 – 03/94	3717	
CARLTON Mk III	2.3 TD Interc.	74	08/88 – 03/94	3410	
CARLTON Mk III	2.3 TD Interc.	74	08/88 – 03/94	3470	
CARLTON Mk III	2.3 TD Interc.	74	08/88 – 03/94	3505	
CARLTON Mk III	2.3 TD Interc.	74	08/88 – 03/94	3615	
CARLTON Mk III	2.3 TD Interc.	74	08/88 – 03/94	3717	
CARLTON Mk III	2.4 i	92	09/88 – 03/94	3470	
CARLTON Mk III	2.4 i	92	09/88 – 03/94	3505	
CARLTON Mk III	2.4 i	92	09/88 – 03/94	3615	
CARLTON Mk III	2.4 i	92	09/88 – 03/94	3717	
CARLTON Mk III	2.6 i	110	09/90 – 03/94	3717	
CARLTON Mk III	2.6 i	110	09/90 – 03/94	3733	
CARLTON Mk III	3.0 3000	130	03/87 – 09/90	3717	
CARLTON Mk III	3.0 3000	130	03/87 – 09/90	3733	
CARLTON Mk III	3.0 3000 24V	150	09/89 – 03/94	3717	
CARLTON Mk III	3.0 3000 24V	150	09/89 – 03/94	3733	
CARLTON Mk III	3.6 24V Lotus	277	08/90 – 09/92	3717	
CARLTON Mk III	3.6 24V Lotus	277	08/90 – 09/92	3733	
CARLTON Mk III	3000 24V	147	09/89 – 03/94	3717	
CARLTON Mk III	3000 24V	147	09/89 – 03/94	3733	
CARLTON Mk III	3000 CAT	130	03/88 – 03/94	3717	
CARLTON Mk III	3000 CAT	130	03/88 – 03/94	3733	
CARLTON Mk III Estate	1.8	65	09/87 – 03/94	3410	
CARLTON Mk III Estate	1.8	65	09/87 – 03/94	3470	
CARLTON Mk III Estate	1.8	65	09/87 – 03/94	3505	
CARLTON Mk III Estate	1.8	65	09/87 – 03/94	3615	
CARLTON Mk III Estate	1.8	65	09/87 – 03/94	3717	
CARLTON Mk III Estate	1.8 i	85	09/86 – 03/94	3410	
CARLTON Mk III Estate	1.8 i	85	09/86 – 03/94	3470	
CARLTON Mk III Estate	1.8 i	85	09/86 – 03/94	3505	
CARLTON Mk III Estate	1.8 i	85	09/86 – 03/94	3615	
CARLTON Mk III Estate	1.8 i	85	09/86 – 03/94	3717	
CARLTON Mk III Estate	1.8 N	60	09/86 – 08/87	3410	
CARLTON Mk III Estate	1.8 N	60	09/86 – 08/87	3717	
CARLTON Mk III Estate	1.8 S	66	09/86 – 03/94	3410	
CARLTON Mk III Estate	1.8 S	66	09/86 – 03/94	3470	
CARLTON Mk III Estate	1.8 S	66	09/86 – 03/94	3505	
CARLTON Mk III Estate	1.8 S	66	09/86 – 03/94	3615	
CARLTON Mk III Estate	1.8 S	66	09/86 – 03/94	3717	
CARLTON Mk III Estate	2.0	74	09/90 – 03/94	3470	
CARLTON Mk III Estate	2.0	74	09/90 – 03/94	3505	
CARLTON Mk III Estate	2.0	74	09/90 – 03/94	3615	
CARLTON Mk III Estate	2.0	74	09/90 – 03/94	3717	
CARLTON Mk III Estate	2.0	85	09/86 – 03/94	3410	
CARLTON Mk III Estate	2.0	85	09/86 – 03/94	3470	
CARLTON Mk III Estate	2.0	85	09/86 – 03/94	3505	
CARLTON Mk III Estate	2.0	85	09/86 – 03/94	3615	
CARLTON Mk III Estate	2.0	85	09/86 – 03/94	3717	
CARLTON Mk III Estate	2.0 i	73	09/90 – 03/94	3470	
CARLTON Mk III Estate	2.0 i	73	09/90 – 03/94	3505	
CARLTON Mk III Estate	2.0 i	73	09/90 – 03/94	3615	
CARLTON Mk III Estate	2.0 i	73	09/90 – 03/94	3717	
CARLTON Mk III Estate	2.0 i	90	09/86 – 03/94	3410	
CARLTON Mk III Estate	2.0 i	90	09/86 – 03/94	3470	

MAKE & MODEL		KW	YEAR		
VAUXHALL					
CARLTON Mk III Estate	2.0 i	90	09/86 – 03/94	3505	
CARLTON Mk III Estate	2.0 i	90	09/86 – 03/94	3615	
CARLTON Mk III Estate	2.0 i	90	09/86 – 03/94	3717	
CARLTON Mk III Estate	2.2 TD	66	09/86 – 08/88	3410	
CARLTON Mk III Estate	2.2 TD	66	09/86 – 08/88	3717	
CARLTON Mk III Estate	2.3 D	54	09/86 – 03/94	3410	
CARLTON Mk III Estate	2.3 D	54	09/86 – 03/94	3470	
CARLTON Mk III Estate	2.3 D	54	09/86 – 03/94	3505	
CARLTON Mk III Estate	2.3 D	54	09/86 – 03/94	3615	
CARLTON Mk III Estate	2.3 D	54	09/86 – 03/94	3717	
CARLTON Mk III Estate	2.3 TD Interc.	74	09/88 – 03/94	3410	
CARLTON Mk III Estate	2.3 TD Interc.	74	09/88 – 03/94	3470	
CARLTON Mk III Estate	2.3 TD Interc.	74	09/88 – 03/94	3505	
CARLTON Mk III Estate	2.3 TD Interc.	74	09/88 – 03/94	3615	
CARLTON Mk III Estate	2.3 TD Interc.	74	09/88 – 03/94	3717	
CARLTON Mk III Estate	2.4 i	92	09/88 – 03/94	3470	
CARLTON Mk III Estate	2.4 i	92	09/88 – 03/94	3505	
CARLTON Mk III Estate	2.4 i	92	09/88 – 03/94	3615	
CARLTON Mk III Estate	2.4 i	92	09/88 – 03/94	3717	
CARLTON Mk III Estate	2.6 i	110	09/90 – 03/94	3717	
CARLTON Mk III Estate	2.6 i	110	09/90 – 03/94	3733	
CARLTON Mk III Estate	3.0	130	03/87 – 03/94	3717	
CARLTON Mk III Estate	3.0	130	03/87 – 03/94	3733	
CARLTON Mk III Estate	3.0 24V	147	09/89 – 03/94	3717	
CARLTON Mk III Estate	3.0 24V	147	09/89 – 03/94	3733	
CASCADA Convertible	1.4	88	02/13 -	4014	
CASCADA Convertible	1.4	88	02/13 -	4149	
CASCADA Convertible	1.4	103	02/13 -	4014	
CASCADA Convertible	1.4	103	02/13 -	4149	
CASCADA Convertible	1.6	125	02/13 -	4014	
CASCADA Convertible	1.6	125	02/13 -	4149	
CASCADA Convertible	1.6	147	11/13 -	4014	
CASCADA Convertible	1.6	147	11/13 -	4149	
CASCADA Convertible	2.0 CDTI	121	02/13 -	4014	
CASCADA Convertible	2.0 CDTI	121	02/13 -	4149	
CASCADA Convertible	2.0 CDTI	125	07/15 -	4014	
CASCADA Convertible	2.0 CDTI	125	07/15 -	4149	
CASCADA Convertible	2.0 CDTI	143	02/13 -	4014	
CASCADA Convertible	2.0 CDTI	143	02/13 -	4149	
CAVALIER Coupe	1.9 S	66	10/75 – 03/78	3335	
CAVALIER Coupe	1.9 S	66	10/75 – 03/78	3365	
CAVALIER Coupe	2.0 S	74	03/78 – 08/81	3335	
CAVALIER Coupe	2.0 S	74	03/78 – 08/81	3365	
CAVALIER Coupe	2.0 S	74	03/78 – 08/81	3410	
CAVALIER Mk II	1.3 N	44	09/81 – 08/88	3410	
CAVALIER Mk II	1.3 S	55	09/81 – 08/88	3410	
CAVALIER Mk II	1.6 D	40	03/82 – 08/88	3410	
CAVALIER Mk II	1.6 i	55	08/86 – 08/88	3410	
CAVALIER Mk II	1.6 i CAT	55	08/86 – 08/88	3410	
CAVALIER Mk II	1.6 N	55	09/81 – 08/88	3410	
CAVALIER Mk II	1.6 S	66	09/81 – 08/88	3410	
CAVALIER Mk II	1.8	62	08/86 – 08/88	3410	
CAVALIER Mk II	1.8 i	82	09/81 – 08/88	3410	
CAVALIER Mk II	1.8 i	85	09/81 – 08/88	3410	
CAVALIER Mk II	1.8 i CAT	74	01/85 – 08/86	3410	
CAVALIER Mk II	2.0 4x4	95	09/87 – 08/88	3410	
CAVALIER Mk II	2.0 i	85	09/86 – 08/88	3410	
CAVALIER Mk II	2.0 i CAT	85	09/86 – 08/88	3410	
CAVALIER Mk II	2.0 SRi 130	95	03/87 – 08/88	3410	
CAVALIER Mk II	2000i	90	09/86 – 08/88	3410	
CAVALIER Mk II Convertible	1800i	82	03/85 – 10/88	3410	
CAVALIER Mk II Estate	1.3 S	55	09/81 – 08/88	3410	
CAVALIER Mk II Estate	1.6	66	10/83 – 08/88	3410	
CAVALIER Mk II Estate	1.6 D	40	03/82 – 08/88	3410	
CAVALIER Mk II Estate	1.8 i	82	09/81 – 08/86	3410	
CAVALIER Mk II Hatchback	1.3 S	55	09/81 – 08/88	3410	
CAVALIER Mk II Hatchback	1.6 S	66	09/81 – 08/88	3410	
CAVALIER Mk II Hatchback	1.8 i	82	09/81 – 08/88	3410	
CAVALIER Mk II Hatchback	1.8 i	85	09/81 – 08/88	3410	
CAVALIER Mk II Hatchback	1600D	40	03/82 – 08/88	3410	
CAVALIER Mk II Hatchback	2.0 4x4	95	09/87 – 08/88	3410	
CAVALIER Mk II Hatchback	2.0 i CAT	85	09/86 – 08/88	3410	
CAVALIER Mk II Hatchback	2.0 SRi 130	95	03/87 – 08/88	3410	
CAVALIER Mk II Hatchback	2000i	90	09/86 – 08/88	3410	
CAVALIER Mk III (87)	1.4 S	55	09/88 – 11/95	3410	
CAVALIER Mk III (87)	1.4 S	55	09/88 – 11/95	3623	

MAKE & MODEL   		KW	YEAR		
VAUXHALL					
CAVALIER Mk III (87)	1.6	60	09/88 – 05/93	3410	
CAVALIER Mk III (87)	1.6	60	09/88 – 05/93	3623	
CAVALIER Mk III (87)	1.6 i	52	09/93 – 11/95	3410	
CAVALIER Mk III (87)	1.6 i	52	09/93 – 11/95	3623	
CAVALIER Mk III (87)	1.6 i	55	09/88 – 11/95	3410	
CAVALIER Mk III (87)	1.6 i	55	09/88 – 11/95	3623	
CAVALIER Mk III (87)	1.7 D	42	09/88 – 09/92	3410	
CAVALIER Mk III (87)	1.7 D	42	09/88 – 09/92	3470	
CAVALIER Mk III (87)	1.7 D	42	09/88 – 09/92	3505	
CAVALIER Mk III (87)	1.7 D	42	09/88 – 09/92	3615	
CAVALIER Mk III (87)	1.7 D	42	09/88 – 09/92	3623	
CAVALIER Mk III (87)	1.7 D	44	07/92 – 11/95	3410	
CAVALIER Mk III (87)	1.7 D	44	07/92 – 11/95	3470	
CAVALIER Mk III (87)	1.7 D	44	07/92 – 11/95	3505	
CAVALIER Mk III (87)	1.7 D	44	07/92 – 11/95	3615	
CAVALIER Mk III (87)	1.7 D	44	07/92 – 11/95	3623	
CAVALIER Mk III (87)	1.7 TD	60	09/88 – 11/95	3410	
CAVALIER Mk III (87)	1.7 TD	60	09/88 – 11/95	3470	
CAVALIER Mk III (87)	1.7 TD	60	09/88 – 11/95	3505	
CAVALIER Mk III (87)	1.7 TD	60	09/88 – 11/95	3615	
CAVALIER Mk III (87)	1.7 TD	60	09/88 – 11/95	3623	
CAVALIER Mk III (87)	1.8	66	09/88 – 08/95	3410	
CAVALIER Mk III (87)	1.8	66	09/88 – 08/95	3470	
CAVALIER Mk III (87)	1.8	66	09/88 – 08/95	3505	
CAVALIER Mk III (87)	1.8	66	09/88 – 08/95	3615	
CAVALIER Mk III (87)	1.8	66	09/88 – 08/95	3623	
CAVALIER Mk III (87)	1.8 i CAT	66	03/90 – 11/95	3410	
CAVALIER Mk III (87)	1.8 i CAT	66	03/90 – 11/95	3470	
CAVALIER Mk III (87)	1.8 i CAT	66	03/90 – 11/95	3505	
CAVALIER Mk III (87)	1.8 i CAT	66	03/90 – 11/95	3615	
CAVALIER Mk III (87)	1.8 i CAT	66	03/90 – 11/95	3623	
CAVALIER Mk III (87)	2.0 GSi	115	09/89 – 08/92	3470	3469
CAVALIER Mk III (87)	2.0 GSi	115	09/89 – 08/92	3505	
CAVALIER Mk III (87)	2.0 GSi	115	09/89 – 08/92	3615	
CAVALIER Mk III (87)	2.0 GSi 4x4	115	09/89 – 08/92	3470	3469
CAVALIER Mk III (87)	2.0 GSi 4x4	115	09/89 – 08/92	3505	
CAVALIER Mk III (87)	2.0 GSi 4x4	115	09/89 – 08/92	3615	
CAVALIER Mk III (87)	2.0 i	85	09/88 – 10/90	3470	3469
CAVALIER Mk III (87)	2.0 i	85	09/88 – 10/90	3505	
CAVALIER Mk III (87)	2.0 i	85	09/88 – 10/90	3615	
CAVALIER Mk III (87)	2.0 i 16V	110	09/88 – 11/95	3470	3469
CAVALIER Mk III (87)	2.0 i 16V	110	09/88 – 11/95	3505	
CAVALIER Mk III (87)	2.0 i 16V	110	09/88 – 11/95	3615	
CAVALIER Mk III (87)	2.0 i 16V 4x4	110	09/88 – 11/95	3470	3469
CAVALIER Mk III (87)	2.0 i 16V 4x4	110	09/88 – 11/95	3505	
CAVALIER Mk III (87)	2.0 i 16V 4x4	110	09/88 – 11/95	3615	
CAVALIER Mk III (87)	2.0 i 4x4	85	01/91 – 10/92	3470	3469
CAVALIER Mk III (87)	2.0 i 4x4	85	01/91 – 10/92	3505	
CAVALIER Mk III (87)	2.0 i 4x4	85	01/91 – 10/92	3615	
CAVALIER Mk III (87)	2.0 i 4x4	95	09/88 – 09/92	3470	3469
CAVALIER Mk III (87)	2.0 i 4x4	95	09/88 – 09/92	3505	
CAVALIER Mk III (87)	2.0 i 4x4	95	09/88 – 09/92	3615	
CAVALIER Mk III (87)	2.0 i CAT	85	09/90 – 11/95	3470	3469
CAVALIER Mk III (87)	2.0 i CAT	85	09/90 – 11/95	3505	
CAVALIER Mk III (87)	2.0 i CAT	85	09/90 – 11/95	3615	
CAVALIER Mk III (87)	2.0 i Turbo 4x4	150	06/92 – 11/94	3736	3469
CAVALIER Mk III (87)	2.0 SRi	95	09/88 – 09/92	3470	3469
CAVALIER Mk III (87)	2.0 SRi	95	09/88 – 09/92	3505	
CAVALIER Mk III (87)	2.0 SRi	95	09/88 – 09/92	3615	
CAVALIER Mk III (87)	2.0 SRi 16V	100	09/93 – 11/95	3470	3469
CAVALIER Mk III (87)	2.0 SRi 16V	100	09/93 – 11/95	3505	
CAVALIER Mk III (87)	2.0 SRi 16V	100	09/93 – 11/95	3615	
CAVALIER Mk III (87)	2.5 V6	125	08/88 – 06/94	3736	3469
CAVALIER Mk III Hatchback	1.4 S	55	09/88 – 11/95	3410	
CAVALIER Mk III Hatchback	1.4 S	55	09/88 – 11/95	3623	
CAVALIER Mk III Hatchback	1.6	60	09/88 – 05/93	3410	
CAVALIER Mk III Hatchback	1.6	60	09/88 – 05/93	3623	
CAVALIER Mk III Hatchback	1.6 i	52	09/93 – 11/95	3410	
CAVALIER Mk III Hatchback	1.6 i	52	09/93 – 11/95	3623	
CAVALIER Mk III Hatchback	1.6 i	55	09/88 – 11/95	3410	
CAVALIER Mk III Hatchback	1.6 i	55	09/88 – 11/95	3623	
CAVALIER Mk III Hatchback	1.7 D	42	09/88 – 09/92	3410	
CAVALIER Mk III Hatchback	1.7 D	42	09/88 – 09/92	3470	
CAVALIER Mk III Hatchback	1.7 D	42	09/88 – 09/92	3505	
CAVALIER Mk III Hatchback	1.7 D	42	09/88 – 09/92	3615	
CAVALIER Mk III Hatchback	1.7 D	42	09/88 – 09/92	3623	

MAKE & MODEL		KW	YEAR		
VAUXHALL					
CAVALIER Mk III Hatchback	1.7 D	44	07/92 – 11/95	3410	
CAVALIER Mk III Hatchback	1.7 D	44	07/92 – 11/95	3470	
CAVALIER Mk III Hatchback	1.7 D	44	07/92 – 11/95	3505	
CAVALIER Mk III Hatchback	1.7 D	44	07/92 – 11/95	3615	
CAVALIER Mk III Hatchback	1.7 D	44	07/92 – 11/95	3623	
CAVALIER Mk III Hatchback	1.7 TD	60	09/88 – 11/95	3410	
CAVALIER Mk III Hatchback	1.7 TD	60	09/88 – 11/95	3470	
CAVALIER Mk III Hatchback	1.7 TD	60	09/88 – 11/95	3505	
CAVALIER Mk III Hatchback	1.7 TD	60	09/88 – 11/95	3615	
CAVALIER Mk III Hatchback	1.7 TD	60	09/88 – 11/95	3623	
CAVALIER Mk III Hatchback	1.8	66	09/88 – 10/90	3410	
CAVALIER Mk III Hatchback	1.8	66	09/88 – 10/90	3470	
CAVALIER Mk III Hatchback	1.8	66	09/88 – 10/90	3505	
CAVALIER Mk III Hatchback	1.8	66	09/88 – 10/90	3615	
CAVALIER Mk III Hatchback	1.8	66	09/88 – 10/90	3623	
CAVALIER Mk III Hatchback	1.8 i CAT	66	03/90 – 11/95	3410	
CAVALIER Mk III Hatchback	1.8 i CAT	66	03/90 – 11/95	3470	
CAVALIER Mk III Hatchback	1.8 i CAT	66	03/90 – 11/95	3505	
CAVALIER Mk III Hatchback	1.8 i CAT	66	03/90 – 11/95	3615	
CAVALIER Mk III Hatchback	1.8 i CAT	66	03/90 – 11/95	3623	
CAVALIER Mk III Hatchback	2.0 i	85	09/88 – 10/92	3470	3469
CAVALIER Mk III Hatchback	2.0 i	85	09/88 – 10/92	3505	
CAVALIER Mk III Hatchback	2.0 i	85	09/88 – 10/92	3615	
CAVALIER Mk III Hatchback	2.0 i 16V	100	09/93 – 11/95	3470	3469
CAVALIER Mk III Hatchback	2.0 i 16V	100	09/93 – 11/95	3505	
CAVALIER Mk III Hatchback	2.0 i 16V	100	09/93 – 11/95	3615	
CAVALIER Mk III Hatchback	2.0 i 16V	110	09/88 – 11/95	3470	3469
CAVALIER Mk III Hatchback	2.0 i 16V	110	09/88 – 11/95	3505	
CAVALIER Mk III Hatchback	2.0 i 16V	110	09/88 – 11/95	3615	
CAVALIER Mk III Hatchback	2.0 i 16V 4x4	110	01/92 – 11/93	3470	3469
CAVALIER Mk III Hatchback	2.0 i 16V 4x4	110	01/92 – 11/93	3505	
CAVALIER Mk III Hatchback	2.0 i 16V 4x4	110	01/92 – 11/93	3615	
CAVALIER Mk III Hatchback	2.0 i 4x4	85	01/91 – 10/92	3470	3469
CAVALIER Mk III Hatchback	2.0 i 4x4	85	01/91 – 10/92	3505	
CAVALIER Mk III Hatchback	2.0 i 4x4	85	01/91 – 10/92	3615	
CAVALIER Mk III Hatchback	2.0 i 4x4	95	09/88 – 09/92	3470	3469
CAVALIER Mk III Hatchback	2.0 i 4x4	95	09/88 – 09/92	3505	
CAVALIER Mk III Hatchback	2.0 i 4x4	95	09/88 – 09/92	3615	
CAVALIER Mk III Hatchback	2.0 i CAT	85	09/90 – 11/95	3470	3469
CAVALIER Mk III Hatchback	2.0 i CAT	85	09/90 – 11/95	3505	
CAVALIER Mk III Hatchback	2.0 i CAT	85	09/90 – 11/95	3615	
CAVALIER Mk III Hatchback	2.0 SRi	95	09/88 – 09/92	3470	3469
CAVALIER Mk III Hatchback	2.0 SRi	95	09/88 – 09/92	3505	
CAVALIER Mk III Hatchback	2.0 SRi	95	09/88 – 09/92	3615	
CAVALIER Mk III Hatchback	2.5 V6	125	09/88 – 06/94	3736	3469
COMBO Mk I (B)	1.2	33	07/94 – 10/01	3623	
COMBO Mk I (B)	1.4	44	07/94 – 10/01	3623	
COMBO Mk I (B)	1.4	60	07/94 – 10/01	3623	
COMBO Mk I (B)	1.7 D	44	07/94 – 10/01	3623	
COMBO Mk II (C) Box Body / Estate (F25)	1.3 CDTI 16V	51	09/04 – 02/12	4042	4040
COMBO Mk II (C) Box Body / Estate (F25)	1.3 CDTI 16V	51	09/04 – 02/12	3846	
COMBO Mk II (C) Box Body / Estate (F25)	1.3 CDTI 16V	55	10/05 – 11/11	3846	4040
COMBO Mk II (C) Box Body / Estate (F25)	1.3 CDTI 16V	55	10/05 – 11/11	4042	
COMBO Mk II (C) Box Body / Estate (F25)	1.4 16V	66	10/01 – 05/07	3846	4040
COMBO Mk II (C) Box Body / Estate (F25)	1.4 16V	66	10/01 – 05/07	4042	
COMBO Mk II (C) Box Body / Estate (F25)	1.4 i 16V	66	01/04 – 11/11	3846	4040
COMBO Mk II (C) Box Body / Estate (F25)	1.4 i 16V	66	01/04 – 11/11	4042	
COMBO Mk II (C) Box Body / Estate (F25)	1.6	62	09/01 – 10/04	3846	4040
COMBO Mk II (C) Box Body / Estate (F25)	1.6	62	09/01 – 10/04	4042	
COMBO Mk II (C) Box Body / Estate (F25)	1.6	64	10/01 – 11/11	3846	4040
COMBO Mk II (C) Box Body / Estate (F25)	1.6	64	10/01 – 11/11	4042	
COMBO Mk II (C) Box Body / Estate (F25)	1.6 CNG 16V	69	06/06 – 02/12	4042	4040
COMBO Mk II (C) Box Body / Estate (F25)	1.6 CNG 16V	71	04/05 – 02/12	4042	4040
COMBO Mk II (C) Box Body / Estate (F25)	1.7 CDTI 16V	74	12/04 – 11/11	4042	4040
COMBO Mk II (C) Box Body / Estate (F25)	1.7 DI 16V	48	09/01 – 11/11	3846	4040
COMBO Mk II (C) Box Body / Estate (F25)	1.7 DI 16V	48	09/01 – 11/11	4042	
COMBO Mk II (C) Box Body / Estate (F25)	1.7 DTI 16V	55	10/01 – 11/11	3846	4040
COMBO Mk II (C) Box Body / Estate (F25)	1.7 DTI 16V	55	10/01 – 11/11	4042	
COMBO Mk III (D) Box Body / Estate	1.3 CDTi	66	11/11 -	4121	
COMBO Mk III (D) Box Body / Estate	1.4	70	11/11 -	4121	
COMBO Mk III (D) Box Body / Estate	1.4 CNG	88	11/11 -	4121	
COMBO Mk III (D) Box Body / Estate	1.6 CDTi	66	11/11 -	4121	
COMBO Mk III (D) Box Body / Estate	1.6 CDTi	74	11/11 -	4121	
COMBO Mk III (D) Box Body / Estate	1.6 CDTi	77	11/11 -	4121	
COMBO Mk III (D) Box Body / Estate	2.0 CDTi	99	11/11 -	4121	
COMBO TOUR Mk II (C) (F25)	1.3 CDTI 16V	51	09/04 – 09/06	3846	4040

MAKE & MODEL		KW	YEAR		
VAUXHALL					
COMBO TOUR Mk II (C) (F25)	1.3 CDTI 16V	51	09/04 – 09/06	4042	
COMBO TOUR Mk II (C) (F25)	1.3 CDTI 16V	55	07/06 – 02/12	3846	4040
COMBO TOUR Mk II (C) (F25)	1.3 CDTI 16V	55	07/06 – 02/12	4042	
COMBO TOUR Mk II (C) (F25)	1.4	66	10/04 – 09/10	3846	4040
COMBO TOUR Mk II (C) (F25)	1.4	66	10/04 – 09/10	4042	
COMBO TOUR Mk II (C) (F25)	1.6	64	10/01 – 06/04	3846	4040
COMBO TOUR Mk II (C) (F25)	1.6	64	10/01 – 06/04	4042	
COMBO TOUR Mk II (C) (F25)	1.6 CNG	69	06/06 – 09/10	3846	4040
COMBO TOUR Mk II (C) (F25)	1.6 CNG	69	06/06 – 09/10	4042	
COMBO TOUR Mk II (C) (F25)	1.6 CNG	71	04/05 – 02/12	3846	4040
COMBO TOUR Mk II (C) (F25)	1.6 CNG	71	04/05 – 02/12	4042	
COMBO TOUR Mk II (C) (F25)	1.7 CDTI 16V	74	12/04 – 09/10	3846	4040
COMBO TOUR Mk II (C) (F25)	1.7 CDTI 16V	74	12/04 – 09/10	4042	
COMBO TOUR Mk II (C) (F25)	1.7 DI 16V	48	09/01 – 06/04	3846	4040
COMBO TOUR Mk II (C) (F25)	1.7 DI 16V	48	09/01 – 06/04	4042	
COMBO TOUR Mk II (C) (F25)	1.7 DTI 16V	55	10/01 – 02/12	3846	4040
COMBO TOUR Mk II (C) (F25)	1.7 DTI 16V	55	10/01 – 02/12	4042	
CORSA Mk I (B)	1.0 i 12V	40	11/96 – 09/00	3623	
CORSA Mk I (B)	1.2 i	33	03/93 – 09/00	3623	
CORSA Mk I (B)	1.2 i 16V	48	03/98 – 09/00	3623	
CORSA Mk I (B)	1.4 i	44	03/93 – 09/00	3623	
CORSA Mk I (B)	1.4 i 16V	63	08/97 – 09/00	3623	
CORSA Mk I (B)	1.4 i 16V	66	09/94 – 09/00	3623	
CORSA Mk I (B)	1.4 i S	60	03/93 – 09/00	3623	
CORSA Mk I (B)	1.5 D	37	12/92 – 12/96	3623	
CORSA Mk I (B)	1.5 TD	49	03/93 – 10/96	3623	
CORSA Mk I (B)	1.6 GSI 16V	80	03/93 – 09/00	3623	
CORSA Mk I (B)	1.6 i 16V	74	08/97 – 09/00	3623	
CORSA Mk I (B)	1.6 i 16V	78	09/94 – 09/00	3623	
CORSA Mk I (B)	1.7 D	44	02/96 – 09/00	3623	
CORSA Mk II (C) (W5L, F08)	1.0 12V	43	09/00 – 10/03	3846	
CORSA Mk II (C) (W5L, F08)	1.0 12V	44	11/03 – 10/06	3846	
CORSA Mk II (C) (W5L, F08)	1.2 16V	55	09/00 – 10/06	3846	
CORSA Mk II (C) (W5L, F08)	1.2 16V Dualfuel	55	08/01 – 10/06	3846	
CORSA Mk II (C) (W5L, F08)	1.2 Twinport	59	07/04 – 10/06	3846	
CORSA Mk II (C) (W5L, F08)	1.3 CDTI 16V	52	08/00 – 09/06	3846	
CORSA Mk II (C) (W5L, F08)	1.3 CDTI 16V	55	09/05 – 09/06	3846	
CORSA Mk II (C) (W5L, F08)	1.4 16V	66	09/00 – 10/06	3846	
CORSA Mk II (C) (W5L, F08)	1.4 Twinport	66	06/03 – 10/06	3846	
CORSA Mk II (C) (W5L, F08)	1.6	62	08/01 – 10/04	3846	
CORSA Mk II (C) (W5L, F08)	1.7 CDTI 16V	74	08/00 – 09/06	4042	4040
CORSA Mk II (C) (W5L, F08)	1.7 DI 16V	48	08/00 – 09/06	3846	
CORSA Mk II (C) (W5L, F08)	1.7 DTI 16V	55	08/00 – 09/06	3846	
CORSA Mk II (C) (W5L, F08)	1.8 16V	92	08/00 – 09/06	3846	
CORSA Mk III (D) (L_8)	1.6 SRi	110	05/07 – 08/14	4042	
CORSA Mk IV (E)	1.0	66	08/14 -	4285	4286
CORSA Mk IV (E)	1.0	85	08/14 -	4285	4286
CORSA Mk IV (E)	1.2	51	08/14 -	4285	4286
CORSA Mk IV (E)	1.3 CDTi	55	08/14 -	4285	4286
CORSA Mk IV (E)	1.3 CDTi	70	08/14 -	4285	4286
CORSA Mk IV (E)	1.4	55	09/14 -	4285	4286
CORSA Mk IV (E)	1.4	66	08/14 -	4285	4286
CORSA Mk IV (E)	1.4	74	08/14 -	4285	4286
CORSA Mk IV (E)	1.4	110	07/15 -		4286
CORSA Mk IV (E)	1.6 VXR	151	04/15 -	4042	4286
CORSA Mk IV (X15)	1.0 (B 10 XFL)	66	08/14 -	4284	
CORSA Mk IV (X15)	1.0 (B 10 XFL)	85	08/14 -	4284	
CORSA Mk IV (X15)	1.0 (B 10 XFT)	85	08/14 -	4284	
CORSA Mk IV (X15)	1.2 (B 12 XEL)	51	08/14 -	4284	
CORSA Mk IV (X15)	1.2 (B 12 XER)	51	08/14 -	4284	
CORSA Mk IV (X15)	1.3 CDTI (B 13 DTC)	55	08/14 -	4284	
CORSA Mk IV (X15)	1.3 CDTI (B 13 DTE)	55	08/14 -	4284	
CORSA Mk IV (X15)	1.3 CDTI (B 13 DTE)	70	08/14 -	4284	
CORSA Mk IV (X15)	1.3 CDTI (B 13 DTR)	70	08/14 -	4284	
CORSA Mk IV (X15)	1.4 (B 14 NEJ)	74	08/14 -	4284	
CORSA Mk IV (X15)	1.4 (B 14 NEL)	74	08/14 -	4284	
CORSA Mk IV (X15)	1.4 (B 14 XEJ)	55	09/14 -	4284	
CORSA Mk IV (X15)	1.4 (B 14 XEJ)	66	08/14 -	4284	
CORSA Mk IV (X15)	1.4 (B 14 XEL)	66	08/14 -	4284	
CORSA Mk IV (X15)	1.4 (B 14 XER)	55	09/14 -	4284	
CORSA Mk IV (X15)	1.4 (B 14 XER)	66	08/14 -	4284	
CORSA Mk IV (X15)	1.4 LPG (B 14 XEL)	66	08/14 -	4284	
CORSA Mk IV (X15)	1.4 LPG (B 14 XER)	66	08/14 -	4284	
CORSA Mk IV (X15)	1.6 VXR (B 16 LER)	151	04/15 -	4284	
CORSA Mk IV (X15)	1.6 VXR (B 16 LES)	151	04/15 -	4284	
CORSAVAN Mk I (B)	1.4 i	44	01/94 – 09/00	3623	

MAKE & MODEL   		KW	YEAR		
VAUXHALL					
CORSAVAN Mk I (B)	1.5 D	37	08/94 – 12/95	3623	
CORSAVAN Mk I (B)	1.7 D	44	01/94 – 09/00	3623	
CORSAVAN Mk II (C)	1.2 16V	55	09/00 – 06/06	3846	
CORSAVAN Mk II (C)	1.2 16V Dualfuel	55	08/01 – 06/06	3846	
CORSAVAN Mk II (C)	1.3 CDTI 16V	52	04/04 – 06/06	3846	
CORSAVAN Mk II (C)	1.4	66	11/03 – 06/06	3846	
CORSAVAN Mk II (C)	1.7 DI 16V	48	09/00 – 06/06	3846	
CORSAVAN Mk II (C)	1.7 DTI 16V	55	09/00 – 06/06	3846	
CORSAVAN Mk IV (E)	1.2	51	10/14 -	4285	4286
CORSAVAN Mk IV (E)	1.3 CDTi	55	10/14 -	4285	4286
CORSAVAN Mk IV (E)	1.3 CDTi	70	10/14 -	4285	4286
CORSAVAN Mk IV (E)	1.4	55	10/14 -	4285	4286
Crossland X (P17) 44228 -75	B 12 XE (EB2F), D 12 XE (EB2FA)	60	03/2017 -	3820/1	
Crossland X (P17) 44228 -75	B 12 XHL (EB2DT), B 12 XHT (EB2DTS), D 12 XHL (EB2	81	03/2017 -	3820/1	
Crossland X (P17) 44348 Turbo D -75	B 16 DT (DV6FD)	73	03/2017 -	3820/1	
FRONTERA Mk I (A)	2.0	85	04/95 – 08/98	3857	3887
FRONTERA Mk I (A)	2.0	85	04/95 – 08/98	3657	
FRONTERA Mk I (A)	2.0	85	04/95 – 08/98	3674	
FRONTERA Mk I (A)	2.0	85	04/95 – 08/98	3743	
FRONTERA Mk I (A)	2.0	85	04/95 – 08/98	3757	
FRONTERA Mk I (A)	2.2 i	100	03/95 – 10/98	3857	3887
FRONTERA Mk I (A)	2.2 i	100	03/95 – 10/98	3657	
FRONTERA Mk I (A)	2.2 i	100	03/95 – 10/98	3674	
FRONTERA Mk I (A)	2.2 i	100	03/95 – 10/98	3743	
FRONTERA Mk I (A)	2.2 i	100	03/95 – 10/98	3757	
FRONTERA Mk I (A)	2.3 TD	74	09/91 – 06/98	3857	3887
FRONTERA Mk I (A)	2.3 TD	74	09/91 – 06/98	3657	
FRONTERA Mk I (A)	2.3 TD	74	09/91 – 06/98	3674	
FRONTERA Mk I (A)	2.3 TD	74	09/91 – 06/98	3743	
FRONTERA Mk I (A)	2.3 TD	74	09/91 – 06/98	3757	
FRONTERA Mk I (A)	2.4 i	92	03/92 – 10/98	3857	3887
FRONTERA Mk I (A)	2.4 i	92	03/92 – 10/98	3657	
FRONTERA Mk I (A)	2.4 i	92	03/92 – 10/98	3674	
FRONTERA Mk I (A)	2.4 i	92	03/92 – 10/98	3743	
FRONTERA Mk I (A)	2.4 i	92	03/92 – 10/98	3757	
FRONTERA Mk I (A)	2.5 TDS	85	11/91 – 06/98	3857	3887
FRONTERA Mk I (A)	2.5 TDS	85	11/91 – 06/98	3657	
FRONTERA Mk I (A)	2.5 TDS	85	11/91 – 06/98	3674	
FRONTERA Mk I (A)	2.5 TDS	85	11/91 – 06/98	3743	
FRONTERA Mk I (A)	2.5 TDS	85	11/91 – 06/98	3757	
FRONTERA Mk I (A)	2.8 TD	83	01/95 – 12/96	3857	3887
FRONTERA Mk I (A)	2.8 TD	83	01/95 – 12/96	3657	
FRONTERA Mk I (A)	2.8 TD	83	01/95 – 12/96	3674	
FRONTERA Mk I (A)	2.8 TD	83	01/95 – 12/96	3743	
FRONTERA Mk I (A)	2.8 TD	83	01/95 – 12/96	3757	
FRONTERA Mk I (A) Sport	2.0 i	85	03/92 – 10/98	3857	3887
FRONTERA Mk I (A) Sport	2.0 i	85	03/92 – 10/98	3657	
FRONTERA Mk I (A) Sport	2.0 i	85	03/92 – 10/98	3674	
FRONTERA Mk I (A) Sport	2.0 i	85	03/92 – 10/98	3743	
FRONTERA Mk I (A) Sport	2.0 i	85	03/92 – 10/98	3757	
FRONTERA Mk I (A) Sport	2.5 TDS	85	09/96 – 10/98	3857	3887
FRONTERA Mk I (A) Sport	2.5 TDS	85	09/96 – 10/98	3657	
FRONTERA Mk I (A) Sport	2.5 TDS	85	09/96 – 10/98	3674	
FRONTERA Mk I (A) Sport	2.5 TDS	85	09/96 – 10/98	3743	
FRONTERA Mk I (A) Sport	2.5 TDS	85	09/96 – 10/98	3757	
FRONTERA Mk I (A) Sport	2.8 TD	83	01/95 – 12/96	3857	3887
FRONTERA Mk I (A) Sport	2.8 TD	83	01/95 – 12/96	3657	
FRONTERA Mk I (A) Sport	2.8 TD	83	01/95 – 12/96	3674	
FRONTERA Mk I (A) Sport	2.8 TD	83	01/95 – 12/96	3743	
FRONTERA Mk I (A) Sport	2.8 TD	83	01/95 – 12/96	3757	
FRONTERA Mk II (B)	2.2 DTI	85	10/98 – 09/04	3743	3887
FRONTERA Mk II (B)	2.2 DTI	85	10/98 – 09/04	3674	
FRONTERA Mk II (B)	2.2 i	100	10/98 – 10/04	3743	3887
FRONTERA Mk II (B)	2.2 i	100	10/98 – 10/04	3674	
FRONTERA Mk II (B)	3.2 i	151	10/98 – 10/04	3743	3887
FRONTERA Mk II (B)	3.2 i	151	10/98 – 10/04	3674	
Grandland X (A18) 44228 -75	B 12 XHT (EB2DTS), D 12 XHT (EB2ADTS)	96	06/2017 -		4374
Grandland X (A18) 44348 Turbo D -75	B 16 DTH (DV6FC)	88	06/2017 -		4374
HCV Movano Mk II (B) Chassis/Cab (X62) 44257 CDTI FWD (UV, HV)	M9T 670, M9T 672, M9T 676, M9T 870	74	05/2010 -		4172/1
HCV Movano Mk II (B) Chassis/Cab (X62) 44257 CDTI FWD (UV, HV)	M9T 706	125	11/2016 -		4172/1
HCV Movano Mk II (B) Chassis/Cab (X62) 44257 CDTI FWD (UV, HV, EV)	M9T 670, M9T 672, M9T 676, M9T 680, M9T 696, M9T 8	92	05/2010 -		4172/1
HCV Movano Mk II (B) Chassis/Cab (X62) 44257 CDTI FWD (UV, HV, EV)	M9T 678, M9T 680	107	05/2010 -		4172/1
HCV Movano Mk II (B) Chassis/Cab (X62) 44257 CDTI RWD (UV, HV)	M9T 670, M9T 690, M9T 692, M9T 870, M9T 890	74	07/2010 -		4172/1
HCV Movano Mk II (B) Chassis/Cab (X62) 44257 CDTI RWD (UV, HV)	M9T 700	120	05/2014 -		4172/1
HCV Movano Mk II (B) Chassis/Cab (X62) 44257 CDTI RWD (UV, HV, EV)	M9T 686, M9T 690, M9T 692, M9T 696, M9T 698, M9T 8	92	07/2010 -		4172/1
HCV Movano Mk II (B) Chassis/Cab (X62) 44257 CDTI RWD (UV, HV, EV)	M9T 694, M9T 696, M9T 698	107	07/2010 -		4172/1

MAKE & MODEL   		KW	YEAR		
VAUXHALL					
HCV Movano Mk II (B) Combi (X62) 44257 CDTI FWD (JV)	M9T 670, M9T 672, M9T 676	74	05/2010 -		4172/1
HCV Movano Mk II (B) Combi (X62) 44257 CDTI FWD (JV)	M9T 670, M9T 672, M9T 676, M9T 680, M9T 876	92	05/2010 -		4172/1
HCV Movano Mk II (B) Combi (X62) 44257 CDTI FWD (JV)	M9T 678, M9T 680	107	05/2010 -		4172/1
HCV Movano Mk II (B) Combi (X62) 44257 CDTI FWD (JV)	M9T 702	100	05/2014 -		4172/1
HCV Movano Mk II (B) Combi (X62) 44257 CDTI FWD (JV)	M9T 702	120	05/2014 -		4172/1
HCV Movano Mk II (B) Combi (X62) 44257 CDTI FWD (JV)	M9T 706	125	07/2015 -		4172/1
HCV Movano Mk II (B) Combi (X62) 44257 CDTI FWD (JV)	M9T 870	81	05/2014 -		4172/1
HCV Movano Mk II (B) Van (X62) 44257 CDTI FWD (FV)	M9T 670, M9T 672, M9T 676, M9T 680, M9T 876	92	05/2010 -		4172/1
HCV Movano Mk II (B) Van (X62) 44257 CDTI FWD (FV)	M9T 670, M9T 672, M9T 676, M9T 870	74	05/2010 -		4172/1
HCV Movano Mk II (B) Van (X62) 44257 CDTI FWD (FV)	M9T 678, M9T 680	107	05/2010 -		4172/1
HCV Movano Mk II (B) Van (X62) 44257 CDTI FWD (FV)	M9T 700	120	05/2014 -		4172/1
HCV Movano Mk II (B) Van (X62) 44257 CDTI FWD (FV)	M9T 702, M9T 716	100	05/2014 -		4172/1
HCV Movano Mk II (B) Van (X62) 44257 CDTI FWD (FV)	M9T 706	125	11/2016 -		4172/1
HCV Movano Mk II (B) Van (X62) 44257 CDTI FWD (FV)	M9T 870	81	02/2012 -		4172/1
HCV Movano Mk II (B) Van (X62) 44257 CDTI RWD (FV)	M9T 686, M9T 690, M9T 692, M9T 696, M9T 698, M9T 8	92	05/2010 -		4172/1
HCV Movano Mk II (B) Van (X62) 44257 CDTI RWD (FV)	M9T 690, M9T 692, M9T 870	74	05/2010 -		4172/1
HCV Movano Mk II (B) Van (X62) 44257 CDTI RWD (FV)	M9T 694, M9T 696, M9T 698	107	05/2010 -		4172/1
HCV Movano Mk II (B) Van (X62) 44257 CDTI RWD (FV)	M9T 700	120	05/2014 -		4172/1
HCV Movano Mk II (B) Van (X62) 44257 CDTI RWD (FV)	M9T 700, M9T 702	100	05/2014 -		4172/1
INSIGNIA	1.4	103	04/11 -	4149	4150
INSIGNIA	1.4 LPG	103	07/12 -	4149	4150
INSIGNIA	1.6	85	07/08 -	4149	4150
INSIGNIA	1.6 CDTI	100	07/15 -	4149	4150
INSIGNIA	1.6 Turbo	125	07/13 -	4149	4150
INSIGNIA	1.6 Turbo	132	01/09 -	4149	4150
INSIGNIA	1.8	103	07/08 -	4149	4150
INSIGNIA	2.0 Biturbo CDTI	143	03/12 -	4149	4150
INSIGNIA	2.0 Biturbo CDTI 4x4	143	03/12 -	4149	4150
INSIGNIA	2.0 CDTI	81	07/08 -	4149	4150
INSIGNIA	2.0 CDTI	88	03/12 – 03/16	4149	4150
INSIGNIA	2.0 CDTI	96	07/08 – 12/14	4149	4150
INSIGNIA	2.0 CDTI	103	07/13 -	4149	4150
INSIGNIA	2.0 CDTI	118	07/08 -	4149	4150
INSIGNIA	2.0 CDTI	120	07/13 -	4149	4150
INSIGNIA	2.0 CDTI	125	11/14 -	4149	4150
INSIGNIA	2.0 CDTI	140	10/08 -	4149	4150
INSIGNIA	2.0 CDTI 4x4	118	07/08 -	4149	4150
INSIGNIA	2.0 CDTI 4x4	120	07/13 -	4149	4150
INSIGNIA	2.0 CDTI 4x4	125	11/14 -	4149	4150
INSIGNIA	2.0 CDTI 4x4	140	05/09 -	4149	4150
INSIGNIA	2.0 Turbo	162	07/08 -	4149	4150
INSIGNIA	2.0 Turbo	184	04/14 -	4149	4150
INSIGNIA	2.0 Turbo 4x4	162	07/08 -	4149	4150
INSIGNIA	2.0 Turbo 4x4	184	09/11 -	4149	4150
INSIGNIA	2.8 V6 Turbo 4x4	191	07/08 -		4150
INSIGNIA	2.8 VXR	239	07/09 -		4150
INSIGNIA Estate	1.4	103	04/11 -	4149	4150
INSIGNIA Estate	1.4 LPG	103	07/12 -	4149	4150
INSIGNIA Estate	1.6	85	07/08 -	4149	4150
INSIGNIA Estate	1.6 CDTI	100	07/15 -	4149	4150
INSIGNIA Estate	1.6 Turbo	125	07/13 -	4149	4150
INSIGNIA Estate	1.6 Turbo	132	01/09 -	4149	4150
INSIGNIA Estate	1.8	103	07/08 -	4149	4150
INSIGNIA Estate	2.0 Biturbo CDTI	143	03/12 -	4149	4150
INSIGNIA Estate	2.0 Biturbo CDTI 4x4	143	03/12 -	4149	4150
INSIGNIA Estate	2.0 CDTI	81	07/08 -	4149	4150
INSIGNIA Estate	2.0 CDTI	88	03/12 – 03/16	4149	4150
INSIGNIA Estate	2.0 CDTI	96	07/08 – 12/14	4149	4150
INSIGNIA Estate	2.0 CDTI	103	07/13 -	4149	4150
INSIGNIA Estate	2.0 CDTI	118	07/08 -	4149	4150
INSIGNIA Estate	2.0 CDTI	120	07/13 -	4149	4150
INSIGNIA Estate	2.0 CDTI	125	11/14 -	4149	4150
INSIGNIA Estate	2.0 CDTI	140	11/08 -	4149	4150
INSIGNIA Estate	2.0 CDTI 4x4	118	07/08 -	4149	4150
INSIGNIA Estate	2.0 CDTI 4x4	120	07/13 -	4149	4150
INSIGNIA Estate	2.0 CDTI 4x4	125	11/14 -	4149	4150
INSIGNIA Estate	2.0 CDTI 4x4	140	05/09 -	4149	4150
INSIGNIA Estate	2.0 Turbo	162	07/08 -	4149	4150
INSIGNIA Estate	2.0 Turbo	184	04/14 -	4149	4150
INSIGNIA Estate	2.0 Turbo 4x4	162	07/08 -	4149	4150
INSIGNIA Estate	2.0 Turbo 4x4	184	09/11 -	4149	4150
INSIGNIA Estate	2.8 V6 Turbo	191	08/08 -		4150
INSIGNIA Estate	2.8 VXR	239	07/09 -		4150
INSIGNIA Saloon	1.4	103	04/11 -	4149	4150
INSIGNIA Saloon	1.4 LPG	103	07/12 -	4149	4150
INSIGNIA Saloon	1.6	85	07/08 -	4149	4150

MAKE & MODEL		KW	YEAR		
VAUXHALL					
INSIGNIA Saloon	1.6 Turbo	125	07/13 -	4149	4150
INSIGNIA Saloon	1.6 Turbo	132	01/09 -	4149	4150
INSIGNIA Saloon	1.8	103	07/08 -	4149	4150
INSIGNIA Saloon	2.0 Biturbo CDTI	143	03/12 -	4149	4150
INSIGNIA Saloon	2.0 Biturbo CDTI 4x4	143	03/12 -	4149	4150
INSIGNIA Saloon	2.0 CDTI	81	07/08 -	4149	4150
INSIGNIA Saloon	2.0 CDTI	88	03/12 – 12/14	4149	4150
INSIGNIA Saloon	2.0 CDTI	96	07/08 – 12/14	4149	4150
INSIGNIA Saloon	2.0 CDTI	103	07/13 -	4149	4150
INSIGNIA Saloon	2.0 CDTI	118	07/08 -	4149	4150
INSIGNIA Saloon	2.0 CDTI	120	07/13 -	4149	4150
INSIGNIA Saloon	2.0 CDTI	125	11/14 -	4149	4150
INSIGNIA Saloon	2.0 CDTI	140	11/08 -	4149	4150
INSIGNIA Saloon	2.0 CDTI 4x4	118	07/08 -	4149	4150
INSIGNIA Saloon	2.0 CDTI 4x4	120	07/13 -	4149	4150
INSIGNIA Saloon	2.0 CDTI 4x4	125	11/14 -	4149	4150
INSIGNIA Saloon	2.0 CDTI 4x4	140	05/09 -	4149	4150
INSIGNIA Saloon	2.0 Turbo	162	07/08 -	4149	4150
INSIGNIA Saloon	2.0 Turbo 4x4	162	07/08 -	4149	4150
INSIGNIA Saloon	2.0 Turbo 4x4	184	09/11 -	4149	4150
INSIGNIA Saloon	2.8 V6 Turbo 4x4	191	07/08 -		4150
INSIGNIA Saloon	2.8 VXR	239	07/09 -		4150
MERIVA Mk I (A)	1.3 CDTI	55	01/03 – 10/09	4042	4040
MERIVA Mk I (A)	1.4 16V Twinport	66	01/03 – 10/09	3846	4040
MERIVA Mk I (A)	1.4 16V Twinport	66	01/03 – 10/09	4042	
MERIVA Mk I (A)	1.6 i	64	01/03 – 06/10	3846	4040
MERIVA Mk I (A)	1.6 i	64	01/03 – 06/10	4042	
MERIVA Mk I (A)	1.6 i 16V	74	01/03 – 09/05	4042	4040
MERIVA Mk I (A)	1.6 i 16V Twinport	77	05/03 – 06/10	4042	4040
MERIVA Mk I (A)	1.6 Turbo	132	05/06 – 06/10	4042	4040
MERIVA Mk I (A)	1.7 CDTI 16V	74	09/03 – 08/05	4042	4040
MERIVA Mk I (A)	1.7 DTI 16V	55	06/03 – 06/10	4042	4040
MERIVA Mk I (A)	1.8 i 16V	92	05/03 – 08/05	4042	4040
MERIVA Mk II (B)	1.3 CDTI	55	06/10 -	4042	
MERIVA Mk II (B)	1.3 CDTi	70	06/10 -	4042	
MERIVA Mk II (B)	1.4	74	06/10 -	4042	
MERIVA Mk II (B)	1.4	88	06/10 -	4042	
MERIVA Mk II (B)	1.4	103	06/10 -	4042	
MERIVA Mk II (B)	1.4 LPG	88	06/11 -	4042	
MERIVA Mk II (B)	1.6 CDTI	70	01/14 -	4042	
MERIVA Mk II (B)	1.6 CDTi	81	07/14 -	4042	
MERIVA Mk II (B)	1.6 CDTi	100	08/13 -	4042	
MERIVA Mk II (B)	1.7 CDTI	74	06/10 -	4042	
MERIVA Mk II (B)	1.7 CDTi	81	06/10 -	4042	
MERIVA Mk II (B)	1.7 CDTi	96	06/10 -	4042	
MIDI Bus	1.8	63	09/84 – 05/88	3462	
MIDI Bus	2.0 TD	50	09/84 – 05/88	3462	
MIDI II Bus	2.0	62	06/88 – 08/97	3462	
MIDI II Bus	2.0 TD	51	06/88 – 07/90	3462	
MIDI II Bus	2.2 D	45	06/88 – 12/94	3462	
MIDI II Bus	2.2 D All-wheel Drive	45	07/90 – 08/94	3462	
MIDI II Bus	2.4 TD	56	09/94 – 08/97	3462	
MIDI II Bus	2.4 TD	69	10/94 – 08/97	3462	
MOKKA	1.4	103	04/13 -	4014	
MOKKA	1.4	103	04/13 -	4008	
MOKKA	1.4 4x4	103	06/12 -	4014	
MOKKA	1.4 4x4	103	06/12 -	4008	
MOKKA	1.4 4x4	112	06/16 -	4014	
MOKKA	1.4 4x4	112	06/16 -	4008	
MOKKA	1.6	85	06/12 -	4014	
MOKKA	1.6	85	06/12 -	4008	
MOKKA	1.6 CDTI	81	06/15 -	4008	
MOKKA	1.6 CDTI	100	01/15 -	4014	
MOKKA	1.6 CDTi	81	06/15 -	4014	
MOKKA	1.6 CDTi	100	01/15 -	4008	
MOKKA	1.6 CDTi 4x4	100	01/15 -	4014	
MOKKA	1.6 CDTi 4x4	100	01/15 -	4008	
MOKKA	1.7 CDTI	96	06/12 -	4014	
MOKKA	1.7 CDTI	96	06/12 -	4008	
MOKKA	1.7 CDTI 4x4	96	06/12 -	4014	
MOKKA	1.7 CDTI 4x4	96	06/12 -	4008	
MONARO	5.7	242	03/04 – 08/05	4189	4188
MONARO	5.7	257	01/05 – 04/07	4189	4188
MONARO	5.7	279	04/04 – 08/05	4189	4188
MONARO	5.7 (Y 57 XE)	285	03/04 – 07/05		4188
MONARO	6.0	293	01/05 – 04/07	4189	4188

MAKE & MODEL		KW	YEAR		
VAUXHALL					
MONARO	6.0 (LS2)	362	10/06 – 04/07	4189	4188
MONTEREY	3.1 TD	84	09/91 – 07/98	3743	3887
MONTEREY	3.1 TD	84	09/91 – 07/98	3674	
MONTEREY	3.2	130	06/92 – 07/98	3743	3887
MONTEREY	3.2	130	06/92 – 07/98	3674	
MONTEREY Mk II	3.0 DTI	117	07/98 – 08/99	3743	3887
MONTEREY Mk II	3.0 DTI	117	07/98 – 08/99	3674	
MONTEREY Mk II	3.5 V6 24V	158	07/98 – 08/99	3743	3887
MONTEREY Mk II	3.5 V6 24V	158	07/98 – 08/99	3674	
MOVANO Mk I (A) Chassis/Cab (ED, UD, HD)	2.2 DTI	66	09/00 – 05/10	3856	3855
MOVANO Mk I (A) Chassis/Cab (ED, UD, HD)	2.5 CDTI	74	04/04 – 05/10	3856	3855
MOVANO Mk I (A) Chassis/Cab (ED, UD, HD)	2.5 CDTI	88	08/06 – 05/10	3856	3855
MOVANO Mk I (A) Chassis/Cab (ED, UD, HD)	2.5 CDTI	107	08/06 – 05/10	3856	3855
MOVANO Mk I (A) Chassis/Cab (ED, UD, HD)	2.5 D	59	10/98 – 01/01	3856	3855
MOVANO Mk I (A) Chassis/Cab (ED, UD, HD)	2.5 DTI	84	10/01 – 05/10	3856	3855
MOVANO Mk I (A) Chassis/Cab (ED, UD, HD)	2.8 DTI	84	10/98 – 10/01	3856	3855
MOVANO Mk I (A) Chassis/Cab (ED, UD, HD)	3.0 DTi	100	10/03 – 05/10	3856	3855
MOVANO Mk I (A) Combi (JD)	1.9 DTI	59	09/00 – 10/01	3856	3855
MOVANO Mk I (A) Combi (JD)	1.9 DTI	60	10/01 – 05/10	3856	3855
MOVANO Mk I (A) Combi (JD)	2.2 DTI	66	09/00 – 05/10	3856	3855
MOVANO Mk I (A) Combi (JD)	2.5 CDTI	74	10/01 – 08/09	3856	3855
MOVANO Mk I (A) Combi (JD)	2.5 CDTI	88	02/03 – 08/09	3856	3855
MOVANO Mk I (A) Combi (JD)	2.5 CDTI	107	08/06 – 05/10	3856	3855
MOVANO Mk I (A) Combi (JD)	2.5 D	59	10/98 – 09/00	3856	3855
MOVANO Mk I (A) Combi (JD)	2.5 DTI	84	10/01 – 08/09	3856	3855
MOVANO Mk I (A) Combi (JD)	2.8 DTI	84	10/98 – 10/01	3856	3855
MOVANO Mk I (A) Combi (JD)	3.0 DTi	100	10/03 – 05/10	3856	3855
MOVANO Mk I (A) Van (FD)	1.9 DTI	59	09/00 – 10/01	3856	3855
MOVANO Mk I (A) Van (FD)	1.9 DTI	60	10/01 – 05/10	3856	3855
MOVANO Mk I (A) Van (FD)	2.2 DTI	66	09/00 – 05/10	3856	3855
MOVANO Mk I (A) Van (FD)	2.5 CDTI	74	04/04 – 05/10	3856	3855
MOVANO Mk I (A) Van (FD)	2.5 CDTI	88	08/06 – 05/10	3856	3855
MOVANO Mk I (A) Van (FD)	2.5 CDTI	107	08/06 – 05/10	3856	3855
MOVANO Mk I (A) Van (FD)	2.5 D	59	10/98 – 09/00	3856	3855
MOVANO Mk I (A) Van (FD)	2.5 DTI	84	10/01 – 05/10	3856	3855
MOVANO Mk I (A) Van (FD)	2.8 TDI	84	10/98 – 10/01	3856	3855
MOVANO Mk I (A) Van (FD)	3.0 DTi	100	10/03 – 05/10	3856	3855
MOVANO Mk II (B) Chassis/Cab	2.3 CDTI [RWD]	74	07/10 -	4056	4057
MOVANO Mk II (B) Chassis/Cab	2.3 CDTI [RWD]	74	07/10 -		4172
MOVANO Mk II (B) Chassis/Cab	2.3 CDTI [RWD]	74	07/10 -		4132
MOVANO Mk II (B) Chassis/Cab	2.3 CDTI [RWD]	92	07/10 -	4056	4057
MOVANO Mk II (B) Chassis/Cab	2.3 CDTI [RWD]	92	07/10 -		4172
MOVANO Mk II (B) Chassis/Cab	2.3 CDTI [RWD]	92	07/10 -		4132
MOVANO Mk II (B) Chassis/Cab	2.3 CDTI [RWD]	96	10/16 -	4056	
MOVANO Mk II (B) Chassis/Cab	2.3 CDTI [RWD]	107	07/10 -	4056	4057
MOVANO Mk II (B) Chassis/Cab	2.3 CDTI [RWD]	107	07/10 -		4172
MOVANO Mk II (B) Chassis/Cab	2.3 CDTI [RWD]	107	07/10 -		4132
MOVANO Mk II (B) Chassis/Cab	2.3 CDTI [RWD]	110	01/13 -	4056	4057
MOVANO Mk II (B) Chassis/Cab	2.3 CDTI [RWD]	110	01/13 -		4132
MOVANO Mk II (B) Chassis/Cab	2.3 CDTI [RWD]	110	01/13 -		4172
MOVANO Mk II (B) Chassis/Cab	2.3 CDTI FWD	74	05/10 -	4056	4057
MOVANO Mk II (B) Chassis/Cab	2.3 CDTI FWD	81	05/14 -	4056	
MOVANO Mk II (B) Chassis/Cab	2.3 CDTI FWD	92	05/10 -	4056	4057
MOVANO Mk II (B) Chassis/Cab	2.3 CDTI FWD	96	10/16 -	4056	
MOVANO Mk II (B) Chassis/Cab	2.3 CDTI FWD	107	05/10 -	4056	4057
MOVANO Mk II (B) Chassis/Cab	2.3 CDTI FWD	110	01/13 -	4056	4057
MOVANO Mk II (B) Chassis/Cab	2.3 CDTI FWD	110	01/13 -		4132
MOVANO Mk II (B) Chassis/Cab	2.3 CDTI FWD	110	01/13 -		4172
MOVANO Mk II (B) Chassis/Cab	2.3 CDTI FWD	120	10/16 -	4056	
MOVANO Mk II (B) Chassis/Cab	2.3 CDTI FWD	125	11/16 -	4056	
MOVANO Mk II (B) Combi	2.3 CDTI [RWD]	96	10/16 -	4056	
MOVANO Mk II (B) Combi	2.3 CDTI FWD	74	05/10 -	4056	4057
MOVANO Mk II (B) Combi	2.3 CDTI FWD	81	05/14 -	4056	
MOVANO Mk II (B) Combi	2.3 CDTI FWD	92	05/10 -	4056	4057
MOVANO Mk II (B) Combi	2.3 CDTI FWD	96	10/16 -	4056	
MOVANO Mk II (B) Combi	2.3 CDTI FWD	100	05/14 -	4056	4057
MOVANO Mk II (B) Combi	2.3 CDTI FWD	107	05/10 -	4056	4057
MOVANO Mk II (B) Combi	2.3 CDTI FWD	110	01/13 -	4056	4057
MOVANO Mk II (B) Combi	2.3 CDTI FWD	110	01/13 -		4132
MOVANO Mk II (B) Combi	2.3 CDTI FWD	110	01/13 -		4172
MOVANO Mk II (B) Combi	2.3 CDTI FWD	120	05/14 -	4056	4057
MOVANO Mk II (B) Combi	2.3 CDTI FWD	125	07/15 -	4056	4057
MOVANO Mk II (B) Combi	2.3 CDTI FWD	125	07/15 -		4132
MOVANO Mk II (B) Combi	2.3 CDTI FWD	125	07/15 -		4172
MOVANO Mk II (B) VAN	2.3 CDTI [RWD]	74	05/10 -	4056	4057
MOVANO Mk II (B) VAN	2.3 CDTI [RWD]	74	05/10 -		4132

MAKE & MODEL		KW	YEAR		
VAUXHALL					
MOVANO Mk II (B) VAN	2.3 CDTI [RWD]	74	05/10 -		4172
MOVANO Mk II (B) VAN	2.3 CDTI [RWD]	81	02/12 -	4056	4057
MOVANO Mk II (B) VAN	2.3 CDTI [RWD]	81	02/12 -		4132
MOVANO Mk II (B) VAN	2.3 CDTI [RWD]	81	02/12 -		4172
MOVANO Mk II (B) VAN	2.3 CDTI [RWD]	92	05/10 -	4056	4057
MOVANO Mk II (B) VAN	2.3 CDTI [RWD]	92	05/10 -		4132
MOVANO Mk II (B) VAN	2.3 CDTI [RWD]	92	05/10 -		4172
MOVANO Mk II (B) VAN	2.3 CDTI [RWD]	96	10/16 -	4056	
MOVANO Mk II (B) VAN	2.3 CDTI [RWD]	100	05/14 -	4056	4057
MOVANO Mk II (B) VAN	2.3 CDTI [RWD]	100	05/14 -		4132
MOVANO Mk II (B) VAN	2.3 CDTI [RWD]	100	05/14 -		4172
MOVANO Mk II (B) VAN	2.3 CDTI FWD	100	05/14 -		4172
MOVANO Mk II (B) VAN	2.3 CDTI FWD	107	05/10 -	4056	4057
MOVANO Mk II (B) VAN	2.3 CDTI FWD	107	05/10 -		4132
MOVANO Mk II (B) VAN	2.3 CDTI FWD	107	05/10 -		4172
MOVANO Mk II (B) VAN	2.3 CDTI FWD	110	01/13 -	4056	4057
MOVANO Mk II (B) VAN	2.3 CDTI FWD	110	01/13 -		4132
MOVANO Mk II (B) VAN	2.3 CDTI FWD	110	01/13 -		4172
MOVANO Mk II (B) VAN	2.3 CDTI FWD	120	05/14 -	4056	4057
MOVANO Mk II (B) VAN	2.3 CDTI FWD	120	05/14 -		4132
MOVANO Mk II (B) VAN	2.3 CDTI FWD	120	05/14 -		4172
MOVANO Mk II (B) VAN	2.3 CDTI FWD	125	11/16 -	4056	
NOVA	1.0	33	09/82 – 10/87	3410	
NOVA	1.2 N	33	01/85 – 10/87	3410	
NOVA	1.2 S	40	09/82 – 10/87	3410	
NOVA	1.3 i	44	09/85 – 10/87	3410	
NOVA	1.3 S	51	09/82 – 10/87	3410	
NOVA	1.4	44	10/90 – 08/92	3410	
NOVA	1.4	44	10/90 – 08/92	3623	
NOVA	1.4	60	09/90 – 08/92	3410	
NOVA	1.4	60	09/90 – 08/92	3623	
NOVA	1.4 S	55	01/90 – 02/93	3410	
NOVA	1.4 S	55	01/90 – 02/93	3623	
NOVA	1.5 D	37	09/87 – 02/93	3410	
NOVA	1.5 D	37	09/87 – 02/93	3623	
NOVA	1.5 TD	49	01/90 – 02/93	3410	
NOVA	1.5 TD	49	01/90 – 02/93	3623	
NOVA Hatchback	1.0	33	05/83 – 03/93	3410	
NOVA Hatchback	1.0	33	05/83 – 03/93	3623	
NOVA Hatchback	1.2 i	33	01/85 – 10/89	3410	
NOVA Hatchback	1.2 i CAT	33	09/89 – 03/93	3410	
NOVA Hatchback	1.2 i CAT	33	09/89 – 03/93	3623	
NOVA Hatchback	1.2 N	38	01/90 – 03/93	3410	
NOVA Hatchback	1.2 N	38	01/90 – 03/93	3623	
NOVA Hatchback	1.2 S	40	05/83 – 02/90	3410	
NOVA Hatchback	1.2 S	43	01/88 – 02/90	3410	
NOVA Hatchback	1.3 i	44	09/85 – 10/89	3410	
NOVA Hatchback	1.3 i CAT	44	09/89 – 03/93	3410	
NOVA Hatchback	1.3 i CAT	44	09/89 – 03/93	3623	
NOVA Hatchback	1.3 S	51	05/83 – 10/89	3410	
NOVA Hatchback	1.4 i	44	01/90 – 03/93	3410	
NOVA Hatchback	1.4 i	44	01/90 – 03/93	3623	
NOVA Hatchback	1.4 i S	60	09/91 – 03/93	3623	
NOVA Hatchback	1.4 S	55	01/90 – 03/93	3410	
NOVA Hatchback	1.4 S	55	01/90 – 03/93	3623	
NOVA Hatchback	1.5 D	37	09/87 – 03/93	3410	
NOVA Hatchback	1.5 D	37	09/87 – 03/93	3623	
NOVA Hatchback	1.5 TD	49	01/90 – 03/93	3410	
NOVA Hatchback	1.6	60	09/88 – 08/90	3410	
NOVA Hatchback	1.6 GSI	72	09/89 – 03/93	3623	
NOVA Hatchback	1.6 GSI	74	05/88 – 03/92	3623	
NOVA Hatchback	1.6 GSI CAT	49	01/90 – 03/93	3623	
NOVA Hatchback	1.6 GSI CAT	74	02/92 – 03/93	3623	
NOVAVAN	12	38	01/90 – 10/94	3410	
NOVAVAN	12	38	01/90 – 10/94	3623	
NOVAVAN	14	55	11/90 – 03/93	3410	
NOVAVAN	14	55	11/90 – 03/93	3623	
NOVAVAN	1.5 D	37	01/91 – 10/94	3410	
NOVAVAN	1.5 D	37	01/91 – 10/94	3623	
OMEGA (B)	2.0	85	03/94 – 09/99	3717	
OMEGA (B)	2.0	85	03/94 – 09/99	3733	
OMEGA (B)	2.0	85	03/94 – 09/99	3736	
OMEGA (B)	2.0 16V	100	03/94 – 09/99	3717	
OMEGA (B)	2.0 16V	100	03/94 – 09/99	3733	
OMEGA (B)	2.0 16V	100	03/94 – 09/99	3736	
OMEGA (B)	2.0 DTI 16V	74	01/98 – 09/00	3717	

MAKE & MODEL		KW	YEAR		
VAUXHALL					
OMEGA (B)	2.0 DTI 16V	74	01/98 – 09/00	3733	
OMEGA (B)	2.2 16V	106	01/94 – 06/03	3717	
OMEGA (B)	2.2 16V	106	01/94 – 06/03	3733	
OMEGA (B)	2.2 DTI 16V	88	08/00 – 07/03	3717	
OMEGA (B)	2.2 DTI 16V	88	08/00 – 07/03	3733	
OMEGA (B)	2.5 DTI 24V	110	09/01 – 07/03	3717	
OMEGA (B)	2.5 DTI 24V	110	09/01 – 07/03	3733	
OMEGA (B)	2.5 TD	96	04/94 – 07/01	3717	
OMEGA (B)	2.5 TD	96	04/94 – 07/01	3733	
OMEGA (B)	2.5 V6	125	03/94 – 09/00	3717	
OMEGA (B)	2.5 V6	125	03/94 – 09/00	3733	
OMEGA (B)	2.6 V6	132	08/00 – 07/03	3717	
OMEGA (B)	2.6 V6	132	08/00 – 07/03	3733	
OMEGA (B)	3.0 V6	155	04/94 – 07/00	3717	
OMEGA (B)	3.0 V6	155	04/94 – 07/00	3733	
OMEGA (B)	3.2 V6	160	02/01 – 07/03	3717	
OMEGA (B)	3.2 V6	160	02/01 – 07/03	3733	
OMEGA (B) Estate	2.0	85	03/94 – 09/99	3717	
OMEGA (B) Estate	2.0	85	03/94 – 09/99	3733	
OMEGA (B) Estate	2.0	85	03/94 – 09/99	3736	
OMEGA (B) Estate	2.0 16V	100	03/94 – 02/01	3717	
OMEGA (B) Estate	2.0 16V	100	03/94 – 02/01	3733	
OMEGA (B) Estate	2.0 16V	100	03/94 – 02/01	3736	
OMEGA (B) Estate	2.0 DTI 16V	74	01/98 – 09/00	3717	
OMEGA (B) Estate	2.0 DTI 16V	74	01/98 – 09/00	3733	
OMEGA (B) Estate	2.2 16V	106	02/94 – 06/03	3717	
OMEGA (B) Estate	2.2 16V	106	02/94 – 06/03	3733	
OMEGA (B) Estate	2.2 DTI 16V	88	08/00 – 06/03	3717	
OMEGA (B) Estate	2.2 DTI 16V	88	08/00 – 06/03	3733	
OMEGA (B) Estate	2.5 DTI 24V	110	09/01 – 06/03	3717	
OMEGA (B) Estate	2.5 DTI 24V	110	09/01 – 06/03	3733	
OMEGA (B) Estate	2.5 TD	96	04/94 – 07/01	3717	
OMEGA (B) Estate	2.5 TD	96	04/94 – 07/01	3733	
OMEGA (B) Estate	2.5 V6	125	03/94 – 09/00	3717	
OMEGA (B) Estate	2.5 V6	125	03/94 – 09/00	3733	
OMEGA (B) Estate	2.6 V6	132	08/00 – 06/03	3717	
OMEGA (B) Estate	2.6 V6	132	08/00 – 06/03	3733	
OMEGA (B) Estate	3.0 V6	155	07/94 – 07/00	3717	
OMEGA (B) Estate	3.0 V6	155	07/94 – 07/00	3733	
OMEGA (B) Estate	3.2 V6	160	02/01 – 06/03	3717	
OMEGA (B) Estate	3.2 V6	160	02/01 – 06/03	3733	
RASCAL Bus	1.0	34	07/86 – 08/93	3509	
RASCAL Pickup	1.0	34	07/86 – 08/93	3509	
SENATOR Mk II (B)	2.5 i	103	09/87 – 10/90	3717	
SENATOR Mk II (B)	2.5 i	103	09/87 – 10/90	3733	
SENATOR Mk II (B)	2.6 i	110	09/90 – 09/93	3717	
SENATOR Mk II (B)	2.6 i	110	09/90 – 09/93	3733	
SENATOR Mk II (B)	3.0	115	09/87 – 09/93	3717	
SENATOR Mk II (B)	3.0	115	09/87 – 09/93	3733	
SENATOR Mk II (B)	3.0	130	01/88 – 09/90	3717	
SENATOR Mk II (B)	3.0	130	01/88 – 09/90	3733	
SENATOR Mk II (B)	3.0	135	09/87 – 08/88	3717	
SENATOR Mk II (B)	3.0	135	09/87 – 08/88	3733	
SENATOR Mk II (B)	3.0 24V	150	09/89 – 09/93	3717	
SENATOR Mk II (B)	3.0 24V	150	09/89 – 09/93	3733	
SENATOR Mk II (B)	3.0 i CAT	130	01/88 – 09/93	3717	
SENATOR Mk II (B)	3.0 i CAT	130	01/88 – 09/93	3733	
SIGNUM	1.8	90	06/03 – 07/05		3853/1
SIGNUM	1.8	103	08/05 – 05/08	4211	3853/1
SIGNUM	1.8 (Z 18 XE)	90	06/03 – 07/05	4211	
SIGNUM	1.9 CDTI	88	04/04 – 03/08	4211	3853/1
SIGNUM	1.9 CDTI 16V	110	04/04 – 03/08	4211	3853/1
SIGNUM	1.9 Turbo	74	01/05 – 05/08		3853/1
SIGNUM	2.0 DTI	74	05/03 – 05/08	4211	3853/1
SIGNUM	2.0 i Turbo	129	03/03 – 10/08	4211	3853/1
SIGNUM	2.2 DTI	92	05/03 – 05/08	4211	3853/1
SIGNUM	2.2 i	114	05/03 – 05/08	4211	3853/1
SIGNUM	2.8 V6 Turbo	169	07/05 – 05/08	4211	3853/1
SIGNUM	2.8 V6 Turbo	184	05/07 – 10/08		3853/1
SIGNUM	3.0 CDTi	130	05/03 – 05/08	4211	3853/1
SIGNUM	3.0 V6 CDTI	135	07/05 – 06/08	4211	3853/1
SIGNUM	3.2 V6	155	05/03 – 05/08	4211	3853/1
TIGRA Mk I (F07)	1.4 16V	66	07/94 – 12/00	3623	
TIGRA Mk I (F07)	1.6 16V	78	07/94 – 12/00	3623	
TIGRA TwinTop	1.3 CDTI	51	06/04 – 08/09	3846	
TIGRA TwinTop	1.4	66	06/04 – 08/09	3846	

MAKE & MODEL		KW	YEAR		
VAUXHALL					
TIGRA TwinTop	1.8	92	06/04 – 08/09	3846	
VECTRA (B)	1.6 i	55	08/95 – 10/01	3470	
VECTRA (B)	1.6 i	55	08/95 – 10/01	3505	
VECTRA (B)	1.6 i	55	08/95 – 10/01	3615	
VECTRA (B)	1.6 i	55	08/95 – 10/01	3665	
VECTRA (B)	1.6 i 16V	74	08/95 – 10/01	3470	
VECTRA (B)	1.6 i 16V	74	08/95 – 10/01	3505	
VECTRA (B)	1.6 i 16V	74	08/95 – 10/01	3615	
VECTRA (B)	1.6 i 16V	74	08/95 – 10/01	3665	
VECTRA (B)	1.6 i 16V	74	08/95 – 10/01	3717	
VECTRA (B)	1.7 TD	60	10/95 – 11/96	3470	
VECTRA (B)	1.7 TD	60	10/95 – 11/96	3505	
VECTRA (B)	1.7 TD	60	10/95 – 11/96	3615	
VECTRA (B)	1.7 TD	60	10/95 – 11/96	3717	
VECTRA (B)	1.8 Dualfuel	92	09/00 – 03/02	3665	
VECTRA (B)	1.8 Dualfuel	92	09/00 – 03/02	3717	
VECTRA (B)	1.8 i 16V	85	10/95 – 09/00	3470	
VECTRA (B)	1.8 i 16V	85	10/95 – 09/00	3505	
VECTRA (B)	1.8 i 16V	85	10/95 – 09/00	3615	
VECTRA (B)	1.8 i 16V	85	10/95 – 09/00	3665	
VECTRA (B)	1.8 i 16V	85	10/95 – 09/00	3717	
VECTRA (B)	1.8 i 16V	92	09/00 – 03/02	3665	
VECTRA (B)	1.8 i 16V	92	09/00 – 03/02	3717	
VECTRA (B)	2.0 DI 16V	60	08/95 – 10/01	3470	
VECTRA (B)	2.0 DI 16V	60	08/95 – 10/01	3505	
VECTRA (B)	2.0 DI 16V	60	08/95 – 10/01	3615	
VECTRA (B)	2.0 DI 16V	60	08/95 – 10/01	3665	
VECTRA (B)	2.0 DI 16V	60	08/95 – 10/01	3717	
VECTRA (B)	2.0 DTI 16V	74	08/95 – 10/01	3665	
VECTRA (B)	2.0 DTI 16V	74	08/95 – 10/01	3717	
VECTRA (B)	2.0 i 16V	100	10/95 – 01/01	3665	
VECTRA (B)	2.0 i 16V	100	10/95 – 01/01	3717	
VECTRA (B)	2.2 DTI 16V	92	08/95 – 10/01	3665	
VECTRA (B)	2.2 DTI 16V	92	08/95 – 10/01	3717	
VECTRA (B)	2.2 i 16V	108	08/95 – 10/01	3665	
VECTRA (B)	2.2 i 16V	108	08/95 – 10/01	3717	
VECTRA (B)	2.5 i GSi	143	03/98 – 07/00	3665	
VECTRA (B)	2.5 i GSi	143	03/98 – 07/00	3717	
VECTRA (B)	2.5 i V6	125	09/95 – 08/00	3665	
VECTRA (B)	2.5 i V6	125	09/95 – 08/00	3717	
VECTRA (B)	2.6 i V6	125	09/00 – 03/02	3665	
VECTRA (B)	2.6 i V6	125	09/00 – 03/02	3717	
VECTRA (B) Estate	1.8 Dualfuel	92	09/00 – 03/02	3665	
VECTRA (B) Estate	1.8 Dualfuel	92	09/00 – 03/02	3717	
VECTRA (B) Estate	1.8 i 16V	85	11/96 – 09/00	3470	
VECTRA (B) Estate	1.8 i 16V	85	11/96 – 09/00	3505	
VECTRA (B) Estate	1.8 i 16V	85	11/96 – 09/00	3615	
VECTRA (B) Estate	1.8 i 16V	85	11/96 – 09/00	3665	
VECTRA (B) Estate	1.8 i 16V	85	11/96 – 09/00	3717	
VECTRA (B) Estate	1.8 i 16V	92	09/00 – 03/02	3665	
VECTRA (B) Estate	1.8 i 16V	92	09/00 – 03/02	3717	
VECTRA (B) Estate	2.0 DI 16V	60	08/95 – 10/01	3470	
VECTRA (B) Estate	2.0 DI 16V	60	08/95 – 10/01	3505	
VECTRA (B) Estate	2.0 DI 16V	60	08/95 – 10/01	3615	
VECTRA (B) Estate	2.0 DI 16V	60	08/95 – 10/01	3665	
VECTRA (B) Estate	2.0 DI 16V	60	08/95 – 10/01	3717	
VECTRA (B) Estate	2.0 DTI 16V	74	08/95 – 10/01	3470	
VECTRA (B) Estate	2.0 DTI 16V	74	08/95 – 10/01	3505	
VECTRA (B) Estate	2.0 DTI 16V	74	08/95 – 10/01	3615	
VECTRA (B) Estate	2.0 DTI 16V	74	08/95 – 10/01	3665	
VECTRA (B) Estate	2.0 DTI 16V	74	08/95 – 10/01	3717	
VECTRA (B) Estate	2.0 i 16V	100	10/95 – 01/01	3665	
VECTRA (B) Estate	2.0 i 16V	100	10/95 – 01/01	3717	
VECTRA (B) Estate	2.2 DTI 16V	92	08/95 – 10/01	3665	
VECTRA (B) Estate	2.2 DTI 16V	92	08/95 – 10/01	3717	
VECTRA (B) Estate	2.2 i 16V	108	08/95 – 10/01	3665	
VECTRA (B) Estate	2.2 i 16V	108	08/95 – 10/01	3717	
VECTRA (B) Estate	2.5 i GSi	143	05/98 – 09/99	3665	
VECTRA (B) Estate	2.5 i GSi	143	05/98 – 09/99	3717	
VECTRA (B) Estate	2.5 i V6	125	11/96 – 08/00	3665	
VECTRA (B) Estate	2.5 i V6	125	11/96 – 08/00	3717	
VECTRA (B) Estate	2.6 i V6	125	09/00 – 03/02	3665	
VECTRA (B) Estate	2.6 i V6	125	09/00 – 03/02	3717	
VECTRA (B) Hatchback	1.6 i	55	08/95 – 10/01	3470	
VECTRA (B) Hatchback	1.6 i	55	08/95 – 10/01	3505	
VECTRA (B) Hatchback	1.6 i	55	08/95 – 10/01	3615	

MAKE & MODEL		KW	YEAR		
VAUXHALL					
VECTRA (B) Hatchback	1.6 i	55	08/95 – 10/01	3665	
VECTRA (B) Hatchback	1.6 i 16V	74	08/95 – 10/01	3470	
VECTRA (B) Hatchback	1.6 i 16V	74	08/95 – 10/01	3505	
VECTRA (B) Hatchback	1.6 i 16V	74	08/95 – 10/01	3615	
VECTRA (B) Hatchback	1.6 i 16V	74	08/95 – 10/01	3665	
VECTRA (B) Hatchback	1.6 i 16V	74	08/95 – 10/01	3717	
VECTRA (B) Hatchback	1.7 TD	60	10/95 – 11/96	3470	
VECTRA (B) Hatchback	1.7 TD	60	10/95 – 11/96	3505	
VECTRA (B) Hatchback	1.7 TD	60	10/95 – 11/96	3615	
VECTRA (B) Hatchback	1.7 TD	60	10/95 – 11/96	3717	
VECTRA (B) Hatchback	1.8 Dualfuel	92	09/00 – 07/03	3665	
VECTRA (B) Hatchback	1.8 Dualfuel	92	09/00 – 07/03	3717	
VECTRA (B) Hatchback	1.8 i 16V	85	10/95 – 09/00	3470	
VECTRA (B) Hatchback	1.8 i 16V	85	10/95 – 09/00	3505	
VECTRA (B) Hatchback	1.8 i 16V	85	10/95 – 09/00	3615	
VECTRA (B) Hatchback	1.8 i 16V	85	10/95 – 09/00	3665	
VECTRA (B) Hatchback	1.8 i 16V	85	10/95 – 09/00	3717	
VECTRA (B) Hatchback	1.8 i 16V	92	09/00 – 07/03	3665	
VECTRA (B) Hatchback	1.8 i 16V	92	09/00 – 07/03	3717	
VECTRA (B) Hatchback	2.0 Di 16V	60	08/95 – 10/01	3470	
VECTRA (B) Hatchback	2.0 Di 16V	60	08/95 – 10/01	3505	
VECTRA (B) Hatchback	2.0 Di 16V	60	08/95 – 10/01	3615	
VECTRA (B) Hatchback	2.0 Di 16V	60	08/95 – 10/01	3665	
VECTRA (B) Hatchback	2.0 Di 16V	60	08/95 – 10/01	3717	
VECTRA (B) Hatchback	2.0 DTi 16V	74	06/97 – 10/01	3470	
VECTRA (B) Hatchback	2.0 DTi 16V	74	06/97 – 10/01	3505	
VECTRA (B) Hatchback	2.0 DTi 16V	74	06/97 – 10/01	3615	
VECTRA (B) Hatchback	2.0 DTi 16V	74	06/97 – 10/01	3665	
VECTRA (B) Hatchback	2.0 DTi 16V	74	06/97 – 10/01	3717	
VECTRA (B) Hatchback	2.0 i 16V	100	10/95 – 01/01	3665	
VECTRA (B) Hatchback	2.0 i 16V	100	10/95 – 01/01	3717	
VECTRA (B) Hatchback	2.2 DTI 16V	92	08/95 – 10/01	3665	
VECTRA (B) Hatchback	2.2 DTI 16V	92	08/95 – 10/01	3717	
VECTRA (B) Hatchback	2.2 i 16V	108	09/00 – 07/03	3665	
VECTRA (B) Hatchback	2.2 i 16V	108	09/00 – 07/03	3717	
VECTRA (B) Hatchback	2.5 i GSi	143	03/98 – 07/00	3665	
VECTRA (B) Hatchback	2.5 i GSi	143	03/98 – 07/00	3717	
VECTRA (B) Hatchback	2.5 i V6	125	09/95 – 08/00	3665	
VECTRA (B) Hatchback	2.5 i V6	125	09/95 – 08/00	3717	
VECTRA (B) Hatchback	2.6 i V6	125	09/00 – 07/03	3665	
VECTRA (B) Hatchback	2.6 i V6	125	09/00 – 07/03	3717	
VECTRA Mk II (C)	1.6 (Z 16 XEP)	77	01/06 – 07/08	4211	
VECTRA Mk II (C)	1.6 16V (Z 16 XE)	74	06/04 – 07/08	4211	
VECTRA Mk II (C)	1.8	103	01/06 – 07/08		3853/1
VECTRA Mk II (C)	1.8 (Z 18 XEL)	81	04/02 – 07/08	4211	
VECTRA Mk II (C)	1.8 (Z 18 XER)	103	01/06 – 07/08	4211	
VECTRA Mk II (C)	1.8 16V	90	04/02 – 07/08	4211	3853/1
VECTRA Mk II (C)	1.8 16V (Z 18 XE)	90	04/02 – 07/08	4211	
VECTRA Mk II (C)	1.8 16V Dualfuel	90	04/02 – 07/08	4211	3853/1
VECTRA Mk II (C)	1.9 CDTI	88	04/02 – 09/08	4211	3853/1
VECTRA MK II (C)	1.9 CDTI (Z 19 DTL)	74	10/05 – 07/08	4211	
VECTRA MK II (C)	1.9 CDTI 16V	110	04/04 – 08/08	4211	3853/1
VECTRA MK II (C)	1.9 CDTI 16V (Z 19 DTH)	110	04/04 – 08/08	4211	
VECTRA MK II (C)	2.0 16V Turbo	129	01/00 – 10/08	4211	3853/1
VECTRA MK II (C)	2.0 16V Turbo (Z 20 NET)	129	01/00 – 10/08	4211	
VECTRA MK II (C)	2.0 DTI 16V	74	04/02 – 10/08	4211	3853/1
VECTRA MK II (C)	2.0 DTI 16V (Y 20 DTH)	74	04/02 – 10/08	4211	
VECTRA MK II (C)	2.2 16V	108	01/02 – 10/08	4211	3853/1
VECTRA MK II (C)	2.2 direct	114	01/02 – 10/08	4211	3853/1
VECTRA MK II (C)	2.2 direct (Z 22 YH)	114	01/02 – 10/08	4211	
VECTRA MK II (C)	2.2 DTI 16V	92	04/02 – 10/08	4211	3853/1
VECTRA MK II (C)	2.2 DTI 16V (Y 22 DTR)	92	04/02 – 10/08	4211	
VECTRA MK II (C)	3.0 CDTi	135	08/05 – 07/08		3853/1
VECTRA MK II (C)	3.0 V6 CDTI	130	06/03 – 08/05		3853/1
VECTRA MK II (C)	3.2 V6	155	06/03 – 07/08		3853/1
VECTRA Mk II (C) Estate	1.8	103	01/06 – 07/08		3853/1
VECTRA Mk II (C) Estate	1.8 16V	90	10/03 – 08/05		3853/1
VECTRA Mk II (C) Estate	1.9 CDTI	88	04/04 – 07/08		3853/1
VECTRA Mk II (C) Estate	1.9 CDTI 16V	110	04/04 – 07/08		3853/1
VECTRA Mk II (C) Estate	2.0 16V Turbo	129	10/03 – 07/08		3853/1
VECTRA Mk II (C) Estate	2.0 DTI 16V	74	10/03 – 07/08		3853/1
VECTRA Mk II (C) Estate	2.2 direct	114	10/03 – 07/08		3853/1
VECTRA Mk II (C) Estate	2.2 DTI 16V	92	10/03 – 07/08		3853/1
VECTRA Mk II (C) Estate	2.8 V6 Turbo	169	08/05 – 07/08		3853/1
VECTRA Mk II (C) Estate	2.8 V6 Turbo	188	08/06 – 07/08		3853/1
VECTRA Mk II (C) Estate	2.8 V6 Turbo	206	10/06 – 07/08		3853/1

MAKE & MODEL   		KW	YEAR		
VAUXHALL					
VECTRA Mk II (C) Estate	3.0 CDTi	135	08/05 – 07/08		3853/1
VECTRA Mk II (C) Estate	3.0 V6 CDTI	130	10/03 – 08/05		3853/1
VECTRA Mk II (C) Estate	3.2 V6	155	10/03 – 08/05		3853/1
VECTRA Mk II (C) GTS	1.6 (Z 16 XEP)	77	01/06 – 07/08	4211	
VECTRA Mk II (C) GTS	1.6 16V (Z 16 XE)	74	06/04 – 07/08	4211	
VECTRA Mk II (C) GTS	1.8	103	01/06 – 07/08	4211	3853/1
VECTRA Mk II (C) GTS	1.8 16V	90	08/02 – 07/08	4211	3853/1
VECTRA Mk II (C) GTS	1.8 16V Dualfuel	90	08/02 – 07/08	4211	3853/1
VECTRA Mk II (C) GTS	1.9 CDTI	88	08/02 – 07/08	4211	3853/1
VECTRA Mk II (C) GTS	1.9 CDTI (Z 19 DTL)	74	10/05 – 07/08	4211	
VECTRA Mk II (C) GTS	1.9 CDTI 16V	110	04/04 – 07/08	4211	3853/1
VECTRA Mk II (C) GTS	2.0 16V Turbo	129	03/03 – 07/08	4211	3853/1
VECTRA Mk II (C) GTS	2.0 DTI 16V	74	08/02 – 07/08	4211	3853/1
VECTRA Mk II (C) GTS	2.2 16V	108	08/02 – 07/08	4211	3853/1
VECTRA Mk II (C) GTS	2.2 direct	114	10/03 – 08/05	4211	3853/1
VECTRA Mk II (C) GTS	2.2 DTI 16V	92	08/02 – 07/08	4211	3853/1
VECTRA Mk II (C) GTS	2.8 V6 Turbo	169	08/05 – 07/08		3853/1
VECTRA Mk II (C) GTS	2.8 V6 Turbo	184	08/06 – 07/08		3853/1
VECTRA Mk II (C) GTS	2.8 V6 Turbo	188	08/05 – 07/08		3853/1
VECTRA Mk II (C) GTS	2.8 V6 Turbo	206	08/06 – 07/08		3853/1
VECTRA Mk II (C) GTS	3.0 CDTi	135	08/05 – 07/08		3853/1
VECTRA Mk II (C) GTS	3.0 V6 CDTI	130	06/03 – 08/05		3853/1
VECTRA Mk II (C) GTS	3.2 V6	155	08/02 – 07/08		3853/1
VIVARO Box	1.6 CDTi	66	05/14 -	4227	3795/1
VIVARO Box	1.6 CDTi	70	08/16 -	4227	3795/1
VIVARO Box	1.6 CDTi	85	05/14 -	4227	3795/1
VIVARO Box	1.6 CDTi	88	05/14 -	4227	3795/1
VIVARO Box	1.6 CDTi	92	08/16 -	4227	3795/1
VIVARO Box	1.6 CDTi	103	05/14 -	4227	3795/1
VIVARO Box	1.6 CDTi	107	08/16 -	4227	3795/1
VIVARO Box (F7)	1.9 DI	59	08/01 – 12/06	3848	3795/1
VIVARO Box (F7)	1.9 DTI	74	08/01 – 12/06	3848	3795/1
VIVARO Box (F7)	2.0 16V	88	08/01 – 12/06	3848	3795/1
VIVARO Box (F7)	2.0 CDTI	66	01/06 – 07/14	3848	3795/1
VIVARO Box (F7)	2.0 CDTI	84	08/06 – 07/14	3848	3795/1
VIVARO Box (F7)	2.0 ECOTEC	86	08/06 – 07/14	3848	3795/1
VIVARO Box (F7)	2.5 CDTI	107	08/06 – 07/14	3848	3795/1
VIVARO Box (F7)	2.5 DTI	99	07/03 – 07/14	3848	3795/1
VIVARO Combi	1.6 CDTi	66	05/14 -	4227	3795/1
VIVARO Combi	1.6 CDTi	70	08/16 -	4227	3795/1
VIVARO Combi	1.6 CDTi	85	05/14 -	4227	3795/1
VIVARO Combi	1.6 CDTi	88	05/14 -	4227	3795/1
VIVARO Combi	1.6 CDTi	92	08/16 -	4227	3795/1
VIVARO Combi	1.6 CDTi	103	06/14 -	4227	3795/1
VIVARO Combi	1.6 CDTi	107	08/16 -	4227	3795/1
VIVARO Combi (J7)	1.9 DI	59	08/01 – 12/06	3848	3795/1
VIVARO Combi (J7)	1.9 DTI	74	08/01 – 12/06	3848	3795/1
VIVARO Combi (J7)	2.0 16V	88	08/01 – 12/06	3848	3795/1
VIVARO Combi (J7)	2.0 CDTI	66	01/06 – 07/14	3848	3795/1
VIVARO Combi (J7)	2.0 CDTI	84	08/06 – 07/14	3848	3795/1
VIVARO Combi (J7)	2.0 ECOTEC	86	08/06 – 07/14	3848	3795/1
VIVARO Combi (J7)	2.5 CDTI	107	01/06 – 07/14	3848	3795/1
VIVARO Combi (J7)	2.5 DTI	99	07/03 – 07/14	3848	3795/1
VIVARO Platform/Chassis	1.6 CDTI	107	08/16 -	4227	3795/1
VIVARO Platform/Chassis	1.6 CDTi	85	05/14 -	4227	3795/1
VIVARO Platform/Chassis	1.6 CDTi	88	05/14 -	4227	3795/1
VIVARO Platform/Chassis	1.6 CDTi	92	08/16 -	4227	3795/1
VIVARO Platform/Chassis	1.6 CDTi	103	05/14 -	4227	3795/1
VIVARO Platform/Chassis (E7)	1.9 DI	59	04/03 – 07/14	3848	3795/1
VIVARO Platform/Chassis (E7)	2.0 16V	88	04/03 – 07/14	3848	3795/1
VIVARO Platform/Chassis (E7)	2.0 CDTI	66	01/06 – 07/14	3848	3795/1
VIVARO Platform/Chassis (E7)	2.0 CDTI	84	08/06 – 07/14	3848	3795/1
VIVARO Platform/Chassis (E7)	2.0 ECOTEC	86	08/06 – 07/14	3848	3795/1
VIVARO Platform/Chassis (E7)	2.5 CDTI	99	04/03 – 07/06	3848	3795/1
VIVARO Platform/Chassis (E7)	2.5 CDTI	107	08/06 – 07/14	3848	3795/1
ZAFIRA Mk I (A) (F75)	1.6 16V	74	04/99 – 08/05	4042	4040
ZAFIRA Mk I (A) (F75)	1.6 CNG	71	09/01 – 06/05	4042	4040
ZAFIRA Mk I (A) (F75)	1.6 Dualfuel	74	11/98 – 08/05	4042	4040
ZAFIRA Mk I (A) (F75)	1.8 16V	85	05/99 – 08/00	4042	4040
ZAFIRA Mk I (A) (F75)	1.8 16V	92	09/00 – 08/05	4042	4040
ZAFIRA Mk I (A) (F75)	1.8 Dualfuel	92	09/00 – 08/05	4042	4040
ZAFIRA Mk I (A) (F75)	2.0	147	06/02 – 06/05		4040
ZAFIRA Mk I (A) (F75)	2.0 DI 16V	60	10/99 – 08/05	4042	4040
ZAFIRA Mk I (A) (F75)	2.0 DTI 16V	74	04/99 – 08/05	4042	4040
ZAFIRA Mk I (A) (F75)	2.0 GSI Turbo	141	09/01 – 06/05		4040
ZAFIRA Mk I (A) (F75)	2.2 16V	108	11/98 – 08/04	4042	4040

MAKE & MODEL		KW	YEAR		
VAUXHALL					
ZAFIRA Mk I (A) (F75)	2.2 D	92	06/01 – 06/05	4042	4040
ZAFIRA Mk II (B) (M75)	1.6	77	07/05 – 11/14	4042	
ZAFIRA Mk II (B) (M75)	1.6	85	12/07 – 11/14	4042	
ZAFIRA Mk II (B) (M75)	1.6 CNG	69	07/05 – 11/14	4042	
ZAFIRA Mk II (B) (M75)	1.6 CNG Turbo	110	02/09 – 11/14	4042	
ZAFIRA Mk II (B) (M75)	1.7 CDTI	81	04/09 – 11/14	4042	
ZAFIRA Mk II (B) (M75)	1.7 CDTI	92	01/08 – 11/14	4042	
ZAFIRA Mk II (B) (M75)	1.8	88	04/13 – 11/14	4042	
ZAFIRA Mk II (B) (M75)	1.8	103	04/05 – 11/14	4042	
ZAFIRA Mk II (B) (M75)	1.9 CDTI	74	07/05 – 11/14	4042	
ZAFIRA Mk II (B) (M75)	1.9 CDTI	88	07/05 – 11/14	4042	
ZAFIRA Mk II (B) (M75)	1.9 CDTI	110	07/05 – 11/14	4042	
ZAFIRA Mk II (B) (M75)	2.0	147	07/05 – 11/14	4042	
ZAFIRA Mk II (B) (M75)	2.2	110	07/05 – 11/14	4042	
ZAFIRA Mk III (P12)	1.4	88	10/11 -	4014	
ZAFIRA Mk III (P12)	1.4	88	10/11 -	4008	
ZAFIRA Mk III (P12)	1.4	88	10/11 -	4149	
ZAFIRA Mk III (P12)	1.4	103	10/11 -	4014	
ZAFIRA Mk III (P12)	1.4	103	10/11 -	4008	
ZAFIRA Mk III (P12)	1.4	103	10/11 -	4149	
ZAFIRA Mk III (P12)	1.4 LPG	103	10/11 -	4014	
ZAFIRA Mk III (P12)	1.4 LPG	103	10/11 -	4008	
ZAFIRA Mk III (P12)	1.4 LPG	103	10/11 -	4149	
ZAFIRA Mk III (P12)	1.6 CDTi	100	03/13 -	4014	
ZAFIRA Mk III (P12)	1.6 CDTi	100	03/13 -	4008	
ZAFIRA Mk III (P12)	1.6 CDTi	100	03/13 -	4149	
ZAFIRA Mk III (P12)	1.6 CNG	110	10/11 -	4014	
ZAFIRA Mk III (P12)	1.6 CNG	110	10/11 -	4008	
ZAFIRA Mk III (P12)	1.6 CNG	110	10/11 -	4149	
ZAFIRA Mk III (P12)	1.6 SIDI	147	07/13 -	4014	
ZAFIRA Mk III (P12)	1.6 SIDI	147	07/13 -	4008	
ZAFIRA Mk III (P12)	1.6 SIDI	147	07/13 -	4149	
ZAFIRA Mk III (P12)	1.6 Turbo	125	12/12 -	4014	
ZAFIRA Mk III (P12)	1.6 Turbo	125	12/12 -	4008	
ZAFIRA Mk III (P12)	1.6 Turbo	125	12/12 -	4149	
ZAFIRA Mk III (P12)	1.8	85	10/11 -	4014	
ZAFIRA Mk III (P12)	1.8	85	10/11 -	4008	
ZAFIRA Mk III (P12)	1.8	85	10/11 -	4149	
ZAFIRA Mk III (P12)	1.8	88	10/11 -	4014	
ZAFIRA Mk III (P12)	1.8	88	10/11 -	4008	
ZAFIRA Mk III (P12)	1.8	88	10/11 -	4149	
ZAFIRA Mk III (P12)	1.8	103	10/11 -	4014	
ZAFIRA Mk III (P12)	1.8	103	10/11 -	4008	
ZAFIRA Mk III (P12)	1.8	103	10/11 -	4149	
ZAFIRA Mk III (P12)	2.0 BiTurbo CDTI	143	01/13 -	4014	
ZAFIRA Mk III (P12)	2.0 BiTurbo CDTI	143	01/13 -	4008	
ZAFIRA Mk III (P12)	2.0 BiTurbo CDTI	143	01/13 -	4149	
ZAFIRA Mk III (P12)	2.0 CDTi	81	10/11 -	4014	
ZAFIRA Mk III (P12)	2.0 CDTi	81	10/11 -	4008	
ZAFIRA Mk III (P12)	2.0 CDTi	81	10/11 -	4149	
ZAFIRA Mk III (P12)	2.0 CDTi	96	10/11 -	4014	
ZAFIRA Mk III (P12)	2.0 CDTi	96	10/11 -	4008	
ZAFIRA Mk III (P12)	2.0 CDTi	96	10/11 -	4149	
ZAFIRA Mk III (P12)	2.0 CDTi	118	10/11 -	4014	
ZAFIRA Mk III (P12)	2.0 CDTi	118	10/11 -	4008	
ZAFIRA Mk III (P12)	2.0 CDTi	118	10/11 -	4149	
ZAFIRA Mk III (P12)	2.0 CDTi	121	10/11 -	4014	
ZAFIRA Mk III (P12)	2.0 CDTi	121	10/11 -	4008	
ZAFIRA Mk III (P12)	2.0 CDTi	121	10/11 -	4149	
ZAFIRA Mk III (P12)	2.0 CDTi	125	01/15 -	4014	
ZAFIRA Mk III (P12)	2.0 CDTi	125	01/15 -	4008	
VOLKSWAGEN					
(FAW) Golf IV (1J1) 44409	BAF	92	07/2003 - 07/2009	3782/1	
(SVW) Gol 44348	BHJ, BRZ	64	12/2003 - 01/2007	3561	
(SVW) Polo II Hatchback -621 44287	CLP	63	12/2010 - 12/2014	3782/1	
(SVW) Polo II Hatchback -621 44348	BMH, CLS, CPJ	77	12/2010 - 12/2014	3782/1	
Arteon (3H7) 2.0 TDI	CRGA	130	11/2017 -	4228/1	
Arteon (3H7) 2.0 TDI	DBGA, DFGA, DSRA, DSRB, DTSA, DTSB	110	04/2017 - 11/2019	4228/1	
Arteon (3H7) 44317 TSi	DADA, DPCA	110	11/2017 - 07/2019	4228/1	
Arteon Shooting Brake (3H9) 2.0 TDI	DSRA, DSRB, DTSA, DTSB	110	09/2020 -	4228/1	
Arteon Shooting Brake (3H9) 44317 TSi	DPCA	110	09/2020 -	4228/1	
Bora I (1J2, 9M2) 44348	AEH (10.98-.), AKL (10.98-.), APF	74	10/1998 - 05/2005	3782/1	
Bora I (1J2, 9M2) 44348	AVU, BFQ	75	08/2000 - 05/2005	3782/1	
Bora I (1J2, 9M2) 44409 4motion	AGN	92	02/1999 - 05/2005	3782/1	
Bora I (1J2, 9M2) 44440 TDI	AHF (10.98-.), ASV	81	10/1998 - 06/2001	3782/1	

MAKE & MODEL   		KW	YEAR		
VOLKSWAGEN					
Bora I (1J2, 9M2) 44440 TDI	AJM, AUY	85	12/1998 - 01/2002	3782/1	
Bora I (1J2, 9M2) 44440 TDI 4motion	AJM, AUY	85	02/1999 - 06/2001	3782/1	
Bora I Variant (1J6) 44348	AEH (05.99-.), AKL (05.99-.), APF (05.99-09.00)	74	05/1999 - 05/2005	3782/1	
Bora I Variant (1J6) 44348	AVU, BFQ	75	08/2000 - 05/2005	3782/1	
Bora I Variant (1J6) 44409 4motion	AGN (05.99-.)	92	05/1999 - 05/2005	3782/1	
Bora I Variant (1J6) 44440 TDI	AHF (05.99-.), ASV (05.00-.)	81	05/1999 - 06/2001	3782/1	
Bora I Variant (1J6) 44440 TDI	AJM, AUY	85	05/1999 - 06/2001	3782/1	
Bora I Variant (1J6) 44440 TDI 4motion	AJM (05.99-05.00), AUY (05.00-.)	85	05/1999 - 06/2001	3782/1	
Caddy IV Alltrack SW (SAB) 1.0 TSI	CHZG	75	11/2015 -	4228/1	4336
Caddy IV Alltrack SW (SAB) 2.0 TDI	CUUB, DFSB	110	05/2015 -	4228/1	4336
Caddy IV Alltrack SW (SAB) 2.0 TDI	CUUD, DFSD	75	05/2015 -	4228/1	4336
Caddy IV Alltrack SW (SAB) 2.0 TDI	CUUF, DFSF	55	05/2015 -	4228/1	4336
Caddy IV Alltrack SW (SAB) 2.0 TDI 4motion	CUUE, DFSE	90	05/2015 -	4228/1	4336
Caddy IV Alltrack SW (SAB) 2.0 TDI 4motion	DFSB	110	11/2015 -	4228/1	4336
Caddy IV Alltrack SW (SAB) 44228 TSI	CYVC	62	06/2015 -	4228/1	4336
Caddy IV Alltrack SW (SAB) 44287 TGI CNG	CPWA	81	06/2015 -	4228/1	4336
Caddy IV Alltrack SW (SAB) 44287 TSI	CZCB	92	05/2015 -	4228/1	4336
Caddy IV SW (SAB, SAJ) 1.0 TSI	CHZG, DKRE	75	11/2015 -	4228/1	4336
Caddy IV SW (SAB, SAJ) 2.0 TDI	CFHC, CLCB	103	05/2015 -	4228/1	4336
Caddy IV SW (SAB, SAJ) 2.0 TDI	CLCA	81	09/2015 -	4228/1	4336
Caddy IV SW (SAB, SAJ) 2.0 TDI	CUUB, DFSB	110	05/2015 - 11/2015	4228/1	4336
Caddy IV SW (SAB, SAJ) 2.0 TDI	CUUD, DFSD	75	05/2015 - 11/2015	4228/1	4336
Caddy IV SW (SAB, SAJ) 2.0 TDI	CUUF, DFSF	55	05/2015 - 11/2015	4228/1	4336
Caddy IV SW (SAB, SAJ) 2.0 TDI 4motion	CFHC	103	05/2015 -	4228/1	4336
Caddy IV SW (SAB, SAJ) 2.0 TDI 4motion	CFHF, CLCA	81	05/2015 - 05/2016	4228/1	4336
Caddy IV SW (SAB, SAJ) 2.0 TDI 4motion	CUUE, DFSE	90	05/2015 - 11/2015	4228/1	4336
Caddy IV SW (SAB, SAJ) 2.0 TDI 4motion	DFSB	110	11/2015 -	4228/1	4336
Caddy IV SW (SAB, SAJ) 44228 TSI	CYVC	62	06/2015 -	4228/1	4336
Caddy IV SW (SAB, SAJ) 44287 TGI CNG	CPWA	81	06/2015 -	4228/1	4336
Caddy IV SW (SAB, SAJ) 44287 TSI	CZCB	92	05/2015 -	4228/1	4336
Caddy IV SW (SAB, SAJ) 44348 TDI	CAYD	75	05/2015 -	4228/1	4336
Caddy IV SW (SAB, SAJ) 44348 TDI	CAYE	55	05/2015 - 11/2017	4228/1	4336
CC (358, B7) 1.4 TSI	CZDA	110	05/2015 - 12/2016		4390
CC (358, B7) 1.4 TSI MultiFuel	CKMA	118	11/2011 - 12/2016		4390
CC (358, B7) 1.8 TSI	CDAA	118	11/2011 - 12/2016		4390
CC (358, B7) 1.8 TSI	CDAB	112	11/2011 - 12/2016		4390
CC (358, B7) 2.0 TDI	CFFB	103	11/2011 - 12/2016		4390
CC (358, B7) 2.0 TDI	CFGB, CLLA	125	11/2011 - 12/2016		4390
CC (358, B7) 2.0 TDI	CFGC	130	12/2012 - 12/2016		4390
CC (358, B7) 2.0 TDI	CUVC	110	05/2015 - 12/2016		4390
CC (358, B7) 2.0 TDI	CUWA	135	05/2015 - 12/2016		4390
CC (358, B7) 2.0 TDI 4motion	CFGB	125	11/2011 - 01/2013		4390
CC (358, B7) 2.0 TDI 4motion	CFGC	130	12/2012 - 12/2016		4390
CC (358, B7) 2.0 TSI	CBFA, CCTA	147	11/2011 - 12/2016		4390
CC (358, B7) 2.0 TSI	CCZB	155	11/2011 - 12/2016		4390
CC (358, B7) 3.6 FSI	BLV	206	11/2011 - 12/2016		4390
CC (358, B7) 3.6 FSI 4motion	BWS	220	11/2011 - 12/2016		4390
CC (358, B7) 3.6 FSI 4motion	CNNA	206	11/2011 - 12/2016		4390
Fox II (5Z1, 5Z3) 1.0	AQZ/ BJE/ BNX	53	10/2005 - 12/2011	3782/1	
Fox II (5Z1, 5Z3) 1.0	CCNA	54	04/2008 - 12/2011	3782/1	
Fox II (5Z1, 5Z3) 1.0 City, Plus Total Flex	CCNA	54	04/2008 - 12/2011	3782/1	
Fox II (5Z1, 5Z3) 1.0 Total Flex	AQZ, BJE	53	08/2003 -	3782/1	
Fox II (5Z1, 5Z3) 44228	BMD (04.05-07.11), CHFB (06.09-07.11)	40	04/2005 - 07/2011	3782/1	
Fox II (5Z1, 5Z3) 44228	CHFA	44	09/2010 - 12/2011	3782/1	
Fox II (5Z1, 5Z3) 44287	BKR	55	04/2005 - 12/2009	3782/1	
Fox II (5Z1, 5Z3) 44287 TDI	BNM	51	04/2005 - 12/2009	3782/1	
Fox II (5Z1, 5Z3) 44348	-	69	10/2005 - 12/2011	3782/1	
Fox II (5Z1, 5Z3) 44348	BAH, BJA, BLH, BPA, CFZA	74	10/2003 - 08/2014	3782/1	
Fox II (5Z1, 5Z3) 44348 Total Flex	BJA, BPA, CCRA	74	10/2003 - 08/2014	3782/1	
Fox II (5Z1, 5Z3) 44348 Total Flex	BPA	73	09/2007 - 12/2009	3782/1	
Fox II (5Z1, 5Z3) 44440 D	ASY	47	12/2007 - 12/2011	3782/1	
Golf II (19E, 1G1) 1.0	GN	33	11/1983 - 08/1985	3441/1	
Golf II (19E, 1G1) 1.0	HZ (08.85-10.91)	37	08/1985 - 10/1991	3441/1	
Golf II (19E, 1G1) 44256	GT (08.83-.)	43	08/1983 - 10/1986	3441/1	
Golf II (19E, 1G1) 44256	HK (08.83-07.85), MH	40	08/1983 - 06/1987	3441/1	
Golf II (19E, 1G1) 44256	NU (08.85-.)	37	08/1985 - 12/1987	3441/1	
Golf II (19E, 1G1) 44256 Cat	2G (08.89-07.92), MH (06.86-12.88), NZ (02.87-07.9	40	06/1986 - 12/1992	3441/1	
Golf II (19E, 1G1) 44348 D	JP, ME (05.88-10.91)	40	08/1983 - 10/1991	3441/1	
Golf II (19E, 1G1) 44348 D	ME	37	08/1983 - 10/1991	3441/1	
Golf IV (1J1) 44287 16V	AHW (08.97-.), AKQ (08.97-.), APE, AXP, BCA	55	10/1997 - 05/2004	3782/1	
Golf IV (1J1) 44348	AEH (01.98-.), AKL (08.97-.), APF	74	08/1997 - 05/2004	3782/1	
Golf IV (1J1) 44348	BAH	74	02/2001 - 03/2007	3782/1	
Golf IV (1J1) 44409	AGN	92	08/1997 - 06/2005	3782/1	
Golf IV (1J1) 44409 4motion	AGN	92	05/1998 - 06/2005	3782/1	
Golf IV (1J1) 44440 SDI	AGP (08.97-.), AQM	50	08/1997 - 06/2005	3782/1	
Golf IV (1J1) 44440 TDI	AGR, ALH	66	10/1997 - 05/2004	3782/1	

MAKE & MODEL		KW	YEAR		
VOLKSWAGEN					
Golf IV (1J1) 44440 TDI	AHF (08.97-.), ASV	81	08/1997 - 05/2004	3782/1	
Golf IV (1J1) 44440 TDI 4motion	AGR	66	07/1998 - 04/2002	3782/1	
Golf IV Variant (1J5) 44287 16V	AHW (05.99-.), AKQ (05.99-.), APE, AXP, BCA	55	05/1999 - 06/2006	3782/1	
Golf IV Variant (1J5) 44348	AEH (05.99-.), AKL (05.99-.), APF	74	05/1999 - 04/2002	3782/1	
Golf IV Variant (1J5) 44409 4motion	AGN	92	05/1999 - 06/2006	3782/1	
Golf IV Variant (1J5) 44440 SDI	AGP (05.99-.), AQM	50	05/1999 - 06/2006	3782/1	
Golf IV Variant (1J5) 44440 TDI	AGR, ALH (05.99-.)	66	05/1999 - 05/2006	3782/1	
Golf IV Variant (1J5) 44440 TDI	AHF (05.99-.), ASV	81	05/1999 - 06/2001	3782/1	
Golf IV Variant (1J5) 44440 TDI 4motion	AGR	66	05/1999 - 04/2002	3782/1	
Golf VII (5G1, BQ1, BE1, BE2) 2.0	CBPA	86	07/2013 -	4228/1	
Golf VII (5G1, BQ1, BE1, BE2) 2.0 GTD	CRGA	130	11/2016 -	4228/1	
Golf VII (5G1, BQ1, BE1, BE2) 2.0 GTD	CUNA, DGCA, DJGA	135	04/2013 -	4228/1	
Golf VII (5G1, BQ1, BE1, BE2) 2.0 TDI	CRBB, CRVC	105	08/2012 -	4228/1	
Golf VII (5G1, BQ1, BE1, BE2) 2.0 TDI	CRBC, CRLB, CRMB, CRUA, DCYA, DEJA, DFGA	110	11/2012 -	4228/1	
Golf VII (5G1, BQ1, BE1, BE2) 2.0 TDI	CRLD (11.16-07.18), CRVA (11.12-07.18), CYKB (11.1	81	11/2012 -	4228/1	
Golf VII (5G1, BQ1, BE1, BE2) 2.0 TDI 4motion	CKFC, CRBC, CRLB, CRMB, DCYA	110	11/2012 -	4228/1	
Golf VII (5G1, BQ1, BE1, BE2) 2.0 TDi	CJAA	104	07/2013 -	4228/1	
Golf VII (5G1, BQ1, BE1, BE2) 44287 GTE Hybrid	-	150	04/2015 -	4228/1	
Golf VII (5G1, BQ1, BE1, BE2) 44287 GTE Hybrid	CUKB	110	05/2014 -	4228/1	
Golf VII (5G1, BQ1, BE1, BE2) 44287 TGI CNG	CPWA, CZBA	81	06/2013 -	4228/1	
Golf VII (5G1, BQ1, BE1, BE2) 44287 TSI	CHPA, CPTA	103	08/2012 -	4228/1	
Golf VII (5G1, BQ1, BE1, BE2) 44287 TSI	CHPB, CZDA, CZEA, DGXA	110	05/2014 -	4228/1	
Golf VII (5G1, BQ1, BE1, BE2) 44287 TSI	CMBA, CXSA	90	11/2012 -	4228/1	
Golf VII (5G1, BQ1, BE1, BE2) 44287 TSI	CZCA	92	05/2014 -	4228/1	
Golf VII (5G1, BQ1, BE1, BE2) 44287 TSI MultiFuel	CPVA	90	04/2013 -	4228/1	
Golf VII (5G1, BQ1, BE1, BE2) 44287 TSI MultiFuel	CPVB	92	12/2013 -	4228/1	
Golf VII (5G1, BQ1, BE1, BE2) 44317 TGI	DHFA	96	11/2018 -	4228/1	
Golf VII (5G1, BQ1, BE1, BE2) 44317 TSI	-	92	03/2017 -	4228/1	
Golf VII (5G1, BQ1, BE1, BE2) 44317 TSI	DACA	96	07/2017 -	4228/1	
Golf VII (5G1, BQ1, BE1, BE2) 44317 TSI	DADA, DPCA	110	04/2017 -	4228/1	
Golf VII (5G1, BQ1, BE1, BE2) 44318 FSI	CBTA/CBUA	127	09/2013 -	4228/1	
Golf VII (5G1, BQ1, BE1, BE2) 44348	CWVA	81	05/2014 -	4228/1	
Golf VII (5G1, BQ1, BE1, BE2) 44348 TDI	CLHA	77	08/2012 -	4228/1	
Golf VII (5G1, BQ1, BE1, BE2) 44348 TDI	CLHB, CRKA, CXXA, DDYB	66	04/2013 -	4228/1	
Golf VII (5G1, BQ1, BE1, BE2) 44348 TDI	CRKB, CXXB, DBKA	81	01/2013 -	4228/1	
Golf VII (5G1, BQ1, BE1, BE2) 44348 TDI	DDYA, DGTE	85	11/2016 -	4228/1	
Golf VII (5G1, BQ1, BE1, BE2) 44348 TDI 4motion	CLHA	77	11/2012 -	4228/1	
Golf VII (5G1, BQ1, BE1, BE2) 44348 TDI 4motion	CRKB, CXXB	81	01/2013 -	4228/1	
Golf VII (5G1, BQ1, BE1, BE2) 44409 TFSI	CNSA, CNSB, CXBA, CXBB	125	07/2013 -	4228/1	
Golf VII (5G1, BQ1, BE1, BE2) e-Golf	EAGA	85	03/2014 - 02/2017	4228/1	
Golf VII (5G1, BQ1, BE1, BE2) e-Golf	EAZA, EBSA	100	12/2016 -	4228/1	
Golf VII Alltrack (BA5, BV5) 2.0 TDI 4motion	CRBC, CRLB, DCYA	110	12/2014 - 05/2018	4228/1	
Golf VII Alltrack (BA5, BV5) 2.0 TDI 4motion	CUNA, DGCA, DJGA	135	12/2014 -	4228/1	
Golf VII Alltrack (BA5, BV5) 44348 TDI 4motion	CRKB, CXXB	81	12/2014 -	4228/1	
Golf VII Alltrack (BA5, BV5) 44409 TSI 4motion	CJSB	132	12/2014 -	4228/1	
Golf VII Alltrack (BA5, BV5) TSI	CJSB	132	02/2019 -	4228/1	
Golf VII Sportsvan (AM1, AN1) 2.0 TDI	-	135	07/2015 -	4228/1	
Golf VII Sportsvan (AM1, AN1) 2.0 TDI	CRLB, DCYA, DFGA	110	02/2014 -	4228/1	
Golf VII Sportsvan (AM1, AN1) 2.0 TDI	CRLD (05.16-11.17), CRVA (05.14-11.17), DCYB (11.1	81	05/2014 -	4228/1	
Golf VII Sportsvan (AM1, AN1) 44287 TSI	CZCA	92	04/2014 -	4228/1	
Golf VII Sportsvan (AM1, AN1) 44287 TSI	CZDA	110	02/2014 -	4228/1	
Golf VII Sportsvan (AM1, AN1) 44287 TSI MultiFuel	CPVB	92	04/2014 -	4228/1	
Golf VII Sportsvan (AM1, AN1) 44317 TSI	DACA	96	05/2017 -	4228/1	
Golf VII Sportsvan (AM1, AN1) 44317 TSI	DADA, DPCA	110	05/2017 -	4228/1	
Golf VII Sportsvan (AM1, AN1) 44348	CWVA	81	05/2014 -	4228/1	
Golf VII Sportsvan (AM1, AN1) 44348 TDI	CRKA, CXXA, DDYB	66	02/2014 -	4228/1	
Golf VII Sportsvan (AM1, AN1) 44348 TDI	CRKB, CXXB, DBKA	81	02/2014 -	4228/1	
Golf VII Sportsvan (AM1, AN1) 44348 TDI	DDYA, DGTE	85	11/2016 -	4228/1	
Golf VII Variant (BA5, BV5) 2.0	CBPA	86	07/2013 -	4228/1	
Golf VII Variant (BA5, BV5) 2.0 GTD	CUNA, DGCA, DJGA	135	01/2015 - 03/2017	4228/1	
Golf VII Variant (BA5, BV5) 2.0 TDI	CRBC, CRLB, CRUA, DCYA, DEJA, DFGA	110	04/2013 -	4228/1	
Golf VII Variant (BA5, BV5) 2.0 TDI	CRLD (11.15-03.17), CRVA (05.13-03.17), CYKB (05.1	81	05/2013 - 03/2017	4228/1	
Golf VII Variant (BA5, BV5) 2.0 TDI 4motion	CRBC, CRLB, DCYA	110	04/2013 - 05/2018	4228/1	
Golf VII Variant (BA5, BV5) 2.0 TDi	CJAA	104	07/2013 -	4228/1	
Golf VII Variant (BA5, BV5) 44228 TSI	CJZA	77	05/2013 -	4228/1	
Golf VII Variant (BA5, BV5) 44228 TSI	CJZB, CYVA	63	05/2013 - 03/2017	4228/1	
Golf VII Variant (BA5, BV5) 44228 TSI	CYVB	81	04/2014 -	4228/1	
Golf VII Variant (BA5, BV5) 44287 GTE Hybrid	-	150	04/2015 -	4228/1	
Golf VII Variant (BA5, BV5) 44287 TGI CNG	CPWA	81	09/2013 -	4228/1	
Golf VII Variant (BA5, BV5) 44287 TSI	CHPA	103	05/2013 - 03/2017	4228/1	
Golf VII Variant (BA5, BV5) 44287 TSI	CHPB, CZDA, DGXA	110	05/2014 -	4228/1	
Golf VII Variant (BA5, BV5) 44287 TSI	CXSA	90	05/2013 -	4228/1	
Golf VII Variant (BA5, BV5) 44287 TSI	CZCA, CZDD	92	05/2014 - 03/2017	4228/1	
Golf VII Variant (BA5, BV5) 44287 TSI MultiFuel	CPVA	90	04/2013 - 03/2017	4228/1	
Golf VII Variant (BA5, BV5) 44287 TSI MultiFuel	CPVB	92	05/2014 - 03/2017	4228/1	
Golf VII Variant (BA5, BV5) 44317 TGI CNG	DHFA	96	12/2018 -	4228/1	

MAKE & MODEL   		KW	YEAR		
VOLKSWAGEN					
Golf VII Variant (BA5, BV5) 44317 TSI	-	92	03/2017 -	4228/1	
Golf VII Variant (BA5, BV5) 44317 TSI	DACA, DPBA	96	07/2017 -	4228/1	
Golf VII Variant (BA5, BV5) 44317 TSI	DADA, DPCA	110	04/2017 -	4228/1	
Golf VII Variant (BA5, BV5) 44318	CBTA, CBUA	112	04/2013 -	4228/1	
Golf VII Variant (BA5, BV5) 44318 FSI	CBTA/CBUA	127	09/2013 -	4228/1	
Golf VII Variant (BA5, BV5) 44348	CWVA	81	05/2014 - 03/2017	4228/1	
Golf VII Variant (BA5, BV5) 44348 TDI	CLHA	77	05/2013 - 03/2017	4228/1	
Golf VII Variant (BA5, BV5) 44348 TDI	CLHB, CRKA, CXXA, DDYB	66	05/2013 - 03/2017	4228/1	
Golf VII Variant (BA5, BV5) 44348 TDI	CRKB, CXXB, DBKA	81	05/2013 - 03/2017	4228/1	
Golf VII Variant (BA5, BV5) 44348 TDI	DDYA, DGTE	85	11/2016 -	4228/1	
Golf VII Variant (BA5, BV5) 44348 TDI 4motion	CLHA	77	05/2013 - 03/2017	4228/1	
Golf VII Variant (BA5, BV5) 44348 TDI 4motion	CRKB, CXXB	81	05/2013 - 03/2017	4228/1	
Golf VII Variant (BA5, BV5) 44409 TFSI	CNSA, CNSB, CXBA, CXBB	125	07/2013 -	4228/1	
Golf VII Variant (BA5, BV5) 44409 TSI 4motion	CJSB	132	11/2016 -	4228/1	
Golf VIII (CD1) 1.0 eTSI	DLAA	81	06/2020 -	4228/1	
Golf VIII (CD1) 1.0 TSI	DLAA	81	02/2020 -	4228/1	
Golf VIII (CD1) 1.0 TSI	DLAB	66	02/2020 -	4228/1	
Golf VIII (CD1) 2.0 TDI BlueMotion	DSRB, DTSB	110	08/2019 -	4228/1	
Golf VIII (CD1) 2.0 TDI BlueMotion	DSUD	85	08/2019 -	4228/1	
Golf VIII (CD1) 44287 GTE Plug-in Hybrid	DGEA	110	09/2020 -	4228/1	
Golf VIII (CD1) 44317 eTSI	DFYA	110	12/2019 -	4228/1	
Golf VIII (CD1) 44317 TGI	DHFA	96	09/2020 -	4228/1	
Golf VIII (CD1) 44317 TSI BlueMotion	DPBA	96	07/2019 -	4228/1	
Golf VIII (CD1) 44317 TSI BlueMotion	DPCA	110	07/2019 -	4228/1	
Golf VIII Variant (CG5) 1.0 eTSI	DLAA	81	09/2020 -	4228/1	
Golf VIII Variant (CG5) 1.0 TSI	DLAA	81	08/2020 -	4228/1	
Golf VIII Variant (CG5) 1.0 TSI	DLAB	66	08/2020 -	4228/1	
Golf VIII Variant (CG5) 2.0 TDI	DSUD	85	08/2020 -	4228/1	
Golf VIII Variant (CG5) 2.0 TDI	DTSB	110	08/2020 -	4228/1	
Golf VIII Variant (CG5) 44317 eTSI	DPBA	96	12/2020 -	4228/1	
Golf VIII Variant (CG5) 44317 eTSI	DPCA	110	12/2020 -	4228/1	
Golf VIII Variant (CG5) 44317 TSI	DPBA	96	08/2020 -	4228/1	
Golf VIII Variant (CG5) 44317 TSI	DPCA	110	08/2020 -	4228/1	
HCV Crafter I 30-35 Bus (2E_) 2.0 TDI	CKTB (05.11-12.16), CSLA (11.15-12.16)	80	05/2011 - 12/2016	3925/2	3926/1
HCV Crafter I 30-35 Bus (2E_) 2.0 TDI	CKTC	100	05/2011 - 12/2016	3925/2	3926/1
HCV Crafter I 30-35 Bus (2E_) 2.0 TDI	CKUB, CSNA	120	07/2011 - 12/2016	3925/2	3926/1
HCV Crafter I 30-35 Bus (2E_) 2.0 TDI	CKUC	105	10/2011 - 12/2016	3925/2	3926/1
HCV Crafter I 30-35 Bus (2E_) 2.0 TDI	CSLB	84	11/2013 - 12/2016	3925/2	3926/1
HCV Crafter I 30-35 Bus (2E_) 2.0 TDI 4motion	CKUB, CSNA	120	11/2011 - 12/2016	3925/2	3926/1
HCV Crafter I 30-35 Bus (2E_) 44318 TDI	BJJ, CEBA	65	04/2006 - 07/2011	3925/2	3926/1
HCV Crafter I 30-35 Bus (2E_) 44318 TDI	BJK, CEBB	80	04/2006 - 05/2013	3925/2	3926/1
HCV Crafter I 30-35 Bus (2E_) 44318 TDI	BJL, CECA	100	04/2006 - 05/2013	3925/2	3926/1
HCV Crafter I 30-35 Bus (2E_) 44318 TDI	BJM, CECB	120	04/2006 - 07/2011	3925/2	3926/1
HCV Crafter I 30-50 Platform/Chassis (2F_) 2.0 TDI	CKTB, CSLA	80	05/2011 - 12/2016	3925/2	
HCV Crafter I 30-50 Platform/Chassis (2F_) 2.0 TDI	CKTB, CSLA	80	05/2011 - 12/2016		3926/1
HCV Crafter I 30-50 Platform/Chassis (2F_) 2.0 TDI	CKTB, CSLA	80	05/2011 - 12/2016	3962/1	
HCV Crafter I 30-50 Platform/Chassis (2F_) 2.0 TDI	CKTB, CSLA	80	05/2011 - 12/2016		3963/1
HCV Crafter I 30-50 Platform/Chassis (2F_) 2.0 TDI	CKTC	100	05/2011 - 12/2016	3925/2	
HCV Crafter I 30-50 Platform/Chassis (2F_) 2.0 TDI	CKTC	100	05/2011 - 12/2016		3926/1
HCV Crafter I 30-50 Platform/Chassis (2F_) 2.0 TDI	CKTC	100	05/2011 - 12/2016	3962/1	
HCV Crafter I 30-50 Platform/Chassis (2F_) 2.0 TDI	CKTC	100	05/2011 - 12/2016		3963/1
HCV Crafter I 30-50 Platform/Chassis (2F_) 2.0 TDI	CKUB, CSNA	120	07/2011 - 12/2016	3925/2	
HCV Crafter I 30-50 Platform/Chassis (2F_) 2.0 TDI	CKUB, CSNA	120	07/2011 - 12/2016		3926/1
HCV Crafter I 30-50 Platform/Chassis (2F_) 2.0 TDI	CKUB, CSNA	120	07/2011 - 12/2016	3962/1	
HCV Crafter I 30-50 Platform/Chassis (2F_) 2.0 TDI	CKUB, CSNA	120	07/2011 - 12/2016		3963/1
HCV Crafter I 30-50 Platform/Chassis (2F_) 2.0 TDI	CKUC	105	10/2011 - 12/2016	3925/2	
HCV Crafter I 30-50 Platform/Chassis (2F_) 2.0 TDI	CKUC	105	10/2011 - 12/2016		3926/1
HCV Crafter I 30-50 Platform/Chassis (2F_) 2.0 TDI	CKUC	105	10/2011 - 12/2016	3962/1	
HCV Crafter I 30-50 Platform/Chassis (2F_) 2.0 TDI	CKUC	105	10/2011 - 12/2016		3963/1
HCV Crafter I 30-50 Platform/Chassis (2F_) 2.0 TDI	CSLB	84	11/2013 - 12/2016	3925/2	
HCV Crafter I 30-50 Platform/Chassis (2F_) 2.0 TDI	CSLB	84	11/2013 - 12/2016		3926/1
HCV Crafter I 30-50 Platform/Chassis (2F_) 2.0 TDI	CSLB	84	11/2013 - 12/2016	3962/1	
HCV Crafter I 30-50 Platform/Chassis (2F_) 2.0 TDI	CSLB	84	11/2013 - 12/2016		3963/1
HCV Crafter I 30-50 Platform/Chassis (2F_) 2.0 TDI	CSLC	103	11/2015 - 12/2016	3925/2	
HCV Crafter I 30-50 Platform/Chassis (2F_) 2.0 TDI	CSLC	103	11/2015 - 12/2016		3926/1
HCV Crafter I 30-50 Platform/Chassis (2F_) 2.0 TDI	CSLC	103	11/2015 - 12/2016	3962/1	
HCV Crafter I 30-50 Platform/Chassis (2F_) 2.0 TDI	CSLC	103	11/2015 - 12/2016		3963/1
HCV Crafter I 30-50 Platform/Chassis (2F_) 2.0 TDI 4motion	CKUB, CSNA	120	11/2011 - 12/2016	3925/2	
HCV Crafter I 30-50 Platform/Chassis (2F_) 2.0 TDI 4motion	CKUB, CSNA	120	11/2011 - 12/2016		3926/1
HCV Crafter I 30-50 Platform/Chassis (2F_) 2.0 TDI 4motion	CKUB, CSNA	120	11/2011 - 12/2016	3962/1	
HCV Crafter I 30-50 Platform/Chassis (2F_) 2.0 TDI 4motion	CKUB, CSNA	120	11/2011 - 12/2016		3963/1
HCV Crafter I 30-50 Platform/Chassis (2F_) 44318 TDI	BJJ, CEBA	65	04/2006 - 07/2011	3925/2	
HCV Crafter I 30-50 Platform/Chassis (2F_) 44318 TDI	BJJ, CEBA	65	04/2006 - 07/2011		3926/1
HCV Crafter I 30-50 Platform/Chassis (2F_) 44318 TDI	BJJ, CEBA	65	04/2006 - 07/2011	3962/1	
HCV Crafter I 30-50 Platform/Chassis (2F_) 44318 TDI	BJJ, CEBA	65	04/2006 - 07/2011		3963/1
HCV Crafter I 30-50 Platform/Chassis (2F_) 44318 TDI	BJK, CEBB	80	04/2006 - 05/2013	3925/2	

MAKE & MODEL   		KW	YEAR		
VOLKSWAGEN					
HCV Crafter I 30-50 Platform/Chassis (2F_) 44318 TDI	BJK, CEBB	80	04/2006 - 05/2013		3926/1
HCV Crafter I 30-50 Platform/Chassis (2F_) 44318 TDI	BJK, CEBB	80	04/2006 - 05/2013	3962/1	
HCV Crafter I 30-50 Platform/Chassis (2F_) 44318 TDI	BJK, CEBB	80	04/2006 - 05/2013		3963/1
HCV Crafter I 30-50 Platform/Chassis (2F_) 44318 TDI	BJL, CECA	100	04/2006 - 05/2013	3925/2	
HCV Crafter I 30-50 Platform/Chassis (2F_) 44318 TDI	BJL, CECA	100	04/2006 - 05/2013		3926/1
HCV Crafter I 30-50 Platform/Chassis (2F_) 44318 TDI	BJL, CECA	100	04/2006 - 05/2013	3962/1	
HCV Crafter I 30-50 Platform/Chassis (2F_) 44318 TDI	BJL, CECA	100	04/2006 - 05/2013		3963/1
HCV Crafter I 30-50 Platform/Chassis (2F_) 44318 TDI	BJM, CECB	120	04/2006 - 07/2011	3925/2	
HCV Crafter I 30-50 Platform/Chassis (2F_) 44318 TDI	BJM, CECB	120	04/2006 - 07/2011		3926/1
HCV Crafter I 30-50 Platform/Chassis (2F_) 44318 TDI	BJM, CECB	120	04/2006 - 07/2011	3962/1	
HCV Crafter I 30-50 Platform/Chassis (2F_) 44318 TDI	BJM, CECB	120	04/2006 - 07/2011		3963/1
HCV Crafter I 30-50 Van (2E_) 2.0 TDI	CKTB, CSLA	80	05/2011 - 12/2016	3925/2	
HCV Crafter I 30-50 Van (2E_) 2.0 TDI	CKTB, CSLA	80	05/2011 - 12/2016		3926/1
HCV Crafter I 30-50 Van (2E_) 2.0 TDI	CKTB, CSLA	80	05/2011 - 12/2016	3962/1	
HCV Crafter I 30-50 Van (2E_) 2.0 TDI	CKTB, CSLA	80	05/2011 - 12/2016		3963/1
HCV Crafter I 30-50 Van (2E_) 2.0 TDI	CKTC	100	05/2011 - 12/2016	3925/2	
HCV Crafter I 30-50 Van (2E_) 2.0 TDI	CKTC	100	05/2011 - 12/2016		3926/1
HCV Crafter I 30-50 Van (2E_) 2.0 TDI	CKTC	100	05/2011 - 12/2016	3962/1	
HCV Crafter I 30-50 Van (2E_) 2.0 TDI	CKTC	100	05/2011 - 12/2016		3963/1
HCV Crafter I 30-50 Van (2E_) 2.0 TDI	CKUB, CSNA	120	07/2011 - 12/2016	3925/2	
HCV Crafter I 30-50 Van (2E_) 2.0 TDI	CKUB, CSNA	120	07/2011 - 12/2016		3926/1
HCV Crafter I 30-50 Van (2E_) 2.0 TDI	CKUB, CSNA	120	07/2011 - 12/2016	3962/1	
HCV Crafter I 30-50 Van (2E_) 2.0 TDI	CKUB, CSNA	120	07/2011 - 12/2016		3963/1
HCV Crafter I 30-50 Van (2E_) 2.0 TDI	CKUC	105	10/2011 - 12/2016	3925/2	
HCV Crafter I 30-50 Van (2E_) 2.0 TDI	CKUC	105	10/2011 - 12/2016		3926/1
HCV Crafter I 30-50 Van (2E_) 2.0 TDI	CKUC	105	10/2011 - 12/2016	3962/1	
HCV Crafter I 30-50 Van (2E_) 2.0 TDI	CKUC	105	10/2011 - 12/2016		3963/1
HCV Crafter I 30-50 Van (2E_) 2.0 TDI	CSLB	84	11/2013 - 12/2016	3925/2	
HCV Crafter I 30-50 Van (2E_) 2.0 TDI	CSLB	84	11/2013 - 12/2016		3926/1
HCV Crafter I 30-50 Van (2E_) 2.0 TDI	CSLB	84	11/2013 - 12/2016	3962/1	
HCV Crafter I 30-50 Van (2E_) 2.0 TDI	CSLB	84	11/2013 - 12/2016		3963/1
HCV Crafter I 30-50 Van (2E_) 2.0 TDI	CSLC	103	11/2015 - 12/2016	3925/2	
HCV Crafter I 30-50 Van (2E_) 2.0 TDI	CSLC	103	11/2015 - 12/2016		3926/1
HCV Crafter I 30-50 Van (2E_) 2.0 TDI	CSLC	103	11/2015 - 12/2016	3962/1	
HCV Crafter I 30-50 Van (2E_) 2.0 TDI	CSLC	103	11/2015 - 12/2016		3963/1
HCV Crafter I 30-50 Van (2E_) 2.0 TDI 4motion	CKUB (07.11-12.16), CSNA (11.13-12.16)	120	07/2011 - 12/2016	3925/2	
HCV Crafter I 30-50 Van (2E_) 2.0 TDI 4motion	CKUB (07.11-12.16), CSNA (11.13-12.16)	120	07/2011 - 12/2016		3926/1
HCV Crafter I 30-50 Van (2E_) 2.0 TDI 4motion	CKUB (07.11-12.16), CSNA (11.13-12.16)	120	07/2011 - 12/2016	3962/1	
HCV Crafter I 30-50 Van (2E_) 2.0 TDI 4motion	CKUB (07.11-12.16), CSNA (11.13-12.16)	120	07/2011 - 12/2016		3963/1
HCV Crafter I 30-50 Van (2E_) 44318 TDI	BJJ, CEBA	65	04/2006 - 07/2011	3925/2	
HCV Crafter I 30-50 Van (2E_) 44318 TDI	BJJ, CEBA	65	04/2006 - 07/2011		3926/1
HCV Crafter I 30-50 Van (2E_) 44318 TDI	BJJ, CEBA	65	04/2006 - 07/2011	3962/1	
HCV Crafter I 30-50 Van (2E_) 44318 TDI	BJJ, CEBA	65	04/2006 - 07/2011		3963/1
HCV Crafter I 30-50 Van (2E_) 44318 TDI	BJK, CEBB	80	04/2006 - 05/2013	3925/2	
HCV Crafter I 30-50 Van (2E_) 44318 TDI	BJK, CEBB	80	04/2006 - 05/2013		3926/1
HCV Crafter I 30-50 Van (2E_) 44318 TDI	BJK, CEBB	80	04/2006 - 05/2013	3962/1	
HCV Crafter I 30-50 Van (2E_) 44318 TDI	BJK, CEBB	80	04/2006 - 05/2013		3963/1
HCV Crafter I 30-50 Van (2E_) 44318 TDI	BJL, CECA	100	04/2006 - 05/2013	3925/2	
HCV Crafter I 30-50 Van (2E_) 44318 TDI	BJL, CECA	100	04/2006 - 05/2013		3926/1
HCV Crafter I 30-50 Van (2E_) 44318 TDI	BJL, CECA	100	04/2006 - 05/2013	3962/1	
HCV Crafter I 30-50 Van (2E_) 44318 TDI	BJL, CECA	100	04/2006 - 05/2013		3963/1
HCV Crafter I 30-50 Van (2E_) 44318 TDI	BJM, CECB	120	04/2006 - 07/2011	3925/2	
HCV Crafter I 30-50 Van (2E_) 44318 TDI	BJM, CECB	120	04/2006 - 07/2011		3926/1
HCV Crafter I 30-50 Van (2E_) 44318 TDI	BJM, CECB	120	04/2006 - 07/2011	3962/1	
HCV Crafter I 30-50 Van (2E_) 44318 TDI	BJM, CECB	120	04/2006 - 07/2011		3963/1
HCV Crafter II Bus (SY_, SC_) 2.0 TDI	DAUA	103	09/2016 -	4350	
HCV Crafter II Bus (SY_, SC_) 2.0 TDI	DAUA	103	09/2016 -		4350
HCV Crafter II Bus (SY_, SC_) 2.0 TDI	DAUA	103	09/2016 -	4350/1	
HCV Crafter II Bus (SY_, SC_) 2.0 TDI	DAUA	103	09/2016 -		4350/1
HCV Crafter II Bus (SY_, SC_) 2.0 TDI	DAUA	103	09/2016 -	4356	
HCV Crafter II Bus (SY_, SC_) 2.0 TDI	DAUA	103	09/2016 -	4356/1	
HCV Crafter II Bus (SY_, SC_) 2.0 TDI	DAUA	103	09/2016 -	4357	
HCV Crafter II Bus (SY_, SC_) 2.0 TDI	DAUA	103	09/2016 -	4357/1	
HCV Crafter II Bus (SY_, SC_) 2.0 TDI	DAUB	75	10/2016 -	4350	
HCV Crafter II Bus (SY_, SC_) 2.0 TDI	DAUB	75	10/2016 -		4350
HCV Crafter II Bus (SY_, SC_) 2.0 TDI	DAUB	75	10/2016 -	4350/1	
HCV Crafter II Bus (SY_, SC_) 2.0 TDI	DAUB	75	10/2016 -		4350/1
HCV Crafter II Bus (SY_, SC_) 2.0 TDI	DAUB	75	10/2016 -	4356	
HCV Crafter II Bus (SY_, SC_) 2.0 TDI	DAUB	75	10/2016 -	4356/1	
HCV Crafter II Bus (SY_, SC_) 2.0 TDI	DAUB	75	10/2016 -	4357	
HCV Crafter II Bus (SY_, SC_) 2.0 TDI	DAUB	75	10/2016 -	4357/1	
HCV Crafter II Bus (SY_, SC_) 2.0 TDI	DAVA	130	09/2016 -	4350	
HCV Crafter II Bus (SY_, SC_) 2.0 TDI	DAVA	130	09/2016 -		4350
HCV Crafter II Bus (SY_, SC_) 2.0 TDI	DAVA	130	09/2016 -	4350/1	
HCV Crafter II Bus (SY_, SC_) 2.0 TDI	DAVA	130	09/2016 -		4350/1
HCV Crafter II Bus (SY_, SC_) 2.0 TDI	DAVA	130	09/2016 -	4356	

MAKE & MODEL		KW	YEAR		
VOLKSWAGEN					
HCV Crafter II Bus (SY_, SC_) 2.0 TDI	DAVA	130	09/2016 -	4356/1	
HCV Crafter II Bus (SY_, SC_) 2.0 TDI	DAVA	130	09/2016 -	4357	
HCV Crafter II Bus (SY_, SC_) 2.0 TDI	DAVA	130	09/2016 -	4357/1	
HCV Crafter II Bus (SY_, SC_) 2.0 TDI 4motion	DAUA	103	04/2017 -	4350	
HCV Crafter II Bus (SY_, SC_) 2.0 TDI 4motion	DAUA	103	04/2017 -		4350
HCV Crafter II Bus (SY_, SC_) 2.0 TDI 4motion	DAUA	103	04/2017 -	4350/1	
HCV Crafter II Bus (SY_, SC_) 2.0 TDI 4motion	DAUA	103	04/2017 -		4350/1
HCV Crafter II Bus (SY_, SC_) 2.0 TDI 4motion	DAUA	103	04/2017 -	4356	
HCV Crafter II Bus (SY_, SC_) 2.0 TDI 4motion	DAUA	103	04/2017 -	4356/1	
HCV Crafter II Bus (SY_, SC_) 2.0 TDI 4motion	DAUA	103	04/2017 -	4357	
HCV Crafter II Bus (SY_, SC_) 2.0 TDI 4motion	DAUA	103	04/2017 -	4357/1	
HCV Crafter II Bus (SY_, SC_) 2.0 TDI 4motion	DAVA	130	03/2017 -	4350	
HCV Crafter II Bus (SY_, SC_) 2.0 TDI 4motion	DAVA	130	03/2017 -		4350
HCV Crafter II Bus (SY_, SC_) 2.0 TDI 4motion	DAVA	130	03/2017 -	4350/1	
HCV Crafter II Bus (SY_, SC_) 2.0 TDI 4motion	DAVA	130	03/2017 -		4350/1
HCV Crafter II Bus (SY_, SC_) 2.0 TDI 4motion	DAVA	130	03/2017 -	4356	
HCV Crafter II Bus (SY_, SC_) 2.0 TDI 4motion	DAVA	130	03/2017 -	4356/1	
HCV Crafter II Bus (SY_, SC_) 2.0 TDI 4motion	DAVA	130	03/2017 -	4357	
HCV Crafter II Bus (SY_, SC_) 2.0 TDI 4motion	DAVA	130	03/2017 -	4357/1	
HCV Crafter II Platform/Chassis (SZ_) 2.0 TDI	DAUA	103	11/2016 -	4350	
HCV Crafter II Platform/Chassis (SZ_) 2.0 TDI	DAUA	103	11/2016 -		4350
HCV Crafter II Platform/Chassis (SZ_) 2.0 TDI	DAUA	103	11/2016 -	4350/1	
HCV Crafter II Platform/Chassis (SZ_) 2.0 TDI	DAUA	103	11/2016 -		4350/1
HCV Crafter II Platform/Chassis (SZ_) 2.0 TDI	DAUA	103	11/2016 -	4356	
HCV Crafter II Platform/Chassis (SZ_) 2.0 TDI	DAUA	103	11/2016 -	4356/1	
HCV Crafter II Platform/Chassis (SZ_) 2.0 TDI	DAUA	103	11/2016 -	4357	
HCV Crafter II Platform/Chassis (SZ_) 2.0 TDI	DAUA	103	11/2016 -	4357/1	
HCV Crafter II Platform/Chassis (SZ_) 2.0 TDI	DAUB	75	11/2016 -	4350	
HCV Crafter II Platform/Chassis (SZ_) 2.0 TDI	DAUB	75	11/2016 -		4350
HCV Crafter II Platform/Chassis (SZ_) 2.0 TDI	DAUB	75	11/2016 -	4350/1	
HCV Crafter II Platform/Chassis (SZ_) 2.0 TDI	DAUB	75	11/2016 -		4350/1
HCV Crafter II Platform/Chassis (SZ_) 2.0 TDI	DAUB	75	11/2016 -	4356	
HCV Crafter II Platform/Chassis (SZ_) 2.0 TDI	DAUB	75	11/2016 -	4356/1	
HCV Crafter II Platform/Chassis (SZ_) 2.0 TDI	DAUB	75	11/2016 -	4357	
HCV Crafter II Platform/Chassis (SZ_) 2.0 TDI	DAUB	75	11/2016 -	4357/1	
HCV Crafter II Platform/Chassis (SZ_) 2.0 TDI	DAVA	130	11/2016 -	4350	
HCV Crafter II Platform/Chassis (SZ_) 2.0 TDI	DAVA	130	11/2016 -		4350
HCV Crafter II Platform/Chassis (SZ_) 2.0 TDI	DAVA	130	11/2016 -	4350/1	
HCV Crafter II Platform/Chassis (SZ_) 2.0 TDI	DAVA	130	11/2016 -		4350/1
HCV Crafter II Platform/Chassis (SZ_) 2.0 TDI	DAVA	130	11/2016 -	4356	
HCV Crafter II Platform/Chassis (SZ_) 2.0 TDI	DAVA	130	11/2016 -	4356/1	
HCV Crafter II Platform/Chassis (SZ_) 2.0 TDI	DAVA	130	11/2016 -	4357	
HCV Crafter II Platform/Chassis (SZ_) 2.0 TDI	DAVA	130	11/2016 -	4357/1	
HCV Crafter II Platform/Chassis (SZ_) 2.0 TDI 4motion	DAUA	103	11/2017 -	4350	
HCV Crafter II Platform/Chassis (SZ_) 2.0 TDI 4motion	DAUA	103	11/2017 -		4350
HCV Crafter II Platform/Chassis (SZ_) 2.0 TDI 4motion	DAUA	103	11/2017 -	4350/1	
HCV Crafter II Platform/Chassis (SZ_) 2.0 TDI 4motion	DAUA	103	11/2017 -		4350/1
HCV Crafter II Platform/Chassis (SZ_) 2.0 TDI 4motion	DAUA	103	11/2017 -	4356	
HCV Crafter II Platform/Chassis (SZ_) 2.0 TDI 4motion	DAUA	103	11/2017 -	4356/1	
HCV Crafter II Platform/Chassis (SZ_) 2.0 TDI 4motion	DAUA	103	11/2017 -	4357	
HCV Crafter II Platform/Chassis (SZ_) 2.0 TDI 4motion	DAUA	103	11/2017 -	4357/1	
HCV Crafter II Platform/Chassis (SZ_) 2.0 TDI 4motion	DAVA	130	03/2017 -	4350	
HCV Crafter II Platform/Chassis (SZ_) 2.0 TDI 4motion	DAVA	130	03/2017 -		4350
HCV Crafter II Platform/Chassis (SZ_) 2.0 TDI 4motion	DAVA	130	03/2017 -	4350/1	
HCV Crafter II Platform/Chassis (SZ_) 2.0 TDI 4motion	DAVA	130	03/2017 -		4350/1
HCV Crafter II Platform/Chassis (SZ_) 2.0 TDI 4motion	DAVA	130	03/2017 -	4356	
HCV Crafter II Platform/Chassis (SZ_) 2.0 TDI 4motion	DAVA	130	03/2017 -	4356/1	
HCV Crafter II Platform/Chassis (SZ_) 2.0 TDI 4motion	DAVA	130	03/2017 -	4357	
HCV Crafter II Platform/Chassis (SZ_) 2.0 TDI 4motion	DAVA	130	03/2017 -	4357/1	
HCV Crafter II Platform/Chassis (SZ_) 2.0 TDI RWD	DASA	90	08/2017 -	4350	
HCV Crafter II Platform/Chassis (SZ_) 2.0 TDI RWD	DASA	90	08/2017 -		4350
HCV Crafter II Platform/Chassis (SZ_) 2.0 TDI RWD	DASA	90	08/2017 -	4350/1	
HCV Crafter II Platform/Chassis (SZ_) 2.0 TDI RWD	DASA	90	08/2017 -		4350/1
HCV Crafter II Platform/Chassis (SZ_) 2.0 TDI RWD	DASA	90	08/2017 -	4356	
HCV Crafter II Platform/Chassis (SZ_) 2.0 TDI RWD	DASA	90	08/2017 -	4356/1	
HCV Crafter II Platform/Chassis (SZ_) 2.0 TDI RWD	DASA	90	08/2017 -	4357	
HCV Crafter II Platform/Chassis (SZ_) 2.0 TDI RWD	DASA	90	08/2017 -	4357/1	
HCV Crafter II Platform/Chassis (SZ_) 2.0 TDI RWD	DASB	103	11/2017 -	4350	
HCV Crafter II Platform/Chassis (SZ_) 2.0 TDI RWD	DASB	103	11/2017 -		4350
HCV Crafter II Platform/Chassis (SZ_) 2.0 TDI RWD	DASB	103	11/2017 -	4350/1	
HCV Crafter II Platform/Chassis (SZ_) 2.0 TDI RWD	DASB	103	11/2017 -		4350/1
HCV Crafter II Platform/Chassis (SZ_) 2.0 TDI RWD	DASB	103	11/2017 -	4356	
HCV Crafter II Platform/Chassis (SZ_) 2.0 TDI RWD	DASB	103	11/2017 -	4356/1	
HCV Crafter II Platform/Chassis (SZ_) 2.0 TDI RWD	DASB	103	11/2017 -	4357	
HCV Crafter II Platform/Chassis (SZ_) 2.0 TDI RWD	DASB	103	11/2017 -	4357/1	
HCV Crafter II Platform/Chassis (SZ_) 2.0 TDI RWD	DASC	80	11/2016 -	4350	

MAKE & MODEL   		KW	YEAR		
VOLKSWAGEN					
HCV Crafter II Platform/Chassis (SZ_) 2.0 TDI RWD	DASC	80	11/2016 -		4350
HCV Crafter II Platform/Chassis (SZ_) 2.0 TDI RWD	DASC	80	11/2016 -	4350/1	
HCV Crafter II Platform/Chassis (SZ_) 2.0 TDI RWD	DASC	80	11/2016 -		4350/1
HCV Crafter II Platform/Chassis (SZ_) 2.0 TDI RWD	DASC	80	11/2016 -	4356	
HCV Crafter II Platform/Chassis (SZ_) 2.0 TDI RWD	DASC	80	11/2016 -	4356/1	
HCV Crafter II Platform/Chassis (SZ_) 2.0 TDI RWD	DASC	80	11/2016 -	4357	
HCV Crafter II Platform/Chassis (SZ_) 2.0 TDI RWD	DASC	80	11/2016 -	4357/1	
HCV Crafter II Platform/Chassis (SZ_) 2.0 TDI RWD	DAWA	130	07/2017 -	4350	
HCV Crafter II Platform/Chassis (SZ_) 2.0 TDI RWD	DAWA	130	07/2017 -		4350
HCV Crafter II Platform/Chassis (SZ_) 2.0 TDI RWD	DAWA	130	07/2017 -	4350/1	
HCV Crafter II Platform/Chassis (SZ_) 2.0 TDI RWD	DAWA	130	07/2017 -		4350/1
HCV Crafter II Platform/Chassis (SZ_) 2.0 TDI RWD	DAWA	130	07/2017 -	4356	
HCV Crafter II Platform/Chassis (SZ_) 2.0 TDI RWD	DAWA	130	07/2017 -	4356/1	
HCV Crafter II Platform/Chassis (SZ_) 2.0 TDI RWD	DAWA	130	07/2017 -	4357	
HCV Crafter II Platform/Chassis (SZ_) 2.0 TDI RWD	DAWA	130	07/2017 -	4357/1	
HCV Crafter II Van (SY_, SX_) 2.0 TDI	DAUA	103	09/2016 -	4350	
HCV Crafter II Van (SY_, SX_) 2.0 TDI	DAUA	103	09/2016 -		4350
HCV Crafter II Van (SY_, SX_) 2.0 TDI	DAUA	103	09/2016 -	4350/1	
HCV Crafter II Van (SY_, SX_) 2.0 TDI	DAUA	103	09/2016 -		4350/1
HCV Crafter II Van (SY_, SX_) 2.0 TDI	DAUA	103	09/2016 -	4356	
HCV Crafter II Van (SY_, SX_) 2.0 TDI	DAUA	103	09/2016 -	4356/1	
HCV Crafter II Van (SY_, SX_) 2.0 TDI	DAUA	103	09/2016 -	4357	
HCV Crafter II Van (SY_, SX_) 2.0 TDI	DAUA	103	09/2016 -	4357/1	
HCV Crafter II Van (SY_, SX_) 2.0 TDI	DAUB	75	10/2016 -	4350	
HCV Crafter II Van (SY_, SX_) 2.0 TDI	DAUB	75	10/2016 -		4350
HCV Crafter II Van (SY_, SX_) 2.0 TDI	DAUB	75	10/2016 -	4350/1	
HCV Crafter II Van (SY_, SX_) 2.0 TDI	DAUB	75	10/2016 -		4350/1
HCV Crafter II Van (SY_, SX_) 2.0 TDI	DAUB	75	10/2016 -	4356	
HCV Crafter II Van (SY_, SX_) 2.0 TDI	DAUB	75	10/2016 -	4356/1	
HCV Crafter II Van (SY_, SX_) 2.0 TDI	DAUB	75	10/2016 -	4357	
HCV Crafter II Van (SY_, SX_) 2.0 TDI	DAUB	75	10/2016 -	4357/1	
HCV Crafter II Van (SY_, SX_) 2.0 TDI	DAVA	130	09/2016 -	4350	
HCV Crafter II Van (SY_, SX_) 2.0 TDI	DAVA	130	09/2016 -		4350
HCV Crafter II Van (SY_, SX_) 2.0 TDI	DAVA	130	09/2016 -	4350/1	
HCV Crafter II Van (SY_, SX_) 2.0 TDI	DAVA	130	09/2016 -		4350/1
HCV Crafter II Van (SY_, SX_) 2.0 TDI	DAVA	130	09/2016 -	4356	
HCV Crafter II Van (SY_, SX_) 2.0 TDI	DAVA	130	09/2016 -	4356/1	
HCV Crafter II Van (SY_, SX_) 2.0 TDI	DAVA	130	09/2016 -	4357	
HCV Crafter II Van (SY_, SX_) 2.0 TDI	DAVA	130	09/2016 -	4357/1	
HCV Crafter II Van (SY_, SX_) 2.0 TDI 4motion	DAUA	103	04/2017 -	4350	
HCV Crafter II Van (SY_, SX_) 2.0 TDI 4motion	DAUA	103	04/2017 -		4350
HCV Crafter II Van (SY_, SX_) 2.0 TDI 4motion	DAUA	103	04/2017 -	4350/1	
HCV Crafter II Van (SY_, SX_) 2.0 TDI 4motion	DAUA	103	04/2017 -		4350/1
HCV Crafter II Van (SY_, SX_) 2.0 TDI 4motion	DAUA	103	04/2017 -	4356	
HCV Crafter II Van (SY_, SX_) 2.0 TDI 4motion	DAUA	103	04/2017 -	4356/1	
HCV Crafter II Van (SY_, SX_) 2.0 TDI 4motion	DAUA	103	04/2017 -	4357	
HCV Crafter II Van (SY_, SX_) 2.0 TDI 4motion	DAUA	103	04/2017 -	4357/1	
HCV Crafter II Van (SY_, SX_) 2.0 TDI 4motion	DAVA	130	03/2017 -	4350	
HCV Crafter II Van (SY_, SX_) 2.0 TDI 4motion	DAVA	130	03/2017 -		4350
HCV Crafter II Van (SY_, SX_) 2.0 TDI 4motion	DAVA	130	03/2017 -	4350/1	
HCV Crafter II Van (SY_, SX_) 2.0 TDI 4motion	DAVA	130	03/2017 -		4350/1
HCV Crafter II Van (SY_, SX_) 2.0 TDI 4motion	DAVA	130	03/2017 -	4356	
HCV Crafter II Van (SY_, SX_) 2.0 TDI 4motion	DAVA	130	03/2017 -	4356/1	
HCV Crafter II Van (SY_, SX_) 2.0 TDI 4motion	DAVA	130	03/2017 -	4357	
HCV Crafter II Van (SY_, SX_) 2.0 TDI 4motion	DAVA	130	03/2017 -	4357/1	
HCV Crafter II Van (SY_, SX_) 2.0 TDI RWD	DASA	90	08/2017 -	4350	
HCV Crafter II Van (SY_, SX_) 2.0 TDI RWD	DASA	90	08/2017 -		4350
HCV Crafter II Van (SY_, SX_) 2.0 TDI RWD	DASA	90	08/2017 -	4350/1	
HCV Crafter II Van (SY_, SX_) 2.0 TDI RWD	DASA	90	08/2017 -		4350/1
HCV Crafter II Van (SY_, SX_) 2.0 TDI RWD	DASA	90	08/2017 -	4356	
HCV Crafter II Van (SY_, SX_) 2.0 TDI RWD	DASA	90	08/2017 -	4356/1	
HCV Crafter II Van (SY_, SX_) 2.0 TDI RWD	DASA	90	08/2017 -	4357	
HCV Crafter II Van (SY_, SX_) 2.0 TDI RWD	DASA	90	08/2017 -	4357/1	
HCV Crafter II Van (SY_, SX_) 2.0 TDI RWD	DASB	103	10/2017 -	4350	
HCV Crafter II Van (SY_, SX_) 2.0 TDI RWD	DASB	103	10/2017 -		4350
HCV Crafter II Van (SY_, SX_) 2.0 TDI RWD	DASB	103	10/2017 -	4350/1	
HCV Crafter II Van (SY_, SX_) 2.0 TDI RWD	DASB	103	10/2017 -		4350/1
HCV Crafter II Van (SY_, SX_) 2.0 TDI RWD	DASB	103	10/2017 -	4356	
HCV Crafter II Van (SY_, SX_) 2.0 TDI RWD	DASB	103	10/2017 -	4356/1	
HCV Crafter II Van (SY_, SX_) 2.0 TDI RWD	DASB	103	10/2017 -	4357	
HCV Crafter II Van (SY_, SX_) 2.0 TDI RWD	DASB	103	10/2017 -	4357/1	
HCV Crafter II Van (SY_, SX_) 2.0 TDI RWD	DASC	80	05/2017 -	4350	
HCV Crafter II Van (SY_, SX_) 2.0 TDI RWD	DASC	80	05/2017 -		4350
HCV Crafter II Van (SY_, SX_) 2.0 TDI RWD	DASC	80	05/2017 -	4350/1	
HCV Crafter II Van (SY_, SX_) 2.0 TDI RWD	DASC	80	05/2017 -		4350/1
HCV Crafter II Van (SY_, SX_) 2.0 TDI RWD	DASC	80	05/2017 -	4356	

MAKE & MODEL   		KW	YEAR		
VOLKSWAGEN					
HCV Crafter II Van (SY_, SX_) 2.0 TDI RWD	DASC	80	05/2017 -	4356/1	
HCV Crafter II Van (SY_, SX_) 2.0 TDI RWD	DASC	80	05/2017 -	4357	
HCV Crafter II Van (SY_, SX_) 2.0 TDI RWD	DASC	80	05/2017 -	4357/1	
HCV Crafter II Van (SY_, SX_) 2.0 TDI RWD	DAWA	130	05/2017 -	4350	
HCV Crafter II Van (SY_, SX_) 2.0 TDI RWD	DAWA	130	05/2017 -		4350
HCV Crafter II Van (SY_, SX_) 2.0 TDI RWD	DAWA	130	05/2017 -	4350/1	
HCV Crafter II Van (SY_, SX_) 2.0 TDI RWD	DAWA	130	05/2017 -		4350/1
HCV Crafter II Van (SY_, SX_) 2.0 TDI RWD	DAWA	130	05/2017 -	4356	
HCV Crafter II Van (SY_, SX_) 2.0 TDI RWD	DAWA	130	05/2017 -	4356/1	
HCV Crafter II Van (SY_, SX_) 2.0 TDI RWD	DAWA	130	05/2017 -	4357	
HCV Crafter II Van (SY_, SX_) 2.0 TDI RWD	DAWA	130	05/2017 -	4357/1	
HCV Crafter II Van (SY_, SX_) e-Crafter	EBHA	100	07/2018 -	4350	
HCV Crafter II Van (SY_, SX_) e-Crafter	EBHA	100	07/2018 -		4350
HCV Crafter II Van (SY_, SX_) e-Crafter	EBHA	100	07/2018 -	4350/1	
HCV Crafter II Van (SY_, SX_) e-Crafter	EBHA	100	07/2018 -		4350/1
HCV Crafter II Van (SY_, SX_) e-Crafter	EBHA	100	07/2018 -	4356	
HCV Crafter II Van (SY_, SX_) e-Crafter	EBHA	100	07/2018 -	4356/1	
HCV Crafter II Van (SY_, SX_) e-Crafter	EBHA	100	07/2018 -	4357	
HCV Crafter II Van (SY_, SX_) e-Crafter	EBHA	100	07/2018 -	4357/1	
HCV Grand California Camper (SCB, SCC) 2.0 TDI	DAVA	130	04/2019 -	4350	
HCV Grand California Camper (SCB, SCC) 2.0 TDI	DAVA	130	04/2019 -		4350
HCV Grand California Camper (SCB, SCC) 2.0 TDI	DAVA	130	04/2019 -	4350/1	
HCV Grand California Camper (SCB, SCC) 2.0 TDI	DAVA	130	04/2019 -		4350/1
HCV Grand California Camper (SCB, SCC) 2.0 TDI	DAVA	130	04/2019 -	4356	
HCV Grand California Camper (SCB, SCC) 2.0 TDI	DAVA	130	04/2019 -	4356/1	
HCV Grand California Camper (SCB, SCC) 2.0 TDI	DAVA	130	04/2019 -	4357	
HCV Grand California Camper (SCB, SCC) 2.0 TDI	DAVA	130	04/2019 -	4357/1	
HCV Grand California Camper (SCB, SCC) 2.0 TDI 4motion	DAVA	130	04/2019 -	4350	
HCV Grand California Camper (SCB, SCC) 2.0 TDI 4motion	DAVA	130	04/2019 -		4350
HCV Grand California Camper (SCB, SCC) 2.0 TDI 4motion	DAVA	130	04/2019 -	4350/1	
HCV Grand California Camper (SCB, SCC) 2.0 TDI 4motion	DAVA	130	04/2019 -		4350/1
HCV Grand California Camper (SCB, SCC) 2.0 TDI 4motion	DAVA	130	04/2019 -	4356	
HCV Grand California Camper (SCB, SCC) 2.0 TDI 4motion	DAVA	130	04/2019 -	4356/1	
HCV Grand California Camper (SCB, SCC) 2.0 TDI 4motion	DAVA	130	04/2019 -	4357	
HCV Grand California Camper (SCB, SCC) 2.0 TDI 4motion	DAVA	130	04/2019 -	4357/1	
Jetta II (19E, 1G2, 165) 1.0	HZ	33	08/1984 - 10/1991	3441/1	
Jetta II (19E, 1G2, 165) 1.0	HZ	37	08/1984 - 10/1991	3441/1	
Jetta II (19E, 1G2, 165) 44256	GT	43	01/1984 - 10/1986	3441/1	
Jetta II (19E, 1G2, 165) 44256	HK (01.84-07.85), MH	40	01/1984 - 06/1987	3441/1	
Jetta II (19E, 1G2, 165) 44256 Cat	2G (08.89-12.91), MH (06.87-12.88), NZ (06.87-12.9	40	06/1987 - 12/1991	3441/1	
Jetta II (19E, 1G2, 165) 44348 D	JP, ME (05.88-10.91)	40	01/1984 - 10/1991	3441/1	
Jetta IV (1J2, 9M2) 44348	AEH, AKL, APF	74	10/1998 - 05/2005	3782/1	
Jetta IV (1J2, 9M2) 44409 4motion	AGN, BAF	92	10/1998 - 05/2005	3782/1	
Jetta IV (1J2, 9M2) 44440 TDi	AHF, ASV	81	10/1998 - 06/2001	3782/1	
Jetta IV Variant (1J5) 44348	AEH, AKL, APF	74	10/1998 - 05/2005	3782/1	
Jetta IV Variant (1J5) 44409 4motion	AGN, BAF	92	10/1998 - 05/2005	3782/1	
Jetta IV Variant (1J5) 44440 TDi	AHF, ASV	81	10/1998 - 06/2001	3782/1	
Jetta IV Variant (1J6) 44348	AEH, AKL, APF	74	10/1998 - 05/2005	3782/1	
Jetta IV Variant (1J6) 44409 4motion	AGN, BAF	92	10/1998 - 05/2005	3782/1	
Jetta IV Variant (1J6) 44440 TDi	AHF, ASV	81	10/1998 - 06/2001	3782/1	
LCV Caddy IV Alltrack Van (SAA) 1.0 TSI	CHZG	75	11/2015 -	4228/1	4336
LCV Caddy IV Alltrack Van (SAA) 2.0 TDI	CUUB (05.15-11.15), DFSB (11.15-.)	110	05/2015 -	4228/1	4336
LCV Caddy IV Alltrack Van (SAA) 2.0 TDI	CUUD (05.15-11.15), DFSD (11.15-.)	75	05/2015 -	4228/1	4336
LCV Caddy IV Alltrack Van (SAA) 2.0 TDI	CUUF (05.15-11.15), DFSC (11.15-07.19), DFSF (11.1	55	05/2015 -	4228/1	4336
LCV Caddy IV Alltrack Van (SAA) 2.0 TDI 4motion	CUUE, DFSE	90	05/2015 -	4228/1	4336
LCV Caddy IV Alltrack Van (SAA) 2.0 TDI 4motion	DFSB	110	11/2015 -	4228/1	4336
LCV Caddy IV Alltrack Van (SAA) 44228 TSI	CYVC	62	06/2015 -	4228/1	4336
LCV Caddy IV Alltrack Van (SAA) 44287 TGI CNG	CPWA	81	06/2015 -	4228/1	4336
LCV Caddy IV Alltrack Van (SAA) 44287 TSI	CZCB	92	05/2015 -	4228/1	4336
LCV Caddy IV Van (SAA, SAH) 1.0 TSI	CHZG, DKRE (11.18-.)	75	11/2015 -	4228/1	4336
LCV Caddy IV Van (SAA, SAH) 2.0 TDI	CFHC, CLCB	103	05/2015 -	4228/1	4336
LCV Caddy IV Van (SAA, SAH) 2.0 TDI	CLCA	81	09/2015 -	4228/1	4336
LCV Caddy IV Van (SAA, SAH) 2.0 TDI	CUUB, DFSB	110	05/2015 -	4228/1	4336
LCV Caddy IV Van (SAA, SAH) 2.0 TDI	CUUD, DFSD	75	05/2015 -	4228/1	4336
LCV Caddy IV Van (SAA, SAH) 2.0 TDI	CUUF, DFSC, DFSF	55	05/2015 -	4228/1	4336
LCV Caddy IV Van (SAA, SAH) 2.0 TDI 4motion	CFHC	103	05/2015 -	4228/1	4336
LCV Caddy IV Van (SAA, SAH) 2.0 TDI 4motion	CFHF, CLCA	81	05/2015 - 05/2016	4228/1	4336
LCV Caddy IV Van (SAA, SAH) 2.0 TDI 4motion	CUUE, DFSE	90	05/2015 -	4228/1	4336
LCV Caddy IV Van (SAA, SAH) 2.0 TDI 4motion	DFSB	110	11/2015 -	4228/1	4336
LCV Caddy IV Van (SAA, SAH) 2.0 TDI 4motion	DFSC	55	11/2015 -	4228/1	4336
LCV Caddy IV Van (SAA, SAH) 44228 TSI	CYVC	62	06/2015 -	4228/1	4336
LCV Caddy IV Van (SAA, SAH) 44287 TGI CNG	CPWA	81	06/2015 -	4228/1	4336
LCV Caddy IV Van (SAA, SAH) 44287 TSI	CZCB	92	05/2015 -	4228/1	4336
LCV Caddy IV Van (SAA, SAH) 44348 TDI	CAYD	75	05/2015 -	4228/1	4336
LCV Caddy IV Van (SAA, SAH) 44348 TDI	CAYE	55	05/2015 - 11/2017	4228/1	4336
LCV Caddy V Van (SBA, SBH) TDi	DTRC	90	09/2020 -	4228/1	

MAKE & MODEL		KW	YEAR		
VOLKSWAGEN					
LCV Fox Van (5Z1) 44287 TDi	BNM	51	04/2005 - 12/2011	3782/1	
LCV Golf II Van (19E, 1G1) 44348 D	JP	40	08/1983 - 07/1991	3441/1	
LCV Golf IV Van (1J1) 44440 TDI	AGR	66	05/2000 - 09/2002	3782/1	
LCV Polo Van (86CF) 1.0	AAU	33	08/1992 - 07/1994	3441/1	
LCV Polo Van (86CF) 1.0	AAU	33	08/1992 - 07/1994	3585/1	
LCV Polo Van (86CF) 44256	AAV	40	08/1992 - 07/1994	3441/1	
LCV Polo Van (86CF) 44256	AAV	40	08/1992 - 07/1994	3585/1	
LCV Polo Van (86CF) 44287 D	1W	35	08/1992 - 07/1994	3585/1	
LCV Polo Van Box body / Hatchback (6N1) 1.0	AEV	33	10/1994 - 12/1999	3585/1	
LCV Polo Van Box body / Hatchback (6N1) 44348	AEA	55	09/1994 - 12/1995	3585/1	
LCV Polo Van Box body / Hatchback (6N1) 44440 D	AEF (10.94-.)	47	10/1994 - 12/1999	3585/1	
LCV Transporter IV Bus (70B, 70C, 7DB, 7DK, 70J, 7 44288 D	AJA	55	08/1997 - 04/2003		4345
LCV Transporter IV Bus (70B, 70C, 7DB, 7DK, 70J, 7 44318	AAF (11.90-12.93), ACU, AEN, AEU	81	09/1990 - 06/2003		4345
LCV Transporter IV Bus (70B, 70C, 7DB, 7DK, 70J, 7 44318	AET (08.96-.), APL (05.99-.), AVT	85	08/1996 - 04/2003		4345
LCV Transporter IV Bus (70B, 70C, 7DB, 7DK, 70J, 7 44318 Syncro	AAF (11.92-12.93), ACU (01.94-.), AEU	81	08/1992 - 04/2003		4345
LCV Transporter IV Bus (70B, 70C, 7DB, 7DK, 70J, 7 44318 Syncro	AET (08.96-.), APL (05.99-.), AVT	85	07/1996 - 04/2003		4345
LCV Transporter IV Bus (70B, 70C, 7DB, 7DK, 70J, 7 44318 TDI	ACV, AUF, AYC	75	09/1995 - 04/2003		4345
LCV Transporter IV Bus (70B, 70C, 7DB, 7DK, 70J, 7 44318 TDI	AHY, AXG	111	05/1998 - 04/2003		4345
LCV Transporter IV Bus (70B, 70C, 7DB, 7DK, 70J, 7 44318 TDI	AJT, AYY	65	05/1998 - 04/2003		4345
LCV Transporter IV Bus (70B, 70C, 7DB, 7DK, 70J, 7 44318 TDI Syncro	ACV, AXL	75	01/1996 - 04/2003		4345
LCV Transporter IV Bus (70B, 70C, 7DB, 7DK, 70J, 7 44440 TD	ABL	50	10/1992 - 04/2003		4345
LCV Transporter IV Platform/Chassis (70E, 70L, 70 44288 D	AJA	55	08/1997 - 04/2003		4345
LCV Transporter IV Platform/Chassis (70E, 70L, 70 44318	AAF (11.90-12.93), ACU (01.94-08.96), AEN, AEU	81	11/1990 - 04/2003		4345
LCV Transporter IV Platform/Chassis (70E, 70L, 70 44318	AET (08.96-.), APL (05.99-.), AVT	85	08/1996 - 04/2003		4345
LCV Transporter IV Platform/Chassis (70E, 70L, 70 44318 Syncro	AAF (11.92-12.93), ACU (01.94-10.96), AEU (06.97-1	81	11/1992 - 11/2001		4345
LCV Transporter IV Platform/Chassis (70E, 70L, 70 44318 Syncro	AET (08.96-.), APL (05.99-.), AVT	85	08/1996 - 04/2003		4345
LCV Transporter IV Platform/Chassis (70E, 70L, 70 44318 TDI	ACV, AUF, AYC	75	09/1995 - 04/2003		4345
LCV Transporter IV Platform/Chassis (70E, 70L, 70 44318 TDI	AJT, AYY	65	05/1998 - 04/2003		4345
LCV Transporter IV Platform/Chassis (70E, 70L, 70 44318 TDI Syncro	ACV, AXL	75	05/1998 - 04/2003		4345
LCV Transporter IV Platform/Chassis (70E, 70L, 70 44440 TD	ABL	50	10/1992 - 04/2003		4345
LCV Transporter IV Van (70A, 70H, 7DA, 7DH) 44288 D	AJA	55	08/1997 - 04/2003		4345
LCV Transporter IV Van (70A, 70H, 7DA, 7DH) 44318	AAF (11.90-12.93), ACU (01.94-08.96), AEN, AEU	81	11/1990 - 04/2003		4345
LCV Transporter IV Van (70A, 70H, 7DA, 7DH) 44318	AET (08.96-.), APL (05.99-.), AVT	85	08/1996 - 04/2003		4345
LCV Transporter IV Van (70A, 70H, 7DA, 7DH) 44318 Syncro	ACU (01.96-10.96), AEU (06.97-11.01)	81	01/1996 - 11/2001		4345
LCV Transporter IV Van (70A, 70H, 7DA, 7DH) 44318 Syncro	AET (08.96-.), APL (05.99-.), AVT	85	08/1996 - 04/2003		4345
LCV Transporter IV Van (70A, 70H, 7DA, 7DH) 44318 TDI	ACV, AUF, AYC	75	09/1995 - 04/2003		4345
LCV Transporter IV Van (70A, 70H, 7DA, 7DH) 44318 TDI	AHY, AXG	111	09/2000 - 04/2003		4345
LCV Transporter IV Van (70A, 70H, 7DA, 7DH) 44318 TDI	AJT, AYY	65	12/1998 - 04/2003		4345
LCV Transporter IV Van (70A, 70H, 7DA, 7DH) 44318 TDI Syncro	ACV, AXL	75	09/1995 - 04/2003		4345
LCV Transporter IV Van (70A, 70H, 7DA, 7DH) 44440 TD	ABL	50	10/1992 - 04/2003		4345
New Beetle (9C1, 1C1) 2.0	AEG, APK (03.00-.), AQY, AZG, AZJ, BER	85	01/1998 - 09/2010	3782/1	
New Beetle (9C1, 1C1) 44440 TDI	ALH (01.98-.)	66	01/1998 - 06/2004	3782/1	
New Beetle Cabrio (1Y7) 2.0	AZJ, BDC, BEV, BGD	85	09/2002 - 10/2010	3782/1	
Passat VI (3C2, B6)/ Magotan 1.4 TSI	CAXA	90	05/2007 - 07/2010		4390
Passat VI (3C2, B6)/ Magotan 1.4 TSI EcoFuel	CDGA	110	01/2009 - 07/2010		4390
Passat VI (3C2, B6)/ Magotan 1.6	BSE, BSF	75	05/2005 - 07/2010		4390
Passat VI (3C2, B6)/ Magotan 1.6 TDI	CAYC	77	08/2009 - 07/2010		4390
Passat VI (3C2, B6)/ Magotan 1.8 TSI	BZB, CDAA	118	05/2007 - 07/2010		4390
Passat VI (3C2, B6)/ Magotan 1.8 TSI	CDAB, CGYA	112	11/2009 - 07/2010		4390
Passat VI (3C2, B6)/ Magotan 1.9 TDI	BKC, BLS, BXE	77	03/2005 - 07/2010		4390
Passat VI (3C2, B6)/ Magotan 2.0 BlueTDI	CBAC	105	01/2009 - 11/2010		4390
Passat VI (3C2, B6)/ Magotan 2.0 FSI	AXX, BPY, BWA, CAWB, CBFA, CCTA, CCZA	147	07/2005 - 07/2010		4390
Passat VI (3C2, B6)/ Magotan 2.0 FSI	BLR, BLY, BVY, BVZ	110	03/2005 - 07/2010		4390
Passat VI (3C2, B6)/ Magotan 2.0 FSI	CCTB	125	08/2007 - 07/2010		4390
Passat VI (3C2, B6)/ Magotan 2.0 FSI 4motion	BLX, BLY, BVX	110	09/2005 - 07/2010		4390
Passat VI (3C2, B6)/ Magotan 2.0 TDI	BMA, CBAA	100	03/2005 - 11/2010		4390
Passat VI (3C2, B6)/ Magotan 2.0 TDI	BMP	103	03/2005 - 05/2009		4390
Passat VI (3C2, B6)/ Magotan 2.0 TDI	BMR, CBBB	125	08/2005 - 07/2010		4390
Passat VI (3C2, B6)/ Magotan 2.0 TDI	BUZ	120	08/2005 - 05/2009		4390
Passat VI (3C2, B6)/ Magotan 2.0 TDI	CBDC	81	11/2008 - 07/2010		4390
Passat VI (3C2, B6)/ Magotan 2.0 TDI 16V	BKP, CBAB	103	03/2005 - 07/2010		4390
Passat VI (3C2, B6)/ Magotan 2.0 TDI 16V 4motion	BKP, CBAB	103	03/2005 - 08/2010		4390
Passat VI (3C2, B6)/ Magotan 2.0 TDI 4motion	BMP	103	03/2005 - 05/2009		4390
Passat VI (3C2, B6)/ Magotan 2.0 TDI 4motion	CBBB	125	05/2009 - 07/2010		4390
Passat VI (3C2, B6)/ Magotan 2.0 TDi	BMN	125	06/2008 - 12/2010		4390
Passat VI (3C2, B6)/ Magotan 3.2 FSI 4motion	AXZ	184	11/2005 - 07/2010		4390
Passat VI (3C2, B6)/ Magotan 3.6 FSI	BLV	206	06/2005 - 07/2010		4390
Passat VI (3C2, B6)/ Magotan 3.6 FSI 4motion	BLV	206	09/2005 - 07/2010		4390
Passat VI (3C2, B6)/ Magotan 3.6 R36 4motion	BWS	220	04/2007 - 07/2010		4390
Passat VI Variant (3C5, B6) 1.4 TSI	CAXA	90	05/2007 - 11/2010		4390
Passat VI Variant (3C5, B6) 1.4 TSI EcoFuel	CDGA	110	01/2009 - 11/2010		4390
Passat VI Variant (3C5, B6) 1.6	BSE, BSF	75	08/2005 - 11/2010		4390
Passat VI Variant (3C5, B6) 1.6 TDI	CAYC	77	08/2009 - 11/2010		4390
Passat VI Variant (3C5, B6) 1.8 TSI	BZB, CDAA	118	05/2007 - 10/2011		4390
Passat VI Variant (3C5, B6) 1.8 TSI	CDAB, CGYA	112	11/2009 - 11/2010		4390
Passat VI Variant (3C5, B6) 1.9 TDI	BKC, BLS, BXE	77	08/2005 - 11/2010		4390

MAKE & MODEL   		KW	YEAR		
VOLKSWAGEN					
Passat VI Variant (3C5, B6) 2.0 BlueTDI	CBAC	105	01/2009 - 11/2010		4390
Passat VI Variant (3C5, B6) 2.0 FSI	AXX, BPY, BWA, CAWB, CBFA, CCTA, CCZA	147	08/2005 - 11/2010		4390
Passat VI Variant (3C5, B6) 2.0 FSI	BLR, BLY, BVY, BVZ	110	08/2005 - 11/2010		4390
Passat VI Variant (3C5, B6) 2.0 FSI 4motion	BLX, BLY, BVX	110	09/2005 - 11/2010		4390
Passat VI Variant (3C5, B6) 2.0 TDI	BMA, CBAA	100	08/2005 - 11/2010		4390
Passat VI Variant (3C5, B6) 2.0 TDI	BMP	103	08/2005 - 05/2009		4390
Passat VI Variant (3C5, B6) 2.0 TDI	BMR, CBBB	125	08/2005 - 11/2010		4390
Passat VI Variant (3C5, B6) 2.0 TDI	BUZ	120	08/2005 - 05/2009		4390
Passat VI Variant (3C5, B6) 2.0 TDI	CBDC	81	11/2008 - 11/2010		4390
Passat VI Variant (3C5, B6) 2.0 TDI 16V	BKP, CBAB	103	08/2005 - 11/2010		4390
Passat VI Variant (3C5, B6) 2.0 TDI 16V 4motion	BKP, CBAB	103	08/2005 - 11/2010		4390
Passat VI Variant (3C5, B6) 2.0 TDI 4motion	BMP	103	08/2005 - 05/2009		4390
Passat VI Variant (3C5, B6) 2.0 TDI 4motion	CBBB	125	05/2009 - 11/2010		4390
Passat VI Variant (3C5, B6) 2.0 TDi	BMN	125	06/2008 - 12/2010		4390
Passat VI Variant (3C5, B6) 3.2 FSI 4motion	AXZ	184	11/2005 - 11/2010		4390
Passat VI Variant (3C5, B6) 3.6 FSI	BLV	206	09/2005 - 11/2010		4390
Passat VI Variant (3C5, B6) 3.6 FSI 4motion	BLV	206	09/2006 - 12/2007		4390
Passat VI Variant (3C5, B6) 3.6 R36 4motion	BWS	220	04/2007 - 11/2010		4390
Passat VII (362, B7) 1.4 TSI	CAXA	90	08/2010 - 12/2014		4390
Passat VII (362, B7) 1.4 TSI	CTHD	118	11/2012 - 12/2014		4390
Passat VII (362, B7) 1.4 TSI EcoFuel	CDGA	110	08/2010 - 12/2014		4390
Passat VII (362, B7) 1.4 TSI MultiFuel	CKMA	118	11/2010 - 12/2014		4390
Passat VII (362, B7) 1.6 TDI	CAYC	77	08/2010 - 12/2014		4390
Passat VII (362, B7) 1.8 TSI	CDAA	118	08/2010 - 12/2014		4390
Passat VII (362, B7) 1.8 TSI	CDAB	112	02/2011 - 12/2014		4390
Passat VII (362, B7) 2.0 TDI	CFFA	100	08/2010 - 12/2014		4390
Passat VII (362, B7) 2.0 TDI	CFFB	103	08/2010 - 12/2014		4390
Passat VII (362, B7) 2.0 TDI	CFGB, CLLA	125	08/2010 - 12/2014		4390
Passat VII (362, B7) 2.0 TDI	CFGC	130	12/2012 - 12/2014		4390
Passat VII (362, B7) 2.0 TDI 4motion	CFFB	103	08/2010 - 12/2014		4390
Passat VII (362, B7) 2.0 TDI 4motion	CFGB	125	08/2010 - 01/2013		4390
Passat VII (362, B7) 2.0 TDI 4motion	CFGC	130	01/2013 - 12/2014		4390
Passat VII (362, B7) 2.0 TSI	CCZB	155	11/2010 - 12/2014		4390
Passat VII (362, B7) 3.6 FSI 4motion	BWS	220	01/2011 - 12/2014		4390
Passat VII (A32, A33, B7) 3.6 FSI	CDVB	206	04/2011 -		4390
Passat VII Alltrack (365, B7) 1.8 TSI	CDAA	118	01/2012 - 12/2014		4390
Passat VII Alltrack (365, B7) 1.8 TSI	CDAB	112	01/2012 - 12/2014		4390
Passat VII Alltrack (365, B7) 2.0 TDI	CFFB	103	01/2012 - 12/2014		4390
Passat VII Alltrack (365, B7) 2.0 TDI 4motion	CFFB	103	01/2012 - 12/2014		4390
Passat VII Alltrack (365, B7) 2.0 TDI 4motion	CFGB	125	01/2012 - 12/2014		4390
Passat VII Alltrack (365, B7) 2.0 TDI 4motion	CFGC	130	01/2013 - 12/2014		4390
Passat VII Alltrack (365, B7) 2.0 TSI 4motion	CCZB	155	01/2012 - 12/2014		4390
Passat VII CC (357, B6) 1.4 TSI MultiFuel	CKMA	118	01/2011 - 01/2012		4390
Passat VII CC (357, B6) 1.8 TSI	BZB, CDAA	118	06/2008 - 01/2012		4390
Passat VII CC (357, B6) 1.8 TSI	CDAB, CGYA	112	11/2008 - 05/2010		4390
Passat VII CC (357, B6) 2.0 BlueTDI	CBAC	105	05/2009 - 11/2010		4390
Passat VII CC (357, B6) 2.0 TDI	CBAA, CFFA	100	06/2008 - 05/2011		4390
Passat VII CC (357, B6) 2.0 TDI	CBAB, CFFB	103	06/2008 - 01/2012		4390
Passat VII CC (357, B6) 2.0 TDI	CBBA	120	05/2008 - 05/2011		4390
Passat VII CC (357, B6) 2.0 TDI	CBBB, CFGB, CLLA	125	06/2008 - 01/2012		4390
Passat VII CC (357, B6) 2.0 TDI 4motion	CBAB, CFFB	103	08/2009 - 01/2012		4390
Passat VII CC (357, B6) 2.0 TDI 4motion	CBBB, CFGB	125	11/2009 - 01/2012		4390
Passat VII CC (357, B6) 2.0 TSI	CAWB, CBFA, CCTA, CCZA	147	06/2008 - 01/2012		4390
Passat VII CC (357, B6) 2.0 TSI	CCZB	155	11/2010 - 01/2012		4390
Passat VII CC (357, B6) 3.6 FSI	BLV, CNNA	206	06/2008 - 01/2012		4390
Passat VII CC (357, B6) 3.6 FSI 4motion	BLV, CNNA	206	06/2008 - 01/2012		4390
Passat VII CC (357, B6) 3.6 FSI 4motion	BWS	220	02/2008 - 12/2011		4390
Passat VII Variant (365, B7)/ Magotan 2.0 TDI	CFFA	100	08/2010 - 12/2014		4390
Passat VII Variant (365, B7)/ Magotan 2.0 TDI	CFFB	103	08/2010 - 12/2014		4390
Passat VII Variant (365, B7)/ Magotan 2.0 TDI	CFGB, CLLA	125	08/2010 - 12/2014		4390
Passat VII Variant (365, B7)/ Magotan 2.0 TDI	CFGC	130	12/2012 - 12/2014		4390
Passat VII Variant (365, B7)/ Magotan 2.0 TDI 4motion	CFFB	103	08/2010 - 12/2014		4390
Passat VII Variant (365, B7)/ Magotan 2.0 TDI 4motion	CFGB	125	08/2010 - 01/2013		4390
Passat VII Variant (365, B7)/ Magotan 2.0 TDI 4motion	CFGC	130	01/2013 - 12/2014		4390
Passat VII Variant (365, B7)/ Magotan 2.0 TSI	CCZB	155	11/2010 - 12/2015		4390
Passat VII Variant (365, B7)/ Magotan 44287 TSI	CAXA	90	08/2010 - 12/2014		4390
Passat VII Variant (365, B7)/ Magotan 44287 TSI	CTHD	118	11/2012 - 12/2014		4390
Passat VII Variant (365, B7)/ Magotan 44287 TSI EcoFuel	CDGA	110	08/2010 - 12/2014		4390
Passat VII Variant (365, B7)/ Magotan 44287 TSI MultiFuel	CKMA	118	11/2010 - 12/2014		4390
Passat VII Variant (365, B7)/ Magotan 44348 TDI	CAYC	77	08/2010 - 12/2014		4390
Passat VII Variant (365, B7)/ Magotan 44350 FSI 4motion	BWS	220	01/2011 - 12/2014		4390
Passat VII Variant (365, B7)/ Magotan 44409 TSI	CDAA	118	08/2010 - 12/2014		4390
Passat VII Variant (365, B7)/ Magotan 44409 TSI	CDAB	112	02/2011 - 12/2014		4390
Passat VIII (3G2, CB2, B8) 2.0 TDI	CRGA	130	05/2016 -	4228/1	
Passat VIII (3G2, CB2, B8) 2.0 TDI	CRLB, DBGA, DFGA, DSRA, DSRB	110	11/2014 -	4228/1	
Passat VIII (3G2, CB2, B8) 2.0 TDI	CRLD (01.16-05.17), DBGB (05.16-.), DFGB (11.17-07	81	01/2016 - 05/2017	4228/1	

MAKE & MODEL		KW	YEAR		
VOLKSWAGEN					
Passat VIII (3G2, CB2, B8) 2.0 TDI	CUPA	135	07/2015 -	4228/1	
Passat VIII (3G2, CB2, B8) 2.0 TDI	DDAA, DFCA, DFHA	140	11/2014 -	4228/1	
Passat VIII (3G2, CB2, B8) 2.0 TDI 4motion	CRLB, DFEA, DFGA	110	08/2014 - 11/2017	4228/1	
Passat VIII (3G2, CB2, B8) 2.0 TDI 4motion	CUAA	176	08/2014 -	4228/1	
Passat VIII (3G2, CB2, B8) 2.0 TDI 4motion	DDAA, DFCA, DFHA	140	11/2014 -	4228/1	
Passat VIII (3G2, CB2, B8) 2.0 TSI	CHHB, CXDA	162	02/2015 -	4228/1	
Passat VIII (3G2, CB2, B8) 2.0 TSI	CZPB, DKZA, DRFA	140	11/2018 -	4228/1	
Passat VIII (3G2, CB2, B8) 2.0 TSI 4motion	CJXA	206	05/2015 -	4228/1	
Passat VIII (3G2, CB2, B8) 2.0 TSI 4motion	DNUA	200	09/2018 -	4228/1	
Passat VIII (3G2, CB2, B8) 44287 GTE	-	160	10/2015 -	4228/1	
Passat VIII (3G2, CB2, B8) 44287 GTE Hybrid	CUKC, DGEB	115	06/2015 - 11/2018	4228/1	
Passat VIII (3G2, CB2, B8) 44287 TSI	CZCA	92	11/2014 -	4228/1	
Passat VIII (3G2, CB2, B8) 44287 TSI	CZDA, CZEA	110	11/2014 -	4228/1	
Passat VIII (3G2, CB2, B8) 44287 TSI 4motion	CZEA	110	02/2015 -	4228/1	
Passat VIII (3G2, CB2, B8) 44317 TSI	DADA, DPCA	110	08/2018 -	4228/1	
Passat VIII (3G2, CB2, B8) 44348 TDI	DCXA, DCZA	88	08/2014 -	4228/1	
Passat VIII (3G2, CB2, B8) 44409 TSI	CJSA, CJSC	132	02/2015 -	4228/1	
Passat VIII Alltrack (3G5, CB5, B8) 2.0 TDI 4motion	CRLB, DFEA	110	05/2015 - 11/2017	4228/1	
Passat VIII Alltrack (3G5, CB5, B8) 2.0 TDI 4motion	CUAA	176	05/2015 -	4228/1	
Passat VIII Alltrack (3G5, CB5, B8) 2.0 TDI 4motion	CUPA	135	07/2015 -	4228/1	
Passat VIII Alltrack (3G5, CB5, B8) 2.0 TDI 4motion	DDAA, DFCA, DFHA	140	05/2015 -	4228/1	
Passat VIII Alltrack (3G5, CB5, B8) 2.0 TSI 4motion	CHHB	162	07/2015 -	4228/1	
Passat VIII Alltrack (3G5, CB5, B8) 2.0 TSI 4motion	CJXA	206	11/2018 -	4228/1	
Passat VIII Alltrack (3G5, CB5, B8) 2.0 TSI 4motion	DNUA	200	08/2018 -	4228/1	
Passat VIII Alltrack (3G5, CB5, B8) 44287 GTE	-	160	10/2015 -	4228/1	
Passat VIII Alltrack (3G5, CB5, B8) 44287 TSI 4motion	CZEA	110	05/2015 -	4228/1	
Passat VIII Variant (3G5, CB5, B8) 2.0 TDI	CRLB, DBGA, DFGA, DSRA, DSRB	110	11/2014 -	4228/1	
Passat VIII Variant (3G5, CB5, B8) 2.0 TDI	CUPA	135	07/2015 -	4228/1	
Passat VIII Variant (3G5, CB5, B8) 2.0 TDI	DDAA, DFCA, DFHA	140	11/2014 -	4228/1	
Passat VIII Variant (3G5, CB5, B8) 2.0 TDI 4motion	CRLB, DFEA, DFGA	110	08/2014 - 11/2017	4228/1	
Passat VIII Variant (3G5, CB5, B8) 2.0 TDI 4motion	CUAA	176	08/2014 -	4228/1	
Passat VIII Variant (3G5, CB5, B8) 2.0 TDI 4motion	DDAA, DFCA, DFHA	140	11/2014 -	4228/1	
Passat VIII Variant (3G5, CB5, B8) 2.0 TSI	CHHB, CXDA	162	08/2014 -	4228/1	
Passat VIII Variant (3G5, CB5, B8) 2.0 TSI	CZPB, DKZA, DRFA	140	11/2018 -	4228/1	
Passat VIII Variant (3G5, CB5, B8) 2.0 TSI 4motion	CJXA	206	05/2015 -	4228/1	
Passat VIII Variant (3G5, CB5, B8) 2.0 TSI 4motion	DNUA	200	09/2018 -	4228/1	
Passat VIII Variant (3G5, CB5, B8) 44287 GTE	-	160	10/2015 -	4228/1	
Passat VIII Variant (3G5, CB5, B8) 44287 GTE Hybrid	CUKC, DGEB	115	06/2015 -	4228/1	
Passat VIII Variant (3G5, CB5, B8) 44287 TSI	CZCA	92	11/2014 -	4228/1	
Passat VIII Variant (3G5, CB5, B8) 44287 TSI	CZDA, CZEA	110	11/2014 -	4228/1	
Passat VIII Variant (3G5, CB5, B8) 44287 TSI 4motion	CZEA	110	02/2015 -	4228/1	
Passat VIII Variant (3G5, CB5, B8) 44317 TSI	DADA, DPCA	110	08/2018 -	4228/1	
Passat VIII Variant (3G5, CB5, B8) 44348 TDI	DCXA, DCZA	88	08/2014 -	4228/1	
Passat VIII Variant (3G5, CB5, B8) 44409 TSI	CJSA, CJSC	132	02/2015 -	4228/1	
Polo II (86C, 80) 1.0	GL	29	10/1981 - 10/1986	3441/1	
Polo II (86C, 80) 1.0	HZ (08.85-01.92)	33	08/1985 - 01/1992	3441/1	
Polo II (86C, 80) 1.0	HZ (08.85-01.92)	33	08/1985 - 01/1992	3585/1	
Polo II (86C, 80) 1.0 Cat	AAK (08.89-07.90), AAU (08.90-09.94), ACM (02.92-1	33	08/1989 - 09/1994	3441/1	
Polo II (86C, 80) 1.0 Cat	AAK (08.89-07.90), AAU (08.90-09.94), ACM (02.92-1	33	08/1989 - 09/1994	3585/1	
Polo II (86C, 80) 44197	HB	37	10/1981 - 09/1989	3441/1	
Polo II (86C, 80) 44256	3F	56	10/1990 - 08/1994	3585/1	
Polo II (86C, 80) 44256	GK (09.82-09.89)	55	09/1982 - 09/1989	3441/1	
Polo II (86C, 80) 44256	HK (08.83-07.85), MH	40	08/1983 - 07/1988	3441/1	
Polo II (86C, 80) 44256 Cat	2G (01.89-09.94), AAV (01.91-08.94), MH (07.87-12.	40	07/1987 - 09/1994	3441/1	
Polo II (86C, 80) 44256 Cat	2G (01.89-09.94), AAV (01.91-08.94), MH (07.87-12.	40	07/1987 - 09/1994	3585/1	
Polo II (86C, 80) 44256 Cat	3F (10.89-03.91)	55	10/1989 - 03/1991	3441/1	
Polo II (86C, 80) 44256 Cat	3F (10.89-03.91)	55	10/1989 - 03/1991	3585/1	
Polo II (86C, 80) 44256 D	MN	33	08/1986 - 07/1990	3441/1	
Polo II (86C, 80) 44287 D	1W	35	10/1990 - 09/1994	3585/1	
Polo II Classic (86C, 80) 1.0	AAK (08.89-07.90), AAU (08.90-09.94), ACM (02.92-1	33	01/1985 - 09/1994	3441/1	
Polo II Classic (86C, 80) 1.0	AAK (08.89-07.90), AAU (08.90-09.94), ACM (02.92-1	33	01/1985 - 09/1994	3585/1	
Polo II Classic (86C, 80) 1.0	GL	29	01/1985 - 10/1986	3441/1	
Polo II Classic (86C, 80) 44256	HK (01.85-07.85), MH	40	01/1985 - 07/1987	3441/1	
Polo II Classic (86C, 80) 44256 Cat	MH (07.87-12.88), NZ (07.87-12.88)	40	07/1987 - 09/1994	3441/1	
Polo II Classic (86C, 80) 44256 Cat	MH (07.87-12.88), NZ (07.87-12.88)	40	07/1987 - 09/1994	3585/1	
Polo II Classic (86C, 80) 44256 D	MN	33	08/1986 - 12/1988	3441/1	
Polo II Classic (86C, 80) 44287 D	1W	35	10/1990 - 09/1994	3585/1	
Polo II Coupe (86C, 80) 1.0	GL	29	05/1982 - 10/1986	3441/1	
Polo II Coupe (86C, 80) 1.0	HZ (08.85-01.92)	33	08/1985 - 01/1992	3441/1	
Polo II Coupe (86C, 80) 1.0	HZ (08.85-01.92)	33	08/1985 - 01/1992	3585/1	
Polo II Coupe (86C, 80) 1.0 Cat	AAK (08.89-07.90), AAU (08.90-09.94), ACM (02.92-1	33	08/1989 - 09/1994	3441/1	
Polo II Coupe (86C, 80) 1.0 Cat	AAK (08.89-07.90), AAU (08.90-09.94), ACM (02.92-1	33	08/1989 - 09/1994	3585/1	
Polo II Coupe (86C, 80) 44256	3F	57	03/1991 - 09/1994	3585/1	
Polo II Coupe (86C, 80) 44256	GK (09.82-09.89)	55	09/1982 - 09/1989	3441/1	
Polo II Coupe (86C, 80) 44256	GT	43	08/1982 - 07/1988	3441/1	
Polo II Coupe (86C, 80) 44256	HK (08.83-07.85), MH	40	08/1983 - 06/1987	3441/1	

MAKE & MODEL   		KW	YEAR		
VOLKSWAGEN					
Polo II Coupe (86C, 80) 44256 Cat	2G (01.89-08.94), AAV (01.91-08.94), MH (07.87-12.	40	07/1987 - 08/1994	3441/1	
Polo II Coupe (86C, 80) 44256 Cat	2G (01.89-08.94), AAV (01.91-08.94), MH (07.87-12.	40	07/1987 - 08/1994	3585/1	
Polo II Coupe (86C, 80) 44256 Cat	3F (10.89-09.94)	55	10/1989 - 09/1994	3441/1	
Polo II Coupe (86C, 80) 44256 Cat	3F (10.89-09.94)	55	10/1989 - 09/1994	3585/1	
Polo II Coupe (86C, 80) 44256 D	MN	33	08/1986 - 08/1990	3441/1	
Polo II Coupe (86C, 80) 44287 D	1W	35	08/1990 - 09/1994	3585/1	
Polo III (6N1) 45 1.0	AEV	33	10/1994 - 09/1996	3585/1	
Polo III (6N1) 55 44256	ADX	40	10/1994 - 07/1995	3585/1	
Polo III (6N1) 55 44287	AEX	40	08/1995 - 10/1999	3585/1	
Polo III (6N1) 60 44287	AEX, AKV, APQ	44	07/1995 - 10/1999	3585/1	
Polo III (6N1) 64 44440 D	AEF (10.94-.)	47	10/1994 - 10/1999	3585/1	
Polo III (6N1) 75 44348	AEA, AEE (07.95-.), AHS (03.96-.)	55	10/1994 - 10/1999	3585/1	
Polo III (6N1) 75 44348 4motion	AEA	55	08/1995 - 10/1999	3585/1	
Polo V (9N_) 44228	AWY, BMD	40	01/2002 - 05/2007	3782/1	
Polo V (9N_) 44228	BBM	44	05/2007 - 11/2009	3782/1	
Polo V (9N_) 44228 12V	AZQ, BME	47	10/2001 - 07/2007	3782/1	
Polo V (9N_) 44287	BLM	61	08/2002 - 11/2009	3782/1	
Polo V (9N_) 44287 16V	AUA, BBY, BKY	55	10/2001 - 05/2008	3782/1	
Polo V (9N_) 44287 16V	AUB, BBZ	74	10/2001 - 05/2008	3782/1	
Polo V (9N_) 44287 FSI	AXU	63	02/2002 - 07/2006	3782/1	
Polo V (9N_) 44287 TDI	BMS, BNV	59	04/2005 - 11/2009	3782/1	
Polo V (9N_) 44287 TDI	BNM, BWB	51	04/2005 - 11/2009	3782/1	
Polo V (9N_) 44348 16V	BTS	77	05/2006 - 11/2009	3782/1	
Polo V (9N_) 44409 GTI	BJX	110	09/2005 - 11/2009	4138/1	
Polo V (9N_) 44409 GTi Cup Edition	BBU	132	05/2006 - 11/2009	4138/1	
Polo V (9N_) 44440 TDI	ASZ (11.03-.), BLT (05.04-.)	96	11/2003 - 11/2009	4138/1	
Polo V (9N_) 44440 TDI	ATD, AXR, BMT	74	10/2001 - 11/2009	3782/1	
Polo V Sedan (9A4, 9A2, 9N2, 9A6) 44287	BBY (07.03-.), BKY	55	11/2002 - 04/2012	3782/1	
Polo V Sedan (9A4, 9A2, 9N2, 9A6) 44287	BBZ (11.03-.)	74	11/2003 - 06/2005	3782/1	
Polo V Sedan (9A4, 9A2, 9N2, 9A6) 44287	BLM	63	12/2003 - 08/2010	3782/1	
Polo V Sedan (9A4, 9A2, 9N2, 9A6) 44440 TDi	ATD	74	09/2002 -	3782/1	
Polo V Sedan (9N4) 44440 TDI	ATD	74	07/2003 - 12/2010	3782/1	
Polo VI (6R1, 6C1) 1.0	CHYA	44	01/2014 -	3782/1	
Polo VI (6R1, 6C1) 1.0	CHYB	55	01/2014 -	3782/1	
Polo VI (6R1, 6C1) 1.0 TSI	CHZB	70	11/2014 -	3782/1	
Polo VI (6R1, 6C1) 44228	CGPA	51	06/2009 -	3782/1	
Polo VI (6R1, 6C1) 44228	CGPB	44	06/2009 -	3782/1	
Polo VI (6R1, 6C1) 44228	CJLA	55	08/2011 -	3782/1	
Polo VI (6R1, 6C1) 44228 TDI	CFWA	55	10/2009 -	3782/1	
Polo VI (6R1, 6C1) 44228 TSI	CBZB	77	11/2009 -	3782/1	
Polo VI (6R1, 6C1) 44228 TSI	CBZC	66	05/2011 - 05/2014	3782/1	
Polo VI (6R1, 6C1) 44228 TSI	CJZD	81	01/2014 -	3782/1	
Polo VI (6R1, 6C1) 44228 TSI 16V	CJZC	66	02/2014 - 10/2017	3782/1	
Polo VI (6R1, 6C1) 44228 TSi	CBZA	63	06/2009 - 09/2017	3782/1	
Polo VI (6R1, 6C1) 44287 (6R1)	CDDA, CGGB, CLPA	63	03/2009 - 05/2014	3782/1	
Polo VI (6R1, 6C1) 44287 TDI	CUSA, CYZB	55	03/2014 - 10/2017	3782/1	
Polo VI (6R1, 6C1) 44287 TDI	CUSB	66	02/2014 -	3782/1	
Polo VI (6R1, 6C1) 44287 TSi	CAVB	125	07/2010 - 09/2017	3782/1	
Polo VI (6R1, 6C1) 44348	CFNA, CLSA	77	01/2010 -	3782/1	
Polo VI (6R1, 6C1) 44348	CWVA	81	07/2014 - 10/2017	3782/1	
Polo VI (6R1, 6C1) 44348	CWVB	66	07/2014 - 10/2017	3782/1	
Polo VI (6R1, 6C1) 44348 TDI	CAYA	55	06/2009 -	3782/1	
Polo VI (6R1, 6C1) 44348 TDI	CAYB	66	06/2009 -	3782/1	
Polo VI Sedan (602, 604 612 614)/ Vento 44228 TDI	CFWA	55	04/2010 -	3782/1	
Polo VI Sedan (602, 604 612 614)/ Vento 44228 TSi	CBZB	77	10/2013 -	3782/1	
Polo VI Sedan (602, 604 612 614)/ Vento 44287	CLPA	63	12/2010 -	3782/1	
Polo VI Sedan (602, 604 612 614)/ Vento 44348	CFNA, CLSA	77	05/2010 -	3782/1	
Polo VI Sedan (602, 604 612 614)/ Vento 44348	CFNB	63	11/2010 -	3782/1	
Polo VI Sedan (602, 604 612 614)/ Vento 44348	CWVA	81	05/2015 -	3782/1	
Polo VII (AW1, BZ1) 1.0	CHYB	55	06/2017 -	3782/1	
Polo VII (AW1, BZ1) 1.0	CHYC, DFNB	48	08/2017 -	3782/1	
Polo VII (AW1, BZ1) 1.0 TGI	DBYA	66	09/2017 -	3782/1	
Polo VII (AW1, BZ1) 1.0 TSI	DFNA, DSGB	59	09/2018 -	3782/1	
Polo VII (AW1, BZ1) 2.0 GTI	CZPC, DKZC	147	11/2017 -	4228/1	4336
Polo Vivo Hatchback 44287	CLPA	63	02/2010 - 09/2017	3782/1	
Polo Vivo Hatchback 44348 16V	CLSA	77	02/2010 - 09/2017	3782/1	
Polo Vivo Sedan 44287	CLPA	63	02/2010 - 09/2017	3782/1	
Sharan II (7N1, 7N2) 1.4 TSI	CAVA, CNWB, CTHA	110	05/2010 -		4390
Sharan II (7N1, 7N2) 1.8 TSI	CDAA	118	11/2011 -		4390
Sharan II (7N1, 7N2) 2.0 TDI	CUVC, DFLA, DLTA	110	05/2015 - 11/2015		4336
Sharan II (7N1, 7N2) 2.0 TDI	CUWA, DFMA	135	05/2015 -		4336
Sharan II (7N1, 7N2) 2.0 TDI	CFFA	100	05/2010 -		4390
Sharan II (7N1, 7N2) 2.0 TDI	CFFB	103	05/2010 -		4390
Sharan II (7N1, 7N2) 2.0 TDI	CFFE, CUVA, DFLD, DLTC	85	05/2011 - 07/2019		4390
Sharan II (7N1, 7N2) 2.0 TDI	CFGB	125	08/2010 -		4390
Sharan II (7N1, 7N2) 2.0 TDI	CFGC, DLUB	130	01/2013 - 11/2015		4390

MAKE & MODEL		KW	YEAR		
VOLKSWAGEN					
Sharan II (7N1, 7N2) 2.0 TDI 4motion	CUVC, DFLA, DLTA	110	05/2015 -		4336
Sharan II (7N1, 7N2) 2.0 TDI 4motion	DFMA	135	05/2016 -		4336
Sharan II (7N1, 7N2) 2.0 TDI 4motion	CFFB	103	05/2011 - 11/2015		4390
Sharan II (7N1, 7N2) 2.0 TSI	DEDA	162	05/2015 -		4336
Sharan II (7N1, 7N2) 2.0 TSI	CCZA	147	12/2010 -		4390
Sharan II (7N1, 7N2) 44287 TSI	CZDA, DJKA	110	05/2015 -		4336
Tiguan Allspace (BW2) 2.0 TDI	DFGA	110	06/2017 -	4228/1	
Tiguan Allspace (BW2) 2.0 TDI 4motion	DBGC, DFGA	110	06/2017 -	4228/1	
Tiguan Allspace (BW2) 2.0 TDI 4motion	DFHA	140	06/2017 -	4228/1	
Tiguan Allspace (BW2) 44287 TSI	CZDA, CZEA	110	06/2017 -	4228/1	
Tiguan I (5N_) 1.4 TSI	CAVA, CTHA	110	05/2008 - 07/2018		4390
Tiguan I (5N_) 1.4 TSI	CAVD, CTHD	118	05/2011 - 07/2018		4390
Tiguan I (5N_) 1.4 TSI	CAXA	90	08/2010 - 07/2018		4390
Tiguan I (5N_) 1.4 TSI	CZDA	110	05/2015 - 07/2018		4390
Tiguan I (5N_) 1.4 TSI	CZDB	92	05/2015 - 07/2018		4390
Tiguan I (5N_) 1.4 TSI 4motion	BWK, CAVA, CTHA	110	09/2007 - 07/2018		4390
Tiguan I (5N_) 1.4 TSI 4motion	CAVD, CTHD	118	05/2011 - 07/2018		4390
Tiguan I (5N_) 2.0 TDI	CBAB, CFFB	103	03/2008 - 07/2018		4390
Tiguan I (5N_) 2.0 TDI	CFFD, CUVE	81	05/2010 - 07/2018		4390
Tiguan I (5N_) 2.0 TDI	CUVC	110	05/2015 - 07/2018		4390
Tiguan I (5N_) 2.0 TDI 4motion	CBAA, CFFA	100	11/2007 - 07/2018		4390
Tiguan I (5N_) 2.0 TDI 4motion	CBAB, CFFB, CLJA	103	09/2007 - 07/2018		4390
Tiguan I (5N_) 2.0 TDI 4motion	CBBA	120	02/2008 - 08/2009		4390
Tiguan I (5N_) 2.0 TDI 4motion	CBBB, CFGB	125	09/2007 - 07/2018		4390
Tiguan I (5N_) 2.0 TDI 4motion	CFGC	130	11/2012 - 07/2018		4390
Tiguan I (5N_) 2.0 TDI 4motion	CUVC	110	05/2015 - 07/2018		4390
Tiguan I (5N_) 2.0 TDI 4motion	CUWA	135	05/2015 - 07/2018		4390
Tiguan I (5N_) 2.0 TDi	CBBB, CFGB	125	08/2011 - 03/2016		4390
Tiguan I (5N_) 2.0 TFSI	CAWB, CCTA	147	11/2007 - 07/2018		4390
Tiguan I (5N_) 2.0 TFSI 4motion	CAWA, CCTB, CCZC	125	09/2007 - 07/2018		4390
Tiguan I (5N_) 2.0 TFSI 4motion	CAWB, CCTA, CCZA	147	09/2007 - 07/2018		4390
Tiguan I (5N_) 2.0 TFSi	CCTB	125	05/2008 - 07/2018		4390
Tiguan I (5N_) 2.0 TSI 4motion	CCZB	155	05/2011 - 07/2018		4390
Tiguan I (5N_) 2.0 TSI 4motion	CCZD	132	05/2011 - 07/2018		4390
Tiguan II (AD1) 2.0 TDI	CYKC	81	08/2016 -	4228/1	
Tiguan II (AD1) 2.0 TDI	DFGA, DTSA, DTSB	110	01/2016 - 07/2020	4228/1	
Tiguan II (AD1) 2.0 TDI	DFGC	85	05/2016 -	4228/1	
Tiguan II (AD1) 2.0 TDI 4motion	CRFD	105	06/2016 -	4228/1	
Tiguan II (AD1) 2.0 TDI 4motion	CRGB	130	08/2016 -	4228/1	
Tiguan II (AD1) 2.0 TDI 4motion	DBGC, DFGA, DTSA, DTSB	110	01/2016 - 07/2020	4228/1	
Tiguan II (AD1) 2.0 TDI 4motion	DFHA	140	04/2016 -	4228/1	
Tiguan II (AD1) 2.0 TSI 4motion	CHHB	162	06/2016 -	4228/1	
Tiguan II (AD1) 2.0 TSI 4motion	CZPA	132	01/2016 -	4228/1	
Tiguan II (AD1) 44287 TSI	CZCA	92	01/2016 -	4228/1	
Tiguan II (AD1) 44287 TSI	CZDA, CZEA, DJVA	110	01/2016 -	4228/1	
Tiguan II (AD1) 44287 TSI 4motion	CZDA, CZEA	110	05/2016 -	4228/1	
Tiguan II (AD1) 44348 TDI	DGDB	85	05/2016 -	4228/1	
Touareg I (7LA, 7L6, 7L7) 44231 V8	AXQ (12.02-.)	228	12/2002 - 11/2006	4075/1	
Touareg I (7LA, 7L6, 7L7) 44231 V8 FSI	BAR	257	06/2006 - 05/2010	4075/1	
Touareg I (7LA, 7L6, 7L7) 5.0 R50 TDI	CBWA	257	08/2007 - 05/2010	4309	
Touareg I (7LA, 7L6, 7L7) 5.0 V10 TDI	AYH (10.02-.), BKW, BLE, BWF	230	10/2002 - 05/2010	4075/1	
Touareg I (7LA, 7L6, 7L7) 6.0 W12	BJN, CFRA	331	08/2004 - 05/2010	4309	
Touran III (5T1)/ Golf Touran 2.0 TDI	CRVA (11.15-07.19), CYKB (11.15-07.19), DFEB (02.1	81	11/2015 -	4228/1	
Touran III (5T1)/ Golf Touran 2.0 TDI	DFEA, DFGA	110	05/2015 -	4228/1	
Touran III (5T1)/ Golf Touran 2.0 TDI	DFHA	140	11/2015 - 07/2019	4228/1	
Touran III (5T1)/ Golf Touran 44228 TSI	CYVB	81	05/2015 -	4228/1	
Touran III (5T1)/ Golf Touran 44287 TSI	CZDA	110	05/2015 -	4228/1	
Touran III (5T1)/ Golf Touran 44348 TDI	CRKB	81	05/2015 - 05/2016	4228/1	
Touran III (5T1)/ Golf Touran 44348 TDI	DGDA	85	05/2016 -	4228/1	
Touran III (5T1)/ Golf Touran 44409 TSI	CJSA	132	11/2015 -	4228/1	
T-Roc (A11) 1.0 TSI	CHZJ, DKRF	85	07/2017 -	4228/1	
T-Roc (A11) 1.0 TSI	DLAA	81	09/2020 -	4228/1	
T-Roc (A11) 1.0 TSI 4motion	CHZJ, DKRF	85	01/2019 -	4228/1	
T-Roc (A11) 2.0 TDI	DFFA	110	03/2018 -	4228/1	
T-Roc (A11) 2.0 TDI 4motion	DFFA	110	09/2017 -	4228/1	
T-Roc (A11) 44317 TSI	DADA, DPCA	110	11/2017 -	4228/1	
T-Roc (A11) 44317 TSI 4motion	DADA, DPCA	110	05/2018 -	4228/1	
T-Roc (A11) 44348 TDI	DGTE	85	03/2018 -	4228/1	
T-Roc Cabrio 1.0 TSI	DKRF	85	12/2019 -	4228/1	
T-Roc Cabrio 1.0 TSI	DLAA	81	12/2019 -	4228/1	
T-Roc Cabrio 44317 TSI	DPCA	110	12/2019 -	4228/1	
Up (121, 122 BL1, BL2) 1.0	CHYA, CHYE, DAFA	44	08/2011 -	3782/1	
Up (121, 122 BL1, BL2) 1.0	CHYB, CWRA	55	08/2011 -	3782/1	
Up (121, 122 BL1, BL2) 1.0 12V Flex	-	60	11/2014 -	3782/1	
Up (121, 122 BL1, BL2) 1.0 EcoFuel	CPGA	50	11/2012 -	3782/1	
Up (121, 122 BL1, BL2) 1.0 GTI	DKRA	85	11/2017 -	4228/1	
Up (121, 122 BL1, BL2) 1.0 TR4 Flex	-	62	01/2014 -	3782/1	
Up (121, 122 BL1, BL2) 1.0 TSI	CHZA, DKLC	66	05/2016 -	3782/1	
Up (121, 122 BL1, BL2) 1.0 TSi Flex	-	77	08/2015 -	3782/1	
Up (121, 122 BL1, BL2) e-Up	EABA	60	07/2013 -	3782/1	
Up (121, 122 BL1, BL2) e-Up	EBMA	61	07/2013 -	3782/1	

BESER®

MAKE & MODEL		KW	YEAR		
VOLVO					
66	DL 1.1	33	08/75 – 08/78		3326
66	GL 1.3	42	08/75 – 08/78		3326
780	2.4 D	90	04/86 – 07/90	3641	3642
780	2.9	108	08/87 – 07/90	3641	3642
780	2.9	115	08/86 – 07/87	3641	3642
240 (P242, P244)	2.0	60	08/74 – 07/76	3373	
240 (P242, P244)	2.0	66	08/76 – 07/79	3373	
240 (P242, P244)	2.0	71	09/78 – 08/83	3373	
240 (P242, P244)	2.0	76	08/84 – 07/85	3373	
240 (P242, P244)	2.0	82	09/88 – 12/93	3373	
240 (P242, P244)	2.0	89	09/84 – 12/93	3373	
240 (P242, P244)	2.0	100	10/82 – 08/84	3373	
240 (P242, P244)	2.1	71	08/74 – 07/75	3373	
240 (P242, P244)	2.1	74	08/75 – 07/80	3373	
240 (P242, P244)	2.1	79	08/80 – 07/84	3373	
240 (P242, P244)	2.1	90	08/74 – 07/80	3373	
240 (P242, P244)	2.1 Turbo	114	08/80 – 07/84	3373	
240 (P242, P244)	2.3	81	08/84 – 07/86	3373	
240 (P242, P244)	2.3	82	08/80 – 07/84	3373	
240 (P242, P244)	2.3	83	08/86 – 07/87	3373	
240 (P242, P244)	2.3	85	08/86 – 12/88	3373	
240 (P242, P244)	2.3	96	08/83 – 07/85	3373	
240 (P242, P244)	2.3	98	08/84 – 12/89	3373	
240 (P242, P244)	2.3	100	08/80 – 07/83	3373	
240 (P242, P244)	2.3	103	08/78 – 07/80	3373	
240 (P242, P244)	2.3 i CAT	85	08/86 – 07/93	3373	
240 (P242, P244)	2.4 Diesel	58	08/87 – 08/93	3373	
240 (P242, P244)	2.4 Diesel	60	08/78 – 07/85	3373	
240 (P242, P244)	2.7 GLT6	104	08/79 – 07/80	3373	
240 (P242, P244)	2.8	114	10/82 – 09/84	3373	
240 Kombi (P245)	2.0	60	08/74 – 07/75	3373	
240 Kombi (P245)	2.0	66	08/76 – 01/82	3373	
240 Kombi (P245)	2.0	71	08/80 – 12/84	3373	
240 Kombi (P245)	2.0	76	08/84 – 07/85	3373	
240 Kombi (P245)	2.0	82	09/88 – 12/93	3373	
240 Kombi (P245)	2.0	86	08/83 – 07/93	3373	
240 Kombi (P245)	2.0	100	10/82 – 08/84	3373	
240 Kombi (P245)	2.0 D	50	09/78 – 10/80	3373	
240 Kombi (P245)	2.1	71	08/74 – 07/75	3373	
240 Kombi (P245)	2.1	74	08/75 – 07/80	3373	
240 Kombi (P245)	2.1	79	08/80 – 07/84	3373	
240 Kombi (P245)	2.1	80	08/80 – 07/84	3373	
240 Kombi (P245)	2.1	86	01/77 – 08/78	3373	
240 Kombi (P245)	2.1	90	08/74 – 07/79	3373	
240 Kombi (P245)	2.1 Turbo	114	08/80 – 07/85	3373	
240 Kombi (P245)	2.3	81	08/84 – 07/86	3373	
240 Kombi (P245)	2.3	82	08/80 – 07/84	3373	
240 Kombi (P245)	2.3	83	08/86 – 07/87	3373	
240 Kombi (P245)	2.3	85	08/86 – 12/88	3373	
240 Kombi (P245)	2.3	96	08/84 – 07/85	3373	
240 Kombi (P245)	2.3	98	08/84 – 12/88	3373	
240 Kombi (P245)	2.3	100	01/83 – 12/84	3373	
240 Kombi (P245)	2.3 CAT	100	08/91 – 07/92	3373	
240 Kombi (P245)	2.3 i CAT	85	08/86 – 07/93	3373	
240 Kombi (P245)	2.4 Diesel	58	08/88 – 08/93	3373	
240 Kombi (P245)	2.4 Diesel	60	04/79 – 08/93	3373	
240 Kombi (P245)	2.7 GLT6	104	08/79 – 07/80	3373	
240 Kombi (P245)	2.8	95	10/81 – 09/82	3373	
240 Kombi (P245)	2.8	114	10/80 – 09/82	3373	
260 (P262, P264)	2.7	92	08/76 – 07/82	3373	
260 (P262, P264)	2.7	95	08/80 – 07/82	3373	
260 (P262, P264)	2.7	103	08/74 – 07/80	3373	
260 (P262, P264)	2.8	109	08/78 – 07/82	3373	
260 (P262, P264)	2.8	114	08/80 – 07/82	3373	
260 Coupe (P262)	2.7	103	08/77 – 07/78	3373	
260 Estate (P265)	2.7	92	08/75 – 07/77	3373	
260 Estate (P265)	2.7	103	07/75 – 07/82	3373	
260 Estate (P265)	2.7	109	10/78 – 07/82	3373	
260 Estate (P265)	2.8	114	08/80 – 07/82	3373	
340-360 (343, 345)	1.3	49	01/89 – 12/90	3378	
340-360 (343, 345)	1.3	49	01/89 – 12/90	3490	
340-360 (343, 345)	1.4	46	08/82 – 08/85	3378	
340-360 (343, 345)	1.4	46	08/82 – 08/85	3490	
340-360 (343, 345)	1.4	47	08/79 – 07/83	3378	
340-360 (343, 345)	1.4	47	08/79 – 07/83	3490	
340-360 (343, 345)	1.4	50	08/86 – 12/88	3378	

MAKE & MODEL		KW	YEAR		
VOLVO					
340-360 (343, 345)	1.4	50	08/86 – 12/88	3490	
340-360 (343, 345)	1.4	51	08/75 – 07/83	3378	
340-360 (343, 345)	1.4	51	08/75 – 07/83	3490	
340-360 (343, 345)	1.4	51	08/87 – 07/88	3378	
340-360 (343, 345)	1.4	51	08/87 – 07/88	3490	
340-360 (343, 345)	1.4	52	08/83 – 07/86	3378	
340-360 (343, 345)	1.4	52	08/83 – 07/86	3490	
340-360 (343, 345)	1.6 Diesel	40	08/84 – 07/91	3378	
340-360 (343, 345)	1.6 Diesel	40	08/84 – 07/91	3490	
340-360 (343, 345)	1.7	59	08/85 – 07/91	3378	
340-360 (343, 345)	1.7	59	08/85 – 07/91	3490	
340-360 (343, 345)	2.0	65	08/80 – 07/84	3378	
340-360 (343, 345)	2.0	65	08/80 – 07/84	3490	
340-360 (343, 345)	2.0	68	08/83 – 07/84	3378	
340-360 (343, 345)	2.0	68	08/83 – 07/84	3490	
340-360 (343, 345)	2.0	70	08/80 – 07/83	3378	
340-360 (343, 345)	2.0	70	08/80 – 07/83	3490	
340-360 (343, 345)	2.0	77	08/84 – 07/87	3378	
340-360 (343, 345)	2.0	77	08/84 – 07/87	3490	
340-360 (343, 345)	2.0	80	08/88 – 07/89	3378	
340-360 (343, 345)	2.0	80	08/88 – 07/89	3490	
340-360 (343, 345)	2.0	81	08/87 – 07/88	3378	
340-360 (343, 345)	2.0	81	08/87 – 07/88	3490	
340-360 (343, 345)	2.0	82	08/86 – 07/88	3378	
340-360 (343, 345)	2.0	82	08/86 – 07/88	3490	
340-360 (343, 345)	2.0	83	08/82 – 07/84	3378	
340-360 (343, 345)	2.0	83	08/82 – 07/84	3490	
340-360 (343, 345)	2.0	85	08/82 – 07/84	3378	
340-360 (343, 345)	2.0	85	08/82 – 07/84	3490	
340-360 (343, 345)	2.0	87	08/84 – 07/86	3378	
340-360 (343, 345)	2.0	87	08/84 – 07/86	3490	
340-360 (343, 345)	2.1	90	08/81 – 07/82	3378	
340-360 (343, 345)	2.1	90	08/81 – 07/82	3490	
340-360 Saloon (344)	1.3	49	01/89 – 12/90	3378	
340-360 Saloon (344)	1.3	49	01/89 – 12/90	3490	
340-360 Saloon (344)	1.4	46	01/83 – 12/86	3378	
340-360 Saloon (344)	1.4	46	01/83 – 12/86	3490	
340-360 Saloon (344)	1.4	50	08/86 – 12/88	3378	
340-360 Saloon (344)	1.4	50	08/86 – 12/88	3490	
340-360 Saloon (344)	1.4	51	08/87 – 07/88	3378	
340-360 Saloon (344)	1.4	51	08/87 – 07/88	3490	
340-360 Saloon (344)	1.4	53	08/83 – 07/86	3378	
340-360 Saloon (344)	1.4	53	08/83 – 07/86	3490	
340-360 Saloon (344)	1.6 Diesel	40	08/84 – 07/91	3378	
340-360 Saloon (344)	1.6 Diesel	40	08/84 – 07/91	3490	
340-360 Saloon (344)	1.7	59	08/85 – 07/91	3378	
340-360 Saloon (344)	1.7	59	08/85 – 07/91	3490	
340-360 Saloon (344)	2.0	66	08/82 – 07/84	3378	
340-360 Saloon (344)	2.0	66	08/82 – 07/84	3490	
340-360 Saloon (344)	2.0	68	08/83 – 07/84	3378	
340-360 Saloon (344)	2.0	68	08/83 – 07/84	3490	
340-360 Saloon (344)	2.0	75	08/84 – 07/90	3378	
340-360 Saloon (344)	2.0	75	08/84 – 07/90	3490	
340-360 Saloon (344)	2.0	77	08/84 – 07/87	3378	
340-360 Saloon (344)	2.0	77	08/84 – 07/87	3490	
340-360 Saloon (344)	2.0	80	08/88 – 07/89	3378	
340-360 Saloon (344)	2.0	80	08/88 – 07/89	3490	
340-360 Saloon (344)	2.0	81	08/87 – 07/88	3378	
340-360 Saloon (344)	2.0	81	08/87 – 07/88	3490	
340-360 Saloon (344)	2.0	82	08/86 – 07/88	3378	
340-360 Saloon (344)	2.0	82	08/86 – 07/88	3490	
340-360 Saloon (344)	2.0	83	08/83 – 07/84	3378	
340-360 Saloon (344)	2.0	83	08/83 – 07/84	3490	
340-360 Saloon (344)	2.0	85	08/84 – 07/86	3378	
340-360 Saloon (344)	2.0	85	08/84 – 07/86	3490	
340-360 Saloon (344)	2.0	87	08/84 – 07/86	3378	
340-360 Saloon (344)	2.0	87	08/84 – 07/86	3490	
440 K (445)	1.6	61	09/88 – 12/96		3583
440 K (445)	1.6	69	09/91 – 08/93		3583
440 K (445)	1.7	58	09/88 – 08/92		3583
440 K (445)	1.7	60	09/88 – 08/89		3583
440 K (445)	1.7	64	09/88 – 12/96		3583
440 K (445)	1.7	70	08/88 – 07/89		3583
440 K (445)	1.7	75	08/89 – 12/96		3583
440 K (445)	1.7	78	09/88 – 12/96		3583
440 K (445)	1.7 Turbo	88	08/88 – 07/96		3583

MAKE & MODEL		KW	YEAR		
VOLVO					
440 K (445)	1.7 Turbo	90	01/91 – 12/96		3583
440 K (445)	1.8	66	08/91 – 12/96		3583
440 K (445)	1.9 Turbo-Diesel	66	07/94 – 12/96		3583
440 K (445)	2.0	80	08/93 – 07/96		3583
440 K (445)	2.0	81	08/92 – 07/95		3583
460 L (464)	1.6	61	07/92 – 07/96		3583
460 L (464)	1.7	58	09/89 – 08/91		3583
460 L (464)	1.7	64	09/88 – 07/96		3583
460 L (464)	1.7	66	09/90 – 07/96		3583
460 L (464)	1.7	75	08/89 – 07/92		3583
460 L (464)	1.7	80	08/89 – 07/92		3583
460 L (464)	1.7 Turbo	88	08/89 – 07/96		3583
460 L (464)	1.7 Turbo	90	01/91 – 07/96		3583
460 L (464)	1.8	66	08/91 – 07/96		3583
460 L (464)	1.9 Turbo-Diesel	66	07/94 – 07/96		3583
460 L (464)	2.0	80	08/93 – 07/96		3583
460 L (464)	2.0	81	08/92 – 07/95		3583
480 E	1.7	75	08/89 – 07/96		3583
480 E	1.7	78	04/86 – 07/89		3583
480 E	1.7	80	08/86 – 07/88		3583
480 E	1.7 Turbo	88	08/87 – 07/96		3583
480 E	1.7 Turbo	90	01/91 – 07/96		3583
480 E	2.0	70	08/87 – 07/89		3583
480 E	2.0	81	08/92 – 09/95		3583
66 Estate	DL 1.1	33	10/75 – 11/79		3326
66 Estate	GL 1.3	42	10/75 – 11/79		3326
740 (744)	2.0	76	09/88 – 08/90	3641	3642
740 (744)	2.0	82	09/90 – 08/92	3641	3642
740 (744)	2.0	86	01/87 – 08/88	3641	3642
740 (744)	2.0	89	08/85 – 07/92	3641	3642
740 (744)	2.0	110	12/83 – 07/84	3641	3642
740 (744)	2.0	118	01/86 – 08/90	3641	3642
740 (744)	2.0	120	01/85 – 12/85	3641	3642
740 (744)	2.0	147	09/90 – 08/92	3641	3642
740 (744)	2.0 GLE	85	04/83 – 07/84	3641	3642
740 (744)	2.0 GLE	103	09/87 – 08/90	3641	3642
740 (744)	2.0 Turbo	114	09/90 – 08/91	3641	3642
740 (744)	2.3	82	08/84 – 07/86	3641	3642
740 (744)	2.3	83	09/85 – 12/89	3641	3642
740 (744)	2.3	84	08/84 – 07/90	3641	3642
740 (744)	2.3	85	08/87 – 07/92	3641	3642
740 (744)	2.3	86	08/86 – 07/88	3641	3642
740 (744)	2.3	95	08/83 – 07/84	3641	3642
740 (744)	2.3	96	08/84 – 07/88	3641	3642
740 (744)	2.3	100	08/88 07/90	3641	3642
740 (744)	2.3	111	08/88 – 08/92	3641	3642
740 (744)	2.3	114	08/88 – 07/91	3641	3642
740 (744)	2.3	117	08/87 – 07/89	3641	3642
740 (744)	2.3 GLE	103	08/84 – 12/85	3641	3642
740 (744)	2.3 Turbo	115	08/86 – 07/89	3641	3642
740 (744)	2.3 Turbo	121	08/89 – 07/90	3641	3642
740 (744)	2.3 Turbo	125	09/89 – 08/91	3641	3642
740 (744)	2.3 Turbo	134	08/85 – 12/88	3641	3642
740 (744)	2.3 Turbo	140	08/89 – 07/90	3641	3642
740 (744)	2.4 Diesel	60	08/84 – 07/92	3641	3642
740 (744)	2.4 TD	80	08/85 – 12/90	3641	3642
740 (744)	2.4 TD	83	08/84 – 07/90	3641	3642
740 (744)	2.4 TD	90	08/86 – 10/88	3641	3642
740 Kombi (745)	2.0	76	09/88 – 08/90	3641	3642
740 Kombi (745)	2.0	82	08/89 – 07/91	3641	3642
740 Kombi (745)	2.0	86	01/87 – 08/88	3641	3642
740 Kombi (745)	2.0	89	08/85 – 07/92	3641	3642
740 Kombi (745)	2.0	147	09/90 – 08/92	3641	3642
740 Kombi (745)	2.0 16V	100	09/87 – 08/90	3641	3642
740 Kombi (745)	2.0 GLE	103	09/87 – 08/90	3641	3642
740 Kombi (745)	2.0 Turbo	114	09/90 – 08/91	3641	3642
740 Kombi (745)	2.0 Turbo	115	09/87 – 08/90	3641	3642
740 Kombi (745)	2.0 Turbo	118	05/85 – 08/87	3641	3642
740 Kombi (745)	2.0 Turbo	121	05/85 – 08/87	3641	3642
740 Kombi (745)	2.3	82	08/85 – 07/86	3641	3642
740 Kombi (745)	2.3	83	08/85 – 12/89	3641	3642
740 Kombi (745)	2.3	84	09/85 – 07/90	3641	3642
740 Kombi (745)	2.3	85	08/87 – 07/92	3641	3642
740 Kombi (745)	2.3	87	01/88 – 10/90	3641	3642
740 Kombi (745)	2.3	96	08/85 – 07/88	3641	3642
740 Kombi (745)	2.3	100	08/89 – 07/90	3641	3642

MAKE & MODEL		KW	YEAR		
VOLVO					
740 Kombi (745)	2.3	111	07/89 – 08/92	3641	3642
740 Kombi (745)	2.3	114	08/88 – 07/90	3641	3642
740 Kombi (745)	2.3	117	08/87 – 07/89	3641	3642
740 Kombi (745)	2.3 GL	89	08/84 – 08/87	3641	3642
740 Kombi (745)	2.3 GLE	103	08/84 – 08/87	3641	3642
740 Kombi (745)	2.3 Turbo	115	08/86 – 07/89	3641	3642
740 Kombi (745)	2.3 Turbo	121	08/89 – 07/90	3641	3642
740 Kombi (745)	2.3 Turbo	125	09/89 – 08/91	3641	3642
740 Kombi (745)	2.3 Turbo	134	08/85 – 07/88	3641	3642
740 Kombi (745)	2.3 Turbo	140	08/89 – 07/90	3641	3642
740 Kombi (745)	2.4 Diesel	60	08/85 – 07/88	3641	3642
740 Kombi (745)	2.4 TD Interc.	90	08/86 – 07/88	3641	3642
740 Kombi (745)	2.4 Turbo-Diesel	80	09/85 – 07/92	3641	3642
760 (704, 764)	2.3	84	08/84 – 08/87	3641	3642
760 (704, 764)	2.3	121	01/88 – 07/92	3641	3642
760 (704, 764)	2.3	127	01/84 – 03/86	3641	3642
760 (704, 764)	2.3	130	08/84 – 08/87	3641	3642
760 (704, 764)	2.3 Turbo	115	09/87 – 08/90	3641	3642
760 (704, 764)	2.3 Turbo (704)	127	08/82 – 07/84	3641	3642
760 (704, 764)	2.3 Turbo (704)	134	08/84 – 10/88	3641	3642
760 (704, 764)	2.4 D	60	01/82 – 07/92	3641	3642
760 (704, 764)	2.4 TD Interc. (704)	85	08/87 – 07/92	3641	3642
760 (704, 764)	2.4 Turbo Diesel (704)	80	04/87 – 07/92	3641	3642
760 (704, 764)	2.4 Turbo Diesel (704)	82	08/82 – 07/87	3641	3642
760 (704, 764)	2.8	95	01/82 – 12/87	3641	3642
760 (704, 764)	2.8	125	09/87 – 08/90	3641	3642
760 (704, 764)	2.8 (704)	105	05/86 – 08/91	3641	3642
760 (704, 764)	2.8 (704, 764)	115	08/81 – 07/88	3641	3642
760 (704, 764)	2.8 (764)	108	08/86 – 07/90	3641	3642
760 Kombi (704, 765)	2.3	84	08/84 – 08/87	3641	3642
760 Kombi (704, 765)	2.3 Turbo	115	09/87 – 08/90	3641	3642
760 Kombi (704, 765)	2.3 Turbo	134	08/84 – 08/90	3641	3642
760 Kombi (704, 765)	2.4 D	60	01/82 – 07/92	3641	3642
760 Kombi (704, 765)	2.4 TD Interc. (765)	85	08/87 – 07/92	3641	3642
760 Kombi (704, 765)	2.8	125	08/84 – 08/90	3641	3642
760 Kombi (704, 765)	2.8 (765)	95	05/86 – 12/87	3641	3642
760 Kombi (704, 765)	2.8 (765)	105	05/86 – 08/91	3641	3642
760 Kombi (704, 765)	2.8 (765)	115	08/86 – 08/90	3641	3642
850 Estate (LW)	2.5 AWD	142	04/96 – 12/96		3642
940 (944)	2.0	82	01/92 – 07/94	3641	3642
940 (944)	2.0	89	09/90 – 09/93	3641	3642
940 (944)	2.0	102	09/90 – 09/93	3641	3642
940 (944)	2.0 Turbo	114	08/90 – 12/94	3641	3642
940 (944)	2.3	85	08/92 – 07/94	3641	3642
940 (944)	2.3	96	08/90 – 12/94	3641	3642
940 (944)	2.3	114	08/90 – 07/91	3641	3642
940 (944)	2.3	118	09/90 – 09/93	3641	3642
940 (944)	2.3 Turbo	121	08/90 – 07/94	3641	3642
940 (944)	2.3 Turbo	140	08/91 – 07/93	3641	3642
940 (944)	2.4 D	60	08/90 – 12/94	3641	3642
940 (944)	2.4 TD Intercooler	90	08/90 – 12/94	3641	3642
940 (944)	2.4 Turbo Diesel	80	08/90 – 12/94	3641	3642
940 II (944)	2.0	89	11/94 – 12/95		3642
940 II (944)	2.0	102	10/94 – 05/97		3642
940 II (944)	2.0 GLT	139	10/94 – 05/97		3642
940 II (944)	2.0 Turbo	114	04/96 – 10/98		3642
940 II (944)	2.3	85	08/94 – 07/95		3642
940 II (944)	2.3	96	08/94 – 10/98		3642
940 II (944)	2.3	113	10/94 – 05/97		3642
940 II (944)	2.3 ti	99	01/95 – 10/98		3642
940 II (944)	2.3 Turbo	121	08/94 – 10/98		3642
940 II (944)	2.3 Turbo	126	01/95 – 12/98		3642
940 II (944)	2.4 TD Interc.	90	08/94 – 10/98		3642
940 II Estate (945)	2.0	89	11/94 – 12/95		3642
940 II Estate (945)	2.0	102	10/94 – 05/97		3642
940 II Estate (945)	2.0 GLT	139	10/94 – 05/97		3642
940 II Estate (945)	2.0 Turbo	114	04/96 – 10/98		3642
940 II Estate (945)	2.3	85	08/94 – 07/95		3642
940 II Estate (945)	2.3	96	08/94 – 10/98		3642
940 II Estate (945)	2.3	113	10/94 – 05/97		3642
940 II Estate (945)	2.3 ti	99	01/95 – 10/98		3642
940 II Estate (945)	2.3 Turbo	121	08/94 – 10/98		3642
940 II Estate (945)	2.3 Turbo	126	08/95 – 10/98		3642
940 II Estate (945)	2.4 TD Interc.	90	08/94 – 10/98		3642
940 Kombi (945)	2.0	82	01/92 – 07/94	3641	3642
940 Kombi (945)	2.0	89	09/90 – 09/93	3641	3642

MAKE & MODEL   		KW	YEAR		
VOLVO					
940 Kombi (945)	2.0 Turbo	114	01/91 – 07/95	3641	3642
940 Kombi (945)	2.3	85	08/92 – 07/94	3641	3642
940 Kombi (945)	2.3	96	08/90 – 12/94	3641	3642
940 Kombi (945)	2.3	114	08/90 – 07/91	3641	3642
940 Kombi (945)	2.3 Turbo	121	08/90 – 07/94	3641	3642
940 Kombi (945)	2.3 Turbo	140	08/91 – 07/93	3641	3642
940 Kombi (945)	2.4 D	60	08/90 – 07/95	3641	3642
940 Kombi (945)	2.4 TD Intercooler	90	08/90 – 08/94	3641	3642
940 Kombi (945)	2.4 Turbo Diesel	80	08/90 – 07/94	3641	3642
960 (964)	2.0	103	09/90 – 08/93	3641	3642
960 (964)	2.0	140	08/90 – 09/93	3641	3642
960 (964)	2.3 Turbo	121	09/90 – 08/93	3641	3642
960 (964)	2.4 TD Interc.	85	09/91 – 07/94	3641	3642
960 (964)	2.8 GL	108	09/90 – 05/92	3641	3642
960 (964)	2.9	150	08/90 – 07/94	3641	3642
960 II (964)	2.5	125	07/94 – 12/96		3642
960 II (964)	2.9	150	07/94 – 12/96		3642
960 II Estate (965)	2.5	125	08/94 – 12/96		3642
960 II Estate (965)	2.9	150	09/94 – 12/96		3642
960 Kombi (965)	2.0	103	09/90 – 08/93	3641	3642
960 Kombi (965)	2.0	140	08/90 – 09/93	3641	3642
960 Kombi (965)	2.3 Turbo	121	09/90 – 08/93	3641	3642
960 Kombi (965)	2.4 TD Interc.	85	09/91 – 07/94	3641	3642
960 Kombi (965)	2.4 Tdi	90	09/90 – 08/93	3641	3642
960 Kombi (965)	2.8	108	09/90 – 05/92	3641	3642
960 Kombi (965)	2.9	150	08/90 – 07/94	3641	3642
C30	1.6	74	10/06 – 12/12	3885	
C30	1.6 D	80	10/06 – 12/12	3885	
C30	1.6 D2	84	10/10 – 12/12	3885	
C30	1.8	92	10/06 – 12/12	3885	
C30	1.8 FlexFuel	92	01/07 – 12/12	3885	
C30	2.0	107	10/06 – 12/12	3885	
C30	2.0 D	100	10/06 – 12/12	3885	
C30	2.0 FlexFuel	107	01/10 – 12/12	3885	
C30	2.4 i	125	10/06 – 12/12	3885	
C30	D3	110	10/10 – 12/12	3885	
C30	D4	130	10/10 – 12/12	3885	
C30	D5	120	10/06 – 12/12	3885	
C30	D5	132	10/06 – 12/12	3885	
C30	Electric	82	12/10 – 12/12	3885	
C30	T5	162	10/06 – 12/12	3885	
C30	T5	169	03/07 – 12/12	3885	
C70 II Convertible	2.0 D	100	01/08 – 10/09	3885	
C70 II Convertible	2.4	103	03/06 – 10/09	3885	
C70 II Convertible	2.4 D	120	03/07 – 06/13	3885	
C70 II Convertible	2.4 i	125	03/06 – 10/09	3885	
C70 II Convertible	D3	110	10/10 – 06/13	3885	
C70 II Convertible	D4	130	10/10 – 06/13	3885	
C70 II Convertible	D5	132	03/06 – 06/13	3885	
C70 II Convertible	T5	162	03/06 – 02/07	3885	
C70 II Convertible	T5	169	03/07 – 10/09	3885	
FL II	FL 240-12	177	05/06 -		
FL II	FL 240-14	177	06/09 -		
FL II	FL 240-15	177	05/06 -		
FL II	FL 240-16	177	05/06 -		
FL II	FL 240-18	177	05/06 -		
FL II	FL 260-12	191	06/09 -		
FL II	FL 260-14	191	06/09 -		
FL II	FL 260-15	191	06/09 -		
FL II	FL 260-16	191	06/09 -		
FL II	FL 260-18	191	06/09 -		
FL II	FL 280-12	206	05/06 -		
FL II	FL 280-14	206	06/09 -		
FL II	FL 280-15	206	05/06 -		
FL II	FL 280-16	206	05/06 -		
FL II	FL 280-18	206	05/06 -		
FL II	FL 290-12	213	06/09 -		
FL II	FL 290-14	213	06/09 -		
FL II	FL 290-16	213	06/09 -		
FL II	FL 290-18	213	06/09 -		
FL III	FL 210-10	155	05/13 -		
FL III	FL 210-12	155	05/13 -		
FL III	FL 210-14	155	05/13 -		
FL III	FL 210-16	155	05/13 -		
FL III	FL 240-10	177	05/13 -		
FL III	FL 240-12	177	05/13 -		

MAKE & MODEL		KW	YEAR		
VOLVO					
FL III	FL 240-14	177	05/13 -		
FL III	FL 240-15	177	05/13 -		
FL III	FL 240-16	177	05/13 -		
FL III	FL 240-18	177	05/13 -		
FL III	FL 250-12	184	05/13 -		
FL III	FL 250-14	184	05/13 -		
FL III	FL 250-16	184	05/13 -		
FL III	FL 250-18	184	05/13 -		
FL III	FL 260-12	191	05/13 -		
FL III	FL 260-14	191	05/13 -		
FL III	FL 260-15	191	05/13 -		
FL III	FL 260-16	191	05/13 -		
FL III	FL 260-18	191	05/13 -		
FL III	FL 280-12	206	05/13 -		
FL III	FL 280-14	206	05/13 -		
FL III	FL 280-16	206	05/13 -		
FL III	FL 280-18	206	05/13 -		
FL III	FL 290-12	213	05/13 -		
FL III	FL 290-14	213	05/13 -		
FL III	FL 290-16	213	05/13 -		
FL III	FL 290-18	213	05/13 -		
S40 I (VS)	1.6	77	09/95 – 08/99		4062
S40 I (VS)	1.6	80	03/99 – 12/03		4062
S40 I (VS)	1.8	85	06/01 – 08/03		4062
S40 I (VS)	1.8	85	07/95 – 08/99		4062
S40 I (VS)	1.8	90	03/99 – 12/03		4062
S40 I (VS)	1.8 i	90	06/01 – 12/03		4062
S40 I (VS)	1.8 i	92	03/98 – 12/03		4062
S40 I (VS)	1.9 DI	70	03/99 – 07/00		4062
S40 I (VS)	1.9 DI	75	07/00 – 12/03		4062
S40 I (VS)	1.9 DI	85	07/00 – 12/03		4062
S40 I (VS)	1.9 T4	147	05/97 – 07/00		4062
S40 I (VS)	1.9 TD	66	07/95 – 08/99		4062
S40 I (VS)	2.0	100	07/95 – 12/03		4062
S40 I (VS)	2.0	103	07/95 – 08/99		4062
S40 I (VS)	2.0 T	118	10/97 – 12/03		4062
S40 I (VS)	2.0 T	120	06/01 – 12/03		4062
S40 I (VS)	2.0 T	121	07/00 – 06/01		4062
S40 I (VS)	2.0 T4	147	07/00 – 12/03		4062
S40 II (MS)	1.6	74	01/05 – 12/12	3885	
S40 II (MS)	1.6 D	81	01/05 – 12/12	3885	
S40 II (MS)	1.6 D2	84	10/10 – 12/12	3885	
S40 II (MS)	1.8	92	04/04 – 12/06	3885	
S40 II (MS)	1.8 FlexFuel	92	01/06 – 12/10	3885	
S40 II (MS)	2.0	107	10/06 – 12/12	3885	
S40 II (MS)	2.0 D	100	01/04 – 12/10	3885	
S40 II (MS)	2.0 D4	96	07/05 – 12/12	3885	
S40 II (MS)	2.0 F	107	10/09 – 12/12	3885	
S40 II (MS)	2.4	103	01/04 – 12/10	3885	
S40 II (MS)	2.4	125	01/04 – 12/10	3885	
S40 II (MS)	2.4 AWD	125	08/06 – 12/12	3885	
S40 II (MS)	2.4 D5	132	03/06 – 12/10	3885	
S40 II (MS)	D3	110	10/10 – 12/12	3885	
S40 II (MS)	D4	130	10/10 – 12/12	3885	
S40 II (MS)	T5	162	01/04 – 12/07	3885	
S40 II (MS)	T5	169	03/07 – 12/12	3885	
S40 II (MS)	T5 AWD	162	04/04 – 12/07	3885	
S40 II (MS)	T5 AWD	169	03/07 – 12/10	3885	
S60 I	2.0 T	132	07/00 – 04/10	3919	3918
S60 I	2.3 T5	195	07/00 – 09/02	3919	3918
S60 I	2.4	103	11/00 – 04/10	3919	3918
S60 I	2.4	125	11/00 – 04/10	3919	3918
S60 I	2.4 AWD	191	02/04 – 04/10	3919	3918
S60 I	2.4 Bifuel (CNG)	103	06/02 – 04/10	3919	3918
S60 I	2.4 Bifuel (LPG)	103	06/02 – 04/10	3919	3918
S60 I	2.4 D	93	09/05 – 04/10	3919	3918
S60 I	2.4 D	96	12/01 – 04/10	3919	3918
S60 I	2.4 D	120	09/05 – 01/09	3919	3918
S60 I	2.4 D5	120	07/01 – 04/10	3919	3918
S60 I	2.4 D5	136	09/05 – 04/10	3919	3918
S60 I	2.4 T	147	11/00 – 04/10	3919	3918
S60 I	2.4 T AWD	147	11/01 – 04/10	3919	3918
S60 I	2.4 T5	191	04/04 – 04/10	3919	3918
S60 I	2.5 T	154	02/04 – 04/10	3919	3918
S60 I	2.5 T AWD	154	04/04 – 04/10	3919	3918
S60 I	T5	184	11/00 – 04/10	3919	3918

MAKE & MODEL   		KW	YEAR		
VOLVO					
S60 II	1.5 T2	90	10/15 -	4161	
S60 II	1.5 T3	112	03/15 -	4161	
S60 II	2.0 D2	88	03/15 -	4161	
S60 II	2.0 D3	110	03/15 -	4161	
S60 II	2.0 D4	140	03/15 -	4161	
S60 II	2.0 D4 AWD	140	03/15 -	4161	
S60 II	2.0 D5	165	03/15 -	4161	
S60 II	2.0 T	132	05/12 – 12/15	4161	
S60 II	2.0 T	149	04/10 – 12/11	4161	
S60 II	2.0 T3	112	03/15 -	4161	
S60 II	2.0 T4	140	05/15 -	4161	
S60 II	2.4 D4 AWD	140	03/15 -	4161	
S60 II	2.5 T5	186	09/11 -	4161	
S60 II	2.5 T5 AWD	186	09/12 -	4161	
S60 II	3.0 T AWD	258	05/14 -	4161	
S60 II	D3	100	05/12 – 12/15	4161	
S60 II	D3	120	04/10 – 04/12	4161	
S60 II	D4	120	05/12 – 12/14	4161	
S60 II	D4	133	09/13 – 12/15	4161	
S60 II	D5	151	04/10 – 12/11	4161	
S60 II	D5	158	04/11 – 12/15	4161	
S60 II	D5	169	04/14 -	4161	
S60 II	D5 AWD	151	04/10 – 12/11	4161	
S60 II	D5 AWD	158	04/11 – 12/15	4161	
S60 II	D5 AWD	169	04/14 -	4161	
S60 II	DRIVe / D2	84	01/11 – 12/15	4161	
S60 II	T3	110	04/10 – 12/15	4161	
S60 II	T4	132	04/10 – 12/15	4161	
S60 II	T4F	132	04/11 – 12/15	4161	
S60 II	T5	157	11/13 – 03/15	4161	
S60 II	T5	177	04/10 – 12/14	4161	
S60 II	T5	180	09/13 -	4161	
S60 II	T5	225	08/13 -	4161	
S60 II	T5 AWD	180	07/14 -	4161	
S60 II	T5 AWD	187	08/15 -	4161	
S60 II	T6	225	09/13 -	4161	
S60 II	T6 AWD	224	04/10 – 12/15	4161	
S60 II	T6 AWD	225	09/15 -	4161	
S60 II	T6 AWD	242	04/14 -	4161	
S70 (LS)	2.3 AWD	195	04/99 – 09/00		3642
S70 (LS)	2.3 T5 AWD	177	11/96 – 09/98		3642
S70 (LS)	2.3 T5 AWD	184	07/97 – 09/00		3642
S70 (LS)	2.3 T5 R AWD	176	11/96 – 09/98		3642
S70 (LS)	2.4 AWD	103	04/99 – 09/00		3642
S70 (LS)	2.4 AWD	106	11/96 – 05/99		3642
S70 (LS)	2.4 AWD	121	10/98 – 05/99		3642
S70 (LS)	2.4 AWD	125	04/99 – 09/00		3642
S70 (LS)	2.4 T5 AWD	142	11/96 – 04/99		3642
S70 (LS)	2.5 TDi AWD	103	10/99 – 09/00		3642
S80 I (TS, XY)	2.0	120	06/98 – 07/06	3919	3918
S80 I (TS, XY)	2.0 T	132	12/99 – 07/06	3919	3918
S80 I (TS, XY)	2.0 T	166	06/98 – 07/06	3919	3918
S80 I (TS, XY)	2.3 R	195	04/00 – 08/05	3919	3918
S80 I (TS, XY)	2.4	103	01/99 – 07/06	3919	3918
S80 I (TS, XY)	2.4	125	01/99 – 07/06	3919	3918
S80 I (TS, XY)	2.4 Bifuel (CNG)	103	09/01 – 07/06	3919	3918
S80 I (TS, XY)	2.4 Bifuel (LPG)	103	09/01 – 07/06	3919	3918
S80 I (TS, XY)	2.4 D	96	10/01 – 07/06	3919	3918
S80 I (TS, XY)	2.4 D5	120	08/01 – 07/06	3919	3918
S80 I (TS, XY)	2.4 LTP	132	06/04 – 07/06	3919	3918
S80 I (TS, XY)	2.4 T	147	06/00 – 07/06	3919	3918
S80 I (TS, XY)	2.4 T5 AWD	147	04/00 – 09/03	3919	3918
S80 I (TS, XY)	2.5 T	154	03/03 – 07/06	3919	3918
S80 I (TS, XY)	2.5 T AWD	154	07/03 – 07/06	3919	3918
S80 I (TS, XY)	2.5 TDI	103	01/99 – 07/06	3919	3918
S80 I (TS, XY)	2.8 T6	200	05/98 – 07/06	3919	3918
S80 I (TS, XY)	2.9	147	03/99 – 07/06	3919	3918
S80 I (TS, XY)	2.9	150	05/98 – 07/06	3919	3918
S80 I (TS, XY)	3.0	144	06/01 – 07/06	3919	3918
S80 I (TS, XY)	3.0 T6	200	06/01 – 07/06	3919	3918
S80 II (AS)	1.6 D DRIVe	80	01/10 -	4161	
S80 II (AS)	1.6 DRIVe	84	06/11 -	4161	
S80 II (AS)	2.0	107	01/08 -	4161	
S80 II (AS)	2.0 Drive- E	180	12/14 -	4161	
S80 II (AS)	2.0 FlexFuel	107	01/08 -	4161	
S80 II (AS)	2.0 T	149	01/10 -	4161	

MAKE & MODEL		KW	YEAR		
VOLVO					
S80 II (AS)	2.0 T5	162	01/15 -	4161	
S80 II (AS)	2.0 TDi	100	02/08 -	4161	
S80 II (AS)	2.4 D	120	03/06 -	4161	
S80 II (AS)	2.4 D	129	01/10 -	4161	
S80 II (AS)	2.5 T	147	03/06 -	4161	
S80 II (AS)	2.5 T	170	01/10 -	4161	
S80 II (AS)	2.5 T	183	09/12 -	4161	
S80 II (AS)	2.5 T	187	01/12 -	4161	
S80 II (AS)	2.5 T AWD	147	10/06 -	4161	
S80 II (AS)	2.5 T FlexFuel	147	05/08 -	4161	
S80 II (AS)	2.5 T FlexFuel	170	01/10 -	4161	
S80 II (AS)	3.2	175	03/06 -	4161	
S80 II (AS)	3.2	179	01/10 -	4161	
S80 II (AS)	3.2 AWD	175	01/07 -	4161	
S80 II (AS)	3.2 AWD	179	01/10 -	4161	
S80 II (AS)	D3	100	05/12 -	4161	
S80 II (AS)	D3 / D4	120	01/10 -	4161	
S80 II (AS)	D4	133	09/13 -	4161	
S80 II (AS)	D5	136	03/06 -	4161	
S80 II (AS)	D5	151	01/10 -	4161	
S80 II (AS)	D5	158	06/11 -	4161	
S80 II (AS)	D5 AWD	136	01/07 -	4161	
S80 II (AS)	D5 AWD	151	01/10 -	4161	
S80 II (AS)	D5 AWD	158	06/11 -	4161	
S80 II (AS)	T4	132	10/10 -	4161	
S80 II (AS)	T4F	132	05/11 -	4161	
S80 II (AS)	T5	177	10/10 -	4161	
S80 II (AS)	T5	180	09/13 -	4161	
S80 II (AS)	T6 AWD	210	01/07 -	4161	
S80 II (AS)	T6 AWD	224	10/10 -	4161	
S90	2.5	125	11/96 – 10/98		3642
S90	2.5	132	11/96 – 10/97		3642
S90	2.9	132	01/97 – 05/98		3642
S90	2.9	150	01/97 – 05/98		3642
V40 Estate (VW)	1.6	77	12/95 – 08/99		4062
V40 Estate (VW)	1.6	80	03/99 – 06/04		4062
V40 Estate (VW)	1.8	85	07/95 – 08/99		4062
V40 Estate (VW)	1.8	90	03/99 – 06/04		4062
V40 Estate (VW)	1.8 i	90	06/01 – 06/04		4062
V40 Estate (VW)	1.8 i	92	03/98 – 06/04		4062
V40 Estate (VW)	1.9 DI	70	03/99 – 07/00		4062
V40 Estate (VW)	1.9 DI	75	07/00 – 06/04		4062
V40 Estate (VW)	1.9 DI	85	07/00 – 06/04		4062
V40 Estate (VW)	1.9 T4	147	05/97 – 07/00		4062
V40 Estate (VW)	1.9 TD	66	07/95 – 08/99		4062
V40 Estate (VW)	2.0	100	07/95 – 06/04		4062
V40 Estate (VW)	2.0	103	07/95 – 08/99		4062
V40 Estate (VW)	2.0 T	118	10/97 – 07/00		4062
V40 Estate (VW)	2.0 T	120	06/01 – 06/04		4062
V40 Estate (VW)	2.0 T	121	07/99 – 06/04		4062
V40 Estate (VW)	2.0 T4	147	07/00 – 06/04		4062
V40 Hatchback	D2	84	03/12 -	3885	
V40 Hatchback	D2	88	02/15 -	3885	
V40 Hatchback	D3	110	03/12 – 03/15	3885	
V40 Hatchback	D4	130	03/12 -	3885	
V40 Hatchback	D4	140	05/14 -	3885	
V40 Hatchback	T2	90	02/15 -	3885	
V40 Hatchback	T2 GTDi	88	03/13 – 12/15	3885	
V40 Hatchback	T3	112	02/15 -	3885	
V40 Hatchback	T3 GTDi	110	03/12 -	3885	
V40 Hatchback	T4	132	07/13 -	3885	
V40 Hatchback	T4	140	08/15 -	3885	
V40 Hatchback	T4	147	04/14 -	3885	
V40 Hatchback	T4 AWD	132	07/13 -	3885	
V40 Hatchback	T4 AWD	140	05/14 -	3885	
V40 Hatchback	T4 GTDi	132	03/12 -	3885	
V40 Hatchback	T4 GTDi AWD	132	03/12 -	3885	
V40 Hatchback	T5	157	03/13 -	3885	
V40 Hatchback	T5	180	05/14 -	3885	
V40 Hatchback	T5	183	01/14 -	3885	
V40 Hatchback	T5	187	12/12 -	3885	
V40 Hatchback	T5 AWD	157	03/13 -	3885	
V40 Hatchback	T5 AWD	180	05/14 -	3885	
V40 Hatchback	T5 AWD	187	01/13 -	3885	
V50 (MW)	1.6	74	01/05 – 12/12	3885	
V50 (MW)	1.6 D	81	01/05 – 12/11	3885	

MAKE & MODEL   		KW	YEAR		
VOLVO					
V50 (MW)	1.8	92	04/04 – 12/10	3885	
V50 (MW)	1.8 FlexFuel	92	01/05 – 12/10	3885	
V50 (MW)	2.0	107	10/06 – 12/12	3885	
V50 (MW)	2.0 D	100	04/04 – 12/10	3885	
V50 (MW)	2.0 FlexFuel	107	01/10 – 12/12	3885	
V50 (MW)	2.4	103	04/04 – 12/10	3885	
V50 (MW)	2.4	125	04/04 – 12/10	3885	
V50 (MW)	2.4 AWD	125	08/06 – 12/09	3885	
V50 (MW)	2.4 D5	132	03/06 – 12/10	3885	
V50 (MW)	2.4 Tdi	120	05/07 – 12/10	3885	
V50 (MW)	D3	110	10/10 – 12/12	3885	
V50 (MW)	D4	130	10/10 – 12/12	3885	
V50 (MW)	T5	162	04/04 – 12/07	3885	
V50 (MW)	T5	169	03/07 – 12/12	3885	
V50 (MW)	T5 AWD	162	04/04 – 12/07	3885	
V50 (MW)	T5 AWD	169	03/07 – 12/10	3885	
V60	1.5 T2	90	01/16 -	4161	
V60	1.6 DRIVe	84	06/11 -	4161	
V60	2.0 AWD	270	06/15 -	4161	
V60	2.0 D2	88	03/15 -	4161	
V60	2.0 D3	110	03/15 -	4161	
V60	2.0 D4	140	03/15 -	4161	
V60	2.0 T	149	09/10 -	4161	
V60	2.0 T4	140	05/15 -	4161	
V60	2.4 D5	158	06/11 -	4161	
V60	2.4 D5 AWD	158	06/11 -	4161	
V60	2.4 D5 Hybrid AWD	120	03/15 -	4161	
V60	2.4 Hybrid D6 AWD	158	06/12 -	4161	
V60	3.0 T AWD	258	05/14 -	4161	
V60	D3	100	12/12 -	4161	
V60	D3 / D4	120	09/10 -	4161	
V60	D4	133	10/13 -	4161	
V60	D4 AWD	120	12/12 -	4161	
V60	D4 AWD	133	10/13 -	4161	
V60	D4 AWD	140	03/15 -	4161	
V60	D5	151	09/10 -	4161	
V60	D5	165	03/15 -	4161	
V60	D5	169	04/14 -	4161	
V60	D5 AWD	151	09/10 -	4161	
V60	D5 AWD	169	04/14 -	4161	
V60	D6 Hybrid AWD	162	03/15 -	4161	
V60	T3	110	09/10 – 12/15	4161	
V60	T3	112	03/15 -	4161	
V60	T4	132	09/10 – 12/15	4161	
V60	T4F	132	04/11 – 12/15	4161	
V60	T5	157	04/14 -	4161	
V60	T5	176	08/12 -	4161	
V60	T5	177	09/10 -	4161	
V60	T5	180	10/13 -	4161	
V60	T5 AWD	180	07/14 -	4161	
V60	T5 AWD	187	08/15 -	4161	
V60	T6	225	10/13 -	4161	
V60	T6 AWD	224	09/10 -	4161	
V60	T6 AWD	225	10/13 -	4161	
V60	T6 AWD	242	04/14 -	4161	
V70 I (LV)	2.0 Turbo AWD	166	01/97 – 03/00		3642
V70 I (LV)	2.3 AWD	177	04/97 – 09/98		3642
V70 I (LV)	2.3 AWD	195	12/98 – 02/00		3642
V70 I (LV)	2.3 T AWD	184	04/97 – 03/00		3642
V70 I (LV)	2.3 T-5 AWD	176	01/97 – 03/00		3642
V70 I (LV)	2.4 AWD	121	10/98 – 05/99		3642
V70 I (LV)	2.4 Turbo AWD	195	03/99 – 03/00		3642
V70 I (LV)	2.5 TDi AWD	103	11/96 – 02/00		3642
V70 I (LV)	2.5 Turbo AWD	142	01/97 – 05/00		3642
V70 II (SW)	2.0 T	132	07/01 – 08/07	3919	3918
V70 II (SW)	2.3	195	10/00 – 09/04	3919	3918
V70 II (SW)	2.3 AWD	195	10/00 – 09/04	3919	3918
V70 II (SW)	2.3 T5	184	03/00 – 08/04	3919	3918
V70 II (SW)	2.4	103	03/00 – 08/07	3919	3918
V70 II (SW)	2.4	121	03/00 – 09/03	3919	3918
V70 II (SW)	2.4	125	03/00 – 08/07	3919	3918
V70 II (SW)	2.4 AWD	121	03/00 – 09/03	3919	3918
V70 II (SW)	2.4 Bifuel (CNG)	103	09/01 – 08/07	3919	3918
V70 II (SW)	2.4 Bifuel (LPG)	103	09/01 – 08/07	3919	3918
V70 II (SW)	2.4 D	93	05/05 – 08/07	3919	3918
V70 II (SW)	2.4 D	96	12/01 – 08/07	3919	3918

MAKE & MODEL		KW	YEAR		
VOLVO					
V70 II (SW)	2.4 D5	120	08/01 – 08/06	3919	3918
V70 II (SW)	2.4 D5	136	12/05 – 08/07	3919	3918
V70 II (SW)	2.4 D5 AWD	120	03/03 – 08/07	3919	3918
V70 II (SW)	2.4 D5 AWD	136	12/05 – 08/07	3919	3918
V70 II (SW)	2.4 T	147	03/00 – 08/03	3919	3918
V70 II (SW)	2.4 T AWD	147	09/01 – 08/02	3919	3918
V70 II (SW)	2.4 T5	191	04/04 – 08/07	3919	3918
V70 II (SW)	2.5 AWD	155	09/02 – 12/04	3919	3918
V70 II (SW)	2.5 T	154	04/04 – 08/07	3919	3918
V70 II (SW)	2.5 T AWD	154	09/02 – 08/07	3919	3918
V70 II (SW)	2.5 TDI	103	03/00 – 08/07	3919	3918
V70 III (BW)	1.6 D	80	01/10 – 12/11	4161	
V70 III (BW)	1.6 DRIVe / D2	84	06/11 – 12/15	4161	
V70 III (BW)	1.6 T4F	132	01/11 – 12/15	4161	
V70 III (BW)	2.0	107	10/07 – 12/11	4161	
V70 III (BW)	2.0 BiFuel	157	03/13 – 12/15	4161	
V70 III (BW)	2.0 D	100	10/07 – 12/15	4161	
V70 III (BW)	2.0 FlexiFuel	107	01/08 – 12/11	4161	
V70 III (BW)	2.0 GDI	157	03/13 – 12/15	4161	
V70 III (BW)	2.0 T	149	01/10 – 12/11	4161	
V70 III (BW)	2.4 D	120	08/07 – 12/10	4161	
V70 III (BW)	2.4 D	129	10/09 – 12/10	4161	
V70 III (BW)	2.5 T	147	08/07 – 12/09	4161	
V70 III (BW)	2.5 T	170	01/10 – 12/12	4161	
V70 III (BW)	2.5 T FlexiFuel	147	05/08 – 12/09	4161	
V70 III (BW)	2.5 T FlexiFuel	170	10/09 – 12/11	4161	
V70 III (BW)	3.2	175	08/07 – 12/10	4161	
V70 III (BW)	3.2	179	05/11 – 12/14	4161	
V70 III (BW)	3.2 AWD	175	08/07 – 12/10	4161	
V70 III (BW)	3.2 AWD	179	05/11 – 12/15	4161	
V70 III (BW)	D2	88	03/15 -	4161	
V70 III (BW)	D3	100	03/10 – 12/15	4161	
V70 III (BW)	D3	110	03/15 -	4161	
V70 III (BW)	D3 / D4	120	03/10 – 12/15	4161	
V70 III (BW)	D4	133	10/13 -	4161	
V70 III (BW)	D4 AWD	120	01/13 – 12/15	4161	
V70 III (BW)	D4 AWD	133	10/13 -	4161	
V70 III (BW)	D5	136	08/07 – 12/09	4161	
V70 III (BW)	D5	151	12/09 – 12/11	4161	
V70 III (BW)	D5	158	06/11 – 12/15	4161	
V70 III (BW)	D5 AWD	136	10/07 – 12/09	4161	
V70 III (BW)	D5 AWD	151	12/09 – 12/11	4161	
V70 III (BW)	D5 AWD	158	06/11 – 12/15	4161	
V70 III (BW)	T4	132	10/10 – 12/15	4161	
V70 III (BW)	T4	140	03/15 -	4161	
V70 III (BW)	T5	177	01/10 – 12/14	4161	
V70 III (BW)	T5	180	10/13 -	4161	
V70 III (BW)	T6 AWD	210	08/07 – 12/10	4161	
V70 III (BW)	T6 AWD	224	04/11 – 12/15	4161	
V90 Estate	2.5	125	11/96 – 10/98		3642
V90 Estate	2.5	132	11/96 – 10/97		3642
V90 Estate	2.9	132	01/97 – 12/98		3642
V90 Estate	2.9	150	01/97 – 12/98		3642
XC70 CROSS COUNTRY	2.4 D5 AWD	136	12/05 – 08/07	3919	3918
XC70 CROSS COUNTRY	2.4 D5 AWD	136	12/05 – 08/07		3918
XC70 CROSS COUNTRY	2.4 D5 XC AWD	120	09/02 – 08/07	3919	
XC70 CROSS COUNTRY	2.4 T XC AWD	142	11/97 – 09/02	3919	3918
XC70 CROSS COUNTRY	2.4 T XC AWD	142	11/97 – 09/02		3642
XC70 CROSS COUNTRY	2.4 T XC AWD	147	03/00 – 09/02	3919	3918
XC70 CROSS COUNTRY	2.5 T XC AWD	154	09/02 – 08/07	3919	3918
XC70 II	2.4 D	129	06/09 – 12/10	4161	
XC70 II	2.4 D / D4 AWD	120	08/07 -	4161	
XC70 II	3.2 AWD	175	08/07 -	4161	
XC70 II	3.2 AWD	179	08/07 -	4161	
XC70 II	D3	120	04/10 – 12/15	4161	
XC70 II	D4	133	10/13 -	4161	
XC70 II	D4 AWD	133	10/13 -	4161	
XC70 II	D5 AWD	136	04/07 – 12/09	4161	
XC70 II	D5 AWD	151	04/09 – 12/11	4161	
XC70 II	D5 AWD	158	04/11 – 12/15	4161	
XC70 II	D5 AWD	162	03/15 -	4161	
XC70 II	T5	180	10/13 -	4161	
XC70 II	T5 AWD	187	08/15 -	4161	
XC70 II	T6 AWD	210	01/08 -	4161	
XC70 II	T6 AWD	224	01/10 -	4161	

MAKE & MODEL   		KW	YEAR		
VOLVO (CHANGAN)					
S40 (MS)	2.4	125	06/06 -	3885	3853/1
S40 (MS)	2.5	162	06/06 -	3885	3853/1
S80L	2.0 T	149	12/10 -	4161	
S80L	2.0 T	157	08/13 -	4161	
S80L	2.5	147	03/09 -	4161	
S80L	3.0 AWD	210	03/09 -	4161	
S80L	3.0 AWD	224	08/13 -	4161	
VOLVO ASIA					
S60L	1.5 T3	112	06/15 -	4161	
S60L	2.0 T	132	06/14 -	4161	
S60L	2.0 T4	140	06/15 -	4161	
S60L	2.0 T5	180	06/15 -	4161	
VW					
BEETLE (5C1, 5C2)	1.2 TSI	77	07/11 -	3904	4135
BEETLE (5C1, 5C2)	1.2 TSI	77	07/11 -	3782	
BEETLE (5C1, 5C2)	1.2 TSI	77	07/11 -	3782/1	
BEETLE (5C1, 5C2)	1.2 TSI 16V	77	12/14 -	3782	3529/1
BEETLE (5C1, 5C2)	1.2 TSI 16V	77	12/14 -	3904	4135
BEETLE (5C1, 5C2)	1.2 TSI 16V	77	12/14 -	3782/1	
BEETLE (5C1, 5C2)	1.4 TSI	110	12/14 -	3782	3529/1
BEETLE (5C1, 5C2)	1.4 TSI	110	12/14 -	3904	4135
BEETLE (5C1, 5C2)	1.4 TSI	118	10/11 -	3782	3529/1
BEETLE (5C1, 5C2)	1.4 TSI	118	10/11 -	3904	4135
BEETLE (5C1, 5C2)	1.6 TDI	77	10/11 -	3904	4135
BEETLE (5C1, 5C2)	1.6 TDI	77	10/11 -	3782	
BEETLE (5C1, 5C2)	1.6 TDI	77	10/11 -	3782/1	
BEETLE (5C1, 5C2)	2.0 TDI	81	06/14 -	3782	3529/1
BEETLE (5C1, 5C2)	2.0 TDI	81	06/14 -	3904	4135
BEETLE (5C1, 5C2)	2.0 TDI	103	04/11 -	3904	4135
BEETLE (5C1, 5C2)	2.0 TDI	103	04/11 -	3782	
BEETLE (5C1, 5C2)	2.0 TDI	103	04/11 -	3782/1	
BEETLE (5C1, 5C2)	2.0 TDI	110	07/14 -	3782	3529/1
BEETLE (5C1, 5C2)	2.0 TDI	110	07/14 -	3904	4135
BEETLE (5C1, 5C2)	2.0 TSI	147	04/11 -	3904	3529/1
BEETLE (5C1, 5C2)	2.0 TSI	147	04/11 -		4135
BEETLE (5C1, 5C2)	2.0 TSI	155	12/12 -	3904	3529/1
BEETLE (5C1, 5C2)	2.0 TSI	155	12/12 -		4135
BEETLE (5C1, 5C2)	2.0 TSI	162	12/14 -	3782	3529/1
BEETLE (5C1, 5C2)	2.0 TSI	162	12/14 -	3904	4135
BEETLE (5C1, 5C2)	2.5	125	04/11 -	3904	4135
BEETLE (5C7)	2.0 TSI (CPLA)	155	12/12 -	4228	
BEETLE (5C7)	2.0 TSI (CPPA)	155	12/12 -	4228	
BEETLE Convertible (5C7, 5C8)	1.2 TSI	77	12/11 -	3904	4135
BEETLE Convertible (5C7, 5C8)	1.2 TSI	77	12/11 -	3782	
BEETLE Convertible (5C7, 5C8)	1.2 TSI 16V	77	12/14 -	3782	3529/1
BEETLE Convertible (5C7, 5C8)	1.2 TSI 16V	77	12/14 -	3904	4135
BEETLE Convertible (5C7, 5C8)	1.2 TSI 16V	77	12/14 -	3782/1	
BEETLE Convertible (5C7, 5C8)	1.4 TSI	110	12/14 -	3782	3529/1
BEETLE Convertible (5C7, 5C8)	1.4 TSI	110	12/14 -	3904	4135
BEETLE Convertible (5C7, 5C8)	1.4 TSI	118	12/11 -	3904	3529/1
BEETLE Convertible (5C7, 5C8)	1.4 TSI	118	12/11 -		4135
BEETLE Convertible (5C7, 5C8)	1.6 TDI	77	12/11 -	3904	4135
BEETLE Convertible (5C7, 5C8)	1.6 TDI	77	12/11 -	3782	
BEETLE Convertible (5C7, 5C8)	1.8 TSI	125	12/13 -	3782	3529/1
BEETLE Convertible (5C7, 5C8)	1.8 TSI	125	12/13 -	3904	4135
BEETLE Convertible (5C7, 5C8)	2.0 TDI	81	06/14 -	3782	3529/1
BEETLE Convertible (5C7, 5C8)	2.0 TDI	81	06/14 -	3904	4135
BEETLE Convertible (5C7, 5C8)	2.0 TDI	103	04/12 -	3782	3529/1
BEETLE Convertible (5C7, 5C8)	2.0 TDI	103	04/12 -	3904	4135
BEETLE Convertible (5C7, 5C8)	2.0 TDI	110	09/14 -	3904	4135
BEETLE Convertible (5C7, 5C8)	2.0 TDI	110	09/14 -	3782	
BEETLE Convertible (5C7, 5C8)	2.0 TSI	147	12/11 -	3904	3529/1
BEETLE Convertible (5C7, 5C8)	2.0 TSI	147	12/11 -		4135
BEETLE Convertible (5C7, 5C8)	2.0 TSI	155	12/12 -	3782	3529/1
BEETLE Convertible (5C7, 5C8)	2.0 TSI	155	12/12 -	3904	4135
BEETLE Convertible (5C7, 5C8)	2.0 TSI	162	12/14 -	3782	3529/1
BEETLE Convertible (5C7, 5C8)	2.0 TSI	162	12/14 -	3904	4135
BEETLE Convertible (5C7, 5C8)	2.5	125	12/11 -	3904	4135
BEETLE Convertible (5C7, 5C8)	2.5	125	12/11 -	3782	
BEETLE Convertible (5C7, 5C8)	2.5	125	12/11 -	3782/1	
BORA IV / JETTA IV (1J2)	1.6 (AEH)	74	10/98 – 05/05	3682	
BORA IV / JETTA IV (1J2)	1.6 (AKL)	74	10/98 – 05/05	3682	
BORA IV / JETTA IV (1J2)	1.6 (APF)	74	10/98 – 05/05	3682	
BORA IV / JETTA IV (1J2)	1.9 SDI (AGP)	50	10/98 – 05/05	3682	
BORA IV / JETTA IV (1J2)	1.9 SDI (AQM)	50	10/98 – 05/05	3682	

MAKE & MODEL		KW	YEAR		
VW					
BORA (1J2)	1.4 16V	55	03/00 – 05/05	3782	3529/1
BORA (1J2)	1.6	74	10/98 – 05/05	3782	3529/1
BORA (1J2)	1.6	74	10/98 – 05/05	3782/1	
BORA (1J2)	1.6	75	08/00 – 05/05	3782	3529/1
BORA (1J2)	1.6	78	06/02 – 10/04	3782	3529/1
BORA (1J2)	1.6 16V	77	05/00 – 05/05	3782	3529/1
BORA (1J2)	1.6 FSI	81	01/02 – 05/05	3782	3529/1
BORA (1J2)	1.8	92	10/98 – 05/05	3782	3529/1
BORA (1J2)	1.8	92	10/98 – 05/05	3782/1	
BORA (1J2)	1.8 4motion	92	02/99 – 05/05	3782	3529/1
BORA (1J2)	1.8 T	110	05/00 – 05/05	3590/1	3529/1
BORA (1J2)	1.8 T	132	03/02 – 05/05	3590/1	3529/1
BORA (1J2)	1.8 T 4motion	110	10/00 – 05/01	3590/1	3529/1
BORA (1J2)	1.9 SDI	50	10/98 – 05/05	3782	3529/1
BORA (1J2)	1.9 SDI	50	10/98 – 05/05	3782/1	
BORA (1J2)	1.9 TDI	66	10/98 – 05/05	3782	3529/1
BORA (1J2)	1.9 TDI	66	10/98 – 05/05	3782/1	
BORA (1J2)	1.9 TDI	74	09/00 – 05/05	3782	3529/1
BORA (1J2)	1.9 TDI	81	10/98 – 06/01	3782	3529/1
BORA (1J2)	1.9 TDI	81	10/98 – 06/01	3782/1	
BORA (1J2)	1.9 TDI	85	12/98 – 01/02	3782	3529/1
BORA (1J2)	1.9 TDI	85	12/98 – 01/02	3782/1	
BORA (1J2)	1.9 TDI	96	11/00 – 05/05	3590/1	3529/1
BORA (1J2)	1.9 TDI	110	05/00 – 05/05	3590/1	3529/1
BORA (1J2)	1.9 TDI 4motion	66	11/98 – 04/02	3782	3529/1
BORA (1J2)	1.9 TDI 4motion	74	09/00 – 05/05	3782	3529/1
BORA (1J2)	1.9 TDI 4motion	85	02/99 – 06/01	3782	3529/1
BORA (1J2)	1.9 TDI 4motion	96	11/00 – 05/05	3590/1	3529/1
BORA (1J2)	1.9 TDI 4motion	110	05/00 – 05/05	3590/1	3529/1
BORA (1J2)	2.0	85	10/98 – 05/05	3782	3529/1
BORA (1J2)	2.0	85	10/98 – 05/05	3782/1	
BORA (1J2)	2.0 4motion	85	04/00 – 05/05	3782	3529/1
BORA (1J2)	2.3 V5	110	10/98 – 10/00	3590/1	3529/1
BORA (1J2)	2.3 V5	125	10/00 – 05/05	3590/1	3529/1
BORA (1J2)	2.3 V5 4motion	110	12/98 – 10/00	3590/1	3529/1
BORA (1J2)	2.3 V5 4motion	125	10/00 – 05/05	3590/1	3529/1
BORA (1J2)	2.8 V6 4motion	150	03/99 – 05/05	3590/1	3529/1
BORA Estate (1J6)	1.4 16V	55	09/01 – 05/05	3782	3529/1
BORA Estate (1J6)	1.6	74	05/99 – 05/05	3782	3529/1
BORA Estate (1J6)	1.6	75	08/00 – 05/05	3782	3529/1
BORA Estate (1J6)	1.6 16V	77	02/00 – 05/05	3782	3529/1
BORA Estate (1J6)	1.6 FSI	81	01/02 – 05/05	3782	3529/1
BORA Estate (1J6)	1.8 4motion	92	05/99 – 05/05	3782	3529/1
BORA Estate (1J6)	1.8 T	110	05/00 – 05/05	3590/1	3529/1
BORA Estate (1J6)	1.8 T	132	05/02 – 05/05	3590/1	3529/1
BORA Estate (1J6)	1.9 TDI	66	07/04 – 05/05	3782	3529/1
BORA Estate (1J6)	1.9 TDI	74	09/00 – 05/05	3782	3529/1
BORA Estate (1J6)	1.9 TDI	81	05/99 – 06/01	3782	3529/1
BORA Estate (1J6)	1.9 TDI	85	05/99 – 06/01	3782	3529/1
BORA Estate (1J6)	1.9 TDI	96	11/00 – 05/05	3590/1	3529/1
BORA Estate (1J6)	1.9 TDI	110	05/01 – 05/05	3590/1	3529/1
BORA Estate (1J6)	1.9 TDI 4motion	74	09/00 – 05/05	3782	3529/1
BORA Estate (1J6)	1.9 TDI 4motion	85	05/99 – 06/01	3782	3529/1
BORA Estate (1J6)	1.9 TDI 4motion	96	11/00 – 05/05	3590/1	3529/1
BORA Estate (1J6)	1.9 TDI 4motion	110	05/01 – 05/05	3590/1	3529/1
BORA Estate (1J6)	2.0	85	05/99 – 05/05	3782	3529/1
BORA Estate (1J6)	2.0 4motion	85	04/00 – 05/05	3782	3529/1
BORA Estate (1J6)	2.0 4motion	88	12/99 – 05/03	3782	3529/1
BORA Estate (1J6)	2.3 V5	110	05/99 – 10/00	3590/1	3529/1
BORA Estate (1J6)	2.3 V5	125	10/00 – 05/05	3590/1	3529/1
BORA Estate (1J6)	2.3 V5 4motion	110	05/99 – 10/00	3590/1	3529/1
BORA Estate (1J6)	2.3 V5 4motion	125	10/00 – 05/05	3590/1	3529/1
BORA Estate (1J6)	2.8 V6 4motion	150	05/99 – 05/05	3590/1	3529/1
BORA Estate (1J6)	2.8 VR6	150	03/00 – 05/00	3590/1	3529/1
BORA IV / JETTA IV (1J6)	1.6 (AEH)	74	05/99 – 05/05	3682	
BORA IV / JETTA IV (1J6)	1.6 (AKL)	74	05/99 – 05/05	3682	
BORA IV / JETTA IV (1J6)	1.6 (APF)	74	05/99 – 05/05	3682	
CADDY I (14)	1.5	51	08.1982 - 07.1983	3444/1	
CADDY I (14)	1.6	55	01.1983 - 07.1992	3444/1	
CADDY I (14)	1.6 D	40	08.1982 - 07.1992	3444/1	
CADDY I (14)	1.8	70	08.1985 - 07.1992	3444/1	
CADDY I (14)	1.5	51	08/82 – 07/83	3444	
CADDY I (14)	1.5	51	08/82 – 07/83	3585	
CADDY I (14)	1.6	55	01/83 – 07/92	3444	
CADDY I (14)	1.6	55	01/83 – 07/92	3585	
CADDY I (14)	1.6	55	10/82 – 10/83	3585	

MAKE & MODEL   		KW	YEAR		
VW					
CADDY I (14)	1.6 D	40	08/82 – 07/92	3444	
CADDY I (14)	1.6 D	40	08/82 – 07/92	3585	
CADDY I (14)	1.8	70	08/85 – 07/92	3444	
CADDY I (14)	1.8	70	08/85 – 07/92	3585	
CADDY II Box (9K9A)	1.9 D	47	11/95 – 01/04	3551	
CADDY II Box (9K9A)	1.9 SDI	47	11/95 – 01/04	3551	
CADDY II Box (9K9A)	60 1.4	44	11/95 – 01/04	3551	
CADDY II Box (9K9A)	75 1.6	55	11/95 – 09/00	3551	
CADDY II Estate (9K9B)	1.4	44	11/95 – 01/04	3551	
CADDY II Estate (9K9B)	1.6	55	11/95 – 05/97	3551	
CADDY II Estate (9K9B)	1.9 D	47	11/95 – 01/04	3551	
CADDY II Estate (9K9B)	1.9 SDI	47	11/95 – 01/04	3551	
CADDY II Pickup (9U7)	1.6	55	06/96 – 12/00	3731	
CADDY II Pickup (9U7)	1.9 D	47	06/96 – 12/00	3731	
CADDY III Box (2KA, 2KH, 2CA, 2CH)	1.2 TSI	63	09/10 – 05/15	3782	3529/1
CADDY III Box (2KA, 2KH, 2CA, 2CH)	1.2 TSI	63	09/10 – 05/15	3904	4135
CADDY III Box (2KA, 2KH, 2CA, 2CH)	1.2 TSI	77	09/10 – 05/15	3782	3529/1
CADDY III Box (2KA, 2KH, 2CA, 2CH)	1.2 TSI	77	09/10 – 05/15	3904	4135
CADDY III Box (2KA, 2KH, 2CA, 2CH)	1.4	55	03/04 – 05/06	3782	3529/1
CADDY III Box (2KA, 2KH, 2CA, 2CH)	1.4	55	03/04 – 05/06	3904	3905
CADDY III Box (2KA, 2KH, 2CA, 2CH)	1.4	59	05/06 – 08/10	3782	3529/1
CADDY III Box (2KA, 2KH, 2CA, 2CH)	1.4	59	05/06 – 08/10	3904	3905
CADDY III Box (2KA, 2KH, 2CA, 2CH)	1.6	75	04/04 – 05/15	3782	3529/1
CADDY III Box (2KA, 2KH, 2CA, 2CH)	1.6	75	04/04 – 05/15	3904	3905
CADDY III Box (2KA, 2KH, 2CA, 2CH)	1.6 BiFuel	75	05/11 – 05/15	3782	3529/1
CADDY III Box (2KA, 2KH, 2CA, 2CH)	1.6 BiFuel	75	05/11 – 05/15	3904	4135
CADDY III Box (2KA, 2KH, 2CA, 2CH)	1.6 TDI	55	08/10 – 05/15	3782	3529/1
CADDY III Box (2KA, 2KH, 2CA, 2CH)	1.6 TDI	55	08/10 – 05/15	3904	4135
CADDY III Box (2KA, 2KH, 2CA, 2CH)	1.6 TDI	75	08/10 – 05/15	3782	3529/1
CADDY III Box (2KA, 2KH, 2CA, 2CH)	1.6 TDI	75	08/10 – 05/15	3904	4135
CADDY III Box (2KA, 2KH, 2CA, 2CH)	1.9 TDI	55	09/05 – 08/10	3782	3529/1
CADDY III Box (2KA, 2KH, 2CA, 2CH)	1.9 TDI	55	09/05 – 08/10	3904	3905
CADDY III Box (2KA, 2KH, 2CA, 2CH)	1.9 TDI	77	04/04 – 08/10	3782	3529/1
CADDY III Box (2KA, 2KH, 2CA, 2CH)	1.9 TDI	77	04/04 – 08/10	3904	3905
CADDY III Box (2KA, 2KH, 2CA, 2CH)	1.9 TDI 4motion	77	11/08 – 08/10	3782	3529/1
CADDY III Box (2KA, 2KH, 2CA, 2CH)	1.9 TDI 4motion	77	11/08 – 08/10	3904	3905
CADDY III Box (2KA, 2KH, 2CA, 2CH)	2.0 EcoFuel	80	04/06 – 05/15	3782	3529/1
CADDY III Box (2KA, 2KH, 2CA, 2CH)	2.0 EcoFuel	80	04/06 – 05/15	3904	3905
CADDY III Box (2KA, 2KH, 2CA, 2CH)	2.0 SDI	51	03/04 – 08/10	3782	3529/1
CADDY III Box (2KA, 2KH, 2CA, 2CH)	2.0 TDI	62	11/10 – 05/15	3782	3529/1
CADDY III Box (2KA, 2KH, 2CA, 2CH)	2.0 TDI	62	11/10 – 05/15	3904	4135
CADDY III Box (2KA, 2KH, 2CA, 2CH)	2.0 TDI	81	08/10 – 05/15	3782	3529/1
CADDY III Box (2KA, 2KH, 2CA, 2CH)	2.0 TDI	81	08/10 – 05/15	3904	4135
CADDY III Box (2KA, 2KH, 2CA, 2CH)	2.0 TDI	103	09/07 – 08/10	3782	3529/1
CADDY III Box (2KA, 2KH, 2CA, 2CH)	2.0 TDI	103	09/07 – 08/10	3904	3905
CADDY III Box (2KA, 2KH, 2CA, 2CH)	2.0 TDI	125	05/12 – 05/15	3782	3529/1
CADDY III Box (2KA, 2KH, 2CA, 2CH)	2.0 TDI	125	05/12 – 05/15	3904	4135
CADDY III Box (2KA, 2KH, 2CA, 2CH)	2.0 TDI 16V	103	11/10 – 05/15	3782	3529/1
CADDY III Box (2KA, 2KH, 2CA, 2CH)	2.0 TDI 16V	103	11/10 – 05/15	3904	4135
CADDY III Box (2KA, 2KH, 2CA, 2CH)	2.0 TDI 16V 4motion	103	11/10 – 05/15	3904	3529/1
CADDY III Box (2KA, 2KH, 2CA, 2CH)	2.0 TDI 16V 4motion	103	11/10 – 05/15		4135
CADDY III Box (2KA, 2KH, 2CA, 2CH)	2.0 TDI 4motion	62	12/10 – 05/15	3782	3529/1
CADDY III Box (2KA, 2KH, 2CA, 2CH)	2.0 TDI 4motion	62	12/10 – 05/15	3904	4135
CADDY III Box (2KA, 2KH, 2CA, 2CH)	2.0 TDI 4motion	81	08/10 – 05/15	3782	3529/1
CADDY III Box (2KA, 2KH, 2CA, 2CH)	2.0 TDI 4motion	81	08/10 – 05/15	3904	4135
CADDY III Estate (2KB, 2KJ, 2CB, 2CJ)	1.2 TSI	63	09/10 – 05/15	3782	3529/1
CADDY III Estate (2KB, 2KJ, 2CB, 2CJ)	1.2 TSI	63	09/10 – 05/15	3904	4135
CADDY III Estate (2KB, 2KJ, 2CB, 2CJ)	1.2 TSI	77	09/10 – 05/15	3782	3529/1
CADDY III Estate (2KB, 2KJ, 2CB, 2CJ)	1.2 TSI	77	09/10 – 05/15	3904	4135
CADDY III Estate (2KB, 2KJ, 2CB, 2CJ)	1.4	55	03/04 – 05/06	3782	3529/1
CADDY III Estate (2KB, 2KJ, 2CB, 2CJ)	1.4	55	03/04 – 05/06	3904	3905
CADDY III Estate (2KB, 2KJ, 2CB, 2CJ)	1.4	59	05/06 – 08/10	3782	3529/1
CADDY III Estate (2KB, 2KJ, 2CB, 2CJ)	1.4	59	05/06 – 08/10	3904	3905
CADDY III Estate (2KB, 2KJ, 2CB, 2CJ)	1.6	74	03/05 – 05/15	3782	3529/1
CADDY III Estate (2KB, 2KJ, 2CB, 2CJ)	1.6	74	03/05 – 05/15	3904	3905
CADDY III Estate (2KB, 2KJ, 2CB, 2CJ)	1.6	75	04/04 – 05/15	3782	3529/1
CADDY III Estate (2KB, 2KJ, 2CB, 2CJ)	1.6	75	04/04 – 05/15	3904	3905
CADDY III Estate (2KB, 2KJ, 2CB, 2CJ)	1.6 BiFuel	75	05/11 – 05/15	3782	3529/1
CADDY III Estate (2KB, 2KJ, 2CB, 2CJ)	1.6 BiFuel	75	05/11 – 05/15	3904	4135
CADDY III Estate (2KB, 2KJ, 2CB, 2CJ)	1.6 TDI	55	08/10 – 05/15	3782	3529/1
CADDY III Estate (2KB, 2KJ, 2CB, 2CJ)	1.6 TDI	55	08/10 – 05/15	3904	4135
CADDY III Estate (2KB, 2KJ, 2CB, 2CJ)	1.6 TDI	75	08/10 – 05/15	3782	3529/1
CADDY III Estate (2KB, 2KJ, 2CB, 2CJ)	1.6 TDI	75	08/10 – 05/15	3904	4135
CADDY III Estate (2KB, 2KJ, 2CB, 2CJ)	1.9 TDI	55	09/05 – 08/10	3782	3529/1
CADDY III Estate (2KB, 2KJ, 2CB, 2CJ)	1.9 TDI	55	09/05 – 08/10	3904	3905
CADDY III Estate (2KB, 2KJ, 2CB, 2CJ)	1.9 TDI	77	04/04 – 08/10	3782	3529/1

MAKE & MODEL		KW	YEAR		
VW					
CADDY III Estate (2KB, 2KJ, 2CB, 2CJ)	1.9 TDI	77	04/04 – 08/10	3904	3905
CADDY III Estate (2KB, 2KJ, 2CB, 2CJ)	1.9 TDI 4motion	77	05/08 – 08/10	3782	3529/1
CADDY III Estate (2KB, 2KJ, 2CB, 2CJ)	1.9 TDI 4motion	77	05/08 – 08/10	3904	3905
CADDY III Estate (2KB, 2KJ, 2CB, 2CJ)	2.0 EcoFuel	80	04/06 – 05/15	3782	3529/1
CADDY III Estate (2KB, 2KJ, 2CB, 2CJ)	2.0 EcoFuel	80	04/06 – 05/15	3904	3905
CADDY III Estate (2KB, 2KJ, 2CB, 2CJ)	2.0 SDI	51	03/04 – 08/10	3782	3529/1
CADDY III Estate (2KB, 2KJ, 2CB, 2CJ)	2.0 SDI	51	03/04 – 08/10	3904	3905
CADDY III Estate (2KB, 2KJ, 2CB, 2CJ)	2.0 TDI	81	08/10 – 05/15	3782	3529/1
CADDY III Estate (2KB, 2KJ, 2CB, 2CJ)	2.0 TDI	81	08/10 – 05/15	3904	4135
CADDY III Estate (2KB, 2KJ, 2CB, 2CJ)	2.0 TDI	103	09/07 – 08/10	3782	3529/1
CADDY III Estate (2KB, 2KJ, 2CB, 2CJ)	2.0 TDI	103	09/07 – 08/10	3904	3905
CADDY III Estate (2KB, 2KJ, 2CB, 2CJ)	2.0 TDI	125	05/12 – 05/15	3782	3529/1
CADDY III Estate (2KB, 2KJ, 2CB, 2CJ)	2.0 TDI	125	05/12 – 05/15	3904	4135
CADDY III Estate (2KB, 2KJ, 2CB, 2CJ)	2.0 TDI 16V	103	11/10 – 05/15	3782	3529/1
CADDY III Estate (2KB, 2KJ, 2CB, 2CJ)	2.0 TDI 16V	103	11/10 – 05/15	3904	4135
CADDY III Estate (2KB, 2KJ, 2CB, 2CJ)	2.0 TDI 16V 4motion	103	11/10 – 05/15	3782	3529/1
CADDY III Estate (2KB, 2KJ, 2CB, 2CJ)	2.0 TDI 16V 4motion	103	11/10 – 05/15	3904	4135
CADDY III Estate (2KB, 2KJ, 2CB, 2CJ)	2.0 TDI 4motion	81	08/10 – 05/15	3782	3529/1
CADDY III Estate (2KB, 2KJ, 2CB, 2CJ)	2.0 TDI 4motion	81	08/10 – 05/15	3904	4135
CORRADO (53I)	1.8 16V	100	04/89 – 07/92	3531	3529
CORRADO (53I)	1.8 G60	118	09/88 – 09/93	3551	3529/1
CORRADO (53I)	1.8 G60	118	09/88 – 09/93		3529
CORRADO (53I)	2.0 i	85	04/93 – 12/95	3531	3529
CORRADO (53I)	2.0 i 16V	100	08/91 – 12/95	3531	3529
CORRADO (53I)	2.9 VR6	140	08/91 – 12/95	3551	3529/1
CORRADO (53I)	2.9 VR6	140	08/91 – 12/95		3529
CRAFTER 30-35 Bus (2E_)	2.0 TDI	80	05/11 -	3925	3926
CRAFTER 30-35 Bus (2E_)	2.0 TDI	84	11/13 -	3925	3926
CRAFTER 30-35 Bus (2E_)	2.0 TDI	84	11/13 -	3962	
CRAFTER 30-35 Bus (2E_)	2.0 TDI	100	05/11 -	3925	3926
CRAFTER 30-35 Bus (2E_)	2.0 TDI	105	10/11 -	3925	3926
CRAFTER 30-35 Bus (2E_)	2.0 TDI	120	07/11 -	3925	3926
CRAFTER 30-35 Bus (2E_)	2.0 TDI 4motion	120	11/11 -	3925	3926
CRAFTER 30-35 Bus (2E_)	2.5 TDI	65	04/06 – 07/11	3925	3926
CRAFTER 30-35 Bus (2E_)	2.5 TDI	80	04/06 -	3925	3926
CRAFTER 30-35 Bus (2E_)	2.5 TDI	100	04/06 -	3925	3926
CRAFTER 30-35 Bus (2E_)	2.5 TDI	120	04/06 – 07/11	3925	3926
CRAFTER 30-50 Box (2E_)	2.0 TDI	80	05/11 -	3925	3926
CRAFTER 30-50 Box (2E_)	2.0 TDI	80	05/11 -	3962	3963
CRAFTER 30-50 Box (2E_)	2.0 TDI	84	11/13 -	3925	3926
CRAFTER 30-50 Box (2E_)	2.0 TDI	84	11/13 -	3962	
CRAFTER 30-50 Box (2E_)	2.0 TDI	100	05/11 -	3925	3926
CRAFTER 30-50 Box (2E_)	2.0 TDI	100	05/11 -	3962	3963
CRAFTER 30-50 Box (2E_)	2.0 TDI	103	11/15 -		3926
CRAFTER 30-50 Box (2E_)	2.0 TDI	103	11/15 -		3963
CRAFTER 30-50 Box (2E_)	2.0 TDI	105	10/11 -	3925	3926
CRAFTER 30-50 Box (2E_)	2.0 TDI	105	10/11 -	3962	3963
CRAFTER 30-50 Box (2E_)	2.0 TDI	120	07/11 -	3925	3926
CRAFTER 30-50 Box (2E_)	2.0 TDI	120	07/11 -	3962	3963
CRAFTER 30-50 Box (2E_)	2.0 TDI 4motion	120	11/11 -	3925	3926
CRAFTER 30-50 Box (2E_)	2.0 TDI 4motion	120	11/11 -	3962	3963
CRAFTER 30-50 Box (2E_)	2.5 TDI	65	04/06 – 07/11	3925	3926
CRAFTER 30-50 Box (2E_)	2.5 TDI	65	04/06 – 07/11	3962	3963
CRAFTER 30-50 Box (2E_)	2.5 TDI	80	04/06 -	3925	3926
CRAFTER 30-50 Box (2E_)	2.5 TDI	80	04/06 -	3962	3963
CRAFTER 30-50 Box (2E_)	2.5 TDI	100	04/06 -	3925	3926
CRAFTER 30-50 Box (2E_)	2.5 TDI	100	04/06 -	3962	3963
CRAFTER 30-50 Box (2E_)	2.5 TDI	120	04/06 – 07/11	3925	3926
CRAFTER 30-50 Box (2E_)	2.5 TDI	120	04/06 – 07/11	3962	3963
CRAFTER 30-50 Platform/Chassis (2F_)	2.0 TDI	80	05/11 -	3925	3926
CRAFTER 30-50 Platform/Chassis (2F_)	2.0 TDI	80	05/11 -	3962	3963
CRAFTER 30-50 Platform/Chassis (2F_)	2.0 TDI	84	11/13 -	3925	3926
CRAFTER 30-50 Platform/Chassis (2F_)	2.0 TDI	84	11/13 -	3962	
CRAFTER 30-50 Platform/Chassis (2F_)	2.0 TDI	100	05/11 -	3925	3926
CRAFTER 30-50 Platform/Chassis (2F_)	2.0 TDI	100	05/11 -	3962	3963
CRAFTER 30-50 Platform/Chassis (2F_)	2.0 TDI	103	11/15 -		3926
CRAFTER 30-50 Platform/Chassis (2F_)	2.0 TDI	103	11/15 -		3963
CRAFTER 30-50 Platform/Chassis (2F_)	2.0 TDI	105	10/11 -	3925	3926
CRAFTER 30-50 Platform/Chassis (2F_)	2.0 TDI	105	10/11 -	3963	3963
CRAFTER 30-50 Platform/Chassis (2F_)	2.0 TDI	120	07/11 -	3925	3926
CRAFTER 30-50 Platform/Chassis (2F_)	2.0 TDI	120	07/11 -	3962	3963
CRAFTER 30-50 Platform/Chassis (2F_)	2.0 TDI 4motion	120	11/11 -	3925	3926
CRAFTER 30-50 Platform/Chassis (2F_)	2.0 TDI 4motion	120	11/11 -	3962	3963
CRAFTER 30-50 Platform/Chassis (2F_)	2.5 TDI	65	04/06 – 07/11	3925	3926
CRAFTER 30-50 Platform/Chassis (2F_)	2.5 TDI	65	04/06 – 07/11	3962	3963
CRAFTER 30-50 Platform/Chassis (2F_)	2.5 TDI	80	04/06 -	3925	3926

MAKE & MODEL   		KW	YEAR		
VW					
CRAFTER 30-50 Platform/Chassis (2F_)	2.5 TDI	80	04/06 -	3962	3963
CRAFTER 30-50 Platform/Chassis (2F_)	2.5 TDI	100	04/06 -	3925	3926
CRAFTER 30-50 Platform/Chassis (2F_)	2.5 TDI	100	04/06 -	3962	3963
CRAFTER 30-50 Platform/Chassis (2F_)	2.5 TDI	120	04/06 – 07/11	3925	3926
CRAFTER 30-50 Platform/Chassis (2F_)	2.5 TDI	120	04/06 – 07/11	3962	3963
DERBY (86)	0.9	29	02/77 – 09/81	3327	
DERBY (86)	0.9	29	02/77 – 09/81	3343	
DERBY (86)	0.9	29	02/77 – 09/81	3483	
DERBY (86)	1.1	37	02/77 – 09/81	3327	
DERBY (86)	1.1	37	02/77 – 09/81	3343	
DERBY (86)	1.1	37	02/77 – 09/81	3483	
DERBY (86)	1.3	43	02/77 – 09/81	3327	
DERBY (86)	1.3	43	02/77 – 09/81	3343	
DERBY (86)	1.3	43	02/77 – 09/81	3483	
DERBY (86)	1.3	44	02/77 – 09/81	3327	
DERBY (86)	1.3	44	02/77 – 09/81	3343	
DERBY (86)	1.3	44	02/77 – 09/81	3483	
DERBY (86C, 80)	1.0	29	10/81 – 12/84	3327	
DERBY (86C, 80)	1.0	29	10/81 – 12/84	3343	
DERBY (86C, 80)	1.0	29	10/81 – 12/84	3483	
DERBY (86C, 80)	1.1	37	10/81 – 07/83	3327	
DERBY (86C, 80)	1.1	37	10/81 – 07/83	3343	
DERBY (86C, 80)	1.1	37	10/81 – 07/83	3483	
DERBY (86C, 80)	1.3	37	08/83 – 12/84	3327	
DERBY (86C, 80)	1.3	37	08/83 – 12/84	3343	
DERBY (86C, 80)	1.3	37	08/83 – 12/84	3483	
DERBY (86C, 80)	1.3	40	08/83 – 12/84	3327	
DERBY (86C, 80)	1.3	40	08/83 – 12/84	3343	
DERBY (86C, 80)	1.3	40	08/83 – 12/84	3483	
DERBY (86C, 80)	1.3	44	08/81 – 07/83	3327	
DERBY (86C, 80)	1.3	44	08/81 – 07/83	3343	
DERBY (86C, 80)	1.3	44	08/81 – 07/83	3483	
DERBY (86C, 80)	1.3	55	09/82 – 12/84	3327	
DERBY (86C, 80)	1.3	55	09/82 – 12/84	3343	
DERBY (86C, 80)	1.3	55	09/82 – 12/84	3483	
EOS (1F7, 1F8)	1.4 TSI	90	11/07 – 08/15	3904	3529/1
EOS (1F7, 1F8)	1.4 TSI	90	11/07 – 08/15		3905
EOS (1F7, 1F8)	1.4 TSI	90	11/07 – 08/15		4135
EOS (1F7, 1F8)	1.4 TSI	92	11/13 -		3529/1
EOS (1F7, 1F8)	1.4 TSI	110	11/13 -		3529/1
EOS (1F7, 1F8)	1.4 TSI	118	05/08 – 08/15	3904	3529/1
EOS (1F7, 1F8)	1.4 TSI	118	05/08 – 08/15		3905
EOS (1F7, 1F8)	1.4 TSI	118	05/08 – 08/15		4135
EOS (1F7, 1F8)	1.6 FSI	85	06/06 – 05/08	3904	3529/1
EOS (1F7, 1F8)	1.6 FSI	85	06/06 – 05/08		3905
EOS (1F7, 1F8)	1.6 FSI	85	06/06 – 05/08		4135
EOS (1F7, 1F8)	2.0 FSI	110	03/06 – 05/08	3904	3529/1
EOS (1F7, 1F8)	2.0 FSI	110	03/06 – 05/08		3905
EOS (1F7, 1F8)	2.0 FSI	110	03/06 – 05/08		4135
EOS (1F7, 1F8)	2.0 TDI	100	11/10 – 08/15	3904	3529/1
EOS (1F7, 1F8)	2.0 TDI	100	11/10 – 08/15		3905
EOS (1F7, 1F8)	2.0 TDI	100	11/10 – 08/15		4135
EOS (1F7, 1F8)	2.0 TDI	103	06/06 – 05/08	3904	3529/1
EOS (1F7, 1F8)	2.0 TDI	103	06/06 – 05/08		3905
EOS (1F7, 1F8)	2.0 TDI	103	06/06 – 05/08		4135
EOS (1F7, 1F8)	2.0 TDI 16V	103	05/08 – 08/15	3904	3529/1
EOS (1F7, 1F8)	2.0 TDI 16V	103	05/08 – 08/15		3905
EOS (1F7, 1F8)	2.0 TDI 16V	103	05/08 – 08/15		4135
EOS (1F7, 1F8)	2.0 TFSI	147	03/06 – 08/15	3904	3529/1
EOS (1F7, 1F8)	2.0 TFSI	147	03/06 – 08/15		3905
EOS (1F7, 1F8)	2.0 TFSI	147	03/06 – 08/15		4135
EOS (1F7, 1F8)	2.0 TFSI	162	11/13 – 08/15		3529/1
EOS (1F7, 1F8)	2.0 TSI	155	11/09 – 08/15	3904	3529/1
EOS (1F7, 1F8)	2.0 TSI	155	11/09 – 08/15		3905
EOS (1F7, 1F8)	2.0 TSI	155	11/09 – 08/15		4135
FOX (5Z1, 5Z3)	1.2	40	04/05 -	3566	
FOX (5Z1, 5Z3)	1.2	40	04/05 -	3782/1	
FOX (5Z1, 5Z3)	1.2	44	09/10 -	3566	
FOX (5Z1, 5Z3)	1.2	44	09/10 -	3782/1	
FOX (5Z1, 5Z3)	1.4	55	04/05 -	3566	
FOX (5Z1, 5Z3)	1.4	55	04/05 -	3782/1	
FOX (5Z1, 5Z3)	1.4 TDI	51	04/05 -	3566	
FOX (5Z1, 5Z3)	1.4 TDI	51	04/05 -	3782/1	
FOX (5Z1, 5Z3)	1.6	74	10/03 -	3566	
FOX (5Z1, 5Z3)	1.6	74	10/03 -	3782/1	
FOX (5Z1, 5Z3)	1.6 Total Flex	74	10/03 -	3566	

MAKE & MODEL		KW	YEAR		
VW					
FOX (5Z1, 5Z3)	1.6 Total Flex	74	10/03 -	3782/1	
GOLF ALLTRACK (BA5)	1.6 TDI 4motion	81	12/14 -	4295	
GOLF ALLTRACK (BA5)	1.8 TSI 4motion	132	12/14 -	4295	
GOLF ALLTRACK (BA5)	2.0 TDI 4motion	110	12/14 -	4295	
GOLF ALLTRACK (BA5)	2.0 TDI 4motion	135	12/14 -	4295	
GOLF I (17)	1.5	51	04.1974 - 12.1975	3444/1	
GOLF I (17)	1.5	51	08.1977 - 07.1983	3444/1	
GOLF I (17)	1.6	55	08.1975 - 02.1984	3444/1	
GOLF I (17)	1.6 GTI	81	08.1976 - 07.1982	3486/1	
GOLF I (17)	1.6 TD	51	03.1982 - 07.1983	3444/1	
GOLF I (17)	1.8 GTI	82	08.1982 - 12.1983	3486/1	
GOLF I (17)	1.1	37	04/74 – 07/83	3327	
GOLF I (17)	1.1	37	04/74 – 07/83	3343	
GOLF I (17)	1.1	37	04/74 – 07/83	3483	
GOLF I (17)	1.1	38	08/76 – 07/80	3327	
GOLF I (17)	1.1	38	08/76 – 07/80	3343	
GOLF I (17)	1.1	38	08/76 – 07/80	3483	
GOLF I (17)	1.3	44	08/79 – 07/83	3327	
GOLF I (17)	1.3	44	08/79 – 07/83	3343	
GOLF I (17)	1.3	44	08/79 – 07/83	3483	
GOLF I (17)	1.5	51	04/74 – 07/83	3585	
GOLF I (17)	1.5	51	04/74 –07/83	3444	
GOLF I (17)	1.5	51	08/77 – 07/83	3585	
GOLF I (17)	1.5 D	37	08/76 – 07/80	3327	
GOLF I (17)	1.5 D	37	08/76 – 07/80	3343	
GOLF I (17)	1.5 D	37	08/76 – 07/80	3483	
GOLF I (17)	1.6	55	08/75 – 02/84	3444	
GOLF I (17)	1.6	55	08/75 – 02/84	3585	
GOLF I (17)	1.6 D	40	08/80 – 07/83	3327	
GOLF I (17)	1.6 D	40	08/80 – 07/83	3343	
GOLF I (17)	1.6 D	40	08/80 – 07/83	3483	
GOLF I (17)	1.6 GTI	81	08/76 – 07/82	3327	
GOLF I (17)	1.6 GTI	81	08/76 – 07/82	3343	
GOLF I (17)	1.6 GTI	81	08/76 – 07/82	3483	
GOLF I (17)	1.6 GTI	81	08/76 – 07/82	3486	
GOLF I (17)	1.6 TD	51	03/82 – 07/83	3444	
GOLF I (17)	1.6 TD	51	03/82 – 07/83	3585	
GOLF I (17)	1.8 GTI	82	08/82 – 12/83	3486	
GOLF I Cabriolet (155)	1.5	51	01.1979 - 11.1983	3444/1	
GOLF I Cabriolet (155)	1.6	53	04.1986 - 02.1990	3444/1	
GOLF I Cabriolet (155)	1.6	55	08.1983 - 04.1992	3444/1	
GOLF I Cabriolet (155)	1.6	81	08.1979 - 07.1982	3486/1	
GOLF I Cabriolet (155)	1.8	66	08.1983 - 09.1992	3486/1	
GOLF I Cabriolet (155)	1.8	70	08.1983 - 04.1993	3486/1	
GOLF I Cabriolet (155)	1.8	72	08.1989 - 03.1993	3486/1	
GOLF I Cabriolet (155)	1.8	82	08.1982 - 12.1989	3486/1	
GOLF I Cabriolet (155)	1.8	82	08.1983 - 12.1992	3486/1	
GOLF I Cabriolet (155)	1.3	40	08/83 – 07/86	3444	
GOLF I Cabriolet (155)	1.3	40	08/83 – 07/86	3585	
GOLF I Cabriolet (155)	1.5	51	01/79 – 11/83	3444	
GOLF I Cabriolet (155)	1.5	51	01/79 – 11/83	3585	
GOLF I Cabriolet (155)	1.6	53	04/86 – 02/90	3444	
GOLF I Cabriolet (155)	1.6	53	04/86 – 02/90	3585	
GOLF I Cabriolet (155)	1.6	55	08/83 – 04/92	3444	
GOLF I Cabriolet (155)	1.6	55	08/83 – 04/92	3585	
GOLF I Cabriolet (155)	1.6	81	08/79 – 07/82	3327	
GOLF I Cabriolet (155)	1.6	81	08/79 – 07/82	3343	
GOLF I Cabriolet (155)	1.6	81	08/79 – 07/82	3483	
GOLF I Cabriolet (155)	1.6	81	08/79 – 07/82	3486	
GOLF I Cabriolet (155)	1.8	66	08/83 – 09/92	3486	
GOLF I Cabriolet (155)	1.8	70	08/83 – 04/93	3486	
GOLF I Cabriolet (155)	1.8	72	08/89 – 03/93	3486	
GOLF I Cabriolet (155)	1.8	82	08/82 – 12/92	3486	
GOLF II (19E, 1G1)	1.0	37	08.1985 - 10.1991	3444/1	
GOLF II (19E, 1G1)	1.3 Cat	40	06.1986 - 12.1992	3444/1	
GOLF II (19E, 1G1)	1.6	51	10.1986 - 12.1992	3444/1	
GOLF II (19E, 1G1)	1.6	53	02.1986 - 10.1991	3444/1	
GOLF II (19E, 1G1)	1.6	55	08.1983 - 07.1992	3444/1	
GOLF II (19E, 1G1)	1.6 D	40	08.1983 - 10.1991	3444/1	
GOLF II (19E, 1G1)	1.6 TD	44	08.1989 - 10.1991	3444/1	
GOLF II (19E, 1G1)	1.6 TD	51	08.1983 - 10.1991	3444/1	
GOLF II (19E, 1G1)	1.6 TD	59	04.1989 - 10.1991	3444/1	
GOLF II (19E, 1G1)	1.8	62	08.1986 - 01.1990	3444/1	
GOLF II (19E, 1G1)	1.8	62	08.1986 - 01.1990	3486/1	
GOLF II (19E, 1G1)	1.8	66	08.1984 - 10.1991	3444/1	
GOLF II (19E, 1G1)	1.8	66	08.1984 - 10.1991	3486/1	

MAKE & MODEL		KW	YEAR		
VW					
GOLF II (19E, 1G1)	1.8 GTI	77	01.1985 - 07.1985	3486/1	
GOLF II (19E, 1G1)	1.8 GTI	79	08.1985 - 10.1987	3486/1	
GOLF II (19E, 1G1)	1.8 GTI	82	08.1983 - 10.1991	3486/1	
GOLF II (19E, 1G1)	1.8 GTI 16V	100	08.1986 - 07.1988	3486/1	
GOLF II (19E, 1G1)	1.8 GTI 16V	102	02.1986 - 06.1990	3486/1	
GOLF II (19E, 1G1)	1.8 GTI 16V	95	02.1986 - 10.1991	3486/1	
GOLF II (19E, 1G1)	1.8 GTI Cat	79	01.1987 - 10.1991	3486/1	
GOLF II (19E, 1G1)	1.8 i Cat	66	08.1987 - 10.1991	3444/1	
GOLF II (19E, 1G1)	1.8 i Cat	66	08.1987 - 10.1991	3486/1	
GOLF II (19E, 1G1)	1.8 i Cat Syncro	66	08.1987 - 10.1991	3444/1	
GOLF II (19E, 1G1)	1.8 Syncro	66	02.1986 - 07.1991	3444/1	
GOLF II (19E, 1G1)	1.8 Syncro	72	08.1988 - 07.1991	3444/1	
GOLF II (19E, 1G1)	1.0	33	11/83 – 08/85	3441	
GOLF II (19E, 1G1)	1.0	37	08/85 – 10/91	3441	
GOLF II (19E, 1G1)	1.0	37	08/85 – 10/91	3444	
GOLF II (19E, 1G1)	1.0	37	08/85 – 10/91	3585	
GOLF II (19E, 1G1)	1.3	37	08/85 – 12/87	3441	
GOLF II (19E, 1G1)	1.3	40	08/83 – 06/87	3441	
GOLF II (19E, 1G1)	1.3	43	08/83 – 10/86	3441	
GOLF II (19E, 1G1)	1.3 CAT	40	06/86 – 12/92	3441	
GOLF II (19E, 1G1)	1.3 CAT	40	06/86 – 12/92	3444	
GOLF II (19E, 1G1)	1.3 CAT	40	06/86 – 12/92	3585	
GOLF II (19E, 1G1)	1.6	51	10/86 – 12/92	3444	
GOLF II (19E, 1G1)	1.6	51	10/86 – 12/92	3585	
GOLF II (19E, 1G1)	1.6	53	02/86 – 10/91	3441	
GOLF II (19E, 1G1)	1.6	53	02/86 – 10/91	3444	
GOLF II (19E, 1G1)	1.6	53	02/86 – 10/91	3585	
GOLF II (19E, 1G1)	1.6	55	08/83 – 07/92	3444	
GOLF II (19E, 1G1)	1.6	55	08/83 – 07/92	3585	
GOLF II (19E, 1G1)	1.6 D	37	08/83 – 10/91	3441	
GOLF II (19E, 1G1)	1.6 D	37	08/83 – 10/91	3444	
GOLF II (19E, 1G1)	1.6 D	37	08/83 – 10/91	3585	
GOLF II (19E, 1G1)	1.6 D	40	08/83 – 10/91	3441	
GOLF II (19E, 1G1)	1.6 D	40	08/83 – 10/91	3444	
GOLF II (19E, 1G1)	1.6 D	40	08/83 – 10/91	3585	
GOLF II (19E, 1G1)	1.6 TD	44	08/89 – 10/91	3444	
GOLF II (19E, 1G1)	1.6 TD	44	08/89 – 10/91	3585	
GOLF II (19E, 1G1)	1.6 TD	51	08/83 – 10/91	3444	
GOLF II (19E, 1G1)	1.6 TD	51	08/83 – 10/91	3585	
GOLF II (19E, 1G1)	1.6 TD	55	08/83 – 07/85	3444	
GOLF II (19E, 1G1)	1.6 TD	55	08/83 – 07/85	3585	
GOLF II (19E, 1G1)	1.6 TD	59	04/89 – 10/91	3444	
GOLF II (19E, 1G1)	1.6 TD	59	04/89 – 10/91	3585	
GOLF II (19E, 1G1)	1.8	62	08/86 – 01/90	3585	3529
GOLF II (19E, 1G1)	1.8	62	08/86 – 01/90	3444	
GOLF II (19E, 1G1)	1.8	62	08/86 – 01/90	3486	
GOLF II (19E, 1G1)	1.8	66	08/84 – 10/91	3486	3529
GOLF II (19E, 1G1)	1.8	66	08/84 – 10/91	3444	
GOLF II (19E, 1G1)	1.8	66	08/84 – 10/91	3585	
GOLF II (19E, 1G1)	1.8 GTI	77	01/85 – 07/85	3486	3529
GOLF II (19E, 1G1)	1.8 GTI	79	08/85 – 10/87	3486	3529
GOLF II (19E, 1G1)	1.8 GTI	82	08/83 – 10/91	3486	3529
GOLF II (19E, 1G1)	1.8 GTI 16V	95	02/86 – 10/91	3486	3529
GOLF II (19E, 1G1)	1.8 GTI 16V	95	02/86 – 10/91	3531	
GOLF II (19E, 1G1)	1.8 GTI 16V	102	02/86 – 06/90	3486	3529
GOLF II (19E, 1G1)	1.8 GTI 16V	102	02/86 – 06/90	3531	
GOLF II (19E, 1G1)	1.8 GTI CAT	79	01/87 – 10/91	3486	3529
GOLF II (19E, 1G1)	1.8 GTI G60	118	04/90 – 07/91	3551	3529
GOLF II (19E, 1G1)	1.8 GTI G60 Syncro	118	08/88 – 12/91	3551	3529
GOLF II (19E, 1G1)	1.8 i CAT	66	08/87 – 10/91	3486	3529
GOLF II (19E, 1G1)	1.8 i CAT	66	08/87 – 10/91	3444	
GOLF II (19E, 1G1)	1.8 i CAT	66	08/87 – 10/91	3585	
GOLF II (19E, 1G1)	1.8 i Syncro CAT	66	08/87 – 10/91	3444	
GOLF II (19E, 1G1)	1.8 i Syncro CAT	66	08/87 – 10/91	3585	
GOLF II (19E, 1G1)	1.8 Syncro	66	02/86 – 07/91	3444	
GOLF II (19E, 1G1)	1.8 Syncro	66	02/86 – 07/91	3585	
GOLF II (19E, 1G1)	1.8 Syncro	72	08/88 – 07/91	3444	
GOLF II (19E, 1G1)	1.8 Syncro	72	08/88 – 07/91	3585	
GOLF II (19E, 1G1)	2.0	57	08/85 – 07/92	3444	
GOLF II (19E, 1G1)	2.0	57	08/85 – 07/92	3585	
GOLF III (1H1)	1.4	40	11.1991 - 08.1997	3444/1	
GOLF III (1H1)	1.4	44	10.1991 - 08.1997	3444/1	
GOLF III (1H1)	1.6	55	09.1992 - 08.1997	3444/1	
GOLF III (1H1)	1.8	55	11.1991 - 08.1997	3444/1	
GOLF III (1H1)	1.8	66	11.1991 - 08.1997	3444/1	
GOLF III (1H1)	1.8 Syncro (1HX1	66	01.1993 - 08.1997	3444/1	

MAKE & MODEL   		KW	YEAR		
VW					
GOLF III (1H1)	1.9 D	47	11.1991 - 08.1997	3444/1	
GOLF III (1H1)	1.9 SDI	47	07.1995 - 08.1997	3444/1	
GOLF III (1H1)	1.9 TD,GTD	55	11.1991 - 08.1997	3444/1	
GOLF III (1H1)	1.3	40	08/91 – 07/92	3444	
GOLF III (1H1)	1.3	40	08/91 – 07/92	3585	
GOLF III (1H1)	1.3	40	08/91 07/92	3538	
GOLF III (1H1)	1.4	40	11/91 – 08/97	3444	
GOLF III (1H1)	1.4	40	11/91 – 08/97	3538	
GOLF III (1H1)	1.4	40	11/91 – 08/97	3585	
GOLF III (1H1)	1.4	40	11/91 – 08/97	3637	
GOLF III (1H1)	1.4	44	10/91 – 08/97	3444	
GOLF III (1H1)	1.4	44	10/91 – 08/97	3538	
GOLF III (1H1)	1.4	44	10/91 – 08/97	3585	
GOLF III (1H1)	1.4	44	10/91 – 08/97	3637	
GOLF III (1H1)	1.6	55	09/92 – 08/97	3444	
GOLF III (1H1)	1.6	55	09/92 – 08/97	3538	
GOLF III (1H1)	1.6	55	09/92 – 08/97	3585	
GOLF III (1H1)	1.6	55	09/92 – 08/97	3637	
GOLF III (1H1)	1.6	74	07/95 – 08/97	3531	3529/1
GOLF III (1H1)	1.6	74	07/95 – 08/97	3551	
GOLF III (1H1)	1.8	55	11/91 – 08/97	3444	3529
GOLF III (1H1)	1.8	55	11/91 – 08/97	3538	
GOLF III (1H1)	1.8	55	11/91 – 08/97	3551	
GOLF III (1H1)	1.8	55	11/91 – 08/97	3585	
GOLF III (1H1)	1.8	66	11/91 – 08/97	3444	3529
GOLF III (1H1)	1.8	66	11/91 – 08/97	3538	
GOLF III (1H1)	1.8	66	11/91 – 08/97	3551	
GOLF III (1H1)	1.8	66	11/91 – 08/97	3585	
GOLF III (1H1)	1.8 Syncro (1HX1)	66	01/93 – 08/97	3444	
GOLF III (1H1)	1.8 Syncro (1HX1)	66	01/93 – 08/97	3551	
GOLF III (1H1)	1.8 Syncro (1HX1)	66	01/93 – 08/97	3585	
GOLF III (1H1)	1.9 D	48	11/91 – 08/97	3444	
GOLF III (1H1)	1.9 D	48	11/91 – 08/97	3538	
GOLF III (1H1)	1.9 D	48	11/91 – 08/97	3585	
GOLF III (1H1)	1.9 D	48	11/91 – 08/97	3637	
GOLF III (1H1)	1.9 SDI	47	07/95 – 08/97	3444	
GOLF III (1H1)	1.9 SDI	47	07/95 – 08/97	3538	
GOLF III (1H1)	1.9 SDI	47	07/95 – 08/97	3585	
GOLF III (1H1)	1.9 SDI	47	07/95 – 08/97	3637	
GOLF III (1H1)	1.9 TD,GTD	55	11/91 – 08/97	3444	
GOLF III (1H1)	1.9 TD,GTD	55	11/91 – 08/97	3538	
GOLF III (1H1)	1.9 TD,GTD	55	11/91 – 08/97	3585	
GOLF III (1H1)	1.9 TD,GTD	55	11/91 – 08/97	3637	
GOLF III (1H1)	1.9 TDI	66	09/93 – 08/97	3551	3529
GOLF III (1H1)	1.9 TDI	81	04/96 – 08/97	3531	3529/1
GOLF III (1H1)	1.9 TDI	81	04/96 – 08/97		3529
GOLF III (1H1)	1.9 TDI Syncro (1HX1)	66	08/95 – 08/97	3551	
GOLF III (1H1)	2.0	85	11/91 – 08/97	3531	3529
GOLF III (1H1)	2.0 GL	79	08/95 – 09/97	3531	3529
GOLF III (1H1)	2.0 GTI 16V	110	08/92 – 08/97	3551	3529/1
GOLF III (1H1)	2.0 GTI 16V	110	08/92 – 08/97		3529
GOLF III (1H1)	2.0 Syncro (1HX1)	85	08/95 – 08/97	3531	
GOLF III (1H1)	2.8 VR6	120	08/95 – 09/97		3529
GOLF III (1H1)	2.8 VR6	128	01/92 – 08/97		3529
GOLF III (1H1)	2.9 VR6 Syncro (1HX1)	140	10/94 – 08/97		3529/1
GOLF III Cabriolet (1E7)	1.6	74	10/94 – 05/98	3531	3529
GOLF III Cabriolet (1E7)	1.6	74	10/94 – 05/98	3551	3529/1
GOLF III Cabriolet (1E7)	1.8	55	07/93 – 05/98	3531	3529
GOLF III Cabriolet (1E7)	1.8	55	07/93 – 05/98	3551	3529/1
GOLF III Cabriolet (1E7)	1.8	66	07/93 – 05/98	3531	3529
GOLF III Cabriolet (1E7)	1.8	66	07/93 – 05/98	3551	3529/1
GOLF III Cabriolet (1E7)	1.9 TDI	66	08/95 – 05/98	3531	3529
GOLF III Cabriolet (1E7)	1.9 TDI	66	08/95 – 05/98	3551	3529/1
GOLF III Cabriolet (1E7)	1.9 TDI	81	07/96 – 05/98	3531	3529
GOLF III Cabriolet (1E7)	1.9 TDI	81	07/96 – 05/98	3551	3529/1
GOLF III Cabriolet (1E7)	2.0	85	07/93 – 05/98	3531	3529
GOLF III Cabriolet (1E7)	2.0	85	07/93 – 05/98	3551	3529/1
GOLF III Variant (1H5)	1.4	40	07.1993 - 04.1999	3444/1	
GOLF III Variant (1H5)	1.4	44	07.1993 - 04.1999	3444/1	
GOLF III Variant (1H5)	1.8 Syncro	66	10.1994 - 04.1999	3444/1	
GOLF III Variant (1H5)	1.4	40	07/93 – 04/99	3444	
GOLF III Variant (1H5)	1.4	40	07/93 – 04/99	3538	
GOLF III Variant (1H5)	1.4	40	07/93 – 04/99	3585	
GOLF III Variant (1H5)	1.4	40	07/93 – 04/99	3637	
GOLF III Variant (1H5)	1.4	44	07/93 – 04/99	3444	
GOLF III Variant (1H5)	1.4	44	07/93 – 04/99	3538	

MAKE & MODEL		KW	YEAR		
VW					
GOLF III Variant (1H5)	1.4	44	07/93 – 04/99	3585	
GOLF III Variant (1H5)	1.4	44	07/93 – 04/99	3637	
GOLF III Variant (1H5)	1.6	74	07/94 – 04/99	3531	3529/1
GOLF III Variant (1H5)	1.6	74	07/94 – 04/99		3529
GOLF III Variant (1H5)	1.8	55	07/93 – 04/99	3551	3529/1
GOLF III Variant (1H5)	1.8	55	07/93 – 04/99		3529
GOLF III Variant (1H5)	1.8	66	07/93 – 04/99	3551	3529/1
GOLF III Variant (1H5)	1.8	66	07/93 – 04/99		3529
GOLF III Variant (1H5)	1.8 Syncro	66	10/94 – 04/99	3444	
GOLF III Variant (1H5)	1.8 Syncro	66	10/94 – 04/99	3551	
GOLF III Variant (1H5)	1.8 Syncro	66	10/94 – 04/99	3585	
GOLF III Variant (1H5)	1.9 D	48	07/93 – 04/99	3551	
GOLF III Variant (1H5)	1.9 D	48	07/93 – 04/99	3637	
GOLF III Variant (1H5)	1.9 SDI	47	07/95 – 04/99	3551	
GOLF III Variant (1H5)	1.9 SDI	47	07/95 – 04/99	3637	
GOLF III Variant (1H5)	1.9 TD	55	07/93 – 04/99	3551	
GOLF III Variant (1H5)	1.9 TD	55	07/93 – 04/99	3637	
GOLF III Variant (1H5)	1.9 TDI	66	03/94 – 04/99	3551	3529/1
GOLF III Variant (1H5)	1.9 TDI	66	03/94 – 04/99		3529
GOLF III Variant (1H5)	1.9 TDI	81	04/96 – 04/99	3531	3529/1
GOLF III Variant (1H5)	1.9 TDI Syncro	66	07/95 – 04/99	3551	3529/1
GOLF III Variant (1H5)	2.0	79	08/95 – 04/96	3531	3529/1
GOLF III Variant (1H5)	2.0	85	07/93 – 04/99	3531	3529/1
GOLF III Variant (1H5)	2.0	85	07/93 – 04/99		3529
GOLF III Variant (1H5)	2.0 Syncro	85	08/95 – 04/99	3531	3529/1
GOLF III Variant (1H5)	2.0 Syncro	85	08/95 – 04/99	3551	
GOLF III Variant (1H5)	2.9 VR6 Syncro	140	10/94 – 04/99		3529/1
GOLF IV (1J1)	1.0	43	08/98 – 05/02	3782	3529/1
GOLF IV (1J1)	1.0	43	08/98 – 05/02	3782/1	
GOLF IV (1J1)	1.0	43	08/98 – 05/02	3682	
GOLF IV (1J1)	1.0	51	08/97 – 05/02	3682	
GOLF IV (1J1)	1.0 Turbo	82	08/97 – 05/02	3682	
GOLF IV (1J1)	1.4 16V	55	08/97 – 06/05	3782	3529/1
GOLF IV (1J1)	1.4 16V	55	08/97 – 06/05	3782/1	
GOLF IV (1J1)	1.4 16V (AHW)	55	08/97 – 06/05	3682	
GOLF IV (1J1)	1.4 16V (AKQ)	55	08/97 – 06/05	3682	
GOLF IV (1J1)	1.4 16V (APE)	55	08/97 – 06/05	3682	
GOLF IV (1J1)	1.4 16V (AXP)	55	08/97 – 06/05	3682	
GOLF IV (1J1)	1.4 16V (BCA)	55	08/97 – 06/05	3682	
GOLF IV (1J1)	1.6	68	12/98 – 05/02	3782	3529/1
GOLF IV (1J1)	1.6	68	12/98 – 05/02	3782/1	
GOLF IV (1J1)	1.6	74	02/01 – 06/01	3782	3529/1
GOLF IV (1J1)	1.6	74	08/97 – 05/04	3782	3529/1
GOLF IV (1J1)	1.6	74	08/97 – 05/04	3782/1	
GOLF IV (1J1)	1.6	75	08/00 – 06/05	3782	3529/1
GOLF IV (1J1)	1.6	78	08/03 – 06/05	3782	3529/1
GOLF IV (1J1)	1.6 (AEH)	74	08/97 – 05/04	3682	
GOLF IV (1J1)	1.6 (AKL)	74	08/97 – 05/04	3682	
GOLF IV (1J1)	1.6 (APF)	74	08/97 – 05/04	3682	
GOLF IV (1J1)	1.6 16V	77	02/00 – 06/05	3782	3529/1
GOLF IV (1J1)	1.6 D	40	08/97 – 07/98	3682	
GOLF IV (1J1)	1.6 FSI	81	01/02 – 06/05	3782	3529/1
GOLF IV (1J1)	1.8	77	04/98 – 05/02	3782	3529/1
GOLF IV (1J1)	1.8	77	04/98 – 05/02	3782/1	
GOLF IV (1J1)	1.8	92	08/97 – 06/05	3782	3529/1
GOLF IV (1J1)	1.8	92	08/97 – 06/05	3782/1	
GOLF IV (1J1)	1.8 4motion	92	05/98 – 06/05	3782	3529/1
GOLF IV (1J1)	1.8 4motion	92	05/98 – 06/05	3782/1	
GOLF IV (1J1)	1.8 T	110	08/97 – 06/05	3590/1	3529/1
GOLF IV (1J1)	1.8 T GTI	132	08/01 – 06/05	3590/1	3529/1
GOLF IV (1J1)	1.9 SDI	50	08/97 – 06/05	3782	3529/1
GOLF IV (1J1)	1.9 SDI	50	08/97 – 06/05	3782/1	
GOLF IV (1J1)	1.9 SDI (AGP)	50	08/97 – 06/05	3682	
GOLF IV (1J1)	1.9 SDI (AQM)	50	08/97 – 06/05	3682	
GOLF IV (1J1)	1.9 TDI	66	10/97 – 05/04	3782	3529/1
GOLF IV (1J1)	1.9 TDI	66	10/97 – 05/04	3782/1	
GOLF IV (1J1)	1.9 TDI	74	09/00 – 06/05	3782	3529/1
GOLF IV (1J1)	1.9 TDI	81	08/97 – 05/04	3782	3529/1
GOLF IV (1J1)	1.9 TDI	81	08/97 – 05/04	3782/1	
GOLF IV (1J1)	1.9 TDI	85	12/98 – 06/01	3782	3529/1
GOLF IV (1J1)	1.9 TDI	85	12/98 – 06/01	3782/1	
GOLF IV (1J1)	1.9 TDI	96	11/00 – 06/05	3590/1	3529/1
GOLF IV (1J1)	1.9 TDI	110	05/00 – 06/05	3590/1	3529/1
GOLF IV (1J1)	1.9 TDI 4motion	66	07/98 – 04/02	3782	3529/1
GOLF IV (1J1)	1.9 TDI 4motion	66	07/98 – 04/02	3782/1	
GOLF IV (1J1)	1.9 TDI 4motion	74	09/00 – 06/05	3782	3529/1

MAKE & MODEL		KW	YEAR		
VW					
GOLF IV (1J1)	1.9 TDI 4motion	85	09/99 – 06/01	3782	3529/1
GOLF IV (1J1)	1.9 TDI 4motion	96	11/00 – 06/05	3590/1	3529/1
GOLF IV (1J1)	1.9 TDI 4motion	110	02/00 – 06/05	3590/1	3529/1
GOLF IV (1J1)	2.0	85	07/98 – 05/04	3782	3529/1
GOLF IV (1J1)	2.0	85	07/98 – 05/04	3782/1	
GOLF IV (1J1)	2.0 4motion	85	10/00 – 06/05	3782	3529/1
GOLF IV (1J1)	2.3 V5	110	08/97 – 10/00	3590/1	3529/1
GOLF IV (1J1)	2.3 V5	125	10/00 – 06/05	3590/1	3529/1
GOLF IV (1J1)	2.3 V5 4motion	110	12/98 – 10/00	3590/1	3529/1
GOLF IV (1J1)	2.3 V5 4motion	125	10/00 – 06/05	3590/1	3529/1
GOLF IV (1J1)	2.8 V6 4motion	150	03/99 – 06/05	3590/1	3529/1
GOLF IV (1J1)	3.2 R32 4motion	177	09/02 – 06/05		3529/1
GOLF IV Cabriolet (1E7)	1.6	74	06/98 – 06/02	3531	3529
GOLF IV Cabriolet (1E7)	1.6	74	06/98 – 06/02	3551	3529/1
GOLF IV Cabriolet (1E7)	1.8	55	06/98 – 06/02	3531	3529
GOLF IV Cabriolet (1E7)	1.8	55	06/98 – 06/02	3551	3529/1
GOLF IV Cabriolet (1E7)	1.8	66	06/98 – 06/02	3531	3529
GOLF IV Cabriolet (1E7)	1.8	66	06/98 – 06/02	3551	3529/1
GOLF IV Cabriolet (1E7)	1.9 TDI	66	06/98 – 06/02	3531	3529
GOLF IV Cabriolet (1E7)	1.9 TDI	66	06/98 – 06/02	3551	3529/1
GOLF IV Cabriolet (1E7)	1.9 TDI	81	06/98 – 06/02	3531	3529
GOLF IV Cabriolet (1E7)	1.9 TDI	81	06/98 – 06/02	3551	3529/1
GOLF IV Cabriolet (1E7)	2.0	85	06/98 – 06/02	3531	3529
GOLF IV Cabriolet (1E7)	2.0	85	06/98 – 06/02	3551	3529/1
GOLF IV Variant (1J5)	1.4 16V	55	05/99 – 06/06	3782	3529/1
GOLF IV Variant (1J5)	1.6	74	05/99 – 04/02	3782	3529/1
GOLF IV Variant (1J5)	1.6	75	08/00 – 06/06	3782	3529/1
GOLF IV Variant (1J5)	1.6 16V	77	02/00 – 06/06	3782	3529/1
GOLF IV Variant (1J5)	1.6 FSI	81	01/02 – 06/06	3782	3529/1
GOLF IV Variant (1J5)	1.8 4motion	92	05/99 – 06/06	3782	3529/1
GOLF IV Variant (1J5)	1.8 T	110	05/00 – 06/06	3590/1	3529/1
GOLF IV Variant (1J5)	1.9 SDI	50	05/99 – 06/06	3782	3529/1
GOLF IV Variant (1J5)	1.9 TDI	66	05/99 – 05/06	3782	3529/1
GOLF IV Variant (1J5)	1.9 TDI	74	09/00 – 06/06	3782	3529/1
GOLF IV Variant (1J5)	1.9 TDI	81	05/99 – 06/01	3782	3529/1
GOLF IV Variant (1J5)	1.9 TDI	85	08/99 – 06/01	3782	3529/1
GOLF IV Variant (1J5)	1.9 TDI	96	11/00 – 06/06	3590/1	3529/1
GOLF IV Variant (1J5)	1.9 TDI 4motion	66	05/99 – 04/02	3782	3529/1
GOLF IV Variant (1J5)	1.9 TDI 4motion	74	09/00 – 06/06	3782	3529/1
GOLF IV Variant (1J5)	1.9 TDI 4motion	85	05/99 – 06/01	3782	3529/1
GOLF IV Variant (1J5)	1.9 TDI 4motion	96	11/00 – 06/06	3590/1	3529/1
GOLF IV Variant (1J5)	1.9 TDI 4motion	110	05/02 – 06/05	3590/1	3529/1
GOLF IV Variant (1J5)	1.9 TDI 4motion	110	05/02 – 06/05	3782	
GOLF IV Variant (1J5)	2.0	85	05/99 – 06/06	3782	3529/1
GOLF IV Variant (1J5)	2.0 4motion	85	10/00 – 06/06	3782	3529/1
GOLF IV Variant (1J5)	2.0 4motion	88	12/99 – 06/06	3782	3529/1
GOLF IV Variant (1J5)	2.0 Bi-Fuel	85	02/02 – 06/06	3782	3529/1
GOLF IV Variant (1J5)	2.3 V5	110	05/99 – 06/06	3590/1	3529/1
GOLF IV Variant (1J5)	2.3 V5	125	10/00 – 06/06	3590/1	3529/1
GOLF IV Variant (1J5)	2.3 V5 4motion	110	05/99 – 06/06	3590/1	3529/1
GOLF IV Variant (1J5)	2.3 V5 4motion	125	10/00 – 06/06	3590/1	3529/1
GOLF IV Variant (1J5)	2.8 V6 4motion	150	05/99 – 06/06	3590/1	3529/1
GOLF PLUS (5M1, 521)	1.2 TSI	63	05/10 – 12/13	3782	3529/1
GOLF PLUS (5M1, 521)	1.2 TSI	63	05/10 – 12/13	3782/1	3905
GOLF PLUS (5M1, 521)	1.2 TSI	77	11/09 – 12/13	3782	3529/1
GOLF PLUS (5M1, 521)	1.2 TSI	77	11/09 – 12/13	3782/1	3905
GOLF PLUS (5M1, 521)	1.4 16V	55	01/05 – 11/06	3782	3529/1
GOLF PLUS (5M1, 521)	1.4 16V	55	01/05 – 11/06	3904	3905
GOLF PLUS (5M1, 521)	1.4 16V	55	01/05 – 11/06	3782/1	
GOLF PLUS (5M1, 521)	1.4 16V	59	05/06 – 12/13	3782	3529/1
GOLF PLUS (5M1, 521)	1.4 16V	59	05/06 – 12/13	3904	3905
GOLF PLUS (5M1, 521)	1.4 16V	59	05/06 – 12/13	3782/1	
GOLF PLUS (5M1, 521)	1.4 FSI	66	07/05 – 11/06	3782	3529/1
GOLF PLUS (5M1, 521)	1.4 FSI	66	07/05 – 11/06	3904	3905
GOLF PLUS (5M1, 521)	1.4 FSI	66	07/05 – 11/06	3782/1	
GOLF PLUS (5M1, 521)	1.4 TSI	90	06/07 – 12/13	3904	3529/1
GOLF PLUS (5M1, 521)	1.4 TSI	90	06/07 – 12/13		3905
GOLF PLUS (5M1, 521)	1.4 TSI	103	05/06 – 06/08	3904	3529/1
GOLF PLUS (5M1, 521)	1.4 TSI	103	05/06 – 06/08		3905
GOLF PLUS (5M1, 521)	1.4 TSI	118	06/08 – 12/13	3904	3529/1
GOLF PLUS (5M1, 521)	1.4 TSI	118	06/08 – 12/13		3905
GOLF PLUS (5M1, 521)	1.4 TSI	125	05/06 – 06/08	3904	3529/1
GOLF PLUS (5M1, 521)	1.4 TSI	125	05/06 – 06/08		3905
GOLF PLUS (5M1, 521)	1.6	67	08/05 – 12/13	3782	3529/1
GOLF PLUS (5M1, 521)	1.6	67	08/05 – 12/13	3782/1	
GOLF PLUS (5M1, 521)	1.6	75	05/05 – 12/13	3782	3529/1

MAKE & MODEL		KW	YEAR		
VW					
GOLF PLUS (5M1, 521)	1.6	75	05/05 – 12/13	3904	3905
GOLF PLUS (5M1, 521)	1.6	75	05/05 – 12/13	3782/1	
GOLF PLUS (5M1, 521)	1.6 BiFuel	75	05/09 – 12/13	3782	3529/1
GOLF PLUS (5M1, 521)	1.6 BiFuel	75	05/09 – 12/13	3782/1	3905
GOLF PLUS (5M1, 521)	1.6 FSI	85	01/05 – 05/08	3782	3529/1
GOLF PLUS (5M1, 521)	1.6 FSI	85	01/05 – 05/08	3904	3905
GOLF PLUS (5M1, 521)	1.6 FSI	85	01/05 – 05/08	3782/1	
GOLF PLUS (5M1, 521)	1.6 MultiFuel	75	11/07 – 12/13	3782	3529/1
GOLF PLUS (5M1, 521)	1.6 MultiFuel	75	11/07 – 12/13	3904	3905
GOLF PLUS (5M1, 521)	1.6 MultiFuel	75	11/07 – 12/13	3782/1	
GOLF PLUS (5M1, 521)	1.6 TDI	66	02/09 – 12/13	3782	3529/1
GOLF PLUS (5M1, 521)	1.6 TDI	66	02/09 – 12/13	3782/1	3905
GOLF PLUS (5M1, 521)	1.6 TDI	77	03/09 – 12/13	3782	3529/1
GOLF PLUS (5M1, 521)	1.6 TDI	77	03/09 – 12/13	3904	3905
GOLF PLUS (5M1, 521)	1.6 TDI	77	03/09 – 12/13	3782/1	
GOLF PLUS (5M1, 521)	1.8	73	08/05 – 12/13	3782	3529/1
GOLF PLUS (5M1, 521)	1.8	73	08/05 – 12/13	3904	3905
GOLF PLUS (5M1, 521)	1.8	73	08/05 – 12/13	3782/1	
GOLF PLUS (5M1, 521)	1.8 Hybrid	73	08/05 – 12/13	3782	3529/1
GOLF PLUS (5M1, 521)	1.8 Hybrid	73	08/05 – 12/13	3904	3905
GOLF PLUS (5M1, 521)	1.8 Hybrid	73	08/05 – 12/13	3782/1	
GOLF PLUS (5M1, 521)	1.9 D	47	12/05 – 12/13	3782/1	3529/1
GOLF PLUS (5M1, 521)	1.9 D	47	12/05 – 12/13	3782	
GOLF PLUS (5M1, 521)	1.9 TDI	66	05/05 – 12/08	3782	3529/1
GOLF PLUS (5M1, 521)	1.9 TDI	66	05/05 – 12/08	3904	3905
GOLF PLUS (5M1, 521)	1.9 TDI	66	05/05 – 12/08	3782/1	
GOLF PLUS (5M1, 521)	1.9 TDI	77	01/05 – 01/09	3782	3529/1
GOLF PLUS (5M1, 521)	1.9 TDI	77	01/05 – 01/09	3904	3905
GOLF PLUS (5M1, 521)	1.9 TDI	77	01/05 – 01/09	3782/1	
GOLF PLUS (5M1, 521)	2.0 FSI	110	05/05 – 06/08	3904	3529/1
GOLF PLUS (5M1, 521)	2.0 FSI	110	05/05 – 06/08		3905
GOLF PLUS (5M1, 521)	2.0 TDI	81	01/09 – 12/13	3904	3529/1
GOLF PLUS (5M1, 521)	2.0 TDI	81	01/09 – 12/13		3905
GOLF PLUS (5M1, 521)	2.0 TDI	96	05/05 – 05/07	3904	3529/1
GOLF PLUS (5M1, 521)	2.0 TDI	96	05/05 – 05/07		3905
GOLF PLUS (5M1, 521)	2.0 TDI	100	05/05 – 12/13	3904	3529/1
GOLF PLUS (5M1, 521)	2.0 TDI	100	05/05 – 12/13		3905
GOLF PLUS (5M1, 521)	2.0 TDI	103	12/05 – 05/11	3904	3529/1
GOLF PLUS (5M1, 521)	2.0 TDI	103	12/05 – 05/11		3905
GOLF PLUS (5M1, 521)	2.0 TDI 16V	103	01/05 – 12/13	3904	3529/1
GOLF PLUS (5M1, 521)	2.0 TDI 16V	103	01/05 – 12/13		3905
GOLF SPORTSVAN (AM1)	1.0 TSI	85	05/15 -	4295	
GOLF SPORTSVAN (AM1)	1.2 TSI	63	05/14 -	4295	
GOLF SPORTSVAN (AM1)	1.2 TSI	81	04/14 -	4295	
GOLF SPORTSVAN (AM1)	1.4 TSI	92	04/14 -	4295	
GOLF SPORTSVAN (AM1)	1.4 TSI	110	02/14 -	4295	
GOLF SPORTSVAN (AM1)	1.4 TSI MultiFuel	92	04/14 -	4295	
GOLF SPORTSVAN (AM1)	1.6	81	05/14 -	4295	
GOLF SPORTSVAN (AM1)	1.6 TDI	66	02/14 -	4295	
GOLF SPORTSVAN (AM1)	1.6 TDI	81	02/14 -	4295	
GOLF SPORTSVAN (AM1)	1.6 TDI	85	11/16 -	4295	
GOLF SPORTSVAN (AM1)	2.0 TDI	81	05/14 -	4295	
GOLF SPORTSVAN (AM1)	2.0 TDI	110	02/14 -	4295	
GOLF V (1K1)	1.4 16V	55	10/03 – 05/06	3782	3529/1
GOLF V (1K1)	1.4 16V	59	05/06 – 11/08	3782	3529/1
GOLF V (1K1)	1.4 FSI	66	10/03 – 07/06	3782	3529/1
GOLF V (1K1)	1.4 TSI	90	05/07 – 11/08	3782	3529/1
GOLF V (1K1)	1.4 TSI	90	05/07 – 11/08	3904	3905
GOLF V (1K1)	1.4 TSI	103	05/06 – 11/08	3782	3529/1
GOLF V (1K1)	1.4 TSI	103	05/06 – 11/08	3904	3905
GOLF V (1K1)	1.4 TSI	125	11/05 – 11/08	3904	3905
GOLF V (1K1)	1.6	67	08/05 – 11/08	3782	3529/1
GOLF V (1K1)	1.6	75	01/04 – 11/08	3782	3529/1
GOLF V (1K1)	1.6	75	01/04 – 11/08	3904	3905
GOLF V (1K1)	1.6 FSI	85	10/03 – 07/08	3782	3529/1
GOLF V (1K1)	1.6 FSI	85	10/03 – 07/08	3904	3905
GOLF V (1K1)	1.6 MultiFuel	75	10/07 – 11/08	3782	3529/1
GOLF V (1K1)	1.6 MultiFuel	75	10/07 – 11/08	3904	3905
GOLF V (1K1)	1.8	73	08/05 – 11/08	3782	3529/1
GOLF V (1K1)	1.8 GTI	132	08/06 – 11/08	3904	3905
GOLF V (1K1)	1.8 Hybrid	73	08/05 – 11/08	3782	3529/1
GOLF V (1K1)	1.9 D	47	12/05 – 11/08	3782	3529/1
GOLF V (1K1)	1.9 TDI	66	05/04 – 11/08	3782	3529/1
GOLF V (1K1)	1.9 TDI	77	10/03 – 11/08	3782	3529/1
GOLF V (1K1)	1.9 TDI	77	10/03 – 11/08	3904	3905
GOLF V (1K1)	1.9 TDI 4motion	77	08/04 – 11/08	3782	3529/1

MAKE & MODEL		KW	YEAR		
VW					
GOLF V (1K1)	1.9 TDI 4motion	77	08/04 – 11/08	3904	3905
GOLF V (1K1)	2.0	85	08/06 – 11/08	3782	3529/1
GOLF V (1K1)	2.0	85	08/06 – 11/08	3904	3905
GOLF V (1K1)	2.0 FSI	110	01/04 – 11/08	3904	3529/1
GOLF V (1K1)	2.0 FSI	110	01/04 – 11/08		3905
GOLF V (1K1)	2.0 FSI 4motion	110	08/04 – 11/08	3904	3529/1
GOLF V (1K1)	2.0 FSI 4motion	110	08/04 – 11/08		3905
GOLF V (1K1)	2.0 GTI	147	10/04 – 02/09	3904	3905
GOLF V (1K1)	2.0 GTI	169	09/06 – 12/08		3529/1
GOLF V (1K1)	2.0 GTI	169	09/06 – 12/08		3905
GOLF V (1K1)	2.0 SDI	55	01/04 – 11/08	3782	3529/1
GOLF V (1K1)	2.0 SDI	55	01/04 – 11/08		3905
GOLF V (1K1)	2.0 TDI	100	10/03 – 11/08	3904	3529/1
GOLF V (1K1)	2.0 TDI	100	10/03 – 11/08		3905
GOLF V (1K1)	2.0 TDI	103	12/04 – 11/08	3904	3529/1
GOLF V (1K1)	2.0 TDI	103	12/04 – 11/08		3905
GOLF V (1K1)	2.0 TDI	125	11/05 – 11/08	3904	3529/1
GOLF V (1K1)	2.0 TDI	125	11/05 – 11/08		3905
GOLF V (1K1)	2.0 TDI 16V	103	10/03 – 11/08	3904	3529/1
GOLF V (1K1)	2.0 TDI 16V	103	10/03 – 11/08		3905
GOLF V (1K1)	2.0 TDI 16V 4motion	103	08/04 – 11/08	3904	3529/1
GOLF V (1K1)	2.0 TDI 16V 4motion	103	08/04 – 11/08		3905
GOLF V (1K1)	2.0 TDI 4motion	103	08/04 – 11/08	3904	3529/1
GOLF V (1K1)	2.0 TDI 4motion	103	08/04 – 11/08		3905
GOLF V Variant (1K5)	1.4	59	06/07 – 07/09	3782	3529/1
GOLF V Variant (1K5)	1.4	59	06/07 – 07/09		3905
GOLF V Variant (1K5)	1.4 TSI	90	06/07 – 07/09	3904	3529/1
GOLF V Variant (1K5)	1.4 TSI	90	06/07 – 07/09		3905
GOLF V Variant (1K5)	1.4 TSI	103	06/07 – 07/09	3904	3529/1
GOLF V Variant (1K5)	1.4 TSI	103	06/07 – 07/09		3905
GOLF V Variant (1K5)	1.4 TSI	118	07/08 – 07/09	3904	3905
GOLF V Variant (1K5)	1.4 TSI	125	06/07 – 07/09	3904	3905
GOLF V Variant (1K5)	1.6	75	06/07 – 07/09	3782	3529/1
GOLF V Variant (1K5)	1.6	75	06/07 – 07/09		3905
GOLF V Variant (1K5)	1.6 MultiFuel	75	11/07 – 07/09	3782	3529/1
GOLF V Variant (1K5)	1.6 MultiFuel	75	11/07 – 07/09	3904	3905
GOLF V Variant (1K5)	1.9 TDI	77	06/07 – 07/09	3782	3529/1
GOLF V Variant (1K5)	1.9 TDI	77	06/07 – 07/09		3905
GOLF V Variant (1K5)	1.9 TDI 4motion	77	01/08 – 07/09	3904	3529/1
GOLF V Variant (1K5)	1.9 TDI 4motion	77	01/08 – 07/09		3905
GOLF V Variant (1K5)	2.0	147	06/07 – 07/09	3904	3905
GOLF V Variant (1K5)	2.0 TDI	100	06/07 – 07/09	3904	3529/1
GOLF V Variant (1K5)	2.0 TDI	100	06/07 – 07/09		3905
GOLF V Variant (1K5)	2.0 TDI	103	06/07 – 07/09	3904	3529/1
GOLF V Variant (1K5)	2.0 TDI	103	06/07 – 07/09		3905
GOLF V Variant (1K5)	2.0 TDI 16V	103	06/07 – 07/09	3904	3529/1
GOLF V Variant (1K5)	2.0 TDI 16V	103	06/07 – 07/09		3905
GOLF V Variant (1K5)	2.0 TDI 4motion	100	06/07 – 07/09		3529/1
GOLF VI (517)	1.2 TSI 16V (CJZA)	105	11/13 -	4228	
GOLF VI (5K1)	1.2 TSI	63	05/10 – 11/12	3782	3529/1
GOLF VI (5K1)	1.2 TSI	63	05/10 – 11/12	3904	4135
GOLF VI (5K1)	1.2 TSI	77	11/08 – 11/12	3782	3529/1
GOLF VI (5K1)	1.2 TSI	77	11/08 – 11/12	3904	3905
GOLF VI (5K1)	1.2 TSI	77	11/08 – 11/12		4135
GOLF VI (5K1)	1.4	59	10/08 – 11/12	3782	3529/1
GOLF VI (5K1)	1.4	59	10/08 – 11/12	3904	3905
GOLF VI (5K1)	1.4	59	10/08 – 11/12		4135
GOLF VI (5K1)	1.4 TSI	90	10/08 – 11/12	3782	3529/1
GOLF VI (5K1)	1.4 TSI	90	10/08 – 11/12	3904	3905
GOLF VI (5K1)	1.4 TSI	90	10/08 – 11/12		4135
GOLF VI (5K1)	1.4 TSI	118	10/08 – 11/12	3904	3905
GOLF VI (5K1)	1.6	75	10/08 – 11/12	3782	3529/1
GOLF VI (5K1)	1.6	75	10/08 – 11/12	3904	3905
GOLF VI (5K1)	1.6	75	10/08 – 11/12		4135
GOLF VI (5K1)	1.6 BiFuel	75	03/09 – 11/12	3782	3529/1
GOLF VI (5K1)	1.6 BiFuel	75	03/09 – 11/12	3904	3905
GOLF VI (5K1)	1.6 BiFuel	75	03/09 – 11/12		4135
GOLF VI (5K1)	1.6 MultiFuel	75	10/08 – 11/12	3782	3529/1
GOLF VI (5K1)	1.6 MultiFuel	75	10/08 – 11/12	3904	4135
GOLF VI (5K1)	1.6 TDI	66	02/09 – 11/12	3782	3529/1
GOLF VI (5K1)	1.6 TDI	66	02/09 – 11/12	3904	3905
GOLF VI (5K1)	1.6 TDI	66	02/09 – 11/12		4135
GOLF VI (5K1)	1.6 TDI	77	02/09 – 11/12	3782	3529/1
GOLF VI (5K1)	1.6 TDI	77	02/09 – 11/12	3904	3905
GOLF VI (5K1)	1.6 TDI	77	02/09 – 11/12		4135
GOLF VI (5K1)	1.8 TSI	118	06/09 – 01/11	3904	3905

MAKE & MODEL   		KW	YEAR		
VW					
GOLF VI (5K1)	2.0 GTi	147	06/09 – 11/13	3904	3905
GOLF VI (5K1)	2.0 GTi	147	06/09 – 11/13		4135
GOLF VI (5K1)	2.0 GTi	155	04/09 – 11/12	3904	3905
GOLF VI (5K1)	2.0 GTi	173	05/11 – 11/12		3905
GOLF VI (5K1)	2.0 TDI	81	10/08 – 11/12	3782	3529/1
GOLF VI (5K1)	2.0 TDI	81	10/08 – 11/12	3904	3905
GOLF VI (5K1)	2.0 TDI	81	10/08 – 11/12		4135
GOLF VI (5K1)	2.0 TDI	100	10/08 – 11/12	3782	3529/1
GOLF VI (5K1)	2.0 TDI	100	10/08 – 11/12	3904	3905
GOLF VI (5K1)	2.0 TDI	100	10/08 – 11/12		4135
GOLF VI (5K1)	2.0 TDI	103	10/08 – 05/13	3782	3529/1
GOLF VI (5K1)	2.0 TDI	103	10/08 – 05/13	3904	3905
GOLF VI (5K1)	2.0 TDI	103	10/08 – 05/13		4135
GOLF VI (5K1)	2.0 TDI	125	04/09 – 11/12	3904	3905
GOLF VI (5K1)	2.0 TDI 4motion	103	05/09 – 11/12	3904	3905
GOLF VI (5K1)	2.0 TDI 4motion	103	05/09 – 11/12		4135
GOLF VI (5K1)	Blue E-Motion	65	12/10 – 11/13	3782	3529/1
GOLF VI (5K1)	Blue E-Motion	65	12/10 – 11/13	3904	4135
GOLF VI Convertible (517)	1.2 TSI	77	03/11 -	3904	3529/1
GOLF VI Convertible (517)	1.2 TSI	77	03/11 -		4135
GOLF VI Convertible (517)	1.2 TSI 16V	77	11/13 -	3904	3529/1
GOLF VI Convertible (517)	1.2 TSI 16V	77	11/13 -		4135
GOLF VI Convertible (517)	1.4 TSI	90	11/11 -	3904	3529/1
GOLF VI Convertible (517)	1.4 TSI	90	11/11 -		4135
GOLF VI Convertible (517)	1.4 TSI	118	03/11 -	3904	3529/1
GOLF VI Convertible (517)	1.4 TSI	118	03/11 -		4135
GOLF VI Convertible (517)	1.6 TDI	77	03/11 -	3904	3529/1
GOLF VI Convertible (517)	1.6 TDI	77	03/11 -		4135
GOLF VI Convertible (517)	2.0 GTI	155	11/11 -	3904	3529/1
GOLF VI Convertible (517)	2.0 GTI	155	11/11 -		4135
GOLF VI Convertible (517)	2.0 R	195	01/13 -	3904	3529/1
GOLF VI Convertible (517)	2.0 R	195	01/13 -		3905
GOLF VI Convertible (517)	2.0 R	195	01/13 -		4135
GOLF VI Convertible (517)	2.0 TDI	103	11/11 -	3904	3529/1
GOLF VI Convertible (517)	2.0 TDI	103	11/11 -		4135
GOLF VI Convertible (517)	2.0 TDI	110	11/13 -	3904	3529/1
GOLF VI Convertible (517)	2.0 TDI	110	11/13 -		4135
GOLF VI Convertible (517)	2.0 TSI	162	11/13 -	3904	3905
GOLF VI Convertible (517)	2.0 TSI	162	11/13 -		4135
GOLF VI Variant (AJ5)	1.2 TSI	63	07/10 – 07/13	3782	4135
GOLF VI Variant (AJ5)	1.2 TSI	77	07/09 – 07/13	3782	3905
GOLF VI Variant (AJ5)	1.2 TSI	77	07/09 – 07/13	3904	4135
GOLF VI Variant (AJ5)	1.4	59	07/09 – 07/13	3782	3905
GOLF VI Variant (AJ5)	1.4	59	07/09 – 07/13	3904	4135
GOLF VI Variant (AJ5)	1.4 TSI	90	07/09 – 07/13	3782	3905
GOLF VI Variant (AJ5)	1.4 TSI	90	07/09 – 07/13	3904	4135
GOLF VI Variant (AJ5)	1.4 TSI	118	07/09 – 07/13	3904	3905
GOLF VI Variant (AJ5)	1.4 TSI	118	07/09 – 07/13		4135
GOLF VI Variant (AJ5)	1.6	75	07/09 – 07/13	3904	3905
GOLF VI Variant (AJ5)	1.6	75	07/09 – 07/13	3782	4135
GOLF VI Variant (AJ5)	1.6	75	07/09 – 07/13	3782	
GOLF VI Variant (AJ5)	1.6 MultiFuel	75	07/10 – 07/13		4135
GOLF VI Variant (AJ5)	1.6 TDI	66	12/09 – 07/13	3782	3905
GOLF VI Variant (AJ5)	1.6 TDI	66	12/09 – 07/13	3904	4135
GOLF VI Variant (AJ5)	1.6 TDI	77	07/09 – 07/13	3782	3905
GOLF VI Variant (AJ5)	1.6 TDI	77	07/09 – 07/13	3904	4135
GOLF VI Variant (AJ5)	1.6 TDI 4motion	77	07/09 – 07/13	3782	3905
GOLF VI Variant (AJ5)	1.6 TDI 4motion	77	07/09 – 07/13	3904	4135
GOLF VI Variant (AJ5)	2.0 TDI	81	01/10 – 07/13	3904	3905
GOLF VI Variant (AJ5)	2.0 TDI	81	01/10 – 07/13		4135
GOLF VI Variant (AJ5)	2.0 TDI	100	07/09 – 07/13	3904	3905
GOLF VI Variant (AJ5)	2.0 TDI	100	07/09 – 07/13		4135
GOLF VI Variant (AJ5)	2.0 TDI 16V	103	07/09 – 07/13	3904	3905
GOLF VI Variant (AJ5)	2.0 TDI 16V	103	07/09 – 07/13		4135
GOLF VI Variant (AJ5)	2.0 TSI	147	07/09 – 07/13	3904	3905
GOLF VII / JETTA VII (BA5)	1.0 TS I (CHZD)	85	05/15 -		4241
GOLF VII / JETTA VII (BA5)	1.2 TS I (CJZA)	77	05/13 -	4228	4241
GOLF VII / JETTA VII (BA5)	1.2 TS I (CJZB)	63	05/13 -	4228	4241
GOLF VII / JETTA VII (BA5)	1.2 TSI (CYVB)	81	04/14 -	4228	4241
GOLF VII / JETTA VII (BA5)	1.2 TSI MultiFuel (CJZA)	77	04/13 -	4228	4241
GOLF VII / JETTA VII (BA5)	1.4 TSI (CHPA)	103	05/13 -	4228	4241
GOLF VII / JETTA VII (BA5)	1.4 TSI (CHPB)	110	05/14 -	4228	4241
GOLF VII / JETTA VII (BA5)	1.4 TSI (CPVB)	92	05/14 -	4228	4241
GOLF VII / JETTA VII (BA5)	1.4 TSI (CXSA)	90	05/13 -	4228	4241
GOLF VII / JETTA VII (BA5)	1.4 TSI (CZCA)	92	05/14 -	4228	4241
GOLF VII / JETTA VII (BA5)	1.4 TSI (CZDA)	110	05/14 -	4228	4241

MAKE & MODEL		KW	YEAR		
VW					
GOLF VII / JETTA VII (BA5)	1.4 TSI BiFuel (CPWA)	81	09/13 -	4228	4241
GOLF VII / JETTA VII (BA5)	1.4 TSI CNG (CPWA)	81	09/13 -	4228	4241
GOLF VII / JETTA VII (BA5)	1.4 TSI MultiFuel (CPVA)	90	04/13 -	4228	4241
GOLF VII / JETTA VII (BA5)	1.4 TSI MultiFuel (CPVB)	92	05/14 -	4228	4241
GOLF VII / JETTA VII (BA5)	1.6 (CWVA)	81	05/14 -	4228	4241
GOLF VII / JETTA VII (BA5)	1.6 TDI (CLHA)	77	05/13 -	4228	4241
GOLF VII / JETTA VII (BA5)	1.6 TDI (CLHB)	66	05/13 -	4228	4241
GOLF VII / JETTA VII (BA5)	1.6 TDI (CRKA)	66	05/13 -	4228	4241
GOLF VII / JETTA VII (BA5)	1.6 TDI (CRKB)	81	05/13 -	4228	4241
GOLF VII / JETTA VII (BA5)	1.6 TDI (CXXA)	66	05/13 -	4228	4241
GOLF VII / JETTA VII (BA5)	1.6 TDI (CXXB)	81	05/13 -	4228	4241
GOLF VII / JETTA VII (BA5)	2.0 GTD (CUNA)	135	01/15 -	4228	4241
GOLF VII / JETTA VII (BA5)	2.0 R (CJXB)	206	03/15 -	4228	4241
GOLF VII / JETTA VII (BA5)	2.0 R (CJXC)	221	03/15 -	4228	4241
GOLF VII / JETTA VII (BA5)	2.0 R 360S	265	09/16 -	4228	4241
GOLF VII / JETTA VII (BA5)	2.0 TDI (CKFC)	110	04/13 -	4228	4241
GOLF VII / JETTA VII (BA5)	2.0 TDI (CRBC)	110	04/13 -	4228	4241
GOLF VII / JETTA VII (BA5)	2.0 TDI (CRLB)	110	04/13 -	4228	4241
GOLF VII / JETTA VII (BA5)	2.0 TDI (CRMB)	110	04/13 -	4228	4241
GOLF VII / JETTA VII (BA5)	2.0 TDI (CRVA)	81	05/13 -	4228	4241
GOLF VII (5G1, BE1)	1.0 TSI	81	11/16 -	4295	
GOLF VII (5G1, BE1)	1.0 TSI (CHZD)	85	05/15 -	4295	4241
GOLF VII (5G1, BE1)	1.2 TSI	63	08/12 -	4295	
GOLF VII (5G1, BE1)	1.2 TSI (CJZA)	77	11/12 -	4228	4241
GOLF VII (5G1, BE1)	1.2 TSI (CJZB)	63	08/12 -	4228	4241
GOLF VII (5G1, BE1)	1.2 TSI (CYVB)	81	04/14 -	4228	4241
GOLF VII (5G1, BE1)	1.4 GTE Hybrid (CUKB)	110	05/14 -	4228	4241
GOLF VII (5G1, BE1)	1.4 TGI (CPWA)	81	06/13 -	4228	4241
GOLF VII (5G1, BE1)	1.4 TGI (CZBA)	81	06/13 -	4228	4241
GOLF VII (5G1, BE1)	1.4 TGI CNG	81	06/13 -	4295	
GOLF VII (5G1, BE1)	1.4 TSI (CHPA)	103	11/12 -	4228	4241
GOLF VII (5G1, BE1)	1.4 TSI (CHPB)	110	05/14 -	4228	4241
GOLF VII (5G1, BE1)	1.4 TSI (CMBA)	90	11/12 -	4228	4241
GOLF VII (5G1, BE1)	1.4 TSI (CPTA)	103	11/12 -	4228	4241
GOLF VII (5G1, BE1)	1.4 TSI (CPVB)	92	05/14 -	4228	4241
GOLF VII (5G1, BE1)	1.4 TSI (CUKA)	90	11/12 -	4228	4241
GOLF VII (5G1, BE1)	1.4 TSI (CXSA)	90	11/12 -	4228	4241
GOLF VII (5G1, BE1)	1.4 TSI (CZCA)	92	05/14 -	4228	4241
GOLF VII (5G1, BE1)	1.4 TSI (CZDA)	110	05/14 -	4228	4241
GOLF VII (5G1, BE1)	1.4 TSI (CZEA)	110	05/14 -	4228	4241
GOLF VII (5G1, BE1)	1.4 TSI MultiFuel (CPVA)	90	04/13 -	4228	4241
GOLF VII (5G1, BE1)	1.4 TSI MultiFuel (CPVB)	92	12/13 -	4228	4241
GOLF VII (5G1, BE1)	1.6 (CWVA)	81	05/14 -	4228	4241
GOLF VII (5G1, BE1)	1.6 TDI	77	08/12 -	4295	
GOLF VII (5G1, BE1)	1.6 TDI	85	11/16 -	4295	
GOLF VII (5G1, BE1)	1.6 TDI (CLHA)	77	08/12 -	4228	4241
GOLF VII (5G1, BE1)	1.6 TDI (CLHB)	66	04/13 -	4228	4241
GOLF VII (5G1, BE1)	1.6 TDI (CRKA)	66	04/13 -	4228	4241
GOLF VII (5G1, BE1)	1.6 TDI (CRKB)	81	01/13 -	4228	4241
GOLF VII (5G1, BE1)	1.6 TDI (CXXA)	66	04/13 -	4228	4241
GOLF VII (5G1, BE1)	1.6 TDI (CXXB)	81	01/13 -	4228	4241
GOLF VII (5G1, BE1)	2.0 GTD (CUNA)	135	04/13 -	4228	4241
GOLF VII (5G1, BE1)	2.0 GTI (CHHA)	169	04/13 -	4228	4241
GOLF VII (5G1, BE1)	2.0 GTI (CHHB)	162	04/13 -	4228	4241
GOLF VII (5G1, BE1)	2.0 GTI Clubsport	195	02/16 -	4295	
GOLF VII (5G1, BE1)	2.0 GTI Clubsport (CJXE)	195	02/16 -	4228	4241
GOLF VII (5G1, BE1)	2.0 GTI Clubsport S (CJXG)	228	09/16 -	4228	4241
GOLF VII (5G1, BE1)	2.0 R (CJXB)	206	11/13 -	4228	4241
GOLF VII (5G1, BE1)	2.0 R (CJXC)	221	11/13 -	4228	
GOLF VII (5G1, BE1)	2.0 R (CJXD)	213	11/13 -	4228	4241
GOLF VII (5G1, BE1)	2.0 R (CJXC)	221	11/13 -		4241
GOLF VII (5G1, BE1)	2.0 TDI	105	08/12 -	4295	
GOLF VII (5G1, BE1)	2.0 TDI (CRBC)	110	11/12 -	4228	4241
GOLF VII (5G1, BE1)	2.0 TDI (CKFC)	110	11/12 -	4228	4241
GOLF VII (5G1, BE1)	2.0 TDI (CRBB)	105	08/12 -	4228	4241
GOLF VII (5G1, BE1)	2.0 TDI (CRLB)	110	11/12 -	4228	4241
GOLF VII (5G1, BE1)	2.0 TDI (CRMB)	110	11/12 -	4228	4241
GOLF VII (5G1, BE1)	2.0 TDI (CRVA)	81	11/12 -	4228	4241
GOLF VII (5G1, BE1)	2.0 TDI (CKFC)	110	11/12 -	4228	
GOLF VII (5G1, BE1)	2.0 TSI (CNTA)	155	11/13 -	4228	4241
GOLF VII (5G1, BE1)	2.0 TSI (CXCA)	155	11/13 -	4228	4241
GOLF VII (5G1, BE1)	e-Golf (EAGA)	85	03/14 – 02/17	4228	4241
GOLF VII ALLTRACK (BA5)	1.6 TDI (CRKB)	81	12/14 -		4241
GOLF VII ALLTRACK (BA5)	1.6 TDI (CXXB)	81	12/14 -		4241
GOLF VII ALLTRACK (BA5)	1.8 TSI (CJSB)	132	12/14 -		4241
GOLF VII ALLTRACK (BA5)	2.0 TDI (CRBC)	110	12/14 -		4241

MAKE & MODEL		KW	YEAR		
VW					
GOLF VII ALLTRACK (BA5)	2.0 TDI (CRLB)	110	12/14 -		4241
GOLF VII ALLTRACK (BA5)	2.0 TDI (CUNA)	135	12/14 -		4241
GOLF VII Estate (BA5)	1.0 TSI	81	11/16 -	4295	
GOLF VII Estate (BA5)	1.0 TSI	85	05/15 -	4295	
GOLF VII Estate (BA5)	1.2 TSI	63	05/13 -	4295	
GOLF VII Estate (BA5)	1.2 TSI	77	05/13 -	4295	
GOLF VII Estate (BA5)	1.4 TGI CNG	81	09/13 -	4295	
GOLF VII Estate (BA5)	1.4 TSI	90	05/13 -	4295	
GOLF VII Estate (BA5)	1.6 TDI	77	05/13 -	4295	
GOLF VII Estate (BA5)	1.6 TDI	85	11/16 -	4295	
GOLF VII Estate (BA5)	2.0 GTD	135	01/15 -	4295	
GOLF VII SPORTSVAN (AM1)	1.0 TSI (CHZD)	85	05/15 -		4241
GOLF VII SPORTSVAN (AM1)	1.2 TSI (CYVA)	63	05/14 -	4228	4241
GOLF VII SPORTSVAN (AM1)	1.2 TSI (CYVB)	81	04/14 -	4228	4241
GOLF VII SPORTSVAN (AM1)	1.4 TSI (CPVB)	92	04/14 -	4228	4241
GOLF VII SPORTSVAN (AM1)	1.4 TSI (CZCA)	92	04/14 -	4228	4241
GOLF VII SPORTSVAN (AM1)	1.4 TSI (CZDA)	110	02/14 -	4228	4241
GOLF VII SPORTSVAN (AM1)	1.4 TSI MultiFuel (CPVB)	92	04/14 -	4228	4241
GOLF VII SPORTSVAN (AM1)	1.6 (CWVA)	81	05/14 -	4228	4241
GOLF VII SPORTSVAN (AM1)	1.6 TDI (CRKA)	66	05/14 -	4228	4241
GOLF VII SPORTSVAN (AM1)	1.6 TDI (CRKB)	81	05/14 -	4228	4241
GOLF VII SPORTSVAN (AM1)	1.6 TDI (CXXA)	66	05/14 -	4228	4241
GOLF VII SPORTSVAN (AM1)	1.6 TDI (CXXB)	81	05/14 -	4228	4241
GOLF VII SPORTSVAN (AM1)	1.6 TDI (DBKA)	81	05/14 -	4228	4241
GOLF VII SPORTSVAN (AM1)	2.0 TDI (CRLB)	110	05/14 -	4228	4241
GOLF VII SPORTSVAN (AM1)	2.0 TDI (CRLD)	81	05/14 -	4228	4241
GOLF VII SPORTSVAN (AM1)	2.0 TDI (CRVA)	81	05/14 -	4228	4241
GOLF VII SPORTSVAN (AM1)	2.0 TDI (DCYA)	110	05/14 -	4228	4241
JETTA I (16)	1.5	51	08.1978 - 02.1984	3444/1	
JETTA I (16)	1.6	63	08.1978 - 02.1984	3444/1	
JETTA I (16)	1.6 GLI	81	08.1978 - 07.1982	3486/1	
JETTA I (16)	1.6 TD	51	03.1982 - 02.1984	3444/1	
JETTA I (16)	1.8	82	08.1982 - 02.1984	3486/1	
JETTA I (16)	1.1	37	08/78 – 02/84	3327	
JETTA I (16)	1.1	37	08/78 – 02/84	3343	
JETTA I (16)	1.1	37	08/78 – 02/84	3483	
JETTA I (16)	1.3	44	08/79 – 02/84	3327	
JETTA I (16)	1.3	44	08/79 – 02/84	3343	
JETTA I (16)	1.3	44	08/79 – 02/84	3483	
JETTA I (16)	1.5	51	08/78 – 02/84	3444	
JETTA I (16)	1.5	51	08/78 – 02/84	3585	
JETTA I (16)	1.5 D	37	08/78 – 07/80	3327	
JETTA I (16)	1.5 D	37	08/78 – 07/80	3343	
JETTA I (16)	1.5 D	37	08/78 – 07/80	3483	
JETTA I (16)	1.6	63	08/78 – 02/84	3444	
JETTA I (16)	1.6	63	08/78 – 02/84	3585	
JETTA I (16)	1.6 D	40	08/80 – 02/84	3327	
JETTA I (16)	1.6 D	40	08/80 – 02/84	3343	
JETTA I (16)	1.6 D	40	08/80 – 02/84	3483	
JETTA I (16)	1.6 GLI	81	08/78 – 07/82	3486	
JETTA I (16)	1.6 TD	51	03/82 – 02/84	3444	
JETTA I (16)	1.6 TD	51	03/82 – 02/84	3585	
JETTA I (16)	1.8	82	08/82 – 02/84	3486	
JETTA II (19E, 1G2, 165)	1.3 Cat	40	06.1987 - 12.1991	3444/1	
JETTA II (19E, 1G2, 165)	1.6	51	10.1986 - 10.1991	3444/1	
JETTA II (19E, 1G2, 165)	1.6	53	03.1986 - 10.1991	3444/1	
JETTA II (19E, 1G2, 165)	1.6	55	01.1984 - 07.1992	3444/1	
JETTA II (19E, 1G2, 165)	1.6 D	40	01.1984 - 10.1991	3444/1	
JETTA II (19E, 1G2, 165)	1.6 TD	51	01.1984 - 10.1991	3444/1	
JETTA II (19E, 1G2, 165)	1.6 TD	59	04.1989 - 10.1991	3444/1	
JETTA II (19E, 1G2, 165)	1.8	62	08.1986 - 01.1990	3444/1	
JETTA II (19E, 1G2, 165)	1.8	62	08.1986 - 01.1990	3486/1	
JETTA II (19E, 1G2, 165)	1.8	66	08.1984 - 10.1991	3444/1	
JETTA II (19E, 1G2, 165)	1.8	66	08.1984 - 10.1991	3486/1	
JETTA II (19E, 1G2, 165)	1.8	77	01.1985 - 12.1992	3486/1	
JETTA II (19E, 1G2, 165)	1.8	79	08.1985 - 10.1987	3486/1	
JETTA II (19E, 1G2, 165)	1.8	82	01.1984 - 10.1991	3486/1	
JETTA II (19E, 1G2, 165)	1.8 16V	102	06.1987 - 12.1989	3486/1	
JETTA II (19E, 1G2, 165)	1.8 16V	95	08.1986 - 10.1991	3486/1	
JETTA II (19E, 1G2, 165)	1.8 Cat	66	08.1987 - 10.1991	3444/1	
JETTA II (19E, 1G2, 165)	1.8 Cat	66	08.1987 - 10.1991	3486/1	
JETTA II (19E, 1G2, 165)	1.8 Cat	79	01.1987 - 10.1991	3486/1	
JETTA II (19E, 1G2, 165)	1.8 Syncro	66	08.1987 - 12.1988	3444/1	
JETTA II (19E, 1G2, 165)	1.8 Syncro	72	08.1988 - 07.1991	3444/1	
JETTA II (19E, 1G2, 165)	1.3	40	01/84 – 06/87	3441	
JETTA II (19E, 1G2, 165)	1.3	43	01/84 – 10/86	3441	

MAKE & MODEL	  	KW	YEAR		
VW					
JETTA II (19E, 1G2, 165)	1.3 CAT	40	06/87 – 12/91	3441	
JETTA II (19E, 1G2, 165)	1.3 CAT	40	06/87 – 12/91	3444	
JETTA II (19E, 1G2, 165)	1.3 CAT	40	06/87 – 12/91	3585	
JETTA II (19E, 1G2, 165)	1.6	51	10/86 – 10/91	3444	
JETTA II (19E, 1G2, 165)	1.6	51	10/86 – 10/91	3585	
JETTA II (19E, 1G2, 165)	1.6	53	03/86 – 10/91	3441	
JETTA II (19E, 1G2, 165)	1.6	53	03/86 – 10/91	3444	
JETTA II (19E, 1G2, 165)	1.6	53	03/86 – 10/91	3585	
JETTA II (19E, 1G2, 165)	1.6	55	01/84 – 07/92	3444	
JETTA II (19E, 1G2, 165)	1.6	55	01/84 – 07/92	3585	
JETTA II (19E, 1G2, 165)	1.6 D	40	01/84 – 10/91	3441	
JETTA II (19E, 1G2, 165)	1.6 D	40	01/84 – 10/91	3444	
JETTA II (19E, 1G2, 165)	1.6 D	40	01/84 – 10/91	3585	
JETTA II (19E, 1G2, 165)	1.6 TD	44	01/90 – 10/91	3441	
JETTA II (19E, 1G2, 165)	1.6 TD	51	01/84 – 10/91	3444	
JETTA II (19E, 1G2, 165)	1.6 TD	51	01/84 – 10/91	3585	
JETTA II (19E, 1G2, 165)	1.6 TD	59	04/89 – 10/91	3444	
JETTA II (19E, 1G2, 165)	1.6 TD	59	04/89 – 10/91	3585	
JETTA II (19E, 1G2, 165)	1.8	62	08/86 – 01/90	3486	3529
JETTA II (19E, 1G2, 165)	1.8	62	08/86 – 01/90	3444	
JETTA II (19E, 1G2, 165)	1.8	62	08/86 – 01/90	3585	
JETTA II (19E, 1G2, 165)	1.8	66	08/84 – 10/91	3486	3529
JETTA II (19E, 1G2, 165)	1.8	66	08/84 – 10/91	3444	
JETTA II (19E, 1G2, 165)	1.8	66	08/84 – 10/91	3585	
JETTA II (19E, 1G2, 165)	1.8	79	08/85 – 10/87	3486	3529
JETTA II (19E, 1G2, 165)	1.8	82	01/84 – 10/91	3486	3529
JETTA II (19E, 1G2, 165)	1.8 16V	95	08/86 – 10/91	3486	3529
JETTA II (19E, 1G2, 165)	1.8 16V	95	08/86 – 10/91	3531	
JETTA II (19E, 1G2, 165)	1.8 16V	102	06/87 – 12/89	3486	3529
JETTA II (19E, 1G2, 165)	1.8 16V	102	06/87 – 12/89	3531	
JETTA II (19E, 1G2, 165)	1.8 CAT	66	08/87 – 10/91	3486	3529
JETTA II (19E, 1G2, 165)	1.8 CAT	66	08/87 – 10/91	3444	
JETTA II (19E, 1G2, 165)	1.8 CAT	66	08/87 – 10/91	3585	
JETTA II (19E, 1G2, 165)	1.8 CAT	79	01/87 – 10/91	3486	3529
JETTA II (19E, 1G2, 165)	1.8 Syncro	62	08/87 – 07/88	3444	
JETTA II (19E, 1G2, 165)	1.8 Syncro	62	08/87 – 07/88	3585	
JETTA II (19E, 1G2, 165)	1.8 Syncro	66	08/87 – 12/88	3444	
JETTA II (19E, 1G2, 165)	1.8 Syncro	66	08/87 – 12/88	3585	
JETTA II (19E, 1G2, 165)	1.8 Syncro	72	08/88 – 07/91	3444	
JETTA II (19E, 1G2, 165)	1.8 Syncro	72	08/88 – 07/91	3585	
JETTA III (1K2)	1.4 TSI	90	05/07 – 10/10	3782	3905
JETTA III (1K2)	1.4 TSI	103	07/06 – 10/10	3782	3905
JETTA III (1K2)	1.4 TSI	118	07/08 – 10/10	3904	3905
JETTA III (1K2)	1.4 TSI	118	07/08 – 10/10	3782	
JETTA III (1K2)	1.4 TSI	125	07/06 – 10/10	3904	3905
JETTA III (1K2)	1.4 TSI	125	07/06 – 10/10	3782	
JETTA III (1K2)	1.6	75	10/05 – 10/10	3782	3905
JETTA III (1K2)	1.6 FSI	85	09/05 – 10/10	3904	3905
JETTA III (1K2)	1.6 FSI	85	09/05 – 10/10	3782	
JETTA III (1K2)	1.6 MultiFuel	75	01/08 – 10/10	3904	3905
JETTA III (1K2)	1.6 MultiFuel	75	01/08 – 10/10	3782	
JETTA III (1K2)	1.6 TDI	66	12/09 – 10/10	3782	3905
JETTA III (1K2)	1.6 TDI	77	06/09 – 10/10	3782	3905
JETTA III (1K2)	1.9 TDI	77	08/05 – 10/10	3782	3905
JETTA III (1K2)	2.0 FSI	110	08/05 – 10/10	3782	3905
JETTA III (1K2)	2.0 TDI	100	09/05 – 10/10	3782	3905
JETTA III (1K2)	2.0 TDI	103	10/05 – 10/10	3782	3905
JETTA III (1K2)	2.0 TDI	125	10/06 – 10/10	3904	3905
JETTA III (1K2)	2.0 TDI 16V	103	08/05 – 10/10	3782	3905
JETTA III (1K2)	2.0 TFSI	125	03/08 – 10/10	3904	3905
JETTA III (1K2)	2.0 TFSI	147	10/05 – 10/10	3904	3905
JETTA III (1K2)	2.5	110	01/06 – 10/10	3782	3905
JETTA III (1K2)	2.5	125	07/08 – 10/10	3904	3905
JETTA IV (162, 163)	1.2 TSI	77	02/11 -	3782	3905
JETTA IV (162, 163)	1.2 TSI	77	02/11 -	3904	4135
JETTA IV (162, 163)	1.4 TSI	90	05/11 -		4135
JETTA IV (162, 163)	1.4 TSI	92	08/14 -	3782	3529/1
JETTA IV (162, 163)	1.4 TSI	92	08/14 -	3904	
JETTA IV (162, 163)	1.4 TSI	110	04/11 – 07/14	3904	4135
JETTA IV (162, 163)	1.4 TSI	110	08/14 -	3782	3529/1
JETTA IV (162, 163)	1.4 TSI	110	08/14 -	3904	
JETTA IV (162, 163)	1.4 TSI	118	04/11 -	3904	4135
JETTA IV (162, 163)	1.4 TSI Hybrid	110	04/11 -	3904	3529/1
JETTA IV (162, 163)	1.6	63	03/13 -	3782	3529/1
JETTA IV (162, 163)	1.6	77	12/11 -	3782	4135
JETTA IV (162, 163)	1.6 TDI	77	02/11 -	3782	3905

MAKE & MODEL			KW	YEAR		
VW						
JETTA IV (162, 163)	1.6 TDI		77	02/11 -		4135
JETTA IV (162, 163)	1.8 TSI		125	07/14 -	3782	3529/1
JETTA IV (162, 163)	1.8 TSI		125	07/14 -	3782/1	
JETTA IV (162, 163)	1.8 TSI		125	07/14 -	3904	
JETTA IV (162, 163)	2.0		85	06/10 -	3904	4135
JETTA IV (162, 163)	2.0 TDI		81	10/10 -	3904	4135
JETTA IV (162, 163)	2.0 TDI		103	02/11 -	3904	4135
JETTA IV (162, 163)	2.0 TDI		110	08/14 -	3782	3529/1
JETTA IV (162, 163)	2.0 TDI		110	08/14 -	3904	
JETTA IV (162, 163)	2.0 TSI		147	12/10 -	3904	4135
JETTA IV (162, 163)	2.0 TSI		155	12/12 -	3904	4135
JETTA IV (162, 163)	2.5		125	04/10 -	3904	4135
KAEFER	1200 1.2 (11)		25	01/60 – 12/85		3326
KAEFER	1300 1.3 (11)		32	01/70 – 01/73		3326
KAEFER	1302 1.2 (11)		25	08/69 – 08/72		3326
KAEFER	1302 1.3 (11)		32	08/70 – 08/72		3326
KAEFER	1302 1.6		35	07/71 – 07/74		3326
KAEFER	1302 1.6 (11)		37	01/70 – 08/72		3326
KAEFER	1500 1.5 (11)		32	08/66 – 11/73		3326
KAEFER	1500 1.6		37	07/70 – 01/73		3326
KAEFER	1600 (Mexico)		34	05/73 – 09/92		3326
KAEFER	1600 i (Mexico)		34	10/92 – 07/03		3326
KAEFER / BEETLE / CAROCHA / COCCINELLE / FUSCA / KEVER	1.2 1303 (D)		25	04/75 – 12/79	3328	
KAEFER / BEETLE / CAROCHA / COCCINELLE / FUSCA / KEVER	1.3 1302 (AC)		29	08/70 – 07/74	3325	
KAEFER / BEETLE / CAROCHA / COCCINELLE / FUSCA / KEVER	1.3 1303 (AB)		32	07/70 – 03/81	3328	
KAEFER / BEETLE / CAROCHA / COCCINELLE / FUSCA / KEVER	1.5 1500 (H)		32	01/66 – 12/70	3325	
KAEFER / BEETLE / CAROCHA / COCCINELLE / FUSCA / KEVER	1.6 1302 (AF)		34	08/70 – 07/74	3325	
KAEFER / BEETLE / CAROCHA / COCCINELLE / FUSCA / KEVER	1.6 1302,1303 (AD)		37	07/70 – 06/79	3328	
KAEFER / BEETLE / CAROCHA / COCCINELLE / FUSCA / KEVER	1.6 1303 (AE)		35	08/70 – 07/74	3328	
KAEFER / BEETLE / CAROCHA / COCCINELLE / FUSCA / KEVER	1.6 1303 (AH)		35	08/70 – 07/74	3328	
KAEFER / BEETLE / CAROCHA / COCCINELLE / FUSCA / KEVER	1.6 1303 (AK)		35	08/70 – 07/74	3328	
KAEFER / BEETLE / CAROCHA / COCCINELLE / FUSCA / KEVER	1.6 1500 (B)		35	07/69 – 07/70	3325	
KAEFER / BEETLE / CAROCHA / COCCINELLE / FUSCA / KEVER / SUPER BEETLE	1.2 1200 (D)		25	01/60 – 12/85	3325	
KAEFER / BEETLE / CAROCHA / COCCINELLE / FUSCA / KEVER / SUPER BEETLE	1.2 1200 (D)		25	01/60 – 12/85	3328	
KAEFER / BEETLE / CAROCHA / COCCINELLE / FUSCA / KEVER / SUPER BEETLE	1.3 1300		32	01/70 – 01/73	3325	
KAEFER / BEETLE / CAROCHA / COCCINELLE / FUSCA / KEVER / SUPER BEETLE	1.3 1300 (AB)		32	01/70 – 01/73	3328	
KAEFER / BEETLE / CAROCHA / COCCINELLE / FUSCA / KEVER / SUPER BEETLE	1.3 1302		32	08/70 – 08/72	3325	
KAEFER / BEETLE / CAROCHA / COCCINELLE / FUSCA / KEVER / SUPER BEETLE	1.3 1302 (AC)		29	08/70 – 07/75	3325	
KAEFER / BEETLE / CAROCHA / COCCINELLE / FUSCA / KEVER / SUPER BEETLE	1.3 1303 (AB)		32	08/72 – 07/75	3328	
KAEFER / BEETLE / CAROCHA / COCCINELLE / FUSCA / KEVER / SUPER BEETLE	1.3 1303 (AR)		32	08/72 – 07/75	3328	
KAEFER / BEETLE / CAROCHA / COCCINELLE / FUSCA / KEVER / SUPER BEETLE	1.5 1500		32	08/66 – 11/73	3325	
KAEFER / BEETLE / CAROCHA / COCCINELLE / FUSCA / KEVER / SUPER BEETLE	1.5 1500 (H)		32	08/66 – 11/73	3328	
KAEFER / BEETLE / CAROCHA / COCCINELLE / FUSCA / KEVER / SUPER BEETLE	1.6 1302		35	07/71 – 07/74	3325	
KAEFER / BEETLE / CAROCHA / COCCINELLE / FUSCA / KEVER / SUPER BEETLE	1.6 1302		37	01/70 – 08/72	3325	
KAEFER / BEETLE / CAROCHA / COCCINELLE / FUSCA / KEVER / SUPER BEETLE	1.6 1303 (AD)		35	08/72 – 12/79	3328	
KAEFER / BEETLE / CAROCHA / COCCINELLE / FUSCA / KEVER / SUPER BEETLE	1.6 1303 LS,S		37	08/72 – 12/79	3328	
KAEFER / BEETLE / CAROCHA / COCCINELLE / FUSCA / KEVER / SUPER BEETLE	1.6 1303 LS,S (AD)		37	08/72 – 12/79	3328	
KAEFER / BEETLE / CAROCHA / COCCINELLE / FUSCA / KEVER / SUPER BEETLE	1.6 1500		37	07/70 – 01/73	3325	
KAEFER / BEETLE / CAROCHA / COCCINELLE / FUSCA / KEVER / SUPER BEETLE	1.6 1500 (AD)		37	07/70 – 01/73	3328	
KAEFER / BEETLE / CAROCHA / COCCINELLE / FUSCA / KEVER / SUPER BEETLE	1.6 1600 (AF)		34	05/73 – 09/92	3328	
KAEFER Convertible (15)	1302 1.3		29	08/70 – 07/74		3326
KAEFER Convertible (15)	1302 1.6		34	08/70 – 07/74		3326
KAEFER Convertible (15)	1302,1303 1.6		37	07/70 – 06/79		3326
KAEFER Convertible (15)	1303 1.3		32	07/70 – 03/81		3326
KAEFER Convertible (15)	1303 1.6		35	08/70 – 07/74		3326
L 80	4.3		103	07/95 – 12/00	3440	
LT 28-35 (2DB, 2DE, 2DK)	2.3 (AGL)		105	05/96 – 07/06	3614	3614
LT 28-35 (2DB, 2DE, 2DK)	2.5 SDI (AGX)		55	07/96 – 07/06	3614	3614
LT 28-35 (2DB, 2DE, 2DK)	2.5 Tdi (AHD)		75	05/96 – 08/99	3614	3614
LT 28-35 (2DB, 2DE, 2DK)	2.5 Tdi (ANJ)		80	05/99 – 07/06	3614	3614
LT 28-35 (2DB, 2DE, 2DK)	2.5 Tdi (APA)		66	05/99 – 07/06	3614	3614
LT 28-35 (2DB, 2DE, 2DK)	2.5 Tdi (AVR)		80	05/99 – 07/06	3614	3614
LT 28-35 (2DB, 2DE, 2DK)	2.5 Tdi (BBE)		61	05/01 – 07/06	3614	3614
LT 28-35 (2DB, 2DE, 2DK)	2.5 Tdi (BBF)		70	05/01 – 07/06	3614	3614
LT 28-35 (2DB, 2DE, 2DK)	2.8 TDI (AGK)		92	07/97 – 05/03	3614	3614
LT 28-35 (2DB, 2DE, 2DK)	2.8 TDI (ATA)		96	01/99 – 01/02	3614	3614
LT 28-35 (2DB, 2DE, 2DK)	2.8 TDI (BCQ)		116	05/01 – 06/06	3614	3614
LT 28-35 I Box (281-363)	2.0		55	04/75 – 09/83	3315/1	
LT 28-35 I Box (281-363)	2.4		66	12/82 – 07/92	3315/1	
LT 28-35 I Box (281-363)	2.4 D		51	08/89 – 06/96	3315/1	
LT 28-35 I Box (281-363)	2.4 D		55	01/79 – 07/92	3315/1	
LT 28-35 I Box (281-363)	2.4 i		69	03/94 – 06/96	3315/1	
LT 28-35 I Bus (281-363)	2.4 TD		68	08/88 – 08/92	3315/1	
LT 28-35 I Bus (281-363)	2.4 TD		70	09/92 – 06/96	3315/1	
LT 28-35 I Bus (281-363)	2.4 TD		75	12/82 – 08/92	3315/1	
LT 28-35 I Bus (281-363)	2.4 TD Syncro		70	08/92 – 04/96	3315/1	

MAKE & MODEL		KW	YEAR		
VW					
LT 28-35 I Bus (281-363)	2.7 D	48	11/75 – 01/80	3315/1	
LT 28-35 I Platform/Chassis (281-363)	2.0	55	04/75 – 09/83	3315/1	
LT 28-35 I Platform/Chassis (281-363)	2.4	66	12/82 – 07/92	3315/1	
LT 28-35 I Platform/Chassis (281-363)	2.4 D	51	08/90 – 06/96	3315/1	
LT 28-35 I Platform/Chassis (281-363)	2.4 D	55	12/78 – 02/91	3315/1	
LT 28-35 I Platform/Chassis (281-363)	2.4 D Syncro	51	08/91 – 07/92	3513	
LT 28-35 I Platform/Chassis (281-363)	2.4 D Syncro	55	08/91 – 07/92	3513	
LT 28-35 I Platform/Chassis (281-363)	2.4 i	69	03/94 – 06/96	3315/1	
LT 28-35 I Platform/Chassis (281-363)	2.4 Syncro	66	08/91 – 07/92	3513	
LT 28-35 I Platform/Chassis (281-363)	2.4 Syncro	70	08/92 – 07/94	3513	
LT 28-35 I Platform/Chassis (281-363)	2.4 TD	68	08/90 – 08/92	3315/1	
LT 28-35 I Platform/Chassis (281-363)	2.4 TD	70	08/92 – 06/96	3315/1	
LT 28-35 I Platform/Chassis (281-363)	2.4 TD	75	12/82 – 09/93	3315/1	
LT 28-35 I Platform/Chassis (281-363)	2.4 TD Syncro	68	08/91 – 07/92	3513	
LT 28-35 I Platform/Chassis (281-363)	2.4 TD Syncro	70	08/92 – 04/96	3513	
LT 28-35 I Platform/Chassis (281-363)	2.4 TD Syncro	75	08/91 – 07/92	3513	
LT 28-35 I Platform/Chassis (281-363)	2.7 D	48	11/75 – 01/80	3315/1	
LT 28-35 II Bus (2DB, 2DE, 2DK)	2.3	105	05/96 – 07/06		3804
LT 28-35 II Bus (2DB, 2DE, 2DK)	2.5 SDI	55	07/96 – 07/06		3804
LT 28-35 II Bus (2DB, 2DE, 2DK)	2.5 TDI	61	05/01 – 07/06		3804
LT 28-35 II Bus (2DB, 2DE, 2DK)	2.5 TDI	66	05/99 – 07/06		3804
LT 28-35 II Bus (2DB, 2DE, 2DK)	2.5 TDI	70	05/01 – 07/06		3804
LT 28-35 II Bus (2DB, 2DE, 2DK)	2.5 TDI	75	05/96 – 08/99		3804
LT 28-35 II Bus (2DB, 2DE, 2DK)	2.5 TDI	80	05/99 – 07/06		3804
LT 28-35 II Bus (2DB, 2DE, 2DK)	2.8 TDI	92	07/97 – 05/03		3804
LT 28-35 II Bus (2DB, 2DE, 2DK)	2.8 TDI	96	01/99 – 01/02		3804
LT 28-35 II Bus (2DB, 2DE, 2DK)	2.8 TDI	116	05/01 – 06/06		3804
LT 28-46 (2DA, 2DD, 2DH)	2.3 (AGL)	105	05/96 – 07/06	3614	3614
LT 28-46 (2DA, 2DD, 2DH)	2.5 SDI (AGX)	55	09/96 – 07/06	3614	3614
LT 28-46 (2DA, 2DD, 2DH)	2.5 Tdi (AHD)	75	05/96 – 08/99	3614	3614
LT 28-46 (2DA, 2DD, 2DH)	2.5 Tdi (ANJ)	80	05/99 – 07/06	3614	3614
LT 28-46 (2DA, 2DD, 2DH)	2.5 Tdi (APA)	66	05/99 – 07/06	3614	3614
LT 28-46 (2DA, 2DD, 2DH)	2.5 Tdi (AVR)	80	05/99 – 07/06	3614	3614
LT 28-46 (2DA, 2DD, 2DH)	2.5 Tdi (BBE)	61	05/01 – 07/06	3614	3614
LT 28-46 (2DA, 2DD, 2DH)	2.5 Tdi (BBF)	70	05/01 – 07/06	3614	3614
LT 28-46 (2DA, 2DD, 2DH)	2.8 TDI (AGK)	92	07/97 – 01/02	3614	3614
LT 28-46 (2DA, 2DD, 2DH)	2.8 TDI (ATA)	96	01/99 – 07/06	3614	3614
LT 28-46 (2DA, 2DD, 2DH)	2.8 TDI (AUH)	116	04/02 – 07/06	3614	3614
LT 28-46 (2DA, 2DD, 2DH)	2.8 TDI (BCQ)	116	04/02 – 07/06	3614	3614
LT 28-46 (2DC, 2DF, 2DG, 2DL, 2DM)	2.3 (AGL)	105	06/96 – 07/06	3614	3614
LT 28-46 (2DC, 2DF, 2DG, 2DL, 2DM)	2.5 SDI (AGX)	55	09/96 – 07/06	3614	3614
LT 28-46 (2DC, 2DF, 2DG, 2DL, 2DM)	2.5 Tdi (AHD)	75	06/96 – 08/99	3614	3614
LT 28-46 (2DC, 2DF, 2DG, 2DL, 2DM)	2.5 Tdi (ANJ)	80	05/99 – 07/06	3614	3614
LT 28-46 (2DC, 2DF, 2DG, 2DL, 2DM)	2.5 Tdi (APA)	66	05/99 – 07/06	3614	3614
LT 28-46 (2DC, 2DF, 2DG, 2DL, 2DM)	2.5 Tdi (AVR)	80	05/99 – 07/06	3614	3614
LT 28-46 (2DC, 2DF, 2DG, 2DL, 2DM)	2.5 Tdi (BBE)	61	05/01 – 07/06	3614	3614
LT 28-46 (2DC, 2DF, 2DG, 2DL, 2DM)	2.5 Tdi (BBF)	70	05/01 – 07/06	3614	3614
LT 28-46 (2DC, 2DF, 2DG, 2DL, 2DM)	2.8 TDI (AGK)	92	07/97 – 01/02	3614	3614
LT 28-46 (2DC, 2DF, 2DG, 2DL, 2DM)	2.8 TDI (ATA)	96	01/99 – 07/06	3614	3614
LT 28-46 (2DC, 2DF, 2DG, 2DL, 2DM)	2.8 TDI (AUH)	116	04/02 – 07/06	3614	3614
LT 28-46 (2DC, 2DF, 2DG, 2DL, 2DM)	2.8 TDI (BCQ)	116	04/02 – 07/06	3614	3614
LT 28-46 II Box (2DA, 2DD, 2DH)	2.3	105	05/96 – 07/06		3804
LT 28-46 II Box (2DA, 2DD, 2DH)	2.5 SDI	55	09/96 – 07/06		3804
LT 28-46 II Box (2DA, 2DD, 2DH)	2.5 TDI	61	05/01 – 07/06		3804
LT 28-46 II Box (2DA, 2DD, 2DH)	2.5 TDI	66	05/99 – 07/06		3804
LT 28-46 II Box (2DA, 2DD, 2DH)	2.5 TDI	70	05/01 – 07/06		3804
LT 28-46 II Box (2DA, 2DD, 2DH)	2.5 TDI	75	05/96 – 08/99		3804
LT 28-46 II Box (2DA, 2DD, 2DH)	2.5 TDI	80	05/99 – 07/06		3804
LT 28-46 II Box (2DA, 2DD, 2DH)	2.8 TDI	92	07/97 – 01/02		3804
LT 28-46 II Box (2DA, 2DD, 2DH)	2.8 TDI	96	01/99 – 07/06		3804
LT 28-46 II Box (2DA, 2DD, 2DH)	2.8 TDI	116	04/02 – 07/06		3804
LT 28-46 II Platform/Chassis (2DC, 2DF, 2DG, 2DL,2DM)	2.3	105	06/96 – 07/06		3804
LT 28-46 II Platform/Chassis (2DC, 2DF, 2DG, 2DL,2DM)	2.5 SDI	55	09/96 – 07/06		3804
LT 28-46 II Platform/Chassis (2DC, 2DF, 2DG, 2DL,2DM)	2.5 TDI	61	05/01 – 07/06		3804
LT 28-46 II Platform/Chassis (2DC, 2DF, 2DG, 2DL,2DM)	2.5 TDI	66	05/99 – 07/06		3804
LT 28-46 II Platform/Chassis (2DC, 2DF, 2DG, 2DL,2DM)	2.5 TDI	70	05/01 – 07/06		3804
LT 28-46 II Platform/Chassis (2DC, 2DF, 2DG, 2DL,2DM)	2.5 TDI	75	06/96 – 08/99		3804
LT 28-46 II Platform/Chassis (2DC, 2DF, 2DG, 2DL,2DM)	2.5 TDI	80	05/99 – 07/06		3804
LT 28-46 II Platform/Chassis (2DC, 2DF, 2DG, 2DL,2DM)	2.8 TDI	92	07/97 – 01/02		3804
LT 28-46 II Platform/Chassis (2DC, 2DF, 2DG, 2DL,2DM)	2.8 TDI	96	01/99 – 07/06		3804
LT 28-46 II Platform/Chassis (2DC, 2DF, 2DG, 2DL,2DM)	2.8 TDI	116	04/02 – 07/06		3804
LT 40-55 I Box (291-512)	2.0	55	04/75 – 09/83	3315/1	
LT 40-55 I Box (291-512)	2.4	66	12/82 – 07/92	3315/1	
LT 40-55 I Box (291-512)	2.4 4WD	66	12/82 – 07/92	3513	
LT 40-55 I Box (291-512)	2.4 D	51	07/90 – 05/96	3315/1	
LT 40-55 I Box (291-512)	2.4 D	55	01/79 – 07/92	3315/1	

MAKE & MODEL   		KW	YEAR		
VW					
LT 40-55 I Box (291-512)	2.4 D 4WD	55	01/79 – 03/86	3513	
LT 40-55 I Box (291-512)	2.4 i	69	01/93 – 06/96	3315/1	
LT 40-55 I Box (291-512)	2.4 TD	68	08/88 – 08/92	3315/1	
LT 40-55 I Box (291-512)	2.4 TD	70	06/92 – 05/96	3315/1	
LT 40-55 I Box (291-512)	2.4 TD	75	02/86 – 08/92	3315/1	
LT 40-55 I Box (291-512)	2.4 TD 4WD	75	08/78 – 07/92	3513	
LT 40-55 I Box (291-512)	2.4 TD Syncro	70	08/92 – 04/96	3513	
LT 40-55 I Platform/Chassis (293-909)	2.0	55	04/75 – 09/83	3315/1	
LT 40-55 I Platform/Chassis (293-909)	2.4	66	08/85 – 07/89	3315/1	
LT 40-55 I Platform/Chassis (293-909)	2.4	70	08/88 – 07/89	3315/1	
LT 40-55 I Platform/Chassis (293-909)	2.4 D	51	08/90 – 06/96	3315/1	
LT 40-55 I Platform/Chassis (293-909)	2.4 D	55	12/78 – 02/91	3315/1	
LT 40-55 I Platform/Chassis (293-909)	2.4 i	69	03/94 – 06/96	3315/1	
LT 40-55 I Platform/Chassis (293-909)	2.4 Syncro	66	12/82 – 07/89	3513	
LT 40-55 I Platform/Chassis (293-909)	2.4 TD	68	08/88 – 07/91	3315/1	
LT 40-55 I Platform/Chassis (293-909)	2.4 TD	70	08/92 – 06/96	3315/1	
LT 40-55 I Platform/Chassis (293-909)	2.4 TD	75	12/82 – 09/93	3315/1	
LT 40-55 I Platform/Chassis (293-909)	2.4 TD Syncro	68	08/91 – 07/92	3513	
LT 40-55 I Platform/Chassis (293-909)	2.4 TD Syncro	70	08/92 – 04/96	3513	
LT 40-55 I Platform/Chassis (293-909)	2.4 TD Syncro	75	08/91 – 07/92	3513	
LUPO (6X1, 6E1)	1.0	37	09/98 – 07/05	3566	
LUPO (6X1, 6E1)	1.4	44	10/00 – 07/05	3566	
LUPO (6X1, 6E1)	1.4 16V	55	09/98 – 07/05	3566	
LUPO (6X1, 6E1)	1.4 16V	74	08/99 – 07/05		3529/1
LUPO (6X1, 6E1)	1.4 FSI	77	02/01 – 07/05		3529/1
LUPO (6X1, 6E1)	1.4 TDI	55	01/99 – 07/05	3566	3529/1
LUPO (6X1, 6E1)	1.6 GTI	92	09/00 – 07/05		3529/1
LUPO (6X1, 6E1)	1.7 SDI	44	09/98 – 07/05	3566	
MULTIVAN V (7HM, 7HN, 7HF, 7EF, 7EM, 7EN)	1.9 TDI	62	01/06 – 11/09	3841/1	3842
MULTIVAN V (7HM, 7HN, 7HF, 7EF, 7EM, 7EN)	1.9 TDI	62	01/06 – 11/09	3841	
MULTIVAN V (7HM, 7HN, 7HF, 7EF, 7EM, 7EN)	1.9 TDI	63	04/03 – 11/09	3841/1	3842
MULTIVAN V (7HM, 7HN, 7HF, 7EF, 7EM, 7EN)	1.9 TDI	63	04/03 – 11/09	3841	
MULTIVAN V (7HM, 7HN, 7HF, 7EF, 7EM, 7EN)	1.9 TDI	63	04/03 – 11/09	4162	
MULTIVAN V (7HM, 7HN, 7HF, 7EF, 7EM, 7EN)	1.9 TDI	75	06/06 – 11/09	3841/1	3842
MULTIVAN V (7HM, 7HN, 7HF, 7EF, 7EM, 7EN)	1.9 TDI	75	06/06 – 11/09	3841	
MULTIVAN V (7HM, 7HN, 7HF, 7EF, 7EM, 7EN)	1.9 TDI	77	04/03 – 11/09	3841/1	3842
MULTIVAN V (7HM, 7HN, 7HF, 7EF, 7EM, 7EN)	1.9 TDI	77	04/03 – 11/09	3841	
MULTIVAN V (7HM, 7HN, 7HF, 7EF, 7EM, 7EN)	2.0	85	11/03 -	3841/1	3842
MULTIVAN V (7HM, 7HN, 7HF, 7EF, 7EM, 7EN)	2.0	85	11/03 -	3841	
MULTIVAN V (7HM, 7HN, 7HF, 7EF, 7EM, 7EN)	2.0 BiTDI	132	09/09 -	3841/1	3842
MULTIVAN V (7HM, 7HN, 7HF, 7EF, 7EM, 7EN)	2.0 BiTDI	132	09/09 -	3841	
MULTIVAN V (7HM, 7HN, 7HF, 7EF, 7EM, 7EN)	2.0 BiTDI	132	09/09 -	4162	
MULTIVAN V (7HM, 7HN, 7HF, 7EF, 7EM, 7EN)	2.0 BiTDI 4motion	132	09/09 -	3841/1	3842
MULTIVAN V (7HM, 7HN, 7HF, 7EF, 7EM, 7EN)	2.0 BiTDI 4motion	132	09/09 -	3841	
MULTIVAN V (7HM, 7HN, 7HF, 7EF, 7EM, 7EN)	2.0 BiTDI 4motion	132	09/09 -	4162	
MULTIVAN V (7HM, 7HN, 7HF, 7EF, 7EM, 7EN)	2.0 TDI	62	09/09 -	3841/1	3842
MULTIVAN V (7HM, 7HN, 7HF, 7EF, 7EM, 7EN)	2.0 TDI	62	09/09 -	3841	
MULTIVAN V (7HM, 7HN, 7HF, 7EF, 7EM, 7EN)	2.0 TDI	75	09/09 -	3841/1	3842
MULTIVAN V (7HM, 7HN, 7HF, 7EF, 7EM, 7EN)	2.0 TDI	75	09/09 -	3841	
MULTIVAN V (7HM, 7HN, 7HF, 7EF, 7EM, 7EN)	2.0 TDI	84	05/11 -	3841	3842
MULTIVAN V (7HM, 7HN, 7HF, 7EF, 7EM, 7EN)	2.0 TDI	100	05/10 -	3841/1	3842
MULTIVAN V (7HM, 7HN, 7HF, 7EF, 7EM, 7EN)	2.0 TDI	100	05/10 -	3841	
MULTIVAN V (7HM, 7HN, 7HF, 7EF, 7EM, 7EN)	2.0 TDI	103	09/09 -	3841/1	3842
MULTIVAN V (7HM, 7HN, 7HF, 7EF, 7EM, 7EN)	2.0 TDI	103	09/09 -	3841	
MULTIVAN V (7HM, 7HN, 7HF, 7EF, 7EM, 7EN)	2.0 TDI	103	09/09 -	4162	
MULTIVAN V (7HM, 7HN, 7HF, 7EF, 7EM, 7EN)	2.0 TDI 4motion	100	05/10 -	3841/1	3842
MULTIVAN V (7HM, 7HN, 7HF, 7EF, 7EM, 7EN)	2.0 TDI 4motion	100	05/10 -	3841	
MULTIVAN V (7HM, 7HN, 7HF, 7EF, 7EM, 7EN)	2.0 TDI 4motion	103	09/09 -	3841/1	3842
MULTIVAN V (7HM, 7HN, 7HF, 7EF, 7EM, 7EN)	2.0 TDI 4motion	103	09/09 -	3841	
MULTIVAN V (7HM, 7HN, 7HF, 7EF, 7EM, 7EN)	2.0 TDI 4motion	103	09/09 -	4162	
MULTIVAN V (7HM, 7HN, 7HF, 7EF, 7EM, 7EN)	2.0 TSI	110	07/12 -	3841	3842
MULTIVAN V (7HM, 7HN, 7HF, 7EF, 7EM, 7EN)	2.0 TSI	110	07/12 -	4162	
MULTIVAN V (7HM, 7HN, 7HF, 7EF, 7EM, 7EN)	2.0 TSI	150	05/11 -	3841	3842
MULTIVAN V (7HM, 7HN, 7HF, 7EF, 7EM, 7EN)	2.0 TSI	150	05/11 -	4162	
MULTIVAN V (7HM, 7HN, 7HF, 7EF, 7EM, 7EN)	2.0 TSI 4motion	150	07/11 -	3841	3842
MULTIVAN V (7HM, 7HN, 7HF, 7EF, 7EM, 7EN)	2.0 TSI 4motion	150	07/11 -	4162	
MULTIVAN V (7HM, 7HN, 7HF, 7EF, 7EM, 7EN)	2.5 TDI	96	04/03 – 11/09	3841/1	3842
MULTIVAN V (7HM, 7HN, 7HF, 7EF, 7EM, 7EN)	2.5 TDI	96	04/03 – 11/09	3841	
MULTIVAN V (7HM, 7HN, 7HF, 7EF, 7EM, 7EN)	2.5 TDI	120	11/03 – 11/09	3841/1	3842
MULTIVAN V (7HM, 7HN, 7HF, 7EF, 7EM, 7EN)	2.5 TDI	120	11/03 – 11/09	3841	
MULTIVAN V (7HM, 7HN, 7HF, 7EF, 7EM, 7EN)	2.5 TDI	128	04/03 – 11/09	3841/1	3842
MULTIVAN V (7HM, 7HN, 7HF, 7EF, 7EM, 7EN)	2.5 TDI	128	04/03 – 11/09	3841	
MULTIVAN V (7HM, 7HN, 7HF, 7EF, 7EM, 7EN)	2.5 TDI 4motion	96	07/04 – 11/09	3841/1	3842
MULTIVAN V (7HM, 7HN, 7HF, 7EF, 7EM, 7EN)	2.5 TDI 4motion	96	07/04 – 11/09	3841	
MULTIVAN V (7HM, 7HN, 7HF, 7EF, 7EM, 7EN)	2.5 TDI 4motion	128	07/04 – 11/09	3841/1	3842
MULTIVAN V (7HM, 7HN, 7HF, 7EF, 7EM, 7EN)	2.5 TDI 4motion	128	07/04 – 11/09	3841	

MAKE & MODEL   		KW	YEAR		
VW					
MULTIVAN V (7HM, 7HN, 7HF, 7EF, 7EM, 7EN)	3.2 4motion	170	11/03 – 06/06	3841/1	3842
MULTIVAN V (7HM, 7HN, 7HF, 7EF, 7EM, 7EN)	3.2 V6	170	02/04 – 06/04	3841/1	3842
MULTIVAN V (7HM, 7HN, 7HF, 7EF, 7EM, 7EN)	3.2 V6	170	02/04 – 06/04	3841	
MULTIVAN V (7HM, 7HN, 7HF, 7EF, 7EM, 7EN)	3.2 V6	173	02/04 – 11/09	3841/1	3842
MULTIVAN V (7HM, 7HN, 7HF, 7EF, 7EM, 7EN)	3.2 V6	173	02/04 – 11/09	3841	
MULTIVAN V (7HM, 7HN, 7HF, 7EF, 7EM, 7EN)	3.2 V6 4motion	173	07/04 – 11/09	3841/1	3842
MULTIVAN V (7HM, 7HN, 7HF, 7EF, 7EM, 7EN)	3.2 V6 4motion	173	07/04 – 11/09	3841	
MULTIVAN VI (SGF, SGM, SGN)	2.0 TDI	62	04/15 -	3841	3842
MULTIVAN VI (SGF, SGM, SGN)	2.0 TDI	62	04/15 -	4162	
MULTIVAN VI (SGF, SGM, SGN)	2.0 TDI	75	04/15 -	3841	3842
MULTIVAN VI (SGF, SGM, SGN)	2.0 TDI	75	04/15 -	4162	
MULTIVAN VI (SGF, SGM, SGN)	2.0 TDI	103	04/15 -	3841	3842
MULTIVAN VI (SGF, SGM, SGN)	2.0 TDI	103	04/15 -	4162	
MULTIVAN VI (SGF, SGM, SGN)	2.0 TDI	110	04/15 -	3841	3842
MULTIVAN VI (SGF, SGM, SGN)	2.0 TDI	110	04/15 -	4162	
MULTIVAN VI (SGF, SGM, SGN)	2.0 TDI	132	04/15 -	3841	3842
MULTIVAN VI (SGF, SGM, SGN)	2.0 TDI	132	04/15 -	4162	
MULTIVAN VI (SGF, SGM, SGN)	2.0 TDI	150	06/15 -	3841	3842
MULTIVAN VI (SGF, SGM, SGN)	2.0 TDI	150	06/15 -	4162	
MULTIVAN VI (SGF, SGM, SGN)	2.0 TDI 4motion	103	06/15 -	3841	3842
MULTIVAN VI (SGF, SGM, SGN)	2.0 TDI 4motion	103	06/15 -	4162	
MULTIVAN VI (SGF, SGM, SGN)	2.0 TDI 4motion	110	08/15 -	3841	3842
MULTIVAN VI (SGF, SGM, SGN)	2.0 TDI 4motion	110	08/15 -	4162	
MULTIVAN VI (SGF, SGM, SGN)	2.0 TDI 4motion	132	06/15 -	3841	3842
MULTIVAN VI (SGF, SGM, SGN)	2.0 TDI 4motion	132	06/15 -	4162	
MULTIVAN VI (SGF, SGM, SGN)	2.0 TDI 4motion	150	06/15 -	3841	3842
MULTIVAN VI (SGF, SGM, SGN)	2.0 TDI 4motion	150	06/15 -	4162	
MULTIVAN VI (SGF, SGM, SGN)	2.0 TSI	110	04/15 -	3841	3842
MULTIVAN VI (SGF, SGM, SGN)	2.0 TSI	110	04/15 -	4162	
MULTIVAN VI (SGF, SGM, SGN)	2.0 TSI	150	04/15 -	3841	3842
MULTIVAN VI (SGF, SGM, SGN)	2.0 TSI	150	04/15 -	4162	
MULTIVAN VI (SGF, SGM, SGN)	2.0 TSI 4motion	150	06/15 -	3841	3842
MULTIVAN VI (SGF, SGM, SGN)	2.0 TSI 4motion	150	06/15 -	4162	
MULTIVAN VI (SGF, SGM, SGN, SHM, SHN)	2.0 TDI	81	07.2019 -	4375	
MULTIVAN VI (SGF, SGM, SGN, SHM, SHN)	2.0 TDI	81	07.2019 -	4375	
NEW BEETLE (9C1, 1C1)	1.4	55	11/01 – 09/10	3782	3529/1
NEW BEETLE (9C1, 1C1)	1.6	74	10/99 – 09/00	3782	3529/1
NEW BEETLE (9C1, 1C1)	1.6	75	06/00 – 09/10	3782	3529/1
NEW BEETLE (9C1, 1C1)	1.8 T	110	10/99 – 09/10	3590/1	3529/1
NEW BEETLE (9C1, 1C1)	1.8 T	132	11/01 – 06/05	3590/1	3529/1
NEW BEETLE (9C1, 1C1)	1.9 TDI	66	01/98 – 06/04	3782	3529/1
NEW BEETLE (9C1, 1C1)	1.9 TDI	66	01/98 – 06/04	3782/1	
NEW BEETLE (9C1, 1C1)	1.9 TDI	74	02/01 – 09/10	3782	3529/1
NEW BEETLE (9C1, 1C1)	1.9 TDI	77	07/05 – 09/10	3782	3529/1
NEW BEETLE (9C1, 1C1)	2.0	85	01/98 - 09/10	3782/1	
NEW BEETLE (9C1, 1C1)	2.0	85	01/98 – 09/10	3782	3529/1
NEW BEETLE (9C1, 1C1)	2.3 V5	125	10/00 – 09/10	3590/1	3529/1
NEW BEETLE (9C1, 1C1)	2.5	110	07/05 – 09/10	3590/1	3529/1
NEW BEETLE (9C1, 1C1)	2.5	110	07/05 – 09/10	3782	
NEW BEETLE (9C1, 1C1)	RSI 3.2 4motion (1C9)	165	04/00 – 05/01	3590/1	3529/1
NEW BEETLE Convertible (1Y7)	1.4	55	01/03 – 09/10	3590/1	3529/1
NEW BEETLE Convertible (1Y7)	1.4	55	01/03 – 09/10	3782	
NEW BEETLE Convertible (1Y7)	1.6	75	01/03 – 09/10	3590/1	3529/1
NEW BEETLE Convertible (1Y7)	1.6	75	01/03 – 09/10	3782	
NEW BEETLE Convertible (1Y7)	1.8 T	110	01/03 – 09/10	3590/1	3529/1
NEW BEETLE Convertible (1Y7)	1.8 T	110	01/03 – 09/10	3782	
NEW BEETLE Convertible (1Y7)	1.9 TDI	74	06/03 – 09/10	3590/1	3529/1
NEW BEETLE Convertible (1Y7)	1.9 TDI	74	06/03 – 09/10	3782	
NEW BEETLE Convertible (1Y7)	1.9 TDI	77	07/05 – 09/10	3590/1	3529/1
NEW BEETLE Convertible (1Y7)	1.9 TDI	77	07/05 – 09/10	3782	
NEW BEETLE Convertible (1Y7)	2.0	85	09/02 – 10/10	3590/1	3529/1
NEW BEETLE Convertible (1Y7)	2.0	85	09/02 – 10/10	3782	
NEW BEETLE Convertible (1Y7)	2.5	110	07/05 – 09/10	3590/1	3529/1
NEW BEETLE Convertible (1Y7)	2.5	110	07/05 – 09/10	3782	
PASSAT VIII (3G5_B8)	1.4 TSI (CZCA)	92	11/14 -	4228	
PASSAT VIII (3G5_B8)	1.4 TSI (CZDA)	110	11/14 -	4228	
PASSAT VIII (3G5_B8)	1.4 TSI (CZEA)	110	11/14 -	4228	
PASSAT VIII (3G5_B8)	1.6 TDI (DCXA)	88	08/14 -	4228	
PASSAT VIII (3G5_B8)	1.6 TDI (DCZA)	88	08/14 -	4228	
PASSAT VIII (3G5_B8)	1.8 TSI (CJSA)	132	02/15 -	4228	
PASSAT VIII (3G5_B8)	1.8 TSI (CJSC)	132	02/15 -	4228	
PASSAT VIII (3G5_B8)	2.0 TDI (CUAA)	176	08/14 -	4228	
PASSAT VIII (3G5_B8)	2.0 TDI (CRLB)	110	11/14 -	4228	
PASSAT VIII (3G5_B8)	2.0 TDI (CUPA)	135	07/15 -	4228	
PASSAT VIII (3G5_B8)	2.0 TDI (DBGA)	110	11/14 -	4228	
PASSAT VIII (3G5_B8)	2.0 TDI (DDAA)	140	11/14 -	4228	

MAKE & MODEL		KW	YEAR		
VW					
PASSAT VIII (3G5_B8)	2.0 TDI (DFCA)	140	11/14 -	4228	
PASSAT VIII (3G5_B8)	2.0 TDI (DFEA)	110	02/15 -	4228	
PASSAT VIII (3G5_B8)	2.0 TDI (DFGA)	110	11/14 -	4228	
PASSAT VIII (3G5_B8)	2.0 TSI (CHHB)	162	02/15 -	4228	
PASSAT VIII (3G5_B8)	2.0 TSI (CJXA)	206	05/15 -	4228	
PASSAT VIII (3G5_B8)	2.0 TSI (CXDA)	162	02/15 -	4228	
PASSAT VIII ALLTRACK (3G5)	1.4 TSI (CZEA)	110	05/15 -	4228	
PASSAT VIII ALLTRACK (3G5)	2.0 TDI (CRLB)	110	05/15 -	4228	
PASSAT VIII ALLTRACK (3G5)	2.0 TDI (CUAA)	176	05/15 -	4228	
PASSAT VIII ALLTRACK (3G5)	2.0 TDI (CUPA)	135	07/15 -	4228	
PASSAT VIII ALLTRACK (3G5)	2.0 TDI (DDAA)	140	05/15 -	4228	
PASSAT VIII ALLTRACK (3G5)	2.0 TDI (DFCA)	140	05/15 -	4228	
PASSAT VIII ALLTRACK (3G5)	2.0 TDI (DFEA)	110	05/15 -	4228	
PASSAT VIII ALLTRACK (3G5)	2.0 TSI (CHHB)	162	07/15 -	4228	
PASSAT (32B)	1.3	40	08/80 – 07/83	3327	
PASSAT (32B)	1.3	40	08/80 – 07/83	3343	
PASSAT (32B)	1.3	40	08/80 – 07/83	3444	
PASSAT (32B)	1.3	40	08/80 – 07/83	3483	
PASSAT (32B)	1.3	40	08/80 – 07/83	3585	
PASSAT (32B)	1.3	44	08/80 – 07/86	3327	
PASSAT (32B)	1.3	44	08/80 – 07/86	3343	
PASSAT (32B)	1.3	44	08/80 – 07/86	3444	
PASSAT (32B)	1.3	44	08/80 – 07/86	3483	
PASSAT (32B)	1.3	44	08/80 – 07/86	3585	
PASSAT (32B)	1.6	51	08/87 – 03/88	3444	
PASSAT (32B)	1.6	51	08/87 – 03/88	3585	
PASSAT (32B)	1.6	53	02/86 – 03/88	3444	
PASSAT (32B)	1.6	53	02/86 – 03/88	3585	
PASSAT (32B)	1.6	55	08/80 – 03/88	3444	
PASSAT (32B)	1.6	55	08/80 – 03/88	3585	
PASSAT (32B)	1.6	63	01/81 – 02/83	3444	
PASSAT (32B)	1.6	63	01/81 – 02/83	3585	
PASSAT (32B)	1.6 D	40	08/80 – 03/88	3327	
PASSAT (32B)	1.6 D	40	08/80 – 03/88	3343	
PASSAT (32B)	1.6 D	40	08/80 – 03/88	3444	
PASSAT (32B)	1.6 D	40	08/80 – 03/88	3483	
PASSAT (32B)	1.6 D	40	08/80 – 03/88	3585	
PASSAT (32B)	1.6 TD	51	04/82 – 03/88	3444	
PASSAT (32B)	1.6 TD	51	04/82 – 03/88	3585	
PASSAT (32B)	1.6 TD	59	05/86 – 03/88	3444	
PASSAT (32B)	1.6 TD	59	05/86 – 03/88	3585	
PASSAT (32B)	1.8	64	05/86 – 03/88	3444	
PASSAT (32B)	1.8	64	05/86 – 03/88	3585	
PASSAT (32B)	1.8	66	01/83 – 03/88	3444	
PASSAT (32B)	1.8	66	01/83 – 03/88	3585	
PASSAT (32B)	1.8	82	12/83 – 03/88	3444	
PASSAT (32B)	1.8	82	12/83 – 03/88	3486	
PASSAT (32B)	1.8	82	12/83 – 03/88	3585	
PASSAT (32B)	1.9	85	01/81 – 07/83	3486	
PASSAT (32B)	2.0	85	08/83 – 03/88	3486	
PASSAT (32B)	2.1	85	01/81 – 07/83	3486	
PASSAT (32B)	2.2	85	08/85 – 03/88	3486	
PASSAT (32B)	2.2	100	01/85 – 03/88	3531	3529
PASSAT (3A2, 35I)	1.6	53	02/88 – 09/91	3444	
PASSAT (3A2, 35I)	1.6	53	02/88 – 09/91	3551	
PASSAT (3A2, 35I)	1.6	53	02/88 – 09/91	3585	
PASSAT (3A2, 35I)	1.6	55	02/88 – 12/88	3444	
PASSAT (3A2, 35I)	1.6	55	02/88 – 12/88	3551	
PASSAT (3A2, 35I)	1.6	55	02/88 – 12/88	3585	
PASSAT (3A2, 35I)	1.6	74	10/94 – 08/96	3531	3529/1
PASSAT (3A2, 35I)	1.6	74	10/94 – 08/96	3551	
PASSAT (3A2, 35I)	1.6 TD	59	08/88 – 09/93	3551	
PASSAT (3A2, 35I)	1.8	55	08/90 – 08/96	3551	
PASSAT (3A2, 35I)	1.8	66	02/88 – 08/96	3551	
PASSAT (3A2, 35I)	1.8	79	04/88 – 07/93	3531	3529
PASSAT (3A2, 35I)	1.8	82	04/88 – 07/92	3531	3529
PASSAT (3A2, 35I)	1.8 16V	100	04/88 – 12/89	3531	3529
PASSAT (3A2, 35I)	1.8 G60 Syncro	118	08/88 – 08/96	3551	3529/1
PASSAT (3A2, 35I)	1.8 G60 Syncro	118	08/88 – 08/96		3529
PASSAT (3A2, 35I)	1.8 GL	102	08/91 – 09/93	3531	3529
PASSAT (3A2, 35I)	1.9 D	50	05/89 – 10/93	3551	
PASSAT (3A2, 35I)	1.9 TD	55	03/91 – 08/96	3551	3529/1
PASSAT (3A2, 35I)	1.9 TDI	66	10/93 – 08/96	3531	
PASSAT (3A2, 35I)	1.9 TDI	66	10/93 – 08/96	3551	
PASSAT (3A2, 35I)	1.9 TDI	81	03/96 – 08/96	3551	3529/1
PASSAT (3A2, 35I)	2.0	79	03/95 – 08/96	3531	3529

MAKE & MODEL		KW	YEAR		
VW					
PASSAT (3A2, 35I)	2.0	85	02/90 – 08/96	3531	3529/1
PASSAT (3A2, 35I)	2.0	85	02/90 – 08/96		3529
PASSAT (3A2, 35I)	2.0	125	04/88 – 07/91		3529/1
PASSAT (3A2, 35I)	2.0 16V	100	08/88 – 09/93	3531	3529/1
PASSAT (3A2, 35I)	2.0 16V	100	08/88 – 09/93		3529
PASSAT (3A2, 35I)	2.0 16V	110	01/94 – 08/96		3529/1
PASSAT (3A2, 35I)	2.0 Syncro	81	09/89 – 07/92	3531	3529/1
PASSAT (3A2, 35I)	2.0 Syncro	81	09/89 – 07/92		3529
PASSAT (3A2, 35I)	2.0 Syncro	85	10/90 – 08/96	3531	3529/1
PASSAT (3A2, 35I)	2.0 Syncro	85	10/90 – 08/96		3529
PASSAT (3A2, 35I)	2.8 VR6	128	06/91 – 08/96	3551	3529/1
PASSAT (3A2, 35I)	2.8 VR6	128	06/91 – 08/96		3529
PASSAT (3B2)	1.6	74	10/96 – 11/00	3590/2	3529/1
PASSAT (3B2)	1.6	74	10/96 – 11/00	3896	
PASSAT (3B2)	1.8	85	01/97 – 11/00	3590/2	3529/1
PASSAT (3B2)	1.8	85	01/97 – 11/00	3896	
PASSAT (3B2)	1.8	92	10/96 – 11/00	3590/2	3529/1
PASSAT (3B2)	1.8	92	10/96 – 11/00	3896	
PASSAT (3B2)	1.8	112	01/00 – 12/01	3590	3529/1
PASSAT (3B2)	1.8 Syncro/4motion	92	10/96 – 11/00	3896	3529/1
PASSAT (3B2)	1.8 T	110	10/96 – 11/00	3590	3529/1
PASSAT (3B2)	1.8 T	110	10/96 – 11/00	3590/2	
PASSAT (3B2)	1.8 T Syncro	110	11/96 – 08/00	3896	3529/1
PASSAT (3B2)	1.9 TDI	66	10/96 – 11/00	3590/2	3529/1
PASSAT (3B2)	1.9 TDI	66	10/96 – 11/00	3896	
PASSAT (3B2)	1.9 TDI	74	02/00 – 11/00	3590/2	3529/1
PASSAT (3B2)	1.9 TDI	74	02/00 – 11/00	3896	
PASSAT (3B2)	1.9 TDI	81	10/96 – 11/00	3590	3529/1
PASSAT (3B2)	1.9 TDI	81	10/96 – 11/00	3590/2	
PASSAT (3B2)	1.9 TDI	85	08/98 – 11/00	3590	3529/1
PASSAT (3B2)	1.9 TDI	85	08/98 – 11/00	3590/2	
PASSAT (3B2)	1.9 TDI 4motion	85	08/99 – 11/00	3590	3529/1
PASSAT (3B2)	1.9 TDI 4motion	85	08/99 – 11/00	3590/2	
PASSAT (3B2)	1.9 TDI Syncro/4motion	81	10/96 – 11/00	3590	3529/1
PASSAT (3B2)	1.9 TDI Syncro/4motion	81	10/96 – 11/00	3590/2	
PASSAT (3B2)	2.0	88	04/00 – 11/00	3590	3529/1
PASSAT (3B2)	2.0	88	04/00 – 11/00	3590/2	
PASSAT (3B2)	2.0 4motion	88	04/00 – 11/00	3590	3529/1
PASSAT (3B2)	2.0 4motion	88	04/00 – 11/00	3590/2	
PASSAT (3B2)	2.3 VR5	110	10/96 – 11/00	3590	3529/1
PASSAT (3B2)	2.3 VR5	110	10/96 – 11/00	3590/2	
PASSAT (3B2)	2.3 VR5 Syncro/4motion	110	10/97 – 11/00	3590	3529/1
PASSAT (3B2)	2.3 VR5 Syncro/4motion	110	10/97 – 11/00	3590/2	
PASSAT (3B2)	2.5 TDI	110	07/98 – 11/00	3590	3529/1
PASSAT (3B2)	2.5 TDI	110	07/98 – 11/00	3590/2	3529/1
PASSAT (3B2)	2.5 TDI Syncro/4motion	110	12/98 – 11/00	3590	
PASSAT (3B2)	2.5 TDI Syncro/4motion	110	12/98 – 11/00	3590/2	
PASSAT (3B2)	2.8 Syncro	132	05/97 – 09/99	3590	3529/1
PASSAT (3B2)	2.8 Syncro	132	05/97 – 09/99	3590/2	
PASSAT (3B2)	2.8 V6	132	05/97 – 09/99	3590	3529/1
PASSAT (3B2)	2.8 V6	132	05/97 – 09/99	3590/2	
PASSAT (3B2)	2.8 V6	140	09/99 – 11/00	3590	3529/1
PASSAT (3B2)	2.8 V6	140	09/99 – 11/00	3590/2	3529/1
PASSAT (3B2)	2.8 V6	142	08/96 – 11/00	3590	
PASSAT (3B2)	2.8 V6	142	08/96 – 11/00	3590/2	
PASSAT (3B2)	2.8 V6 Syncro/4motion	142	10/96 – 11/00	3590	3529/1
PASSAT (3B2)	2.8 V6 Syncro/4motion	142	10/96 – 11/00	3590/2	
PASSAT (3B3)	1.6	75	11/00 – 05/05	3590/2	3529/1
PASSAT (3B3)	1.8	92	03/03 – 03/05	3590/2	3529/1
PASSAT (3B3)	1.8 T	125	02/01 – 05/05	3590/2	3529/1
PASSAT (3B3)	1.8 T 20V	110	11/00 – 05/05	3590/2	3529/1
PASSAT (3B3)	1.8 T 4motion	125	03/01 – 05/05	3590/2	3529/1
PASSAT (3B3)	1.9 TDI	74	11/00 – 05/05	3590/2	3529/1
PASSAT (3B3)	1.9 TDI	96	11/00 – 05/05	3590/2	3529/1
PASSAT (3B3)	1.9 TDI 4motion	96	11/00 – 05/05	3590/2	3529/1
PASSAT (3B3)	2.0	85	11/00 – 05/05	3590/2	3529/1
PASSAT (3B3)	2.0	96	11/01 – 05/05	3590/2	3529/1
PASSAT (3B3)	2.0 4motion	85	11/00 – 05/05	3590/2	3529/1
PASSAT (3B3)	2.0 TDI	100	12/03 – 05/05	3590/2	3529/1
PASSAT (3B3)	2.3 V5	125	11/00 – 05/05		3529/1
PASSAT (3B3)	2.3 V5 4motion	125	11/00 – 05/05		3529/1
PASSAT (3B3)	2.5 TDI	110	11/00 – 05/05		3529/1
PASSAT (3B3)	2.5 TDI	120	05/03 – 05/05		3529/1
PASSAT (3B3)	2.5 TDI 4motion	110	11/00 – 05/05		3529/1
PASSAT (3B3)	2.5 TDI 4motion	132	01/03 – 05/05		3529/1
PASSAT (3B3)	2.8 4motion	142	11/00 – 05/05		3529/1

MAKE & MODEL		KW	YEAR		
VW					
PASSAT (3B3)	4.0 W8 4motion	202	09/01 – 09/04		3529/1
PASSAT (3C2)	1.4 TSI	90	05/07 – 07/10	3904	
PASSAT (3C2)	1.4 TSI EcoFuel	110	01/09 – 07/10	3904	
PASSAT (3C2)	1.6	75	05/05 – 07/10	3904	3905
PASSAT (3C2)	1.6 FSI	85	03/05 – 06/08	3904	3905
PASSAT (3C2)	1.6 TDI	77	08/09 – 07/10	3904	
PASSAT (3C2)	1.8 TSI	112	11/09 – 07/10	3904	
PASSAT (3C2)	1.8 TSI	118	05/07 – 07/10	3904	
PASSAT (3C2)	1.9 TDI	77	03/05 – 11/08	3904	3905
PASSAT (3C2)	2.0 BlueTDI	105	01/09 – 11/10	3904	
PASSAT (3C2)	2.0 FSI	110	03/05 – 07/10	3904	3905
PASSAT (3C2)	2.0 FSI	125	08/07 – 07/10	3904	
PASSAT (3C2)	2.0 FSI	147	07/05 – 07/10	3904	3905
PASSAT (3C2)	2.0 FSI 4motion	110	09/05 – 07/10	3904	3905
PASSAT (3C2)	2.0 TDI	81	11/08 – 07/10	3904	
PASSAT (3C2)	2.0 TDI	88	11/05 – 05/07	3904	3905
PASSAT (3C2)	2.0 TDI	90	08/05 – 07/06	3904	3905
PASSAT (3C2)	2.0 TDI	100	03/05 – 11/10	3904	3905
PASSAT (3C2)	2.0 TDI	103	03/05 – 05/09	3904	3905
PASSAT (3C2)	2.0 TDI	120	08/05 – 05/09	3904	3905
PASSAT (3C2)	2.0 TDI	125	08/05 – 07/10	3904	3905
PASSAT (3C2)	2.0 TDI 16V	103	03/05 – 07/10	3904	3905
PASSAT (3C2)	2.0 TDI 16V 4motion	103	03/05 – 08/10	3904	3905
PASSAT (3C2)	2.0 TDI 4motion	103	03/05 – 05/09	3904	3905
PASSAT (3C2)	2.0 TDI 4motion	125	05/09 – 07/10	3904	
PASSAT B2 (32B)	1.3	40	08.1980 - 07.1983	3444/1	
PASSAT B2 (32B)	1.3	44	08.1980 - 07.1986	3444/1	
PASSAT B2 (32B)	1.3	44	08.1980 - 07.1986	3444/1	
PASSAT B2 (32B)	1.6	51	08.1986 - 03.1988	3444/1	
PASSAT B2 (32B)	1.6	53	02.1986 - 03.1988	3444/1	
PASSAT B2 (32B)	1.6	55	08.1980 - 03.1988	3444/1	
PASSAT B2 (32B)	1.6	55	09.1979 - 03.1988	3444/1	
PASSAT B2 (32B)	1.6	63	01.1981 - 02.1983	3444/1	
PASSAT B2 (32B)	1.6 D	40	08.1980 - 03.1988	3444/1	
PASSAT B2 (32B)	1.6 TD	51	04.1982 - 03.1988	3444/1	
PASSAT B2 (32B)	1.6 TD	59	05.1986 - 03.1988	3444/1	
PASSAT B2 (32B)	1.8	64	05.1986 - 03.1988	3444/1	
PASSAT B2 (32B)	1.8	66	01.1983 - 03.1988	3444/1	
PASSAT B2 (32B)	1.8	82	12.1983 - 03.1988	3444/1	
PASSAT B2 (32B)	1.8	82	12.1983 - 03.1988	3486/1	
PASSAT B2 (32B)	1.9	85	01.1981 - 07.1983	3486/1	
PASSAT B2 (32B)	2.0	85	08.1983 - 03.1988	3486/1	
PASSAT B2 (32B)	2.2	85	08.1985 - 03.1988	3486/1	
PASSAT B2 Sedan (32B)	1.6	51	08.1986 - 03.1988	3444/1	
PASSAT B2 Sedan (32B)	1.6	53	01.1985 - 03.1988	3444/1	
PASSAT B2 Sedan (32B)	1.6	55	08.1984 - 03.1988	3444/1	
PASSAT B2 Sedan (32B)	1.6 TD	51	01.1985 - 03.1988	3444/1	
PASSAT B2 Sedan (32B)	1.8	64	05.1986 - 03.1988	3444/1	
PASSAT B2 Sedan (32B)	1.8	66	01.1985 - 03.1988	3444/1	
PASSAT B2 Sedan (32B)	2.2	85	01.1985 - 03.1988	3486/1	
PASSAT B2 Variant (33B)	1.3	40	08.1980 - 07.1983	3444/1	
PASSAT B2 Variant (33B)	1.3	44	08.1980 - 07.1986	3444/1	
PASSAT B2 Variant (33B)	1.3	44	08.1980 - 07.1986	3444/1	
PASSAT B2 Variant (33B)	1.6	51	08.1986 - 03.1988	3444/1	
PASSAT B2 Variant (33B)	1.6	53	02.1986 - 03.1988	3444/1	
PASSAT B2 Variant (33B)	1.6	55	08.1980 - 07.1983	3444/1	
PASSAT B2 Variant (33B)	1.6	55	08.1983 - 03.1988	3444/1	
PASSAT B2 Variant (33B)	1.6	63	01.1981 - 02.1983	3444/1	
PASSAT B2 Variant (33B)	1.6 D	40	08.1980 - 03.1988	3444/1	
PASSAT B2 Variant (33B)	1.6 TD	51	04.1982 - 03.1988	3444/1	
PASSAT B2 Variant (33B)	1.8	64	05.1986 - 03.1988	3444/1	
PASSAT B2 Variant (33B)	1.8	66	01.1983 - 03.1988	3444/1	
PASSAT B2 Variant (33B)	1.8	66	01.1983 - 03.1988	3486/1	
PASSAT B2 Variant (33B)	1.8	82	12.1983 - 03.1988	3444/1	
PASSAT B2 Variant (33B)	1.8	82	12.1983 - 03.1988	3486/1	
PASSAT B2 Variant (33B)	1.9	85	01.1981 - 07.1983	3486/1	
PASSAT B2 Variant (33B)	2.0	85	08.1983 - 03.1988	3486/1	
PASSAT B2 Variant (33B)	2.2	85	08.1985 - 03.1988	3444/1	
PASSAT B2 Variant (33B)	2.2	85	08.1985 - 03.1988	3486/1	
PASSAT B3/B4 (3A2, 35I)	1.6	53	04.1988 - 07.1989	3444/1	
PASSAT B3/B4 (3A2, 35I)	1.6	55	04.1988 - 07.1992	3444/1	
PASSAT CC (357)	1.4 TSI MultiFuel	118	01/11 – 01/12	3904	
PASSAT CC (357)	1.8 TSI	112	11/08 – 05/10	3904	
PASSAT CC (357)	1.8 TSI	118	06/08 – 01/12	3904	
PASSAT CC (357)	2.0 BlueTDI	105	05/09 – 11/10	3904	
PASSAT CC (357)	2.0 TDI	100	06/08 – 05/11	3904	

MAKE & MODEL		KW	YEAR		
VW					
PASSAT CC (357)	2.0 TDI	103	06/08 – 01/12	3904	
PASSAT CC (357)	2.0 TDI	120	05/08 – 05/11	3904	
PASSAT CC (357)	2.0 TDI	125	06/08 – 01/12	3904	
PASSAT CC (357)	2.0 TDI 4motion	103	08/09 – 01/12	3904	
PASSAT CC (357)	2.0 TDI 4motion	125	11/09 – 01/12	3904	
PASSAT CC (357)	2.0 TSI	147	06/08 – 01/12	3904	
PASSAT CC (357)	2.0 TSI	155	11/10 – 01/12	3904	
PASSAT Estate (3B5)	1.6	74	06/97 – 11/00	3590/2	3529/1
PASSAT Estate (3B5)	1.6	74	06/97 – 11/00	3896	
PASSAT Estate (3B5)	1.8	85	06/97 – 11/00	3590/2	3529/1
PASSAT Estate (3B5)	1.8	85	06/97 – 11/00	3896	
PASSAT Estate (3B5)	1.8	92	06/97 – 11/00	3590/2	3529/1
PASSAT Estate (3B5)	1.8	92	06/97 – 11/00	3896	
PASSAT Estate (3B5)	1.8 Syncro/4motion	92	06/97 – 11/00	3590/2	3529/1
PASSAT Estate (3B5)	1.8 Syncro/4motion	92	06/97 – 11/00	3896	
PASSAT Estate (3B5)	1.8 T	110	06/97 – 11/00	3590	3529/1
PASSAT Estate (3B5)	1.8 T	110	06/97 – 11/00	3590/2	
PASSAT Estate (3B5)	1.9 TDI	66	06/97 – 11/00	3590/2	3529/1
PASSAT Estate (3B5)	1.9 TDI	66	06/97 – 11/00	3896	
PASSAT Estate (3B5)	1.9 TDI	74	02/00 – 11/00	3590/2	3529/1
PASSAT Estate (3B5)	1.9 TDI	74	02/00 – 11/00	3896	
PASSAT Estate (3B5)	1.9 TDI	81	06/97 – 11/00	3590	3529/1
PASSAT Estate (3B5)	1.9 TDI	81	06/97 – 11/00	3590/2	
PASSAT Estate (3B5)	1.9 TDI	85	08/98 – 11/00	3590	3529/1
PASSAT Estate (3B5)	1.9 TDI	85	08/98 – 11/00	3590/2	
PASSAT Estate (3B5)	1.9 TDI 4motion	85	08/99 – 11/00	3590	3529/1
PASSAT Estate (3B5)	1.9 TDI 4motion	85	08/99 – 11/00	3590/2	
PASSAT Estate (3B5)	1.9 TDI Syncro/4motion	81	06/97 – 11/00	3590	3529/1
PASSAT Estate (3B5)	1.9 TDI Syncro/4motion	81	06/97 – 11/00	3590/2	
PASSAT Estate (3B5)	2.0	88	04/00 – 11/00	3590	3529/1
PASSAT Estate (3B5)	2.0	88	04/00 – 11/00	3590/2	
PASSAT Estate (3B5)	2.0 4motion	88	04/00 – 11/00	3590	3529/1
PASSAT Estate (3B5)	2.0 4motion	88	04/00 – 11/00	3590/2	
PASSAT Estate (3B5)	2.3 VR5	110	06/97 – 11/00	3590	3529/1
PASSAT Estate (3B5)	2.3 VR5	110	06/97 – 11/00	3590/2	
PASSAT Estate (3B5)	2.3 VR5 Syncro/4motion	110	10/97 – 11/00	3590	3529/1
PASSAT Estate (3B5)	2.3 VR5 Syncro/4motion	110	10/97 – 11/00	3590/2	
PASSAT Estate (3B5)	2.5 TDI	110	07/98 – 11/00	3590	3529/1
PASSAT Estate (3B5)	2.5 TDI	110	07/98 – 11/00	3590/2	
PASSAT Estate (3B5)	2.5 TDI Syncro/4motion	110	12/98 – 11/00	3590	3529/1
PASSAT Estate (3B5)	2.5 TDI Syncro/4motion	110	12/98 – 11/00	3590/2	
PASSAT Estate (3B5)	2.8 Syncro	132	05/97 – 09/99	3590	3529/1
PASSAT Estate (3B5)	2.8 Syncro	132	05/97 – 09/99	3590/2	3529/1
PASSAT Estate (3B5)	2.8 V6	132	09/97 – 09/99	3590	
PASSAT Estate (3B5)	2.8 V6	132	09/97 – 09/99	3590/2	
PASSAT Estate (3B5)	2.8 V6	140	09/99 – 11/00	3590	3529/1
PASSAT Estate (3B5)	2.8 V6	140	09/99 – 11/00	3590/2	
PASSAT Estate (3B5)	2.8 V6	142	06/97 – 11/00	3590	3529/1
PASSAT Estate (3B5)	2.8 V6	142	06/97 – 11/00	3590/2	3529/1
PASSAT Estate (3B5)	2.8 V6 Syncro/4motion	142	06/97 – 11/00	3590	
PASSAT Estate (3B5)	2.8 V6 Syncro/4motion	142	06/97 – 11/00	3590/2	
PASSAT Saloon (32B)	1.3	40	08/80 – 07/83	3444	
PASSAT Saloon (32B)	1.3	40	08/80 – 07/83	3585	
PASSAT Saloon (32B)	1.3	44	08/80 – 07/86	3327	
PASSAT Saloon (32B)	1.3	44	08/80 – 07/86	3343	
PASSAT Saloon (32B)	1.3	44	08/80 – 07/86	3444	
PASSAT Saloon (32B)	1.3	44	08/80 – 07/86	3483	
PASSAT Saloon (32B)	1.3	44	08/80 – 07/86	3585	
PASSAT Saloon (32B)	1.6	51	08/87 – 03/88	3444	
PASSAT Saloon (32B)	1.6	53	01/85 – 03/88	3444	
PASSAT Saloon (32B)	1.6	53	01/85 – 03/88	3585	
PASSAT Saloon (32B)	1.6	55	01/85 – 03/88	3444	
PASSAT Saloon (32B)	1.6	55	01/85 – 03/88	3585	
PASSAT Variant (32B)	1.6	51	08/87 – 03/88	3585	
PASSAT Variant (32B)	1.6	51	08/87 – 03/88	3444	
PASSAT Variant (32B)	1.6	53	02/86 – 03/88	3444	
PASSAT Variant (32B)	1.6	53	02/86 – 03/88	3585	
PASSAT Variant (32B)	1.6	55	08/80 – 03/88	3444	
PASSAT Variant (32B)	1.6	55	08/80 – 03/88	3585	
PASSAT Variant (32B)	1.6	63	01/81 – 02/83	3444	
PASSAT Variant (32B)	1.6	63	01/81 – 02/83	3585	
PASSAT Variant (32B)	1.6 D	40	08/80 – 03/88	3444	
PASSAT Variant (32B)	1.6 D	40	08/80 – 03/88	3585	
PASSAT Variant (32B)	1.6 TD	51	01/85 – 03/88	3444	
PASSAT Variant (32B)	1.6 TD	51	01/85 – 03/88	3585	
PASSAT Variant (32B)	1.6 TD	51	04/82 – 03/88	3444	

BESER®

MAKE & MODEL		KW	YEAR		
VW					
PASSAT Variant (32B)	1.6 TD	51	04/82 – 03/88	3585	
PASSAT Variant (32B)	1.8	64	05/86 – 03/88	3444	
PASSAT Variant (32B)	1.8	64	05/86 – 03/88	3585	
PASSAT Variant (32B)	1.8	66	01/83 – 03/88	3444	
PASSAT Variant (32B)	1.8	66	01/83 – 03/88	3486	
PASSAT Variant (32B)	1.8	66	01/83 – 03/88	3585	
PASSAT Variant (32B)	1.8	66	01/85 – 03/88	3444	
PASSAT Variant (32B)	1.8	66	01/85 – 03/88	3585	
PASSAT Variant (32B)	1.8	82	12/83 – 03/88	3444	
PASSAT Variant (32B)	1.8	82	12/83 – 03/88	3486	
PASSAT Variant (32B)	1.8	82	12/83 – 03/88	3585	
PASSAT Variant (32B)	1.8 Syncro	66	01/86 – 03/88	3531	3529
PASSAT Variant (32B)	1.9	85	01/81 – 07/83	3486	
PASSAT Variant (32B)	2.0	85	08/83 – 03/88	3486	
PASSAT Variant (32B)	2.0 Syncro	85	05/84 – 03/88	3531	3529
PASSAT Variant (32B)	2.1	85	01/81 – 07/83	3486	
PASSAT Variant (32B)	2.2	85	01/85 – 03/88	3486	
PASSAT Variant (32B)	2.2	85	08/85 – 03/88	3444	
PASSAT Variant (32B)	2.2	85	08/85 – 03/88	3486	
PASSAT Variant (32B)	2.2	85	08/85 – 03/88	3585	
PASSAT Variant (32B)	2.2	100	01/85 – 03/88	3531	3529
PASSAT Variant (32B)	2.2 Syncro	88	08/85 – 03/88	3531	3529
PASSAT Variant (3A5, 35I)	1.6	53	04/88 – 09/91	3551	
PASSAT Variant (3A5, 35I)	1.6	55	04/88 – 12/88	3551	
PASSAT Variant (3A5, 35I)	1.6	74	07/94 – 12/95	3531	3529/1
PASSAT Variant (3A5, 35I)	1.6	74	07/94 – 12/95	3551	
PASSAT Variant (3A5, 35I)	1.6 TD	59	08/88 – 09/93	3551	
PASSAT Variant (3A5, 35I)	1.8	55	08/90 – 05/97	3551	
PASSAT Variant (3A5, 35I)	1.8	66	02/88 – 05/97	3551	
PASSAT Variant (3A5, 35I)	1.8	79	04/88 – 07/90	3531	3529
PASSAT Variant (3A5, 35I)	1.8	82	04/88 – 07/92	3531	3529
PASSAT Variant (3A5, 35I)	1.8	102	08/91 – 09/93	3531	3529/1
PASSAT Variant (3A5, 35I)	1.8	102	08/91 – 09/93		3529
PASSAT Variant (3A5, 35I)	1.8 16V	100	04/88 – 12/89	3531	3529/1
PASSAT Variant (3A5, 35I)	1.8 16V	100	04/88 – 12/89		3529
PASSAT Variant (3A5, 35I)	1.8 G60 Syncro	118	08/88 – 05/97	3551	3529/1
PASSAT Variant (3A5, 35I)	1.8 G60 Syncro	118	08/88 – 05/97		3529
PASSAT Variant (3A5, 35I)	1.9 D	50	05/89 – 10/93	3551	
PASSAT Variant (3A5, 35I)	1.9 TD	55	03/91 – 05/97	3551	
PASSAT Variant (3A5, 35I)	1.9 TDI	66	10/93 – 05/97	3531	3529/1
PASSAT Variant (3A5, 35I)	1.9 TDI	66	10/93 – 05/97	3551	
PASSAT Variant (3A5, 35I)	1.9 TDI	81	03/96 – 05/97	3551	3529/1
PASSAT Variant (3A5, 35I)	2.0	79	03/95 – 08/96	3531	3529
PASSAT Variant (3A5, 35I)	2.0	85	02/90 – 05/97	3531	3529/1
PASSAT Variant (3A5, 35I)	2.0	85	02/90 – 05/97		3529
PASSAT Variant (3A5, 35I)	2.0 16V	100	08/88 – 09/93	3531	3529/1
PASSAT Variant (3A5, 35I)	2.0 16V	100	08/88 – 09/93		3529
PASSAT Variant (3A5, 35I)	2.0 16V	110	01/94 – 05/97		3529/1
PASSAT Variant (3A5, 35I)	2.0 Syncro	85	10/90 – 05/97	3531	3529/1
PASSAT Variant (3A5, 35I)	2.0 Syncro	85	10/90 – 05/97		3529
PASSAT Variant (3A5, 35I)	2.8 VR6	128	06/91 – 05/97	3551	3529/1
PASSAT Variant (3A5, 35I)	2.8 VR6	128	06/91 – 05/97		3529
PASSAT Variant (3A5, 35I)	2.9 VR6 Syncro	135	01/94 – 05/97		3529/1
PASSAT Variant (3B6)	1.6	75	11/00 – 05/05	3590/2	3529/1
PASSAT Variant (3B6)	1.8 4motion	125	03/01 – 05/05	3590/2	3529/1
PASSAT Variant (3B6)	1.8 T	125	05/02 – 08/05	3590/2	3529/1
PASSAT Variant (3B6)	1.8 T 20V	110	11/00 – 05/05	3590/2	3529/1
PASSAT Variant (3B6)	1.9 TDI	74	11/00 – 05/05	3590/2	3529/1
PASSAT Variant (3B6)	1.9 TDI	96	11/00 – 05/05	3590/2	3529/1
PASSAT Variant (3B6)	1.9 TDI 4motion	96	11/00 – 05/05	3590/2	3529/1
PASSAT Variant (3B6)	2.0	85	11/00 – 05/05	3590/2	3529/1
PASSAT Variant (3B6)	2.0	96	11/01 – 05/05	3590/2	3529/1
PASSAT Variant (3B6)	2.0 4motion	85	11/00 – 05/05	3590/2	3529/1
PASSAT Variant (3B6)	2.0 TDI	100	12/03 – 05/05	3590/2	3529/1
PASSAT Variant (3B6)	2.3 VR5	125	11/00 – 05/05		3529/1
PASSAT Variant (3B6)	2.3 VR5 4motion	125	11/00 – 05/05		3529/1
PASSAT Variant (3B6)	2.5 TDI	110	11/00 – 05/05		3529/1
PASSAT Variant (3B6)	2.5 TDI	120	05/03 – 05/05		3529/1
PASSAT Variant (3B6)	2.5 TDI 4motion	110	11/00 – 05/05		3529/1
PASSAT Variant (3B6)	2.5 TDI 4motion	132	01/03 – 05/05		3529/1
PASSAT Variant (3B6)	2.8 4motion	142	11/00 – 05/05		3529/1
PASSAT Variant (3B6)	4.0 W8 4motion	202	09/01 – 09/04		3529/1
PASSAT Variant (3C5)	1.4 TSI	90	05/07 – 11/10	3904	
PASSAT Variant (3C5)	1.4 TSI EcoFuel	110	01/09 – 11/10	3904	
PASSAT Variant (3C5)	1.6	75	08/05 – 11/10	3904	3905
PASSAT Variant (3C5)	1.6 FSI	85	08/05 – 06/08	3904	3905

MAKE & MODEL		KW	YEAR		
VW					
PASSAT Variant (3C5)	1.6 TDI	77	08/09 – 11/10	3904	
PASSAT Variant (3C5)	1.8 TSI	112	11/09 – 11/10	3904	
PASSAT Variant (3C5)	1.8 TSI	118	05/07 – 10/11	3904	
PASSAT Variant (3C5)	1.9 TDI	77	08/05 – 11/08	3904	3905
PASSAT Variant (3C5)	2.0 BlueTDI	105	01/09 – 11/10	3904	
PASSAT Variant (3C5)	2.0 FSI	110	08/05 – 11/10	3904	3905
PASSAT Variant (3C5)	2.0 FSI	125	08/07 – 11/10	3904	
PASSAT Variant (3C5)	2.0 FSI	147	08/05 – 11/10	3904	3905
PASSAT Variant (3C5)	2.0 FSI 4motion	110	09/05 – 11/10	3904	3905
PASSAT Variant (3C5)	2.0 TDI	81	11/08 – 11/10	3904	
PASSAT Variant (3C5)	2.0 TDI	88	11/05 – 05/07	3904	3905
PASSAT Variant (3C5)	2.0 TDI	90	08/05 – 02/06	3904	3905
PASSAT Variant (3C5)	2.0 TDI	100	08/05 – 11/10	3904	3905
PASSAT Variant (3C5)	2.0 TDI	103	08/05 – 05/09	3904	3905
PASSAT Variant (3C5)	2.0 TDI	120	08/05 – 05/09	3904	3905
PASSAT Variant (3C5)	2.0 TDI	125	08/05 – 11/10	3904	3905
PASSAT Variant (3C5)	2.0 TDI 16V	103	08/05 – 11/10	3904	3905
PASSAT Variant (3C5)	2.0 TDI 16V 4motion	103	08/05 – 11/10	3904	3905
PASSAT Variant (3C5)	2.0 TDI 4motion	103	08/05 – 05/09	3904	3905
PASSAT Variant (3C5)	2.0 TDI 4motion	125	05/09 – 11/10	3904	
POLO (6N1)	1.7 SDI	42	04/97 – 10/99	3566	
POLO (6N1)	100 1.4 16V	74	04/96 – 10/99		3529/1
POLO (6N1)	120 1.6 16V GTI	88	09/98 – 10/99		3529/1
POLO (6N1)	45 1.0	33	10/94 – 09/96	3566	
POLO (6N1)	50 1.0	37	09/96 – 10/99	3566	
POLO (6N1)	55 1.3	40	10/94 – 07/95	3566	
POLO (6N1)	55 1.4	40	08/95 – 10/99	3566	
POLO (6N1)	60 1.4	44	07/95 – 10/99	3566	
POLO (6N1)	60 1.7 SDI	44	08/97 – 10/99	3566	
POLO (6N1)	64 1.9 D	47	10/94 – 10/99	3566	
POLO (6N1)	64 1.9 SDI	47	07/96 – 10/99	3566	
POLO (6N1)	75 1.6	55	10/94 – 10/99	3566	
POLO (6N2)	1.0	37	10/99 – 09/01	3566	3529/1
POLO (6N2)	1.4	40	10/99 – 09/01	3566	3529/1
POLO (6N2)	1.4	44	10/99 – 09/01	3566	3529/1
POLO (6N2)	1.4 16V	55	10/99 – 09/01	3566	3529/1
POLO (6N2)	1.4 16V	74	10/99 – 09/01		3529/1
POLO (6N2)	1.4 TDI	55	10/99 – 09/01		3529/1
POLO (6N2)	1.4 TDi	66	01/00 – 10/00		3529/1
POLO (6N2)	1.6 16V GTI	92	10/99 – 09/01		3529/1
POLO (6N2)	1.7 SDI	44	10/99 – 09/01	3566	3529/1
POLO (6N2)	1.9 D	47	10/99 – 09/01	3566	3529/1
POLO (6N2)	1.9 SDI	47	10/99 – 09/01	3566	3529/1
POLO (6R, 6C)	1.0	44	01/14 -	3782/1	3529/1
POLO (6R, 6C)	1.0	44	01/14 -	3904	
POLO (6R, 6C)	1.0	55	01/14 -	3782/1	3529/1
POLO (6R, 6C)	1.0	55	01/14 -	3904	
POLO (6R, 6C)	1.0 TSI	70	11/14 -	3782/1	3529/1
POLO (6R, 6C)	1.0 TSI	70	11/14 -	3904	
POLO (6R, 6C)	1.0 TSI	81	11/14 -	3782/1	3529/1
POLO (6R, 6C)	1.0 TSI	81	11/14 -	3904	
POLO (6R, 6C)	1.2	44	06/09 -	3782/1	3529/1
POLO (6R, 6C)	1.2	44	06/09 -	3904	
POLO (6R, 6C)	1.2	51	06/09 -	3782/1	3529/1
POLO (6R, 6C)	1.2	51	06/09 -	3904	
POLO (6R, 6C)	1.2 TDI	55	10/09 -	3782/1	3529/1
POLO (6R, 6C)	1.2 TDI	55	10/09 -	3904	
POLO (6R, 6C)	1.2 TSI	66	05/11 – 05/14	3782/1	3529/1
POLO (6R, 6C)	1.2 TSI	66	05/11 – 05/14	3904	
POLO (6R, 6C)	1.2 TSI	77	11/09 -	3782/1	3529/1
POLO (6R, 6C)	1.2 TSI	77	11/09 -	3904	3529/1
POLO (6R, 6C)	1.2 TSI	81	01/14 -	3782/1	
POLO (6R, 6C)	1.2 TSI	81	01/14 -	3904	
POLO (6R, 6C)	1.2 TSI 16V	66	02/14 -	3782/1	3529/1
POLO (6R, 6C)	1.2 TSI 16V	66	02/14 -	3904	
POLO (6R, 6C)	1.4	63	06/09 -	3782/1	3529/1
POLO (6R, 6C)	1.4	63	06/09 -	3904	
POLO (6R, 6C)	1.4 BiFuel	60	03/10 – 01/11	3782/1	3529/1
POLO (6R, 6C)	1.4 BiFuel	60	03/10 – 01/11	3904	
POLO (6R, 6C)	1.4 GTI	132	05/10 -	3904	3529/1
POLO (6R, 6C)	1.4 TDI	55	03/14 -	3782/1	3529/1
POLO (6R, 6C)	1.4 TDI	55	03/14 -	3904	
POLO (6R, 6C)	1.4 TDI	66	02/14 -	3782/1	3529/1
POLO (6R, 6C)	1.4 TDI	66	02/14 -	3904	
POLO (6R, 6C)	1.4 TDI	77	05/14 -	3782/1	3529/1
POLO (6R, 6C)	1.4 TDI	77	05/14 -	3904	

MAKE & MODEL		KW	YEAR		
VW					
POLO (6R, 6C)	1.4 TSI	103	10/12 -	3782/1	3529/1
POLO (6R, 6C)	1.4 TSI	103	10/12 -	3904	
POLO (6R, 6C)	1.4 TSI	110	05/14 -	3782/1	3529/1
POLO (6R, 6C)	1.4 TSI	110	05/14 -	3904	
POLO (6R, 6C)	1.6	63	05/10 -	3782/1	
POLO (6R, 6C)	1.6	63	05/10 -	4200	
POLO (6R, 6C)	1.6	66	07/14 -	3782/1	3529/1
POLO (6R, 6C)	1.6	81	07/14 -	3782/1	3529/1
POLO (6R, 6C)	1.6	81	07/14 -	3904	
POLO (6R, 6C)	1.6 BiFuel	60	01/11 -	3782/1	3529/1
POLO (6R, 6C)	1.6 BiFuel	60	01/11 -	3904	
POLO (6R, 6C)	1.6 TDI	55	06/09 -	3782/1	3529/1
POLO (6R, 6C)	1.6 TDI	55	06/09 -	3904	
POLO (6R, 6C)	1.6 TDI	66	06/09 -	3782/1	3529/1
POLO (6R, 6C)	1.6 TDI	66	06/09 -	3904	
POLO (6R, 6C)	1.6 TDI	77	06/09 -	3782/1	3529/1
POLO (6R, 6C)	1.6 TDI	77	06/09 -	3904	
POLO (6R, 6C)	1.8 GTI	136	11/14 -	3782/1	3529/1
POLO (6R, 6C)	1.8 GTI	141	11/14 -	3904	3529/1
POLO (6R, 6C)	2.0 R WRC	162	08/13 -	3904	3529/1
POLO (86)	0.8	25	09/75 – 09/81	3327	
POLO (86)	0.8	25	09/75 – 09/81	3343	
POLO (86)	0.8	25	09/75 – 09/81	3483	
POLO (86)	0.9	29	09/75 – 09/81	3327	
POLO (86)	0.9	29	09/75 – 09/81	3343	
POLO (86)	0.9	29	09/75 – 09/81	3483	
POLO (86)	1.1	37	03/75 – 09/81	3327	
POLO (86)	1.1	37	03/75 – 09/81	3343	
POLO (86)	1.1	37	03/75 – 09/81	3483	
POLO (86)	1.1	44	03/75 – 09/81	3327	
POLO (86)	1.1	44	03/75 – 09/81	3343	
POLO (86)	1.1	44	03/75 – 09/81	3483	
POLO (86)	1.3	44	12/76 – 09/81	3327	
POLO (86)	1.3	44	12/76 – 09/81	3343	
POLO (86)	1.3	44	12/76 – 09/81	3483	
POLO (86C, 80)	0.9	29	10/81 – 12/81	3327	
POLO (86C, 80)	0.9	29	10/81 – 12/81	3343	
POLO (86C, 80)	0.9	29	10/81 – 12/81	3483	
POLO (86C, 80)	1.0	29	10/81 – 10/86	3327	
POLO (86C, 80)	1.0	29	10/81 – 10/86	3343	
POLO (86C, 80)	1.0	29	10/81 – 10/86	3441	
POLO (86C, 80)	1.0	29	10/81 – 10/86	3483	
POLO (86C, 80)	1.0	33	08/85 – 01/92	3441	
POLO (86C, 80)	1.0 CAT	33	08/89 – 09/94	3441	
POLO (86C, 80)	1.1	37	10/81 – 09/89	3327	
POLO (86C, 80)	1.1	37	10/81 – 09/89	3343	
POLO (86C, 80)	1.1	37	10/81 – 09/89	3441	
POLO (86C, 80)	1.1	37	10/81 – 09/89	3483	
POLO (86C, 80)	1.3	37	08/83 – 07/85	3327	
POLO (86C, 80)	1.3	37	08/83 – 07/85	3343	
POLO (86C, 80)	1.3	37	08/83 – 07/85	3441	
POLO (86C, 80)	1.3	37	08/83 – 07/85	3483	
POLO (86C, 80)	1.3	40	08/83 – 07/88	3327	
POLO (86C, 80)	1.3	40	08/83 – 07/88	3343	
POLO (86C, 80)	1.3	40	08/83 – 07/88	3441	
POLO (86C, 80)	1.3	40	08/83 – 07/88	3483	
POLO (86C, 80)	1.3	43	08/82 – 07/88	3327	
POLO (86C, 80)	1.3	43	08/82 – 07/88	3343	
POLO (86C, 80)	1.3	43	08/82 – 07/88	3483	
POLO (86C, 80)	1.3	44	10/81 – 07/83	3327	
POLO (86C, 80)	1.3	44	10/81 – 07/83	3343	
POLO (86C, 80)	1.3	44	10/81 – 07/83	3483	
POLO (86C, 80)	1.3	55	09/82 – 09/89	3327	
POLO (86C, 80)	1.3	55	09/82 – 09/89	3343	
POLO (86C, 80)	1.3	55	09/82 – 09/89	3441	
POLO (86C, 80)	1.3	55	09/82 – 09/89	3483	
POLO (86C, 80)	1.3 CAT	40	07/87 – 09/94	3441	
POLO (86C, 80)	1.3 CAT	55	10/89 – 03/91	3441	
POLO (86C, 80)	1.3 D	33	08/86 – 07/90	3441	
POLO (9N_)	1.2	40	01/02 – 05/07	3566	
POLO (9N_)	1.2	40	01/02 – 05/07	3782	
POLO (9N_)	1.2	40	01/02 – 05/07	3782/1	
POLO (9N_)	1.2	44	05/07 – 11/09	3782	3529/1
POLO (9N_)	1.2	44	05/07 – 11/09	3782/1	
POLO (9N_)	1.2 12V	47	10/01 – 07/07	3782	3529/1
POLO (9N_)	1.2 12V	47	10/01 – 07/07	3782/1	4152

MAKE & MODEL		KW	YEAR		
VW					
POLO (9N_)	1.2 12V	51	05/07 – 11/09	3782	3529/1
POLO (9N_)	1.2 12V	51	05/07 – 11/09	3782/1	4152
POLO (9N_)	1.4	63	06/05 – 11/09	3782	3529/1
POLO (9N_)	1.4	63	08/02 – 11/09	3782/1	4152
POLO (9N_)	1.4 16V	55	10/01 – 05/08	3782	3529/1
POLO (9N_)	1.4 16V	55	10/01 – 05/08	3782/1	4152
POLO (9N_)	1.4 16V	59	05/06 – 11/09	3782	3529/1
POLO (9N_)	1.4 16V	59	05/06 – 11/09	3782/1	4152
POLO (9N_)	1.4 16V	74	10/01 – 05/08	3782	3529/1
POLO (9N_)	1.4 16V	74	10/01 – 05/08	3782/1	4152
POLO (9N_)	1.4 FSI	63	02/02 – 07/06	3782	3529/1
POLO (9N_)	1.4 FSI	63	02/02 – 07/06	3782/1	4152
POLO (9N_)	1.4 TDI	51	04/05 – 11/09	3782	3529/1
POLO (9N_)	1.4 TDI	51	04/05 – 11/09	3782/1	4152
POLO (9N_)	1.4 TDI	55	10/01 – 06/05	3782	3529/1
POLO (9N_)	1.4 TDI	55	10/01 – 06/05	3782/1	4152
POLO (9N_)	1.4 TDI	59	04/05 – 11/09	3782	3529/1
POLO (9N_)	1.4 TDI	59	04/05 – 11/09	3782/1	4152
POLO (9N_)	1.6	74	08/02 – 05/05	3782	3529/1
POLO (9N_)	1.6	74	08/02 – 05/05	3782/1	4152
POLO (9N_)	1.6 16V	77	05/06 – 11/09	3782	3529/1
POLO (9N_)	1.6 16V	77	05/06 – 11/09	3782/1	4152
POLO (9N_)	1.6 Flex	74	06/08 – 04/09	3782	3529/1
POLO (9N_)	1.6 Flex	74	06/08 – 04/09	3782/1	4152
POLO (9N_)	1.8 GTI	110	09/05 – 11/09	4138	3529/1
POLO (9N_)	1.8 GTI	110	09/05 – 11/09		4152
POLO (9N_)	1.8 GTi Cup Edition	132	05/06 – 11/09	3590/1	3529/1
POLO (9N_)	1.8 GTi Cup Edition	132	05/06 – 11/09		4152
POLO (9N_)	1.9 SDI	47	10/01 – 11/09	3782	3529/1
POLO (9N_)	1.9 SDI	47	10/01 – 11/09	3782/1	4152
POLO (9N_)	1.9 TDI	74	10/01 – 11/09	3782	3529/1
POLO (9N_)	1.9 TDI	74	10/01 – 11/09	3782/1	4152
POLO (9N_)	1.9 TDI	96	11/03 – 11/09	4138	3529/1
POLO (9N_)	1.9 TDI	96	11/03 – 11/09		4152
POLO Box (6NF)	1.0	33	10/94 – 12/99	3566	
POLO Box (6NF)	1.4	44	05/98 – 12/99	3566	
POLO Box (6NF)	1.7 SDI	44	08/97 – 12/99	3566	
POLO Box (6NF)	1.9 D	47	10/94 – 12/99	3566	
POLO Box (6NF)	1.9 SDI	47	07/96 – 12/99	3566	
POLO Box (86CF)	1.0	33	08/92 – 07/94	3566	
POLO Box (86CF)	1.3	40	08/92 – 07/94	3566	
POLO Box (86CF)	1.4 D	35	08/92 – 07/94	3566	
POLO CLASSIC (6KV2)	1.4	62	05/96 – 07/02	3538	3529/1
POLO CLASSIC (6KV2)	1.4	62	05/96 – 07/02	3637	3529
POLO CLASSIC (6KV2)	1.8 Hybrid	74	05/96 – 09/01	3538	3529
POLO CLASSIC (6KV2)	1.8 Hybrid	74	05/96 – 09/01	3637	3529/1
POLO CLASSIC (6KV2)	1.9 SDI	48	06/96 – 09/01	3538	3529
POLO CLASSIC (6KV2)	1.9 SDI	48	06/96 – 09/01	3637	3529/1
POLO CLASSIC (6KV2)	1.9 TDI	67	01/97 – 08/99	3637	3529/1
POLO CLASSIC (6KV2)	1.9 TDI	67	01/97 – 08/99		3529
POLO CLASSIC (6KV2)	100 1.6	74	12/95 – 09/01	3637	3529/1
POLO CLASSIC (6KV2)	100 1.6	74	12/95 – 09/01		3529
POLO CLASSIC (6KV2)	110 1.9 TDI	81	06/98 – 01/02	3637	3529/1
POLO CLASSIC (6KV2)	110 1.9 TDI	81	06/98 – 01/02		3529
POLO CLASSIC (6KV2)	54 1.4	40	01/98 – 08/99	3538	3529
POLO CLASSIC (6KV2)	54 1.4	40	01/98 – 08/99	3637	3529/1
POLO CLASSIC (6KV2)	57 1.7 SDI	42	07/97 – 09/01	3538	3529
POLO CLASSIC (6KV2)	57 1.7 SDI	42	07/97 – 09/01	3637	3529/1
POLO CLASSIC (6KV2)	60 1.4	44	12/95 – 09/01	3538	3529
POLO CLASSIC (6KV2)	60 1.4	44	12/95 – 09/01	3637	3529/1
POLO CLASSIC (6KV2)	64 1,9 D	47	01/96 – 10/96	3538	3529
POLO CLASSIC (6KV2)	64 1,9 D	47	01/96 – 10/96	3637	3529/1
POLO CLASSIC (6KV2)	64 1.9 SDI	47	12/95 – 08/99	3538	3529
POLO CLASSIC (6KV2)	64 1.9 SDI	47	12/95 – 08/99	3637	3529/1
POLO CLASSIC (6KV2)	68 1.9 SDI	50	08/99 – 01/02	3538	3529
POLO CLASSIC (6KV2)	68 1.9 SDI	50	08/99 – 01/02	3637	3529/1
POLO CLASSIC (6KV2)	75 1.4 16V	55	10/99 – 09/01	3538	3529
POLO CLASSIC (6KV2)	75 1.4 16V	55	10/99 – 09/01	3637	3529/1
POLO CLASSIC (6KV2)	75 1.6	55	11/95 – 09/01	3538	3529
POLO CLASSIC (6KV2)	75 1.6	55	11/95 – 09/01	3637	3529/1
POLO CLASSIC (6KV2)	90 1.8	66	01/97 – 09/01	3637	3529/1
POLO CLASSIC (6KV2)	90 1.8	66	01/97 – 09/01		3529
POLO CLASSIC (6KV2)	90 1.9 TDI	66	09/96 – 09/01	3637	3529/1
POLO CLASSIC (6KV2)	90 1.9 TDI	66	09/96 – 09/01		3529
POLO CLASSIC (86C, 80)	1.0	29	01/85 – 10/86	3327	
POLO CLASSIC (86C, 80)	1.0	29	01/85 – 10/86	3343	

MAKE & MODEL   		KW	YEAR		
VW					
POLO CLASSIC (86C, 80)	1.0	29	01/85 – 10/86	3441	
POLO CLASSIC (86C, 80)	1.0	29	01/85 – 10/86	3483	
POLO CLASSIC (86C, 80)	1.0	33	01/85 – 09/94	3343	
POLO CLASSIC (86C, 80)	1.0	33	01/85 – 09/94	3441	
POLO CLASSIC (86C, 80)	1.0	33	01/85 – 09/94	3483	
POLO CLASSIC (86C, 80)	1.0	33	01/85 – 09/94	3327	
POLO CLASSIC (86C, 80)	1.3	40	01/85 – 07/87	3327	
POLO CLASSIC (86C, 80)	1.3	40	01/85 – 07/87	3343	
POLO CLASSIC (86C, 80)	1.3	40	01/85 – 07/87	3441	
POLO CLASSIC (86C, 80)	1.3	40	01/85 – 07/87	3483	
POLO CLASSIC (86C, 80)	1.3 CAT	40	07/87 – 09/94	3441	
POLO CLASSIC (86C, 80)	1.3 D	33	08/86 – 12/88	3441	
POLO Coupe (86C, 80)	1.3 G40	83	08.1990 - 09.1994	3486/1	
POLO Coupe (86C, 80)	1.3 G40	85	01.1987 - 08.1990	3486/1	
POLO Coupe (86C, 80)	1.0	29	05/82 – 10/86	3327	
POLO Coupe (86C, 80)	1.0	29	05/82 – 10/86	3343	
POLO Coupe (86C, 80)	1.0	29	05/82 – 10/86	3441	
POLO Coupe (86C, 80)	1.0	29	05/82 – 10/86	3483	
POLO Coupe (86C, 80)	1.0	33	08/85 – 01/92	3441	
POLO Coupe (86C, 80)	1.0 CAT	33	08/89 – 09/94	3441	
POLO Coupe (86C, 80)	1.1	37	10/81 – 07/83	3327	
POLO Coupe (86C, 80)	1.1	37	10/81 – 07/83	3343	
POLO Coupe (86C, 80)	1.1	37	10/81 – 07/83	3483	
POLO Coupe (86C, 80)	1.3	40	08/83 – 06/87	3327	
POLO Coupe (86C, 80)	1.3	40	08/83 – 06/87	3343	
POLO Coupe (86C, 80)	1.3	40	08/83 – 06/87	3441	
POLO Coupe (86C, 80)	1.3	40	08/83 – 06/87	3483	
POLO Coupe (86C, 80)	1.3	44	10/81 – 07/83	3327	
POLO Coupe (86C, 80)	1.3	44	10/81 – 07/83	3343	
POLO Coupe (86C, 80)	1.3	44	10/81 – 07/83	3483	
POLO Coupe (86C, 80)	1.3	55	09/82 – 09/89	3327	
POLO Coupe (86C, 80)	1.3	55	09/82 – 09/89	3343	
POLO Coupe (86C, 80)	1.3	55	09/82 – 09/89	3441	
POLO Coupe (86C, 80)	1.3	55	09/82 – 09/89	3483	
POLO Coupe (86C, 80)	1.3 CAT	40	07/87 – 08/94	3441	
POLO Coupe (86C, 80)	1.3 CAT	55	10/89 – 09/94	3441	
POLO Coupe (86C, 80)	1.3 D	33	08/86 – 08/90	3441	
POLO Coupe (86C, 80)	1.3 G40	83	08/90 – 09/94	3486	
POLO Coupe (86C, 80)	1.3 G40	85	01/87 – 08/90	3486	
POLO Coupe (86C, 80)	1.4 D	35	08/90 – 09/94	3441	
POLO Saloon (60_, 61_)	1.6	63	11/10 -	3782/1	3529/1
POLO Saloon (60_, 61_)	1.6	63	11/10 -	4200	
POLO Saloon (60_, 61_)	1.6	77	05/10 -	3782/1	3529/1
POLO Saloon (60_, 61_)	1.6	77	05/10 -	4200	
POLO Saloon (9A4)	1.4	55	07/03 -	3782	
POLO Saloon (9A4)	1.4	55	07/03 -	3782/1	
POLO Saloon (9A4)	1.4	55	07/03 -	4138	3529/1
POLO Saloon (9A4)	1.4	74	11/03 -	3782	3529/1
POLO Saloon (9A4)	1.4	74	11/03 -	3782/1	
POLO Saloon (9A4)	1.4	74	11/03 -	4138	
POLO Saloon (9A4)	1.4 TDI	55	07/03 -	3782	3529/1
POLO Saloon (9A4)	1.4 TDI	55	07/03 -	3782/1	
POLO Saloon (9A4)	1.4 TDI	55	07/03 -	4138	
POLO Saloon (9A4)	1.6	74	09/02 -	3782	3529/1
POLO Saloon (9A4)	1.6	74	09/02 -	3782/1	
POLO Saloon (9A4)	1.6	74	09/02 -	4138	
POLO Saloon (9A4)	1.9 SDI	47	09/02 -	3782	3529/1
POLO Saloon (9A4)	1.9 SDI	47	09/02 -	3782/1	
POLO Saloon (9A4)	1.9 SDI	47	09/02 -	4138	
POLO Saloon (9A4)	1.9 TDi	74	09/02 -	3782	3529/1
POLO Saloon (9A4)	1.9 TDi	74	09/02 -	3782/1	
POLO Saloon (9A4)	1.9 TDi	74	09/02 -	4138	
POLO V (6R, 6C)	1.8 GTI 230	169	04/16 -		4241
POLO V (6R, 6C)	1.8 GTI 230	169	04/16 -	4228	
POLO Variant (6KV5)	1.4	40	12/98 – 09/01	3538	3529
POLO Variant (6KV5)	1.4	40	12/98 – 09/01	3637	3529/1
POLO Variant (6KV5)	1.4	44	05/97 – 09/01	3538	3529
POLO Variant (6KV5)	1.4	44	05/97 – 09/01	3637	3529/1
POLO Variant (6KV5)	1.4 16V	55	10/99 – 09/01	3538	3529
POLO Variant (6KV5)	1.4 16V	55	10/99 – 09/01	3637	3529/1
POLO Variant (6KV5)	1.6	55	05/97 – 09/01	3538	3529
POLO Variant (6KV5)	1.6	55	05/97 – 09/01	3637	3529/1
POLO Variant (6KV5)	1.6	74	05/97 – 09/01	3538	3529
POLO Variant (6KV5)	1.6	74	05/97 – 09/01	3637	3529/1
POLO Variant (6KV5)	1.7 SDI	42	08/97 – 09/01	3538	3529
POLO Variant (6KV5)	1.7 SDI	42	08/97 – 09/01	3637	3529/1

MAKE & MODEL		KW	YEAR		
VW					
POLO Variant (6KV5)	1.8	66	05/97 – 09/01	3538	3529
POLO Variant (6KV5)	1.8	66	05/97 – 09/01	3637	3529/1
POLO Variant (6KV5)	1.9 SDI	47	06/97 – 09/01	3538	3529
POLO Variant (6KV5)	1.9 SDI	47	06/97 – 09/01	3637	3529/1
POLO Variant (6KV5)	1.9 SDI	50	08/99 – 09/01	3538	3529
POLO Variant (6KV5)	1.9 SDI	50	08/99 – 09/01	3637	3529/1
POLO Variant (6KV5)	1.9 TDI	66	05/97 – 09/01	3538	3529
POLO Variant (6KV5)	1.9 TDI	66	05/97 – 09/01	3637	3529/1
POLO Variant (6KV5)	1.9 TDI	81	06/98 – 09/01	3538	3529
POLO Variant (6KV5)	1.9 TDI	81	06/98 – 09/01	3637	3529/1
SANTANA (32B)	1.3	44	08.1981 - 07.1983	3444/1	
SANTANA (32B)	1.6	55	08.1981 - 12.1984	3444/1	
SANTANA (32B)	1.6	55	08.1981 - 12.1984	3444/1	
SANTANA (32B)	1.6	63	08.1981 - 12.1982	3444/1	
SANTANA (32B)	1.6 D	40	08.1981 - 12.1984	3444/1	
SANTANA (32B)	1.6 TD	51	12.1981 - 12.1984	3444/1	
SANTANA (32B)	1.8	66	01.1983 - 12.1984	3444/1	
SANTANA (32B)	1.9	85	08.1981 - 07.1983	3486/1	
SANTANA (32B)	2.0	85	08.1983 - 12.1984	3486/1	
SANTANA (32B)	1.3	44	08/81 – 07/83	3327	
SANTANA (32B)	1.3	44	08/81 – 07/83	3343	
SANTANA (32B)	1.3	44	08/81 – 07/83	3444	
SANTANA (32B)	1.3	44	08/81 – 07/83	3483	
SANTANA (32B)	1.3	44	08/81 – 07/83	3585	
SANTANA (32B)	1.6	55	08/81 – 12/84	3444	
SANTANA (32B)	1.6	55	08/81 – 12/84	3585	
SANTANA (32B)	1.6	63	08/81 – 12/82	3444	
SANTANA (32B)	1.6	63	08/81 – 12/82	3585	
SANTANA (32B)	1.6 D	40	08/81 – 12/84	3327	
SANTANA (32B)	1.6 D	40	08/81 – 12/84	3343	
SANTANA (32B)	1.6 D	40	08/81 – 12/84	3444	
SANTANA (32B)	1.6 D	40	08/81 – 12/84	3483	
SANTANA (32B)	1.6 D	40	08/81 – 12/84	3585	
SANTANA (32B)	1.6 TD	51	12/81 – 12/84	3444	
SANTANA (32B)	1.6 TD	51	12/81 – 12/84	3585	
SANTANA (32B)	1.8	66	01/83 – 12/84	3444	
SANTANA (32B)	1.8	66	01/83 – 12/84	3585	
SANTANA (32B)	1.9	85	08/81 – 07/83	3486	
SANTANA (32B)	2.0	85	08/83 – 12/84	3486	
SANTANA (32B)	2.1	85	08/82 – 12/83	3486	
SCIROCCO (137, 138)	1.4 TSI	90	08/08 -	3904	3529/1
SCIROCCO (137, 138)	1.4 TSI	90	08/08 -		3905
SCIROCCO (137, 138)	1.4 TSI	92	11/13 -	3904	3529/1
SCIROCCO (137, 138)	1.4 TSI	110	07/15 -	3904	3529/1
SCIROCCO (137, 138)	1.4 TSI	110	07/15 -		4135
SCIROCCO (137, 138)	1.4 TSI	118	05/08 -	3904	3905
SCIROCCO (137, 138)	2.0 R	188	11/09 -	3904	
SCIROCCO (137, 138)	2.0 R	206	05/14 -		3905
SCIROCCO (137, 138)	2.0 R	206	05/14 -		4135
SCIROCCO (137, 138)	2.0 TDI	100	11/10 -	3904	3529/1
SCIROCCO (137, 138)	2.0 TDI	103	08/08 -	3904	3905
SCIROCCO (137, 138)	2.0 TDI	103	08/08 -		3529/1
SCIROCCO (137, 138)	2.0 TDI	110	11/13 -	3904	3529/1
SCIROCCO (137, 138)	2.0 TDI	110	11/13 -		3905
SCIROCCO (137, 138)	2.0 TDI	125	05/09 -	3904	3905
SCIROCCO (137, 138)	2.0 TDI	125	05/09 -		4135
SCIROCCO (137, 138)	2.0 TDI	130	01/13 -	3904	3905
SCIROCCO (137, 138)	2.0 TDI	130	01/13 -		4135
SCIROCCO (137, 138)	2.0 TDI	135	05/14 -	3904	3529/1
SCIROCCO (137, 138)	2.0 TDI	135	05/14 -		3905
SCIROCCO (137, 138)	2.0 TDI	135	05/14 -		4135
SCIROCCO (137, 138)	2.0 TSI	132	11/13 -	3904	3905
SCIROCCO (137, 138)	2.0 TSI	132	11/13 -		4135
SCIROCCO (137, 138)	2.0 TSI	147	05/08 – 11/09	3904	3905
SCIROCCO (137, 138)	2.0 TSI	147	05/08 – 11/09		4135
SCIROCCO (137, 138)	2.0 TSI	155	11/09 -	3904	3905
SCIROCCO (137, 138)	2.0 TSI	155	11/09 -		4135
SCIROCCO (137, 138)	2.0 TSI	162	11/13 -	3904	4135
SCIROCCO (53)	1.1	37	04.1974 - 07.1979	3444/1	
SCIROCCO (53)	1.3	44	08.1979 - 07.1980	3444/1	
SCIROCCO (53)	1.5	51	02.1974 - 12.1975	3444/1	
SCIROCCO (53)	1.5	51	08.1977 - 07.1980	3444/1	
SCIROCCO (53)	1.5	55	02.1974 - 08.1975	3444/1	
SCIROCCO (53)	1.5	63	02.1974 - 12.1977	3444/1	
SCIROCCO (53)	1.6	55	08.1975 - 07.1979	3444/1	
SCIROCCO (53)	1.6	63	08.1975 - 07.1980	3444/1	

MAKE & MODEL		KW	YEAR		
VW					
SCIROCCO (53)	1.6	81	06.1976 - 07.1980	3444/1	
SCIROCCO (53)	1.1	37	04/74 – 07/79	3444	
SCIROCCO (53)	1.1	37	04/74 – 07/79	3585	
SCIROCCO (53)	1.3	44	08/79 – 07/80	3444	
SCIROCCO (53)	1.3	44	08/79 – 07/80	3585	
SCIROCCO (53)	1.5	51	02/74 – 12/75	3444	
SCIROCCO (53)	1.5	51	02/74 – 12/75	3585	
SCIROCCO (53)	1.5	51	08/77 – 07/80	3444	
SCIROCCO (53)	1.5	51	08/77 – 07/80	3585	
SCIROCCO (53)	1.5	55	02/74 – 08/75	3444	
SCIROCCO (53)	1.5	55	02/74 – 08/75	3585	
SCIROCCO (53)	1.5	63	02/74 – 12/77	3444	
SCIROCCO (53)	1.5	63	02/74 – 12/77	3585	
SCIROCCO (53)	1.6	51	08/75 – 07/77	3444	
SCIROCCO (53)	1.6	51	08/75 – 07/77	3585	
SCIROCCO (53)	1.6	55	08/75 – 07/79	3444	
SCIROCCO (53)	1.6	55	08/75 – 07/79	3585	
SCIROCCO (53)	1.6	63	08/75 – 07/80	3444	
SCIROCCO (53)	1.6	63	08/75 – 07/80	3585	
SCIROCCO (53)	1.6	81	06/76 – 07/80	3444	
SCIROCCO (53)	1.6	81	06/76 – 07/80	3585	
SCIROCCO (53B)	1.3	40	08.1983 - 07.1984	3444/1	
SCIROCCO (53B)	1.3	44	08.1980 - 12.1983	3444/1	
SCIROCCO (53B)	1.5	51	08.1980 - 12.1983	3444/1	
SCIROCCO (53B)	1.6	53	04.1986 - 07.1990	3444/1	
SCIROCCO (53B)	1.6	55	01.1983 - 12.1989	3444/1	
SCIROCCO (53B)	1.6	63	08.1980 - 04.1984	3444/1	
SCIROCCO (53B)	1.6	81	08.1980 - 07.1982	3486/1	
SCIROCCO (53B)	1.8	66	08.1983 - 07.1992	3486/1	
SCIROCCO (53B)	1.8	70	11.1985 - 07.1992	3486/1	
SCIROCCO (53B)	1.8	82	08.1982 - 12.1989	3486/1	
SCIROCCO (53B)	1.3	44	08/80 – 12/83	3444	
SCIROCCO (53B)	1.3	44	08/80 – 12/83	3585	
SCIROCCO (53B)	1.5	51	08/80 – 12/83	3444	
SCIROCCO (53B)	1.5	51	08/80 – 12/83	3585	
SCIROCCO (53B)	1.6	51	08/83 – 07/84	3531	3529
SCIROCCO (53B)	1.6	53	04/86 – 07/90	3444	
SCIROCCO (53B)	1.6	53	04/86 – 07/90	3585	
SCIROCCO (53B)	1.6	55	01/83 – 12/89	3444	
SCIROCCO (53B)	1.6	55	01/83 – 12/89	3585	
SCIROCCO (53B)	1.6	63	08/80 – 04/84	3444	
SCIROCCO (53B)	1.6	63	08/80 – 04/84	3585	
SCIROCCO (53B)	1.6	81	08/80 – 07/82	3486	
SCIROCCO (53B)	1.8	66	08/83 – 07/92	3486	
SCIROCCO (53B)	1.8	70	11/85 – 07/92	3486	
SCIROCCO (53B)	1.8	82	08/82 – 12/89	3486	
SCIROCCO (53B)	1.8 16V	95	03/86 – 07/92	3531	3529
SCIROCCO (53B)	1.8 16V	102	10/85 – 07/89	3531	3529
SHARAN (7M8, 7M9, 7M6)	1.8 T 20V	110	09/97 – 03/10	3506	3529/1
SHARAN (7M8, 7M9, 7M6)	1.8 T 20V	110	09/97 – 03/10	4095	
SHARAN (7M8, 7M9, 7M6)	1.9 TDI	66	09/95 – 03/10	3506	3529/1
SHARAN (7M8, 7M9, 7M6)	1.9 TDI	81	09/96 – 04/00	3506	3529/1
SHARAN (7M8, 7M9, 7M6)	1.9 TDI	96	11/02 – 03/10	4095	
SHARAN (7M8, 7M9, 7M6)	1.9 TDI	110	06/05 – 03/10	4095	
SHARAN (7M8, 7M9, 7M6)	1.9 TDI 4motion	85	04/00 – 03/10	3506	3529/1
SHARAN (7M8, 7M9, 7M6)	1.9 TDI 4motion	85	04/00 – 03/10	4095	
SHARAN (7M8, 7M9, 7M6)	2.0	85	09/95 – 03/10	3506	3529/1
SHARAN (7M8, 7M9, 7M6)	2.0 16V	110	09/95 – 02/00	3506	3529/1
SHARAN (7M8, 7M9, 7M6)	2.0 LPG	85	04/06 – 03/10	4095	
SHARAN (7M8, 7M9, 7M6)	2.0 TDI	100	11/05 – 03/10	4095	
SHARAN (7M8, 7M9, 7M6)	2.0 TDI	103	11/05 – 03/10	4095	
SHARAN (7M8, 7M9, 7M6)	2.8 V6 24V	150	04/00 – 03/10	4095	
SHARAN (7M8, 7M9, 7M6)	2.8 VR6	128	09/95 – 04/00	3506	3529/1
SHARAN (7M8, 7M9, 7M6)	2.8 VR6 Syncro	128	11/96 – 04/00	3506	3529/1
SHARAN (7N1, 7N2)	1.8 TSI	118	11/11 -		3905
TARO	1.8	61	04/89 – 09/94	3414	
TARO	2.2	69	06/89 – 07/94	3414	
TARO	2.2 4x4	69	06/89 – 07/94	3414	
TARO	2.4 D	58	07/94 – 03/97	3414	
TARO	2.4 D	59	09/91 – 07/94	3414	
TARO	2.4 D	61	06/89 – 03/97	3414	
TARO	2.4 D 4x4	58	07/94 – 03/97	3560	
TARO	2.4 D 4x4	61	04/89 – 03/97	3560	
TARO	2.4 i 4x4	84	06/89 – 03/97	3560	
TIGUAN II (AD1)	1.4 TSI (CZCA)	92	01/16 -	4228	
TIGUAN II (AD1)	1.4 TSI (CZDA)	110	05/16 -	4228	

MAKE & MODEL		KW	YEAR		
VW					
TIGUAN II (AD1)	1.4 TSI (CZEA)	110	05/16 -	4228	
TIGUAN II (AD1)	1.6 TDI (DGDB)	85	05/16 -	4228	
TIGUAN II (AD1)	2.0 TDI (DFGC)	85	05/16 -	4228	
TIGUAN II (AD1)	2.0 TDI (CUAA)	176	05/16 -	4228	
TIGUAN II (AD1)	2.0 TDI (DFGA)	110	01/16 -	4228	
TIGUAN II (AD1)	2.0 TDI (DFHA)	140	04/16 -	4228	
TIGUAN II (AD1)	2.0 TSI (CHHB)	162	06/16 -	4228	
TIGUAN II (AD1)	2.0 TSI (CZPA)	132	01/16 -	4228	
TOUAREG (7LA, 7L6, 7L7)	2.5 R5 TDI	120	08/03 – 05/10	3945	
TOUAREG (7LA, 7L6, 7L7)	2.5 R5 TDI	120	08/03 – 05/10	4075	
TOUAREG (7LA, 7L6, 7L7)	2.5 R5 TDI	128	01/03 – 05/10	3945	
TOUAREG (7LA, 7L6, 7L7)	2.5 R5 TDI	128	01/03 – 05/10	4075	
TOUAREG (7LA, 7L6, 7L7)	3.0 TDI	155	04/06 – 05/10	3945	4076
TOUAREG (7LA, 7L6, 7L7)	3.0 V6 TDI	165	11/04 – 05/10	4075	4076
TOUAREG (7LA, 7L6, 7L7)	3.0 V6 TDI	165	11/04 – 05/10	3945	
TOUAREG (7LA, 7L6, 7L7)	3.0 V6 TDI	176	11/07 – 05/10	4075	4076
TOUAREG (7LA, 7L6, 7L7)	3.0 V6 TDI	176	11/07 – 05/10	3945	
TOUAREG (7LA, 7L6, 7L7)	3.2 V6	162	10/02 – 11/06	4075	4076
TOUAREG (7LA, 7L6, 7L7)	3.2 V6	162	10/02 – 11/06	3945	
TOUAREG (7LA, 7L6, 7L7)	3.2 V6	177	11/04 – 11/06	4075	4076
TOUAREG (7LA, 7L6, 7L7)	3.6 V6 FSI	206	10/05 – 05/10	3945	4076
TOUAREG (7LA, 7L6, 7L7)	4.2 V8	228	12/02 – 11/06	4075	4076
TOUAREG (7LA, 7L6, 7L7)	4.2 V8	228	12/02 – 11/06	3945	
TOUAREG (7LA, 7L6, 7L7)	4.2 V8 FSI	257	06/06 – 05/10	4075	4076
TOUAREG (7LA, 7L6, 7L7)	5.0 R50 TDI	257	08/07 – 05/10	4075	4076
TOUAREG (7LA, 7L6, 7L7)	5.0 V10 TDI	230	10/02 – 05/10	4075	4076
TOUAREG (7LA, 7L6, 7L7)	6.0 W12	331	08/04 – 05/10	4075	4076
TOUAREG (7P5)	3.0 V6 TDI	150	01/10 -	3945	
TOUAREG (7P5)	3.0 V6 TDI	165	06/10 -	3945	
TOUAREG (7P5)	3.0 V6 TDI	176	01/10 -	3945	
TOUAREG (7P5)	3.0 V6 TDI	180	05/11 -	3945	
TOUAREG (7P5)	3.0 V6 TDI	193	09/14 -	3945	
TOUAREG (7P5)	3.0 V6 TSI	213	08/10 -	3945	
TOUAREG (7P5)	3.0 V6 TSI Hybrid	245	04/10 -	3945	
TOUAREG (7P5)	3.6 V6 FSI	183	08/10 -	3945	
TOUAREG (7P5)	3.6 V6 FSI	206	04/10 -	3945	
TOUAREG (7P5)	4.2 V8 FSI	265	01/11 -	3945	
TOUAREG (7P5)	4.2 V8 TDI	250	01/10 -	3945	
TOUAREG (7P5, 7P6)	3.0 V6 TDI	150	01.2010 - 03.2018		4310
TOUAREG (7P5, 7P6)	3.0 V6 TDI	165	06.2010 - 03.2018		4310
TOUAREG (7P5, 7P6)	3.0 V6 TDI	176	01.2010 - 03.2018		4310
TOUAREG (7P5, 7P6)	3.0 V6 TDI	180	05.2011 - 03.2018		4310
TOUAREG (7P5, 7P6)	3.0 V6 TDI	193	09.2014 - 03.2018		4310
TOUAREG (7P5, 7P6)	3.0 V6 TSI Hybrid	245	04.2010 - 03.2018		4310
TOUAREG (7P5, 7P6)	3.6 V6 FSI	183	08.2010 - 03.2018		4310
TOUAREG (7P5, 7P6)	3.6 V6 FSI	206	04.2010 - 03.2018		4310
TOUAREG (7P5, 7P6)	4.2 V8 FSI	265	01.2011 - 03.2018		4310
TOUAREG (7P5, 7P6)	4.2 V8 TDI	250	01.2010 - 03.2018		4310
TOURAN III (5T1)	1.2 TSI (CYVB)	81	05/16 -	4228	4241
TOURAN III (5T1)	1.4 TSI (CZDA)	110	05/16 -	4228	4241
TOURAN III (5T1)	1.6 TDI (CRKB)	81	05/15 – 05/16	4228	4241
TOURAN III (5T1)	1.6 TDI (DGDA)	85	05/16 -	4228	4241
TOURAN III (5T1)	1.8 TSI (CJSA)	132	11/15 -	4228	4241
TOURAN III (5T1)	2.0 TDI (CRVA)	81	11/15 -	4228	4241
TOURAN III (5T1)	2.0 TDI (CYKB)	81	11/15 -	4228	4241
TOURAN III (5T1)	2.0 TDI (DFEA)	110	05/15 -	4228	4241
TOURAN III (5T1)	2.0 TDI (DFEB)	81	11/15 -	4228	4241
TOURAN III (5T1)	2.0 TDI (DFGA)	110	05/15 -	4228	4241
TOURAN III (5T1)	2.0 TDI (DFGB)	81	11/15 -	4228	4241
TOURAN III (5T1)	2.0 TDI (DFHA)	140	11/15 -	4228	4241
TOURAN (1T1, 1T2)	1.4 FSI	125	11/06 – 05/10	3904	3905
TOURAN (1T1, 1T2)	1.4 TSI	103	02/06 – 05/10	3904	3905
TOURAN (1T1, 1T2)	1.4 TSI	103	02/06 – 05/10		4135
TOURAN (1T1, 1T2)	1.4 TSI EcoFuel	110	05/09 – 05/10	3904	3905
TOURAN (1T1, 1T2)	1.4 TSI EcoFuel	110	05/09 – 05/10		4135
TOURAN (1T1, 1T2)	1.6	75	07/03 – 05/10	3904	3905
TOURAN (1T1, 1T2)	1.6	75	07/03 – 05/10		4135
TOURAN (1T1, 1T2)	1.6 FSI	85	02/03 – 01/07	3904	3905
TOURAN (1T1, 1T2)	1.9 TDI	66	11/04 – 05/10	3904	3905
TOURAN (1T1, 1T2)	1.9 TDI	66	11/04 – 05/10		4135
TOURAN (1T1, 1T2)	1.9 TDI	74	02/03 – 05/04	3904	3905
TOURAN (1T1, 1T2)	1.9 TDI	74	02/03 – 05/04		4135
TOURAN (1T1, 1T2)	1.9 TDI	77	08/03 – 05/10	3904	3905
TOURAN (1T1, 1T2)	1.9 TDI	77	08/03 – 05/10		4135
TOURAN (1T1, 1T2)	2.0 EcoFuel	80	02/06 – 05/09	3904	3905
TOURAN (1T1, 1T2)	2.0 EcoFuel	80	02/06 – 05/09		4135

MAKE & MODEL		KW	YEAR		
VW					
TOURAN (1T1, 1T2)	2.0 FSI	85	10/04 – 05/10	3904	3905
TOURAN (1T1, 1T2)	2.0 FSI	85	10/04 – 05/10		4135
TOURAN (1T1, 1T2)	2.0 FSI	110	10/03 – 01/07	3904	3905
TOURAN (1T1, 1T2)	2.0 FSI	110	10/03 – 01/07		4135
TOURAN (1T1, 1T2)	2.0 TDI	100	02/03 – 05/10	3904	3905
TOURAN (1T1, 1T2)	2.0 TDI	100	02/03 – 05/10		4135
TOURAN (1T1, 1T2)	2.0 TDI	103	12/05 – 05/10	3904	3905
TOURAN (1T1, 1T2)	2.0 TDI	103	12/05 – 05/10		4135
TOURAN (1T1, 1T2)	2.0 TDI	125	12/05 – 05/10	3904	3905
TOURAN (1T1, 1T2)	2.0 TDI	125	12/05 – 05/10		4135
TOURAN (1T1, 1T2)	2.0 TDI 16V	103	08/03 – 05/10	3904	3905
TOURAN (1T1, 1T2)	2.0 TDI 16V	103	08/03 – 05/10		4135
TOURAN (1T3)	1.2 TSI	77	05/10 – 05/15	3904	4135
TOURAN (1T3)	1.4 TSI	103	05/10 – 05/15	3904	4135
TOURAN (1T3)	1.4 TSI	125	05/10 – 05/15	3904	4135
TOURAN (1T3)	1.4 TSI EcoFuel	110	05/10 – 05/15	3904	4135
TOURAN (1T3)	1.6 TDI	66	05/10 – 05/15	3904	4135
TOURAN (1T3)	1.6 TDI	77	05/10 – 05/15	3904	4135
TOURAN (1T3)	2.0 TDI	81	11/10 – 05/15	3904	4135
TOURAN (1T3)	2.0 TDI	103	05/10 – 05/15	3904	4135
TOURAN (1T3)	2.0 TDI	125	05/10 – 01/13	3904	4135
TOURAN (1T3)	2.0 TDI	130	01/13 – 05/15	3904	4135
TRANSPORTER T4	1.8 (PD)	49	12/90 – 07/92		3671
TRANSPORTER T4	2.0 (AAC)	62	07/90 – 04/03		3671
TRANSPORTER T4	2.5 (AAF)	81	11/90 – 04/03		3671
TRANSPORTER T4	2.5 (ACU)	81	11/90 – 04/03		3671
TRANSPORTER T4	2.5 (AEN)	81	11/90 – 04/03		3671
TRANSPORTER T4	2.5 (AET)	85	08/96 – 04/03		3671
TRANSPORTER T4	2.5 (AEU)	81	11/90 – 04/03		3671
TRANSPORTER T4	2.5 (APL)	85	08/96 – 04/03		3671
TRANSPORTER T4	2.5 (AVT)	85	08/96 – 04/03		3671
TRANSPORTER / CARAVELLE VI Minibüs/Otobüs (	SGB, SGG, SGJ, SG 2.0 TDI	66	10.2019 -	4375	
TRANSPORTER / CARAVELLE VI Minibüs/Otobüs (	SGB, SGG, SGJ, SG 2.0 TDI	81	07.2019 -	4375	
TRANSPORTER / CARAVELLE VI Minibüs/Otobüs (	SGB, SGG, SGJ, SG ABT e-Caravelle	83	01.2020 -	4375	
TRANSPORTER / CARAVELLE VI Minibüs/Otobüs (SGB, SGG, SGJ, SG ABT)	e-Caravelle	83	01.2020 -	4375	
TRANSPORTER / CARAVELLE VI Minibüs/Otobüs (SGB, SGG, SGJ, SG)	2.0 TDI	66	10.2019 -	4375	
TRANSPORTER / CARAVELLE VI Minibüs/Otobüs (SGB, SGG, SGJ, SG)	2.0 TDI	81	07.2019 -	4375	
TRANSPORTER II Box	1.6	37	08/70 – 04/79	3350	
TRANSPORTER II Box	1.7	49	08/71 – 12/73	3350	
TRANSPORTER II Box	1.8	50	11/73 – 07/75	3350	
TRANSPORTER II Box	2.0	51	08/75 – 07/79	3350	
TRANSPORTER II Bus	1.6	34	08/67 – 07/70	3350	
TRANSPORTER II Bus	1.6	37	08/70 – 04/79	3350	
TRANSPORTER II Bus	1.7	49	08/71 – 10/73	3350	
TRANSPORTER II Bus	1.8	50	11/73 – 07/75	3350	
TRANSPORTER II Bus	2.0	51	08/75 – 04/79	3350	
TRANSPORTER II Platform/Chassis	1.6	37	08/68 – 07/79	3350	
TRANSPORTER III Box	1.6	37	05/79 – 12/82	3350	
TRANSPORTER III Box	1.6 D	37	01/81 – 07/87	3350	
TRANSPORTER III Box	1.6 TD	51	10/84 – 07/92	3350	
TRANSPORTER III Box	1.6 TD Syncro	51	03/86 – 07/92	3350	
TRANSPORTER III Box	1.9	44	10/82 – 07/92	3350	
TRANSPORTER III Box	1.9	57	10/82 – 07/92	3350	
TRANSPORTER III Box	1.9	61	10/84 - 02/89	3350	
TRANSPORTER III Box	1.9	66	08/83 – 02/89	3350	
TRANSPORTER III Box	1.9 Syncro	57	11/84 – 07/92	3350	
TRANSPORTER III Box	2.0	51	05/79 – 04/86	3350	
TRANSPORTER III Box	2.1	70	08/85 – 07/92	3350	
TRANSPORTER III Box	2.1	82	03/86 – 07/92	3350	
TRANSPORTER III Box	2.1 Syncro	70	08/85 – 07/92	3350	
TRANSPORTER III Box	2.1 Syncro	82	03/86 – 07/92	3350	
TRANSPORTER III Bus	1.6	37	05/79 – 12/82	3350	
TRANSPORTER III Bus	1.6 D	37	01/81 – 07/87	3350	
TRANSPORTER III Bus	1.6 TD	51	08/84 – 07/92	3350	
TRANSPORTER III Bus	1.6 TD Syncro	51	03/86 – 07/92	3350	
TRANSPORTER III Bus	1.9	44	08/82 – 07/92	3350	
TRANSPORTER III Bus	1.9	57	08/82 – 07/92	3350	
TRANSPORTER III Bus	1.9	61	01/83 – 07/85	3350	
TRANSPORTER III Bus	1.9	66	08/83 – 07/85	3350	
TRANSPORTER III Bus	1.9 Syncro	57	02/85 – 07/92	3350	
TRANSPORTER III Bus	2.0	51	05/79 – 12/82	3350	
TRANSPORTER III Bus	2.1	70	08/85 – 07/92	3350	
TRANSPORTER III Bus	2.1	82	08/84 – 07/92	3350	
TRANSPORTER III Bus	2.1 Syncro	70	08/85 – 07/92	3350	
TRANSPORTER III Bus	2.1 Syncro	82	01/86 – 07/92	3350	
TRANSPORTER III Platform/Chassis	1.6 D	37	01/81 – 07/87	3350	

MAKE & MODEL		KW	YEAR		
VW					
TRANSPORTER III Platform/Chassis	1.6 TD	51	10/84 – 07/92	3350	
TRANSPORTER III Platform/Chassis	1.6 TD Syncro	51	03/86 – 07/92	3350	
TRANSPORTER III Platform/Chassis	1.9	44	09/82 – 07/92	3350	
TRANSPORTER III Platform/Chassis	1.9	57	08/82 – 07/92	3350	
TRANSPORTER III Platform/Chassis	1.9	61	10/84 – 02/89	3350	
TRANSPORTER III Platform/Chassis	1.9 Syncro	57	12/84 – 07/92	3350	
TRANSPORTER III Platform/Chassis	2.0	51	05/79 – 04/86	3350	
TRANSPORTER III Platform/Chassis	2.1	70	08/85 – 07/92	3350	
TRANSPORTER III Platform/Chassis	2.1	82	03/86 – 07/92	3350	
TRANSPORTER III Platform/Chassis	2.1 Syncro	70	08/85 – 07/92	3350	
TRANSPORTER III Platform/Chassis	2.1 Syncro	82	03/86 – 07/92	3350	
TRANSPORTER IV Box (70XA)	1.9 D	44	09/90 – 12/95	3553	
TRANSPORTER IV Box (70XA)	1.9 D	44	09/90 – 12/95	3553/1	
TRANSPORTER IV Box (70XA)	1.9 D	44	09/90 – 12/95	3606	
TRANSPORTER IV Box (70XA)	1.9 D	44	09/90 – 12/95	3794	
TRANSPORTER IV Box (70XA)	1.9 D	44	09/90 – 12/95	4020	
TRANSPORTER IV Box (70XA)	1.9 D	45	07/90 – 12/95	3553	
TRANSPORTER IV Box (70XA)	1.9 D	45	07/90 – 12/95	3553/1	
TRANSPORTER IV Box (70XA)	1.9 D	45	07/90 – 12/95	3606	
TRANSPORTER IV Box (70XA)	1.9 D	45	07/90 – 12/95	3794	
TRANSPORTER IV Box (70XA)	1.9 D	45	07/90 – 12/95	4020	
TRANSPORTER IV Box (70XA)	1.9 TD	50	10/92 – 04/03	3553	
TRANSPORTER IV Box (70XA)	1.9 TD	50	10/92 – 04/03	3553/1	
TRANSPORTER IV Box (70XA)	1.9 TD	50	10/92 – 04/03	3606	
TRANSPORTER IV Box (70XA)	1.9 TD	50	10/92 – 04/03	3794	
TRANSPORTER IV Box (70XA)	1.9 TD	50	10/92 – 04/03	4020	
TRANSPORTER IV Box (70XA)	1.9 TD	50	10/92 – 04/03	4095	
TRANSPORTER IV Box (70XA)	2.0	62	07/90 – 04/03	3553	
TRANSPORTER IV Box (70XA)	2.0	62	07/90 – 04/03	3553/1	
TRANSPORTER IV Box (70XA)	2.0	62	07/90 – 04/03	3606	
TRANSPORTER IV Box (70XA)	2.0	62	07/90 – 04/03	3794	
TRANSPORTER IV Box (70XA)	2.0	62	07/90 – 04/03	4020	
TRANSPORTER IV Box (70XA)	2.0	62	07/90 – 04/03	4095	
TRANSPORTER IV Box (70XA)	2.4 D	55	08/97 – 04/03	3553	
TRANSPORTER IV Box (70XA)	2.4 D	55	08/97 – 04/03	3553/1	
TRANSPORTER IV Box (70XA)	2.4 D	55	08/97 – 04/03	3606	
TRANSPORTER IV Box (70XA)	2.4 D	55	08/97 – 04/03	3794	
TRANSPORTER IV Box (70XA)	2.4 D	55	08/97 – 04/03	4020	
TRANSPORTER IV Box (70XA)	2.4 D	55	08/97 – 04/03	4095	
TRANSPORTER IV Box (70XA)	2.4 D	57	07/90 – 04/98	3553	
TRANSPORTER IV Box (70XA)	2.4 D	57	07/90 – 04/98	3553/1	
TRANSPORTER IV Box (70XA)	2.4 D	57	07/90 – 04/98	3606	
TRANSPORTER IV Box (70XA)	2.4 D	57	07/90 – 04/98	3794	
TRANSPORTER IV Box (70XA)	2.4 D	57	07/90 – 04/98	4020	
TRANSPORTER IV Box (70XA)	2.4 D	57	07/90 – 04/98	4095	
TRANSPORTER IV Box (70XA)	2.4 D Syncro	57	10/92 – 09/98	3553	
TRANSPORTER IV Box (70XA)	2.4 D Syncro	57	10/92 – 09/98	3553/1	
TRANSPORTER IV Box (70XA)	2.4 D Syncro	57	10/92 – 09/98	3606	
TRANSPORTER IV Box (70XA)	2.4 D Syncro	57	10/92 – 09/98	3794	
TRANSPORTER IV Box (70XA)	2.4 D Syncro	57	10/92 – 09/98	4020	
TRANSPORTER IV Box (70XA)	2.4 D Syncro	57	10/92 – 09/98	4095	
TRANSPORTER IV Box (70XA)	2.5	81	11/90 – 04/03	3553	
TRANSPORTER IV Box (70XA)	2.5	81	11/90 – 04/03	3553/1	
TRANSPORTER IV Box (70XA)	2.5	81	11/90 – 04/03	3606	
TRANSPORTER IV Box (70XA)	2.5	81	11/90 – 04/03	3794	
TRANSPORTER IV Box (70XA)	2.5	81	11/90 – 04/03	4020	
TRANSPORTER IV Box (70XA)	2.5	81	11/90 – 04/03	4095	
TRANSPORTER IV Box (70XA)	2.5	85	08/96 - 04/03	3794	
TRANSPORTER IV Box (70XA)	2.5	85	08/96 – 04/03	3553	
TRANSPORTER IV Box (70XA)	2.5	85	08/96 – 04/03	3553/1	
TRANSPORTER IV Box (70XA)	2.5	85	08/96 – 04/03	3606	
TRANSPORTER IV Box (70XA)	2.5	85	08/96 – 04/03	4020	
TRANSPORTER IV Box (70XA)	2.5	85	08/96 – 04/03	4095	
TRANSPORTER IV Box (70XA)	2.5 Syncro	81	10/92 – 04/03	3553	
TRANSPORTER IV Box (70XA)	2.5 Syncro	81	10/92 – 04/03	3553/1	
TRANSPORTER IV Box (70XA)	2.5 Syncro	81	10/92 – 04/03	3606	
TRANSPORTER IV Box (70XA)	2.5 Syncro	81	10/92 – 04/03	3794	
TRANSPORTER IV Box (70XA)	2.5 Syncro	81	10/92 – 04/03	4020	
TRANSPORTER IV Box (70XA)	2.5 Syncro	81	10/92 – 04/03	4095	
TRANSPORTER IV Box (70XA)	2.5 Syncro	85	08/96 – 04/03	3553	
TRANSPORTER IV Box (70XA)	2.5 Syncro	85	08/96 – 04/03	3553/1	
TRANSPORTER IV Box (70XA)	2.5 Syncro	85	08/96 – 04/03	3606	
TRANSPORTER IV Box (70XA)	2.5 Syncro	85	08/96 – 04/03	3794	
TRANSPORTER IV Box (70XA)	2.5 Syncro	85	08/96 – 04/03	4020	
TRANSPORTER IV Box (70XA)	2.5 Syncro	85	08/96 – 04/03	4095	
TRANSPORTER IV Box (70XA)	2.5 TDI	65	12/98 – 04/03	3553	

MAKE & MODEL   		KW	YEAR		
VW					
TRANSPORTER IV Box (70XA)	2.5 TDI	65	12/98 – 04/03	3553/1	
TRANSPORTER IV Box (70XA)	2.5 TDI	65	12/98 – 04/03	3606	
TRANSPORTER IV Box (70XA)	2.5 TDI	65	12/98 – 04/03	3794	
TRANSPORTER IV Box (70XA)	2.5 TDI	65	12/98 – 04/03	4020	
TRANSPORTER IV Box (70XA)	2.5 TDI	65	12/98 – 04/03	4095	
TRANSPORTER IV Box (70XA)	2.5 TDI	75	09/95 – 04/03	3553	
TRANSPORTER IV Box (70XA)	2.5 TDI	75	09/95 – 04/03	3553/1	
TRANSPORTER IV Box (70XA)	2.5 TDI	75	09/95 – 04/03	3606	
TRANSPORTER IV Box (70XA)	2.5 TDI	75	09/95 – 04/03	3794	
TRANSPORTER IV Box (70XA)	2.5 TDI	75	09/95 – 04/03	4020	
TRANSPORTER IV Box (70XA)	2.5 TDI	75	09/95 – 04/03	4095	
TRANSPORTER IV Box (70XA)	2.5 TDI	111	09/00 – 04/03	3553	
TRANSPORTER IV Box (70XA)	2.5 TDI	111	09/00 – 04/03	3553/1	
TRANSPORTER IV Box (70XA)	2.5 TDI	111	09/00 – 04/03	3606	
TRANSPORTER IV Box (70XA)	2.5 TDI	111	09/00 – 04/03	3794	
TRANSPORTER IV Box (70XA)	2.5 TDI	111	09/00 – 04/03	4020	
TRANSPORTER IV Box (70XA)	2.5 TDI	111	09/00 – 04/03	4095	
TRANSPORTER IV Box (70XA)	2.5 TDI Syncro	75	09/95 – 04/03	3553	
TRANSPORTER IV Box (70XA)	2.5 TDI Syncro	75	09/95 – 04/03	3553/1	
TRANSPORTER IV Box (70XA)	2.5 TDI Syncro	75	09/95 – 04/03	3606	
TRANSPORTER IV Box (70XA)	2.5 TDI Syncro	75	09/95 – 04/03	3794	
TRANSPORTER IV Box (70XA)	2.5 TDI Syncro	75	09/95 – 04/03	4020	
TRANSPORTER IV Box (70XA)	2.5 TDI Syncro	75	09/95 – 04/03	4095	
TRANSPORTER IV Box (70XA)	2.8 VR6	103	05/96 – 05/00	3553	
TRANSPORTER IV Box (70XA)	2.8 VR6	103	05/96 – 05/00	3553/1	
TRANSPORTER IV Box (70XA)	2.8 VR6	103	05/96 – 05/00	3606	
TRANSPORTER IV Box (70XA)	2.8 VR6	103	05/96 – 05/00	3794	
TRANSPORTER IV Box (70XA)	2.8 VR6	103	05/96 – 05/00	4020	
TRANSPORTER IV Box (70XA)	2.8 VR6	103	05/96 – 05/00	4095	
TRANSPORTER IV Box (70XA)	2.8 VR6	150	06/00 – 04/03	4095	
TRANSPORTER IV Bus (70XB, 70XC, 7DB, 7DW, 7DK)	1.8	49	12/90 – 07/92	3553	
TRANSPORTER IV Bus (70XB, 70XC, 7DB, 7DW, 7DK)	1.8	49	12/90 – 07/92	3553/1	
TRANSPORTER IV Bus (70XB, 70XC, 7DB, 7DW, 7DK)	1.8	49	12/90 – 07/92	3606	
TRANSPORTER IV Bus (70XB, 70XC, 7DB, 7DW, 7DK)	1.8	49	12/90 – 07/92	3794	
TRANSPORTER IV Bus (70XB, 70XC, 7DB, 7DW, 7DK)	1.8	49	12/90 – 07/92	4020	
TRANSPORTER IV Bus (70XB, 70XC, 7DB, 7DW, 7DK)	1.9 D	44	09/90 – 12/95	3553	
TRANSPORTER IV Bus (70XB, 70XC, 7DB, 7DW, 7DK)	1.9 D	44	09/90 – 12/95	3553/1	
TRANSPORTER IV Bus (70XB, 70XC, 7DB, 7DW, 7DK)	1.9 D	44	09/90 – 12/95	3606	
TRANSPORTER IV Bus (70XB, 70XC, 7DB, 7DW, 7DK)	1.9 D	44	09/90 – 12/95	3794	
TRANSPORTER IV Bus (70XB, 70XC, 7DB, 7DW, 7DK)	1.9 D	44	09/90 – 12/95	4020	
TRANSPORTER IV Bus (70XB, 70XC, 7DB, 7DW, 7DK)	1.9 D	45	09/90 – 12/95	3553	
TRANSPORTER IV Bus (70XB, 70XC, 7DB, 7DW, 7DK)	1.9 D	45	09/90 – 12/95	3553/1	
TRANSPORTER IV Bus (70XB, 70XC, 7DB, 7DW, 7DK)	1.9 D	45	09/90 – 12/95	3606	
TRANSPORTER IV Bus (70XB, 70XC, 7DB, 7DW, 7DK)	1.9 D	45	09/90 – 12/95	3794	
TRANSPORTER IV Bus (70XB, 70XC, 7DB, 7DW, 7DK)	1.9 D	45	09/90 – 12/95	4020	
TRANSPORTER IV Bus (70XB, 70XC, 7DB, 7DW, 7DK)	1.9 TD	50	10/92 – 04/03	3553	
TRANSPORTER IV Bus (70XB, 70XC, 7DB, 7DW, 7DK)	1.9 TD	50	10/92 – 04/03	3553/1	
TRANSPORTER IV Bus (70XB, 70XC, 7DB, 7DW, 7DK)	1.9 TD	50	10/92 – 04/03	3606	
TRANSPORTER IV Bus (70XB, 70XC, 7DB, 7DW, 7DK)	1.9 TD	50	10/92 – 04/03	3794	
TRANSPORTER IV Bus (70XB, 70XC, 7DB, 7DW, 7DK)	1.9 TD	50	10/92 – 04/03	4020	
TRANSPORTER IV Bus (70XB, 70XC, 7DB, 7DW, 7DK)	1.9 TD	50	10/92 – 04/03	4095	
TRANSPORTER IV Bus (70XB, 70XC, 7DB, 7DW, 7DK)	2.0	62	09/90 – 04/03	3553	
TRANSPORTER IV Bus (70XB, 70XC, 7DB, 7DW, 7DK)	2.0	62	09/90 – 04/03	3553/1	
TRANSPORTER IV Bus (70XB, 70XC, 7DB, 7DW, 7DK)	2.0	62	09/90 – 04/03	3606	
TRANSPORTER IV Bus (70XB, 70XC, 7DB, 7DW, 7DK)	2.0	62	09/90 – 04/03	3794	
TRANSPORTER IV Bus (70XB, 70XC, 7DB, 7DW, 7DK)	2.0	62	09/90 – 04/03	4020	
TRANSPORTER IV Bus (70XB, 70XC, 7DB, 7DW, 7DK)	2.0	62	09/90 – 04/03	4095	
TRANSPORTER IV Bus (70XB, 70XC, 7DB, 7DW, 7DK)	2.4 D	55	08/97 – 04/03	3553	
TRANSPORTER IV Bus (70XB, 70XC, 7DB, 7DW, 7DK)	2.4 D	55	08/97 – 04/03	3553/1	
TRANSPORTER IV Bus (70XB, 70XC, 7DB, 7DW, 7DK)	2.4 D	55	08/97 – 04/03	3606	
TRANSPORTER IV Bus (70XB, 70XC, 7DB, 7DW, 7DK)	2.4 D	55	08/97 – 04/03	3794	
TRANSPORTER IV Bus (70XB, 70XC, 7DB, 7DW, 7DK)	2.4 D	55	08/97 – 04/03	4020	
TRANSPORTER IV Bus (70XB, 70XC, 7DB, 7DW, 7DK)	2.4 D	55	08/97 – 04/03	4095	
TRANSPORTER IV Bus (70XB, 70XC, 7DB, 7DW, 7DK)	2.4 D	57	09/90 – 04/98	3553	
TRANSPORTER IV Bus (70XB, 70XC, 7DB, 7DW, 7DK)	2.4 D	57	09/90 – 04/98	3553/1	
TRANSPORTER IV Bus (70XB, 70XC, 7DB, 7DW, 7DK)	2.4 D	57	09/90 – 04/98	3606	
TRANSPORTER IV Bus (70XB, 70XC, 7DB, 7DW, 7DK)	2.4 D	57	09/90 – 04/98	3794	
TRANSPORTER IV Bus (70XB, 70XC, 7DB, 7DW, 7DK)	2.4 D	57	09/90 – 04/98	4020	
TRANSPORTER IV Bus (70XB, 70XC, 7DB, 7DW, 7DK)	2.4 D	57	09/90 – 04/98	4095	
TRANSPORTER IV Bus (70XB, 70XC, 7DB, 7DW, 7DK)	2.4 D Syncro	57	10/92 – 09/98	3553	
TRANSPORTER IV Bus (70XB, 70XC, 7DB, 7DW, 7DK)	2.4 D Syncro	57	10/92 – 09/98	3553/1	
TRANSPORTER IV Bus (70XB, 70XC, 7DB, 7DW, 7DK)	2.4 D Syncro	57	10/92 – 09/98	3606	
TRANSPORTER IV Bus (70XB, 70XC, 7DB, 7DW, 7DK)	2.4 D Syncro	57	10/92 – 09/98	3794	
TRANSPORTER IV Bus (70XB, 70XC, 7DB, 7DW, 7DK)	2.4 D Syncro	57	10/92 – 09/98	4020	
TRANSPORTER IV Bus (70XB, 70XC, 7DB, 7DW, 7DK)	2.4 D Syncro	57	10/92 – 09/98	4095	
TRANSPORTER IV Bus (70XB, 70XC, 7DB, 7DW, 7DK)	2.5	81	11/90 – 04/03	3553	

MAKE & MODEL   		KW	YEAR		
VW					
TRANSPORTER IV Bus (70XB, 70XC, 7DB, 7DW, 7DK)	2.5	81	11/90 – 04/03	3553/1	
TRANSPORTER IV Bus (70XB, 70XC, 7DB, 7DW, 7DK)	2.5	81	11/90 – 04/03	3606	
TRANSPORTER IV Bus (70XB, 70XC, 7DB, 7DW, 7DK)	2.5	81	11/90 – 04/03	3794	
TRANSPORTER IV Bus (70XB, 70XC, 7DB, 7DW, 7DK)	2.5	81	11/90 – 04/03	4020	
TRANSPORTER IV Bus (70XB, 70XC, 7DB, 7DW, 7DK)	2.5	81	11/90 – 04/03	4095	
TRANSPORTER IV Bus (70XB, 70XC, 7DB, 7DW, 7DK)	2.5	85	08/96 – 04/03	3553	
TRANSPORTER IV Bus (70XB, 70XC, 7DB, 7DW, 7DK)	2.5	85	08/96 – 04/03	3553/1	
TRANSPORTER IV Bus (70XB, 70XC, 7DB, 7DW, 7DK)	2.5	85	08/96 – 04/03	3606	
TRANSPORTER IV Bus (70XB, 70XC, 7DB, 7DW, 7DK)	2.5	85	08/96 – 04/03	3794	
TRANSPORTER IV Bus (70XB, 70XC, 7DB, 7DW, 7DK)	2.5	85	08/96 – 04/03	4020	
TRANSPORTER IV Bus (70XB, 70XC, 7DB, 7DW, 7DK)	2.5	85	08/96 – 04/03	4095	
TRANSPORTER IV Bus (70XB, 70XC, 7DB, 7DW, 7DK)	2.5 Syncro	81	11/92 – 04/03	3553	
TRANSPORTER IV Bus (70XB, 70XC, 7DB, 7DW, 7DK)	2.5 Syncro	81	11/92 – 04/03	3553/1	
TRANSPORTER IV Bus (70XB, 70XC, 7DB, 7DW, 7DK)	2.5 Syncro	81	11/92 – 04/03	3606	
TRANSPORTER IV Bus (70XB, 70XC, 7DB, 7DW, 7DK)	2.5 Syncro	81	11/92 – 04/03	3794	
TRANSPORTER IV Bus (70XB, 70XC, 7DB, 7DW, 7DK)	2.5 Syncro	81	11/92 – 04/03	4020	
TRANSPORTER IV Bus (70XB, 70XC, 7DB, 7DW, 7DK)	2.5 Syncro	81	11/92 – 04/03	4095	
TRANSPORTER IV Bus (70XB, 70XC, 7DB, 7DW, 7DK)	2.5 Syncro	85	07/96 – 04/03	3553	
TRANSPORTER IV Bus (70XB, 70XC, 7DB, 7DW, 7DK)	2.5 Syncro	85	07/96 – 04/03	3553/1	
TRANSPORTER IV Bus (70XB, 70XC, 7DB, 7DW, 7DK)	2.5 Syncro	85	07/96 – 04/03	3606	
TRANSPORTER IV Bus (70XB, 70XC, 7DB, 7DW, 7DK)	2.5 Syncro	85	07/96 – 04/03	3794	
TRANSPORTER IV Bus (70XB, 70XC, 7DB, 7DW, 7DK)	2.5 Syncro	85	07/96 – 04/03	4020	
TRANSPORTER IV Bus (70XB, 70XC, 7DB, 7DW, 7DK)	2.5 Syncro	85	07/96 – 04/03	4095	
TRANSPORTER IV Bus (70XB, 70XC, 7DB, 7DW, 7DK)	2.5 TDI	65	05/98 – 04/03	3553	
TRANSPORTER IV Bus (70XB, 70XC, 7DB, 7DW, 7DK)	2.5 TDI	65	05/98 – 04/03	3553/1	
TRANSPORTER IV Bus (70XB, 70XC, 7DB, 7DW, 7DK)	2.5 TDI	65	05/98 – 04/03	3606	
TRANSPORTER IV Bus (70XB, 70XC, 7DB, 7DW, 7DK)	2.5 TDI	65	05/98 – 04/03	3794	
TRANSPORTER IV Bus (70XB, 70XC, 7DB, 7DW, 7DK)	2.5 TDI	65	05/98 – 04/03	4020	
TRANSPORTER IV Bus (70XB, 70XC, 7DB, 7DW, 7DK)	2.5 TDI	65	05/98 – 04/03	4095	
TRANSPORTER IV Bus (70XB, 70XC, 7DB, 7DW, 7DK)	2.5 TDI	75	09/95 – 04/ 03	3794	
TRANSPORTER IV Bus (70XB, 70XC, 7DB, 7DW, 7DK)	2.5 TDI	75	09/95 – 04/03	3553	
TRANSPORTER IV Bus (70XB, 70XC, 7DB, 7DW, 7DK)	2.5 TDI	75	09/95 – 04/03	3553/1	
TRANSPORTER IV Bus (70XB, 70XC, 7DB, 7DW, 7DK)	2.5 TDI	75	09/95 – 04/03	3606	
TRANSPORTER IV Bus (70XB, 70XC, 7DB, 7DW, 7DK)	2.5 TDI	75	09/95 – 04/03	4020	
TRANSPORTER IV Bus (70XB, 70XC, 7DB, 7DW, 7DK)	2.5 TDI	75	09/95 – 04/03	4095	
TRANSPORTER IV Bus (70XB, 70XC, 7DB, 7DW, 7DK)	2.5 TDI	111	05/98 – 04/03	3553	
TRANSPORTER IV Bus (70XB, 70XC, 7DB, 7DW, 7DK)	2.5 TDI	111	05/98 – 04/03	3553/1	
TRANSPORTER IV Bus (70XB, 70XC, 7DB, 7DW, 7DK)	2.5 TDI	111	05/98 – 04/03	3606	
TRANSPORTER IV Bus (70XB, 70XC, 7DB, 7DW, 7DK)	2.5 TDI	111	05/98 – 04/03	3794	
TRANSPORTER IV Bus (70XB, 70XC, 7DB, 7DW, 7DK)	2.5 TDI	111	05/98 – 04/03	4020	
TRANSPORTER IV Bus (70XB, 70XC, 7DB, 7DW, 7DK)	2.5 TDI	111	05/98 – 04/03	4095	
TRANSPORTER IV Bus (70XB, 70XC, 7DB, 7DW, 7DK)	2.5 TDI Syncro	75	01/96 – 04/03	3553	
TRANSPORTER IV Bus (70XB, 70XC, 7DB, 7DW, 7DK)	2.5 TDI Syncro	75	01/96 – 04/03	3553/1	
TRANSPORTER IV Bus (70XB, 70XC, 7DB, 7DW, 7DK)	2.5 TDI Syncro	75	01/96 – 04/03	3606	
TRANSPORTER IV Bus (70XB, 70XC, 7DB, 7DW, 7DK)	2.5 TDI Syncro	75	01/96 – 04/03	3794	
TRANSPORTER IV Bus (70XB, 70XC, 7DB, 7DW, 7DK)	2.5 TDI Syncro	75	01/96 – 04/03	4020	
TRANSPORTER IV Bus (70XB, 70XC, 7DB, 7DW, 7DK)	2.5 TDI Syncro	75	01/96 – 04/03	4095	
TRANSPORTER IV Bus (70XB, 70XC, 7DB, 7DW, 7DK)	2.8 VR 6	103	11/95 – 04/00	3553	
TRANSPORTER IV Bus (70XB, 70XC, 7DB, 7DW, 7DK)	2.8 VR 6	103	11/95 – 04/00	3553/1	
TRANSPORTER IV Bus (70XB, 70XC, 7DB, 7DW, 7DK)	2.8 VR 6	103	11/95 – 04/00	3606	
TRANSPORTER IV Bus (70XB, 70XC, 7DB, 7DW, 7DK)	2.8 VR 6	103	11/95 – 04/00	3794	
TRANSPORTER IV Bus (70XB, 70XC, 7DB, 7DW, 7DK)	2.8 VR 6	103	11/95 – 04/00	4020	
TRANSPORTER IV Bus (70XB, 70XC, 7DB, 7DW, 7DK)	2.8 VR 6	103	11/95 – 04/00	4095	
TRANSPORTER IV Bus (70XB, 70XC, 7DB, 7DW, 7DK)	2.8 VR6	150	04/00 – 04/03	4095	
TRANSPORTER IV Bus (70XB, 70XC, 7DB, 7DW, 7DK)	2.8 VR6 Syncro	103	01/96 – 04/96	3553	
TRANSPORTER IV Bus (70XB, 70XC, 7DB, 7DW, 7DK)	2.8 VR6 Syncro	103	01/96 – 04/96	3553/1	
TRANSPORTER IV Bus (70XB, 70XC, 7DB, 7DW, 7DK)	2.8 VR6 Syncro	103	01/96 – 04/96	3606	
TRANSPORTER IV Bus (70XB, 70XC, 7DB, 7DW, 7DK)	2.8 VR6 Syncro	103	01/96 – 04/96	3794	
TRANSPORTER IV Bus (70XB, 70XC, 7DB, 7DW, 7DK)	2.8 VR6 Syncro	103	01/96 – 04/96	4020	
TRANSPORTER IV Bus (70XB, 70XC, 7DB, 7DW, 7DK)	2.8 VR6 Syncro	103	01/96 – 04/96	4095	
TRANSPORTER IV Platform/Chassis (70XD)	1.8	49	12/90 – 07/92	3553	
TRANSPORTER IV Platform/Chassis (70XD)	1.8	49	12/90 – 07/92	3553/1	
TRANSPORTER IV Platform/Chassis (70XD)	1.8	49	12/90 – 07/92	3606	
TRANSPORTER IV Platform/Chassis (70XD)	1.8	49	12/90 – 07/92	3794	
TRANSPORTER IV Platform/Chassis (70XD)	1.8	49	12/90 – 07/92	4020	
TRANSPORTER IV Platform/Chassis (70XD)	1.9 D	44	09/90 – 12/95	3553	
TRANSPORTER IV Platform/Chassis (70XD)	1.9 D	44	09/90 – 12/95	3553/1	
TRANSPORTER IV Platform/Chassis (70XD)	1.9 D	44	09/90 – 12/95	3606	
TRANSPORTER IV Platform/Chassis (70XD)	1.9 D	44	09/90 – 12/95	3794	
TRANSPORTER IV Platform/Chassis (70XD)	1.9 D	44	09/90 – 12/95	4020	
TRANSPORTER IV Platform/Chassis (70XD)	1.9 D	45	07/90 – 12/95	3553	
TRANSPORTER IV Platform/Chassis (70XD)	1.9 D	45	07/90 – 12/95	3553/1	
TRANSPORTER IV Platform/Chassis (70XD)	1.9 D	45	07/90 – 12/95	3606	
TRANSPORTER IV Platform/Chassis (70XD)	1.9 D	45	07/90 – 12/95	3794	
TRANSPORTER IV Platform/Chassis (70XD)	1.9 D	45	07/90 – 12/95	4020	
TRANSPORTER IV Platform/Chassis (70XD)	1.9 TD	50	10/92 – 04/03	3553	

MAKE & MODEL   		KW	YEAR		
VW					
TRANSPORTER IV Platform/Chassis (70XD)	1.9 TD	50	10/92 – 04/03	3553/1	
TRANSPORTER IV Platform/Chassis (70XD)	1.9 TD	50	10/92 – 04/03	3606	
TRANSPORTER IV Platform/Chassis (70XD)	1.9 TD	50	10/92 – 04/03	3794	
TRANSPORTER IV Platform/Chassis (70XD)	1.9 TD	50	10/92 – 04/03	4020	
TRANSPORTER IV Platform/Chassis (70XD)	1.9 TD	50	10/92 – 04/03	4095	
TRANSPORTER IV Platform/Chassis (70XD)	2.0	62	07/90 – 04/03	3553	
TRANSPORTER IV Platform/Chassis (70XD)	2.0	62	07/90 – 04/03	3553/1	
TRANSPORTER IV Platform/Chassis (70XD)	2.0	62	07/90 – 04/03	3606	
TRANSPORTER IV Platform/Chassis (70XD)	2.0	62	07/90 – 04/03	3794	
TRANSPORTER IV Platform/Chassis (70XD)	2.0	62	07/90 – 04/03	4020	
TRANSPORTER IV Platform/Chassis (70XD)	2.0	62	07/90 – 04/03	4095	
TRANSPORTER IV Platform/Chassis (70XD)	2.4 D	55	08/97 – 04/03	3553	
TRANSPORTER IV Platform/Chassis (70XD)	2.4 D	55	08/97 – 04/03	3553/1	
TRANSPORTER IV Platform/Chassis (70XD)	2.4 D	55	08/97 – 04/03	3606	
TRANSPORTER IV Platform/Chassis (70XD)	2.4 D	55	08/97 – 04/03	3794	
TRANSPORTER IV Platform/Chassis (70XD)	2.4 D	55	08/97 – 04/03	4020	
TRANSPORTER IV Platform/Chassis (70XD)	2.4 D	55	08/97 – 04/03	4095	
TRANSPORTER IV Platform/Chassis (70XD)	2.4 D	57	09/90 – 04/98	3553	
TRANSPORTER IV Platform/Chassis (70XD)	2.4 D	57	09/90 – 04/98	3553/1	
TRANSPORTER IV Platform/Chassis (70XD)	2.4 D	57	09/90 – 04/98	3606	
TRANSPORTER IV Platform/Chassis (70XD)	2.4 D	57	09/90 – 04/98	3794	
TRANSPORTER IV Platform/Chassis (70XD)	2.4 D	57	09/90 – 04/98	4020	
TRANSPORTER IV Platform/Chassis (70XD)	2.4 D	57	09/90 – 04/98	4095	
TRANSPORTER IV Platform/Chassis (70XD)	2.4 D Syncro	57	10/92 – 09/98	3553	
TRANSPORTER IV Platform/Chassis (70XD)	2.4 D Syncro	57	10/92 – 09/98	3553/1	
TRANSPORTER IV Platform/Chassis (70XD)	2.4 D Syncro	57	10/92 – 09/98	3606	
TRANSPORTER IV Platform/Chassis (70XD)	2.4 D Syncro	57	10/92 – 09/98	3794	
TRANSPORTER IV Platform/Chassis (70XD)	2.4 D Syncro	57	10/92 – 09/98	4020	
TRANSPORTER IV Platform/Chassis (70XD)	2.4 D Syncro	57	10/92 – 09/98	4095	
TRANSPORTER IV Platform/Chassis (70XD)	2.5	81	11/90 – 04/03	3553	
TRANSPORTER IV Platform/Chassis (70XD)	2.5	81	11/90 – 04/03	3553/1	
TRANSPORTER IV Platform/Chassis (70XD)	2.5	81	11/90 – 04/03	3606	
TRANSPORTER IV Platform/Chassis (70XD)	2.5	81	11/90 – 04/03	3794	
TRANSPORTER IV Platform/Chassis (70XD)	2.5	81	11/90 – 04/03	4020	
TRANSPORTER IV Platform/Chassis (70XD)	2.5	81	11/90 – 04/03	4095	
TRANSPORTER IV Platform/Chassis (70XD)	2.5	85	08/96 – 04/03	3553	
TRANSPORTER IV Platform/Chassis (70XD)	2.5	85	08/96 – 04/03	3553/1	
TRANSPORTER IV Platform/Chassis (70XD)	2.5	85	08/96 – 04/03	3606	
TRANSPORTER IV Platform/Chassis (70XD)	2.5	85	08/96 – 04/03	3794	
TRANSPORTER IV Platform/Chassis (70XD)	2.5	85	08/96 – 04/03	4020	
TRANSPORTER IV Platform/Chassis (70XD)	2.5	85	08/96 – 04/03	4095	
TRANSPORTER IV Platform/Chassis (70XD)	2.5 Syncro	81	10/92 – 04/03	3553	
TRANSPORTER IV Platform/Chassis (70XD)	2.5 Syncro	81	10/92 – 04/03	3553/1	
TRANSPORTER IV Platform/Chassis (70XD)	2.5 Syncro	81	10/92 – 04/03	3606	
TRANSPORTER IV Platform/Chassis (70XD)	2.5 Syncro	81	10/92 – 04/03	3794	
TRANSPORTER IV Platform/Chassis (70XD)	2.5 Syncro	81	10/92 – 04/03	4020	
TRANSPORTER IV Platform/Chassis (70XD)	2.5 Syncro	81	10/92 – 04/03	4095	
TRANSPORTER IV Platform/Chassis (70XD)	2.5 Syncro	85	08/96 – 04/03	3553	
TRANSPORTER IV Platform/Chassis (70XD)	2.5 Syncro	85	08/96 – 04/03	3553/1	
TRANSPORTER IV Platform/Chassis (70XD)	2.5 Syncro	85	08/96 – 04/03	3606	
TRANSPORTER IV Platform/Chassis (70XD)	2.5 Syncro	85	08/96 – 04/03	3794	
TRANSPORTER IV Platform/Chassis (70XD)	2.5 Syncro	85	08/96 – 04/03	4020	
TRANSPORTER IV Platform/Chassis (70XD)	2.5 Syncro	85	08/96 – 04/03	4095	
TRANSPORTER IV Platform/Chassis (70XD)	2.5 TDI	65	05/98 – 04/03	3553	
TRANSPORTER IV Platform/Chassis (70XD)	2.5 TDI	65	05/98 – 04/03	3553/1	
TRANSPORTER IV Platform/Chassis (70XD)	2.5 TDI	65	05/98 – 04/03	3606	
TRANSPORTER IV Platform/Chassis (70XD)	2.5 TDI	65	05/98 – 04/03	3794	
TRANSPORTER IV Platform/Chassis (70XD)	2.5 TDI	65	05/98 – 04/03	4020	
TRANSPORTER IV Platform/Chassis (70XD)	2.5 TDI	65	05/98 – 04/03	4095	
TRANSPORTER IV Platform/Chassis (70XD)	2.5 TDI	75	09/95 – 04/03	3553	
TRANSPORTER IV Platform/Chassis (70XD)	2.5 TDI	75	09/95 – 04/03	3553/1	
TRANSPORTER IV Platform/Chassis (70XD)	2.5 TDI	75	09/95 – 04/03	3606	
TRANSPORTER IV Platform/Chassis (70XD)	2.5 TDI	75	09/95 – 04/03	3794	
TRANSPORTER IV Platform/Chassis (70XD)	2.5 TDI	75	09/95 – 04/03	4020	
TRANSPORTER IV Platform/Chassis (70XD)	2.5 TDI	75	09/95 – 04/03	4095	
TRANSPORTER IV Platform/Chassis (70XD)	2.5 TDI Syncro	75	05/98 – 04/03	3553	
TRANSPORTER IV Platform/Chassis (70XD)	2.5 TDI Syncro	75	05/98 – 04/03	3553/1	
TRANSPORTER IV Platform/Chassis (70XD)	2.5 TDI Syncro	75	05/98 – 04/03	3606	
TRANSPORTER IV Platform/Chassis (70XD)	2.5 TDI Syncro	75	05/98 – 04/03	3794	
TRANSPORTER IV Platform/Chassis (70XD)	2.5 TDI Syncro	75	05/98 – 04/03	4020	
TRANSPORTER IV Platform/Chassis (70XD)	2.5 TDI Syncro	75	05/98 – 04/03	4095	
TRANSPORTER IV Platform/Chassis (70XD)	2.8	103	05/96 – 05/00	3553	
TRANSPORTER IV Platform/Chassis (70XD)	2.8	103	05/96 – 05/00	3553/1	
TRANSPORTER IV Platform/Chassis (70XD)	2.8	103	05/96 – 05/00	3606	
TRANSPORTER IV Platform/Chassis (70XD)	2.8	103	05/96 – 05/00	3794	
TRANSPORTER IV Platform/Chassis (70XD)	2.8	103	05/96 – 05/00	4020	

MAKE & MODEL		KW	YEAR		
VW					
TRANSPORTER IV Platform/Chassis (70XD)	2.8	103	05/96 – 05/00	4095	
TRANSPORTER IV Platform/Chassis (70XD)	2.8 VR6	150	06/00 – 04/03	4095	
TRANSPORTER T3	1.6	50	04/83 – 09/90	3605	
TRANSPORTER T3	1.6 D (CS)	37	01/81 – 07/87	3605	
TRANSPORTER T3	1.6 TD (JX)	51	10/84 – 07/92	3605	
TRANSPORTER T3	1.7 D (KY)	42	07/89 – 07/92	3605	
TRANSPORTER T3	1.9 (DF)	44	09/82 – 07/92	3605	
TRANSPORTER T3	1.9 (DG)	57	08/82 – 07/92	3605	
TRANSPORTER T3	1.9 (DH)	61	10/84 – 02/89	3605	
TRANSPORTER T3	2.0 (CU)	51	05/79 – 04/86	3605	
TRANSPORTER T3	2.1 (DJ)	82	03/86 – 07/92	3605	
TRANSPORTER T3	2.1 (MV)	70	08/85 – 07/92	3605	
TRANSPORTER T3	2.1 i (SS)	68	07/89 – 07/92	3605	
TRANSPORTER V Box (7HA, 7HH, 7EA, 7EH)	1.9 TDI	62	01/06 – 11/09	3841	3841/1
TRANSPORTER V Box (7HA, 7HH, 7EA, 7EH)	1.9 TDI	62	01/06 – 11/09		3842
TRANSPORTER V Box (7HA, 7HH, 7EA, 7EH)	1.9 TDI	63	04/03 – 11/09	3841/1	3842
TRANSPORTER V Box (7HA, 7HH, 7EA, 7EH)	1.9 TDI	63	04/03 – 11/09	3841	
TRANSPORTER V Box (7HA, 7HH, 7EA, 7EH)	1.9 TDI	75	06/06 – 11/09	3841/1	3842
TRANSPORTER V Box (7HA, 7HH, 7EA, 7EH)	1.9 TDI	75	06/06 – 11/09	3841	
TRANSPORTER V Box (7HA, 7HH, 7EA, 7EH)	1.9 TDI	77	04/03 – 11/09	3841/1	3842
TRANSPORTER V Box (7HA, 7HH, 7EA, 7EH)	1.9 TDI	77	04/03 – 11/09	3841	
TRANSPORTER V Box (7HA, 7HH, 7EA, 7EH)	2.0	85	11/03 -	3841/1	3842
TRANSPORTER V Box (7HA, 7HH, 7EA, 7EH)	2.0	85	11/03 -	3841	
TRANSPORTER V Box (7HA, 7HH, 7EA, 7EH)	2.0 BiTDI	132	09/09 -	3841	3842
TRANSPORTER V Box (7HA, 7HH, 7EA, 7EH)	2.0 BiTDI	132	09/09 -	4162	
TRANSPORTER V Box (7HA, 7HH, 7EA, 7EH)	2.0 BiTDI 4motion	132	09/09 -	3841	3842
TRANSPORTER V Box (7HA, 7HH, 7EA, 7EH)	2.0 BiTDI 4motion	132	09/09 -	4162	
TRANSPORTER V Box (7HA, 7HH, 7EA, 7EH)	2.0 TDI	62	09/09 -	3841	3842
TRANSPORTER V Box (7HA, 7HH, 7EA, 7EH)	2.0 TDI	75	09/09 -	3841	3842
TRANSPORTER V Box (7HA, 7HH, 7EA, 7EH)	2.0 TDI	84	05/11 -	3841	3842
TRANSPORTER V Box (7HA, 7HH, 7EA, 7EH)	2.0 TDI	100	05/10 -	3841	3842
TRANSPORTER V Box (7HA, 7HH, 7EA, 7EH)	2.0 TDI	103	09/09 -	3841	3842
TRANSPORTER V Box (7HA, 7HH, 7EA, 7EH)	2.0 TDI 4motion	100	05/10 -	3841	3842
TRANSPORTER V Box (7HA, 7HH, 7EA, 7EH)	2.0 TDI 4motion	103	09/09 -	3841	3842
TRANSPORTER V Box (7HA, 7HH, 7EA, 7EH)	2.0 TSI	110	07/12 -	3841	3842
TRANSPORTER V Box (7HA, 7HH, 7EA, 7EH)	2.0 TSI	110	07/12 -	4162	
TRANSPORTER V Box (7HA, 7HH, 7EA, 7EH)	2.0 TSI	150	05/11 -	3841	3842
TRANSPORTER V Box (7HA, 7HH, 7EA, 7EH)	2.0 TSI	150	05/11 -	4162	
TRANSPORTER V Box (7HA, 7HH, 7EA, 7EH)	2.0 TSI 4motion	150	07/11 -	3841	3842
TRANSPORTER V Box (7HA, 7HH, 7EA, 7EH)	2.0 TSI 4motion	150	07/11 -	4162	
TRANSPORTER V Box (7HA, 7HH, 7EA, 7EH)	2.5 TDI	96	04/03 – 11/09	3841/1	3842
TRANSPORTER V Box (7HA, 7HH, 7EA, 7EH)	2.5 TDI	96	04/03 – 11/09	3841	
TRANSPORTER V Box (7HA, 7HH, 7EA, 7EH)	2.5 TDI	128	04/03 – 11/09	3841/1	3842
TRANSPORTER V Box (7HA, 7HH, 7EA, 7EH)	2.5 TDI	128	04/03 – 11/09	3841	
TRANSPORTER V Box (7HA, 7HH, 7EA, 7EH)	2.5 TDI 4motion	96	07/04 – 11/09	3841/1	3842
TRANSPORTER V Box (7HA, 7HH, 7EA, 7EH)	2.5 TDI 4motion	96	07/04 – 11/09	3841	
TRANSPORTER V Box (7HA, 7HH, 7EA, 7EH)	2.5 TDI 4motion	128	07/04 – 11/09	3841/1	3842
TRANSPORTER V Box (7HA, 7HH, 7EA, 7EH)	2.5 TDI 4motion	128	07/04 – 11/09	3841	
TRANSPORTER V Box (7HA, 7HH, 7EA, 7EH)	3.2 4motion	170	11/03 – 06/06	3841/1	
TRANSPORTER V Box (7HA, 7HH, 7EA, 7EH)	3.2 4motion	173	11/03 – 11/09	3841/1	3842
TRANSPORTER V Box (7HA, 7HH, 7EA, 7EH)	3.2 4motion	173	11/03 – 11/09	3841	
TRANSPORTER V Box (7HA, 7HH, 7EA, 7EH)	3.2 V6	170	04/03 – 06/04	3841/1	3842
TRANSPORTER V Box (7HA, 7HH, 7EA, 7EH)	3.2 V6	170	04/03 – 06/04	3841	
TRANSPORTER V Box (7HA, 7HH, 7EA, 7EH)	3.2 V6	173	02/04 – 11/09	3841/1	3842
TRANSPORTER V Box (7HA, 7HH, 7EA, 7EH)	3.2 V6	173	02/04 – 11/09	3841	
TRANSPORTER V Bus (7HB, 7HJ, 7EB, 7EJ, 7EF, 7EG,7HF, 7EC)	1.9 TDI	62	01/06 – 11/09	3841/1	3842
TRANSPORTER V Bus (7HB, 7HJ, 7EB, 7EJ, 7EF, 7EG,7HF, 7EC)	1.9 TDI	62	01/06 – 11/09	3841	
TRANSPORTER V Bus (7HB, 7HJ, 7EB, 7EJ, 7EF, 7EG,7HF, 7EC)	1.9 TDI	63	04/03 – 11/09	3841/1	3842
TRANSPORTER V Bus (7HB, 7HJ, 7EB, 7EJ, 7EF, 7EG,7HF, 7EC)	1.9 TDI	63	04/03 – 11/09	3841	
TRANSPORTER V Bus (7HB, 7HJ, 7EB, 7EJ, 7EF, 7EG,7HF, 7EC)	1.9 TDI	75	06/06 – 11/09	3841/1	3842
TRANSPORTER V Bus (7HB, 7HJ, 7EB, 7EJ, 7EF, 7EG,7HF, 7EC)	1.9 TDI	75	06/06 – 11/09	3841	
TRANSPORTER V Bus (7HB, 7HJ, 7EB, 7EJ, 7EF, 7EG,7HF, 7EC)	1.9 TDI	77	04/03 – 11/09	3841/1	3842
TRANSPORTER V Bus (7HB, 7HJ, 7EB, 7EJ, 7EF, 7EG,7HF, 7EC)	1.9 TDI	77	04/03 – 11/09	3841	
TRANSPORTER V Bus (7HB, 7HJ, 7EB, 7EJ, 7EF, 7EG,7HF, 7EC)	2.0	85	11/03 -	3841/1	3842
TRANSPORTER V Bus (7HB, 7HJ, 7EB, 7EJ, 7EF, 7EG,7HF, 7EC)	2.0	85	11/03 -	3841	
TRANSPORTER V Bus (7HB, 7HJ, 7EB, 7EJ, 7EF, 7EG,7HF, 7EC)	2.0 BiTDI	132	09/09 -	4162	3842
TRANSPORTER V Bus (7HB, 7HJ, 7EB, 7EJ, 7EF, 7EG,7HF, 7EC)	2.0 BiTDI	132	09/09 -	3841	
TRANSPORTER V Bus (7HB, 7HJ, 7EB, 7EJ, 7EF, 7EG,7HF, 7EC)	2.0 BiTDI 4motion	132	09/09 -	4162	3842
TRANSPORTER V Bus (7HB, 7HJ, 7EB, 7EJ, 7EF, 7EG,7HF, 7EC)	2.0 BiTDI 4motion	132	09/09 -	3841	
TRANSPORTER V Bus (7HB, 7HJ, 7EB, 7EJ, 7EF, 7EG,7HF, 7EC)	2.0 TDI	62	09/09 -	3841	3842
TRANSPORTER V Bus (7HB, 7HJ, 7EB, 7EJ, 7EF, 7EG,7HF, 7EC)	2.0 TDI	75	09/09 -	4162	3842
TRANSPORTER V Bus (7HB, 7HJ, 7EB, 7EJ, 7EF, 7EG,7HF, 7EC)	2.0 TDI	75	09/09 -	3841	
TRANSPORTER V Bus (7HB, 7HJ, 7EB, 7EJ, 7EF, 7EG,7HF, 7EC)	2.0 TDI	84	05/11 -	3841	3842
TRANSPORTER V Bus (7HB, 7HJ, 7EB, 7EJ, 7EF, 7EG,7HF, 7EC)	2.0 TDI	100	05/10 -	3841	3842
TRANSPORTER V Bus (7HB, 7HJ, 7EB, 7EJ, 7EF, 7EG,7HF, 7EC)	2.0 TDI	103	09/09 -	3841	3842
TRANSPORTER V Bus (7HB, 7HJ, 7EB, 7EJ, 7EF, 7EG,7HF, 7EC)	2.0 TDI 4motion	100	05/10 -	3841	3842

MAKE & MODEL   		KW	YEAR		
VW					
TRANSPORTER V Bus (7HB, 7HJ, 7EB, 7EJ, 7EF, 7EG,7HF, 7EC)	2.0 TDI 4motion	103	09/09 -	3841	3842
TRANSPORTER V Bus (7HB, 7HJ, 7EB, 7EJ, 7EF, 7EG,7HF, 7EC)	2.0 TSI	110	07/12 -	3841	3842
TRANSPORTER V Bus (7HB, 7HJ, 7EB, 7EJ, 7EF, 7EG,7HF, 7EC)	2.0 TSI	110	07/12 -	4162	
TRANSPORTER V Bus (7HB, 7HJ, 7EB, 7EJ, 7EF, 7EG,7HF, 7EC)	2.0 TSI	150	05/11 -	4162	
TRANSPORTER V Bus (7HB, 7HJ, 7EB, 7EJ, 7EF, 7EG,7HF, 7EC)	2.0 TSI	150	05/11 -	3841	3842
TRANSPORTER V Bus (7HB, 7HJ, 7EB, 7EJ, 7EF, 7EG,7HF, 7EC)	2.0 TSI 4motion	150	07/11 -	4162	3842
TRANSPORTER V Bus (7HB, 7HJ, 7EB, 7EJ, 7EF, 7EG,7HF, 7EC)	2.0 TSI 4motion	150	07/11 -	3841	
TRANSPORTER V Bus (7HB, 7HJ, 7EB, 7EJ, 7EF, 7EG,7HF, 7EC)	2.5 TDI	96	04/03 – 11/09	3841/1	3842
TRANSPORTER V Bus (7HB, 7HJ, 7EB, 7EJ, 7EF, 7EG,7HF, 7EC)	2.5 TDI	96	04/03 – 11/09	3841	
TRANSPORTER V Bus (7HB, 7HJ, 7EB, 7EJ, 7EF, 7EG,7HF, 7EC)	2.5 TDI	120	11/03 – 11/09	3841/1	3842
TRANSPORTER V Bus (7HB, 7HJ, 7EB, 7EJ, 7EF, 7EG,7HF, 7EC)	2.5 TDI	120	11/03 – 11/09	3841	
TRANSPORTER V Bus (7HB, 7HJ, 7EB, 7EJ, 7EF, 7EG,7HF, 7EC)	2.5 TDI	128	04/03 – 11/09	3841/1	3842
TRANSPORTER V Bus (7HB, 7HJ, 7EB, 7EJ, 7EF, 7EG,7HF, 7EC)	2.5 TDI	128	04/03 – 11/09	3841	
TRANSPORTER V Bus (7HB, 7HJ, 7EB, 7EJ, 7EF, 7EG,7HF, 7EC)	2.5 TDI 4motion	96	07/04 – 11/09	3841	3842
TRANSPORTER V Bus (7HB, 7HJ, 7EB, 7EJ, 7EF, 7EG,7HF, 7EC)	2.5 TDI 4motion	96	07/04 – 11/09	3841/1	
TRANSPORTER V Bus (7HB, 7HJ, 7EB, 7EJ, 7EF, 7EG,7HF, 7EC)	2.5 TDI 4motion	128	07/04 – 11/09	3841/1	
TRANSPORTER V Bus (7HB, 7HJ, 7EB, 7EJ, 7EF, 7EG,7HF, 7EC)	2.5 TDI 4motion	128	07/04 – 11/09	3841	3842
TRANSPORTER V Bus (7HB, 7HJ, 7EB, 7EJ, 7EF, 7EG,7HF, 7EC)	3.2 4motion	170	11/03 – 06/06	3841/1	
TRANSPORTER V Bus (7HB, 7HJ, 7EB, 7EJ, 7EF, 7EG,7HF, 7EC)	3.2 V6	170	02/04 – 06/04	3841	3842
TRANSPORTER V Bus (7HB, 7HJ, 7EB, 7EJ, 7EF, 7EG,7HF, 7EC)	3.2 V6	170	02/04 – 06/04	3841/1	
TRANSPORTER V Bus (7HB, 7HJ, 7EB, 7EJ, 7EF, 7EG,7HF, 7EC)	3.2 V6	173	02/04 – 11/09	3841	3842
TRANSPORTER V Bus (7HB, 7HJ, 7EB, 7EJ, 7EF, 7EG,7HF, 7EC)	3.2 V6	173	02/04 – 11/09	3841/1	
TRANSPORTER V Bus (7HB, 7HJ, 7EB, 7EJ, 7EF, 7EG,7HF, 7EC)	3.2 V6 4motion	173	11/03 – 11/09	3841	3842
TRANSPORTER V Bus (7HB, 7HJ, 7EB, 7EJ, 7EF, 7EG,7HF, 7EC)	3.2 V6 4motion	173	11/03 – 11/09	3841/1	
TRANSPORTER V Platform/Chassis (7JD, 7JE, 7JL,7JY, 7JZ, 7FD	1.9 TDI	62	01/06 – 11/09	3841/1	3842
TRANSPORTER V Platform/Chassis (7JD, 7JE, 7JL,7JY, 7JZ, 7FD	1.9 TDI	62	01/06 – 11/09	3841	
TRANSPORTER V Platform/Chassis (7JD, 7JE, 7JL,7JY, 7JZ, 7FD	1.9 TDI	63	04/03 – 11/09	3841/1	3842
TRANSPORTER V Platform/Chassis (7JD, 7JE, 7JL,7JY, 7JZ, 7FD	1.9 TDI	63	04/03 – 11/09	3841	
TRANSPORTER V Platform/Chassis (7JD, 7JE, 7JL,7JY, 7JZ, 7FD	1.9 TDI	75	06/06 – 11/09	3841/1	3842
TRANSPORTER V Platform/Chassis (7JD, 7JE, 7JL,7JY, 7JZ, 7FD	1.9 TDI	75	06/06 – 11/09	3841	
TRANSPORTER V Platform/Chassis (7JD, 7JE, 7JL,7JY, 7JZ, 7FD	1.9 TDI	77	04/03 – 11/09	3841/1	3842
TRANSPORTER V Platform/Chassis (7JD, 7JE, 7JL,7JY, 7JZ, 7FD	1.9 TDI	77	04/03 – 11/09	3841	
TRANSPORTER V Platform/Chassis (7JD, 7JE, 7JL,7JY, 7JZ, 7FD	2.0	85	11/03 -	3841	3842
TRANSPORTER V Platform/Chassis (7JD, 7JE, 7JL,7JY, 7JZ, 7FD	2.0	85	11/03 -	3841/1	
TRANSPORTER V Platform/Chassis (7JD, 7JE, 7JL,7JY, 7JZ, 7FD	2.0 BiTDI	132	09/09 -	4162	
TRANSPORTER V Platform/Chassis (7JD, 7JE, 7JL,7JY, 7JZ, 7FD	2.0 BiTDI	132	09/09 -	3841	3842
TRANSPORTER V Platform/Chassis (7JD, 7JE, 7JL,7JY, 7JZ, 7FD	2.0 BiTDI 4motion	132	09/09 -	4162	3842
TRANSPORTER V Platform/Chassis (7JD, 7JE, 7JL,7JY, 7JZ, 7FD	2.0 BiTDI 4motion	132	09/09 -	3841	
TRANSPORTER V Platform/Chassis (7JD, 7JE, 7JL,7JY, 7JZ, 7FD	2.0 TDI	62	09/09 -	3841	3842
TRANSPORTER V Platform/Chassis (7JD, 7JE, 7JL,7JY, 7JZ, 7FD	2.0 TDI	75	09/09 -	3841	3842
TRANSPORTER V Platform/Chassis (7JD, 7JE, 7JL,7JY, 7JZ, 7FD	2.0 TDI	84	05/11 -	3841	3842
TRANSPORTER V Platform/Chassis (7JD, 7JE, 7JL,7JY, 7JZ, 7FD	2.0 TDI	100	05/10 -	3841	3842
TRANSPORTER V Platform/Chassis (7JD, 7JE, 7JL,7JY, 7JZ, 7FD	2.0 TDI	103	09/09 -	3841	3842
TRANSPORTER V Platform/Chassis (7JD, 7JE, 7JL,7JY, 7JZ, 7FD	2.0 TDI 4motion	100	05/10 -	3841	3842
TRANSPORTER V Platform/Chassis (7JD, 7JE, 7JL,7JY, 7JZ, 7FD	2.0 TDI 4motion	103	09/09 -	3841	3842
TRANSPORTER V Platform/Chassis (7JD, 7JE, 7JL,7JY, 7JZ, 7FD	2.0 TSI	110	07/12 -	3841	
TRANSPORTER V Platform/Chassis (7JD, 7JE, 7JL,7JY, 7JZ, 7FD	2.0 TSI	110	07/12 -	4162	3842
TRANSPORTER V Platform/Chassis (7JD, 7JE, 7JL,7JY, 7JZ, 7FD	2.5 TDI	96	04/03 – 11/09	3841/1	3842
TRANSPORTER V Platform/Chassis (7JD, 7JE, 7JL,7JY, 7JZ, 7FD	2.5 TDI	96	04/03 – 11/09	3841	
TRANSPORTER V Platform/Chassis (7JD, 7JE, 7JL,7JY, 7JZ, 7FD	2.5 TDI	128	04/03 – 11/09	3841	
TRANSPORTER V Platform/Chassis (7JD, 7JE, 7JL,7JY, 7JZ, 7FD	2.5 TDI	128	04/03 – 11/09	3841/1	3842
TRANSPORTER V Platform/Chassis (7JD, 7JE, 7JL,7JY, 7JZ, 7FD	2.5 TDI 4motion	96	07/04 – 11/09	3841	
TRANSPORTER V Platform/Chassis (7JD, 7JE, 7JL,7JY, 7JZ, 7FD	2.5 TDI 4motion	96	07/04 – 11/09	3841/1	3842
TRANSPORTER V Platform/Chassis (7JD, 7JE, 7JL,7JY, 7JZ, 7FD	2.5 TDI 4motion	128	04/04 – 11/09	3841/1	
TRANSPORTER V Platform/Chassis (7JD, 7JE, 7JL,7JY, 7JZ, 7FD	2.5 TDI 4motion	128	04/04 – 11/09	3841	3842
TRANSPORTER V Platform/Chassis (7JD, 7JE, 7JL,7JY, 7JZ, 7FD	3.2 V6	170	02/04 – 11/09	3841	3842
TRANSPORTER V Platform/Chassis (7JD, 7JE, 7JL,7JY, 7JZ, 7FD	3.2 V6	170	02/04 – 11/09	3841/1	
TRANSPORTER V Platform/Chassis (7JD, 7JE, 7JL,7JY, 7JZ, 7FD	3.2 V6	173	08/03 – 05/06	3841	3842
TRANSPORTER V Platform/Chassis (7JD, 7JE, 7JL,7JY, 7JZ, 7FD	3.2 V6	173	08/03 – 05/06	3841/1	
TRANSPORTER VI Box (SGA, SGH)	2.0 TDI	62	04/15 -	3841	3842
TRANSPORTER VI Box (SGA, SGH)	2.0 TDI	62	04/15 -	4162	
TRANSPORTER VI Box (SGA, SGH)	2.0 TDI	75	04/15 -	3841	3842
TRANSPORTER VI Box (SGA, SGH)	2.0 TDI	75	04/15 -	4162	
TRANSPORTER VI Box (SGA, SGH)	2.0 TDI	84	05/16 -	3841	3842
TRANSPORTER VI Box (SGA, SGH)	2.0 TDI	84	05/16 -	4162	
TRANSPORTER VI Box (SGA, SGH)	2.0 TDI	103	04/15 -	3841	3842
TRANSPORTER VI Box (SGA, SGH)	2.0 TDI	103	04/15 -	4162	
TRANSPORTER VI Box (SGA, SGH)	2.0 TDI	110	04/15 -	3841	3842
TRANSPORTER VI Box (SGA, SGH)	2.0 TDI	110	04/15 -	4162	
TRANSPORTER VI Box (SGA, SGH)	2.0 TDI	132	04/15 -	3841	3842
TRANSPORTER VI Box (SGA, SGH)	2.0 TDI	132	04/15 -	4162	
TRANSPORTER VI Box (SGA, SGH)	2.0 TDI	150	06/15 -	3841	3842
TRANSPORTER VI Box (SGA, SGH)	2.0 TDI	150	06/15 -	4162	
TRANSPORTER VI Box (SGA, SGH)	2.0 TDI 4motion	103	06/15 -	3841	3842
TRANSPORTER VI Box (SGA, SGH)	2.0 TDI 4motion	103	06/15 -	4162	
TRANSPORTER VI Box (SGA, SGH)	2.0 TDI 4motion	110	08/15 -	3841	3842

MAKE & MODEL   		KW	YEAR		
VW					
TRANSPORTER VI Box (SGA, SGH)	2.0 TDI 4motion	110	08/15 -	4162	
TRANSPORTER VI Box (SGA, SGH)	2.0 TDI 4motion	132	06/15 -	3841	3842
TRANSPORTER VI Box (SGA, SGH)	2.0 TDI 4motion	132	06/15 -	4162	
TRANSPORTER VI Box (SGA, SGH)	2.0 TDI 4motion	150	06/15 -	3841	3842
TRANSPORTER VI Box (SGA, SGH)	2.0 TDI 4motion	150	06/15 -	4162	
TRANSPORTER VI Box (SGA, SGH)	2.0 TSI	110	04/15 -	3841	3842
TRANSPORTER VI Box (SGA, SGH)	2.0 TSI	110	04/15 -	4162	
TRANSPORTER VI Box (SGA, SGH)	2.0 TSI	150	04/15 -	3841	3842
TRANSPORTER VI Box (SGA, SGH)	2.0 TSI	150	04/15 -	4162	
TRANSPORTER VI Box (SGA, SGH)	2.0 TSI 4motion	150	06/15 -	3841	3842
TRANSPORTER VI Box (SGA, SGH)	2.0 TSI 4motion	150	06/15 -	4162	
TRANSPORTER VI Bus (SGB, SGG, SGJ)	2.0 TDI	62	04/15 -	3841	3842
TRANSPORTER VI Bus (SGB, SGG, SGJ)	2.0 TDI	62	04/15 -	4162	
TRANSPORTER VI Bus (SGB, SGG, SGJ)	2.0 TDI	75	04/15 -	3841	3842
TRANSPORTER VI Bus (SGB, SGG, SGJ)	2.0 TDI	75	04/15 -	4162	
TRANSPORTER VI Bus (SGB, SGG, SGJ)	2.0 TDI	84	05/16 -	3841	3842
TRANSPORTER VI Bus (SGB, SGG, SGJ)	2.0 TDI	84	05/16 -	4162	
TRANSPORTER VI Bus (SGB, SGG, SGJ)	2.0 TDI	103	04/15 -	3841	3842
TRANSPORTER VI Bus (SGB, SGG, SGJ)	2.0 TDI	103	04/15 -	4162	
TRANSPORTER VI Bus (SGB, SGG, SGJ)	2.0 TDI	110	04/15 -	3841	3842
TRANSPORTER VI Bus (SGB, SGG, SGJ)	2.0 TDI	110	04/15 -	4162	
TRANSPORTER VI Bus (SGB, SGG, SGJ)	2.0 TDI	132	04/15 -	3841	3842
TRANSPORTER VI Bus (SGB, SGG, SGJ)	2.0 TDI	132	04/15 -	4162	
TRANSPORTER VI Bus (SGB, SGG, SGJ)	2.0 TDI	150	06/15 -	3841	3842
TRANSPORTER VI Bus (SGB, SGG, SGJ)	2.0 TDI	150	06/15 -	4162	
TRANSPORTER VI Bus (SGB, SGG, SGJ)	2.0 TDI 4motion	103	06/15 -	3841	3842
TRANSPORTER VI Bus (SGB, SGG, SGJ)	2.0 TDI 4motion	103	06/15 -	4162	
TRANSPORTER VI Bus (SGB, SGG, SGJ)	2.0 TDI 4motion	110	08/15 -	3841	3842
TRANSPORTER VI Bus (SGB, SGG, SGJ)	2.0 TDI 4motion	110	08/15 -	4162	
TRANSPORTER VI Bus (SGB, SGG, SGJ)	2.0 TDI 4motion	132	06/15 -	3841	3842
TRANSPORTER VI Bus (SGB, SGG, SGJ)	2.0 TDI 4motion	132	06/15 -	4162	
TRANSPORTER VI Bus (SGB, SGG, SGJ)	2.0 TDI 4motion	150	06/15 -	3841	3842
TRANSPORTER VI Bus (SGB, SGG, SGJ)	2.0 TDI 4motion	150	06/15 -	4162	
TRANSPORTER VI Bus (SGB, SGG, SGJ)	2.0 TSI	110	04/15 -	3841	3842
TRANSPORTER VI Bus (SGB, SGG, SGJ)	2.0 TSI	110	04/15 -	4162	
TRANSPORTER VI Bus (SGB, SGG, SGJ)	2.0 TSI	150	04/15 -	3841	3842
TRANSPORTER VI Bus (SGB, SGG, SGJ)	2.0 TSI	150	04/15 -	4162	
TRANSPORTER VI Bus (SGB, SGG, SGJ)	2.0 TSI 4motion	150	06/15 -	3841	3842
TRANSPORTER VI Bus (SGB, SGG, SGJ)	2.0 TSI 4motion	150	06/15 -	4162	
TRANSPORTER VI Panelvan/Van	(SGA, SGH, SHA, SHH) 2.0 TDI	66	10.2019 -	4375	
TRANSPORTER VI Panelvan/Van	(SGA, SGH, SHA, SHH) 2.0 TDI	81	07.2019 -	4375	
TRANSPORTER VI Panelvan/Van	(SGA, SGH, SHA, SHH) 2.0 TDI	146	08.2018 -	4375	
TRANSPORTER VI Panelvan/Van	(SGA, SGH, SHA, SHH) ABT e-Transporter	83	01.2020 -	4375	
TRANSPORTER VI Panelvan/Van (SGA, SGH, SHA, SHH)	2.0 TDI	146	08.2018 -	4375	
TRANSPORTER VI Panelvan/Van (SGA, SGH, SHA, SHH)	2.0 TDI	66	10.2019 -	4375	
TRANSPORTER VI Panelvan/Van (SGA, SGH, SHA, SHH)	2.0 TDI	81	07.2019 -	4375	
TRANSPORTER VI Panelvan/Van (SGA, SGH, SHA, SHH)	ABT e-Transporter	83	01.2020 -	4375	
TRANSPORTER VI Platform şasi	(SFD, SFE, SFL, SFZ, SJD, SJE, 2.0 TDI	66	10.2019 -	4375	
TRANSPORTER VI Platform şasi	(SFD, SFE, SFL, SFZ, SJD, SJE, 2.0 TDI	81	07.2019 -	4375	
TRANSPORTER VI Platform şasi	(SFD, SFE, SFL, SFZ, SJD, SJE, 2.0 TDI	146	08.2019 -	4375	
TRANSPORTER VI Platform şasi (SFD, S	(SFD, SFE, SFL, SFZ, SJD, SJE, 2.0 TDI	146	08.2019 -	4375	
TRANSPORTER VI Platform şasi (SFD, SFE, SFL, SFZ, SJD, SJE)	2.0 TDI	146	08.2019 -	4375	
TRANSPORTER VI Platform şasi (SFD, SFE, SFL, SFZ, SJD, SJE)	2.0 TDI	66	10.2019 -	4375	
TRANSPORTER VI Platform şasi (SFD, SFE, SFL, SFZ, SJD, SJE)	2.0 TDI	81	07.2019 -	4375	
TRANSPORTER VI Platform şasi (SFD, SFE, SFL, SFZ, SJD, SJE)	2.0 TDI 4motion	146	08.2019 -	4375	
TRANSPORTER VI Platform/Chassis (SFD, SFE, SFL,SFZ)	2.0 TDI	62	04/15 -	3841	3842
TRANSPORTER VI Platform/Chassis (SFD, SFE, SFL,SFZ)	2.0 TDI	62	04/15 -	4162	
TRANSPORTER VI Platform/Chassis (SFD, SFE, SFL,SFZ)	2.0 TDI	75	04/15 -	3841	3842
TRANSPORTER VI Platform/Chassis (SFD, SFE, SFL,SFZ)	2.0 TDI	75	04/15 -	4162	
TRANSPORTER VI Platform/Chassis (SFD, SFE, SFL,SFZ)	2.0 TDI	84	05/16 -	3841	3842
TRANSPORTER VI Platform/Chassis (SFD, SFE, SFL,SFZ)	2.0 TDI	84	05/16 -	4162	
TRANSPORTER VI Platform/Chassis (SFD, SFE, SFL,SFZ)	2.0 TDI	103	04/15 -	3841	3842
TRANSPORTER VI Platform/Chassis (SFD, SFE, SFL,SFZ)	2.0 TDI	103	04/15 -	4162	
TRANSPORTER VI Platform/Chassis (SFD, SFE, SFL,SFZ)	2.0 TDI	110	08/15 -	3841	3842
TRANSPORTER VI Platform/Chassis (SFD, SFE, SFL,SFZ)	2.0 TDI	110	08/15 -	4162	
TRANSPORTER VI Platform/Chassis (SFD, SFE, SFL,SFZ)	2.0 TDI	132	04/15 -	3841	3842
TRANSPORTER VI Platform/Chassis (SFD, SFE, SFL,SFZ)	2.0 TDI	132	04/15 -	4162	
TRANSPORTER VI Platform/Chassis (SFD, SFE, SFL,SFZ)	2.0 TDI	150	05/16 -	3841	3842
TRANSPORTER VI Platform/Chassis (SFD, SFE, SFL,SFZ)	2.0 TDI	150	05/16 -	4162	
TRANSPORTER VI Platform/Chassis (SFD, SFE, SFL,SFZ)	2.0 TDI 4motion	103	06/15 -	4162	3842
TRANSPORTER VI Platform/Chassis (SFD, SFE, SFL,SFZ)	2.0 TDI 4motion	103	06/15 -	3841	
TRANSPORTER VI Platform/Chassis (SFD, SFE, SFL,SFZ)	2.0 TDI 4motion	110	05/16 -	4162	3842
TRANSPORTER VI Platform/Chassis (SFD, SFE, SFL,SFZ)	2.0 TDI 4motion	110	05/16 -	3841	
TRANSPORTER VI Platform/Chassis (SFD, SFE, SFL,SFZ)	2.0 TDI 4motion	132	06/15 -	4162	3842
TRANSPORTER VI Platform/Chassis (SFD, SFE, SFL,SFZ)	2.0 TDI 4motion	132	06/15 -	3841	
TRANSPORTER VI Platform/Chassis (SFD, SFE, SFL,SFZ)	2.0 TSI	110	04/15 -	4162	3842

MAKE & MODEL   		KW	YEAR		
VW					
TRANSPORTER VI Platform/Chassis (SFD, SFE, SFL,SFZ)	2.0 TSI	110	04/15 -	3841	
UP	1.0	44	08/11 -	3782/1	
UP	1.0	55	08/11 -	3782/1	
UP	1.0 EcoFuel	50	11/12 -	3782/1	
UP	e-Up	60	07/13 -	3782	
VENTO (1H2)	1.4	40	11.1991 - 09.1998	3444/1	
VENTO (1H2)	1.4	44	11.1991 - 09.1998	3444/1	
VENTO (1H2)	1.6	55	09.1992 - 09.1998	3444/1	
VENTO (1H2)	1.8	55	11.1991 - 09.1998	3444/1	
VENTO (1H2)	1.8	66	11.1991 - 09.1998	3444/1	
VENTO (1H2)	1.9 D	48	11.1991 - 09.1998	3444/1	
VENTO (1H2)	1.9 TD	55	11.1991 - 09.1998	3444/1	
VENTO (1H2)	1.0 Flex	56	07/08 -	3566	
VENTO (1H2)	1.4	40	11/91 – 09/98	3444	
VENTO (1H2)	1.4	40	11/91 – 09/98	3538	
VENTO (1H2)	1.4	40	11/91 – 09/98	3585	
VENTO (1H2)	1.4	44	11/91 – 09/98	3444	
VENTO (1H2)	1.4	44	11/91 – 09/98	3538	
VENTO (1H2)	1.4	44	11/91 – 09/98	3585	
VENTO (1H2)	1.6	55	09/92 – 09/98	3444	
VENTO (1H2)	1.6	55	09/92 – 09/98	3538	
VENTO (1H2)	1.6	55	09/92 – 09/98	3551	
VENTO (1H2)	1.6	55	09/92 – 09/98	3585	
VENTO (1H2)	1.6	74	10/94 – 09/98	3531	3529
VENTO (1H2)	1.6	74	10/94 – 09/98	3551	
VENTO (1H2)	1.6 Flex	74	07/08 -	3566	
VENTO (1H2)	1.8	55	11/91 – 09/98	3444	
VENTO (1H2)	1.8	55	11/91 – 09/98	3538	
VENTO (1H2)	1.8	55	11/91 – 09/98	3551	
VENTO (1H2)	1.8	55	11/91 – 09/98	3585	
VENTO (1H2)	1.8	66	11/91 – 09/98	3444	3529
VENTO (1H2)	1.8	66	11/91 – 09/98	3531	
VENTO (1H2)	1.8	66	11/91 – 09/98	3551	
VENTO (1H2)	1.8	66	11/91 – 09/98	3585	
VENTO (1H2)	1.9 D	48	11/91 – 09/98	3444	
VENTO (1H2)	1.9 D	48	11/91 – 09/98	3538	
VENTO (1H2)	1.9 D	48	11/91 – 09/98	3585	
VENTO (1H2)	1.9 D	48	11/91 – 09/98	3637	
VENTO (1H2)	1.9 SDI	47	04/97 – 09/98	3538	
VENTO (1H2)	1.9 SDI	47	04/97 – 09/98	3637	
VENTO (1H2)	1.9 TD	55	11/91 – 09/98	3444	
VENTO (1H2)	1.9 TD	55	11/91 – 09/98	3551	
VENTO (1H2)	1.9 TD	55	11/91 – 09/98	3585	
VENTO (1H2)	1.9 TDI	66	09/93 – 09/98	3531	3529
VENTO (1H2)	1.9 TDI	66	09/93 – 09/98	3551	
VENTO (1H2)	1.9 TDI	81	04/96 – 09/98	3531	3529/1
VENTO (1H2)	2.0	85	11/91 – 09/98	3531	3529
VENTO (1H2)	2.0	85	11/91 – 09/98	3551	3529/1
VENTO (1H2)	2.0 GL	62	11/91 – 07/98	3531	3529
VENTO (1H2)	2.0 GL	62	11/91 – 07/98	3551	3529/1
VENTO (1H2)	2.0 GL	79	05/96 – 12/97		3529
VENTO (1H2)	2.0 GL	79	05/96 – 12/97		3529/1
VENTO (1H2)	2.8 VR6	120	08/95 – 04/96		3529
VENTO (1H2)	2.8 VR6	128	01/92 – 09/98		3529
VOYAGE	2.8 VR6	120	08/95 – 04/96		3529/1
VOYAGE	2.8 VR6	128	01/92 – 09/98		3529/1
VW (FAW)					
CC	1.8	118	07/10 -	3904	
CC	2.0	147	07/10 -	3904	
GOLF V (1K1)	1.4 TSI	96	08/09 – 12/14	3904	
GOLF V (1K1)	1.6	77	08/09 -	3904	
GOLF V (1K1)	2.0 TSI	147	03/10 -	3904	
MAGOTAN (B6)	1.4 TSI	96	01/10 – 07/11	3904	
MAGOTAN (B6)	1.8 TSI	118	06/07 – 07/11	3904	
MAGOTAN (B6)	2.0	85	06/07 – 04/08	3904	
MAGOTAN (B6)	2.0 TSi	147	04/08 – 07/11	3904	
SAGITAR	1.4 TSI	96	09/09 -	3904	
SAGITAR	1.6	74	02/06 – 12/12	3904	
SAGITAR	1.8 TSI	118	07/08 -	3904	
SAGITAR	1.8 TURBO	110	04/06 – 04/08	3904	
SAGITAR	2.0	85	04/06 – 06/09	3904	
VW (SVW)					
PASSAT LINGYU Saloon (B5)	1.8	120	01/09 – 04/09		3529/1
PASSAT LINGYU Saloon (B5)	1.8 T	110	11/05 – 04/09		3529/1
PASSAT LINGYU Saloon (B5)	2.0	85	04/06 – 04/09		3529/1
PASSAT LINGYU Saloon (B5)	2.8	140	11/05 – 04/09		3529/1

MAKE & MODEL		KW	YEAR		
WARTBURG					
353	1.0	33	06/66 – 04/69	3404	
353	1.0	37	02/75 – 01/89	3404	
353	1.0	37	04/69 – 02/75	3404	
353 Tourist	1.0	37	04/69 – 02/75	3404	
353 Tourist	1.0 (353 W 000)	37	02/75 – 08/88	3404	
353 Tourist	1.3	43	09/88 – 05/91	3404	
WIESMANN					
MF3 Roadster	3.2	236	01/96 -	3564/1	3578
MF3 Roadster	3.2	252	07/03 -	3564/1	3578
WULING					
DRAGON LZ Pickup	0.8	29	08/98 – 07/05	3380	
DRAGON LZ Pickup	0.8	29	08/98 – 07/05	3381	
DRAGON LZ Pickup	0.8	29	08/98 – 07/05	3474	
DRAGON LZ Pickup	0.8	29	08/98 – 07/05	3580	
YUGO					
311 / 411	1.1	41	04/83 – 04/91	3316	
511 / 513	1.1	41	04/83 – 04/91	3316	
SANA	1.4	52	10/89 – 10/93	3432	
SANA	1.4	52	10/89 – 10/93	3491	
TEMPO	0.9	33	05/91 – 12/93	3316	
TEMPO	1.1	41	06/85 – 07/93	3316	
ZASTAVA					
10 (188)	1.2 60	44	10/05 -	3608	
10 (188)	1.2 60	44	10/05 -	3643	
YUGO	0.9	33	04/80 – 06/92	3432	
YUGO	0.9	33	04/80 – 06/92	3491	
YUGO	60 EFI (145 A)	44	08/91 – 06/95	3432	
YUGO	60 EFI (145 A)	44	08/91 – 06/95	3491	
YUGO	65 EFI (145 A)	48	08/91 – 06/95	3432	
YUGO	65 EFI (145 A)	48	08/91 – 06/95	3491	
YUGO FLORIDA	1.1	44	08/89 -	3432	
YUGO FLORIDA	1.1	44	08/89 -	3491	
YUGO FLORIDA	1.3 (103 A)	50	03/91 -	3432	
YUGO FLORIDA	1.3 (103 A)	50	03/91 -	3491	
YUGO FLORIDA	1.4	52	10/88 – 06/95	3432	
YUGO FLORIDA	1.4	52	10/88 – 06/95	3491	
YUGO FLORIDA	1.4 CAT	52	10/88 -	3432	
YUGO FLORIDA	1.4 CAT	52	10/88 -	3491	
YUGO FLORIDA	1.6	62	08/89 – 06/95	3432	
YUGO FLORIDA	1.6	62	08/89 – 06/95	3491	
ZAZ					
LANOS Hatchback	1.1	37	01/89 -	3422	
LANOS Hatchback	1.1	37	01/89 -	3552	
LANOS Hatchback	1.2	42	01/98 -	3422	
LANOS Hatchback	1.2	42	01/98 -	3552	
LANOS Hatchback	1.3	44	01/89 -	3422	
LANOS PICK-UP	1.3	44	01/89 -	3552	
LANOS PICK-UP	1.4	55	10/04 -	3623	
LANOS Saloon	1.5	63	10/04 -	3623	
TAVRIA (1102)	1.6 16V	78	10/04 -	3470	
TAVRIA (1102)	1.6 16V	78	10/04 -	3505	
TAVRIA (1102)	1.6 16V	78	10/04 -	3615	

BRAKE PAD ILLUSTRATIONS

ABARTH

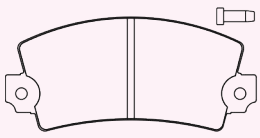
3329/1

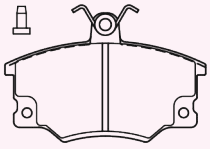
3466

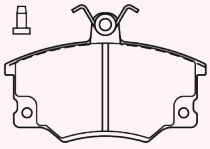
3468

ACURA

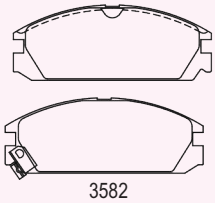
3582

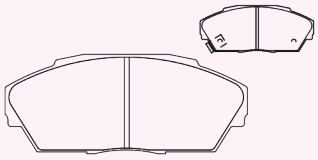
3631

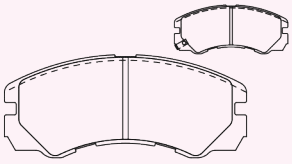
3674

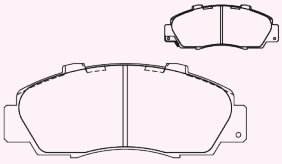
3704

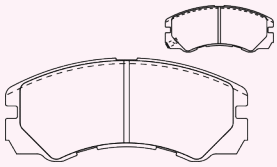
3743

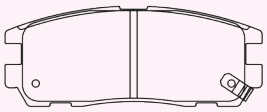
3887

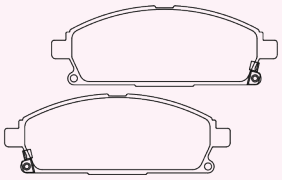
3932

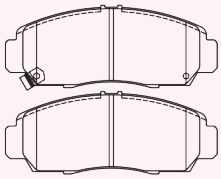
4109

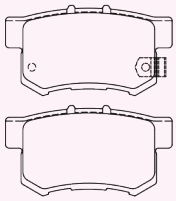
4148

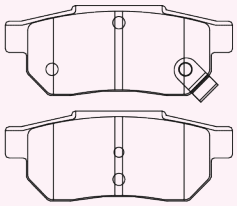
4212

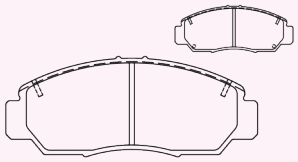
4232

AIXAM

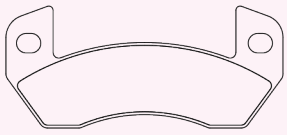
3747

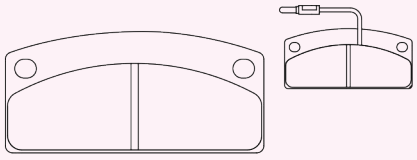
3748

ALFA ROMEO

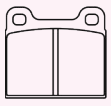
3318

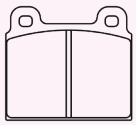
3320

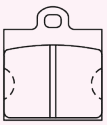
3325

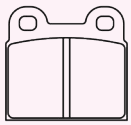
3326

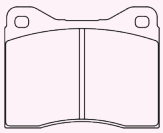
3331

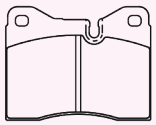
3331/1

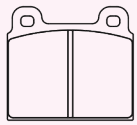
3350

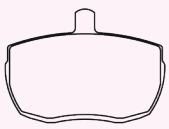
3423

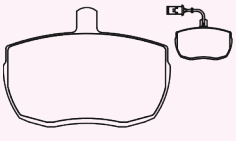
3423/1

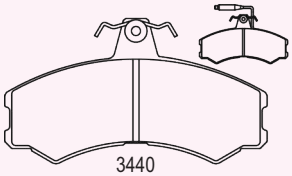
3440

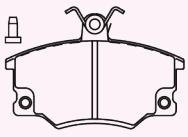
3466

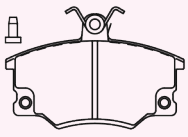
3468

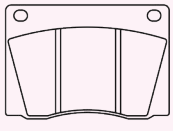
3471

ALFA ROMEO

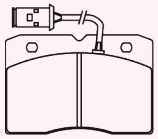
3523

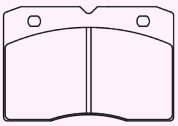
3524

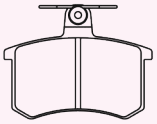
3536

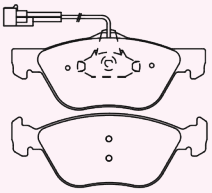
3617

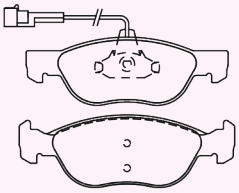
3618

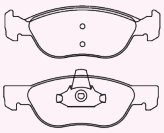
3618/1

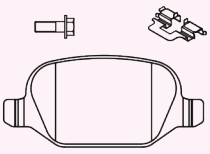
4123

ALPINA

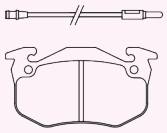
3587

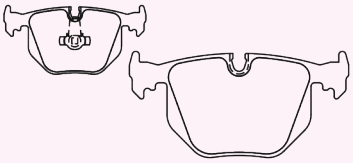
3879

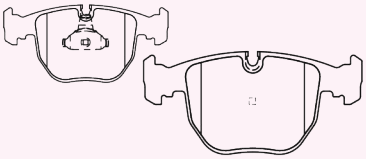
3881

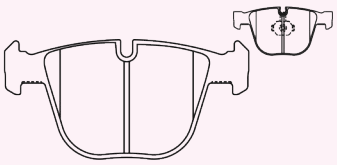
4179

ALPINE

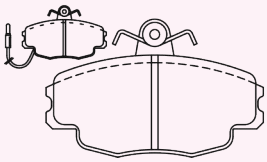
3431

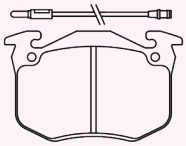
3442

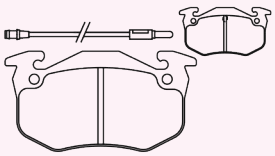
3492

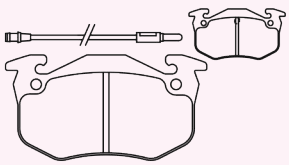
3493

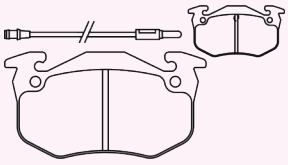
3494

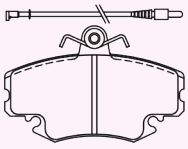
3503

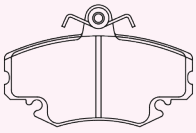
3503/1

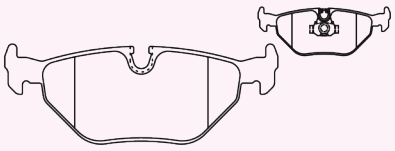
3656

ASIA MOTORS

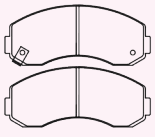
3574

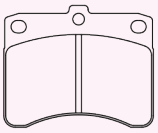
3746

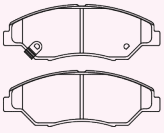
4009

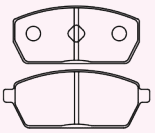
4034

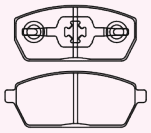
4034/1

ASTON MARTIN

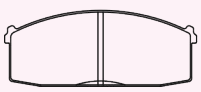
3370

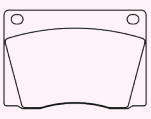
3455

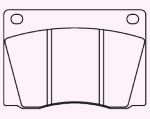
3471

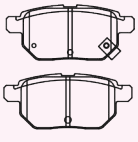
3954

AUDI

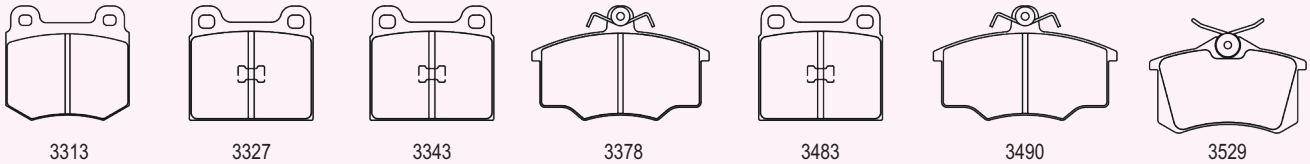
3313 3327 3343 3378 3483 3490 3529

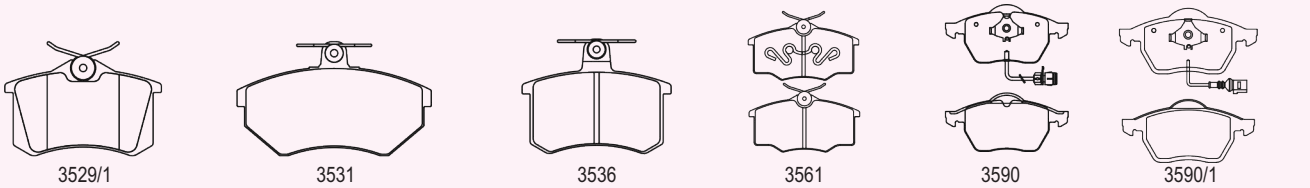
3529/1 3531 3536 3561 3590 3590/1

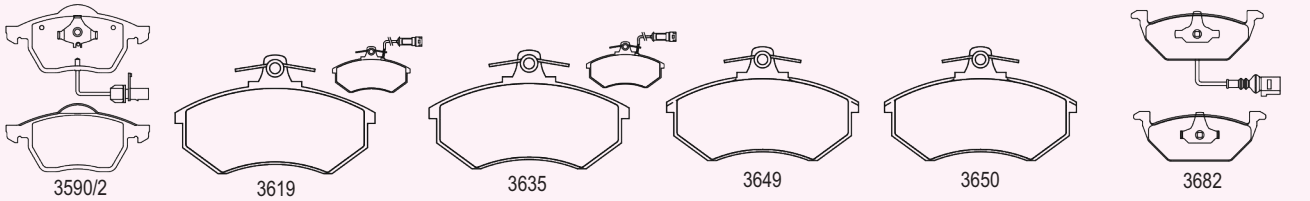
3590/2 3619 3635 3649 3650 3682

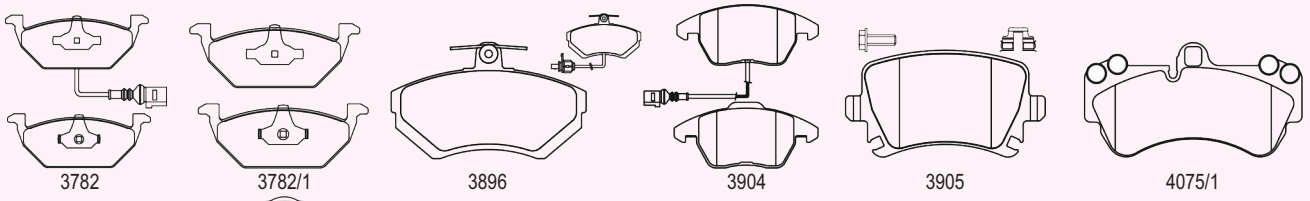
3782 3782/1 3896 3904 3905 4075/1

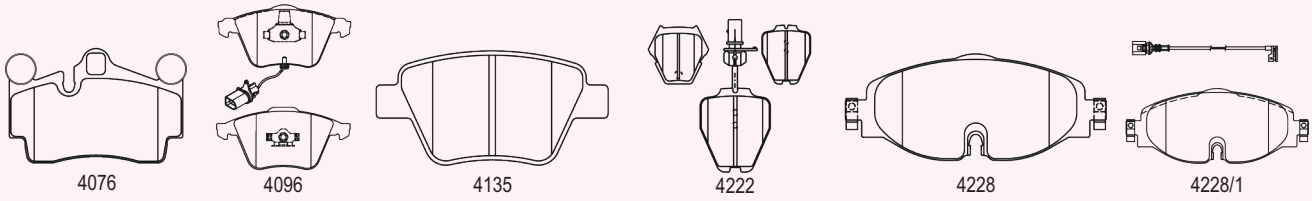
4076 4096 4135 4222 4228 4228/1

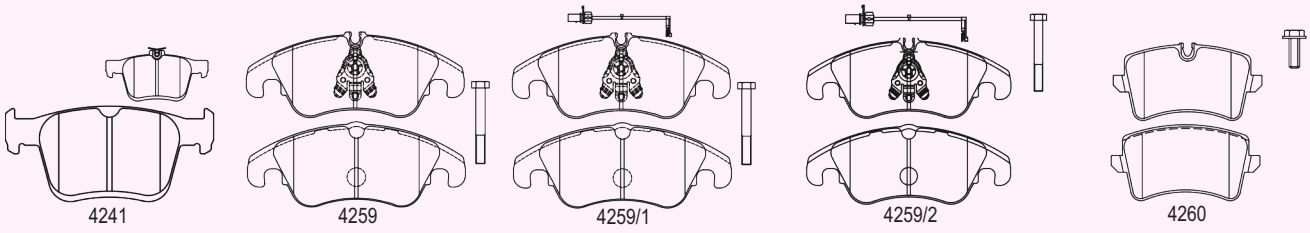
4241 4259 4259/1 4259/2 4260

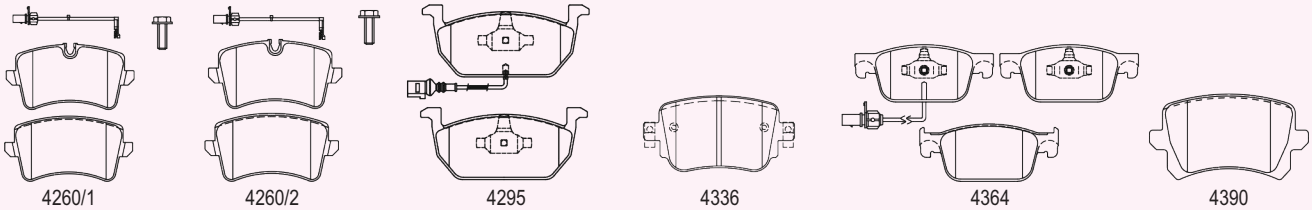
4260/1 4260/2 4295 4336 4364 4390

AUSTIN

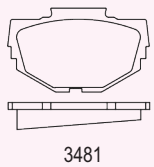
3481

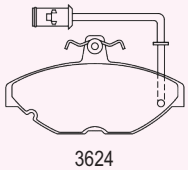
3624

AUTO UNION

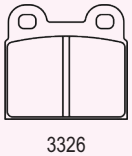
3326

AUTOBIANCHI

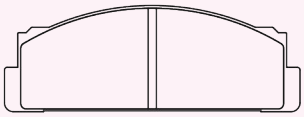
3316

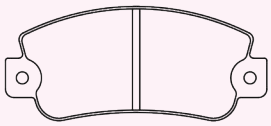
3424

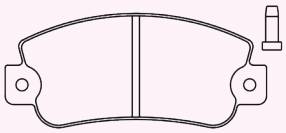
3424/1

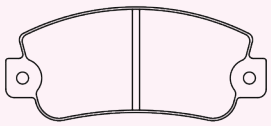
3439

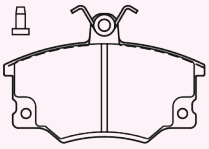
3468

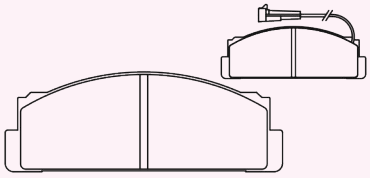
3485

BEDFORD

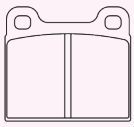
3318

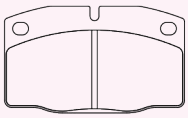
3410

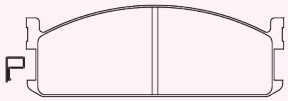
3462

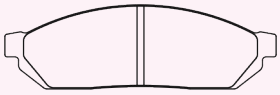
3509

BENTLEY

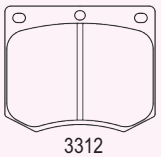
3312

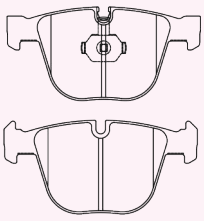
4179

BERTONE

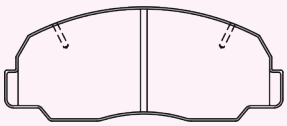
3436

BMC

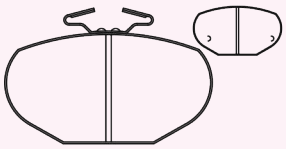
3443

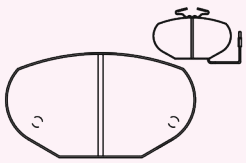
3456

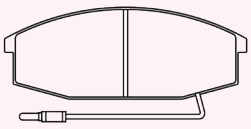
3708

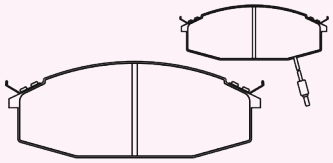
3708/1

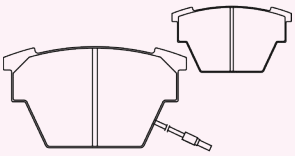
3871

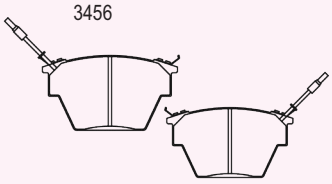
3871/1

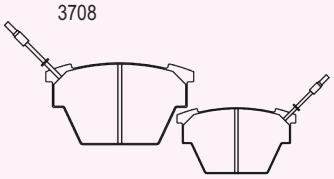
3871/2

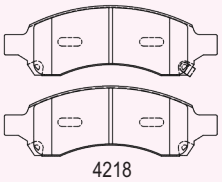
4218

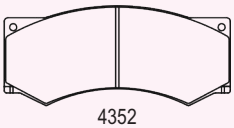
4352

BMW

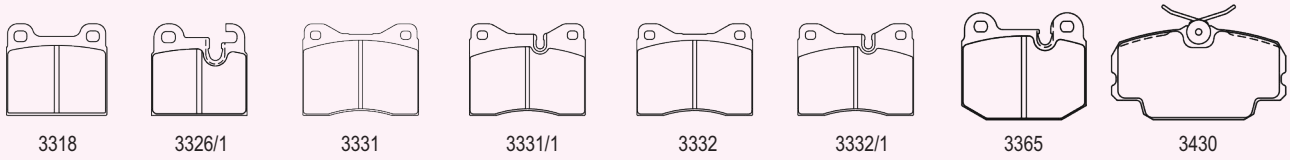
3318
3326/1
3331
3331/1
3332
3332/1
3365
3430

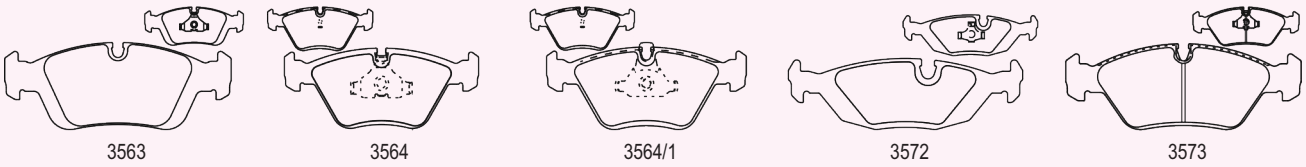
3563
3564
3564/1
3572
3573

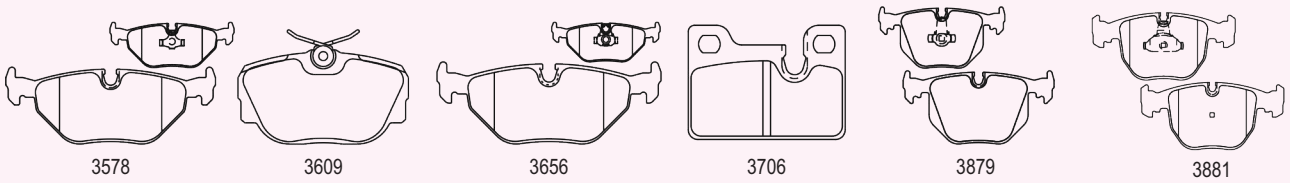
3578
3609
3656
3706
3879
3881

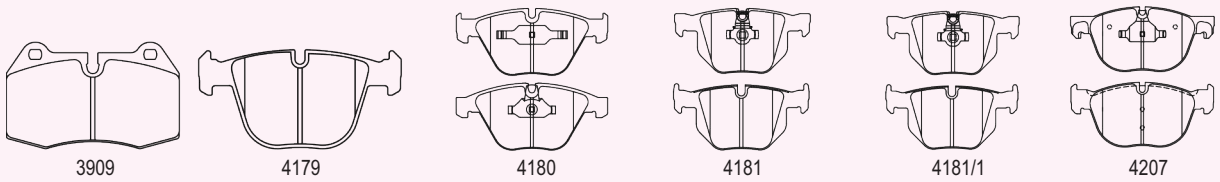
3909
4179
4180
4181
4181/1
4207

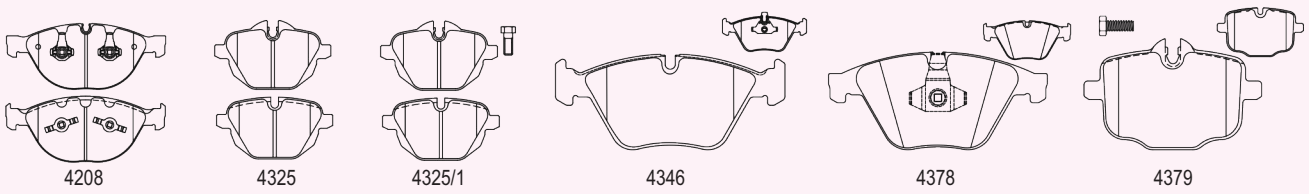
4208
4325
4325/1
4346
4378
4379

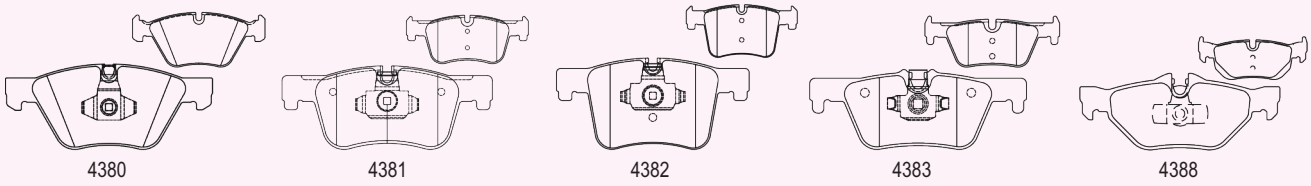
4380
4381
4382
4383
4388

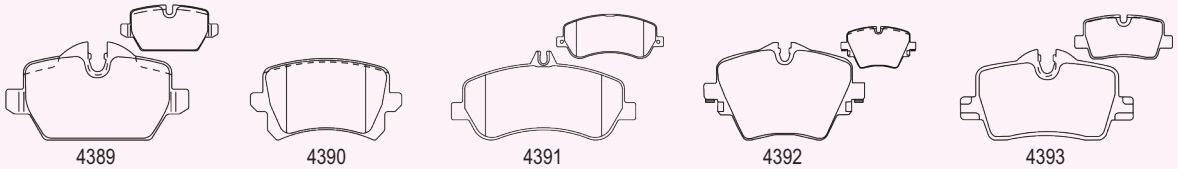
4389
4390
4391
4392
4393

BUICK

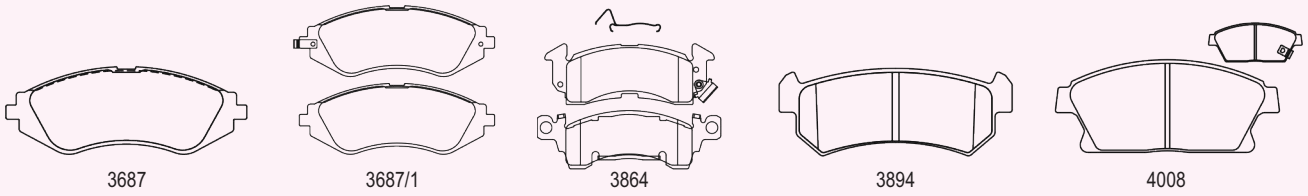
3687
3687/1
3864
3894
4008

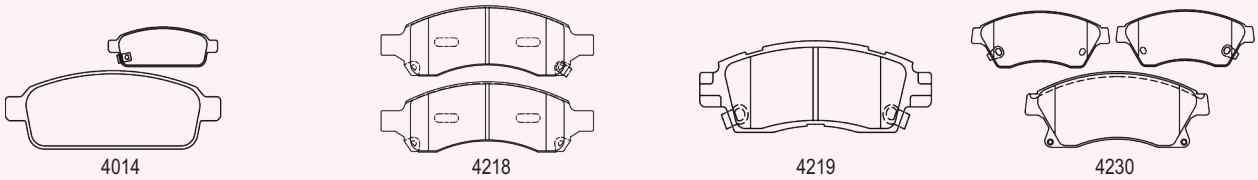
4014
4218
4219
4230

BYD

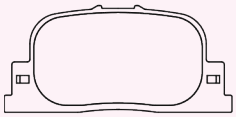
3876

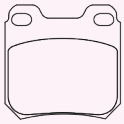
3717

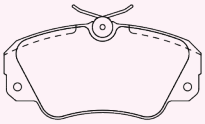
3733

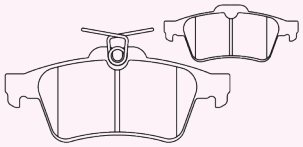
3853/1

CADILLAC

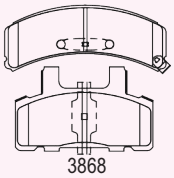
3868

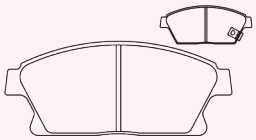
4008

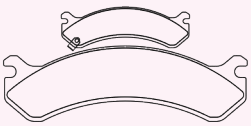
4021

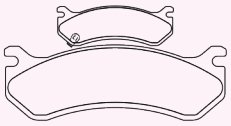
4022

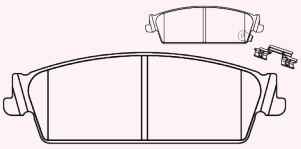
4184

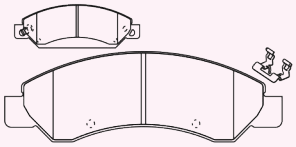
4185

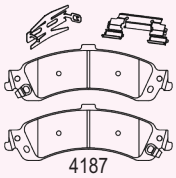
4187

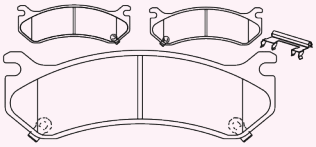
4190

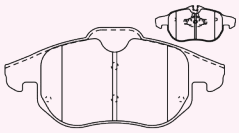
4211

CARBODIES

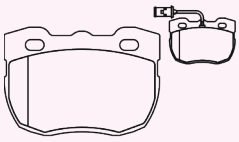
3662

CHANGFENG

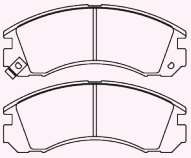
3685

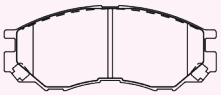
3809

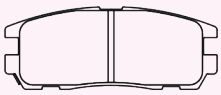
3887

CHERY

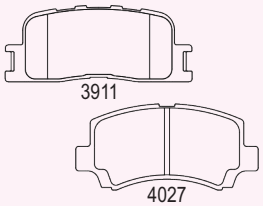
3911
4027

CHEVROLET

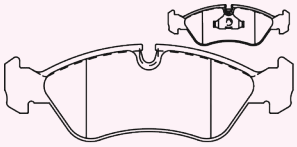
3470

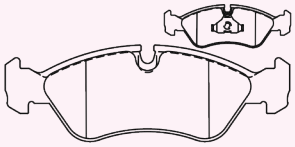
3505

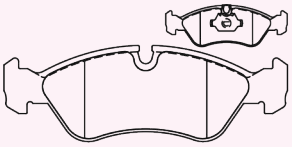
3615

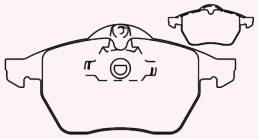
3665

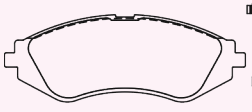
3687

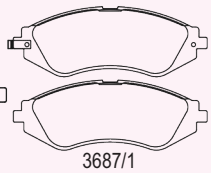
3687/1

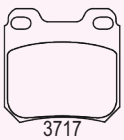
3717

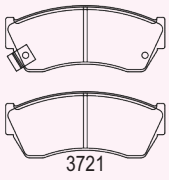
3721

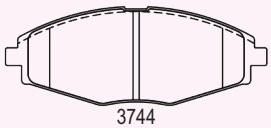
3744

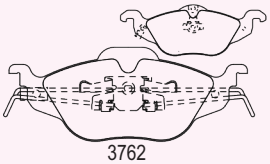
3762

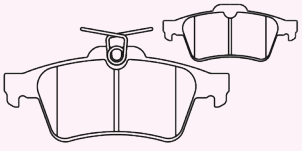
3853/1

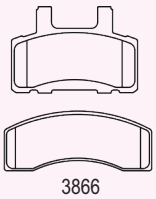
3866

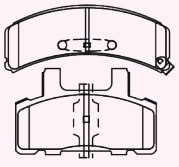
3868

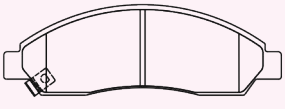
3886

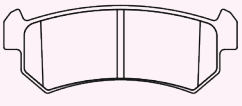
3894

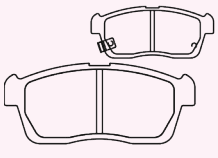
3928

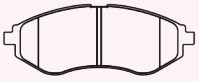
3951

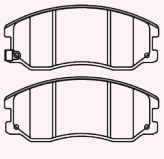
3976

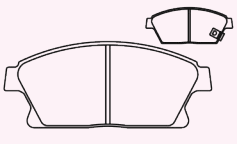
4008

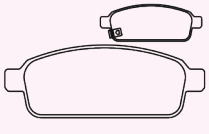
4014

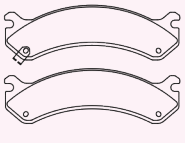
4021

CHEVROLET

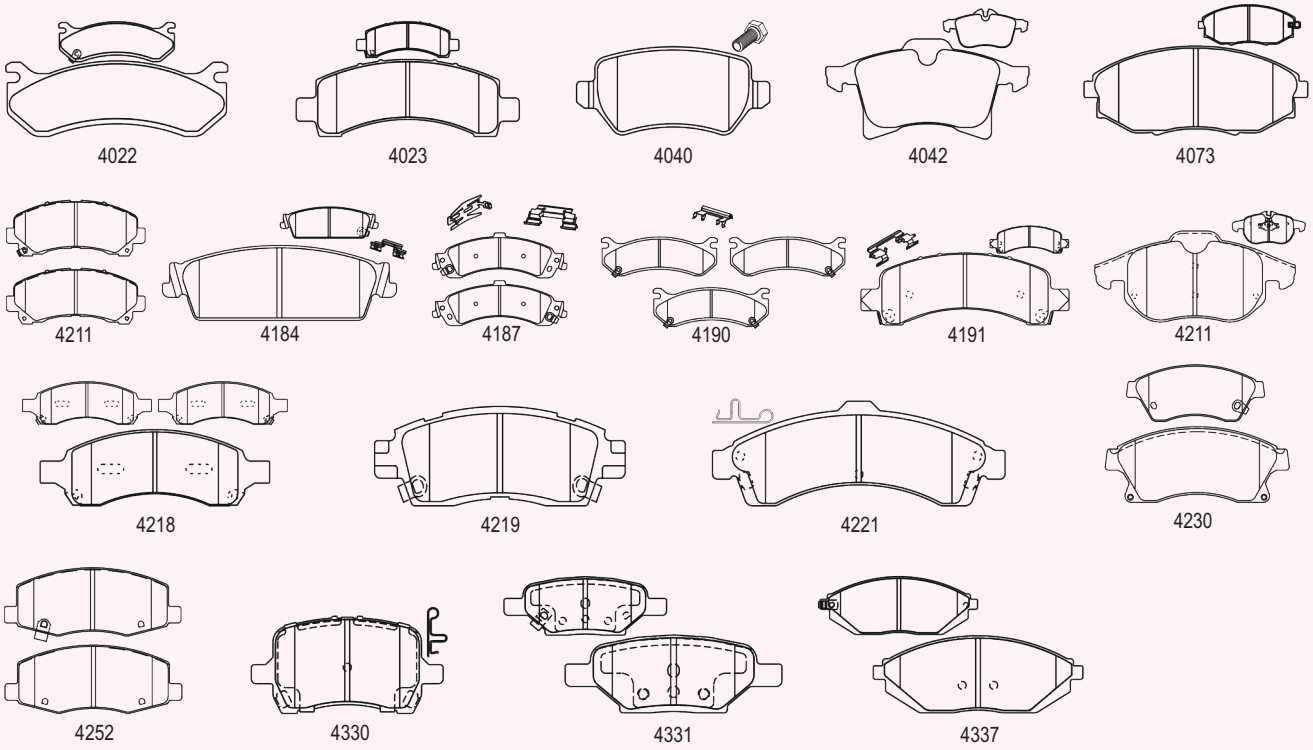

CHRYSLER

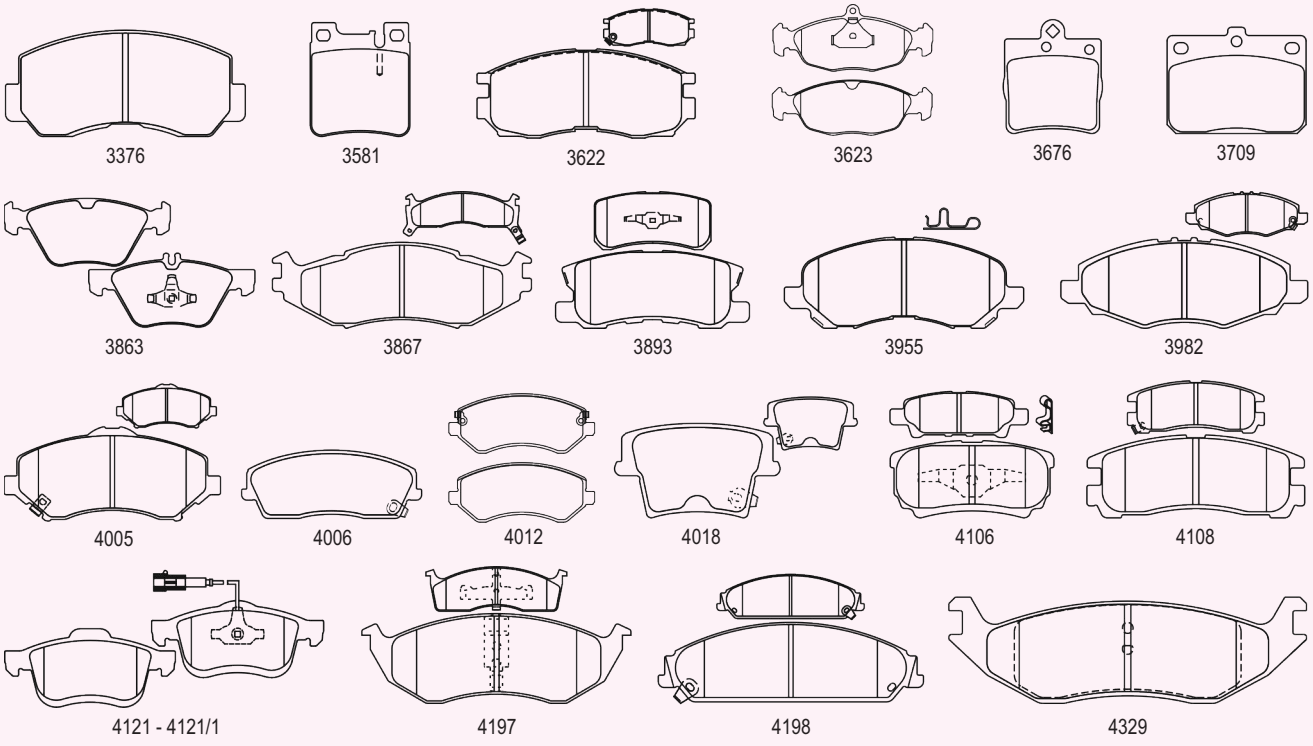

CITROËN

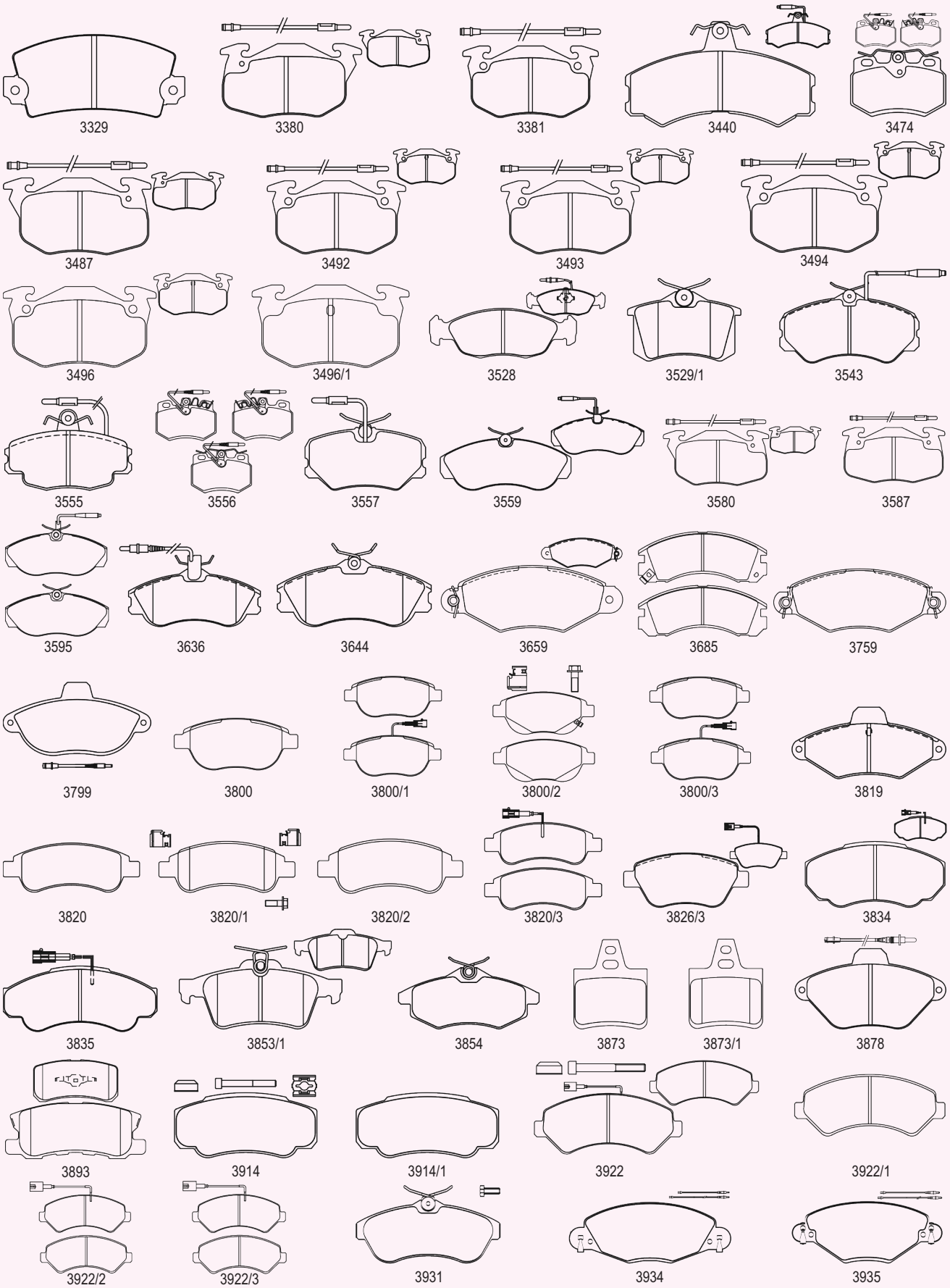
3329
3380
3381
3440
3474
3487
3492
3493
3494
3496
3496/1
3528
3529/1
3543
3555
3556
3557
3559
3580
3587
3595
3636
3644
3659
3685
3759
3799
3800
3800/1
3800/2
3800/3
3819
3820
3820/1
3820/2
3820/3
3826/3
3834
3835
3853/1
3854
3873
3873/1
3878
3893
3914
3914/1
3922
3922/1
3922/2
3922/3
3931
3934
3935

CITROËN

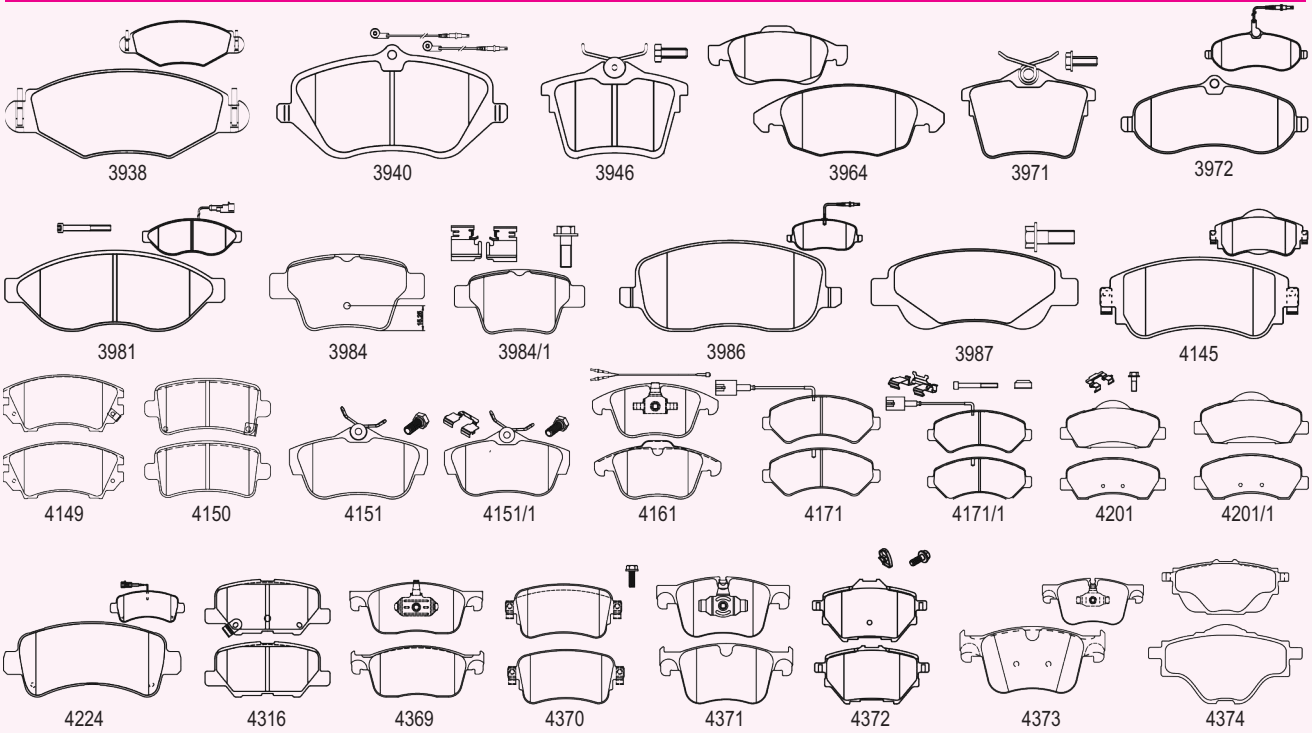

CELICA

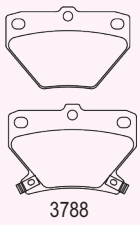

DACIA

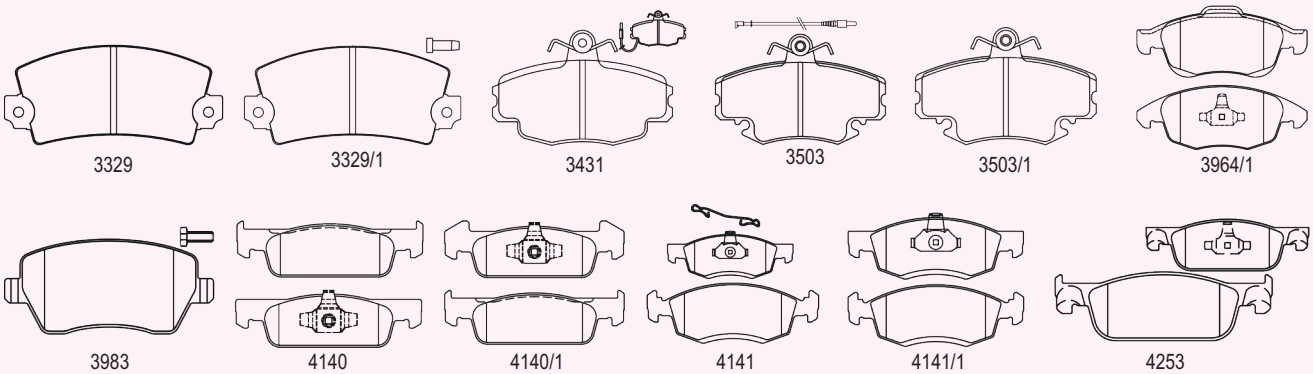

DAEWOO

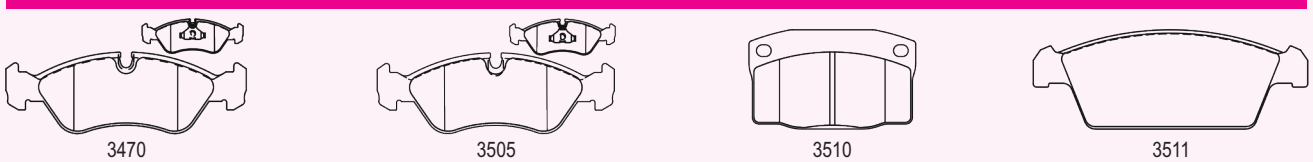

DAEWOO

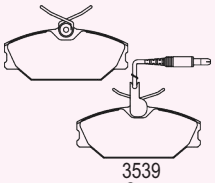
3539

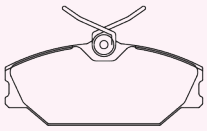
3539/1

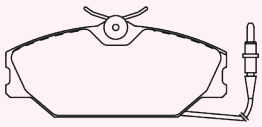
3546

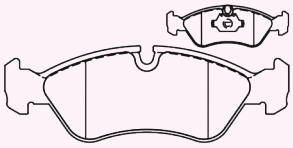
3615

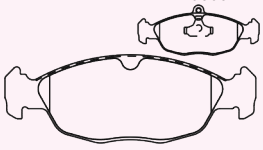
3623

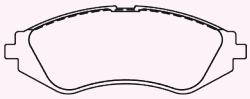
3687

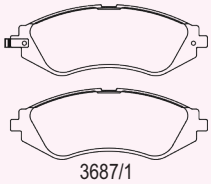
3687/1

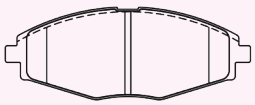
3744

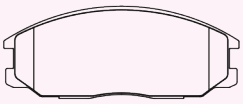
3843

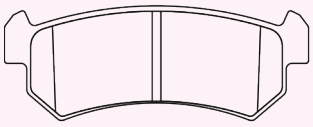
3894

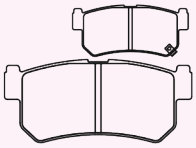
3895

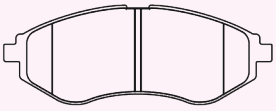
3951

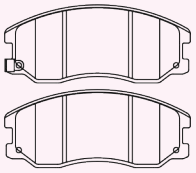
3976

DAF

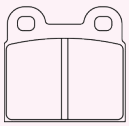
3326

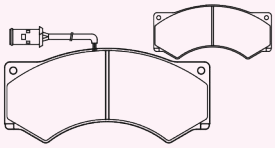
3433

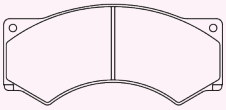
3433/1

DAIHATSU

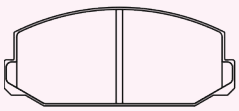
3314

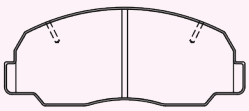
3436

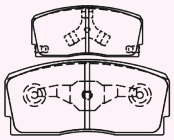
3600

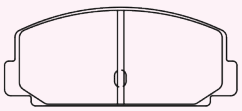
3601

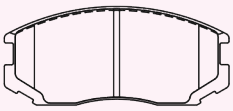
3604

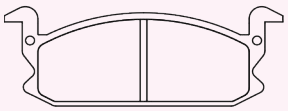
3620

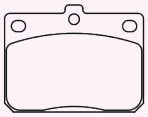
3709

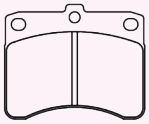
3746

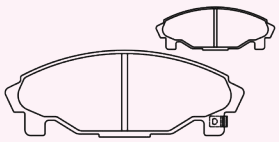
3898

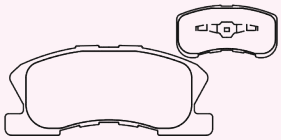
3901

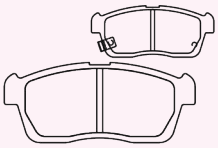
3928

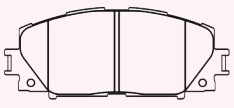
3958

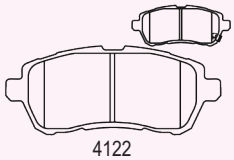
4122

DAIMLER

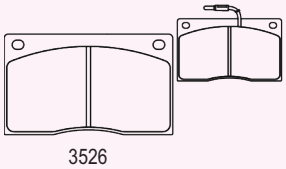
3526

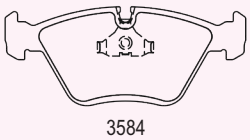
3584

DALLAS

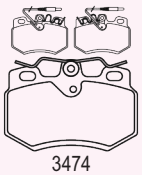
3474

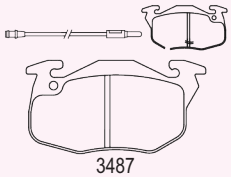
3487

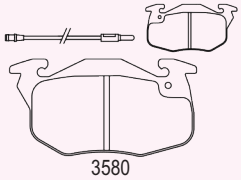
3580

DODGE

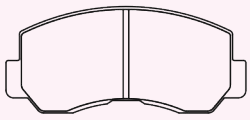
3376


3670

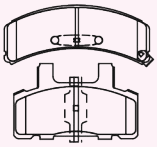
3868

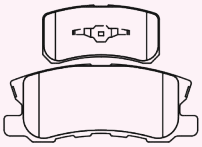
3893

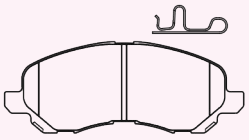
3955

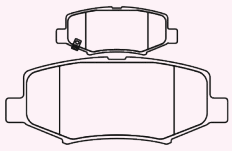
4004

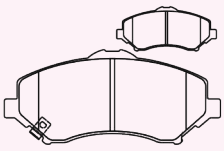
4005

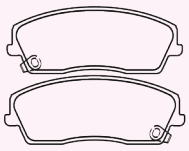
4006

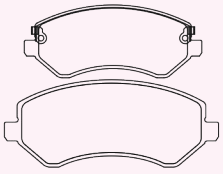
4012

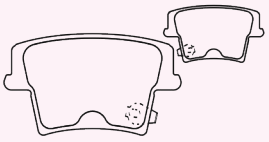
4018

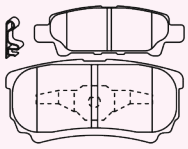
4106

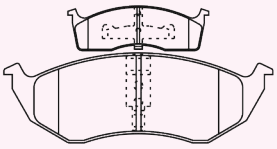
4197

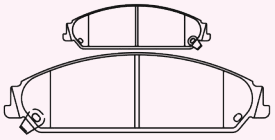
4198

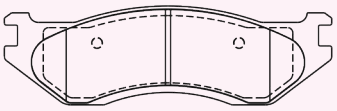
4327

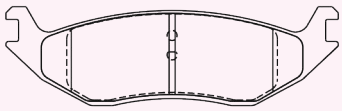
4329

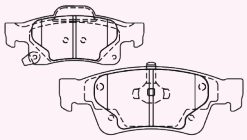
4339

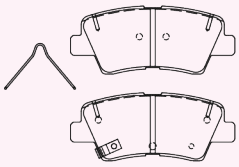
4343

DR

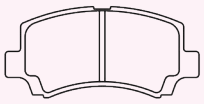
4027

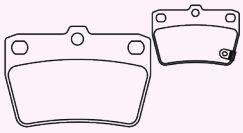
4153

DS


3529/1

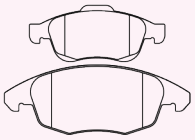
3964

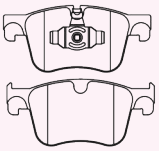
4371

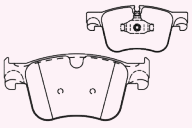
4373

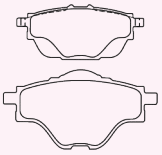
4374

DFSK / EUNOS / FENGXING (DONGFENG)

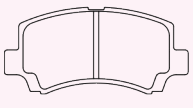
4027

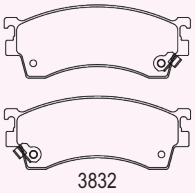
3832

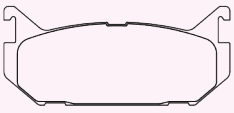
3833

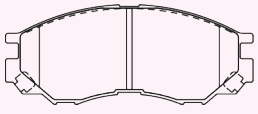
3809

FERRARI

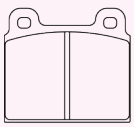
3320

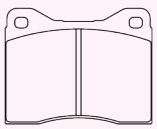
3331

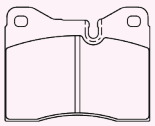
3331/1

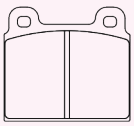
3350

FIAT

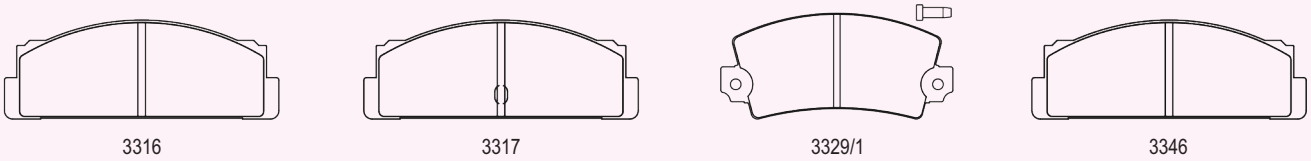
3316 3317 3329/1 3346

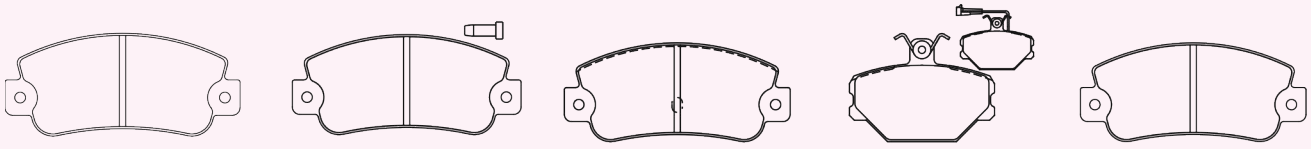
3424 3424/1 3425 3432 3439

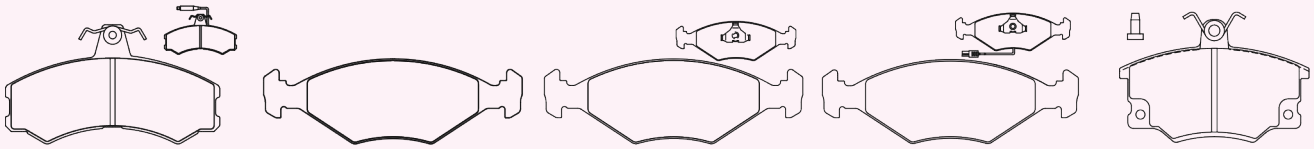
3440 3458 3459 3461 3466

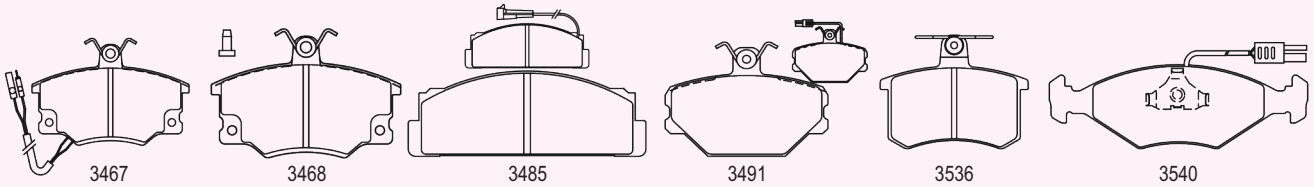
3467 3468 3485 3491 3536 3540

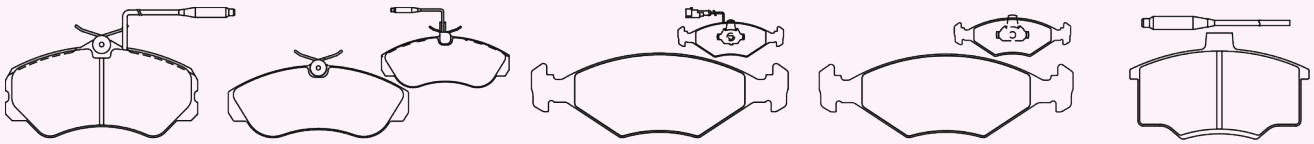
3543 3559 3568 3569 3586

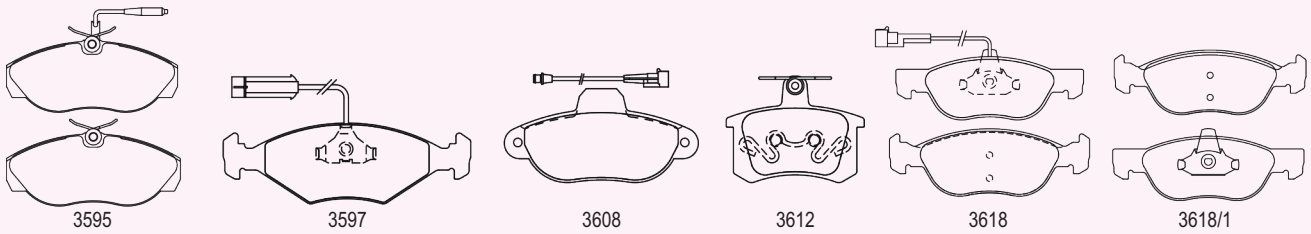
3595 3597 3608 3612 3618 3618/1

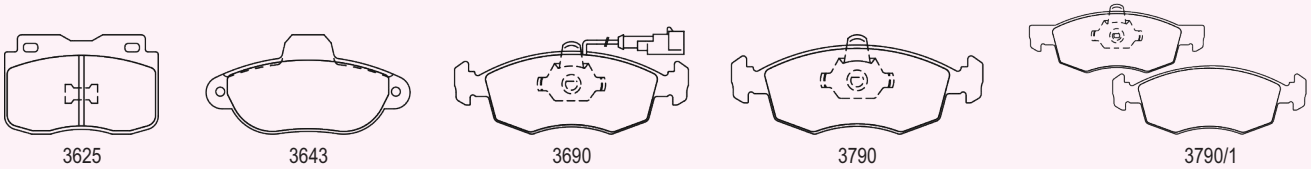
3625 3643 3690 3790 3790/1

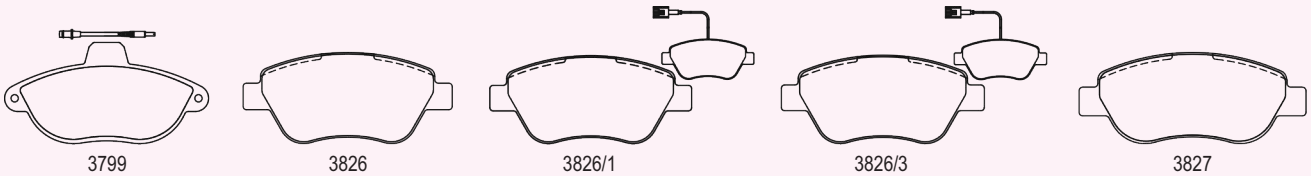
3799 3826 3826/1 3826/3 3827

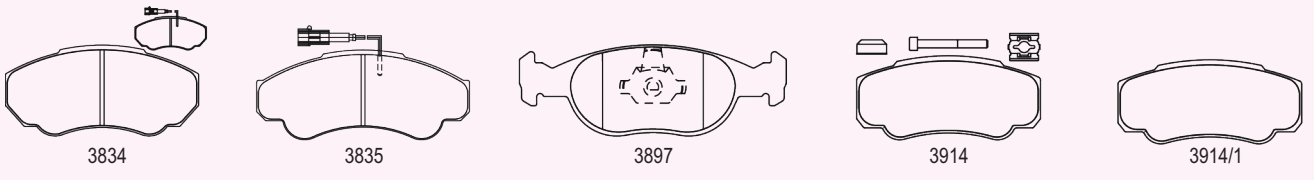
3834 3835 3897 3914 3914/1

FIAT

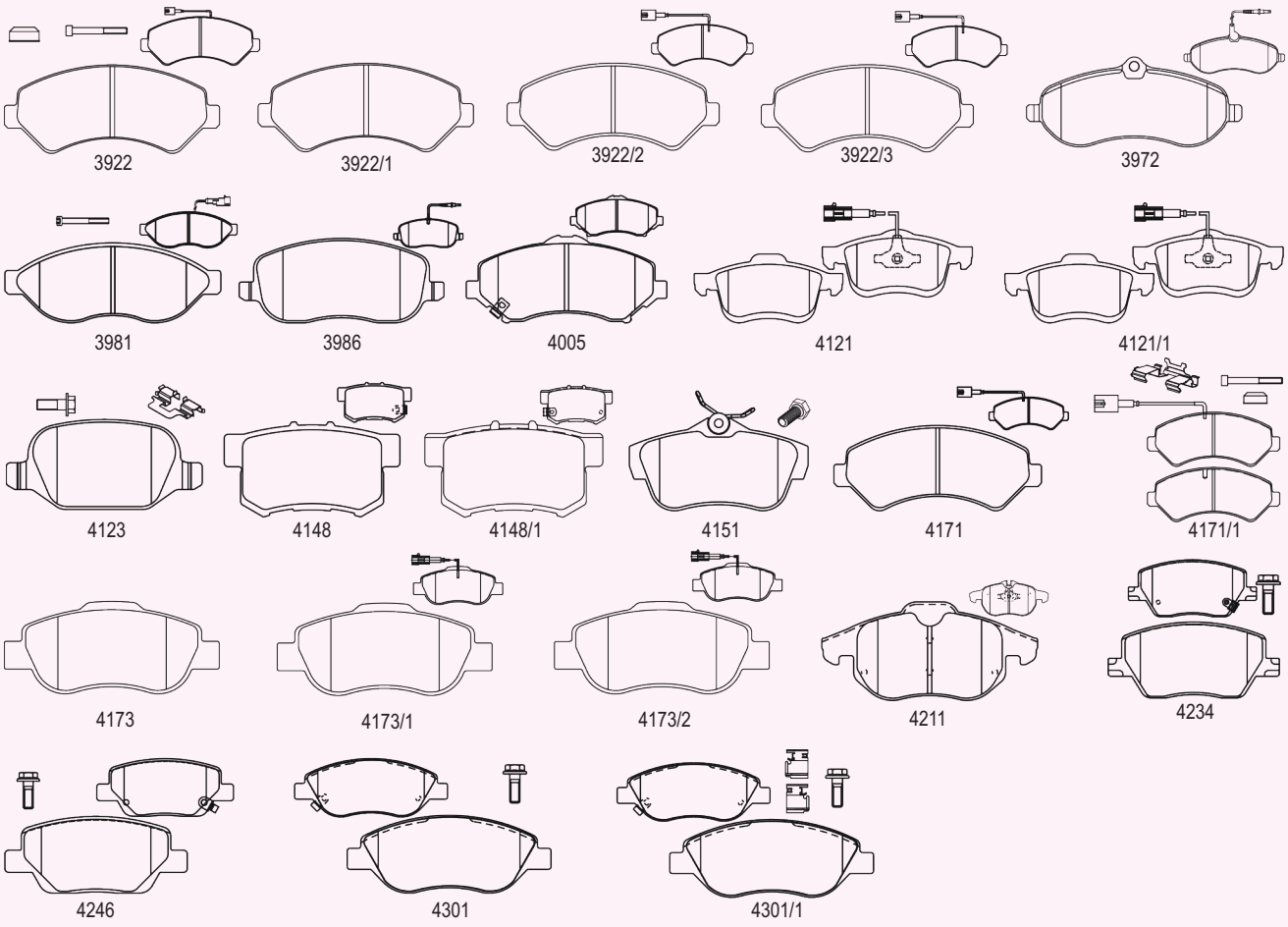
3922
3922/1
3922/2
3922/3
3972
3981
3986
4005
4121
4121/1
4123
4148
4148/1
4151
4171
4171/1
4173
4173/1
4173/2
4211
4234
4246
4301
4301/1

FORD

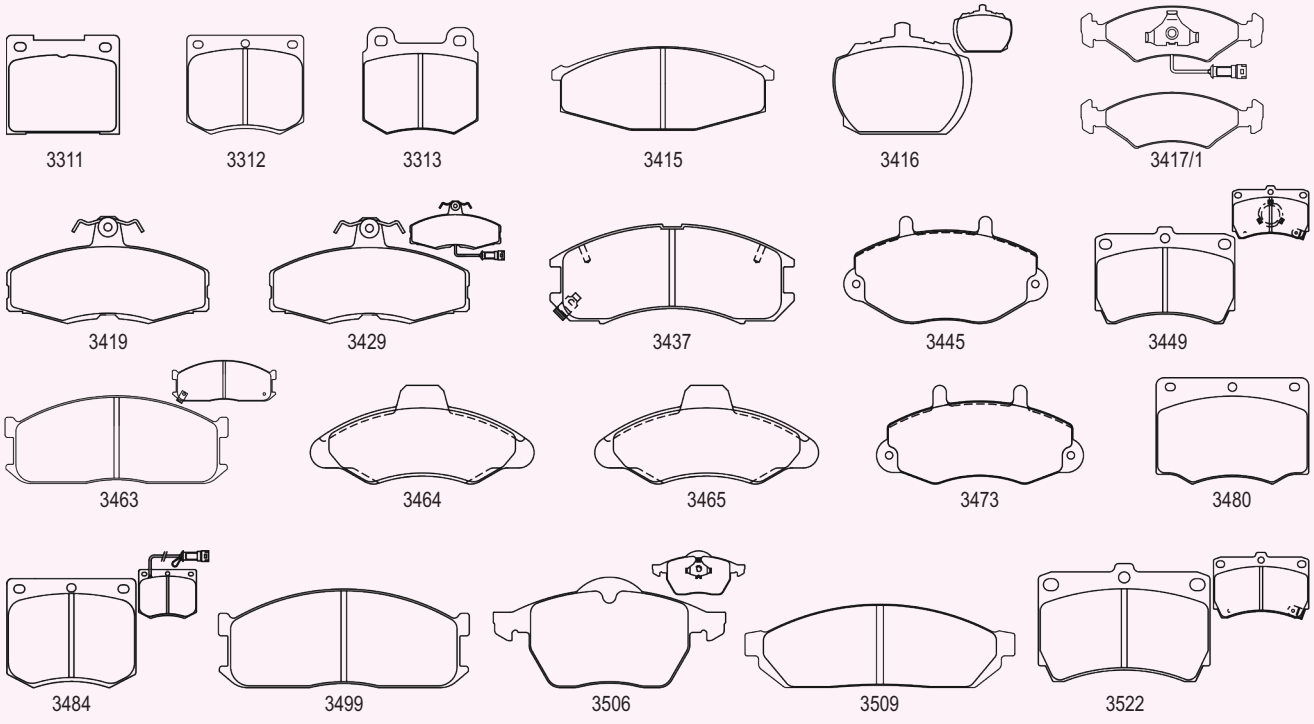
3311
3312
3313
3415
3416
3417/1
3419
3429
3437
3445
3449
3463
3464
3465
3473
3480
3484
3499
3506
3509
3522

FORD


3529/1

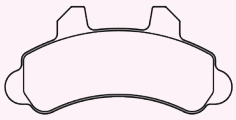
3534

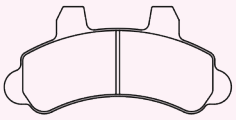
3535

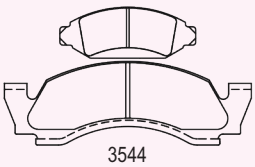
3544

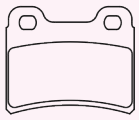
3545

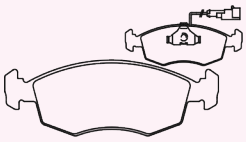
3548

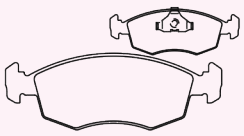
3549

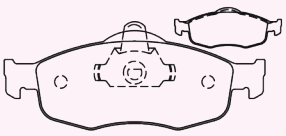
3558

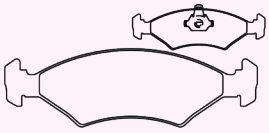
3570

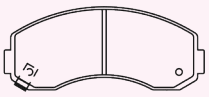
3574

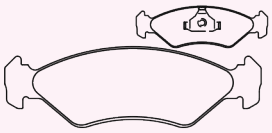
3589

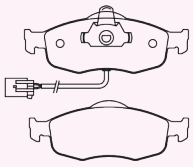
3593

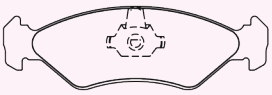
3594

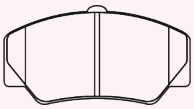
3603

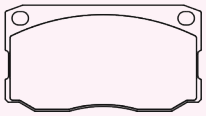
3613

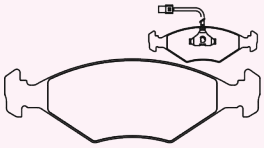
3616

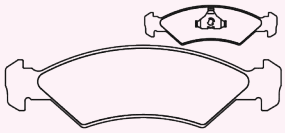
3621

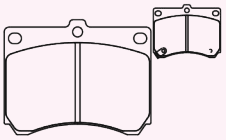
3640

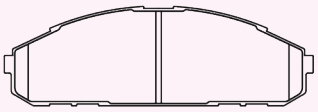
3667

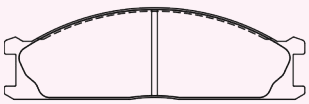
3692

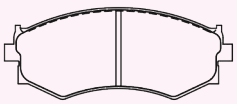
3700

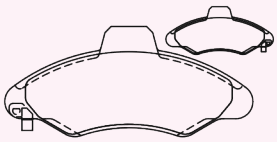
3722

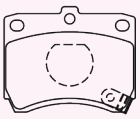
3723

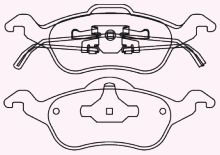
3754

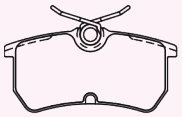
3755

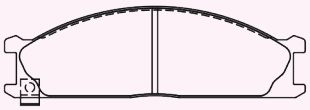
3760

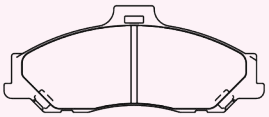
3767

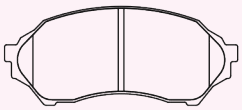
3780

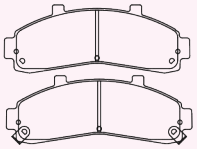
3781

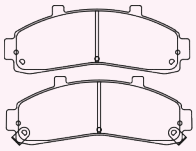
3781/1

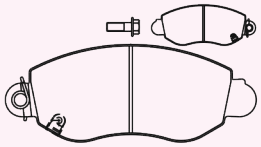
3784

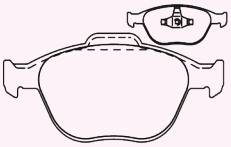
3801

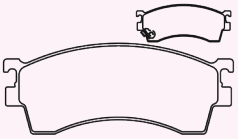
3832

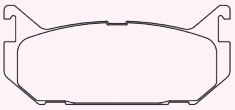
3833

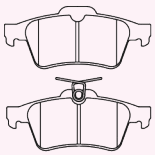
3853/1

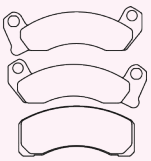
3865

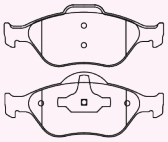
3877

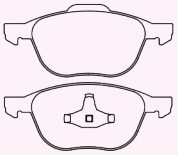
3885

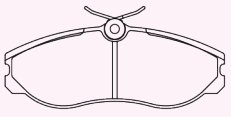
3888

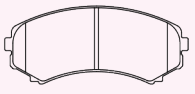
3892

3906

3906/1

3906/1A

3906/2

3907

3907/1

3907/1A

3907/2

3920

3920/1

3921

3988

FORD

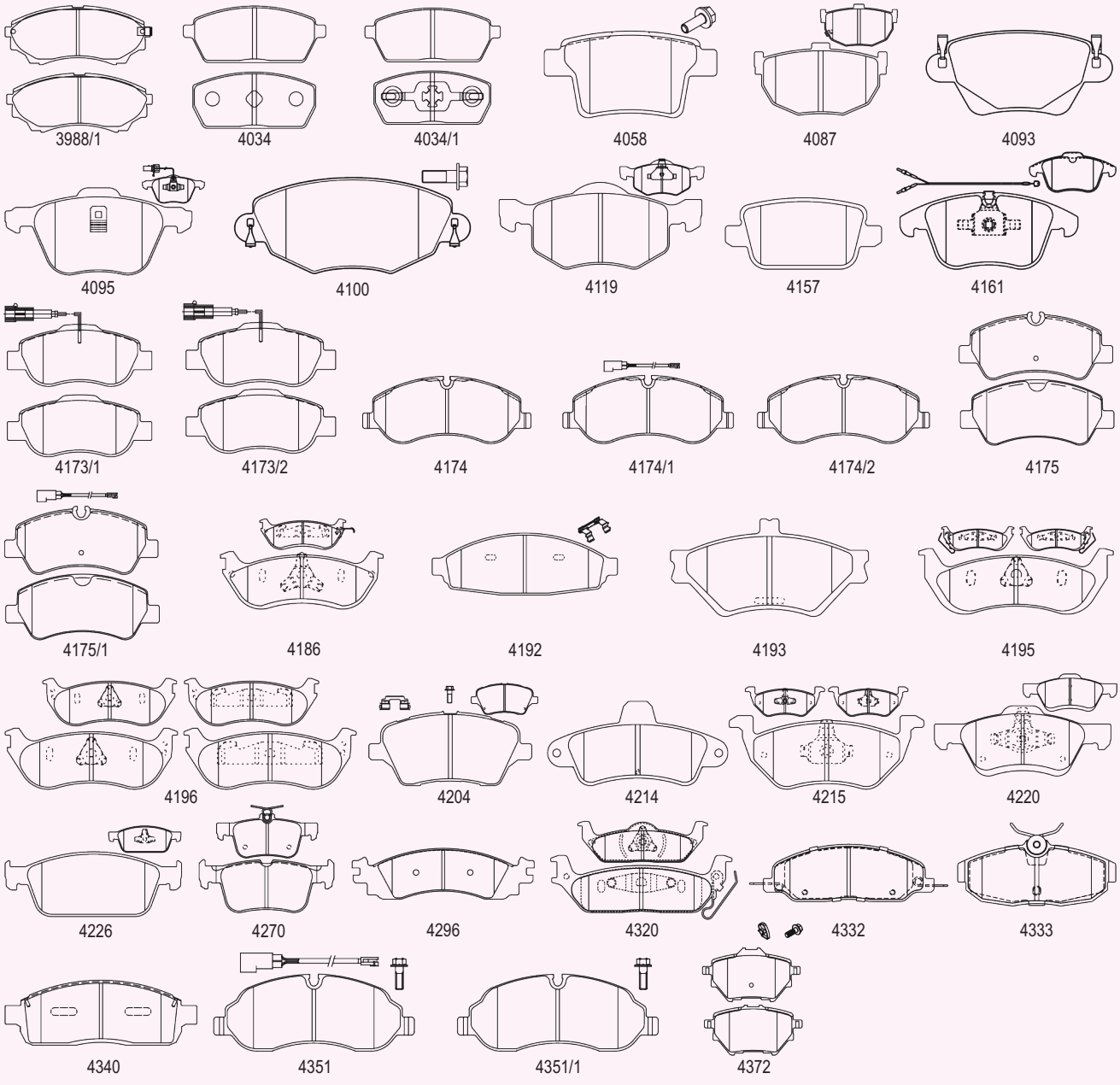

FSO

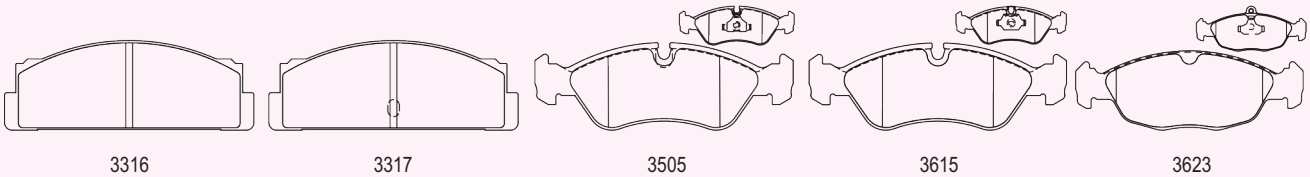

FUSO

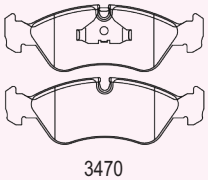

GEELY

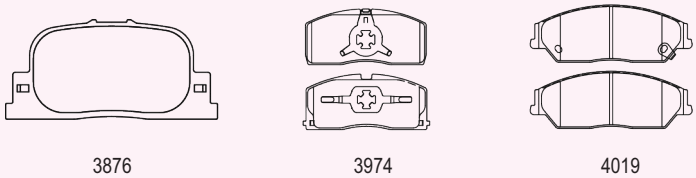

GREAT WALL

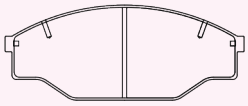
3714

GM

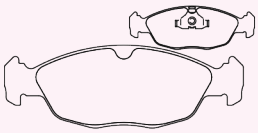
3530

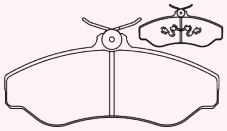
3547

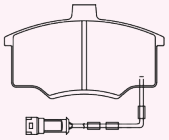
3588

GAZ GAZELLE

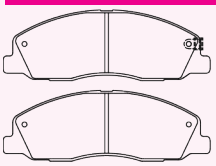
4344

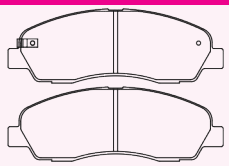
4377

GMC

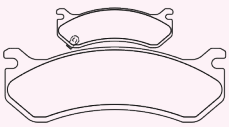
4022

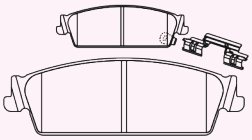
4184

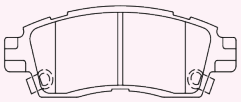
4219

HAFEI

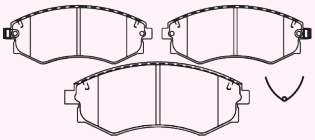
3632

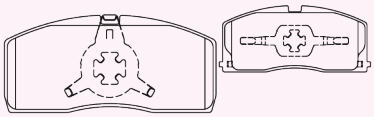
3974

HAIMA (FAW)

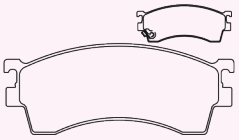
3832

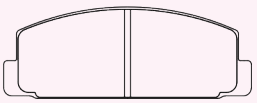
3875

HAWTAI

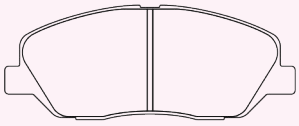
3960

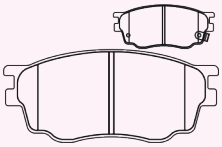
4118

HOLDEN

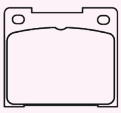
3311

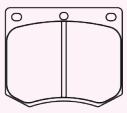
3312

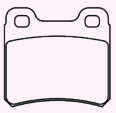
3469

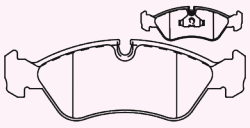
3470

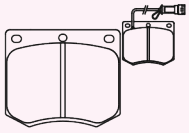
3484

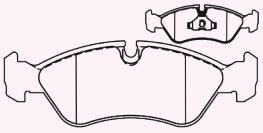
3505

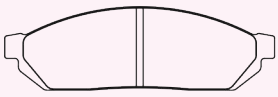
3509

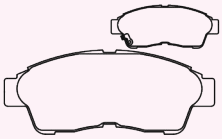
3554

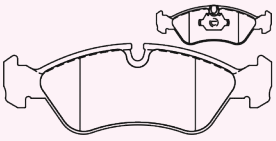
3615

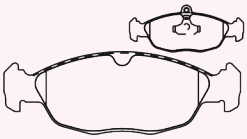
3623

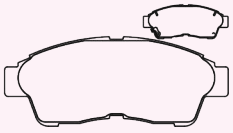
3651

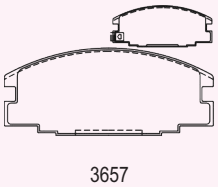
3657

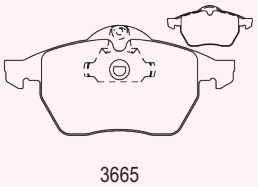
3665

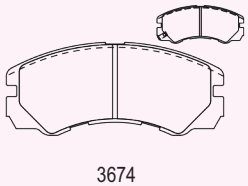
3674

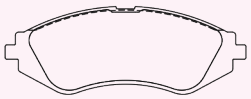
3687

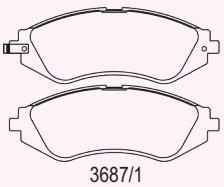
3687/1

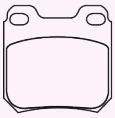
3717

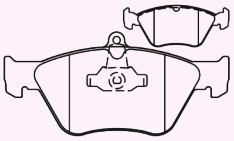
3736

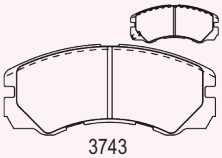
3743

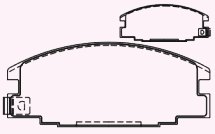
3757

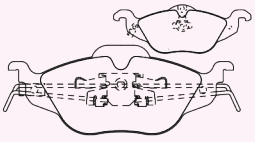
3762

HOLDEN

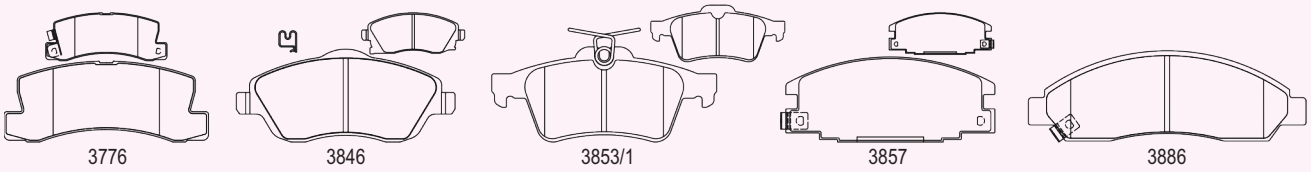

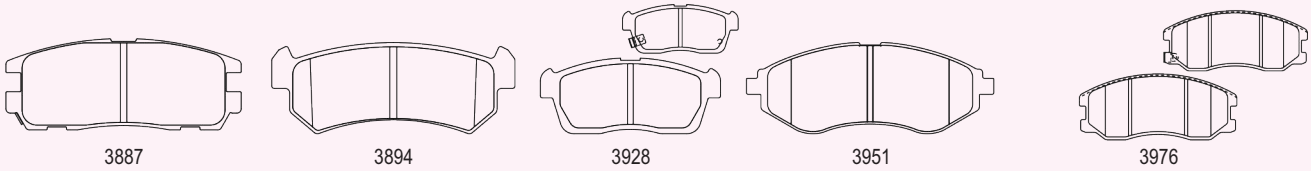

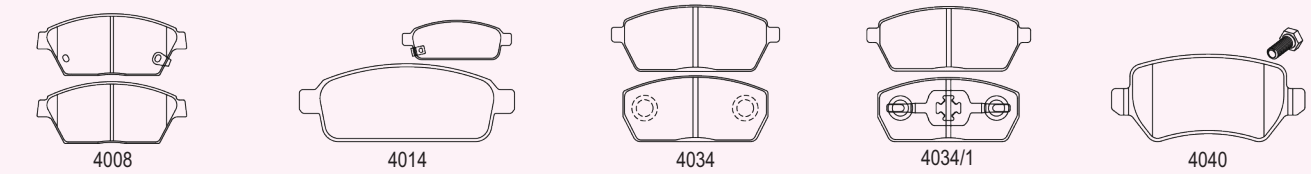

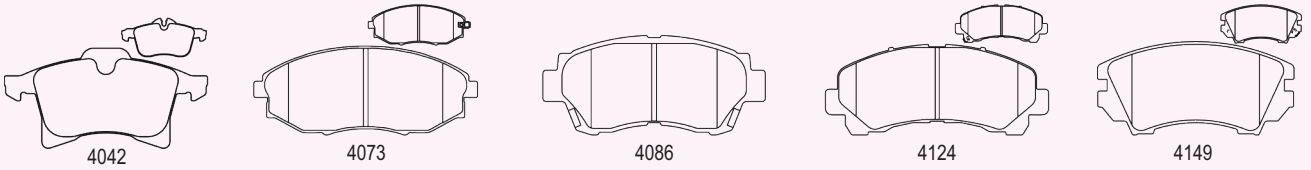

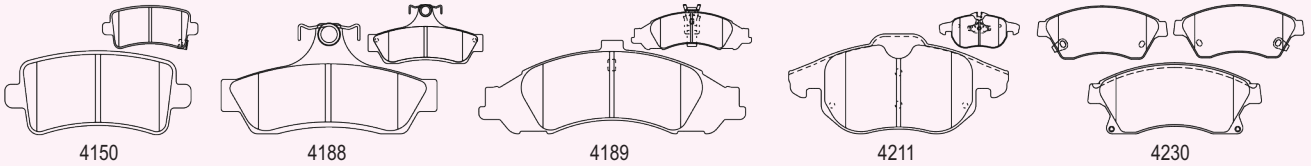

HONDA

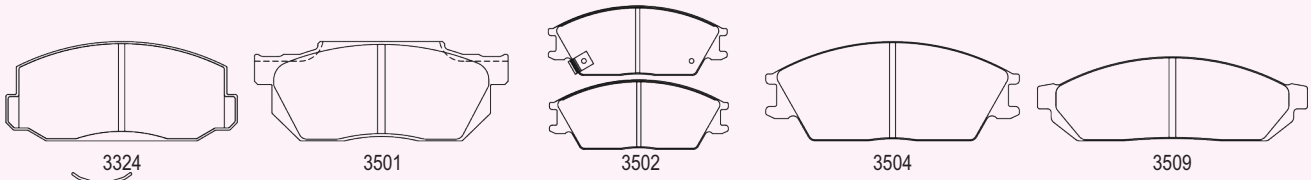

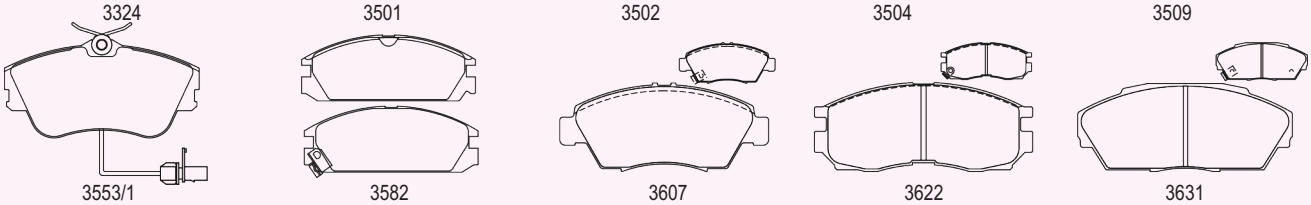

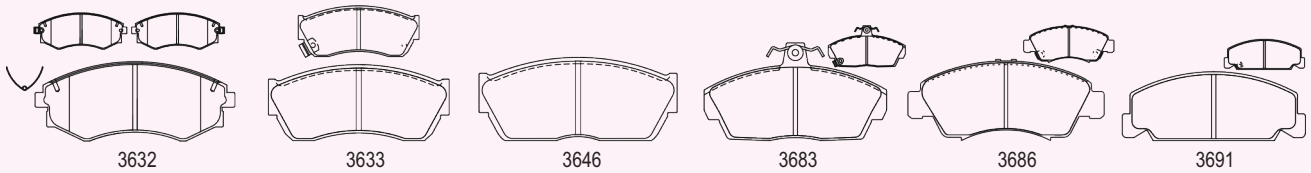

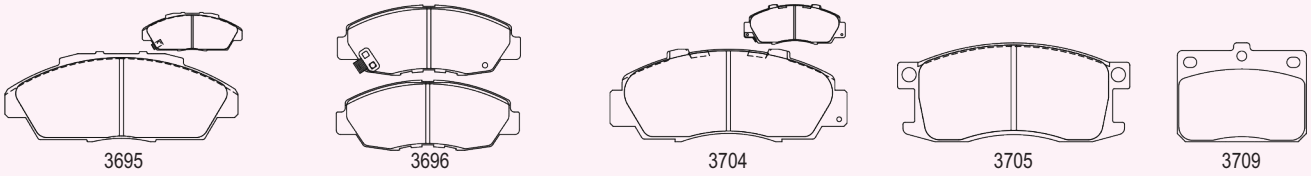

HONDA

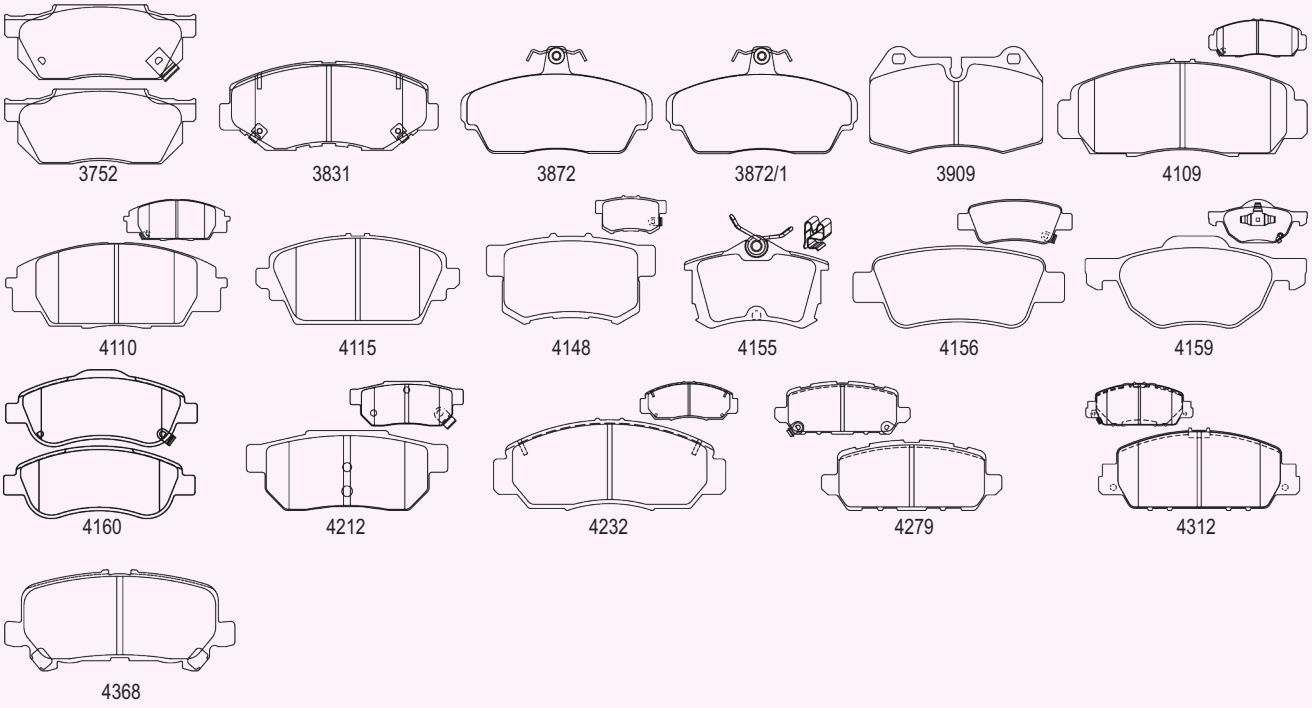

HONGQI

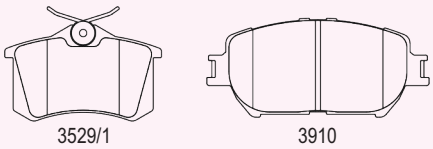

HSV

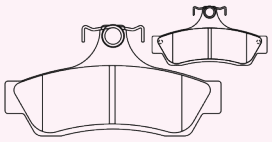

HUALI

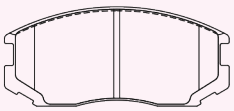

HUMMER

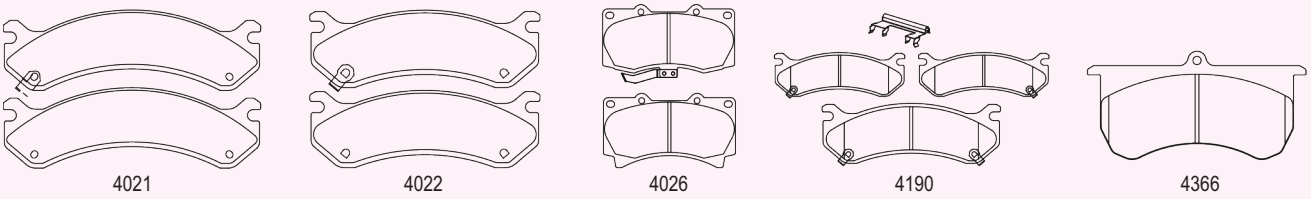

HYUNDAI

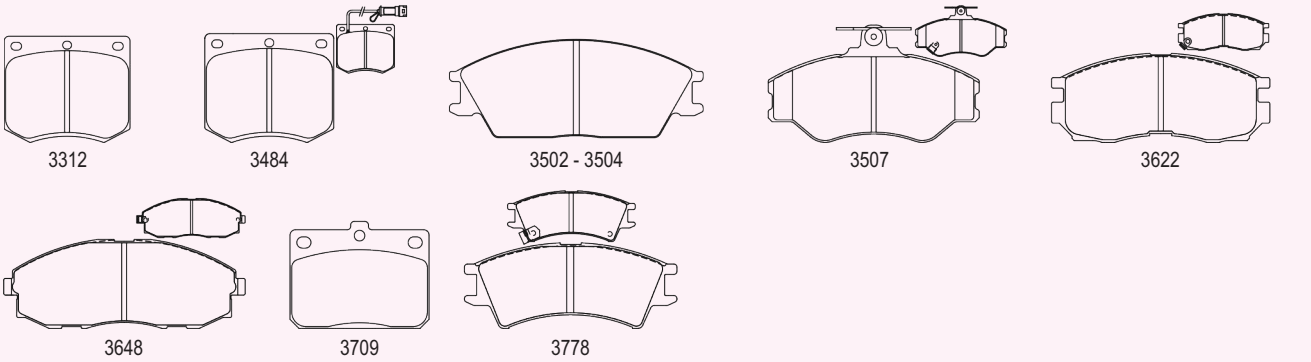

HYUNDAI

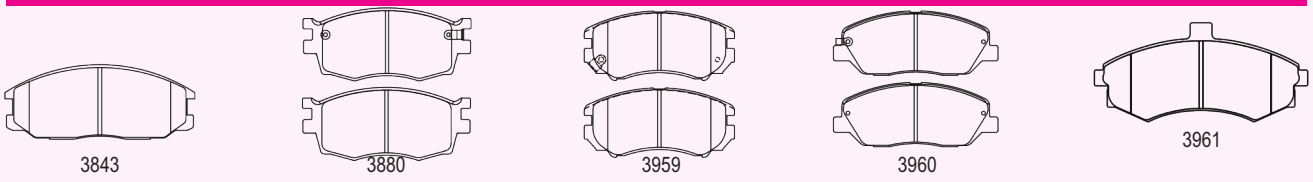

INFINITI

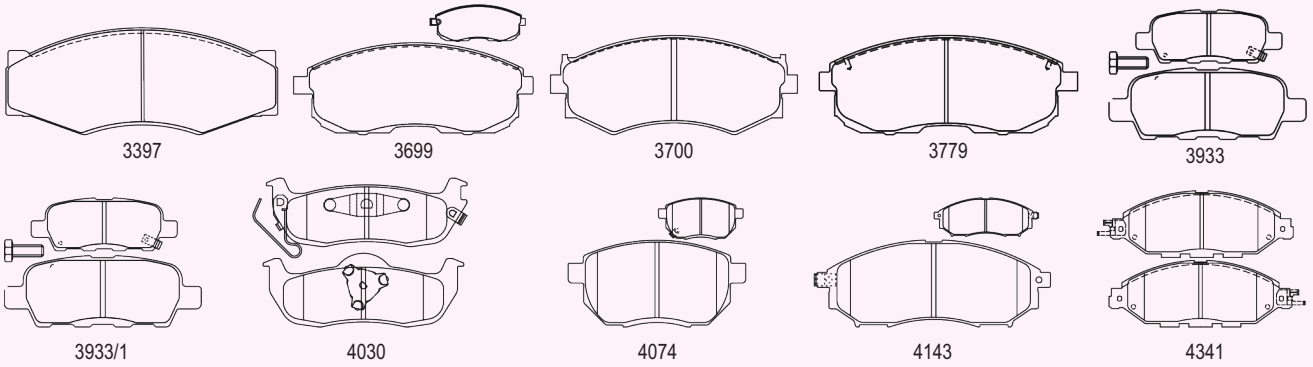

INNOCENTI

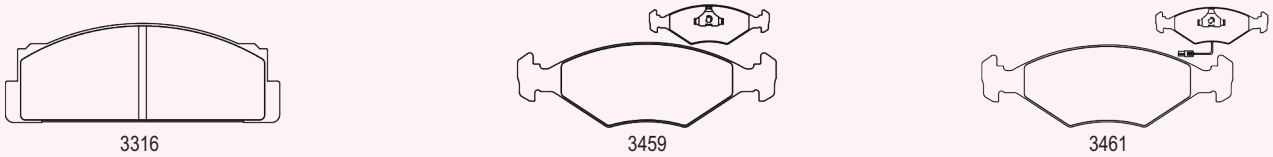

INOKOM

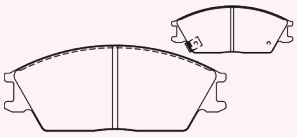
3502

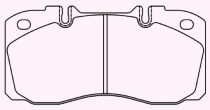
3994

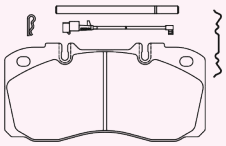
3994/1

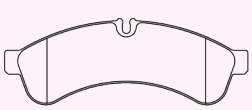
3995

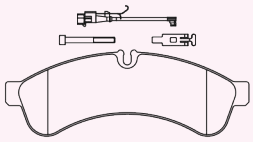
3995/1

ISUZU

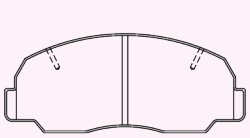
3436

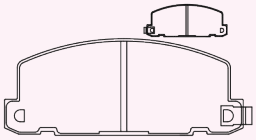
3446

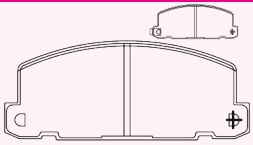
3450

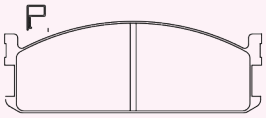
3462

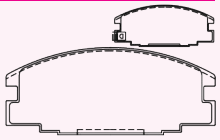
3657

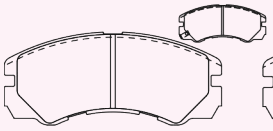
3674

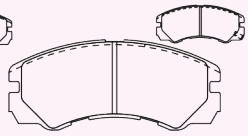
3743

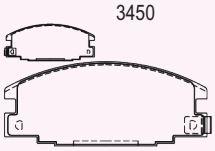
3757

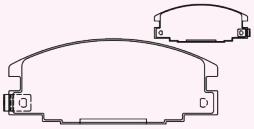
3857

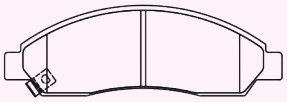
3886

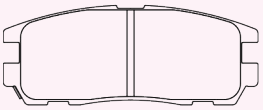
3887

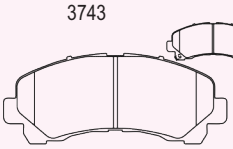
4124

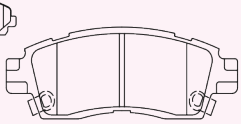
4219

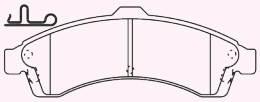
4221

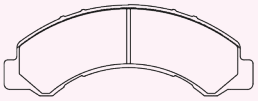
4354

IVECO

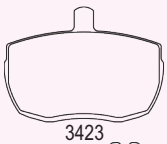
3423

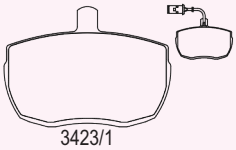
3423/1

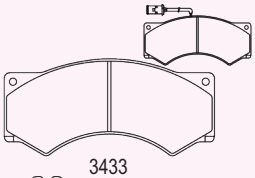
3433

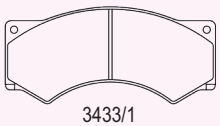
3433/1

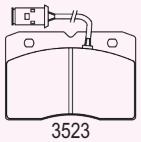
3523

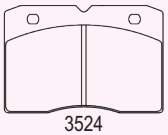
3524

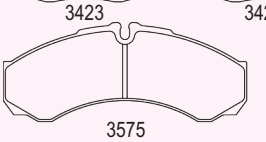
3575

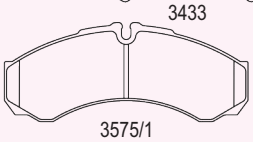
3575/1

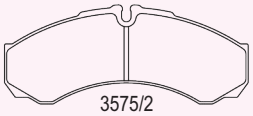
3575/2

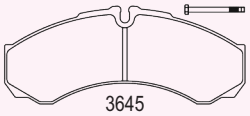
3645

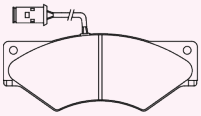
3749/1

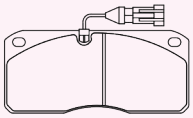
3773

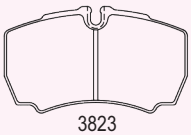
3823

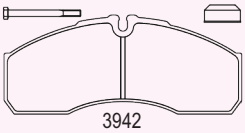
3942

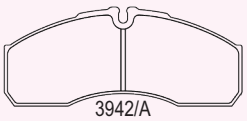
3942/A

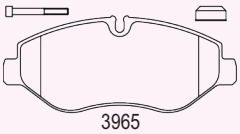
3965

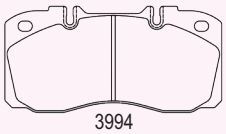
3994

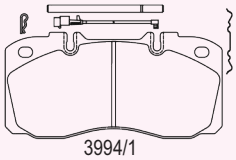
3994/1

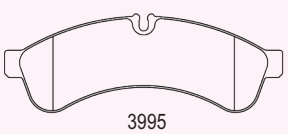
3995

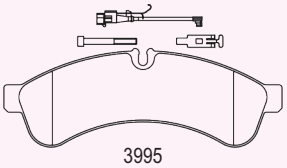
3995

4092

4092

4169

ISTANA

3793

INDUSTRIAL

4133

JAC

3993

JAGUAR

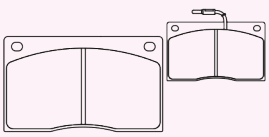
3526

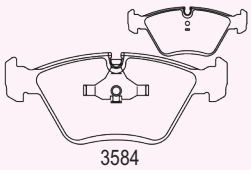
3584

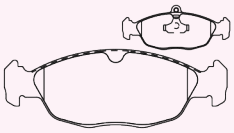
3623

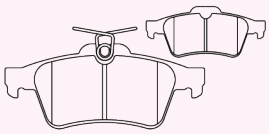
3853/1

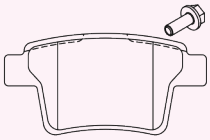
4058

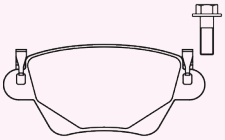
4093

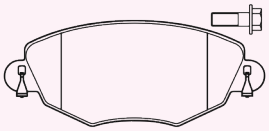
4100

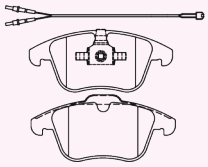
4161

JEEP

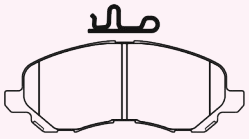
3955

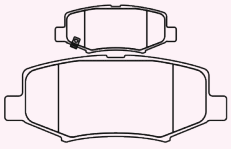
4004

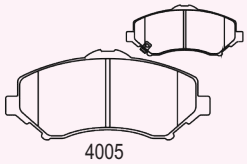
4005

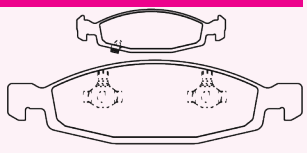
4011

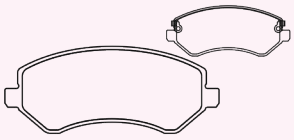
4012

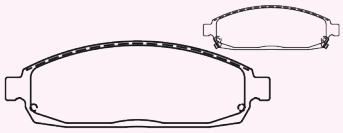
4016

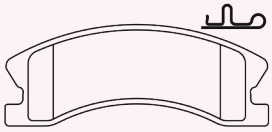
4031

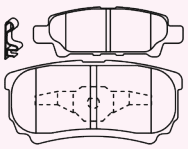
4106

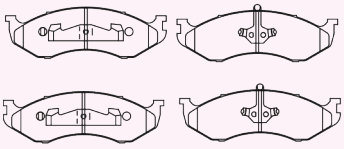
4182

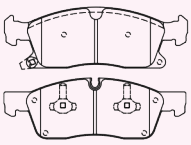
4338

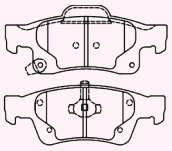
4339

KARSAN

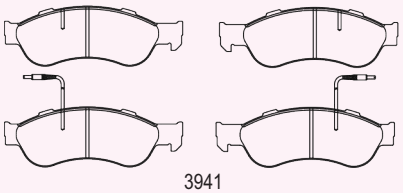
3941

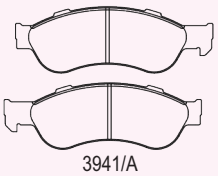
3941/A

KIA

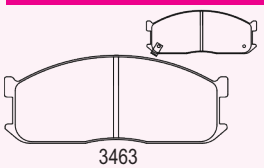
3463

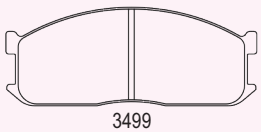
3499

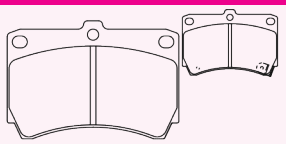
3522

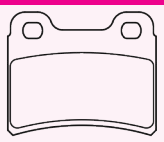
3545

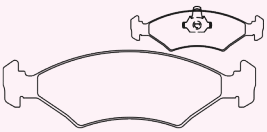
3570

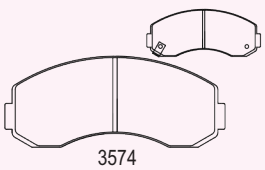
3574

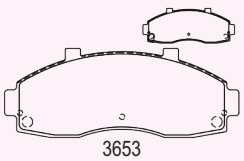
3653

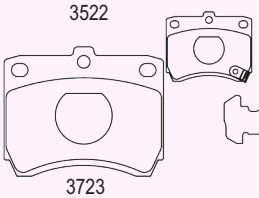
3723

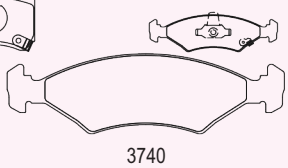
3740

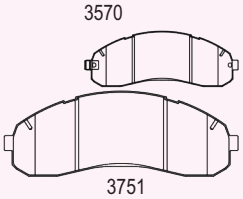
3751

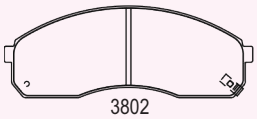
3802

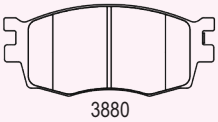
3880

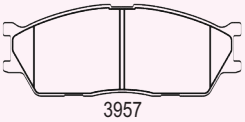
3957

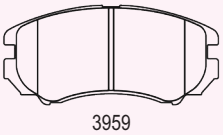
3959

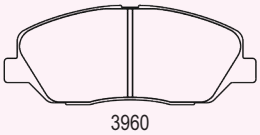
3960

KIA

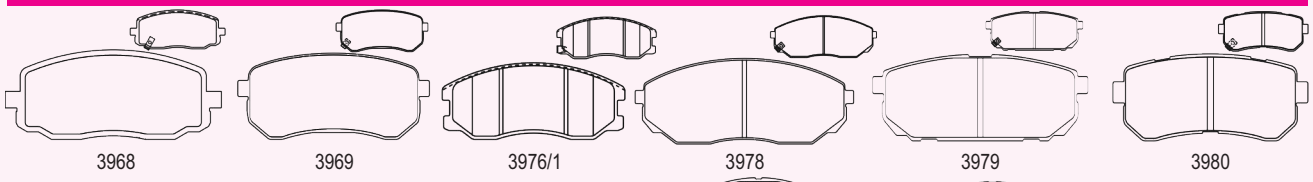

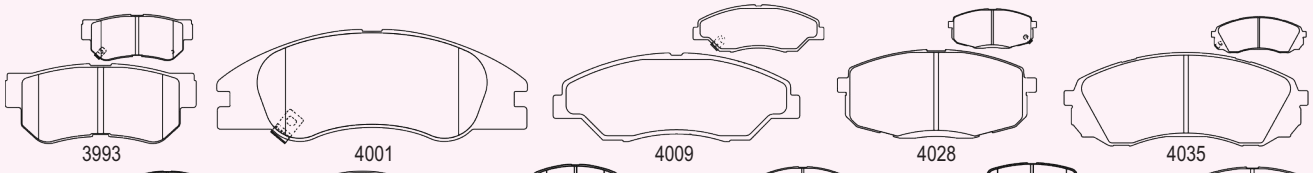

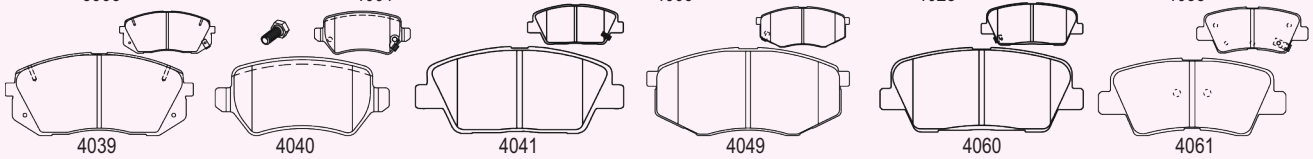

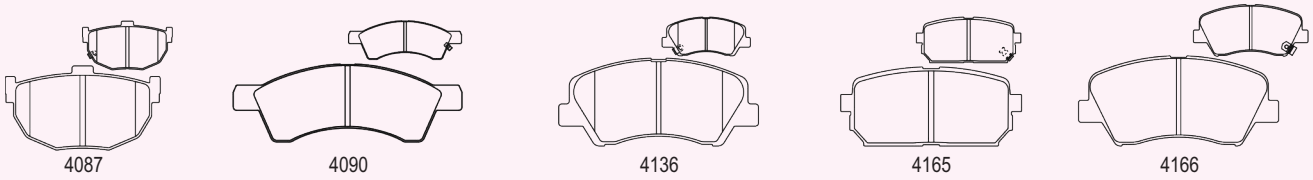

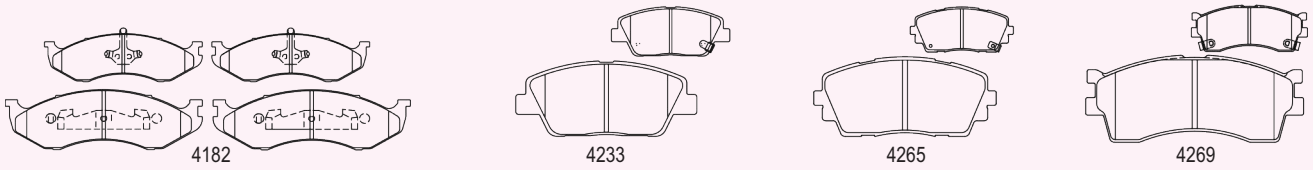

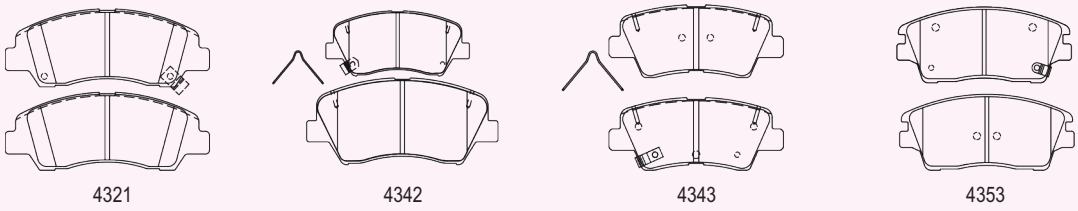

LADA

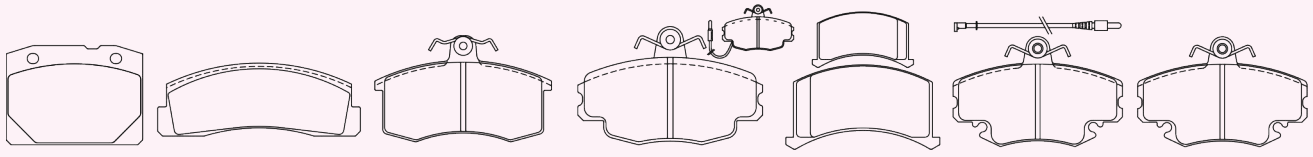

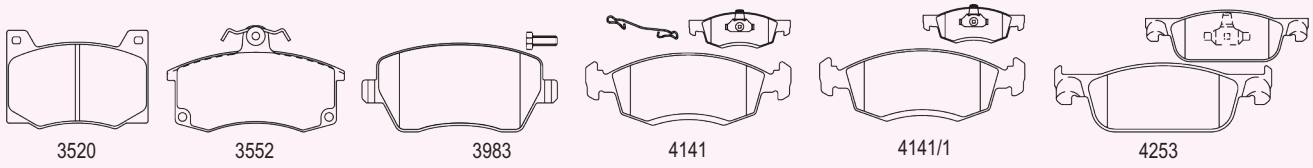

LANCIA

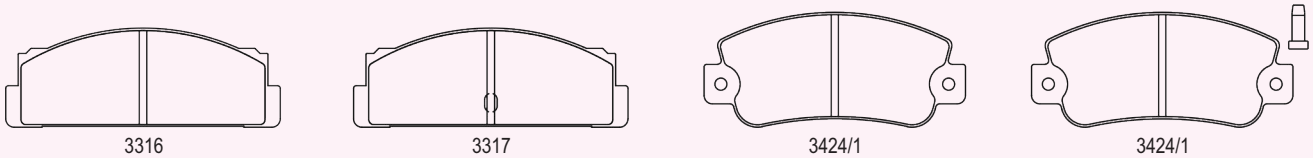

LANCIA

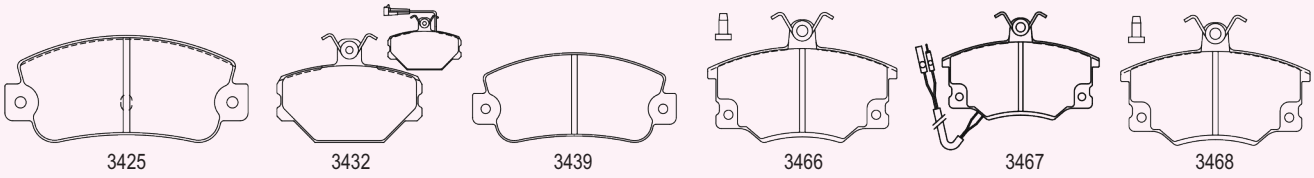

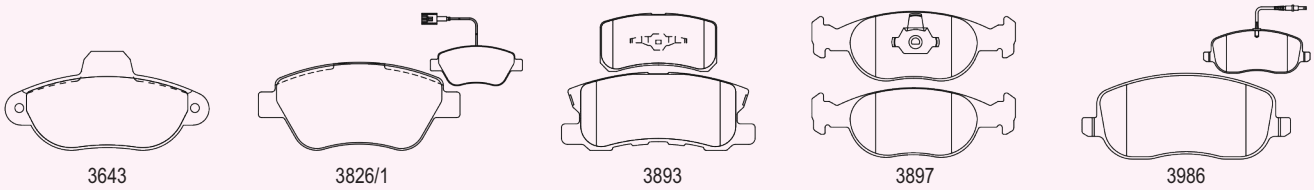

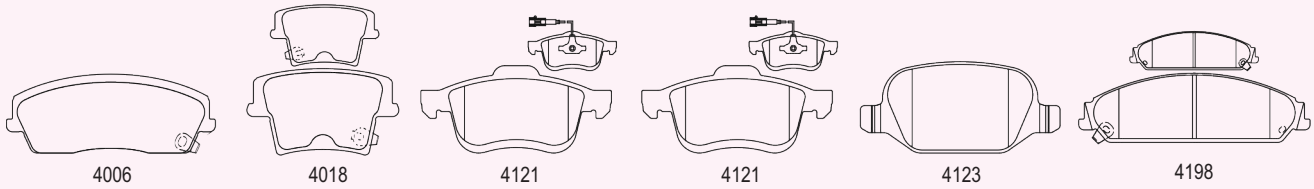

LAND ROVER

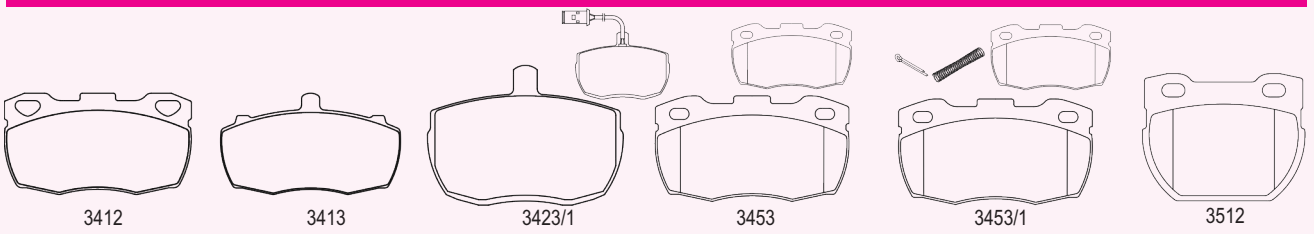

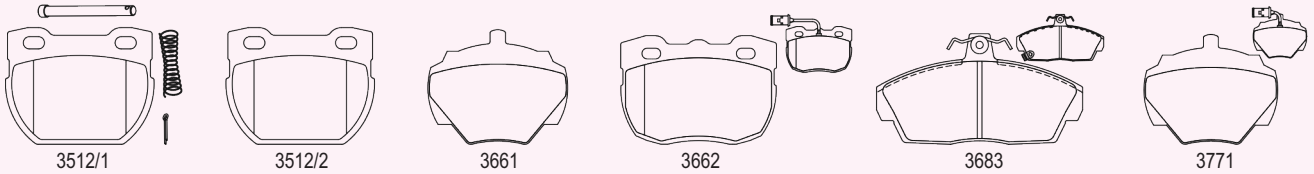

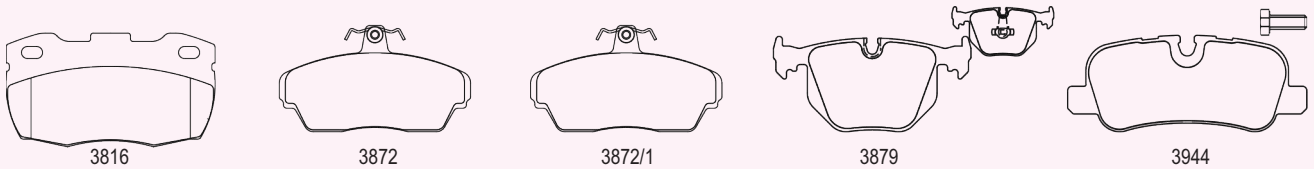

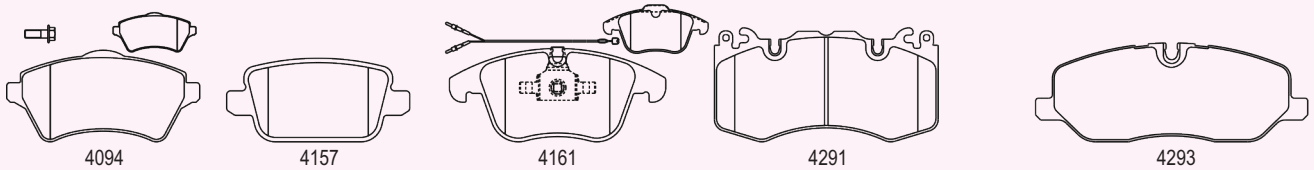

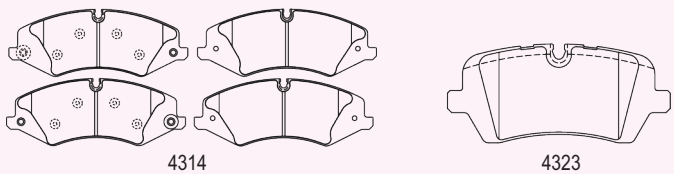

LANDWIND (JMC)

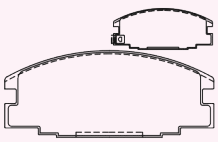
3657

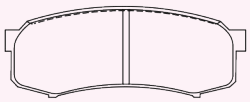
3693

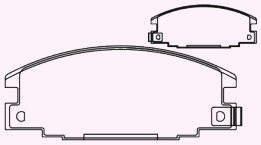
3757

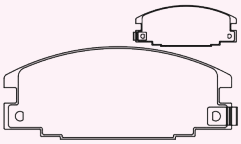
3857

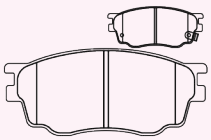
4118

LDV

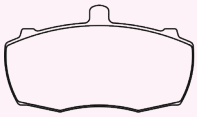
3413

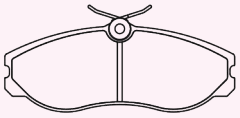
3888

LEXUS

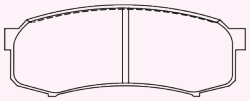
3693

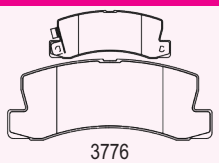
3776

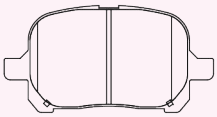
3822

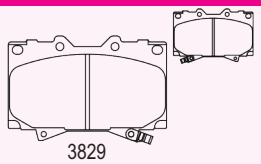
3829

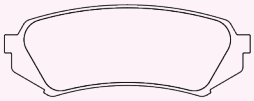
3830

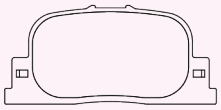
3876

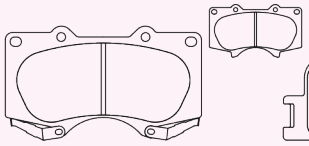
3891

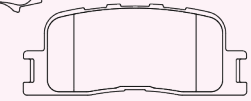
3911

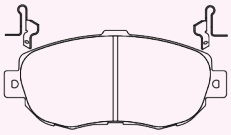
3915

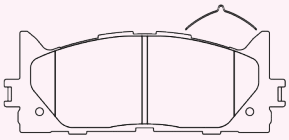
3948

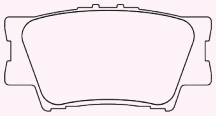
3949

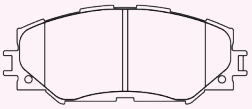
3953

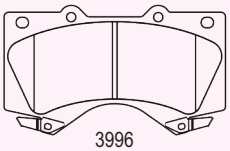
3996

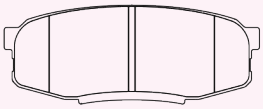
3997

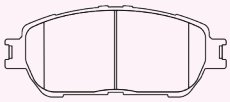
4003

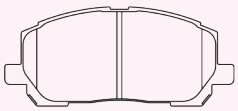
4082

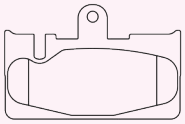
4083

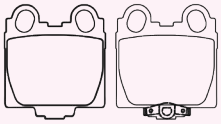
4085

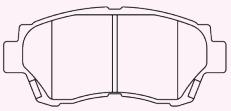
4086

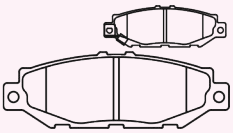
4099

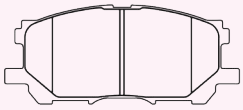
4105

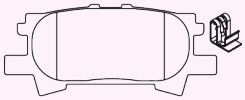
4111

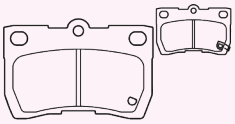
4113

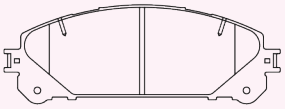
4255

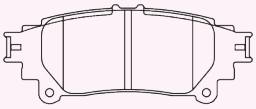
4256

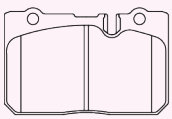
4274

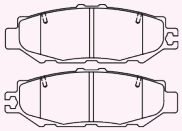
4275

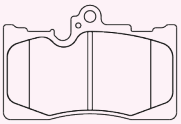
4276

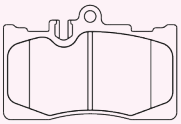
4276/1

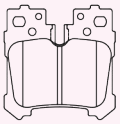
4277

LEYLAND

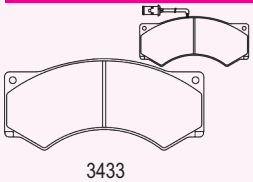
3433

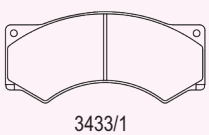
3433/1

LIFAN

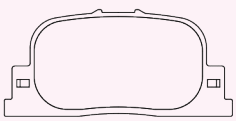
3876

LIGIER

3747

LINCOLN

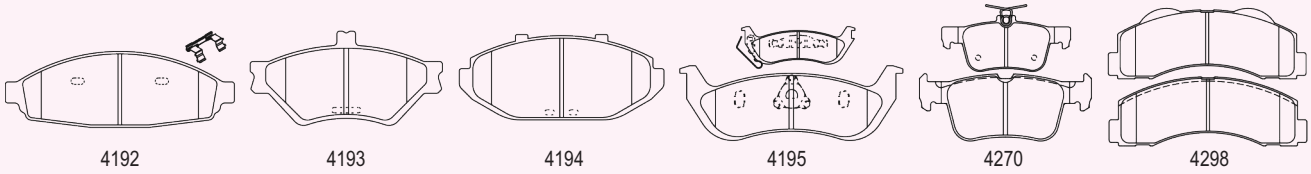

LOTUS / LTI / MAHINDRA

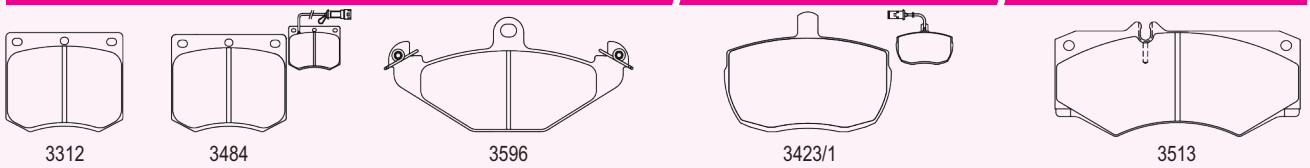

MARUTI

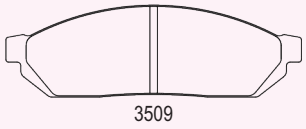

MASERATI

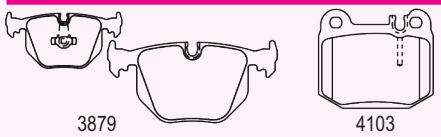

MAZDA

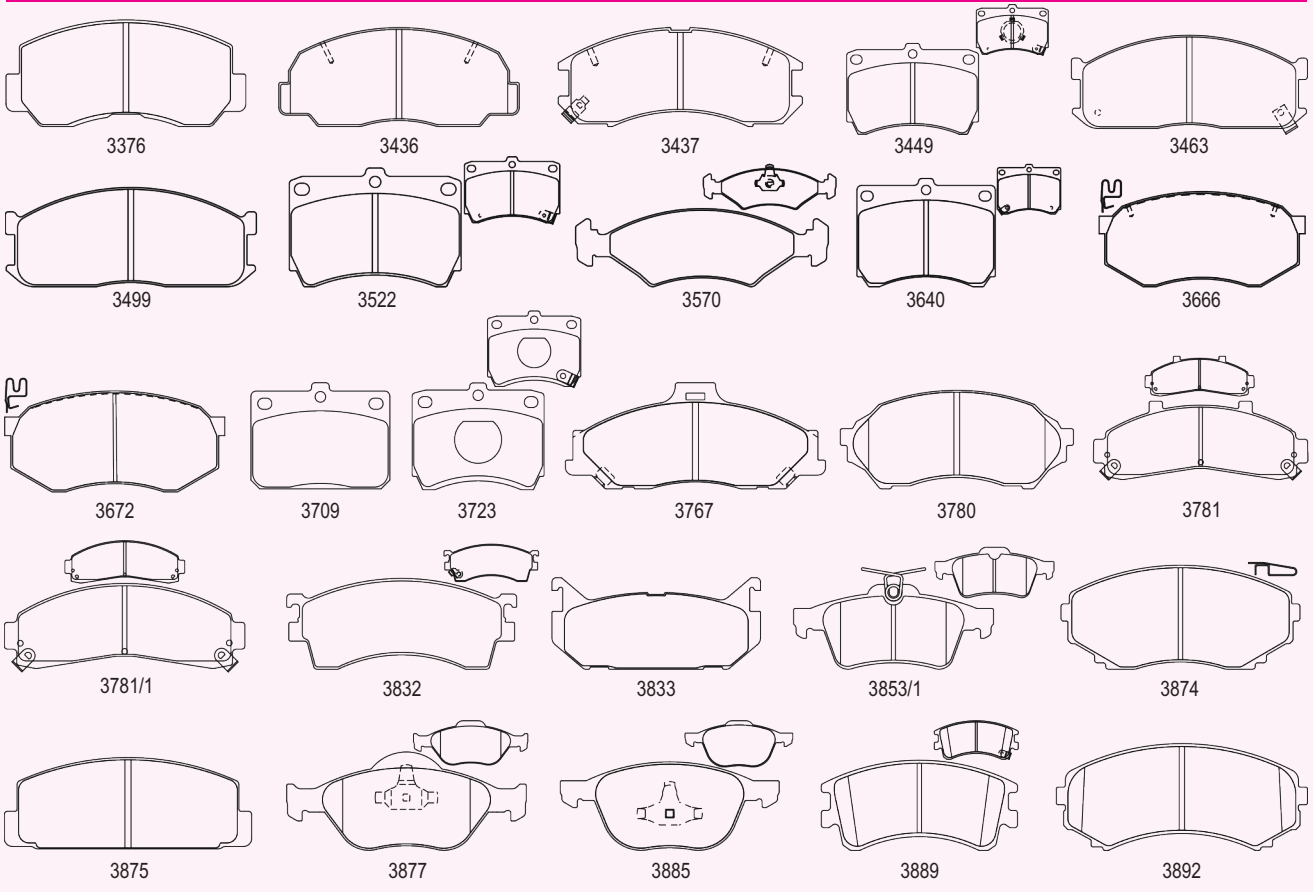

MAZDA

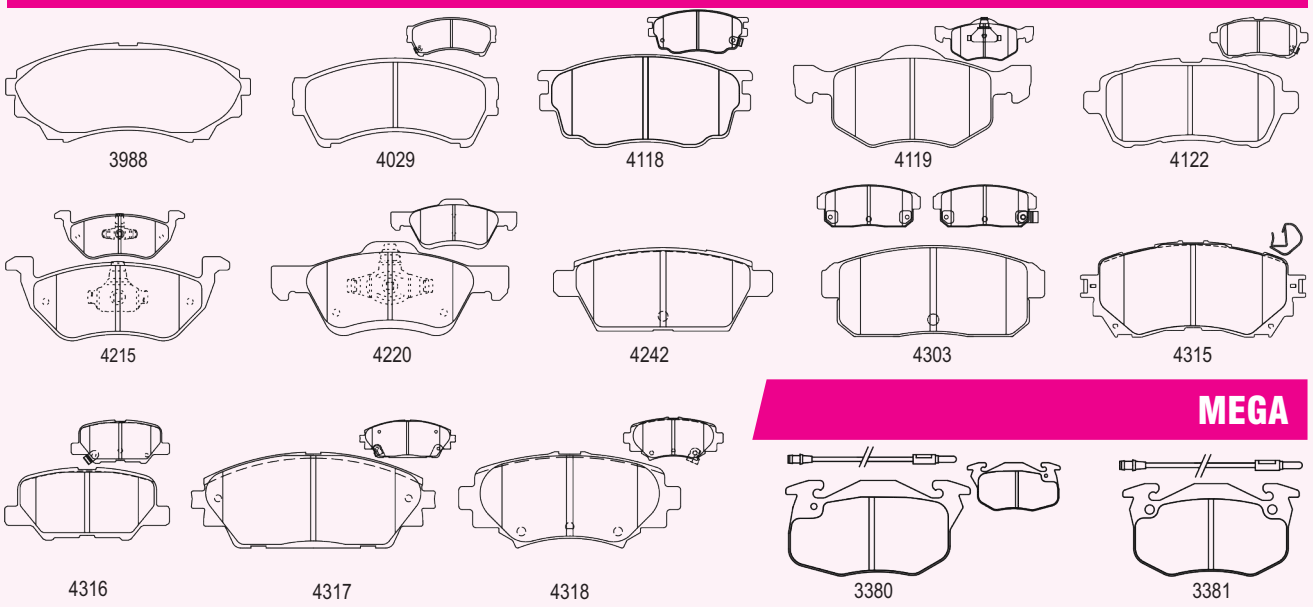

MEGA

MERCEDES BENZ

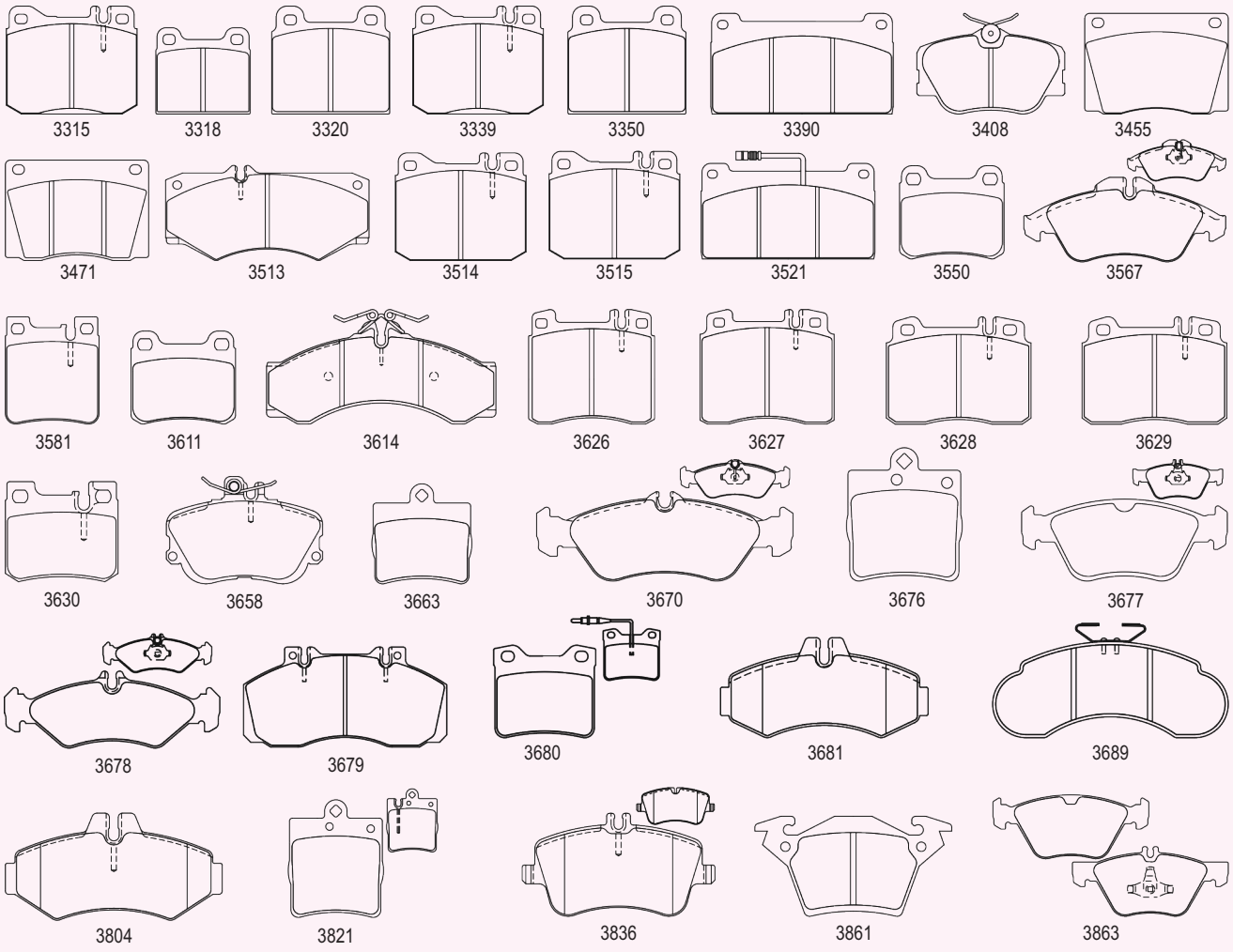

MERCEDES BENZ

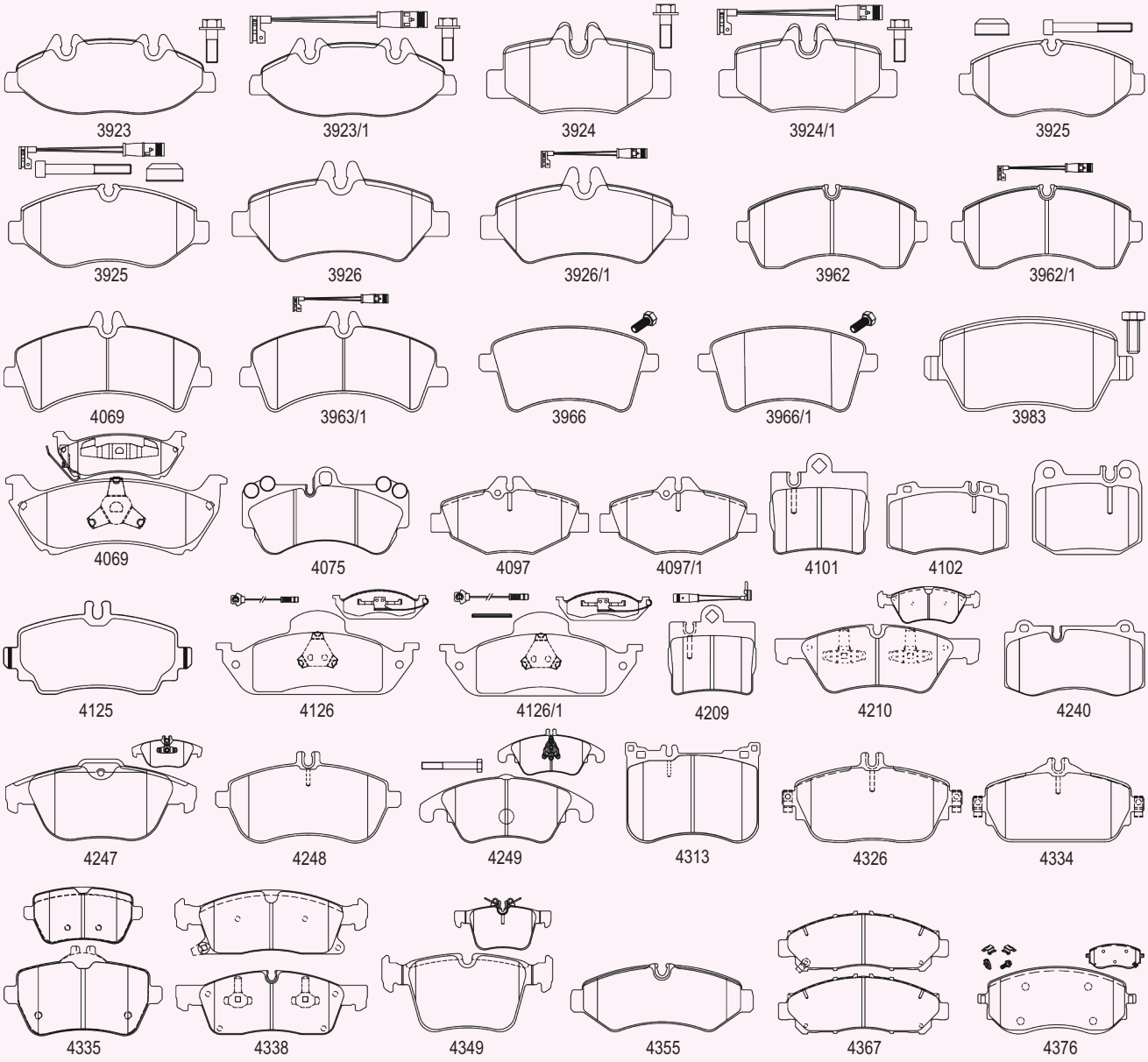

MERCURY

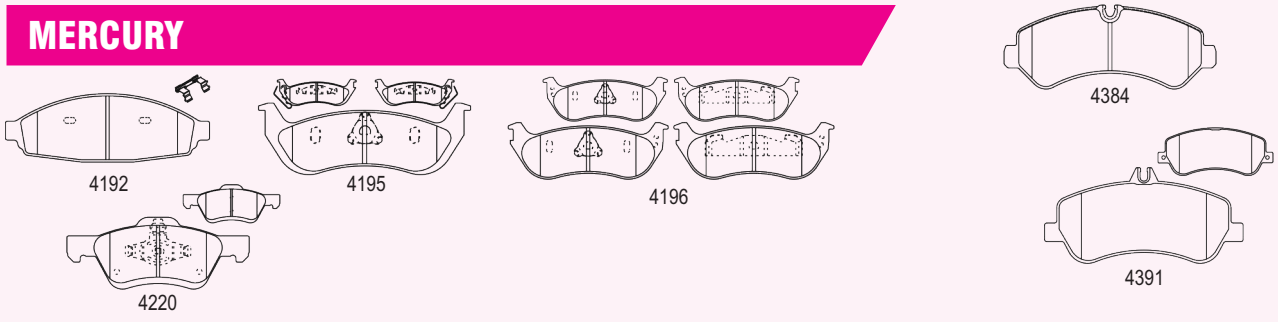

MG

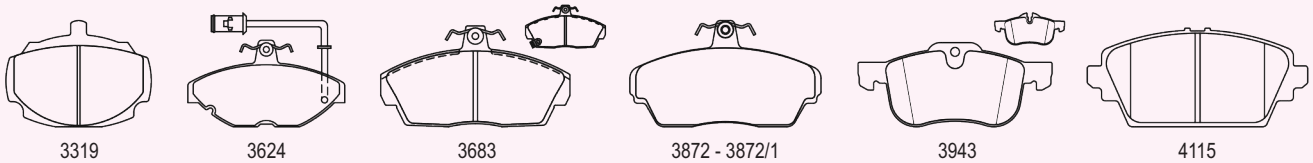

MG

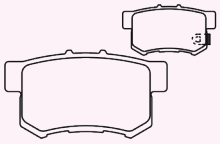
4148

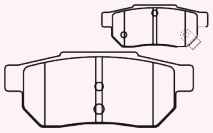
4212

MITSUBISHI

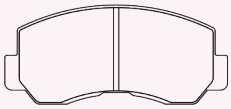
3376

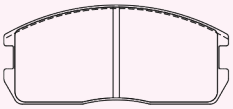
3400

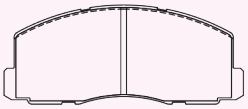
3401

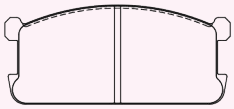
3407

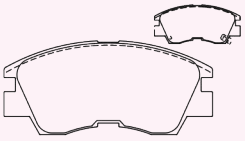
3448

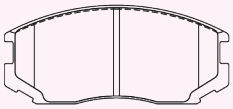
3604

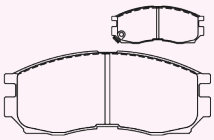
3622

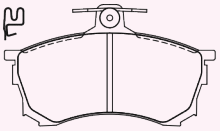
3675

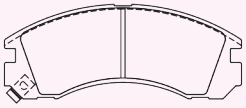
3685

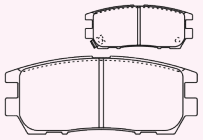
3688

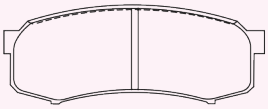
3693

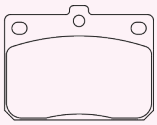
3709

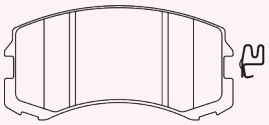
3765

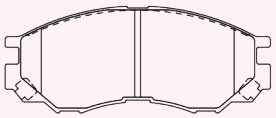
3809

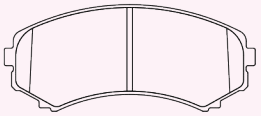
3892

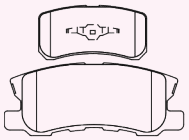
3893

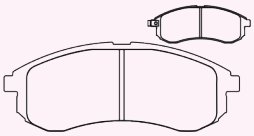
3900

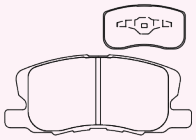
3916

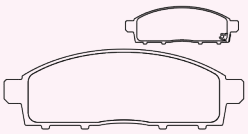
3975

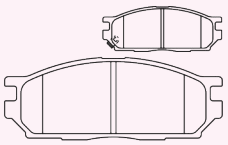
4033

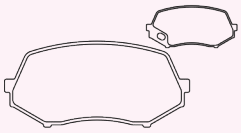
4054

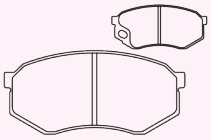
4055

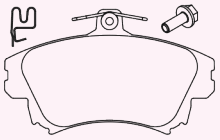
4059

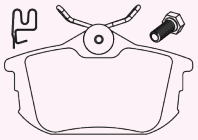
4062

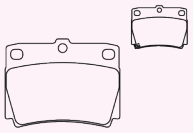
4084

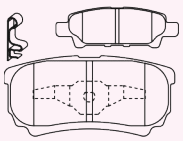
4106

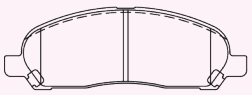
4107

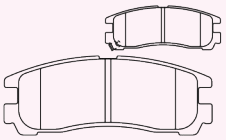
4108

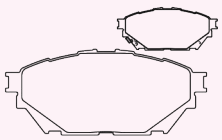
4170

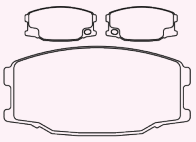
4216

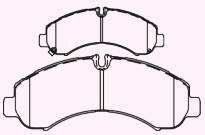
4244

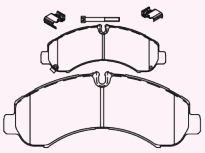
4244/1

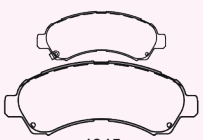
4245

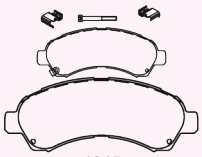
4245

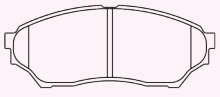
4271

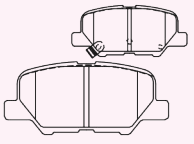
4316

MULTICAR

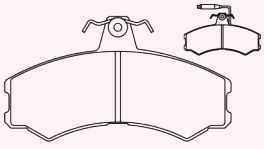
3440

MAGIRUS

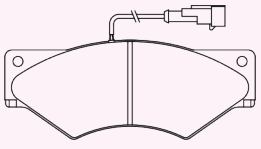
3749

NISSAN

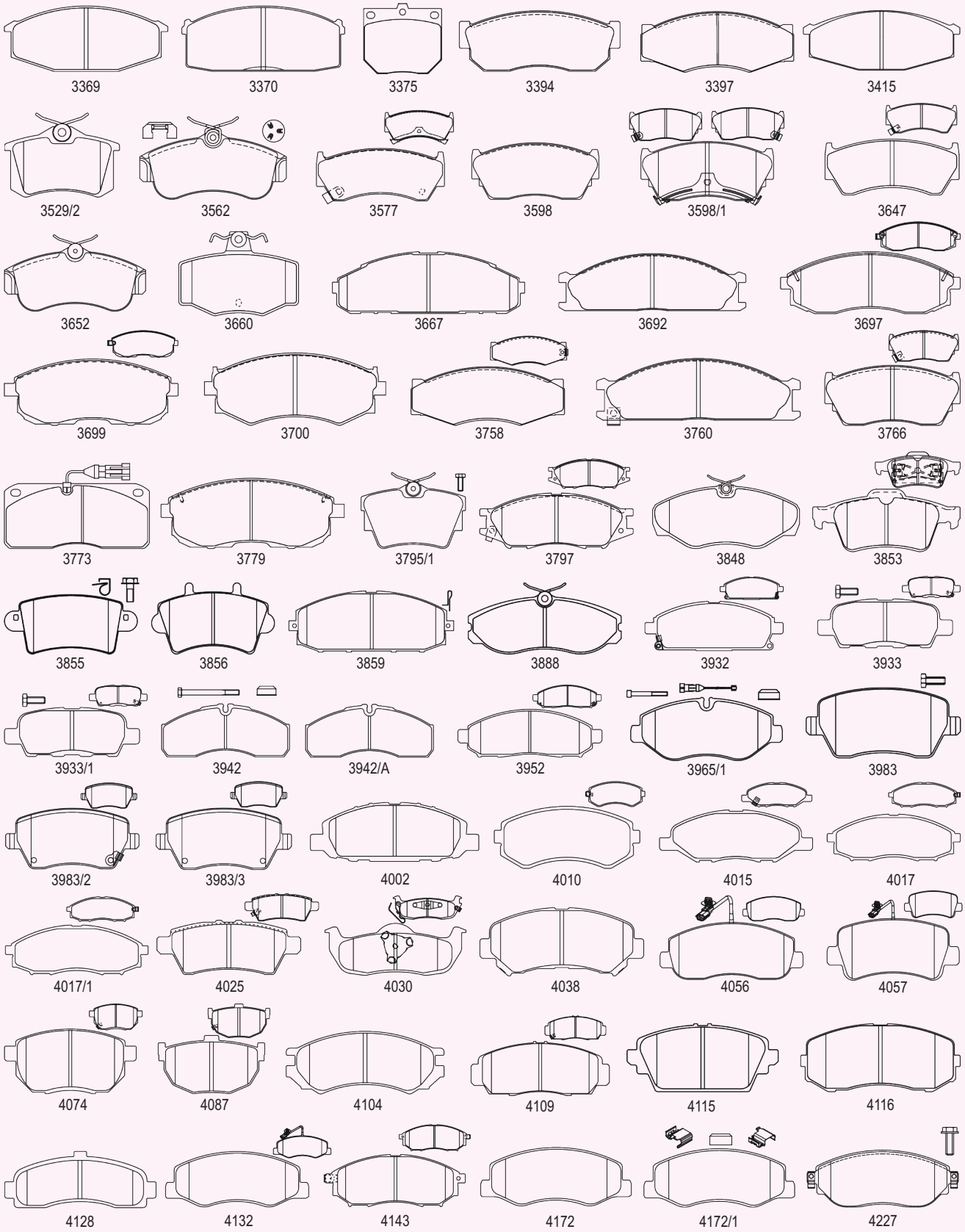
3369
3370
3375
3394
3397
3415
3529/2
3562
3577
3598
3598/1
3647
3652
3660
3667
3692
3697
3699
3700
3758
3760
3766
3773
3779
3795/1
3797
3848
3853
3855
3856
3859
3888
3932
3933
3933/1
3942
3942/A
3952
3965/1
3983
3983/2
3983/3
4002
4010
4015
4017
4017/1
4025
4030
4038
4056
4057
4074
4087
4104
4109
4115
4116
4128
4132
4143
4172
4172/1
4227

NAZA

NISSAN

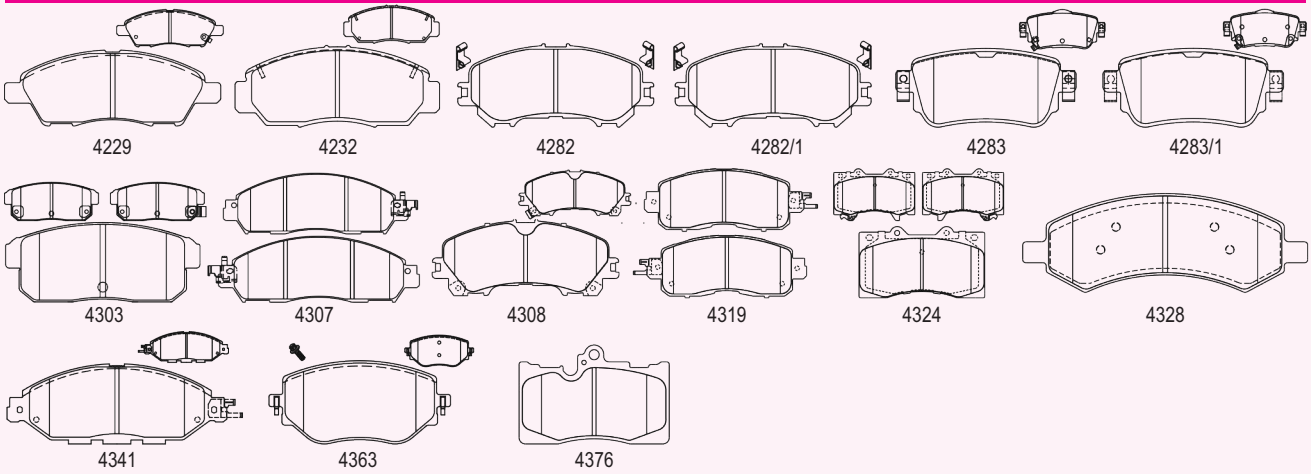

OLCIT

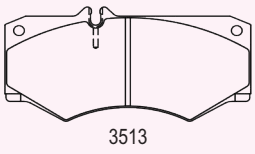

OPEL

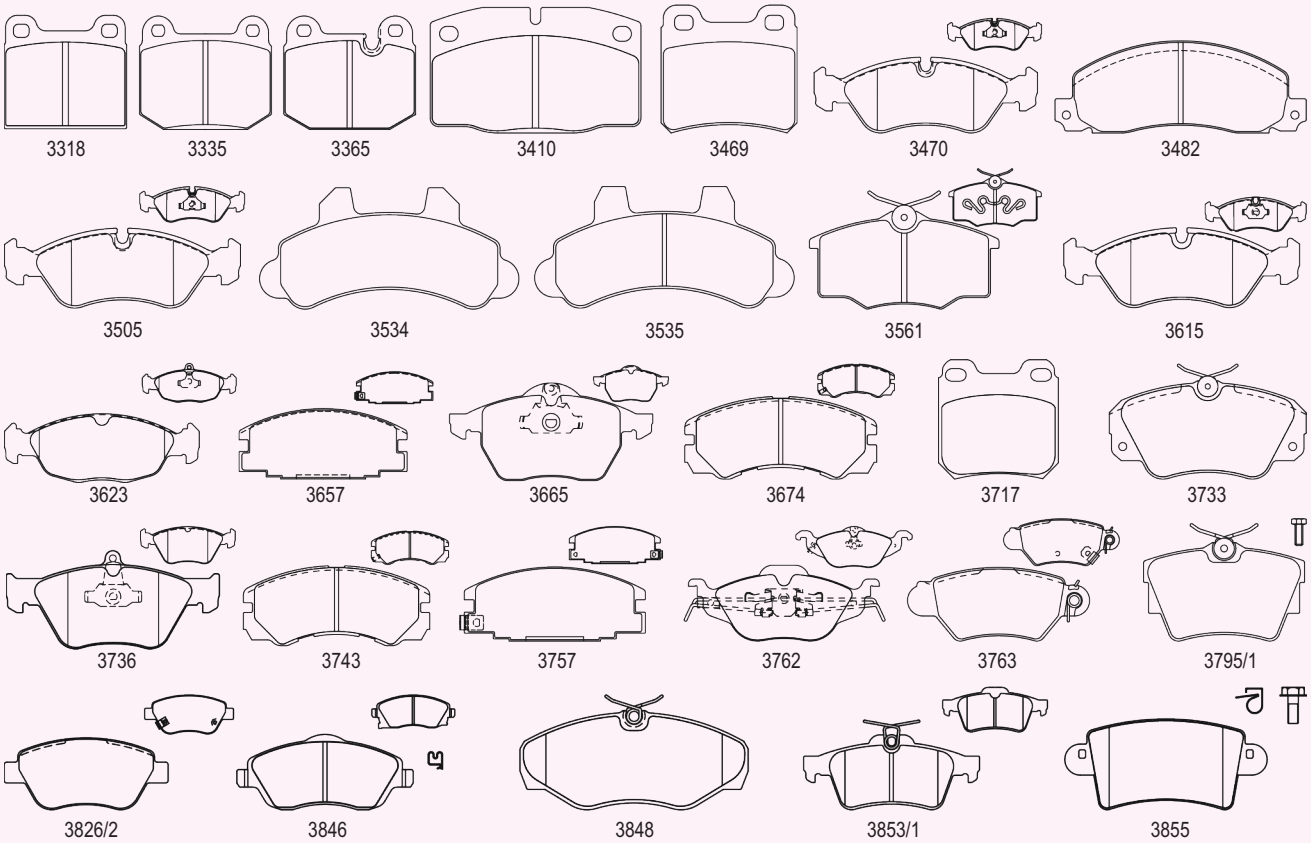

OPEL

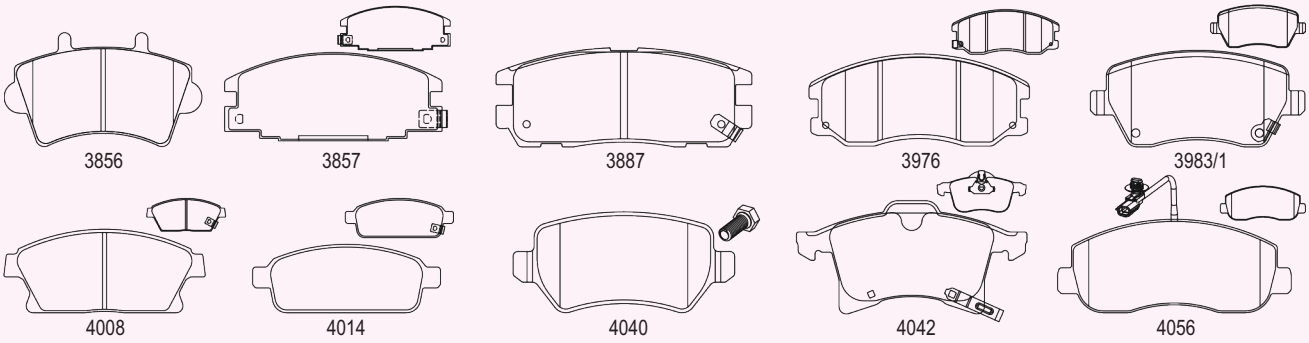

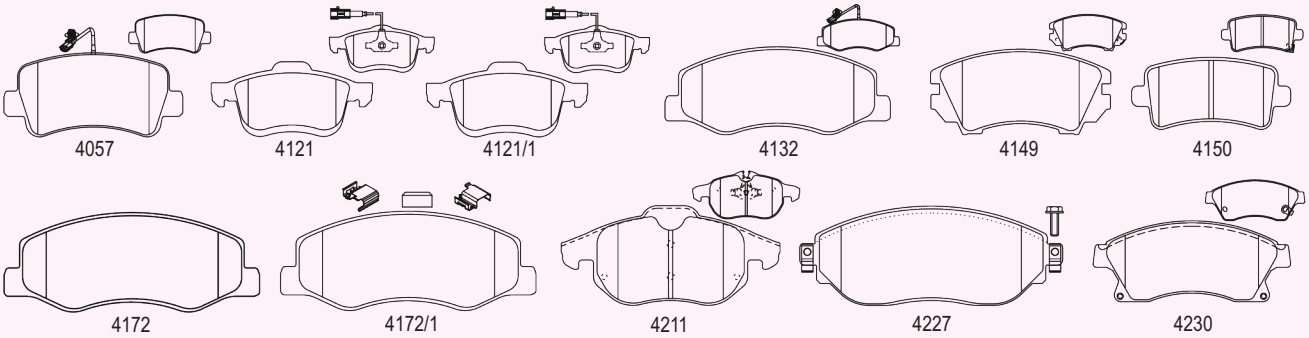

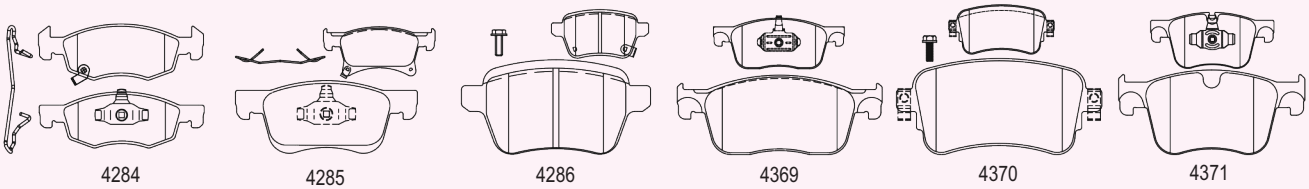

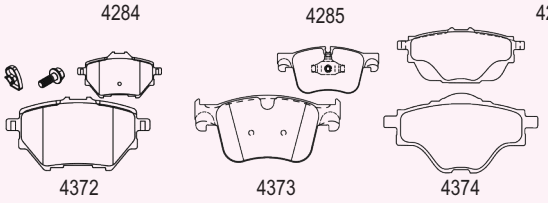

OPTARE

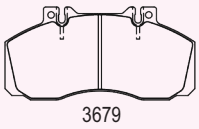

OTOKAR

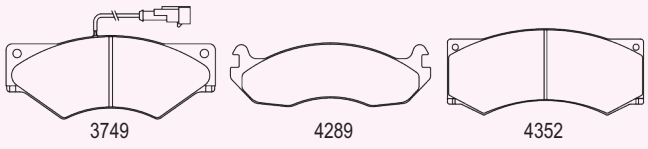

PERODUA

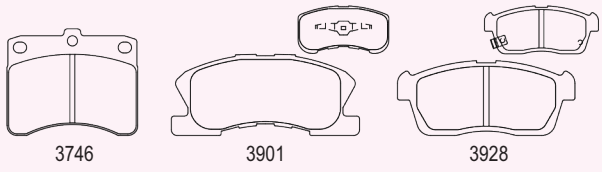

PEUGEOT

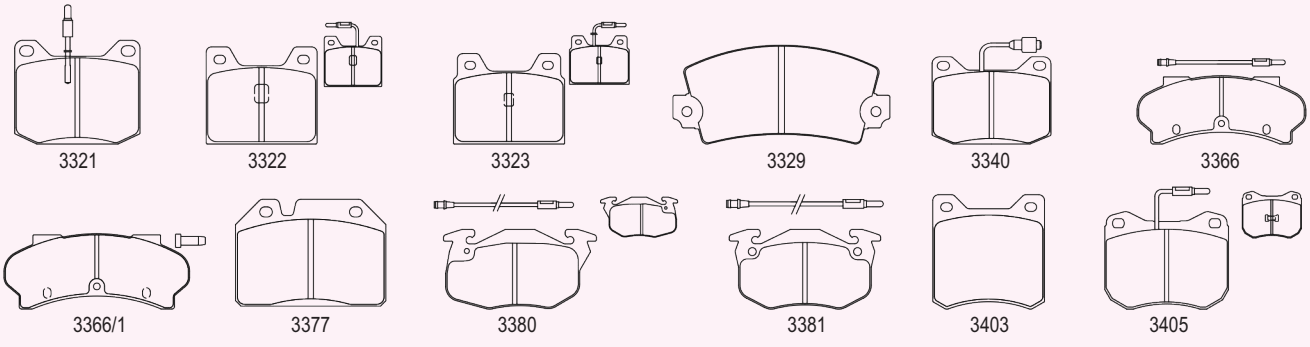

PEUGEOT

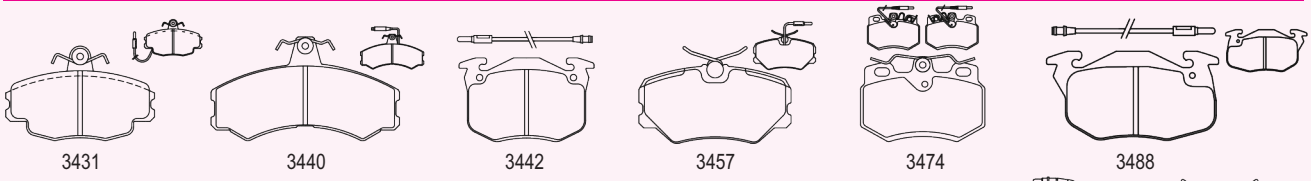
3431 3440 3442 3457 3474 3488

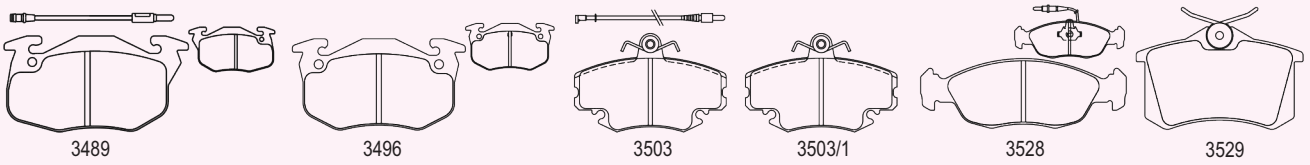
3489 3496 3503 3503/1 3528 3529

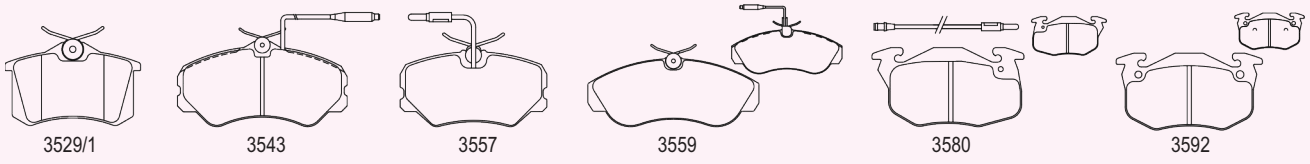
3529/1 3543 3557 3559 3580 3592

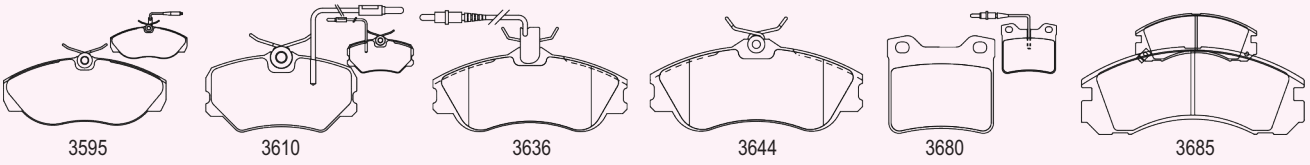
3595 3610 3636 3644 3680 3685

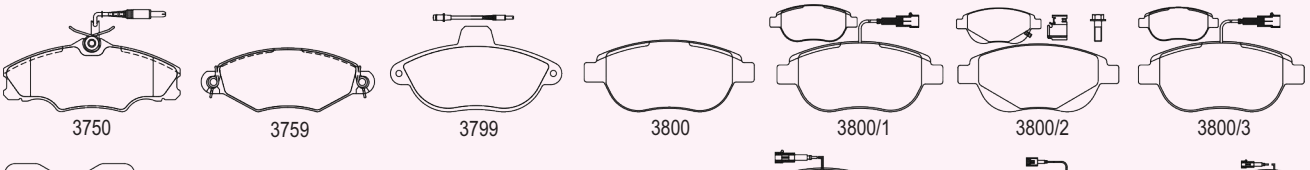
3750 3759 3799 3800 3800/1 3800/2 3800/3

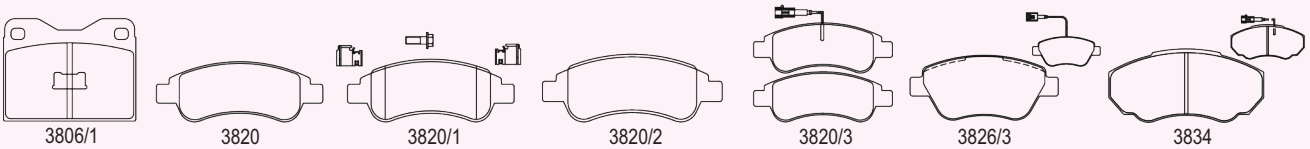
3806/1 3820 3820/1 3820/2 3820/3 3826/3 3834

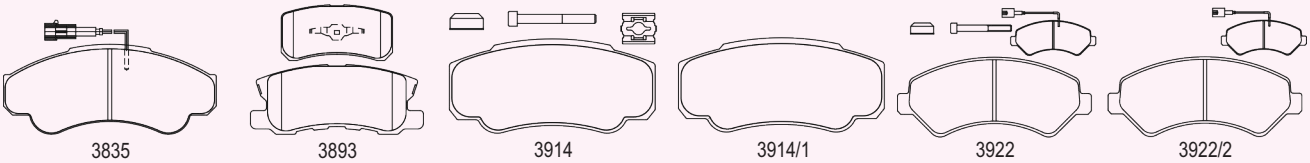
3835 3893 3914 3914/1 3922 3922/2

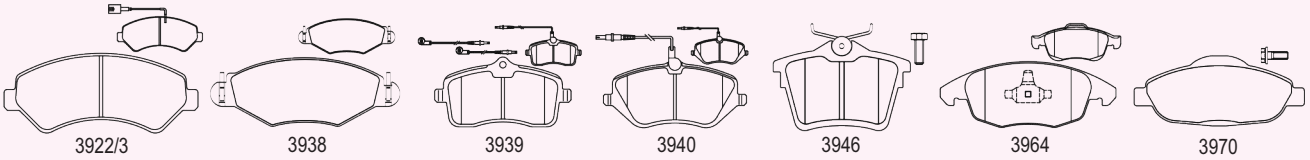
3922/3 3938 3939 3940 3946 3964 3970

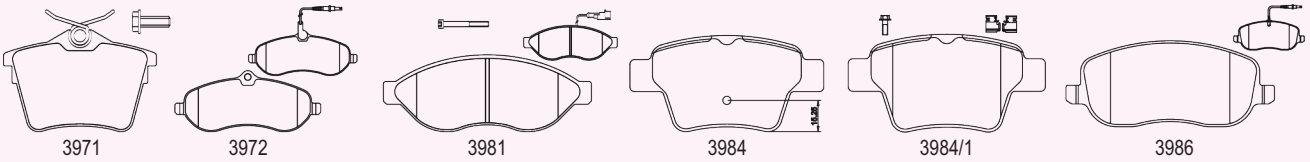
3971 3972 3981 3984 3984/1 3986

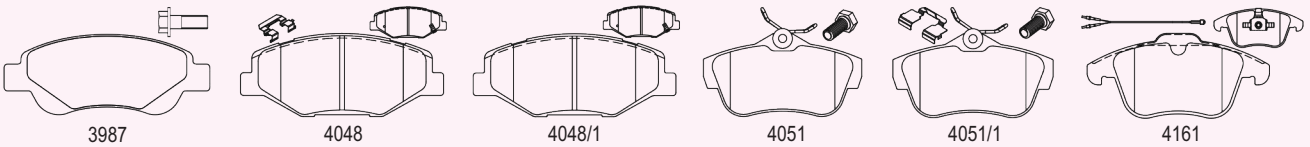
3987 4048 4048/1 4051 4051/1 4161

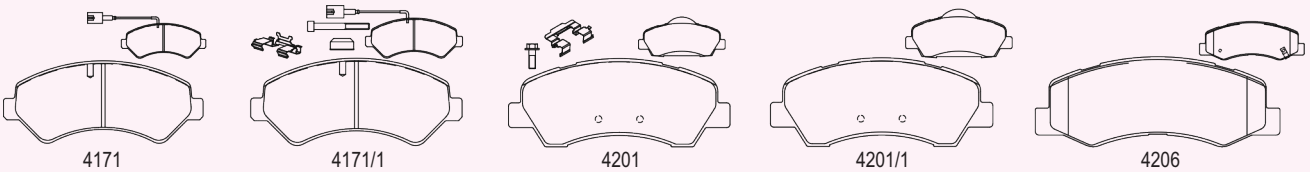
4171 4171/1 4201 4201/1 4206

PEUGEOT

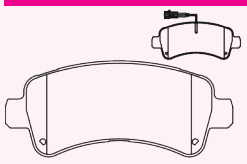
4224

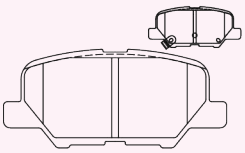
4316

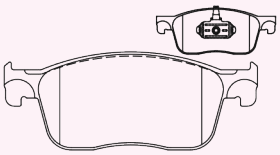
4369

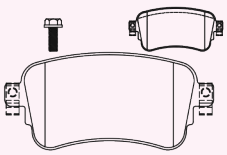
4370

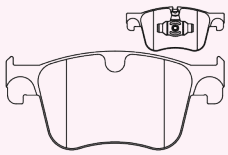
4371

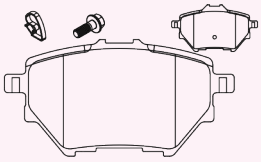
4372

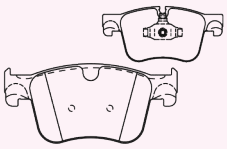
4373

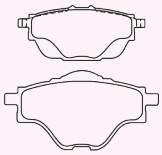
4374

PIAGGIO

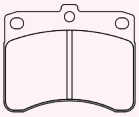
3746

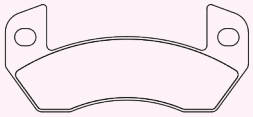
3747

PININFARINA

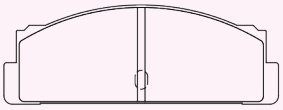
3317

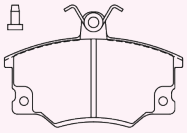
3466

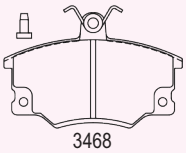
3468

PLYMOUTH

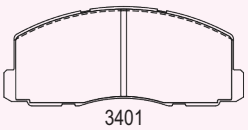
3401

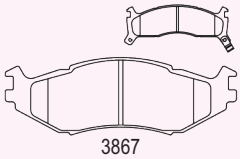
3867

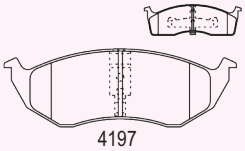
4197

PONTIAC

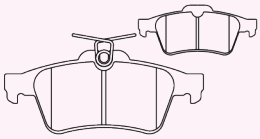
3853/1

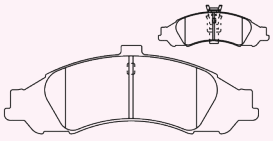
4189

PORSCHE

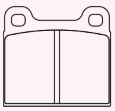
3318

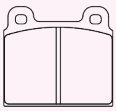
3320

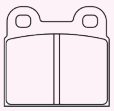
3326

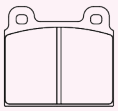
3350

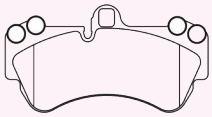
4075

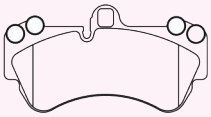
4075/1

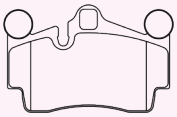
4076

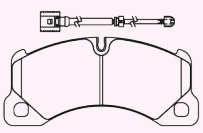
4309

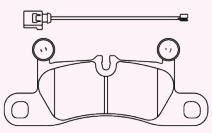
4310

PROTON

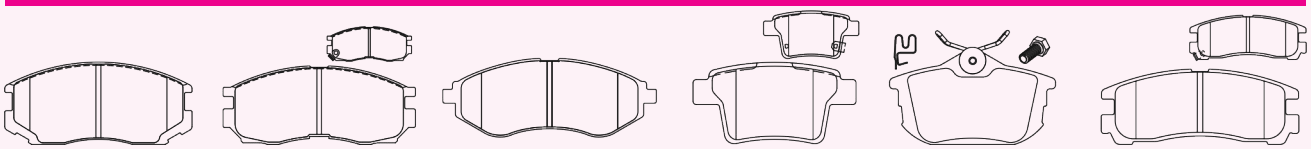

PUCH / RELIANT / RELY



RENAULT

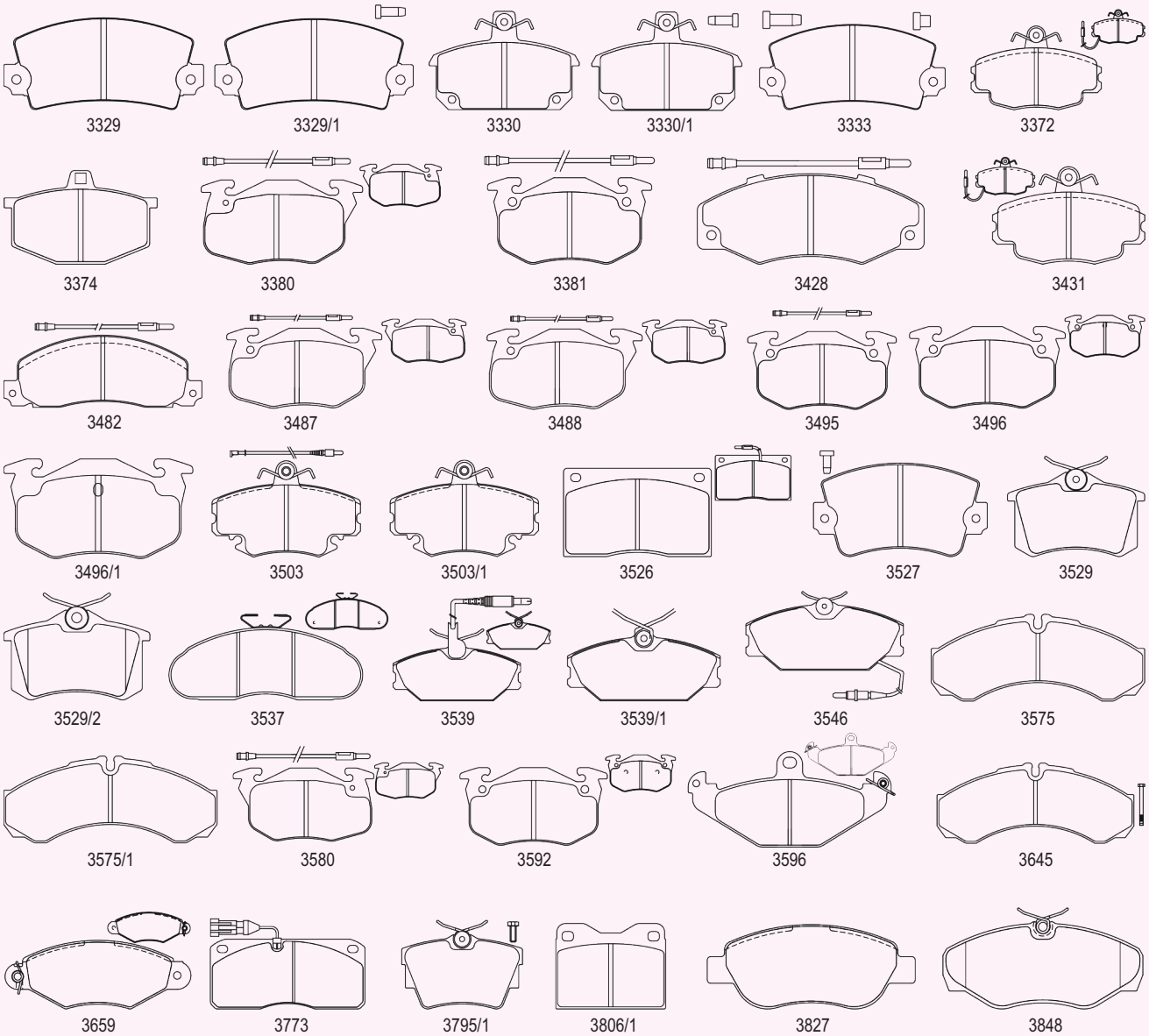

RENAULT

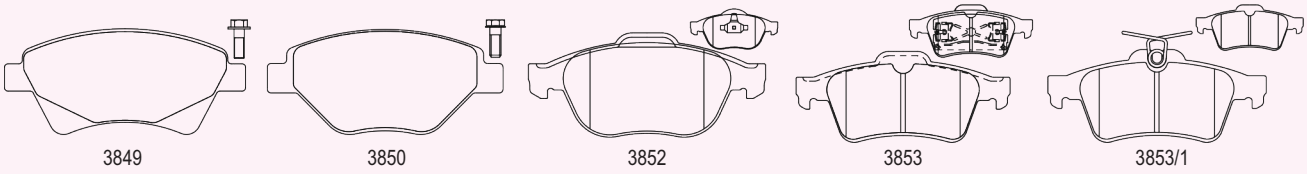
3849 3850 3852 3853 3853/1

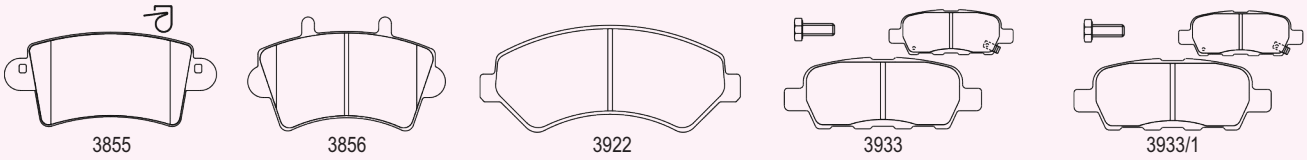
3855 3856 3922 3933 3933/1

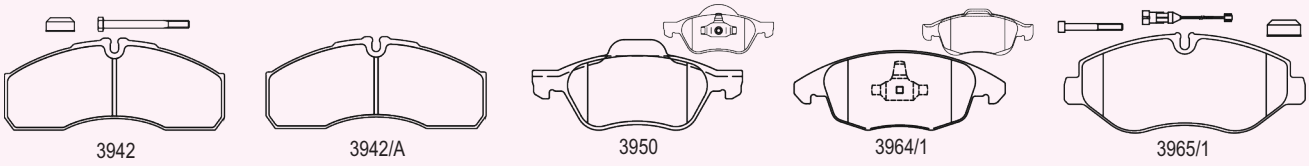
3942 3942/A 3950 3964/1 3965/1

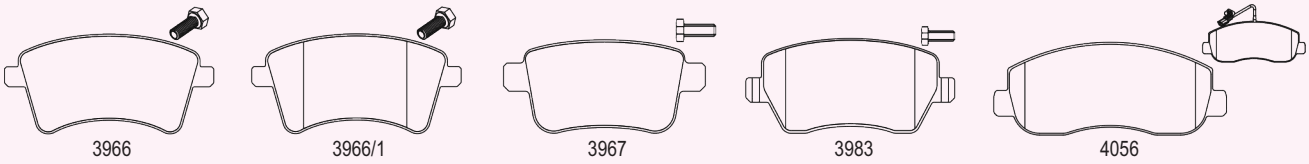
3966 3966/1 3967 3983 4056

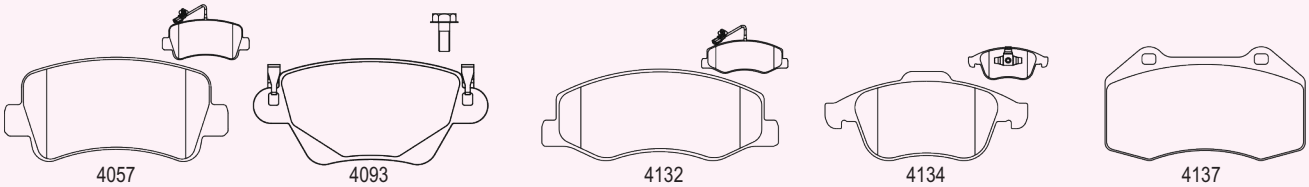
4057 4093 4132 4134 4137

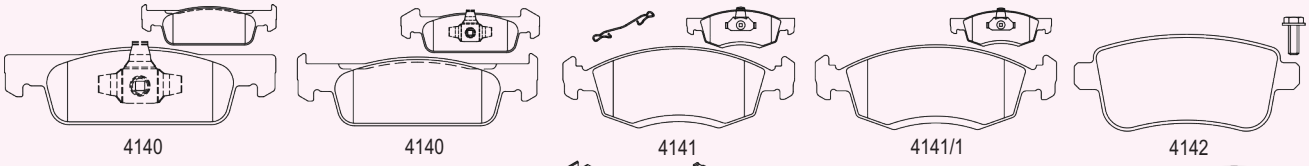
4140 4140 4141 4141/1 4142

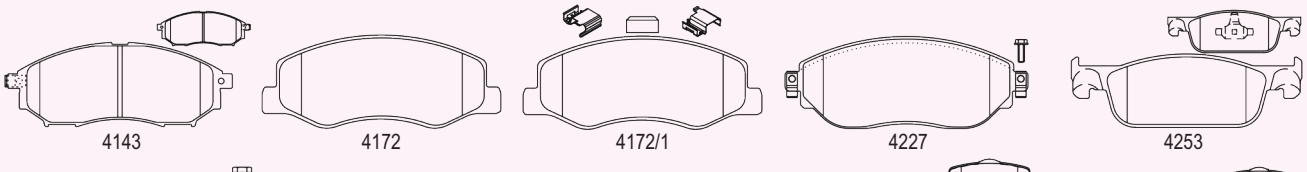
4143 4172 4172/1 4227 4253

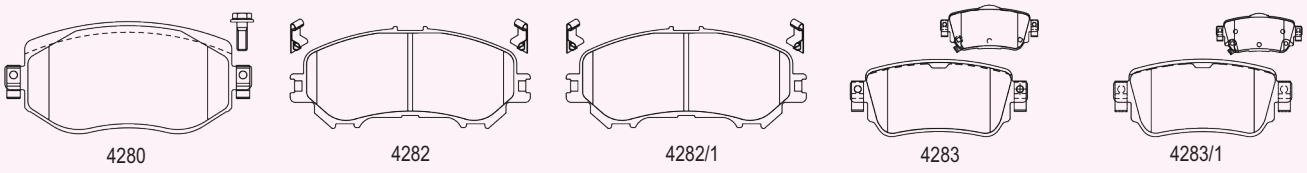
4280 4282 4282/1 4283 4283/1

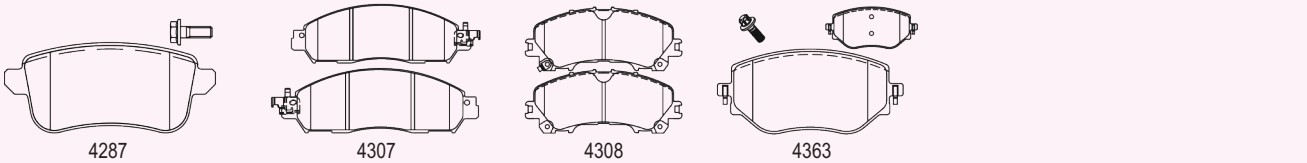
4287 4307 4308 4363

REX MOTORCYCLES / ROEWE (SAIC) / ROLLS-ROYCE

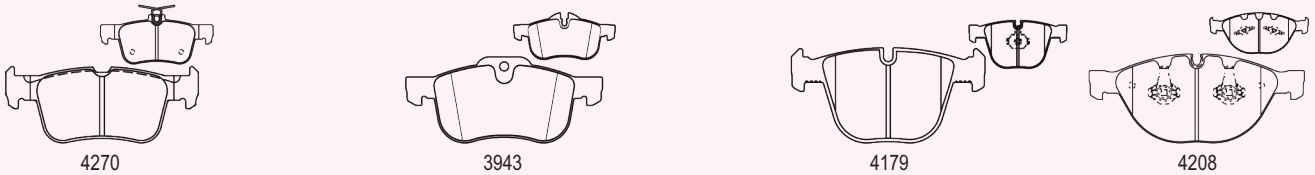
4270 3943 4179 4208

ROVER

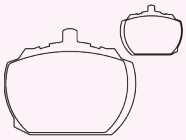
3416

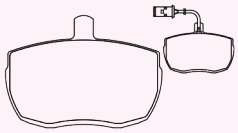
3423/1

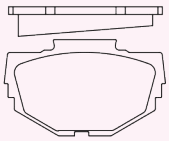
3481

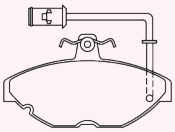
3624

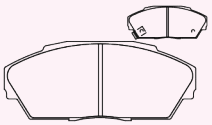
3631

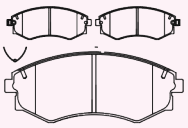
3632

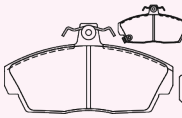
3683

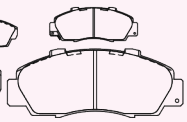
3704

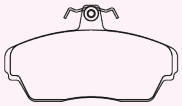
3872

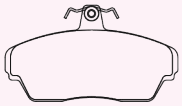
3872/1

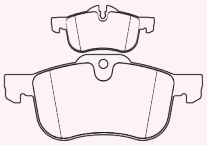
3943

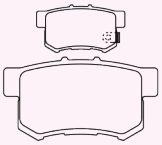
4148

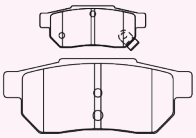
4212

RIICH

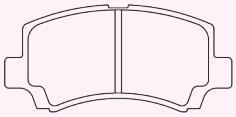
4027

RIMO GO KART

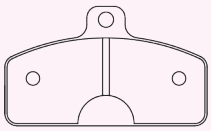
4304

SAAB

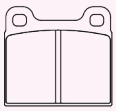
3318

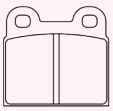
3326

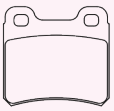
3469

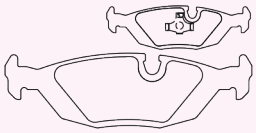
3583

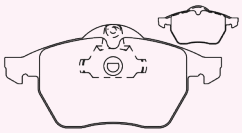
3665

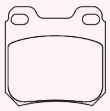
3717

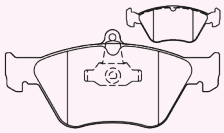
3736

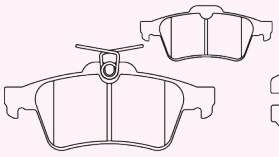
3853/1

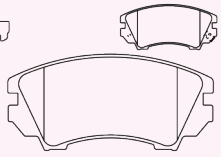
4149

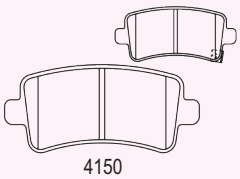
4150

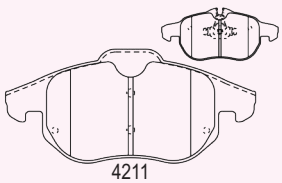
4211

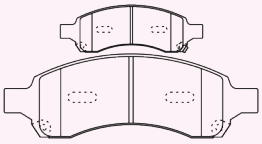
4218

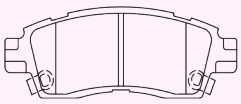
4219

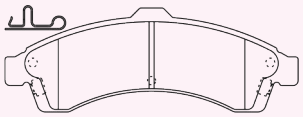
4221

SAMSUNG / SCION

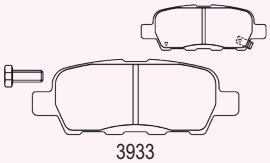
3933

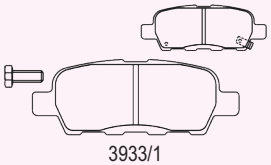
3933/1

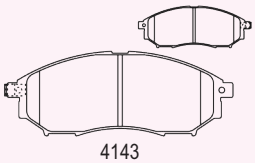
4143

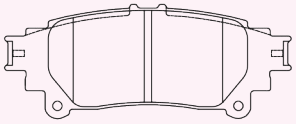
4256

SEAT

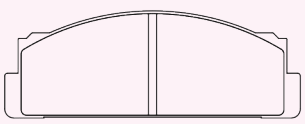
3316

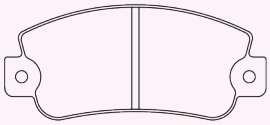
3424

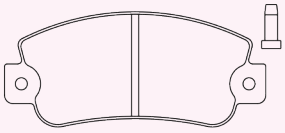
3424/1

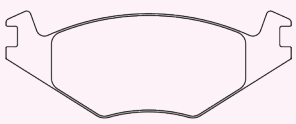
3441

SEAT

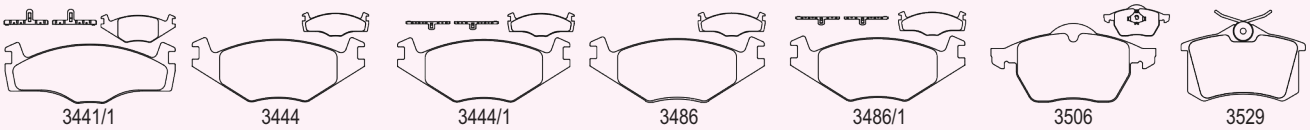
3441/1
3444
3444/1
3486
3486/1
3506
3529

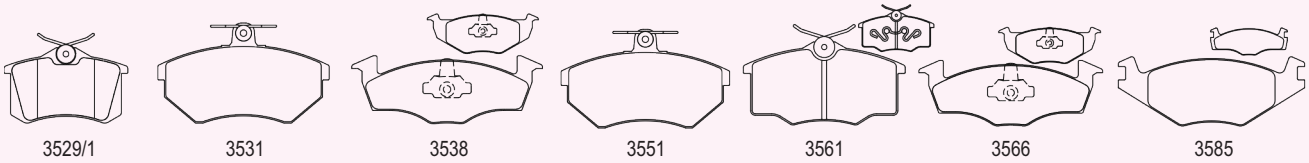
3529/1
3531
3538
3551
3561
3566
3585

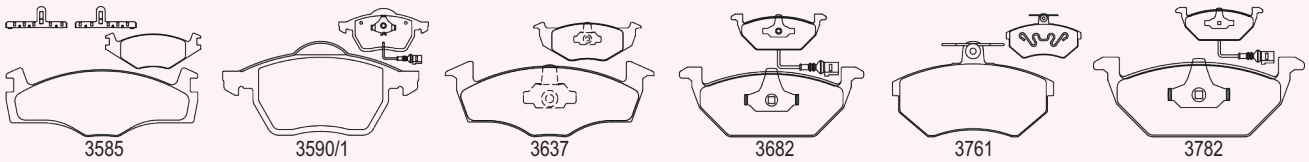
3585
3590/1
3637
3682
3761
3782

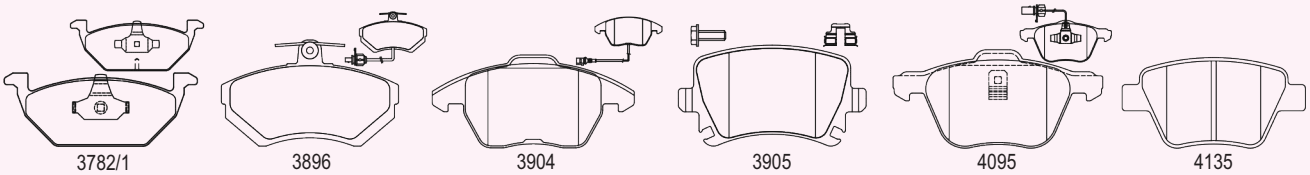
3782/1
3896
3904
3905
4095
4135

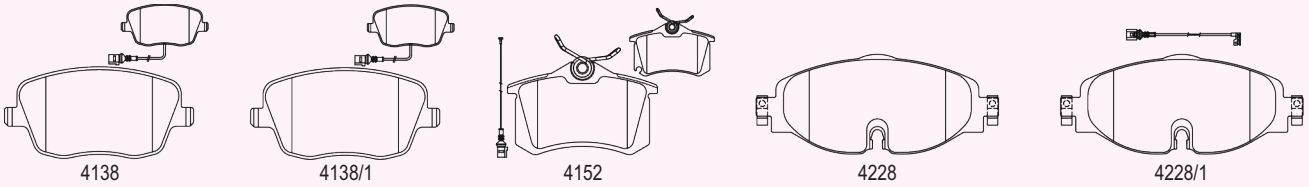
4138
4138/1
4152
4228
4228/1

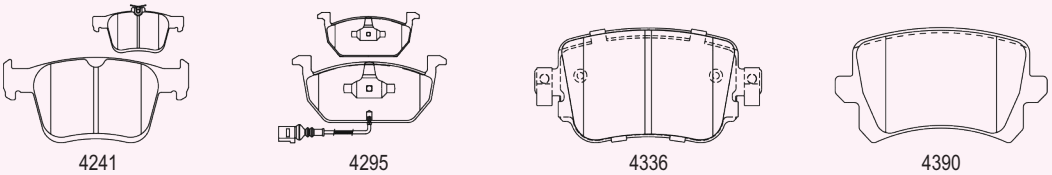
4241
4295
4336
4390

SKODA

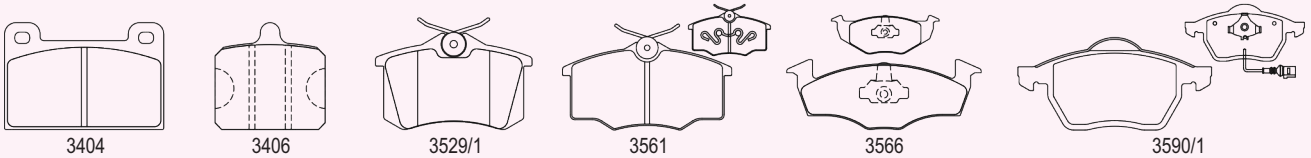
3404
3406
3529/1
3561
3566
3590/1

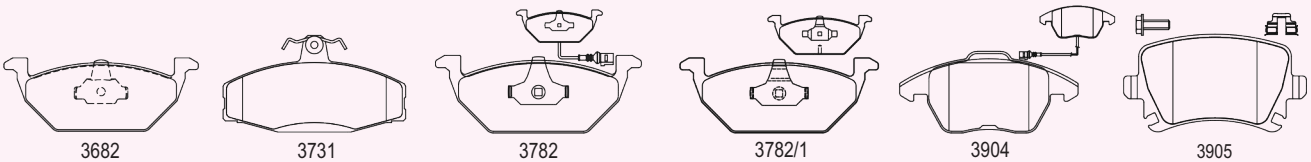
3682
3731
3782
3782/1
3904
3905

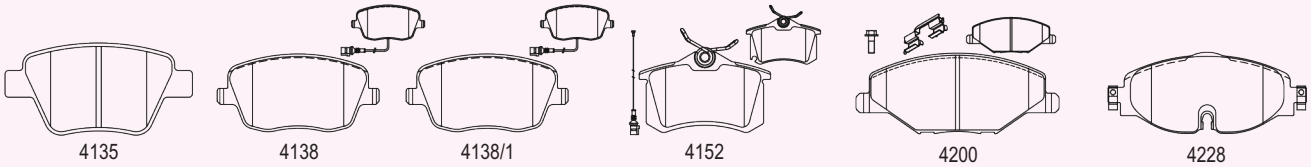
4135
4138
4138/1
4152
4200
4228

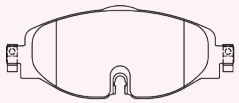
4228

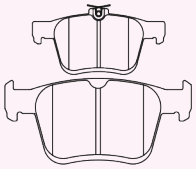
4241

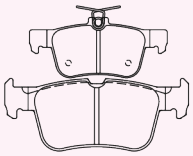
4270

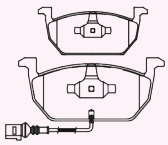
4295

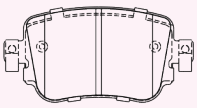
4336

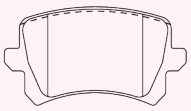
4390

SMART

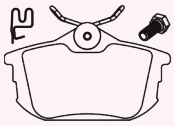
4062

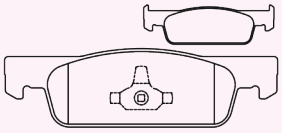
4140

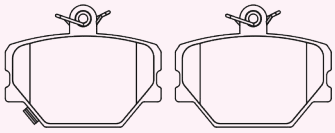
4281

SSANGYONG

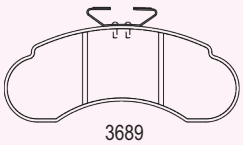
3689

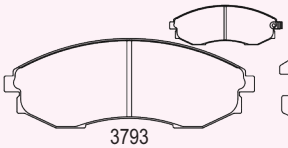
3793

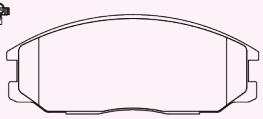
3843

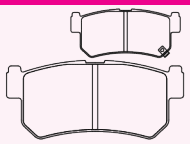
3895

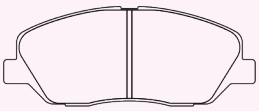
3960

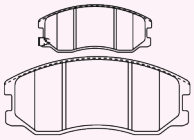
3976/1

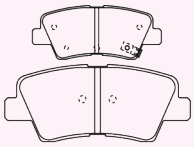
4061

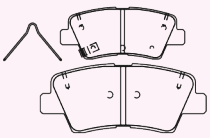
4343

SUBARU

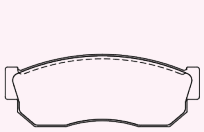
3394

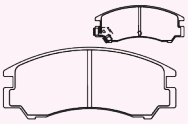
3395

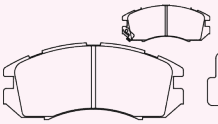
3426

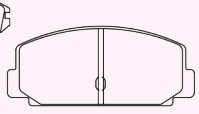
3601

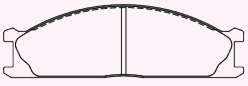
3692

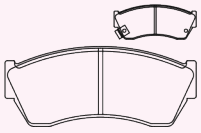
3721

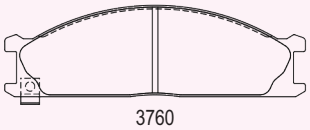
3760

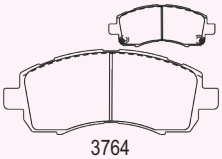
3764

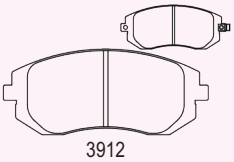
3912

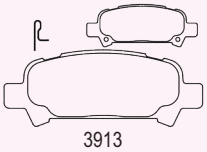
3913

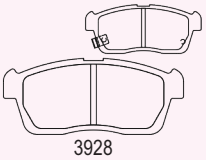
3928

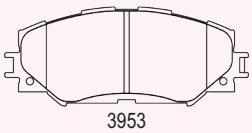
3953

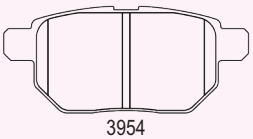
3954

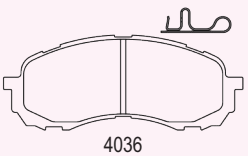
4036

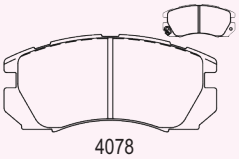
4078

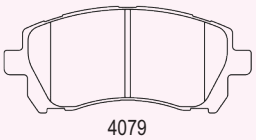
4079

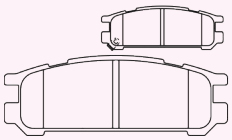
4080

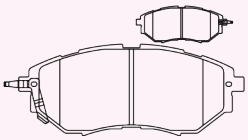
4081

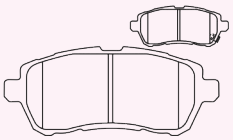
4122

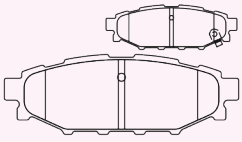
4213

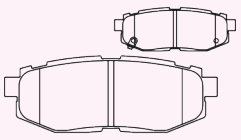
4258

SUZUKI

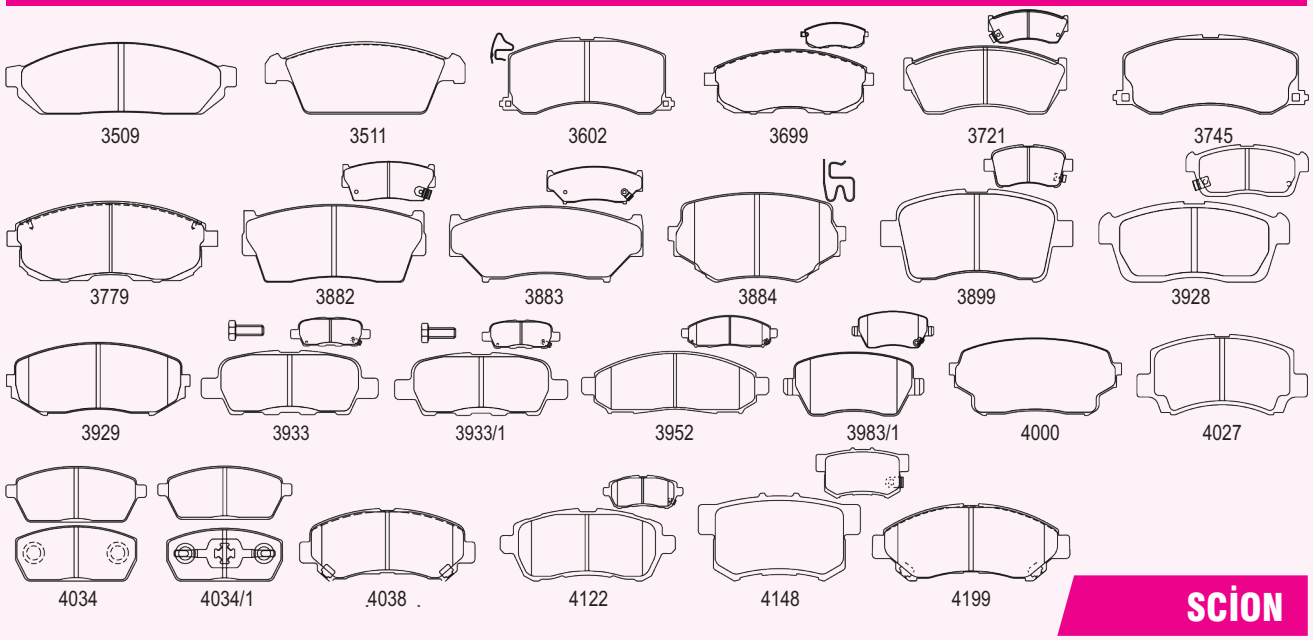

SCION

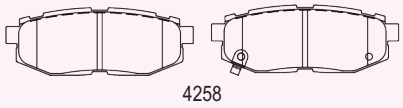

TALBOT

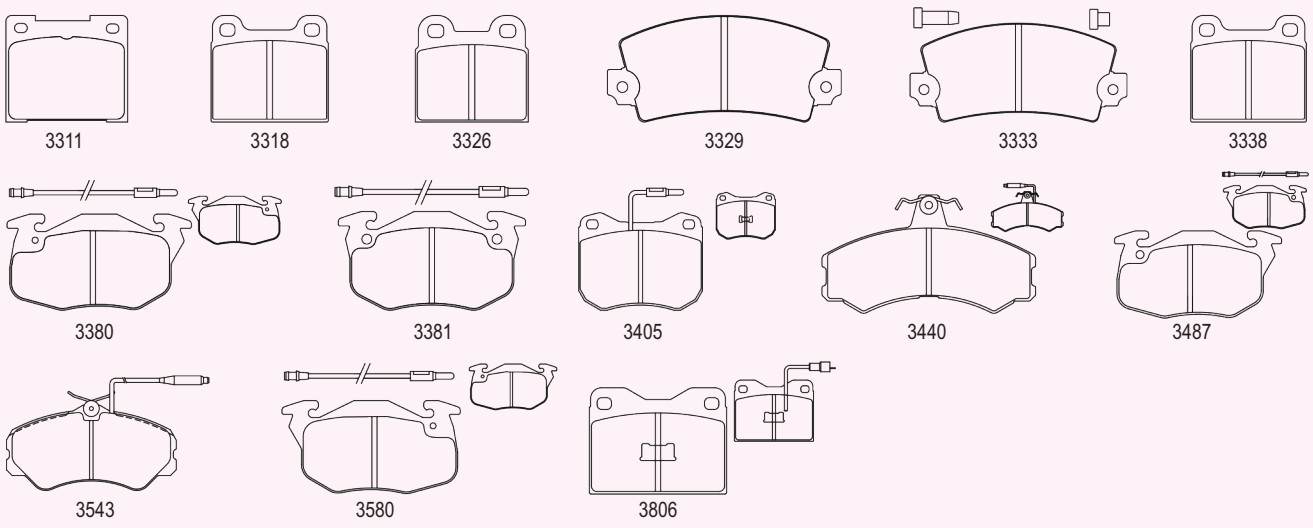

TOYOTA

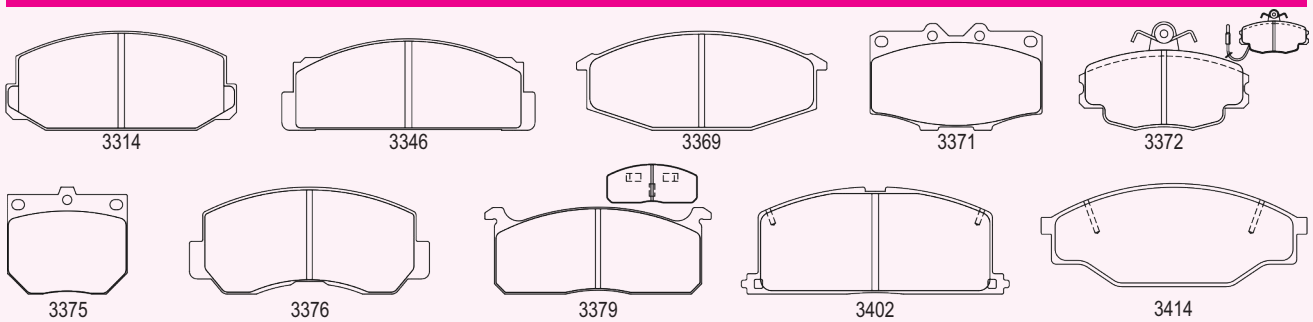

TOYOTA

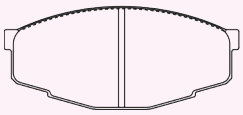
3418

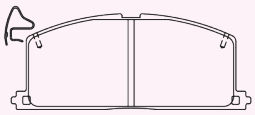
3472

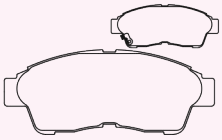
3554

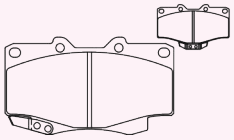
3560

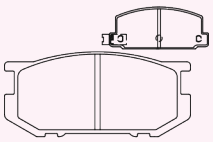
3579

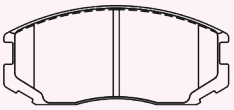
3604

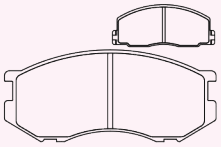
3634

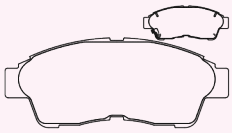
3651

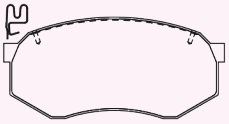
3666

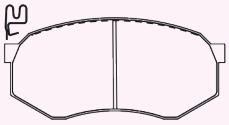
3672

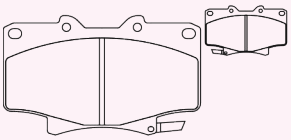
3673

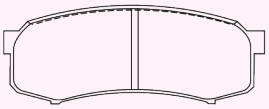
3693

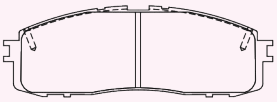
3701

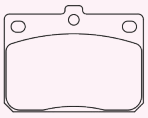
3709

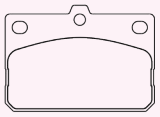
3710

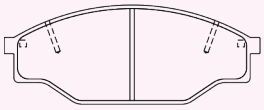
3714

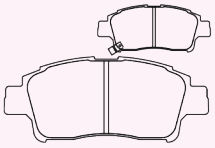
3768

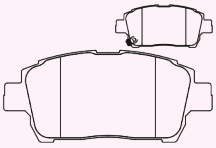
3769

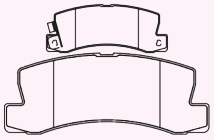
3776

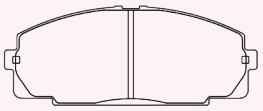
3777

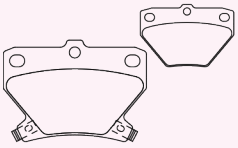
3788

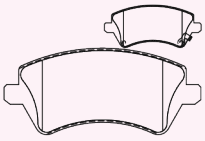
3817

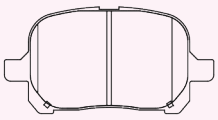
3822

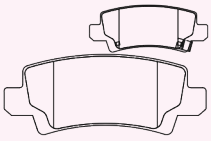
3825

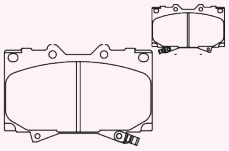
3829

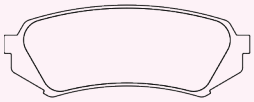
3830

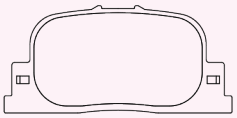
3876

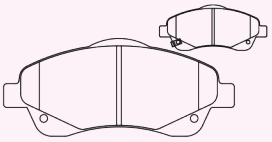
3890

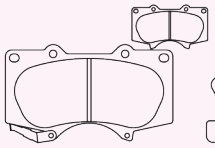
3891

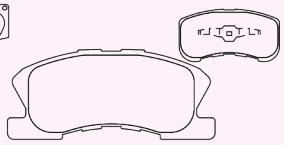
3901

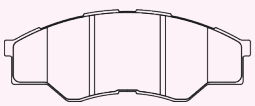
3903

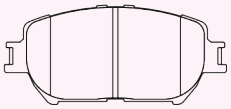
3910

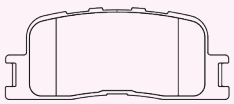
3911

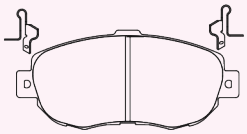
3915

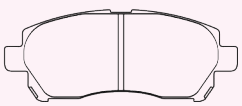
3927

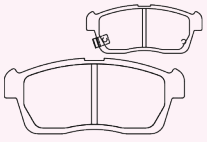
3928

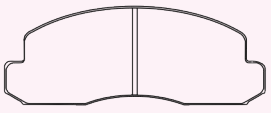
3930

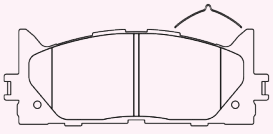
3948

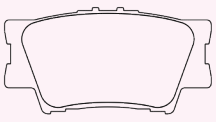
3949

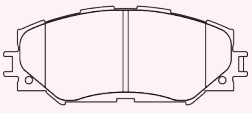
3953

3954

3956

3958

3972

3982

3987

3996

3997

3998

4003

TOYOTA

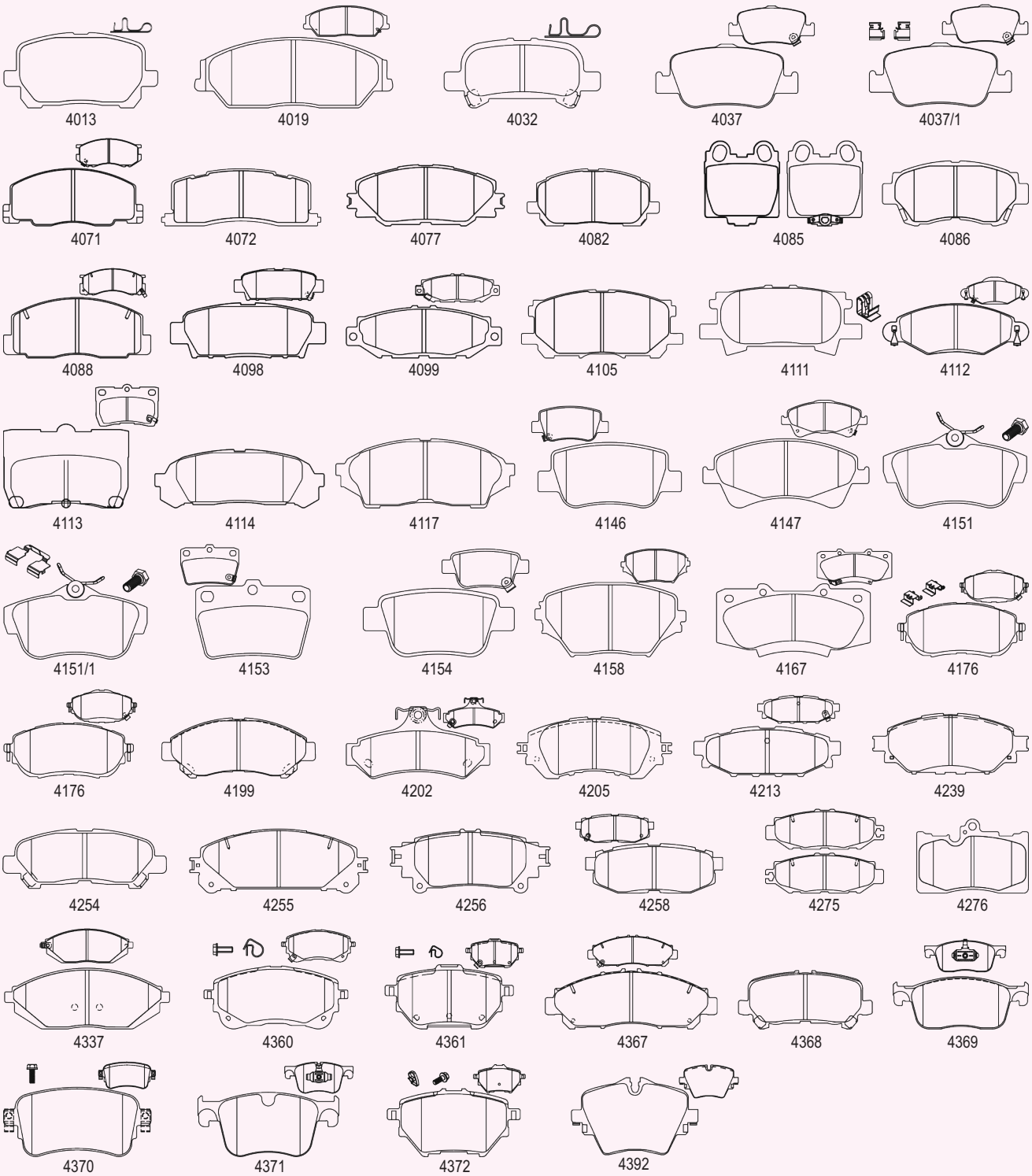

TRIUMPH

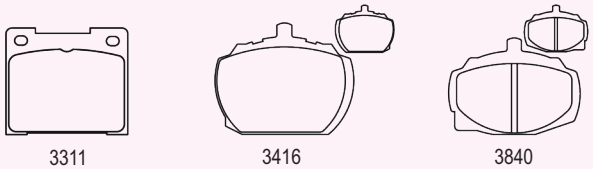

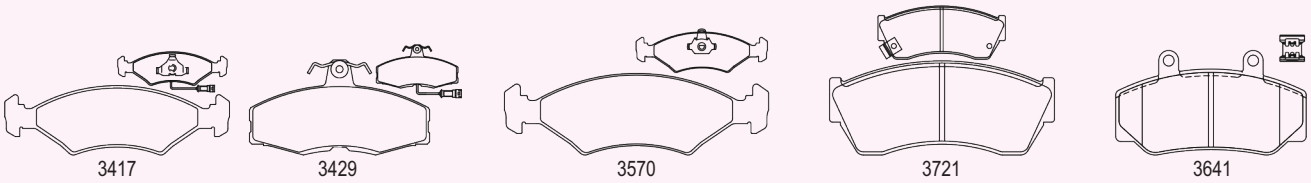
3417
3429
3570
3721
3641

VAUXHALL

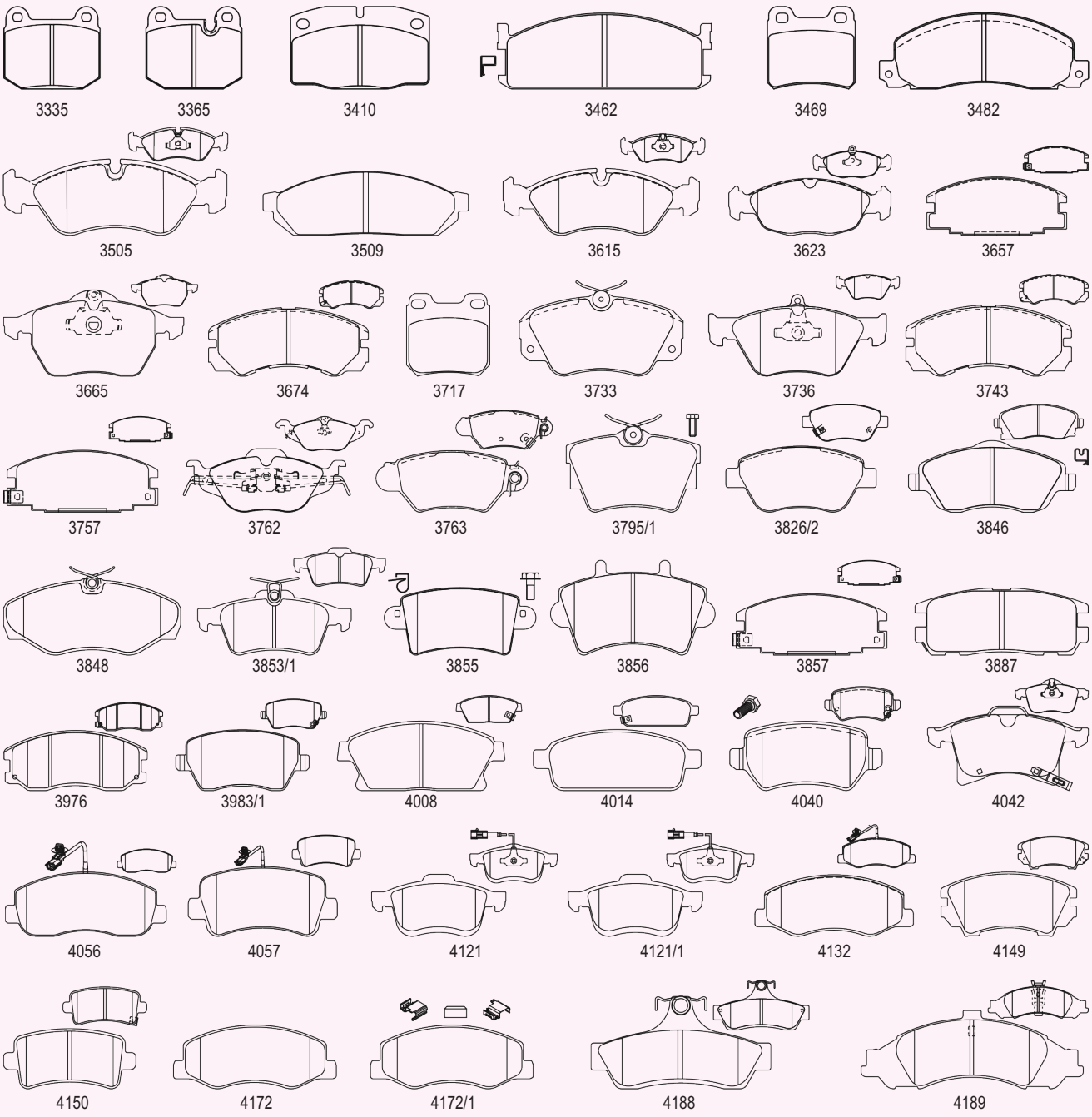
3335
3365
3410
3462
3469
3482
3505
3509
3615
3623
3657
3665
3674
3717
3733
3736
3743
3757
3762
3763
3795/1
3826/2
3846
3848
3853/1
3855
3856
3857
3887
3976
3983/1
4008
4014
4040
4042
4056
4057
4121
4121/1
4132
4149
4150
4172
4172/1
4188
4189

VAUXHALL

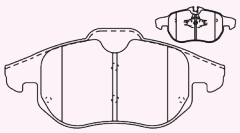
4211

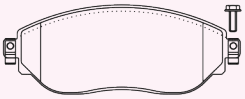
4227

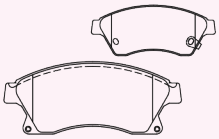
4230

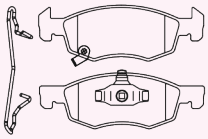
4284

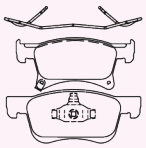
4285

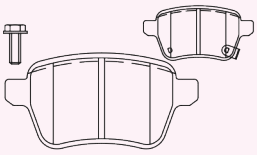
4286

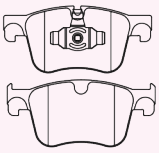
4371

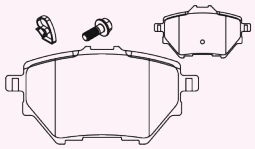
4372

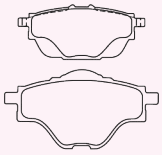
4374

VOLVO

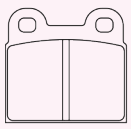
3326

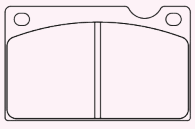
3373

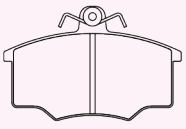
3378

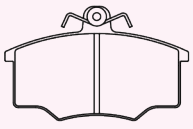
3490

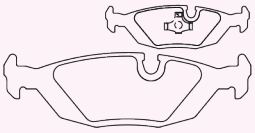
3583

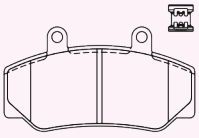
3641

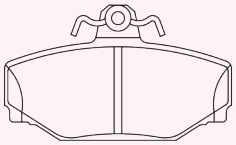
3642

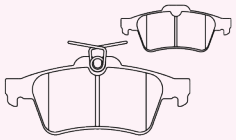
3853/1

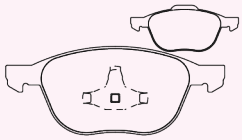
3885

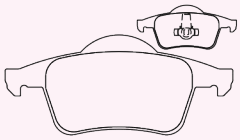
3918

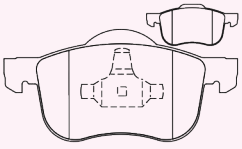
3919

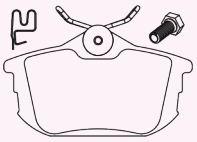
4062

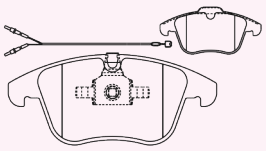
4161

VW

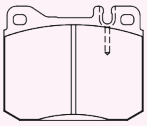
3315/1

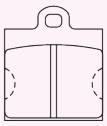
3325

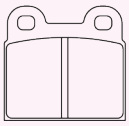
3326

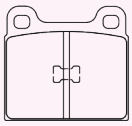
3327

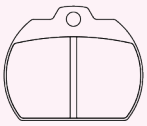
3328

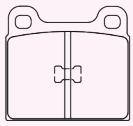
3343

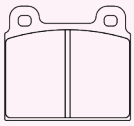
3350

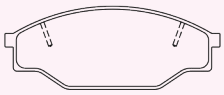
3414

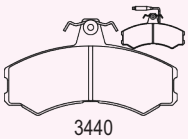
3440

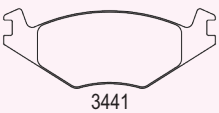
3441

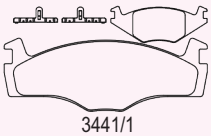
3441/1

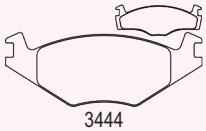
3444

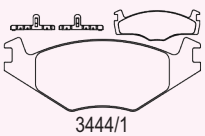
3444/1

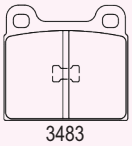
3483

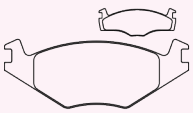
3486

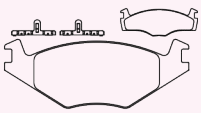
3486/1

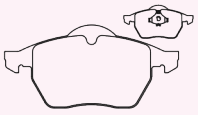
3506

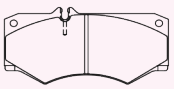
3513

3529

3529/1

3531

3533

3538

3551

3553

3553/1

3560

3561

VW

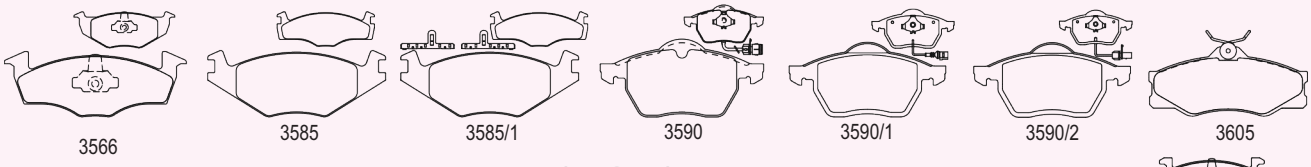
3566
3585
3585/1
3590
3590/1
3590/2
3605

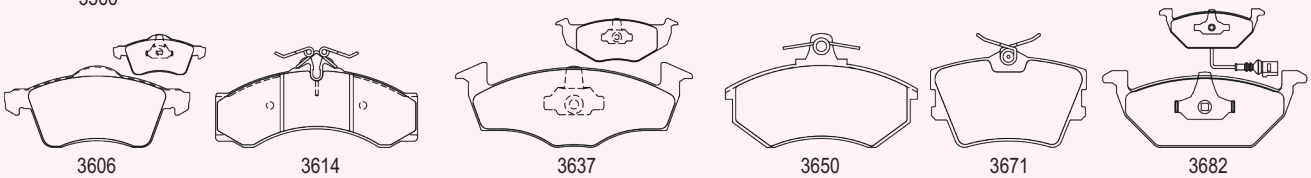
3606
3614
3637
3650
3671
3682

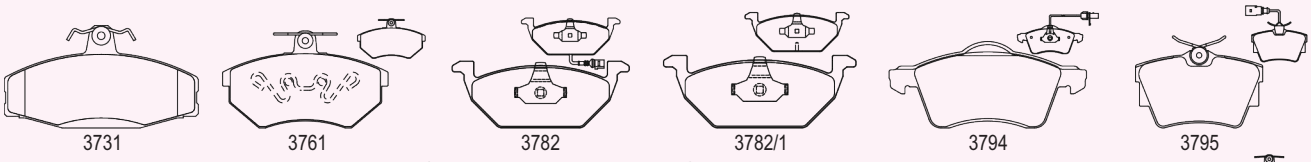
3731
3761
3782
3782/1
3794
3795

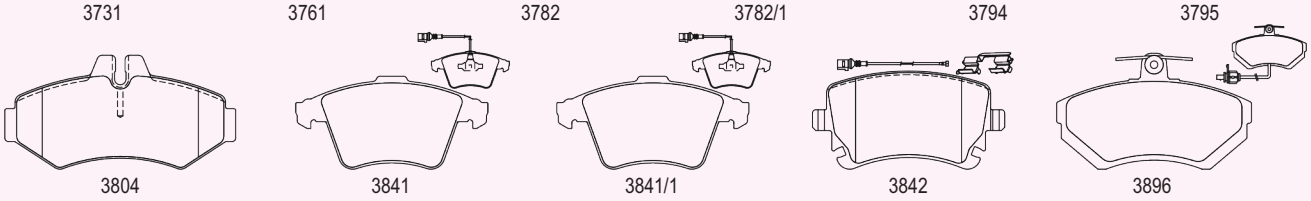
3804
3841
3841/1
3842
3896

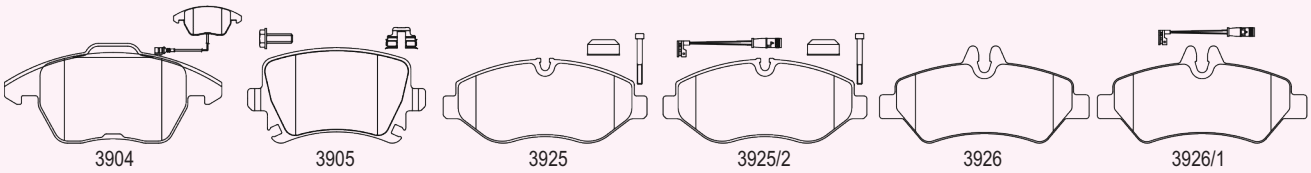
3904
3905
3925
3925/2
3926
3926/1

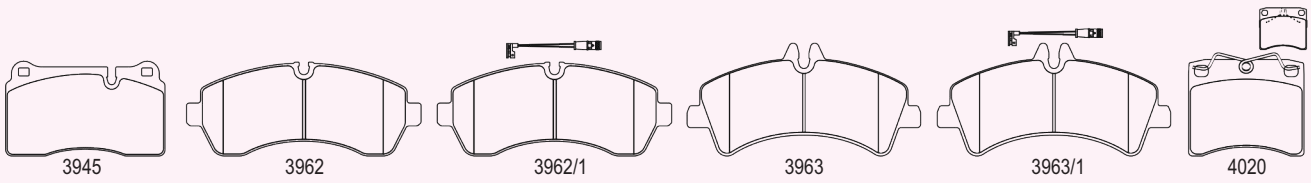
3945
3962
3962/1
3963
3963/1
4020

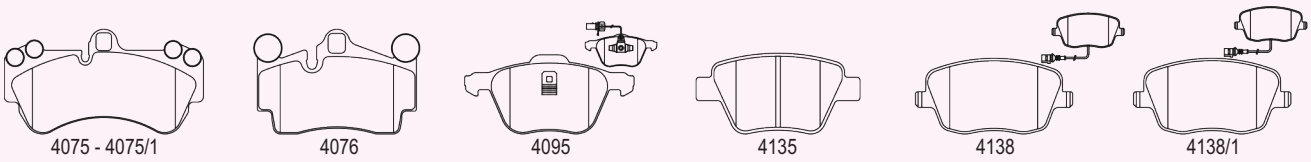
4075 - 4075/1
4076
4095
4135
4138
4138/1

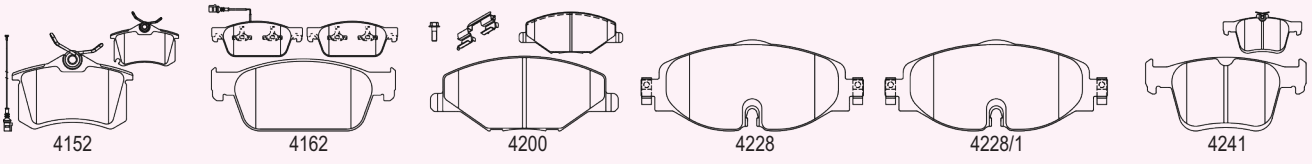
4152
4162
4200
4228
4228/1
4241

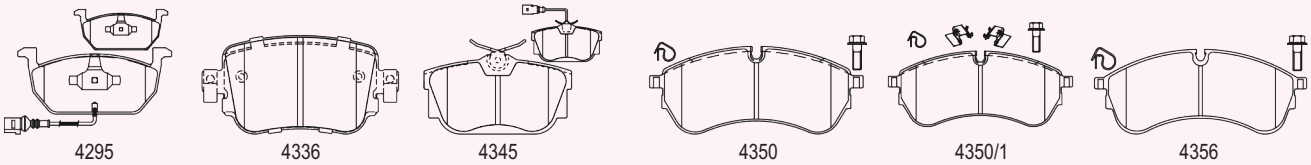
4295
4336
4345
4350
4350/1
4356

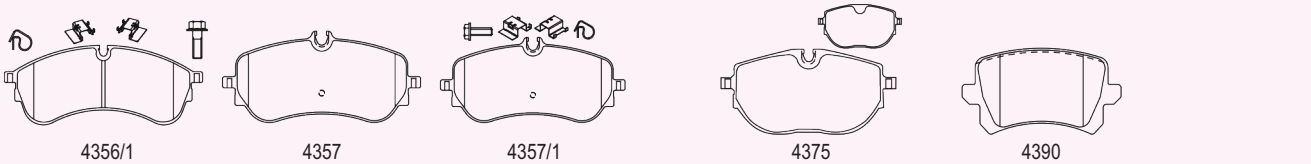
4356/1
4357
4357/1
4375
4390

WARTBURG

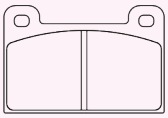

3404

WIESMANN

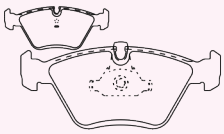

3564/1

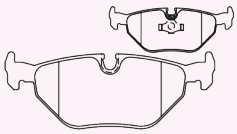

3578

WULING

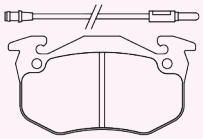

3381

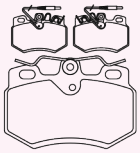

3474

WESTERN

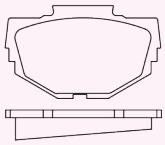

3481

WUUNG

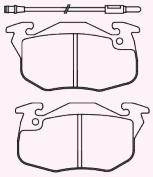

3580

YUGO

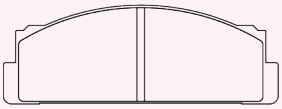

3316

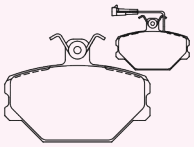

3432

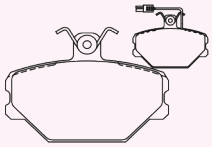

3491

ZASTAVA

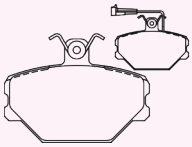

3432

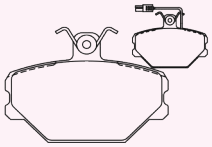

3491

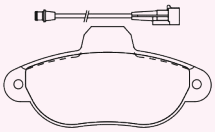

3608

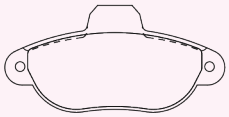

3643

ZAZ

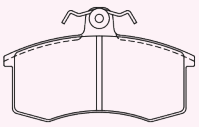

3422

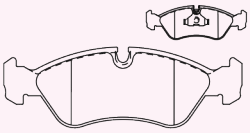

3470

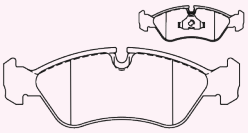

3505

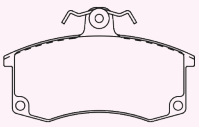

3552

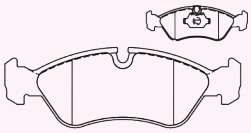

3615

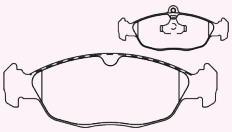

3623

MANUFACTURERS CROSS REFERENCE TABLE

REFERENCE	T(mm)	REMARKS	MAKE	F/R	WVA No
3311	14.25	4 PADS PLAIN	FORD - HOLDEN TALBOT - TRIUMPH	F	20088

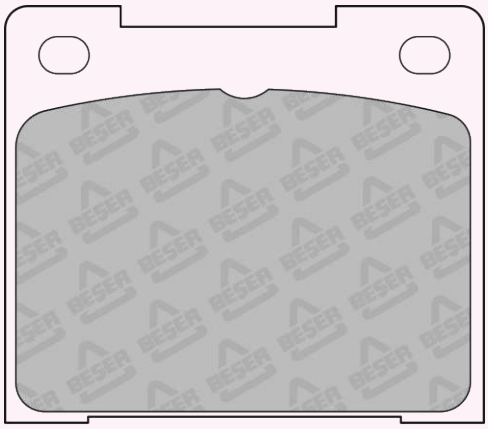

63 x 55,4

REFERENCE	T(mm)	REMARKS	MAKE	F/R	WVA No
3312	15	4 PADS PLAIN	BENTLEY - FORD - HOLDEN, HYUNDAI - LOTUS	F	20491

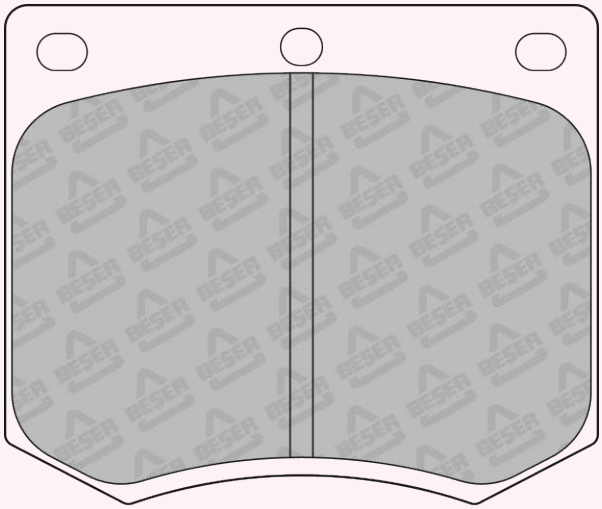

78,3 x 65,9

REFERENCE	T(mm)	REMARKS	MAKE	F/R	WVA No
3313	17	4 PADS PLAIN	AUDİ - FORD	F	20252 20407

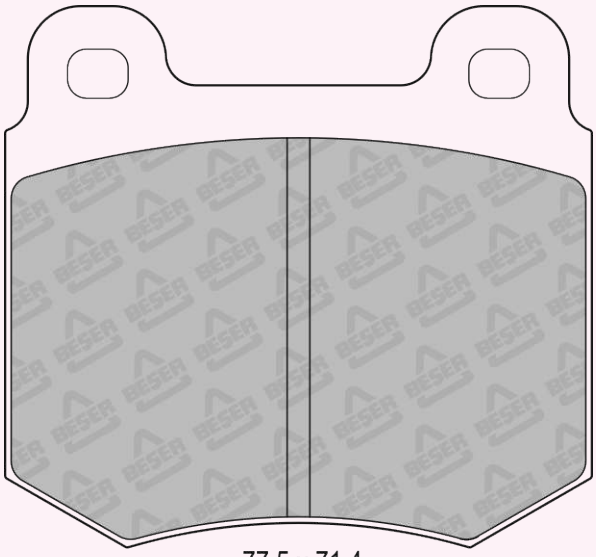

77,5 x 71,4

REFERENCE	T(mm)	REMARKS	MAKE	F/R	WVA No
3314	13,8	4 PADS PLAIN	DAIHATSU - TOYOTA	F	20599

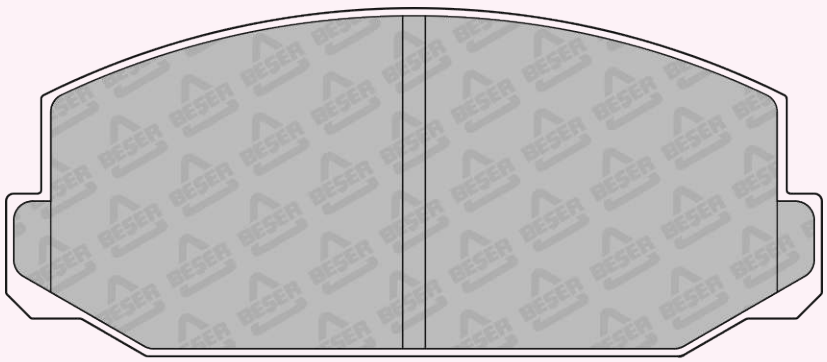

108 x 46

REFERENCE	T(mm)	REMARKS	MAKE	F/R	WVA No
3315	15	4 PADS PLAIN	MERCEDES BENZ	F	20392 29581

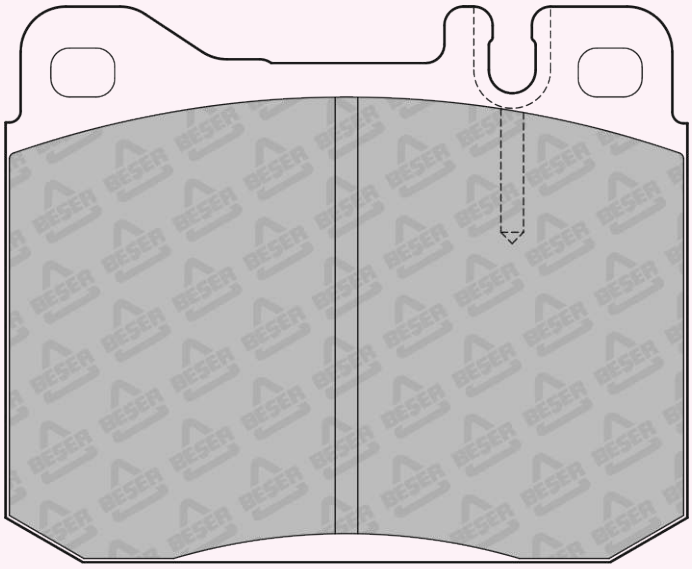

90 x 73,4

REFERENCE	T(mm)	REMARKS	MAKE	F/R	WVA No
3315/1	19	4 PADS PLAIN	VW	F	20392

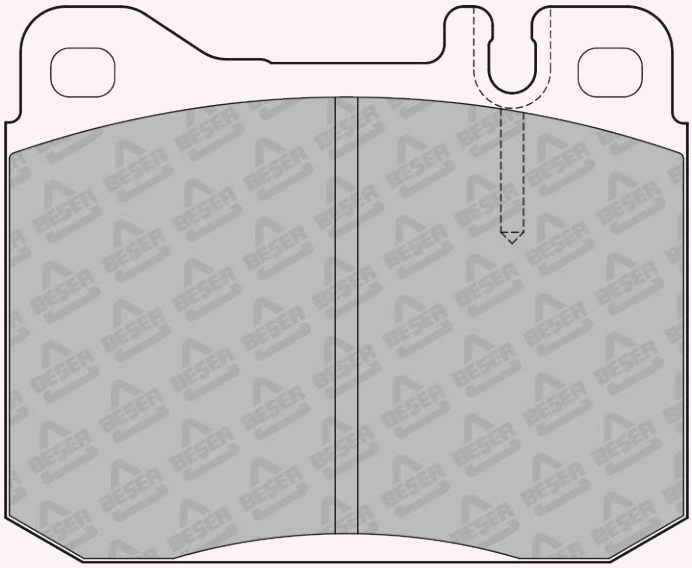

90 x 73,4

REFERENCE	T(mm)	REMARKS	MAKE	F/R	WVA No
3316	17,3	4 PADS PLAIN	AUTOBIANCHI FIAT - FSO - INNOCENTI LANCIA - SEAT - YUGO	F	20073

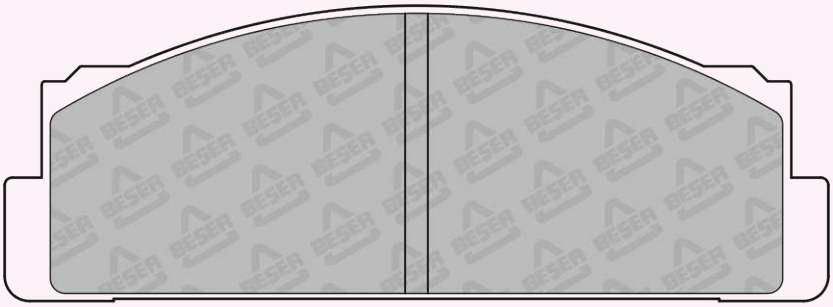

108,8 x 39

REFERENCE	T(mm)	REMARKS	MAKE	F/R	WVA No
3317	10	4 PADS WITH CENTRAL LUG.	FIAT - FSO LANCIA - PININFARINA	R	20074

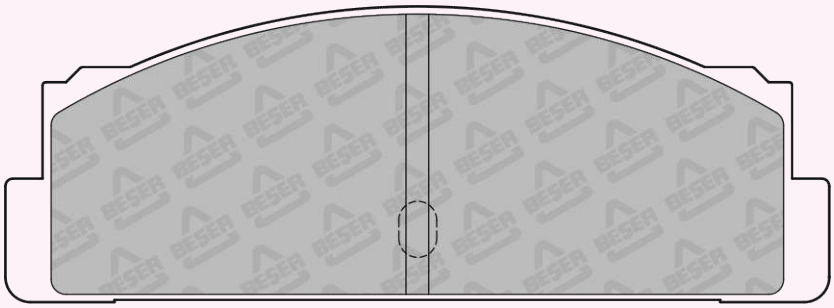

108,8 x 39

REFERENCE	T(mm)	REMARKS	MAKE	F/R	WVA No
3318	14,5	4 PADS PLAIN	ALFA ROMEO - BEDFORD - BMW MERCEDES BENZ - OPEL PORSCHE - SAAB - TALBOT	F	20034 20107

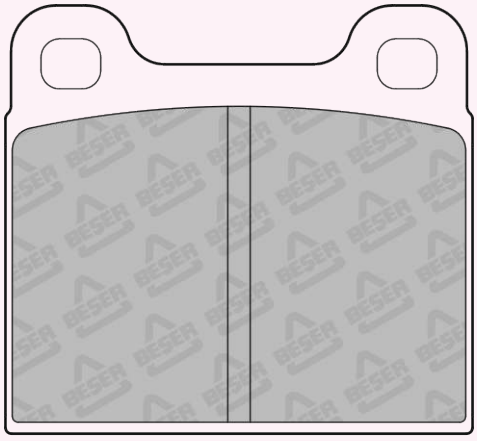

61,6 x 56,5

REFERENCE	T(mm)	REMARKS	MAKE	F/R	WVA No
3319	15	4 PADS PLAIN	MG	F	20037

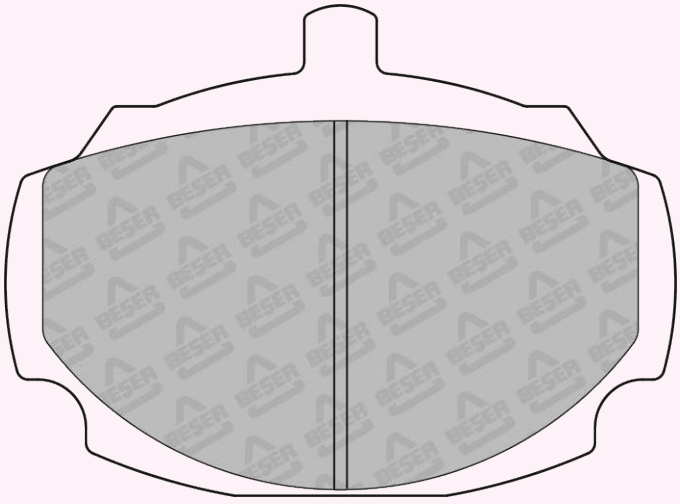

88,6 x 64,6

REFERENCE	T(mm)	REMARKS	MAKE	F/R	WVA No
3320	15	4 PADS PLAIN	ALFA ROMEO FERRARI MERCEDES BENZ PORSCHE	F	20011

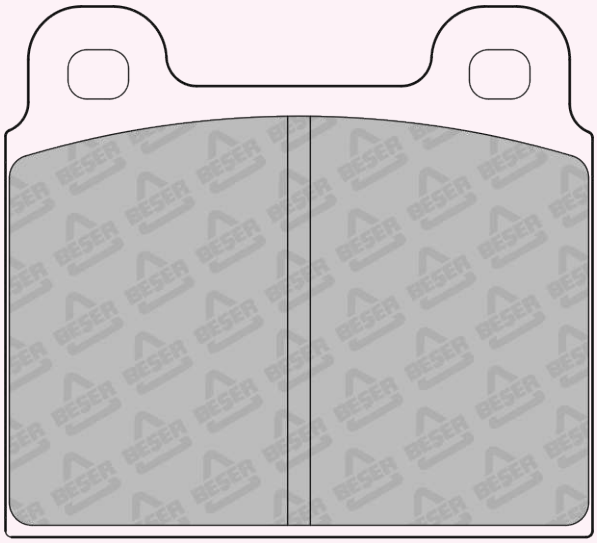

77,5 x 70

REFERENCE	T(mm)	REMARKS	MAKE	F/R	WVA No
3321	17	2 PADS WITH WEAR SENSOR (80mm)	PEUGEOT	F	20145 20146

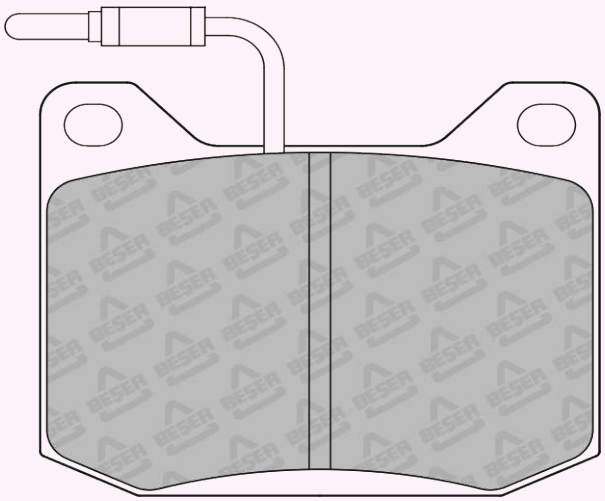

78,4 x 64,5

REFERENCE	T(mm)	REMARKS	MAKE	F/R	WVA No
3322	14,4	2 PADS WITH WEAR SENSOR (80mm)	PEUGEOT	R	20143 20417

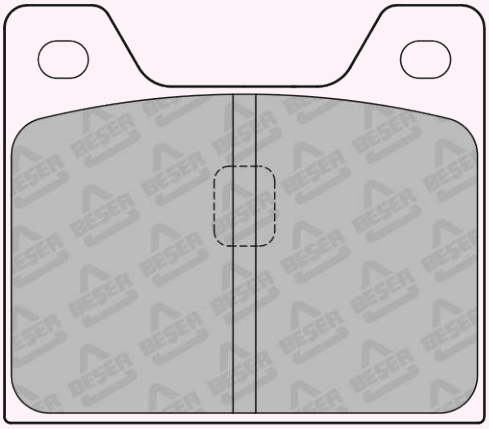

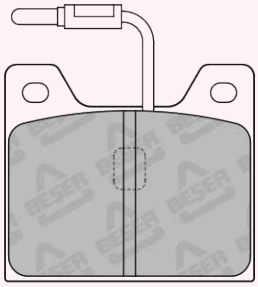

63,4 x 55,2

REFERENCE	T(mm)	REMARKS	MAKE	F/R	WVA No
3323	16,4	2 PADS WITH WEAR SENSOR (80mm)	PEUGEOT - TALBOT	R	20053 20271

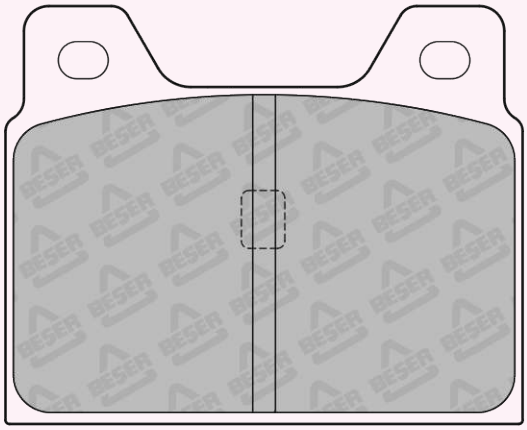

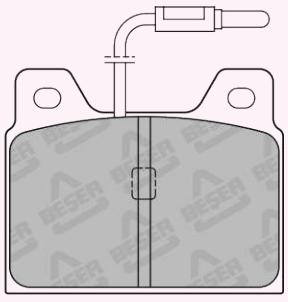

68,3 x 55,2

REFERENCE	T(mm)	REMARKS	MAKE	F/R	WVA No
3324	14	4 PADS PLAIN	HONDA	F	20535

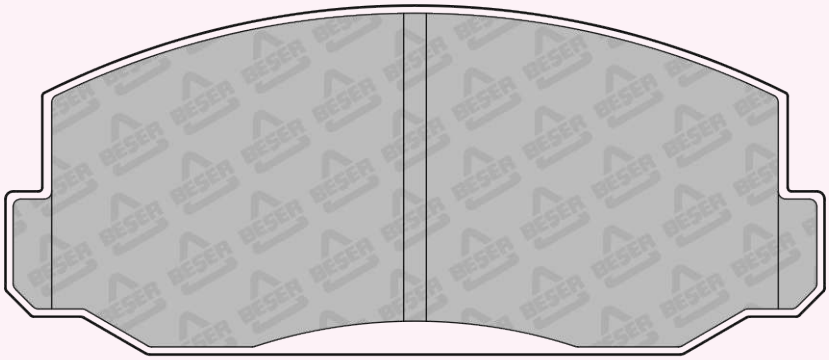

108,2 x 46

REFERENCE	T(mm)	REMARKS	MAKE	F/R	WVA No
3325	15	4 PADS PLAIN	ALFA ROMEO - VW	F	20075

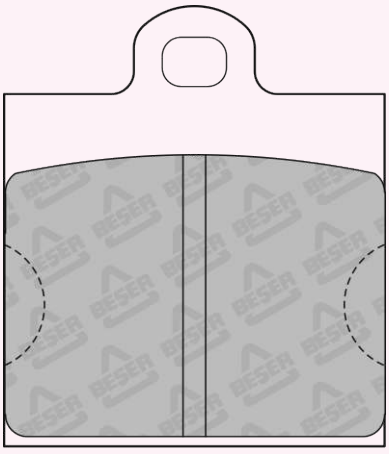

50,3 x 58,1

REFERENCE	T(mm)	REMARKS	MAKE	F/R	WVA No
3326	15	4 PADS PLAIN	ALFA ROMEO - AUTO UNION DAF - PORSCHE - SAAB TALBOT - VOLVO - VW	R	20009

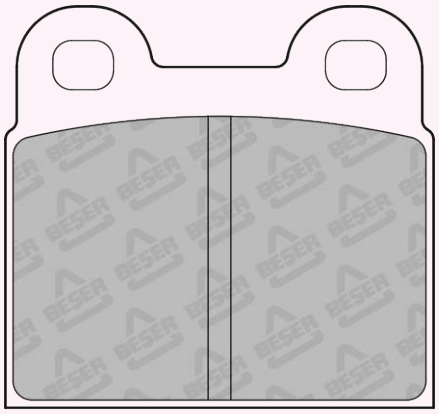

56,5 x 53

REFERENCE	T(mm)	REMARKS	MAKE	F/R	WVA No
3326/1	15	4 PADS PLAIN	BMW	R	20436

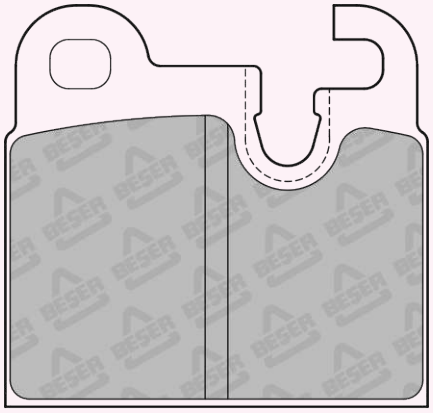

55,7 x 53

REFERENCE	T(mm)	REMARKS	MAKE	F/R	WVA No
3327	15 ,3	4 PADS PLAIN	AUDI VW	F	20228

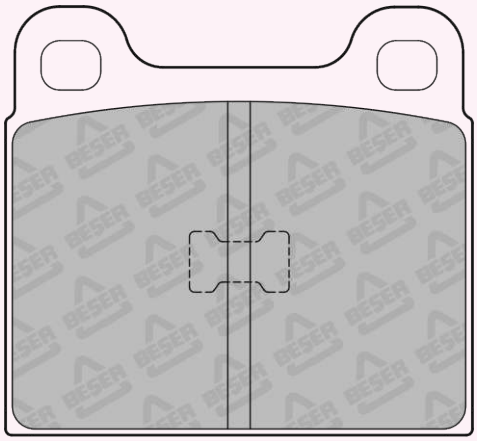

61,6 x 56,5

REFERENCE	T(mm)	REMARKS	MAKE	F/R	WVA No
3328	16	4 PADS PLAIN	VW	F	20286

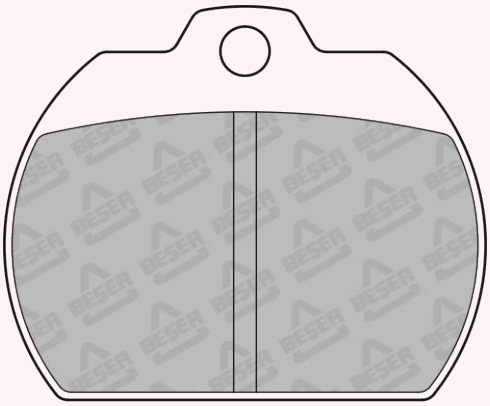

63,5 x 51,9

REFERENCE	T(mm)	REMARKS	MAKE	F/R	WVA No
3329	14	4 PADS PLAIN	CITROEN - DACIA PEUGEOT - RENAULT TALBOT	F	20140 20141 20335

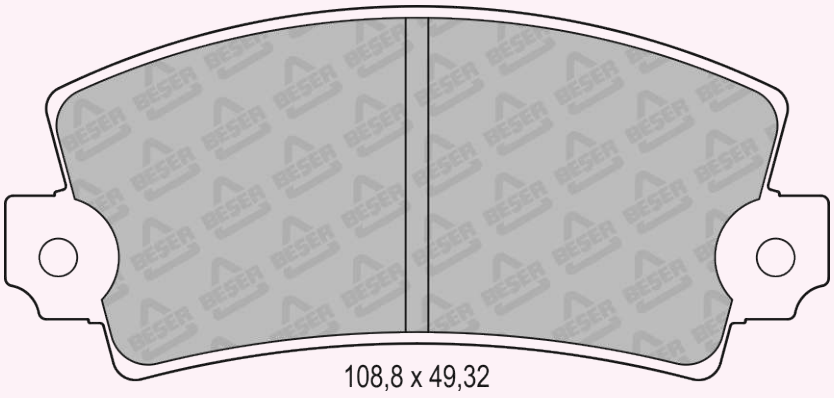

REFERENCE	T(mm)	REMARKS	MAKE	F/R	WVA No
3329/1	14	4 PADS PLAIN	ABARTH DACIA - FIAT - RENAULT -	F	20494 20495

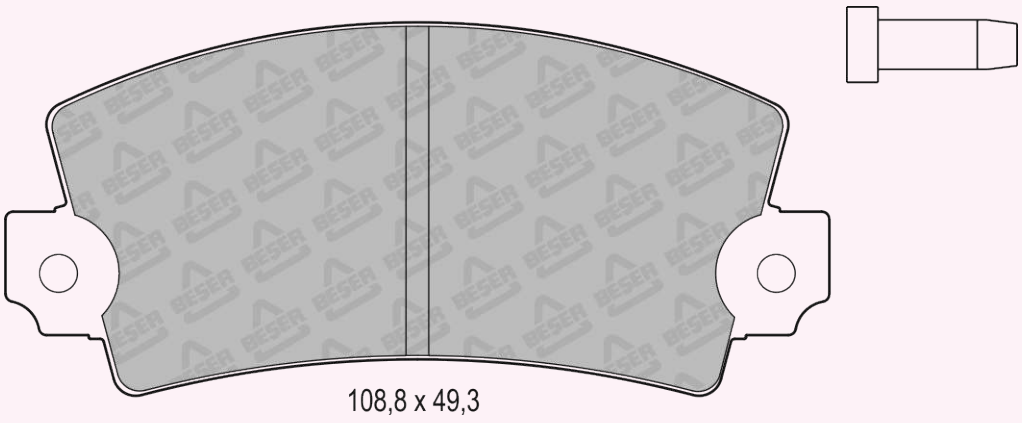

REFERENCE	T(mm)	REMARKS	MAKE	F/R	WVA No
3330	16,3	4 PADS PLAIN	RENAULT	F	20671 20672 20673

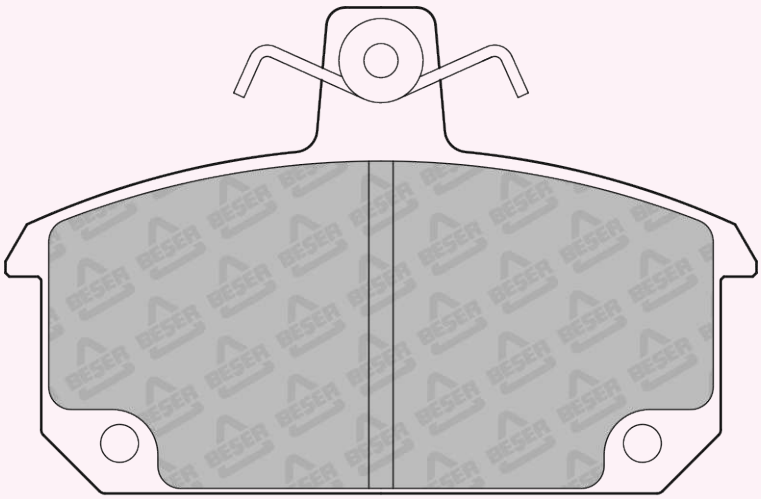

99,1 x 64,1

REFERENCE	T(mm)	REMARKS	MAKE	F/R	WVA No
3330/1	16,3	4 PADS PLAIN	RENAULT	F	20671 20672 20673

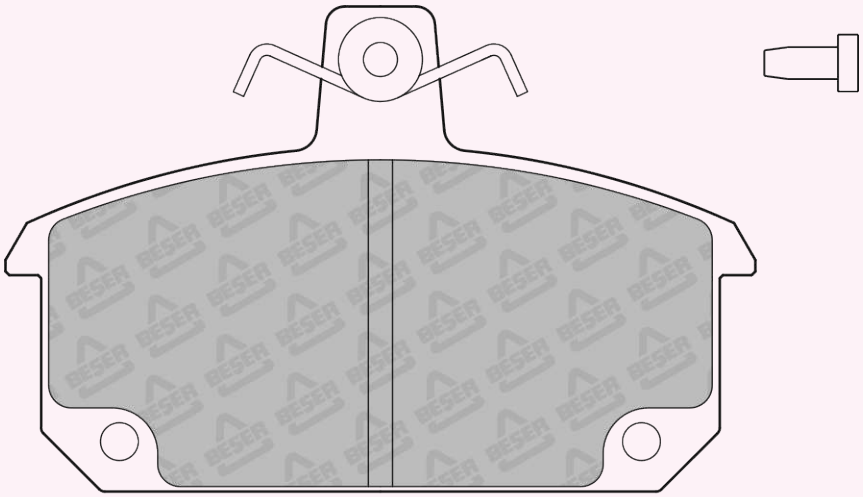

99,1 x 64,1

REFERENCE	T(mm)	REMARKS	MAKE	F/R	WVA No
3331	15	4 PADS PLAIN	ALFA ROMEO - BMW FERRARİ	F	20092

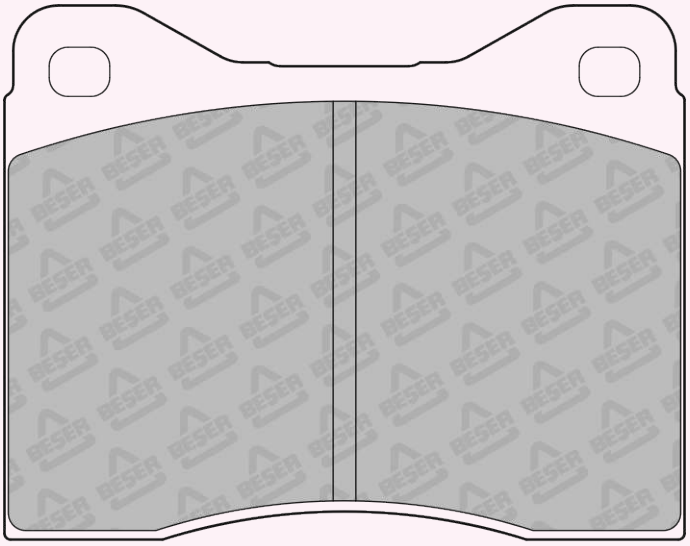

89,8 x 70,5

REFERENCE	T(mm)	REMARKS	MAKE	F/R	WVA No
3331/1	15	4 PADS PLAIN	ALFA ROMEO - BMW FERRARİ	F	20090 20437

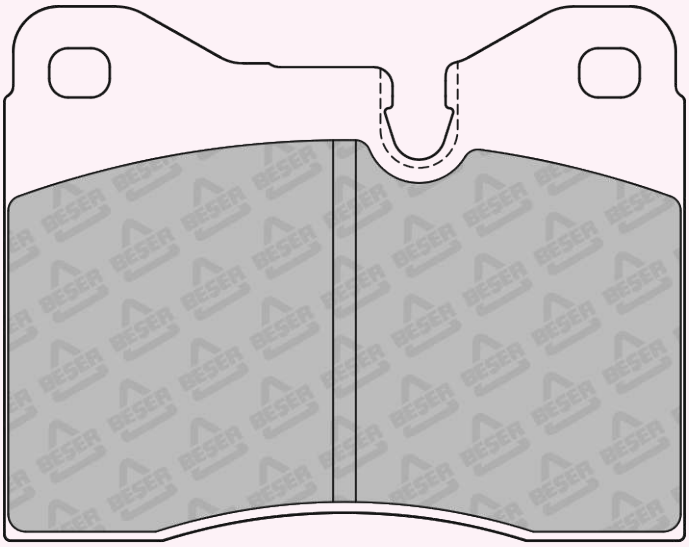

89,8 x 70,5

REFERENCE	T(mm)	REMARKS	MAKE	F/R	WVA No
3332	18,5	4 PADS PLAIN	BMW	F	20092

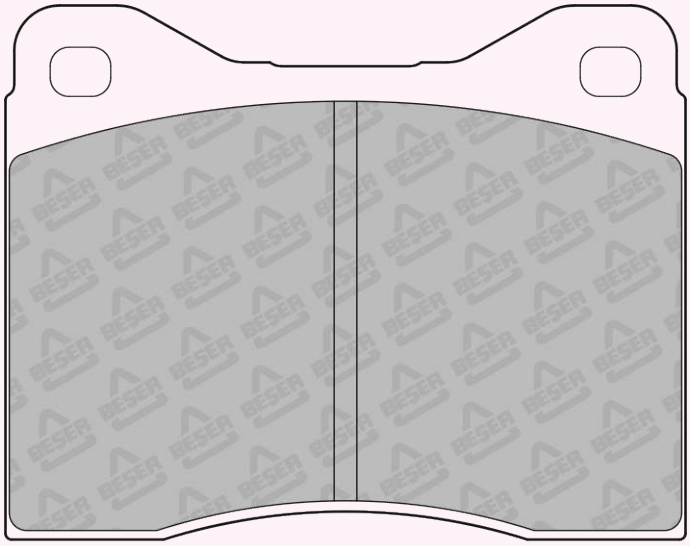

89,8 x 70,5

REFERENCE	T(mm)	REMARKS	MAKE	F/R	WVA No
3332/1	19	4 PADS PLAIN	BMW	F	20092 20437

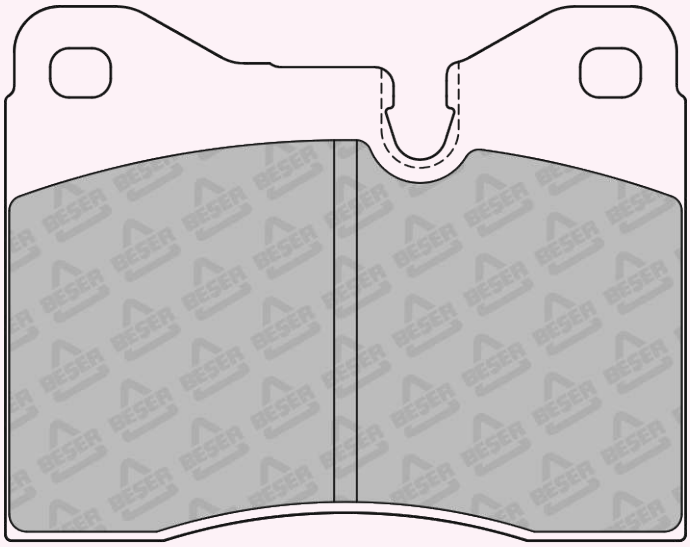

89,8 x 70,5

REFERENCE	T(mm)	REMARKS	MAKE	F/R	WVA No
3333	14	4 PADS WITH CENTRAL LUG 4 PLUGS	RENAULT - TALBOT	R	20347 20348 20494 20495

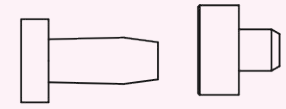

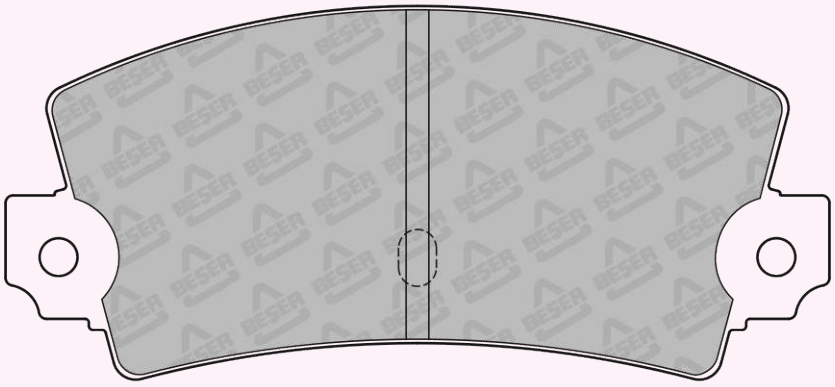

108,8 x 49,3

REFERENCE	T(mm)	REMARKS	MAKE	F/R	WVA No
3334	16	4 PADS PLAIN	OPEL	F	20068 20468

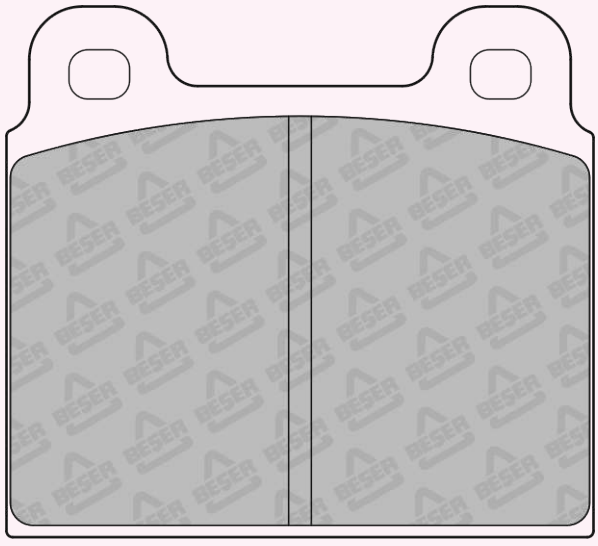

77,5 x 70

REFERENCE	T(mm)	REMARKS	MAKE	F/R	WVA No
3335	16,5	4 PADS PLAIN	OPEL - VAUXHALL	F	20323

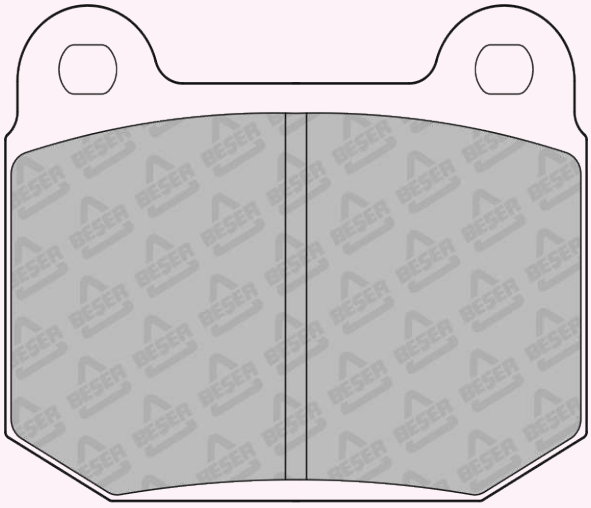

76,7 x 65,5

REFERENCE	T(mm)	REMARKS	MAKE	F/R	WVA No
3336	13,8	4 PADS PLAIN	BERTONE - DAIHATSU - TOYOTA	F	20599

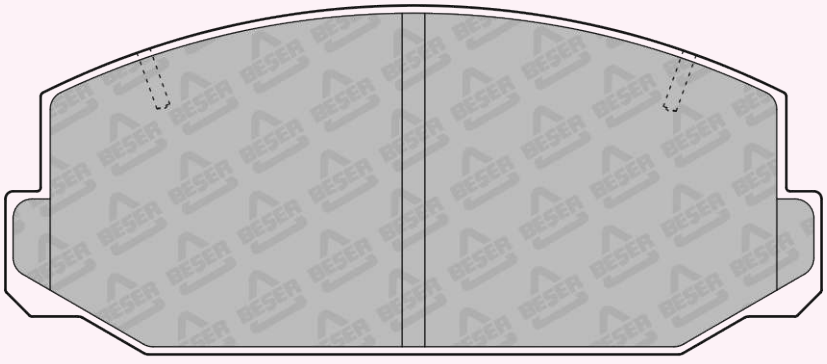

107,8 x 46

REFERENCE	T(mm)	REMARKS	MAKE	F/R	WVA No
3339	17,5	4 PADS PLAIN	MERCEDES BENZ	F	20341

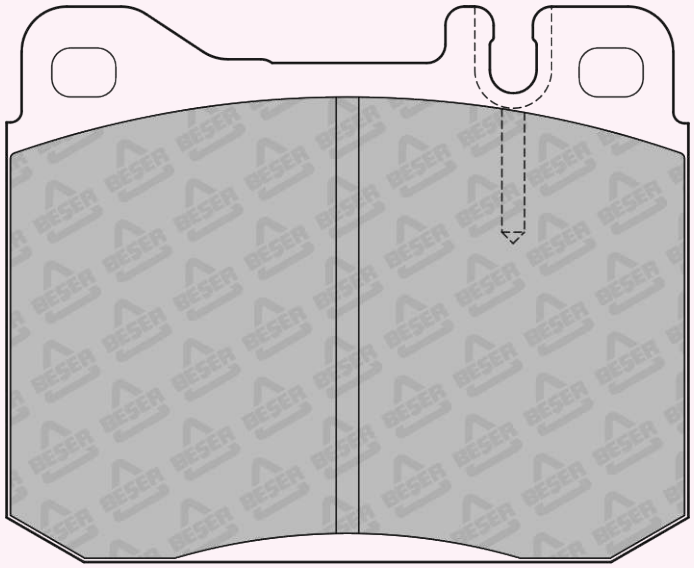

90 x 73,4

REFERENCE	T(mm)	REMARKS	MAKE	F/R	WVA No
3340	15	2 PADS WITH WEAR SENSOR (245mm)	PEUGEOT	F	20145 20592

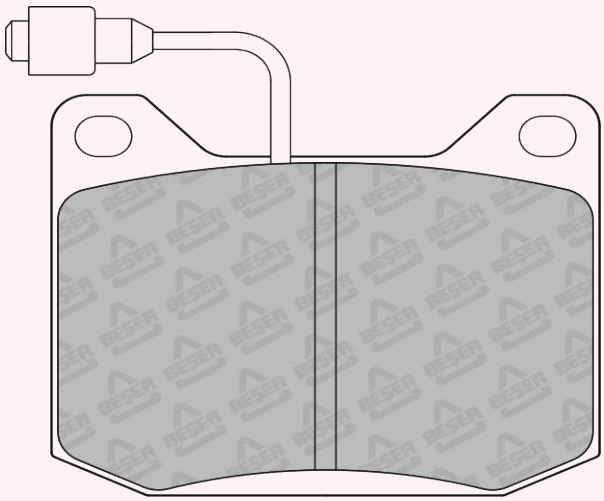

78,4 x 64,5

REFERENCE	T(mm)	REMARKS	MAKE	F/R	WVA No
3343	18,5	4 PADS PLAIN	AUDI - VW	F	20228

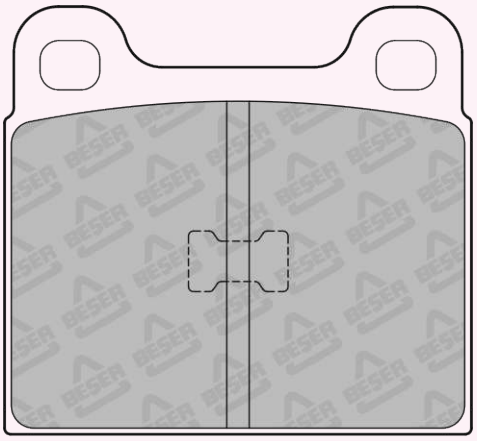

61,6 x 56,5

REFERENCE	T(mm)	REMARKS	MAKE	F/R	WVA No
3344	15	4 PADS PLAIN	AUDI - FORD	F	20245

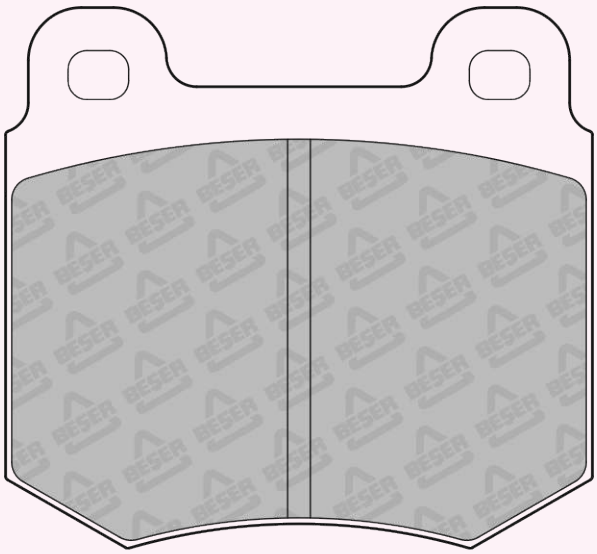

77,5 x 71,4

REFERENCE	T(mm)	REMARKS	MAKE	F/R	WVA No
3346	12,5	4 PADS PLAIN	FIAT - SEAT - TOYOTA	F	20073

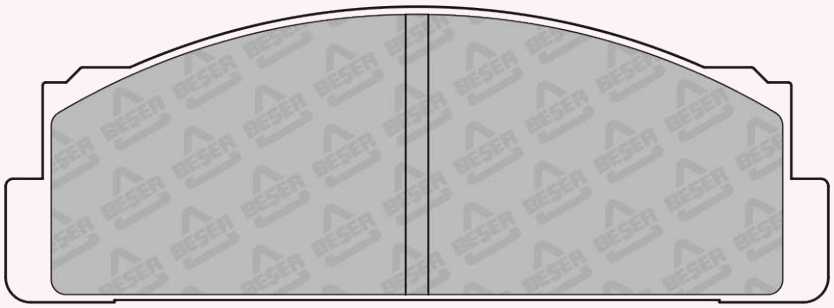

108,8 x 39

REFERENCE	T(mm)	REMARKS	MAKE	F/R	WVA No
3350	18,5	4 PADS PLAIN	ALFA ROMEO - FERRARI MERCEDES BENZ - PORSCHE VW	F	20011

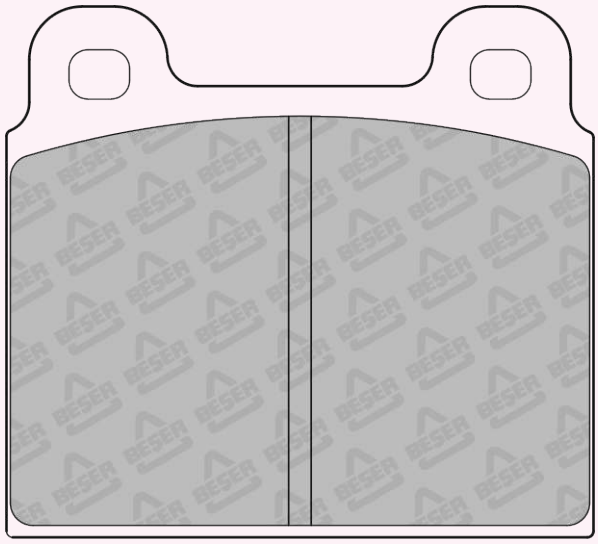

77,5 x 70

REFERENCE	T(mm)	REMARKS	MAKE	F/R	WVA No
3365	16,5	4 PADS PLAIN	BMW - OPEL - VAUXHALL	F	20588

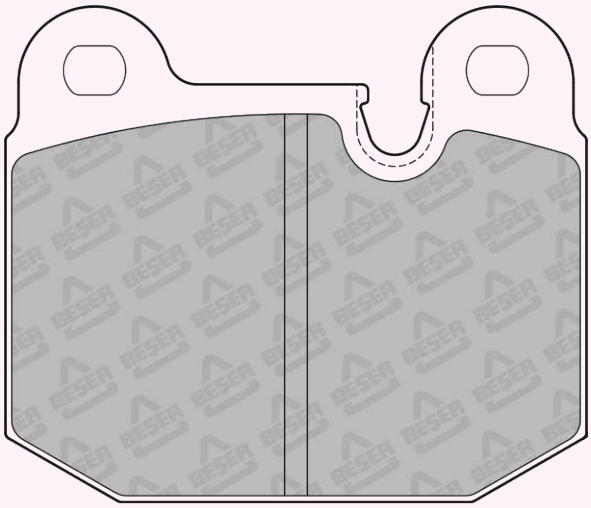

76,7 x 65,4

REFERENCE	T(mm)	REMARKS	MAKE	F/R	WVA No
3366	18	2 PADS WITH WEAR SENSOR (160mm)	PEUGEOT	F	20366

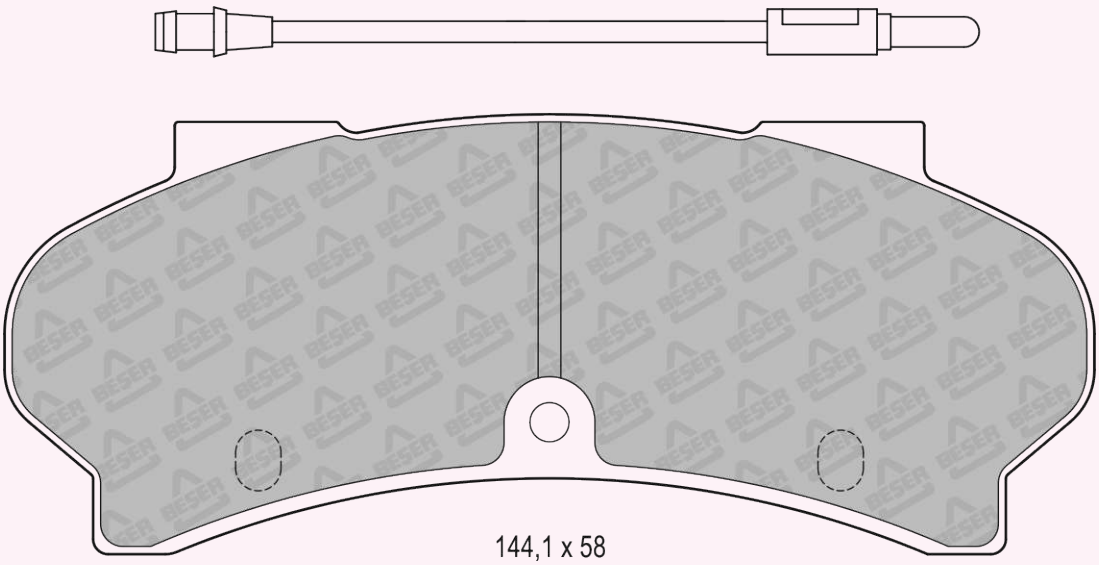

144,1 x 58

REFERENCE	T(mm)	REMARKS	MAKE	F/R	WVA No
3366/1	15	4 PADS PLAIN	PEUGEOT	F	20367

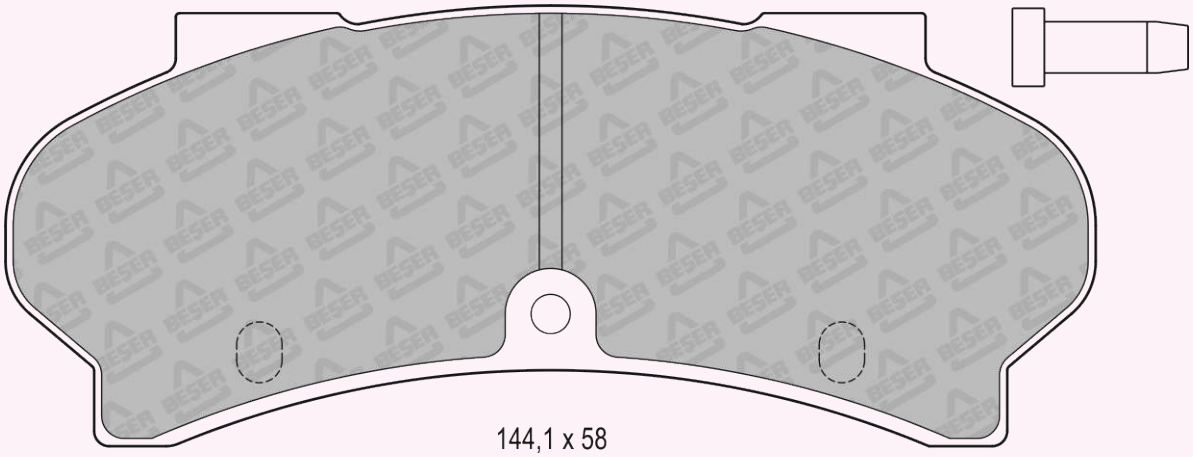

144,1 x 58

REFERENCE	T(mm)	REMARKS	MAKE	F/R	WVA No
3369	16,3	4 PADS PLAIN	NISSAN - TOYOTA	F	20628

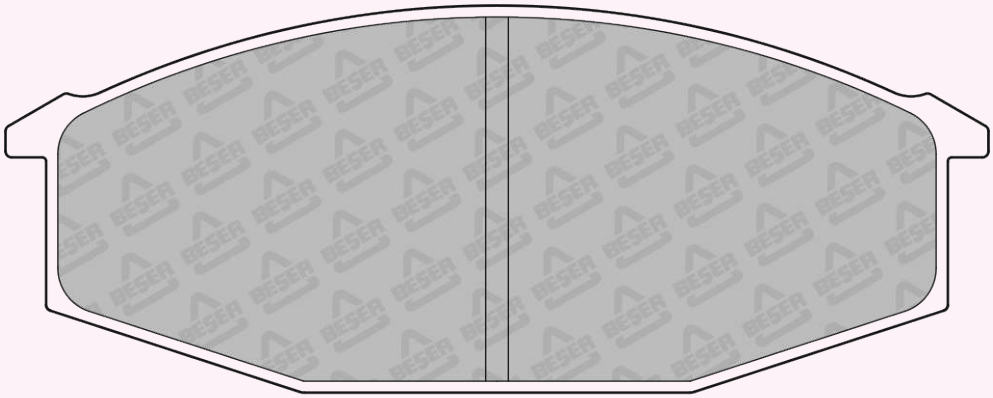

129,8 x 51

REFERENCE	T(mm)	REMARKS	MAKE	F/R	WVA No
3370	14,5	4 PADS PLAIN	ASTON MARTIN NISSAN	F	20718

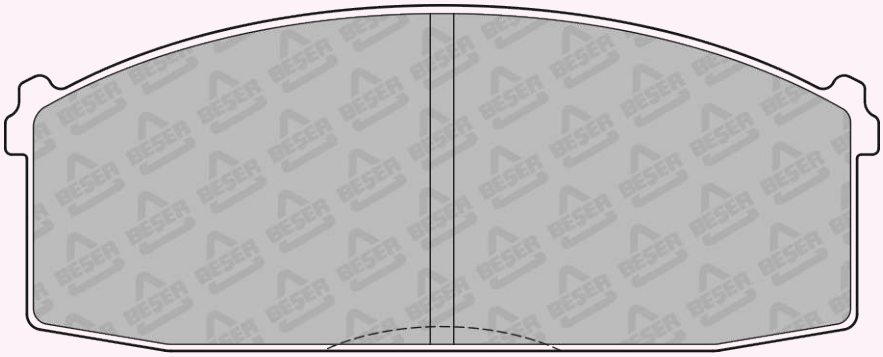

111,5 x 44

REFERENCE	T(mm)	REMARKS	MAKE	F/R	WVA No
3371	15	4 PADS PLAIN	TOYOTA	F	20852

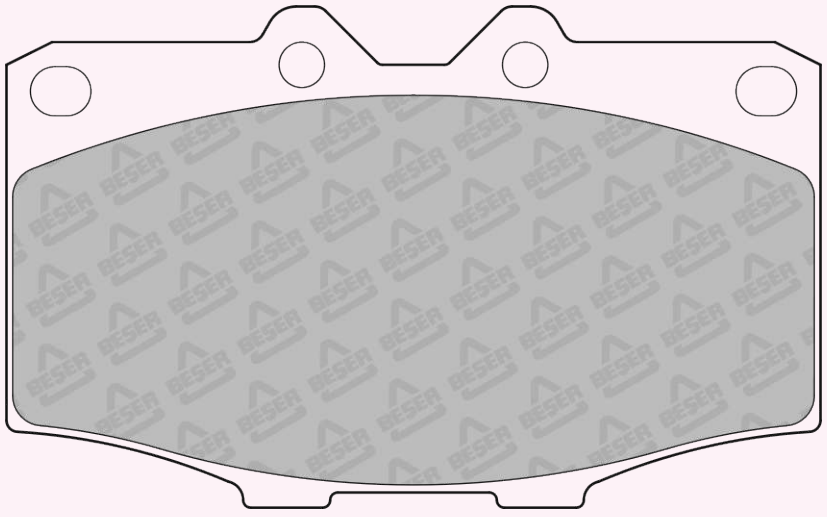

107,5 x 66,2

REFERENCE	T(mm)	REMARKS	MAKE	F/R	WVA No
3372	18	2 PADS WITH WEAR SENSOR (130mm)	RENAULT - PEUGEOT	F	20772 20935 20936 20937 20938

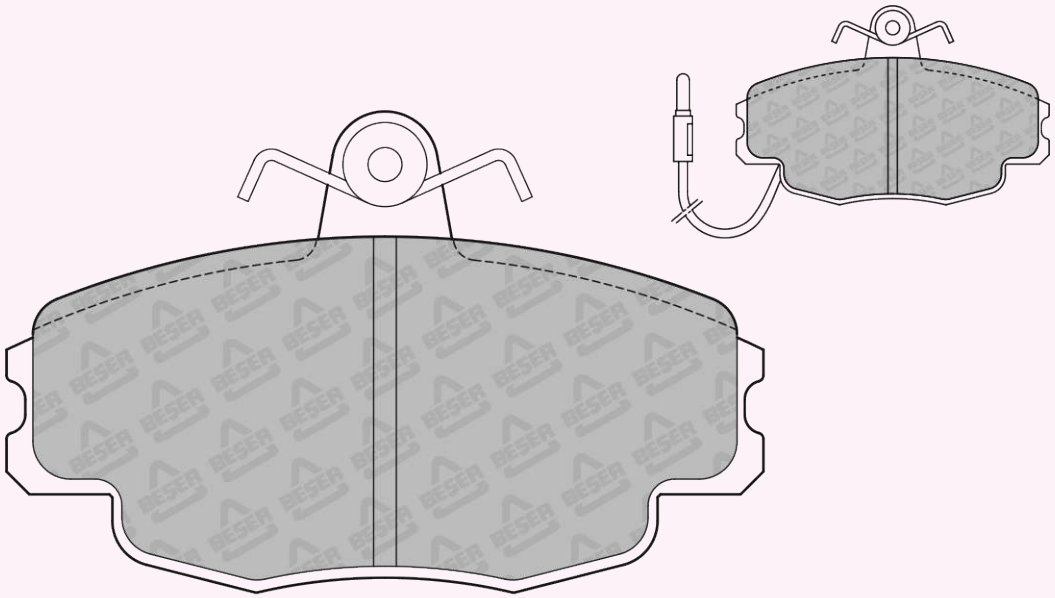

100 x 63,5

REFERENCE	T(mm)	REMARKS	MAKE	F/R	WVA No
3373	16	4 PADS PLAIN	VOLVO	F	20153

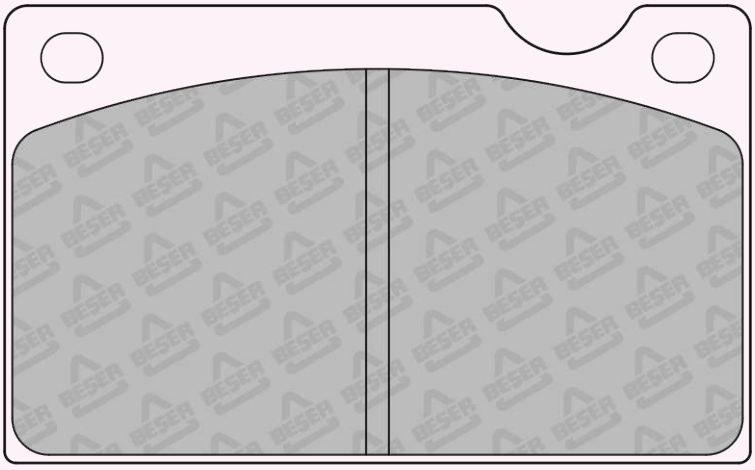

98,1 x 60,4

REFERENCE	T(mm)	REMARKS	MAKE	F/R	WVA No
3374	15,5	4 PADS PLAIN	RENAULT	F	20480

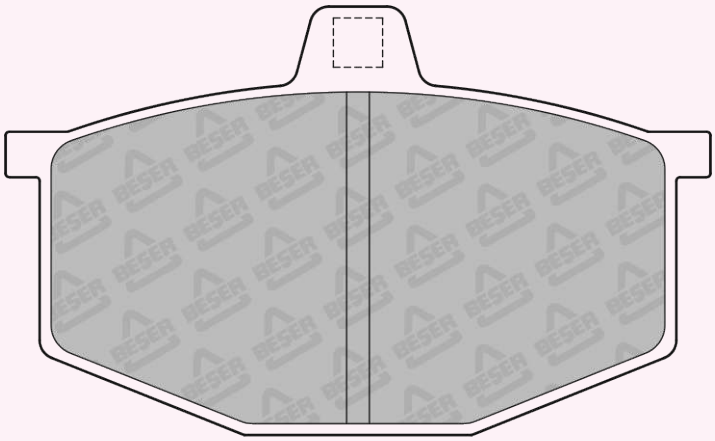

93 x 56,5

REFERENCE	T(mm)	REMARKS	MAKE	F/R	WVA No
3375	15,3	4 PADS PLAIN	NISSAN - TOYOTA	F	20289

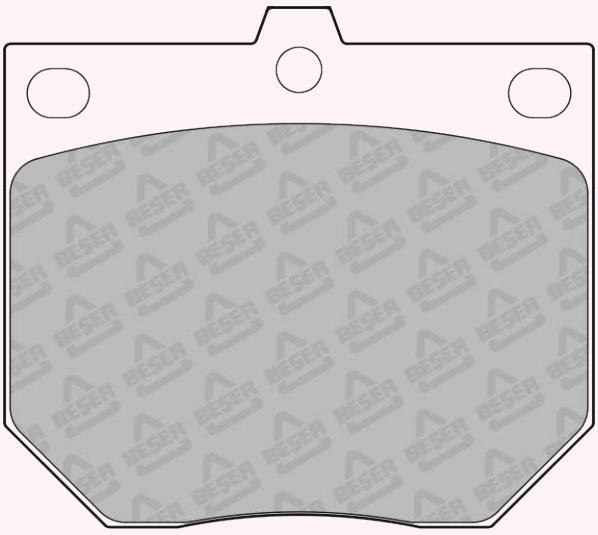

77,7 x 68,6

REFERENCE	T(mm)	REMARKS	MAKE	F/R	WVA No
3376	15	4 PADS PLAIN	CHRYSLER - DODGE MAZDA - MITSUBISHI TOYOTA	F	20476 20699

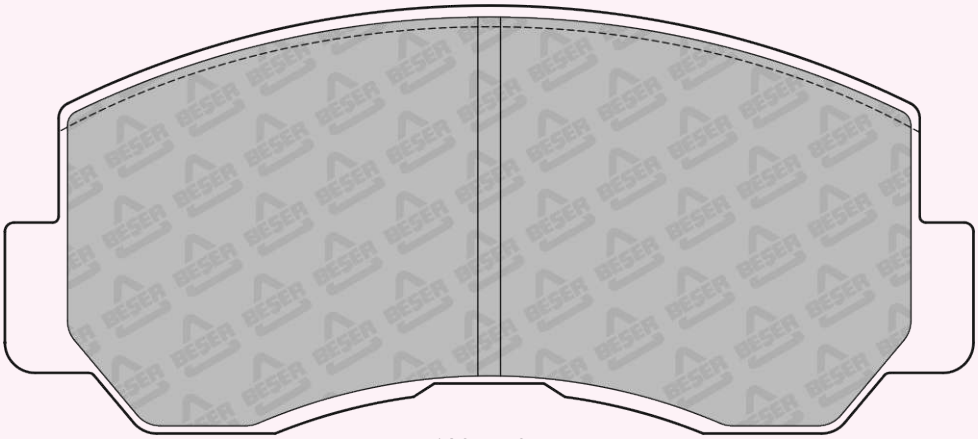

128 x 56,5

REFERENCE	T(mm)	REMARKS	MAKE	F/R	WVA No
3377	15,4	4 PADS PLAIN	PEUGEOT	F	20151

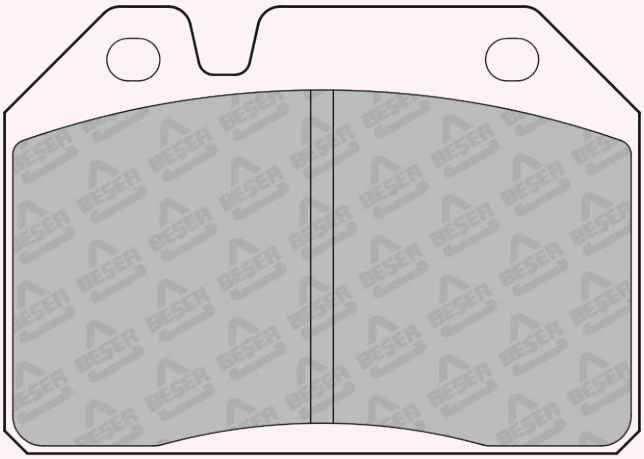

83,8 x 59

REFERENCE	T(mm)	REMARKS	MAKE	F/R	WVA No
3378	19,4	4 PADS PLAIN	AUDI VOLVO	F	20574

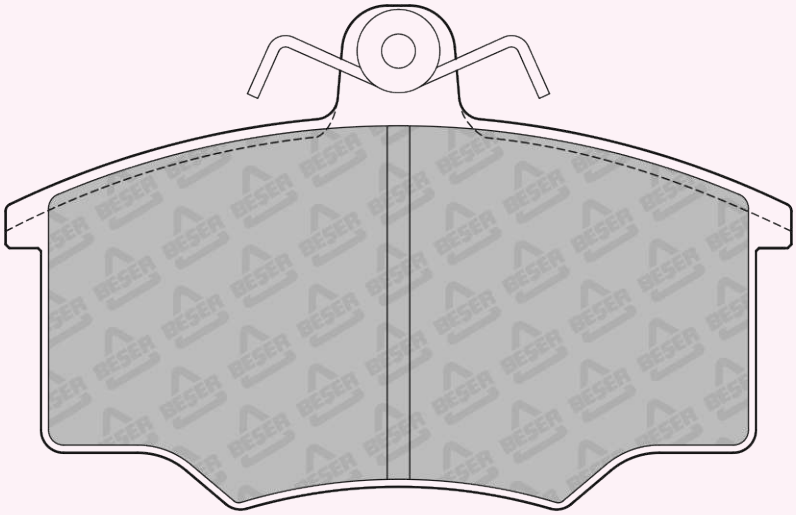

103,8 x 66,5

REFERENCE	T(mm)	REMARKS	MAKE	F/R	WVA No
3379	15	2 PADS INNER & 2 PADS OUTER	TOYOTA	F	20729 20730

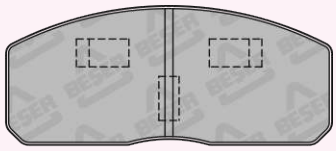

120,3 x 51,2

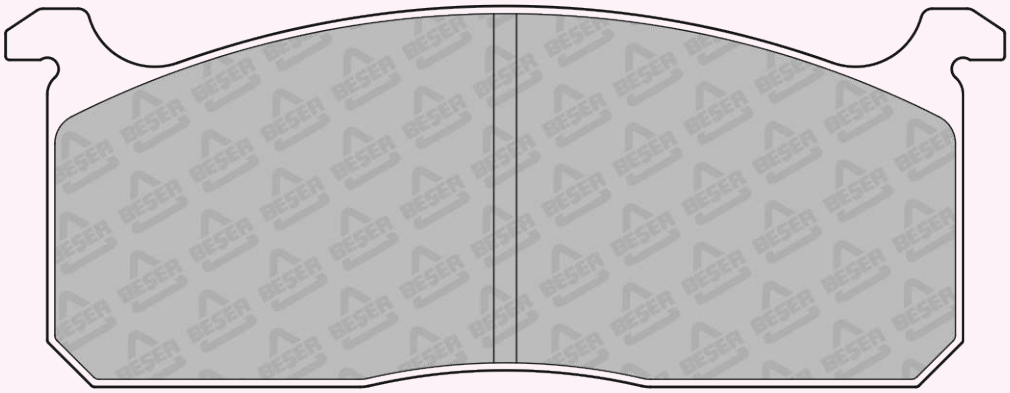

132 x 50,3

REFERENCE	T(mm)	REMARKS	MAKE	F/R	WVA No
3380	18	2 PADS RIGHT & 2 PADS LEFT 2 PADS WITH WEAR SENSOR (100mm)	CITROEN - MEGA - PEUGEOT RENAULT - TALBOT WULING	F	20905 20906 20986 20987

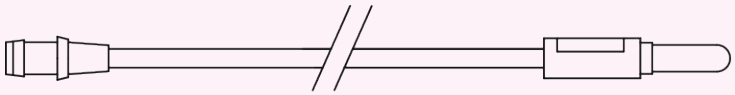

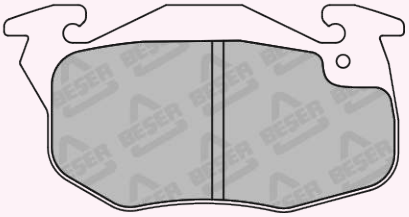

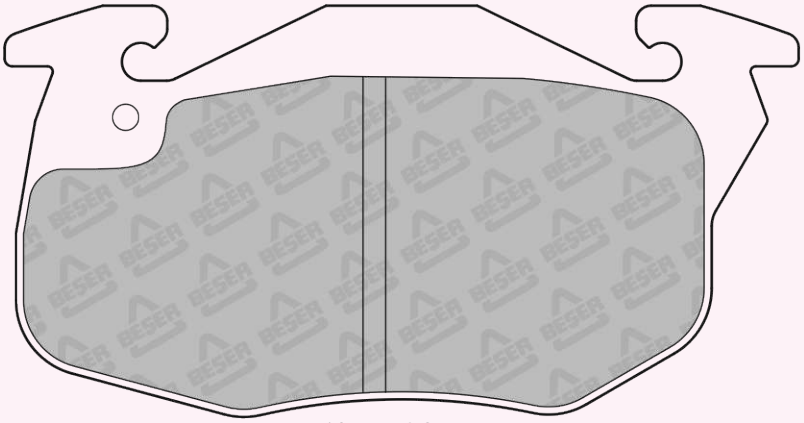

105 x 54,3

REFERENCE	T(mm)	REMARKS	MAKE	F/R	WVA No
3381	18	2 PADS WITH WEAR SENSOR (100mm)	CITROEN - MEGA PEUGEOT - RENAULT TALBOT - WULING	F	20634 20635 20636

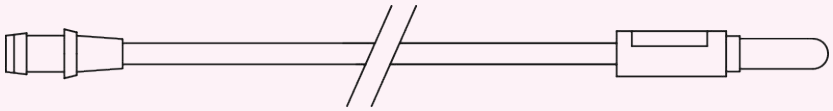

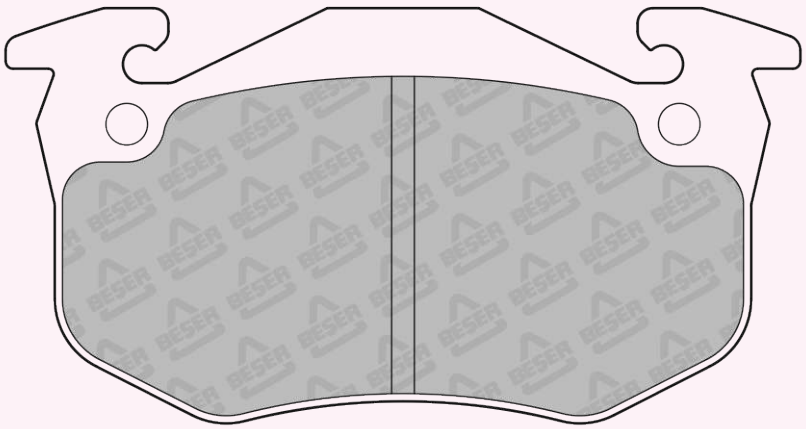

105 x 55

REFERENCE	T(mm)	REMARKS	MAKE	F/R	WVA No
3390	20	4 PADS PLAIN	MERCEDES BENZ	F	29324 29325

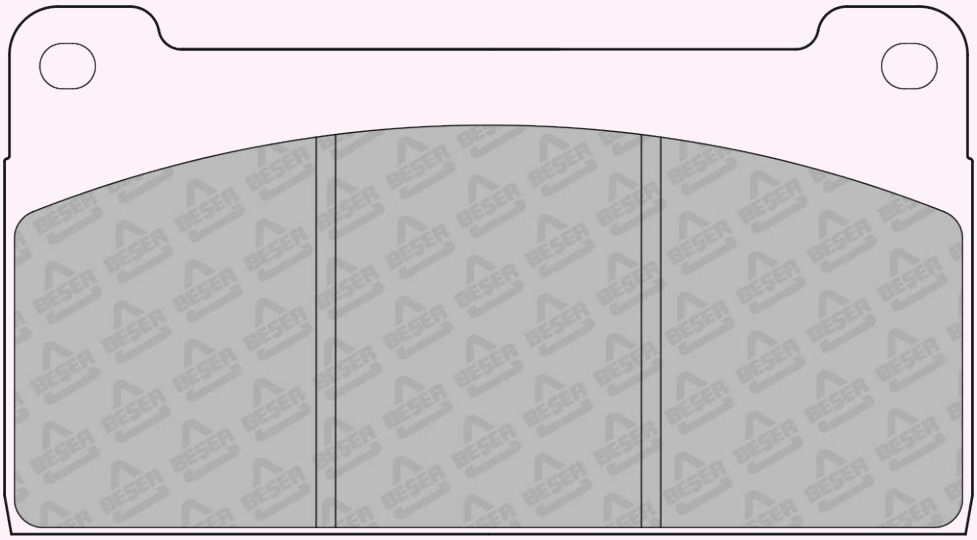

149.7 x 81.5
(NOT SCALE)

REFERENCE	T(mm)	REMARKS	MAKE	F/R	WVA No
3393	16	4 PADS PLAIN	LADA	F	20166

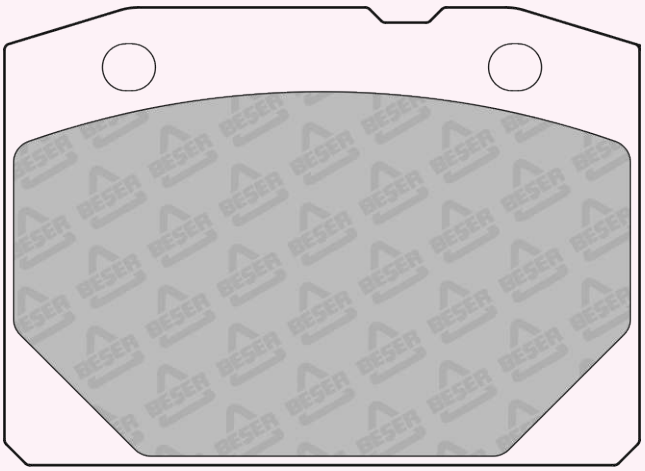

83,9 x 60,5

REFERENCE	T(mm)	REMARKS	MAKE	F/R	WVA No
3394	16	4 PADS PLAIN	NISSAN SUBARU	F	20958

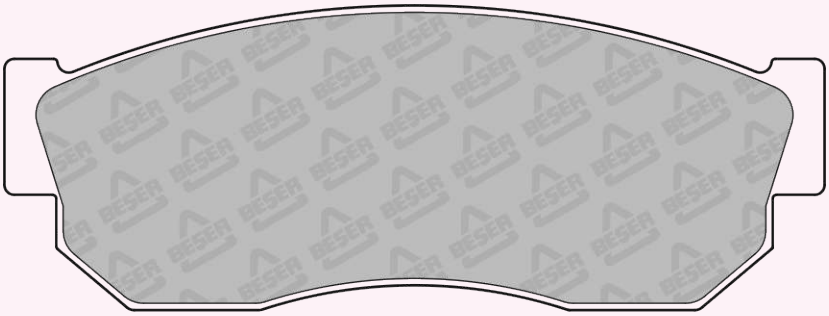

108,5 x 40,3

REFERENCE	T(mm)	REMARKS	MAKE	F/R	WVA No
3395	18	2 PADS WITH WEAR SENSOR	SUBARU	F	20112 20113

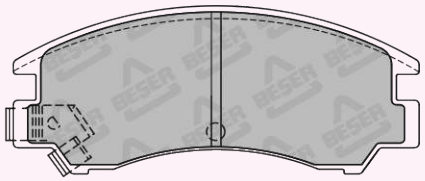

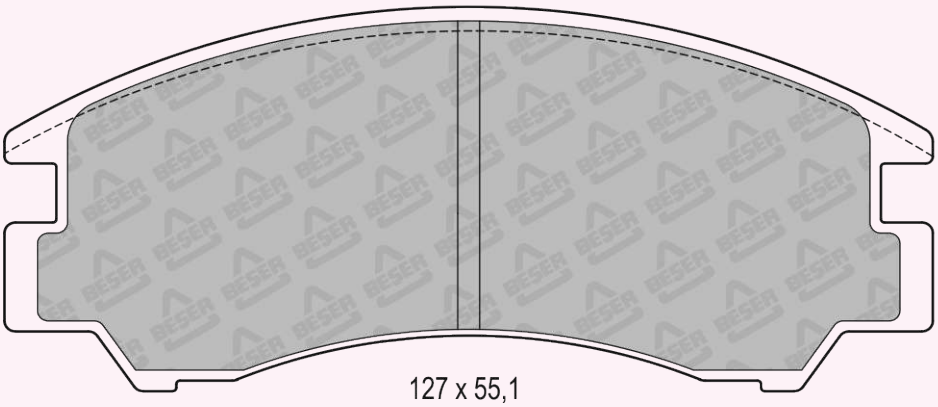

127 x 55,1

REFERENCE	T(mm)	REMARKS	MAKE	F/R	WVA No
3397	17	4 PADS PLAIN	INFINITI - NISSAN	F	21099

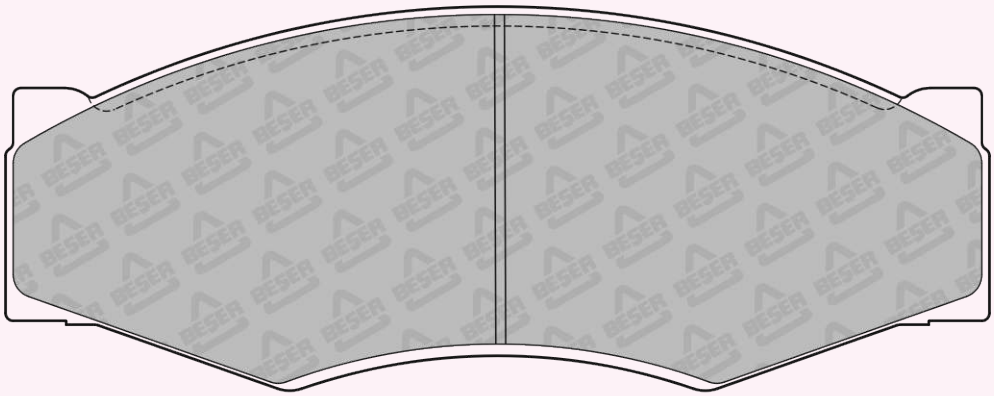

130 x 49,5

REFERENCE	T(mm)	REMARKS	MAKE	F/R	WVA No
3400	15	4 PADS PLAIN	MITSUBISHI	F	21126

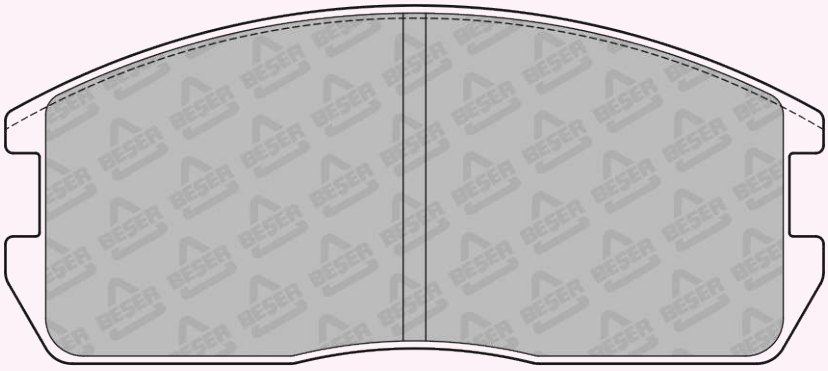

108 x 47,3

REFERENCE	T(mm)	REMARKS	MAKE	F/R	WVA No
3401	15,5	4 PADS PLAIN	MITSUBISHI PLYMOUNTH	F	20955

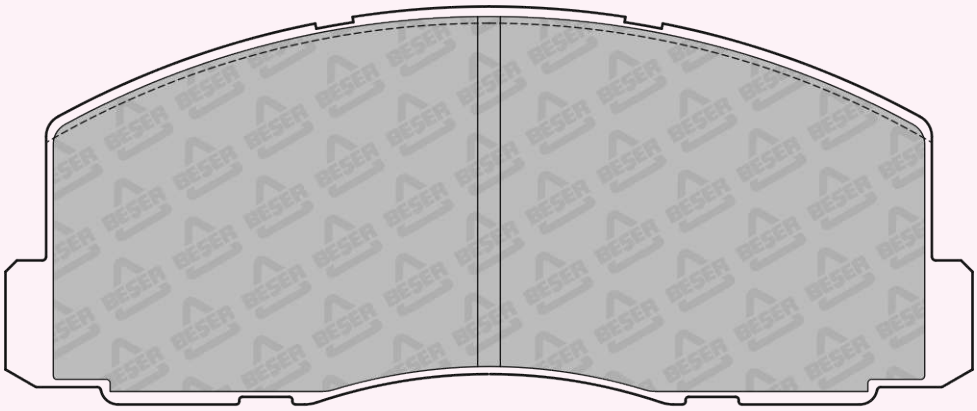

127,7 x 52,5

REFERENCE	T(mm)	REMARKS	MAKE	F/R	WVA No
3402	15	4 PADS PLAIN	TOYOTA	F	20870

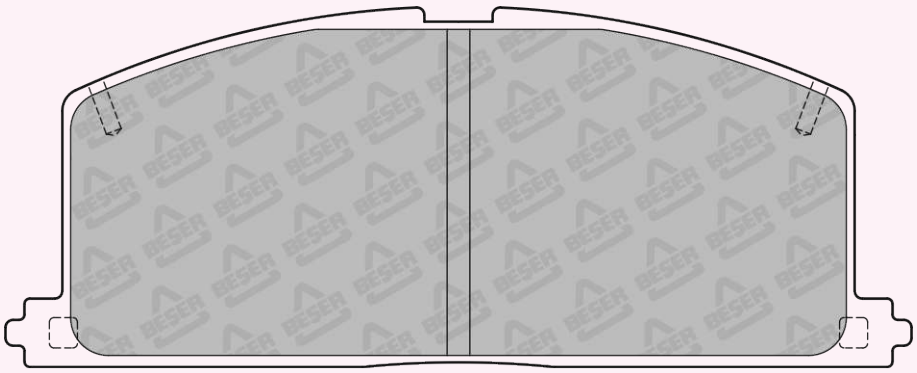

119,7 x 47,5

REFERENCE	T(mm)	REMARKS	MAKE	F/R	WVA No
3403	16,3	4 PADS PLAIN	PEUGEOT	F	20161

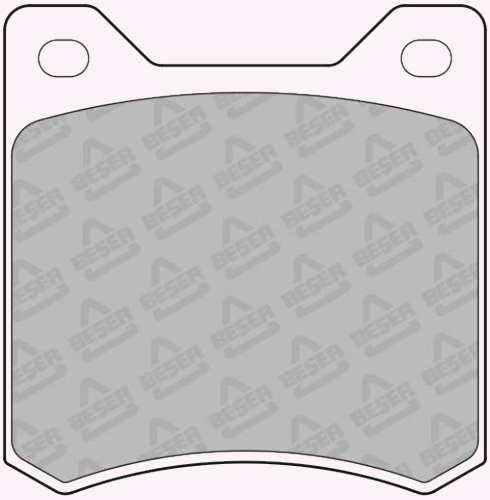

63,4 x 64,4

REFERENCE	T(mm)	REMARKS	MAKE	F/R	WVA No
3404	15	4 PADS PLAIN	SKODA WARTBURG	F	20561

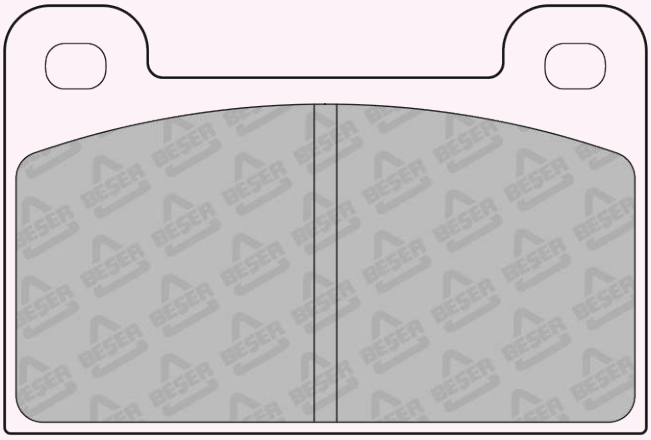

84,8 x 56,5

REFERENCE	T(mm)	REMARKS	MAKE	F/R	WVA No
3405	19	2 PADS WITH WEAR SENSOR (100 mm)	PEUGEOT - TALBOT	F	20454 20455

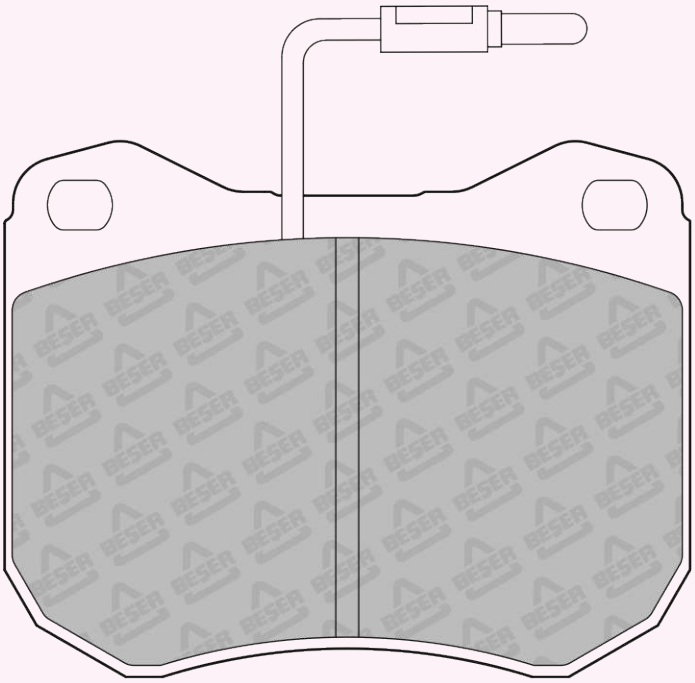

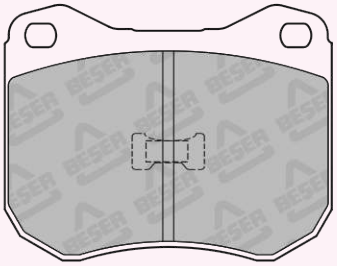

89,5 x 70,8

89,5 x 70,8

REFERENCE	T(mm)	REMARKS	MAKE	F/R	WVA No
3406	15,4	4 PADS PLAIN	SKODA	F	20576

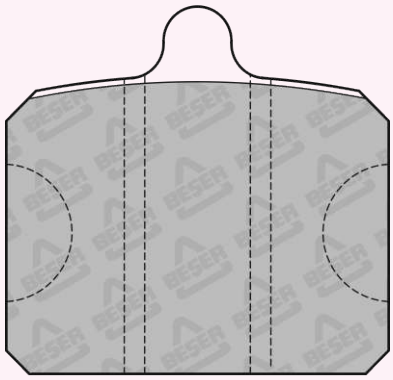

50,7 x 48,5

REFERENCE	T(mm)	REMARKS	MAKE	F/R	WVA No
3407	15,2	4 PADS PLAIN	MITSUBISHI	F	20724

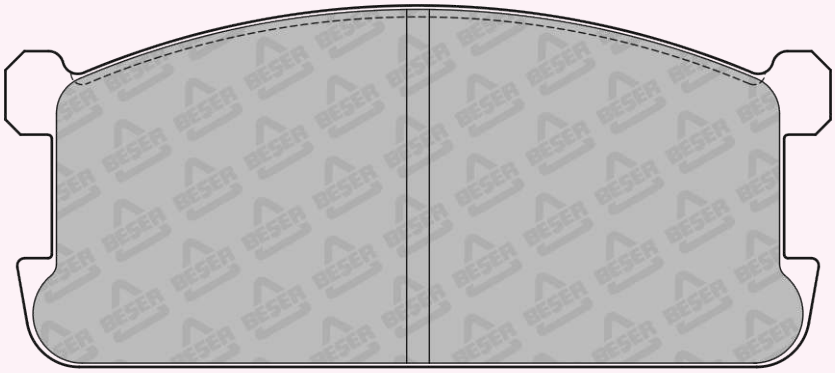

109 x 47,6

REFERENCE	T(mm)	REMARKS	MAKE	F/R	WVA No
3408	19,4	4 PADS PLAIN	MERCEDES BENZ	F	20940 20941

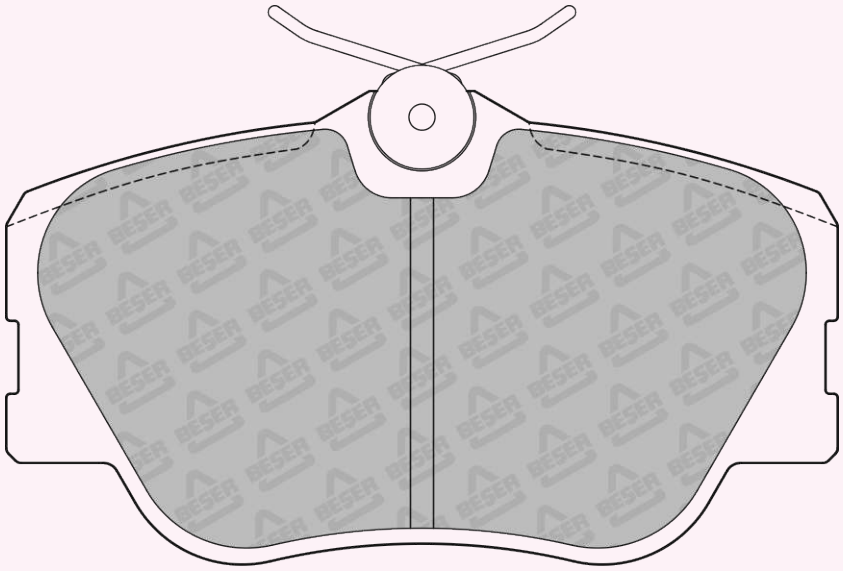

109,8 x 59,6

REFERENCE	T(mm)	REMARKS	MAKE	F/R	WVA No
3410	15,3	4 PADS PLAIN	BEDFORD - OPEL - VAUXHALL	F	20939

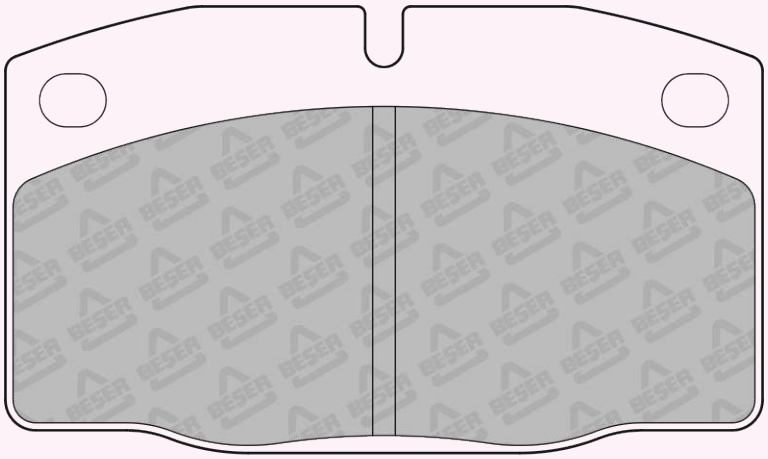

100 x 59

REFERENCE	T(mm)	REMARKS	MAKE	F/R	WVA No
3412	18	4 PADS PLAIN	LAND ROVER	F	21519

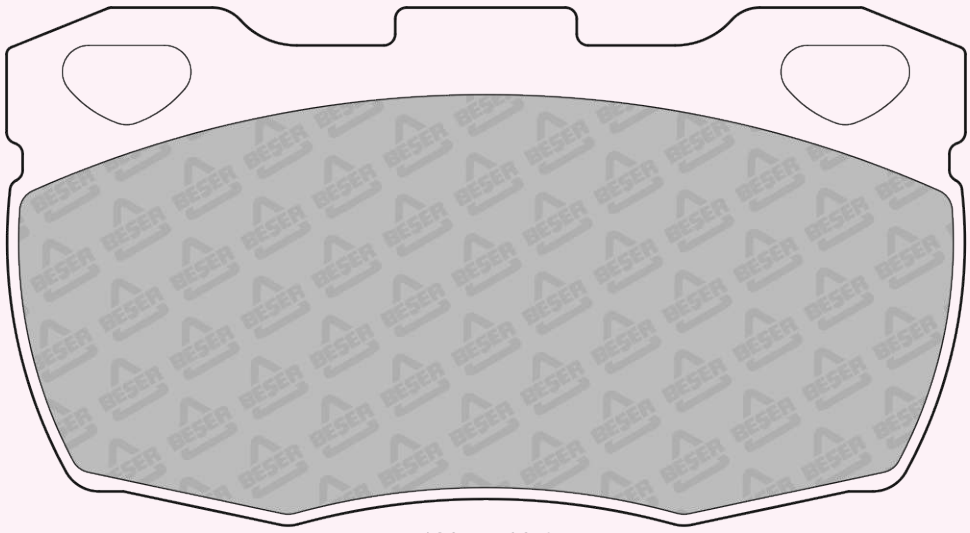

126,7 x 68,4

REFERENCE	T(mm)	REMARKS	MAKE	F/R	WVA No
3413	18	4 PADS PLAIN	LAND ROVER - LDV	F	20904

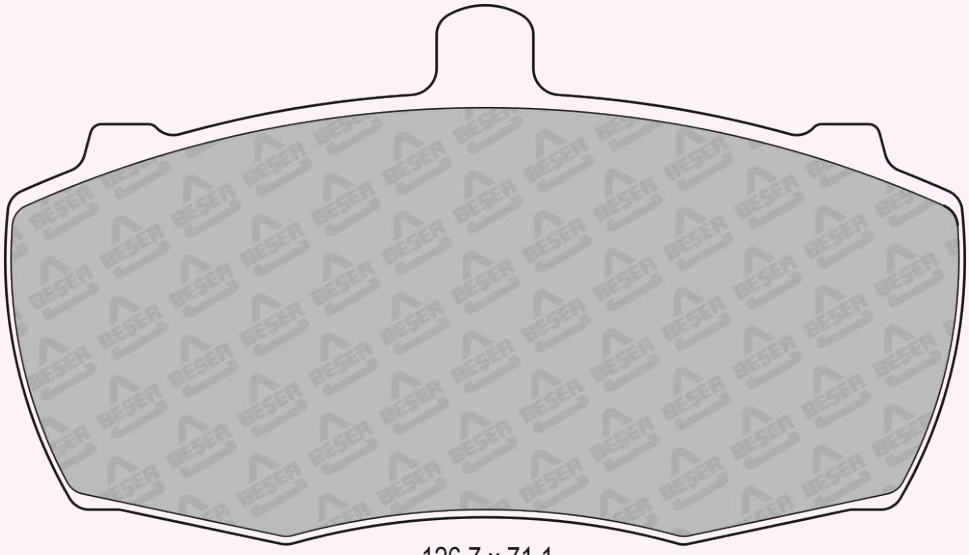

126,7 x 71,1

REFERENCE	T(mm)	REMARKS	MAKE	F/R	WVA No
3414	15	4 PADS WITH OUTER RADIUS DRILLED HOLES	TOYOTA - VW	F	21158

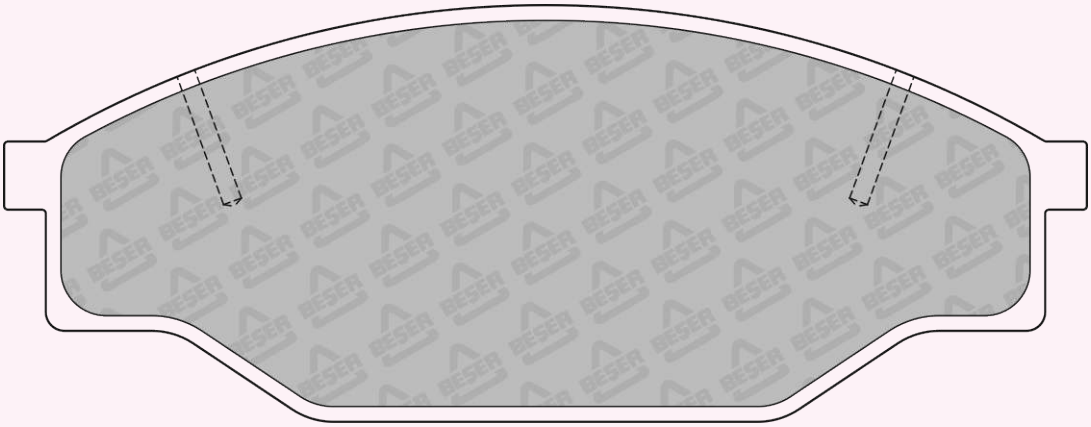

143 x 55

REFERENCE	T(mm)	REMARKS	MAKE	F/R	WVA No
3415	16,7	4 PADS PLAIN	NISSAN - FORD	F	20863

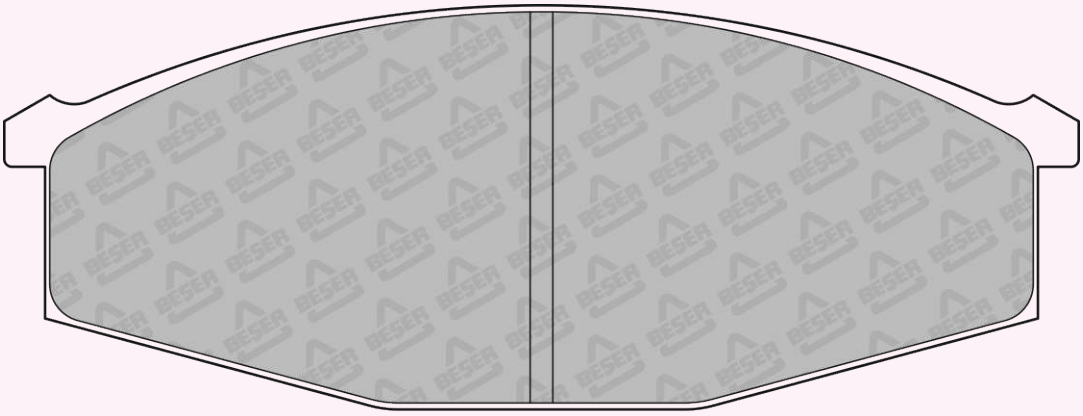

142 x 53,3

REFERENCE	T(mm)	REMARKS	MAKE	F/R	WVA No
3416	15	2 PADS RIGHT & 2 PADS LEFT	FORD-ROVER-TRIUMPH	F	20364 20365

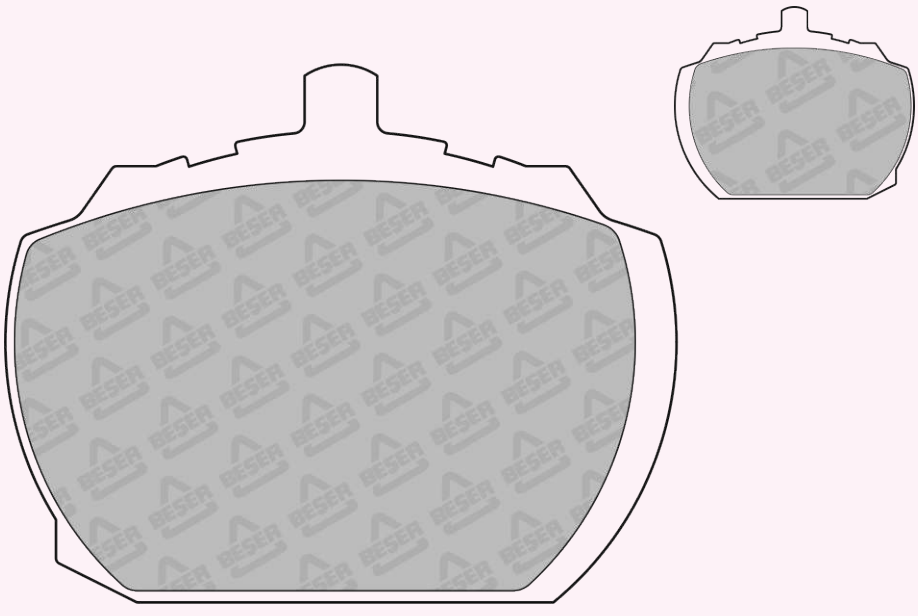

88,7 x 70,9

REFERENCE	T(mm)	REMARKS	MAKE	F/R	WVA No
3417	18	4 PADS PISTON CLIP	TVR	F	20640 20753

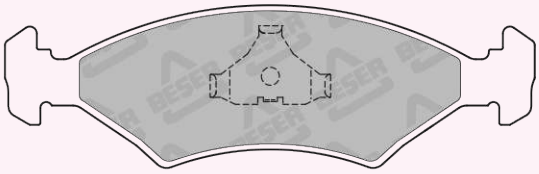

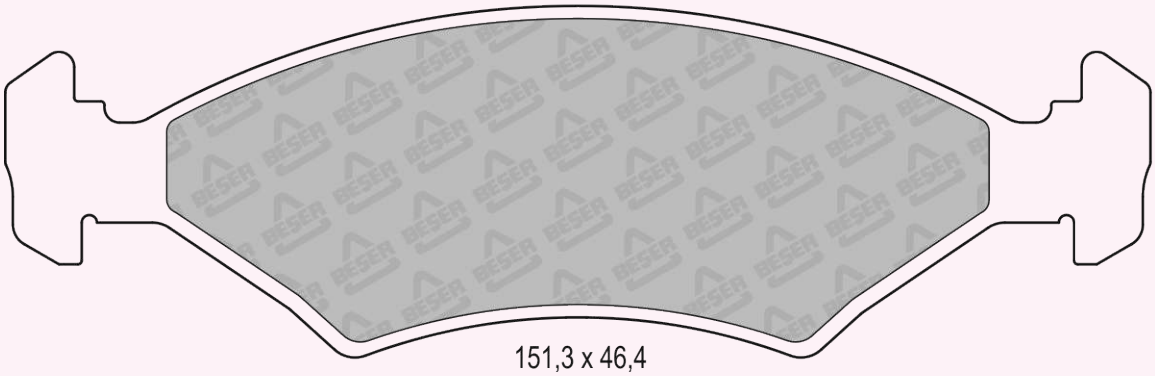

151,3 x 46,4

REFERENCE	T(mm)	REMARKS	MAKE	F/R	WVA No
3417/1	18	2 PADS WITH WEAR SENSOR (264mm)	FORD	F	20640 20783

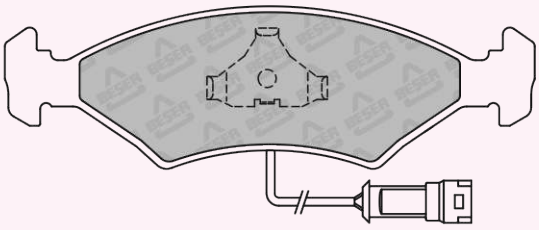

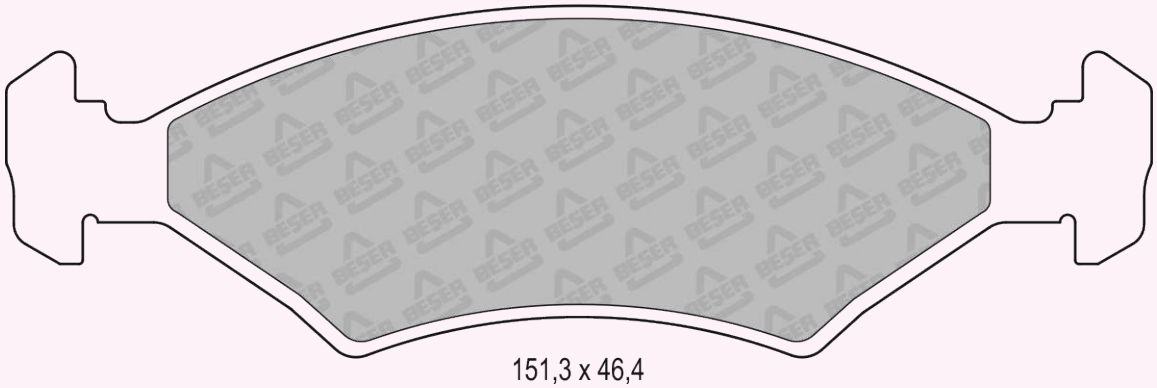

151,3 x 46,4

REFERENCE	T(mm)	REMARKS	MAKE	F/R	WVA No
3418	15,5	4 PADS PLAIN	TOYOTA	F	21042

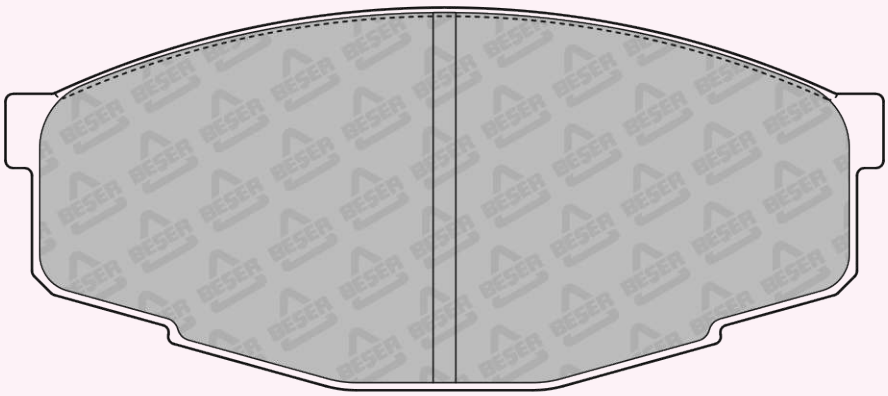

116 x 50,5

REFERENCE	T(mm)	REMARKS	MAKE	F/R	WVA No
3419	17,5	4 PADS PLAIN	FORD	F	20861

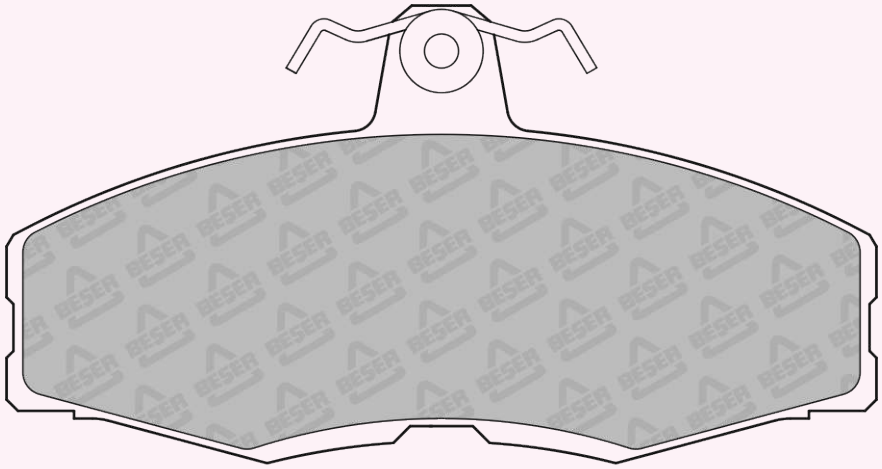

114,9 x 60,3

REFERENCE	T(mm)	REMARKS	MAKE	F/R	WVA No
3421	16	4 PADS PLAIN	LADA	F	20660

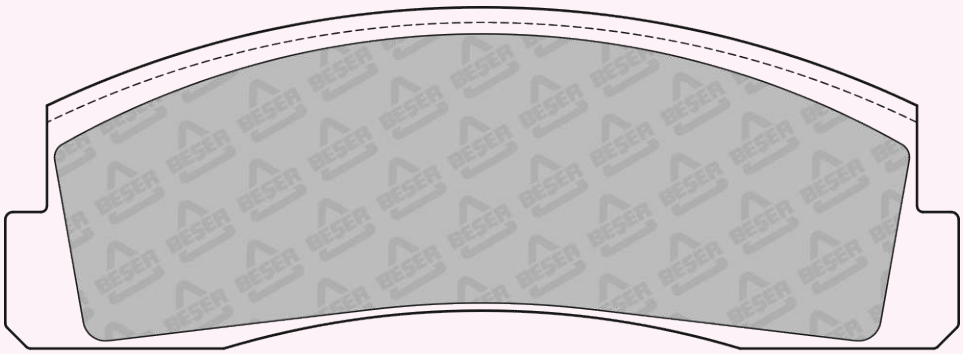

126 x 45

REFERENCE	T(mm)	REMARKS	MAKE	F/R	WVA No
3422	17,4	4 PADS PLAIN	LADA - ZAZ	F	21170

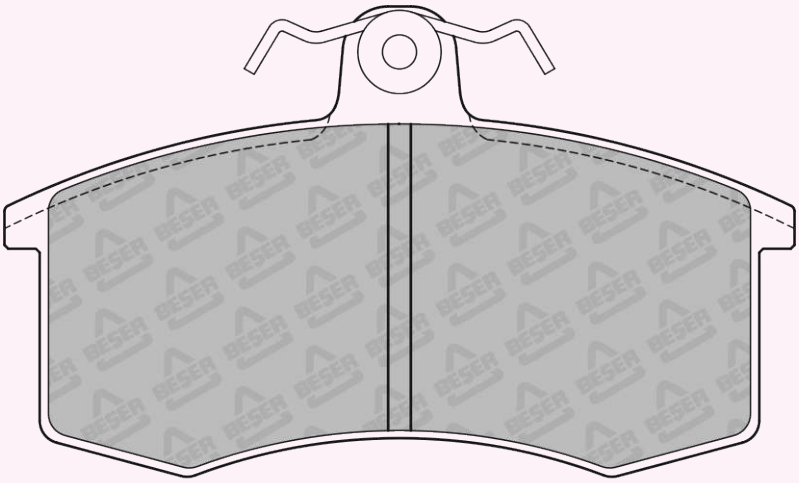

104,3 x 62,1

REFERENCE	T(mm)	REMARKS	MAKE	F/R	WVA No
3423	18	4 PADS PLAIN	ALFA ROMEO , IVECO	F	20359

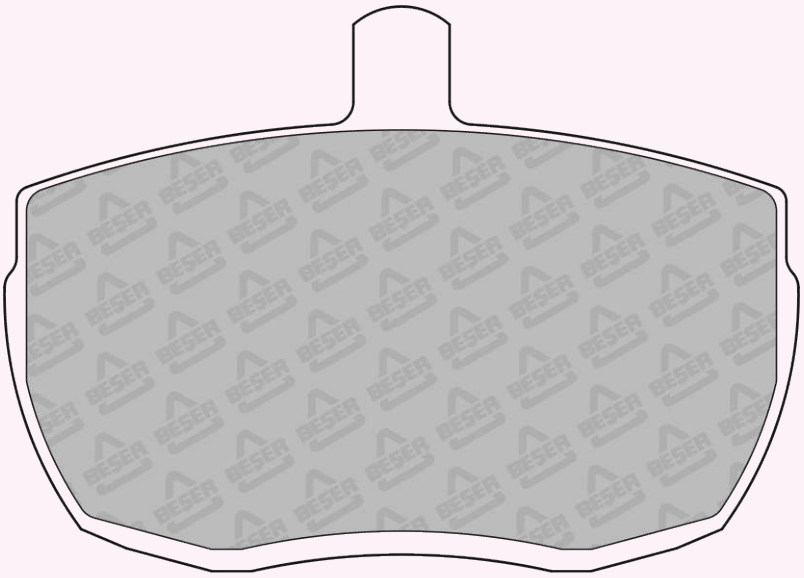

104,8 x 74,6

REFERENCE	T(mm)	REMARKS	MAKE	F/R	WVA No
3423/1	18	1 PAD WITH WEAR SENSOR (210 mm)	ALFA ROMEO - CAR BODIES - LTI - IVECO LAND ROVER - ROVER	F	20359 21160

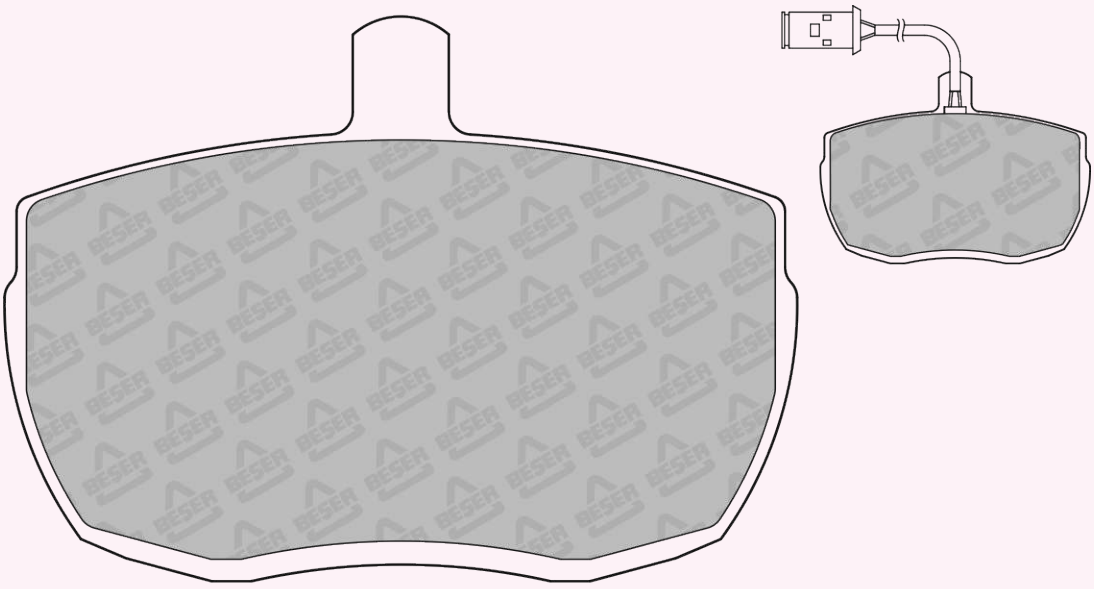

104,8 x 74,6

REFERENCE	T(mm)	REMARKS	MAKE	F/R	WVA No
3424	18	4 PADS PLAIN	AUTO BIANCHI FIAT LANCIA ,SEAT	F	20775 20950

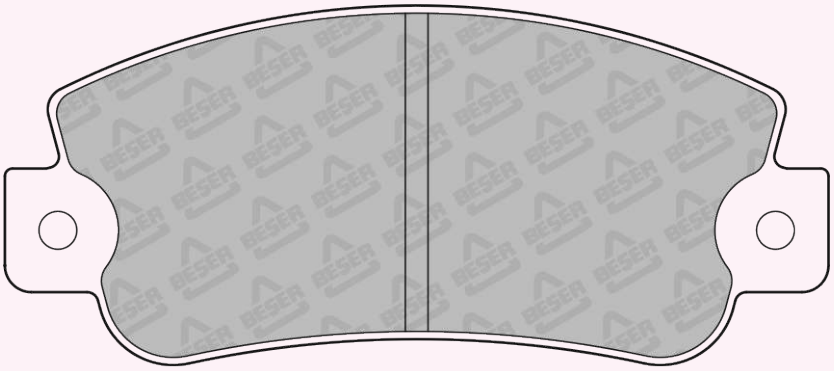

108,8 x 47,4

REFERENCE	T(mm)	REMARKS	MAKE	F/R	WVA No
3424/1	18	4 PADS PLAIN	AUTO BIANCHI FIAT LANCIA ,SEAT	F	20950 20951 20952

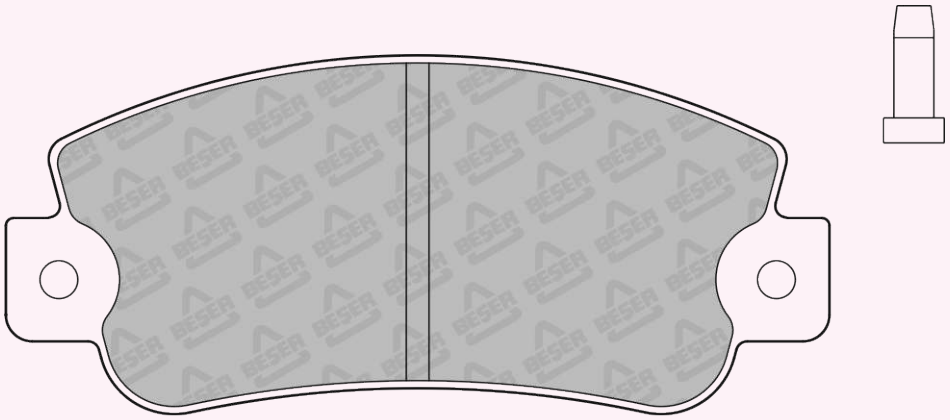

108,8 x 47,4

REFERENCE	T(mm)	REMARKS	MAKE	F/R	WVA No
3425	12	4 PADS PLAIN	FIAT - LANCIA	F-R	21107

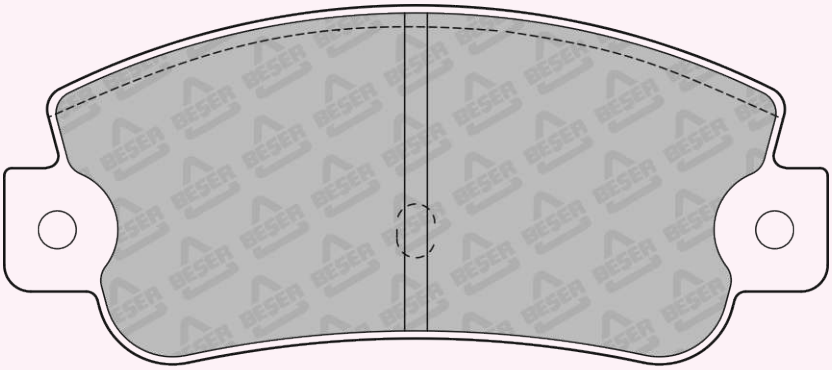

108,8 x 47,4

REFERENCE	T(mm)	REMARKS	MAKE	F/R	WVA No
3426	16,8	2 PADS WITH WEAR SENSOR	SUBARU	F	21495 21496 21503

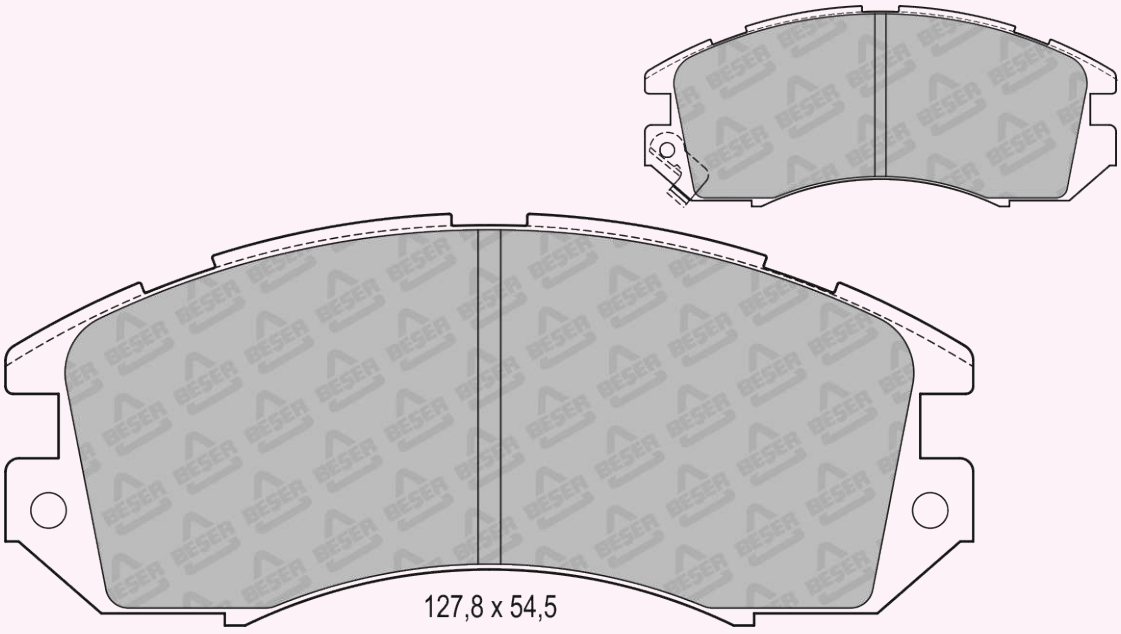

127,8 x 54,5

REFERENCE	T(mm)	REMARKS	MAKE	F/R	WVA No
3428	16,5	2 PADS WITH WEAR SENSOR (390mm)	RENAULT	F	21016 21086 21087

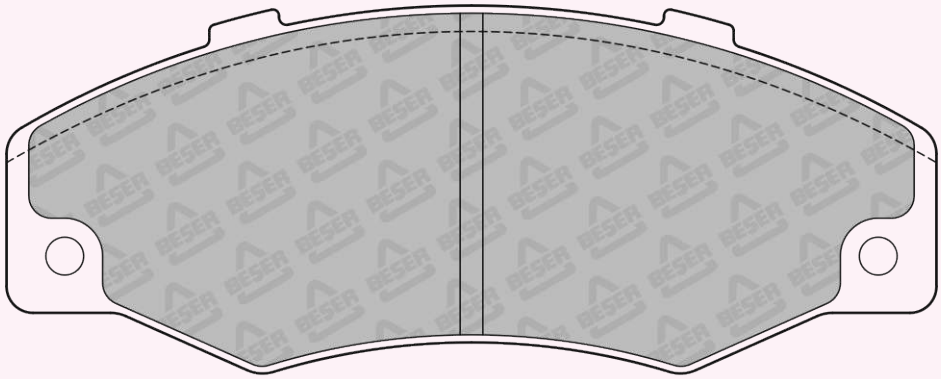

122,9 x 48,6

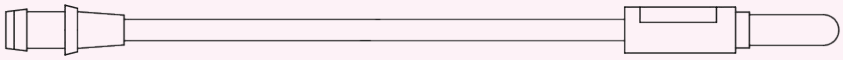

REFERENCE	T(mm)	REMARKS	MAKE	F/R	WVA No
3429	17,5	2 PADS WITH WEAR SENSOR (264mm)	FORD - TVR	F	20861 20862

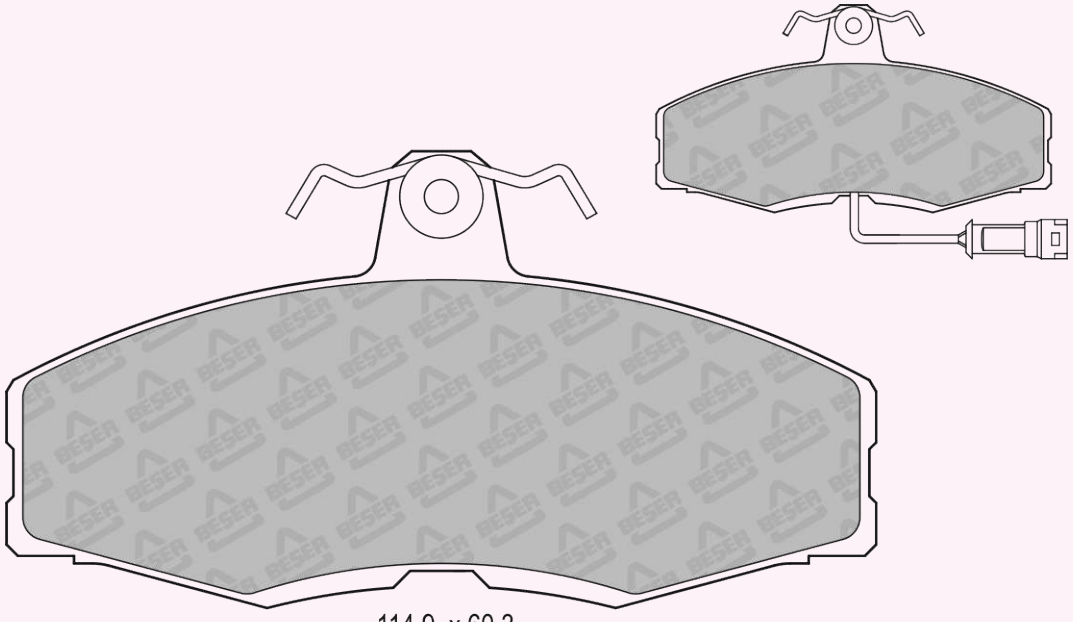

114,9 x 60,3

REFERENCE	T(mm)	REMARKS	MAKE	F/R	WVA No
3430	17,1	4 PADS PLAIN	BMW	F	21054 21055

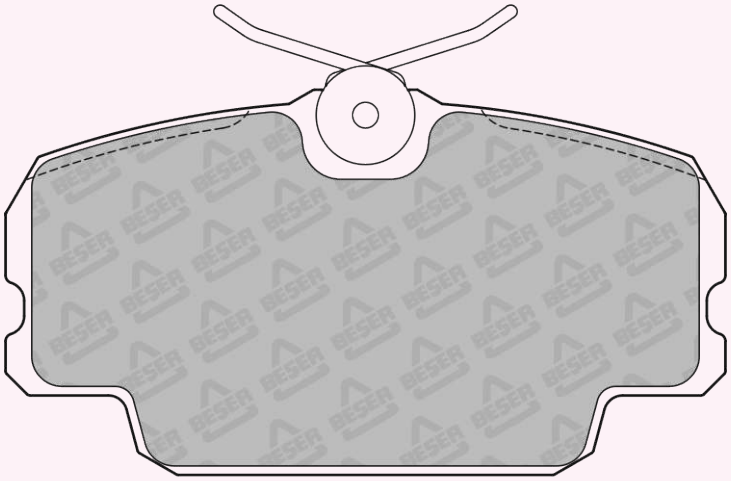

95 x 50,8

REFERENCE	T(mm)	REMARKS	MAKE	F/R	WVA No
3431	18	2 PADS WITH WEAR SENSOR (200mm)	ALPINE - DACIA - LADA PEUGEOT - RENAULT	F	21463

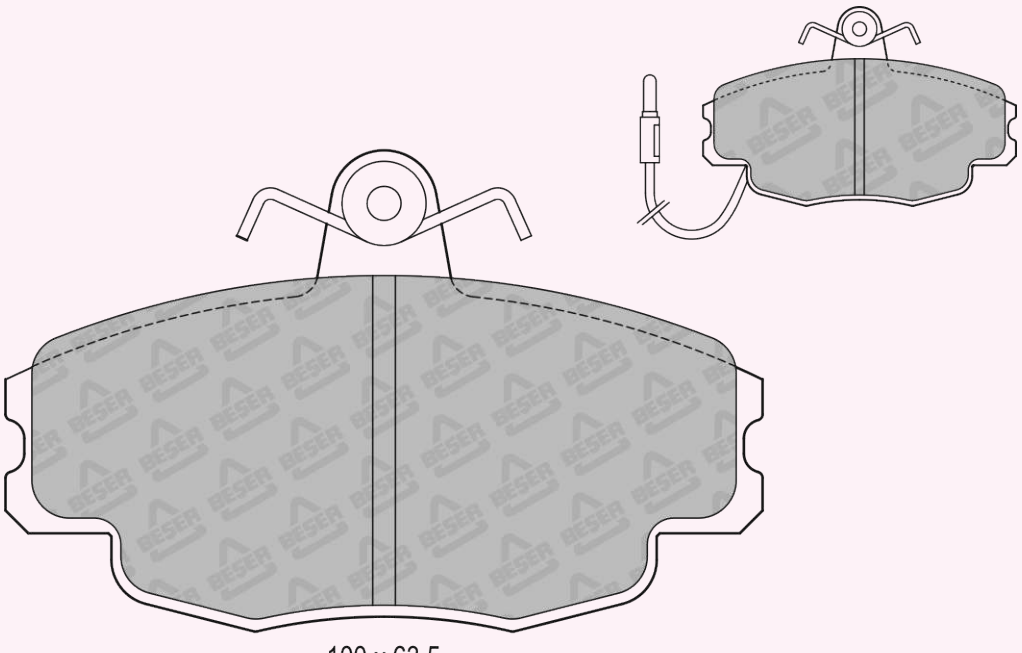

100 x 63,5

REFERENCE	T(mm)	REMARKS	MAKE	F/R	WVA No
3432	17	1 PAD WITH WEAR SENSOR (285mm)	FIAT - LANCIA - YUGO ZASTAVA	F	21100 21105

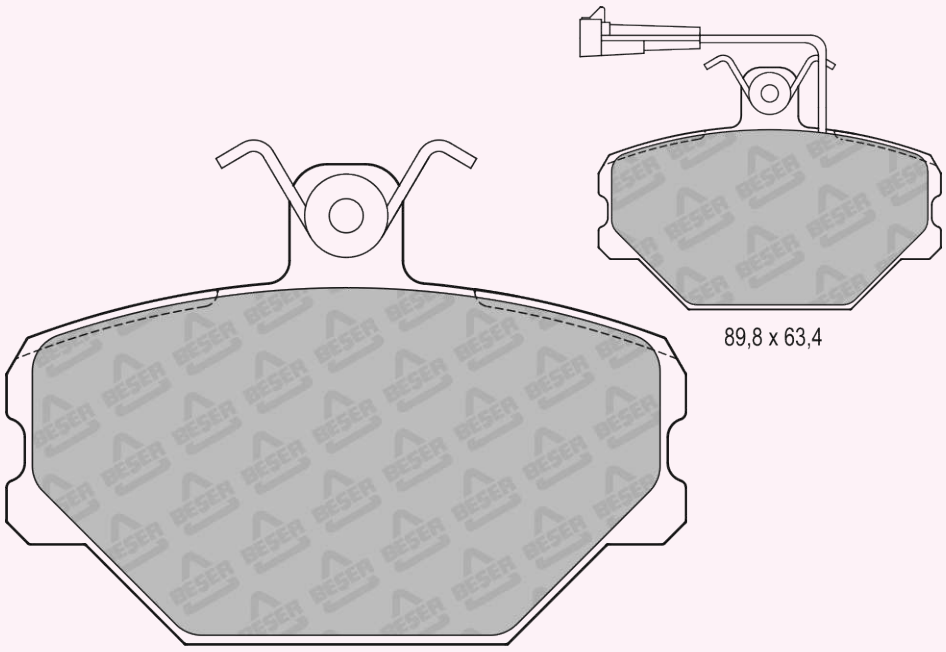

REFERENCE	T(mm)	REMARKS	MAKE	F/R	WVA No
3433	23	2 PADS WITH WEAR SENSOR (450mm)	DAF - IVECO - LEYLAND	F	29017 29024

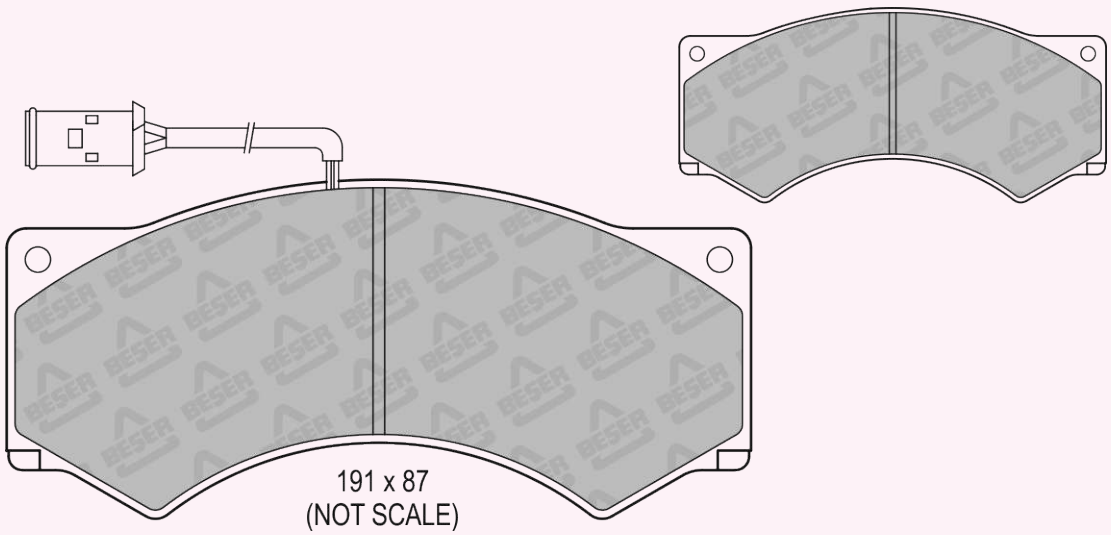

REFERENCE	T(mm)	REMARKS	MAKE	F/R	WVA No
3433/1	23	4 PADS PLAIN	DAF - LEYLAND IVECO	F	29017

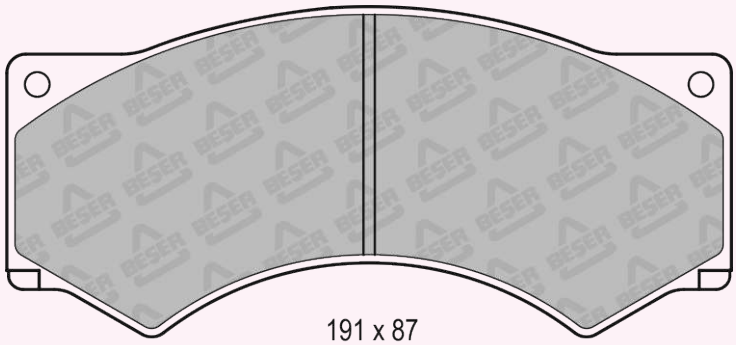

191 x 87
(NOT SCALE)

REFERENCE	T(mm)	REMARKS	MAKE	F/R	WVA No
3436	14	4 PADS WITH OUTER RADIUS DRILLED HOLES	DAIHATSU ISUZU - MAZDA	F	21243 21712

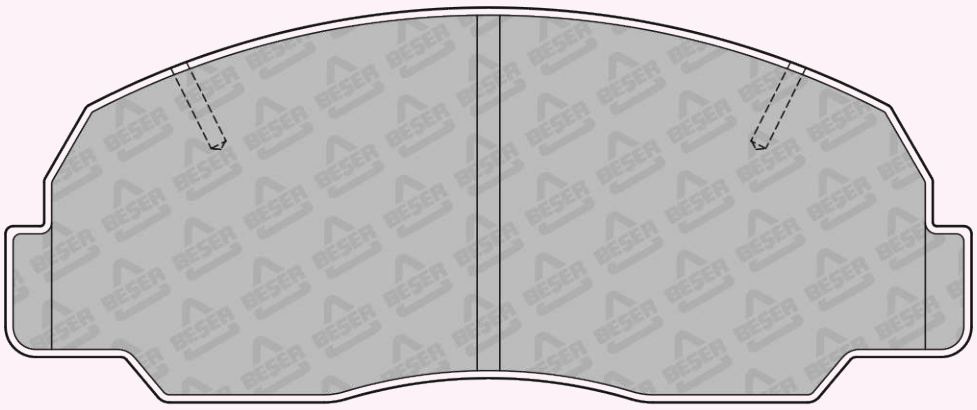

127,7 x 52,2

REFERENCE	T(mm)	REMARKS	MAKE	F/R	WVA No
3437	15,4	2 PADS WITH WEAR SENSOR	FORD - MAZDA	F	21378 21379 21380

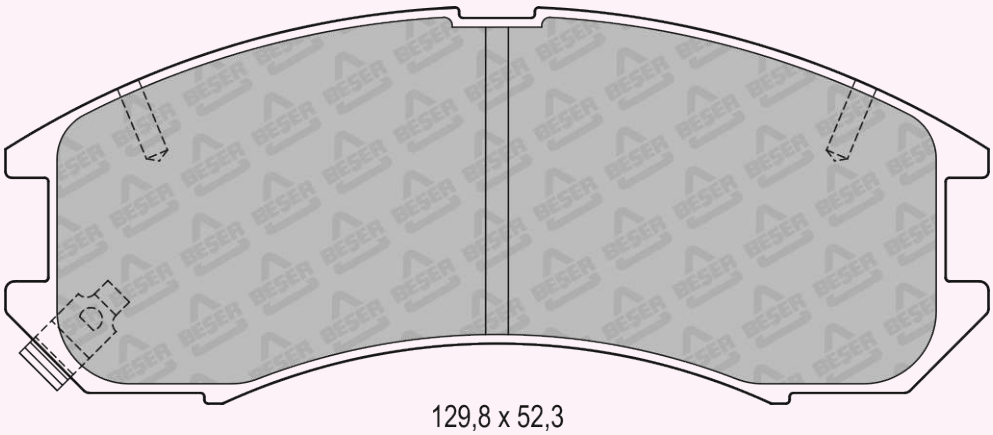

129,8 x 52,3

REFERENCE	T(mm)	REMARKS	MAKE	F/R	WVA No
3439	15	4 PADS PLAIN	AUTOBIANCHI FIAT - LANCIA	F	21131

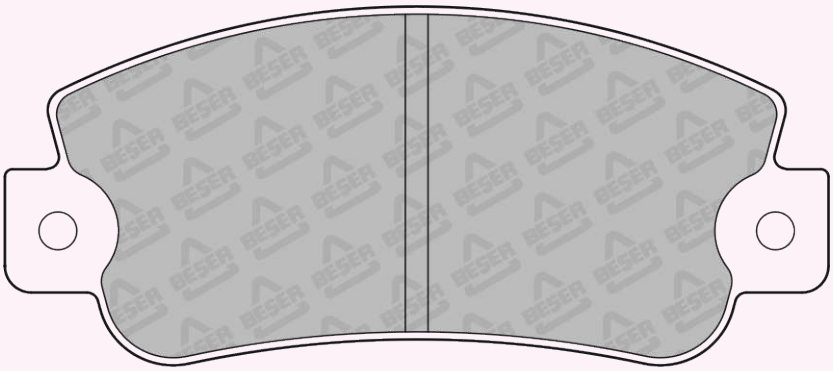

108,8 x 47,4

REFERENCE	T(mm)	REMARKS	MAKE	F/R	WVA No
3440	19	2 PADS WITH WEAR SENSOR (130mm)	ALFA ROMEO - CITROEN - FIAT MULTICAR PEUGEOT - TALBOT - VW	F	20741 20787

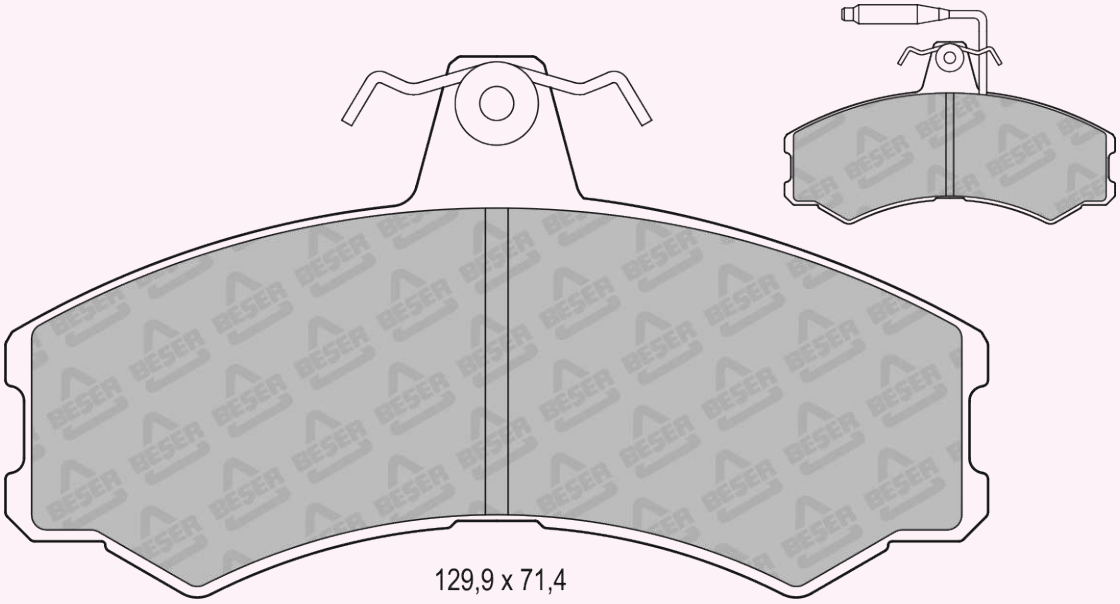

129,9 x 71,4

REFERENCE	T(mm)	REMARKS	MAKE	F/R	WVA No
3441	17,3	4 PADS PLAIN	SEAT - VW	F	20889

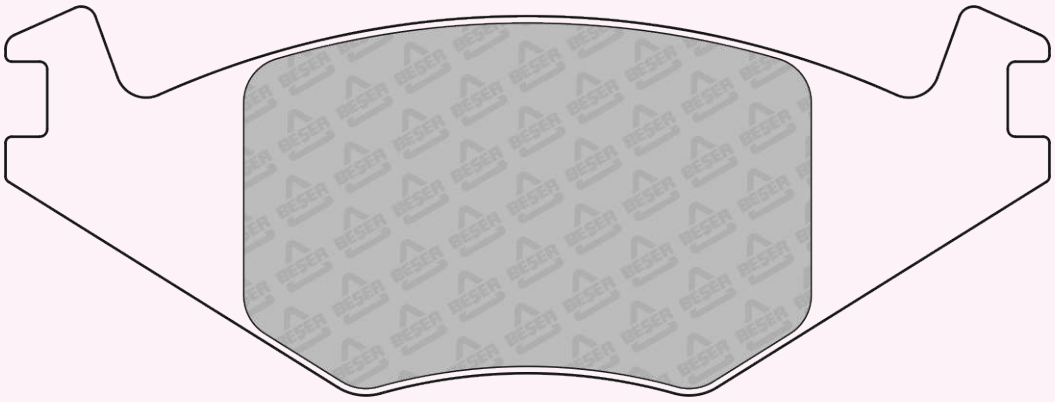

137,9 x 51,3

REFERENCE	T(mm)	REMARKS	MAKE	F/R	WVA No
3441/1	17,3	4 PADS PLAIN & 4 SPINGS	SEAT - VW	F	20889

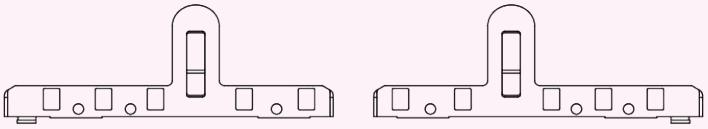

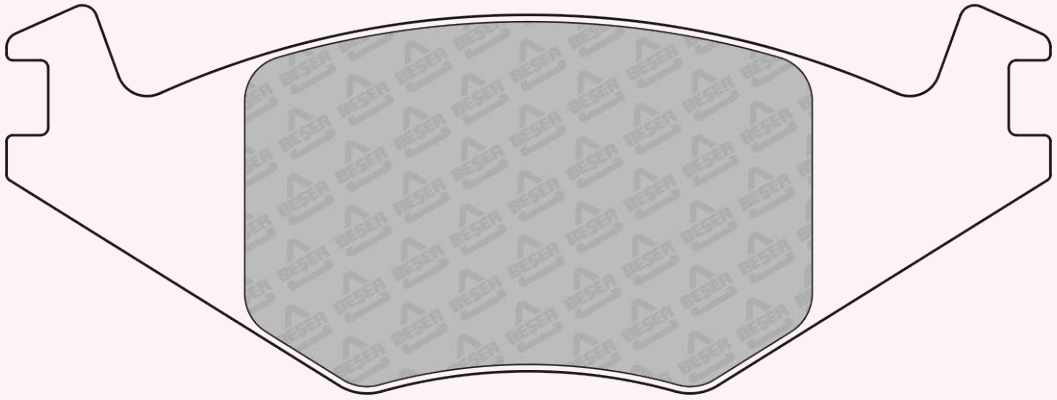

137,9 x 51,3

REFERENCE	T(mm)	REMARKS	MAKE	F/R	WVA No
3442	17,7	2 PADS WITH WEAR SENSOR (110mm)	ALPINE - PEUGEOT	F	20631 20632 20633

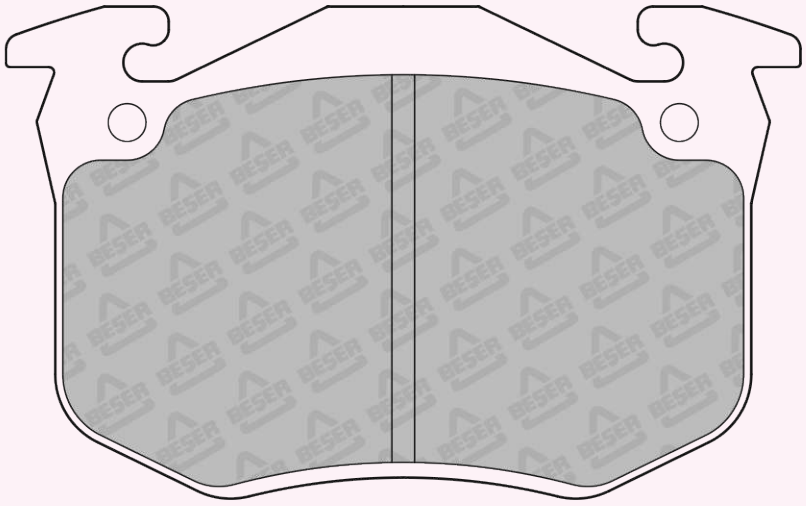

105 x 65

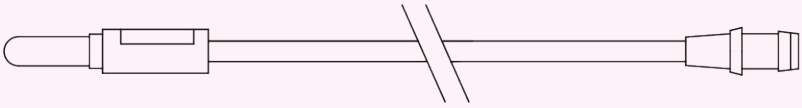

REFERENCE	T(mm)	REMARKS	MAKE	F/R	WVA No
3443	18	2 PADS INNER & 2 PADS OUTER	BMC	F	---

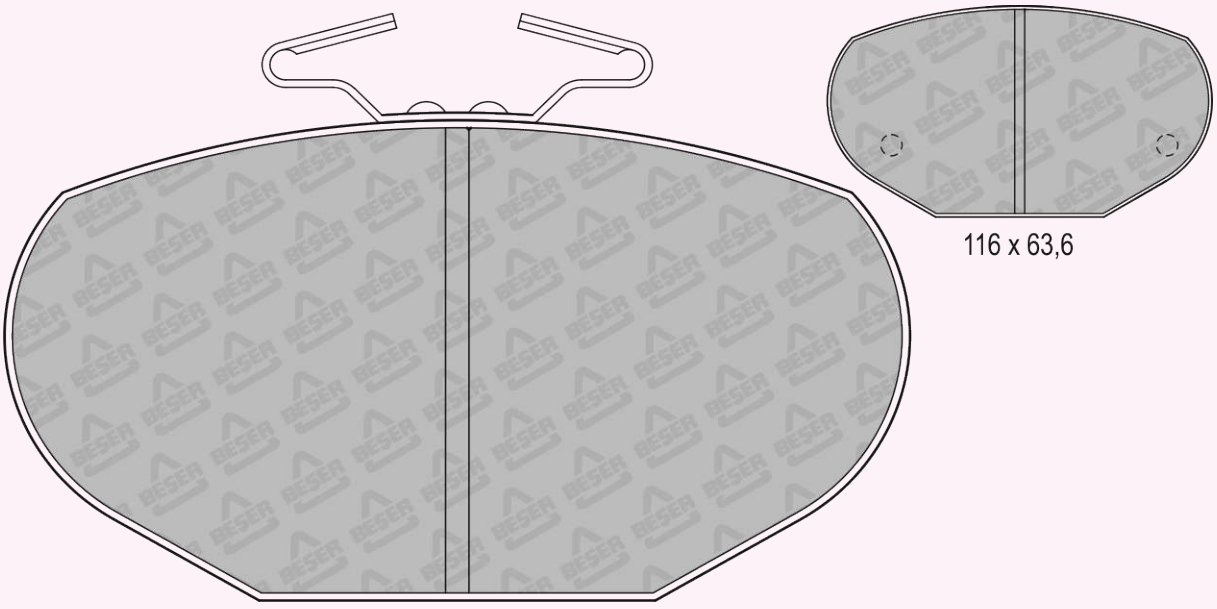

REFERENCE	T(mm)	REMARKS	MAKE	F/R	WVA No
3444	19,7	2 PADS INNER & 2 PADS OUTER	SEAT - VW	F	20887 20888

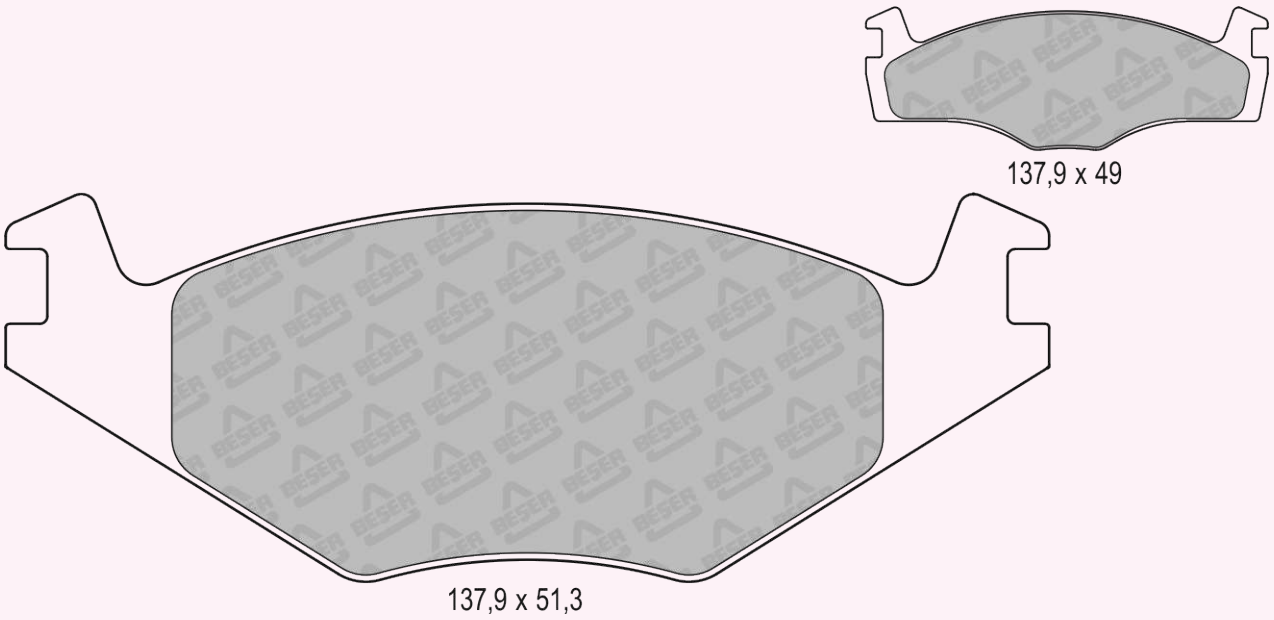

REFERENCE	T(mm)	REMARKS	MAKE	F/R	WVA No
3444/1	19,7	2 PADS INNER & 2 PADS OUTER WITH 4 SPRING	SEAT - VW	F	20887 20888

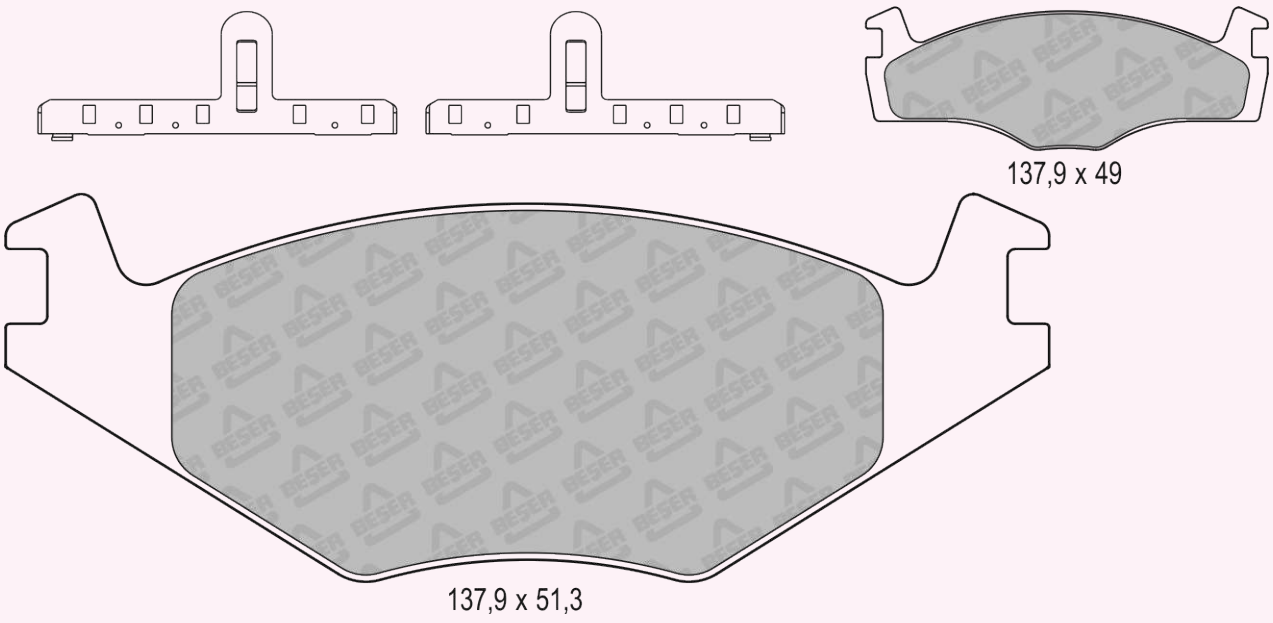

REFERENCE	T(mm)	REMARKS	MAKE	F/R	WVA No
3445	18	4 PADS PLAIN	FORD	F	21469

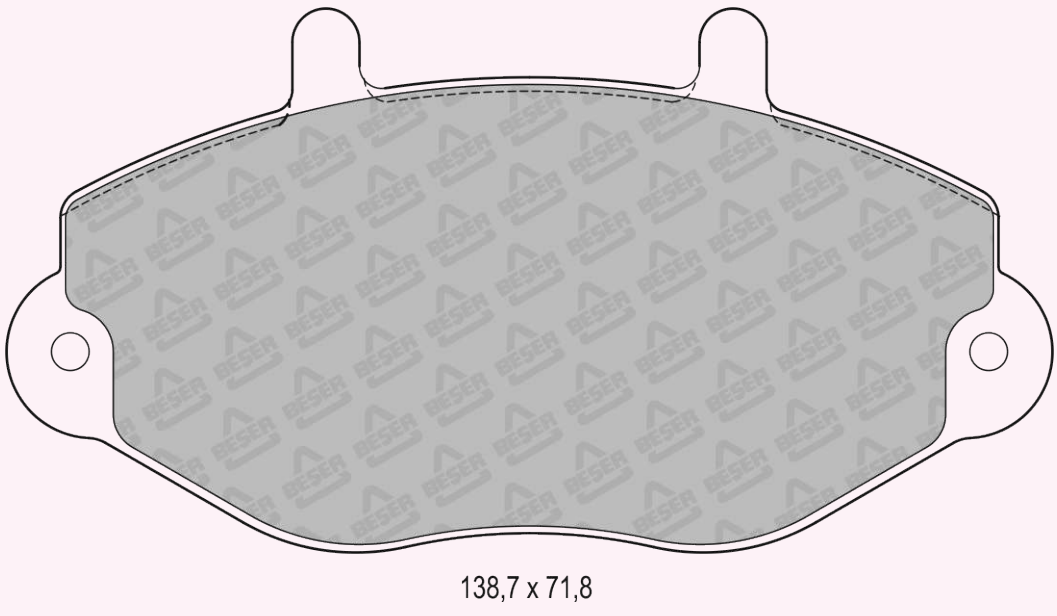

REFERENCE	T(mm)	REMARKS	MAKE	F/R	WVA No
3446	15,5	4 PADS WITH WEAR SENSOR	ISUZU	F	20880 20881 20882

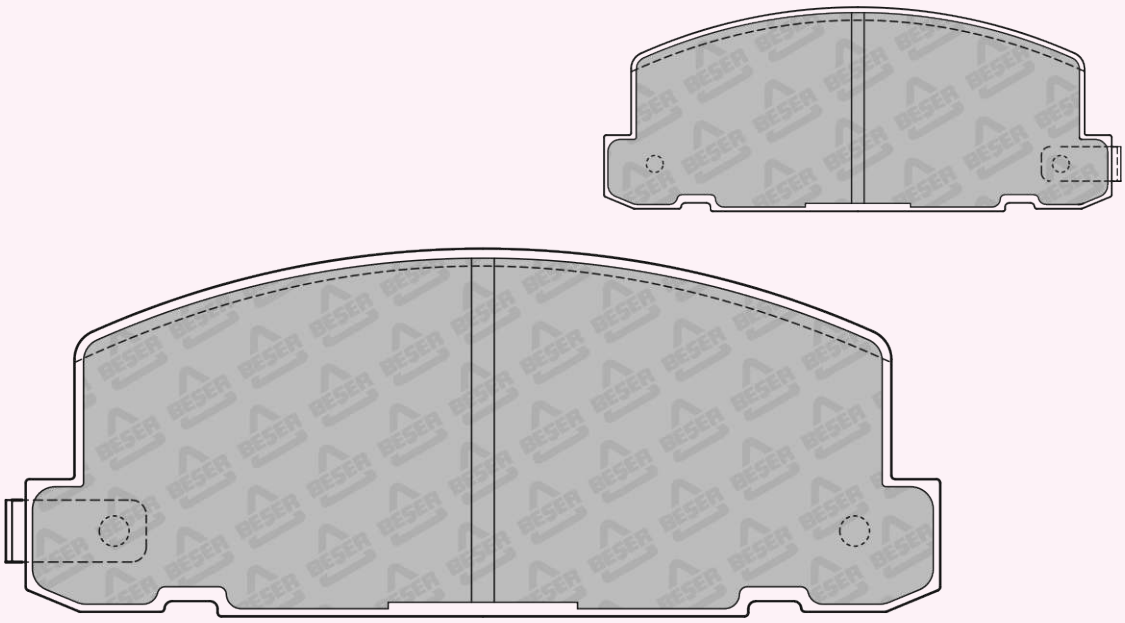

120,8 x 48,5

REFERENCE	T(mm)	REMARKS	MAKE	F/R	WVA No
3447	15,7	4 PADS PLAIN	LADA	F	- - -

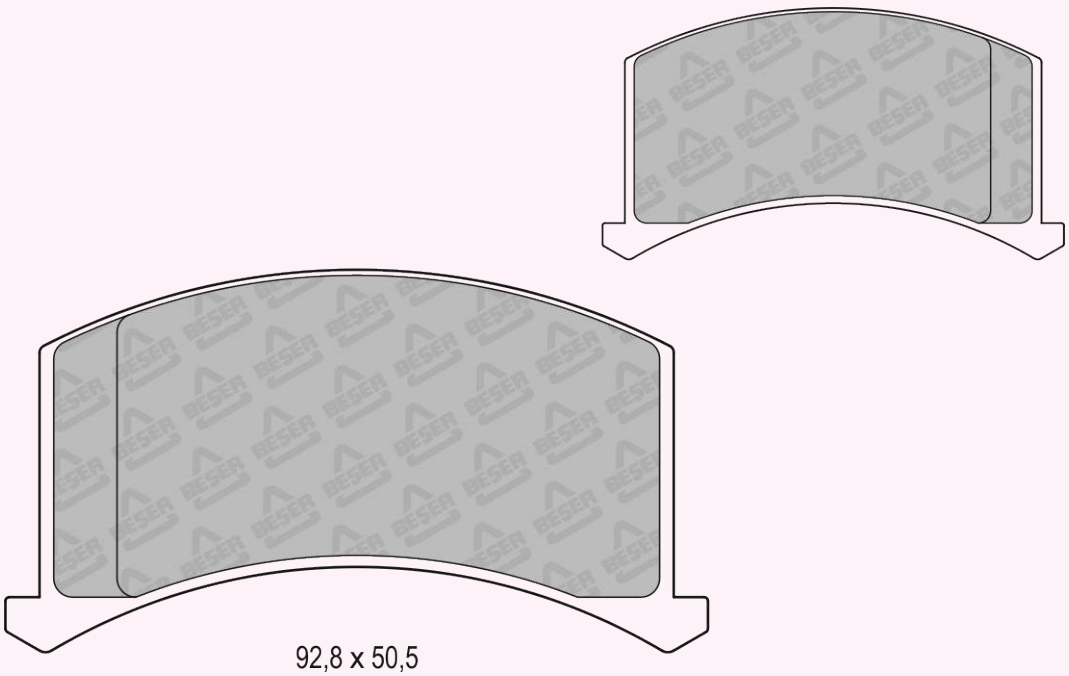

92,8 x 50,5

REFERENCE	T(mm)	REMARKS	MAKE	F/R	WVA No
3448	16,8	2 PADS WITH WEAR SENSOR	MITSUBISHI	F	21373 21374 21375

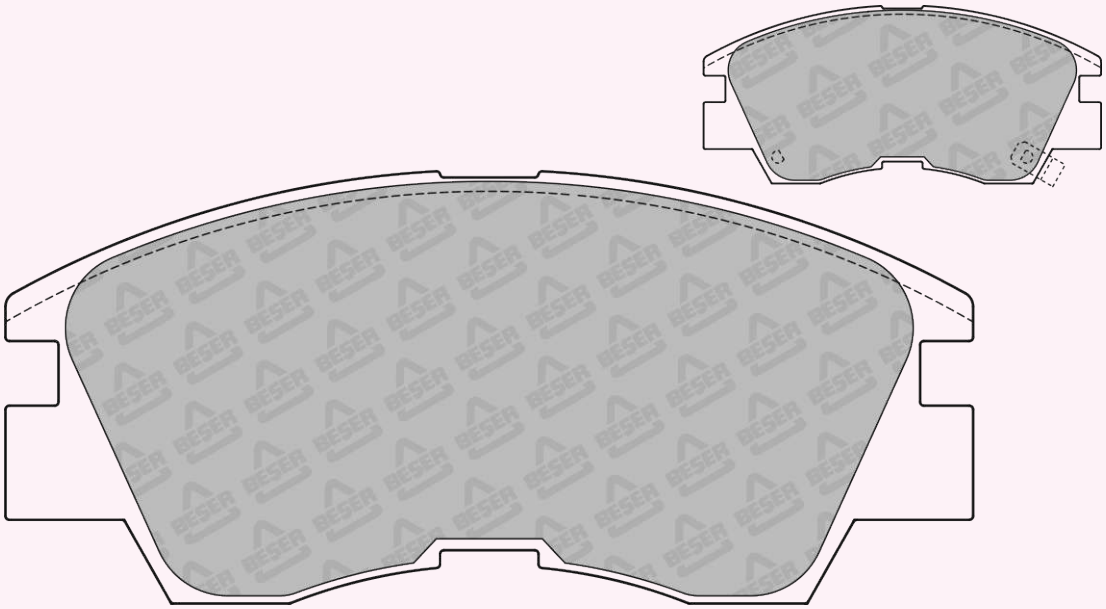

127,8 x 57

REFERENCE	T(mm)	REMARKS	MAKE	F/R	WVA No
3449	14,9	2 PADS WITH WEAR SENSOR	MAZDA - FORD	F	20039 20041 21277

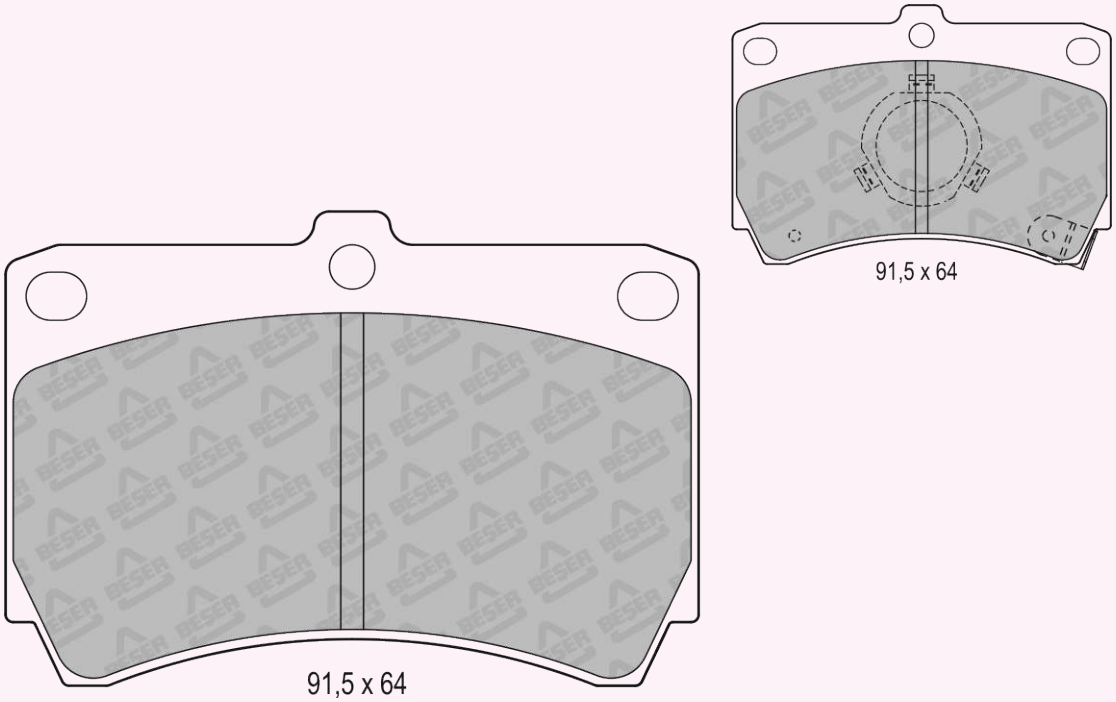

91,5 x 64

91,5 x 64

REFERENCE	T(mm)	REMARKS	MAKE	F/R	WVA No
3450	15	2 PADS WITH WEAR SENSOR	ISUZU	F	20880 20881 20882

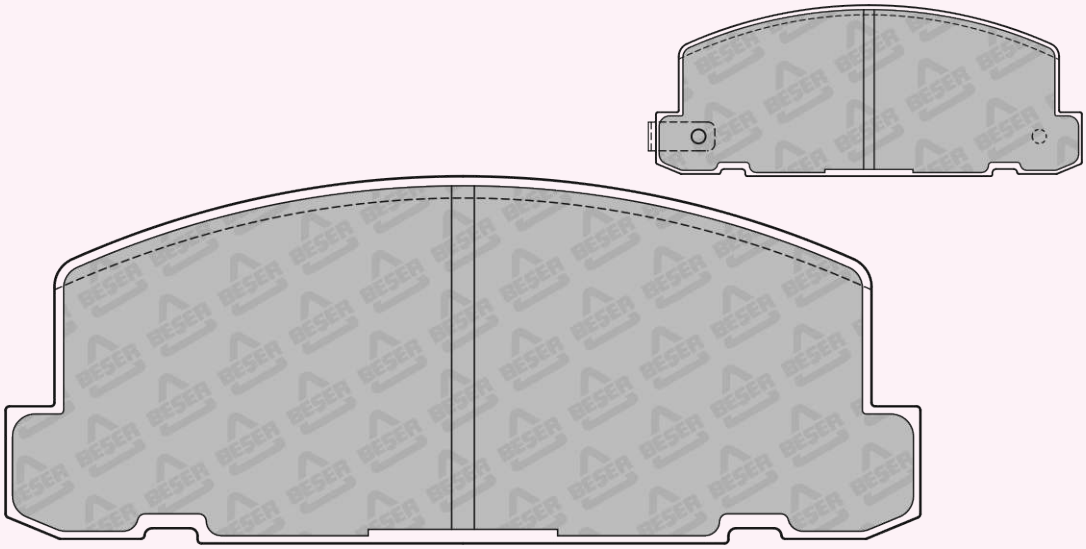

120,8 x 48,5

REFERENCE	T(mm)	REMARKS	MAKE	F/R	WVA No
3453	18	4 PADS PLAIN	LAND ROVER	F	21519

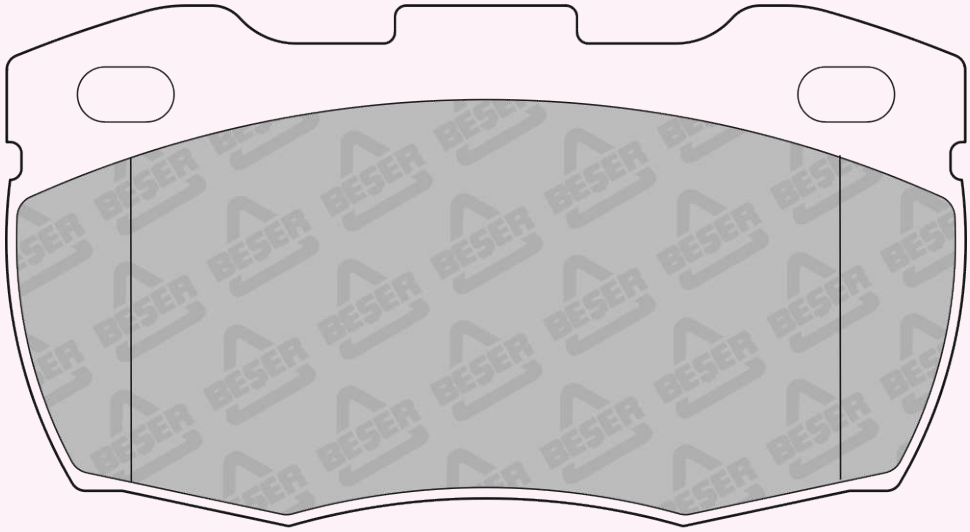

126,7 x 68,6

REFERENCE	T(mm)	REMARKS	MAKE	F/R	WVA No
3453/1	18	4 PADS PLAIN	LAND ROVER	F	21519

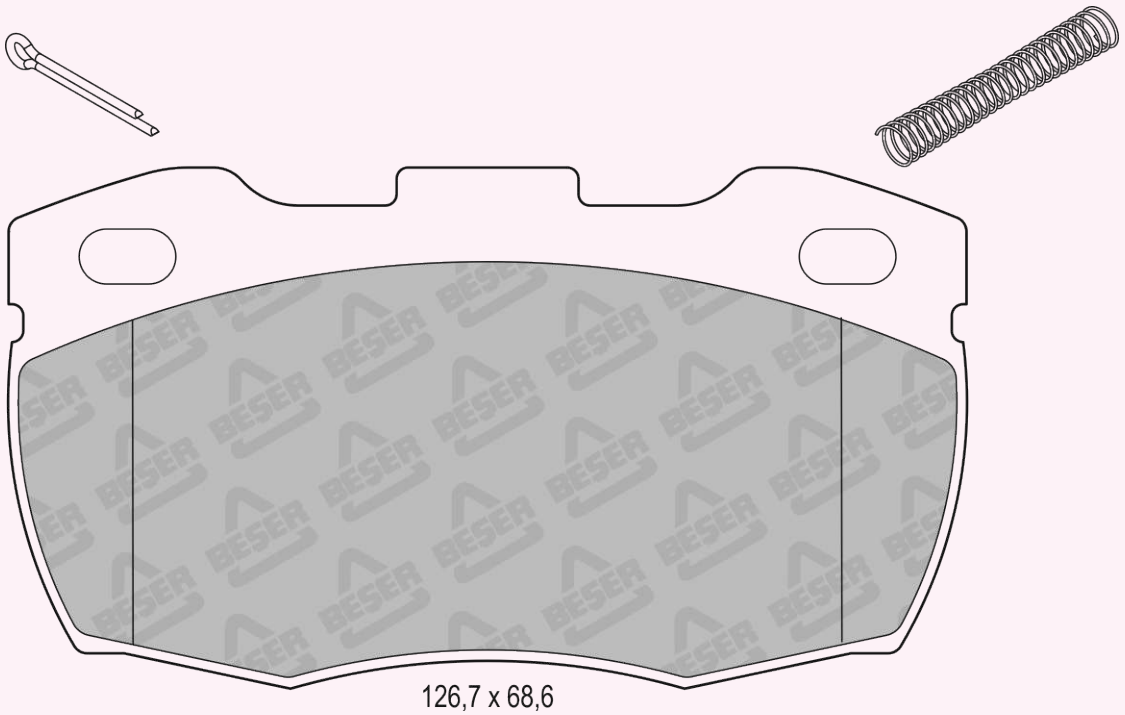

126,7 x 68,6

REFERENCE	T(mm)	REMARKS	MAKE	F/R	WVA No
3455	16	4 PADS PLAIN	ASTON MARTIN MERCEDES BENZ	F	20027

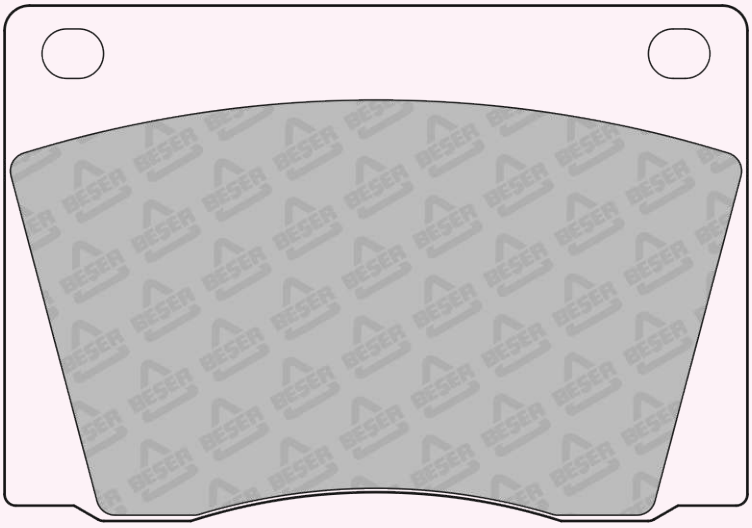

98,2 x 68,1

REFERENCE	T(mm)	REMARKS	MAKE	F/R	WVA No
3456	18	2 PADS INNER & 2 PADS OUTER 2 WEAR INDICATOR (190mm)	BMC	F	---

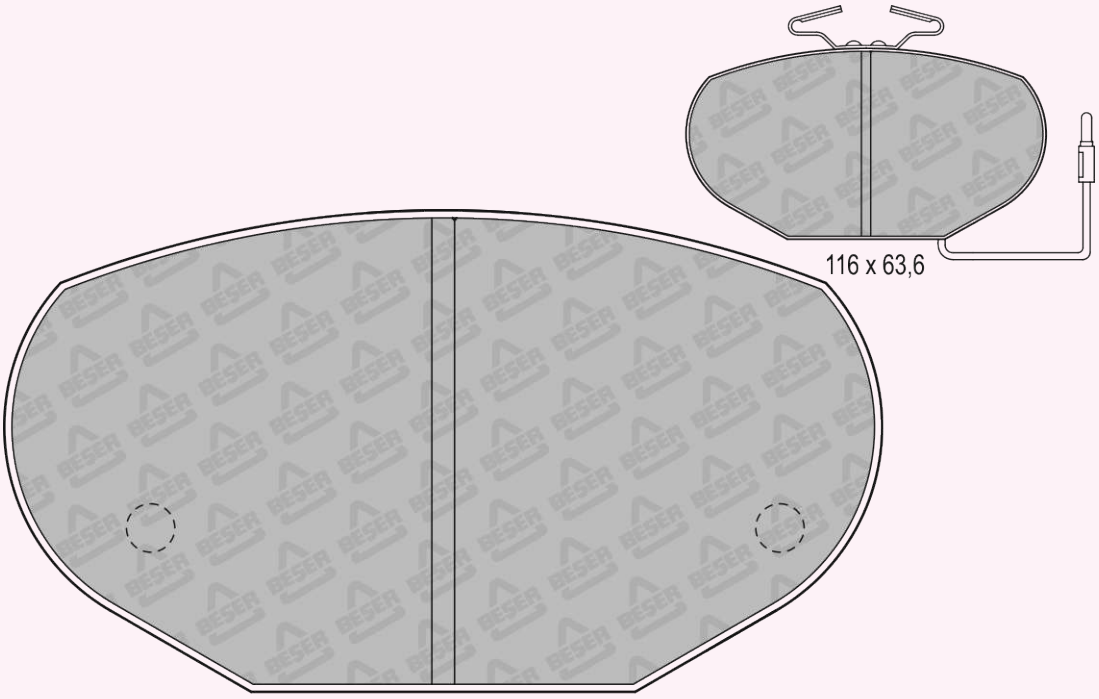

REFERENCE	T(mm)	REMARKS	MAKE	F/R	WVA No
3457	19	2 PADS WITH WEAR SENSOR (220mm)	PEUGEOT	F	21209 21210

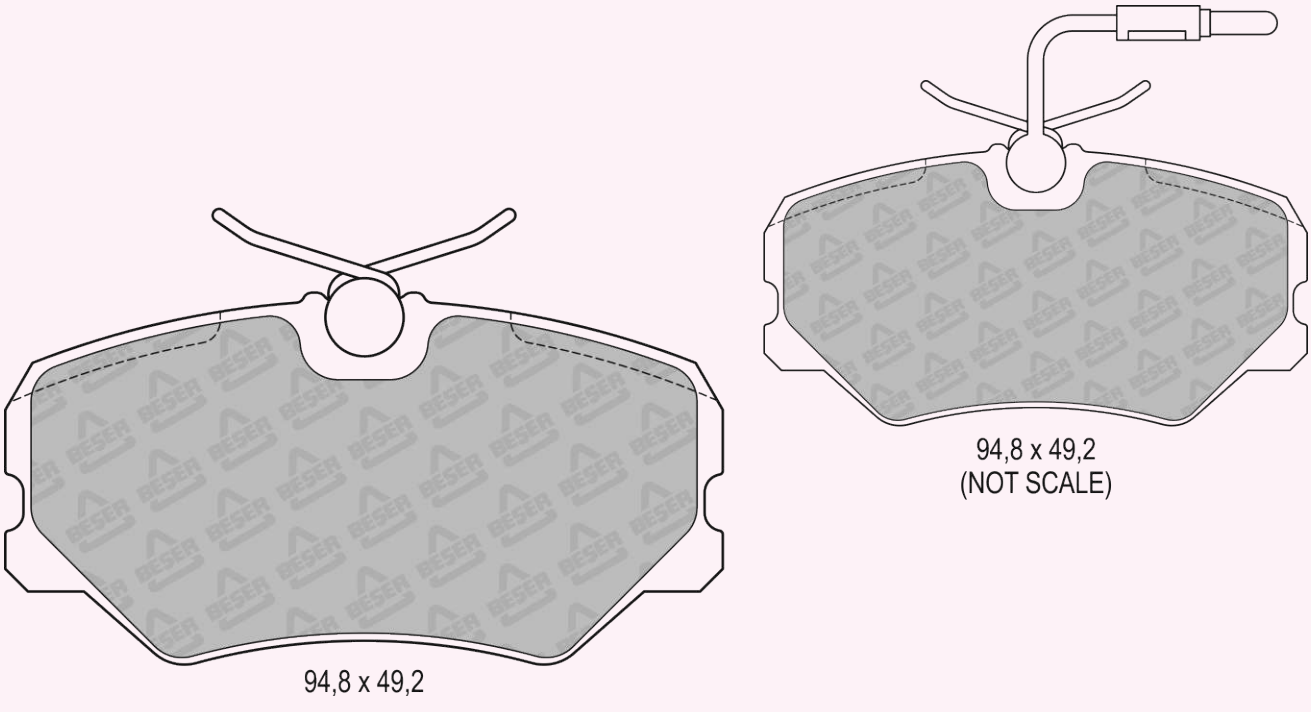

REFERENCE	T(mm)	REMARKS	MAKE	F/R	WVA No
3458	15	2 PADS PISTON CLIP	FIAT	F	21193 21962

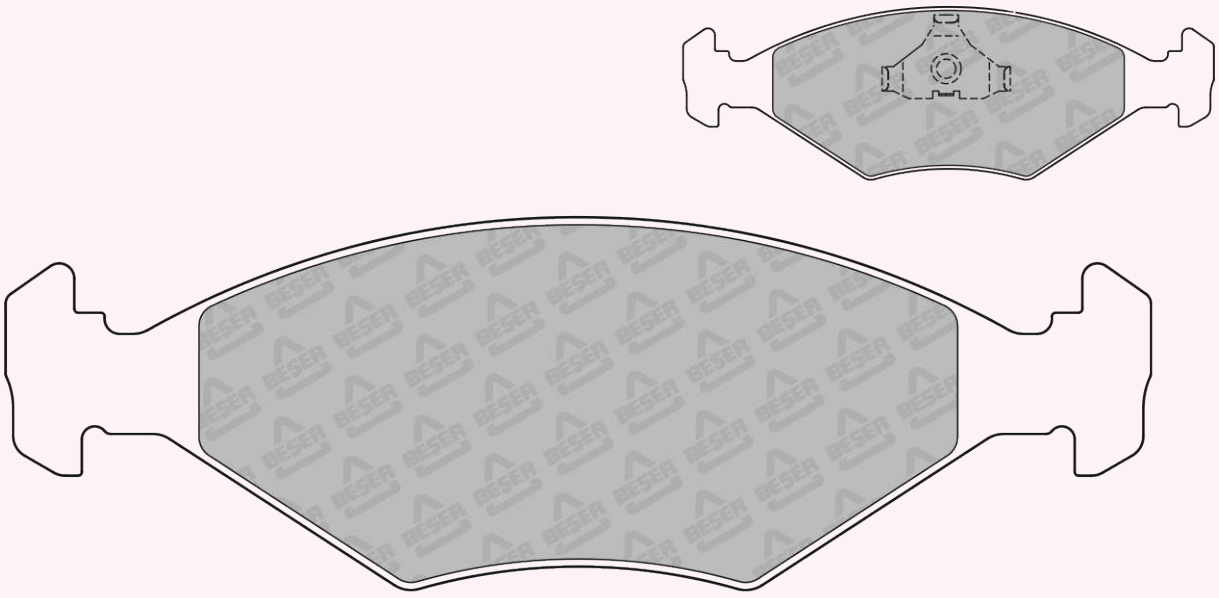

151,3 x 49,2

REFERENCE	T(mm)	REMARKS	MAKE	F/R	WVA No
3459	17,5	2 PADS PISTON CLIP	FIAT - INNOCENTI	F	21193 21194

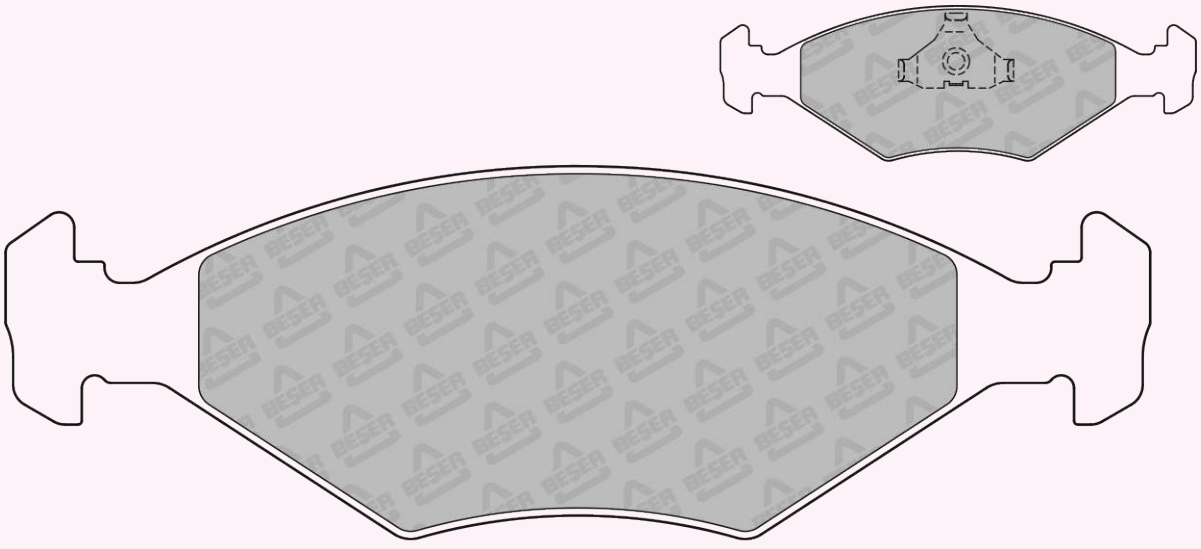

151,3 x 49,2

REFERENCE	T(mm)	REMARKS	MAKE	F/R	WVA No
3461	17,5	2 PADS WITH WEAR SENSOR (230mm)	FIAT - INNOCENTI	F	21193 21195

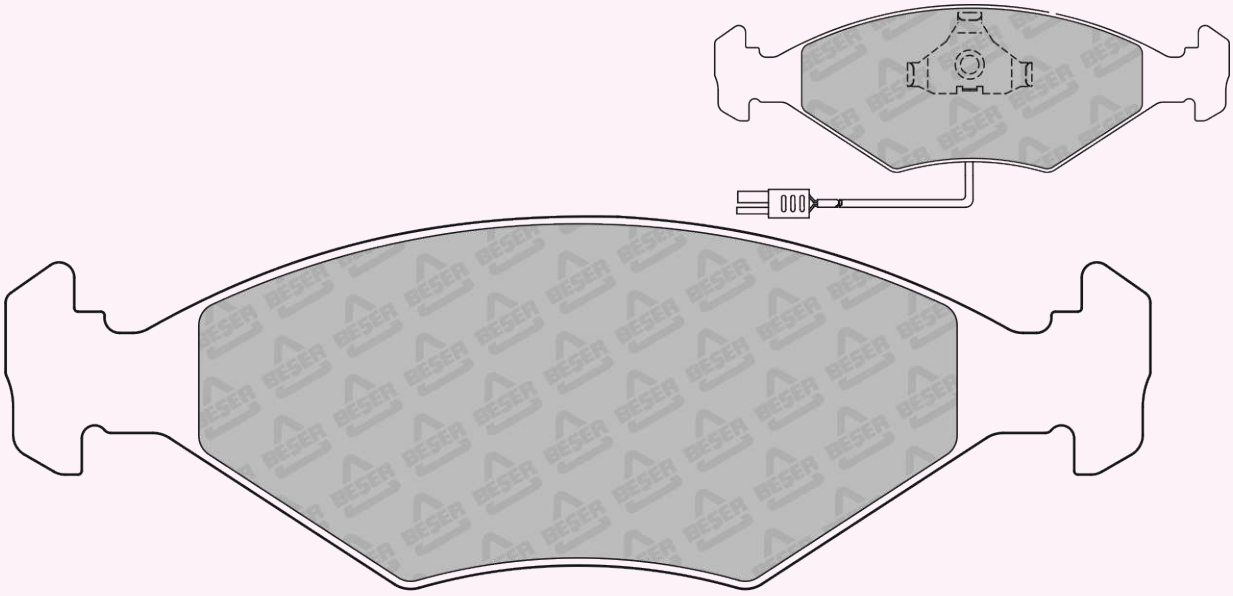

151,3 x 49,2

REFERENCE	T(mm)	REMARKS	MAKE	F/R	WVA No
3462	15,4	2 PADS WITH WEAR SENSOR	BEDFORD ISUZU - VAUXHALL	F	21115

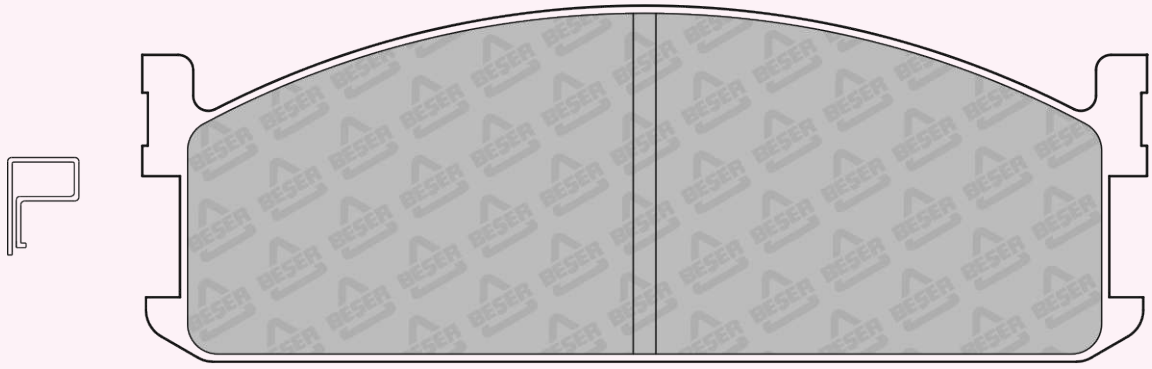

133 x 47

REFERENCE	T(mm)	REMARKS	MAKE	F/R	WVA No
3463	15,5	2 PADS WITH WEAR SENSOR	FORD - KIA MAZDA	F	20002 20191 20192

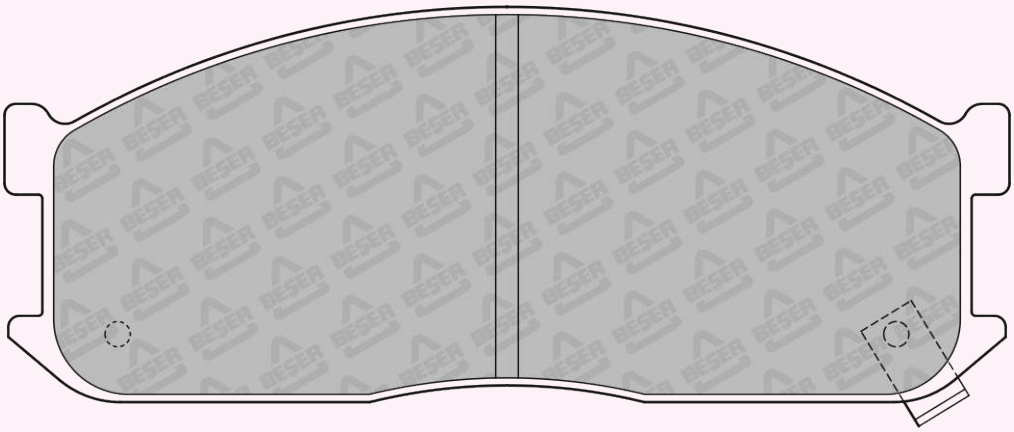

133 x 52,2

REFERENCE	T(mm)	REMARKS	MAKE	F/R	WVA No
3464	19	4 PADS PLAIN	FORD	F	21171

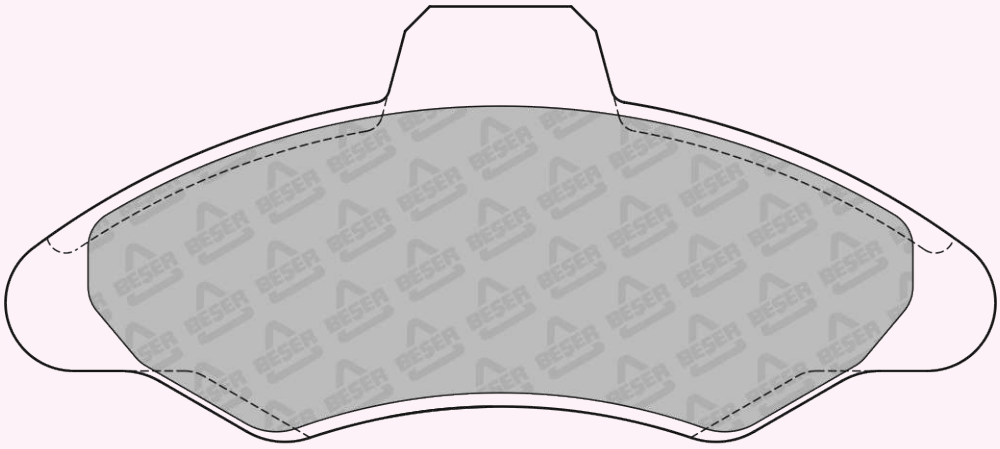

130,8 x 57,5

REFERENCE	T(mm)	REMARKS	MAKE	F/R	WVA No
3465	18	4 PADS PLAIN	FORD	F	21171

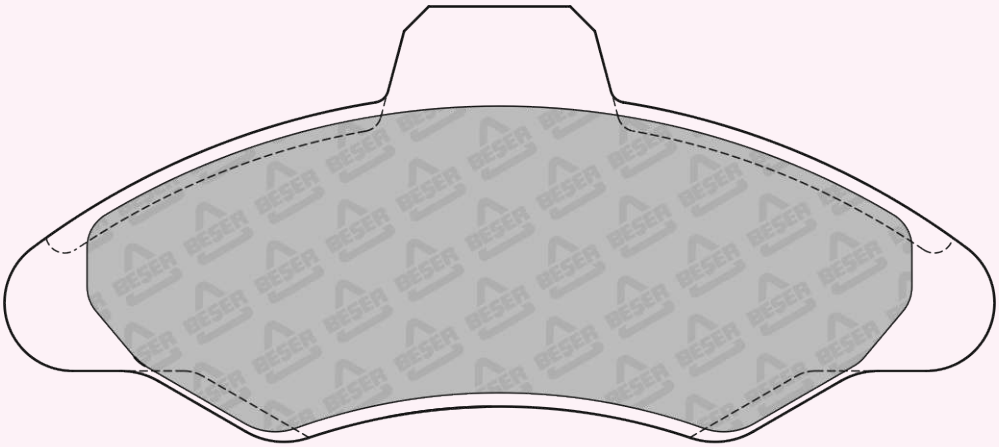

130,8 x 57,5

REFERENCE	T(mm)	REMARKS	MAKE	F/R	WVA No
3466	17	2 PADS WITH WEAR SENSOR	AUTO BIANCHI ABARTH -ALFA ROMEO FIAT-LANCIA - PININFARINA	F	20833 20834 20838

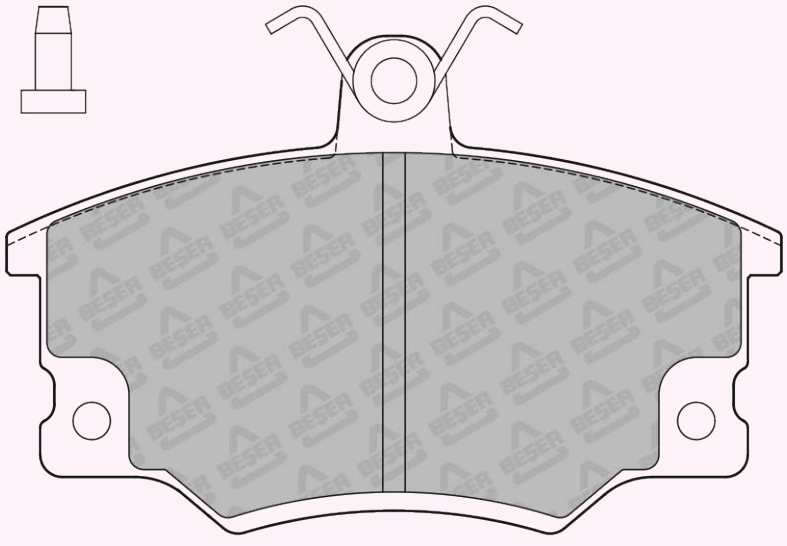

103,8 x 66,6

REFERENCE	T(mm)	REMARKS	MAKE	F/R	WVA No
3467	17	2 PADS WITH WEAR SENSOR	FIAT - LANCIA	F	20836 20837 20838

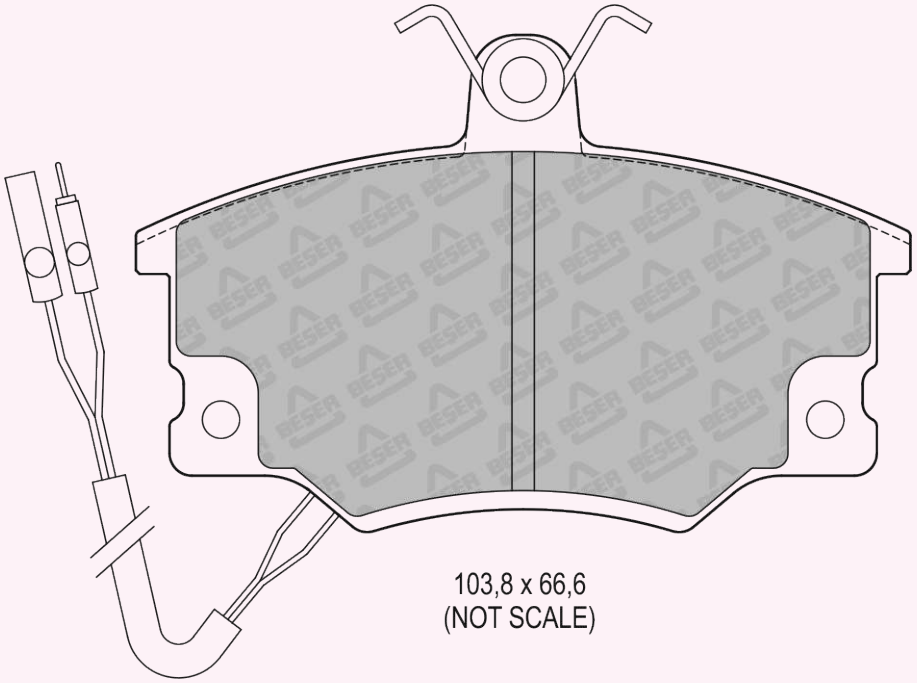

REFERENCE	T(mm)	REMARKS	MAKE	F/R	WVA No
3468	19,35	2 PADS WITH WEAR SENSOR	ABARTH - ALFA ROMEO AUTO BIANCHI - FIAT LANCIA - PININFARINA	F	20719 20720

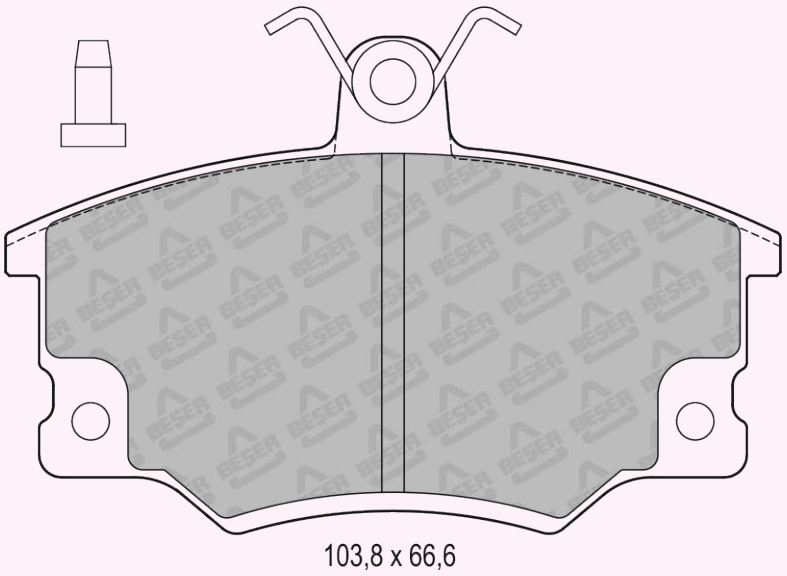

REFERENCE	T(mm)	REMARKS	MAKE	F/R	WVA No
3469	15,5	4 PADS PLAIN	HOLDEN - OPEL - SAAB VAUXHALL	R	21140

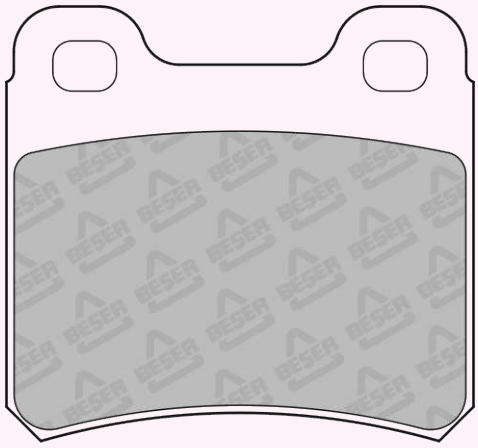

61,6 x 57,5

REFERENCE	T(mm)	REMARKS	MAKE	F/R	WVA No
3470	17	2 PADS PISTON CLIP	CHEVROLET - DAEWOO - FSO HOLDEN - OPEL - VAUXHALL - ZAZ	F	21190 21201

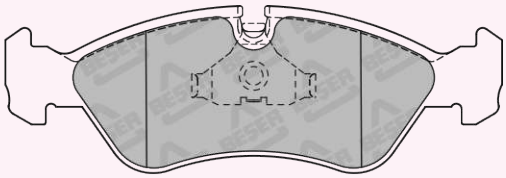

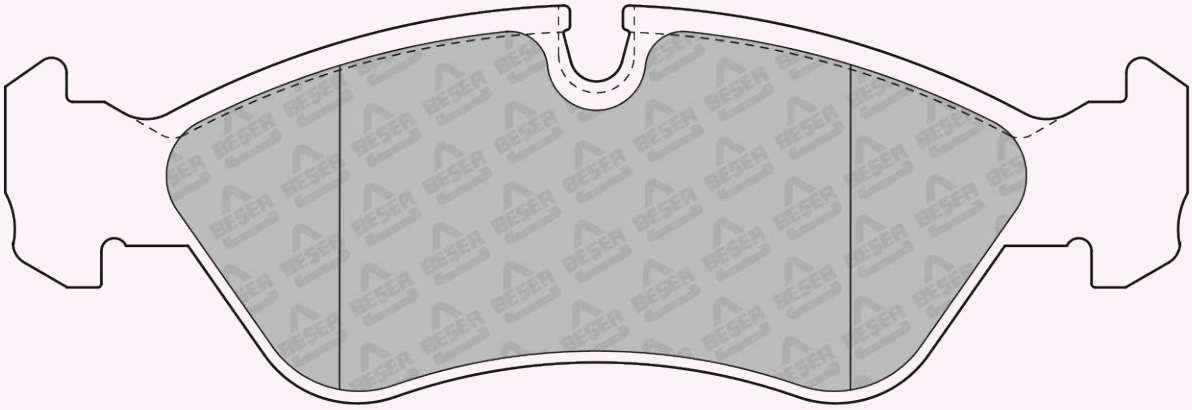

156,3 x 52,8

REFERENCE	T(mm)	REMARKS	MAKE	F/R	WVA No
3471	16	4 PADS PLAIN & 2 SLOT	ASTON MARTIN MERCEDES BENZ	F	20027

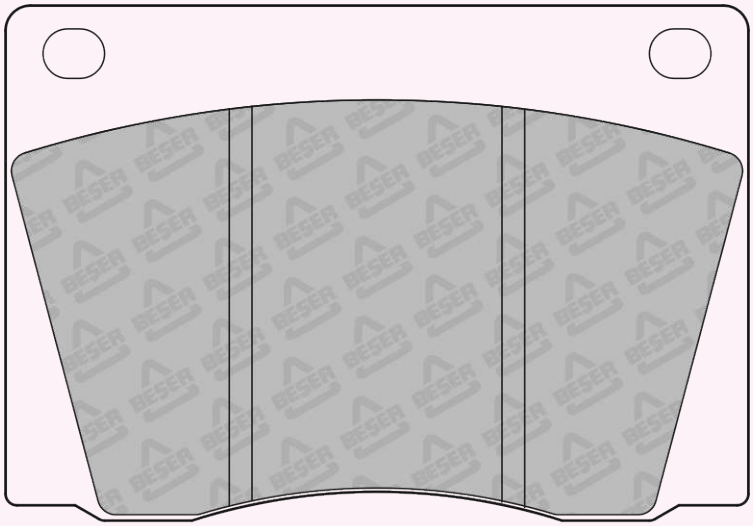

98,2 x 68,1

REFERENCE	T(mm)	REMARKS	MAKE	F/R	WVA No
3472	15	4 PADS WITH WEAR SENSOR	TOYOTA	F	20870 21294

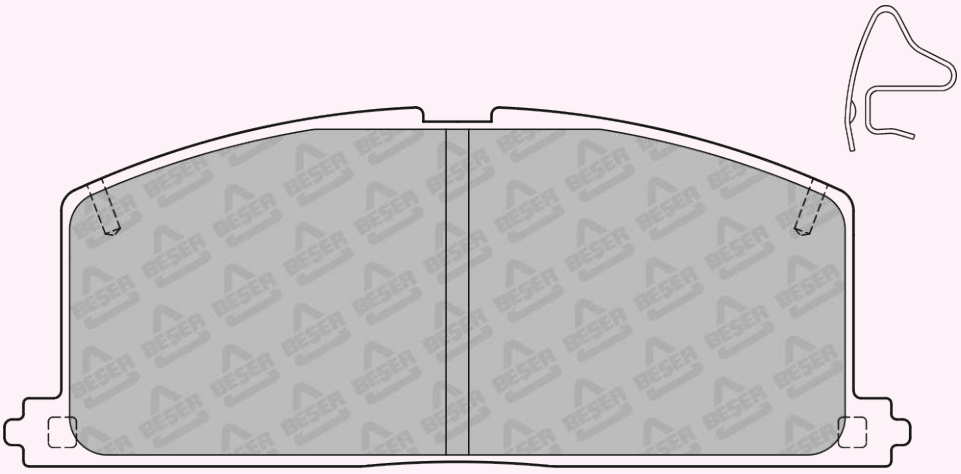

119,7 x 47,5

REFERENCE	T(mm)	REMARKS	MAKE	F/R	WVA No
3473	18	4 PADS WITH ANTINOISE COAT GLUED	FORD	F	21470

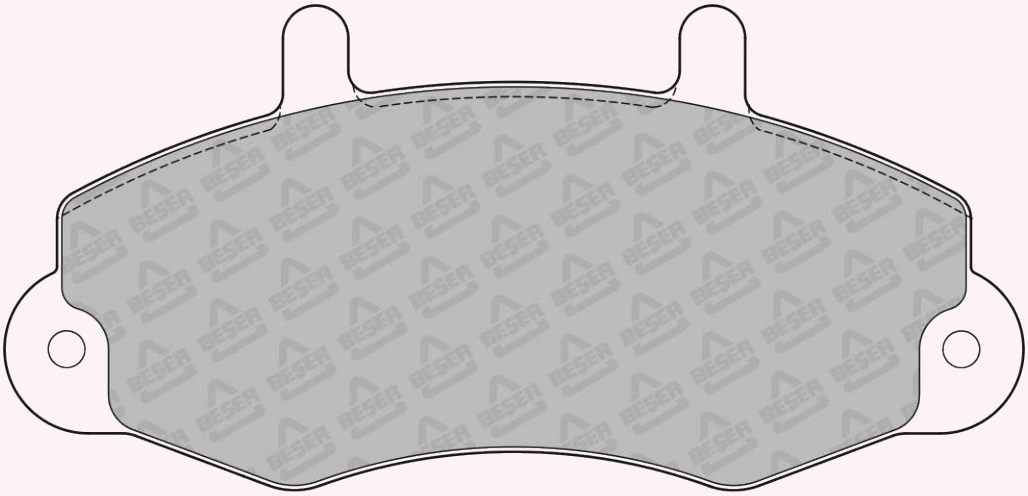

138,7 x 64

REFERENCE	T(mm)	REMARKS	MAKE	F/R	WVA No
3474	17,5	2 PADS WITH WEAR SENSOR (230mm)	CITROEN-DALLAS PEUGEOT-WULING	F	20989 21022 21023

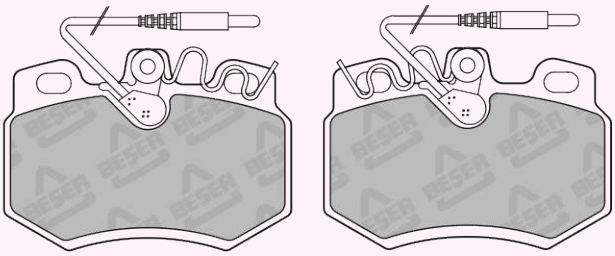

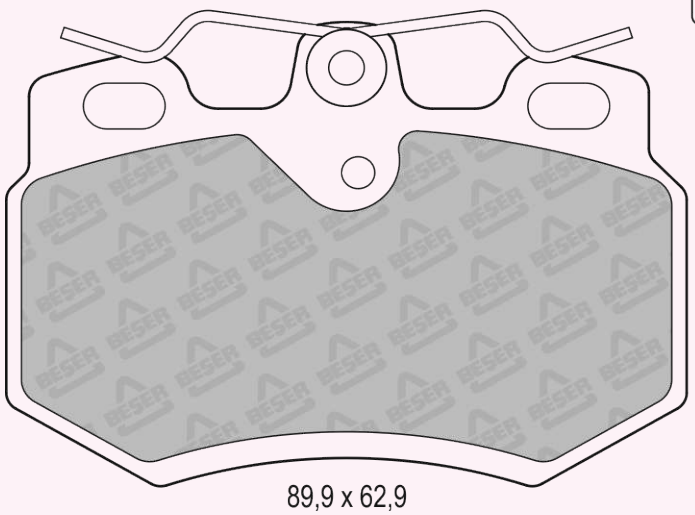

89,9 x 62,9

REFERENCE	T(mm)	REMARKS	MAKE	F/R	WVA No
3480	15	4 PADS PLAIN	FORD	F	20578

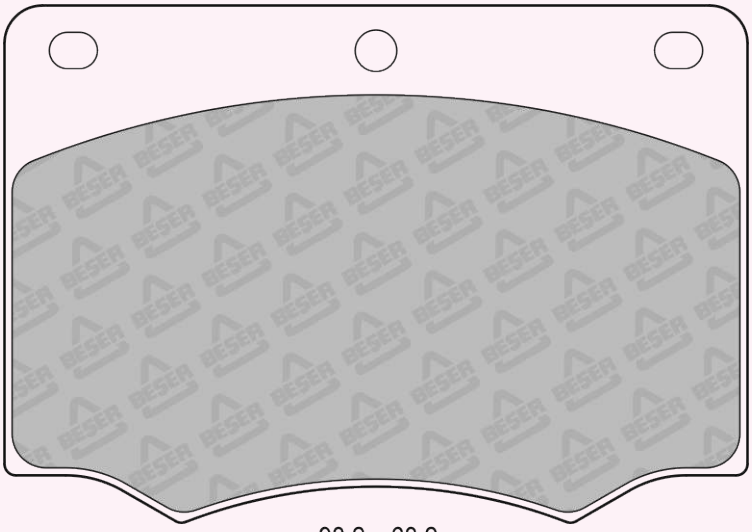

98,2 x 68,2

REFERENCE	T(mm)	REMARKS	MAKE	F/R	WVA No
3481	19,3	2 PADS RIGHT & 2 PADS LEFT	AUSTIN - WESTERN - ROVER	F	20171 20172

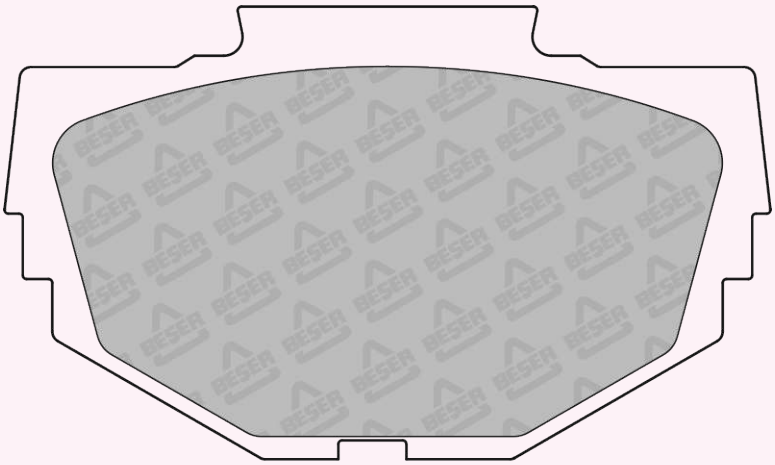

101,2 x 59,8



REFERENCE	T(mm)	REMARKS	MAKE	F/R	WVA No
3482	18,5	4 PADS PLAIN	OPEL - RENAULT VAUXHALL	F	20926 20928 20929

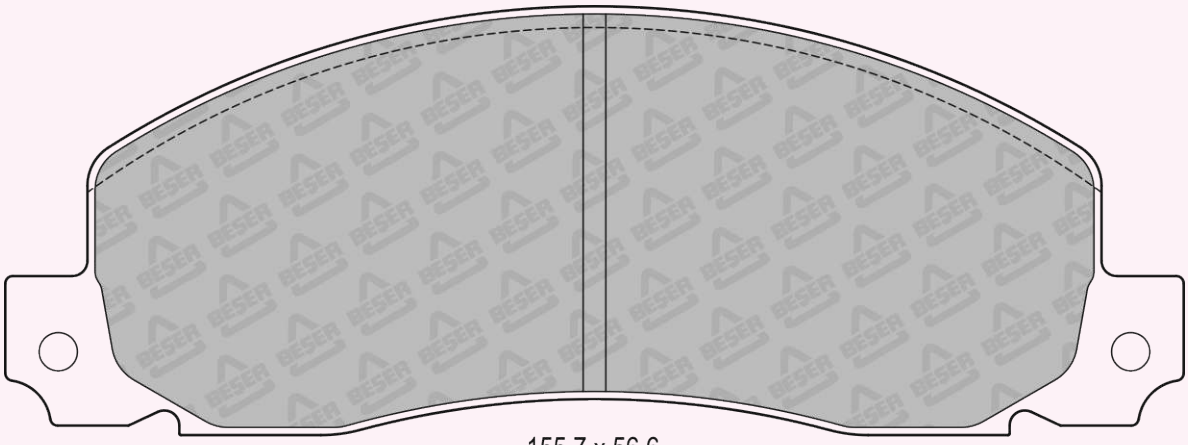

155,7 x 56,6

REFERENCE	T(mm)	REMARKS	MAKE	F/R	WVA No
3483	18	4 PADS PLAIN	AUDI - VW	F	20228

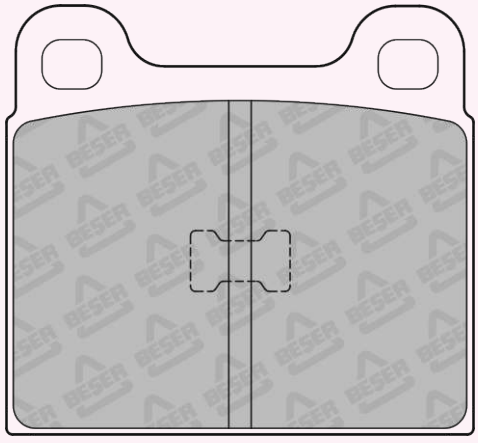

61,6 x 56,5

REFERENCE	T(mm)	REMARKS	MAKE	F/R	WVA No
3484	15	2 PADS WITH WEAR SENSOR (264mm)	FORD-HOLDEN HYUNDAI-LOTUS	F	20491 20793

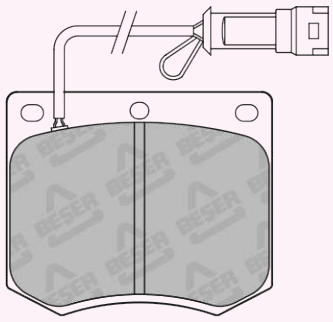

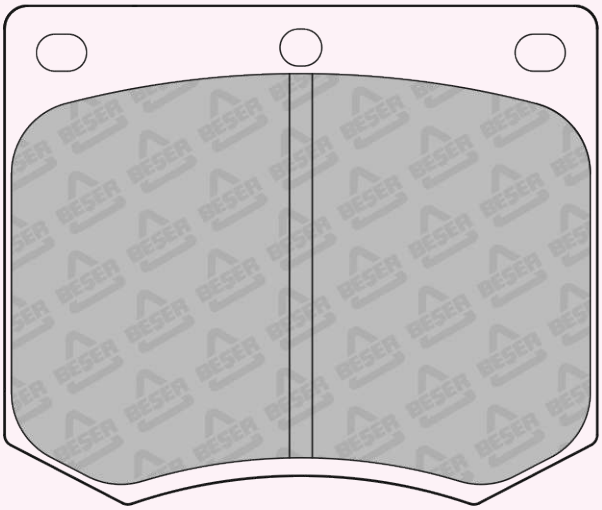

78,3 x 65,9

REFERENCE	T(mm)	REMARKS	MAKE	F/R	WVA No
3485	17,3	2 PAD WITH WEAR SENSOR (150mm)	LANCIA-AUTO BIANCHI FIAT	F	20073

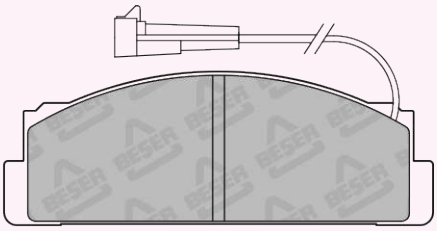

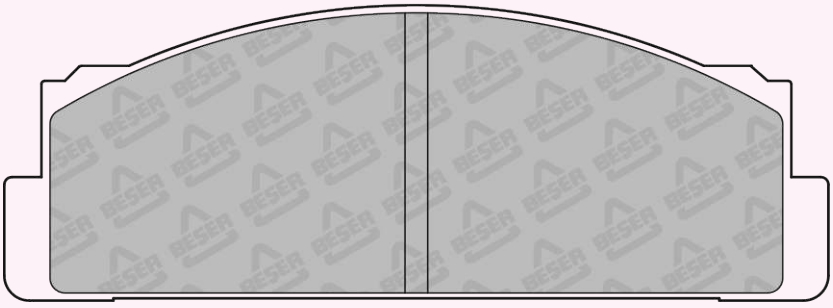

108,8 x 39

REFERENCE	T(mm)	REMARKS	MAKE	F/R	WVA No
3486	15,3	2 PADS INNER & 2 PADS OUTER	SEAT-VW	F	20887 20888

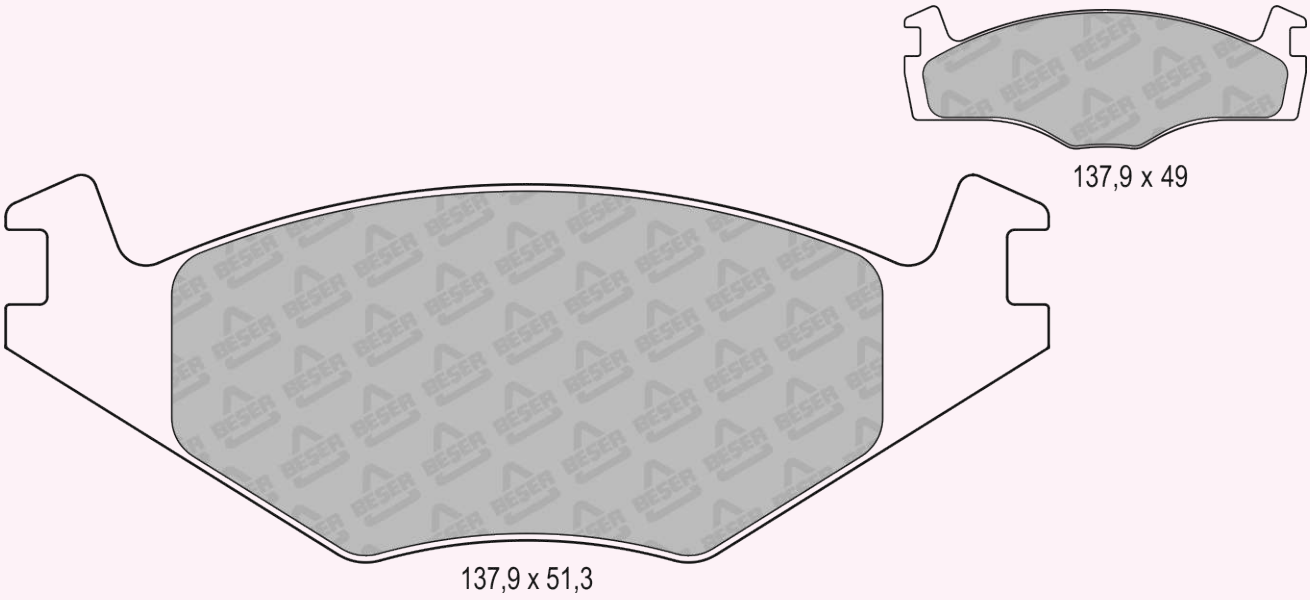

REFERENCE	T(mm)	REMARKS	MAKE	F/R	WVA No
3486/1	15,3	2 PADS INNER & 2 PADS OUTER	SEAT-VW	F	20887 20888

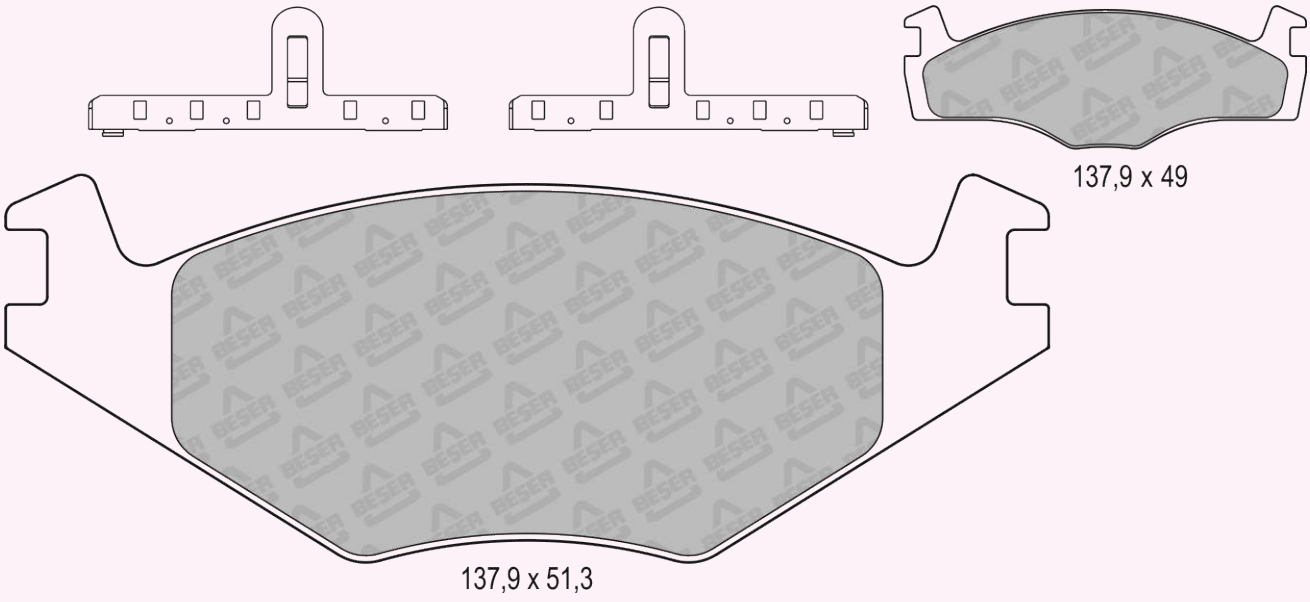

REFERENCE	T(mm)	REMARKS	MAKE	F/R	WVA No
3487	18	4 PADS WITH WEAR SENSOR (285mm) & (368mm)	CITROEN - DALLAS - PEUGEOT RENAULT - TALBOT	F	20905 20906

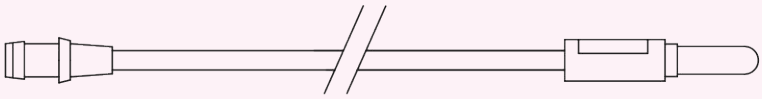

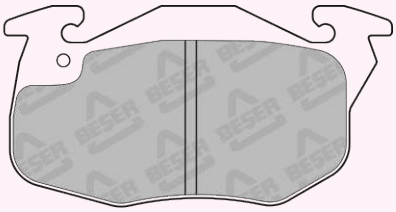

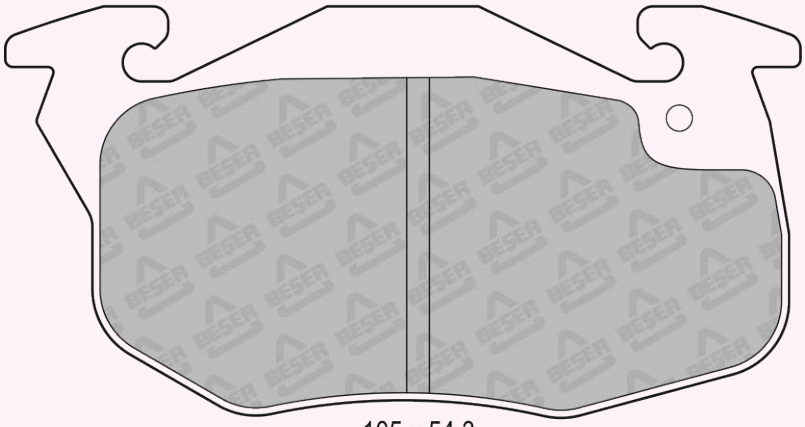

105 x 54,3

REFERENCE	T(mm)	REMARKS	MAKE	F/R	WVA No
3488	18	4 PADS WITH WEAR SENSOR (110mm) & (245mm)	PEUGEOT - RENAULT	F	21061

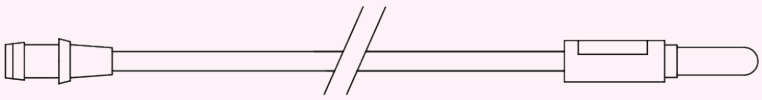

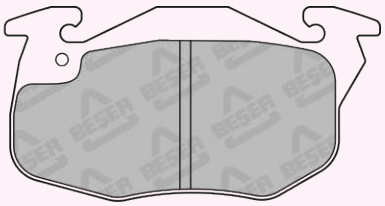

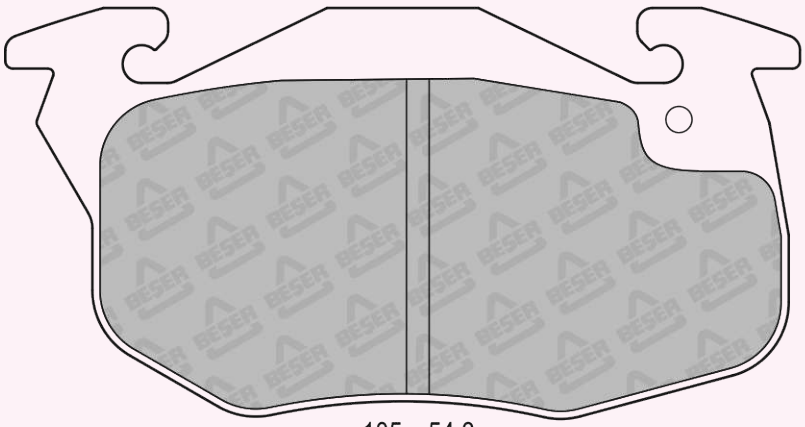

105 x 54,3

REFERENCE	T(mm)	REMARKS	MAKE	F/R	WVA No
3489	18	4 PADS WITH WEAR SENSOR (170mm) & (285mm)	PEUGEOT	F	21414

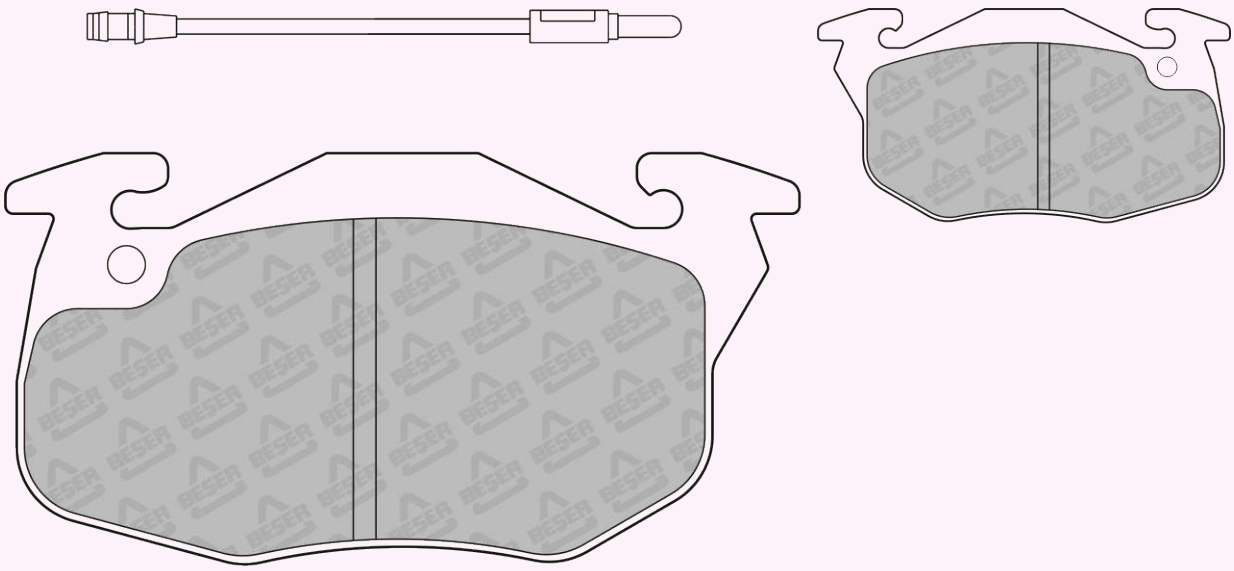

105 x 54,3

REFERENCE	T(mm)	REMARKS	MAKE	F/R	WVA No
3490	15	4 PADS PLAIN	AUDI-VOLVO	F	20574

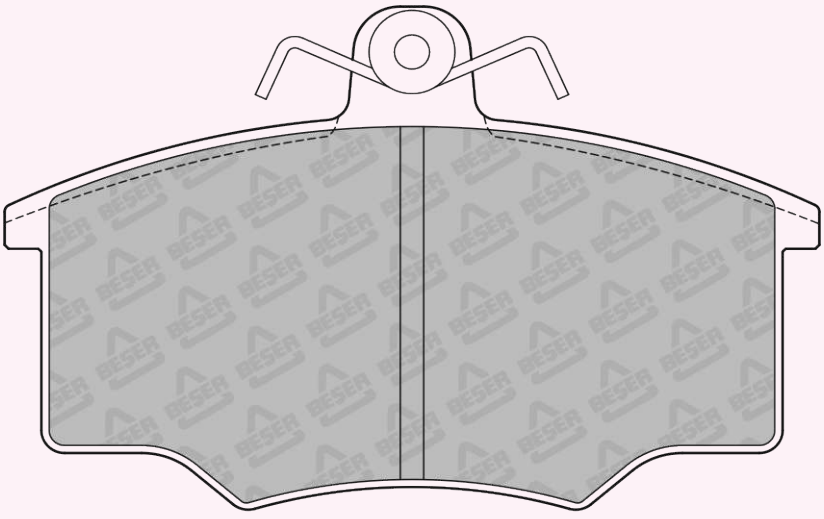

103,8 x 66,5

REFERENCE	T(mm)	REMARKS	MAKE	F/R	WVA No
3491	17	2 PADS WITH WEAR SENSOR (265mm)	FIAT - LANCIA YUGO - ZASTAVA	F	21100 21101 21533

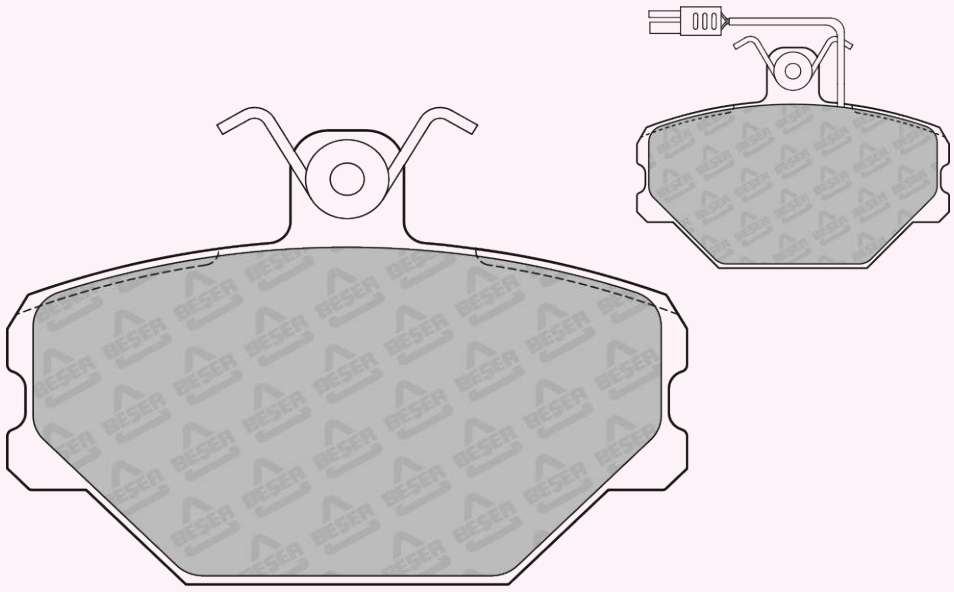

89,8 x 63,4

REFERENCE	T(mm)	REMARKS	MAKE	F/R	WVA No
3492	17,7	2 PADS WITH WEAR SENSOR 2 PADS WITH LUG (100mm)	ALPINE - CITROEN	F	20635 20636 20859

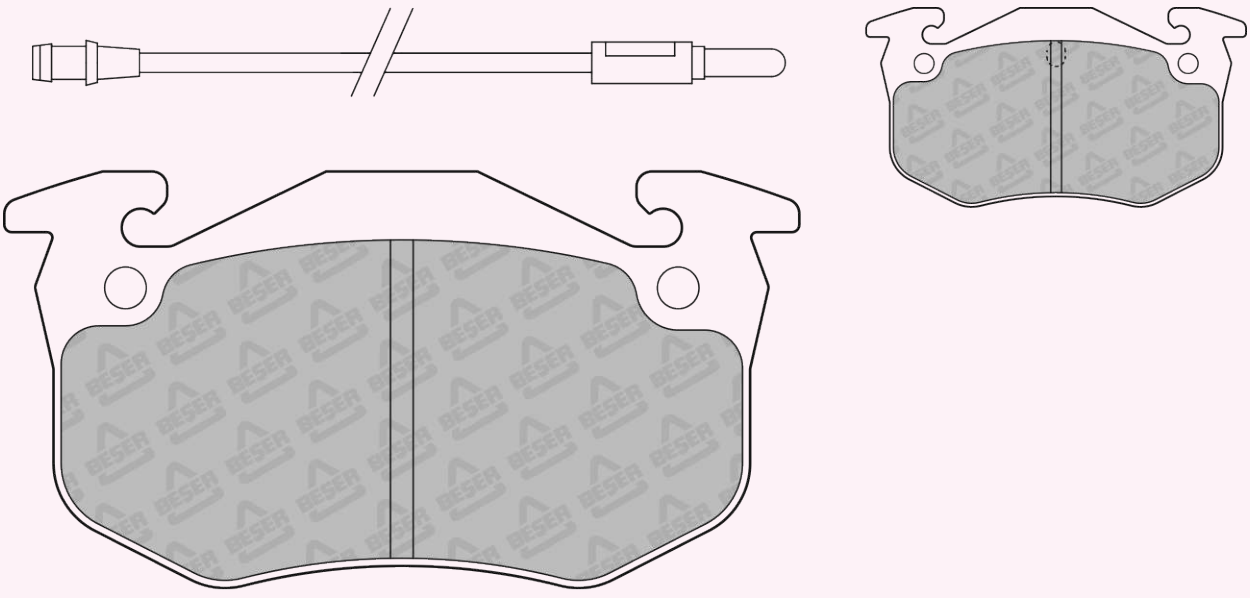

105 x 55

REFERENCE	T(mm)	REMARKS	MAKE	F/R	WVA No
3493	17,7	4 PADS WITH WEAR SENSOR (130mm) & (245mm)	ALPINE - CITROEN	F	20635 20636 20859 20860

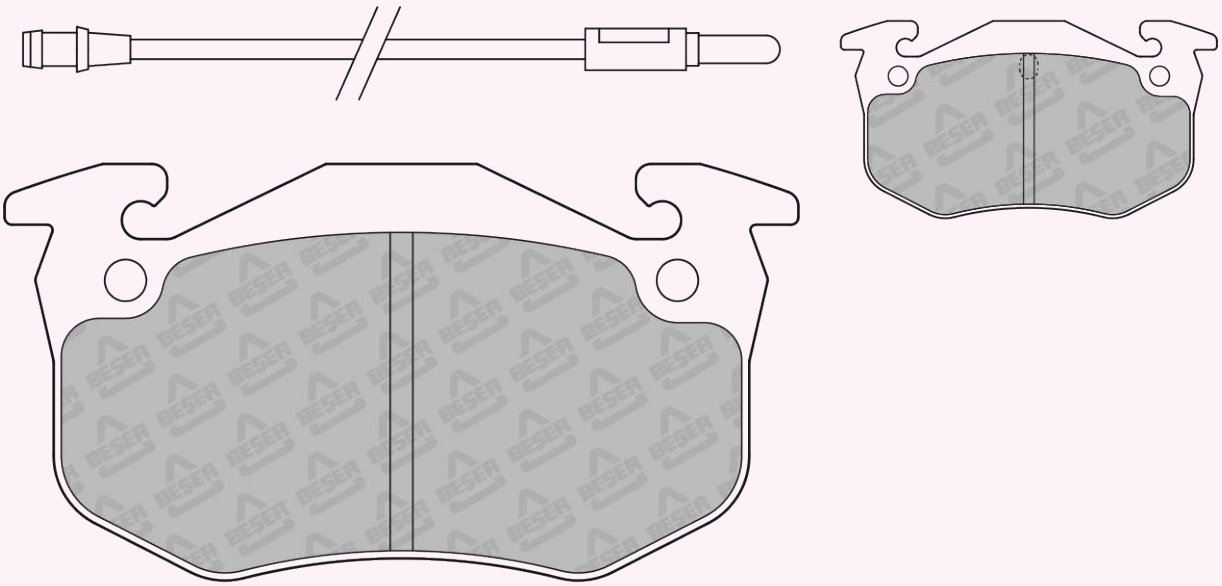

105 x 55

REFERENCE	T(mm)	REMARKS	MAKE	F/R	WVA No
3494	11	2 PADS WITH LUG-2 PADS W/O LUG 2 PADS WITH WEAR SENSOR (100mm)	ALPINE - CITROEN	F	20635

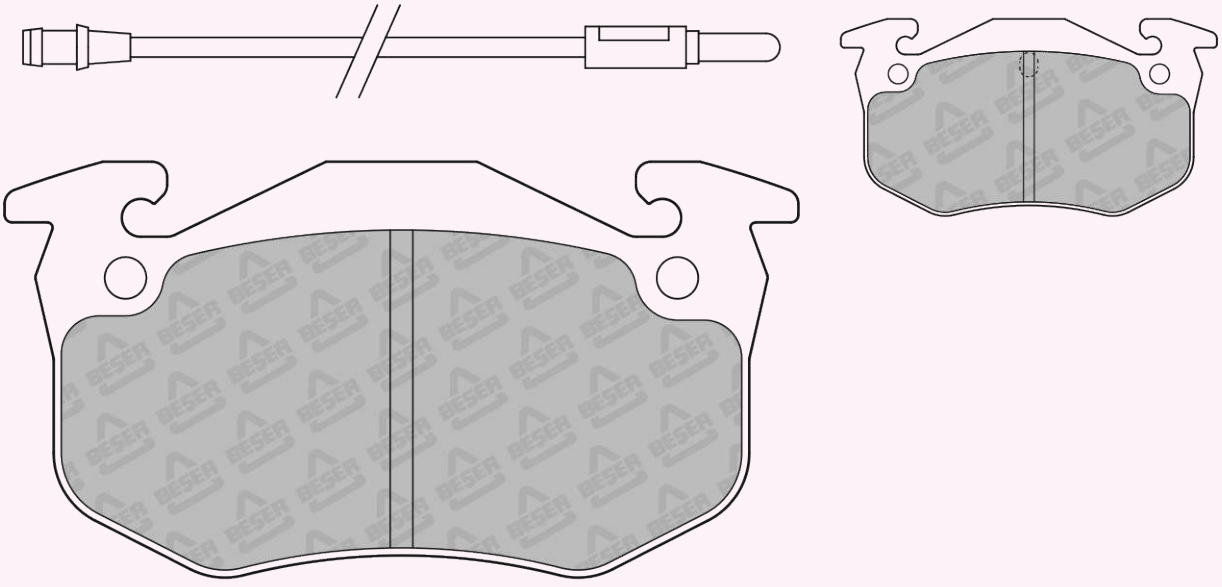

105 x 55

REFERENCE	T(mm)	REMARKS	MAKE	F/R	WVA No
3495	15	2 PADS WITH WEAR SENSOR (200mm)	RENAULT	F	20634 21096 21097

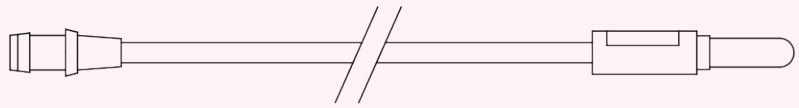

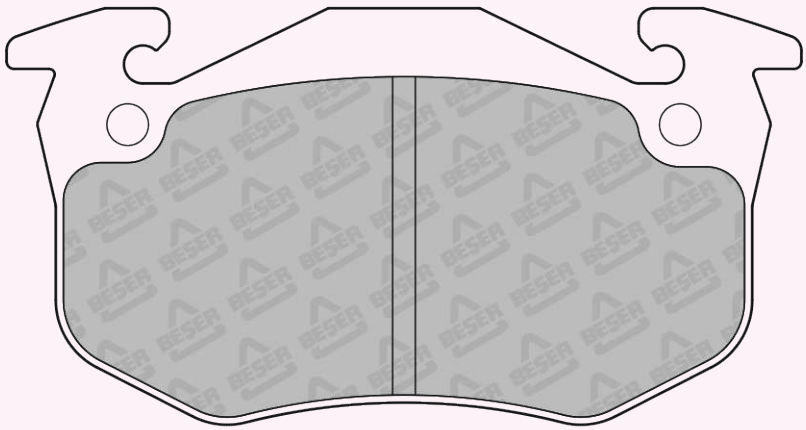

105 x 55

REFERENCE	T(mm)	REMARKS	MAKE	F/R	WVA No
3496	11	4 PADS W/O SENSOR 2 PADS WITH LUG	CITROEN-PEUGEOT RENAULT	R	20973 20974

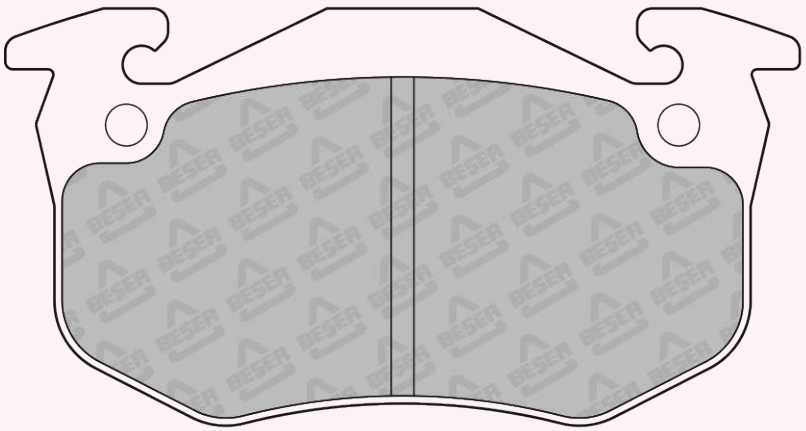

105 x 55

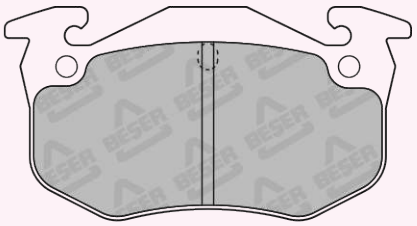

105 x 55
(NOT SCALE)

REFERENCE	T(mm)	REMARKS	MAKE	F/R	WVA No
3496/1	11	4 PADS PLAIN	CITROEN - PEUGEOT RENAULT	R	20973 20974

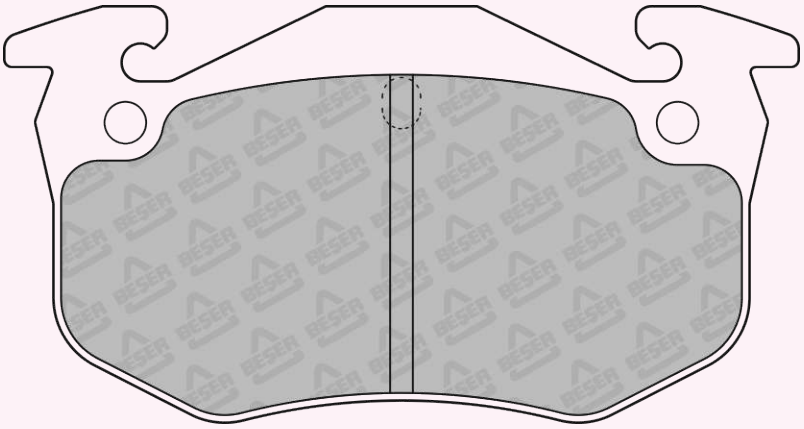

105 x 55

REFERENCE	T(mm)	REMARKS	MAKE	F/R	WVA No
3499	14,5	4 PADS PLAIN	FORD - KIA MAZDA	F	20002

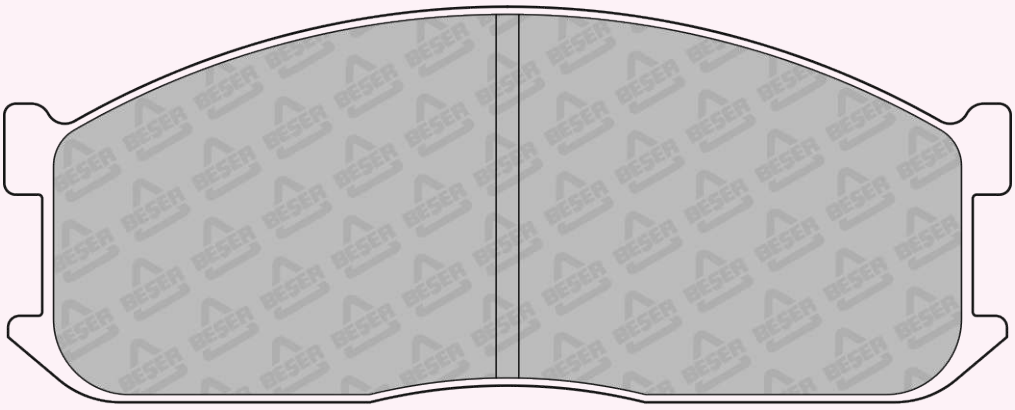

133 x 52,2

REFERENCE	T(mm)	REMARKS	MAKE	F/R	WVA No
3501	15	4 PADS PLAIN	HONDA	F	20959

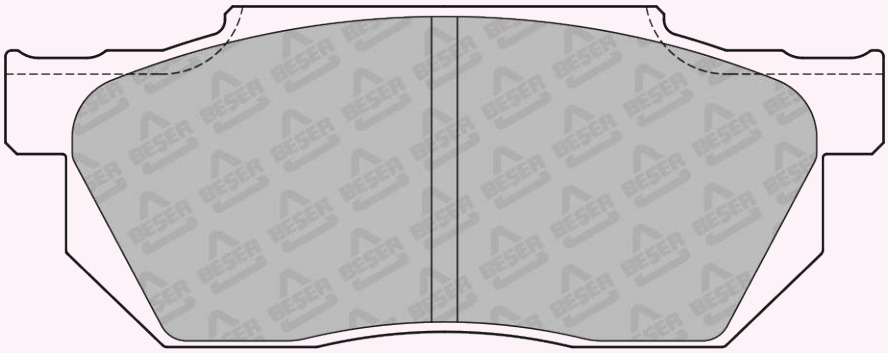

116 x 45

REFERENCE	T(mm)	REMARKS	MAKE	F/R	WVA No
3502	15	2 PADS WITH WEAR SENSOR	HYUNDAI-INOKOM	F	21012 21773 21774

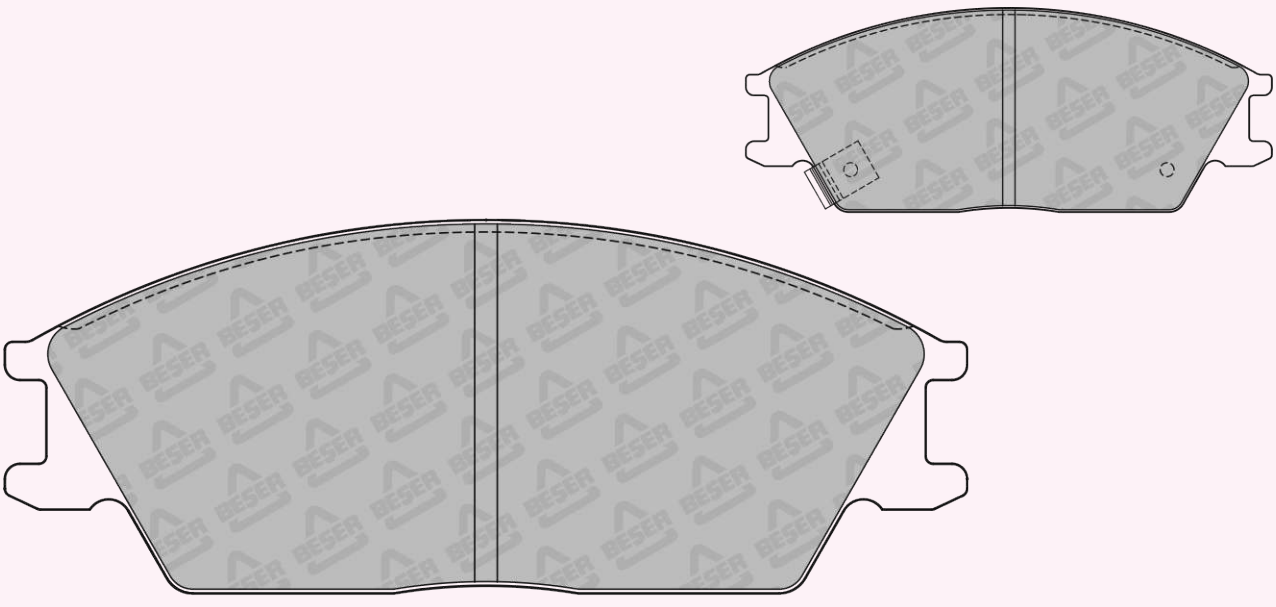

127,3 x 49

REFERENCE	T(mm)	REMARKS	MAKE	F/R	WVA No
3503	18	2 PADS WITH WEAR SENSOR (220mm)	ALPINE - DACIA - LADA PEUGEOT - RENAULT	F	21404 21463 21472 21473

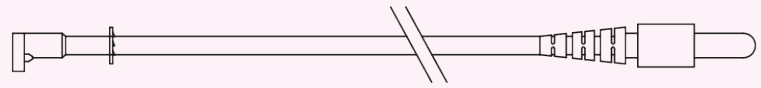

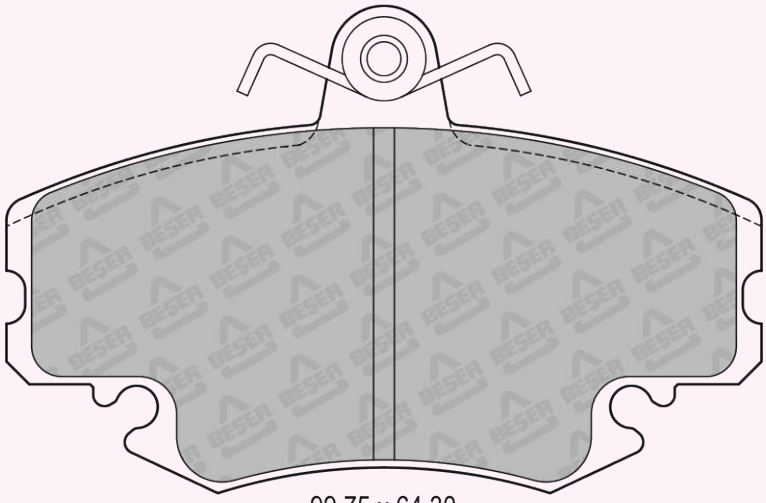

99,75 x 64,30

REFERENCE	T(mm)	REMARKS	MAKE	F/R	WVA No
3503/1	18	4 PADS PLAIN	PEUGEOT-LADA-RENAULT ALPINE-DACIA	F	21463

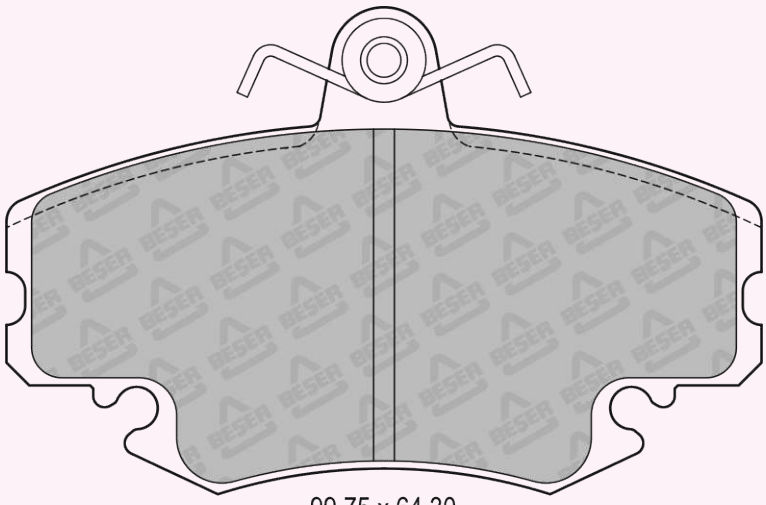

99,75 x 64,30

REFERENCE	T(mm)	REMARKS	MAKE	F/R	WVA No
3504	15	4 PADS PLAIN	HONDA-HYUNDAI	F	21012

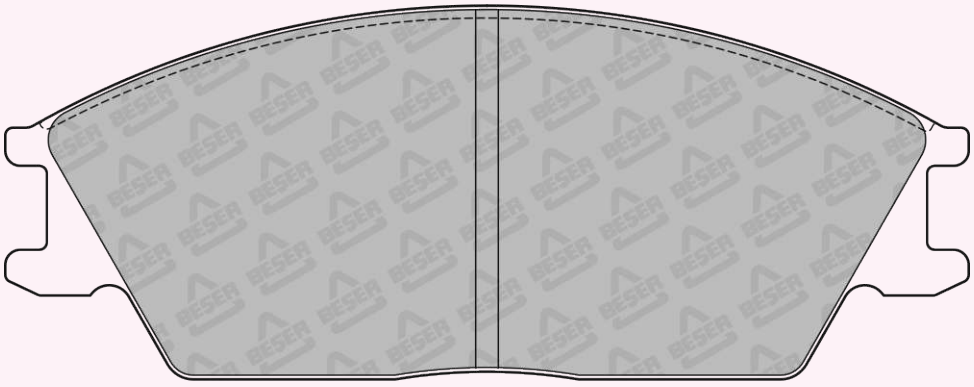

127,3 x 49

REFERENCE	T(mm)	REMARKS	MAKE	F/R	WVA No
3505	17,5	2 PADS PISTON CLIP	CHEVROLET - DAEWOO - FSO HOLDEN OPEL - VAUXHALL - ZAZ	F	21190 21201

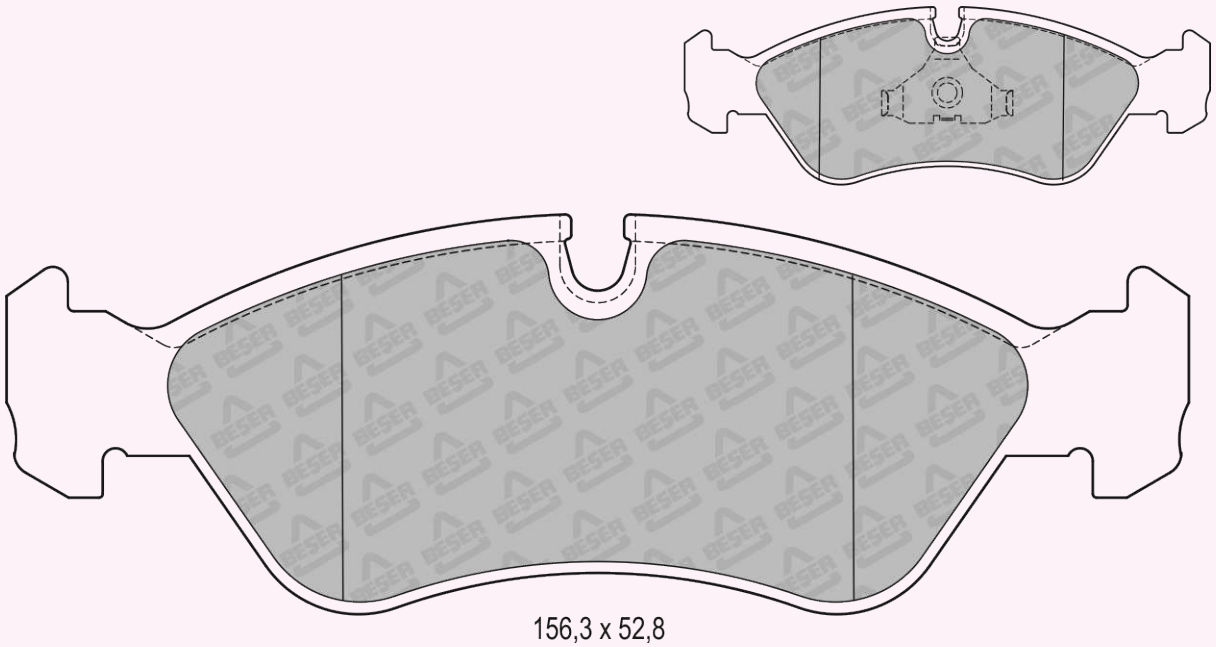

156,3 x 52,8

REFERENCE	T(mm)	REMARKS	MAKE	F/R	WVA No
3506	19,5	2 PADS PISTON CLIP	FORD - SEAT VW	F	21848 21849

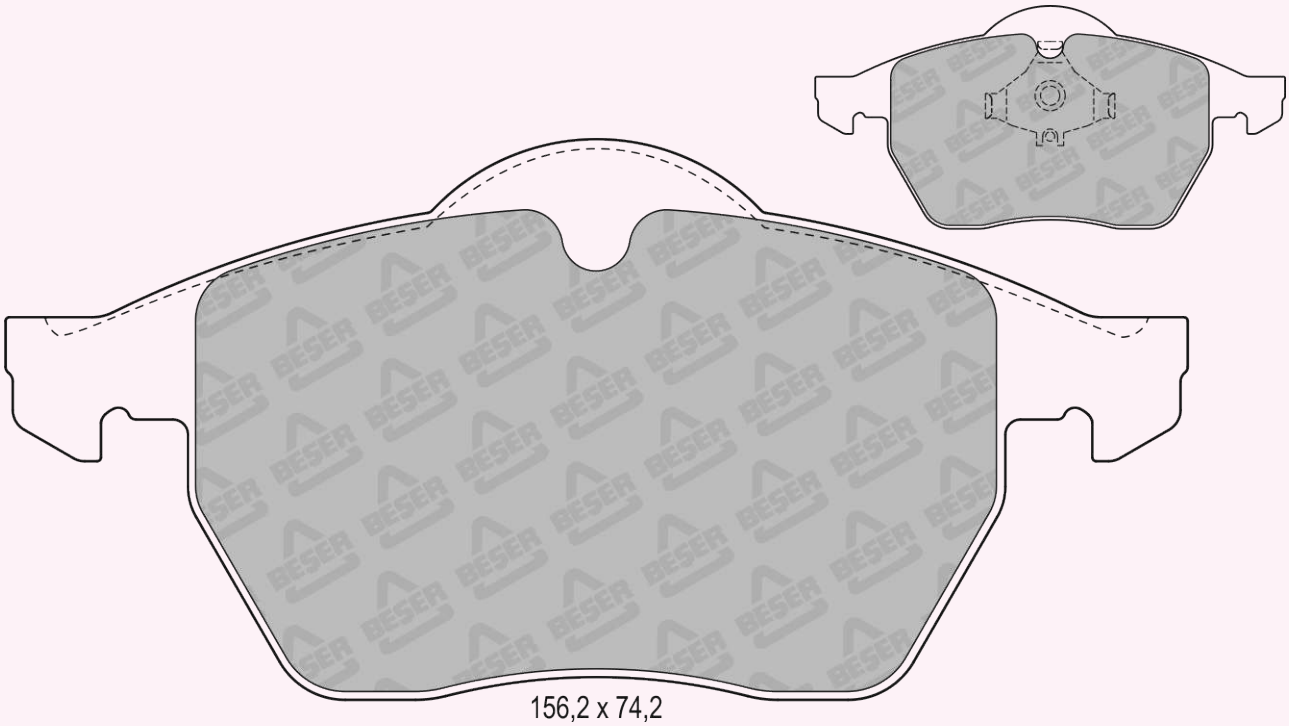

REFERENCE	T(mm)	REMARKS	MAKE	F/R	WVA No
3507	18	2 PADS WITH WEAR SENSOR	HYUNDAI	F	23081 23082 23083

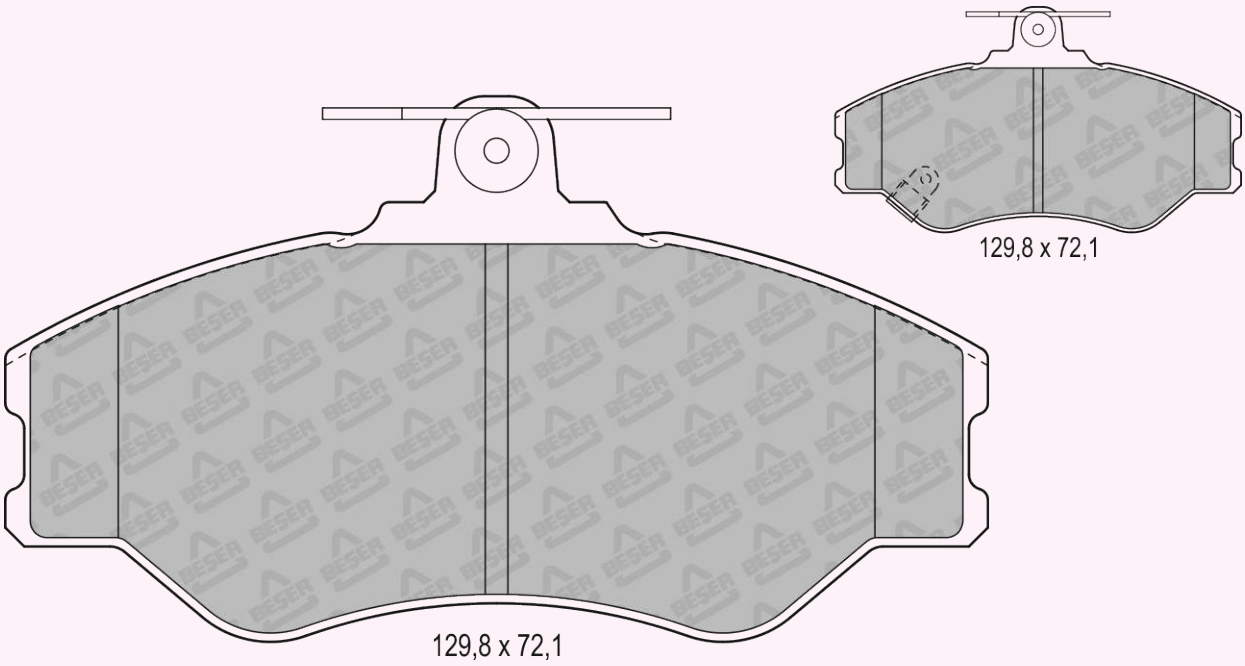

REFERENCE	T(mm)	REMARKS	MAKE	F/R	WVA No
3509	15	4 PADS PLAIN	BEDFORD - FORD HOLDEN - HONDA MARUTI - SUZUKI - VAUXHALL	F	20731

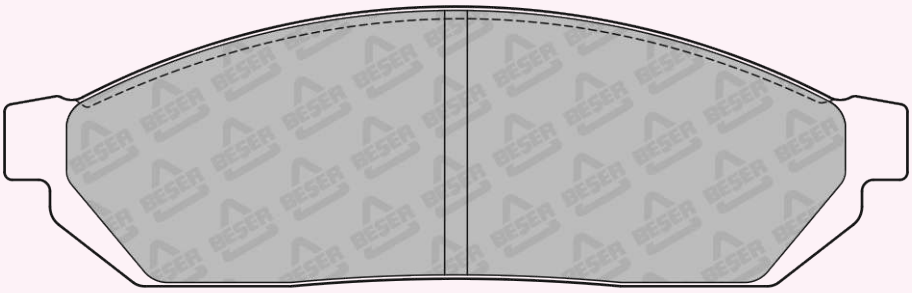

119,3 x 36,8

REFERENCE	T(mm)	REMARKS	MAKE	F/R	WVA No
3510	15,4	4 PADS PLAIN	DAEWOO	F	21057

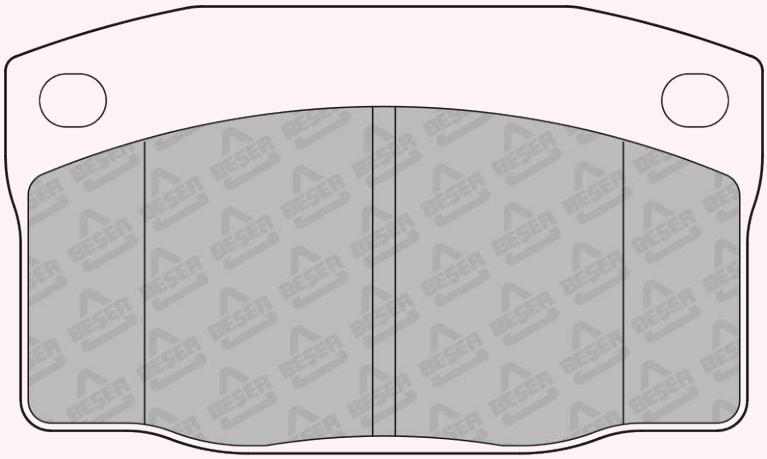

100 x 59

REFERENCE	T(mm)	REMARKS	MAKE	F/R	WVA No
3511	14	4 PADS PLAIN	DAEWOO - SUZUKI	F	23061

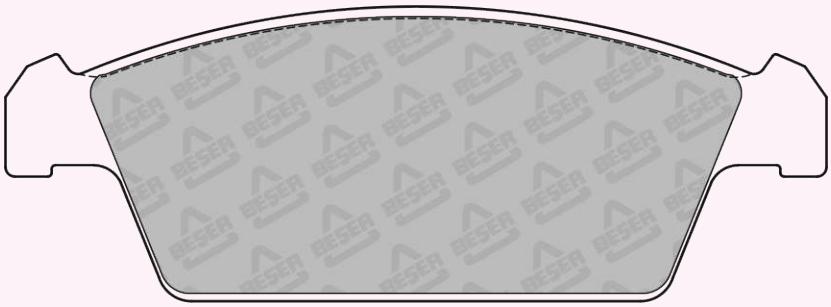

108,6 x 39

REFERENCE	T(mm)	REMARKS	MAKE	F/R	WVA No
3512	14,4	4 PADS PLAIN	LAND ROVER	R	23471

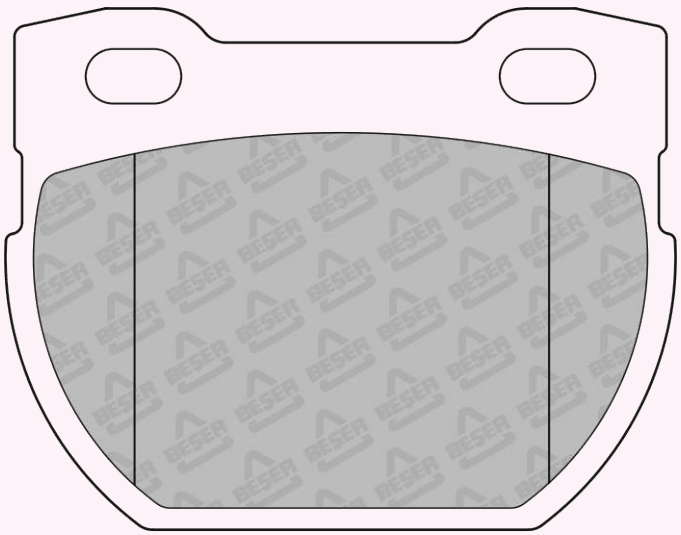

88,4 x 68,8

REFERENCE	T(mm)	REMARKS	MAKE	F/R	WVA No
3512/1	17,5	4 PADS PLAIN	LAND ROVER	R	23471

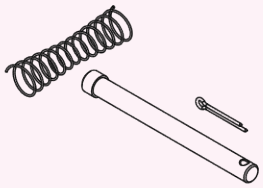

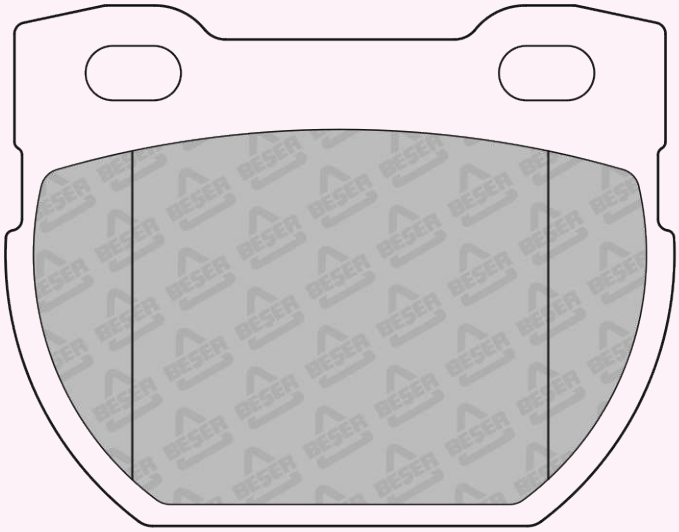

88,4 x 68,8

REFERENCE	T(mm)	REMARKS	MAKE	F/R	WVA No
3512/2	17,5	4 PADS PLAIN	LAND ROVER	R	23471

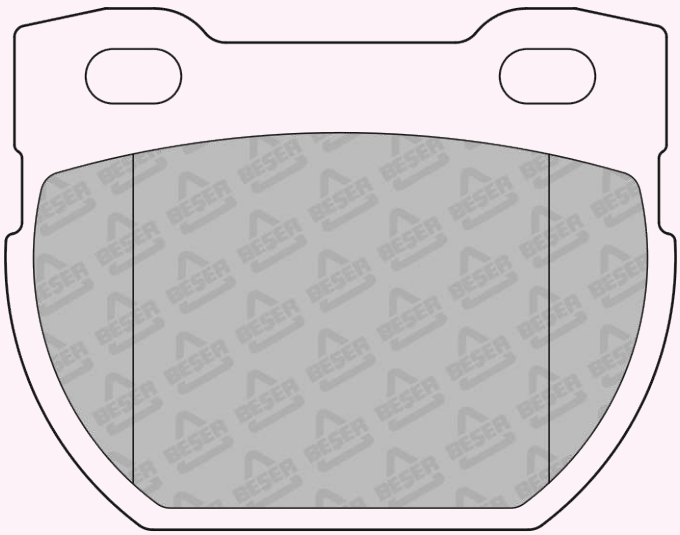

88,4 x 68,8

REFERENCE	T(mm)	REMARKS	MAKE	F/R	WVA No
3513	18	4 PADS PLAIN	MAHINDRA - MERCEDES BENZ OLCIT - PUCH - VW	F	20784 29784

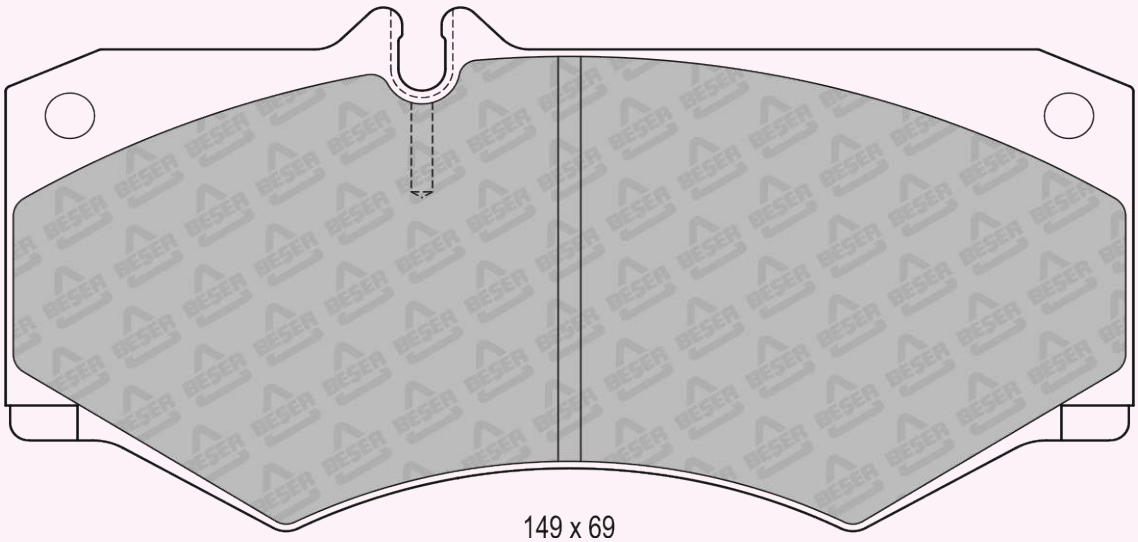

149 x 69

REFERENCE	T(mm)	REMARKS	MAKE	F/R	WVA No
3514	17,5	4 PADS PLAIN	MERCEDES BENZ	F	20341

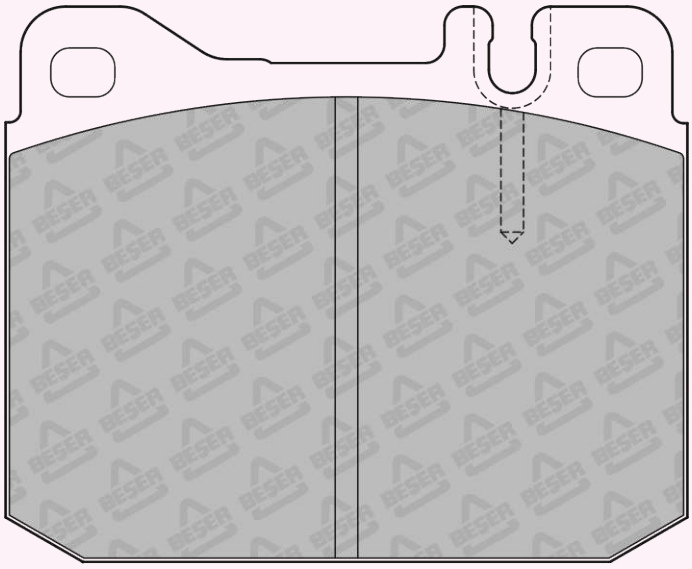

90 x 73,4

REFERENCE	T(mm)	REMARKS	MAKE	F/R	WVA No
3515	15	4 PADS PLAIN	MERCEDES BENZ	F	20392 20581

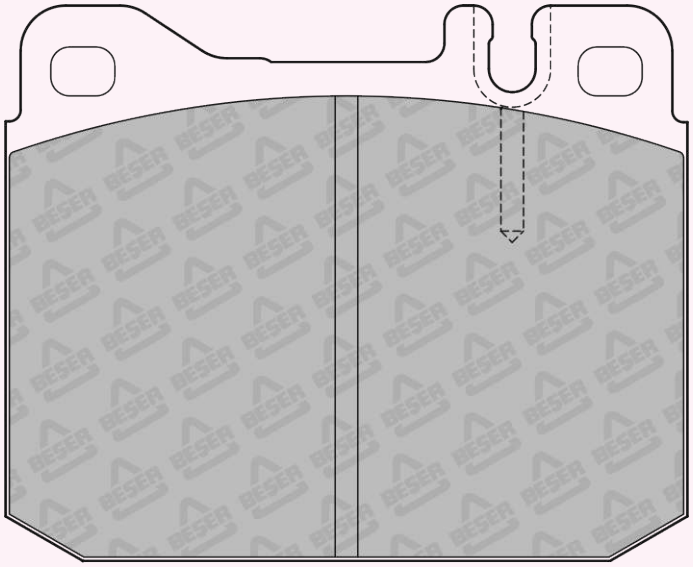

90 x 73,4

REFERENCE	T(mm)	REMARKS	MAKE	F/R	WVA No
3520	14,8	4 PADS PLAIN	LADA	F	---

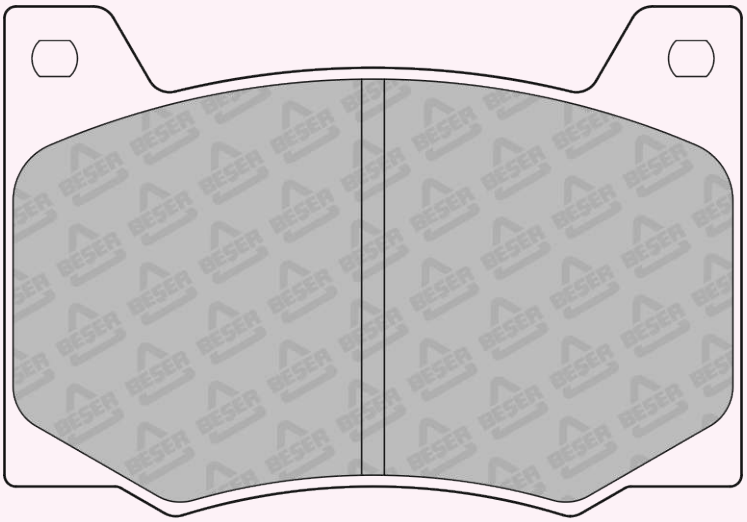

97,3 x 67,4

REFERENCE	T(mm)	REMARKS	MAKE	F/R	WVA No
3521	20	1 PAD WITH WEAR SENSOR (480mm)	MERCEDES BENZ	F,R	29764 29324

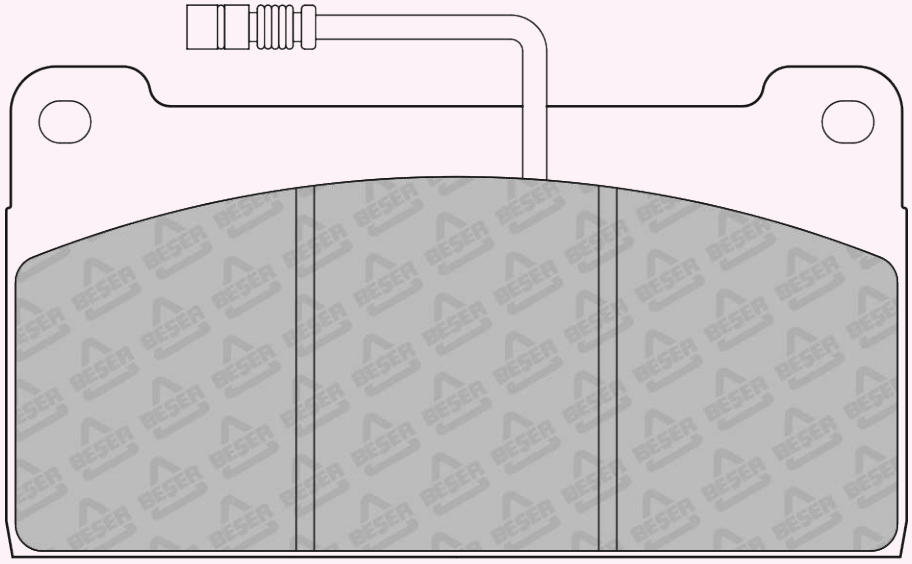

149,7 x 81,5
(NOT SCALE)

REFERENCE	T(mm)	REMARKS	MAKE	F/R	WVA No
3522	14,9	2 PADS WITH WEAR SENSOR	FORD - KIA - MAZDA	F	21654 21655 21656

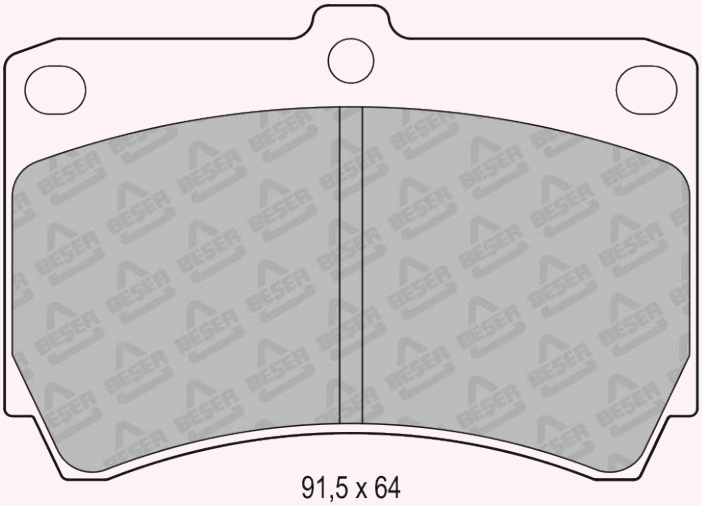

91,5 x 64

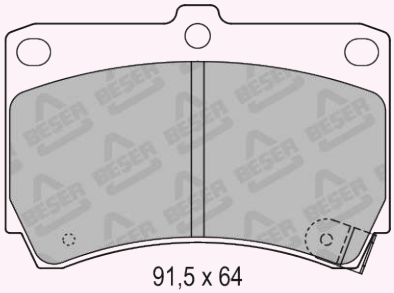

91,5 x 64
(NOT SCALE)

REFERENCE	T(mm)	REMARKS	MAKE	F/R	WVA No
3523	18,3	2 PADS WITH WEAR SENSOR (160 mm)	ALFA ROMEO - IVECO	F	21048 21049 29041

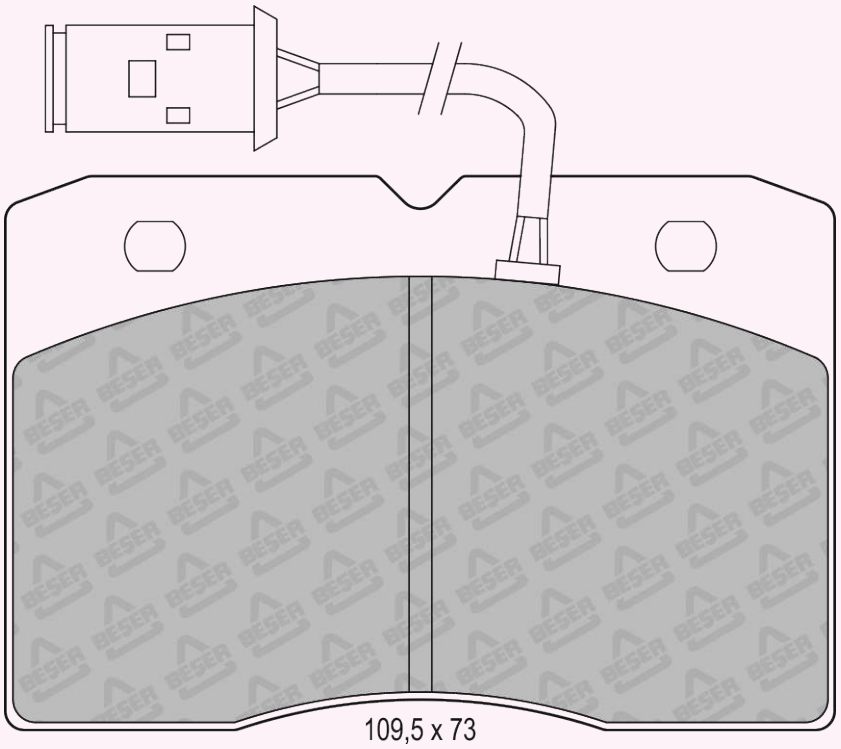

109,5 x 73

REFERENCE	T(mm)	REMARKS	MAKE	F/R	WVA No
3524	18,3	4 PADS PLAIN	ALFA ROMEO - IVECO	F	21048

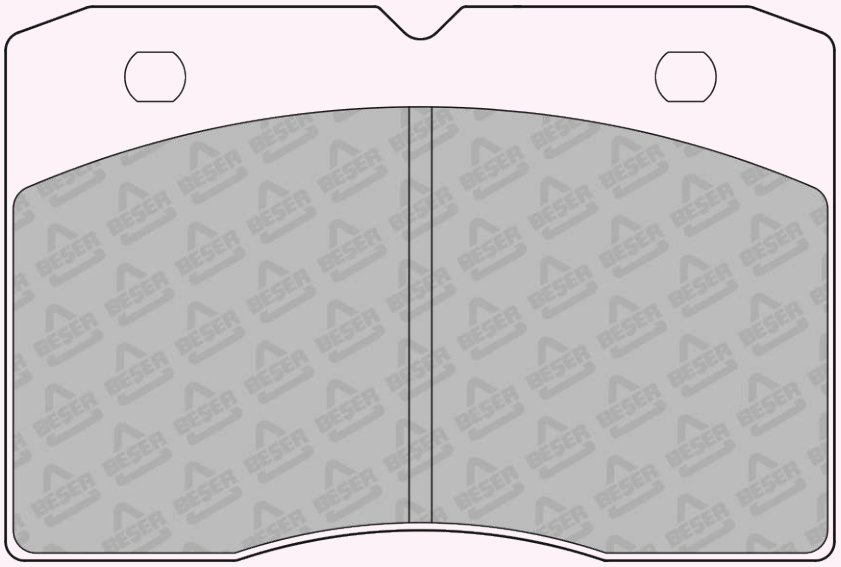

109,5 x 73

REFERENCE	T(mm)	REMARKS	MAKE	F/R	WVA No
3526	15,5	2 PADS WITH WEAR SENSOR (160 mm)	DAIMLER - JAGUAR - RENAULT	F	21110 20380

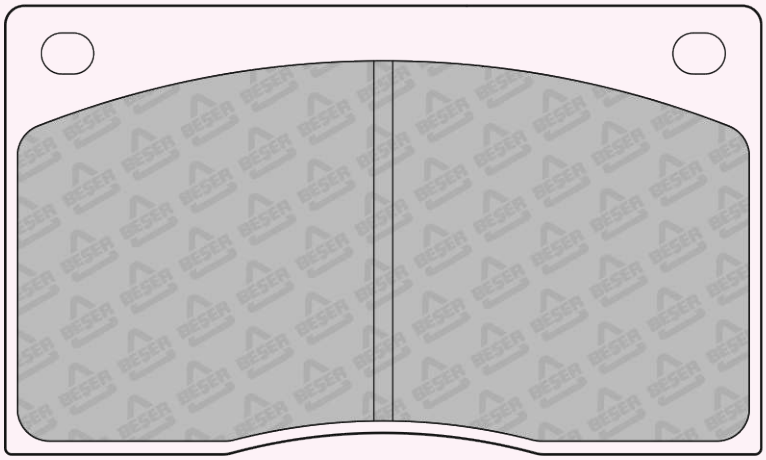

119,7 x 71
(NOT SCALE)

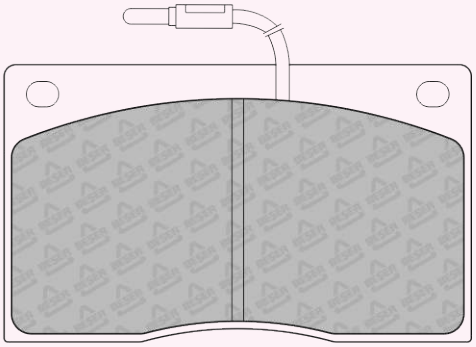

119,7 x 71
(NOT SCALE)

REFERENCE	T(mm)	REMARKS	MAKE	F/R	WVA No
3527	18,5	4 PADS PLAIN	RENAULT	F	20488 20489 20570 20571

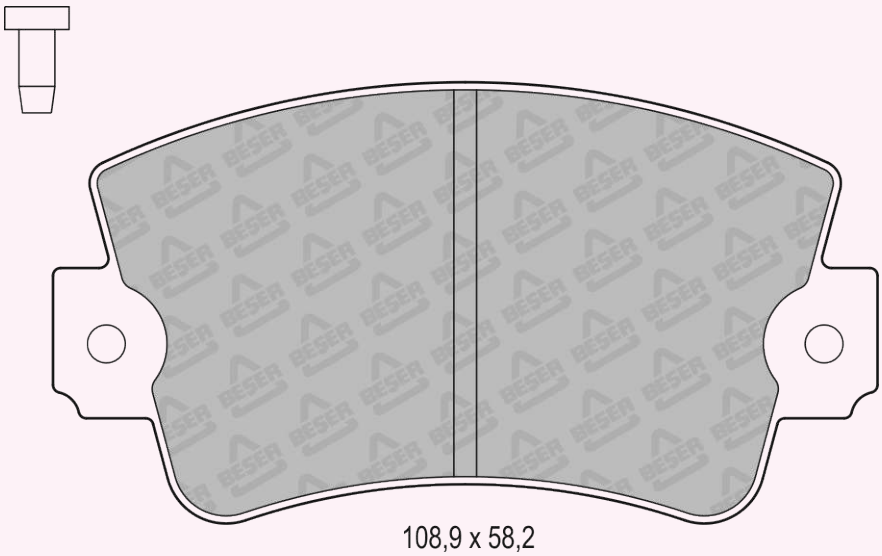

108,9 x 58,2

REFERENCE	T(mm)	REMARKS	MAKE	F/R	WVA No
3528	16,5	2 PADS WITH WEAR SENSOR (270 mm)	CITROEN - PEUGEOT	F	21430 21432

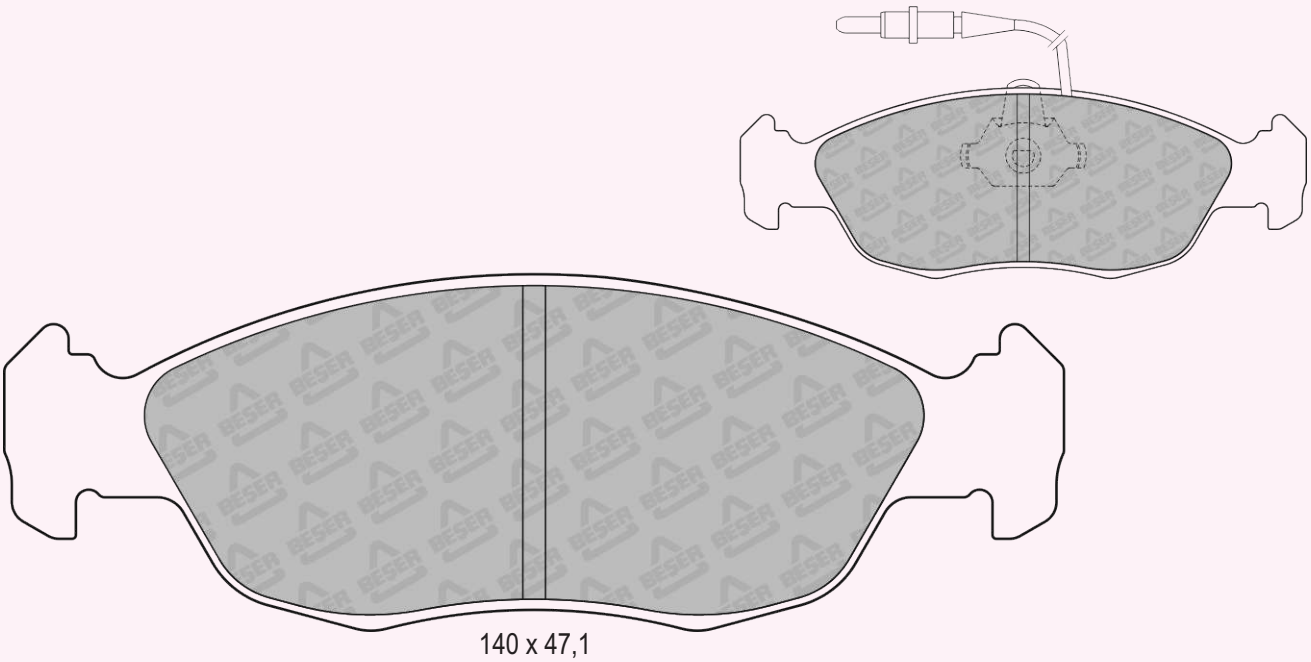

140 x 47,1
(NOT SCALE)

REFERENCE	T(mm)	REMARKS	MAKE	F/R	WVA No
3529	15	4 PADS PLAIN	AUDI - PEUGEOT - RENAULT SEAT - VW	R	20961 23554

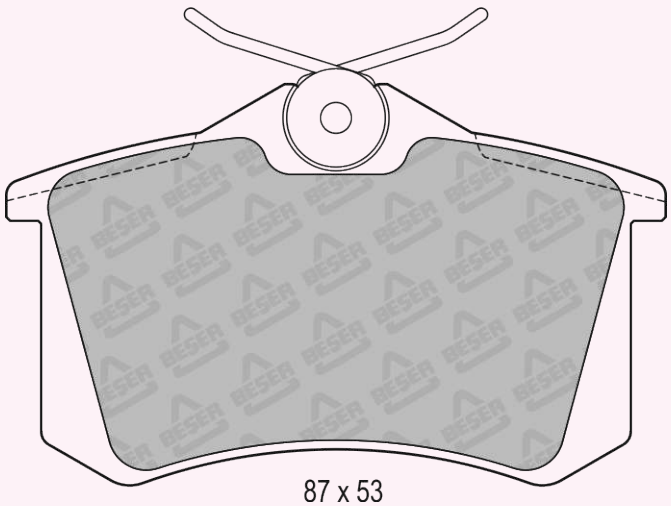

87 x 53

REFERENCE	T(mm)	REMARKS	MAKE	F/R	WVA No
3529/1	17	4 PADS WITH CHAMFERS	AUDI - CITROEN - DS FORD - HONGQI - PEUGEOT SEAT - SKODA - VW	R	20961 23554

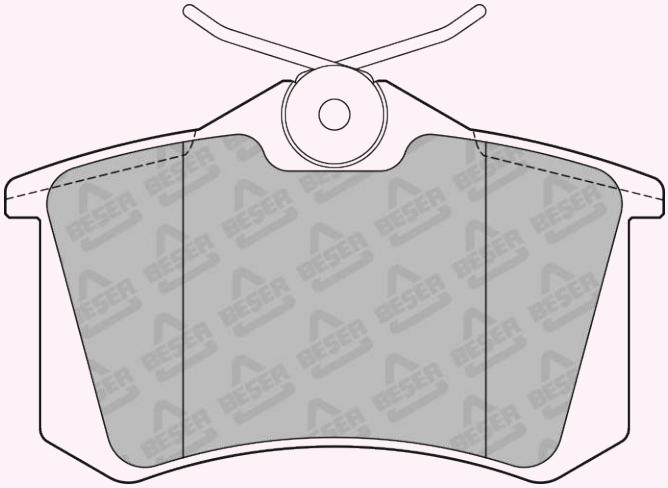

87 x 53

REFERENCE	T(mm)	REMARKS	MAKE	F/R	WVA No
3529/2	16	4 PADS WITH CHAMFERS	NISSAN-RENAULT	R	20960 20961 23554

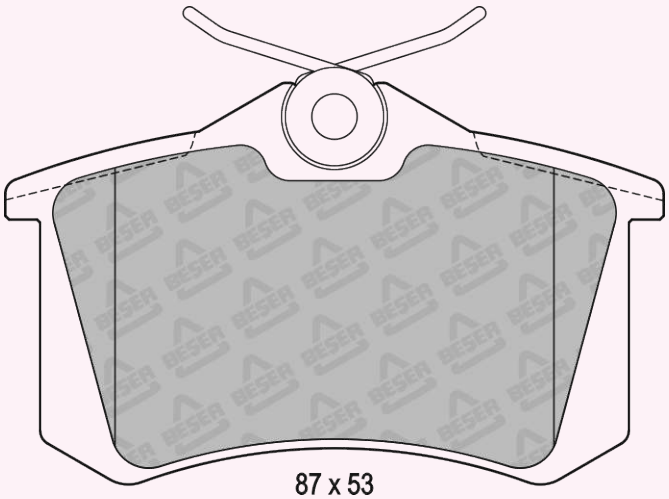

87 x 53

REFERENCE	T(mm)	REMARKS	MAKE	F/R	WVA No
3530	16,5	2 PADS PISTON CLIP	GM	F	---

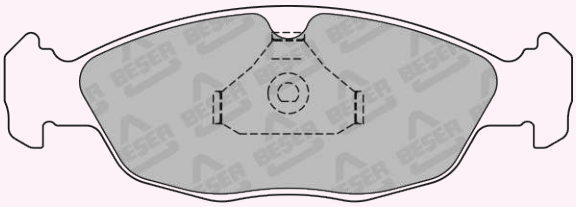

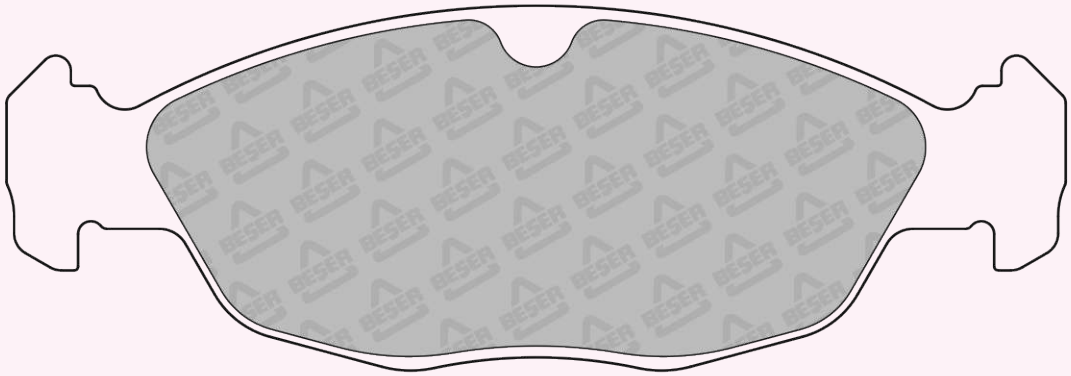

140 x 48,2

REFERENCE	T(mm)	REMARKS	MAKE	F/R	WVA No
3531	16	4 PADS PLAIN	AUDI - SEAT - VW	F	20168

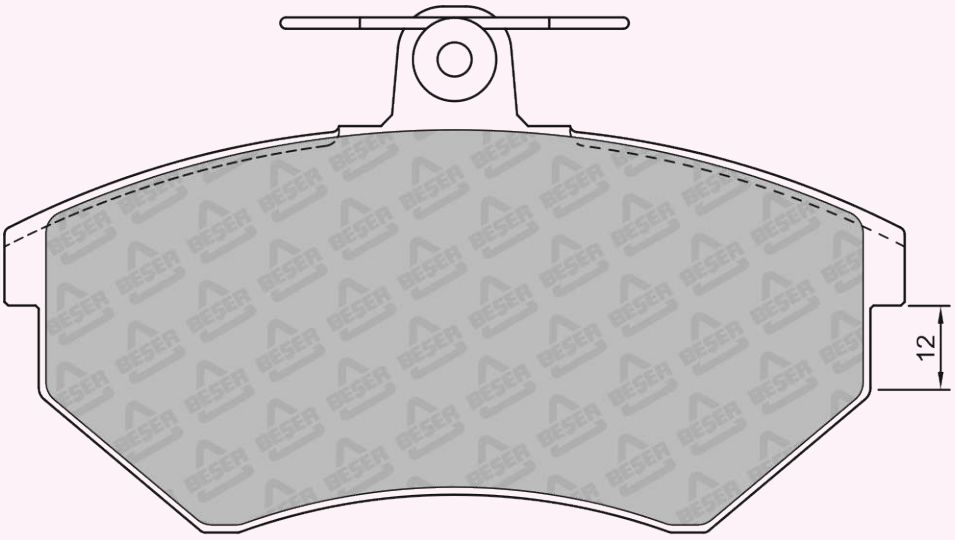

118,9 x 69,5

REFERENCE	T(mm)	REMARKS	MAKE	F/R	WVA No
3533	18,3	4 PADS PLAIN	VW	F	---

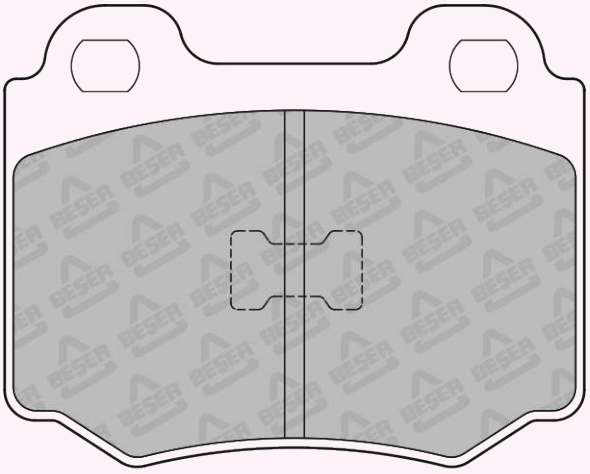

76,6 x 61

REFERENCE	T(mm)	REMARKS	MAKE	F/R	WVA No
3534	16,8	4 PADS PLAIN	FORD-OPEL	F	---

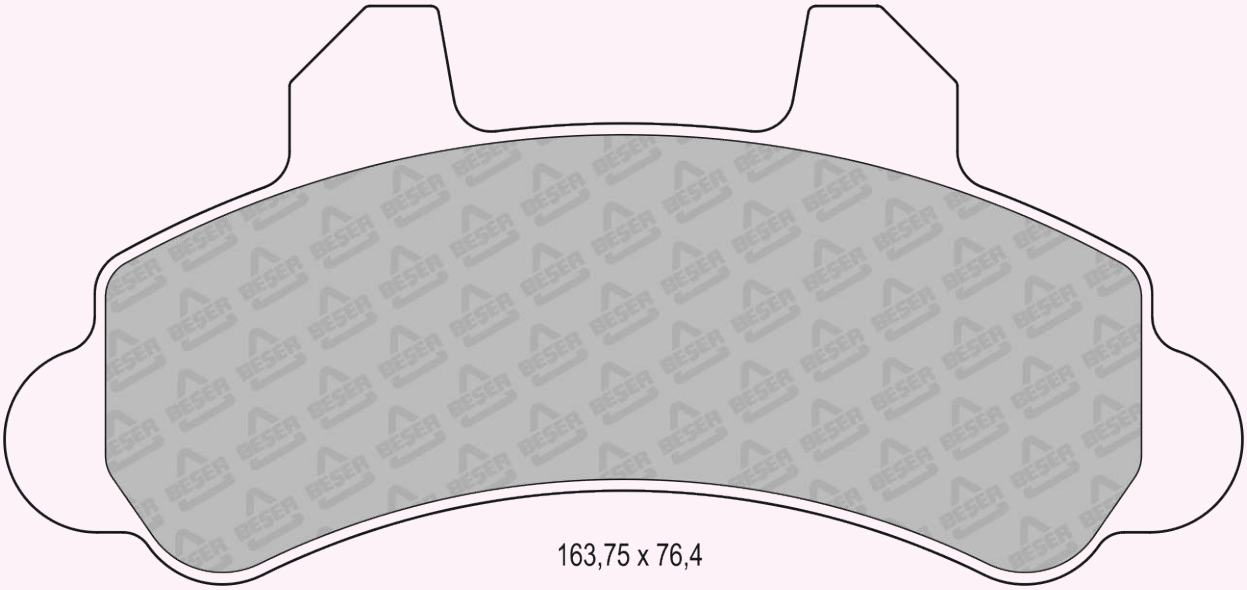

163,75 x 76,4

REFERENCE	T(mm)	REMARKS	MAKE	F/R	WVA No
3535	16	4 PADS PLAIN	FORD-OPEL	F	---

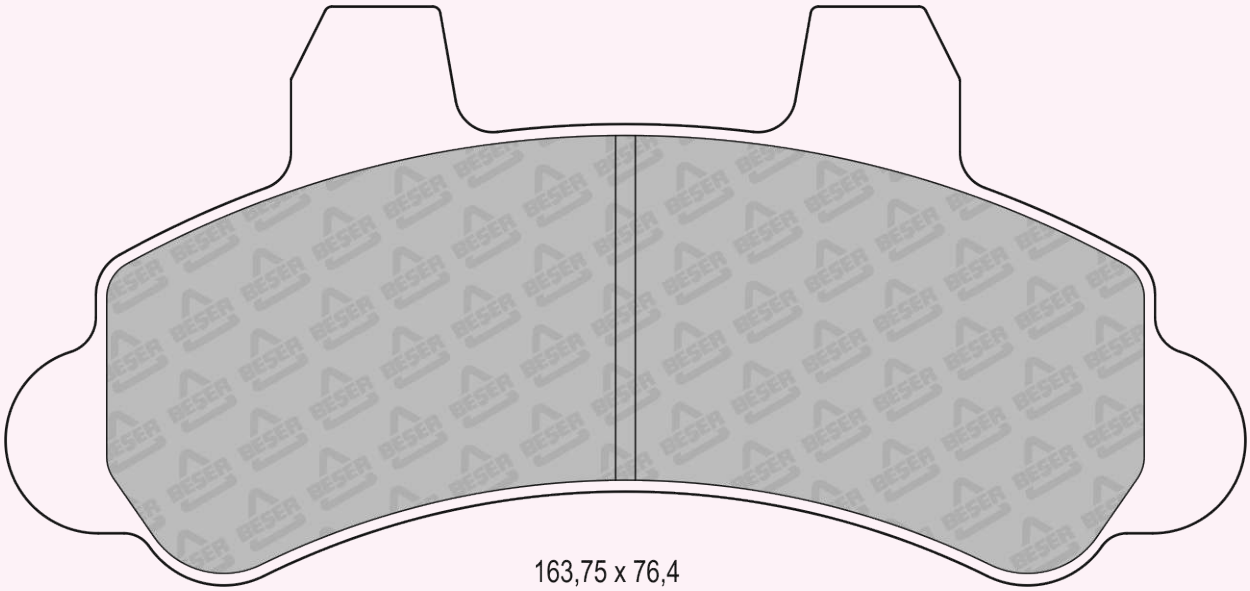

163,75 x 76,4

REFERENCE	T(mm)	REMARKS	MAKE	F/R	WVA No
3536	16,4	4 PADS PLAIN	ALFA ROMEO - AUDI FIAT - LANCIA	R	21144

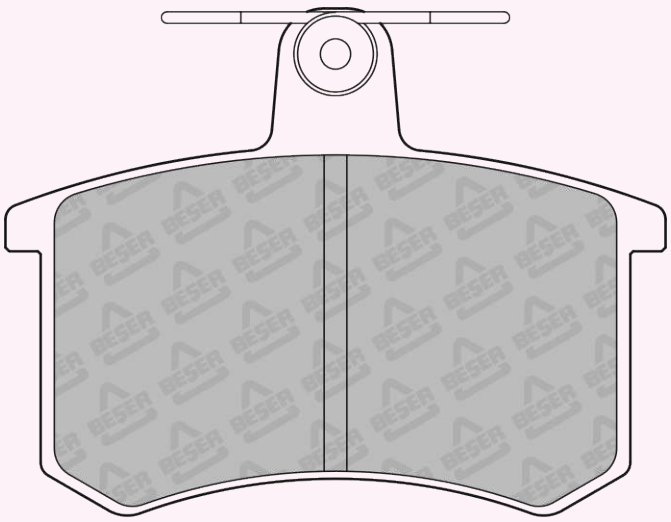

87,2 x 66,8

REFERENCE	T(mm)	REMARKS	MAKE	F/R	WVA No
3537	17	2 PADS INNER & 2 PADS OUTER	RENAULT	F	20947 29706

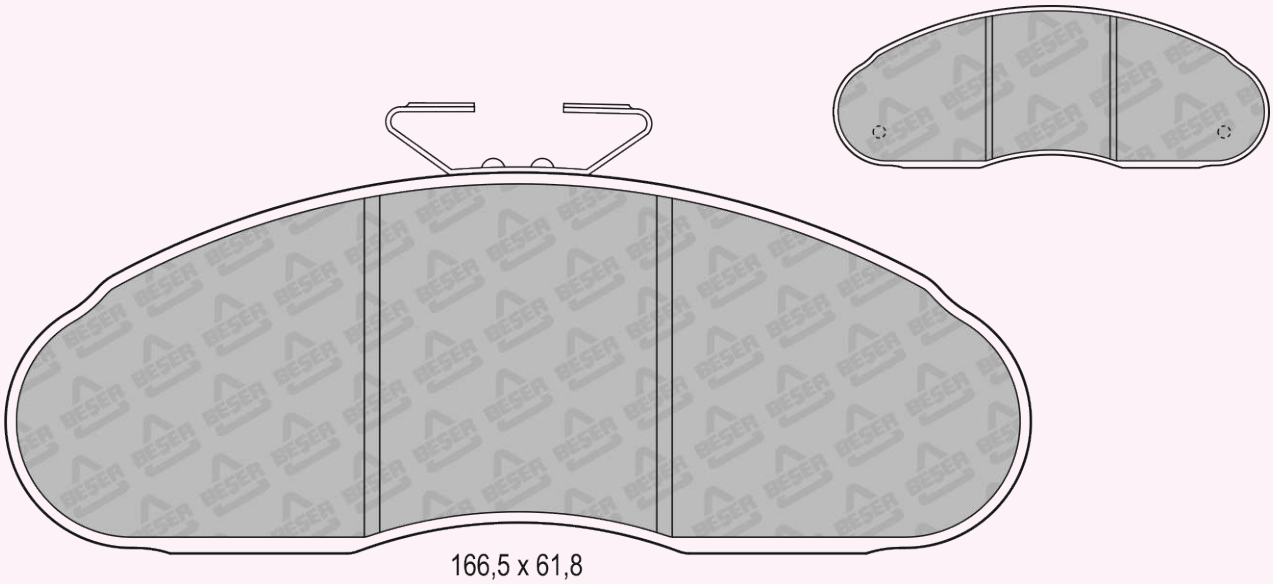

166,5 x 61,8
(NOT SCALE)

REFERENCE	T(mm)	REMARKS	MAKE	F/R	WVA No
3538	19,5	2 PADS INNER & 2 PADS OUTER	SEAT - VW	F	21866 21868

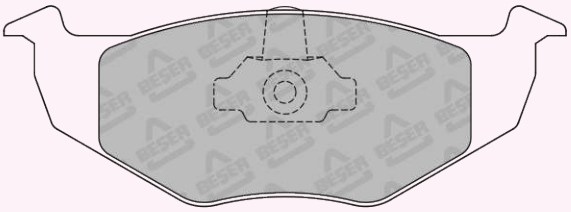

141,6 x 51,1
(NOT SCALE)

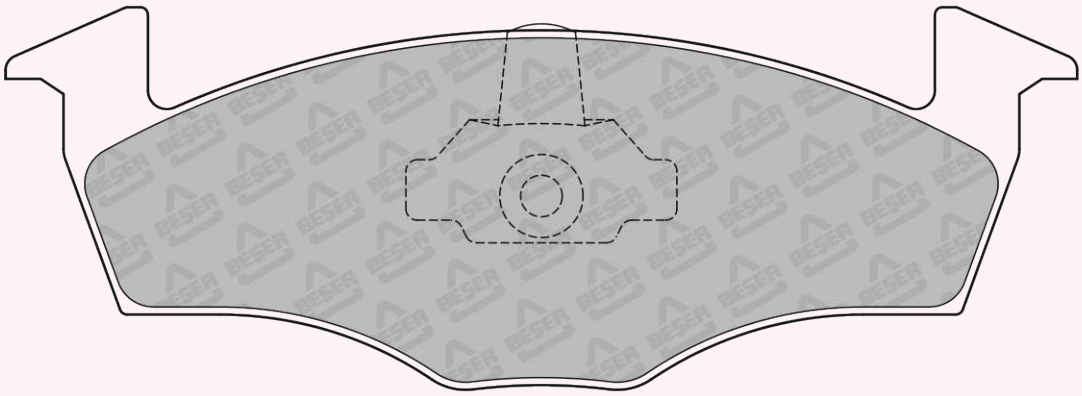

141,6 x 50,6

REFERENCE	T(mm)	REMARKS	MAKE	F/R	WVA No
3539	18,5	2 PADS WITH WEAR SENSOR (280mm)	DAEWOO - RENAULT	F	20919 21388

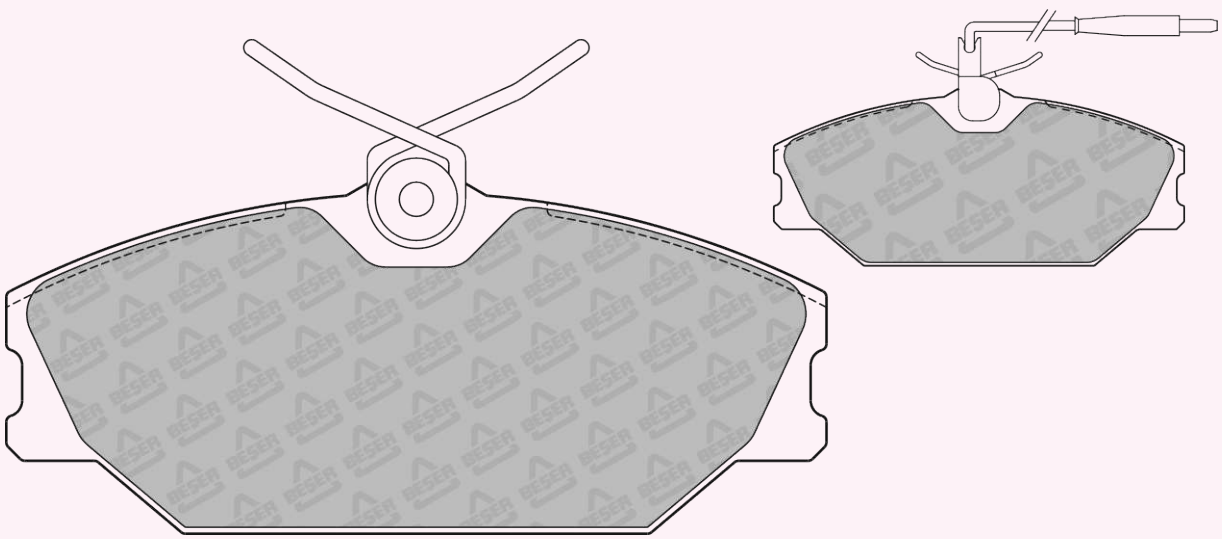

128,75 x 55,8
(NOT SCALE)

REFERENCE	T(mm)	REMARKS	MAKE	F/R	WVA No
3539/1	18,5	4 PADS PLAIN	DAEWOO - RENAULT	F	23172

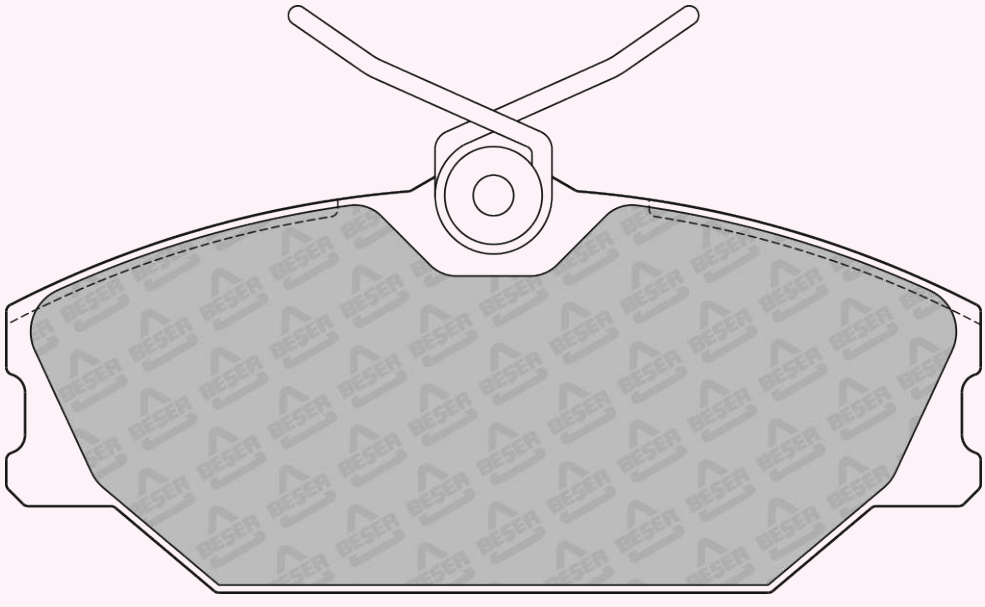

128,75 x 55,8

REFERENCE	T(mm)	REMARKS	MAKE	F/R	WVA No
3540	16,5	2 PADS WITH WEAR SENSOR (280mm)	FIAT	F	21193

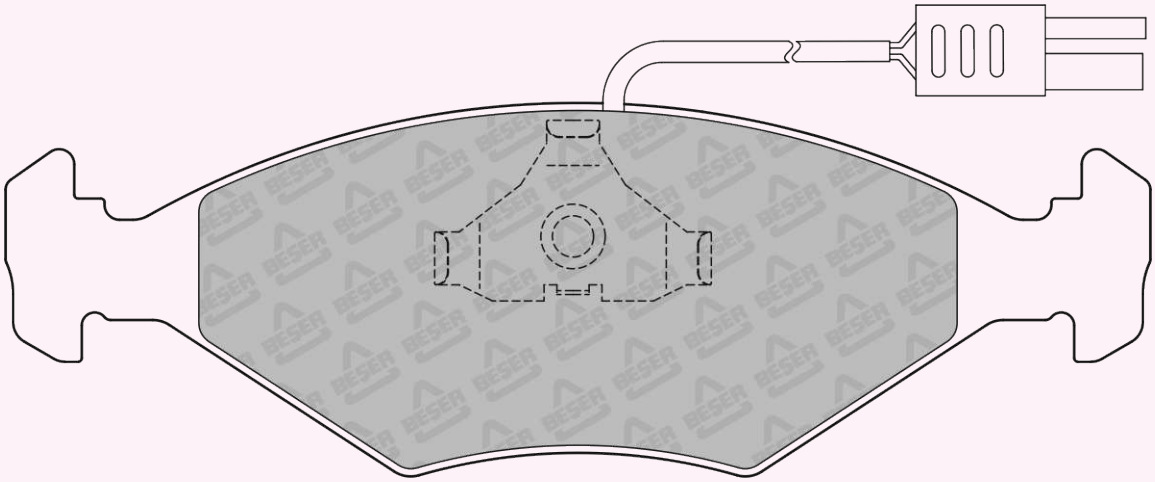

151,3 x 49,2

REFERENCE	T(mm)	REMARKS	MAKE	F/R	WVA No
3543	19,3	2 PADS WITH WEAR SENSOR (210mm)	CITROEN-FIAT PEUGEOT-TALBOT	F	21205 21206

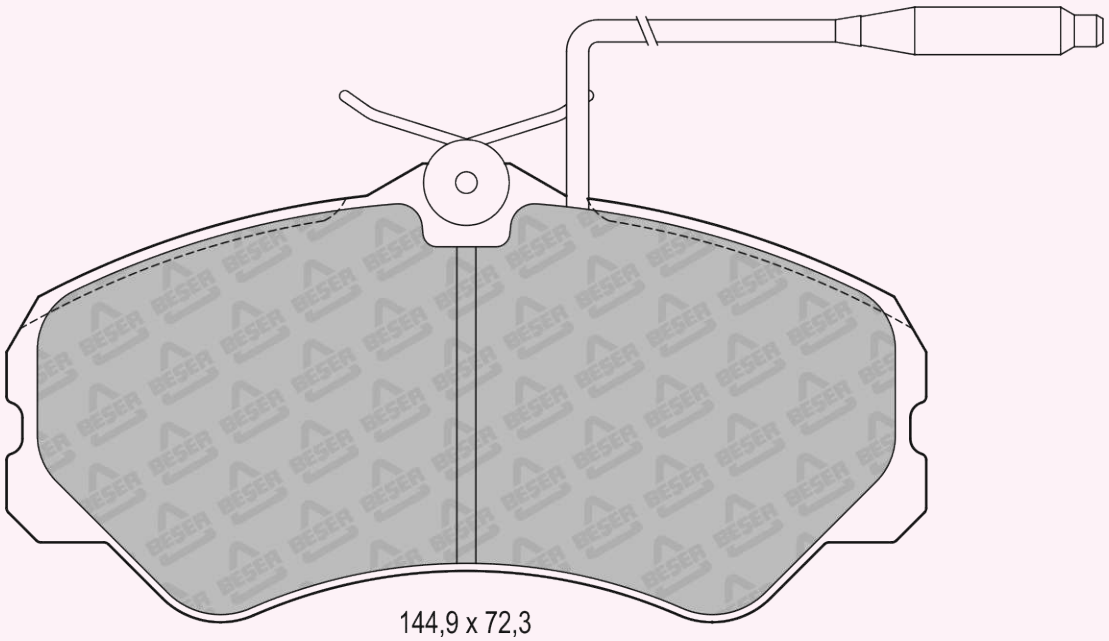

144,9 x 72,3

REFERENCE	T(mm)	REMARKS	MAKE	F/R	WVA No
3544	17 12,5	2 PADS INNER & 2 PADS OUTER	FORD	F	---

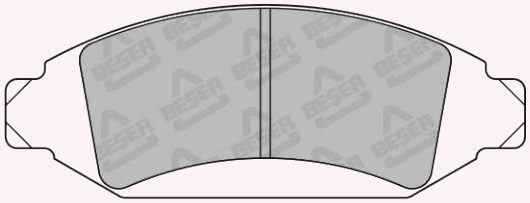

157,5 x 58,5
(NOT SCALE)

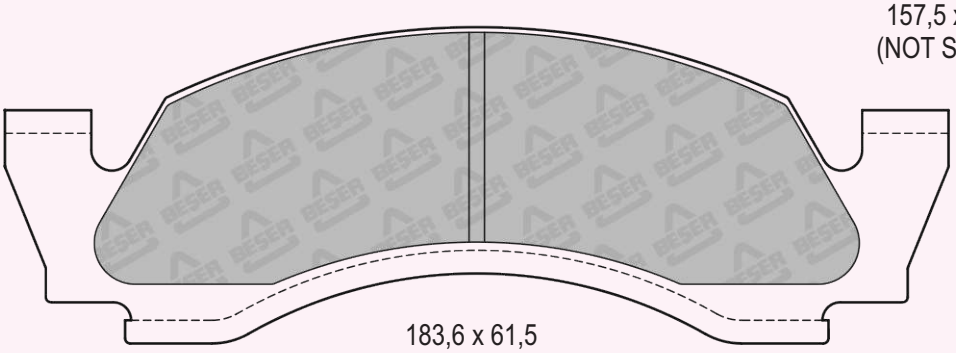

183,6 x 61,5
(NOT SCALE)

REFERENCE	T(mm)	REMARKS	MAKE	F/R	WVA No
3545	14,7	4 PADS PLAIN	FORD-KIA	R	21832

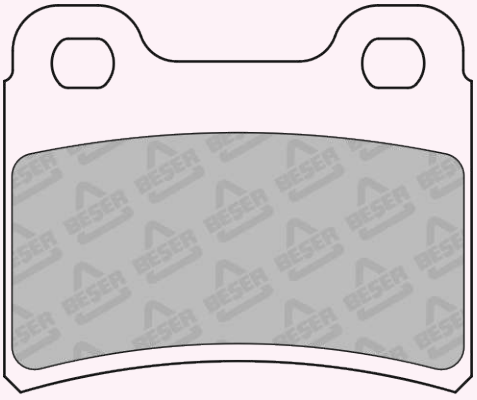

61,7 x 51,1

REFERENCE	T(mm)	REMARKS	MAKE	F/R	WVA No
3546	18,5	2 PADS WITH WEAR SENSOR (195mm)	DAEWOO - RENAULT	F	20919 20920 20921

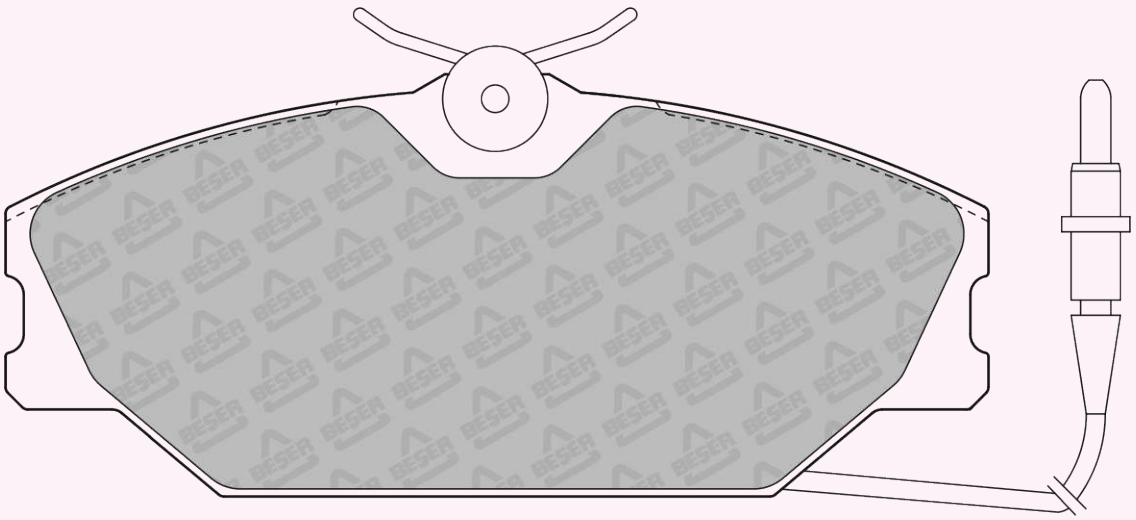

130 x 55,8

REFERENCE	T(mm)	REMARKS	MAKE	F/R	WVA No
3547	17,5	4 PADS PLAIN, 2 SPRING	GM	F	---

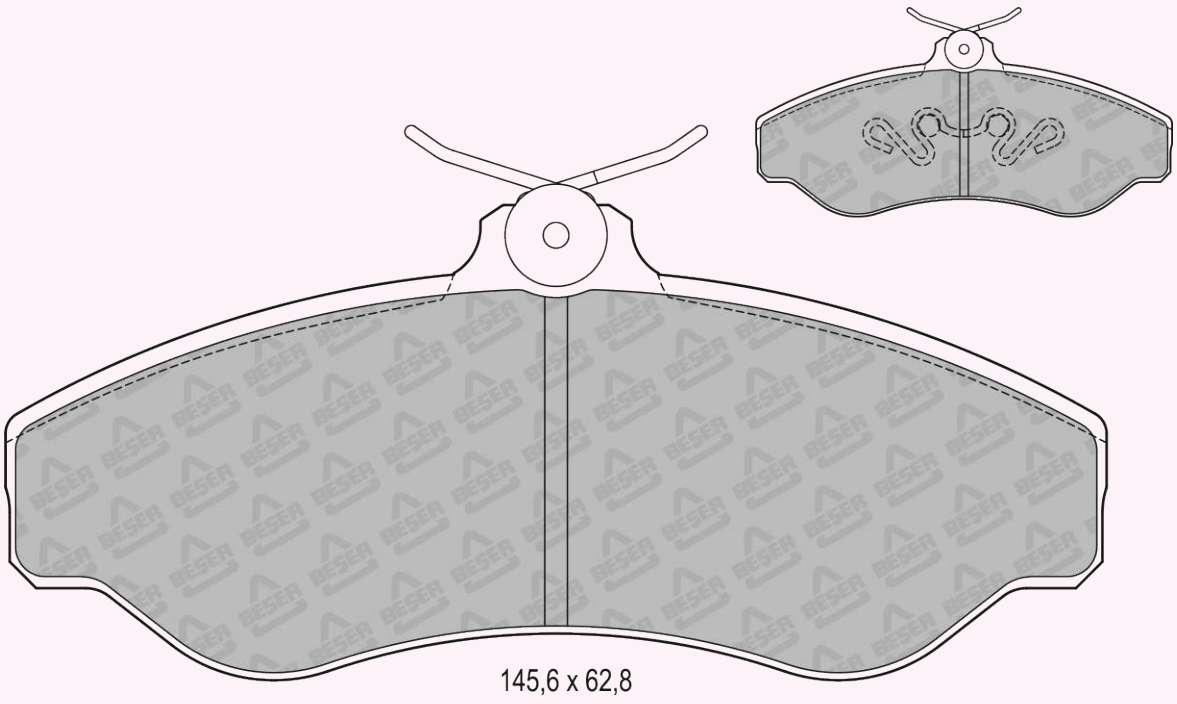

145,6 x 62,8

REFERENCE	T(mm)	REMARKS	MAKE	F/R	WVA No
3548	18	2 PADS WITH WEAR SENSOR (280mm)	FORD	F	20907 23227 23228

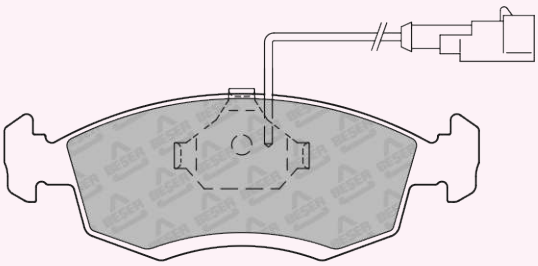

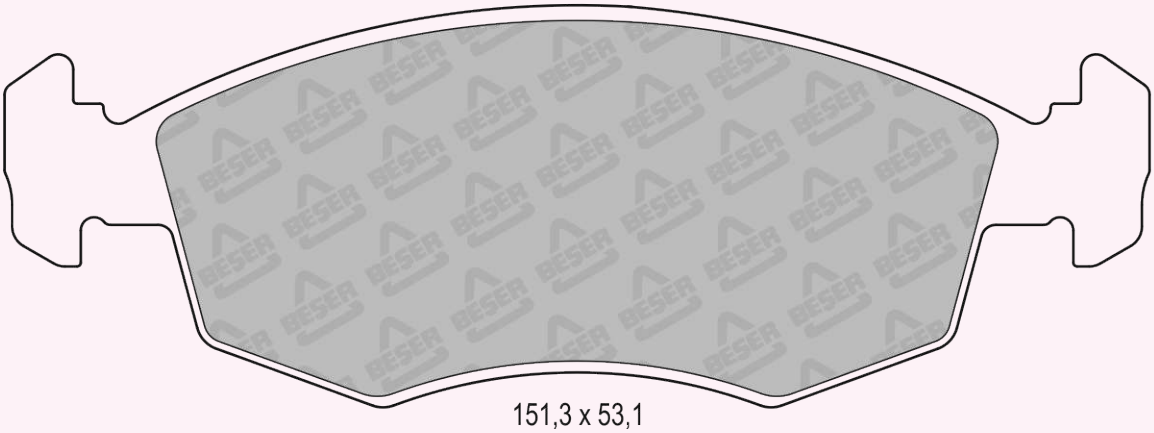

151,3 x 53,1

REFERENCE	T(mm)	REMARKS	MAKE	F/R	WVA No
3549	18	2 PADS PISTON CLIP	FORD	F	20907 20908

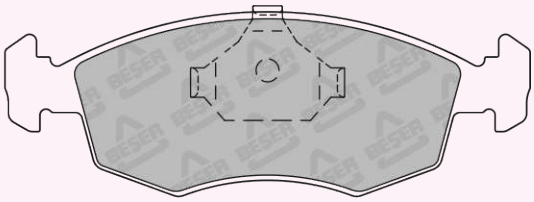

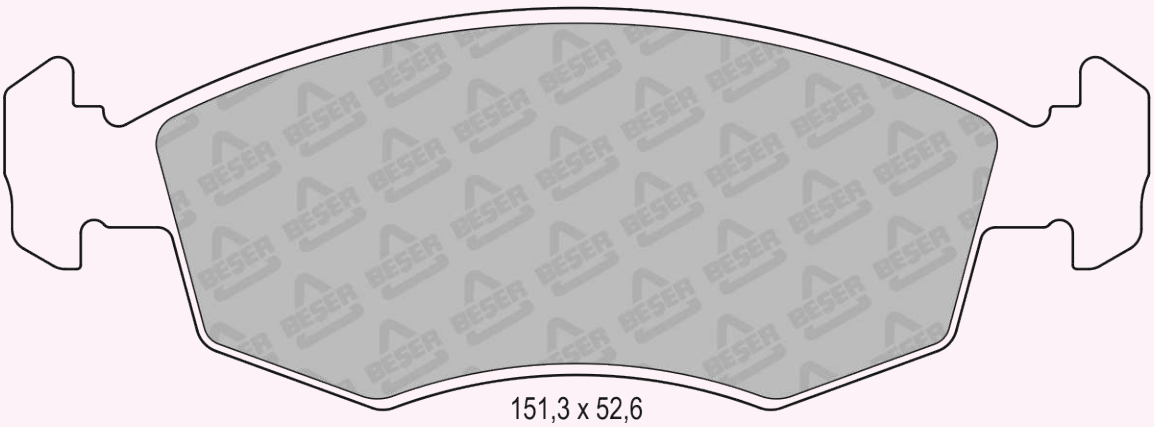

151,3 x 52,6

REFERENCE	T(mm)	REMARKS	MAKE	F/R	WVA No
3550	15,5	4 PADS PLAIN	MERCEDES BENZ	R	20687

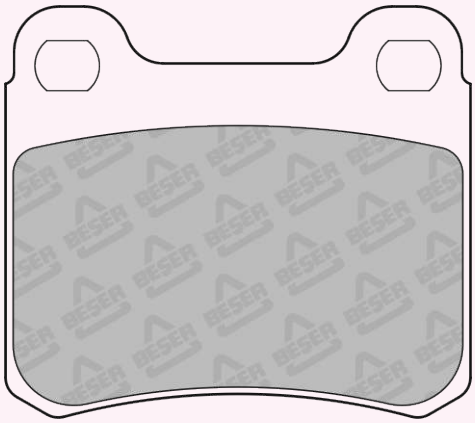

61,3 x 54,2

REFERENCE	T(mm)	REMARKS	MAKE	F/R	WVA No
3551	19,4	4 PADS PLAIN	SEAT - VW	F	20168

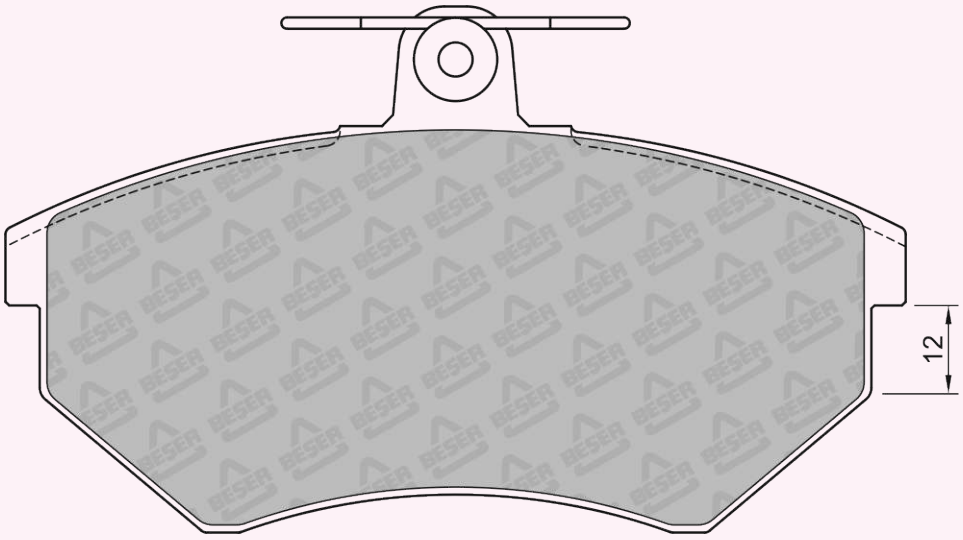

118,9 x 69,5

REFERENCE	T(mm)	REMARKS	MAKE	F/R	WVA No
3552	17,4	4 PADS PLAIN	LADA-ZAZ	F	23671

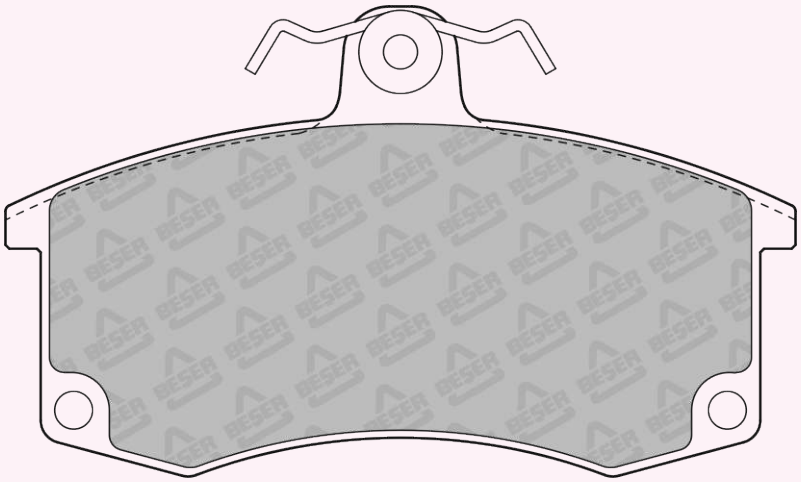

104,3 x 62,1

REFERENCE	T(mm)	REMARKS	MAKE	F/R	WVA No
3553	19	4 PADS PLAIN	VW	F	21479

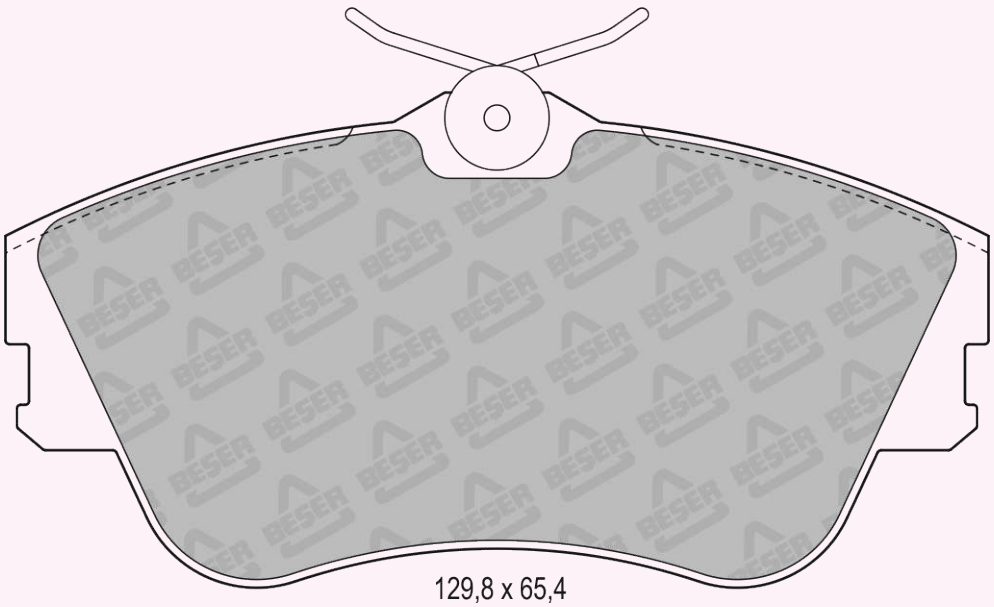

129,8 x 65,4

REFERENCE	T(mm)	REMARKS	MAKE	F/R	WVA No
3553/1	19	1 PAD WITH WEAR SENSOR	HONDA - VW	F	21479 23445

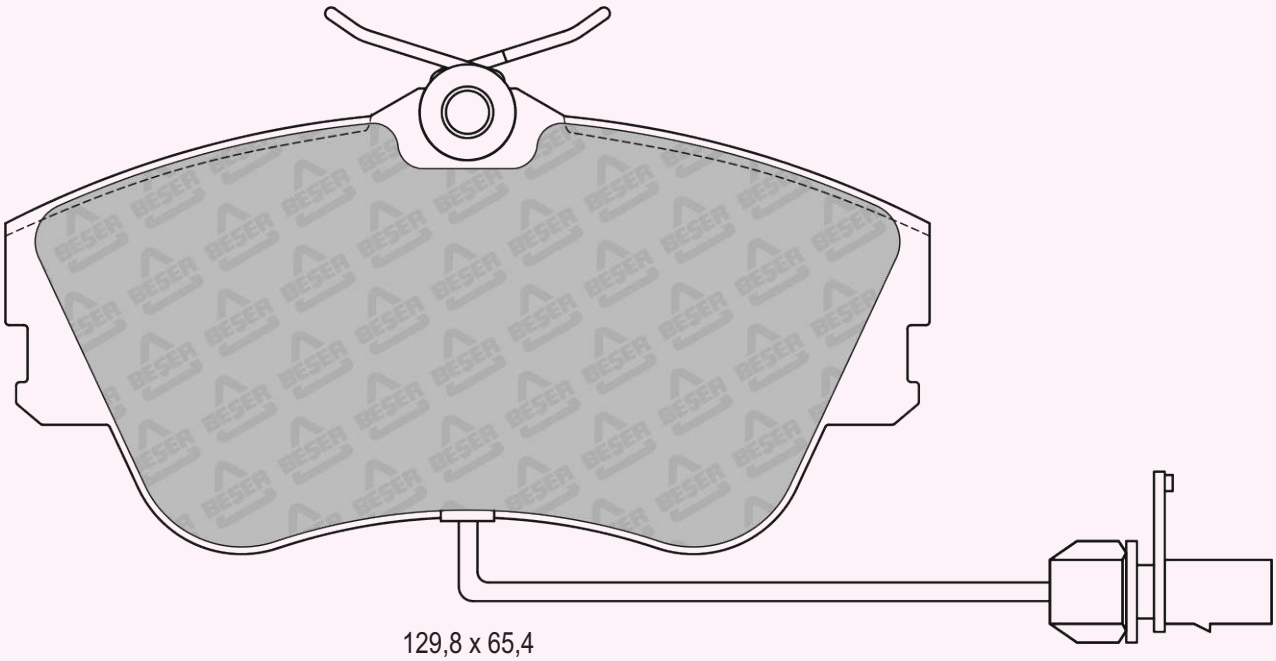

129,8 x 65,4
(NOT SCALE)

REFERENCE	T(mm)	REMARKS	MAKE	F/R	WVA No
3554	17,5	2 PADS WITH WEAR SENSOR	HOLDEN - TOYOTA	F	21601 21602 21603

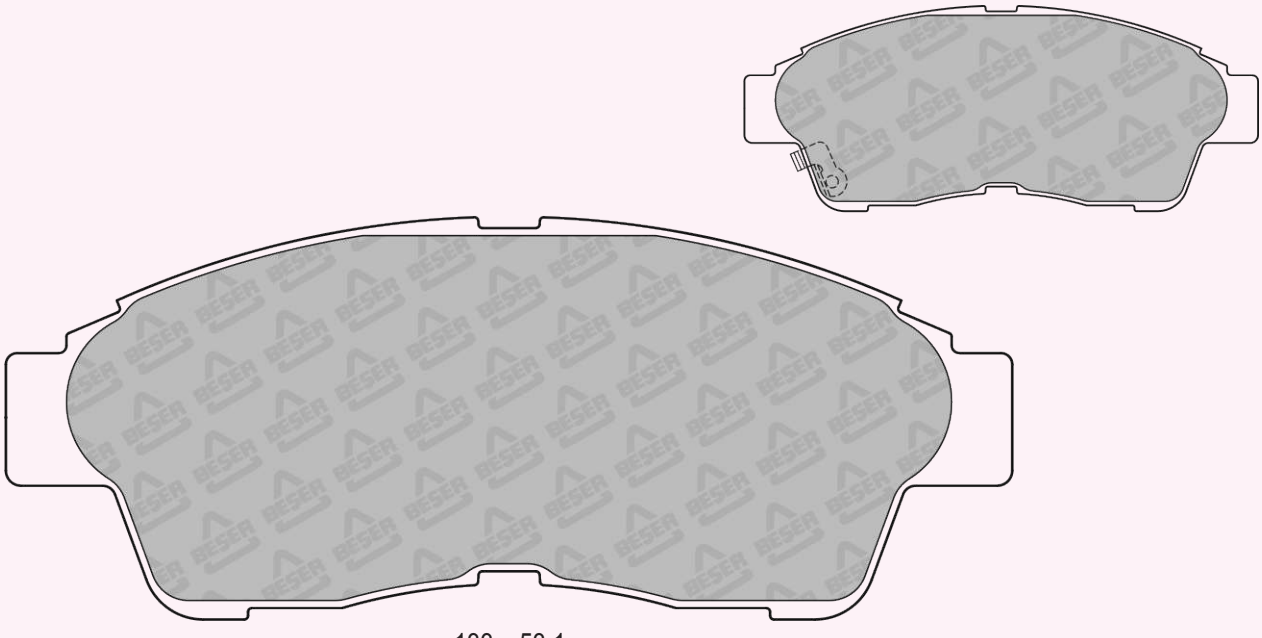

133 x 53,1

REFERENCE	T(mm)	REMARKS	MAKE	F/R	WVA No
3555	18	4 PADS WITH WEAR SENOR (320mm) & (360mm)	CITROEN	F	21460 21613

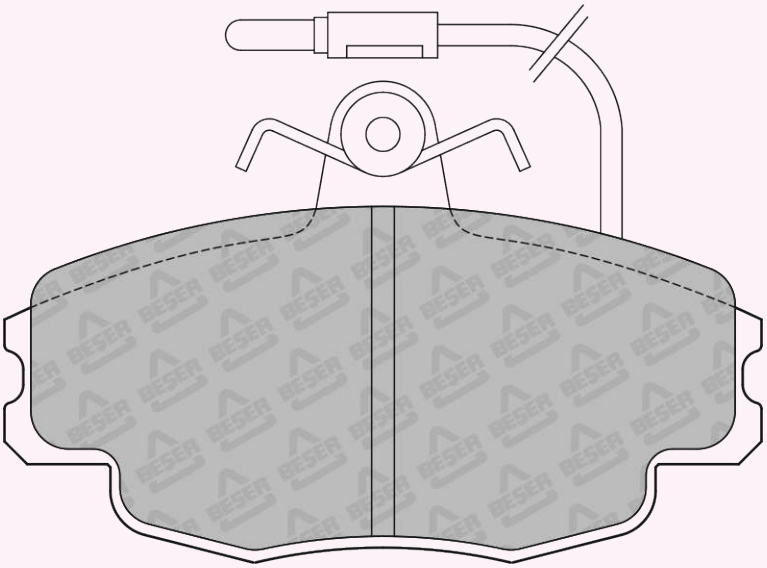

100 x 63,5

REFERENCE	T(mm)	REMARKS	MAKE	F/R	WVA No
3556	17,75	4 PADS WITH WEAR SENSOR (350mm)	CITROEN	F	21614 21615 21616

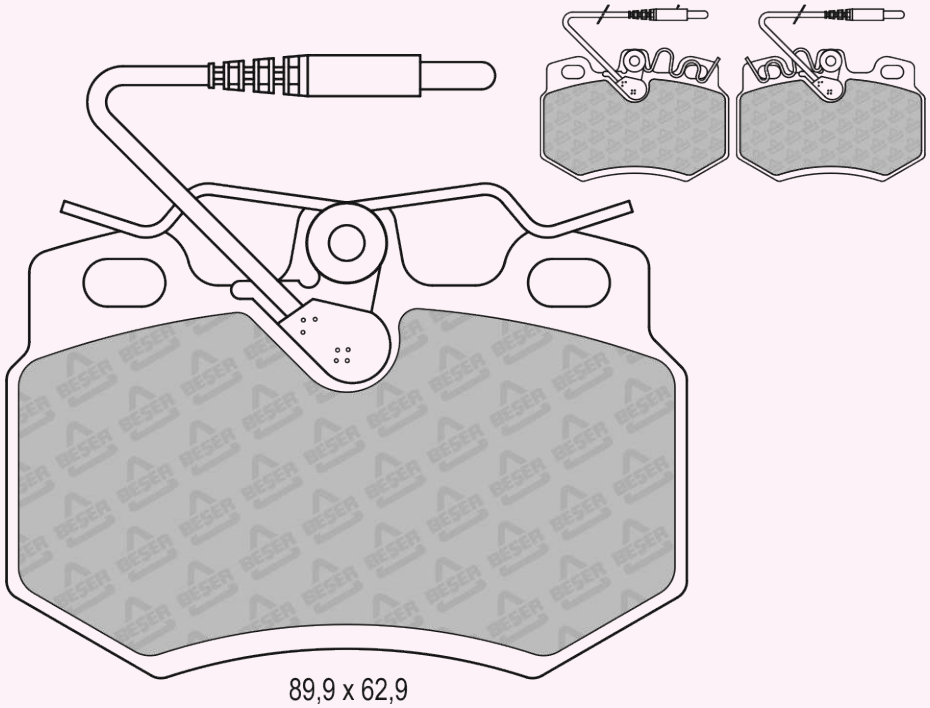

89,9 x 62,9

REFERENCE	T(mm)	REMARKS	MAKE	F/R	WVA No
3557	19	4 PADS WITH WEAR SENSOR (280/380mm)	CITROEN - PEUGEOT	F	23169 23170

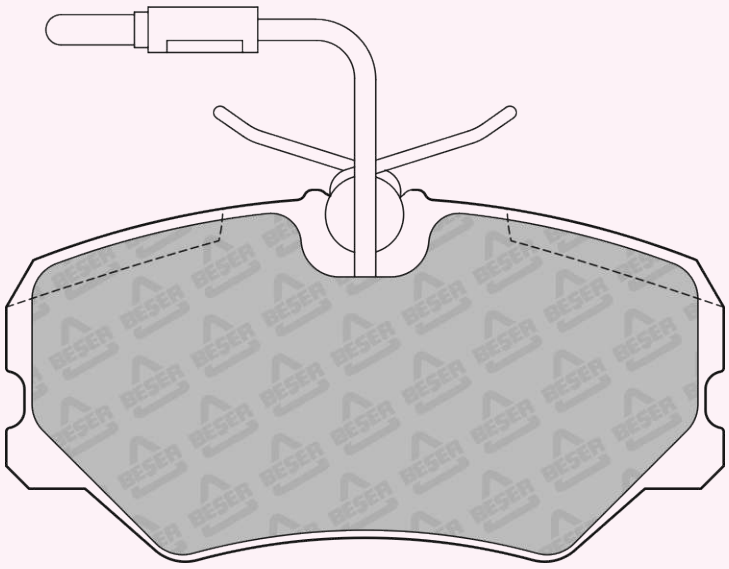

94,8 x 49

REFERENCE	T(mm)	REMARKS	MAKE	F/R	WVA No
3558	18	2 PADS INNER & 2 PADS OUTER	FORD	F	21394 23071



156,3 x 58,5
(NOT SCALE)

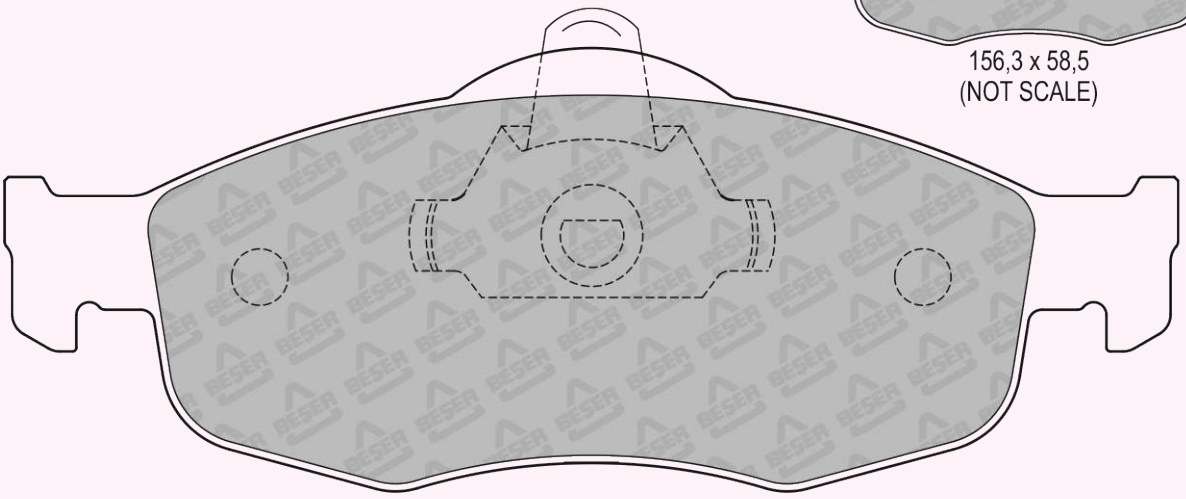

155,1 x 58,5

REFERENCE	T(mm)	REMARKS	MAKE	F/R	WVA No
3559	19,7	2 PADS WITH WEAR SENSOR (200mm)	CITROEN-FIAT PEUGEOT	F	21799 21800

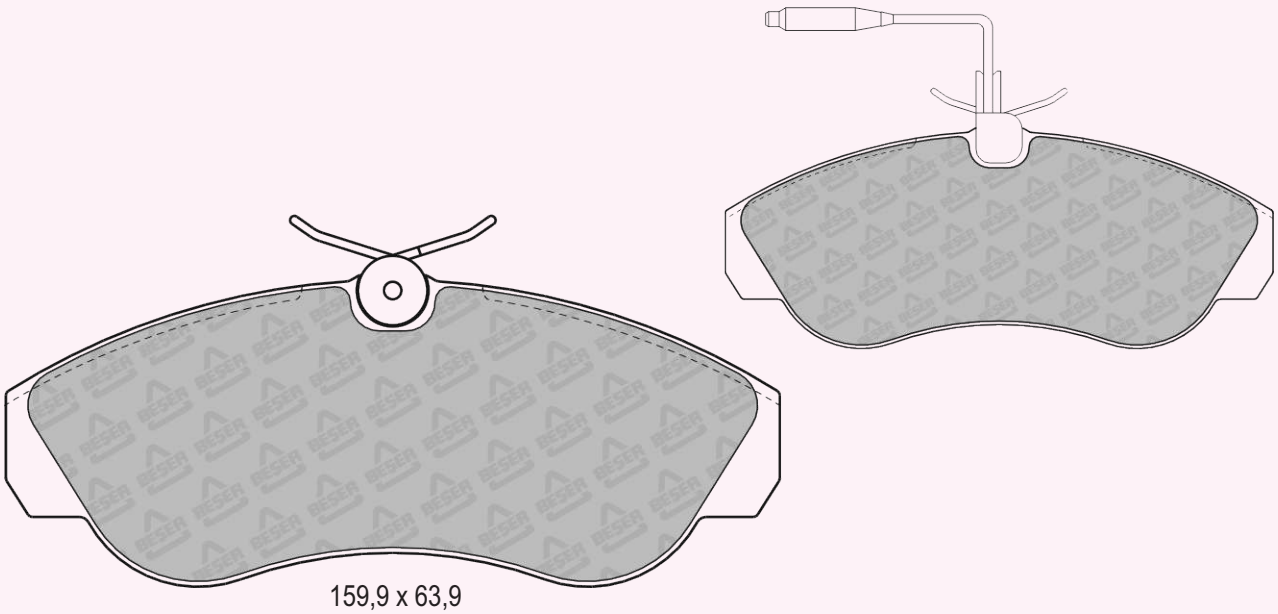

159,9 x 63,9
(NOT SCALE)

REFERENCE	T(mm)	REMARKS	MAKE	F/R	WVA No
3560	15	2 PADS WITH WEAR SENSOR	TOYOTA-VW	F	21679 21680

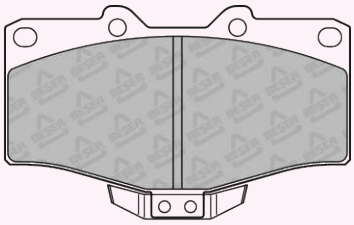

119,2 x 73,5
(NOT SCALE)

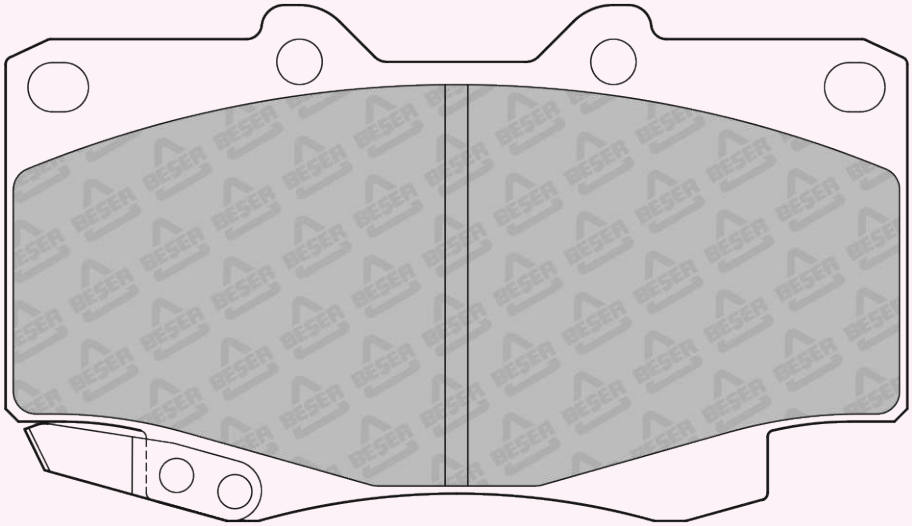

119,2 x 68,1

REFERENCE	T(mm)	REMARKS	MAKE	F/R	WVA No
3561	15,5	2 PADS WITH SPRING	AUDI - OPEL - SEAT SKODA - VW	F	23546 23547

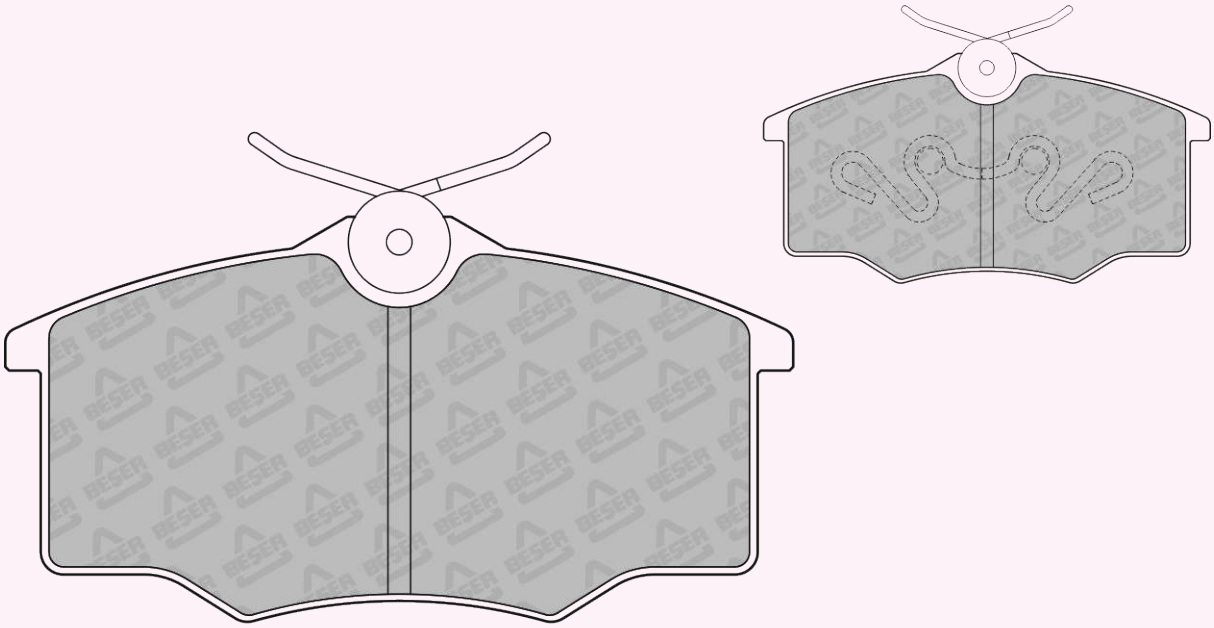

104,1 x 53,6

REFERENCE	T(mm)	REMARKS	MAKE	F/R	WVA No
3562	17,5	4 PADS PLAIN S1 - 4 Pcs. S2 - 2 Pcs.	NISSAN	F	21546

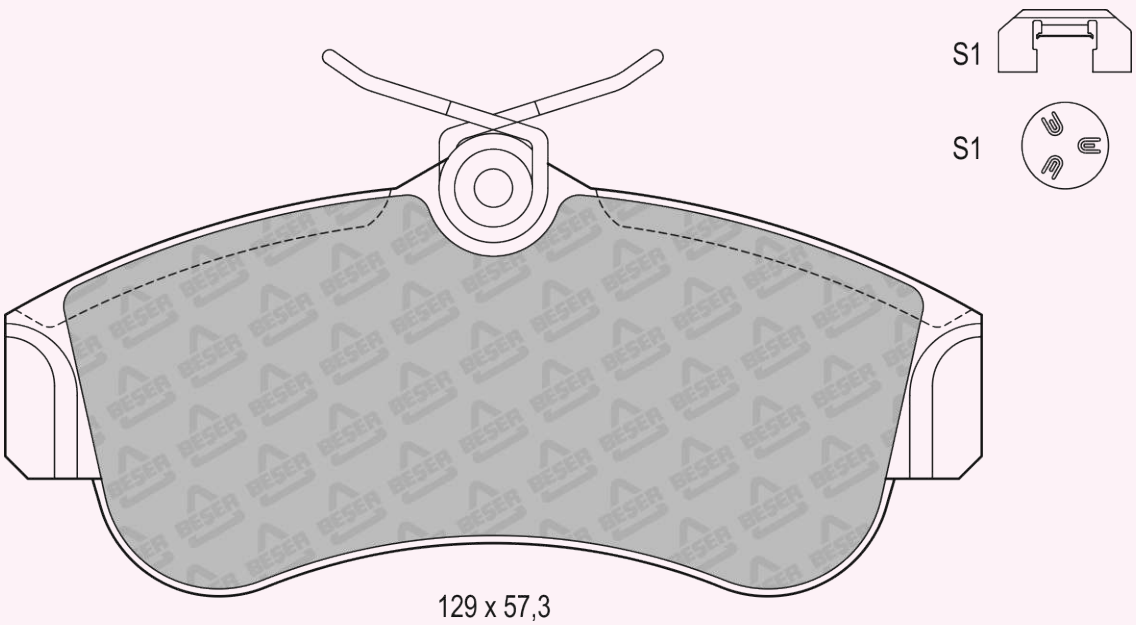

129 x 57,3

REFERENCE	T(mm)	REMARKS	MAKE	F/R	WVA No
3563	17	2 PADS PISTON CLIP	BMW	F	21643 21644

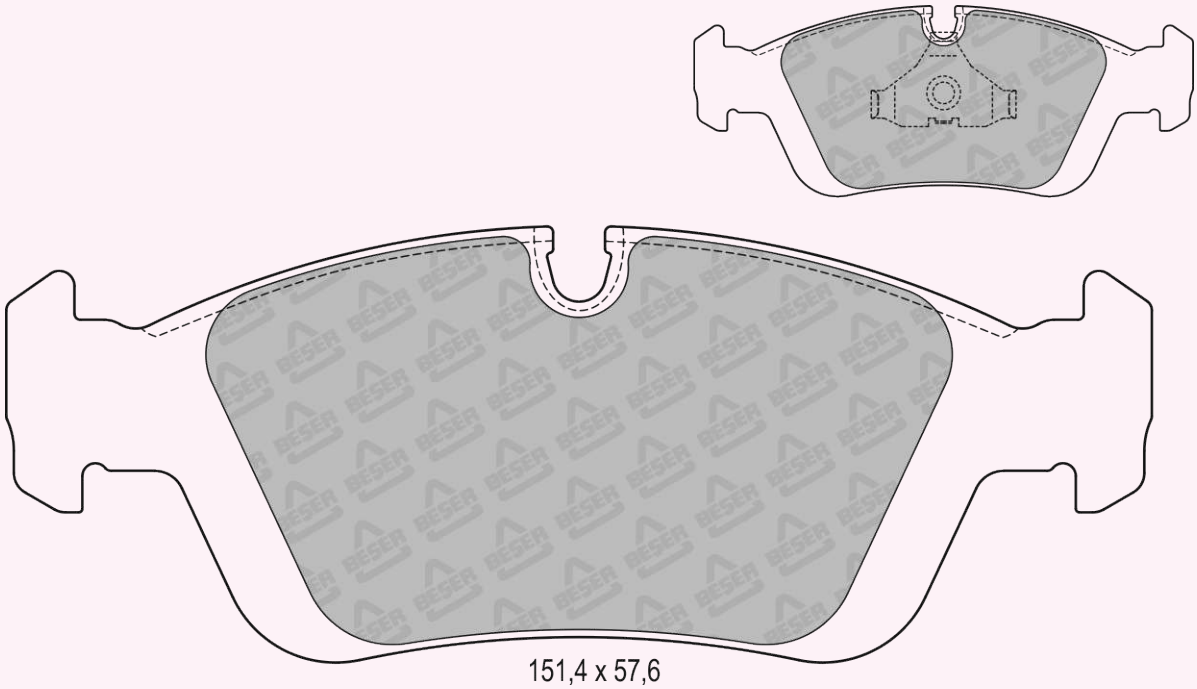

REFERENCE	T(mm)	REMARKS	MAKE	F/R	WVA No
3564	20,3	2 PADS PISTON CLIP	BMW	F	20968 21064

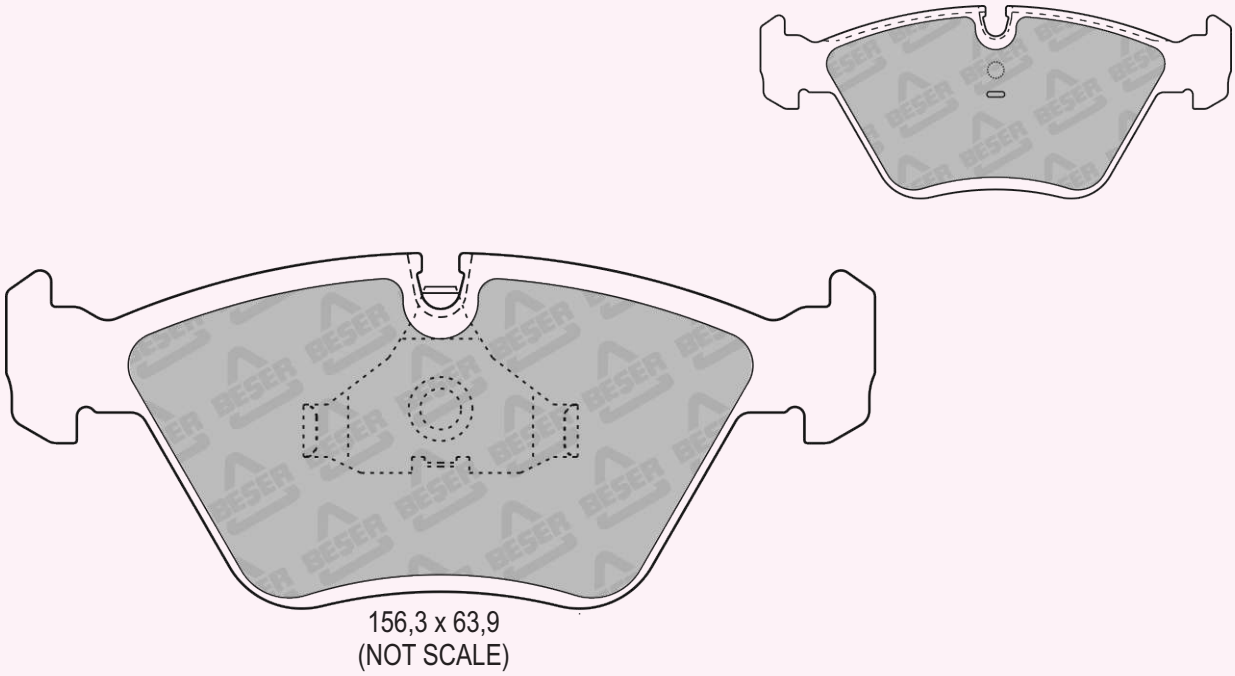

REFERENCE	T(mm)	REMARKS	MAKE	F/R	WVA No
3564/1	20,3	2 PADS PISTON CLIP	BMW-WIESMANN	F	21676 23474

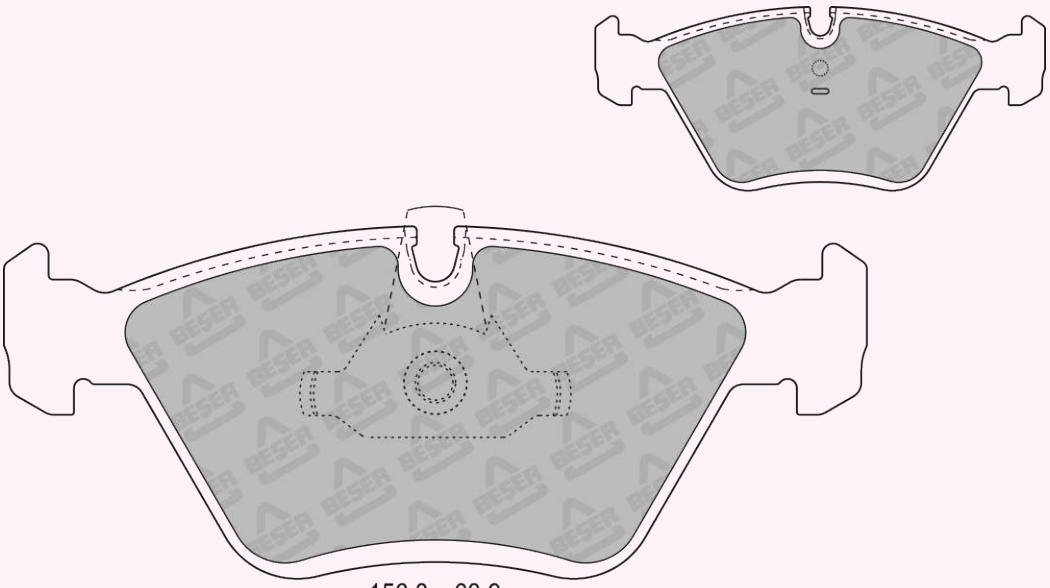

156,3 x 63,9
(NOT SCALE)

REFERENCE	T(mm)	REMARKS	MAKE	F/R	WVA No
3566	17	2 PADS INNER & 2 PADS OUTER	SEAT-SKODA VW	F	21866 21868

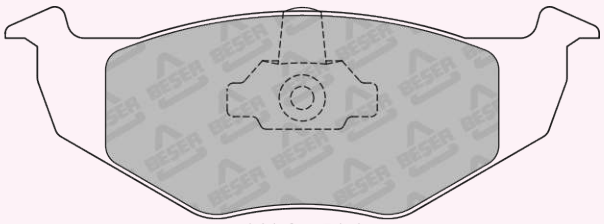

141,6 x 51,1
(NOT SCALE)

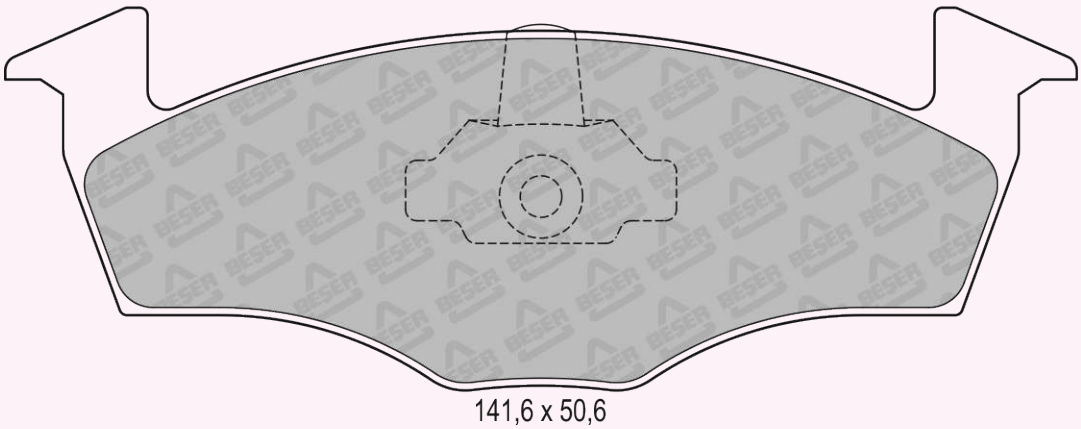

141,6 x 50,6

REFERENCE	T(mm)	REMARKS	MAKE	F/R	WVA No
3567	20,5	2 PADS PISTON CLIP	MERCEDES BENZ	F	21576 21577 23990 23991

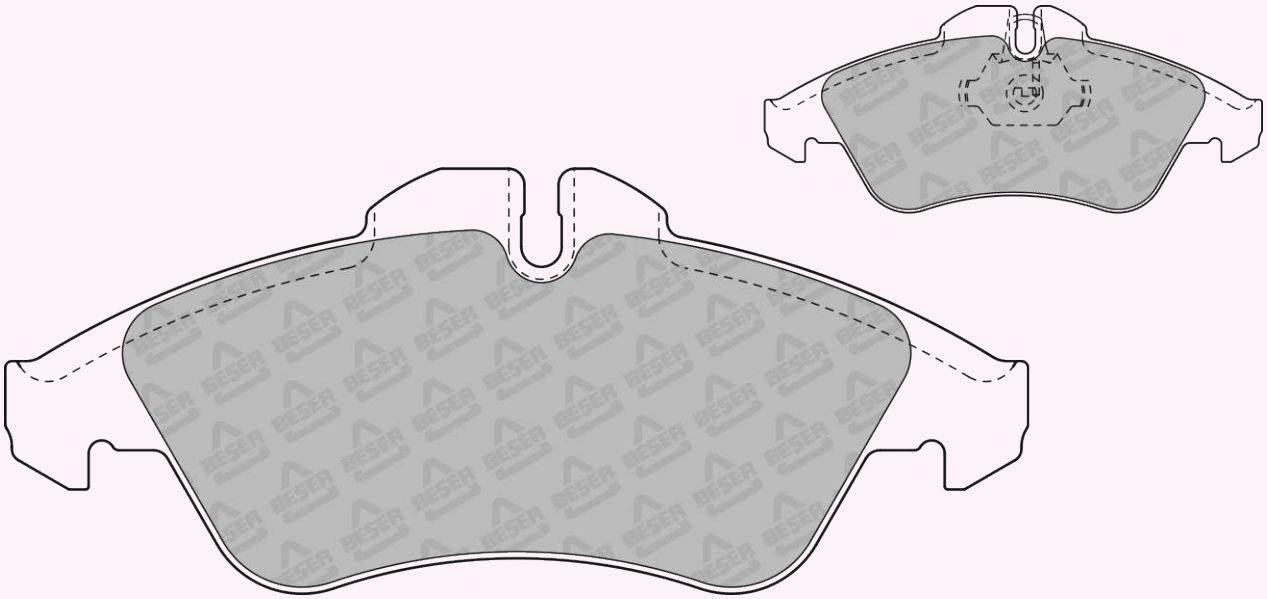

156,5 x 64,9
(NOT SCALE)

REFERENCE	T(mm)	REMARKS	MAKE	F/R	WVA No
3568	18	1 PAD WITH WEAR SENSOR (150mm)	FIAT	F	23218 23776

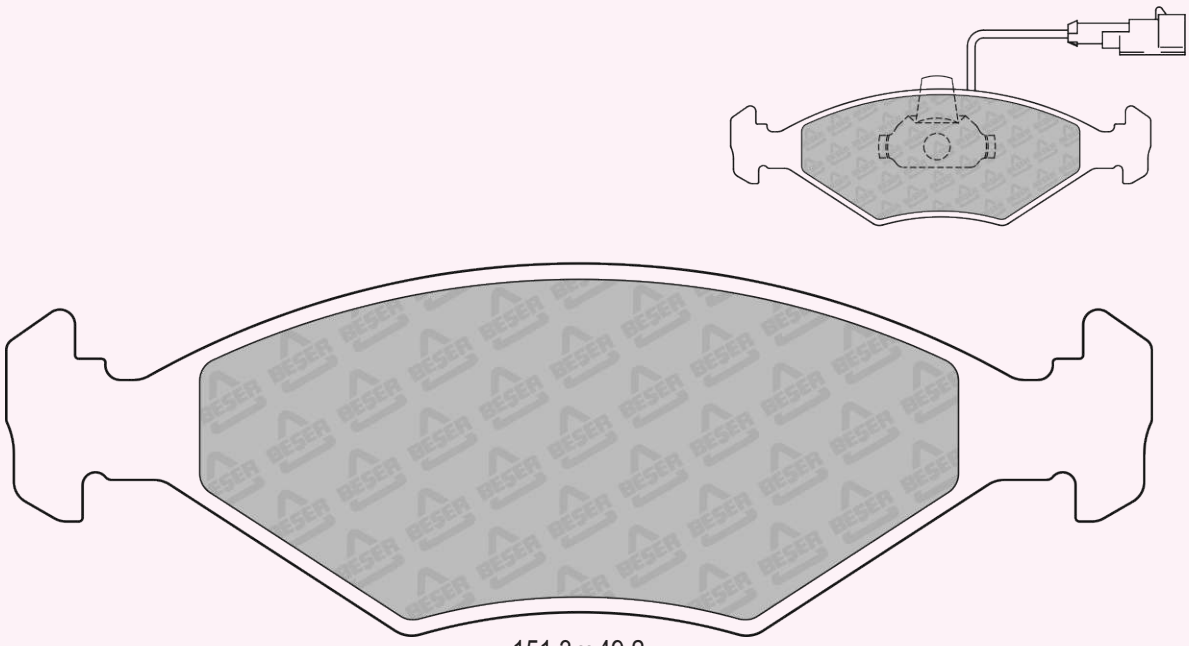

151,3 x 49,2

REFERENCE	T(mm)	REMARKS	MAKE	F/R	WVA No
3569	18	2 PADS PISTON CLIP	FIAT	F	23218 23775

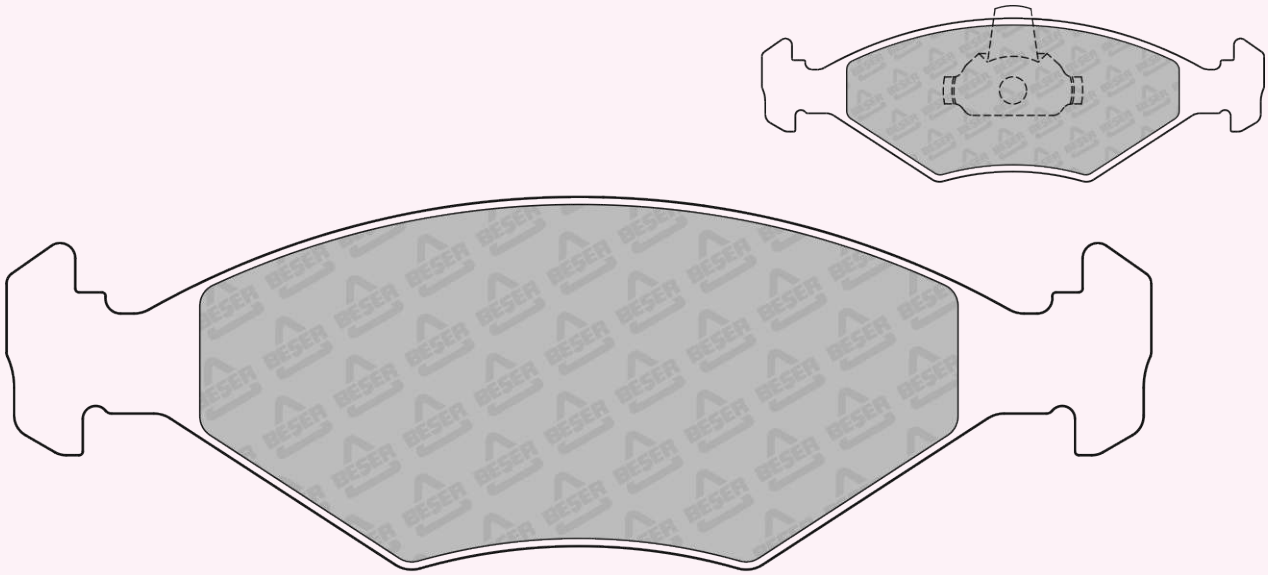

151,3 x 49,2

REFERENCE	T(mm)	REMARKS	MAKE	F/R	WVA No
3570	18	2 PADS PISTON CLIP	FORD-KIA-MAZDA-TVR	F	23103 23104

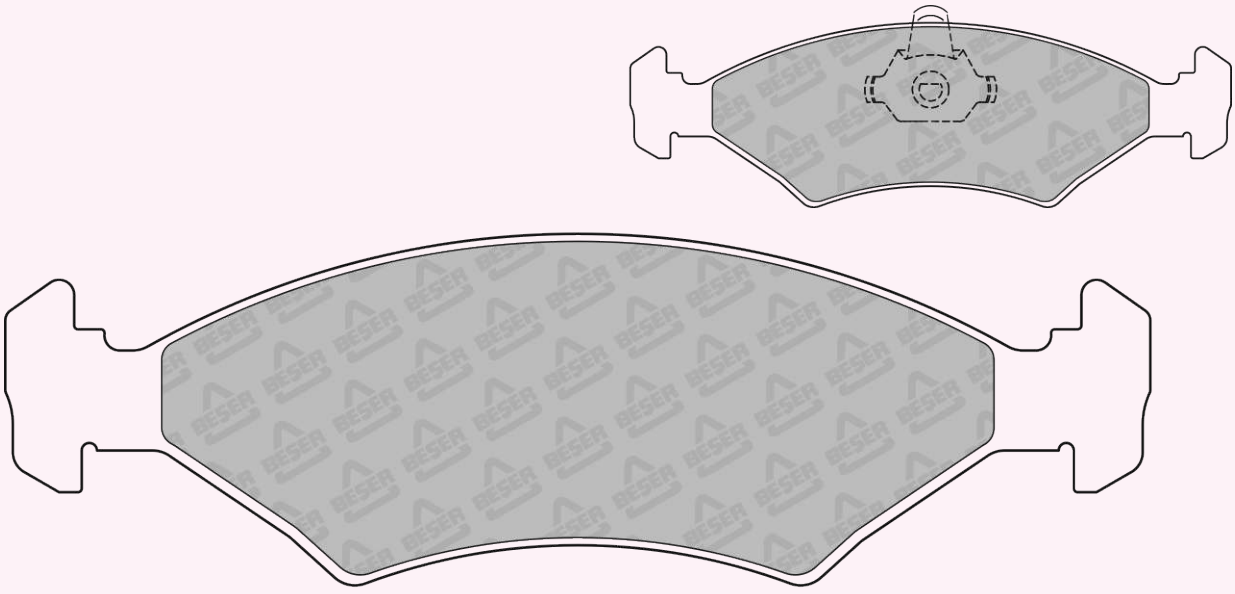

151,3 x 46,4

REFERENCE	T(mm)	REMARKS	MAKE	F/R	WVA No
3572	16	2 PADS PISTON CLIP	BMW	R	20675 20756

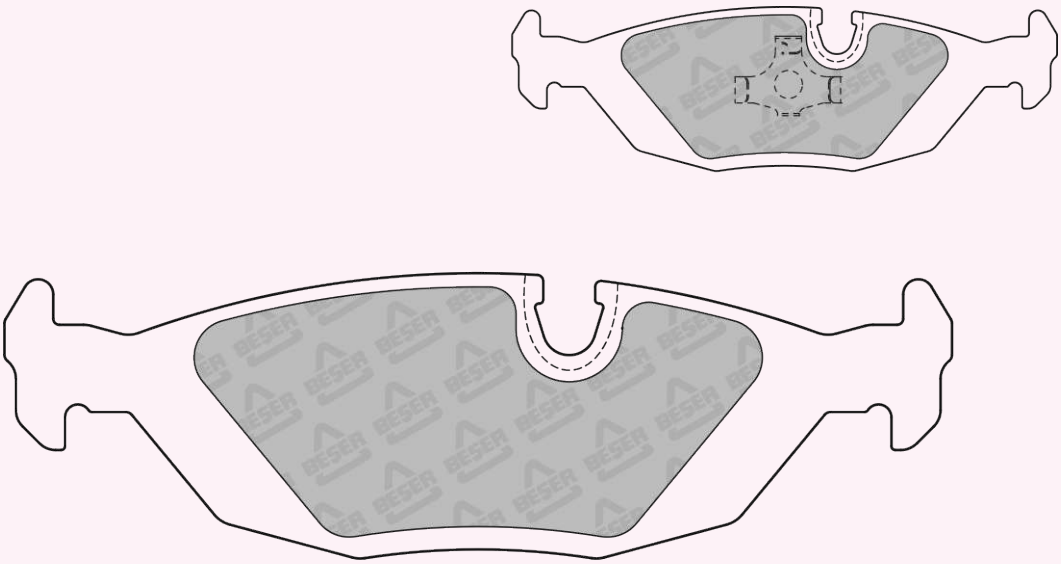

125,1 x 37,6

REFERENCE	T(mm)	REMARKS	MAKE	F/R	WVA No
3573	19,5	2 PADS PISTON CLIP	BMW	F	20629 20757

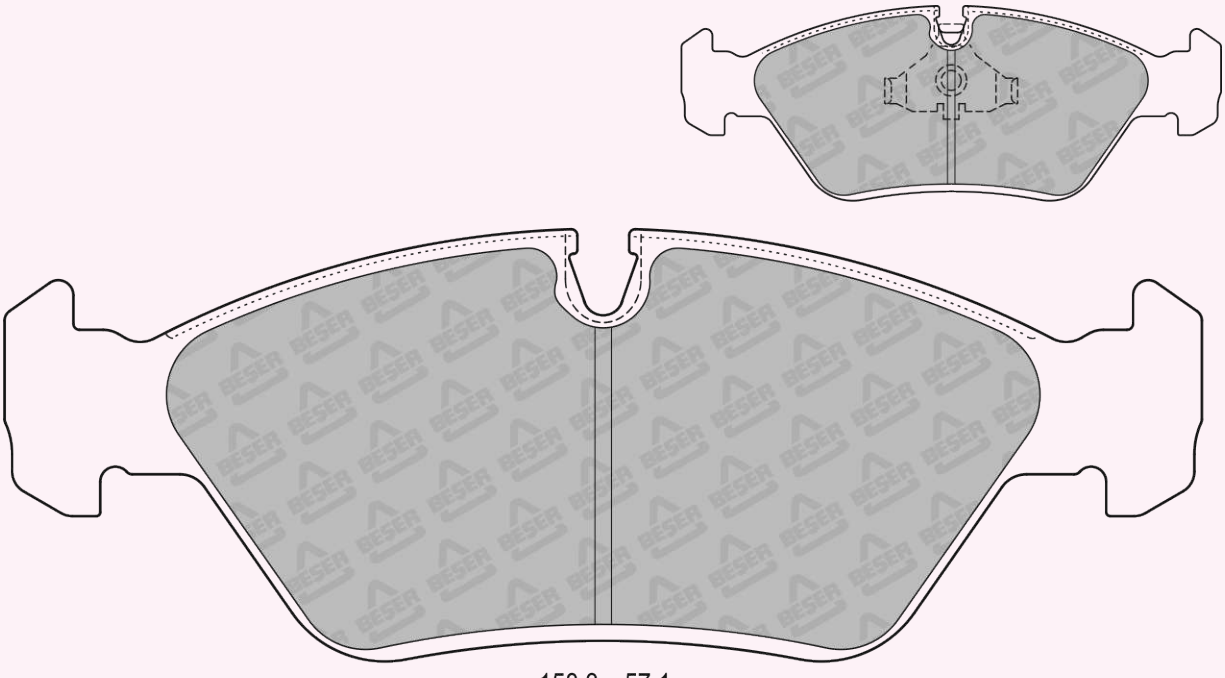

158,3 x 57,1

REFERENCE	T(mm)	REMARKS	MAKE	F/R	WVA No
3574	15,5	2 PADS WITH WEAR SENSOR	KIA-FORD-ASIA MOTORS	F	23784 23785 23786

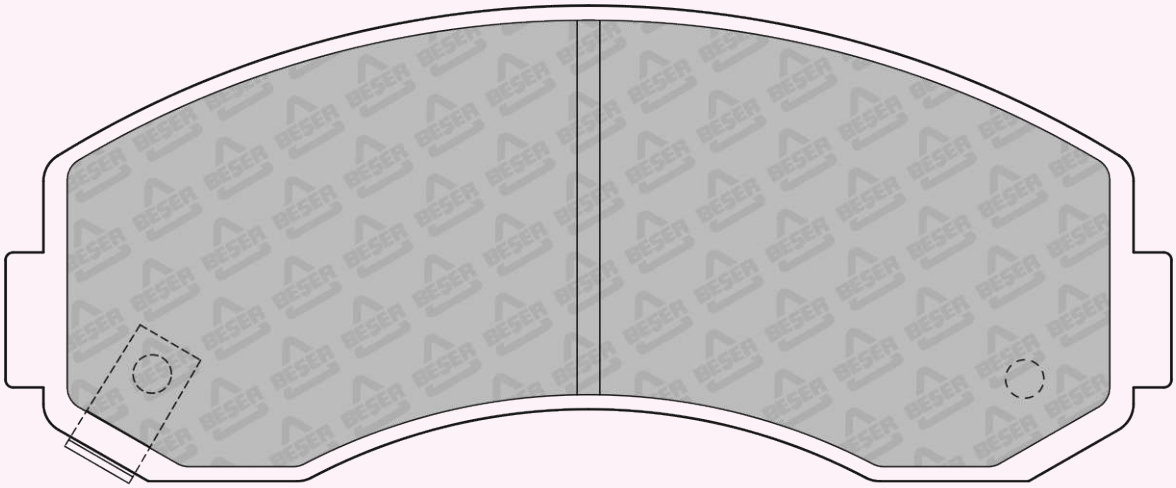

154 x 63,4

REFERENCE	T(mm)	REMARKS	MAKE	F/R	WVA No
3575	20	4 PADS PLAIN	IVECO-RENAULT	F	29121

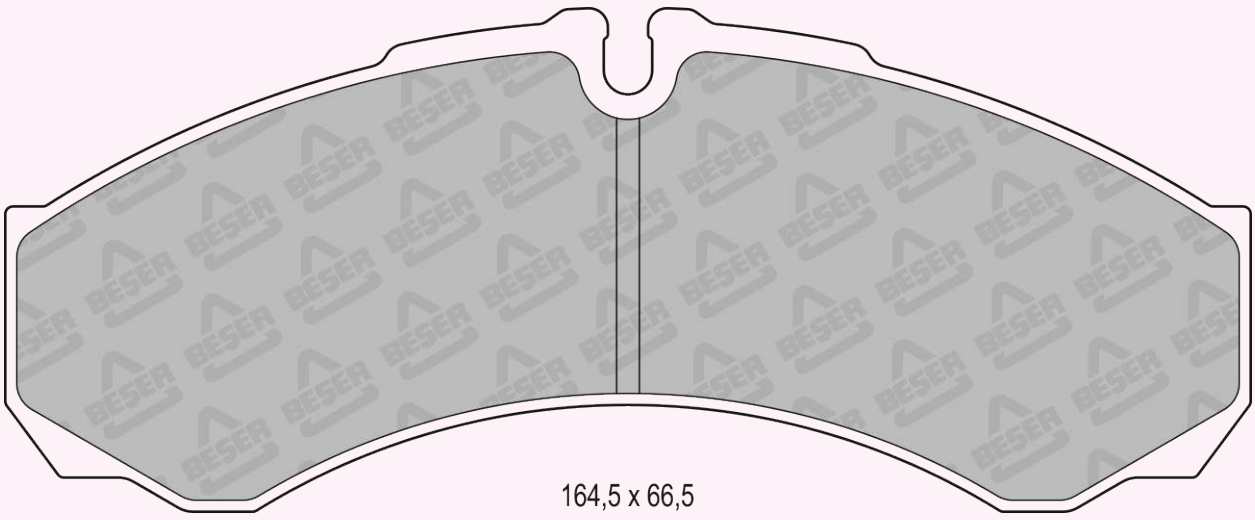

164,5 x 66,5

REFERENCE	T(mm)	REMARKS	MAKE	F/R	WVA No
3575/1	20	4 PADS PLAIN	IVECO-RENAULT	F	29121

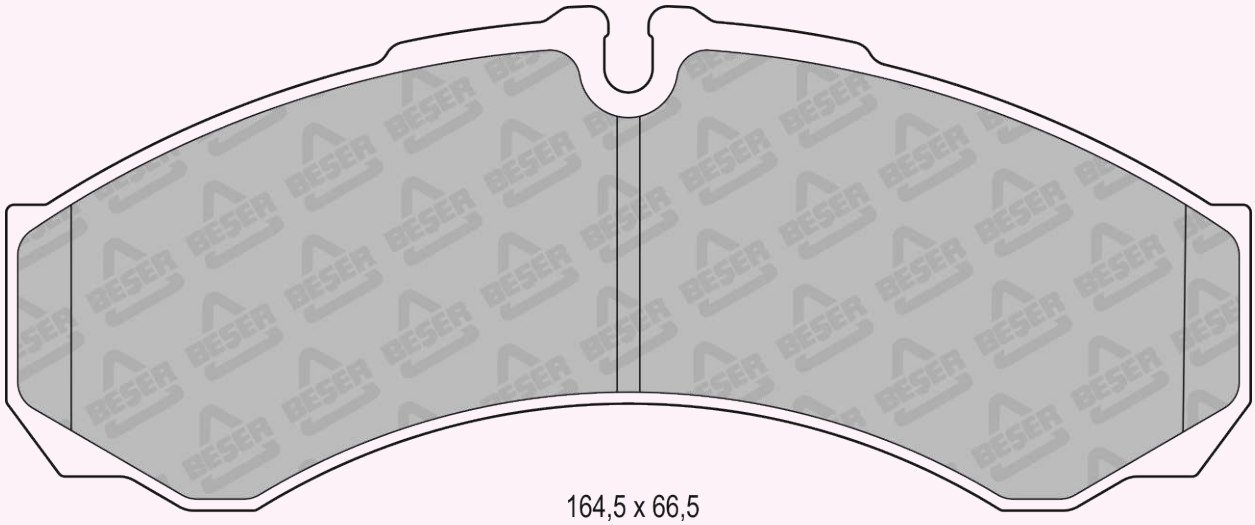

164,5 x 66,5

REFERENCE	T(mm)	REMARKS	MAKE	F/R	WVA No
3575/2	17	4 PADS PLAIN	IVECO	F	29121

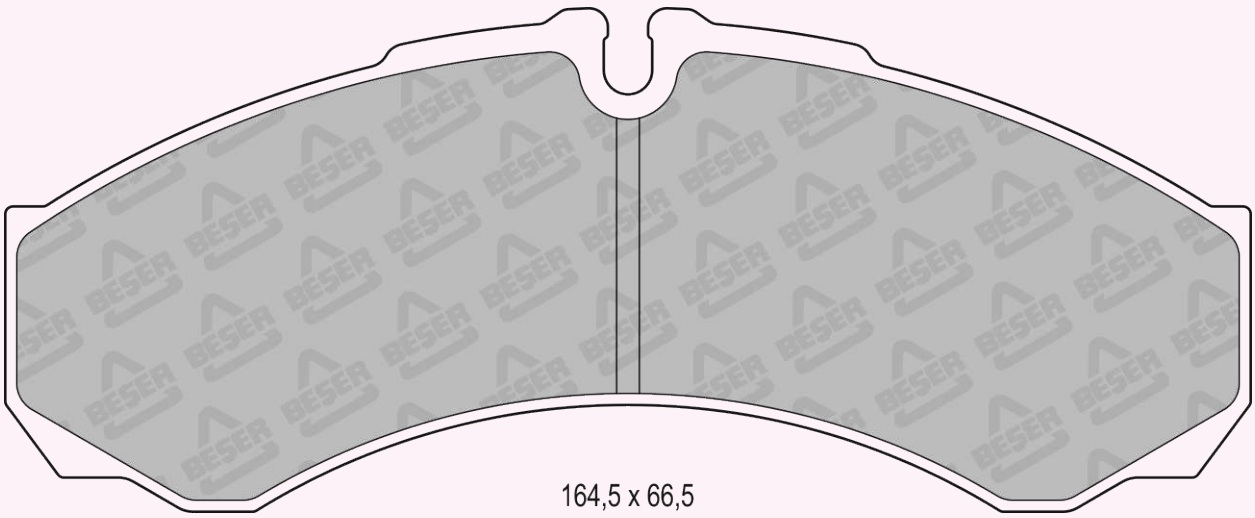

164,5 x 66,5

REFERENCE	T(mm)	REMARKS	MAKE	F/R	WVA No
3577	16	2 PADS WITH WEAR SENSOR	NISSAN	F	23004 23005 23006

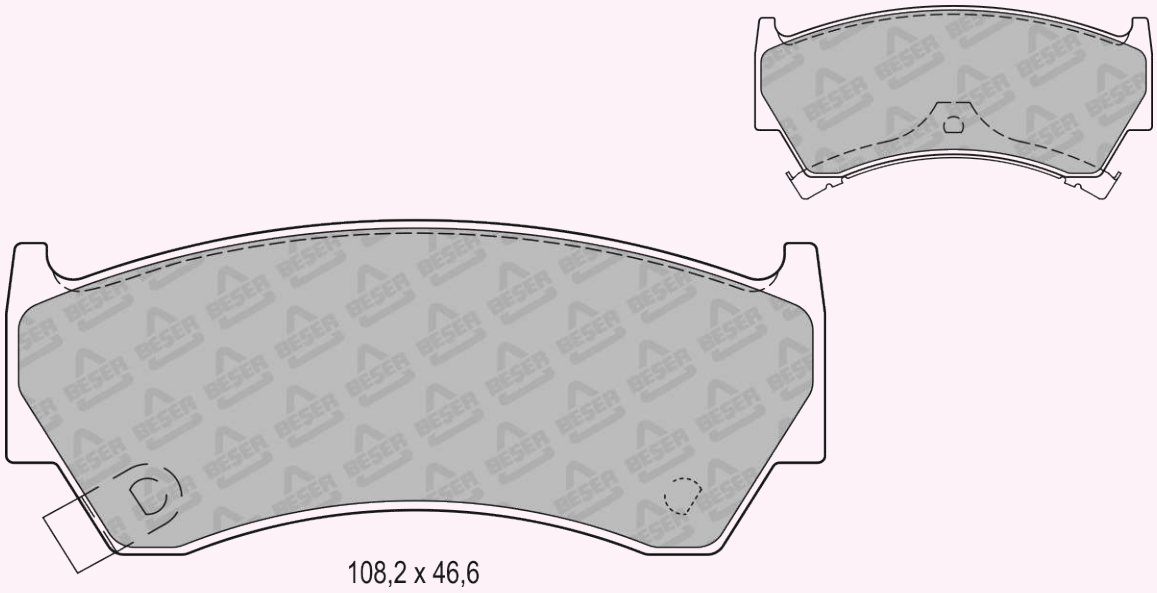

108,2 x 46,6

REFERENCE	T(mm)	REMARKS	MAKE	F/R	WVA No
3578	17	2 PADS PISTON CLIP	BMW-WIESMANN	R	20995 20996

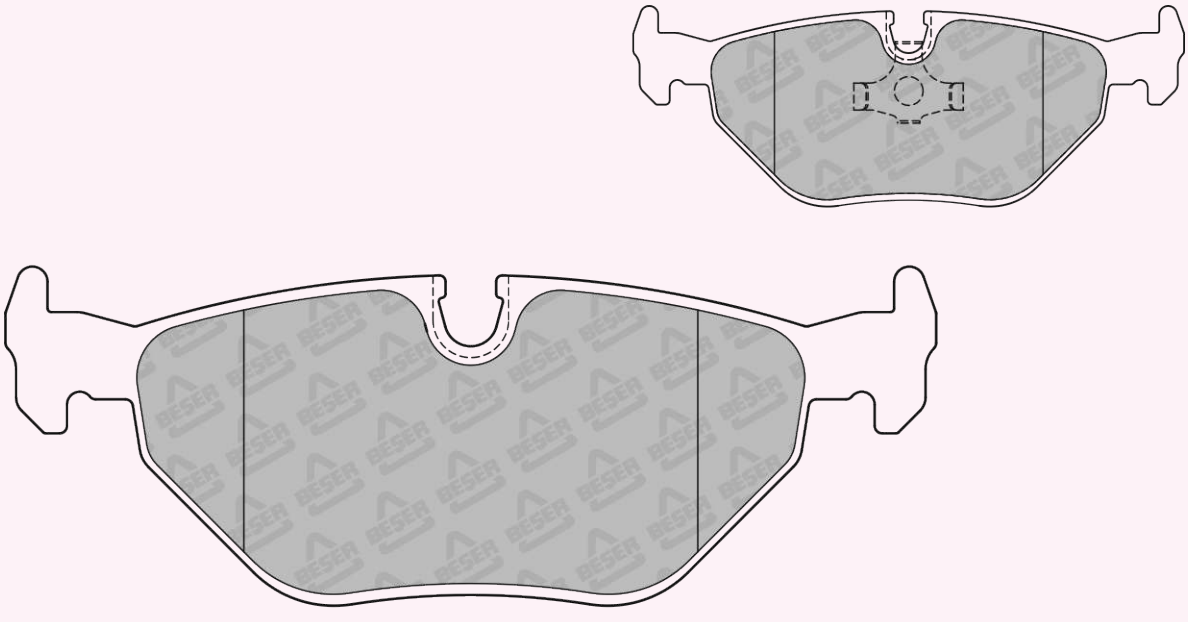

123 x 44,8

REFERENCE	T(mm)	REMARKS	MAKE	F/R	WVA No
3579	14,7	2 PADS WITH WEAR SENSOR	TOYOTA	F	20767 20768 20854

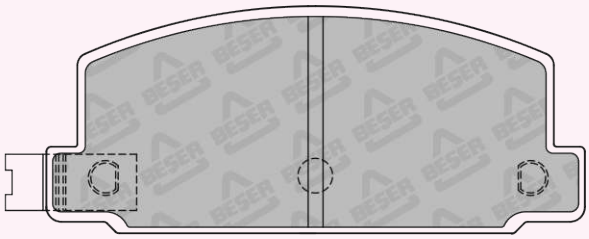

108,5 x 45,8
(NOT SCALE)

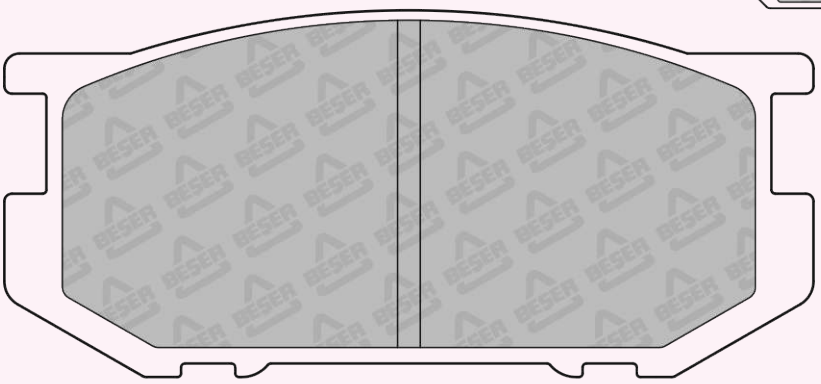

107 x 48,4

REFERENCE	T(mm)	REMARKS	MAKE	F/R	WVA No
3580	18	2 PADS WITH WEAR SENSOR (205mm)	CITROEN - DALLAS - PEUGEOT RENAULT - TALBOT - WUUNG	F	20905 20906 20986 20987

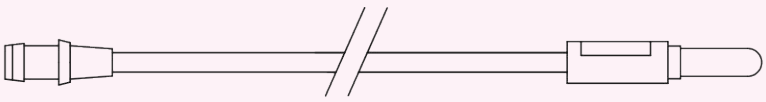

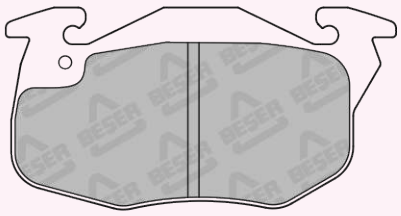

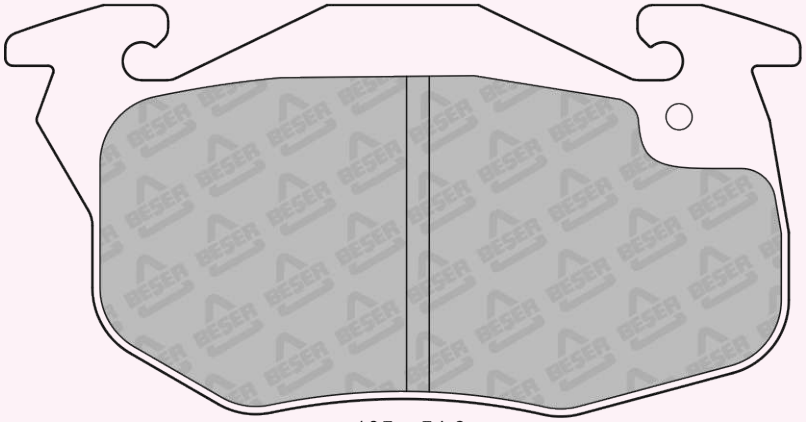

105 x 54,3

REFERENCE	T(mm)	REMARKS	MAKE	F/R	WVA No
3581	16	4 PADS PLAIN	CHRYSLER MERCEDES BENZ	R	21305

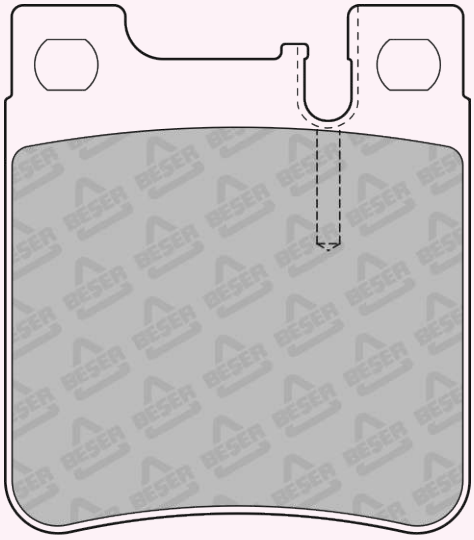

61,3 x 69,7

REFERENCE	T(mm)	REMARKS	MAKE	F/R	WVA No
3582	15	2 PADS WITH WEAR SENSOR	ACURA - HONDA	F	20099 20104 20108

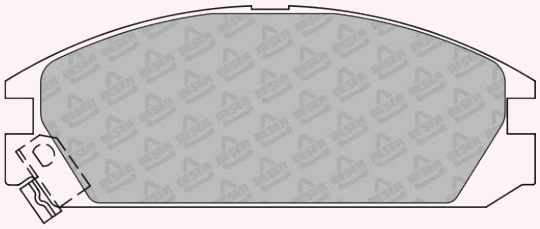

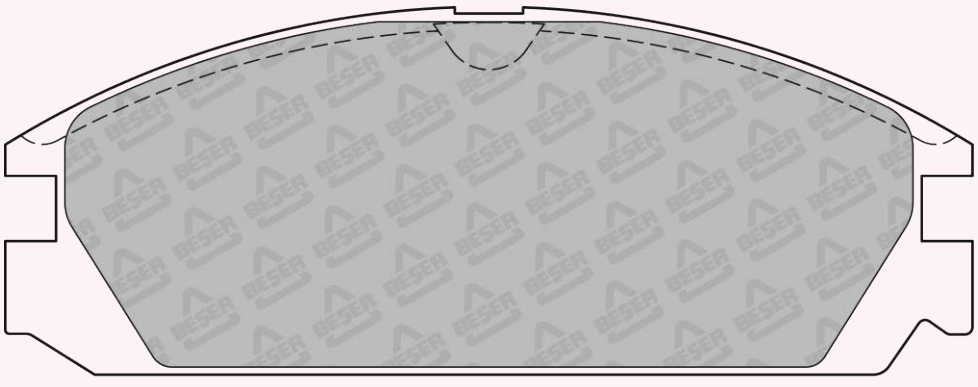

127,8 x 48,5

REFERENCE	T(mm)	REMARKS	MAKE	F/R	WVA No
3583	14,7	2 PADS PISTON CLIP	SAAB-VOLVO	R	21089 21090

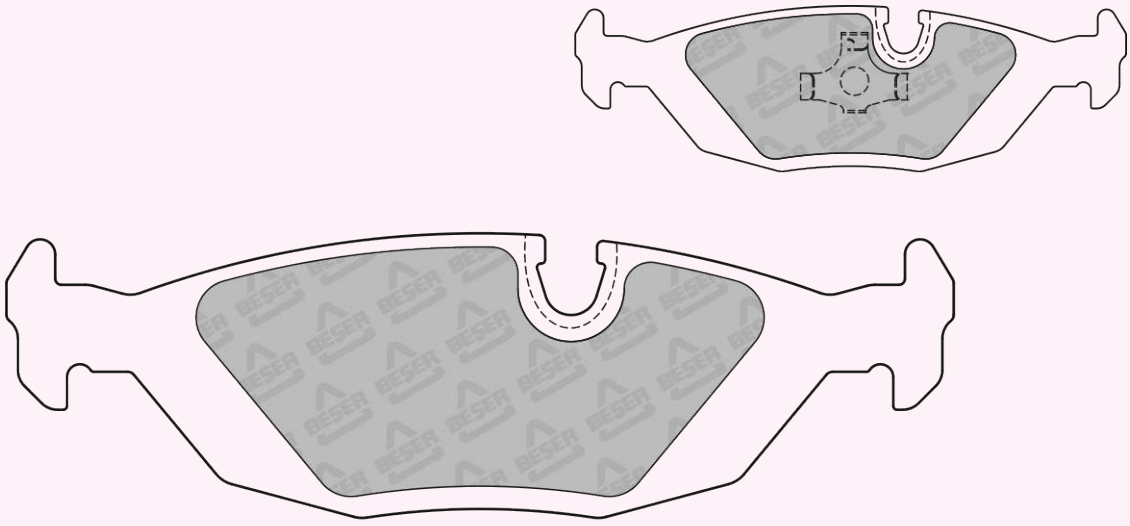

125,1 x 37,6

REFERENCE	T(mm)	REMARKS	MAKE	F/R	WVA No
3584	17,5	2 PADS PISTON CLIP	DAIMLER - JAGUAR	F	20968 23126

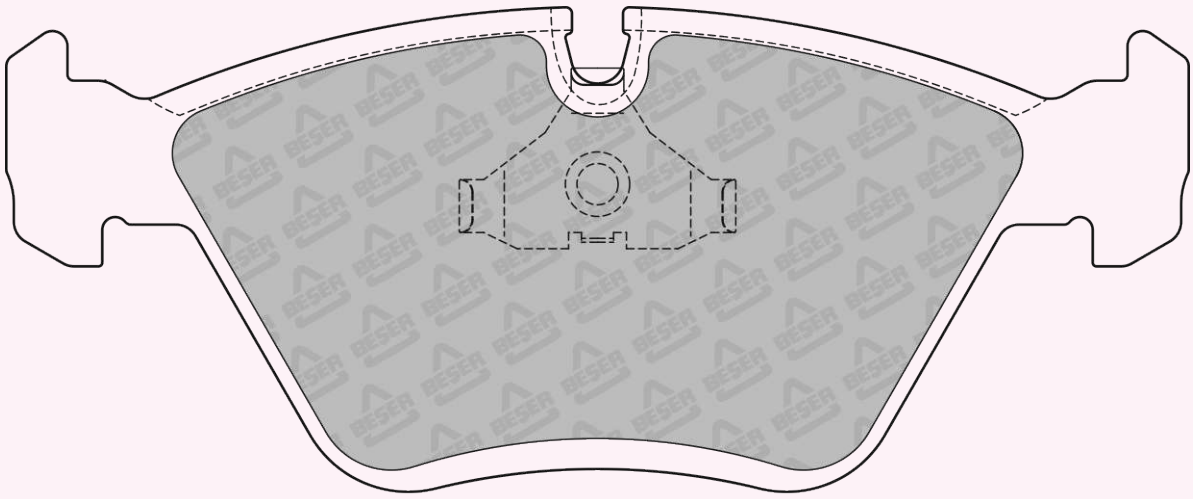

156,3 x 63,9

REFERENCE	T(mm)	REMARKS	MAKE	F/R	WVA No
3585	17	2 PADS INNER & 2 PADS OUTER	SEAT - VW	F	20887 20888

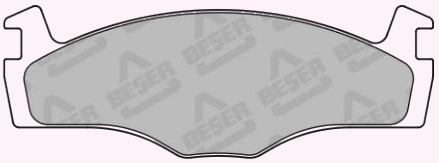

137,9 x 49
(NOT SCALE)

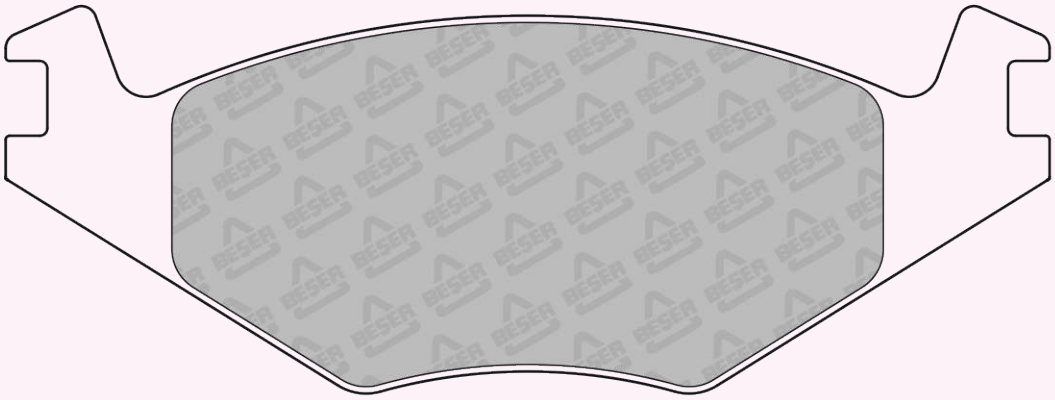

137,9 x 51,3

REFERENCE	T(mm)	REMARKS	MAKE	F/R	WVA No
3585/1	17	2 PADS INNER & 2 PADS OUTER WITH 4 SPINGS	SEAT - VW	F	20887 20888

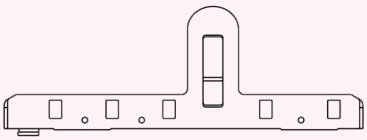

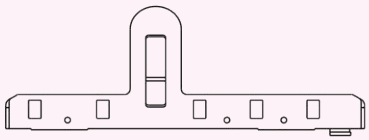



137,9 x 49
(NOT SCALE)

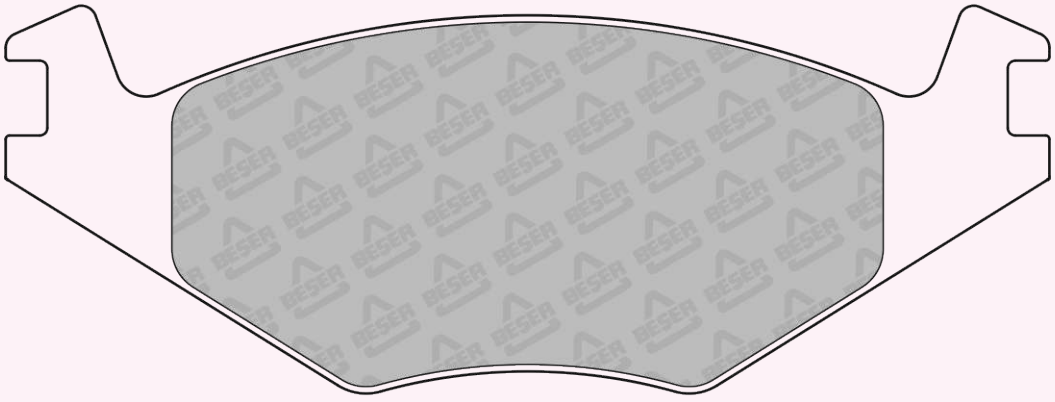

137,9 x 51,3

REFERENCE	T(mm)	REMARKS	MAKE	F/R	WVA No
3586	19	2 PADS WITH WEAR SENSOR (820mm)	FIAT	F	---

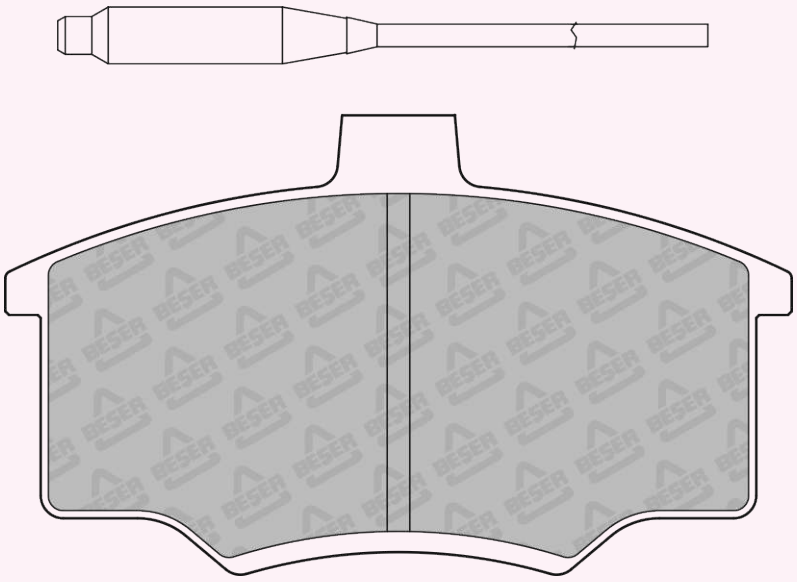

103,8 x 58,4

REFERENCE	T(mm)	REMARKS	MAKE	F/R	WVA No
3587	14,5	2 PADS WITH WEAR SENSOR (130mm)	ALPINA - CITROEN	F	20635

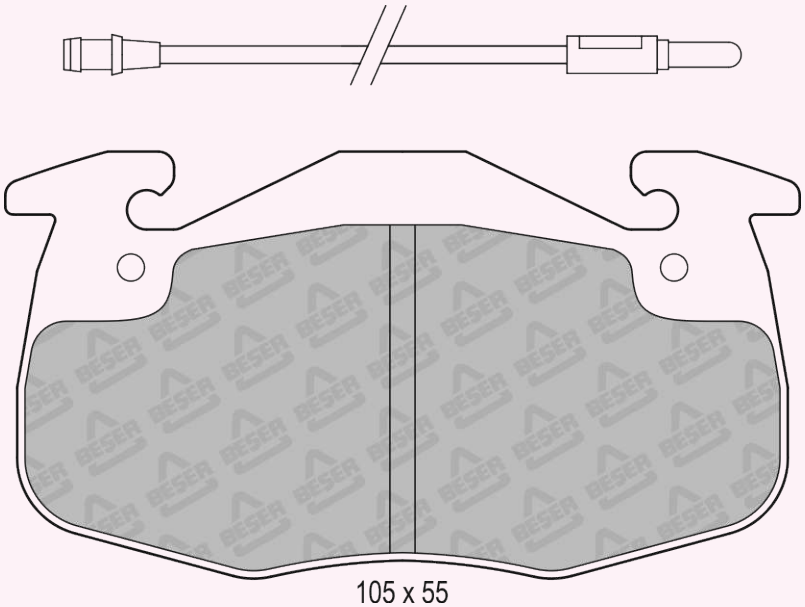

105 x 55

REFERENCE	T(mm)	REMARKS	MAKE	F/R	WVA No
3588	15	2 PAD WITH WEAR SENSOR (1100mm)	GM	F	---

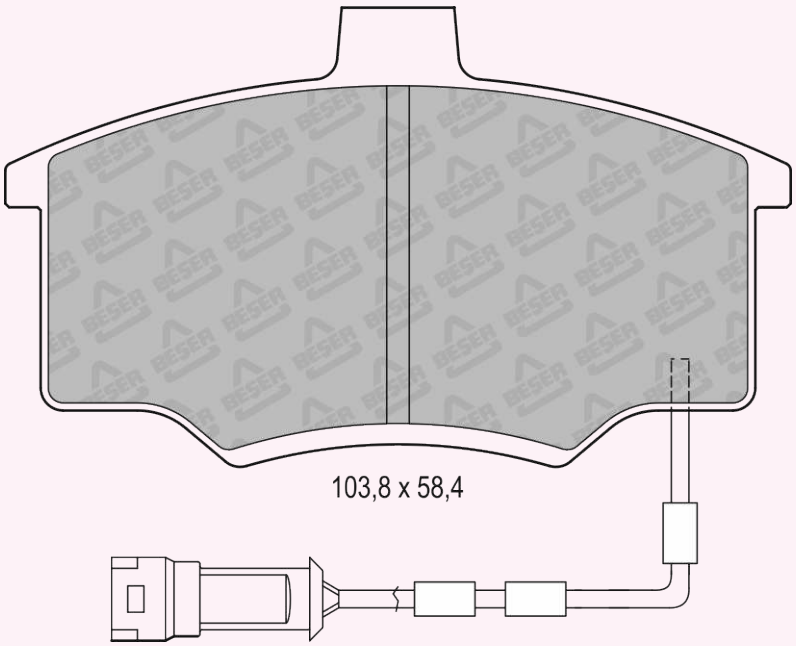

REFERENCE	T(mm)	REMARKS	MAKE	F/R	WVA No
3589	17,5	2 PADS PISTON CLIP	FORD	F	21202 21203

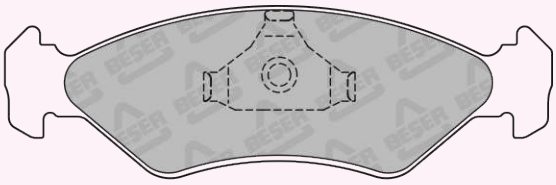

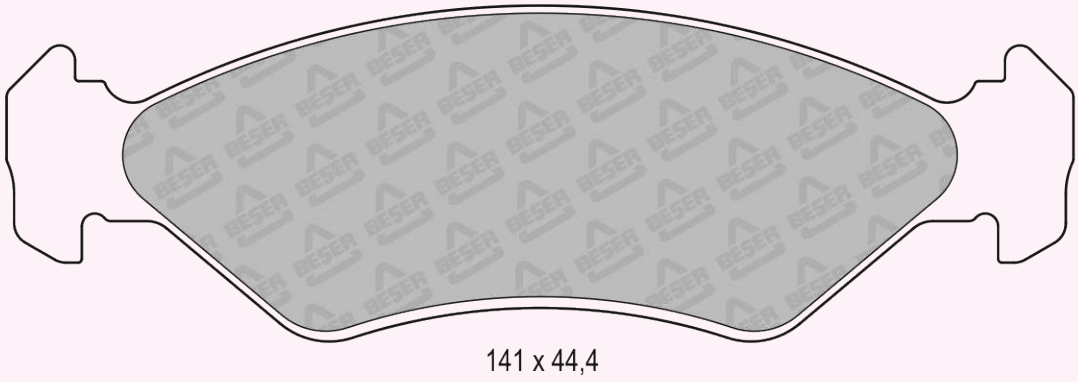

REFERENCE	T(mm)	REMARKS	MAKE	F/R	WVA No
3590	19,5	2 PADS WHIT WEAR SENSOR	AUDI - VW	F	20676 20678

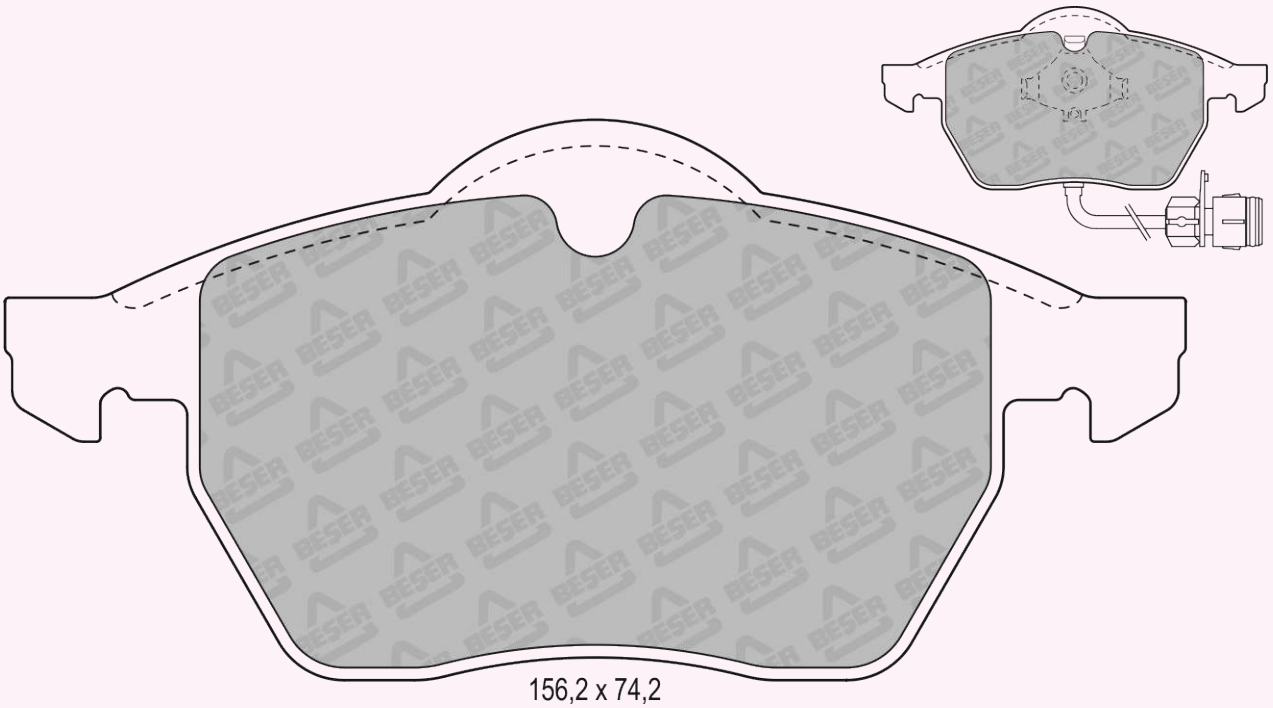

REFERENCE	T(mm)	REMARKS	MAKE	F/R	WVA No
3590/1	19.5	2 PADS WITH WEAR SENSOR	AUDI - SEAT - SKODA - VW	F	20676 21911 23392

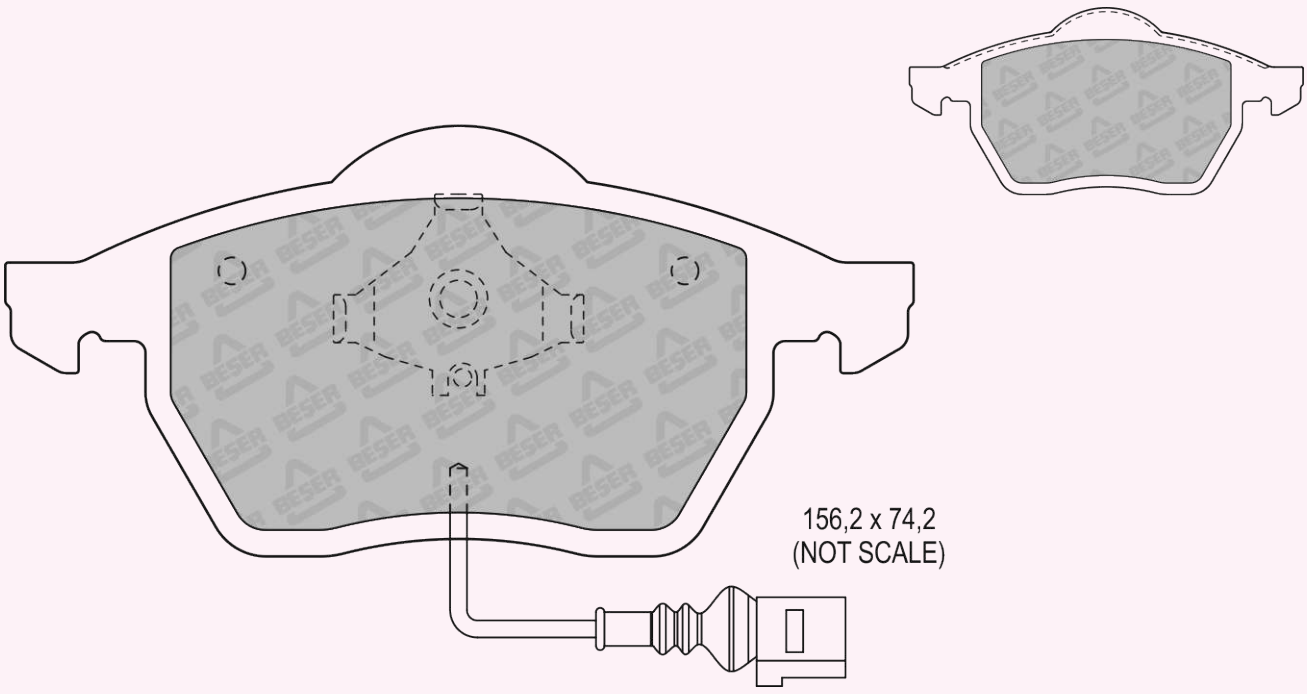

REFERENCE	T(mm)	REMARKS	MAKE	F/R	WVA No
3590/2	19.5	2 PADS WITH WEAR SENSOR	AUDI - VW	F	21848 21849 23324

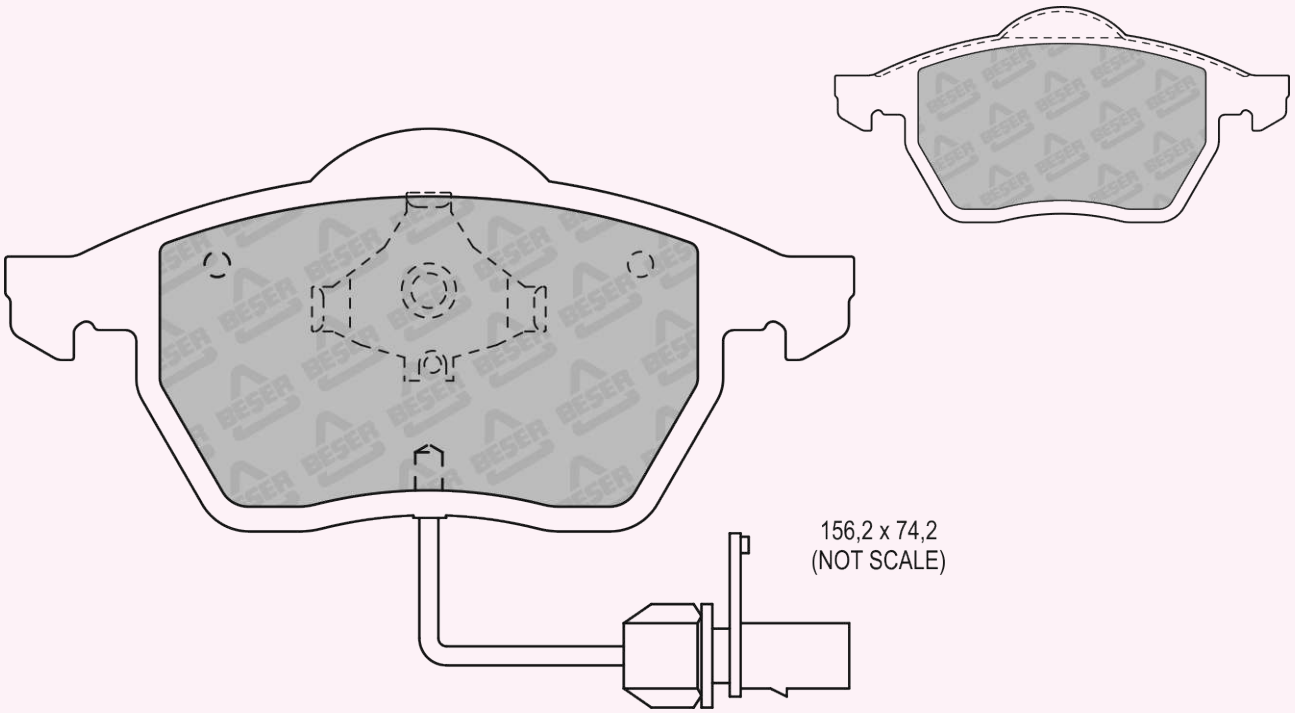

REFERENCE	T(mm)	REMARKS	MAKE	F/R	WVA No
3592	11	2 PADS WITH LUG 2 PADS W/O LUG	PEUGEOT - RENAULT	F	20315 20636

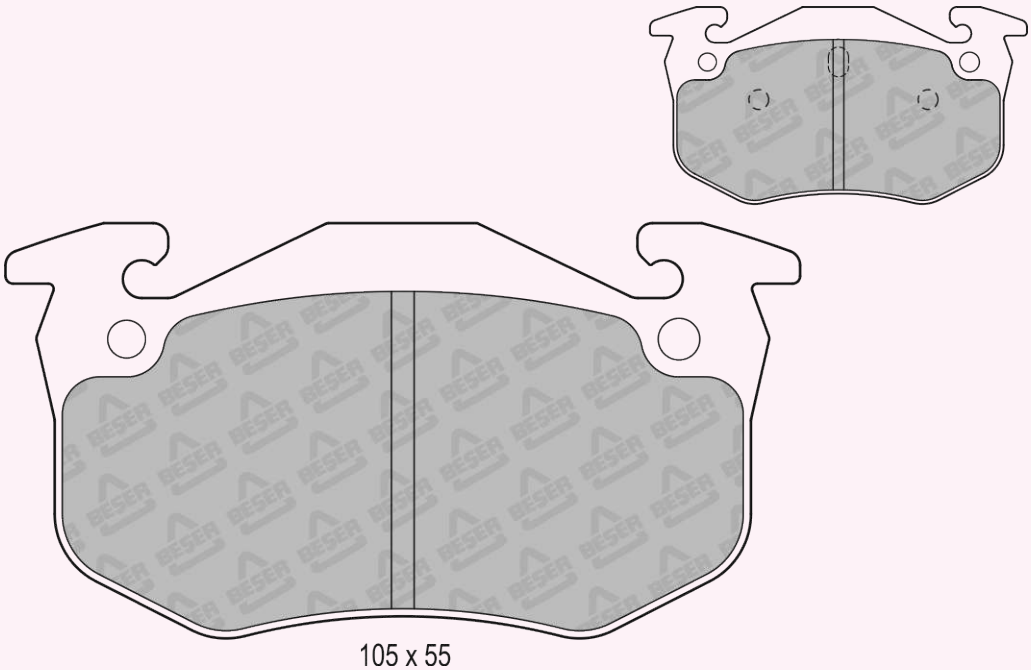

REFERENCE	T(mm)	REMARKS	MAKE	F/R	WVA No
3593	18	2 PADS WITH WEAR SENSOR	FORD	F	21394 21638 23071

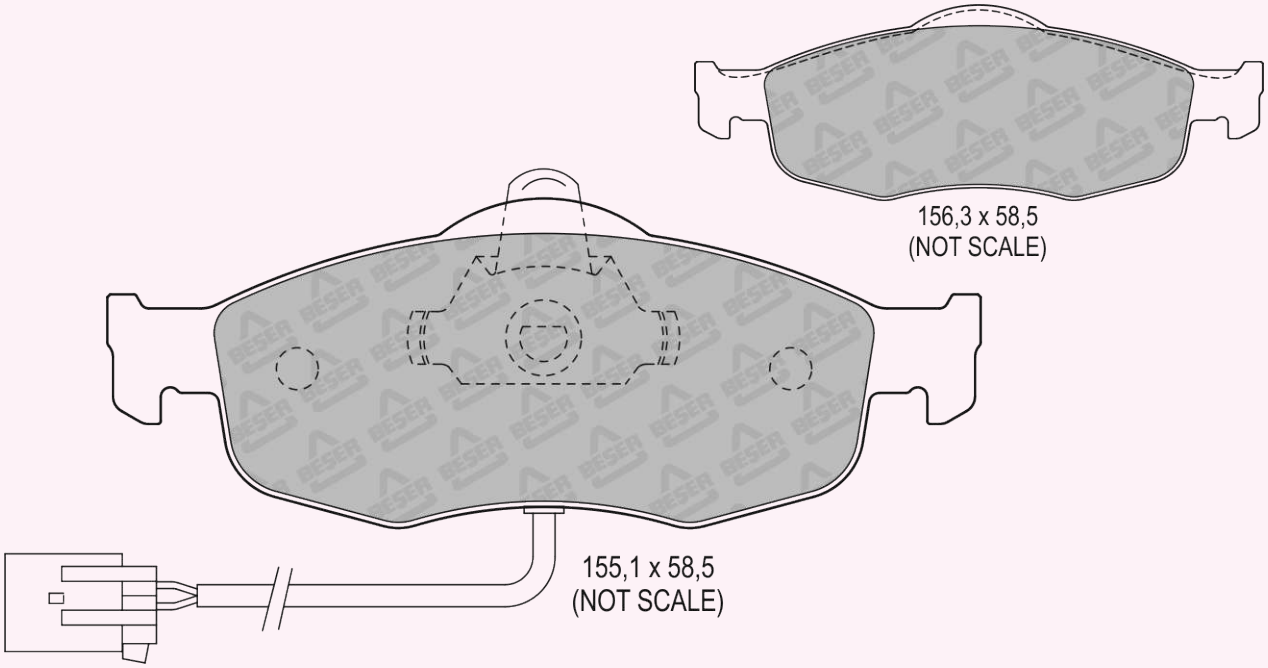

REFERENCE	T(mm)	REMARKS	MAKE	F/R	WVA No
3594	17,5	2 PADS PISTON CLIP	FORD	F	23101 23102

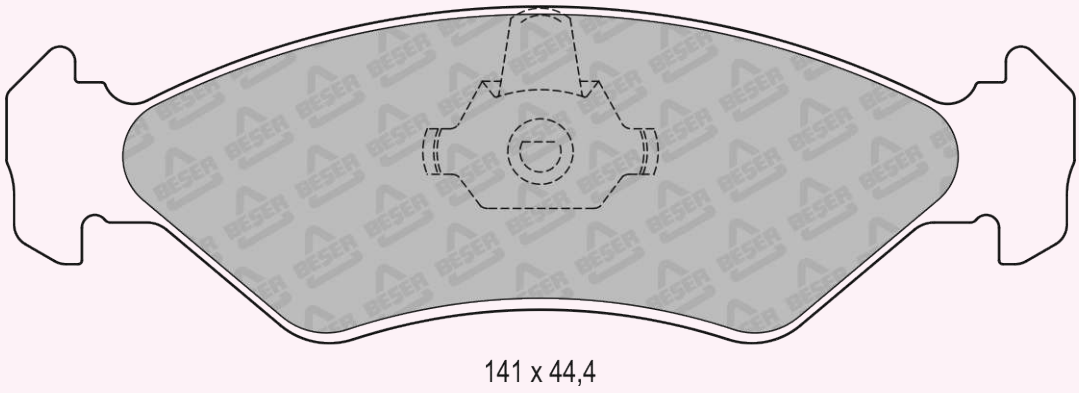

REFERENCE	T(mm)	REMARKS	MAKE	F/R	WVA No
3595	18,7	2 PADS WITH WEAR SENSOR (200mm)	CITROEN - FIAT PEUGEOT	F	21797 21798

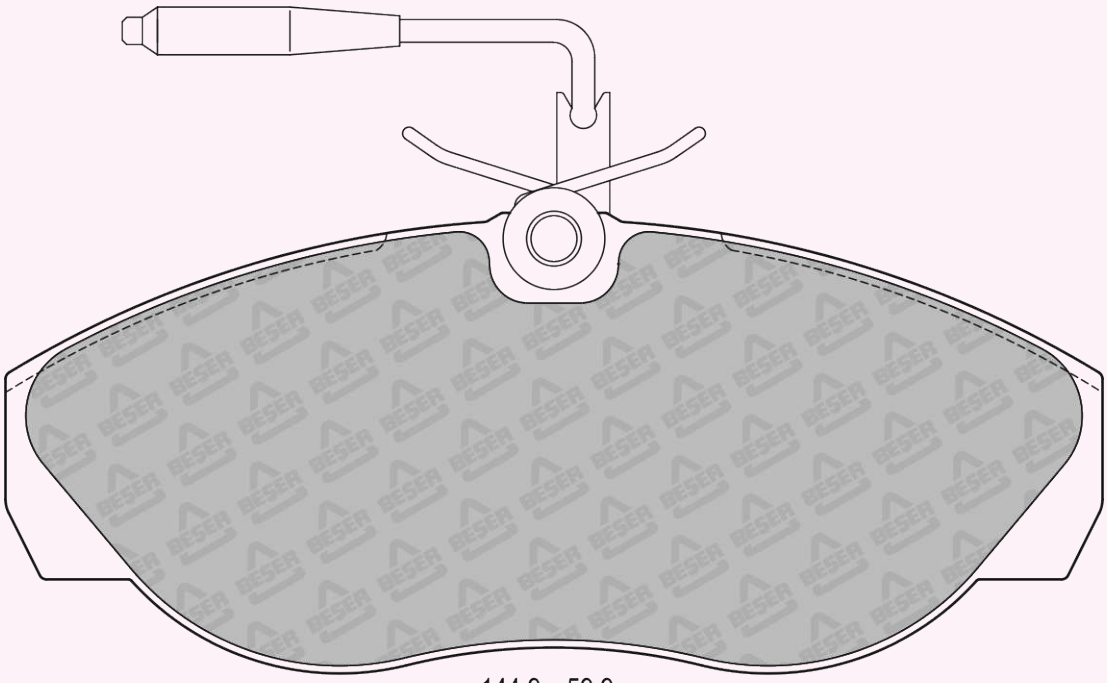

144,9 x 59,9

REFERENCE	T(mm)	REMARKS	MAKE	F/R	WVA No
3596	14,8	4 PADS WITH WIRE SPRINGS	LOTUS - RENAULT	R	20410 20423

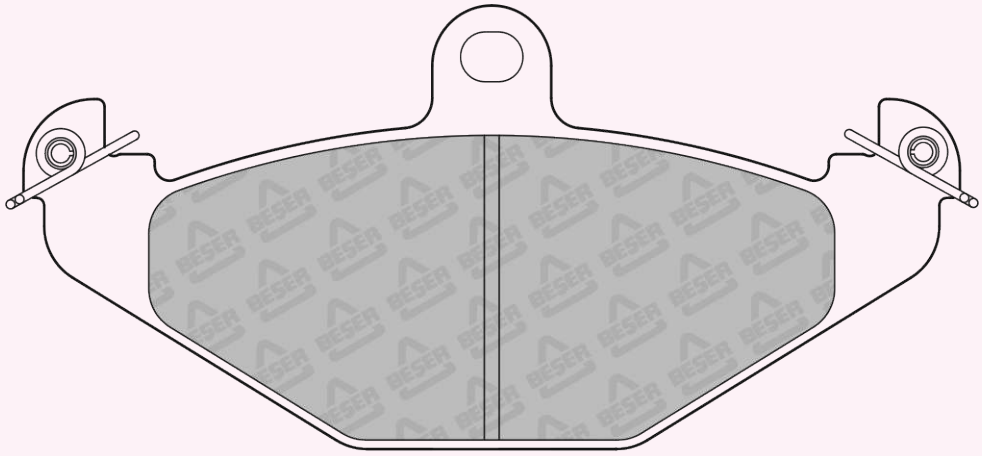

126 x 58,6

REFERENCE	T(mm)	REMARKS	MAKE	F/R	WVA No
3597	17,5	2 PADS WITH WEAR SENSOR (180mm)	FIAT	F	---

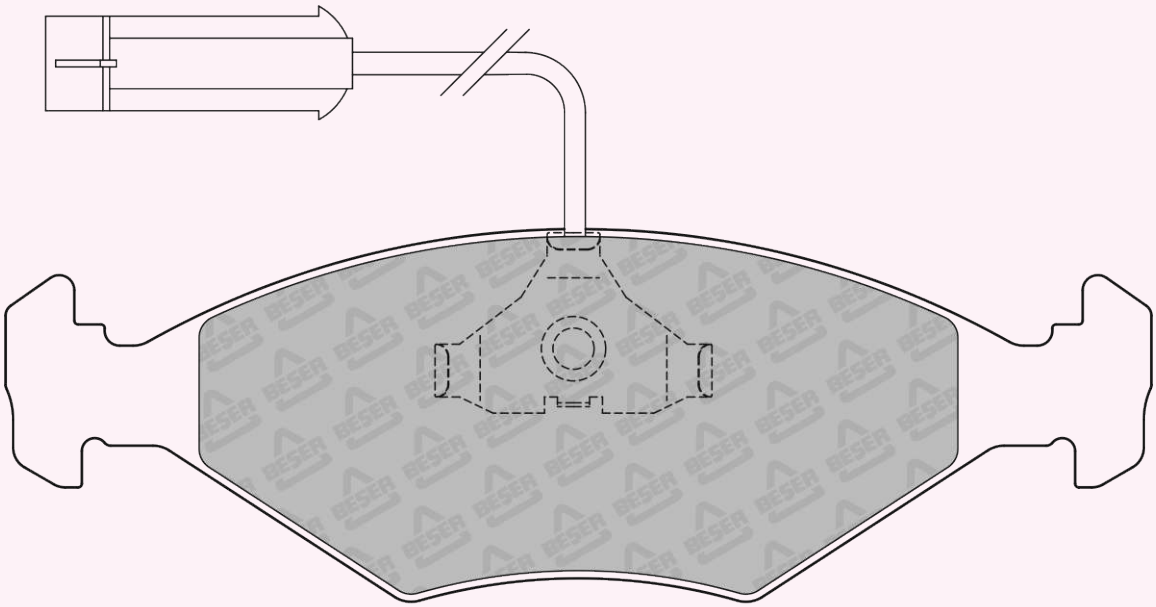

151,3 x 49,2

REFERENCE	T(mm)	REMARKS	MAKE	F/R	WVA No
3598	16,3	4 PADS PLAIN	NISSAN	F	21657

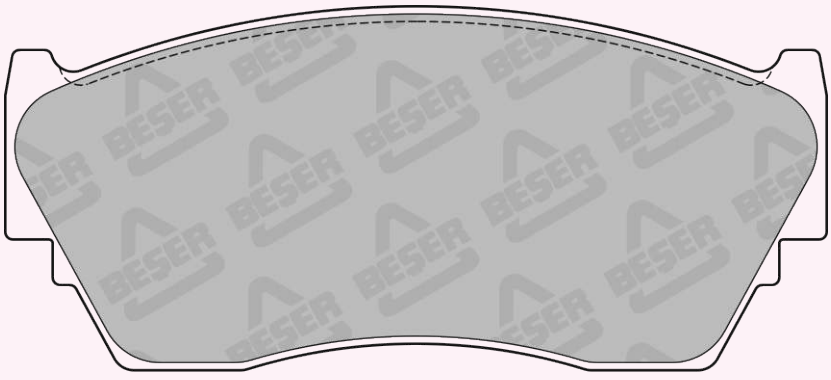

108,5 x 48

REFERENCE	T(mm)	REMARKS	MAKE	F/R	WVA No
3598/1	16,3	2 PADS WITH WEAR SENSOR (1B + 1C + 2D)	NISSAN	F	23005 23006 24089

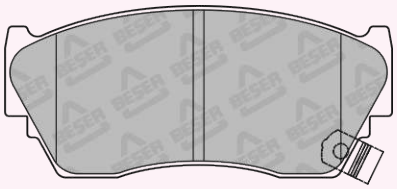

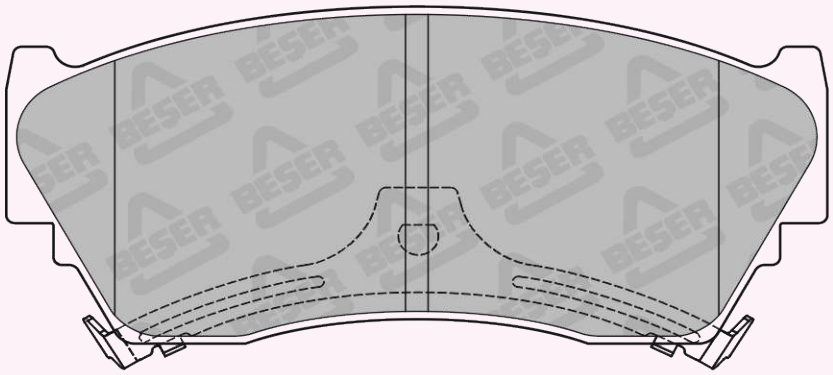

108,5 x 48

REFERENCE	T(mm)	REMARKS	MAKE	F/R	WVA No
3599	18	2 PADS WITH WEAR SENSOR (240mm)	RENAULT - PEUGEOT	F	20772 21463

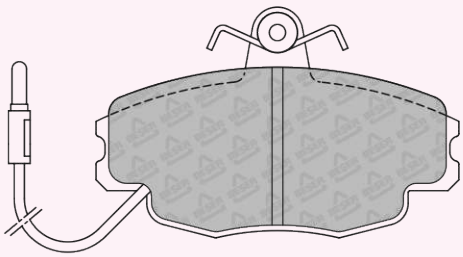

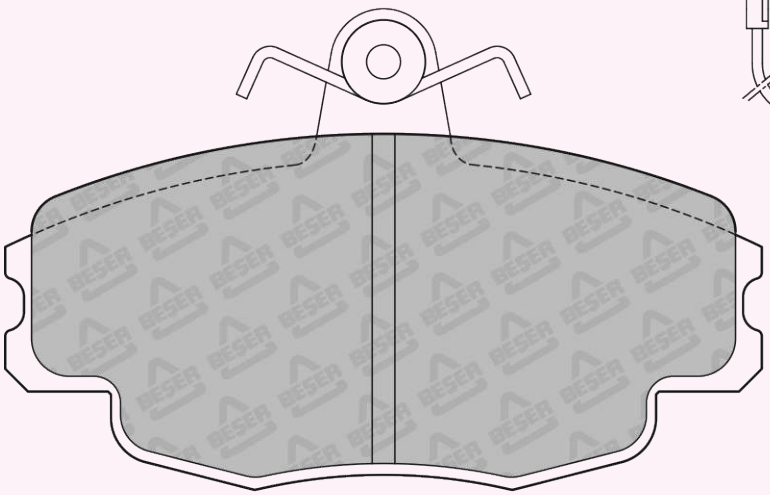

100 x 63,5

REFERENCE	T(mm)	REMARKS	MAKE	F/R	WVA No
3600	13,5	2 PADS WITH WEAR SENSOR	DAIHATSU	F	21338 21339 21340

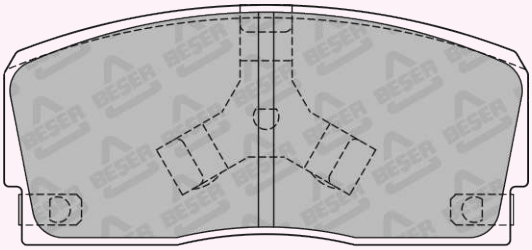

102,7 x 47
(NOT SCALE)

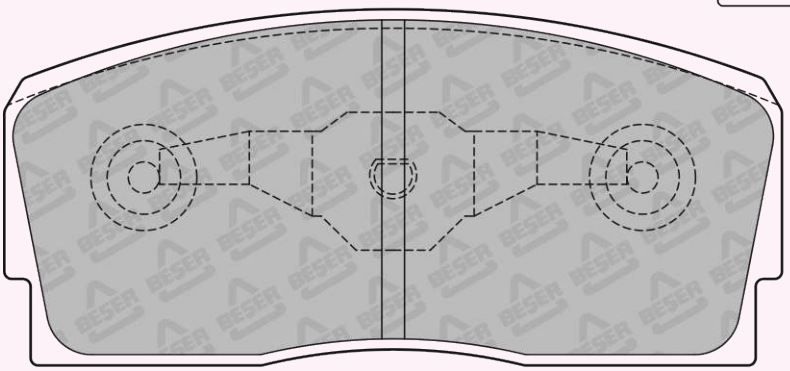

102,7 x 47

REFERENCE	T(mm)	REMARKS	MAKE	F/R	WVA No
3601	13,8	4 PADS WITH LUGS.	DAIHATSU - SUBARU	F	20563

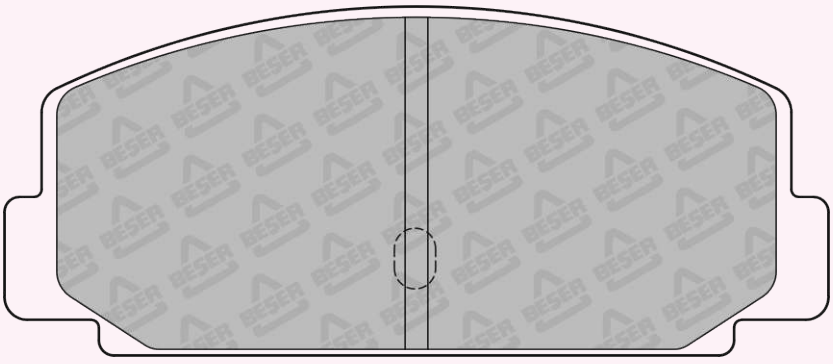

108,8 x 46

REFERENCE	T(mm)	REMARKS	MAKE	F/R	WVA No
3602	15,5	2 PADS WITH WEAR SENSOR	SUZUKI	F	23400

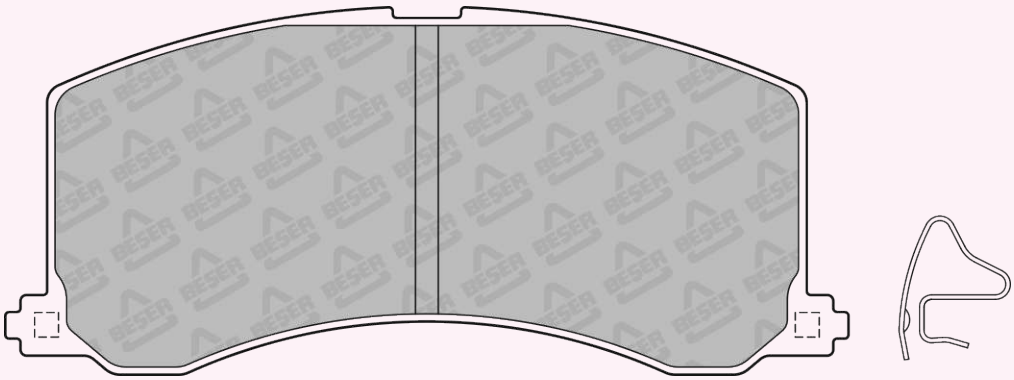

111,4 x 48,5

REFERENCE	T(mm)	REMARKS	MAKE	F/R	WVA No
3603	18	4 PADS PLAIN	FORD	F	21141

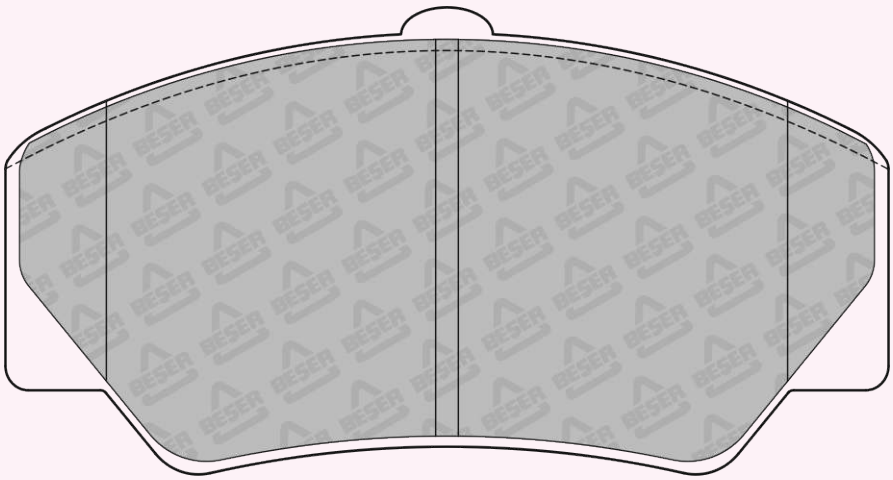

116,7 x 58,3

REFERENCE	T(mm)	REMARKS	MAKE	F/R	WVA No
3604	15	4 PADS WITH CHAMFERS	DAIHATSU - HUALI MITSUBISHI - PROTON - TOYOTA	F	21650

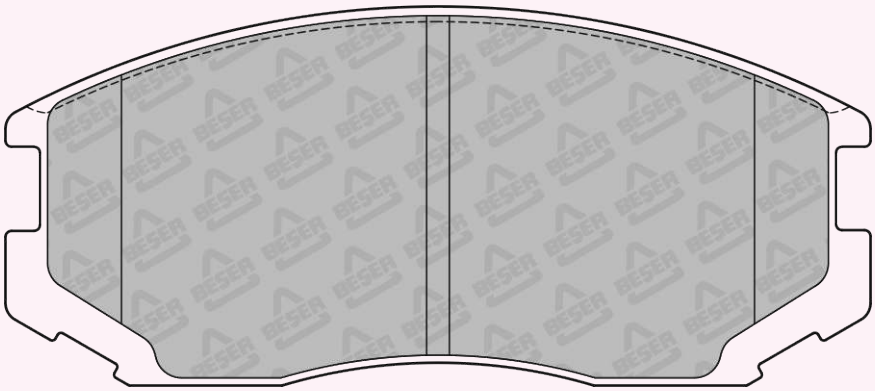

114,2 x 50

REFERENCE	T(mm)	REMARKS	MAKE	F/R	WVA No
3605	19,5	4 PADS PLAIN	VW	F	20979

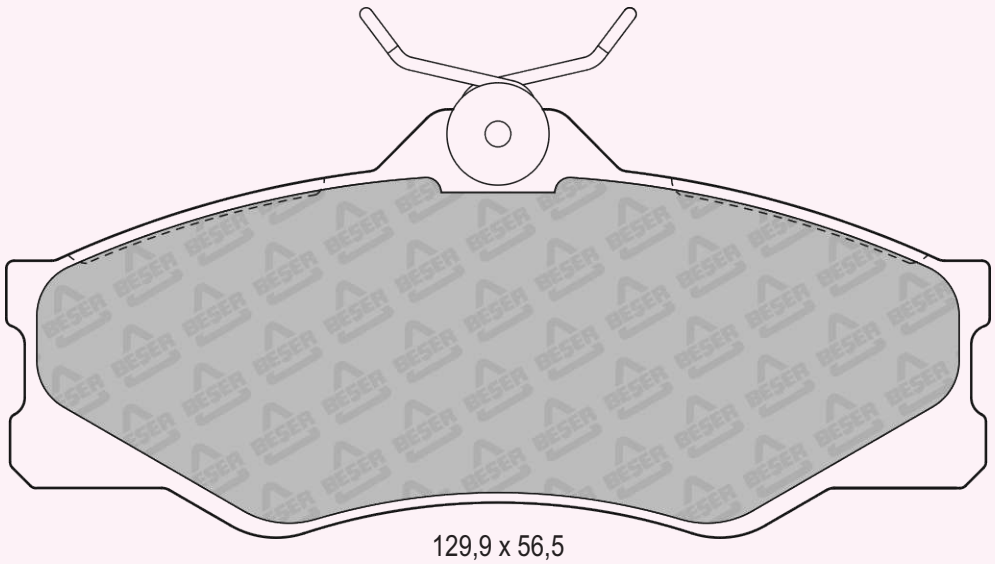

129,9 x 56,5

REFERENCE	T(mm)	REMARKS	MAKE	F/R	WVA No
3606	19,5	2 PADS PISTON CLIP	VW	F	21883 21885

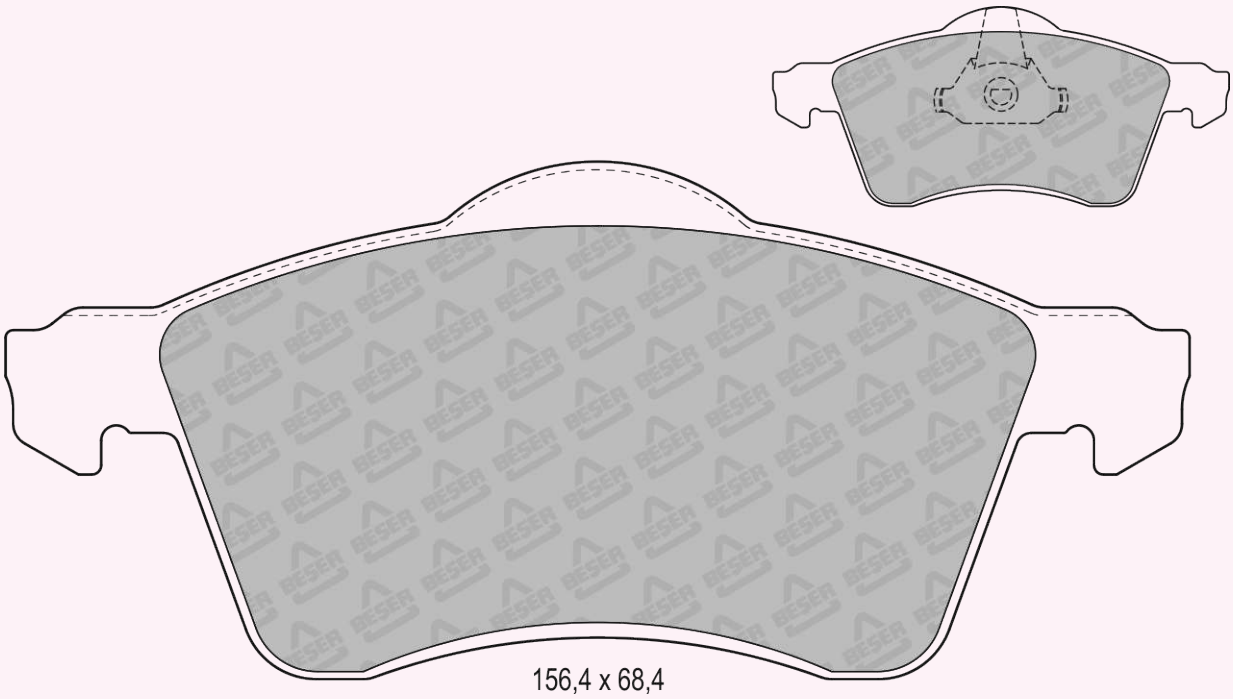

REFERENCE	T(mm)	REMARKS	MAKE	F/R	WVA No
3607	17,3	2 PADS WITH WEAR SENSOR	HONDA	F	21694 21695 21696

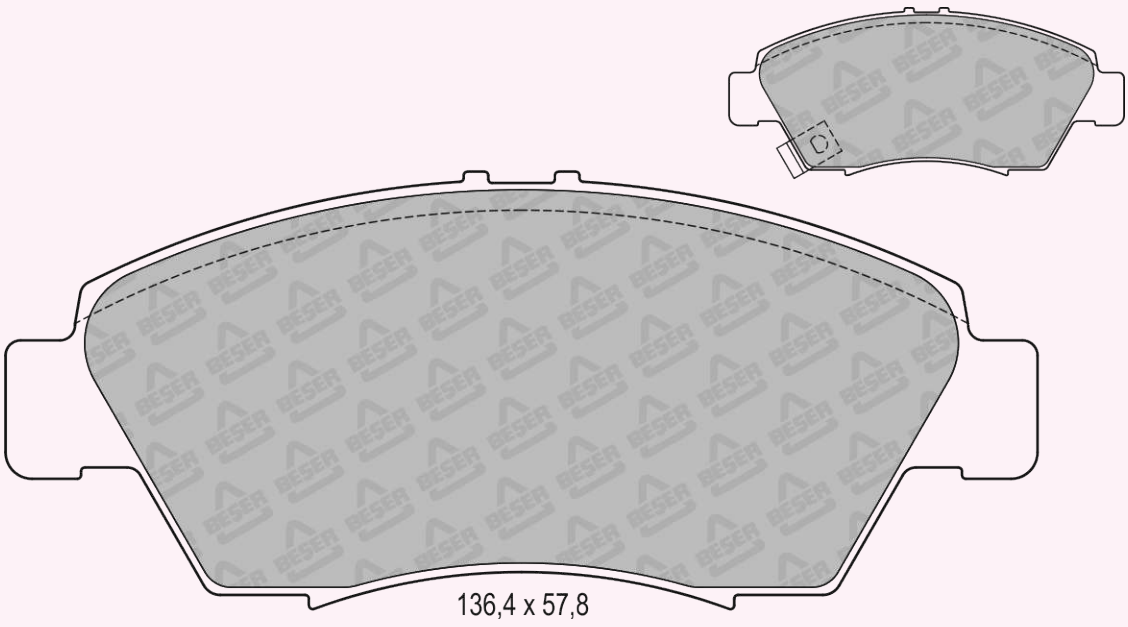

REFERENCE	T(mm)	REMARKS	MAKE	F/R	WVA No
3608	17	1 PAD WITH WEAR SENSOR (475mm)	FIAT - LANCIA ZASTAVA	F	21436 21437

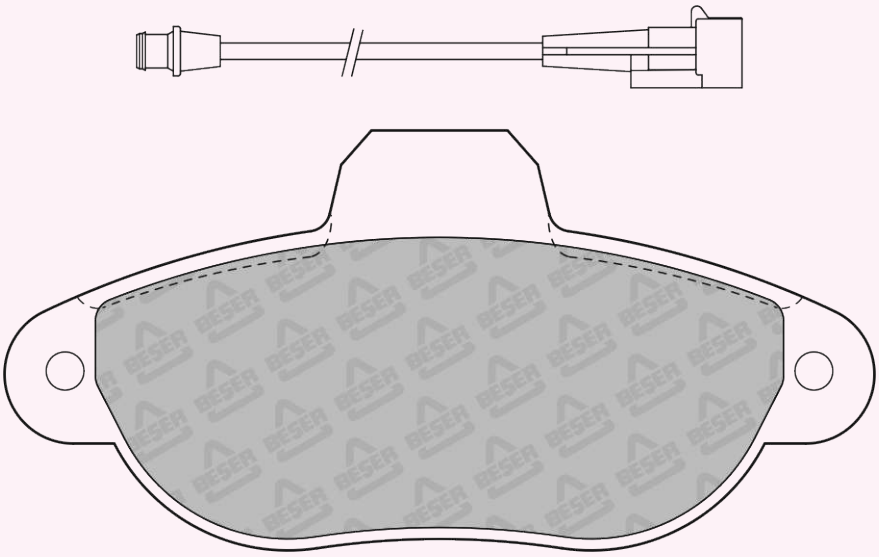

114,9 x 55,4

REFERENCE	T(mm)	REMARKS	MAKE	F/R	WVA No
3609	17	4 PADS PLAIN	BMW	F	21173

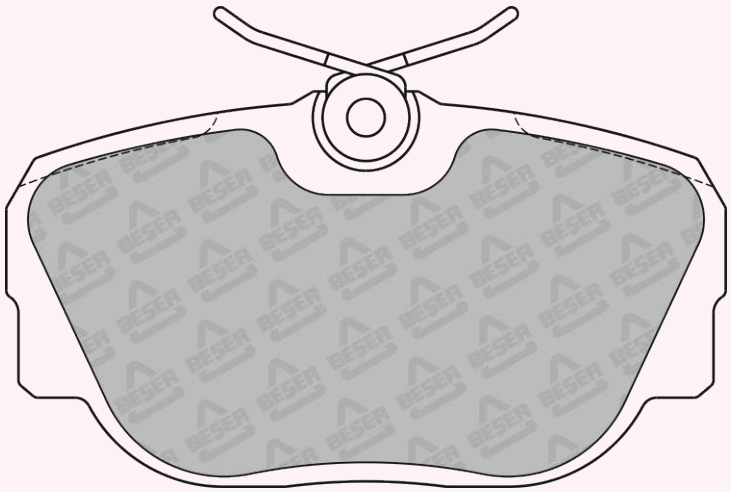

95 x 52

REFERENCE	T(mm)	REMARKS	MAKE	F/R	WVA No
3610	19	4 PADS WITH WEAR SENSOR (290-320mm)	CITROEN - PEUGEOT	F	20202 23169 23170

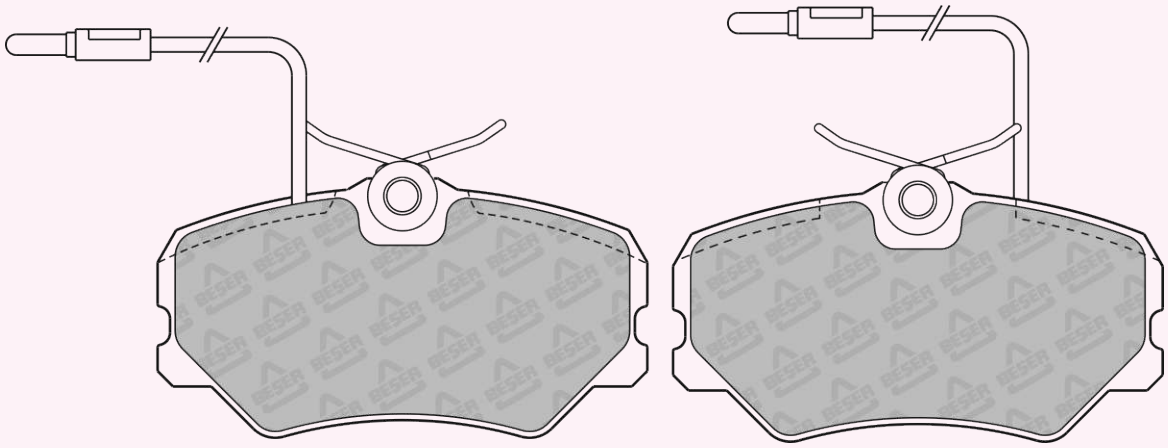

94,8 x 49
(NOT SCALE)

REFERENCE	T(mm)	REMARKS	MAKE	F/R	WVA No
3611	13,5	4 PADS PLAIN	MERCEDES BENZ	R	20687 20758

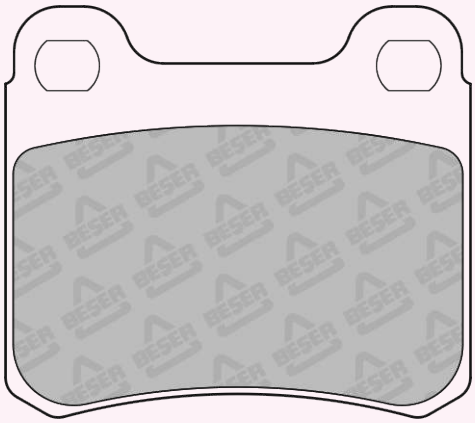

61,3 x 54,2

REFERENCE	T(mm)	REMARKS	MAKE	F/R	WVA No
3612	16,4	2 PADS WITH SRING	FIAT	R	---

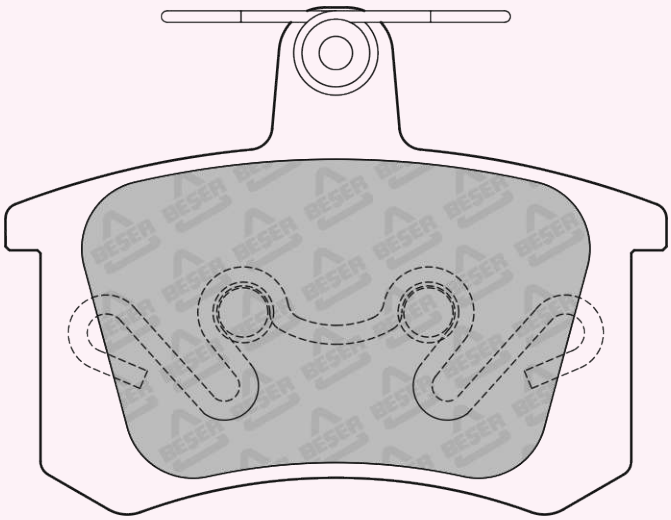

87,3 x 66,9

REFERENCE	T(mm)	REMARKS	MAKE	F/R	WVA No
3613	18,6	4 PADS PLAIN	FORD	F	---

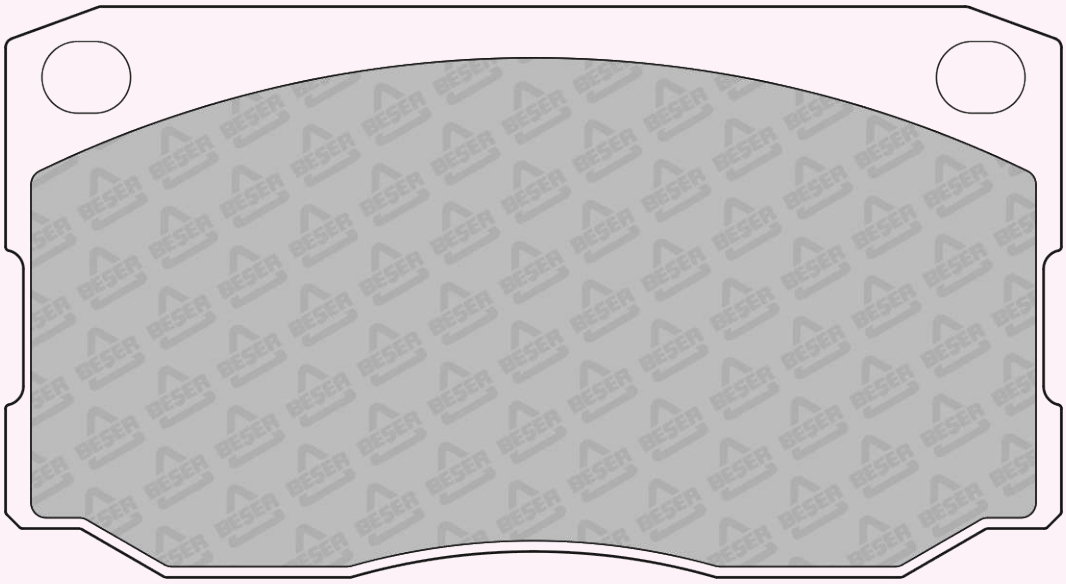

139,5 x 75,4

REFERENCE	T(mm)	REMARKS	MAKE	F/R	WVA No
3614	20	4 PADS WITH 2 SLOT	MERCEDES BENZ - VW	F/R	29076 29153

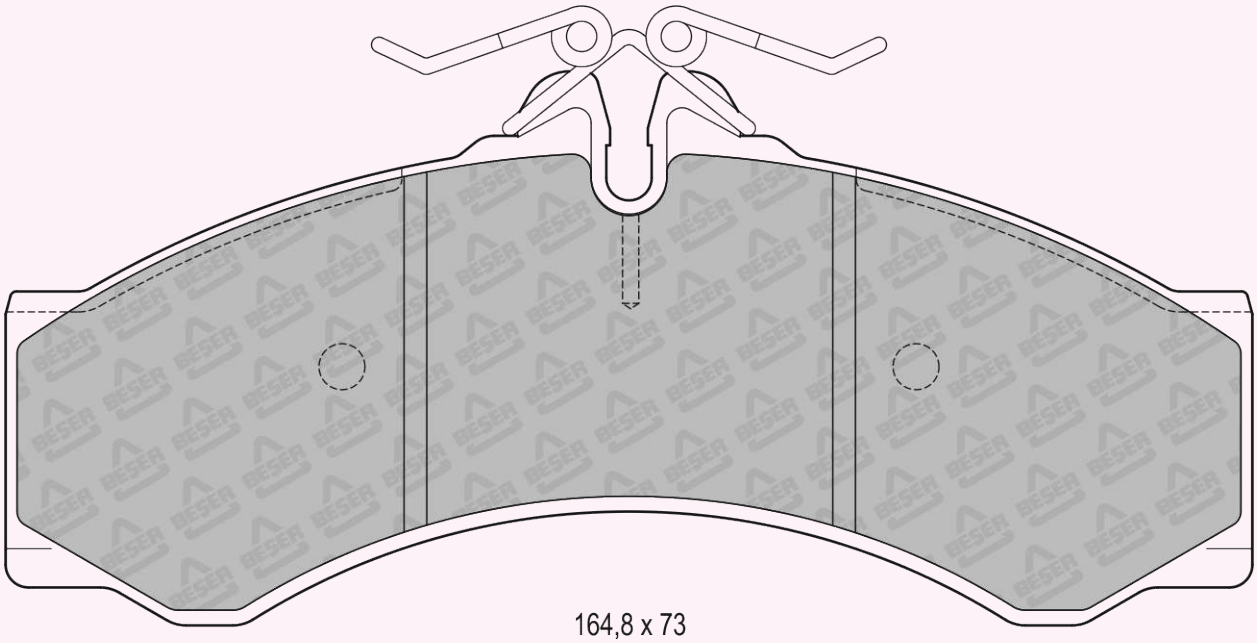

164,8 x 73

REFERENCE	T(mm)	REMARKS	MAKE	F/R	WVA No
3615	18	2 PADS PISTON CLIP	CHEVROLET - DAEWOO - FSO HOLDEN - OPEL ZAZ - VAUXHALL	F	21190 21862

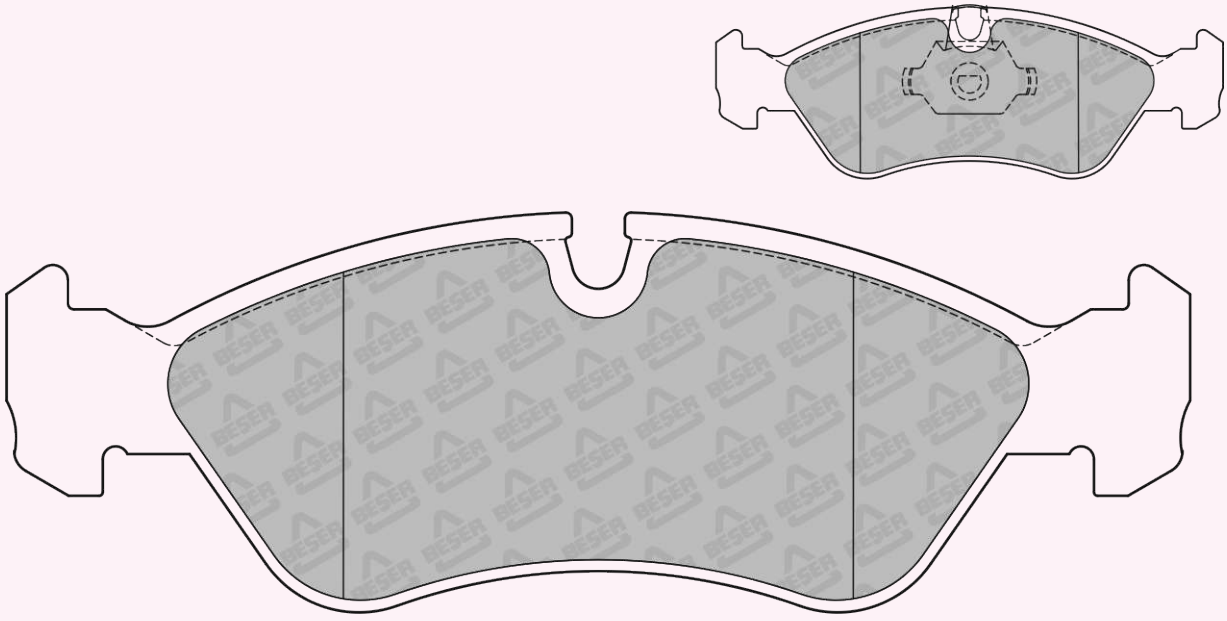

156,3 x 52,8

REFERENCE	T(mm)	REMARKS	MAKE	F/R	WVA No
3616	16,5	1 PAD WITH WEAR SENSOR (850mm)	FORD	F	---

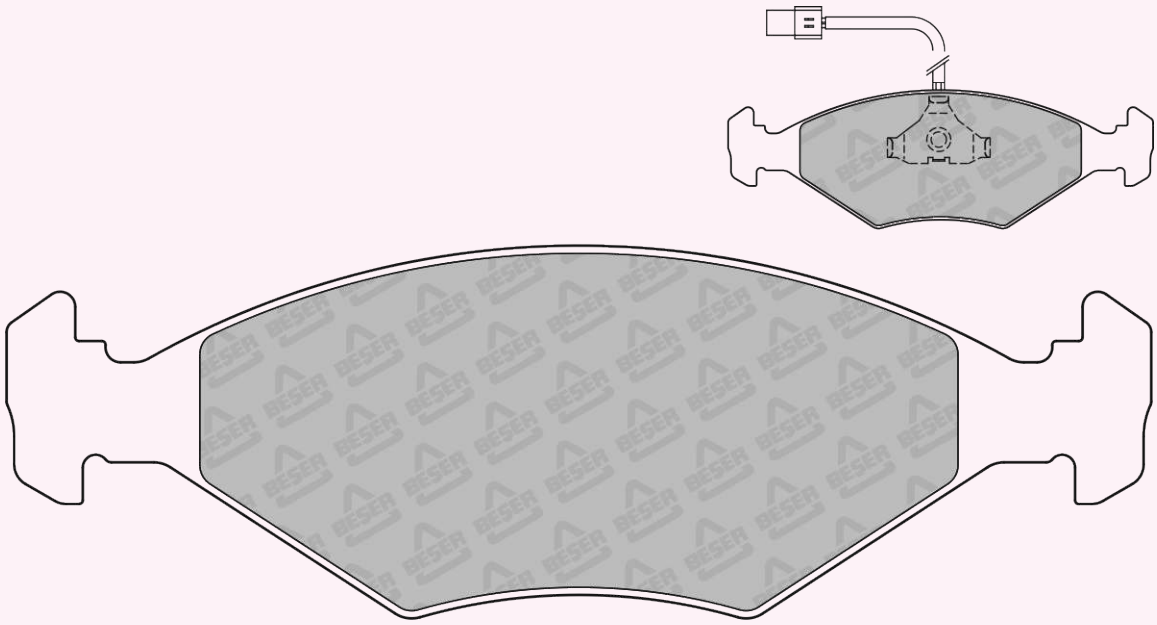

151,3 x 49,2

REFERENCE	T(mm)	REMARKS	MAKE	F/R	WVA No
3617	19	2 PAD WITH WEAR SENSOR (200mm)	ALFA ROMEO	F	21636 21637 23289

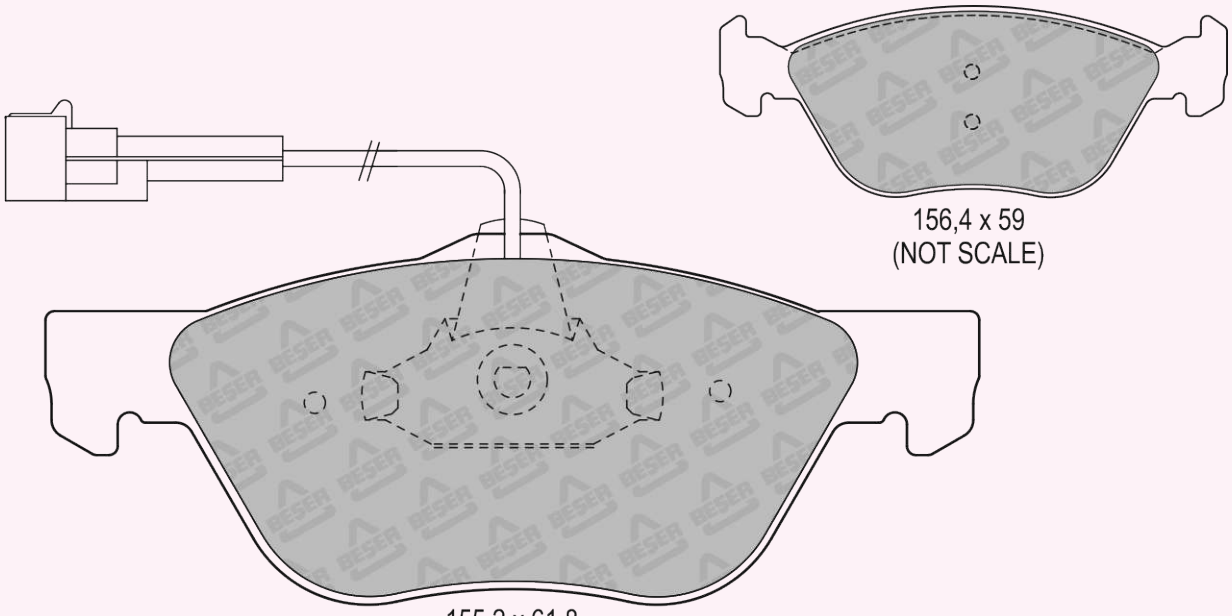

156,4 x 59
(NOT SCALE)

155,2 x 61,8
(NOT SCALE)

REFERENCE	T(mm)	REMARKS	MAKE	F/R	WVA No
3618	17,5	1 PAD WITH WEAR SENSOR (225mm)	ALFA ROMEO,FIAT LANCIA	F	21927 21928 21929

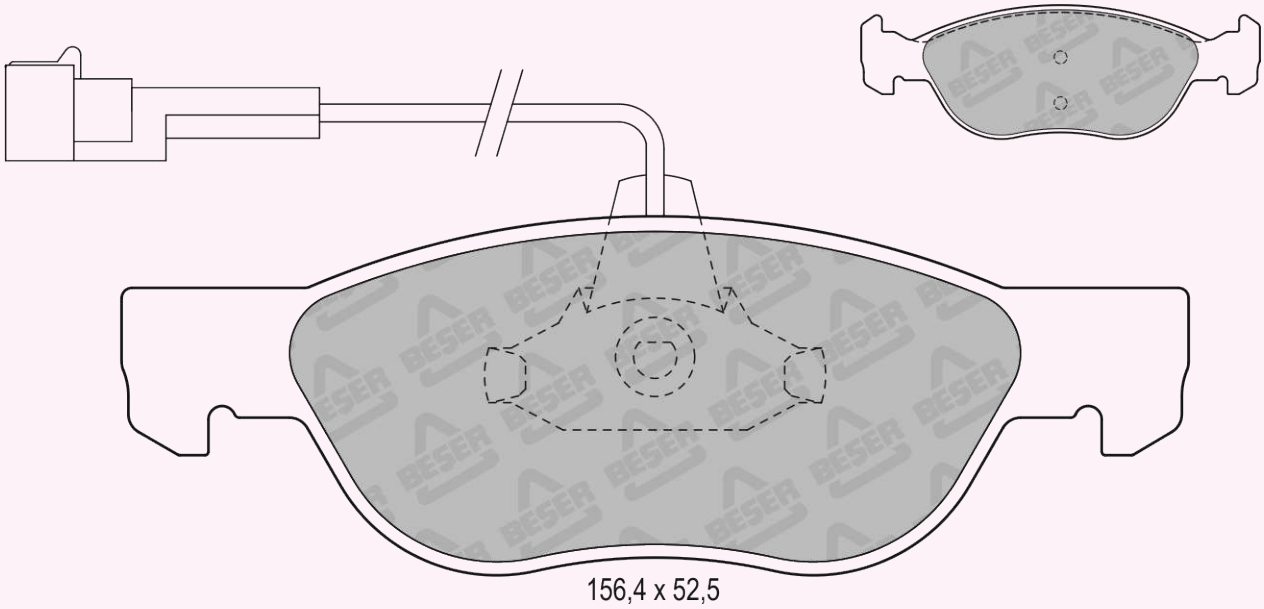

REFERENCE	T(mm)	REMARKS	MAKE	F/R	WVA No
3618/1	17,5	2 PADS PISTON CLIP	ALFA ROMEO,FIAT LANCIA	F	21927 21928

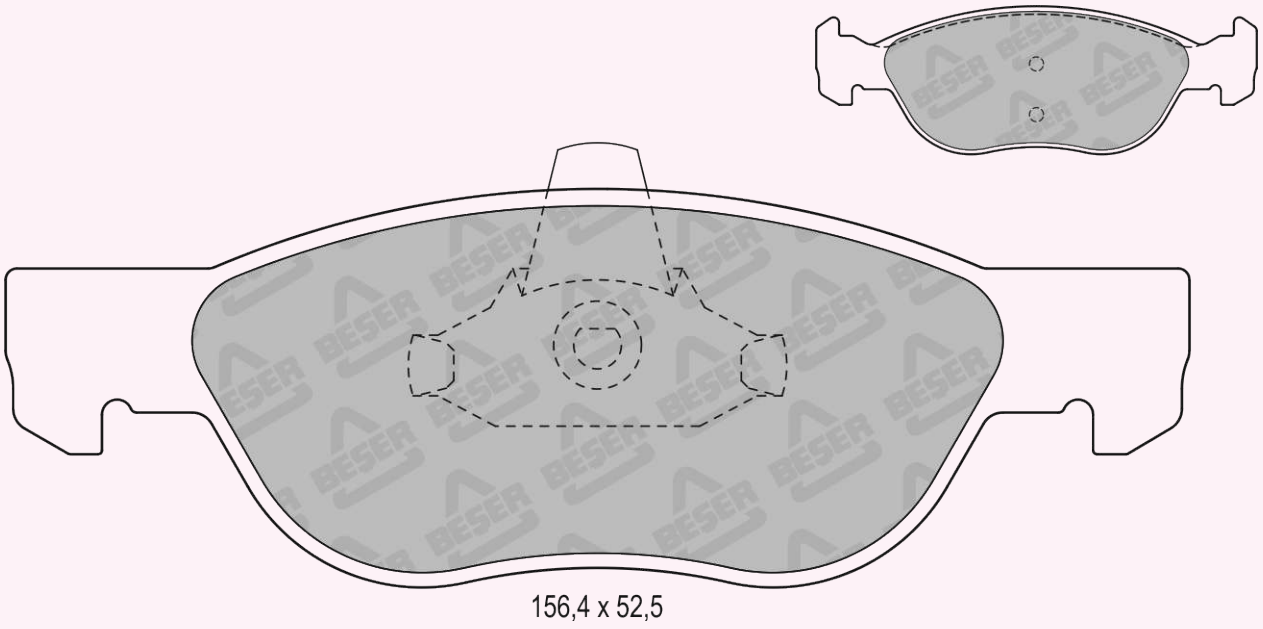

REFERENCE	T(mm)	REMARKS	MAKE	F/R	WVA No
3619	19,4	2 PADS WITH WEAR SENSOR	AUDI	F	20669 20901

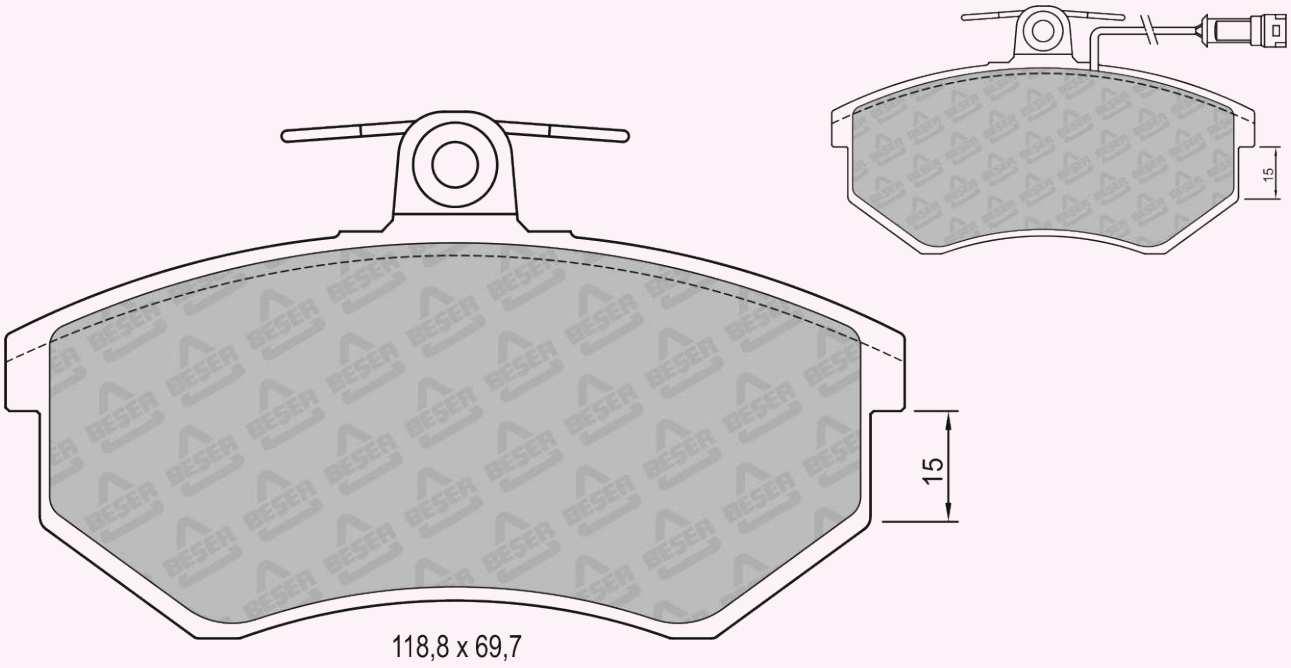

118,8 x 69,7

REFERENCE	T(mm)	REMARKS	MAKE	F/R	WVA No
3620	14	4 PADS PLAIN	DAIHATSU	F	21159

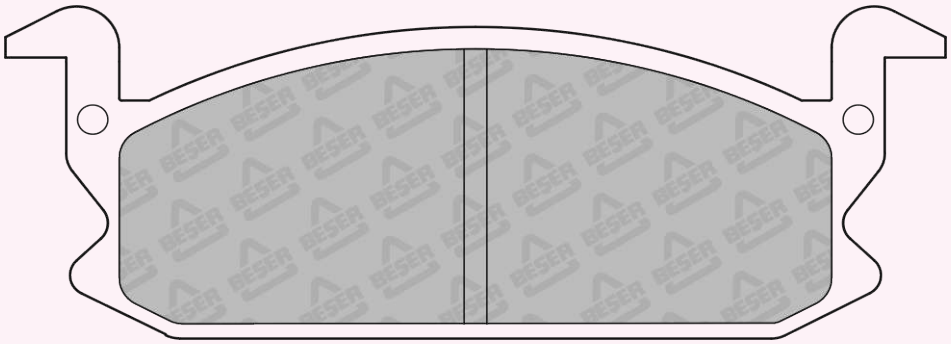

124,1 x 43,8

REFERENCE	T(mm)	REMARKS	MAKE	F/R	WVA No
3621	18	2 PADS PISTON CLIP	FORD	F	20857 20858

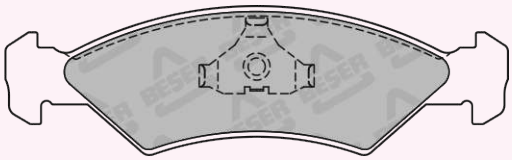

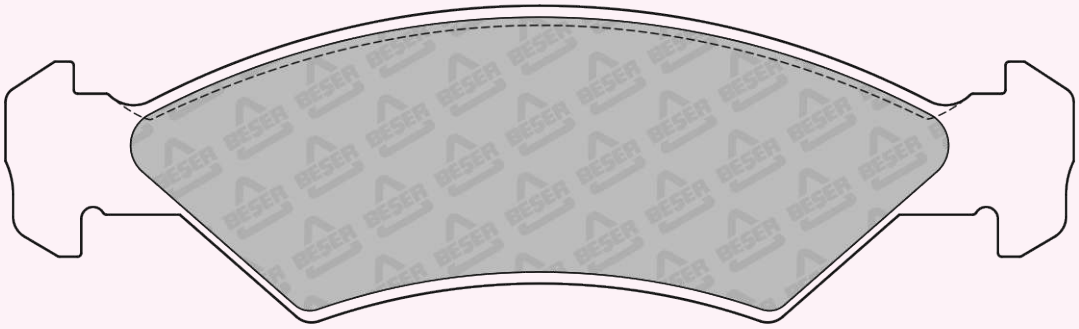

141,1 x 41,8

REFERENCE	T(mm)	REMARKS	MAKE	F/R	WVA No
3622	16	2 PADS WITH WEAR SENSOR	CHRYSLER - HONDA HYUNDAI - MITSUBISHI - PROTON	F	21647 21648 21649

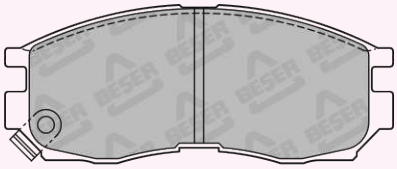

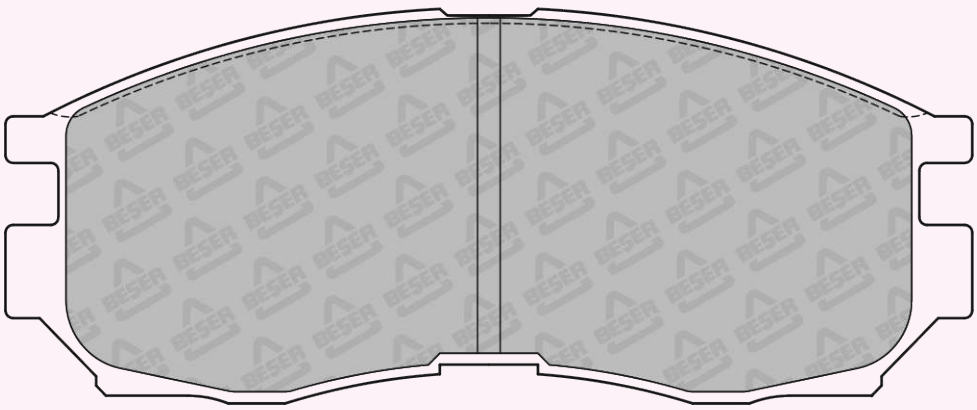

127,8 x 52

REFERENCE	T(mm)	REMARKS	MAKE	F/R	WVA No
3623	16,5	2 PADS PISTON CLIP	CHEVROLET - DAEWOO - FSO HOLDEN - JAGUAR - OPEL VAUXHALL - ZAZ	F	20547 21353

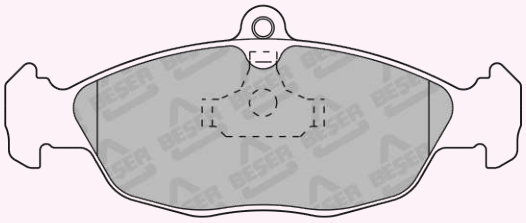

140,2 x 58,3
(NOT SCALE)

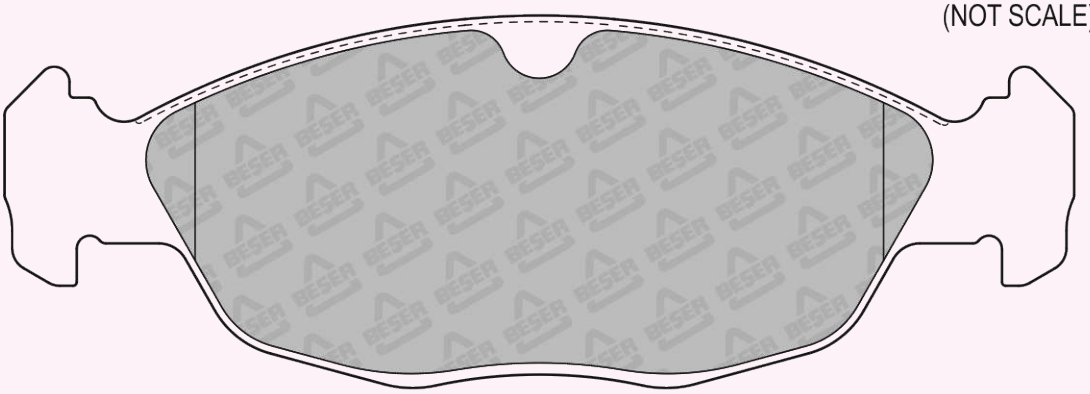

141,4 x 48,3

REFERENCE	T(mm)	REMARKS	MAKE	F/R	WVA No
3624	18,3	1 PAD WITH WEAR SENSOR (200mm)	AUSTIN - MG RELIANT - ROVER	F	21084 21085

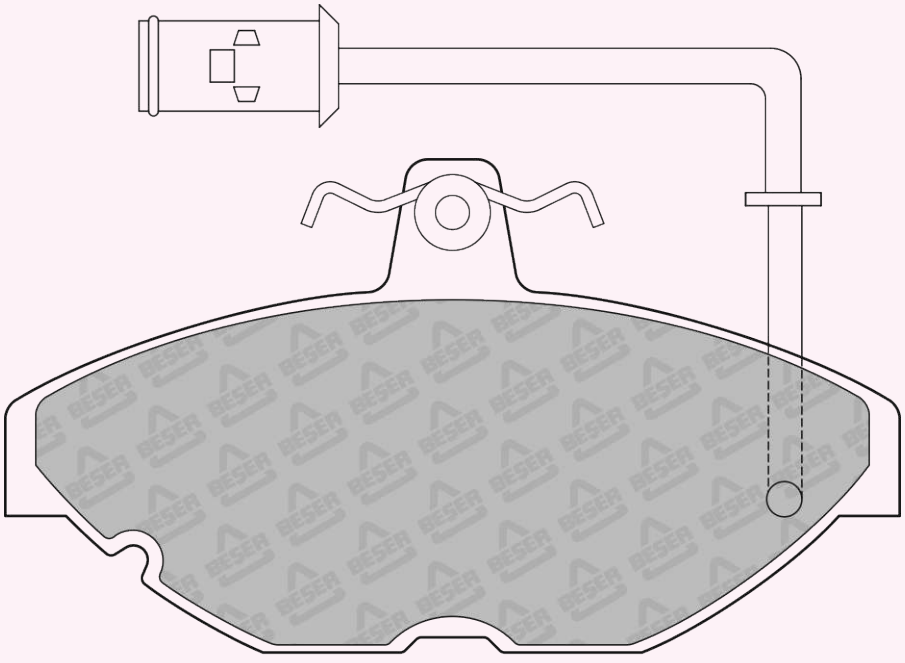

118,1 x 64,2

REFERENCE	T(mm)	REMARKS	MAKE	F/R	WVA No
3625	16,5	4 PADS PLAIN	FIAT	F	20375

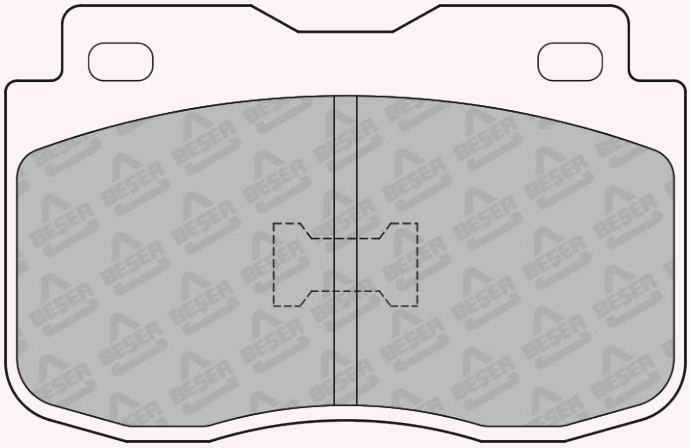

89,8 x 57,5

REFERENCE	T(mm)	REMARKS	MAKE	F/R	WVA No
3626	17,4	4 PADS PLAIN	MERCEDES BENZ	F	21304

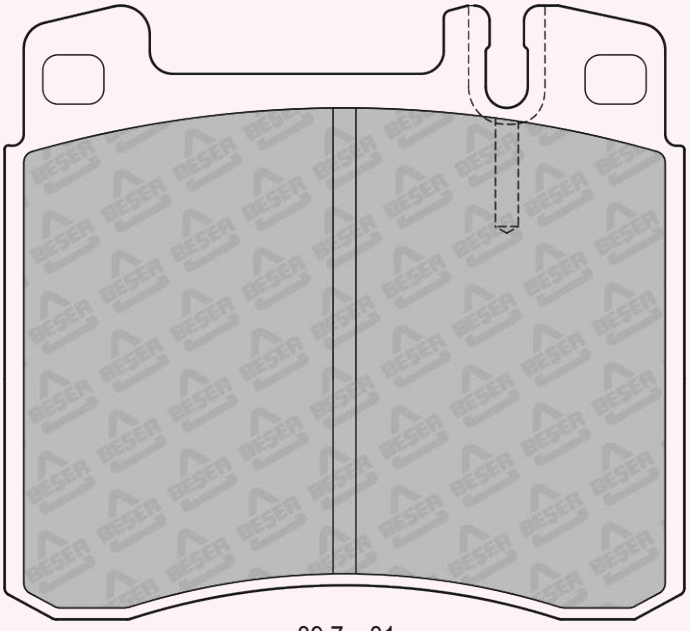

89,7 x 81

REFERENCE	T(mm)	REMARKS	MAKE	F/R	WVA No
3627	18,3	4 PADS PLAIN	MERCEDES BENZ	F	21303

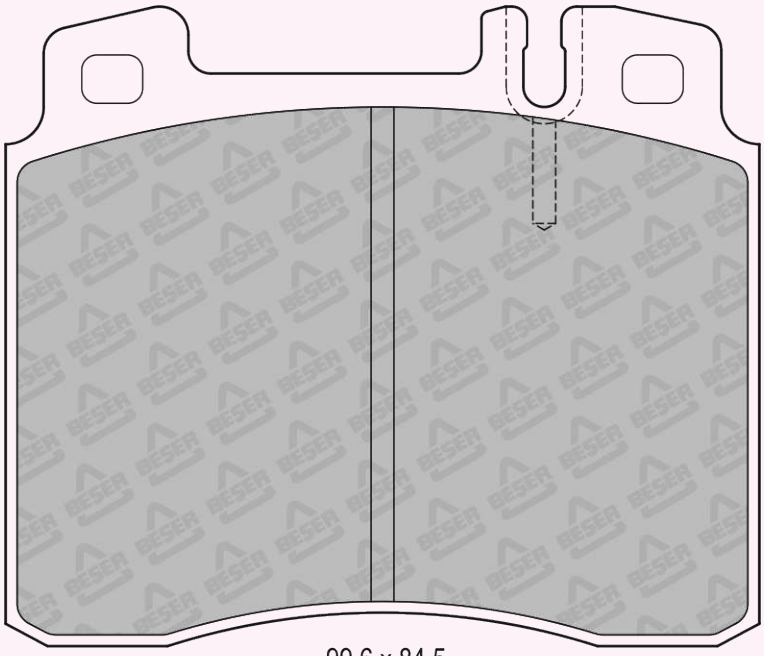

99,6 x 84,5

REFERENCE	T(mm)	REMARKS	MAKE	F/R	WVA No
3628	16	4 PADS PLAIN	MERCEDES BENZ	F	21153

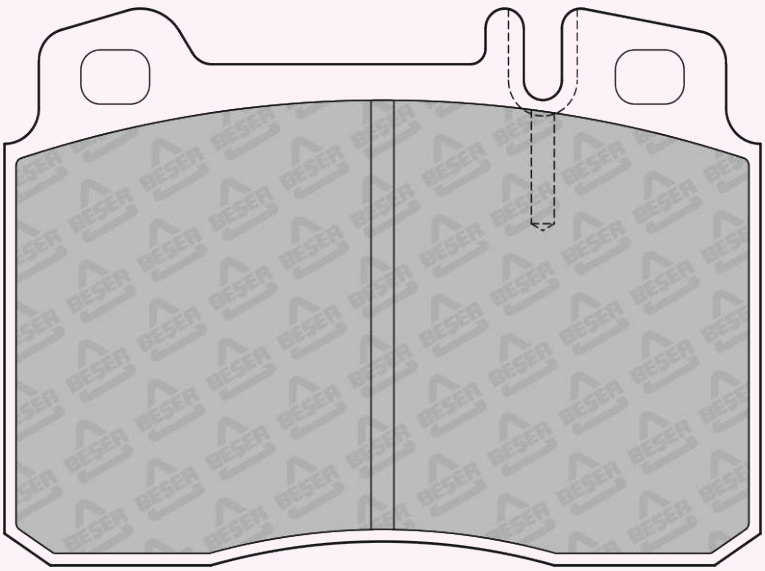

99,8 x 73,5

REFERENCE	T(mm)	REMARKS	MAKE	F/R	WVA No
3629	17,5	4 PADS PLAIN	MERCEDES BENZ	F	21153

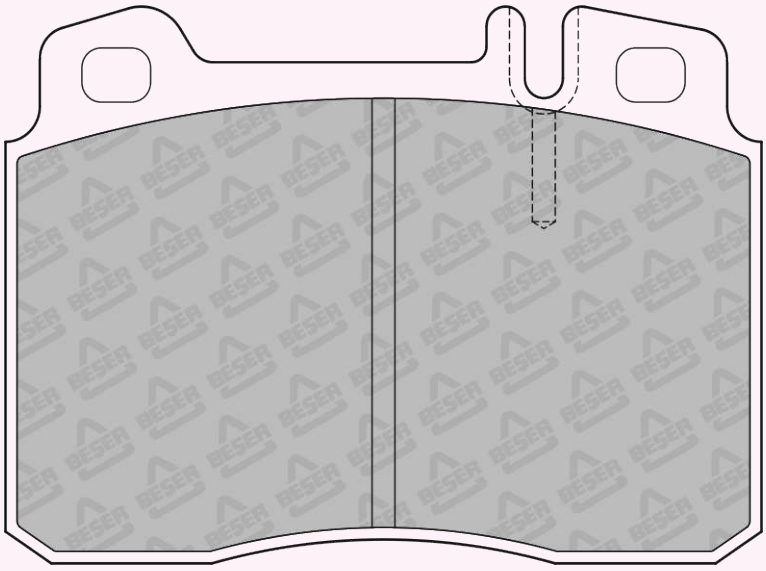

99,8 x 73,5

REFERENCE	T(mm)	REMARKS	MAKE	F/R	WVA No
3630	15	4 PADS PLAIN	MERCEDES BENZ	R	21301

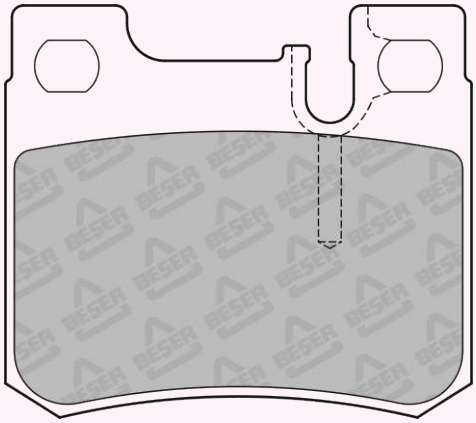

61,5 x 54,3

REFERENCE	T(mm)	REMARKS	MAKE	F/R	WVA No
3631	17,5	2 PADS WITH WEAR SENSOR	ACURA - HONDA ROVER	F	21446 21447 21448

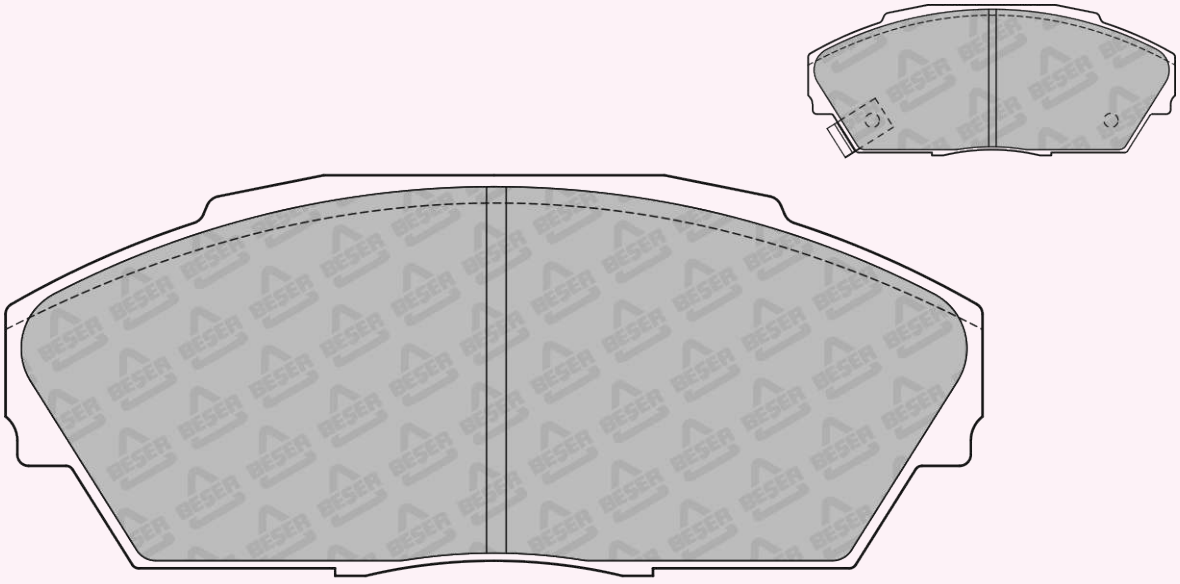

129,1 x 52,9

REFERENCE	T(mm)	REMARKS	MAKE	F/R	WVA No
3632	17	2 PADS WITH WEAR SENSOR 4 PADS WITH SPRING	HAFEI - HYUNDAI KIA - MITSUBISHI	F	21725 21726 21727

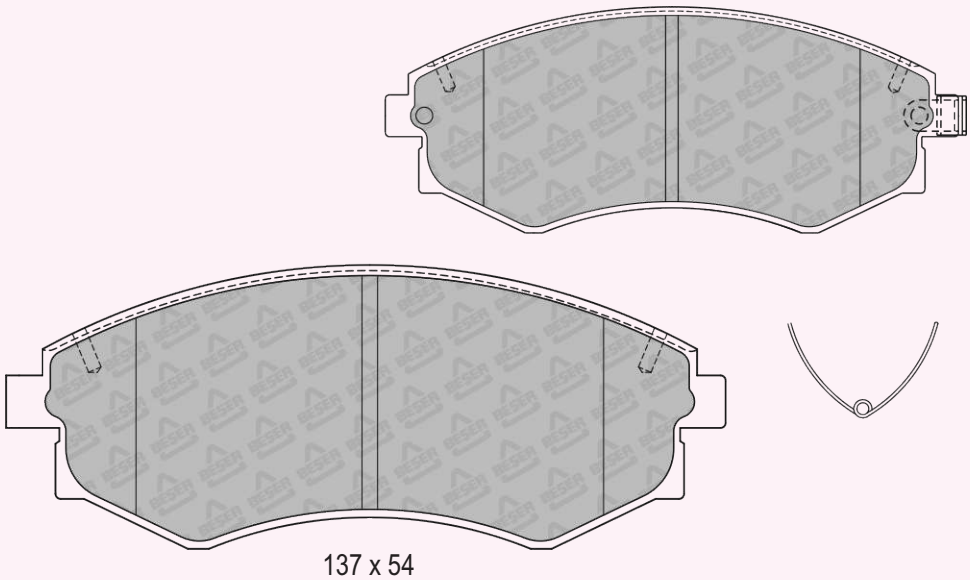

137 x 54
(NOT SCALE)

REFERENCE	T(mm)	REMARKS	MAKE	F/R	WVA No
3633	14,9	2 PADS WITH WEAR SENSOR	HONDA	F	20895 21326 21327

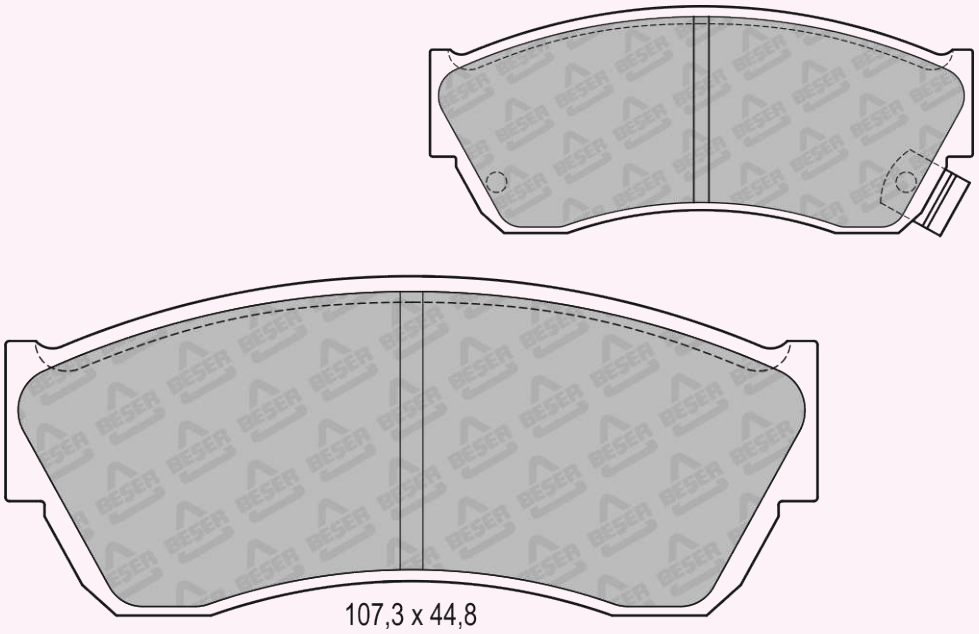

REFERENCE	T(mm)	REMARKS	MAKE	F/R	WVA No
3634	15,5	2 PADS INNER & 2 PADS OUTER	TOYOTA	F	21248 21249

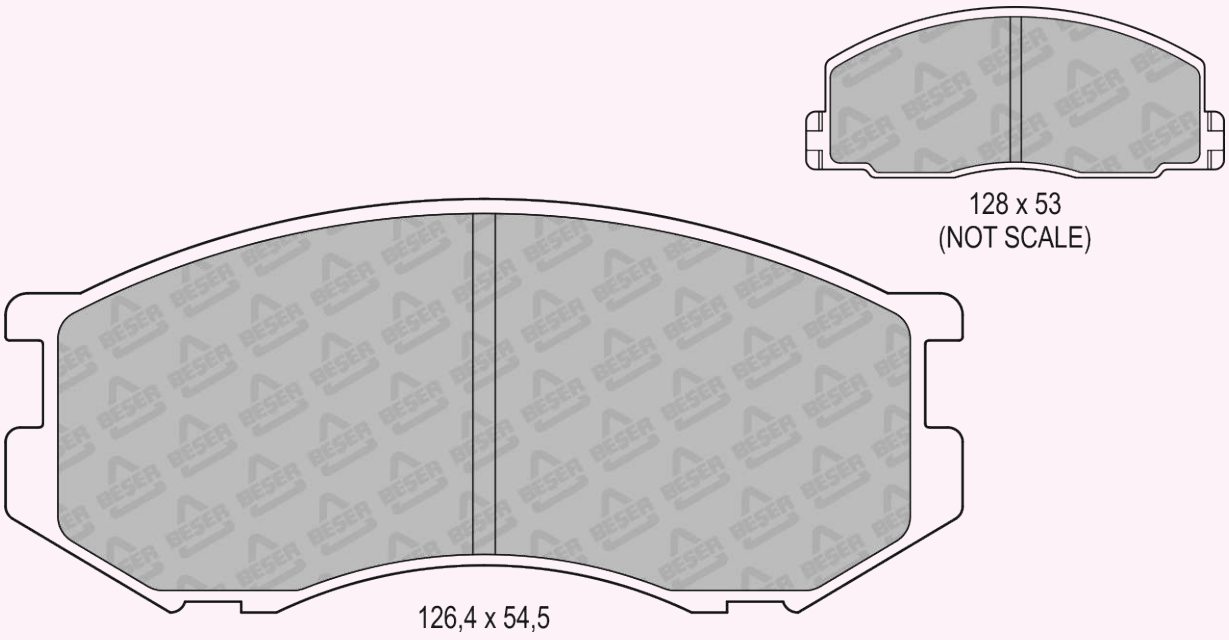

REFERENCE	T(mm)	REMARKS	MAKE	F/R	WVA No
3635	16	2 PADS WITH WEAR SENSOR (240mm)	AUDI	F	20669 20901

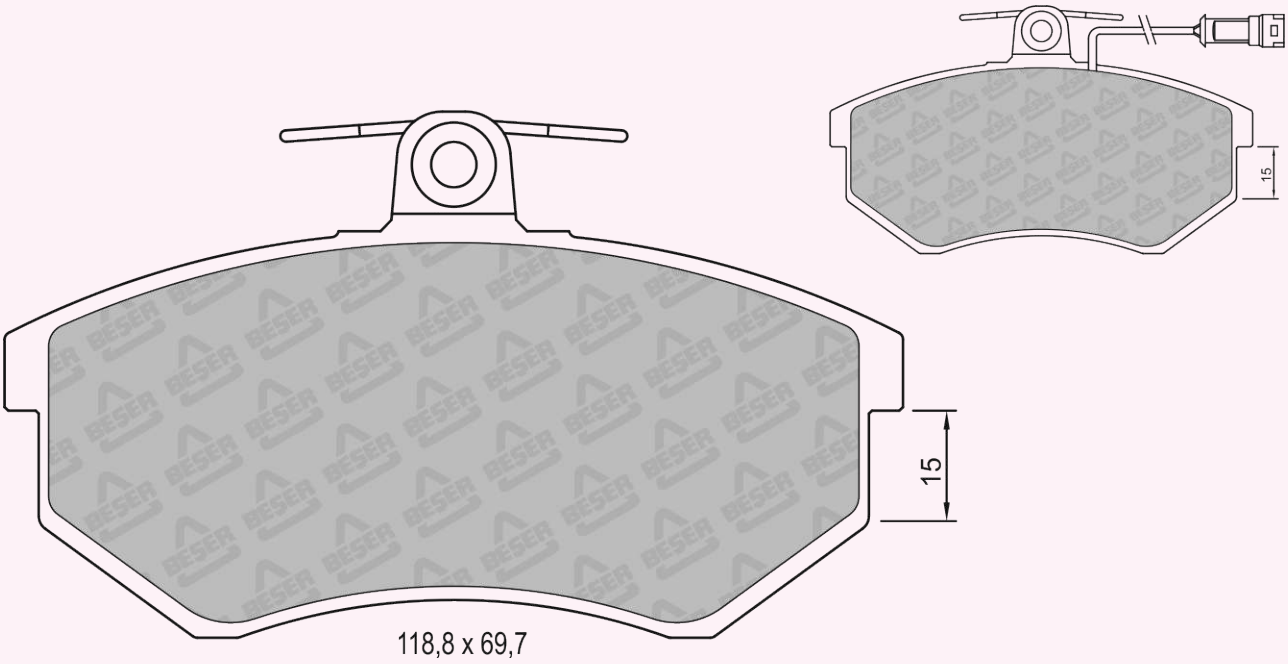

REFERENCE	T(mm)	REMARKS	MAKE	F/R	WVA No
3636	19	4 PADS WEAR SENSOR (310-280mm) 4 BOLTS	CITROEN - PEUGEOT	F	23124 23125

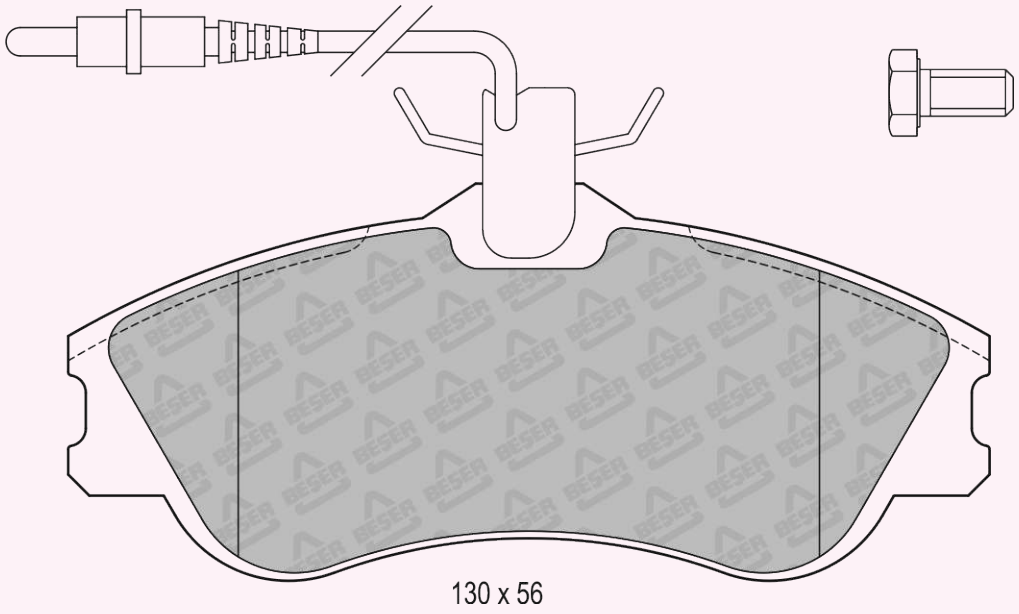

REFERENCE	T(mm)	REMARKS	MAKE	F/R	WVA No
3637	15	2 PADS INNER & 2 PADS OUTER	SEAT - VW	F	21866 21868

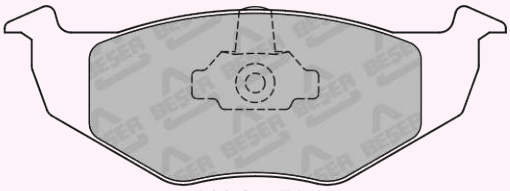

141,6 x 51,1
(NOT SCALE)

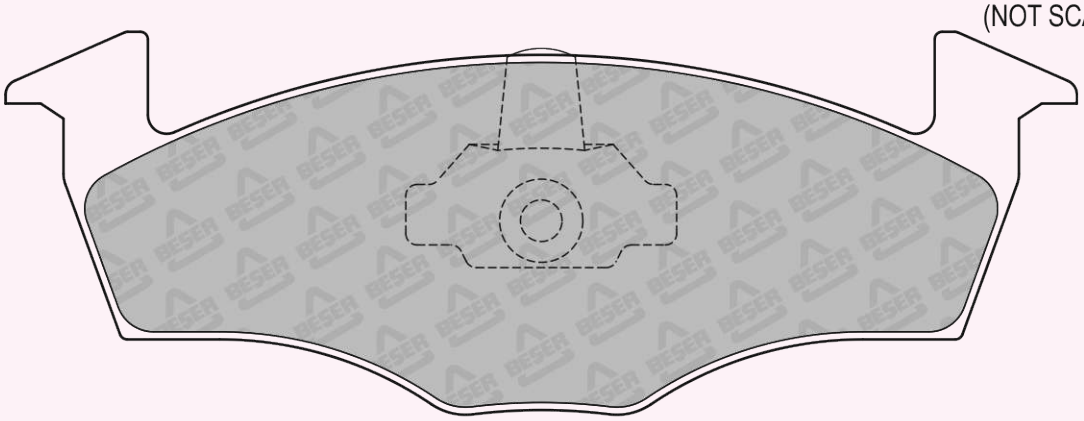

141,6 x 50,6

REFERENCE	T(mm)	REMARKS	MAKE	F/R	WVA No
3640	15	2 PADS WITH WEAR SENSOR	FORD - MAZDA	F	21539 21540 21541

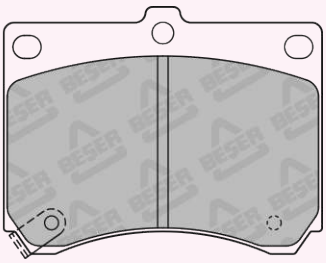

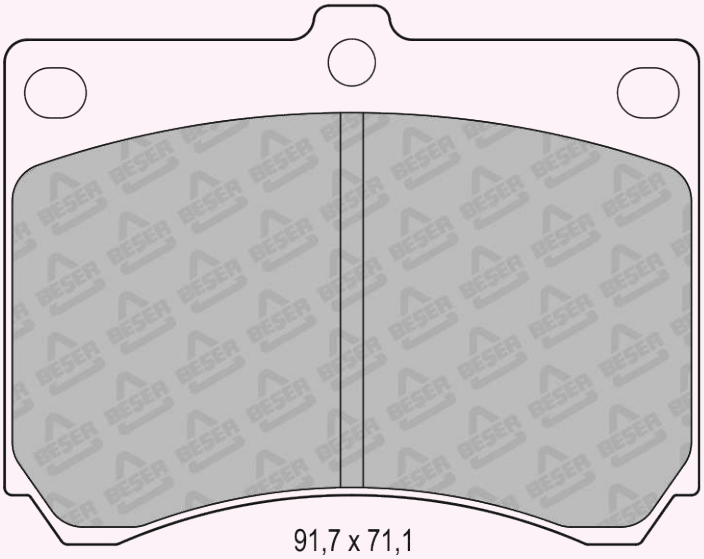

91,7 x 71,1

REFERENCE	T(mm)	REMARKS	MAKE	F/R	WVA No
3641	16,4	4 PADS WITH 8 PLUGS WITH 2 SPRINGS	UMM - VOLVO	F	21233

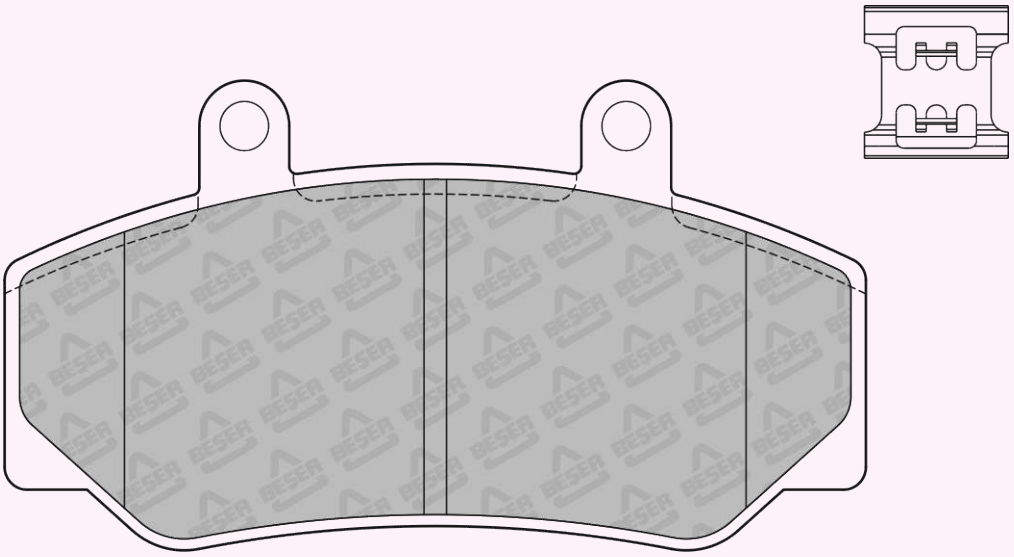

113,8 x 62

REFERENCE	T(mm)	REMARKS	MAKE	F/R	WVA No
3642	13	4 PADS PLAIN	VOLVO	R	21385

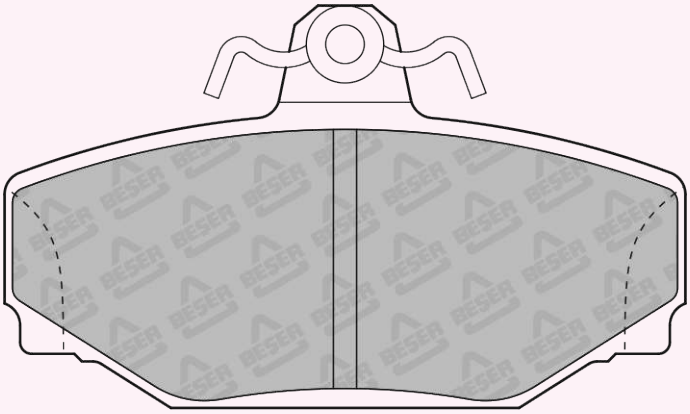

89,9 x 53,5

REFERENCE	T(mm)	REMARKS	MAKE	F/R	WVA No
3643	17	4 PADS PLAIN	FIAT LANCIA - ZASTAVA	F	21436

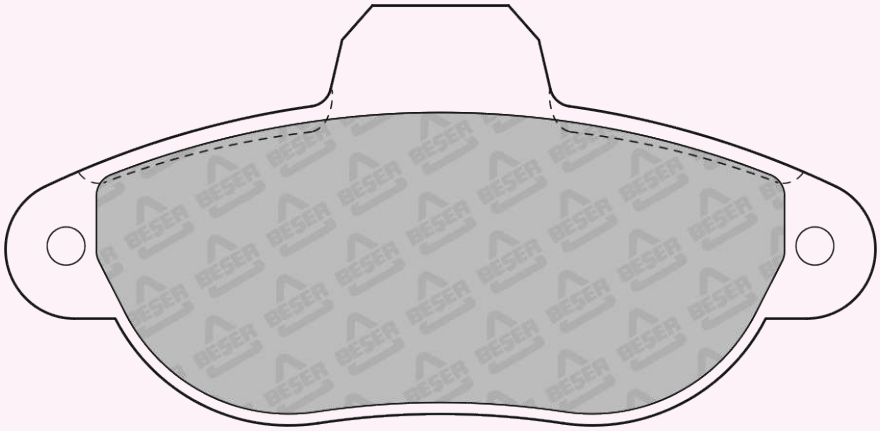

114,9 x 55,4

REFERENCE	T(mm)	REMARKS	MAKE	F/R	WVA No
3644	19	4 PADS PLAIN	CITROEN - PEUGEOT	F	23346

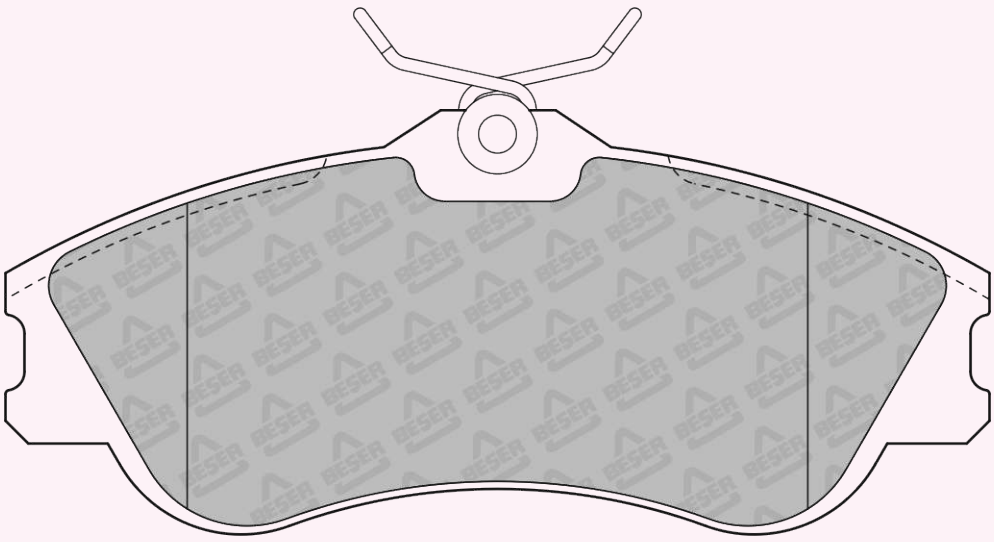

130 x 56

REFERENCE	T(mm)	REMARKS	MAKE	F/R	WVA No
3645	20	4 PADS PLAIN & 4 BOLTS.	IVECO - RENAULT	F	29121

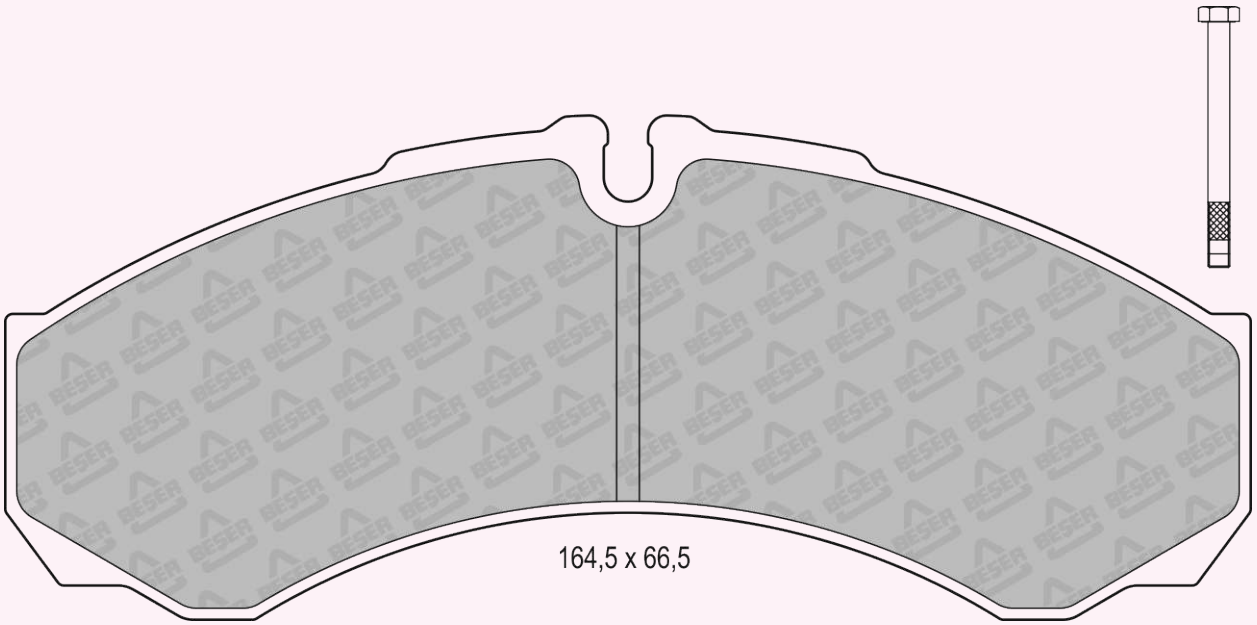

REFERENCE	T(mm)	REMARKS	MAKE	F/R	WVA No
3646	14,9	4 PADS PLAIN	HONDA	F	20895 21326 21327

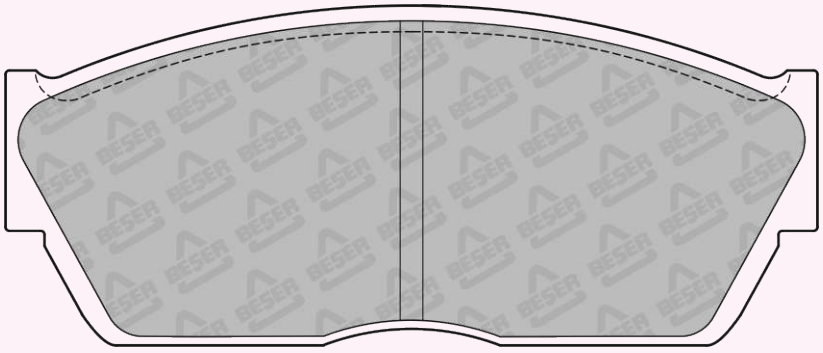

REFERENCE	T(mm)	REMARKS	MAKE	F/R	WVA No
3647	16	2 PADS WITH WEAR SENSOR	NISSAN	F	---

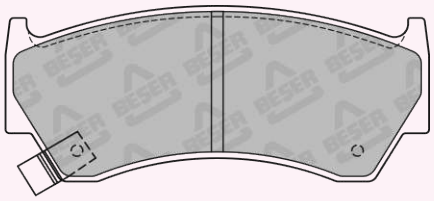

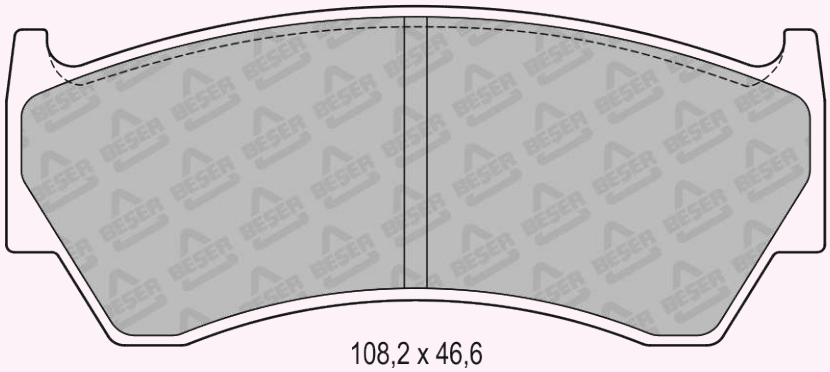

108,2 x 46,6

REFERENCE	T(mm)	REMARKS	MAKE	F/R	WVA No
3648	16	2 PADS WITH WEAR SENSOR	HYUNDAI	F	23536 23537 23538

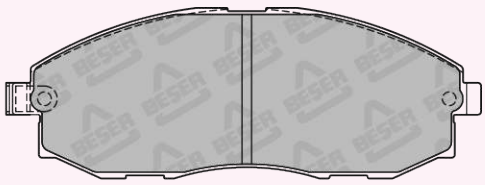

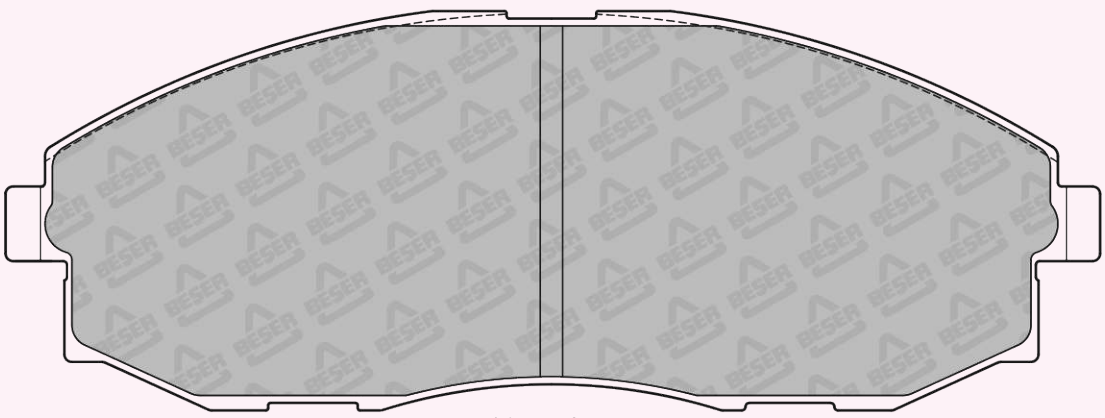

147 x 53,5

REFERENCE	T(mm)	REMARKS	MAKE	F/R	WVA No
3649	16	4 PADS PLAIN	AUDI	F	20669

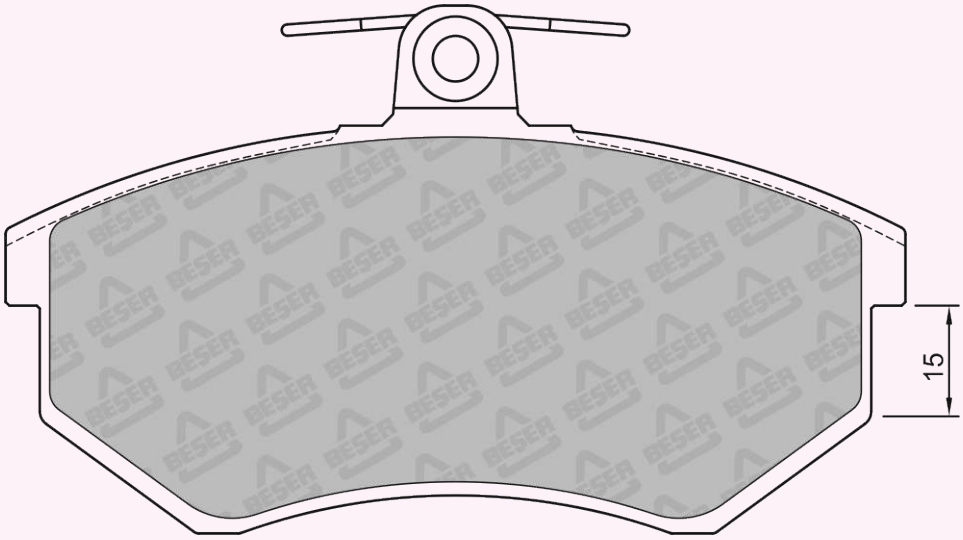

118,8 x 69,7

REFERENCE	T(mm)	REMARKS	MAKE	F/R	WVA No
3650	19,4	4 PADS PLAIN	AUDI - VW	F	20669 20778

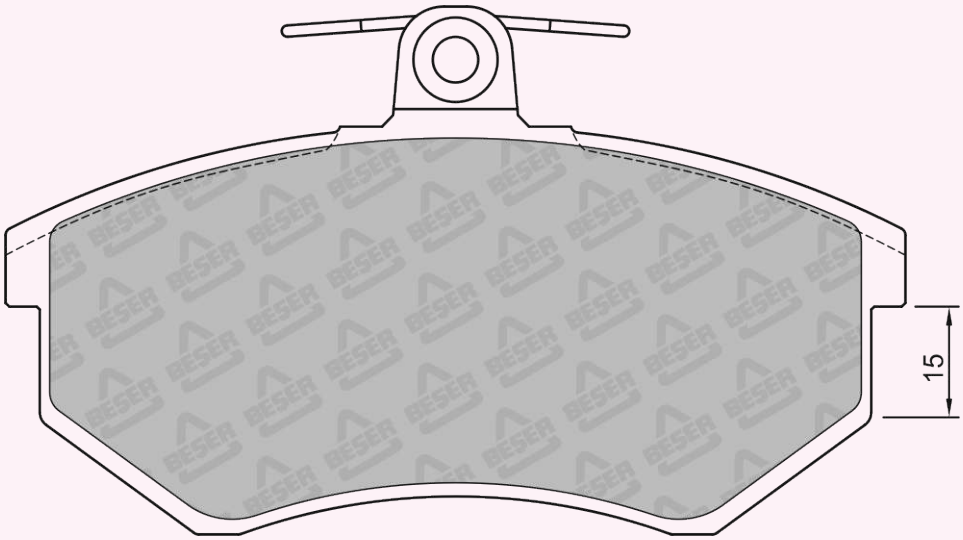

118,8 x 69,7

REFERENCE	T(mm)	REMARKS	MAKE	F/R	WVA No
3651	17,5	2 PADS WITH WEAR SENSOR 4 PAD WITH DRILLED HOLES	HOLDEN - TOYOTA	F	21601 21602 21603

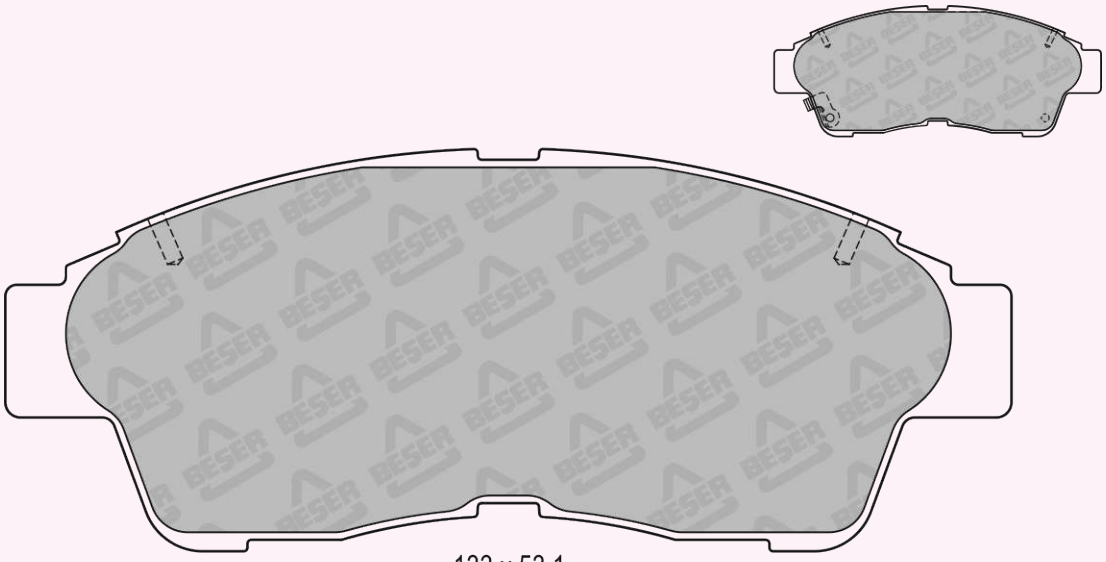

133 x 53,1

REFERENCE	T(mm)	REMARKS	MAKE	F/R	WVA No
3652	17,5	4 PADS PLAIN	NISSAN	F	21546

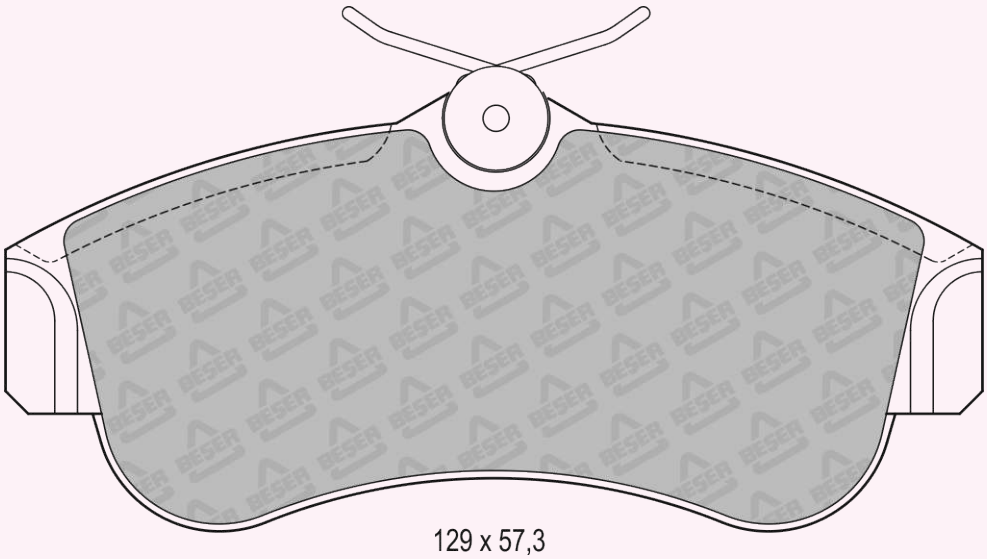

129 x 57,3

REFERENCE	T(mm)	REMARKS	MAKE	F/R	WVA No
3653	17,2	2 PADS WITH WEAR SENSOR	KIA	F	23484 23485 23486

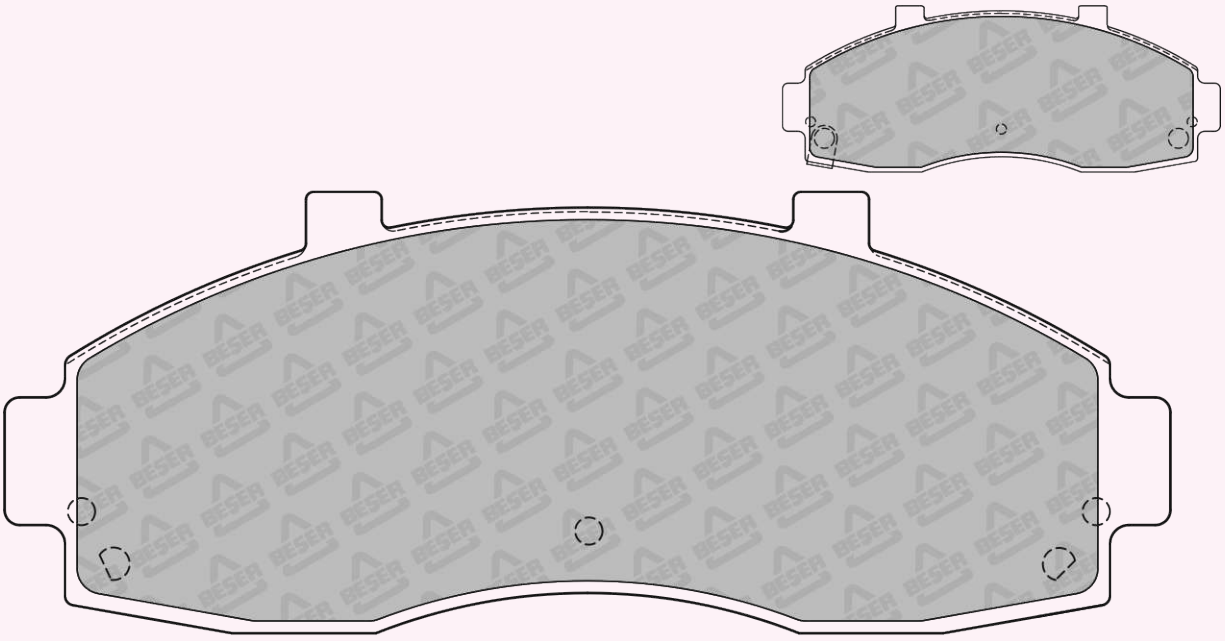

154 x 58,4

REFERENCE	T(mm)	REMARKS	MAKE	F/R	WVA No
3656	17	2 PADS PISTON CLIP	ALPINE - BMW	R	21691 21891

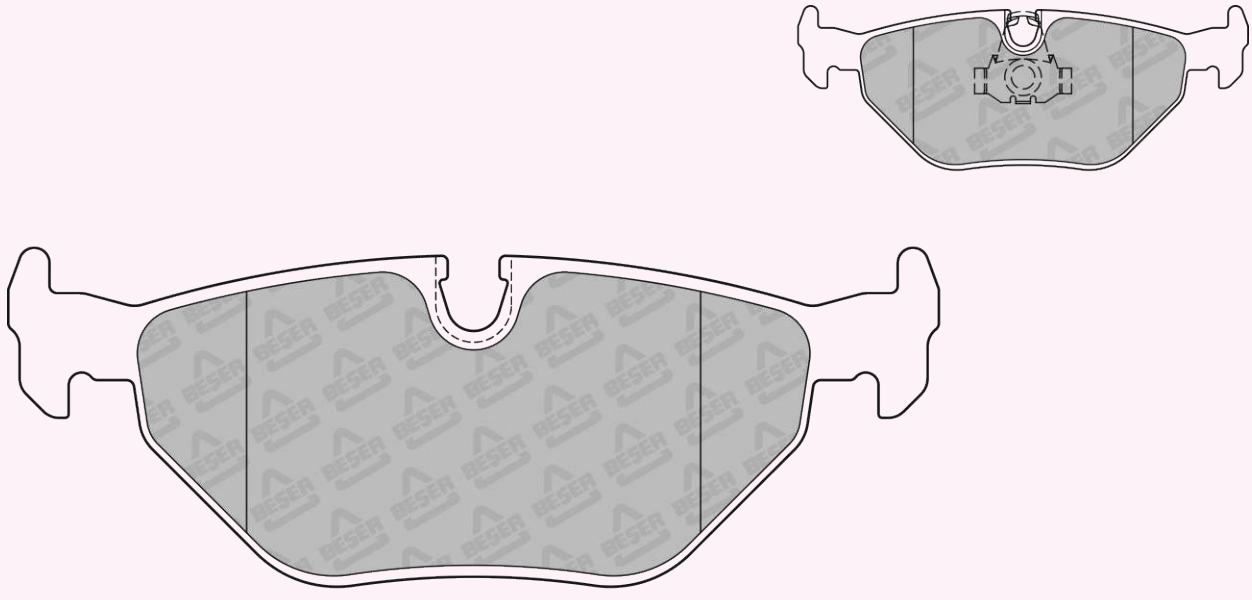

123 x 44,8

REFERENCE	T(mm)	REMARKS	MAKE	F/R	WVA No
3657	16,5	2 PADS WITH WEAR SENSOR	HOLDEN - ISUZU - LANDWIND(JMC) OPEL - VAUXHALL	F	21543 21544

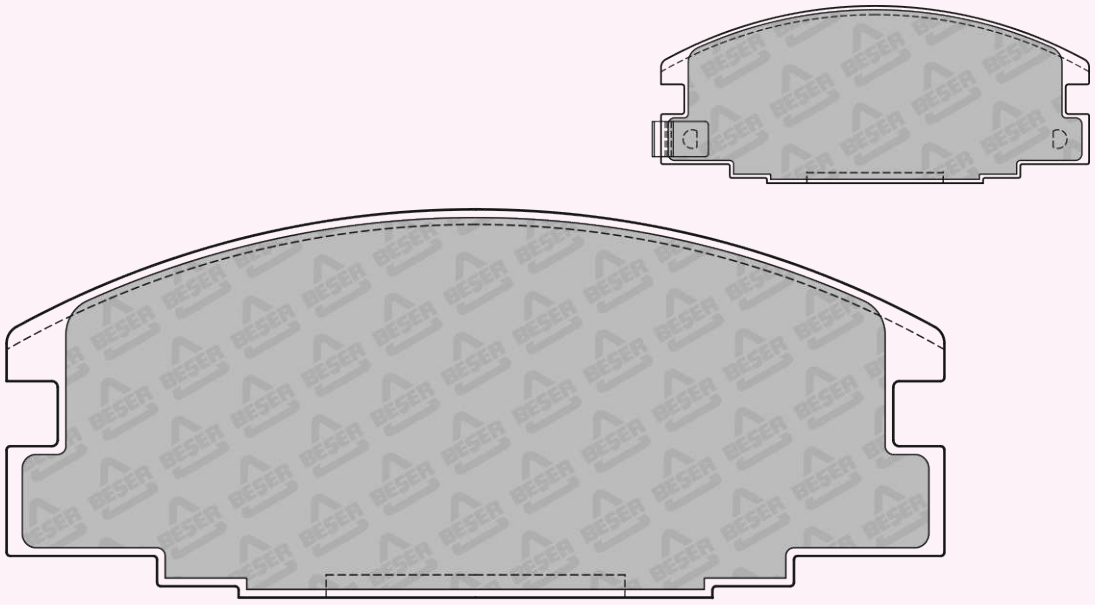

126,5 x 51,3

REFERENCE	T(mm)	REMARKS	MAKE	F/R	WVA No
3658	20	4 PADS PLAIN	MERCEDES BENZ	F	21439

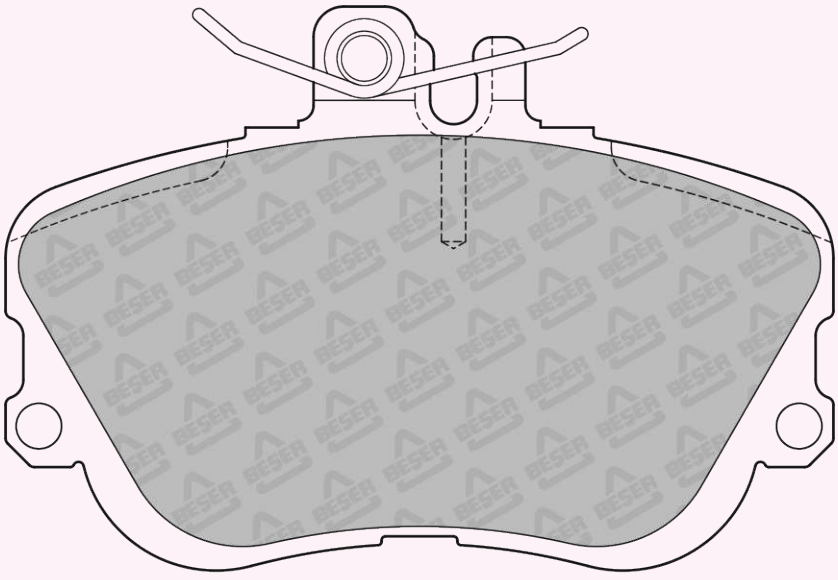

109,4 x 74,6

REFERENCE	T(mm)	REMARKS	MAKE	F/R	WVA No
3659	18	4 PADS PLAIN	CITROEN - RENAULT	F	21980 21981

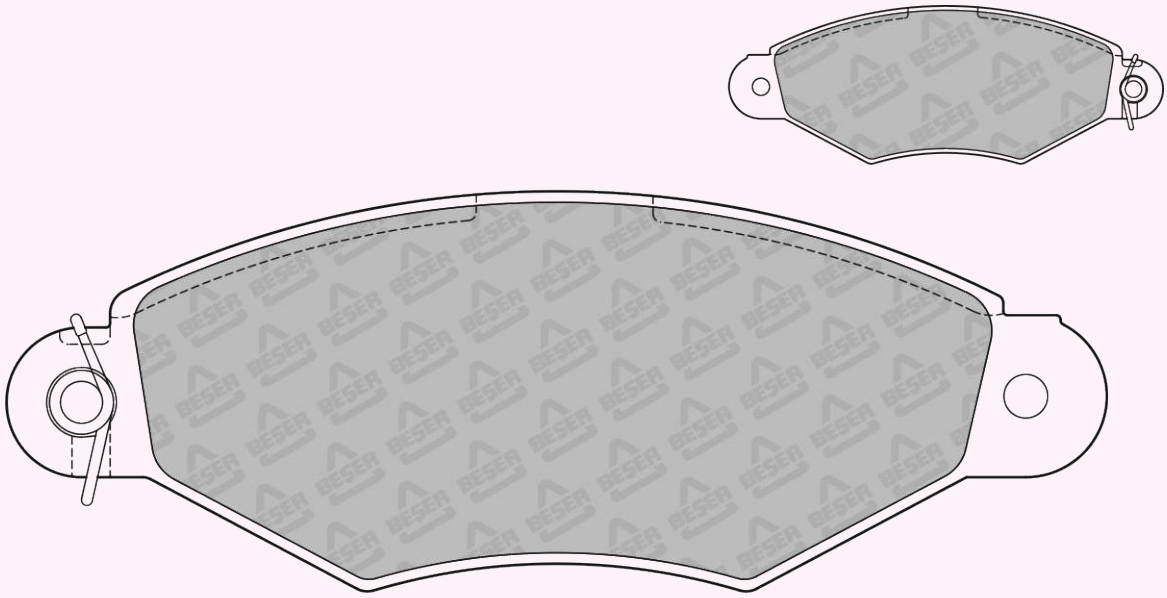

130,7 x 47,6

REFERENCE	T(mm)	REMARKS	MAKE	F/R	WVA No
3660	15,6	4 PADS PLAIN	NISSAN	R	21545

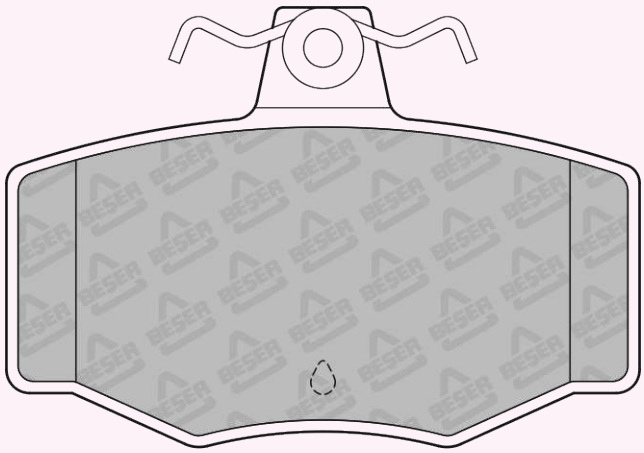

83,5 x 57

REFERENCE	T(mm)	REMARKS	MAKE	F/R	WVA No
3661	15,5	4 PADS PLAIN	LAND ROVER	R	20344

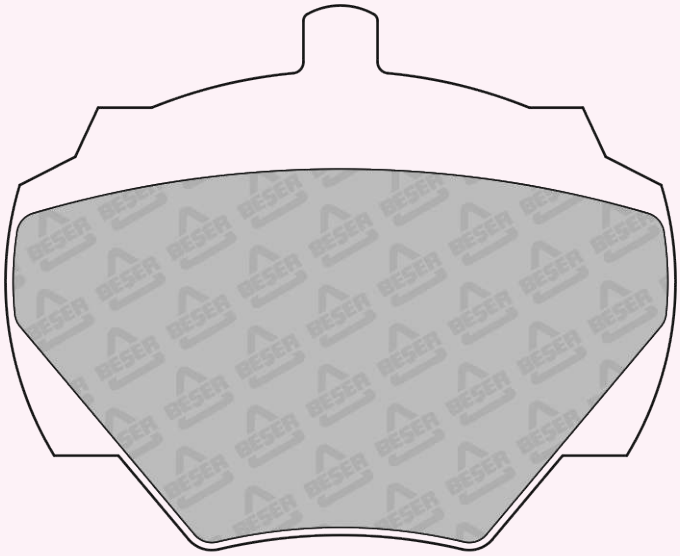

88,6 x 72

REFERENCE	T(mm)	REMARKS	MAKE	F/R	WVA No
3662	18,5	1 PAD WEAR SENSOR & WITH CHAMFERS (210mm)	CARBODIES LAND ROVER	F	21459 21897 22993

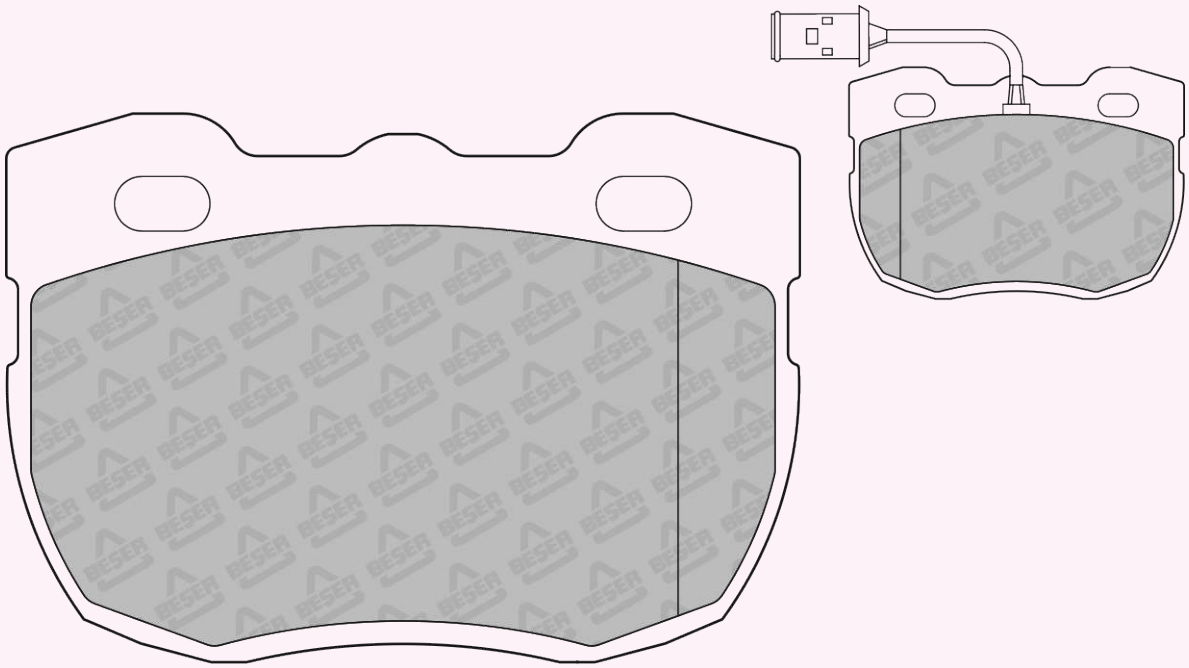

104,8 x 72,4

REFERENCE	T(mm)	REMARKS	MAKE	F/R	WVA No
3663	15,5	4 PADS PLAIN	MERCEDES BENZ	R	21900

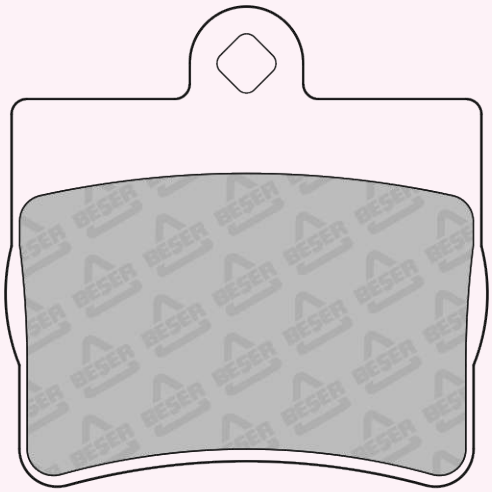

63,7 x 63,4

REFERENCE	T(mm)	REMARKS	MAKE	F/R	WVA No
3665	19,5	2 PADS PISTON CLIP	CHEVROLET - HOLDEN OPEL - SAAB - VAUXHALL	F	20676 21828 21829

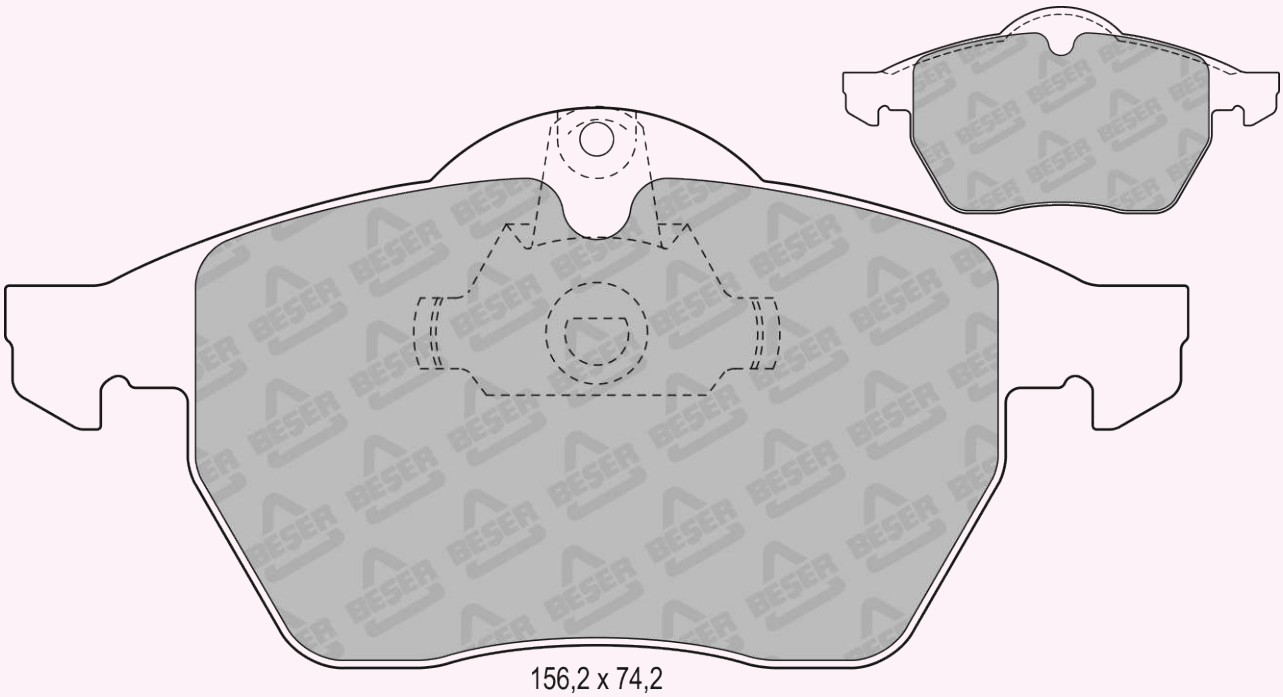

156,2 x 74,2

REFERENCE	T(mm)	REMARKS	MAKE	F/R	WVA No
3666	15,3	4 PADS WITH WEAR SENSOR 4 PADS WITH 2 DRILLED HOLES	MAZDA - TOYOTA	F	21537 21538

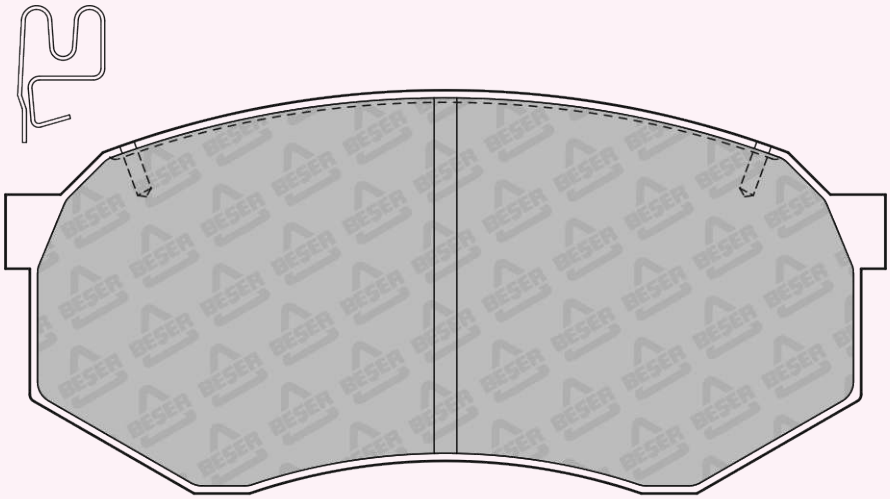

116,3 x 53,3

REFERENCE	T(mm)	REMARKS	MAKE	F/R	WVA No
3667	18	4 PADS PLAIN	FORD - NISSAN	F	23565

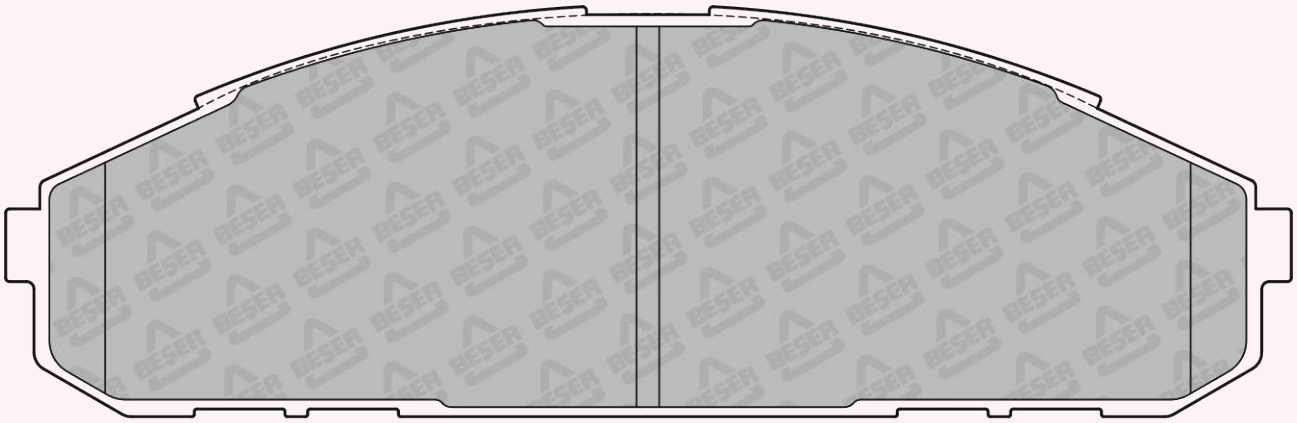

169,9 x 54,4

REFERENCE	T(mm)	REMARKS	MAKE	F/R	WVA No
3670	18,5	2 PADS PISTON CLIP	DODGE MERCEDES BENZ	F	21592 21593 23901 23902

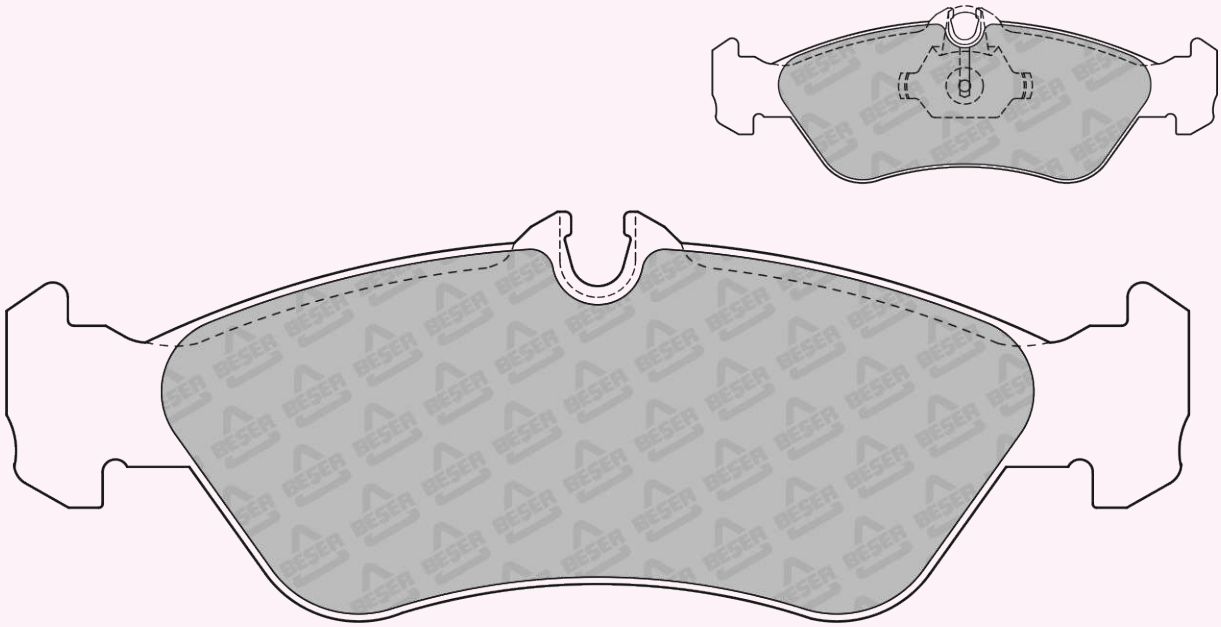

156,3 x 54,8

REFERENCE	T(mm)	REMARKS	MAKE	F/R	WVA No
3671	17	4 PADS PLAIN	VW	R	21748 21882

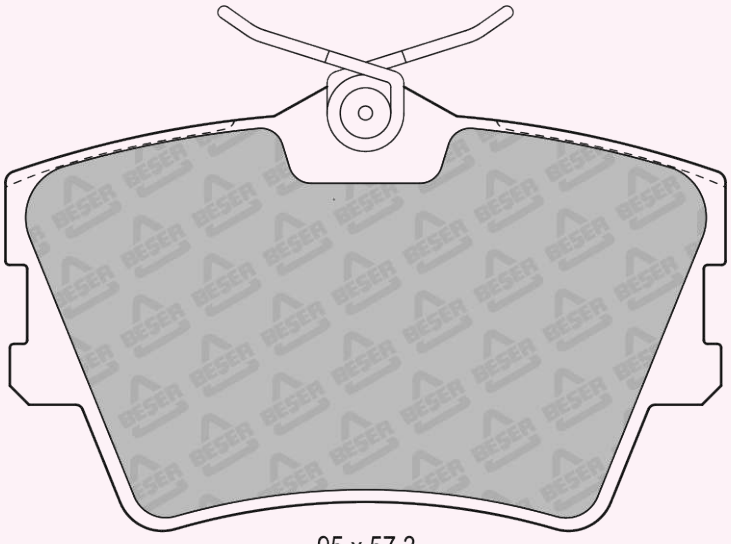

95 x 57,3

REFERENCE	T(mm)	REMARKS	MAKE	F/R	WVA No
3672	17,2	4 PADS WITH WEAR SENSOR	MAZDA - TOYOTA	F	21318 21537 21538

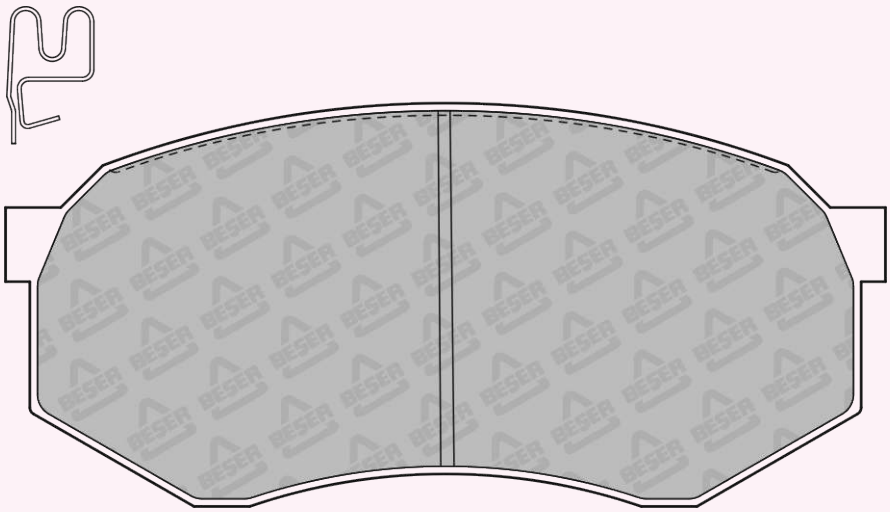

116,3 x 53,3

REFERENCE	T(mm)	REMARKS	MAKE	F/R	WVA No
3673	15	4 PADS WITH WEAR SENSOR	TOYOTA	F	21775 21776

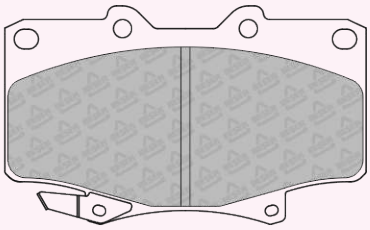

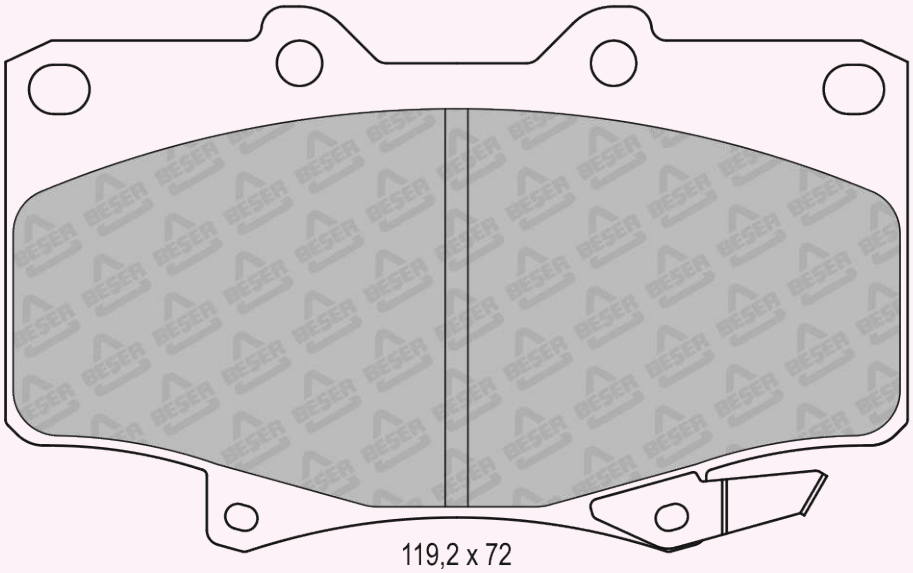

119,2 x 72

REFERENCE	T(mm)	REMARKS	MAKE	F/R	WVA No
3674	16,5	2 PADS WITH WEAR SENSOR	ACURA - HOLDEN ISUZU - OPEL - VAUXHALL	F	21845 21846 21847

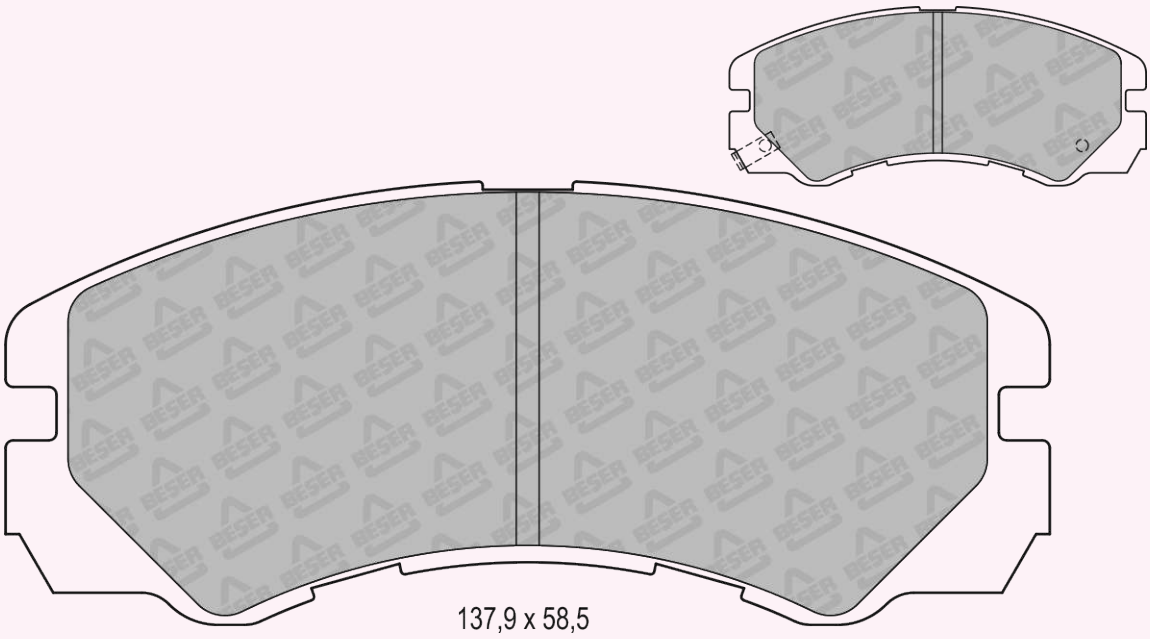

REFERENCE	T(mm)	REMARKS	MAKE	F/R	WVA No
3675	15,8	4 PADS WITH WEAR SENSOR	MITSUBISHI	F	23080 23127

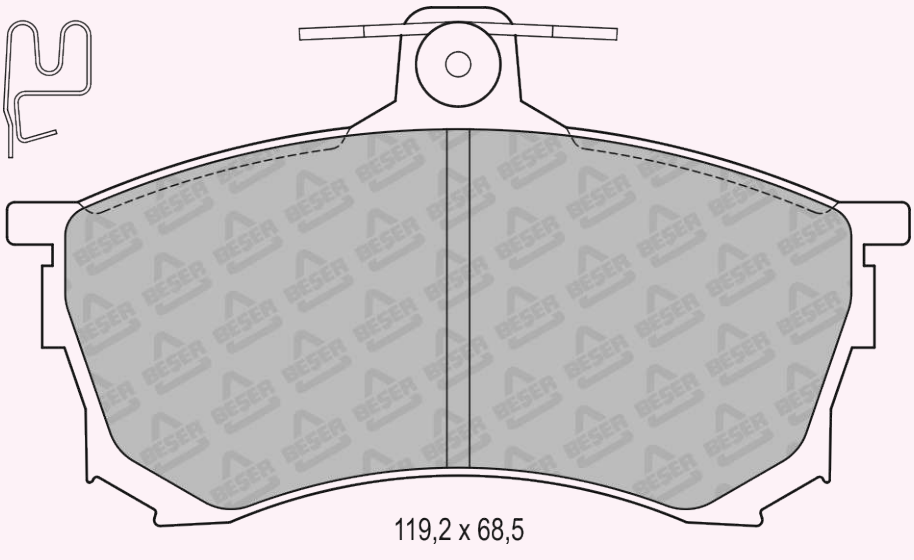

REFERENCE	T(mm)	REMARKS	MAKE	F/R	WVA No
3676	15.5	4 PADS PLAIN	CHRYSLER MERCEDES-BENZ	R	21919

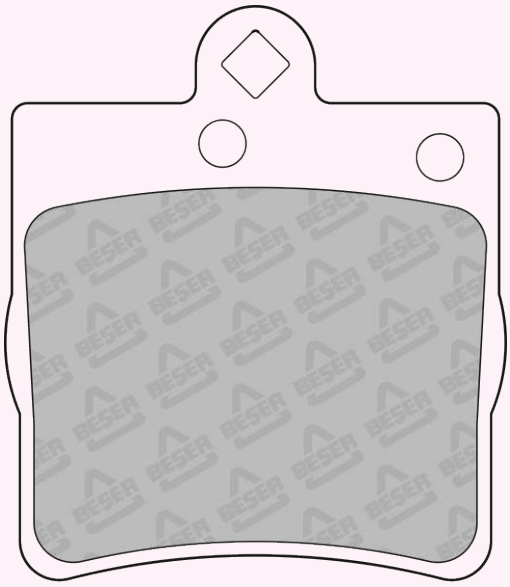

63,7 x 72,9

REFERENCE	T(mm)	REMARKS	MAKE	F/R	WVA No
3677	19,5	2 PADS PISTON CLIP	MERCEDES BENZ	F	21664 21795

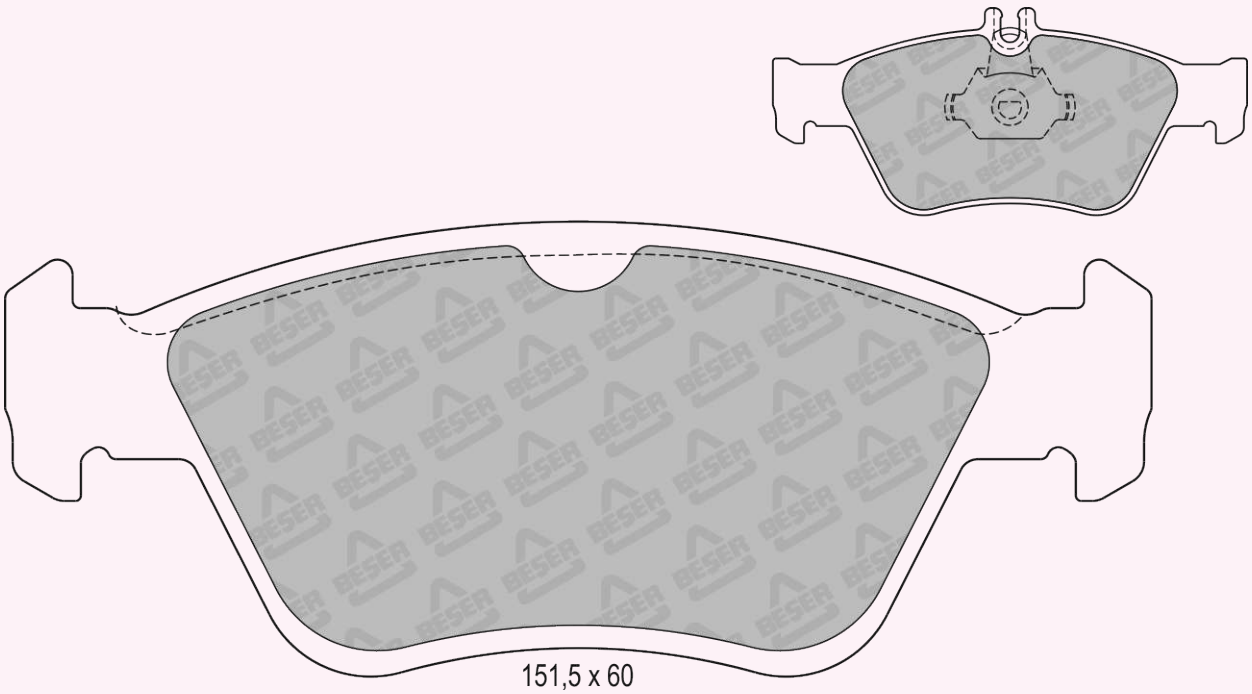

151,5 x 60

REFERENCE	T(mm)	REMARKS	MAKE	F/R	WVA No
3678	17	2 PADS PISTON CLIP	MERCEDES BENZ	R	21621 21622

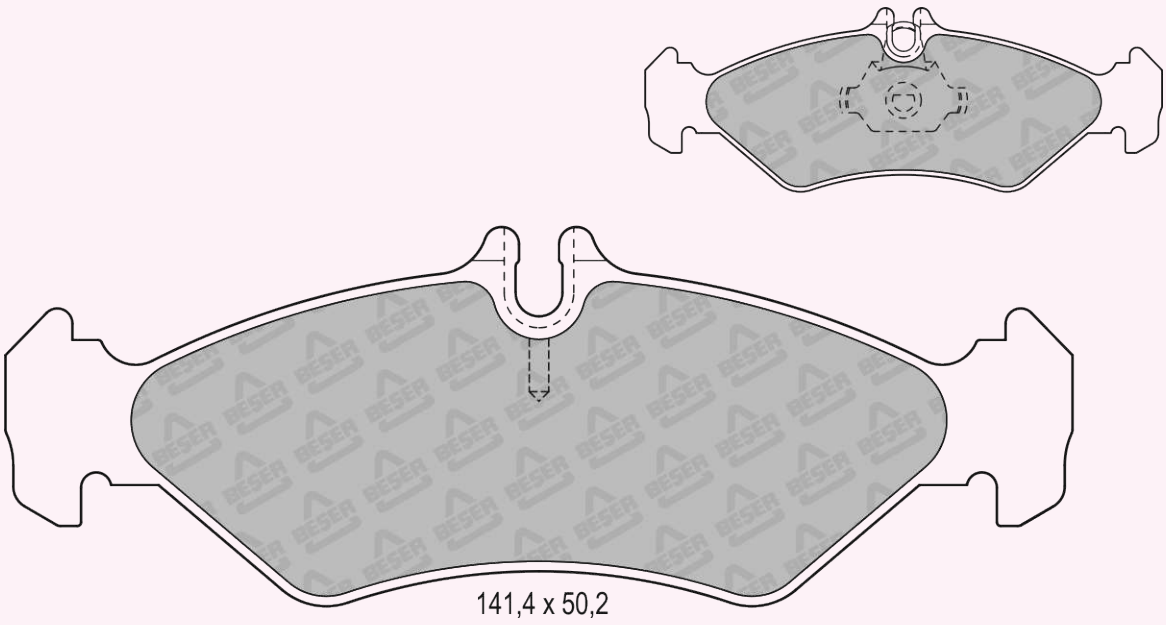

141,4 x 50,2

REFERENCE	T(mm)	REMARKS	MAKE	F/R	WVA No
3679	21,7	4 PADS PLAIN	MERCEDES BENZ OPTARE	F	29835

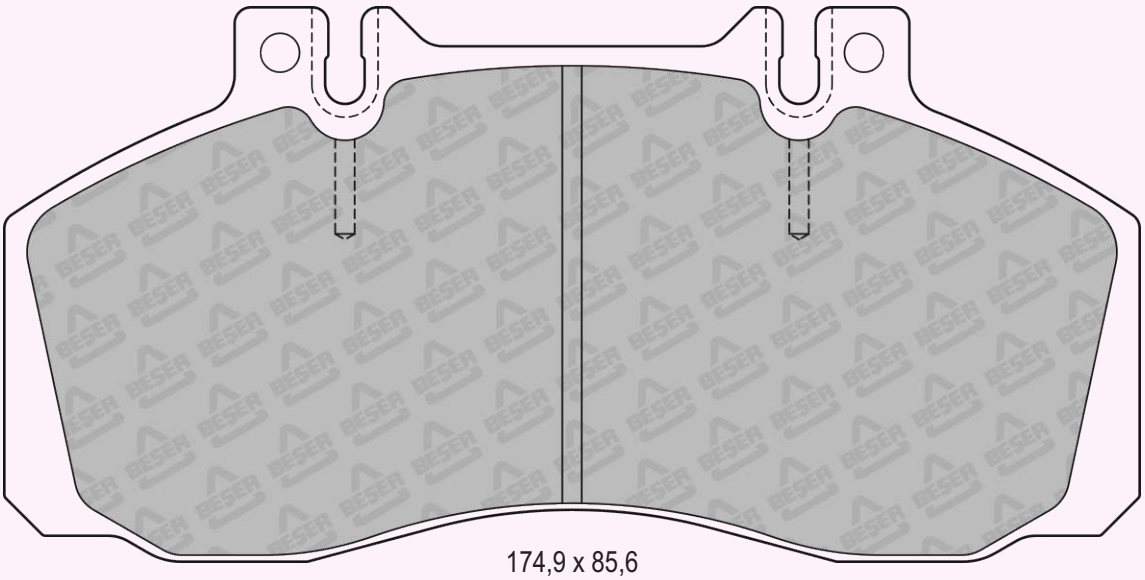

174,9 x 85,6
(NOT SCALE)

REFERENCE	T(mm)	REMARKS	MAKE	F/R	WVA No
3680	17	2 PADS WITH WEAR SENSOR (115mm)	MERCEDES BENZ PEUGEOT	R	21278 21572 21904

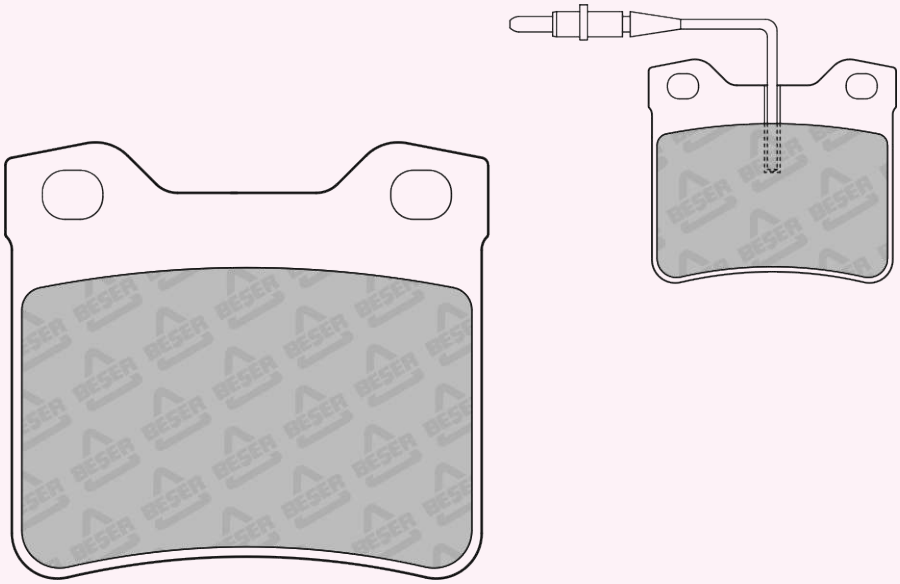

63,8 x 57,55

REFERENCE	T(mm)	REMARKS	MAKE	F/R	WVA No
3681	20,6	4 PADS PLAIN	MERCEDES BENZ	F	23022

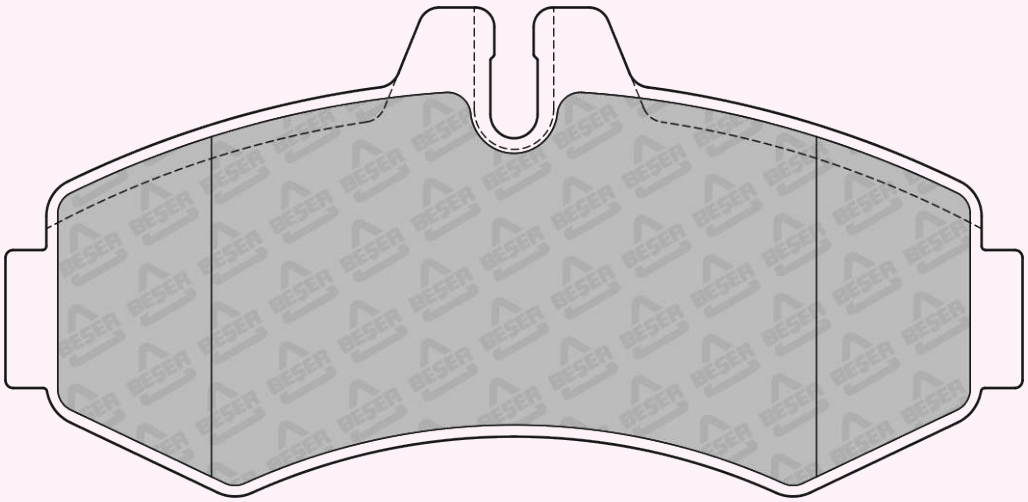

134,4 x 64,5

REFERENCE	T(mm)	REMARKS	MAKE	F/R	WVA No
3682	19,6	2 PADS PISTON CLIP	AUDI - SEAT SKODA - VW	F	21974 23130

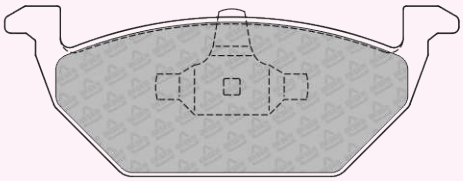

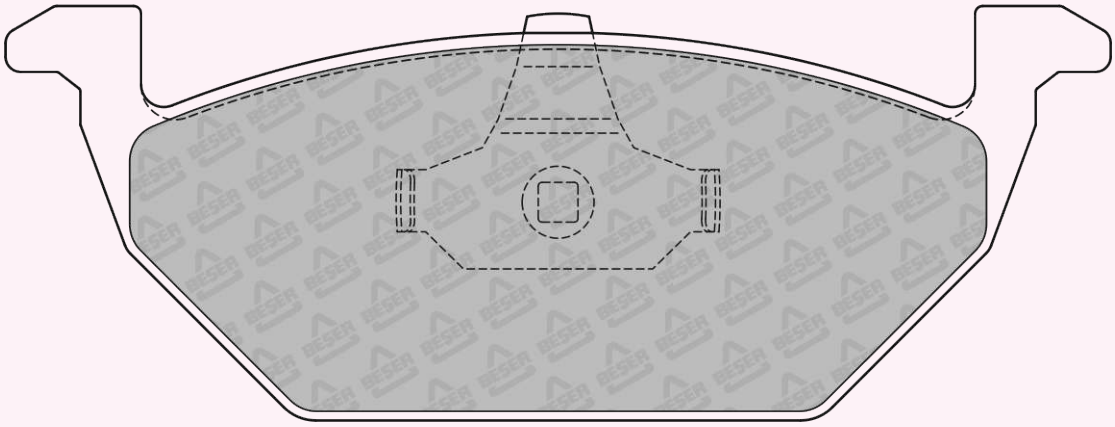

146 x 54,7

REFERENCE	T(mm)	REMARKS	MAKE	F/R	WVA No
3683	18	2 PADS WITH WEAR SENSOR	HONDA - LAND ROVER MG - ROVER	F	21515 21516 21517

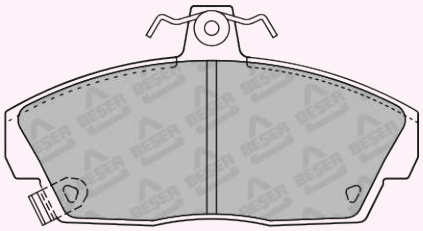

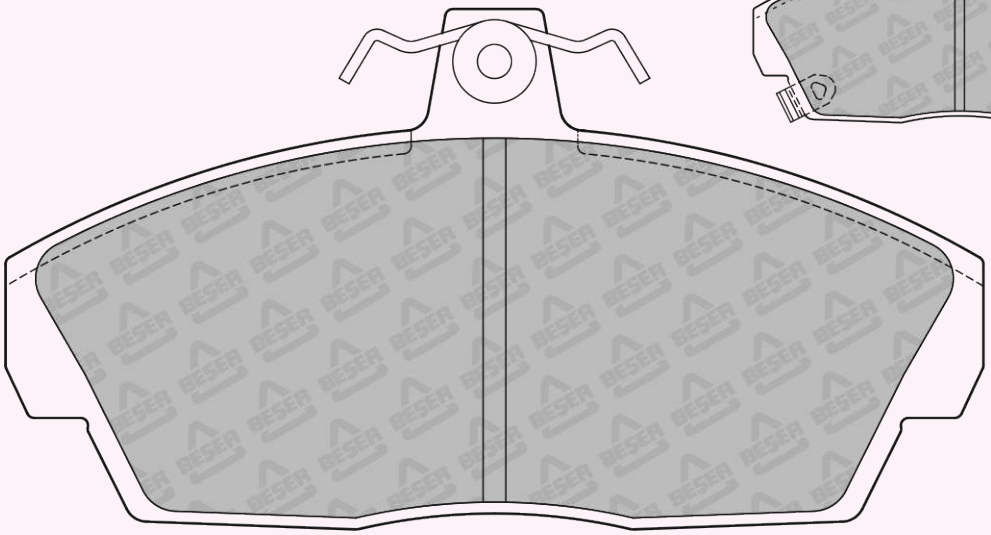

129,2 x 68,6

REFERENCE	T(mm)	REMARKS	MAKE	F/R	WVA No
3685	15,7	2 PADS WITH WEAR SENSOR	CHANGFENG - CITROEN MITSUBISHI - PEUGEOT	F	21363 21768 21769

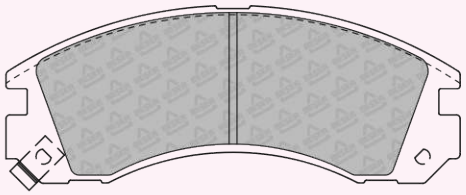

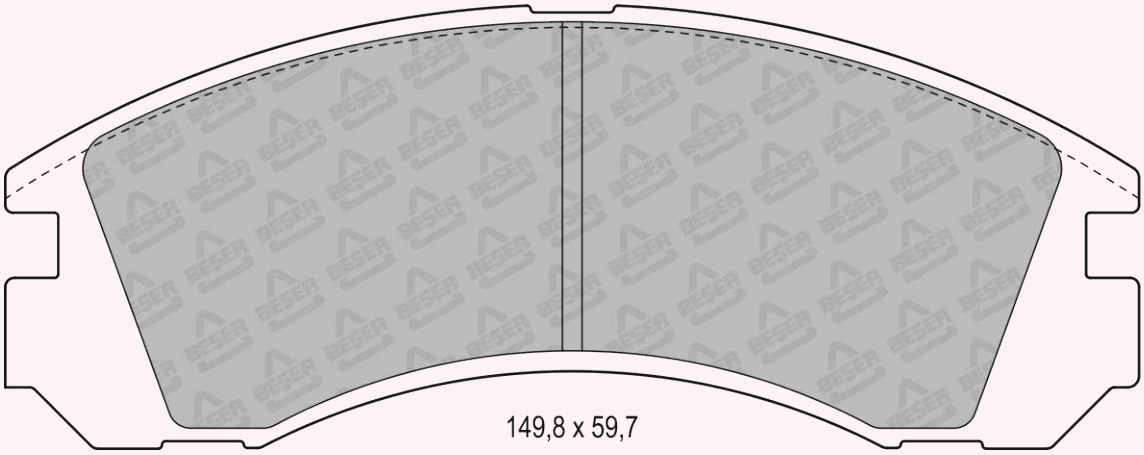

REFERENCE	T(mm)	REMARKS	MAKE	F/R	WVA No
3686	15	2 PADS WITH WEAR SENSOR	HONDA	F	21697 21698 21699

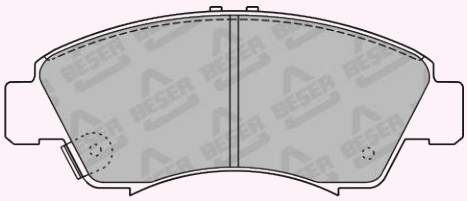

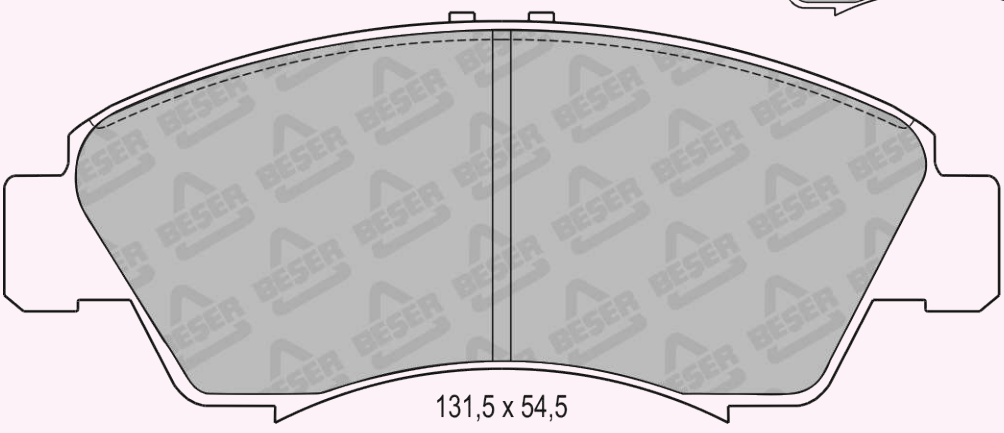

REFERENCE	T(mm)	REMARKS	MAKE	F/R	WVA No
3687	17,6	4 PADS PLAIN	BUICK - CHEVROLET DAEWOO - HOLDEN	F	23234 23235 23236

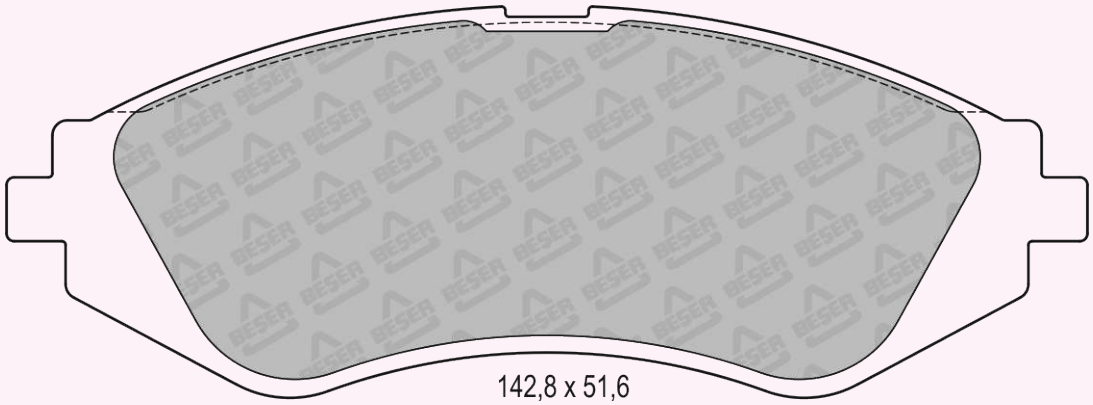

REFERENCE	T(mm)	REMARKS	MAKE	F/R	WVA No
3687/1	17,6	2 PADS WITH WEAR SENSOR	BUICK - CHEVROLET DAEWOO - HOLDEN	F	23234 23235 23236

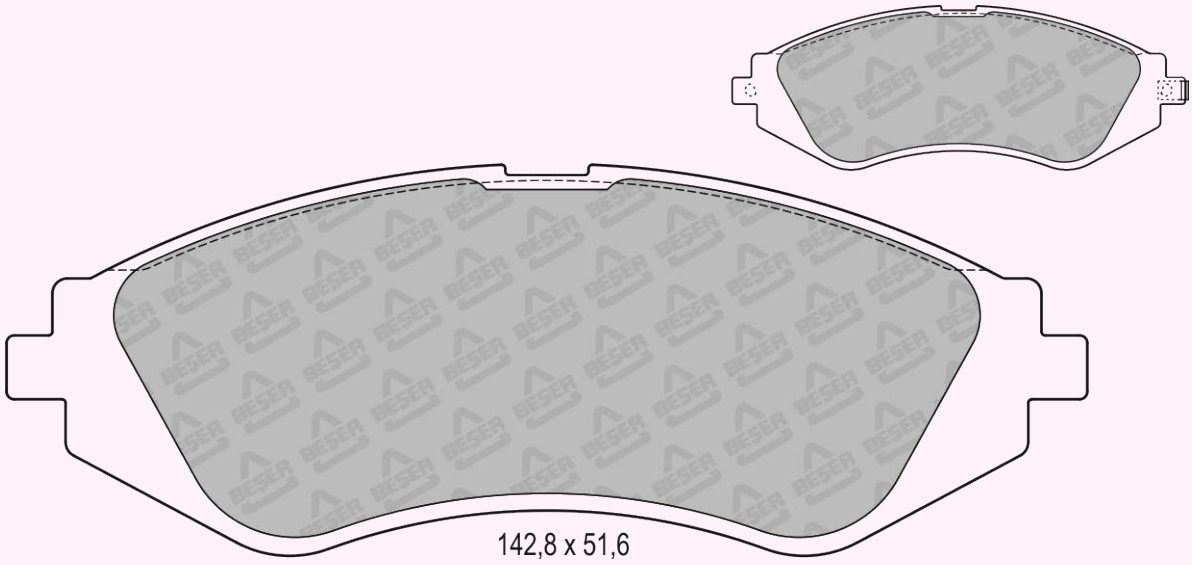

REFERENCE	T(mm)	REMARKS	MAKE	F/R	WVA No
3688	14	2 PADS WITH WEAR SENSOR	MITSUBISHI	R	21840 21841 21842

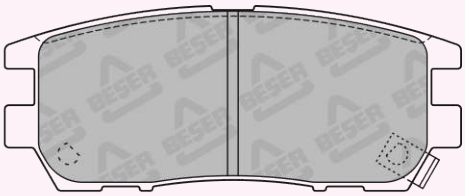

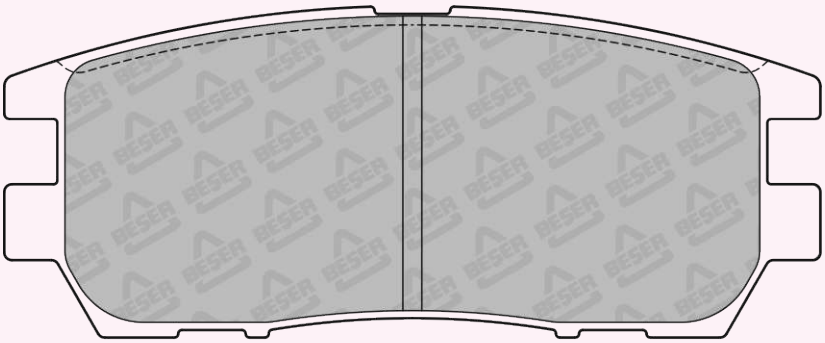

107,8 x 43,7

REFERENCE	T(mm)	REMARKS	MAKE	F/R	WVA No
3689	14	2 PADS WITH 2 HOLES (14mm) DIAMETER ON BACKING PLATE	MERCEDES BENZ SSANGYONG	F	20933 20934 21573

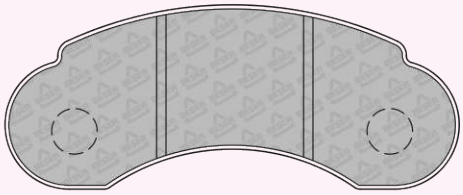

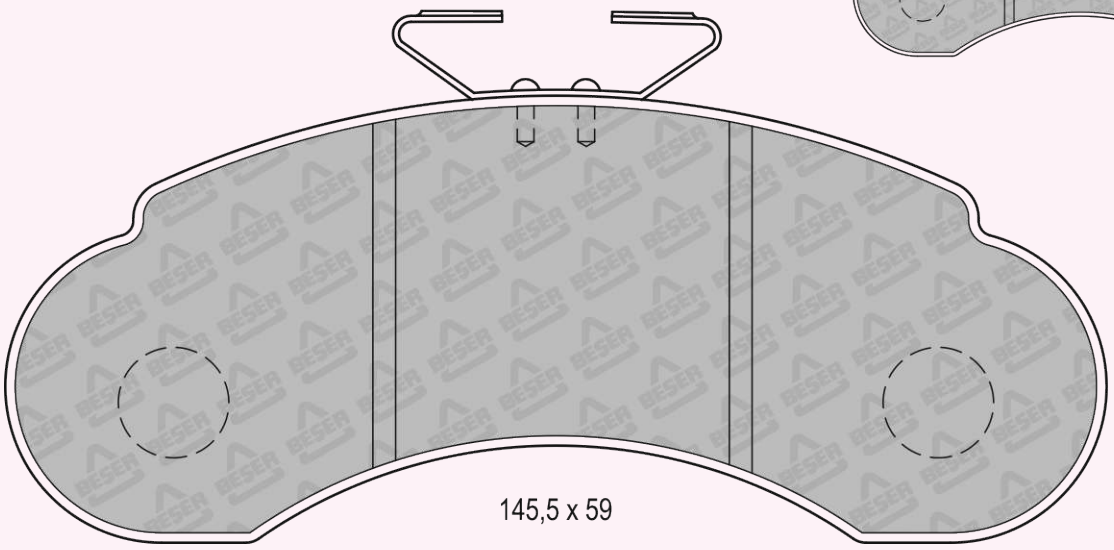

145,5 x 59

REFERENCE	T(mm)	REMARKS	MAKE	F/R	WVA No
3690	18	2 PADS WITH WEAR SENSOR	FIAT	F	20907 23227 23228

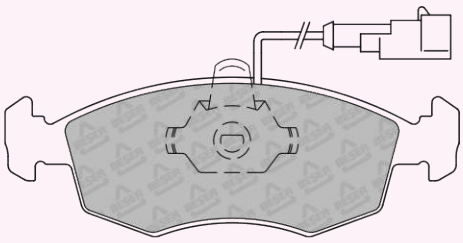

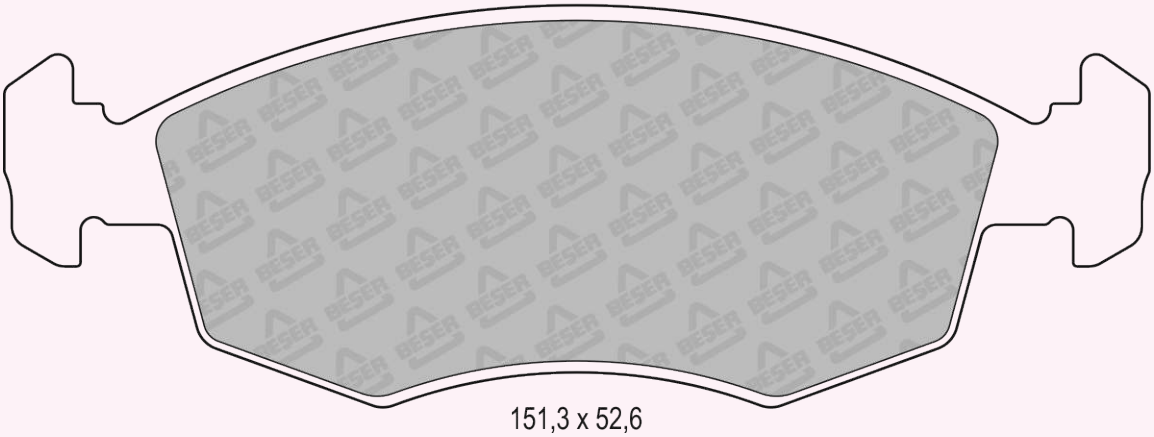

151,3 x 52,6

REFERENCE	T(mm)	REMARKS	MAKE	F/R	WVA No
3691	15	2 PADS WITH WEAR SENSOR	HONDA	F	21330 21331 21332

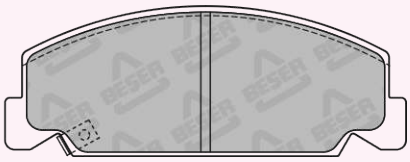

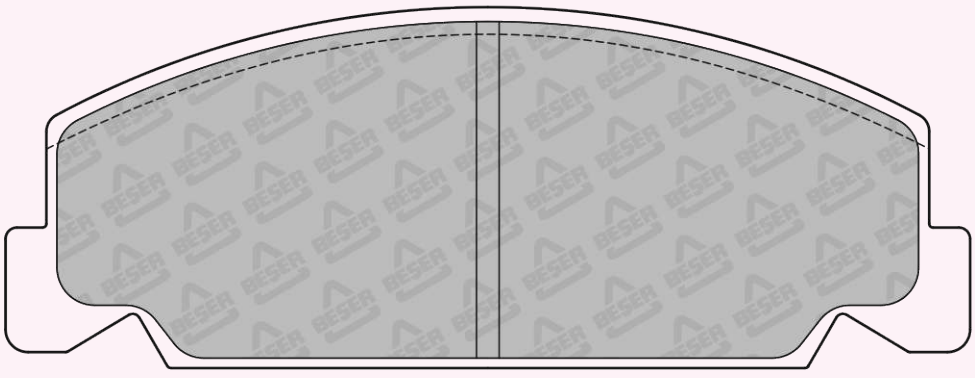

127,6 x 47,8

REFERENCE	T(mm)	REMARKS	MAKE	F/R	WVA No
3692	17	4 PADS PLAIN	FORD - NISSAN SUBARU	F	21347

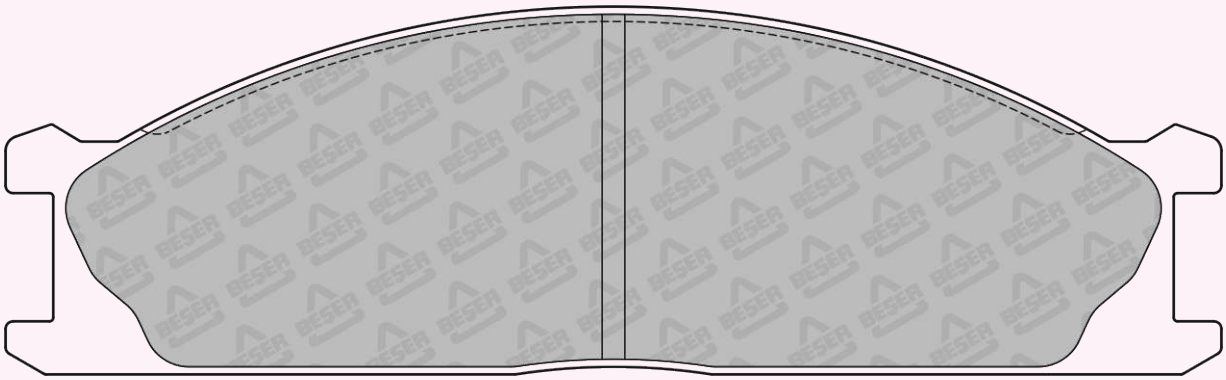

160,6 x 48,5

REFERENCE	T(mm)	REMARKS	MAKE	F/R	WVA No
3693	15,5	4 PADS PLAIN	LANDWIND(JMC) - LEXUS MITSUBISHI - TOYOTA	F	21947

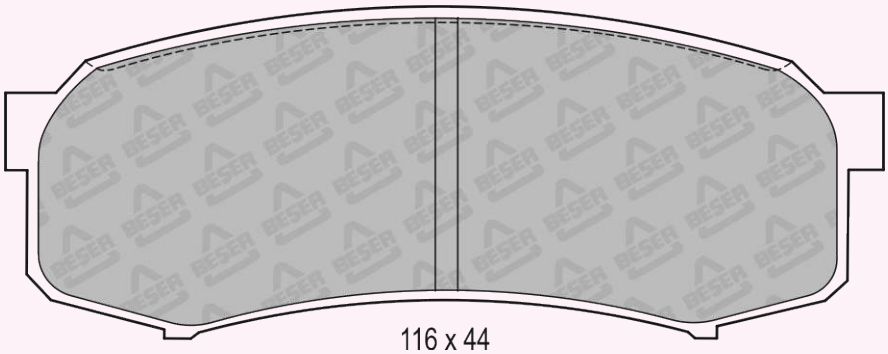

116 x 44

REFERENCE	T(mm)	REMARKS	MAKE	F/R	WVA No
3695	19,3	2 PADS WITH WEAR SENSOR	HONDA	F	21700 21701 21702

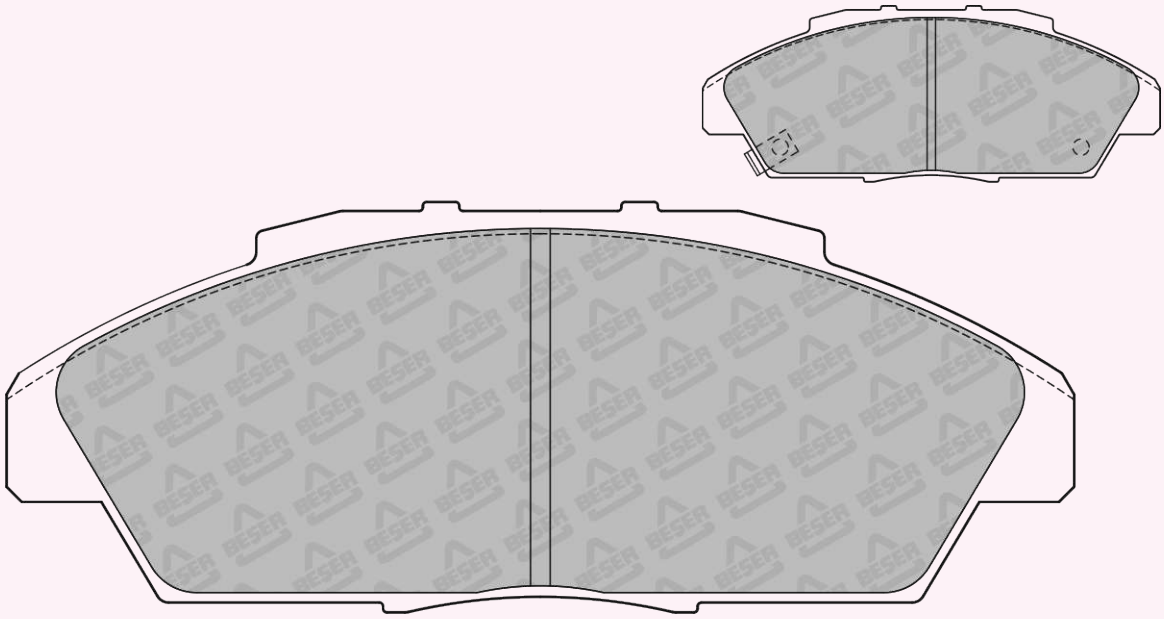

141,1 x 54,3

REFERENCE	T(mm)	REMARKS	MAKE	F/R	WVA No
3696	16	2 PADS WITH WEAR SENSOR	HONDA	F	21497 21498 21499

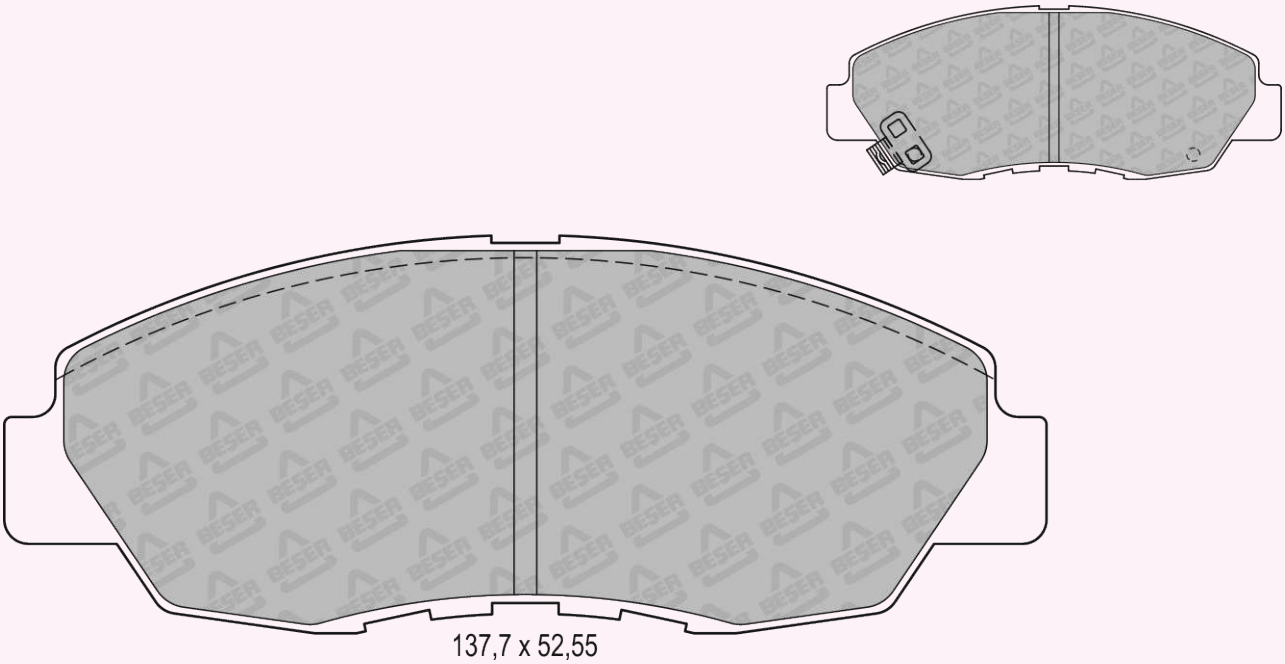

137,7 x 52,55

REFERENCE	T(mm)	REMARKS	MAKE	F/R	WVA No
3697	17	2 PADS WITH WEAR SENSOR	NISSAN	F	23086 23316 23317

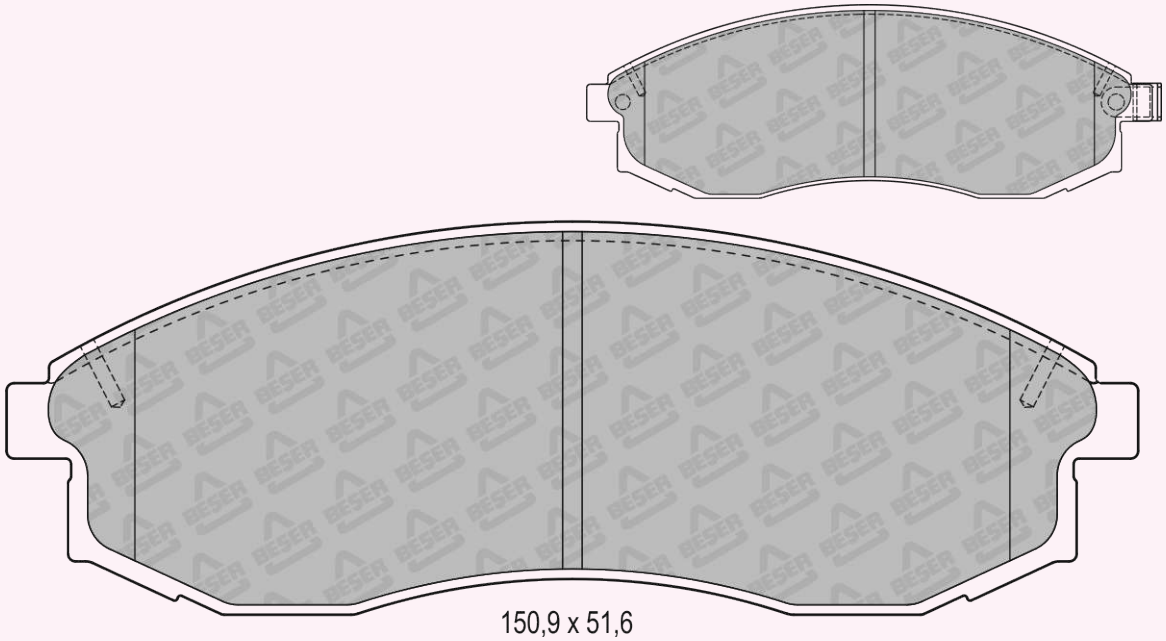

150,9 x 51,6

REFERENCE	T(mm)	REMARKS	MAKE	F/R	WVA No
3699	17	4 PADS WITH WEAR SENSOR	NISSAN - INFINITI SUZUKI	F	21561 21562 21633

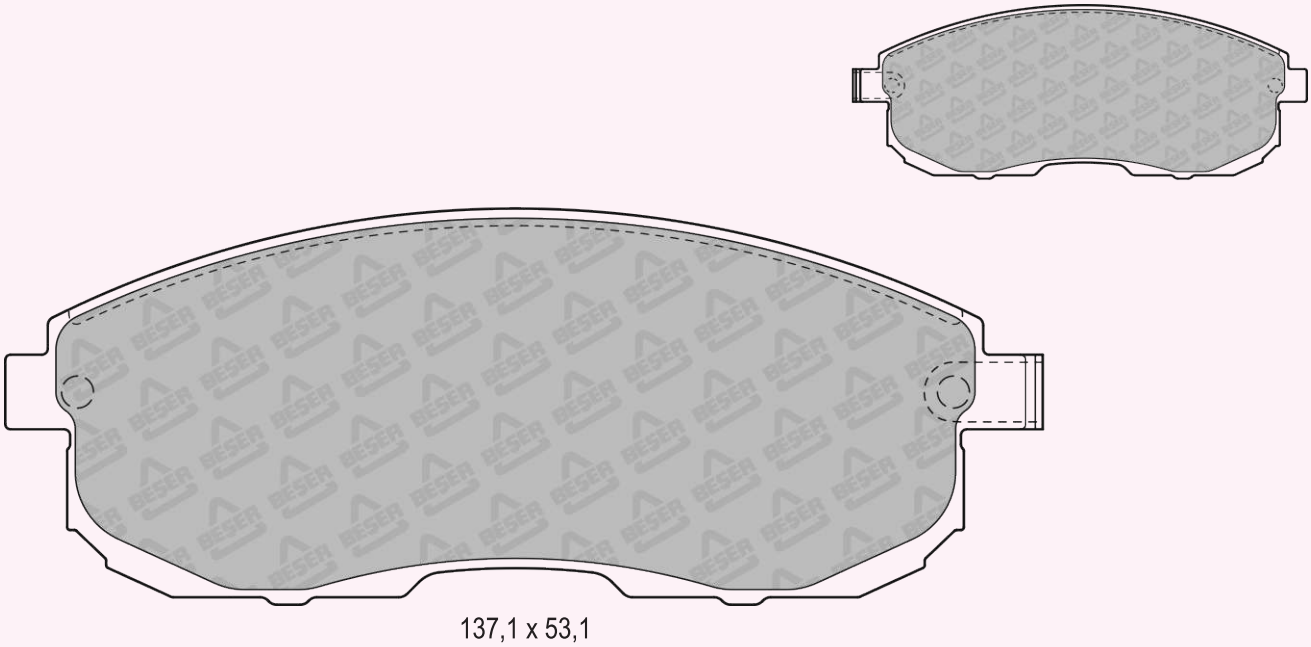

137,1 x 53,1

REFERENCE	T(mm)	REMARKS	MAKE	F/R	WVA No
3700	16,8	4 PADS PLAIN	FORD - INFINITI - NISSAN	F	21526

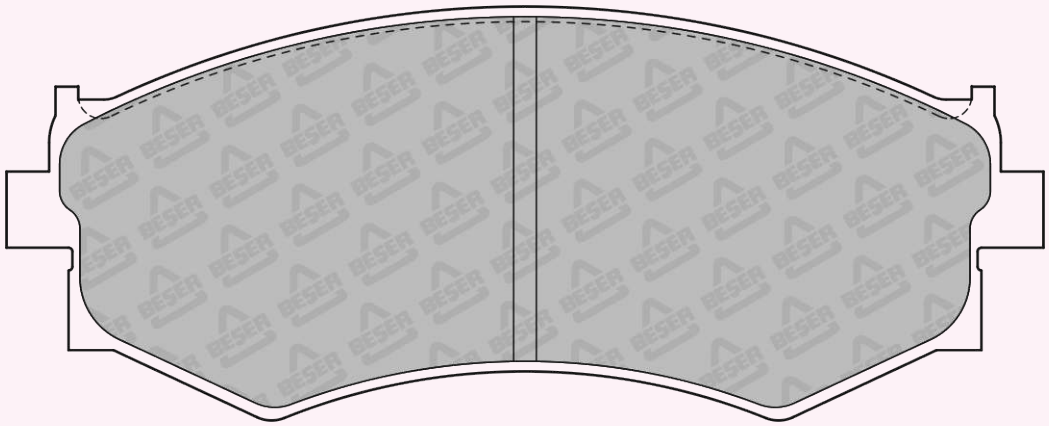

137 x 54,6

REFERENCE	T(mm)	REMARKS	MAKE	F/R	WVA No
3701	15	4 PADS PLAIN	TOYOTA	F	20004

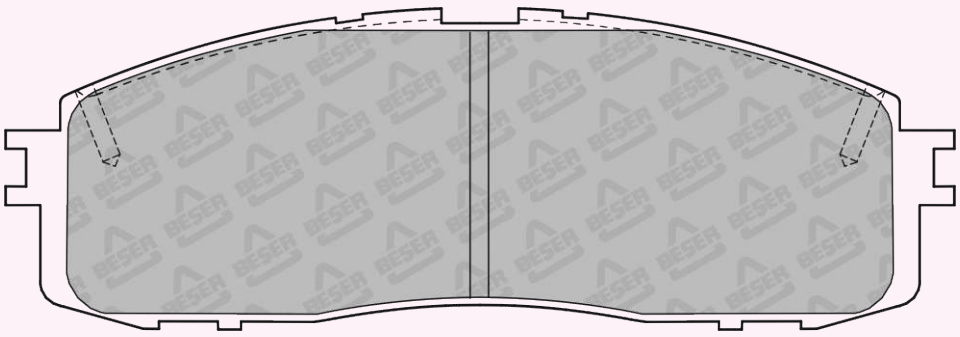

125,3 x 42,3

REFERENCE	T(mm)	REMARKS	MAKE	F/R	WVA No
3704	18	2 PADS WITH WEAR SENSOR	ACURA - HONDA ROVER	F	21651 21652 21653

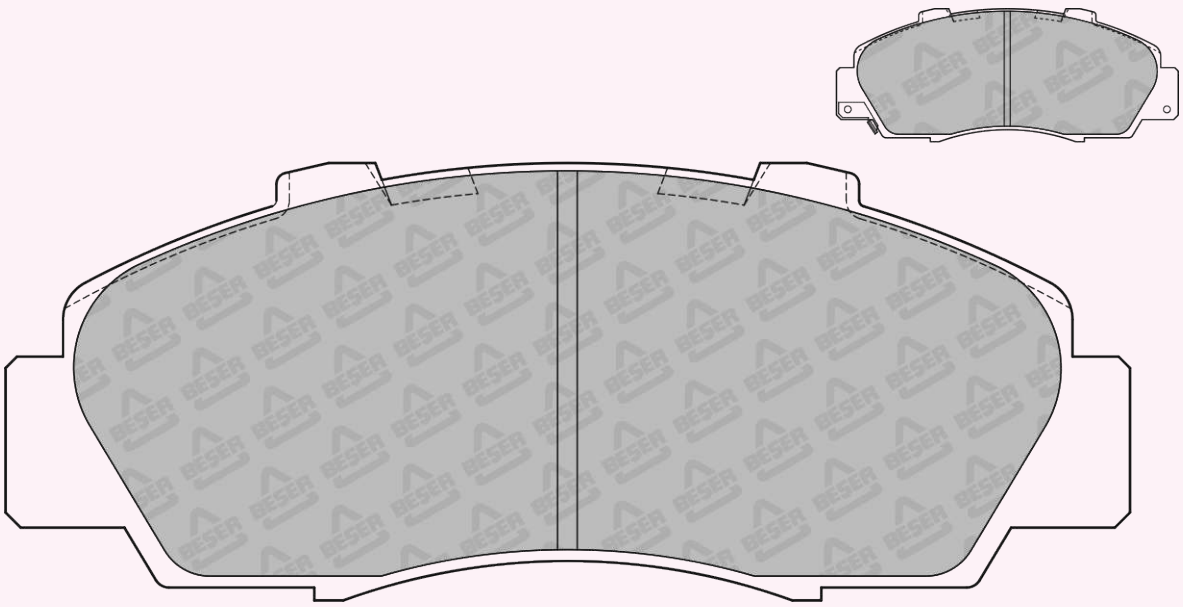

148,6 x 57,7

REFERENCE	T(mm)	REMARKS	MAKE	F/R	WVA No
3705	15,4	4 PADS PLAIN	HONDA	F	20735

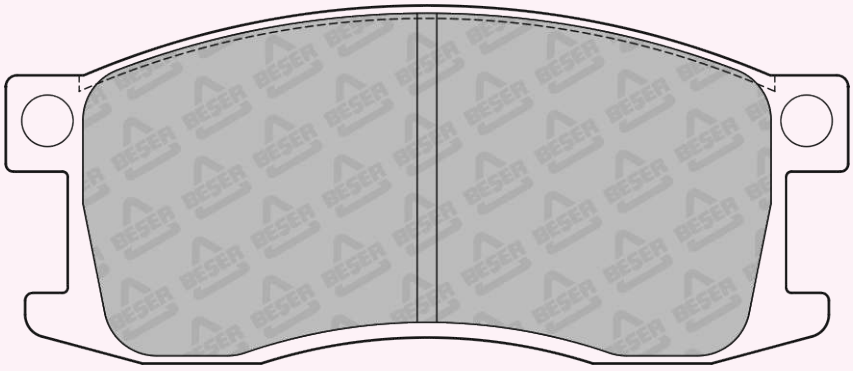

111,4 x 47,2

REFERENCE	T(mm)	REMARKS	MAKE	F/R	WVA No
3706	15	2 PADS "U" SHAPE TO FIT THE WEAR SENSOR	BMW	R	20587

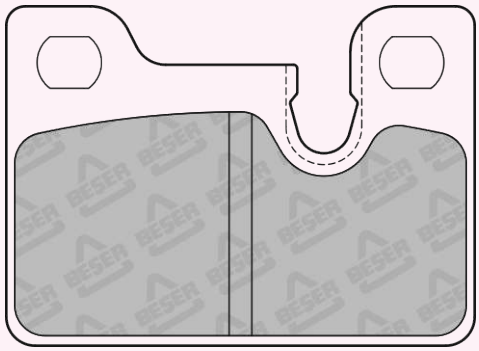

61,8 x 44,7

REFERENCE	T(mm)	REMARKS	MAKE	F/R	WVA No
3708	18	2 PADS WITH WEAR SENSOR (195mm)	BMC	F	---

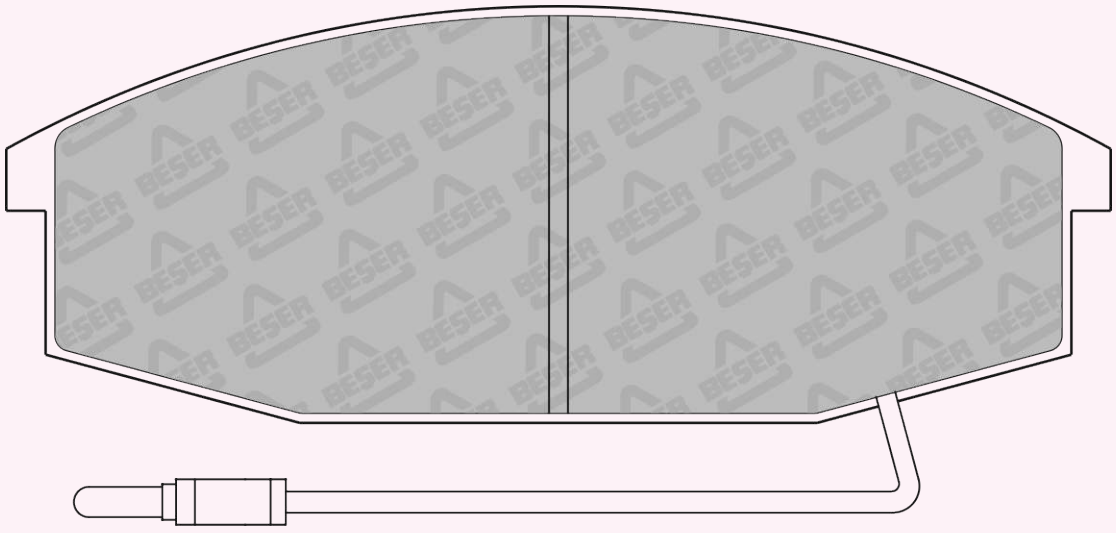

146 x 55

REFERENCE	T(mm)	REMARKS	MAKE	F/R	WVA No
3708/1	18	4 PADS PLAIN	BMC	F	---

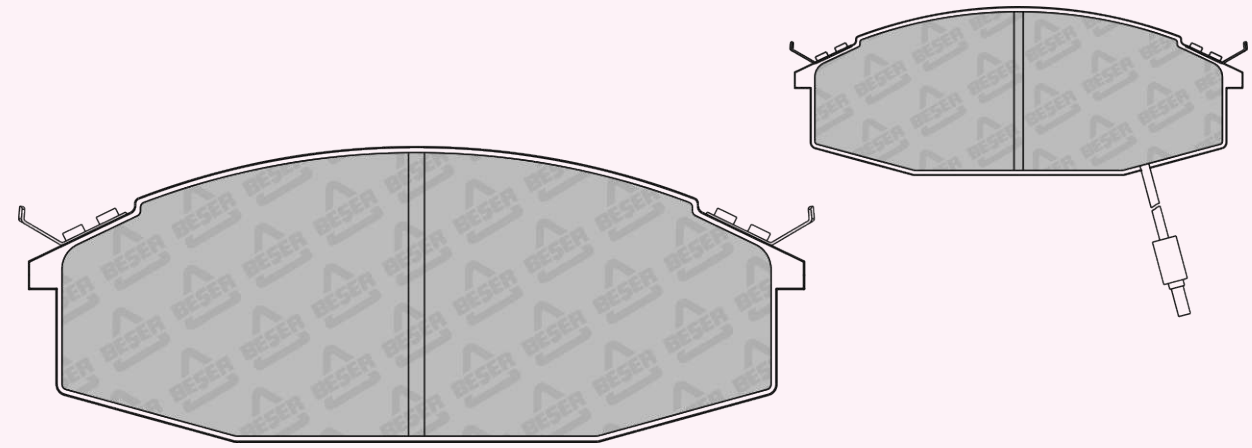

146 x 54
(NOT SCALE)

REFERENCE	T(mm)	REMARKS	MAKE	F/R	WVA No
3709	14,5	4 PADS PLAIN	CHRYSLER-DAIHATSU-HONDA HYUNDAI-MAZDA-MITSUBISHI-TOYOTA	F	20703

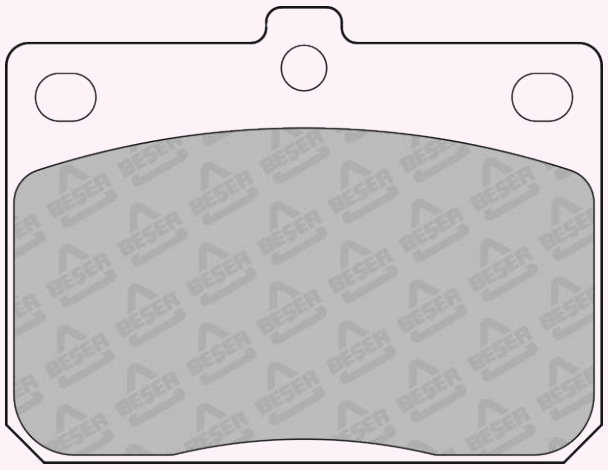

78,7 x 60

REFERENCE	T(mm)	REMARKS	MAKE	F/R	WVA No
3710	14,5	4 PADS PLAIN	TOYOTA	F	20302

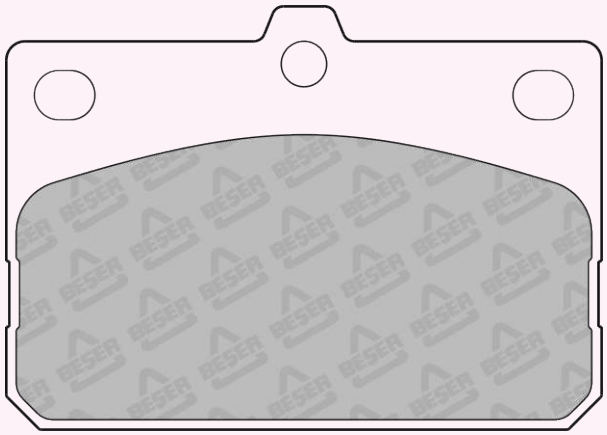

78,6 x 55,8

REFERENCE	T(mm)	REMARKS	MAKE	F/R	WVA No
3714	15,6	4 PADS WITH DIRILLED HOLES ON RADIUS PLATE	GREAT WALL - TOYOTA	F	21158

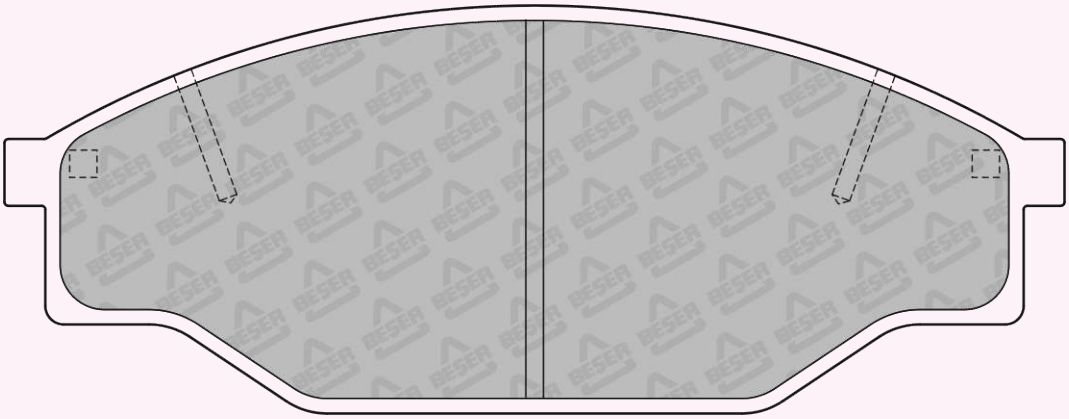

140 x 55

REFERENCE	T(mm)	REMARKS	MAKE	F/R	WVA No
3717	15,6	4 PADS PLAIN	CADILLAC CHEVROLET - HOLDEN OPEL - SAAB - VAUXHALL	F	21050

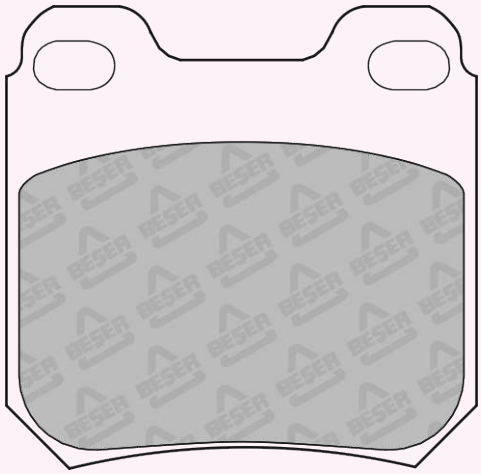

62 x 61

REFERENCE	T(mm)	REMARKS	MAKE	F/R	WVA No
3721	14,9	2 PADS WITH WEAR SENSOR	CHEVROLET - SUBARU - SUZUKI - TATA	F	21333 21334 21335

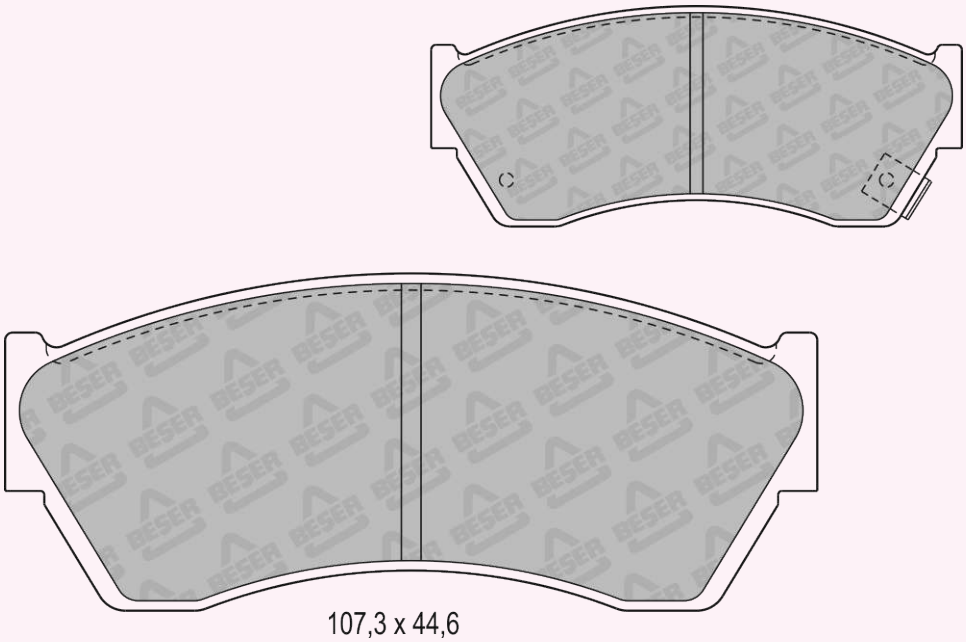

107,3 x 44,6

REFERENCE	T(mm)	REMARKS	MAKE	F/R	WVA No
3722	18	4 PADS WITH WEAR SENSOR	FORD	F	23300 23301

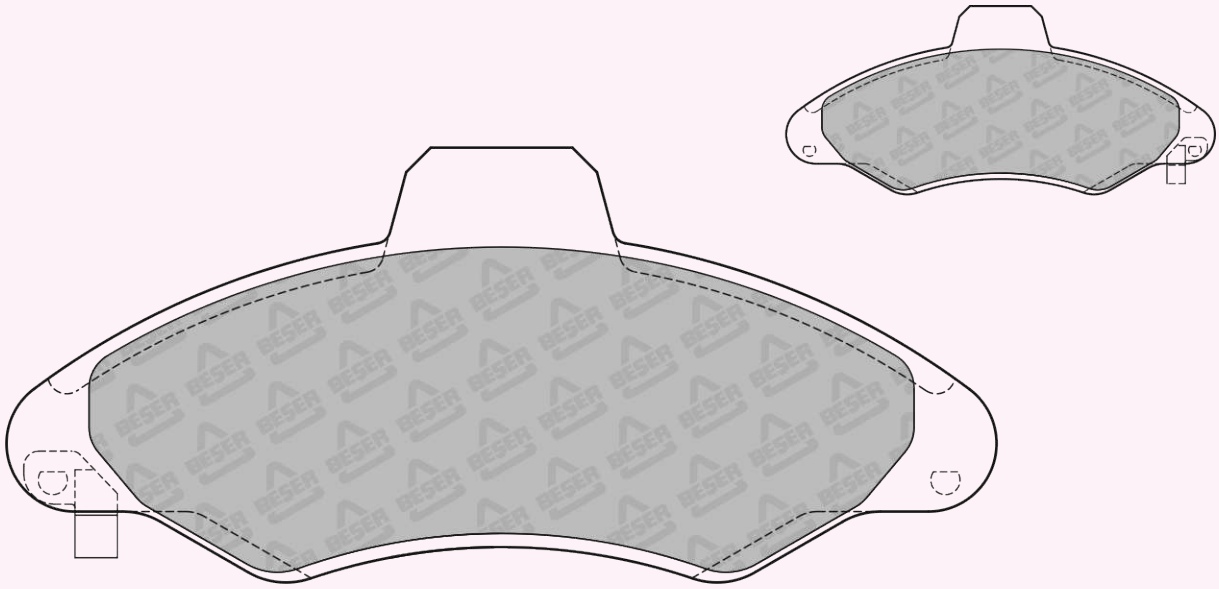

130,8 x 57,5

REFERENCE	T(mm)	REMARKS	MAKE	F/R	WVA No
3723	14,2	2 PADS WITH WEAR SENSOR	FORD - KIA MAZDA	F	21355 21356 21357

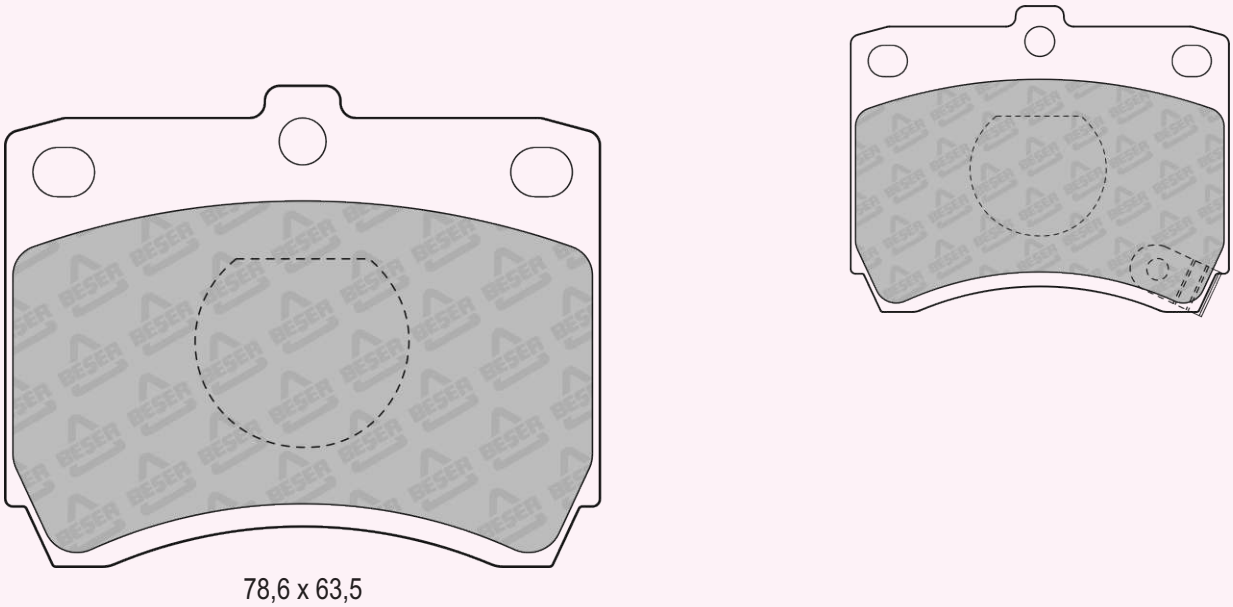

78,6 x 63,5

REFERENCE	T(mm)	REMARKS	MAKE	F/R	WVA No
3731	17,5	4 PADS PLAIN	SKODA VW	F	21662

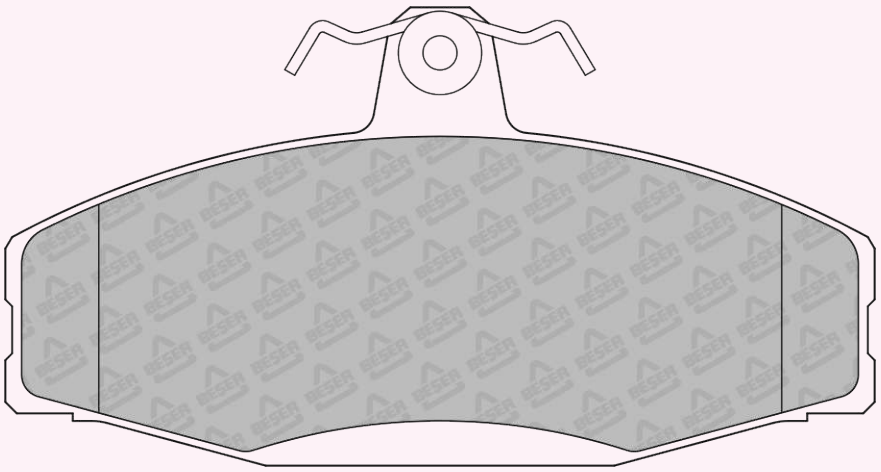

114,9 x 60,3

REFERENCE	T(mm)	REMARKS	MAKE	F/R	WVA No
3733	19	4 PADS WITH CHAMFERS.	CADILLAC - OPEL VAUXHALL	F	21368

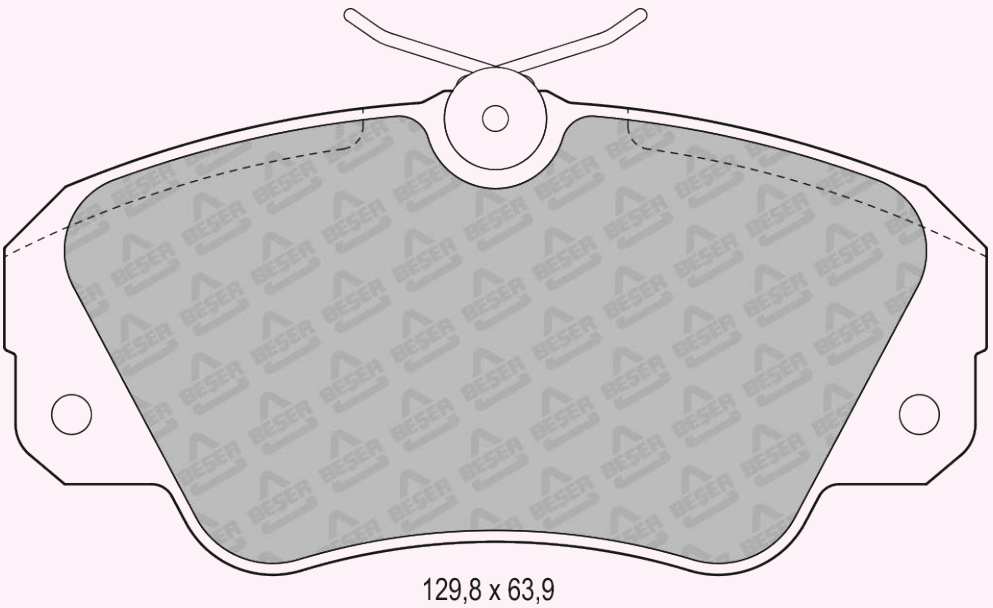

129,8 x 63,9

REFERENCE	T(mm)	REMARKS	MAKE	F/R	WVA No
3736	17,5	2 PADS PISTON CLIP	HOLDEN - OPEL SAAB - VAUXHALL	F	21411 21413

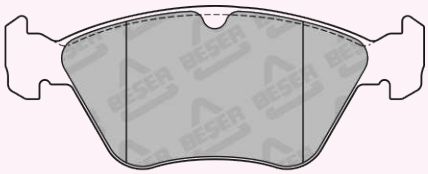

156,4 x 60,65
(NOT SCALE)

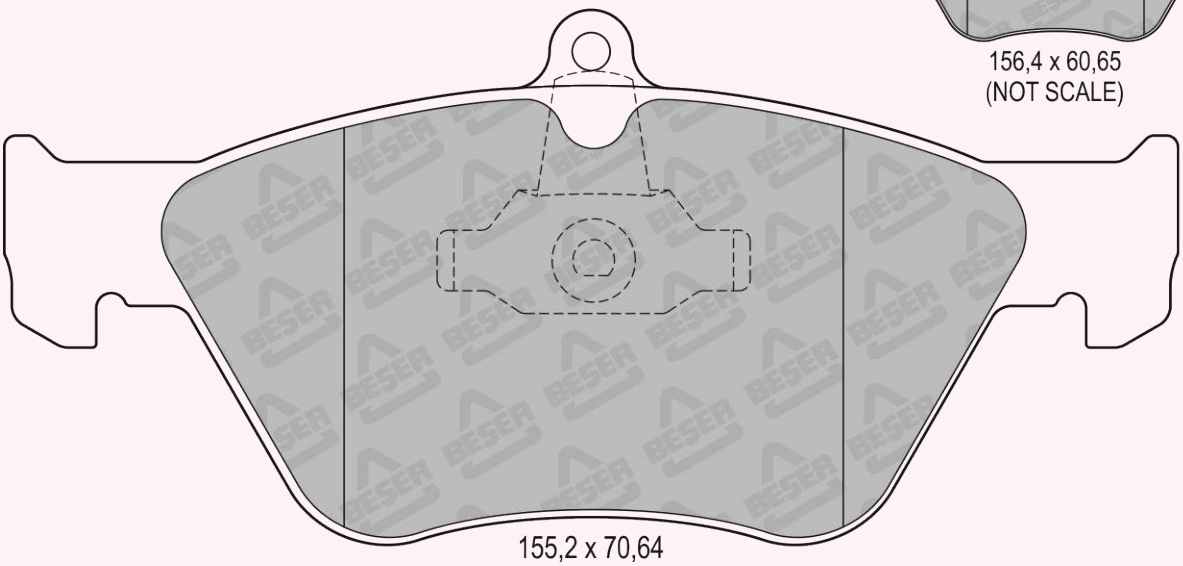

155,2 x 70,64

REFERENCE	T(mm)	REMARKS	MAKE	F/R	WVA No
3740	18	2 PADS WITH WEAR SENSOR	KIA	F	23384 23385 23386

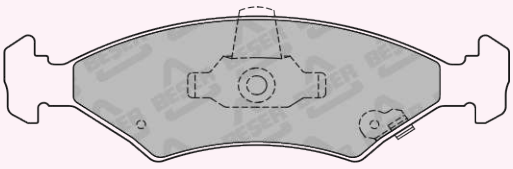

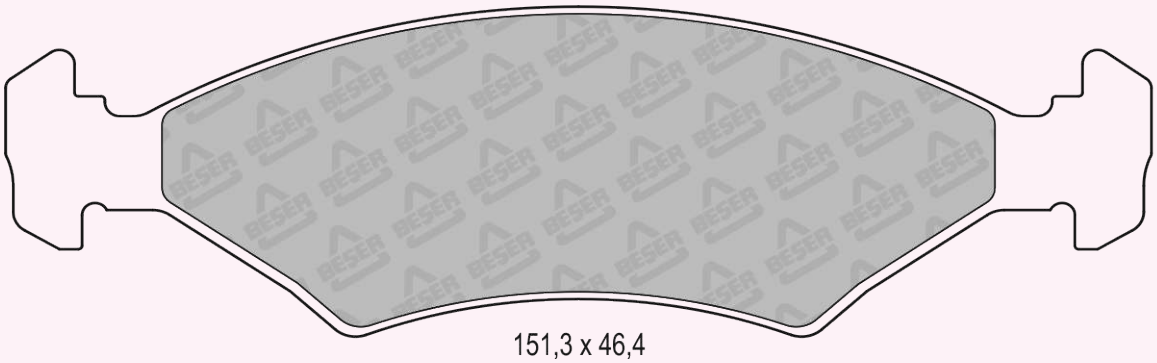

151,3 x 46,4

REFERENCE	T(mm)	REMARKS	MAKE	F/R	WVA No
3743	15,5	2 PADS WITH WEAR SENSOR	ACURA - HOLDEN - ISUZU - OPEL VAUXHALL	F	21845

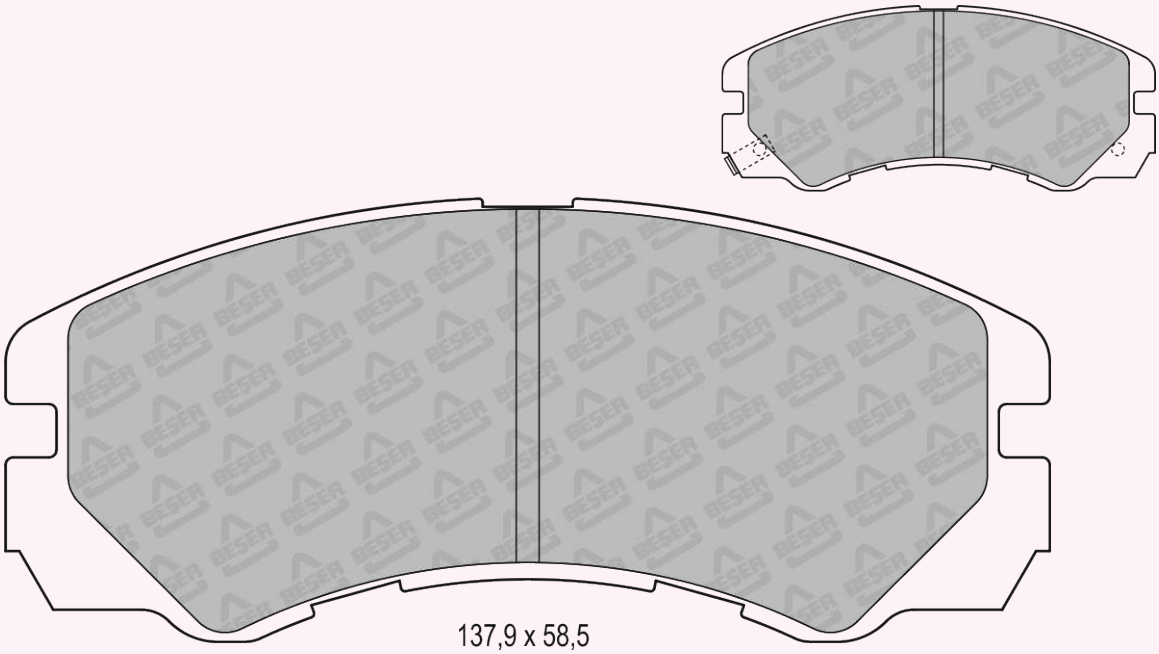

137,9 x 58,5

REFERENCE	T(mm)	REMARKS	MAKE	F/R	WVA No
3744	16	4 PADS PLAIN	DAEWOO - CHEVROLET	R	23241

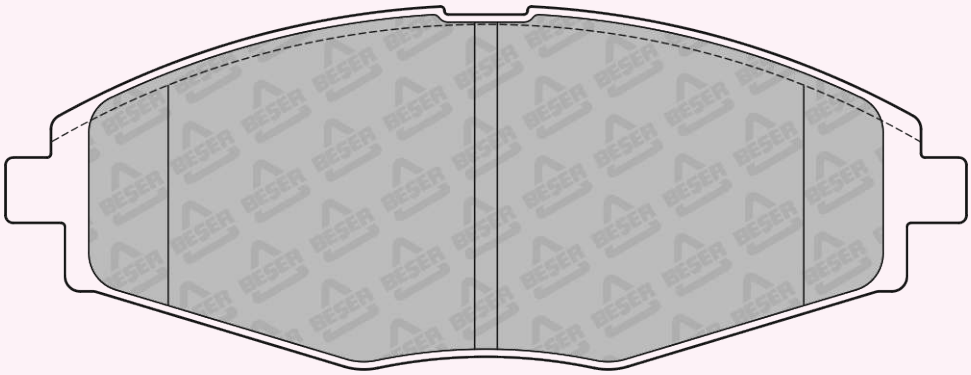

127 x 47,8

REFERENCE	T(mm)	REMARKS	MAKE	F/R	WVA No
3745	14	4 PADS PLAIN	SUZUKI	F	21730

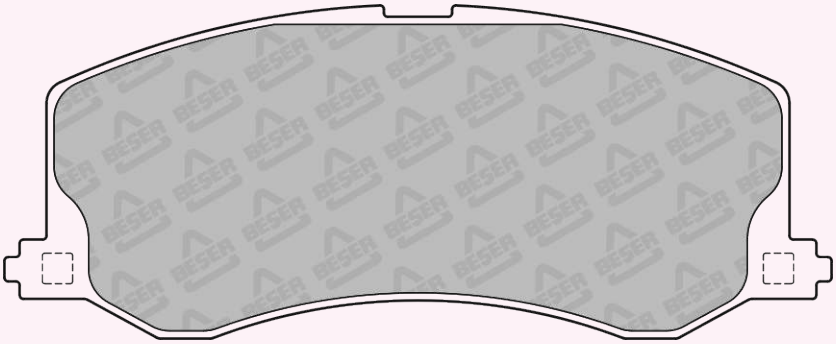

109,2 x 44

REFERENCE	T(mm)	REMARKS	MAKE	F/R	WVA No
3746	13,5	4 PADS PLAIN	ASIA MOTORS - DAIHATSU PERODUA - PIAGGIO	F	20780

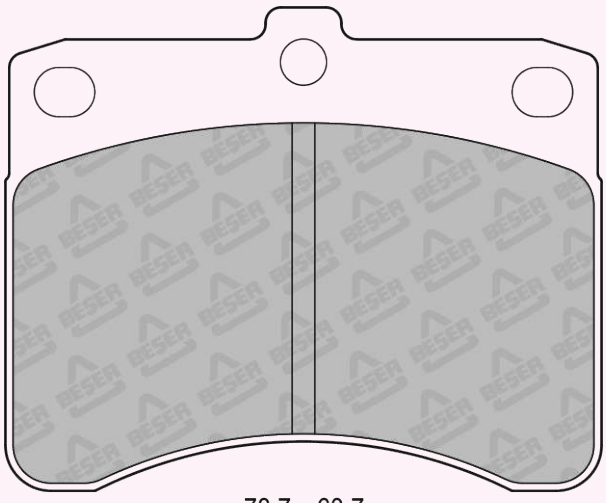

78,7 x 63,7

REFERENCE	T(mm)	REMARKS	MAKE	F/R	WVA No
3747	8	4 PADS PLAIN	AIXAM - LIGIER - PIAGGIO	F	---

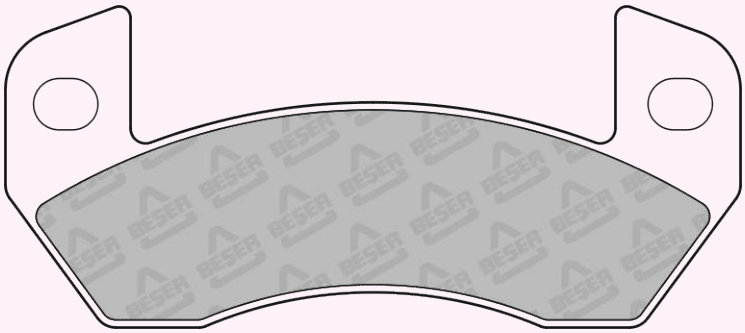

97 x 42,4

REFERENCE	T(mm)	REMARKS	MAKE	F/R	WVA No
3748	9,8	2 PADS WITH WEAR SENSOR (180mm)	AIXAM	F	24730 24731 24732

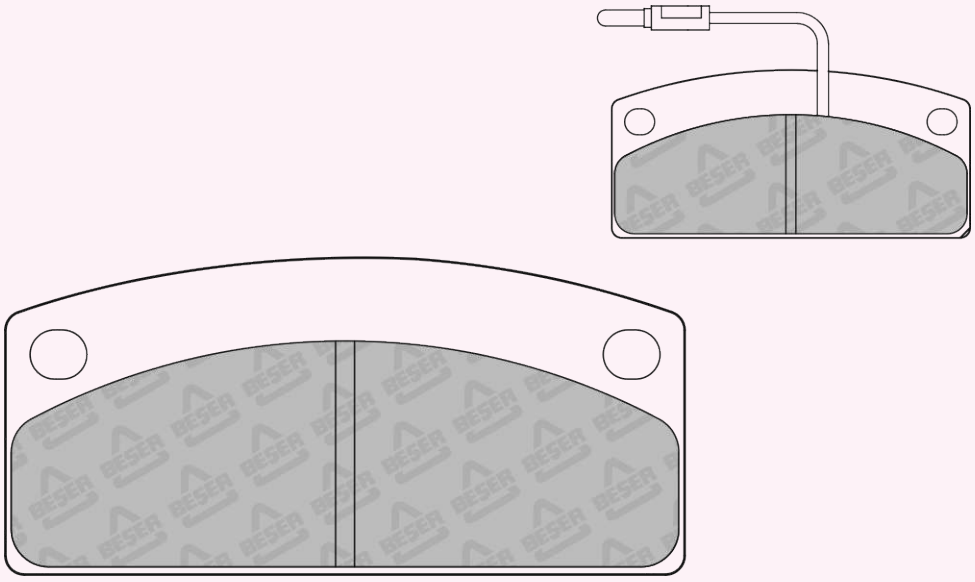

89,7 x 42

REFERENCE	T(mm)	REMARKS	MAKE	F/R	WVA No
3749	20	2 PADS WITH WEAR SENSOR (210mm)	IVECO	F	29001 29003

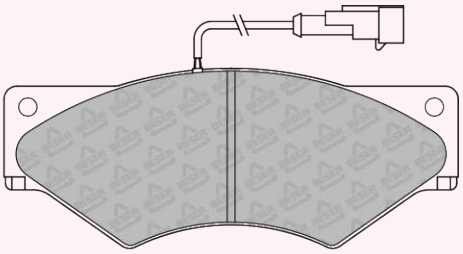

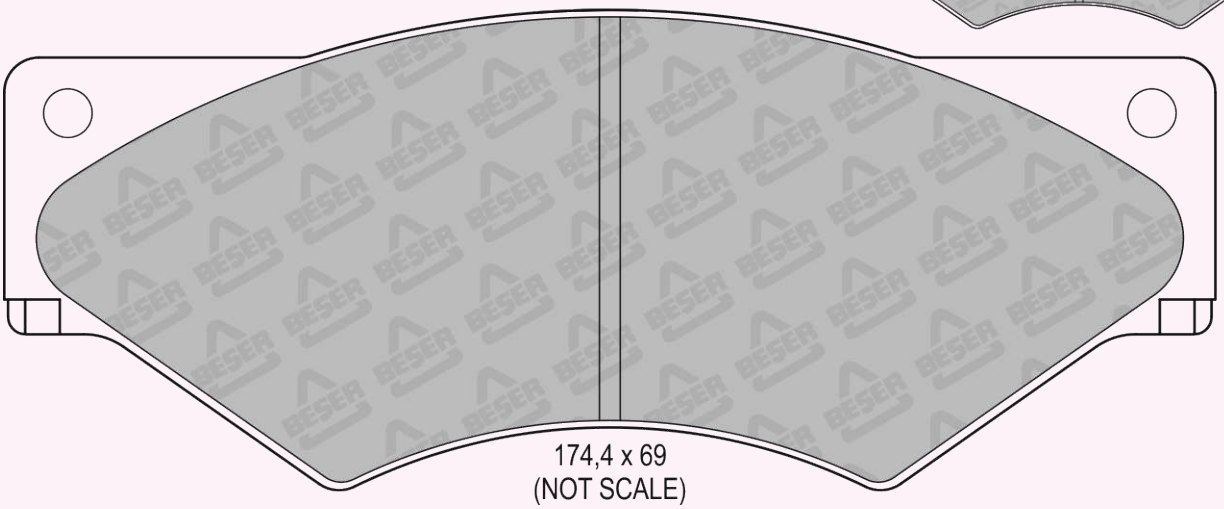

174,4 x 69
(NOT SCALE)

REFERENCE	T(mm)	REMARKS	MAKE	F/R	WVA No
3749/1	20	2 PADS WITH WEAR SENSOR. (225 mm.)	IVECO	F	29001 29107

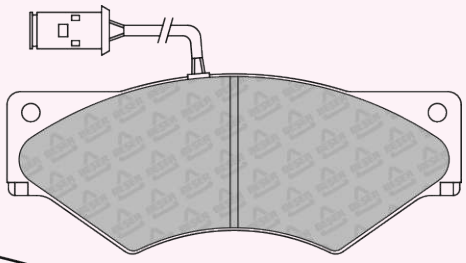

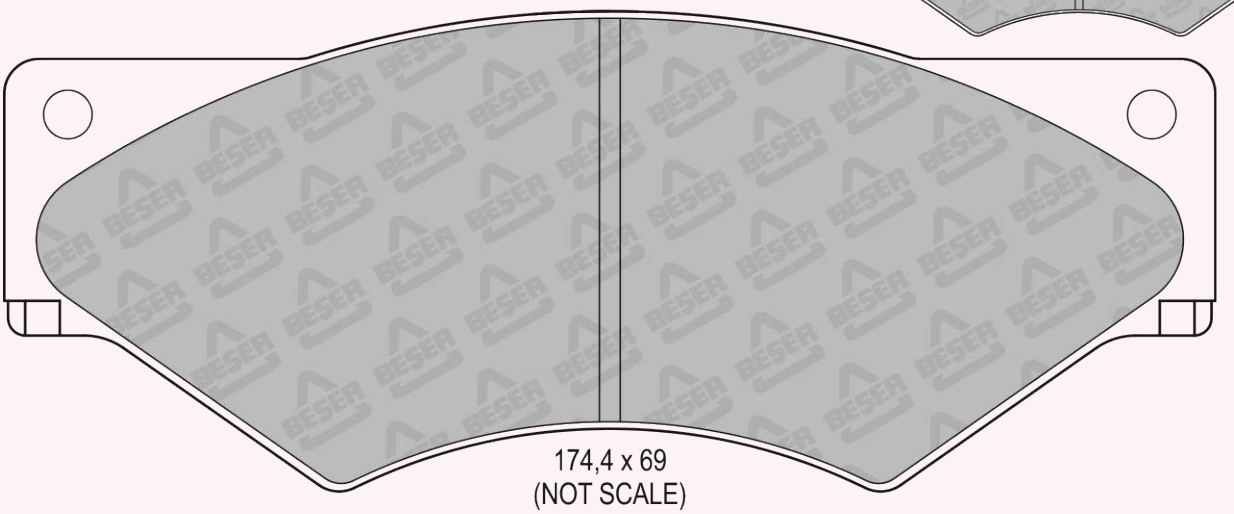

174,4 x 69
(NOT SCALE)

REFERENCE	T(mm)	REMARKS	MAKE	F/R	WVA No
3750	19	2 PADS WITH WEAR SENSOR (310mm)	PEUGEOT	F	21724 21749

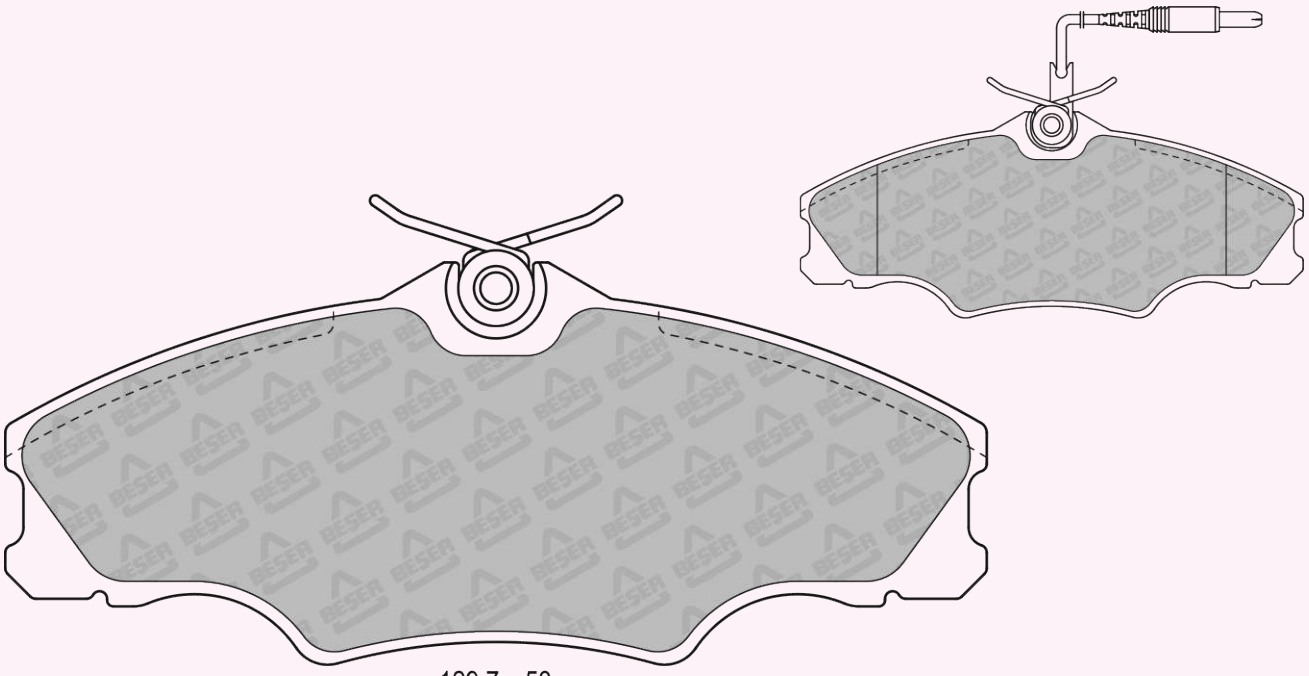

129,7 x 53

REFERENCE	T(mm)	REMARKS	MAKE	F/R	WVA No
3751	18	2 PADS WITH WEAR SENSOR	KIA - IVECO	F	-

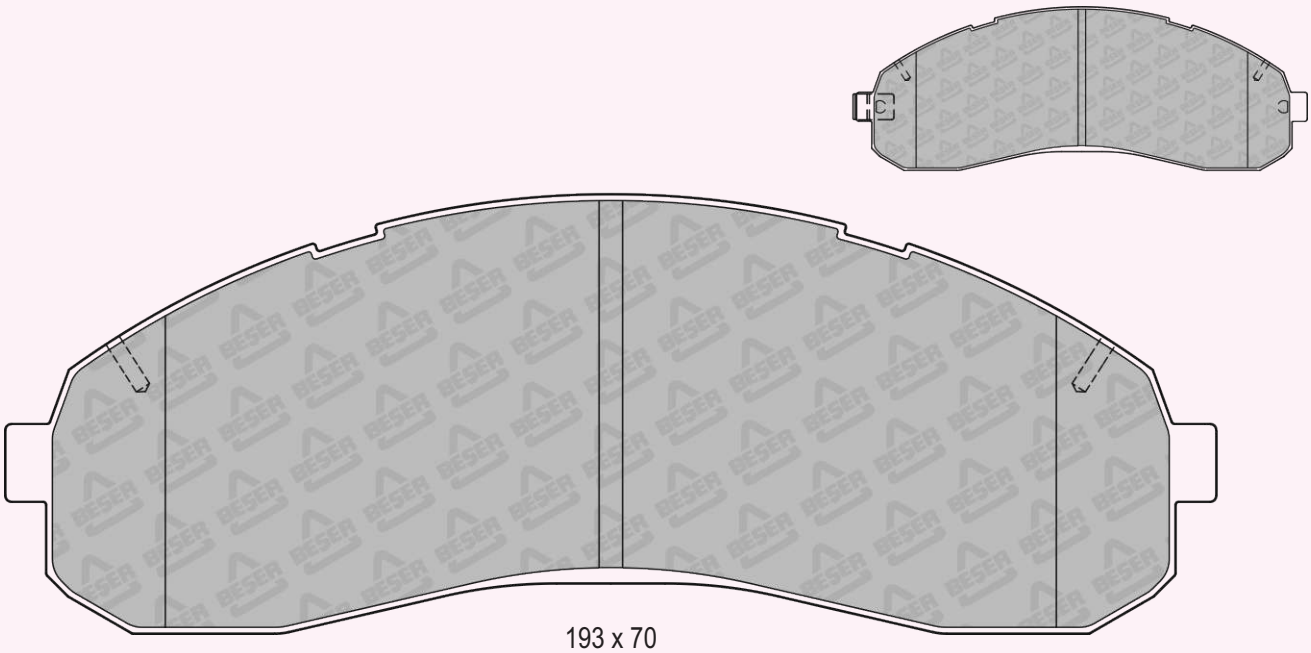

193 x 70
(NOT SCALE)

REFERENCE	T(mm)	REMARKS	MAKE	F/R	WVA No
3752	15	2 PADS WITH WEAR SENSOR	HONDA	F	20193 20194 20959

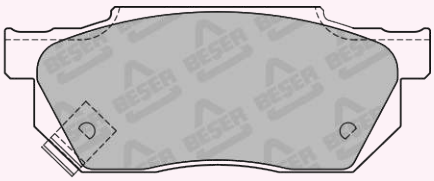

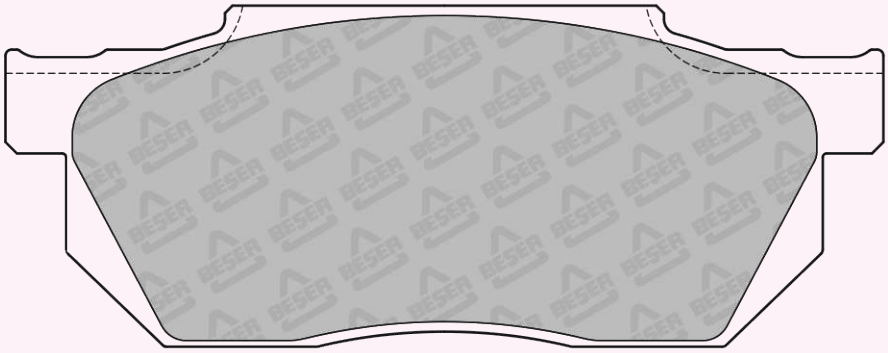

116 x 45

REFERENCE	T(mm)	REMARKS	MAKE	F/R	WVA No
3754	19	4 PADS PISTON CLIP	FORD	F	23154 23155

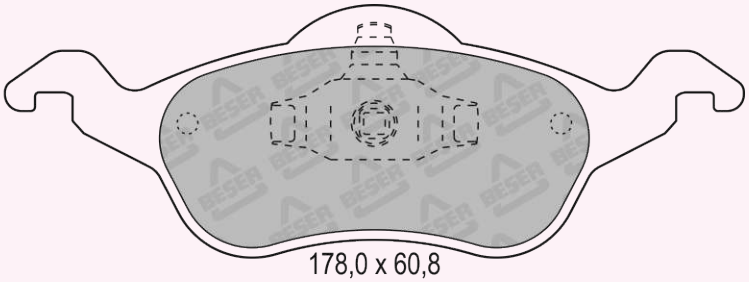

178,0 x 60,8
(NOT SCALE)

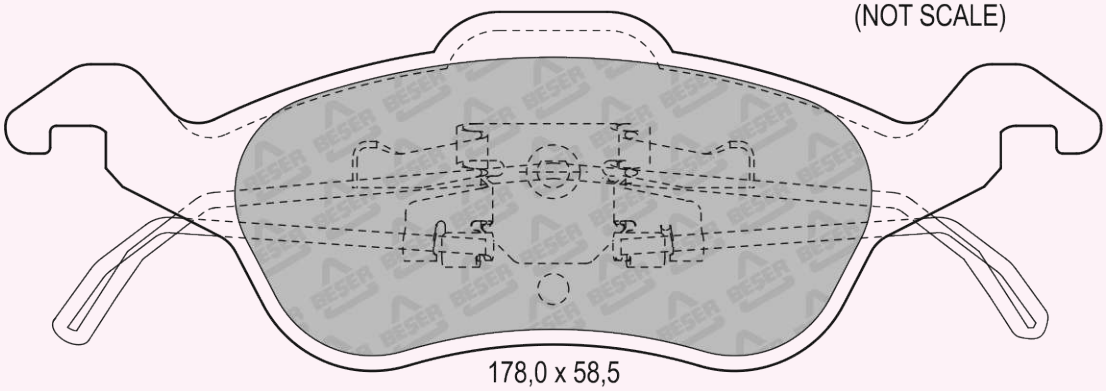

178,0 x 58,5
(NOT SCALE)

REFERENCE	T(mm)	REMARKS	MAKE	F/R	WVA No
3755	14,5	4 PADS PLAIN	FORD	R	23353

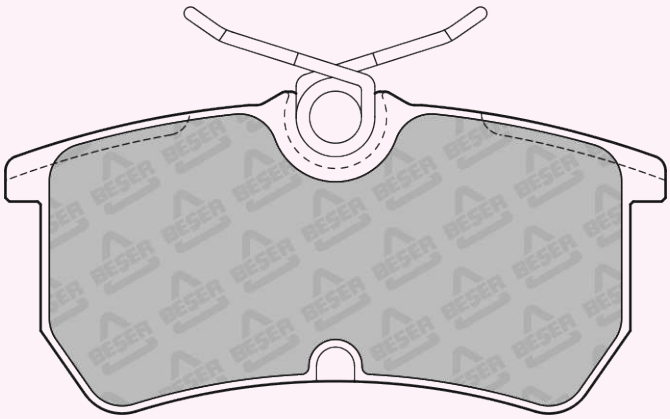

87,2 x 42,6

REFERENCE	T(mm)	REMARKS	MAKE	F/R	WVA No
3757	15,5	4 PADS WITH WEAR SENSOR	HOLDEN - ISUZU - LANDWIND (JMC) OPEL - VAUXHALL	F	21543 21544

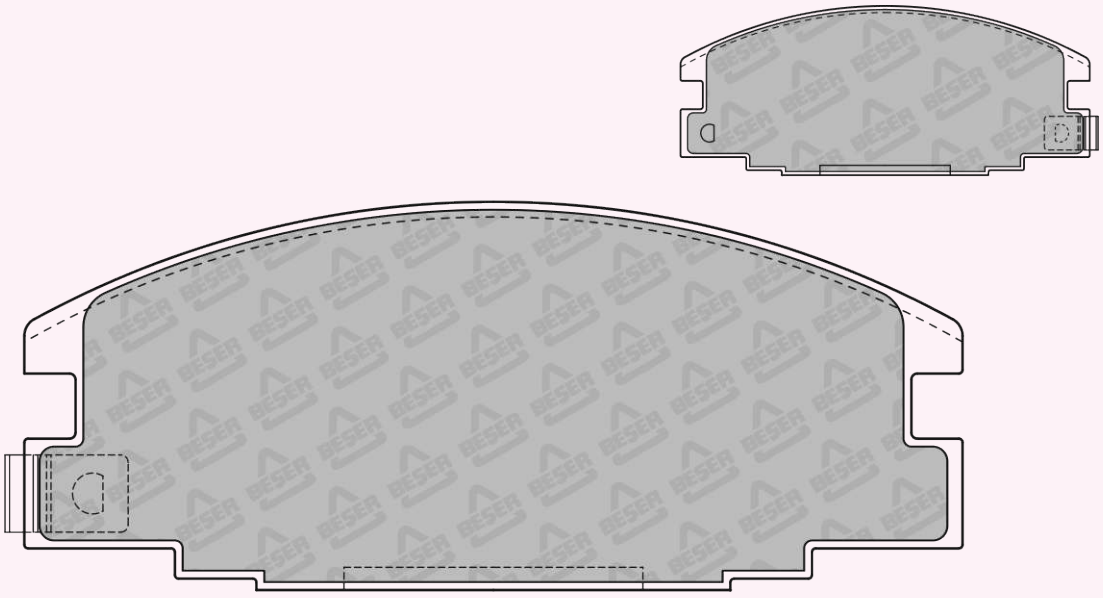

126,5 x 51,3

REFERENCE	T(mm)	REMARKS	MAKE	F/R	WVA No
3758	17	2 PADS WITH WEAR SENSOR	NISSAN	F	21099 21119 21130

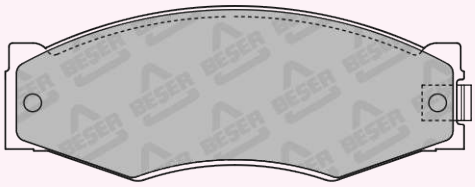

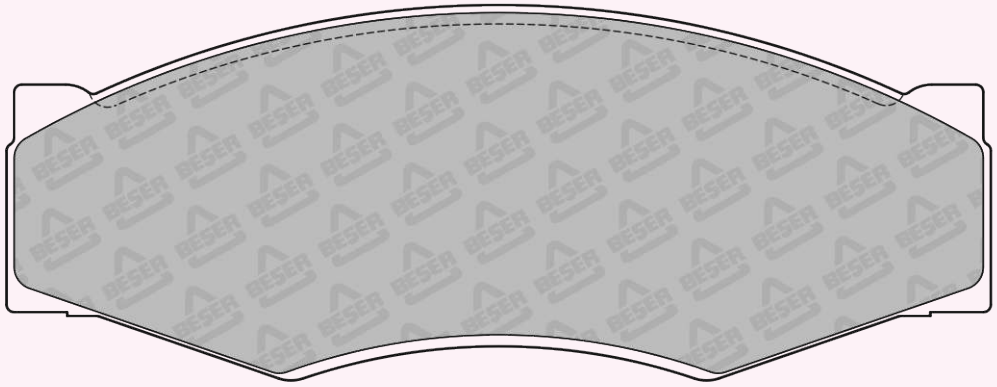

130 x 49,5

REFERENCE	T(mm)	REMARKS	MAKE	F/R	WVA No
3759	18	4 PADS PLAIN	CITROEN - PEUGEOT	F	21980 21981 23205

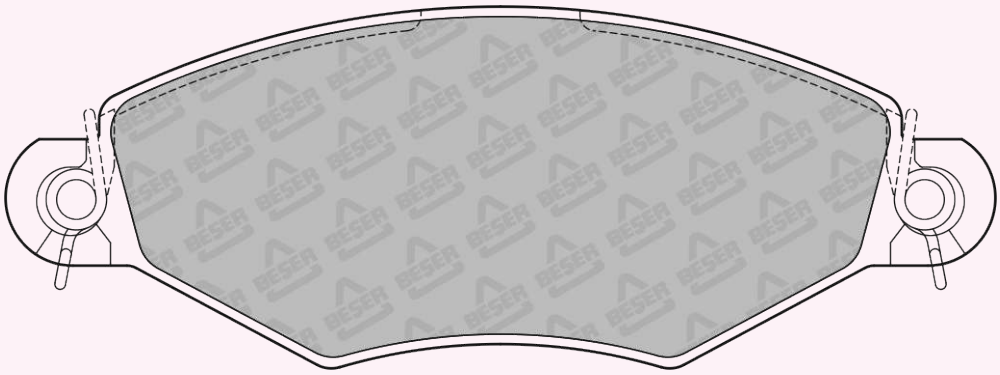

130,7 x 47,6

REFERENCE	T(mm)	REMARKS	MAKE	F/R	WVA No
3760	17	2 PADS WITH WEAR SENSOR	FORD - NISSAN SUBARU	F	21347 21348 21349

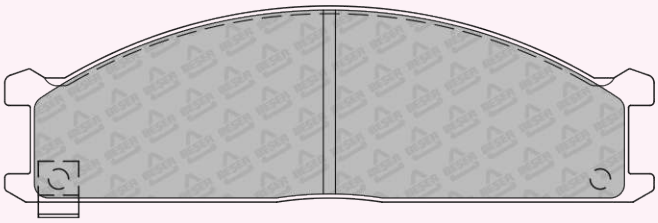

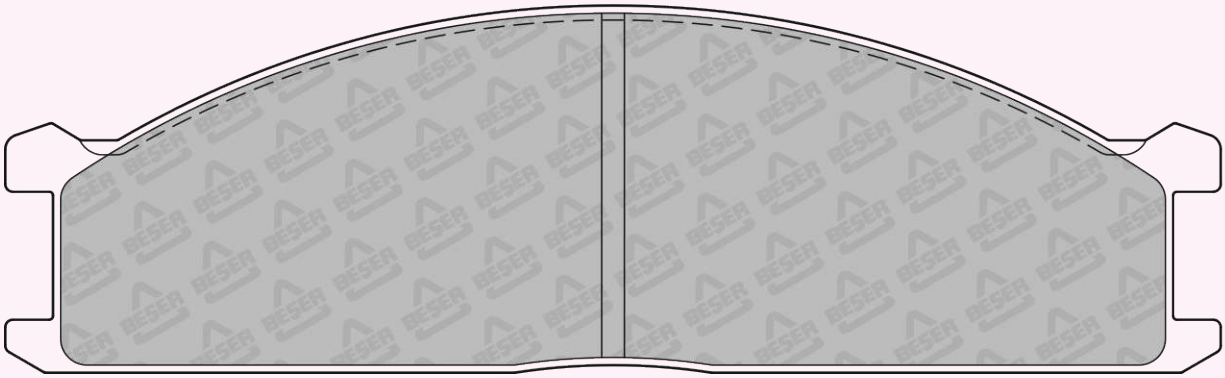

160,6 x 48,5

REFERENCE	T(mm)	REMARKS	MAKE	F/R	WVA No
3761	16	2 PADS WITH SPRING	SEAT - VW	F	---

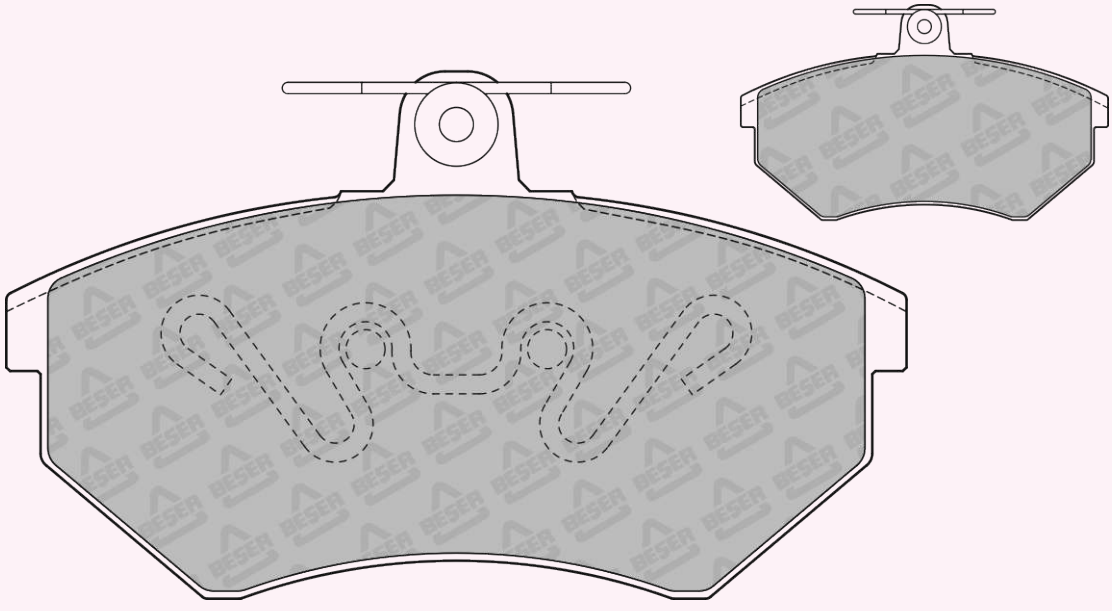

118,9 x 69,5

REFERENCE	T(mm)	REMARKS	MAKE	F/R	WVA No
3762	17,5	2 PADS WITH WEAR SENSOR	CHEVROLET - HOLDEN OPEL - VAUXHALL	F	23063 23064 23066 23067

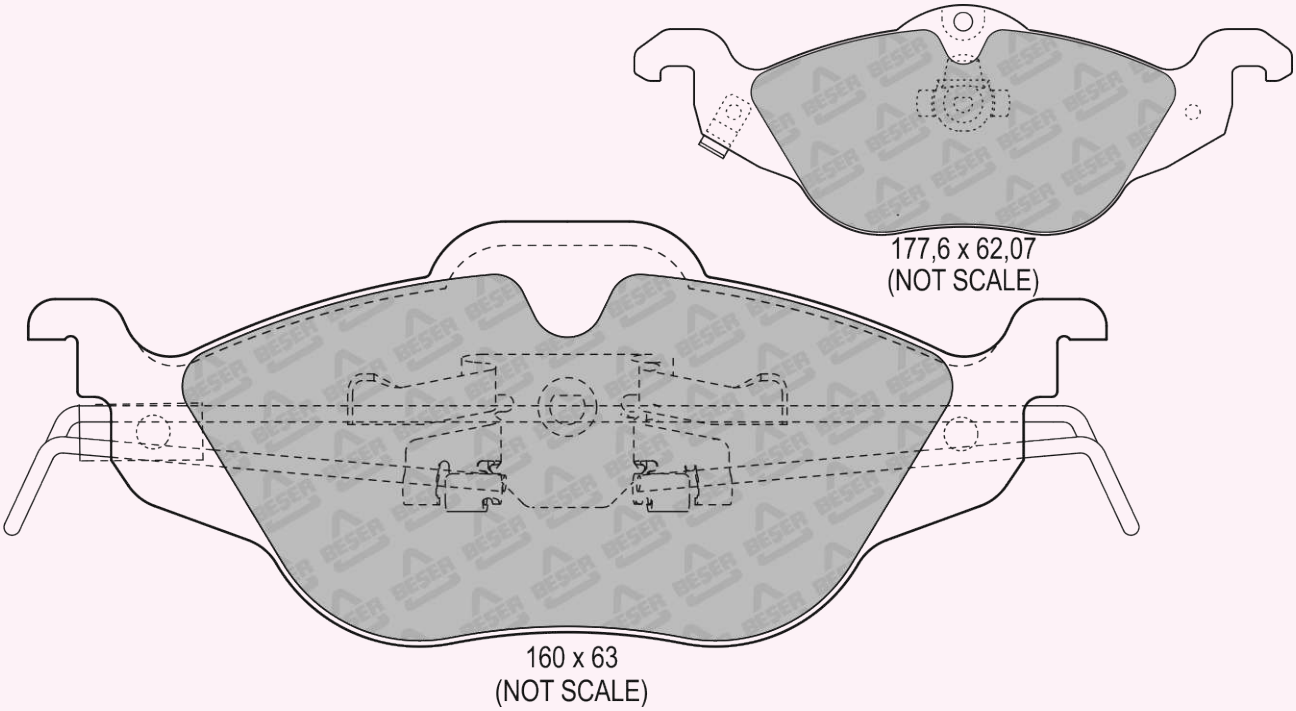

REFERENCE	T(mm)	REMARKS	MAKE	F/R	WVA No
3763	17.0/16.0	2 PADS WITH WEAR SENSOR	OPEL - VAUXHALL	R	23052 23053 23054 23055

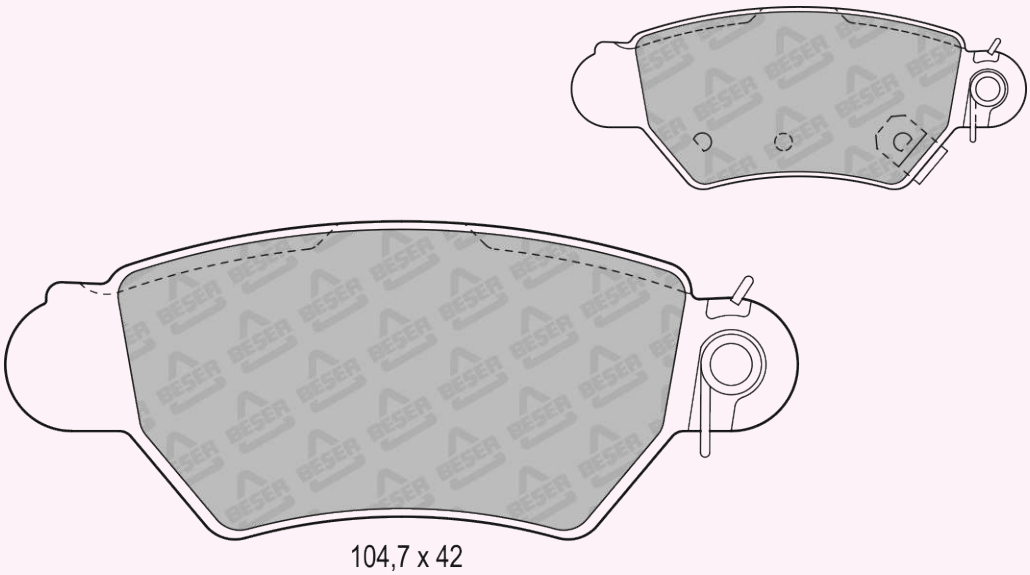

REFERENCE	T(mm)	REMARKS	MAKE	F/R	WVA No
3764	17,5	2 PADS WITH WEAR SENSOR	SUBARU	F	23780 23781 23782

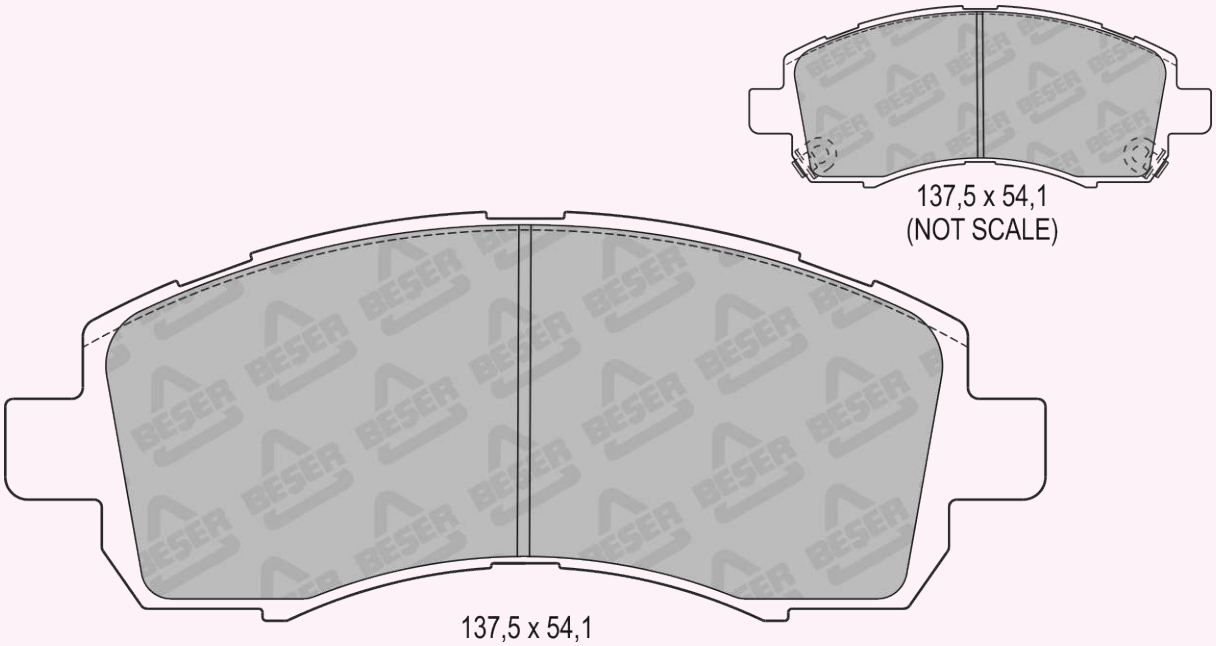

REFERENCE	T(mm)	REMARKS	MAKE	F/R	WVA No
3765	15,5	2 PADS WITH WEAR SENSOR	MITSUBISHI	F	24291

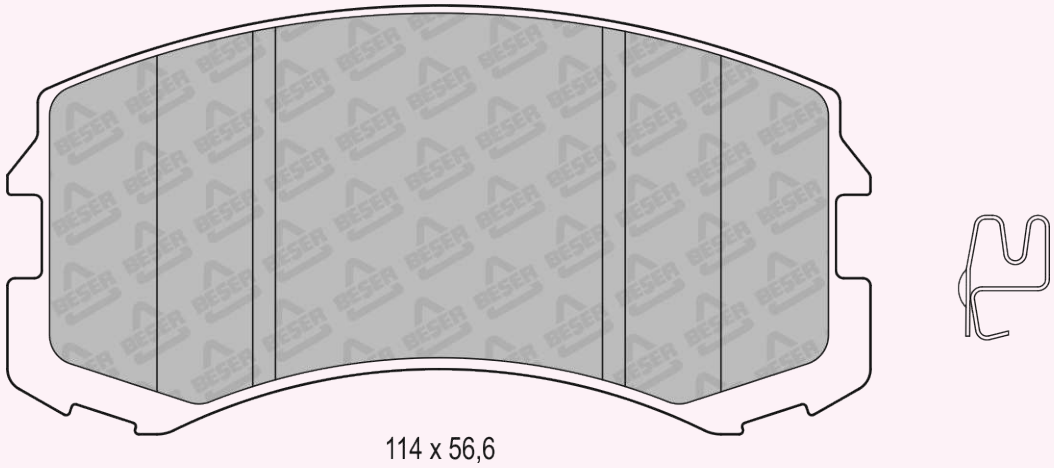

REFERENCE	T(mm)	REMARKS	MAKE	F/R	WVA No
3766	16,5	2 PADS WITH WEAR SENSOR	NISSAN	F	21657 21658 21659

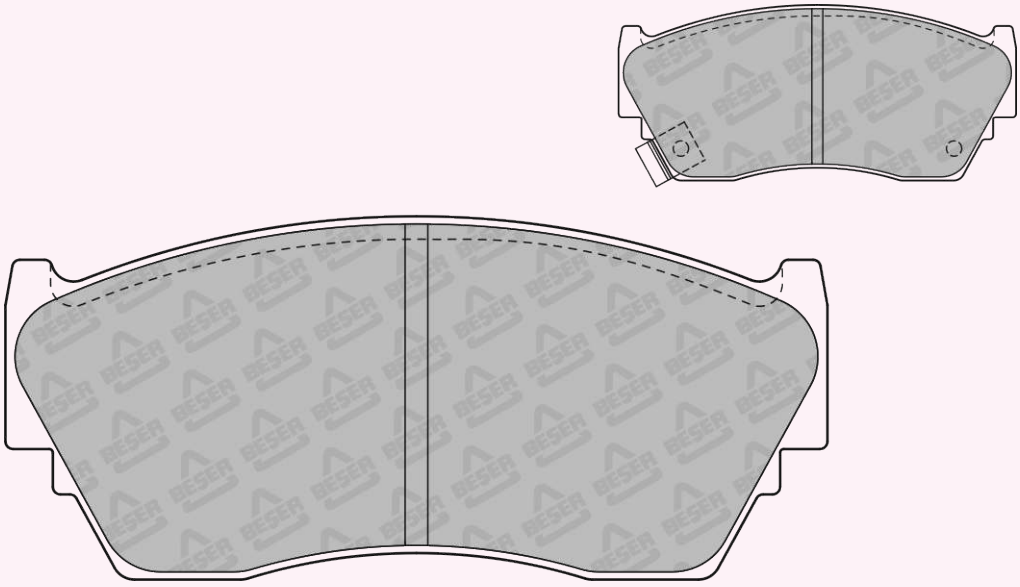

108,5 x 48

REFERENCE	T(mm)	REMARKS	MAKE	F/R	WVA No
3767	16	4 PADS PLAIN	FORD - MAZDA	F	23540

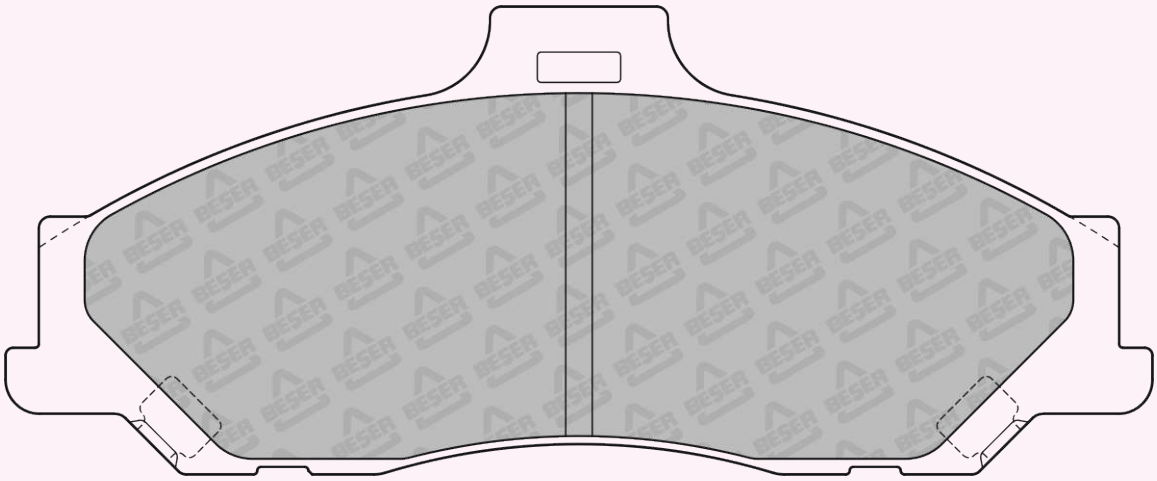

151,5 x 61,7

REFERENCE	T(mm)	REMARKS	MAKE	F/R	WVA No
3768	16,5	2 PADS WITH WEAR SENSOR	TOYOTA	F	23348 23349 23350

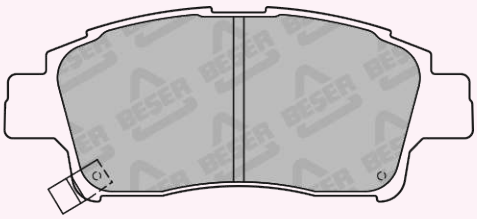

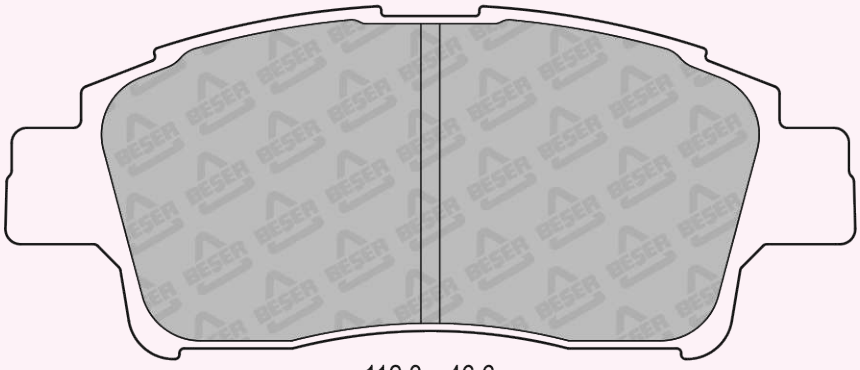

112,3 x 46,6

REFERENCE	T(mm)	REMARKS	MAKE	F/R	WVA No
3769	16,7	2 PADS WITH WEAR SENSOR	TOYOTA	F	23510 23511 23512

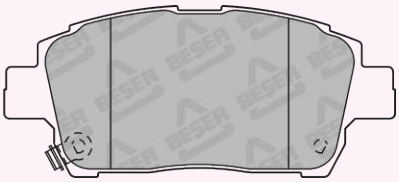

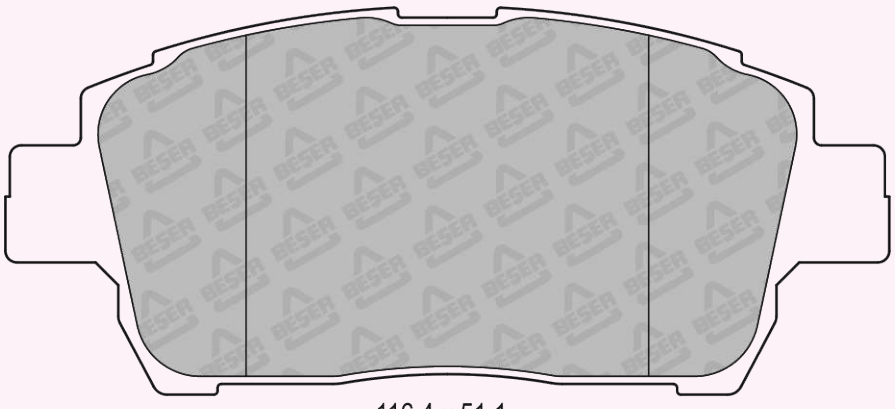

116,4 x 51,1

REFERENCE	T(mm)	REMARKS	MAKE	F/R	WVA No
3771	15,5	1 PAD WITH WEAR SENSOR (210mm)	LAND ROVER	R	21238 21237 21514

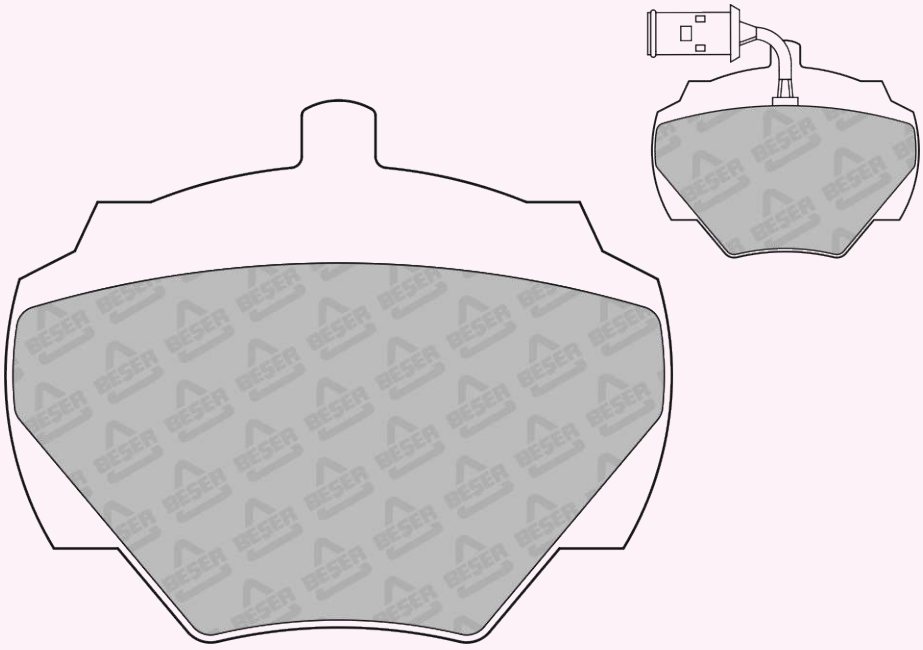

88,6 x 72

REFERENCE	T(mm)	REMARKS	MAKE	F/R	WVA No
3773	22,0	2 PADS WITH WEAR SENSOR (300mm)	IVECO NISSAN - RENAULT	F	29067

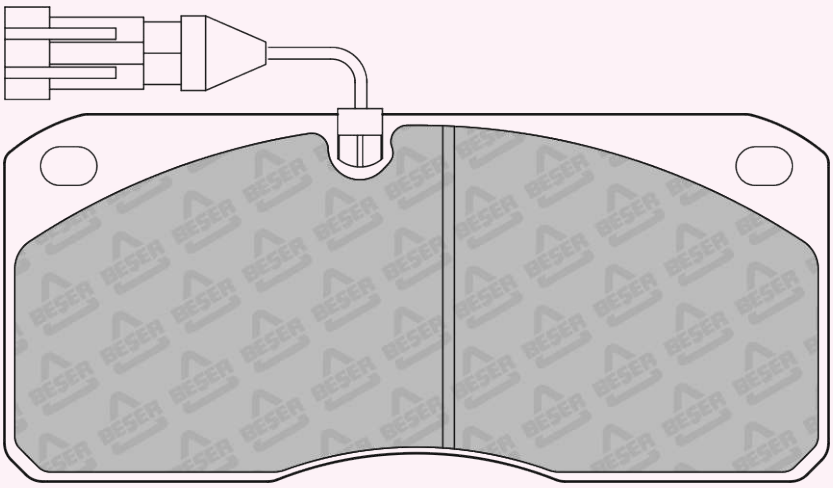

175,4 x 78
(NOT SCALE)

REFERENCE	T(mm)	REMARKS	MAKE	F/R	WVA No
3776	15,0	2 PADS WITH WEAR SENSOR	HOLDEN - LEXUS TOYOTA	R	21833 21834

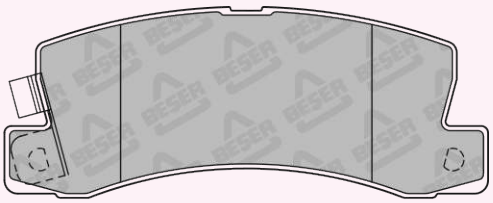

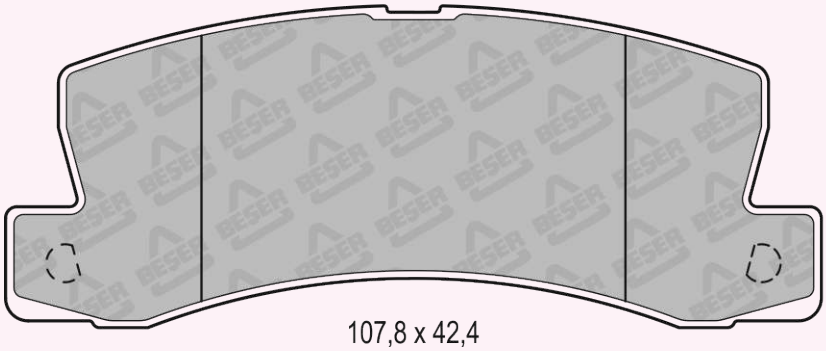

107,8 x 42,4

REFERENCE	T(mm)	REMARKS	MAKE	F/R	WVA No
3777	16,3	4 PADS PLAIN	TOYOTA	F	21468

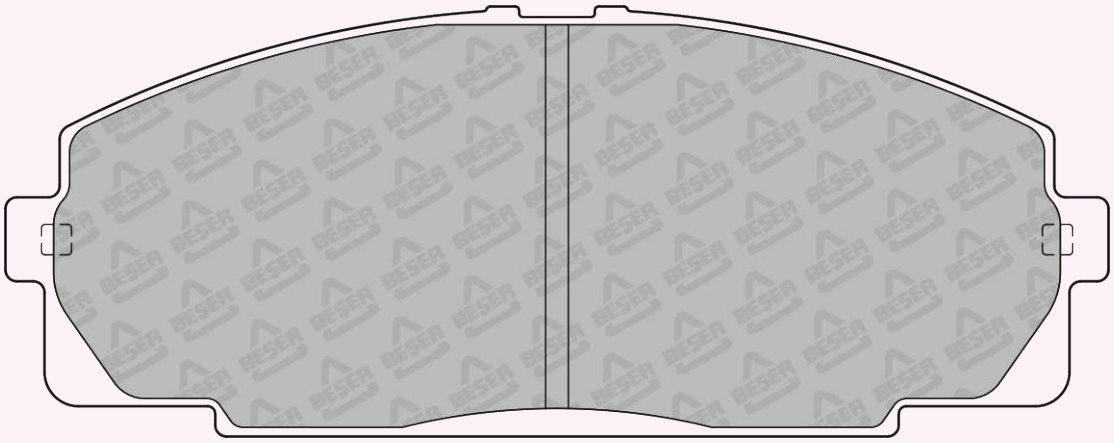

145,7 x 56,8

REFERENCE	T(mm)	REMARKS	MAKE	F/R	WVA No
3778	16,6	2 PADS WITH WEAR SENSOR	HYUNDAI	F	23238 23239 23240

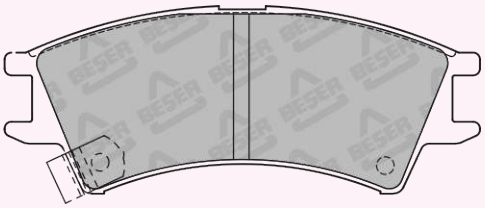

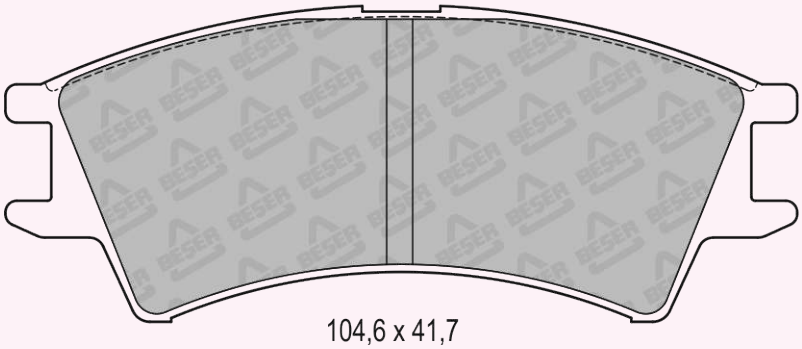

104,6 x 41,7

REFERENCE	T(mm)	REMARKS	MAKE	F/R	WVA No
3779	16	4 PADS PLAIN	INFINITI - NISSAN SUZUKI	F	21561 21562 21633

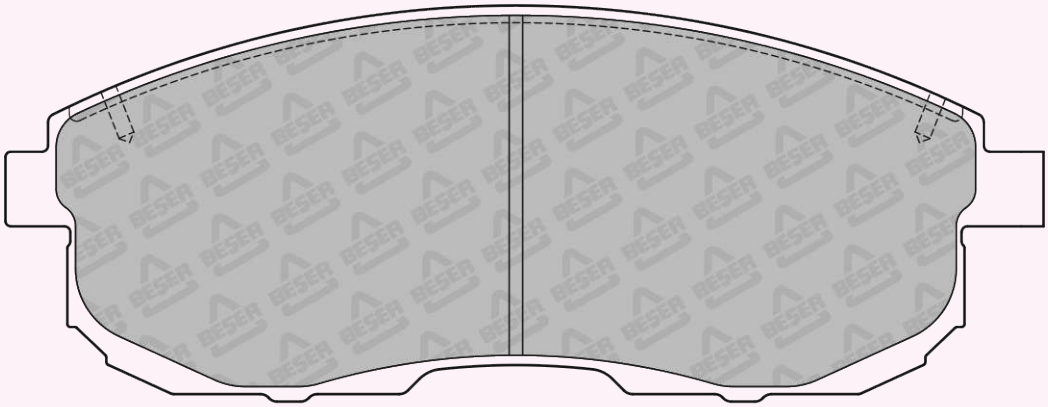

137,1 x 53,1

REFERENCE	T(mm)	REMARKS	MAKE	F/R	WVA No
3780	16	4 PADS PLAIN	FORD - MAZDA	F	23490

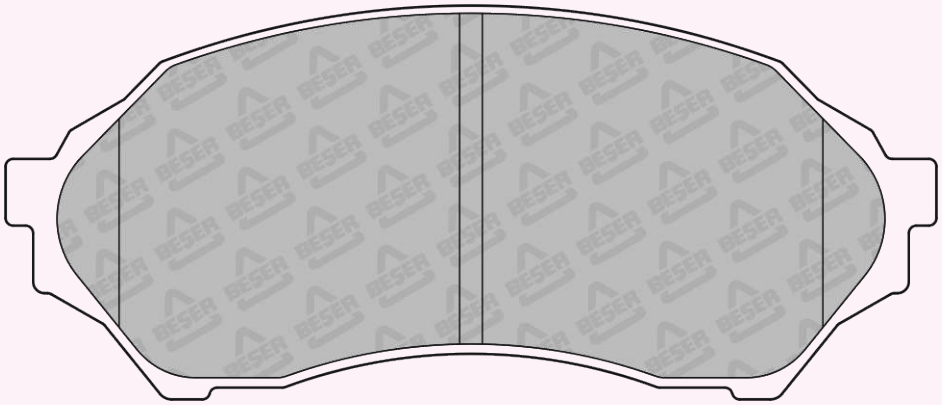

123 x 51,9

REFERENCE	T(mm)	REMARKS	MAKE	F/R	WVA No
3781	17,3	2 PADS WITH WEAR SENSOR	FORD - MAZDA	F	23472 23473 23636

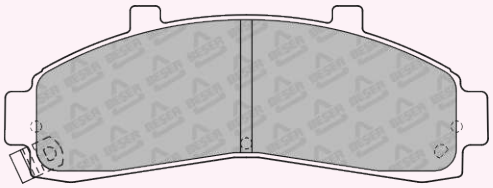

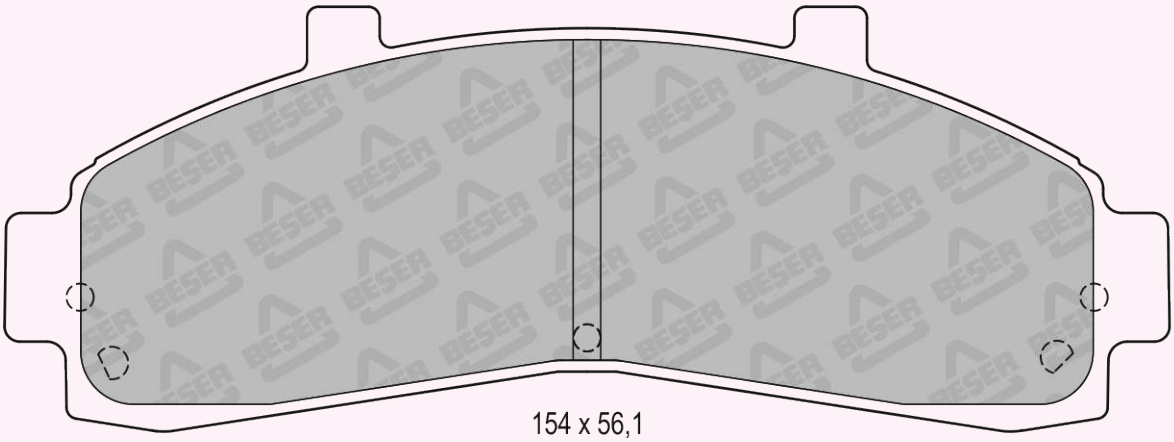

154 x 56,1

REFERENCE	T(mm)	REMARKS	MAKE	F/R	WVA No
3781/1	17,3	2 PADS WITH WEAR SENSOR	FORD - MAZDA	F	23472 23473 23636

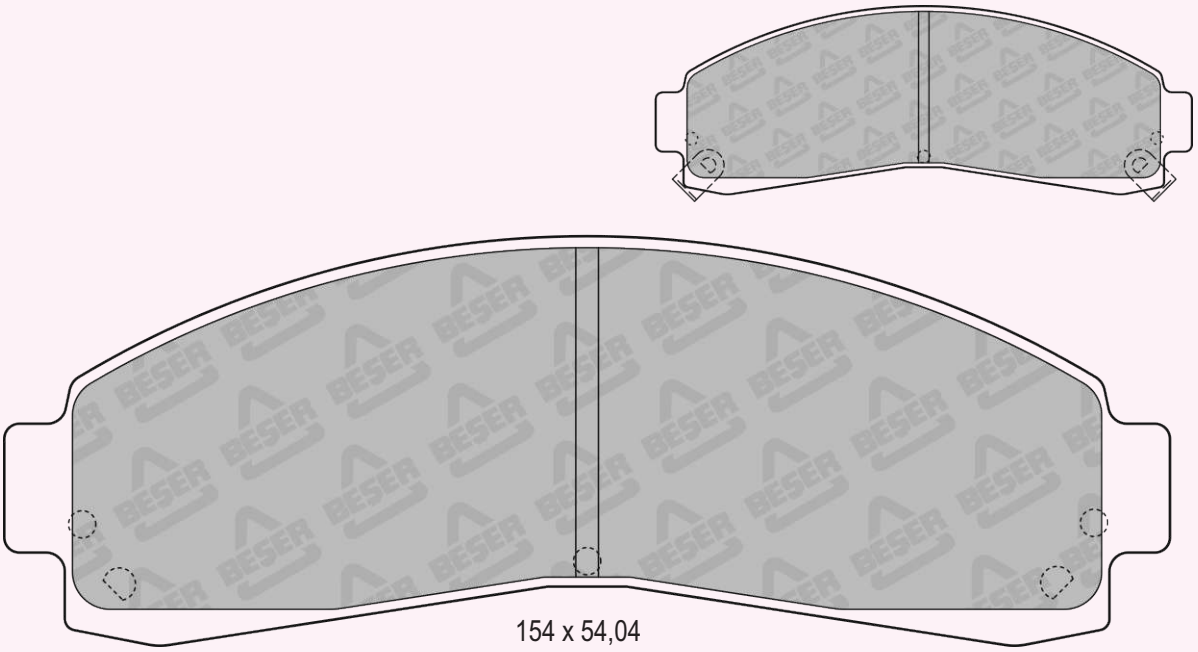

154 x 54,04
(NOT SCALE)

REFERENCE	T(mm)	REMARKS	MAKE	F/R	WVA No
3782	19,6	1 PAD WITH WEAR SENSOR (155mm)	AUDI - SEAT SKODA - VW	F	23130 23131 23187

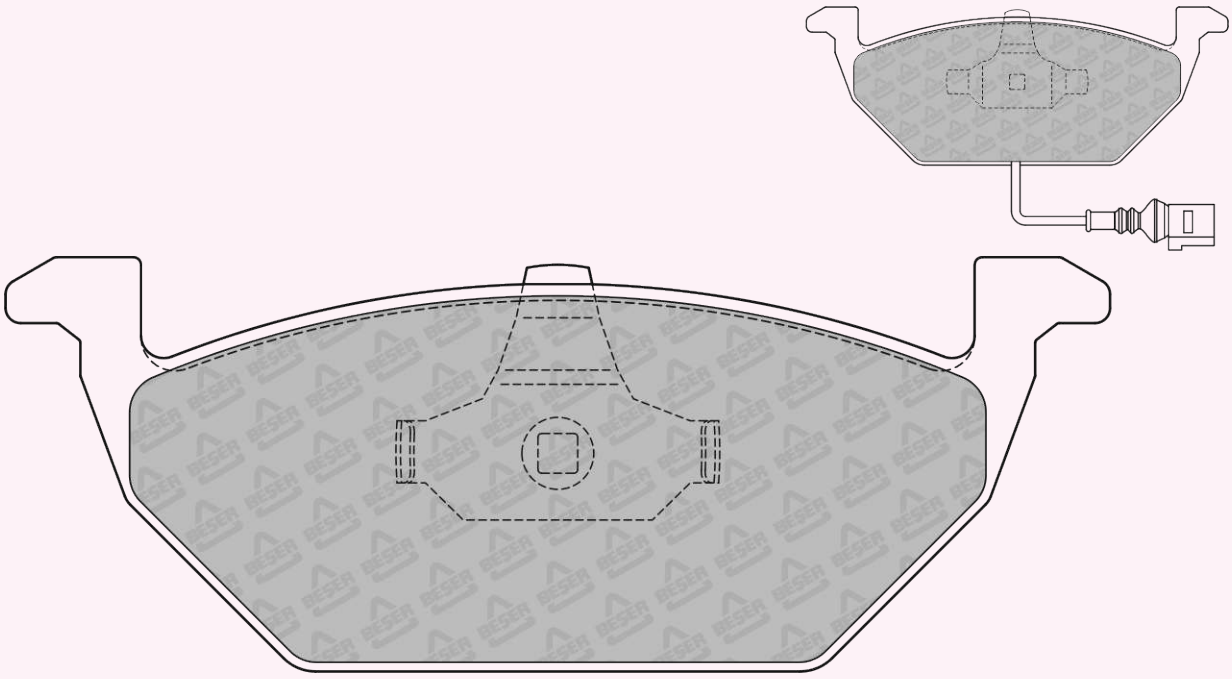

146 x 54,7

REFERENCE	T(mm)	REMARKS	MAKE	F/R	WVA No
3782/1	19,6	2 PADS PISTON CLIP	AUDI - SEAT SKODA - VW	F	23130 23131 23187

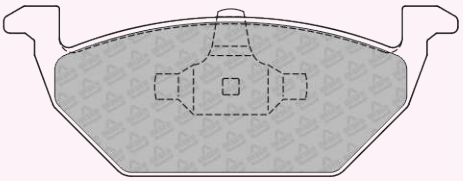

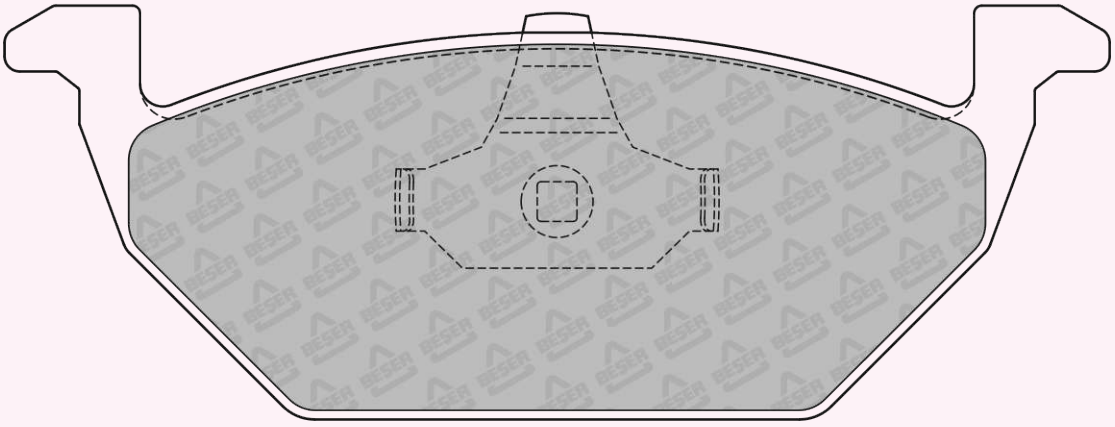

146 x 54,7

REFERENCE	T(mm)	REMARKS	MAKE	F/R	WVA No
3784	18,7	2 PADS WITH WEAR SENSOR	FORD	F	23577 23578 23579 23580

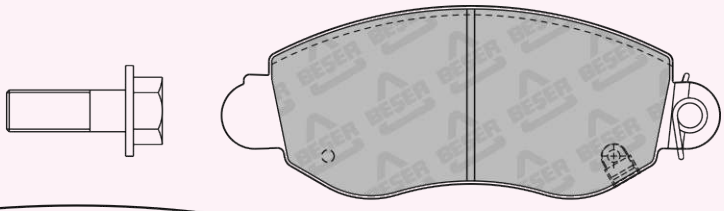

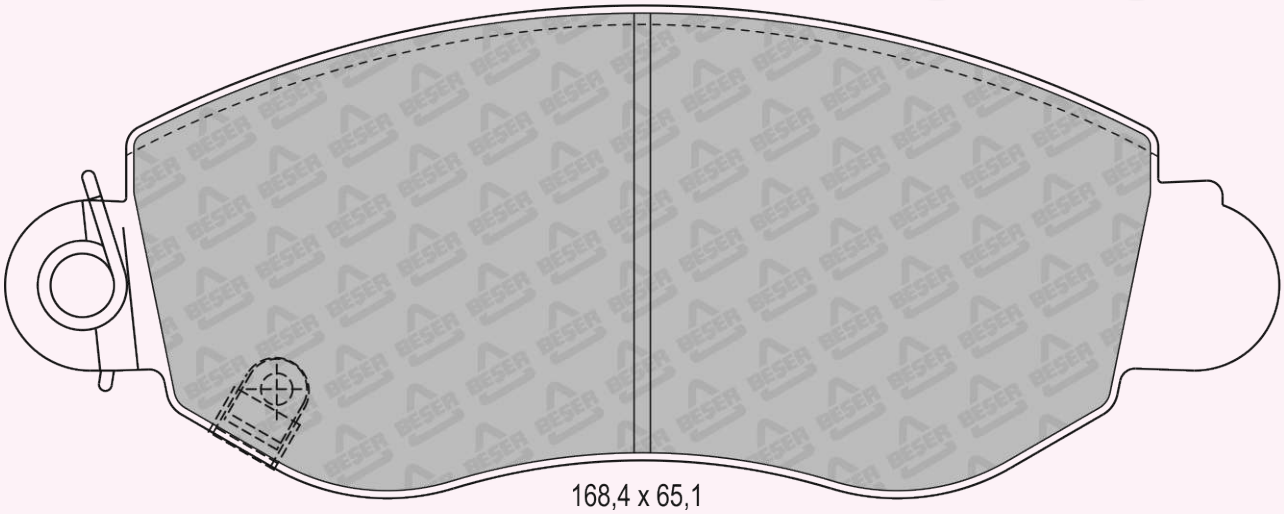

168,4 x 65,1

REFERENCE	T(mm)	REMARKS	MAKE	F/R	WVA No
3788	14,0	2 PADS WITH WEAR SENSOR	TOYOTA	R	23521 23522 23523

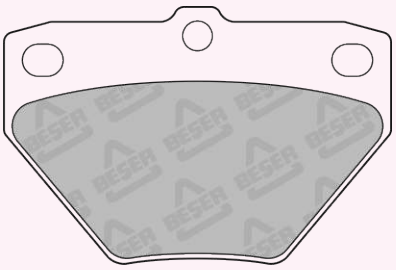

78,5 x 48,9
(NOT SCALE)

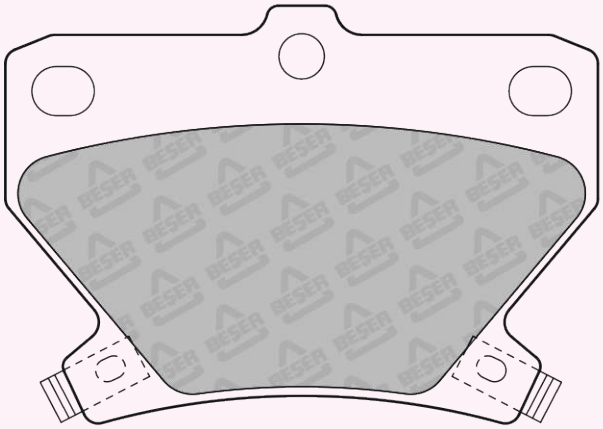

78,3 x 55,3

REFERENCE	T(mm)	REMARKS	MAKE	F/R	WVA No
3790	18	2 PADS PISTON CLIP	FIAT	F	20907 23552

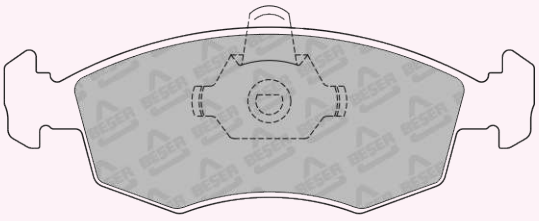

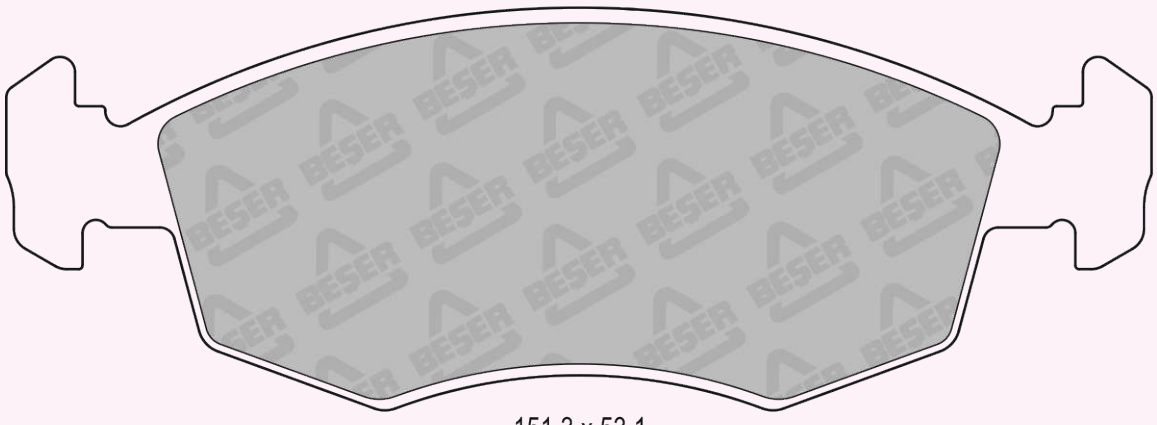

151,3 x 53,1

REFERENCE	T(mm)	REMARKS	MAKE	F/R	WVA No
3790/1	18	2 PADS PISTON CLIP	FIAT	F	20907 23842

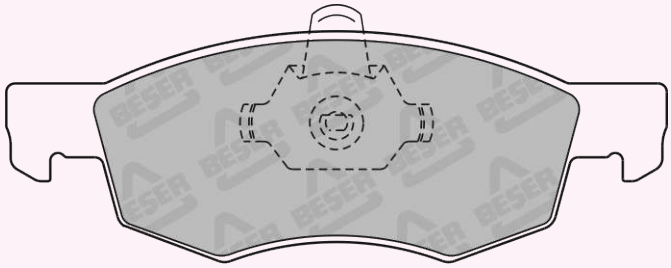

151,3 x 52,6
(NOT SCALE)

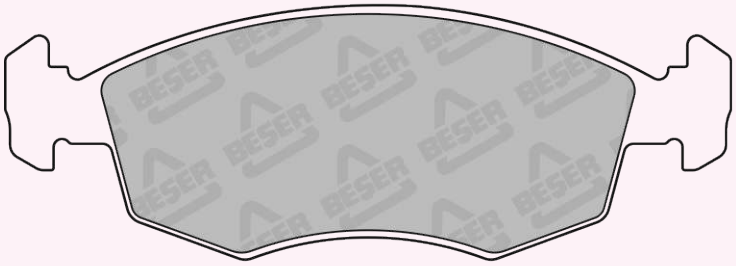

151,3 x 53,1
(NOT SCALE)

REFERENCE	T(mm)	REMARKS	MAKE	F/R	WVA No
3793	15,8	2 PADS WITH WEAR SENSOR	ISTANA - SANGYONG	F	---

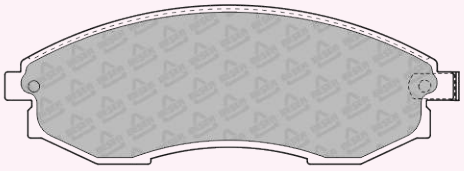

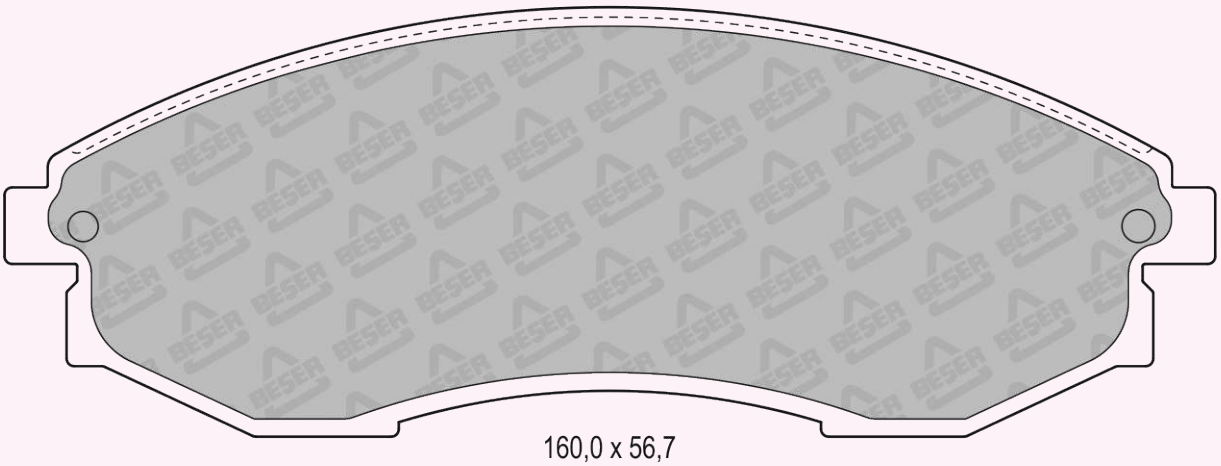

160,0 x 56,7

REFERENCE	T(mm)	REMARKS	MAKE	F/R	WVA No
3794	19,5	2 PADS WITH WEAR SENSOR	VW	F	21883 21885 23163

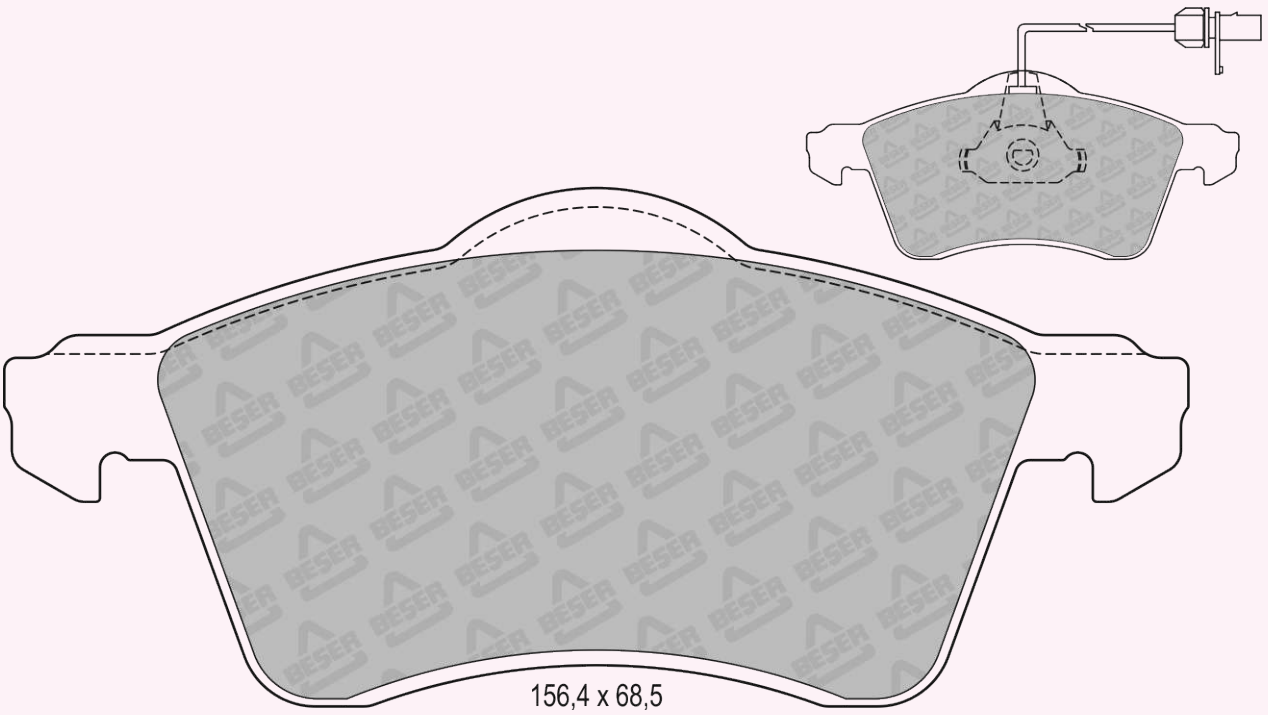

REFERENCE	T(mm)	REMARKS	MAKE	F/R	WVA No
3795	16,2	1 PAD WITH WEAR SENSOR (210mm)	VW	R	23224 23446

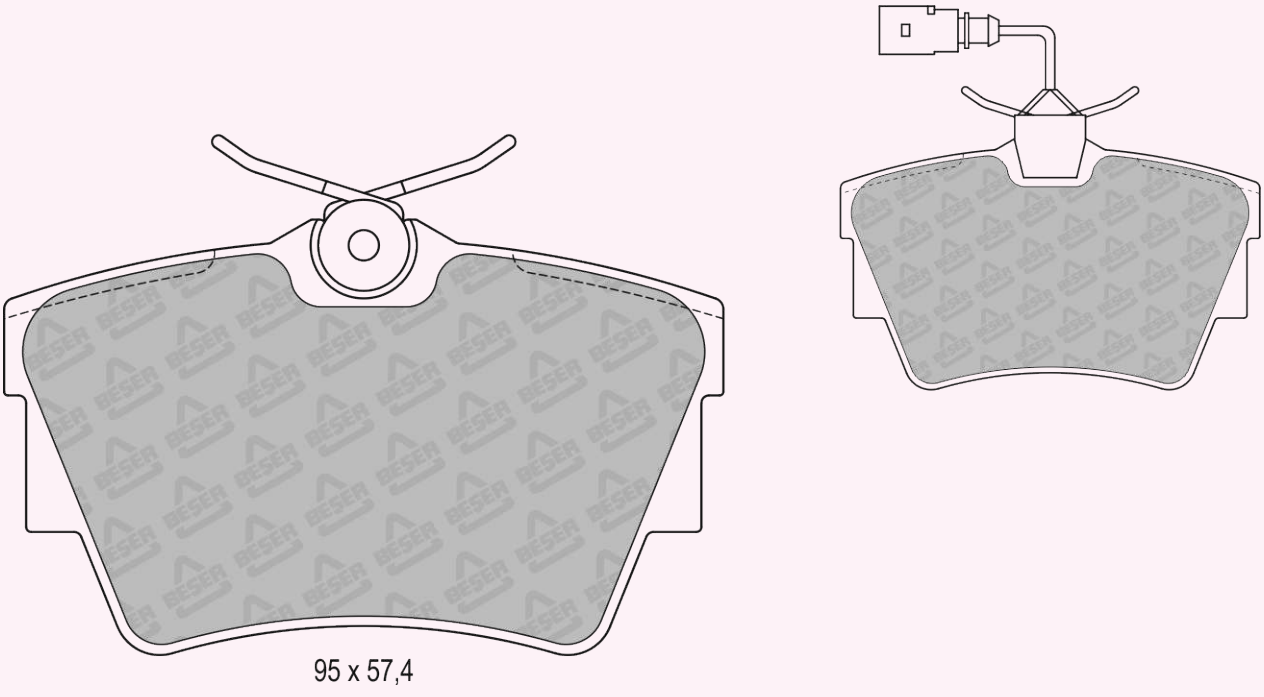

REFERENCE	T(mm)	REMARKS	MAKE	F/R	WVA No
3795/1	16,2	4 PADS PLAIN	NISSAN - OPEN RENAULT - VAUXHALL	R	23980

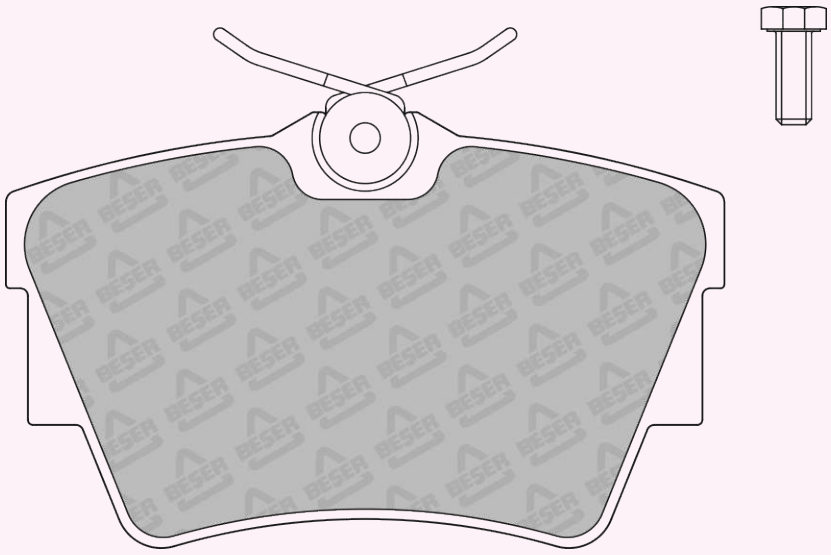

95 x 57,4

REFERENCE	T(mm)	REMARKS	MAKE	F/R	WVA No
3797	15,5	2 PADS WITH WEAR SENSOR	NISSAN	F	24647 24648 24649

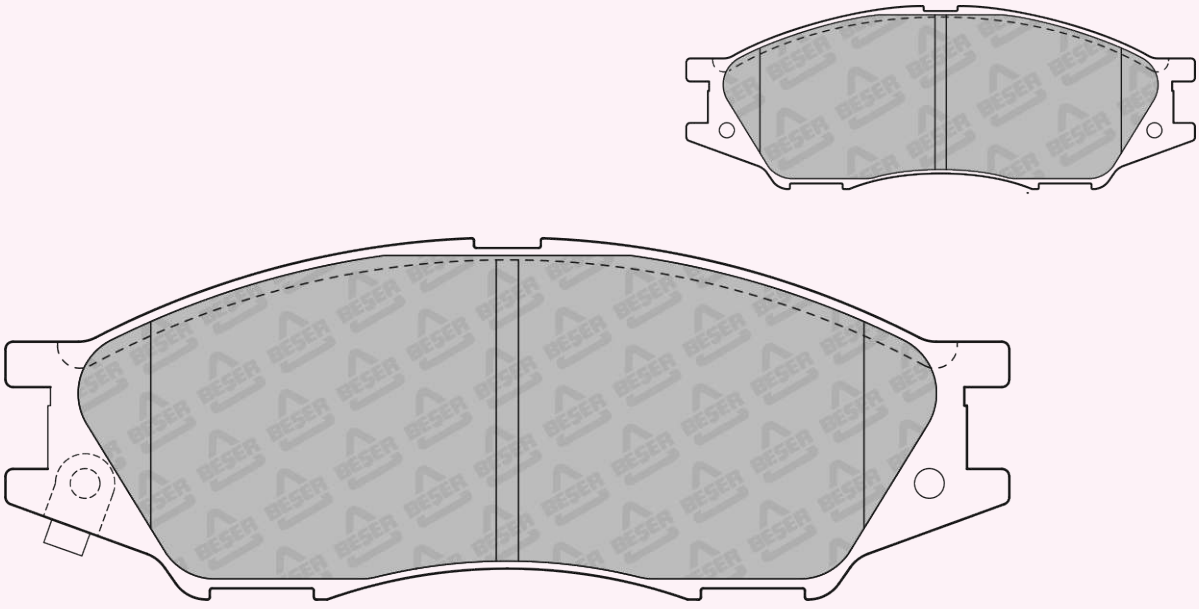

135,1 x 48,6

REFERENCE	T(mm)	REMARKS	MAKE	F/R	WVA No
3799	18,5	2 PADS WITH WEAR SENSOR (285mm)	CITROEN - FIAT PEUGEOT	F	23042

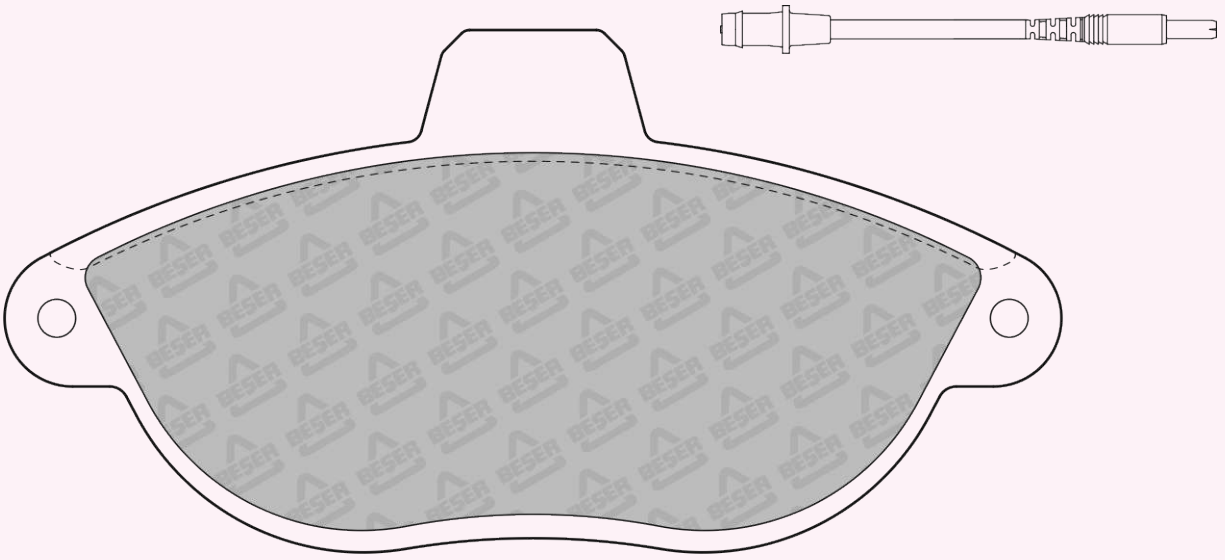

139,6 x 68,9

REFERENCE	T(mm)	REMARKS	MAKE	F/R	WVA No
3800	19,2	4 PADS PLAIN	CITROEN - PEUGEOT	F	23600

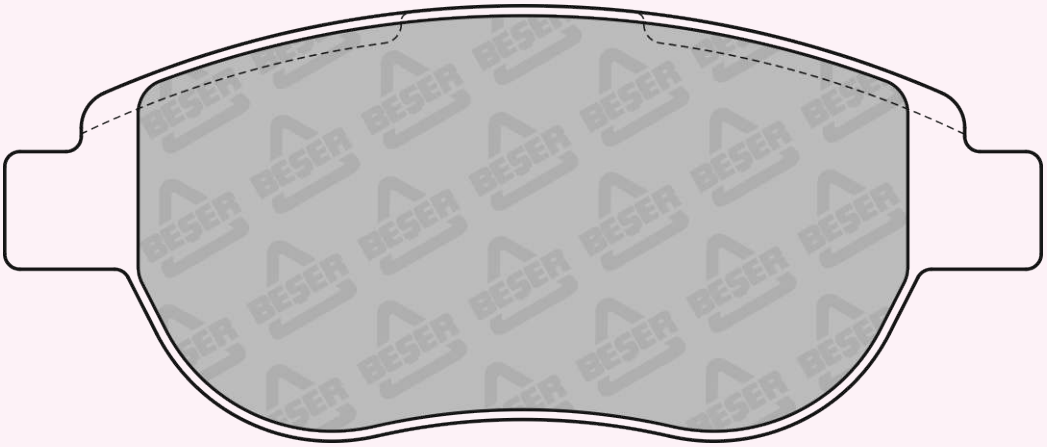

136,9 x 57,36

REFERENCE	T(mm)	REMARKS	MAKE	F/R	WVA No
3800/1	19,2	1 PAD WITH WEAR SENSOR	CITROEN - PEUGEOT	F	23708 23709 23981

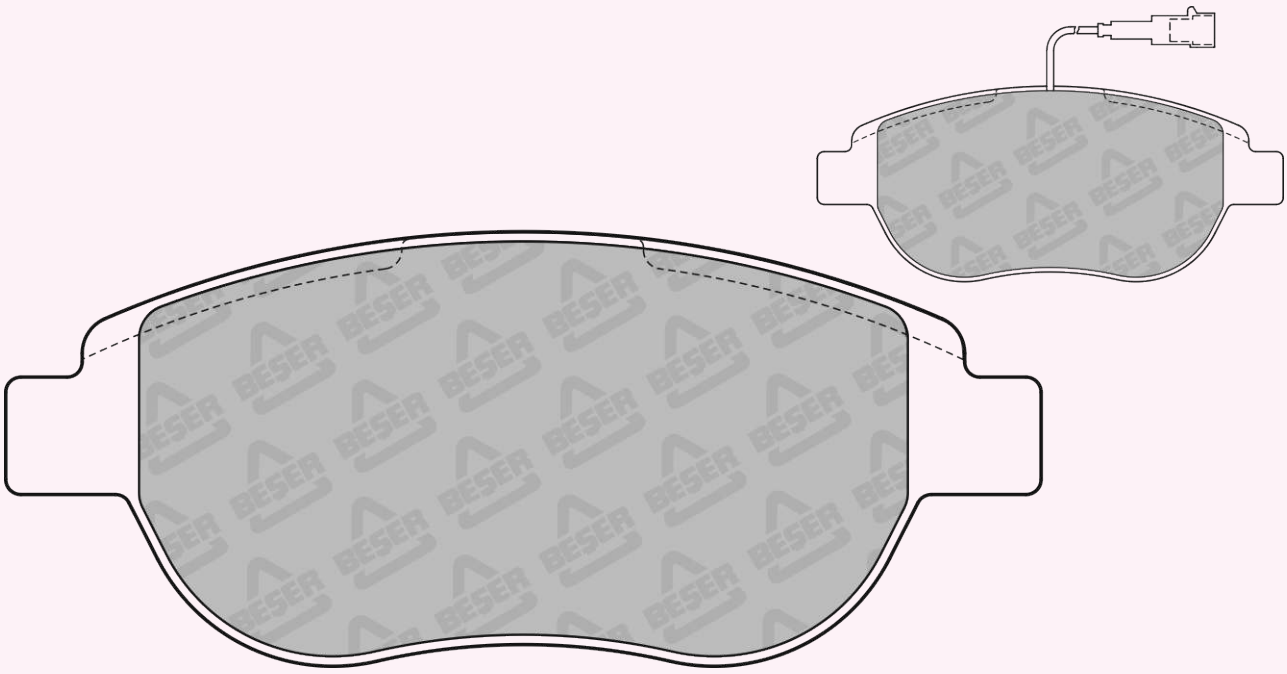

136,8 x 57,4

REFERENCE	T(mm)	REMARKS	MAKE	F/R	WVA No
3800/2	19	2 PADS WITH WEAR SENSOR	CITROEN - PEUGEOT	F	23981 24549

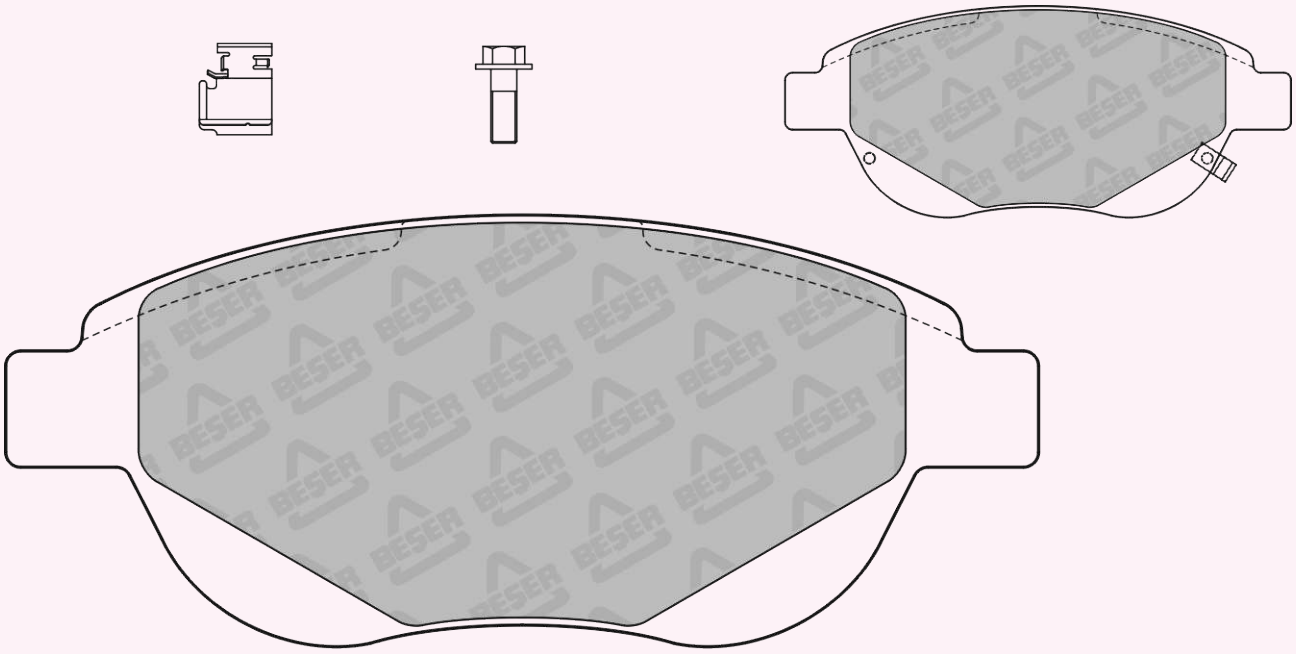

136,8 x 57,4

REFERENCE	T(mm)	REMARKS	MAKE	F/R	WVA No
3800/3	19,2	2 PADS WITH WEAR SENSOR	CITROEN - PEUGEOT	F	23708 23709

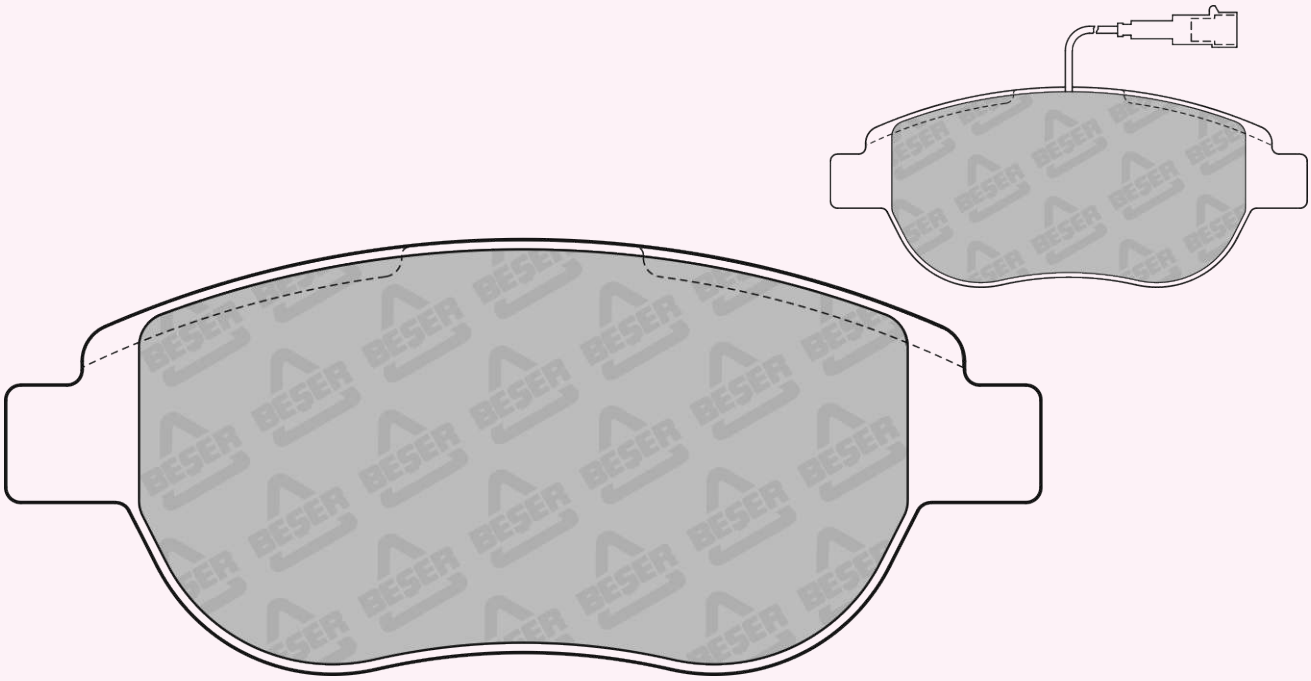

136,8 x 57,4

REFERENCE	T(mm)	REMARKS	MAKE	F/R	WVA No
3801	17,5 18,3	2 PADS PISTON CLIP	FORD	F	23440 23441

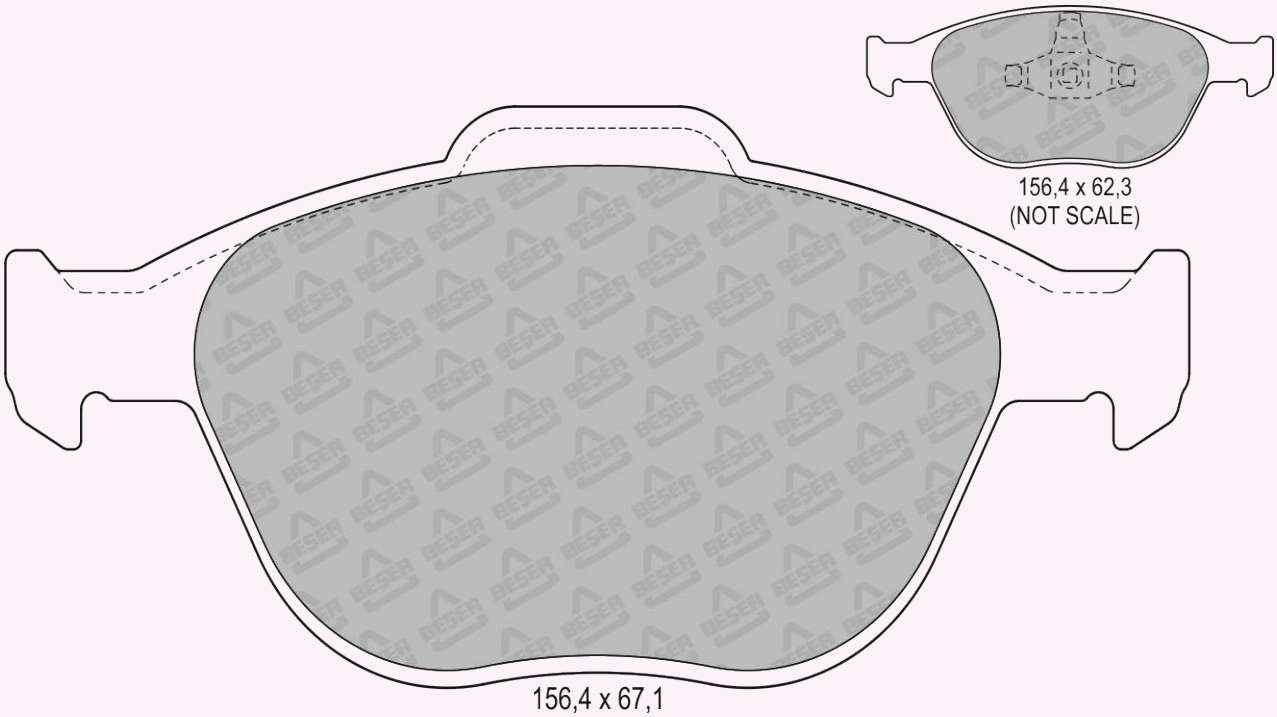

156,4 x 62,3
(NOT SCALE)

156,4 x 67,1

REFERENCE	T(mm)	REMARKS	MAKE	F/R	WVA No
3802	16,5	2 PADS WITH WEAR SENSOR	KIA - NAZA	F	23649 23650 23651

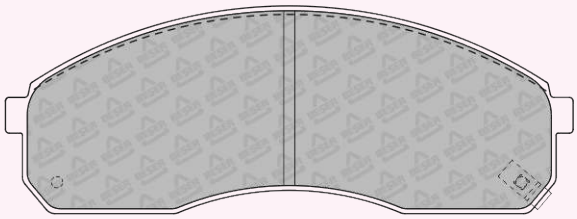

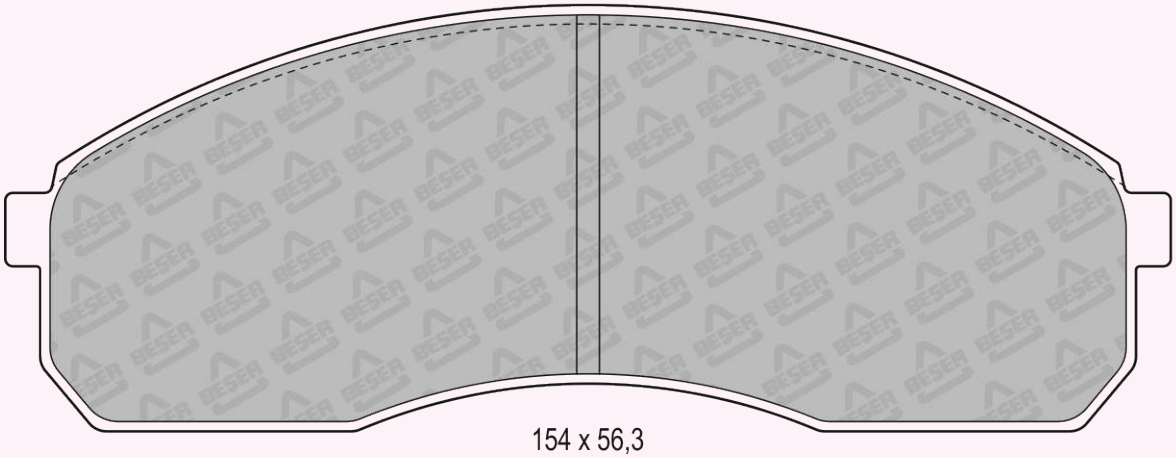

154 x 56,3

REFERENCE	T(mm)	REMARKS	MAKE	F/R	WVA No
3804	18,8	4 PADS PLAIN	MERCEDES BENZ - PUCH VW	R	23021

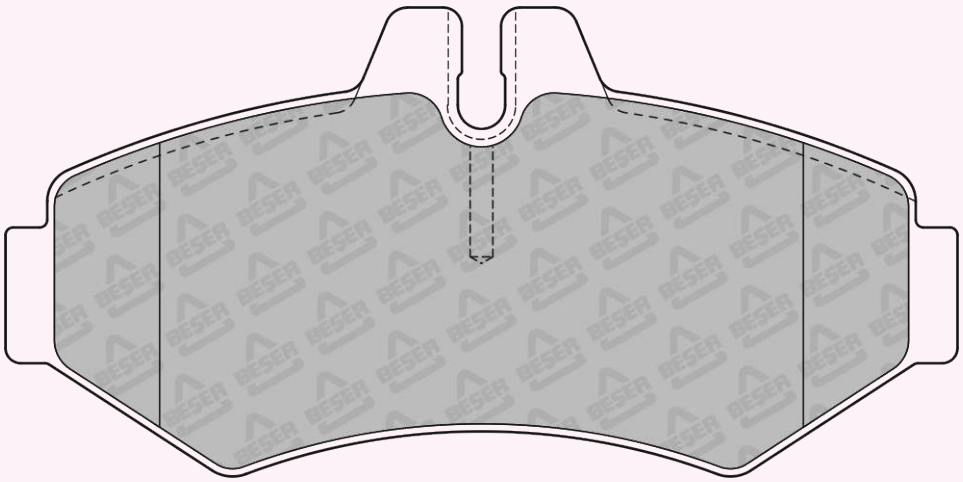

125,7 x 61,8

REFERENCE	T(mm)	REMARKS	MAKE	F/R	WVA No
3806	15	2 PADS WITH WEAR SENSOR (215mm)	TALBOT	F	20260

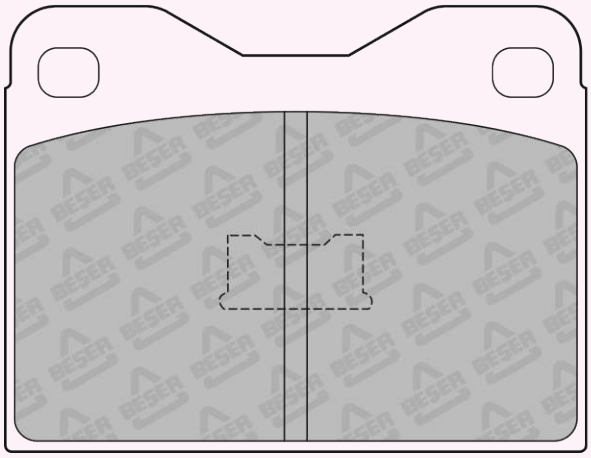

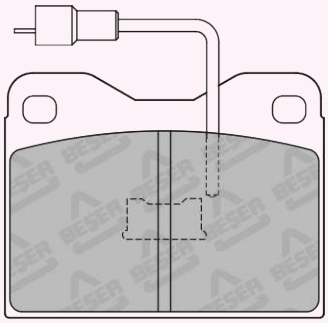

76,7 x 58,8

REFERENCE	T(mm)	REMARKS	MAKE	F/R	WVA No
3806/1	16,5	4 PADS PLAIN	PEUGEOT - RENAULT	F	20260

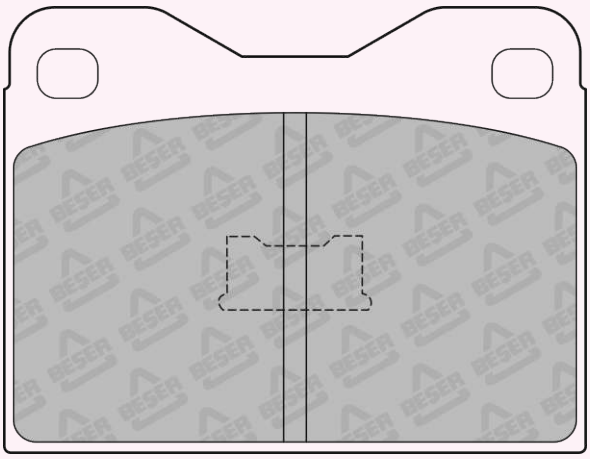

76,7 X 58,8

REFERENCE	T(mm)	REMARKS	MAKE	F/R	WVA No
3809	16,0	4 PADS PLAIN	CHANGFENG FENGXING(DONGFENG) - MISTUBISHI	F	23290

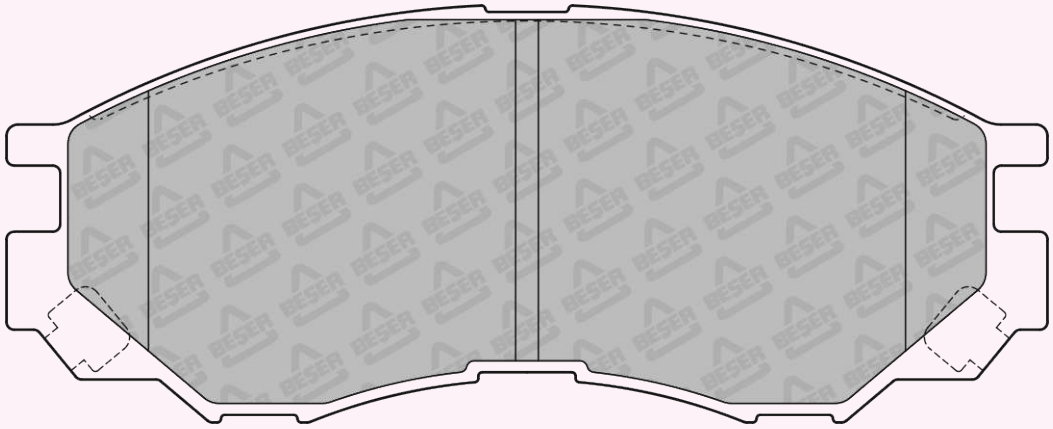

137,5 x 54,9

REFERENCE	T(mm)	REMARKS	MAKE	F/R	WVA No
3816	18,2	4 PADS PLAIN	LAND ROVER	F	21519

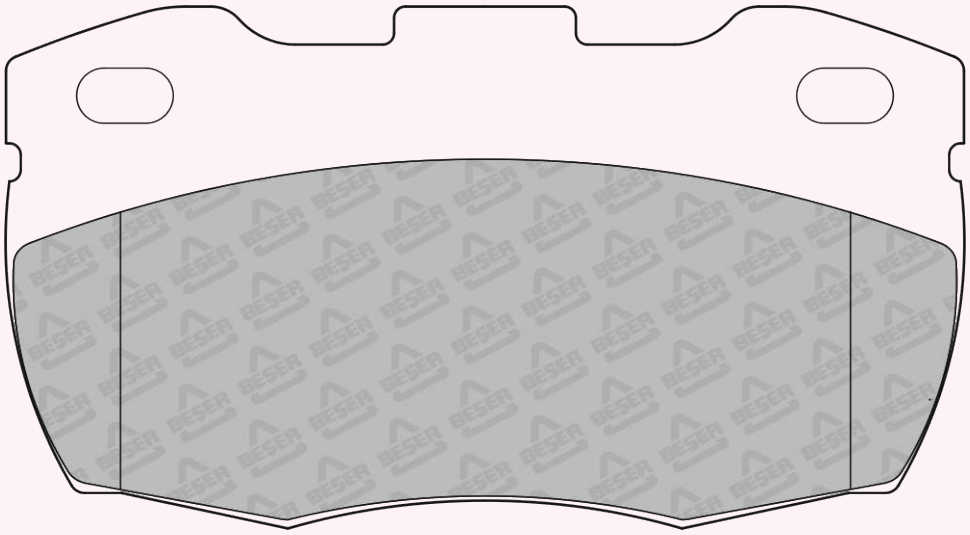

126,7 x 68,6

REFERENCE	T(mm)	REMARKS	MAKE	F/R	WVA No
3817	17,8	2 PADS WITH WEAR SENSOR	TOYOTA	F	23766 23818 23819

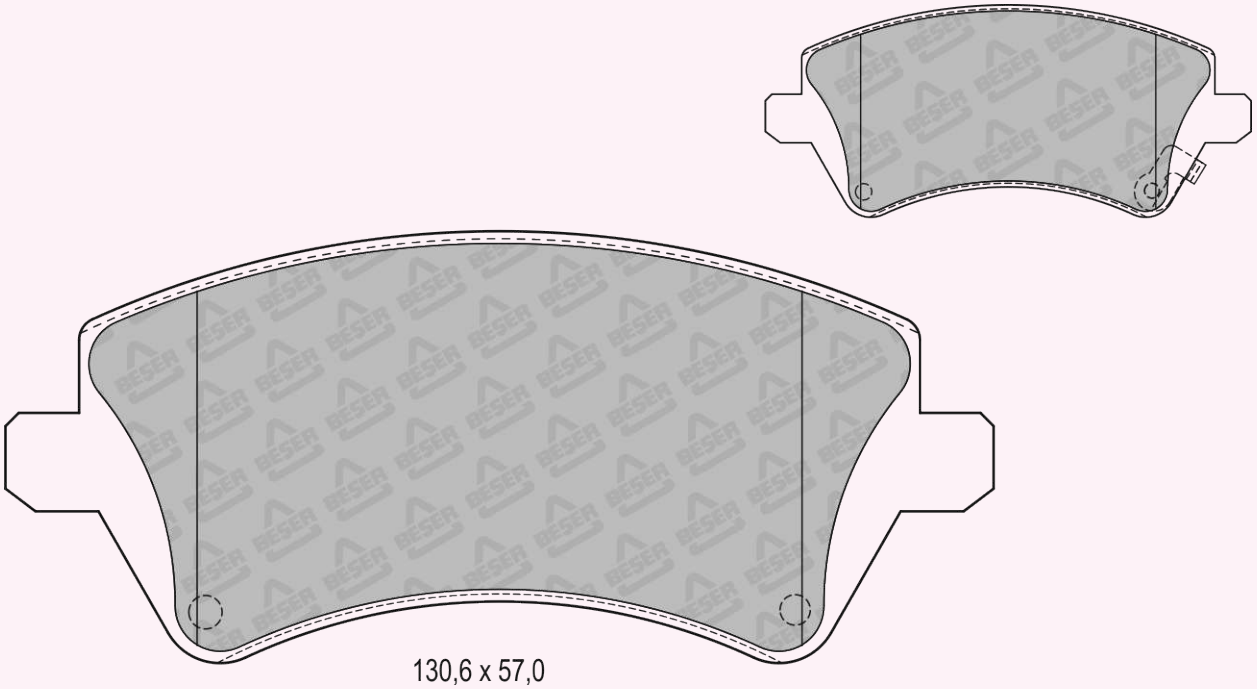

130,6 x 57,0

REFERENCE	T(mm)	REMARKS	MAKE	F/R	WVA No
3819	17,0	4 PADS PLAIN	CITROEN	F	21631

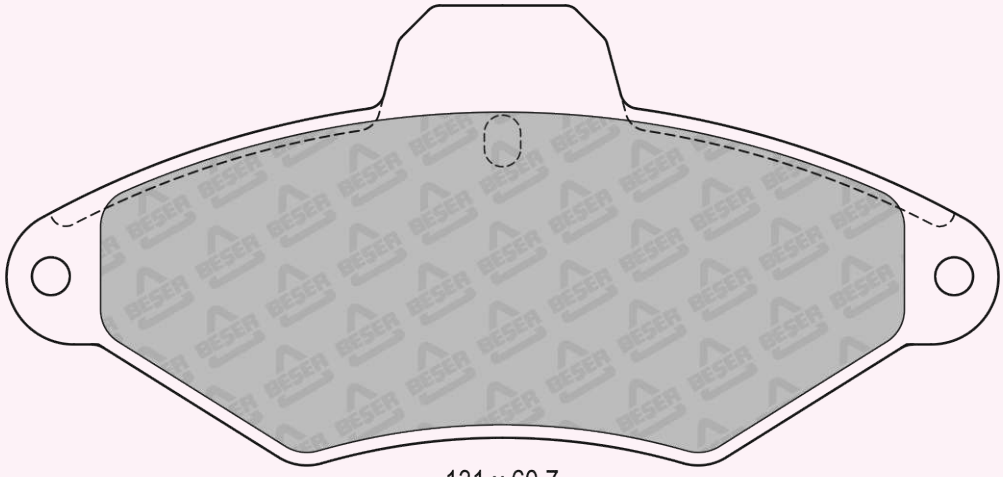

131 x 60,7

REFERENCE	T(mm)	REMARKS	MAKE	F/R	WVA No
3820	18,5	4 PADS PLAIN	CITROEN - PEUGEOT	F	23599 24101

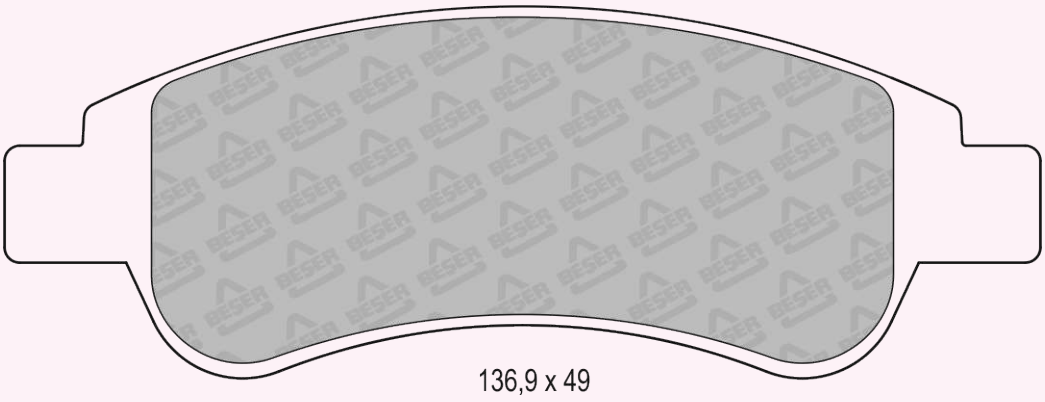

REFERENCE	T(mm)	REMARKS	MAKE	F/R	WVA No
3820/1	18,5	4 PADS PLAIN	CITROEN - PEUGEOT	F	24101 24465

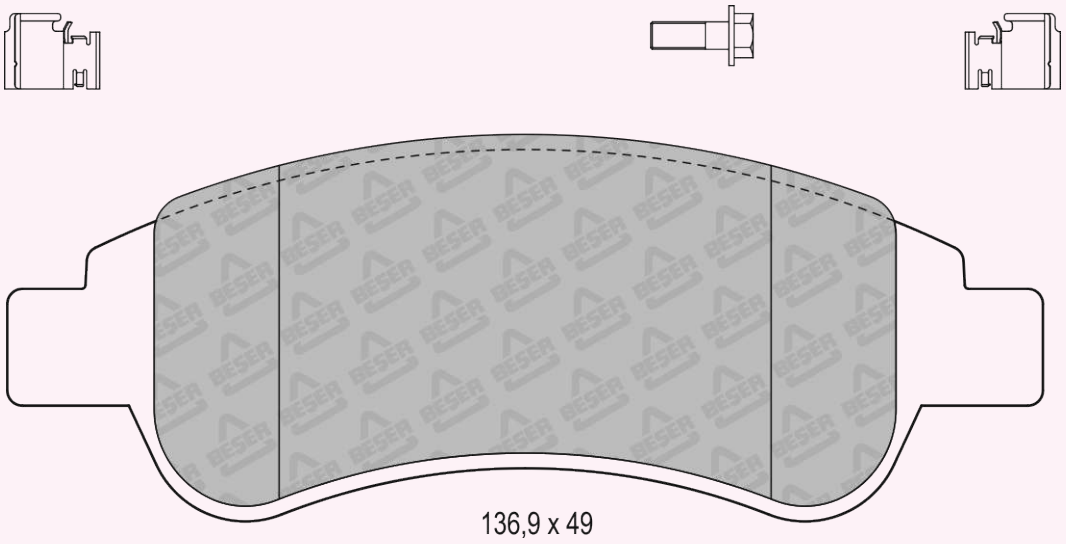

REFERENCE	T(mm)	REMARKS	MAKE	F/R	WVA No
3820/2	18,5	4 PADS PLAIN	CITROEN - PEUGEOT	F	24101

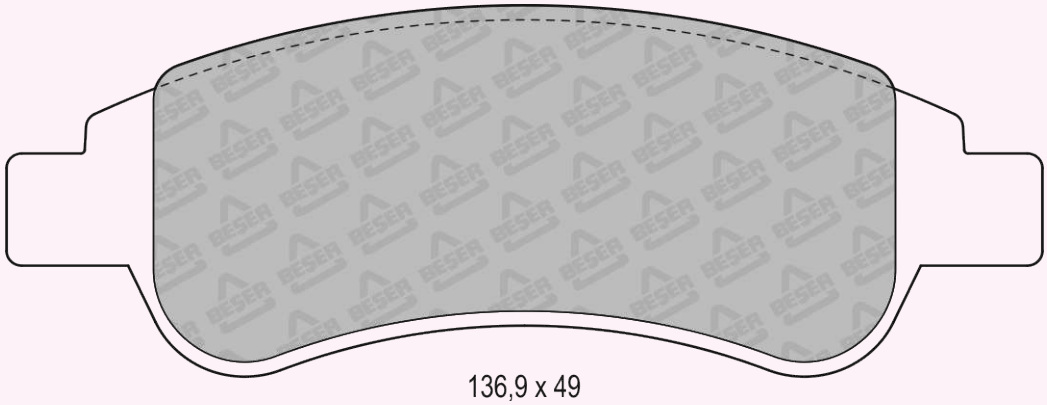

136,9 x 49

REFERENCE	T(mm)	REMARKS	MAKE	F/R	WVA No
3820/3	18,5	2 PADS WITH WEAR SENSOR	CITROEN - PEUGEOT	R	22041 24465

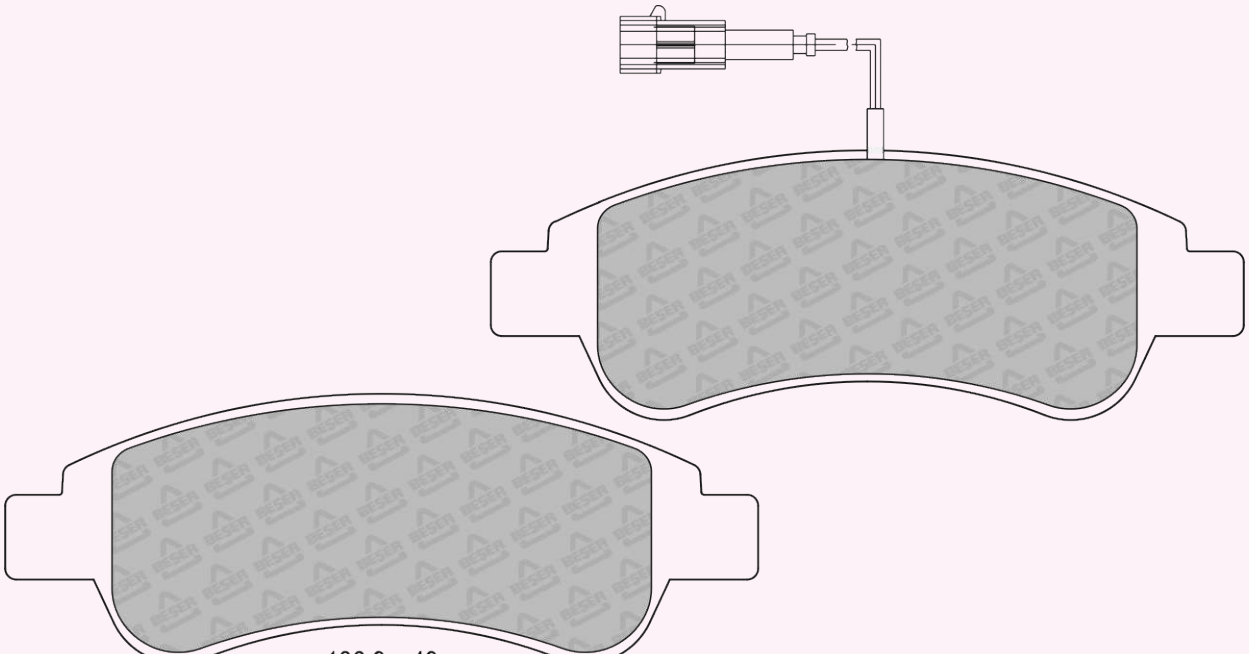

136,9 x 49
(NOT SCALE)

REFERENCE	T(mm)	REMARKS	MAKE	F/R	WVA No
3821	15,5	1 PAD WITH INDICATOR SLOT	MERCEDES BENZ	F	21898 21899

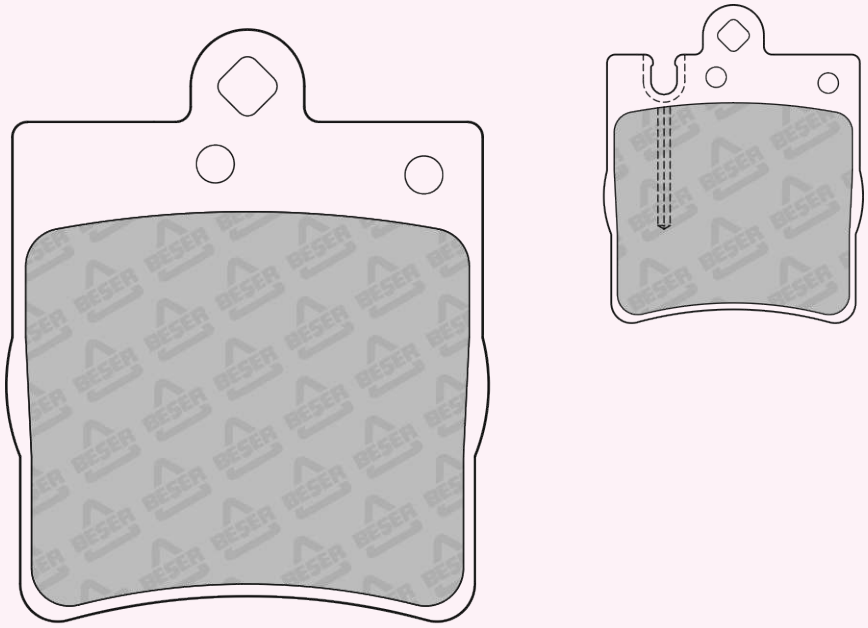

63,7 x 78,2

REFERENCE	T(mm)	REMARKS	MAKE	F/R	WVA No
3822	17,0	4 PADS PLAIN	LEXUS - TOYOTA	F	23513

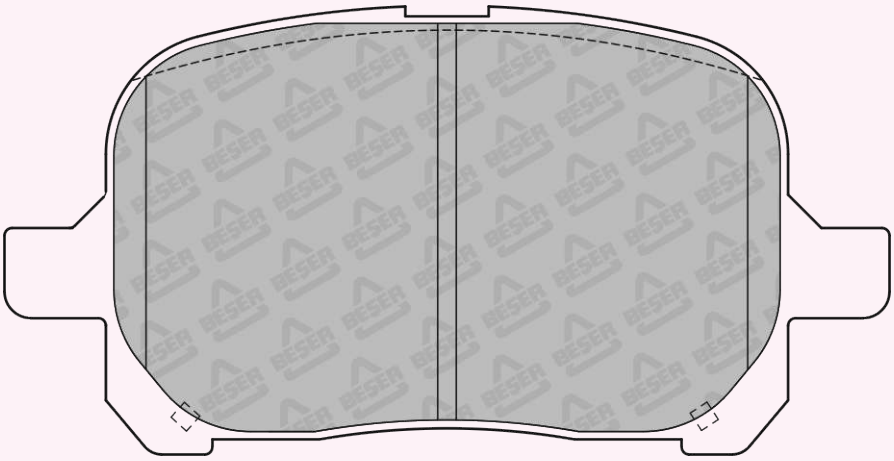

116,8 x 59,1

REFERENCE	T(mm)	REMARKS	MAKE	F/R	WVA No
3823	20	4 PADS PLAIN	IVECO	F	29123

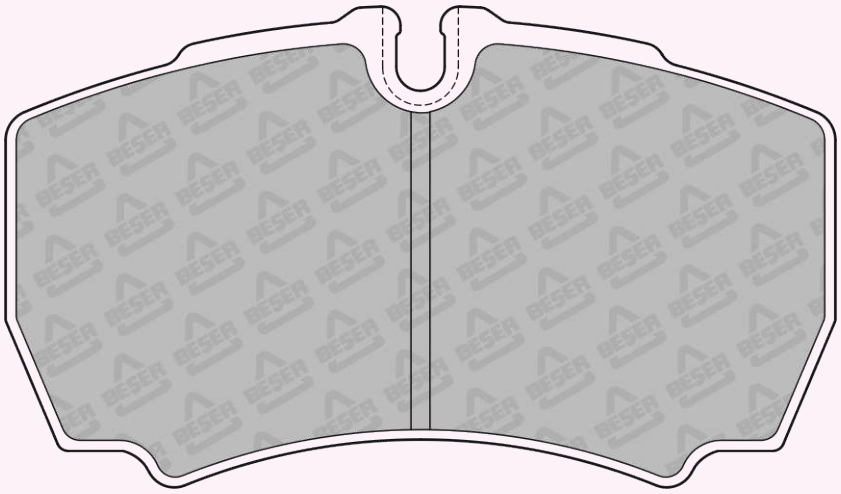

109,6 x 63,4

REFERENCE	T(mm)	REMARKS	MAKE	F/R	WVA No
3825	16,1	2 PADS WITH WEAR SENSOR	TOYOTA	R	23816

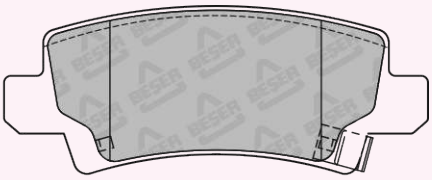

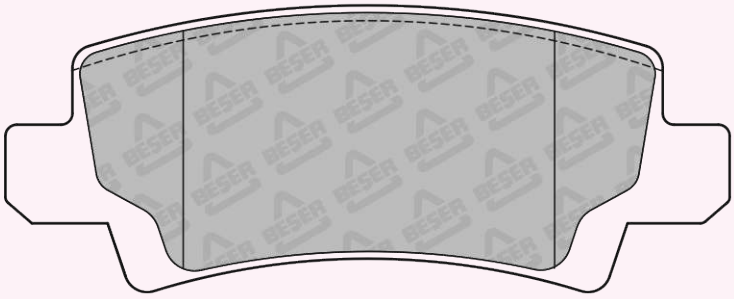

95,7 x 37,8

REFERENCE	T(mm)	REMARKS	MAKE	F/R	WVA No
3826	17,8	4 PADS PLAIN	FIAT	F	23705

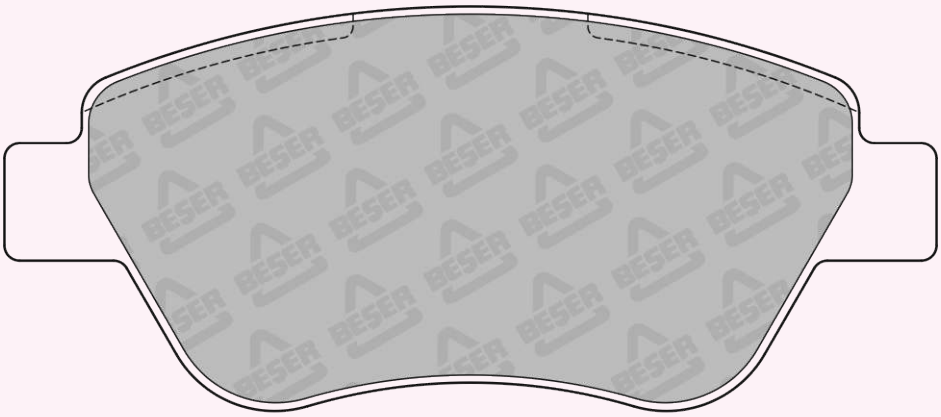

123 x 53,4

REFERENCE	T(mm)	REMARKS	MAKE	F/R	WVA No
3826/1	17,8	1 PAD WITH WEAR SENSOR (215 mm)	FIAT - LANCIA	F	23705 23706

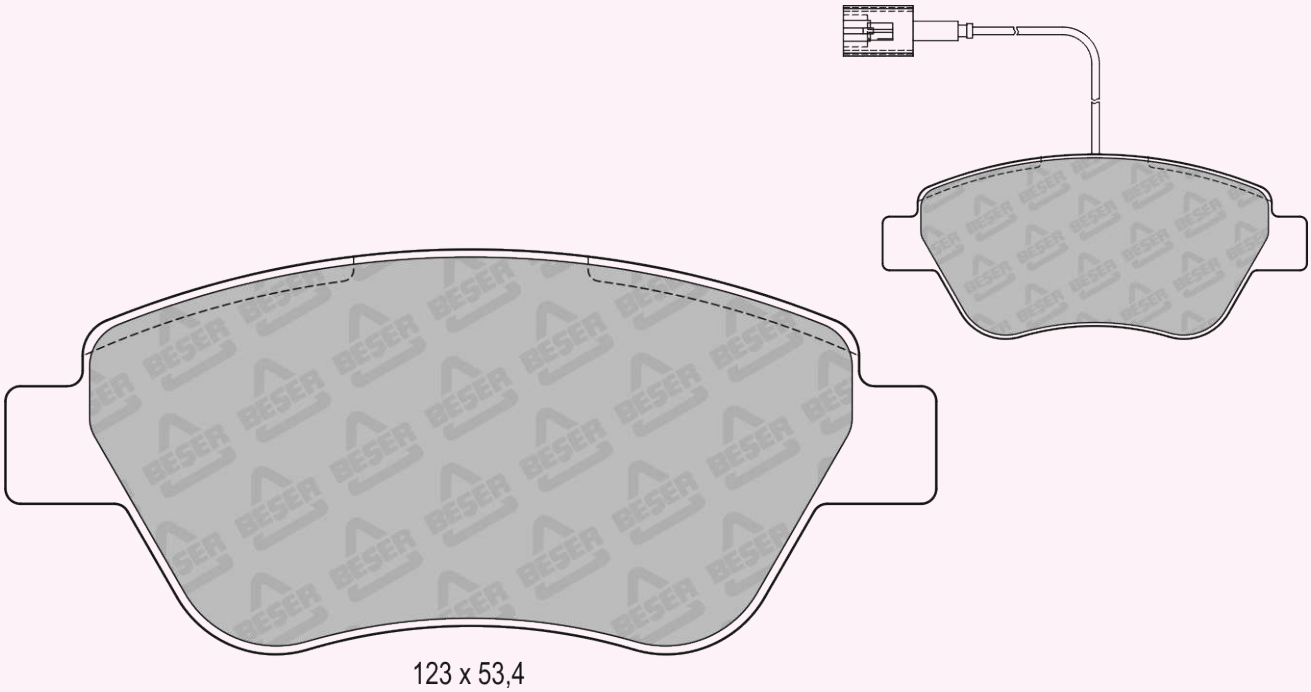

123 x 53,4

REFERENCE	T(mm)	REMARKS	MAKE	F/R	WVA No
3826/2	17,8	2 PADS WITH WEAR SENSOR	OPEL - VAUXHALL	F	23982 24288 25095

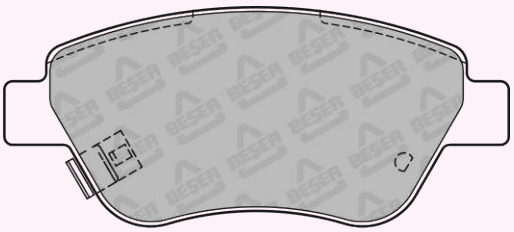

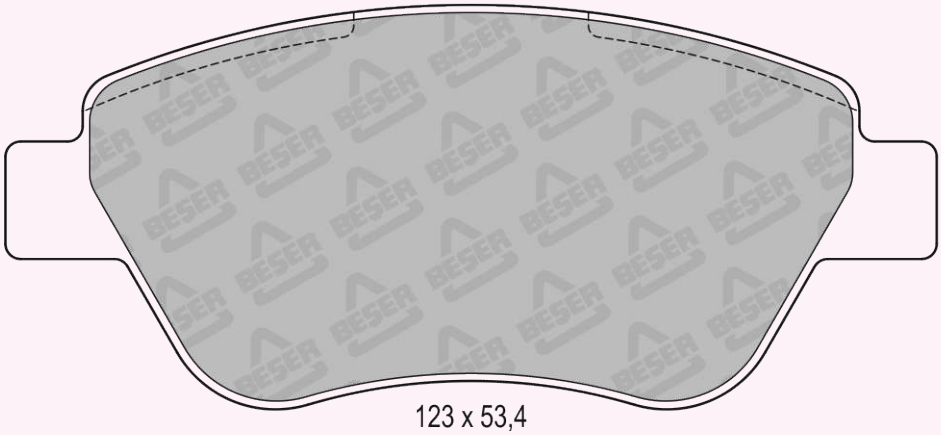

123 x 53,4

REFERENCE	T(mm)	REMARKS	MAKE	F/R	WVA No
3826/3	17,8	2 PADS WITH WEAR SENSOR	CITROEN - FIAT PEUGEOT	F	23705 23706

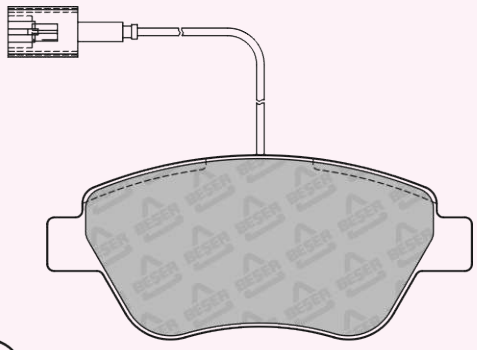

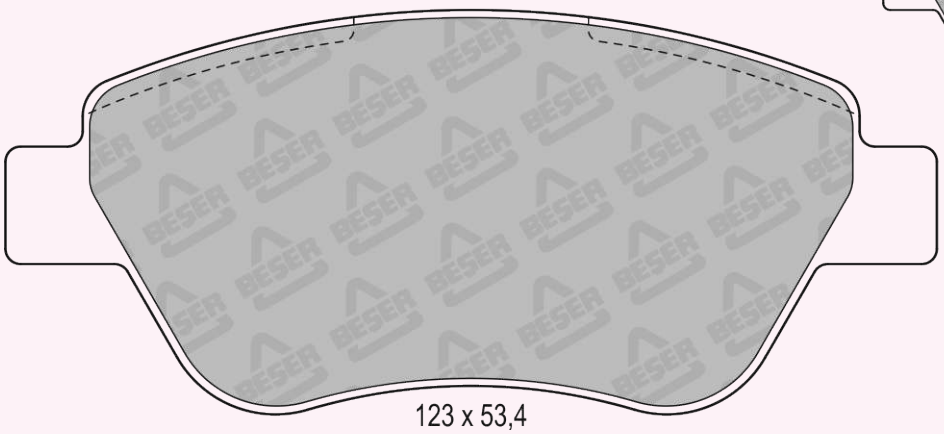

123 x 53,4

REFERENCE	T(mm)	REMARKS	MAKE	F/R	WVA No
3827	17,8	4 PADS PLAIN	FIAT - RENAULT	F	24393

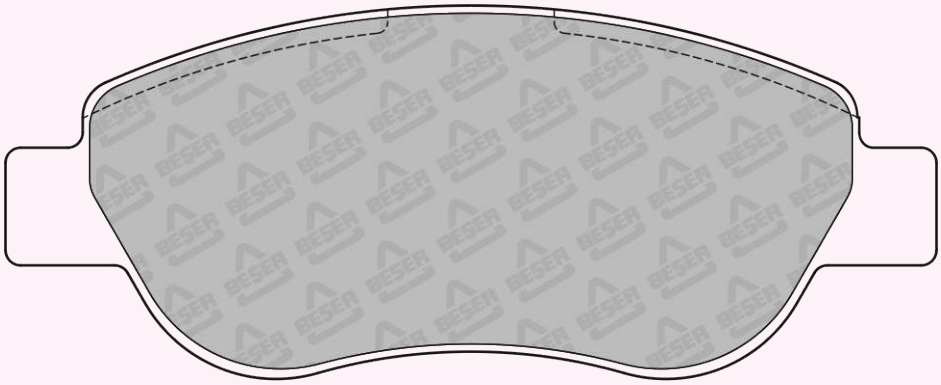

123 x 49,2

REFERENCE	T(mm)	REMARKS	MAKE	F/R	WVA No
3829	17,5	4 PADS WITH WEAR SENSOR	LEXUS - TOYOTA	F	23524 23525

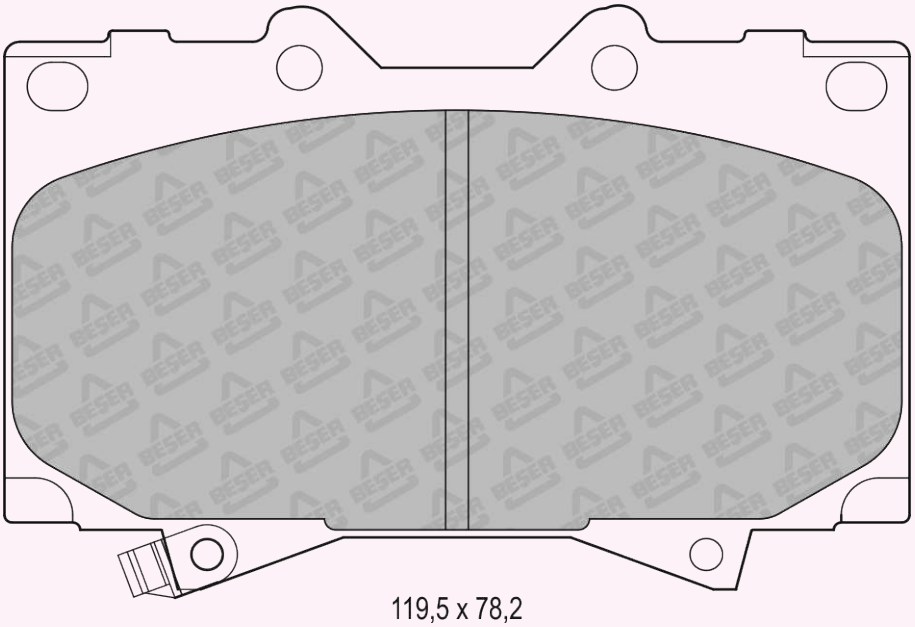

119,5 x 78,2

REFERENCE	T(mm)	REMARKS	MAKE	F/R	WVA No
3830	17,5	4 PADS PLAIN	LEXUS - TOYOTA	F	23539

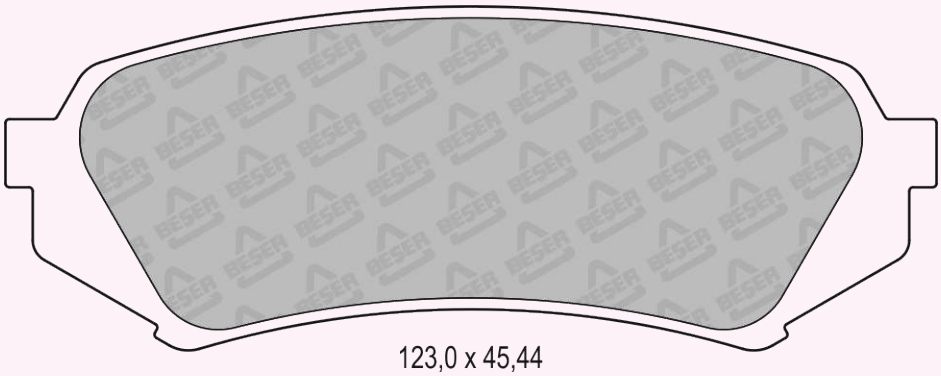

123,0 x 45,44

REFERENCE	T(mm)	REMARKS	MAKE	F/R	WVA No
3831	17,5	2 PADS WITH WEAR SENSOR	HONDA	F	23868 23869 23870

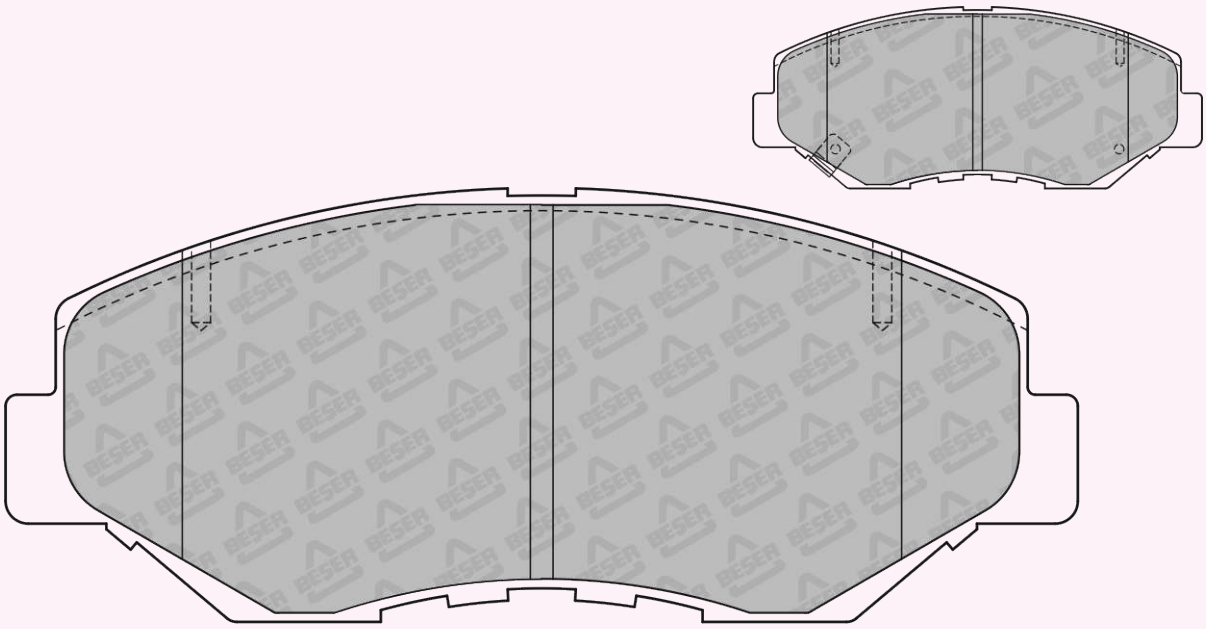

141,65 x 57,23

REFERENCE	T(mm)	REMARKS	MAKE	F/R	WVA No
3832	16	2 PADS WITH WEAR SENSOR	EUNOS - FORD HAIMA(FAW) - MAZDA	F	21754 21755 23845 23846

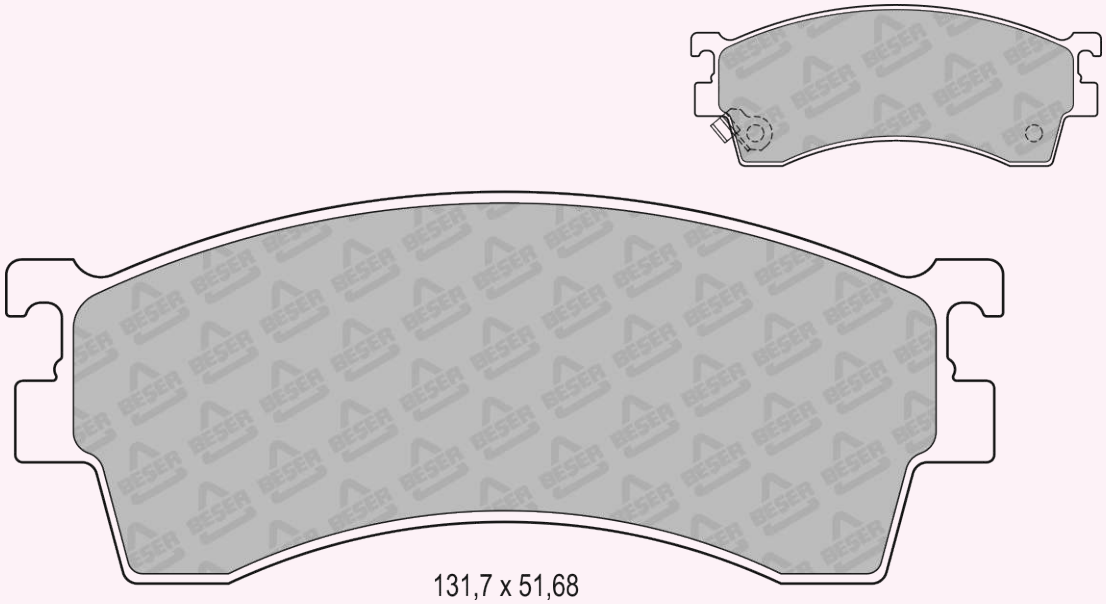

131,7 x 51,68

REFERENCE	T(mm)	REMARKS	MAKE	F/R	WVA No
3833	13,6	4 PADS PLAIN	EUNOS FORD - MAZDA	R	21766

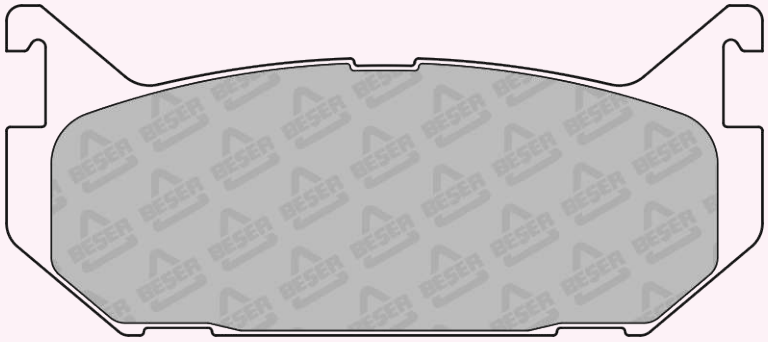

99,8 x 43,5

REFERENCE	T(mm)	REMARKS	MAKE	F/R	WVA No
3834	18,5	1 PAD WITH WEAR SENSOR	CITROEN - FIAT PEUGEOT	F	23917 23918

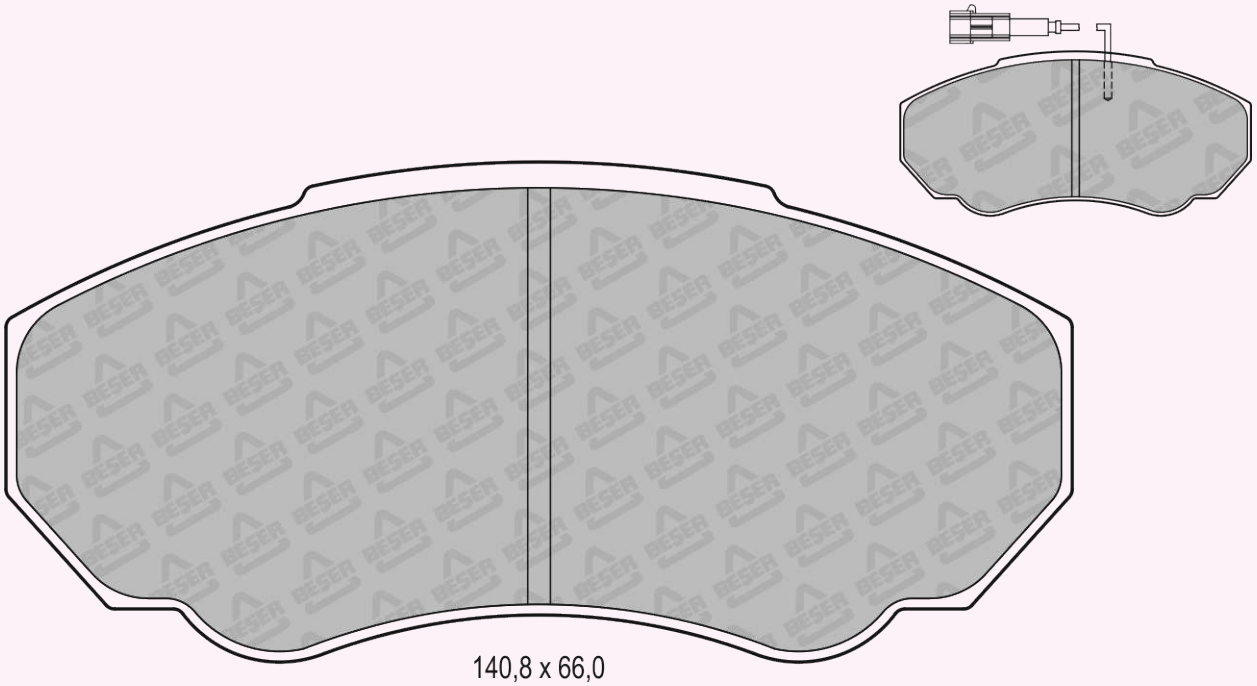

REFERENCE	T(mm)	REMARKS	MAKE	F/R	WVA No
3835	18,5	1 PAD WITH WEAR SENSOR	CITROEN - FIAT PEUGEOT	F	23919 23920

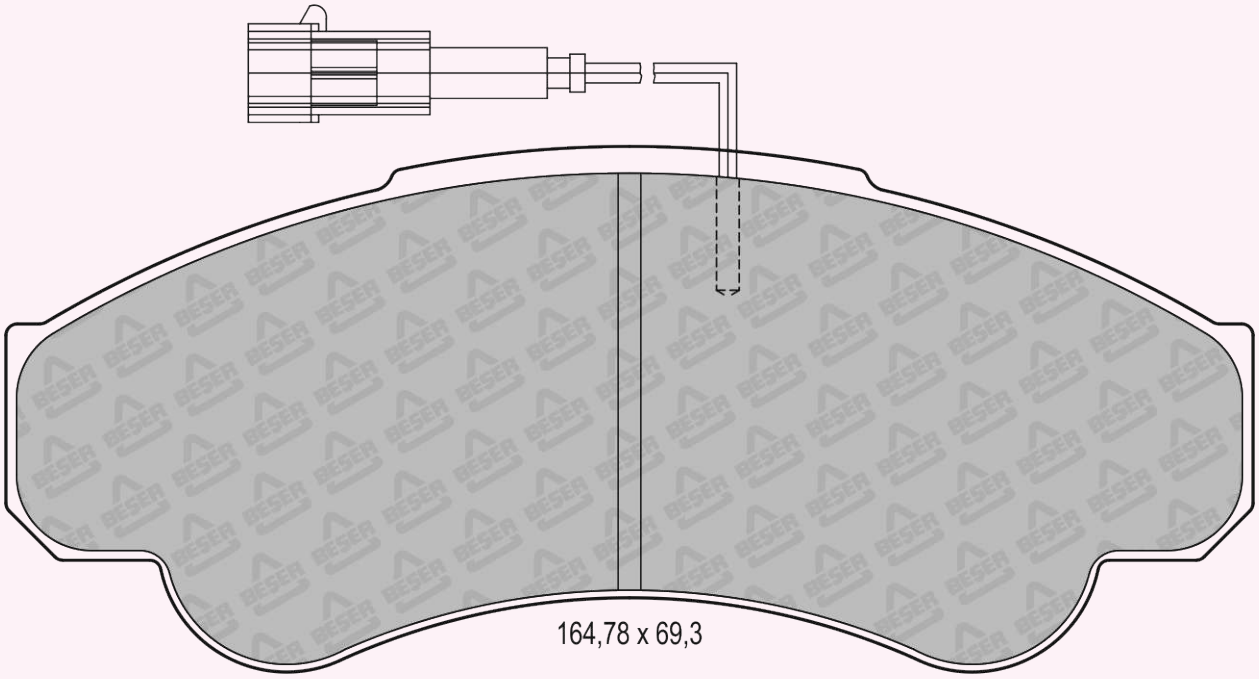

REFERENCE	T(mm)	REMARKS	MAKE	F/R	WVA No
3836	19,6	2 PADS INNER & 2 PADS OUTER	MERCEDES BENZ	F	23144 23145

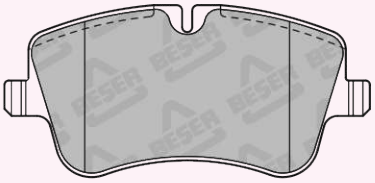

131,25 x 61,79
(NOT SCALE)

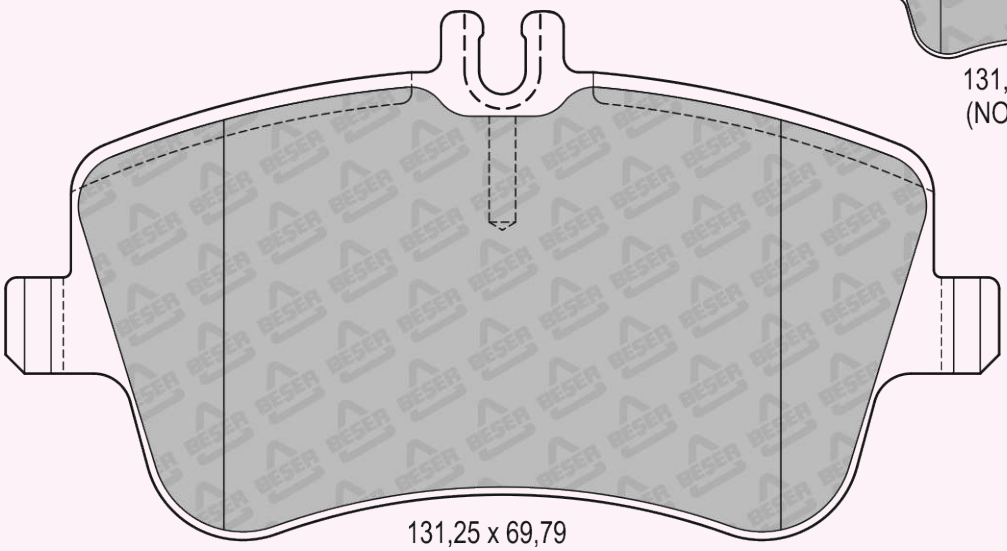

131,25 x 69,79

REFERENCE	T(mm)	REMARKS	MAKE	F/R	WVA No
3840	15	2 PADS RIGHT & 2 PADS LEFT	TRIUMPH	---	20226 20227

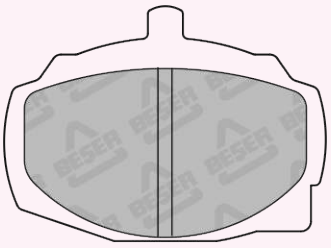

88,2 x 64,6
(NOT SCALE)

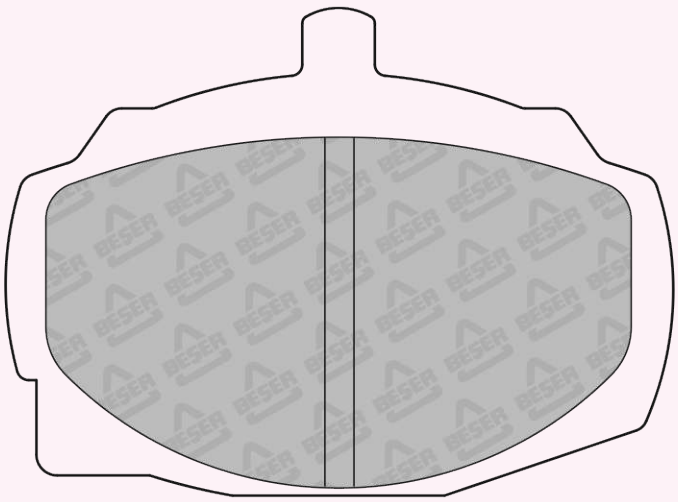

88,2 x 64,6

REFERENCE	T(mm)	REMARKS	MAKE	F/R	WVA No
3841	18,85 19,95	1 PAD WITH WEAR SENSOR	VW	F	23746 23747 23749

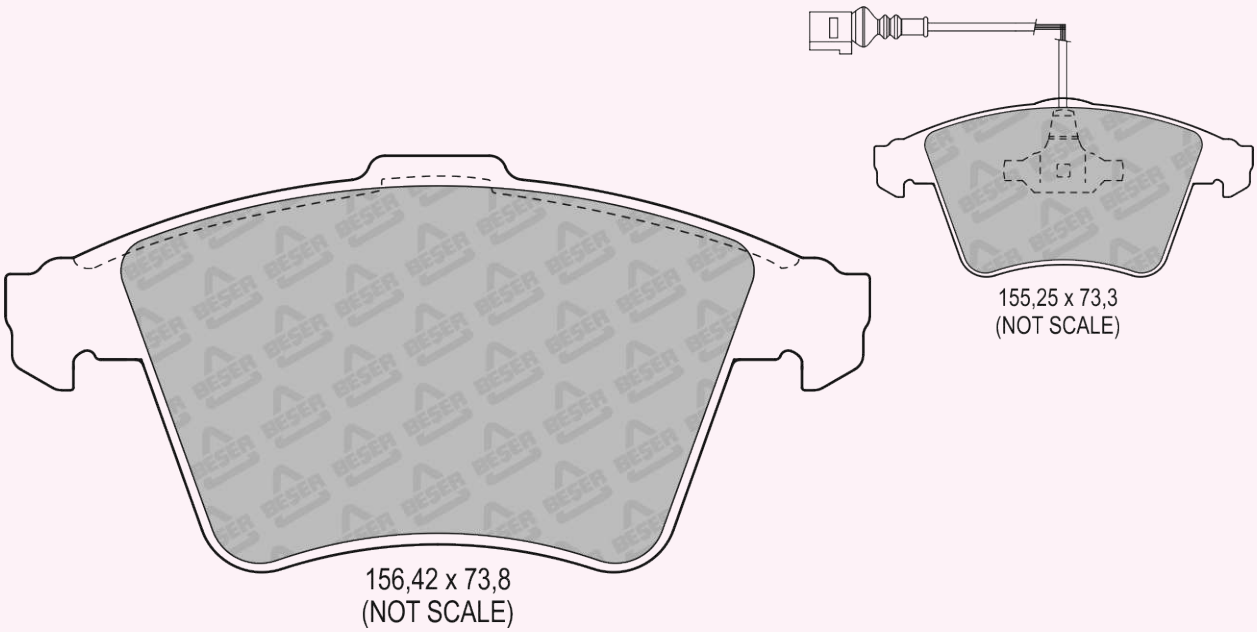

REFERENCE	T(mm)	REMARKS	MAKE	F/R	WVA No
3841/1	17 17,5	1 PAD WITH WEAR SENSOR	VW	F	23746 23747 23749

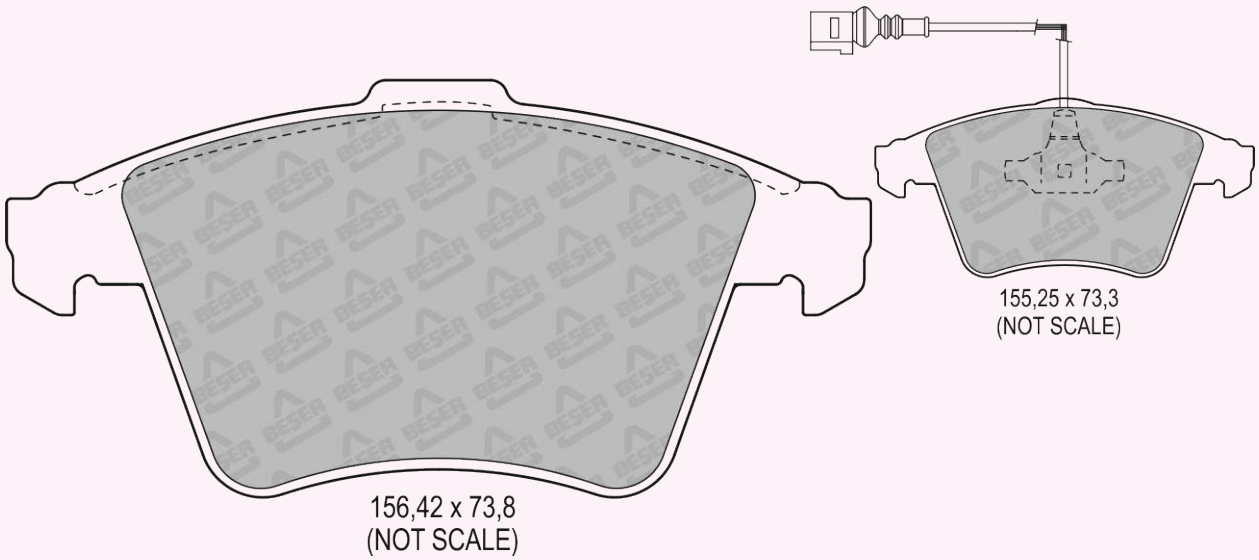

REFERENCE	T(mm)	REMARKS	MAKE	F/R	WVA No
3842	17,4	1 PAD WITH WEAR SENSOR	VW	R	23326



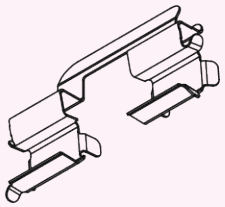

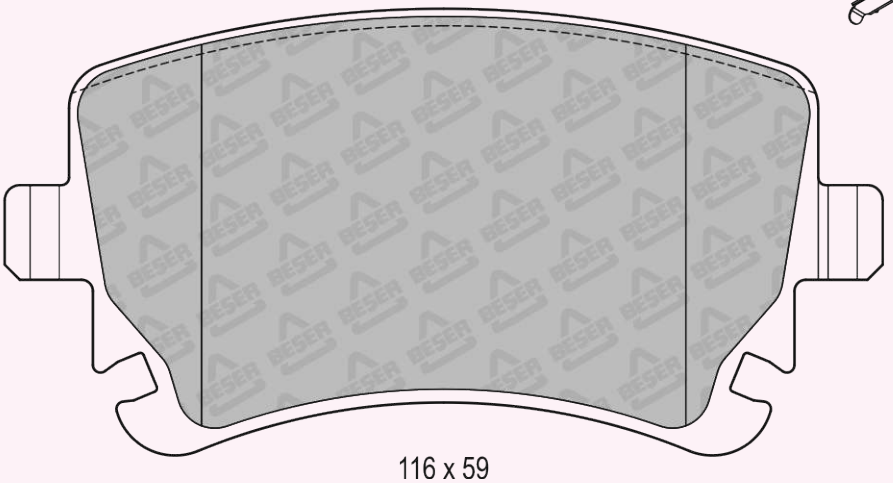

116 x 59

REFERENCE	T(mm)	REMARKS	MAKE	F/R	WVA No
3843	16,5	2 PADS WITH WEAR SENSOR	DAEWOO - HYUNDAI SSANGYONG	F	23569 23570 23571

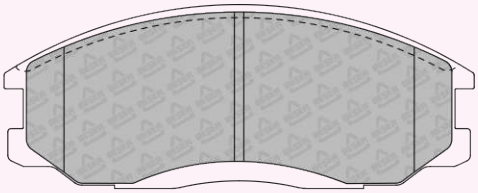

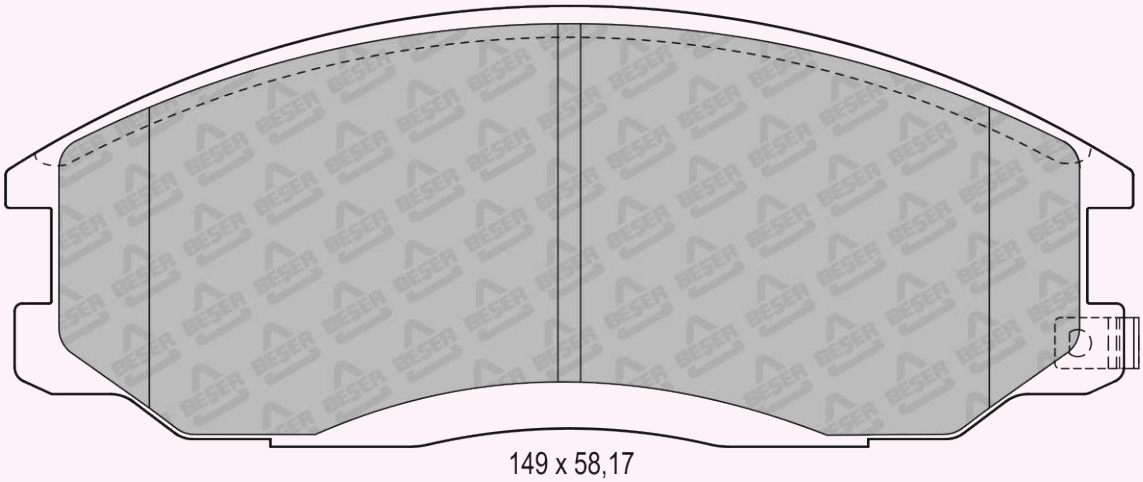

149 x 58,17

REFERENCE	T(mm)	REMARKS	MAKE	F/R	WVA No
3846	16.5	2 PADS INNER & 2 PADS OUTER	HOLDEN - OPEL VAUXHALL	F	23225 23226

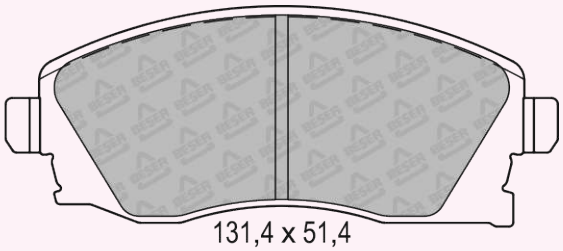

131,4 x 51,4
(NOT SCALE)

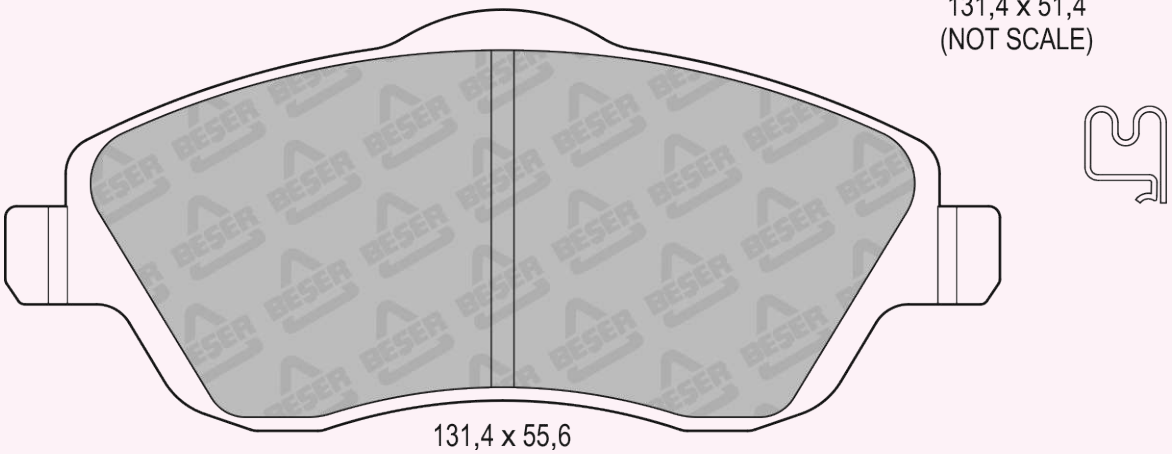

131,4 x 55,6

REFERENCE	T(mm)	REMARKS	MAKE	F/R	WVA No
3848	18.1	4 PADS PLAIN	NISSAN - OPEL RENAULT -VAUXHALL	F	23099

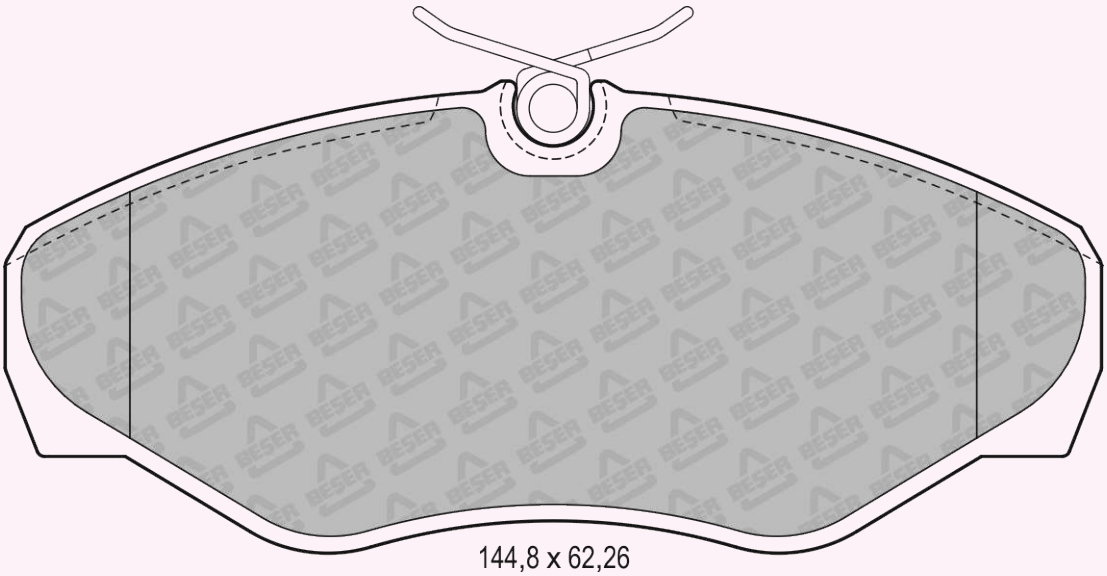

144,8 x 62,26

REFERENCE	T(mm)	REMARKS	MAKE	F/R	WVA No
3849	18.1	4 PADS PLAIN	RENAULT	F	23930

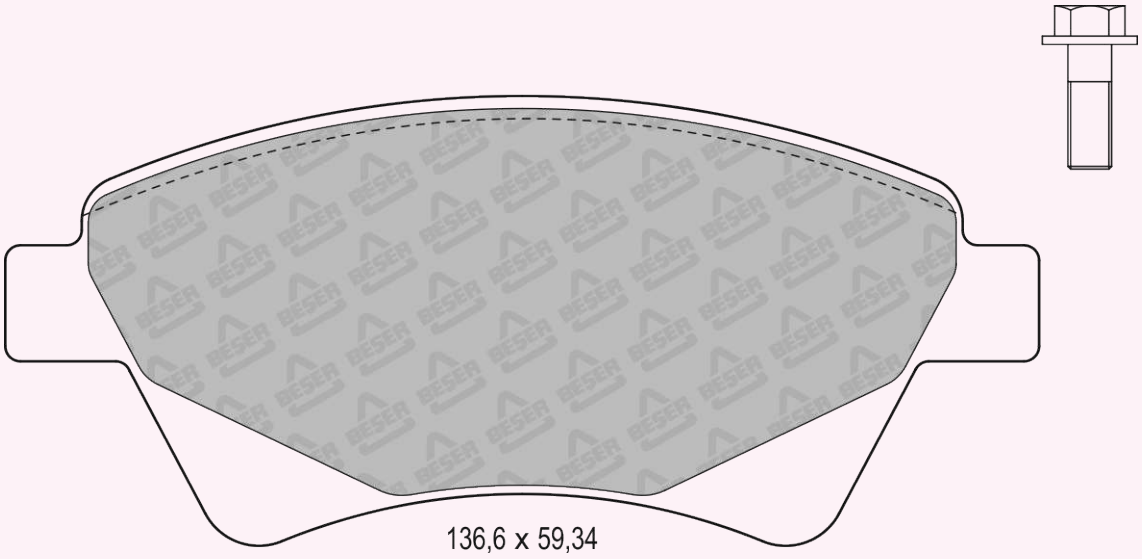

REFERENCE	T(mm)	REMARKS	MAKE	F/R	WVA No
3850	18.15	4 PADS PLAIN	RENAULT	F	23934

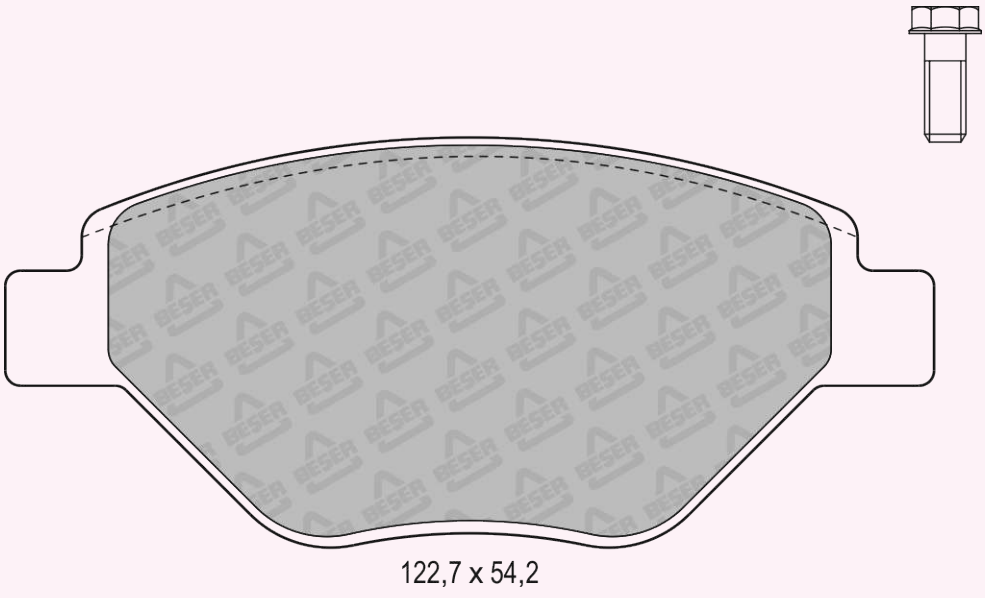

REFERENCE	T(mm)	REMARKS	MAKE	F/R	WVA No
3852	18	2 PADS INNER & 2 PADS OUTER	RENAULT	F	23245 23247

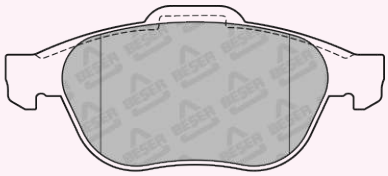

156,3 x 68,06
(NOT SCALE)

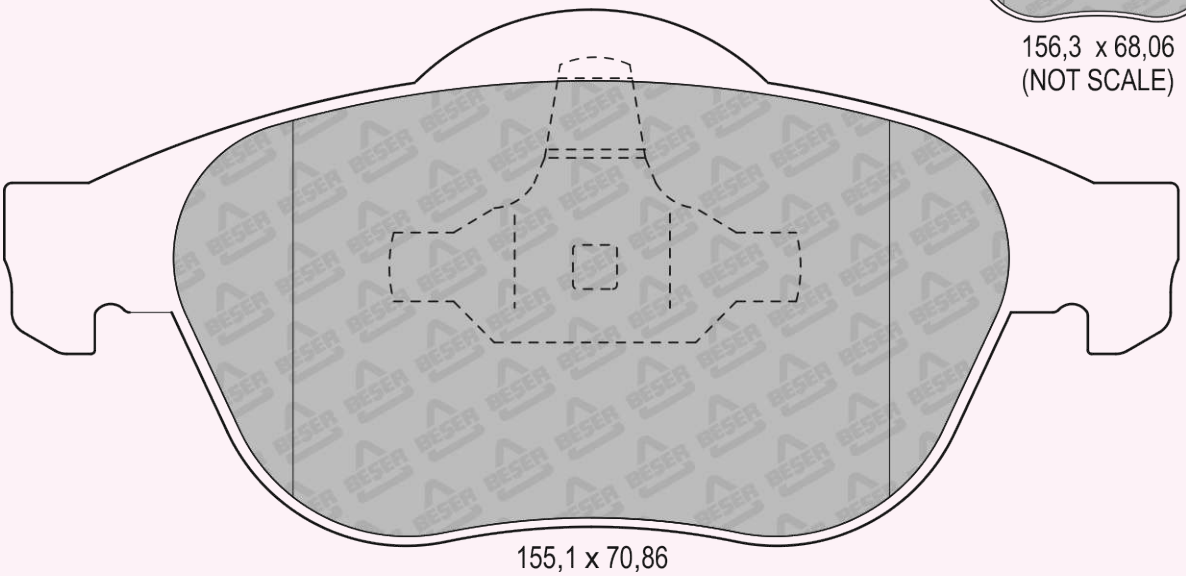

155,1 x 70,86

REFERENCE	T(mm)	REMARKS	MAKE	F/R	WVA No
3853	16.5	2 PADS INNER & 2 PADS OUTER	NISSAN - RENAULT	R	23482 23483

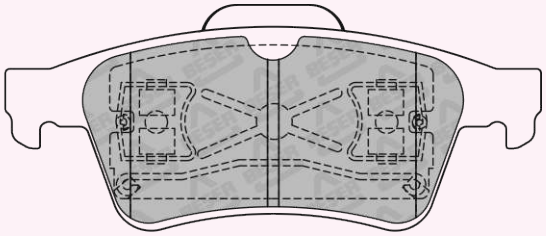

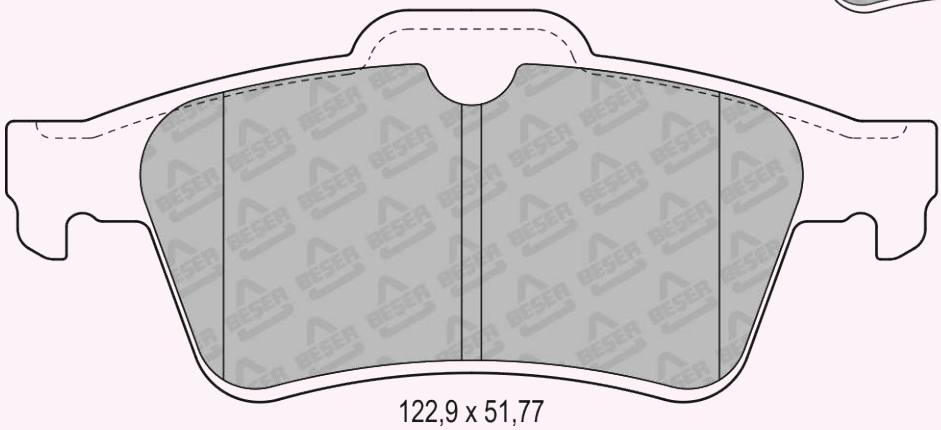

122,9 x 51,77

REFERENCE	T(mm)	REMARKS	MAKE	F/R	WVA No
3853/1	16.5	2 PADS INNER & 2 PADS OUTER	CADILLAC - CHEVROLET - CITROEN FORD - HOLDEN - JAGUAR - MAZDA OPEL - PLYMOUTH - RENAULT - SAAB VAUXHALL - VOLVO	R	23482 24137

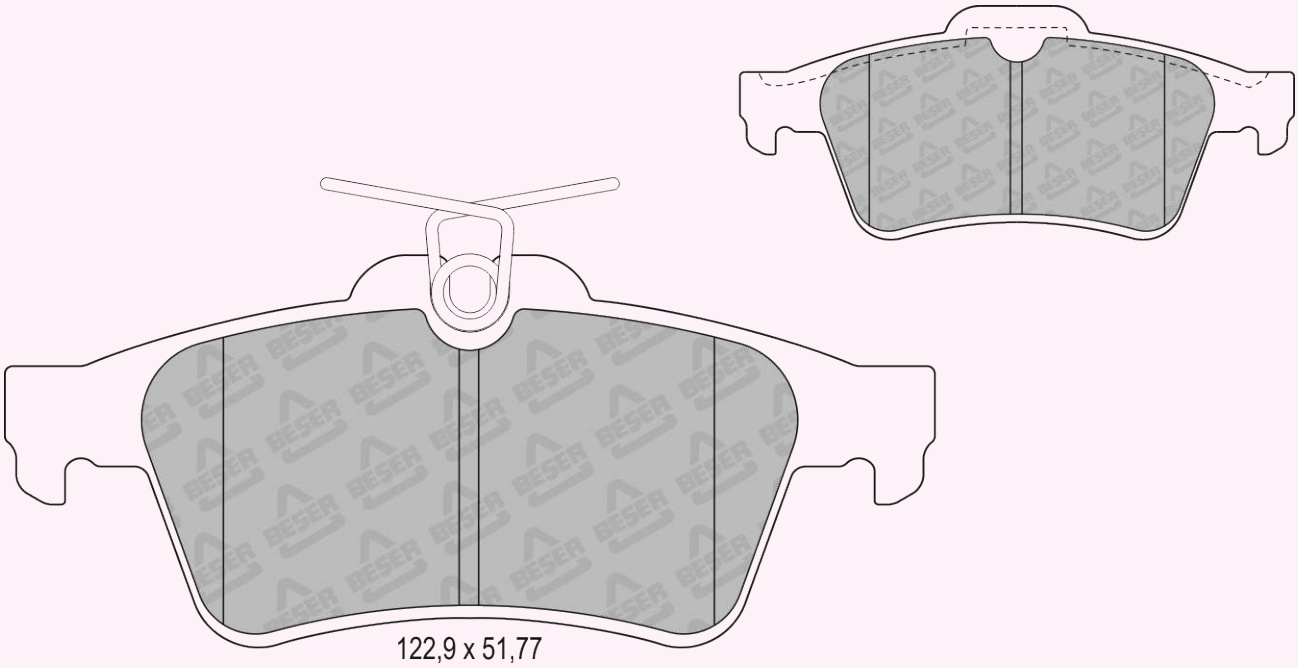

122,9 x 51,77

REFERENCE	T(mm)	REMARKS	MAKE	F/R	WVA No
3854	19	4 PADS PLAIN	CITROEN	F	23407

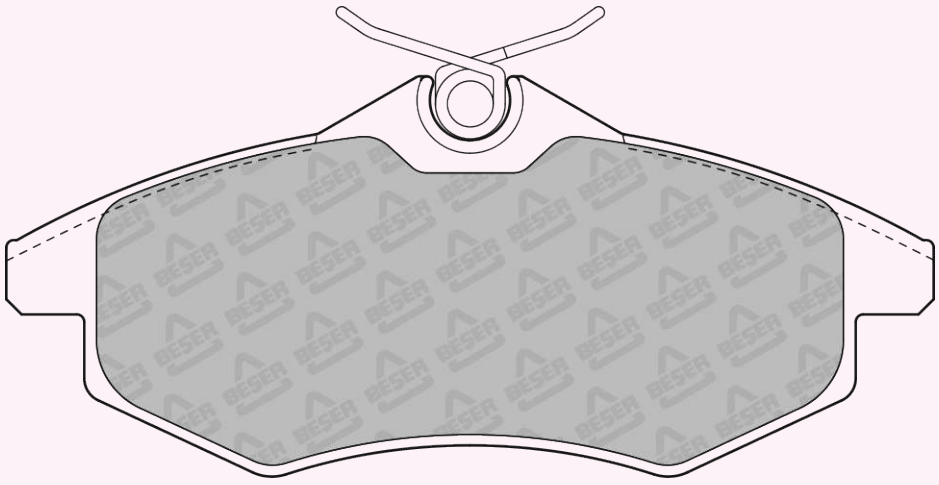

122,5 x 52,89

REFERENCE	T(mm)	REMARKS	MAKE	F/R	WVA No
3855	16.8	4 PADS WITH WEAR SENSOR	NISSAN - OPEL RENAULT - VAUXHALL	R	23669

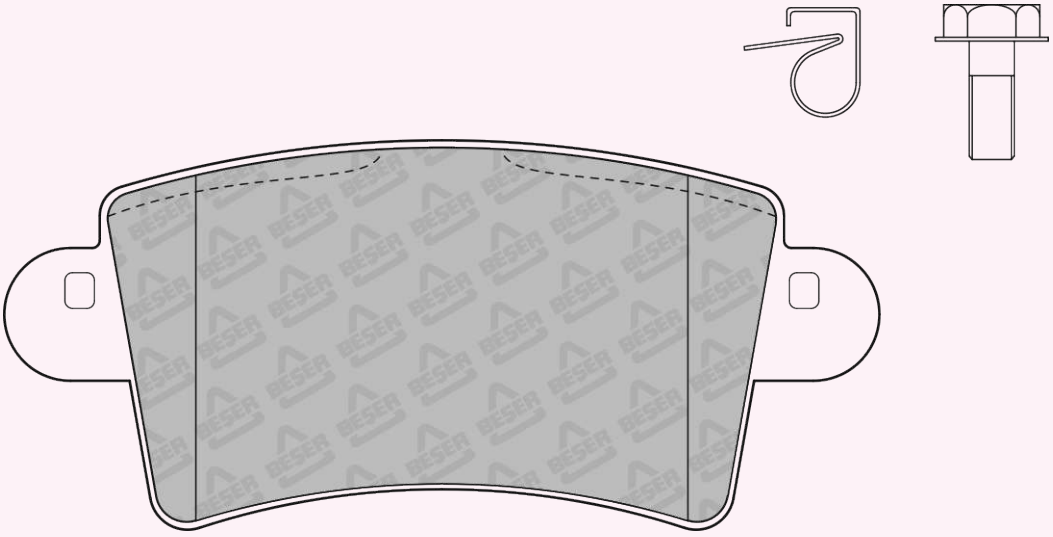

115,6 x 51,32

REFERENCE	T(mm)	REMARKS	MAKE	F/R	WVA No
3856	17.75	4 PADS PLAIN	NISSAN - OPEL RENAULT - VAUXHALL	F	23613

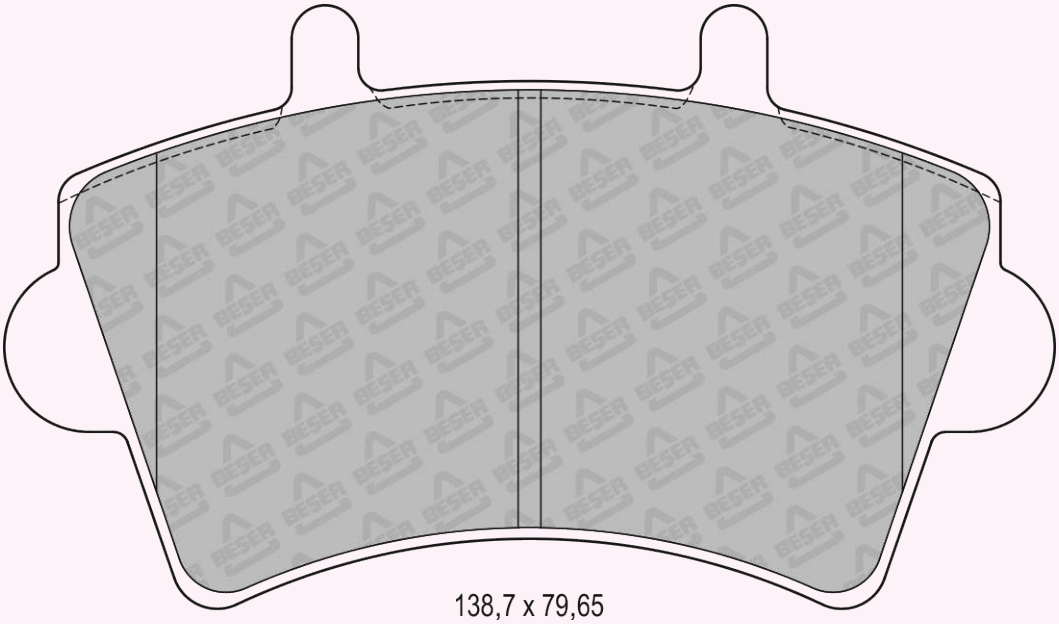

138,7 x 79,65

REFERENCE	T(mm)	REMARKS	MAKE	F/R	WVA No
3857	16,5	4 PADS WITH WEAR SENSOR	HOLDEN - ISUZU - LANDWIND(JMC) OPEL - VAUXHALL	F	21543 21544

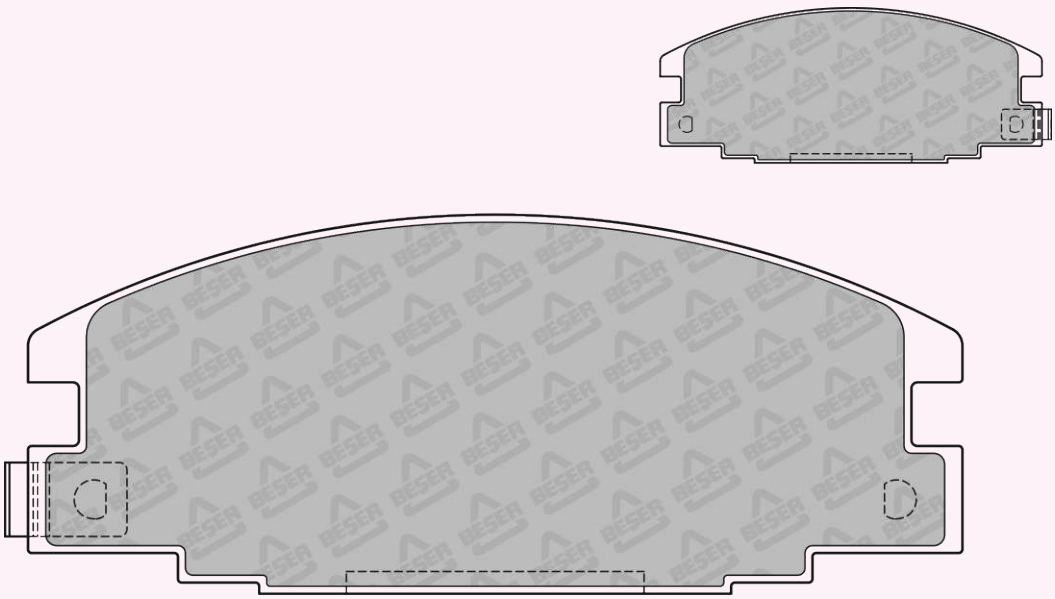

126,5 x 51,3

REFERENCE	T(mm)	REMARKS	MAKE	F/R	WVA No
3859	18.8	4 PADS WITH WEAR SENSOR	NISSAN	F	23611 23612 24132

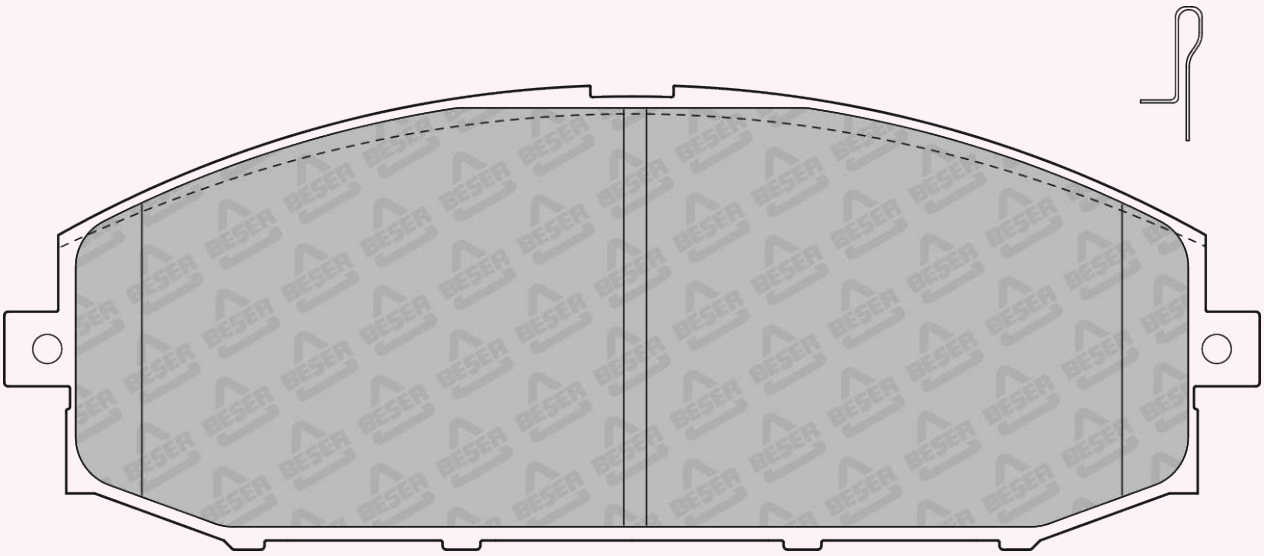

165,85 x 61,2

REFERENCE	T(mm)	REMARKS	MAKE	F/R	WVA No
3861	18	4 PADS PLAIN	MERCEDES BENZ	R	23020

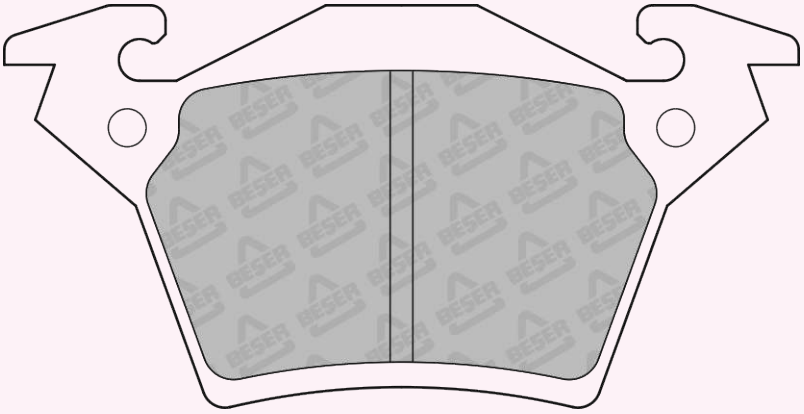

104,95 x 53,05

REFERENCE	T(mm)	REMARKS	MAKE	F/R	WVA No
3863	20	2 PADS PISTON CLIP	CHRYSLER MERCEDES BENZ	F	21670 21794

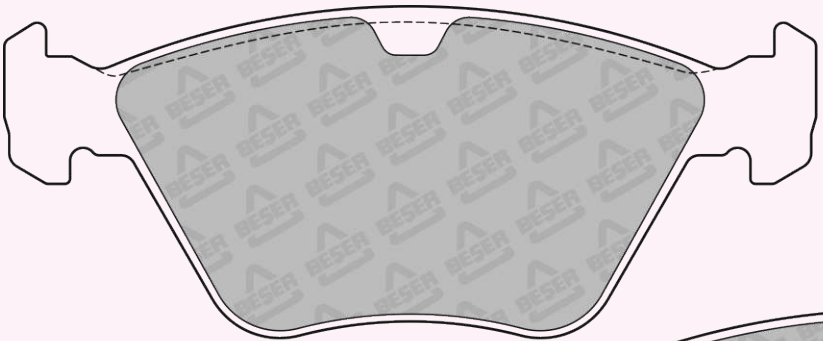

156,3x63,8
(NOT SCALE)

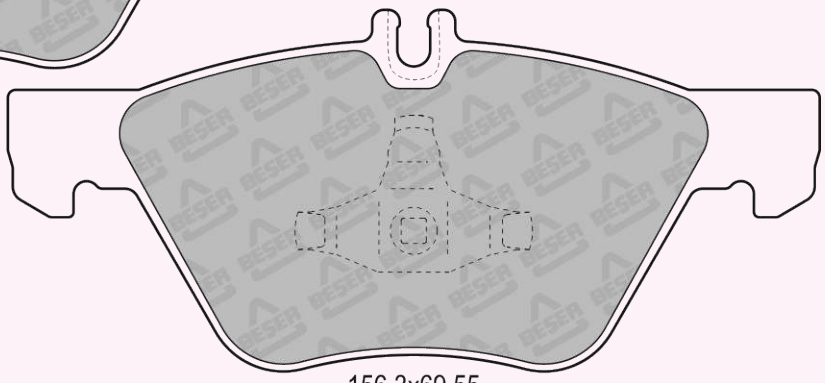

156,3x69,55
(NOT SCALE)

REFERENCE	T(mm)	REMARKS	MAKE	F/R	WVA No
3864	15,6-14,6	4 PADS PLAIN	BUICK - CADILLAC - CHEVROLET JEEP - PONTIAC	F	---

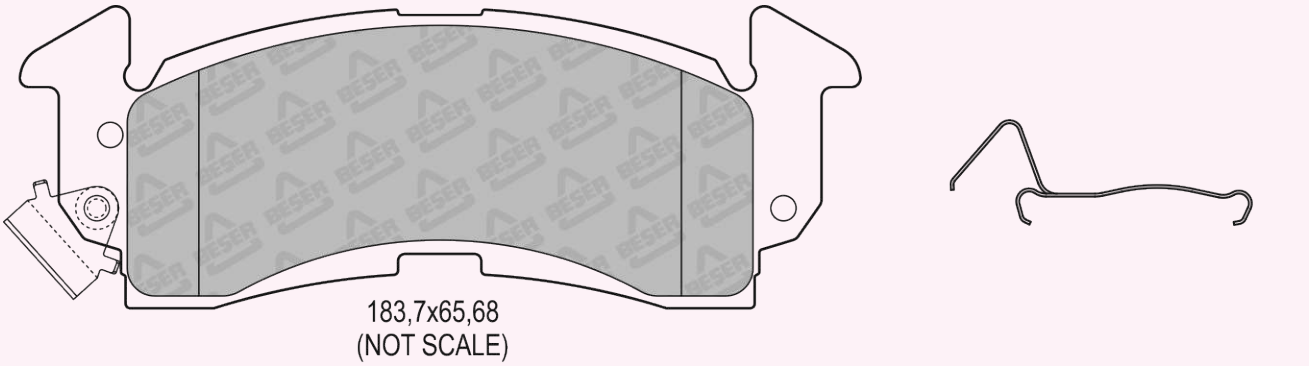

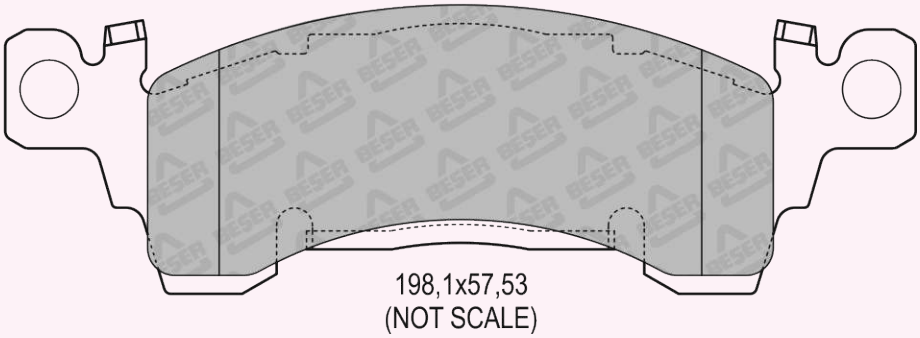

REFERENCE	T(mm)	REMARKS	MAKE	F/R	WVA No
3865	15,4-16,8	2 PADS PISTON CLIP	FORD	F	-

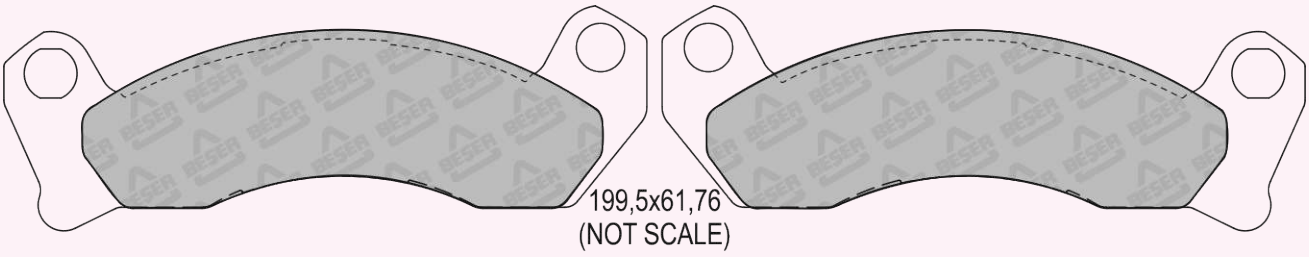

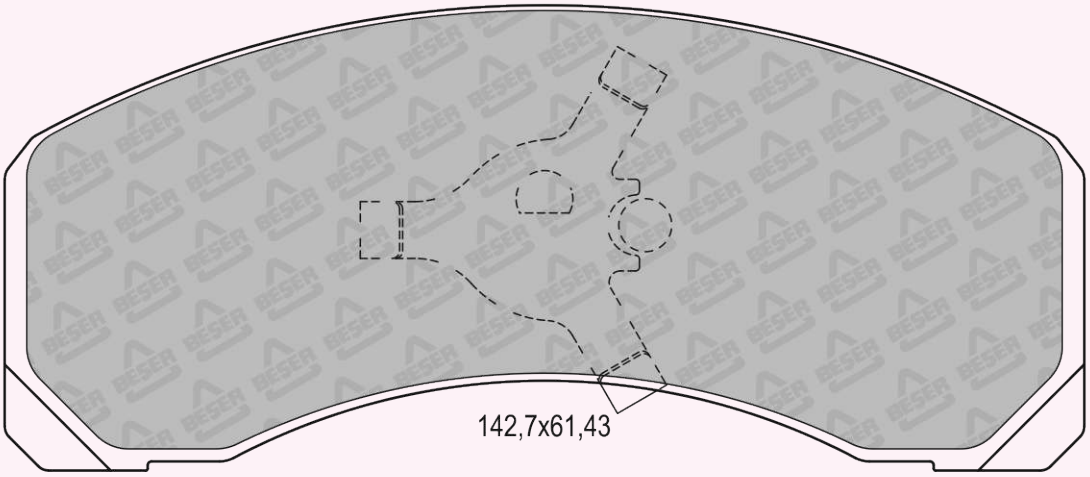

REFERENCE	T(mm)	REMARKS	MAKE	F/R	WVA No
3866	17.5 -16,6	4 PADS PLAIN	CHEVROLET - GMC	F	24769 24770 24771

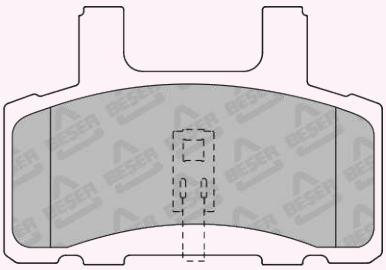

125,9x85,7
(NOT SCALE)

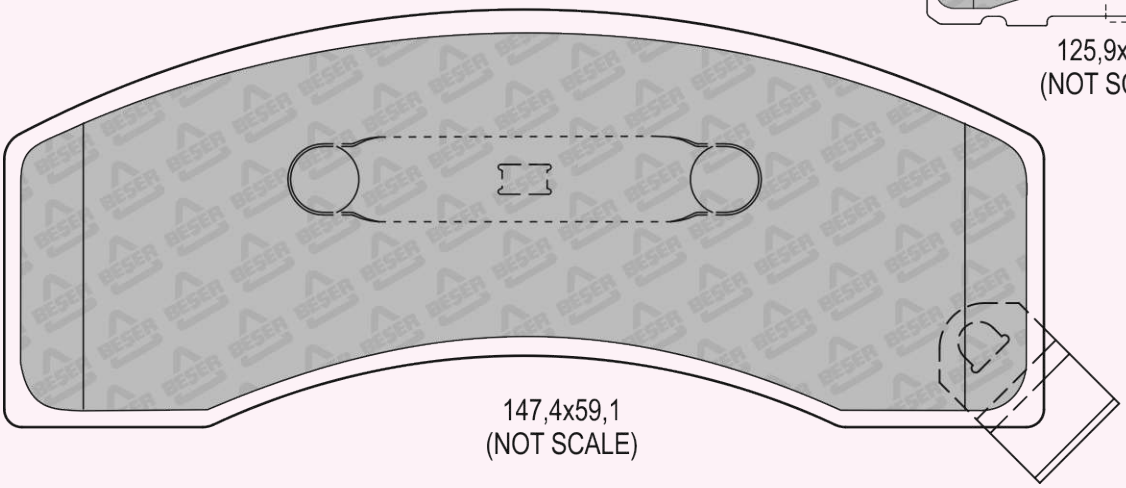

147,4x59,1
(NOT SCALE)

REFERENCE	T(mm)	REMARKS	MAKE	F/R	WVA No
3867	15-15,8	2 PADS WITH WEAR SENSOR	CHRYSLER - PLYMOUTH	F	21812 21813 21814

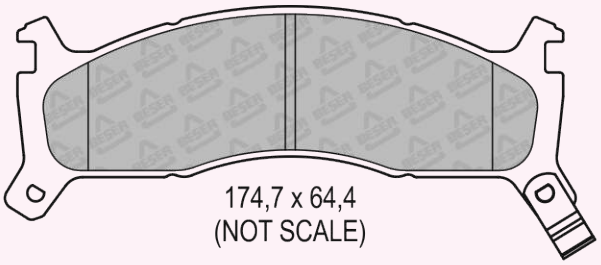

174,7 x 64,4
(NOT SCALE)

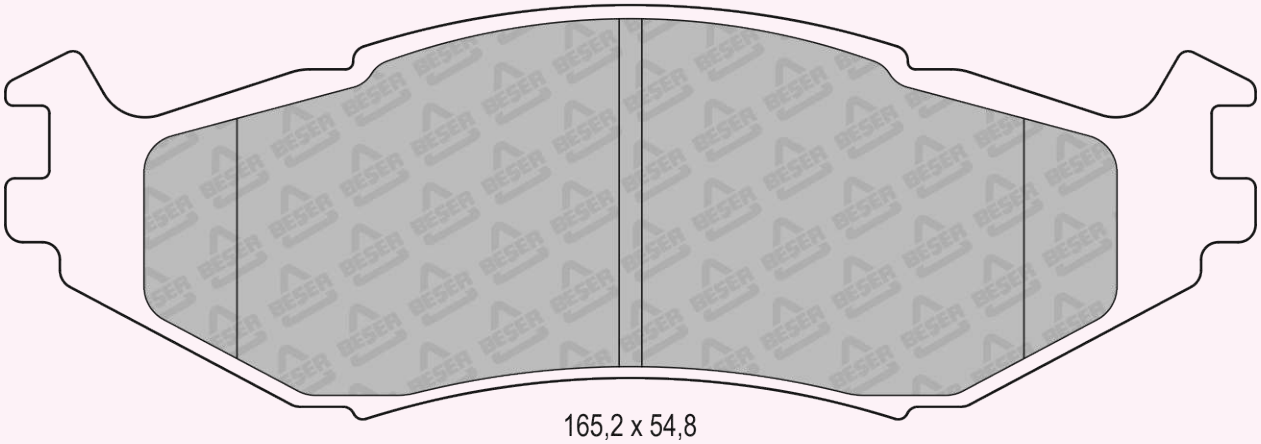

165,2 x 54,8

REFERENCE	T(mm)	REMARKS	MAKE	F/R	WVA No
3868	15.75 - 17	2 PADS INNER & 2 PADS OUTER	CADILLAC -CHEVROLET DODGE	F	25371 25372 25373

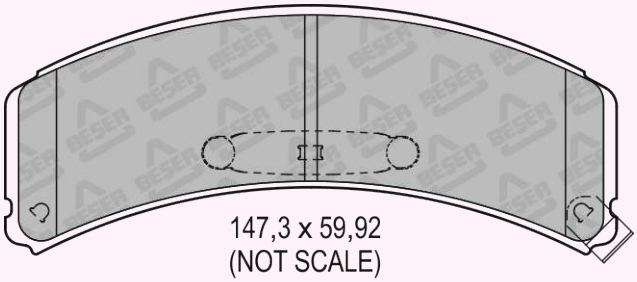

147,3 x 59,92
(NOT SCALE)

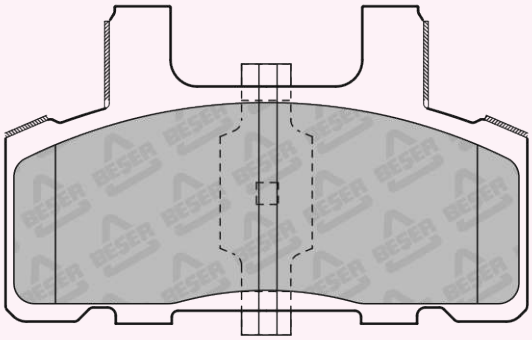

125,7 x 75,91
(NOT SCALE)

REFERENCE	T(mm)	REMARKS	MAKE	F/R	WVA No
3871	18	2 PADS WITH WEAR SENSOR	BMC	F	---

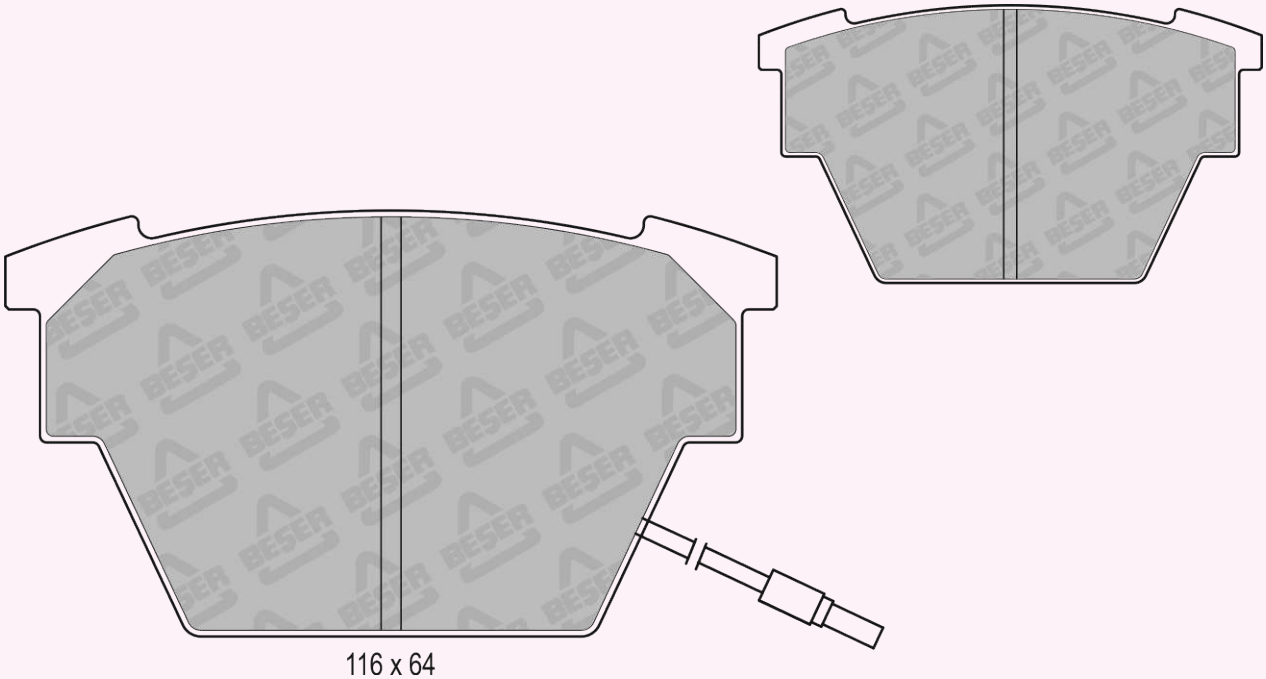

116 x 64

REFERENCE	T(mm)	REMARKS	MAKE	F/R	WVA No
3871/1	17	2 PADS WITH WEAR SENSOR	BMC	F	---

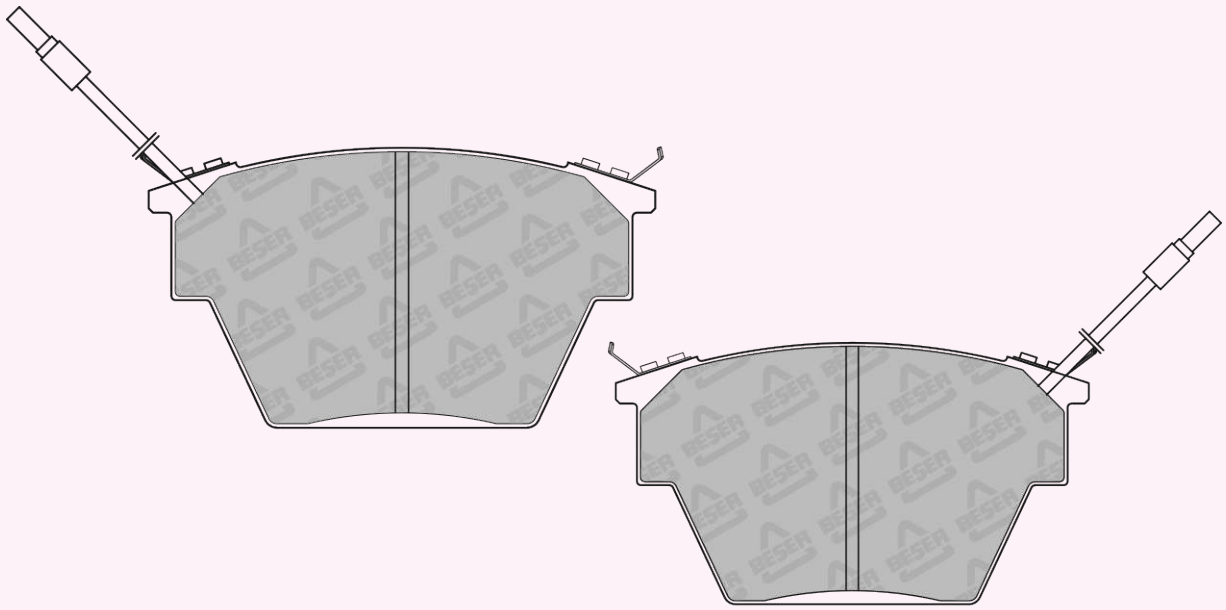

116 x 64
(NOT SCALE)

REFERENCE	T(mm)	REMARKS	MAKE	F/R	WVA No
3871/2	17	2 PADS WITH WEAR SENSOR	BMC	F	---

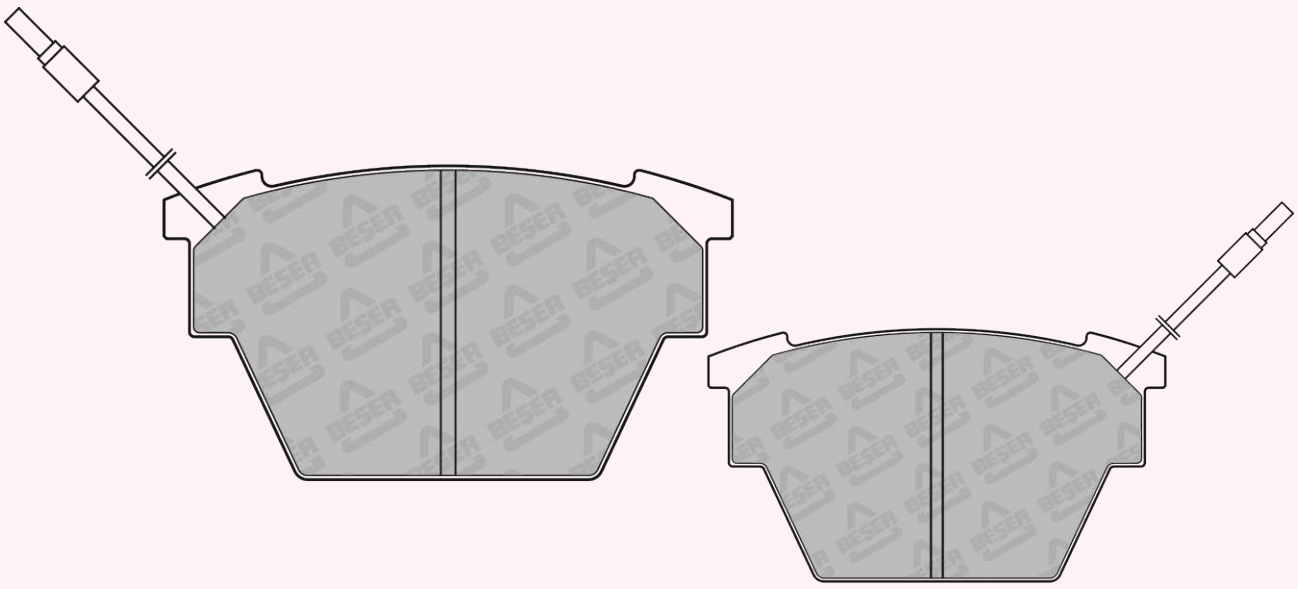

116 x 64
(NOT SCALE)

REFERENCE	T(mm)	REMARKS	MAKE	F/R	WVA No
3872	17.5	4 PADS PLAIN	HONDA - LAND ROVER MG-ROVER	F	21515

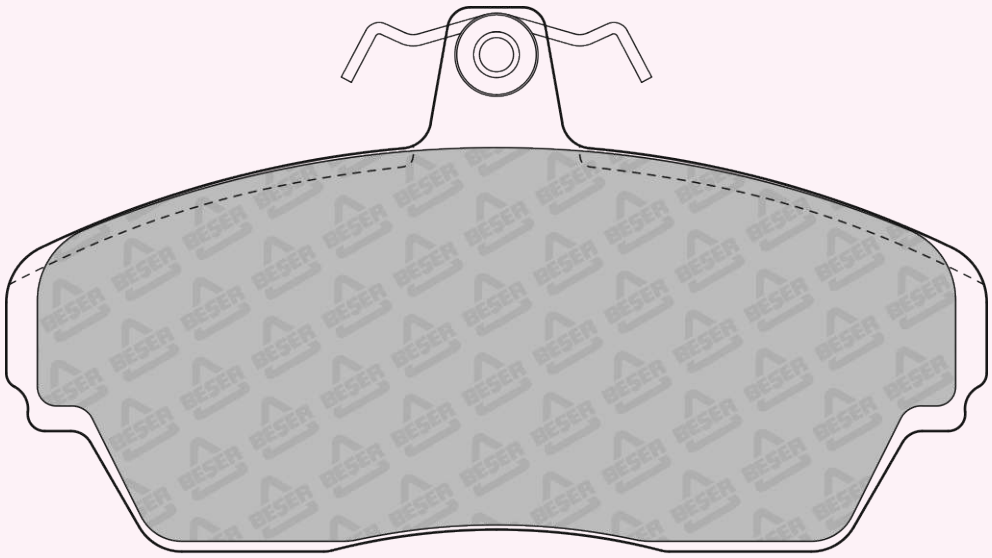

129,5 x 71,8

REFERENCE	T(mm)	REMARKS	MAKE	F/R	WVA No
3872/1	17.5	4 PADS PLAIN	HONDA - LANDROVER MG - ROVER	F	21515

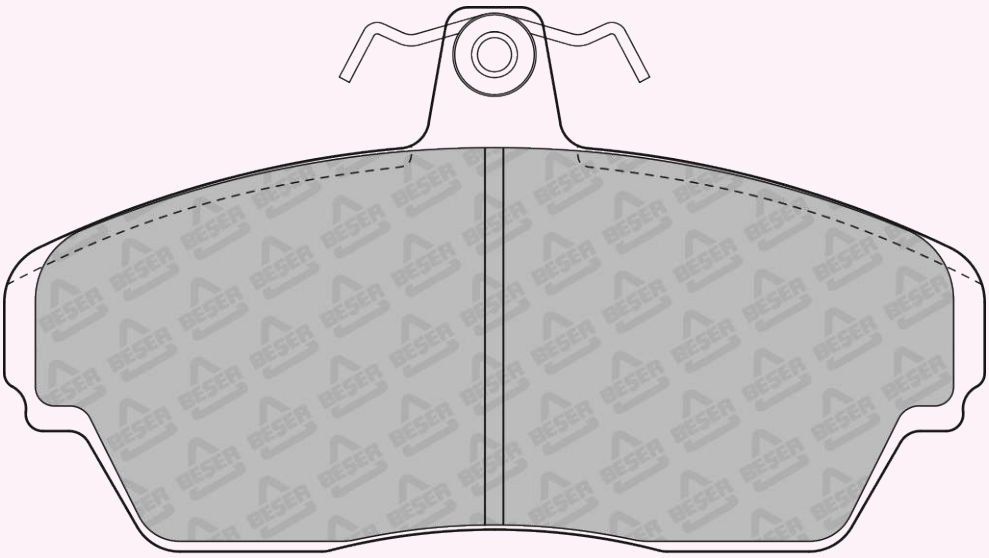

129,5 x 71,8

REFERENCE	T(mm)	REMARKS	MAKE	F/R	WVA No
3873	15	4 PADS PLAIN	CITROEN	R	20162

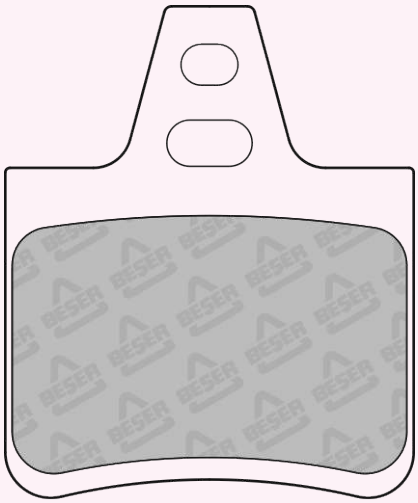

53,8 x 64,82

REFERENCE	T(mm)	REMARKS	MAKE	F/R	WVA No
3873/1	15	4 PADS PLAIN	CITROEN	R	20162

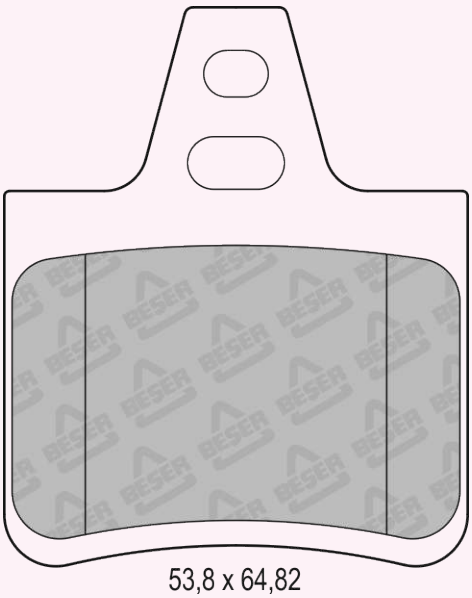

53,8 x 64,82

REFERENCE	T(mm)	REMARKS	MAKE	F/R	WVA No
3874	15.85	2 PADS WITH WEAR SENSOR	MAZDA	F	23515

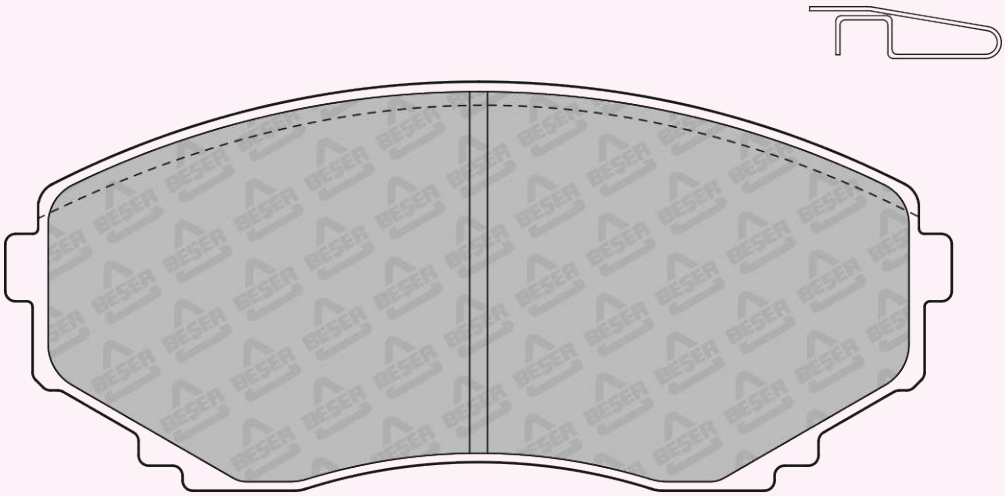

138,94 x 60,07
(NOT SCALE)

REFERENCE	T(mm)	REMARKS	MAKE	F/R	WVA No
3875	13	4 PADS PLAIN	HAIMA (FAW) - MAZDA	R	20031 24045

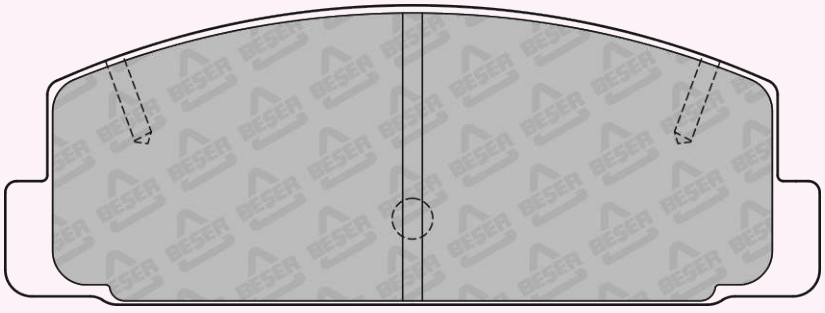

107,6 x 39,5

REFERENCE	T(mm)	REMARKS	MAKE	F/R	WVA No
3876	14.8	4 PADS PLAIN	BYD - GEELY LEXUS - LIFAN - TOYOTA	R	23592

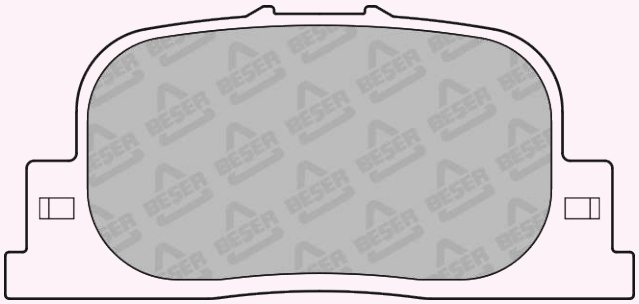

83 x 38,6

REFERENCE	T(mm)	REMARKS	MAKE	F/R	WVA No
3877	18.5	2 PADS RIGHT & 2 PADS LEFT	FORD - MAZDA	F	23202 23203 23604

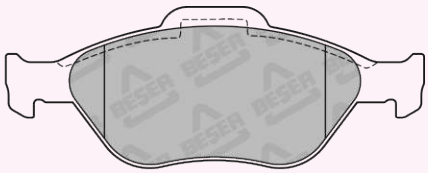

151,4 x 58,32
(NOT SCALE

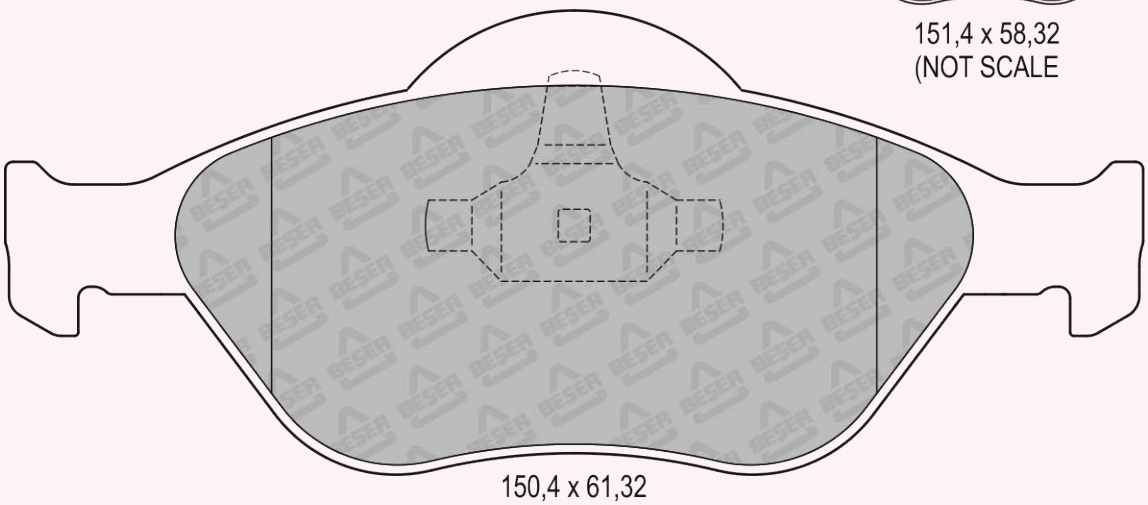

150,4 x 61,32

REFERENCE	T(mm)	REMARKS	MAKE	F/R	WVA No
3878	16	4 PADS WITH WEAR SENSOR (155mm + 365mm)	CITROEN	F	21632

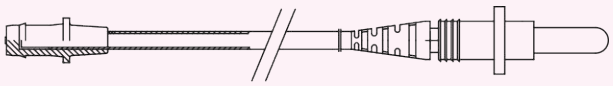

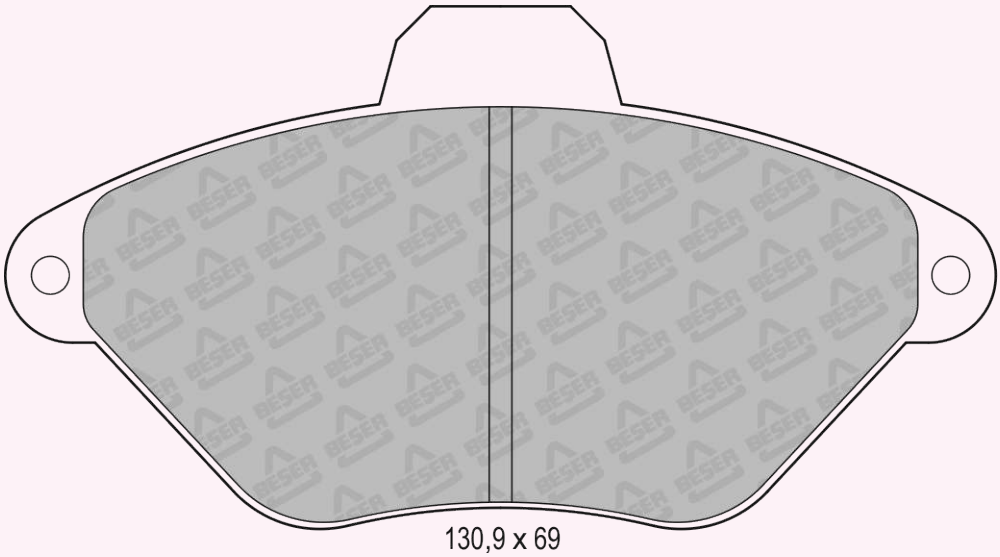

130,9 x 69

REFERENCE	T(mm)	REMARKS	MAKE	F/R	WVA No
3879	17	2 PADS WITH WEAR SENSOR	ALPINA - BMW LAND ROVER - MASERATI	R	21282 21487

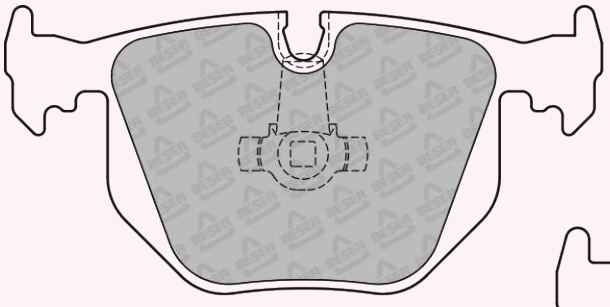

123,17 x 58,25
(NOT SCALE)

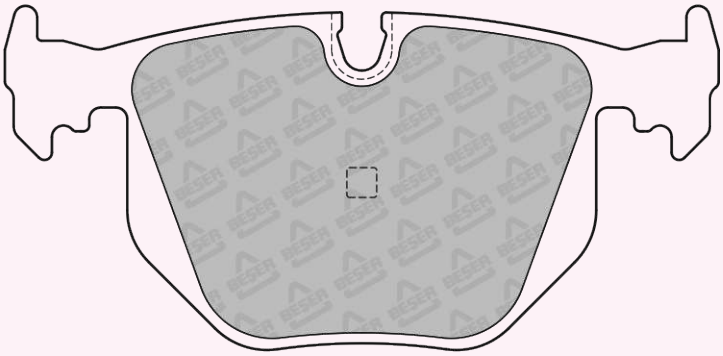

123,17 x 58,25
(NOT SCALE)

REFERENCE	T(mm)	REMARKS	MAKE	F/R	WVA No
3880	18	2 PADS WITH WEAR SENSOR	HYUNDAI - KIA	F-R	24317 24318 24319

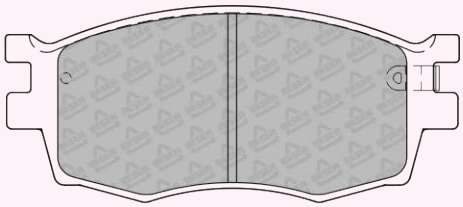

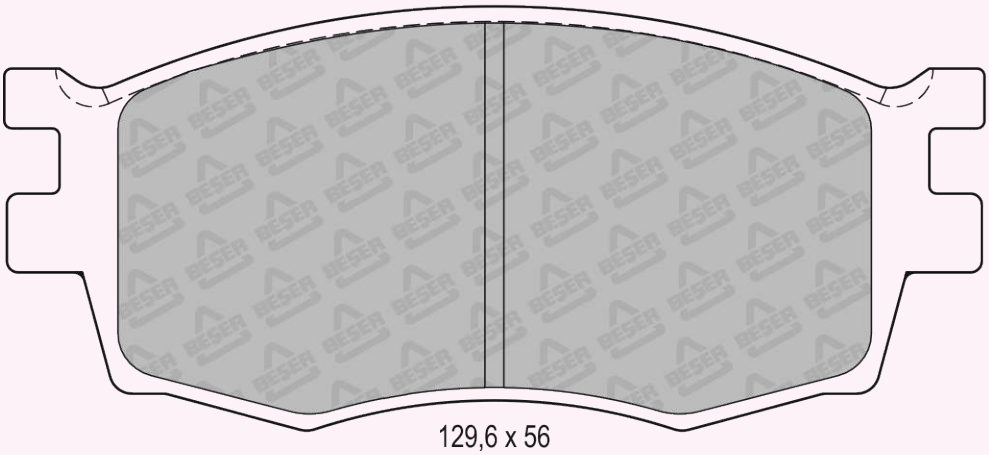

129,6 x 56

REFERENCE	T(mm)	REMARKS	MAKE	F/R	WVA No
3881	18.5	2 PADS PISTON CLIP	ALPINA - BMW	F	21486 21642

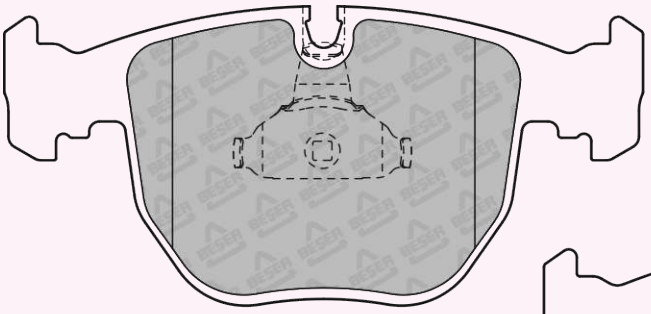

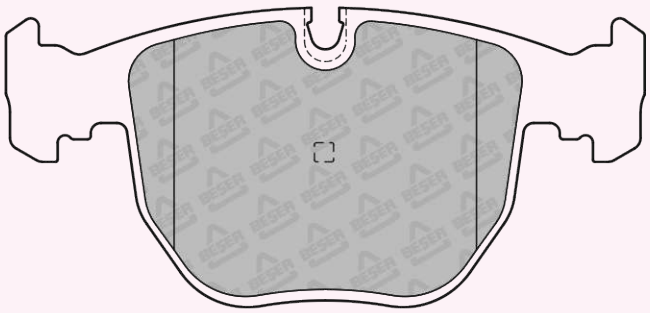

156,3x73,19
(NOT SCALE)

REFERENCE	T(mm)	REMARKS	MAKE	F/R	WVA No
3882	14.8	1 PAD WITH WEAR SENSOR	SUZUKİ	F	21500 21501 21502

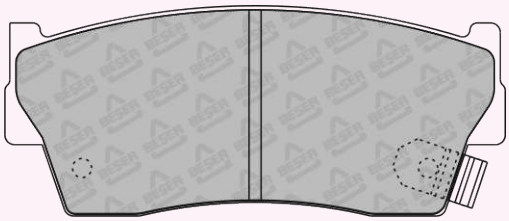

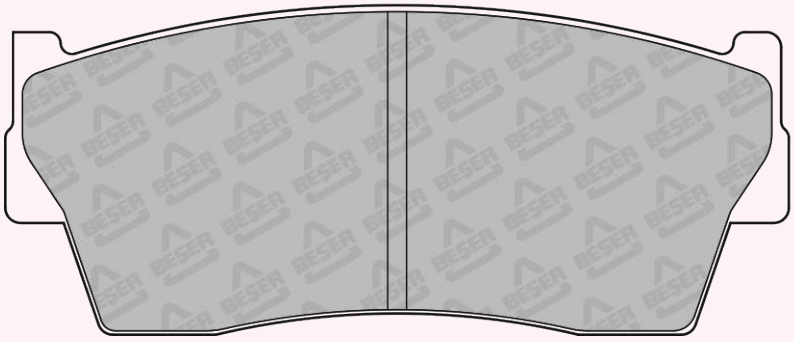

103,5 x 43,45
(NOT SCALE)

REFERENCE	T(mm)	REMARKS	MAKE	F/R	WVA No
3883	14.8	2 PADS WITH WEAR SENSOR	SUZUKİ	F	21907 21908 21909

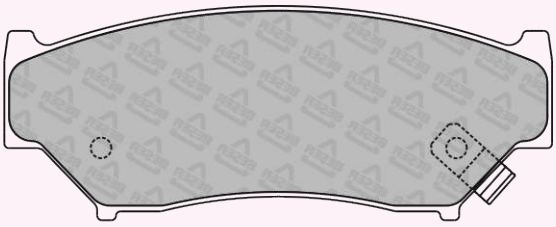

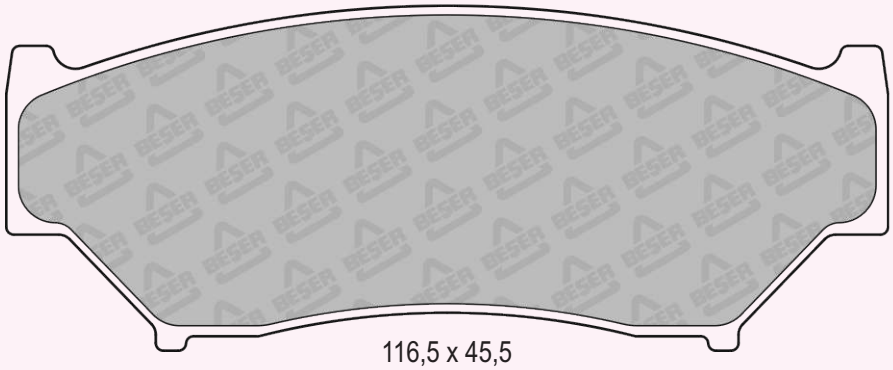

116,5 x 45,5
(NOT SCALE)

REFERENCE	T(mm)	REMARKS	MAKE	F/R	WVA No
3884	14.5	2 PADS WITH WEAR SENSOR	SUZUKİ	F	23314

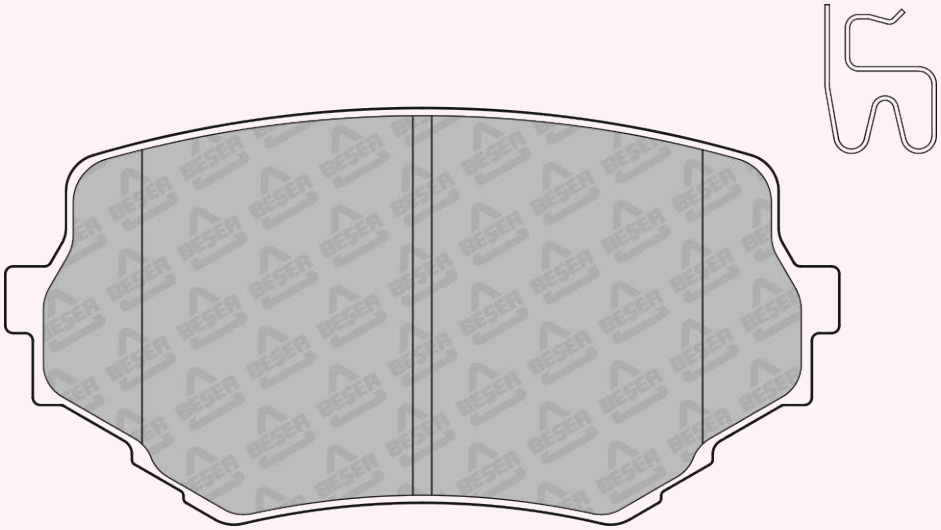

110,2 x 54,98

REFERENCE	T(mm)	REMARKS	MAKE	F/R	WVA No
3885	18.2	2 PADS INNER & 2 PADS OUTER	FORD MAZDA - VOLVO	F	23723 23724

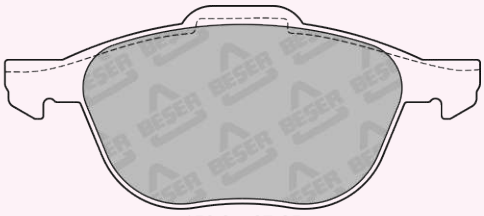

156,3 x 67,25
(NOT SCALE)

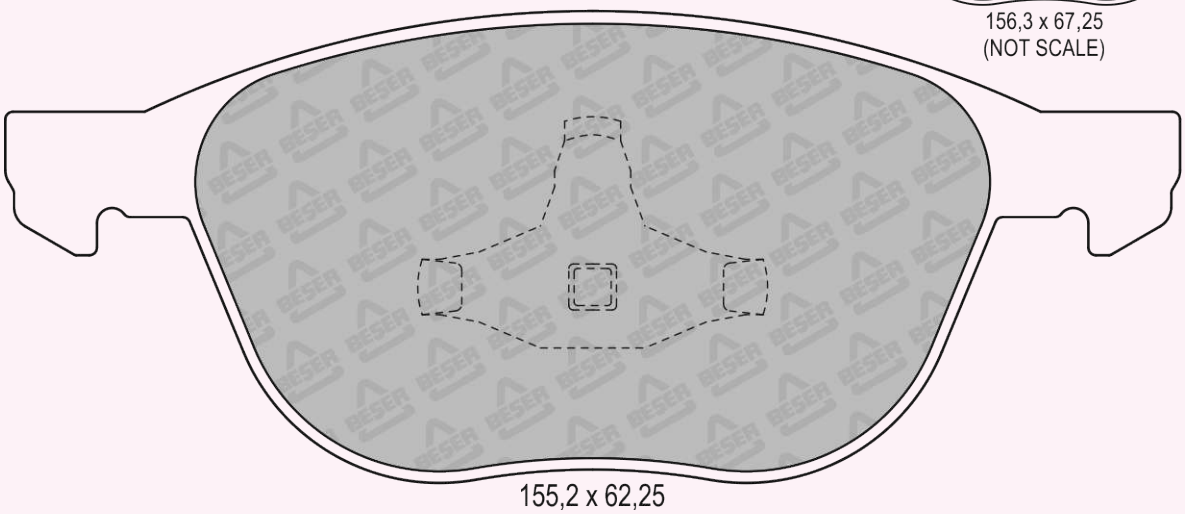

155,2 x 62,25

REFERENCE	T(mm)	REMARKS	MAKE	F/R	WVA No
3886	16	4 PADS WITH WEAR SENSOR	CHEVROLET HOLDEN - ISUZU	F	24182 24370 24594 24595

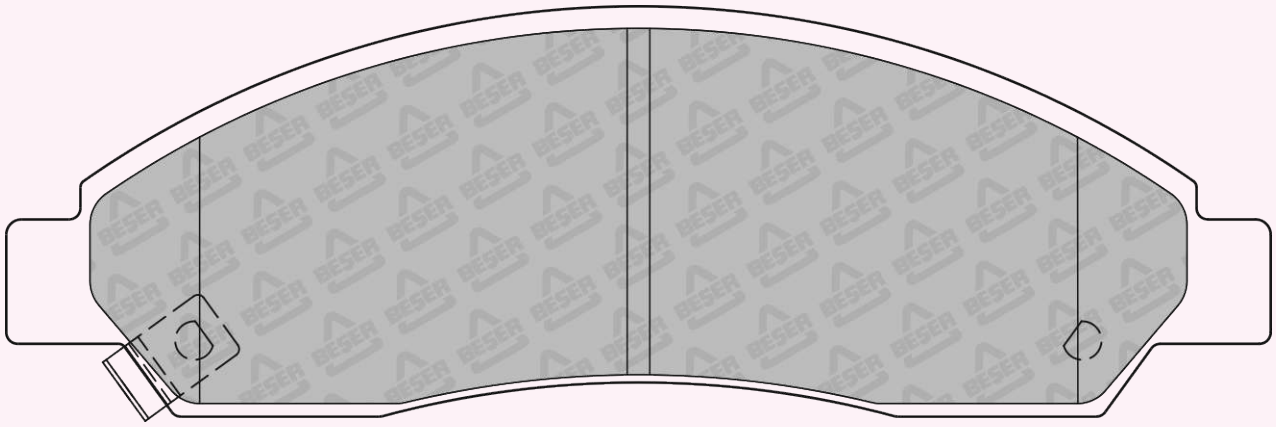

167,1 x 54,1

REFERENCE	T(mm)	REMARKS	MAKE	F/R	WVA No
3887	16	2 PADS WITH WEAR SENSOR	ACURA - CHANGFENG - HOLDEN ISUZU - OPEL - VAUXHALL	R	21875 21876 21877

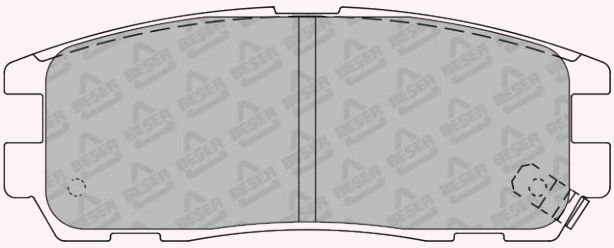

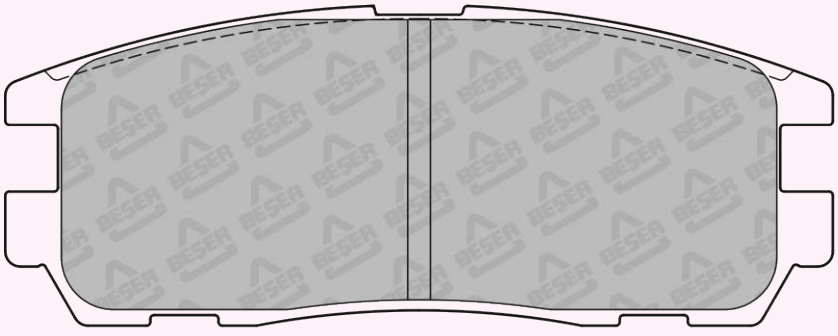

109,3 x 42,19

REFERENCE	T(mm)	REMARKS	MAKE	F/R	WVA No
3888	15.5	4 PADS PLAIN	FORD LDV - NISSAN	F	21481

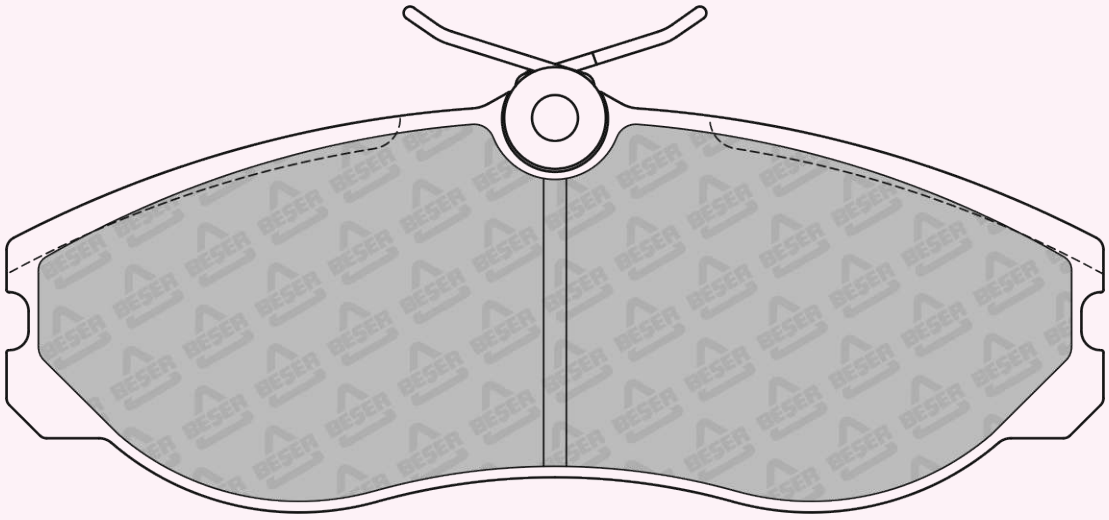

144,9 x 55,6

REFERENCE	T(mm)	REMARKS	MAKE	F/R	WVA No
3889	18 - 18,3	2 PADS WITH WEAR SENSOR	MAZDA	F	24046 24047 24048

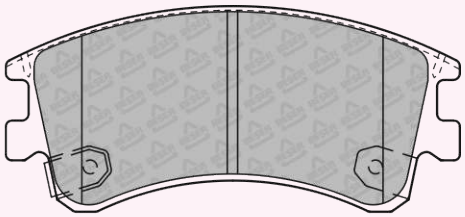

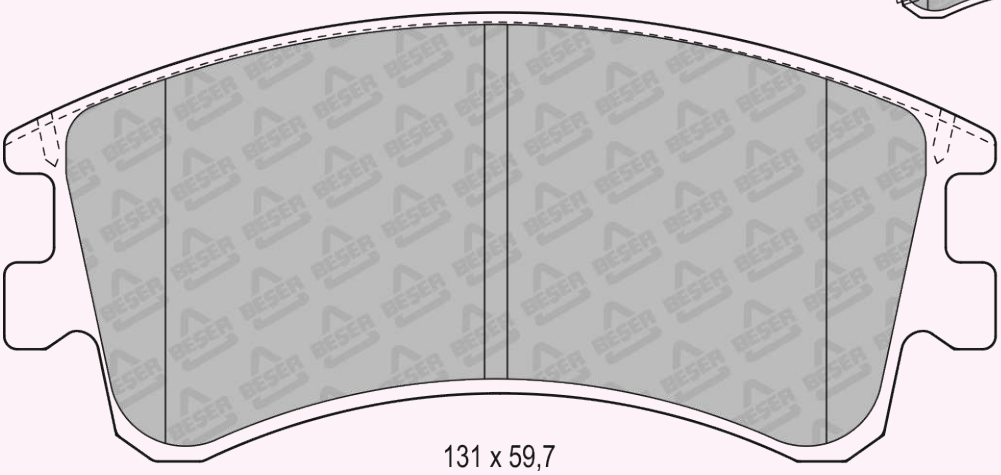

131 x 59,7

REFERENCE	T(mm)	REMARKS	MAKE	F/R	WVA No
3890	18,5	2 PADS WITH WEAR SENSOR	TOYOTA	F	23480 23481 23768

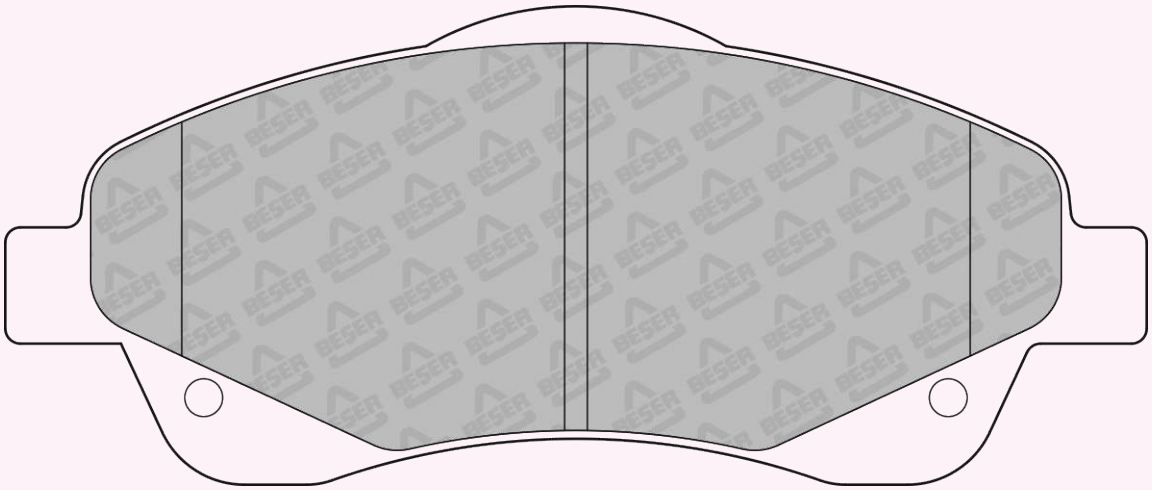

150,8 x 63,15

REFERENCE	T(mm)	REMARKS	MAKE	F/R	WVA No
3891	17	2 PADS WITH WEAR SENSOR	LEXUS - TOYOTA	F	24024 24025 24026

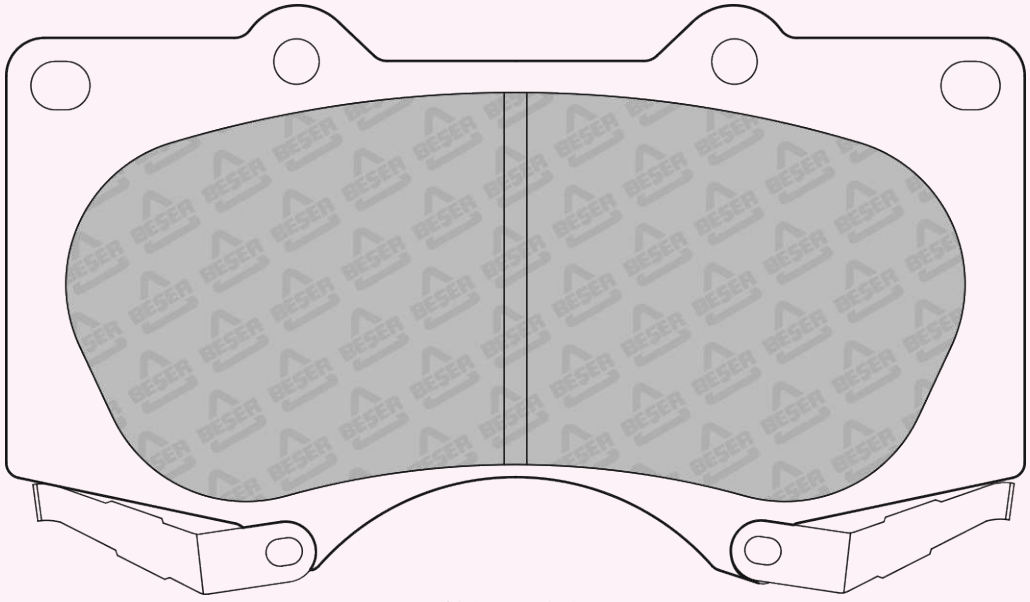

134,5 x 76,47

REFERENCE	T(mm)	REMARKS	MAKE	F/R	WVA No
3892	16	4 PADS PLAIN	FORD MAZDA - MITSUBISHI	F	23488 24066

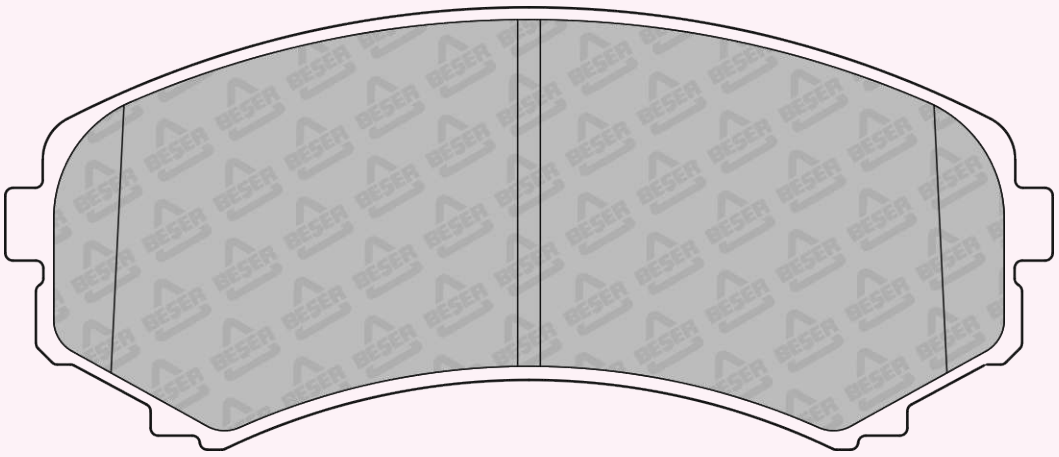

138,4 x 58,4

REFERENCE	T(mm)	REMARKS	MAKE	F/R	WVA No
3893	15.5	2 PADS INNER & 2 PADS OUTER	CHRYSLER - CITROEN - DODGE JEEP - LANCIA - MITSUBISHI PEUGEOT	R	23582 23583

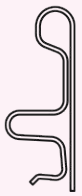

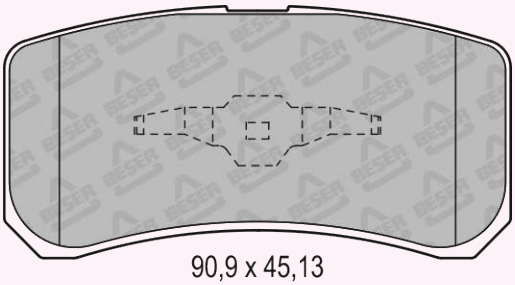

90,9 x 45,13
(NOT SCALE)

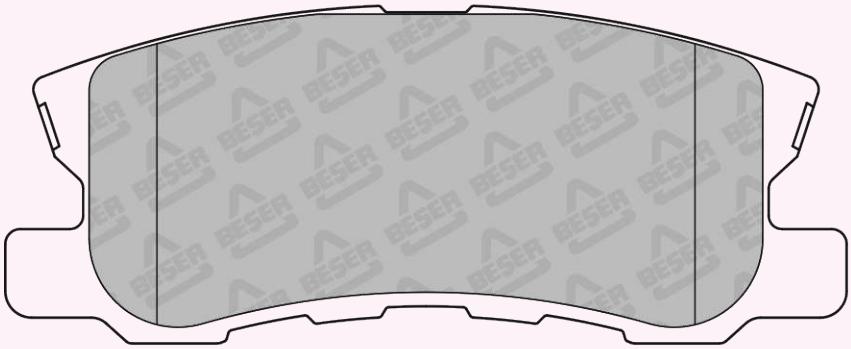

111,25 x 44,56

REFERENCE	T(mm)	REMARKS	MAKE	F/R	WVA No
3894	14.6	4 PADS PLAIN	BUICK - CHEVROLET DAEWOO - HOLDEN	R	24071

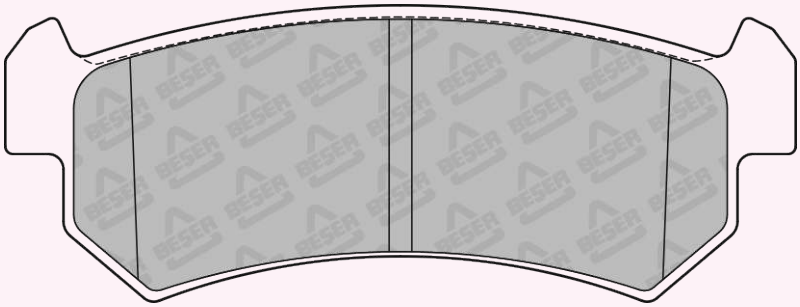

104,35 x 38,96

REFERENCE	T(mm)	REMARKS	MAKE	F/R	WVA No
3895	14,9	2 PADS WITH WEAR SENSOR	DAEWOO-SSANGYONG	R	23673 23674 23675

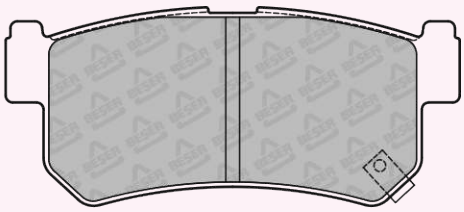

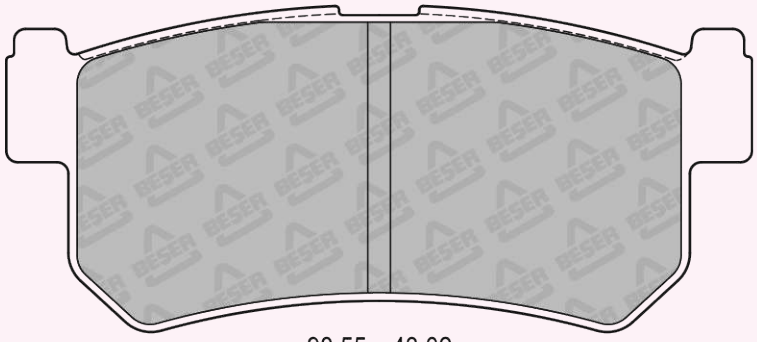

98,55 x 43,02

REFERENCE	T(mm)	REMARKS	MAKE	F/R	WVA No
3896	19.5	2 PADS WITH WEAR SENSOR	AUDI - SEAT VW	F	21945 23393

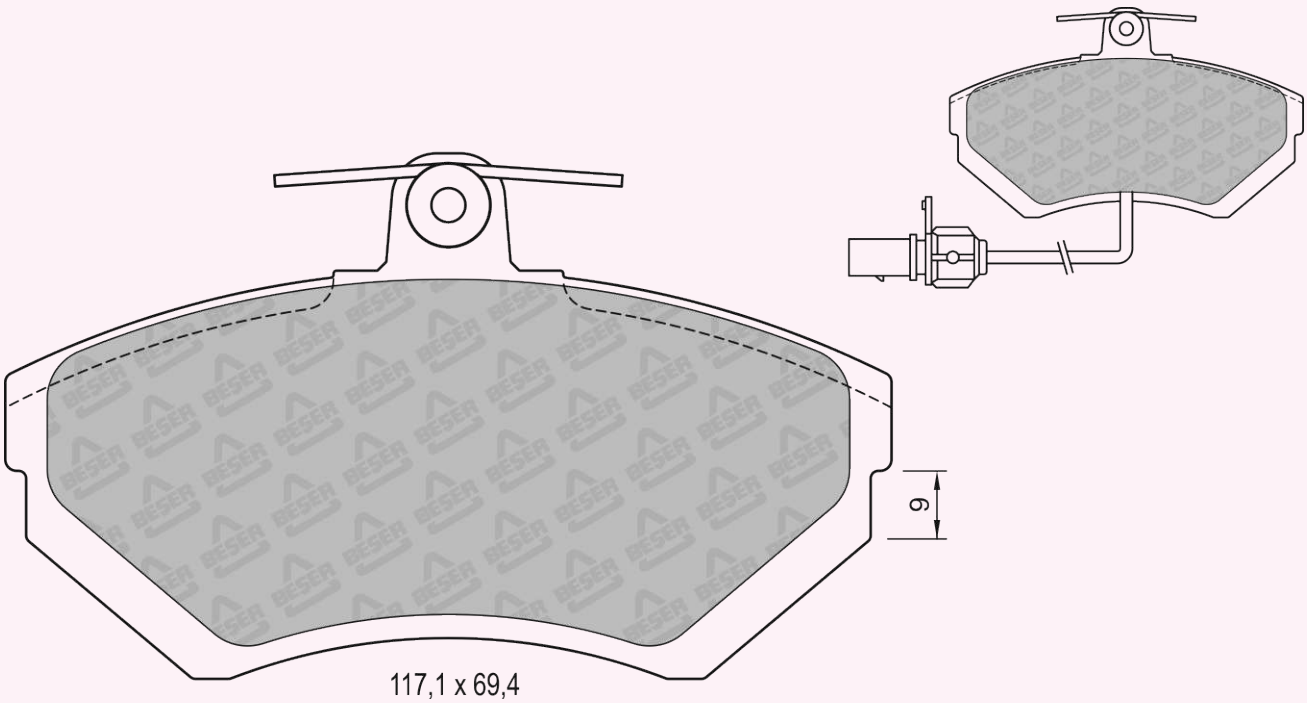

REFERENCE	T(mm)	REMARKS	MAKE	F/R	WVA No
3897	17.6	2 PADS PISTON CLIP	FIAT - LANCIA	F	21930 23181

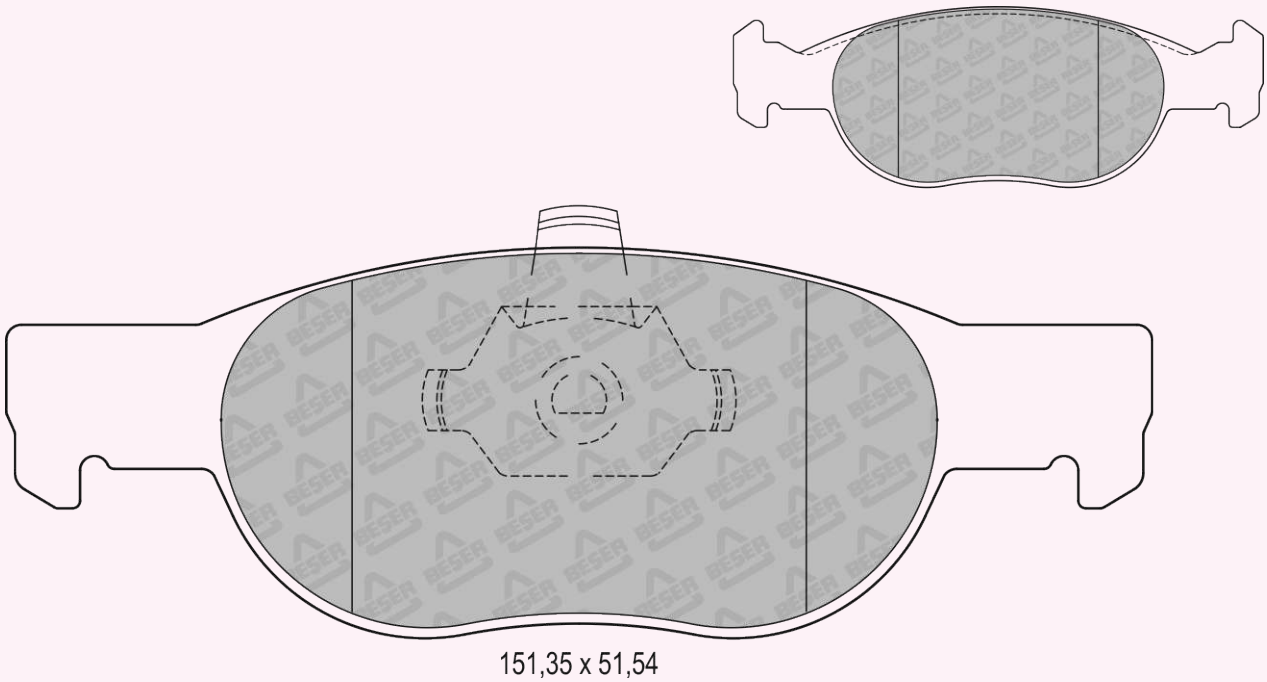

REFERENCE	T(mm)	REMARKS	MAKE	F/R	WVA No
3898	15.3	2 PADS WITH WEAR SENSOR	DAIHATSU	F	21952 21953 21954

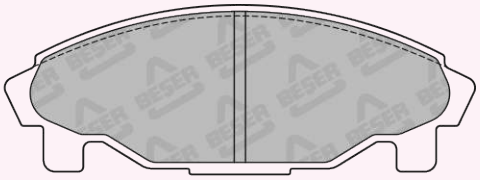

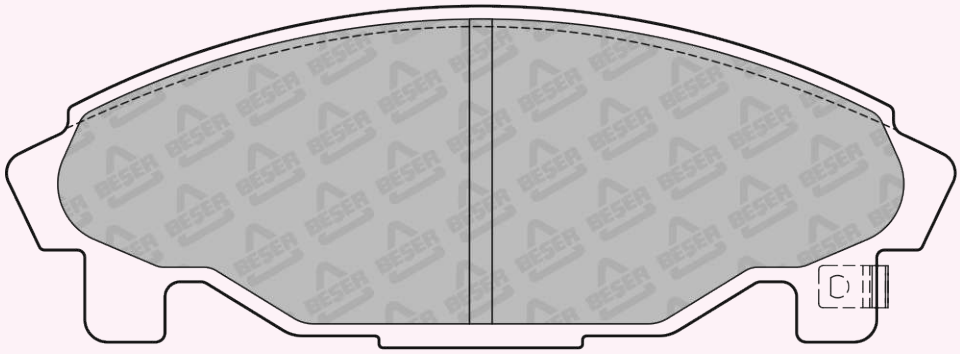

125,4 x 45,1

REFERENCE	T(mm)	REMARKS	MAKE	F/R	WVA No
3899	15.5	2 PADS WITH WEAR SENSOR	SUZUKI	F	24830 24831

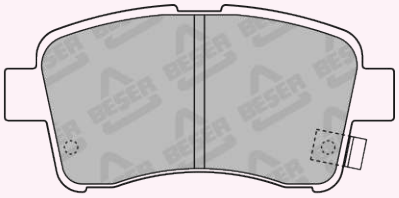

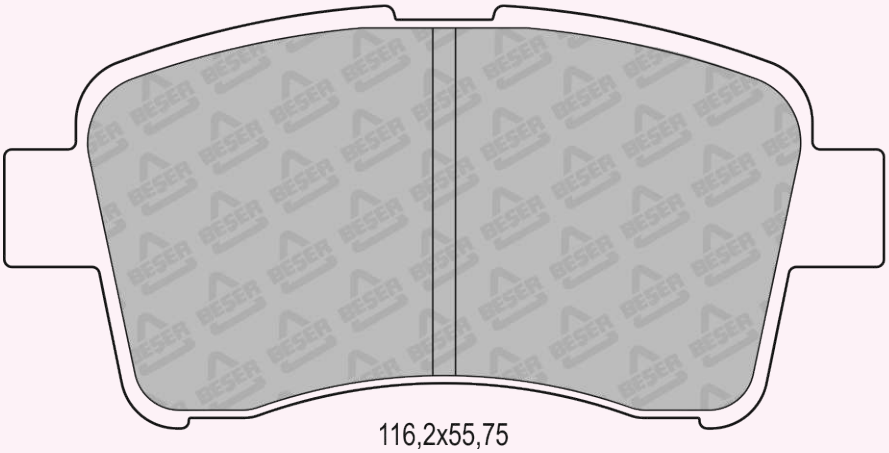

116,2x55,75

REFERENCE	T(mm)	REMARKS	MAKE	F/R	WVA No
3900	16.0	1 PAD WITH WEAR SENSOR	MITSUBISHI	F	23879 23880

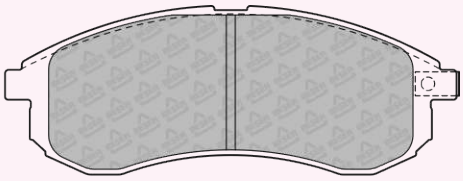

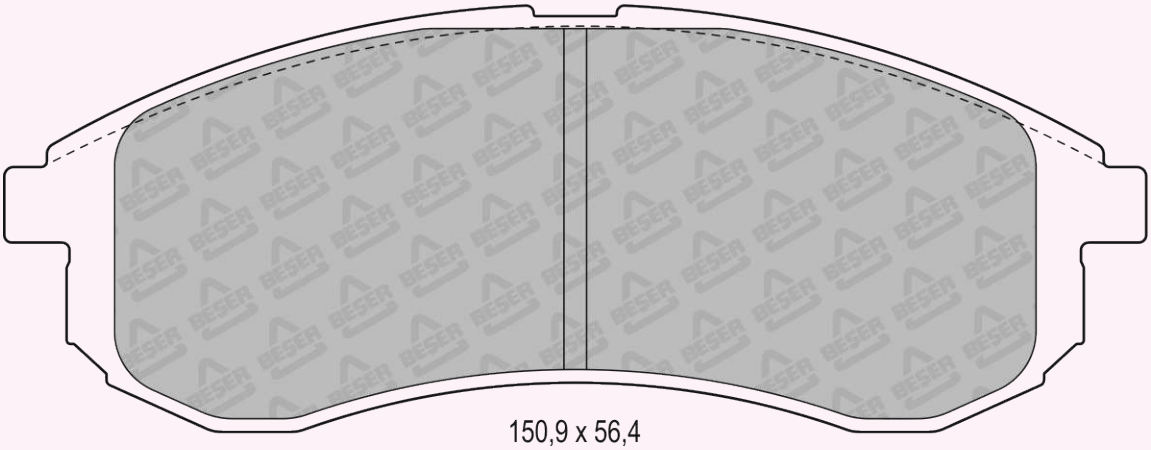

150,9 x 56,4

REFERENCE	T(mm)	REMARKS	MAKE	F/R	WVA No
3901	15.5	2 PADS INNER & 2 PADS OUTER	DAIHATSU - PERODUA TOYOTA	F	23497 23498

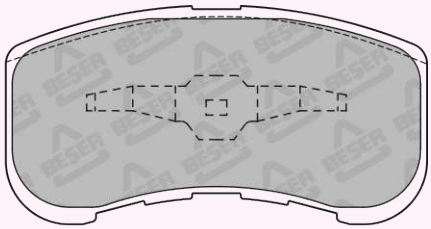

94,9 x 49,25
(NOT SCALE)

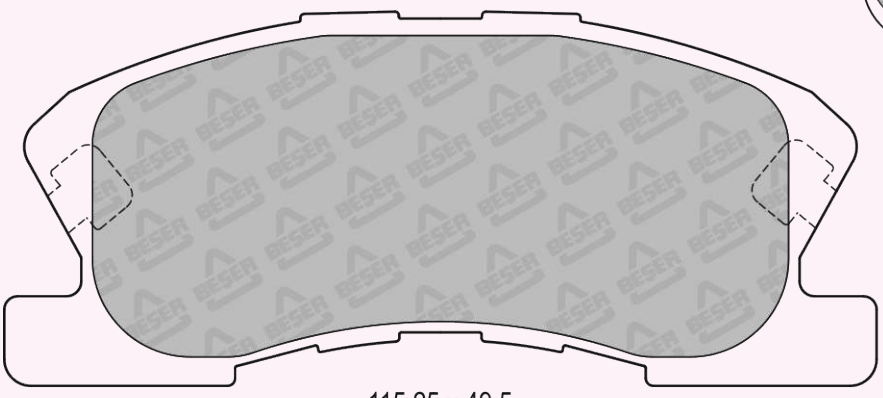

115,25 x 49,5

REFERENCE	T(mm)	REMARKS	MAKE	F/R	WVA No
3903	16	4 PADS PLAIN	TOYOTA	F	24567

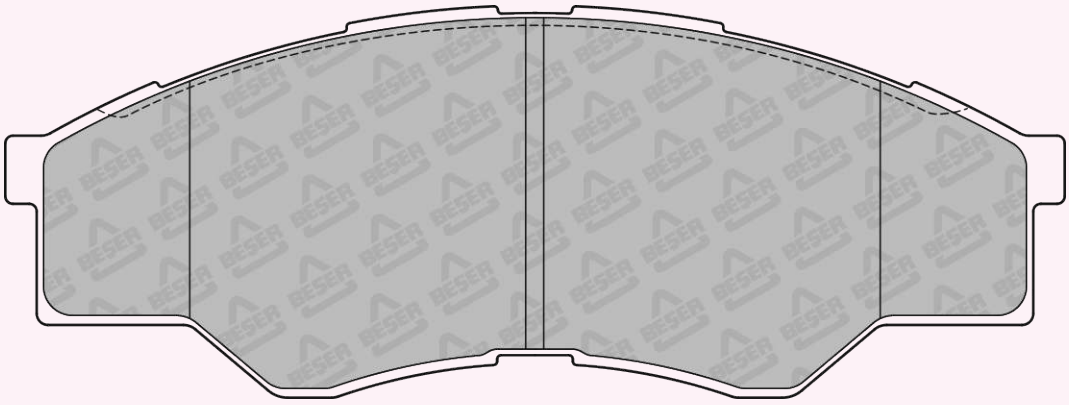

140 x 51,69

REFERENCE	T(mm)	REMARKS	MAKE	F/R	WVA No
3904	20	1 PAD WITH WEAR SENSOR	AUDI - SEAT - SKODA - VW	F	23587 23588 23589

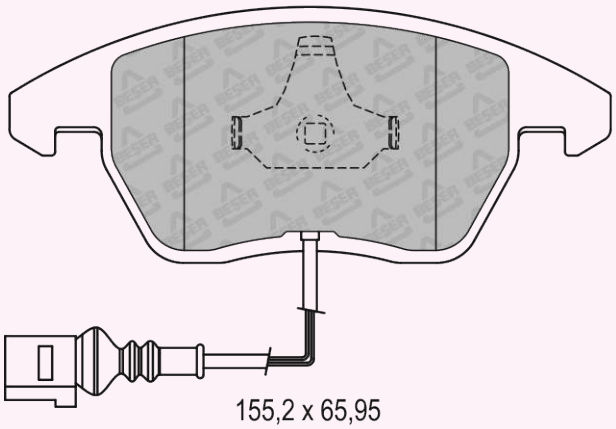

155,2 x 65,95
(NOT SCALE)

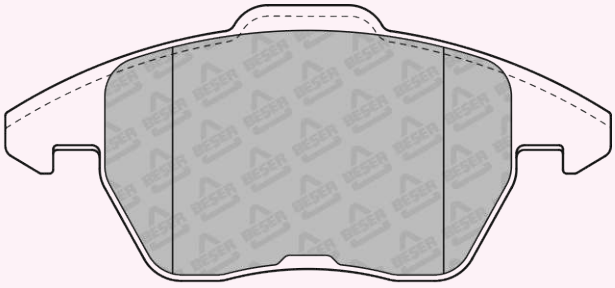

156,35 x 71,05
(NOT SCALE)

REFERENCE	T(mm)	REMARKS	MAKE	F/R	WVA No
3905	15,9	4 PADS PLAIN	AUDI - SEAT - SKODA - VW	R	23914

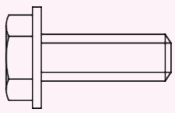

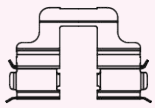

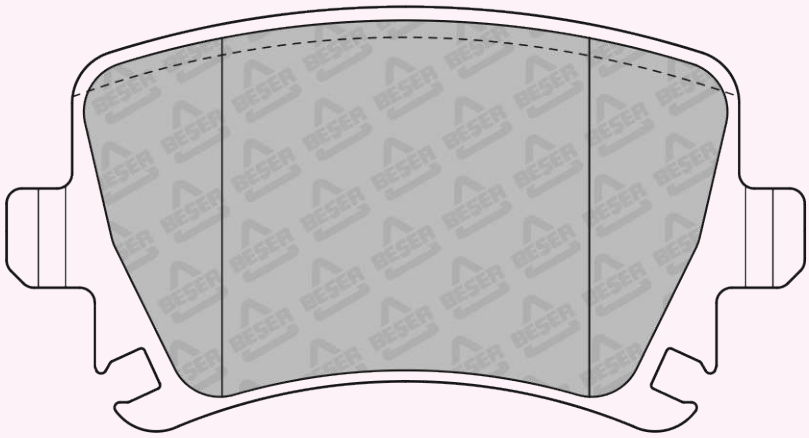

105,4 x 56,05

REFERENCE	T(mm)	REMARKS	MAKE	F/R	WVA No
3906	18	2 PADS WITH WEAR SENSOR	FORD	F	22262 24484

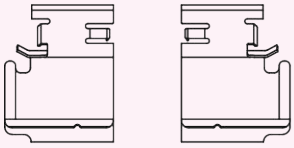



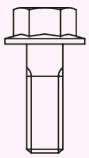

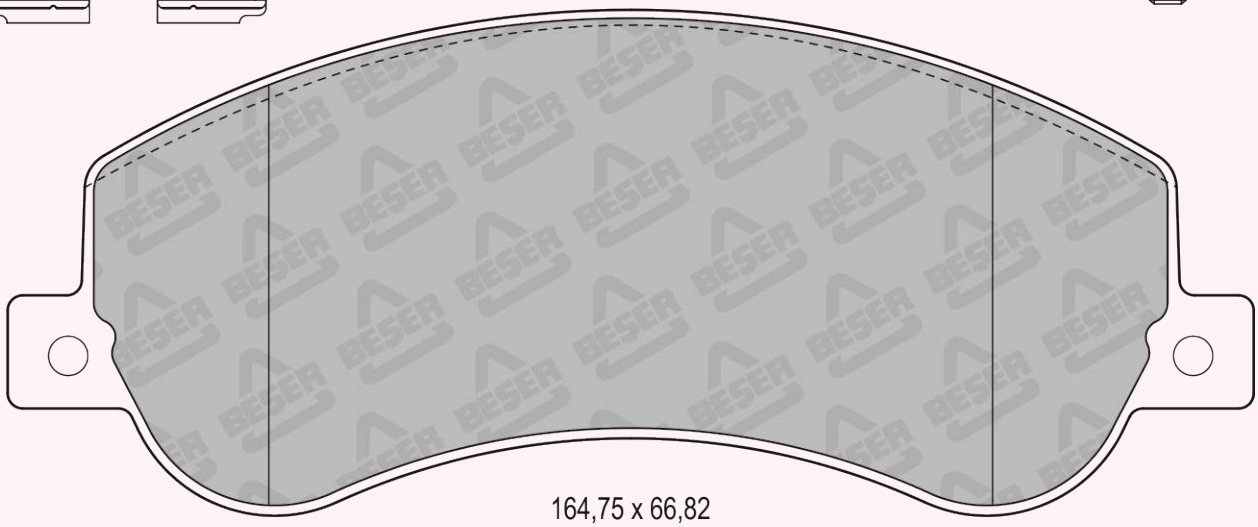

164,75 x 66,82

REFERENCE	T(mm)	REMARKS	MAKE	F/R	WVA No
3906/1	18	4 PADS PLAIN	FORD	F	24484

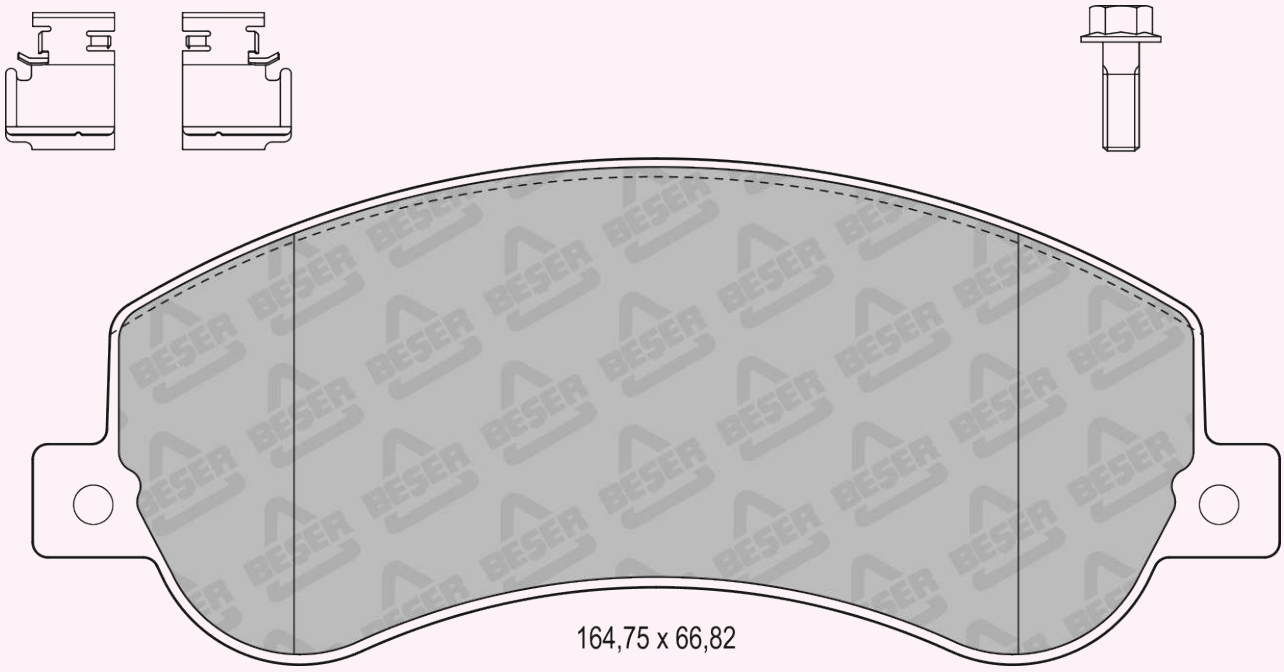

REFERENCE	T(mm)	REMARKS	MAKE	F/R	WVA No
3906/2	18	1 PAD WITH WEAR SENSOR	FORD	F	24484

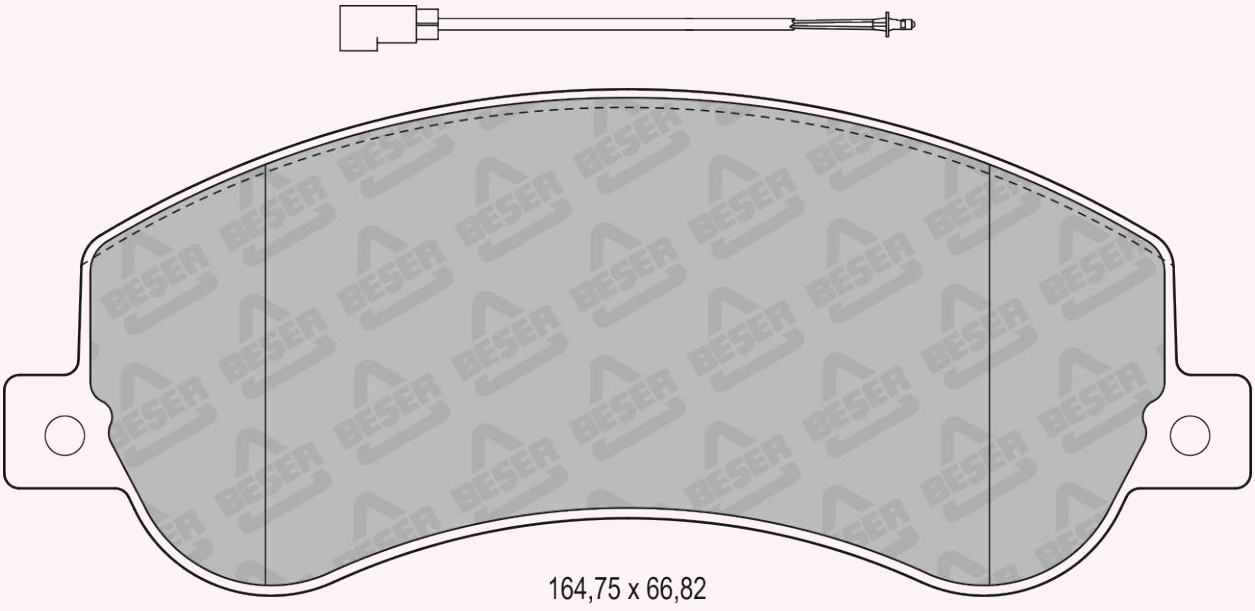

REFERENCE	T(mm)	REMARKS	MAKE	F/R	WVA No
3906/1A	18	4 PADS PLAIN	FORD	F	24484

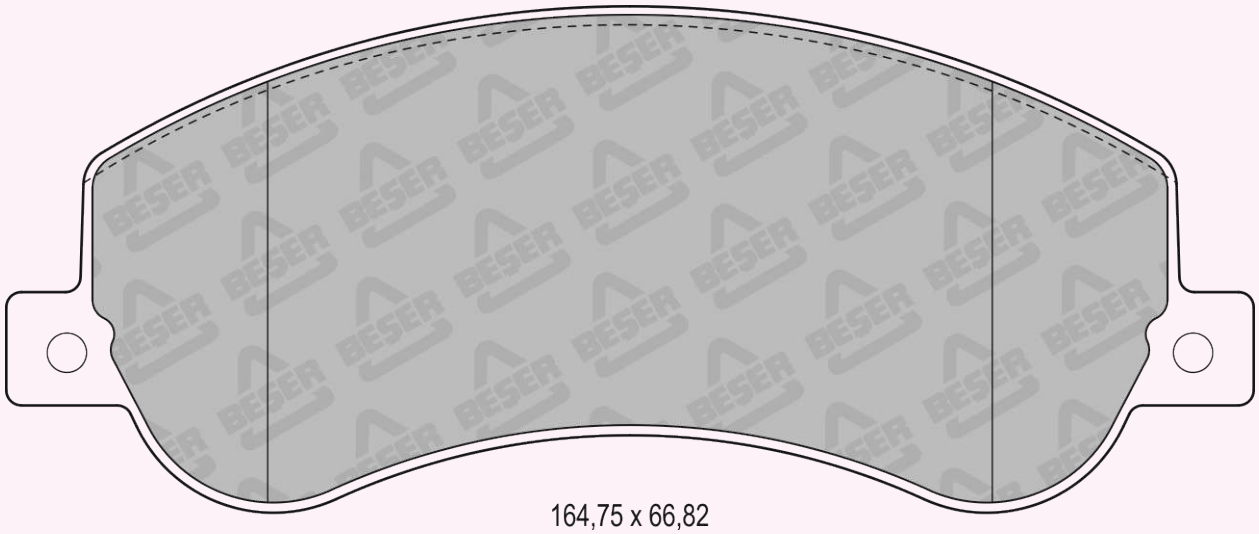

164,75 x 66,82

REFERENCE	T(mm)	REMARKS	MAKE	F/R	WVA No
3907	17	2 PADS WITH WEAR SENSOR	FORD	R	24486

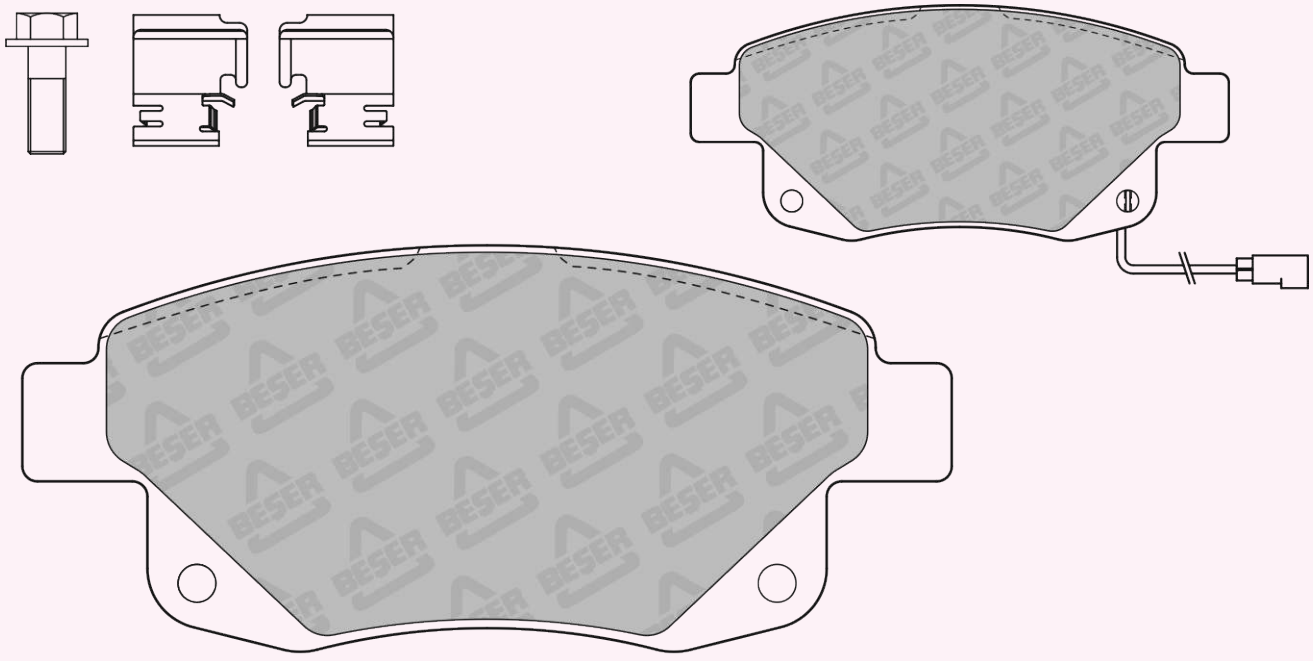

122,8 x 53,68

REFERENCE	T(mm)	REMARKS	MAKE	F/R	WVA No
3907/1	17	4 PADS PLAIN	FORD	R	24486



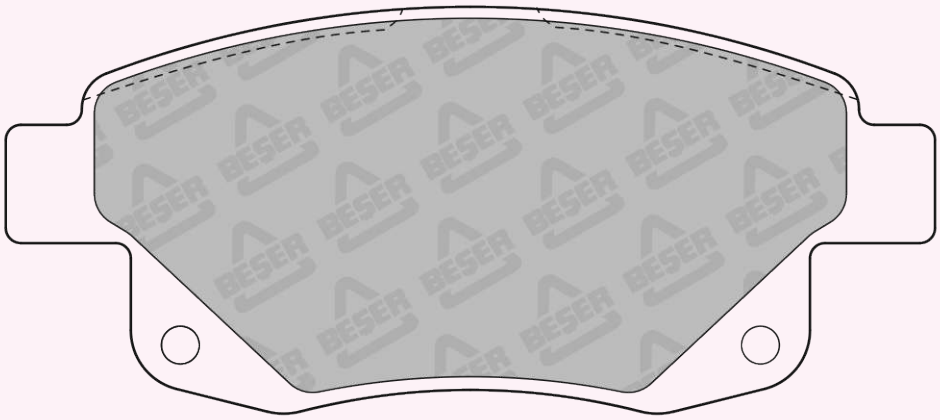

122,8 x 53,68

REFERENCE	T(mm)	REMARKS	MAKE	F/R	WVA No
3907/2	17	1 PAD WITH WEAR SENSOR	FORD	R	24486



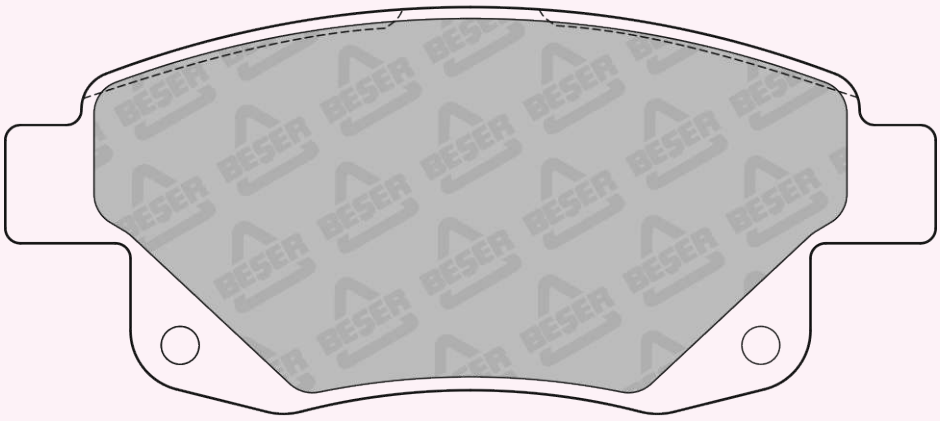

122,8 x 53,68

REFERENCE	T(mm)	REMARKS	MAKE	F/R	WVA No
3907/1A	17	4 PADS PLAIN	FORD	R	24486

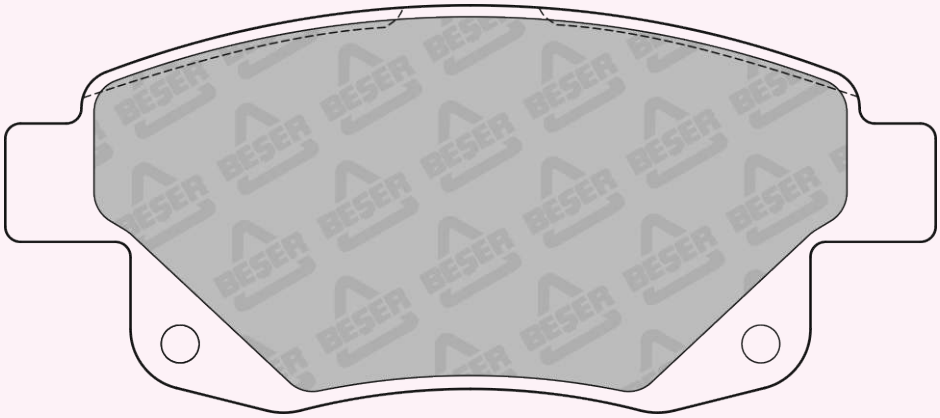

122,8 x 53,68

REFERENCE	T(mm)	REMARKS	MAKE	F/R	WVA No
3909	16.7	4 PADS PLAIN	BMW - HONDA	F	21471

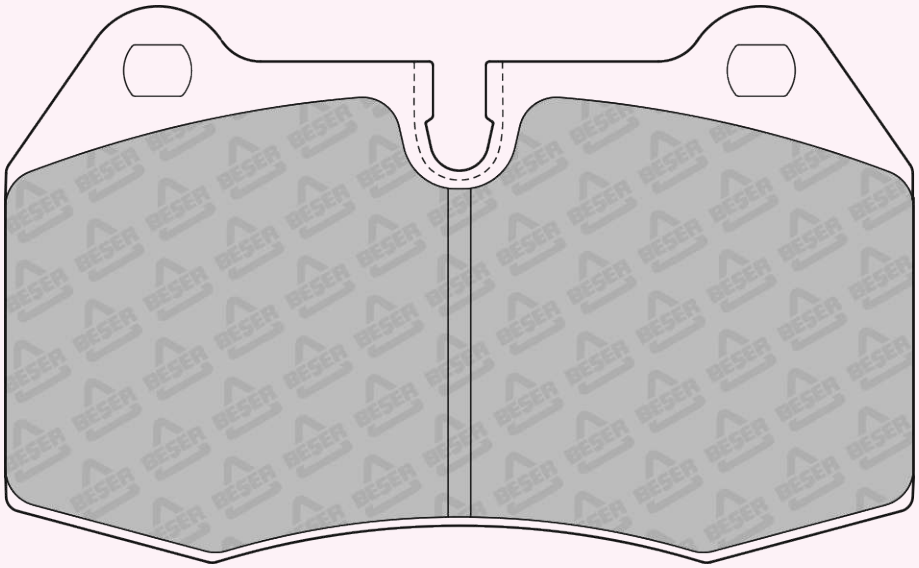

120 x 73,7

REFERENCE	T(mm)	REMARKS	MAKE	F/R	WVA No
3910	17.3	4 PADS PLAIN	HONGQI - TOYOTA	F	23928

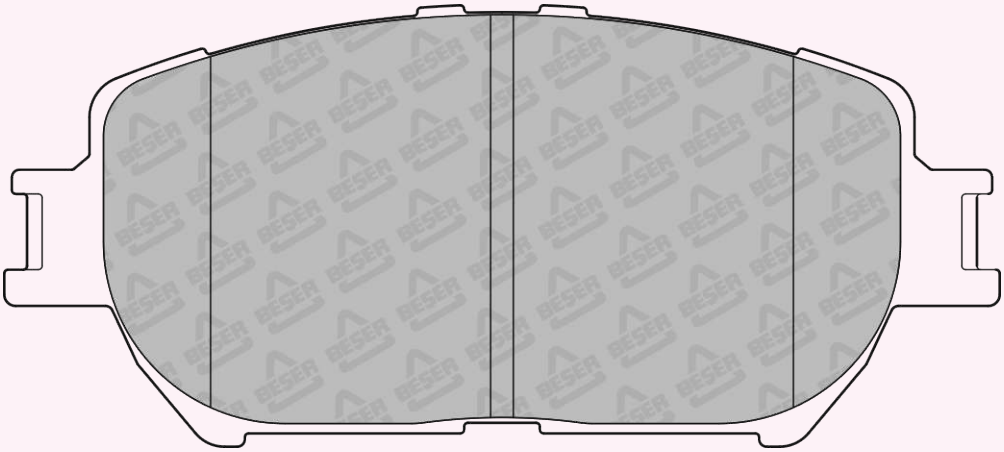

131,5 x 58,4

REFERENCE	T(mm)	REMARKS	MAKE	F/R	WVA No
3911	15.9	4 PADS PLAIN	CHERY - LEXUS RELY - TOYOTA	R	23702

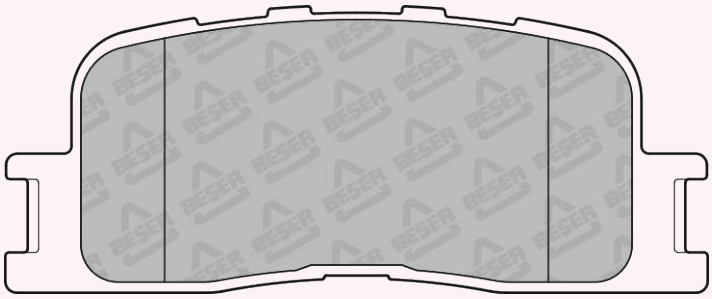

92,8 x 37,7

REFERENCE	T(mm)	REMARKS	MAKE	F/R	WVA No
3912	16.4	2 PADS WITH WEAR SENSOR	SUBARU	F	23865 23866 23867

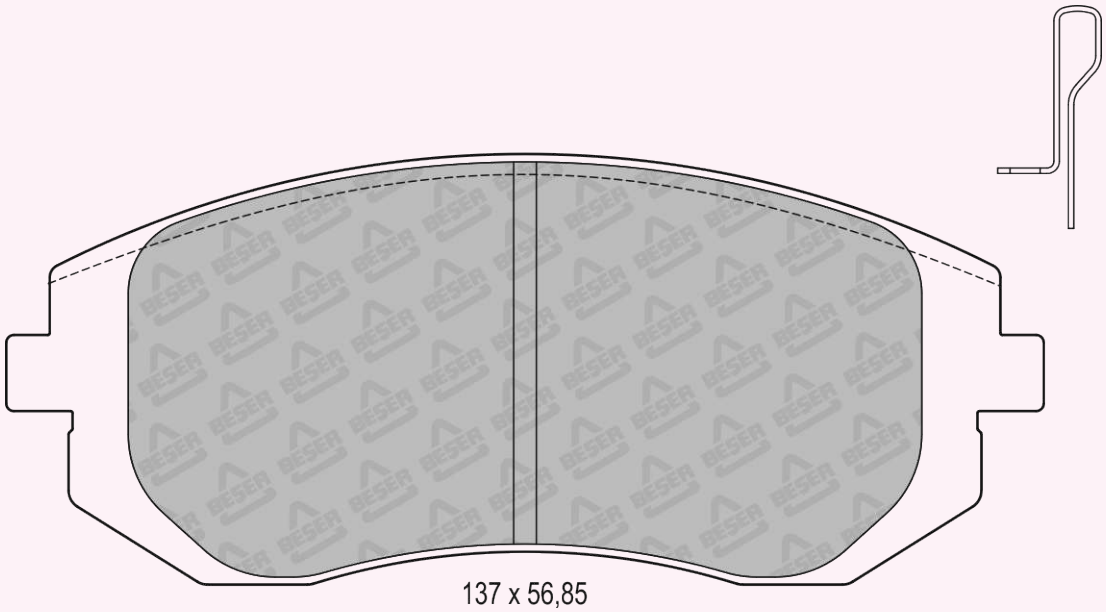

137 x 56,85

REFERENCE	T(mm)	REMARKS	MAKE	F/R	WVA No
3913	14	2 PADS WITH WEAR SENSOR	SUBARU	R	23572 23573 23574

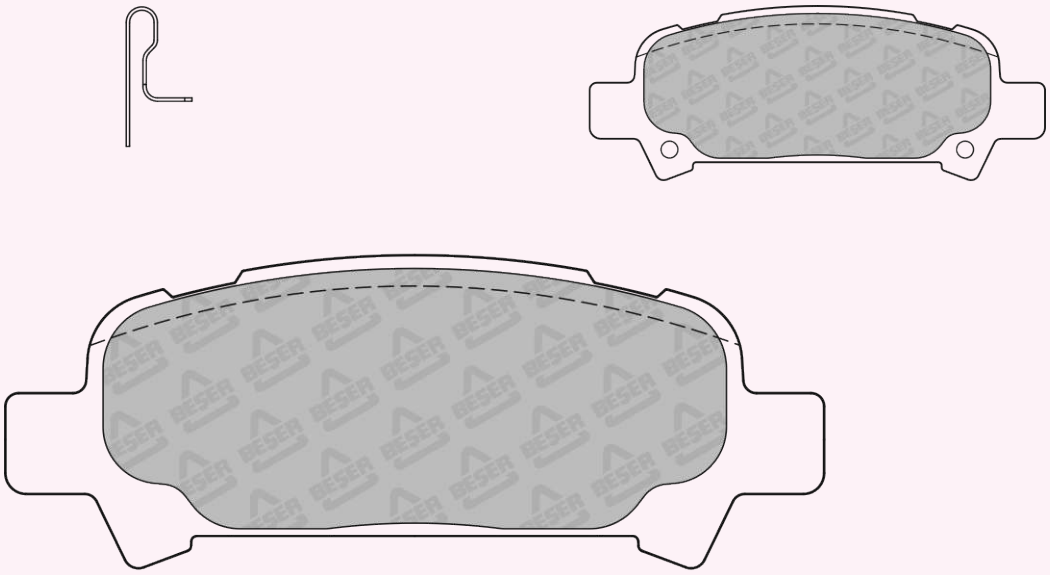

108,15 x 41,3

REFERENCE	T(mm)	REMARKS	MAKE	F/R	WVA No
3914	20	4 PADS PLAIN	CITROEN - FIAT PEUGEOT	R	23921

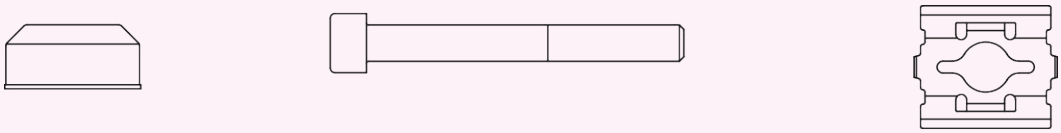

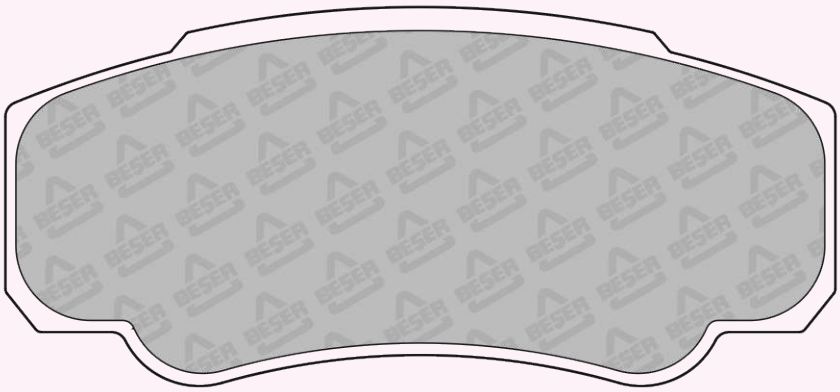

109,7 x 50

REFERENCE	T(mm)	REMARKS	MAKE	F/R	WVA No
3914/1	20	4 PADS PLAIN	CITROEN - FIAT PEUGEOT	R	23921

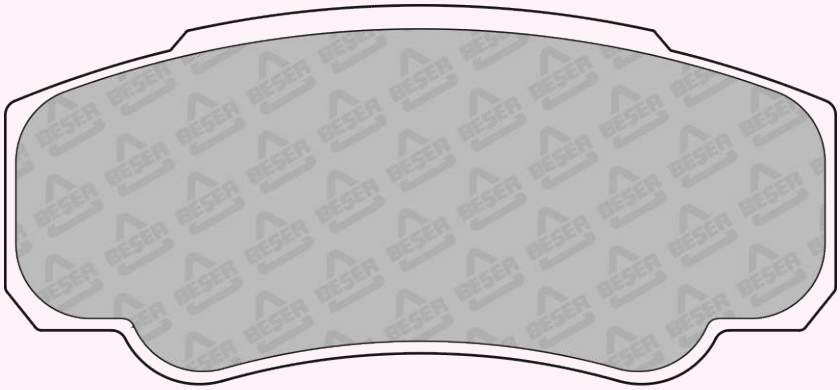

109,7 x 50

REFERENCE	T(mm)	REMARKS	MAKE	F/R	WVA No
3915	17,8	2 PADS WITH WEAR SENSOR	LEXUS - TOYOTA	F	21490 23848 23849

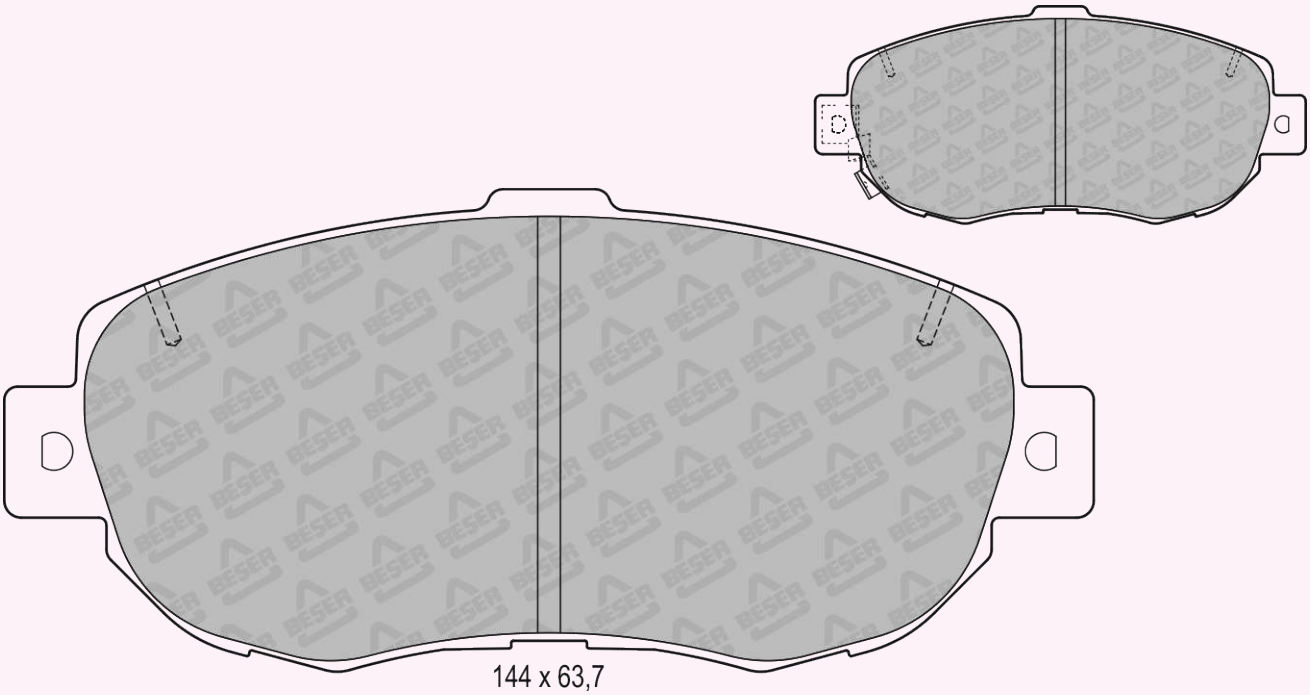

144 x 63,7

REFERENCE	T(mm)	REMARKS	MAKE	F/R	WVA No
3916	15.6	2 PADS WITH WEAR SENSOR	MITSUBISHI	R	25309 25310

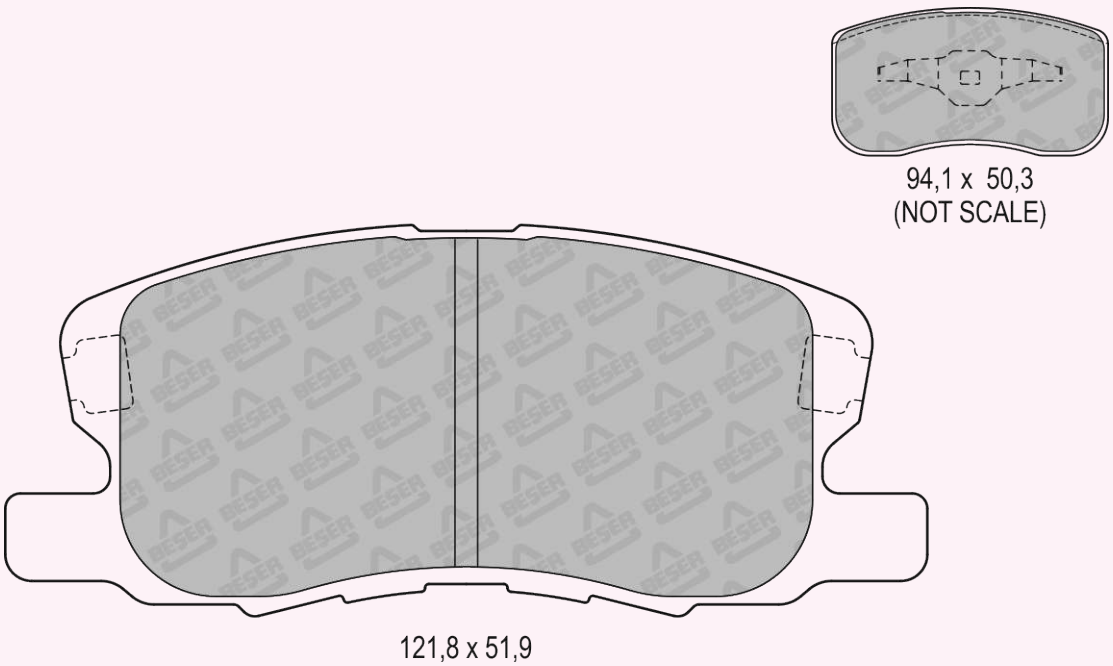

94,1 x 50,3
(NOT SCALE)

121,8 x 51,9

REFERENCE	T(mm)	REMARKS	MAKE	F/R	WVA No
3918	17.3	2 PADS PISTON CLIP	VOLVO	R	23076 23077

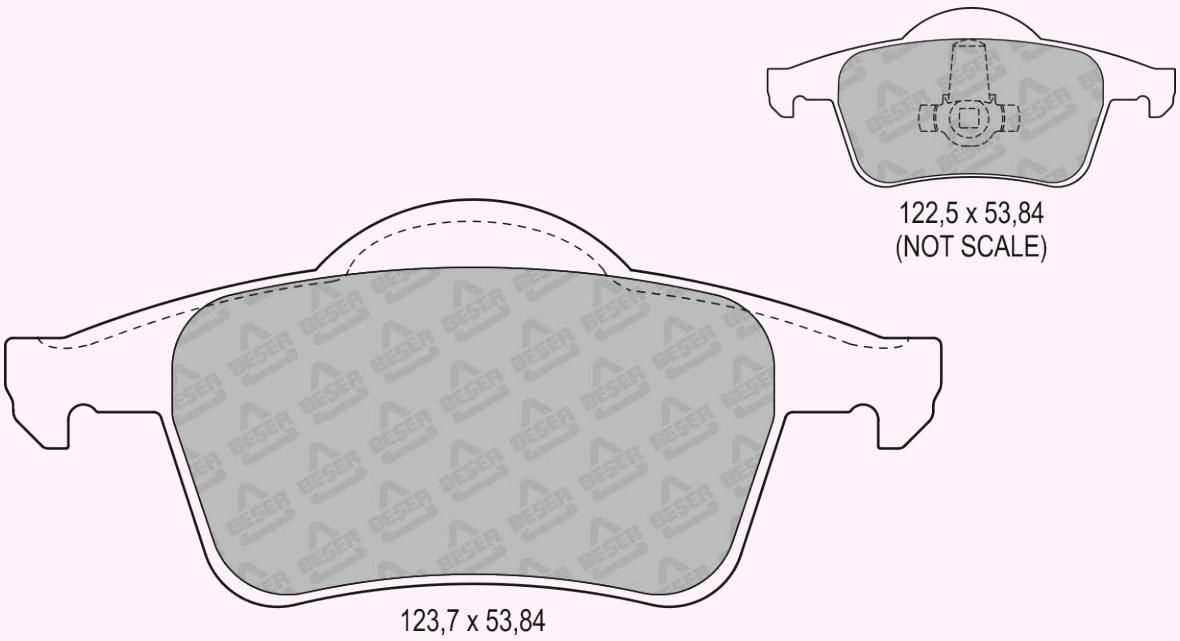

REFERENCE	T(mm)	REMARKS	MAKE	F/R	WVA No
3919	18.5	2 PADS INNER & 2 PADS OUTER	VOLVO	F	23073 23074

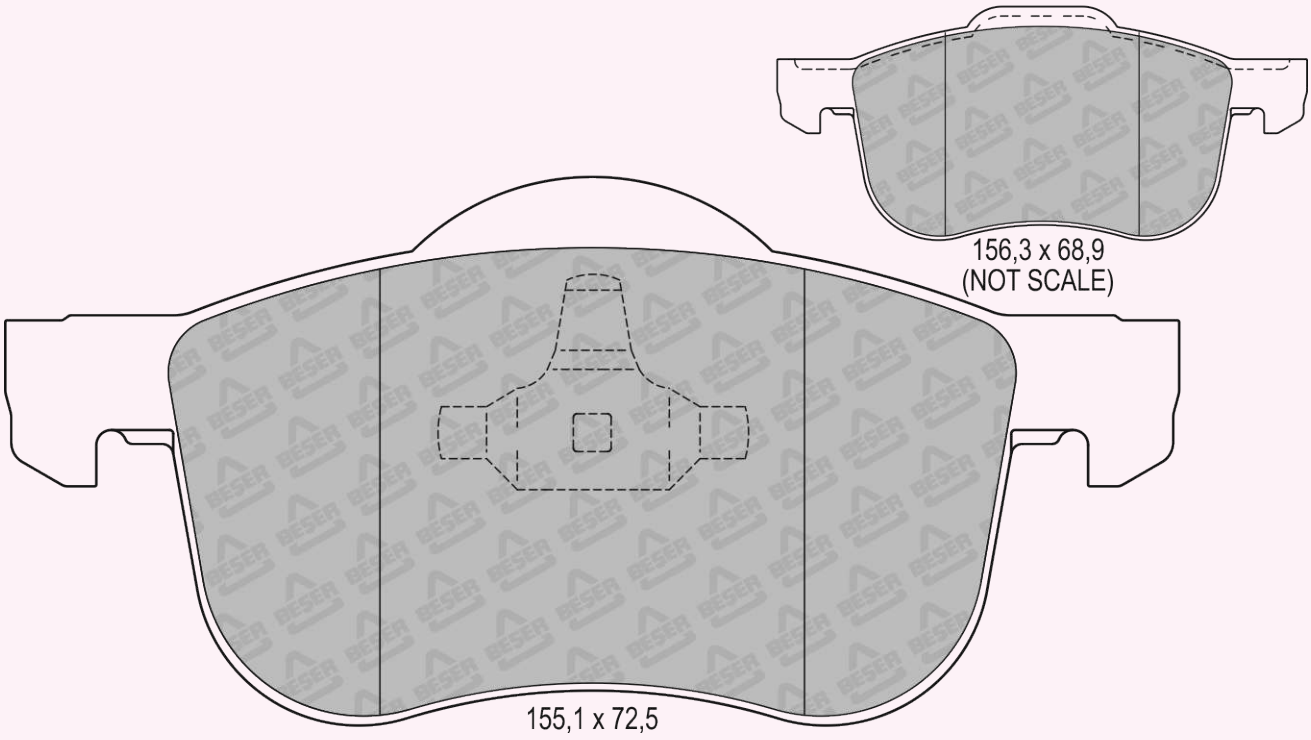

REFERENCE	T(mm)	REMARKS	MAKE	F/R	WVA No
3920	18.8	2 PADS WITH WEAR SENSOR	FORD	F	24485

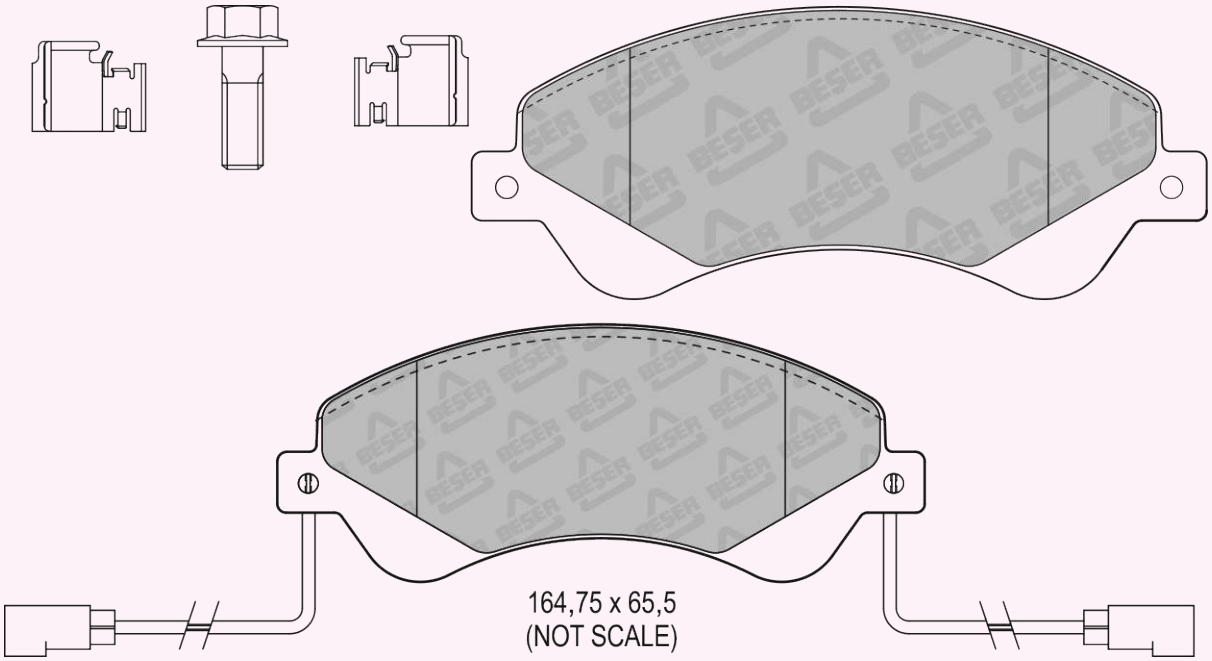

REFERENCE	T(mm)	REMARKS	MAKE	F/R	WVA No
3920/1	18.8	2 PADS WITH WEAR SENSOR	FORD	F	24485

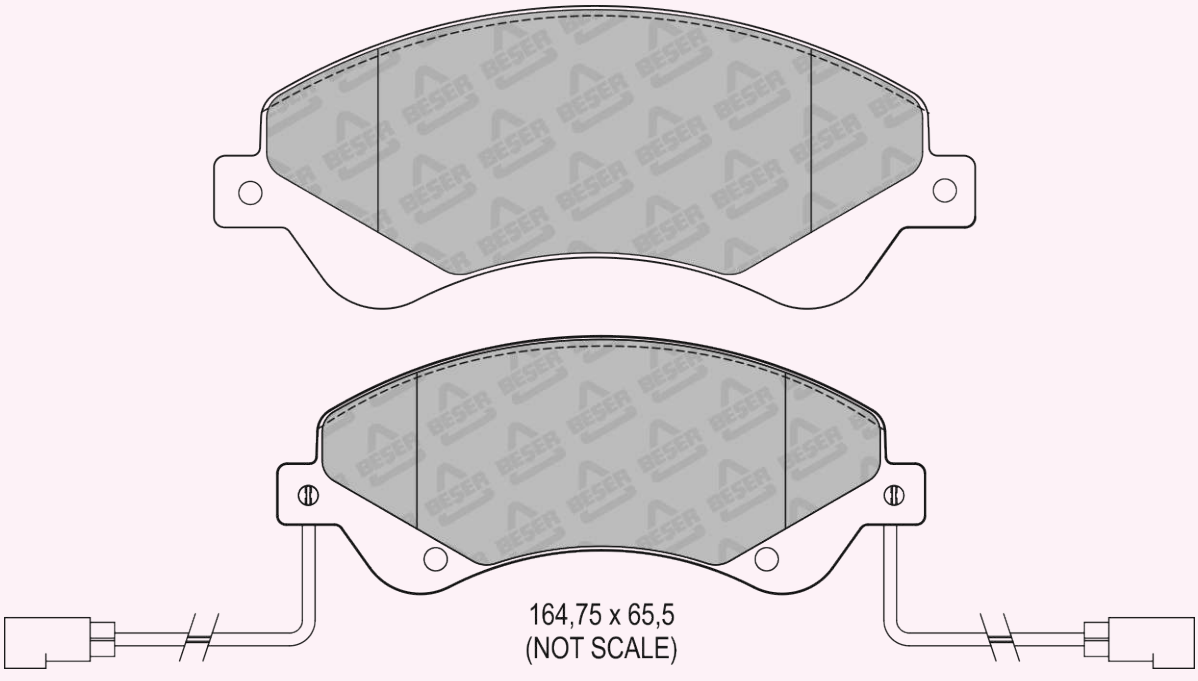

REFERENCE	T(mm)	REMARKS	MAKE	F/R	WVA No
3921	18.15	2 PADS WITH WEAR SENSOR	FORD	F	23434 23840 23435 23841

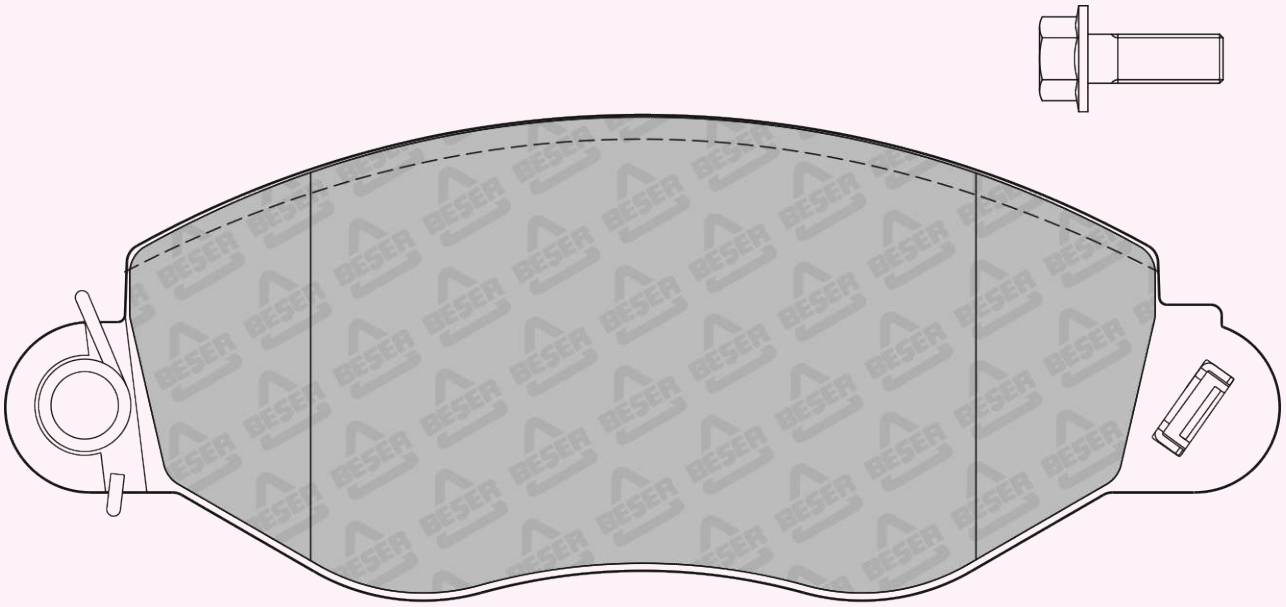

168,5 x 64,15

REFERENCE	T(mm)	REMARKS	MAKE	F/R	WVA No
3922	19.1	1 PAD WITH WEAR SENSOR	CITROEN - FIAT PEUGEOT	F	24466 24467

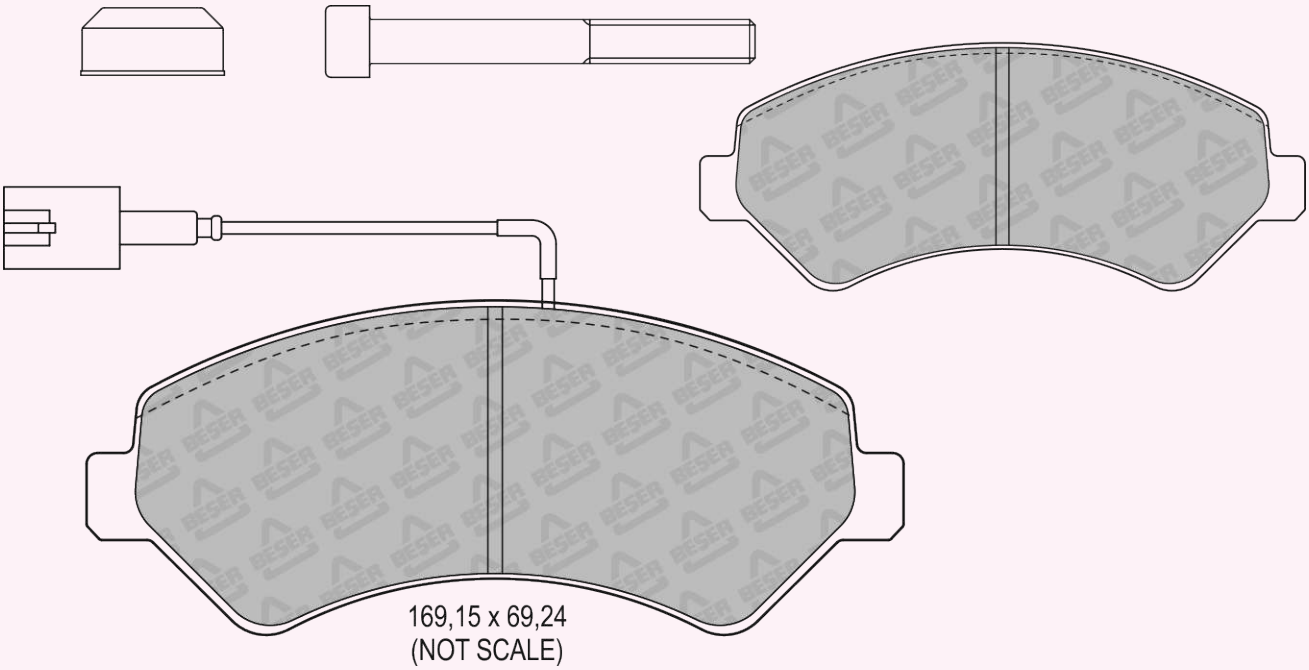

169,15 x 69,24
(NOT SCALE)

REFERENCE	T(mm)	REMARKS	MAKE	F/R	WVA No
3922/1	19.1	4 PADS PLAIN	CITROEN - FIAT PEUGEOT	F	24466 24467

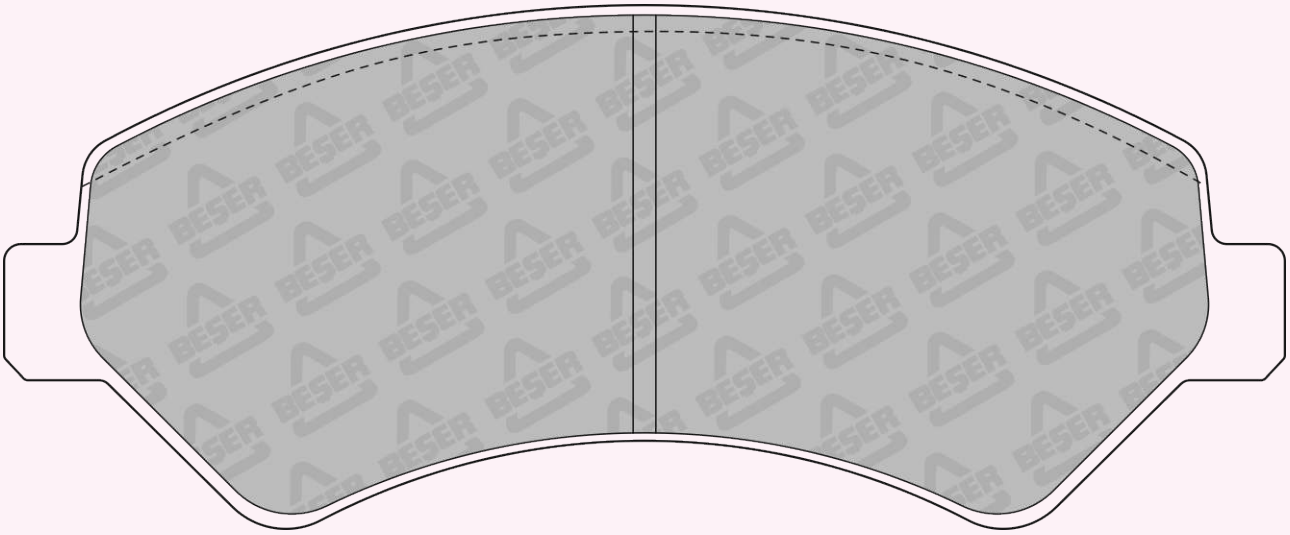

169,15 x 69,24

REFERENCE	T(mm)	REMARKS	MAKE	F/R	WVA No
3922/2	19,1	1 PAD WITH WEAR SENSOR (215 mm)	CITROEN - FIAT PEUGEOT	F	24466 24467

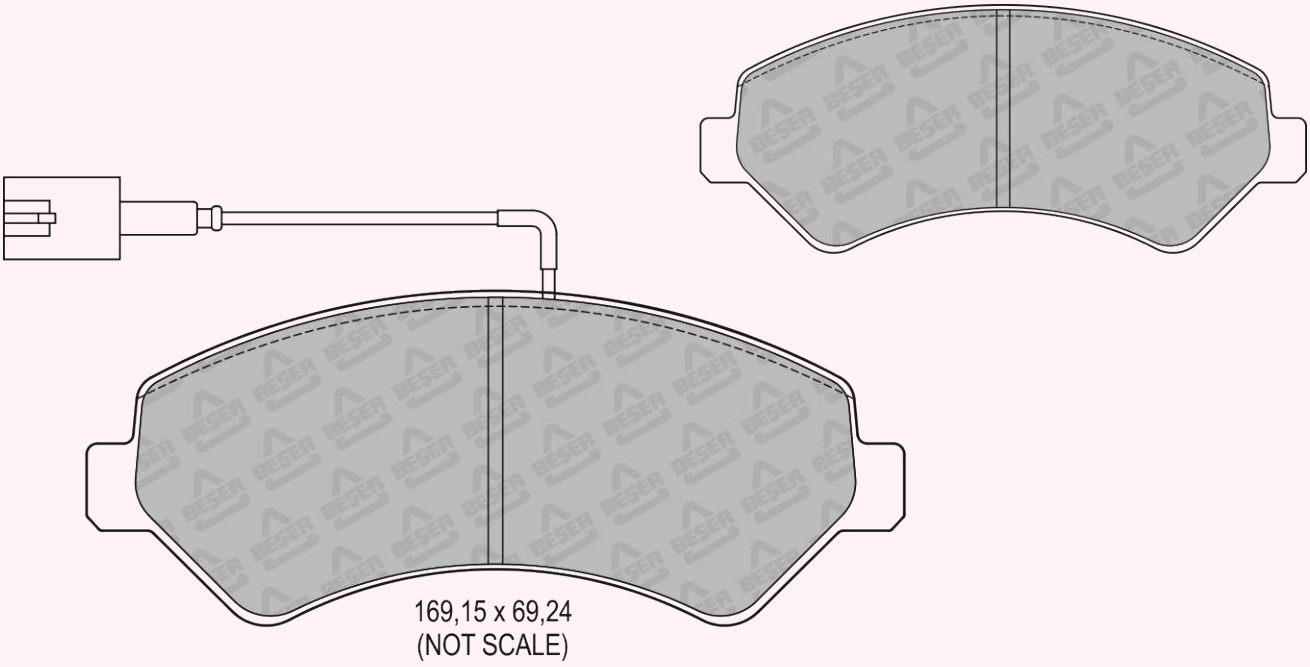

169,15 x 69,24
(NOT SCALE)

REFERENCE	T(mm)	REMARKS	MAKE	F/R	WVA No
3922/3	19,1	2 PADS WITH WEAR SENSOR (215 mm)	CITROEN - FIAT PEUGEOT	F	24466 24467

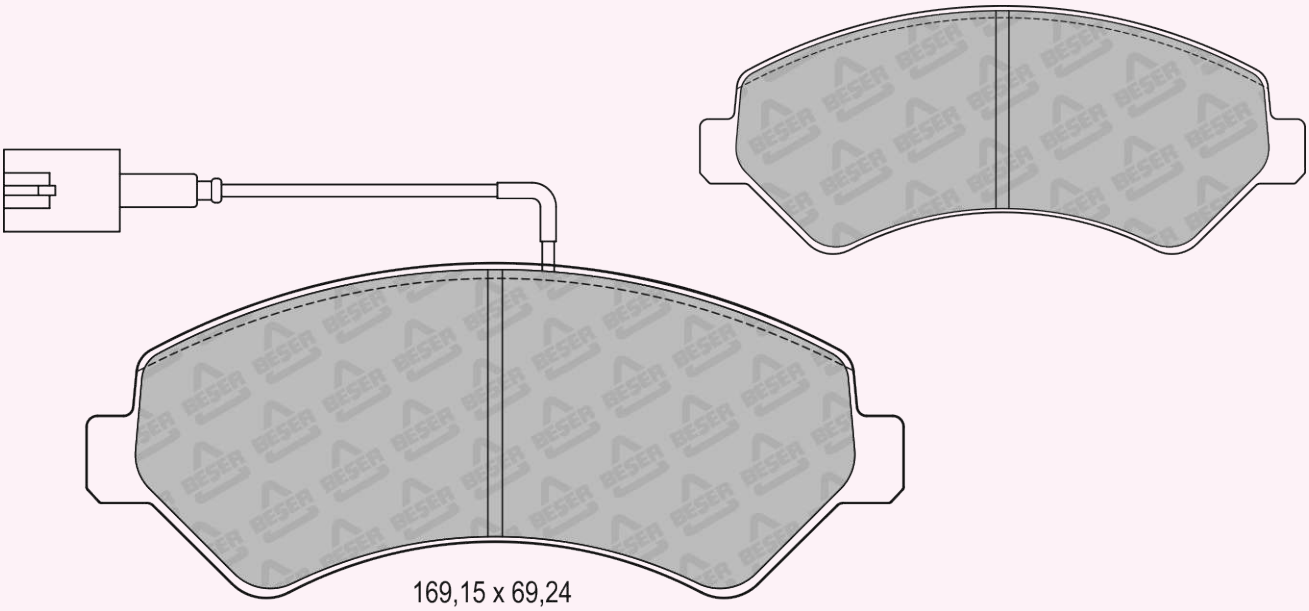

169,15 x 69,24
(NOT SCALE)

REFERENCE	T(mm)	REMARKS	MAKE	F/R	WVA No
3923	20.8	4 PADS PLAIN	MERCEDES-BENZ	F	24007

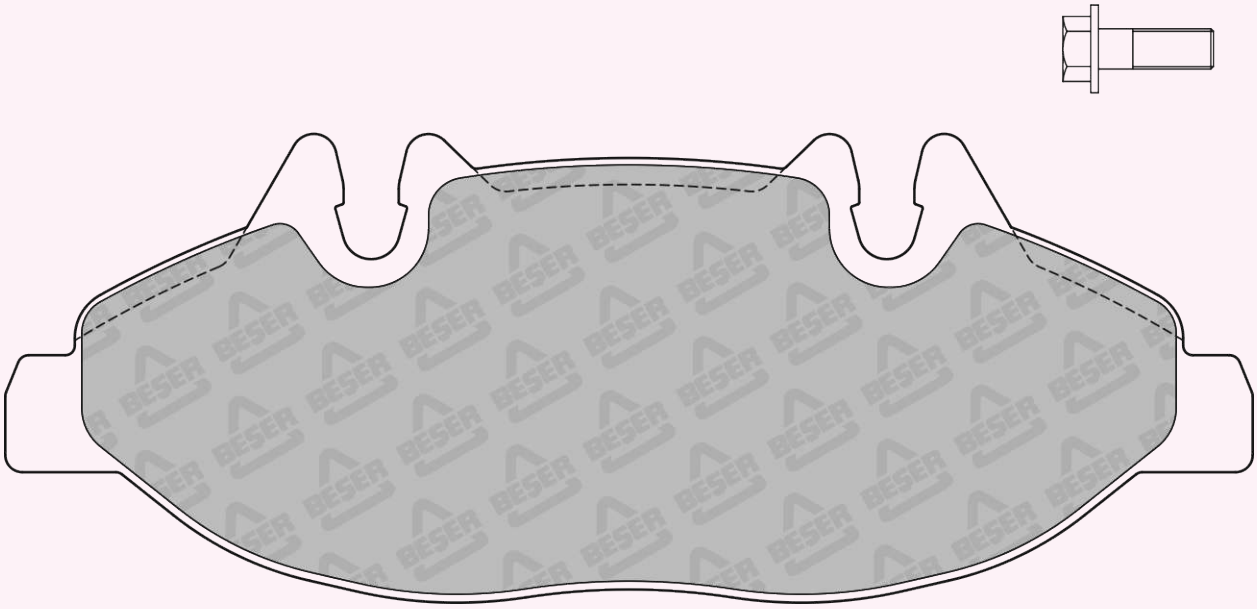

164,85 x 61,92

REFERENCE	T(mm)	REMARKS	MAKE	F/R	WVA No
3923/1	20,8	2 PADS WITH WEAR SENSOR	MERCEDES-BENZ	F	24007

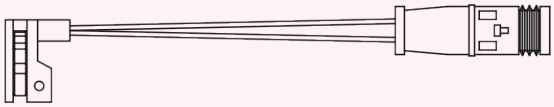

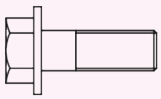

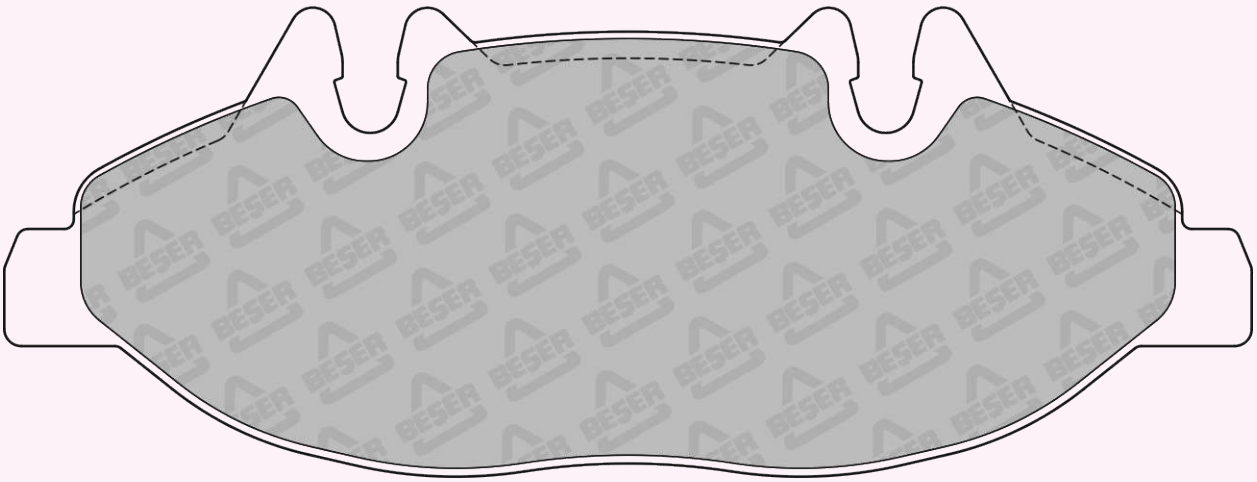

164,85 x 61,92

REFERENCE	T(mm)	REMARKS	MAKE	F/R	WVA No
3924	18.3	4 PADS PLAIN	MERCEDES-BENZ	R	24008

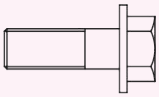

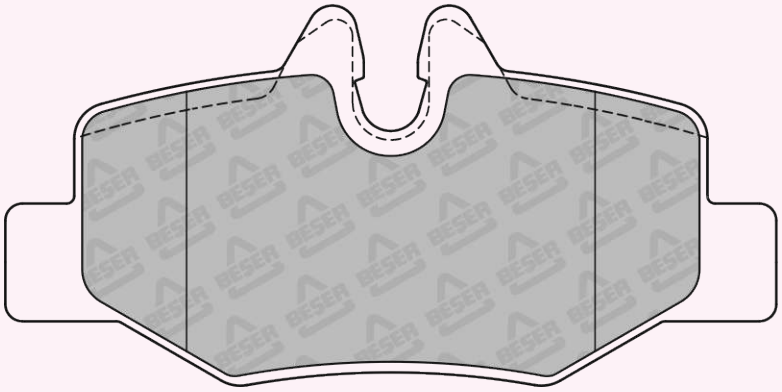

101,9 x 50,2

REFERENCE	T(mm)	REMARKS	MAKE	F/R	WVA No
3924/1	18.3	2 PADS WITH WEAR SENSOR	MERCEDES-BENZ	R	24008

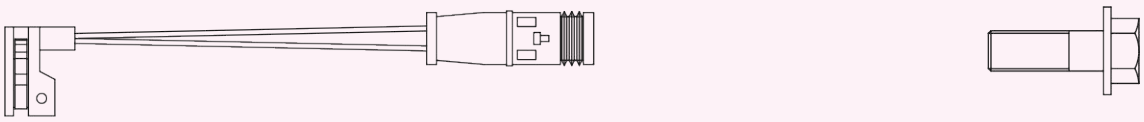

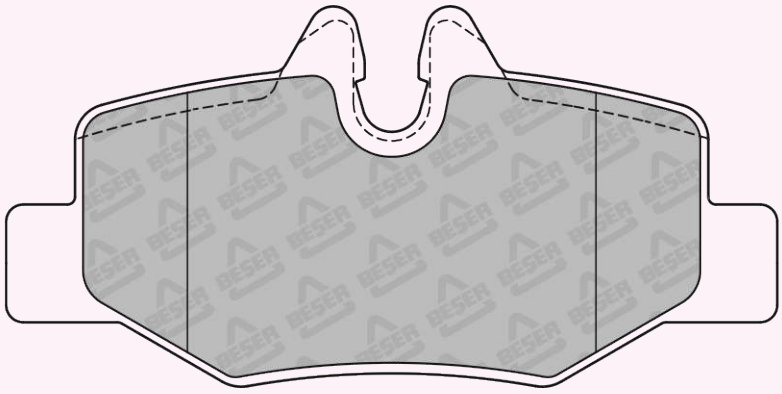

101,9 x 50,2

REFERENCE	T(mm)	REMARKS	MAKE	F/R	WVA No
3925	20.8	4 PADS PLAIN	MERCEDES - BENZ VW	F	29192

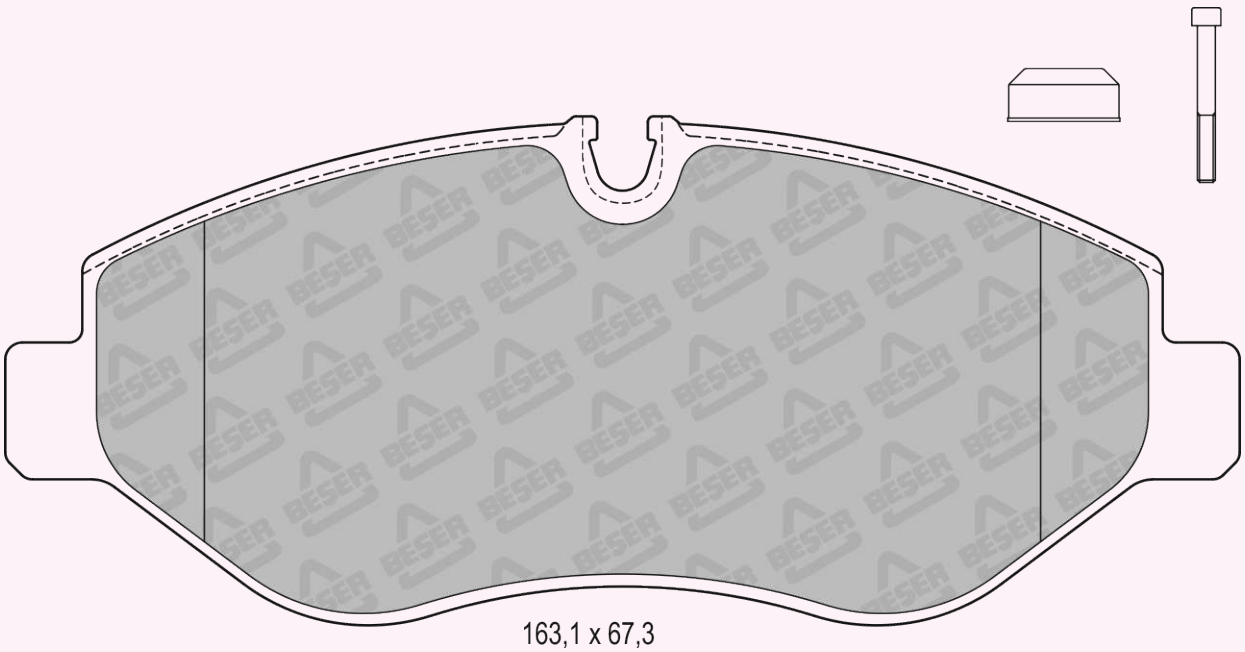

163,1 x 67,3

REFERENCE	T(mm)	REMARKS	MAKE	F/R	WVA No
3925/2	20,8	2 PADS WITH WEAR SENSOR	MERCEDES - BENZ VW	F	29192

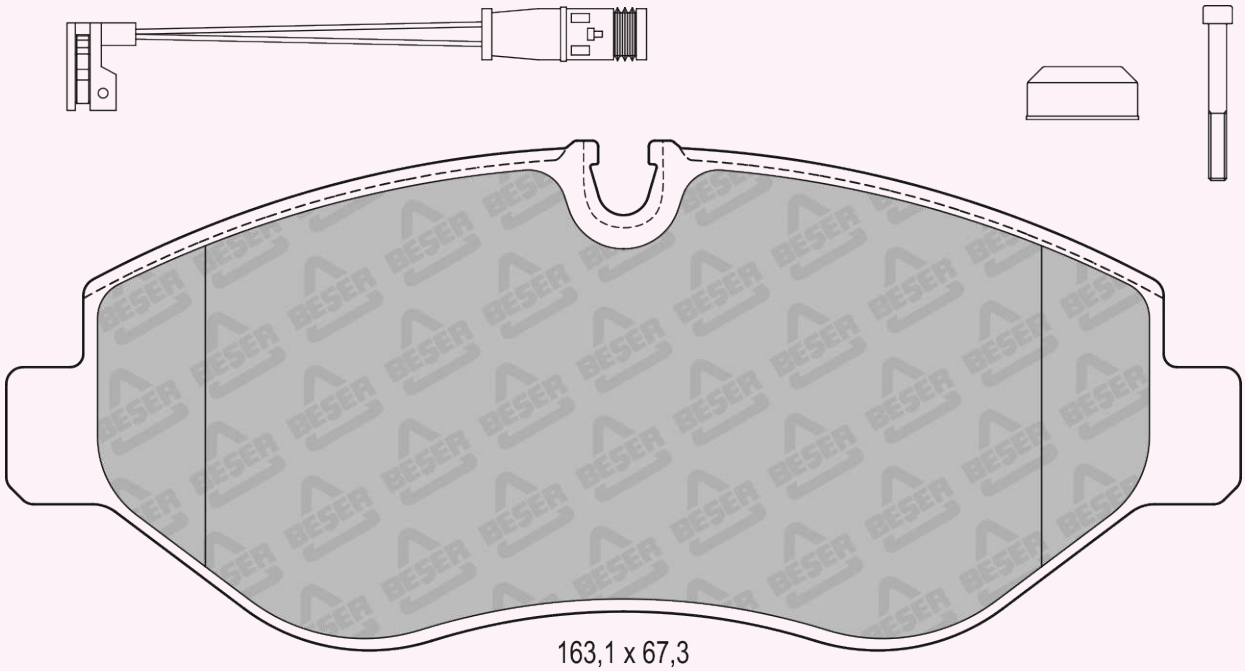

163,1 x 67,3

REFERENCE	T(mm)	REMARKS	MAKE	F/R	WVA No
3926	19,75	4 PADS PLAIN	MERCEDES - BENZ VW	R	29190

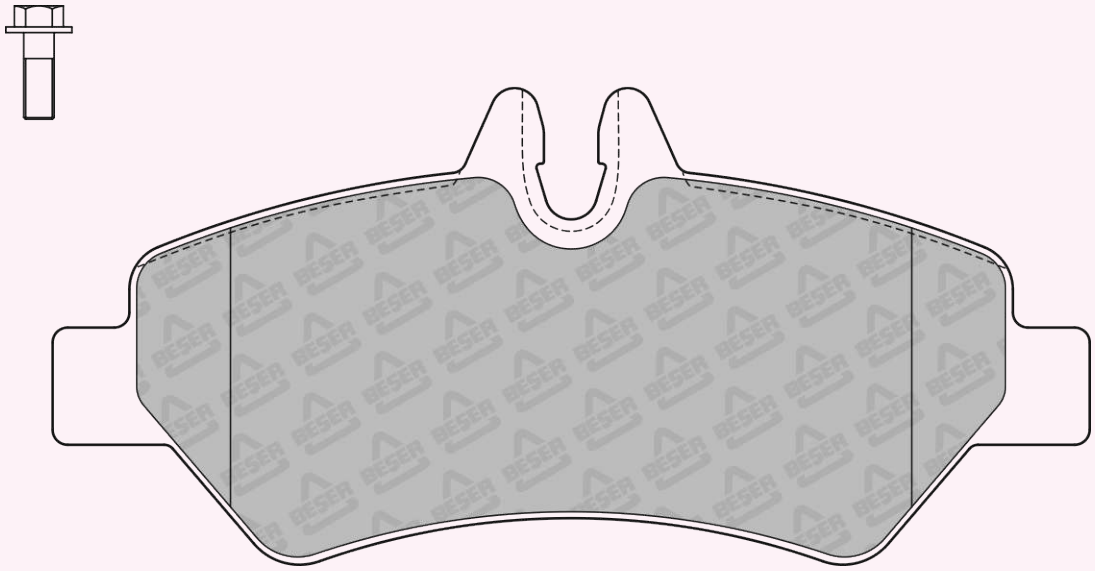

137 x 63

REFERENCE	T(mm)	REMARKS	MAKE	F/R	WVA No
3926/1	19,75	2 PADS WITH WEAR SENSOR	MERCEDES - BENZ VW	R	29190

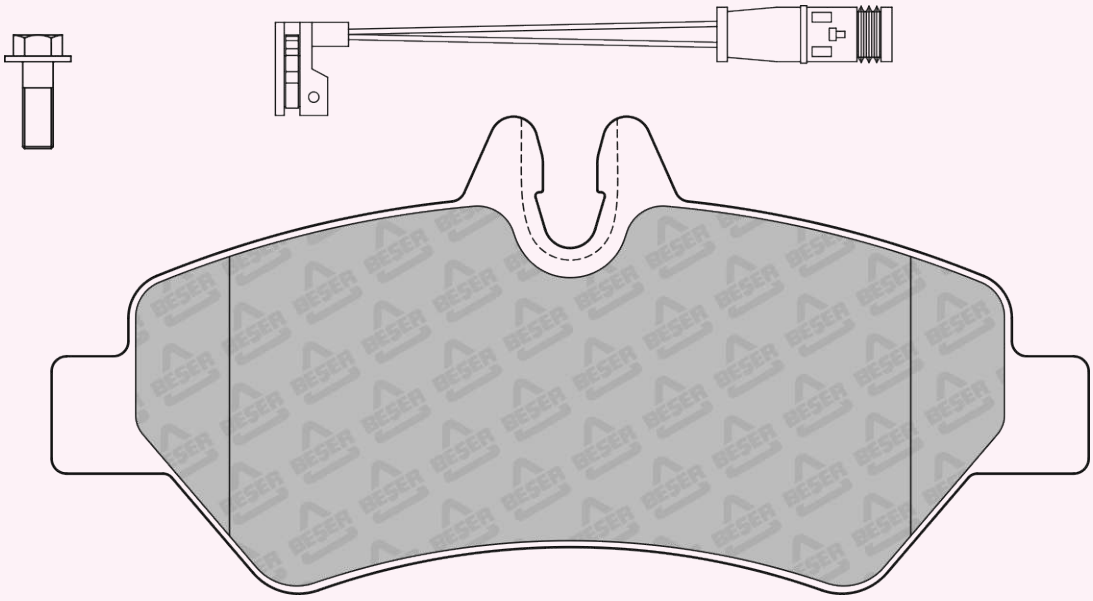

137 x 63

REFERENCE	T(mm)	REMARKS	MAKE	F/R	WVA No
3927	14	4 PADS PLAIN	TOYOTA	F	25060

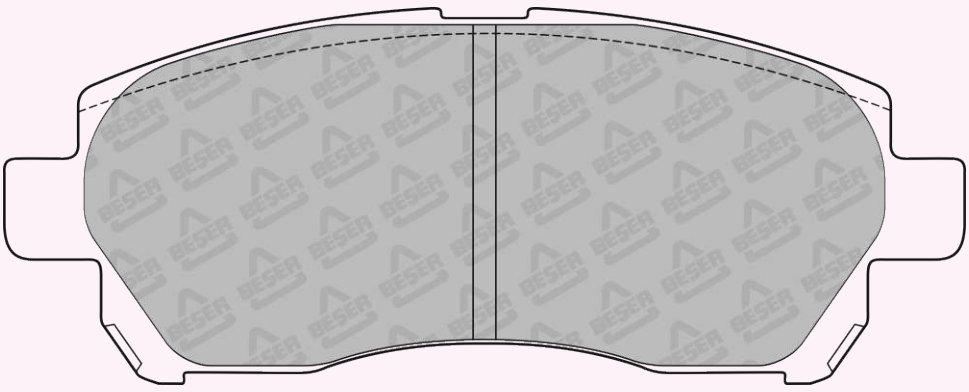

126,85 x 49,47

REFERENCE	T(mm)	REMARKS	MAKE	F/R	WVA No
3928	15	2 PADS WITH WEAR SENSOR	CHEVROLET - DAIHATSU - HOLDEN PERODUA - SUBARU - SUZUKI TOYOTA	F	23507 23508 23509

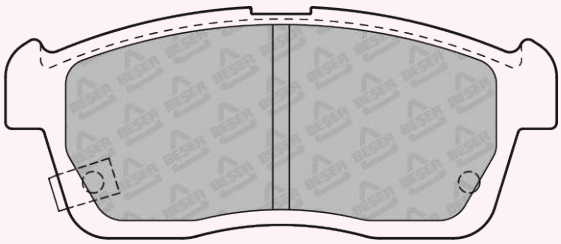

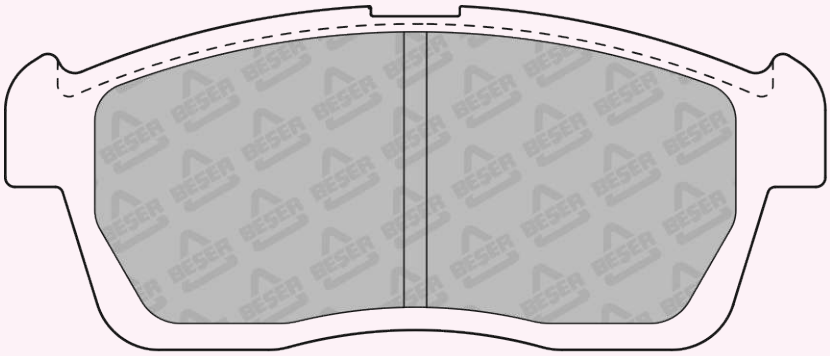

108,4 x 45,33

REFERENCE	T(mm)	REMARKS	MAKE	F/R	WVA No
3929	17	4 PADS PLAIN	SUZUKI	F	24346

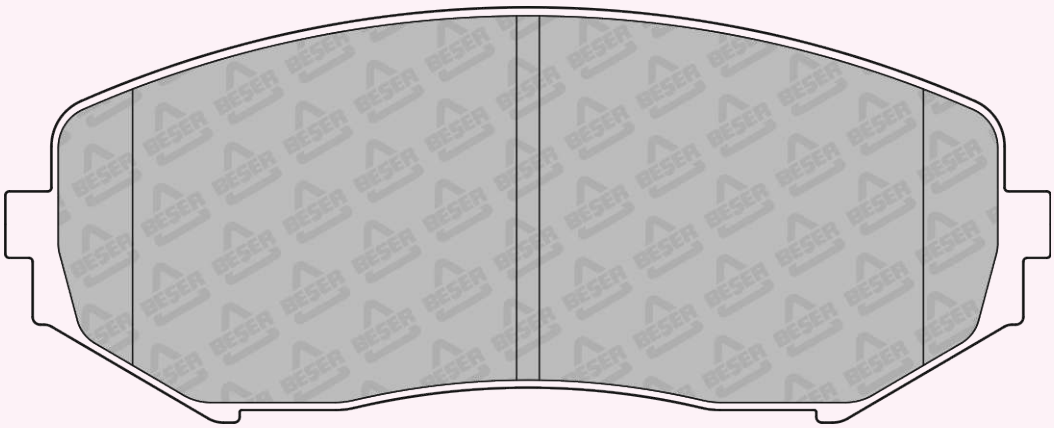

138,05 x 54,7

REFERENCE	T(mm)	REMARKS	MAKE	F/R	WVA No
3930	20,0	4 PADS WITH WEAR SENSOR	TOYOTA	F	29296 29297

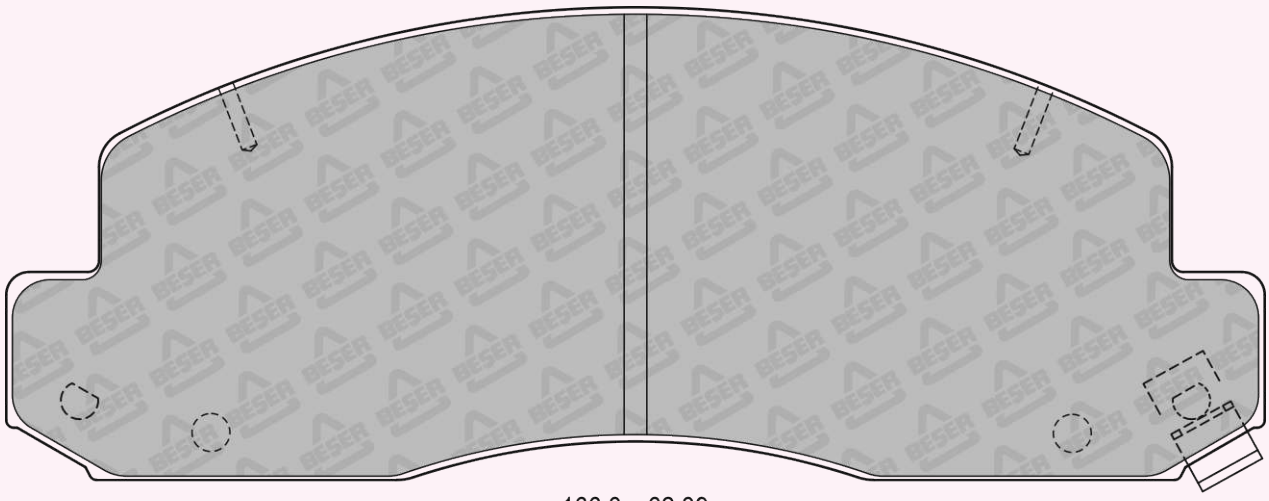

166,3 x 62,39

REFERENCE	T(mm)	REMARKS	MAKE	F/R	WVA No
3931	19	4 PADS PLAIN	CITROEN	F	23409

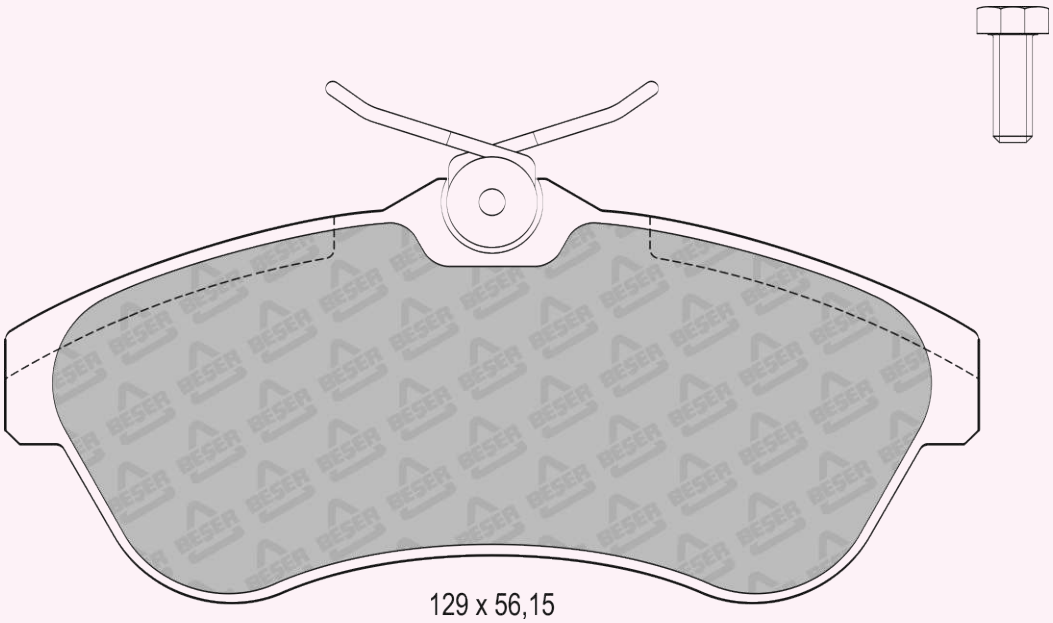

129 x 56,15

REFERENCE	T(mm)	REMARKS	MAKE	F/R	WVA No
3932	16,5	4 PADS WITH WEAR SENSOR	ACURA - NISSAN	F	23420 23421

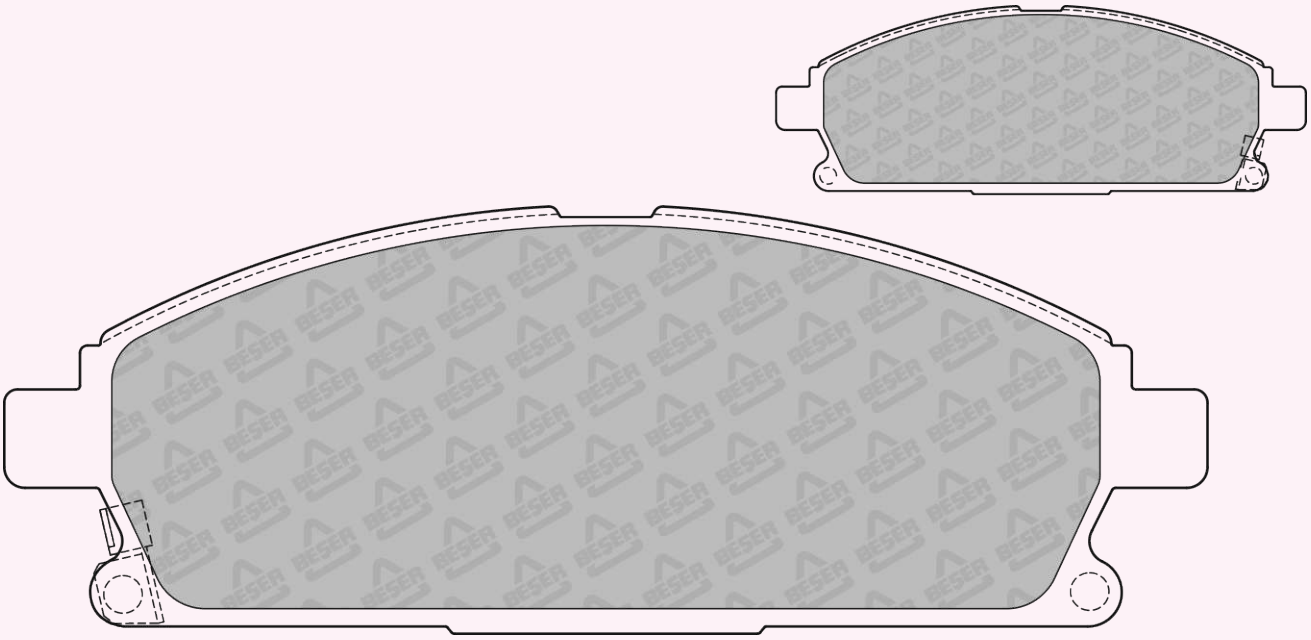

159 x 56,39

REFERENCE	T(mm)	REMARKS	MAKE	F/R	WVA No
3933	14,3	2 PADS WITH WEAR SENSOR	INFINITY - NISSAN - RENAULT SAMSUNG-SUZIKI	R	23871 23872 24088

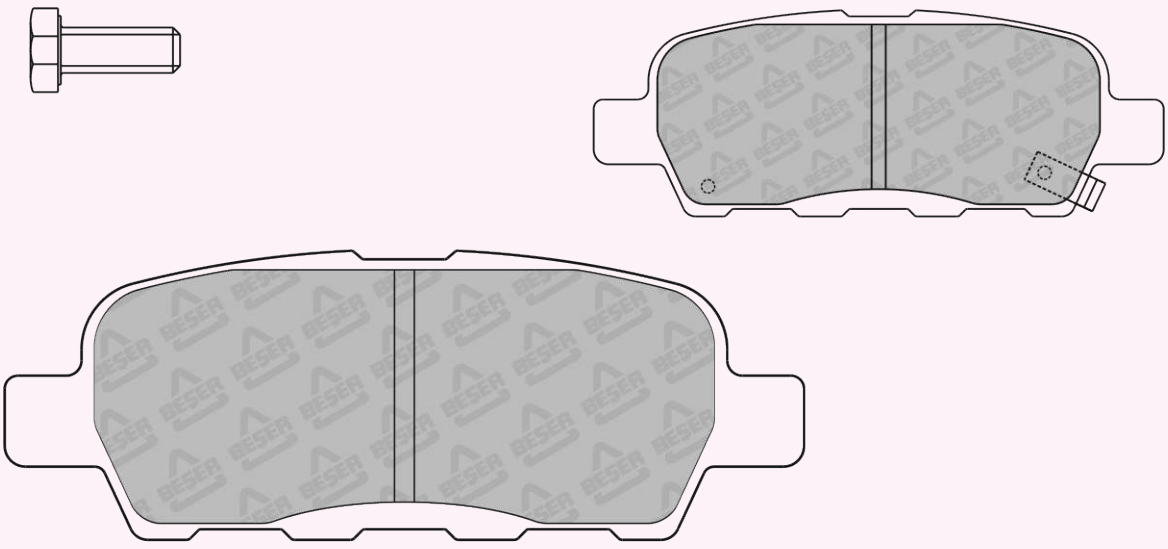

105,6 x 38,13

REFERENCE	T(mm)	REMARKS	MAKE	F/R	WVA No
3933/1	13,8	2 PADS WITH WEAR SENSOR	INFINITY - NISSAN - RENAULT SAMSUNG-SUZIKI	R	23871 23872 24088

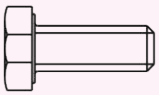

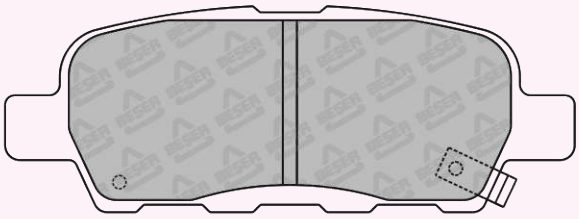

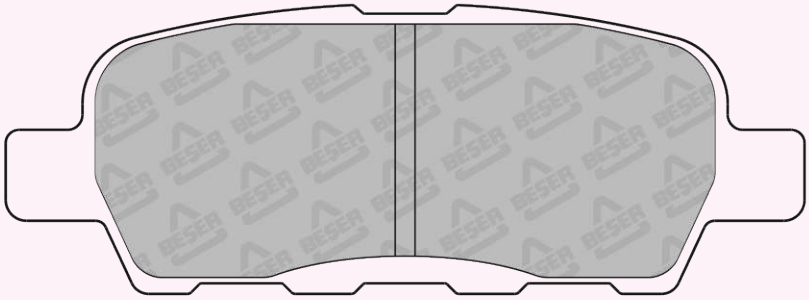

105,6 x 38,13

REFERENCE	T(mm)	REMARKS	MAKE	F/R	WVA No
3934	18	4 PADS WITH WEAR SENSOR	CITROEN	F	23273

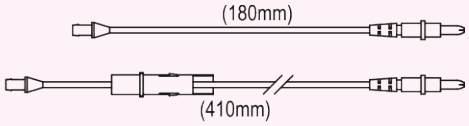

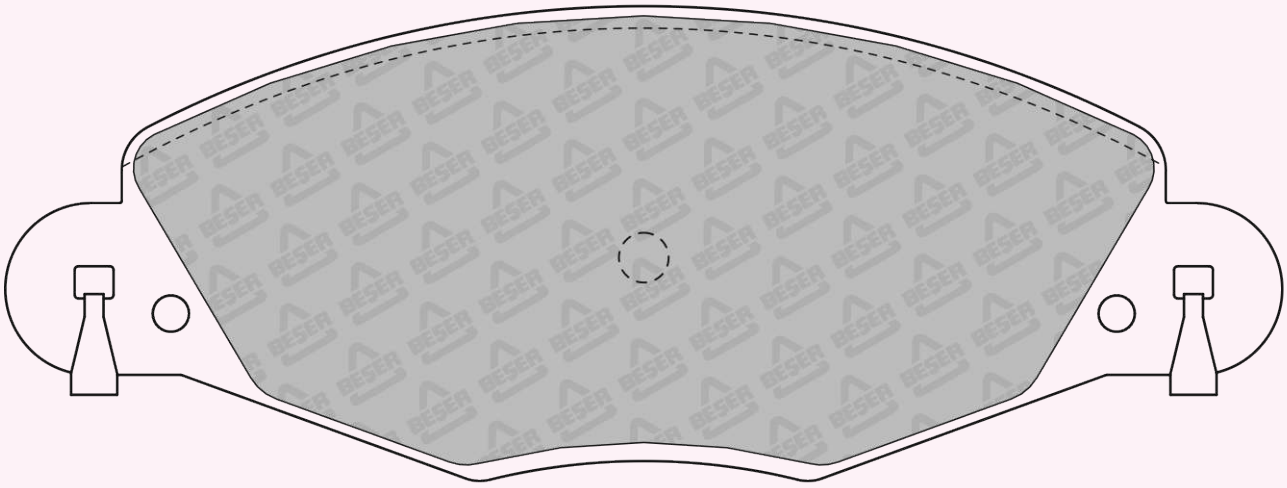

168,7 x 62,7

REFERENCE	T(mm)	REMARKS	MAKE	F/R	WVA No
3935	18	4 PADS WITH WEAR SENSOR	CITROEN	F	23277

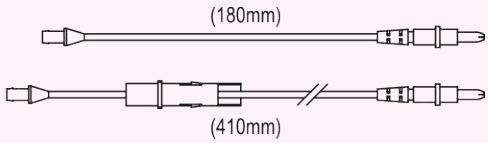

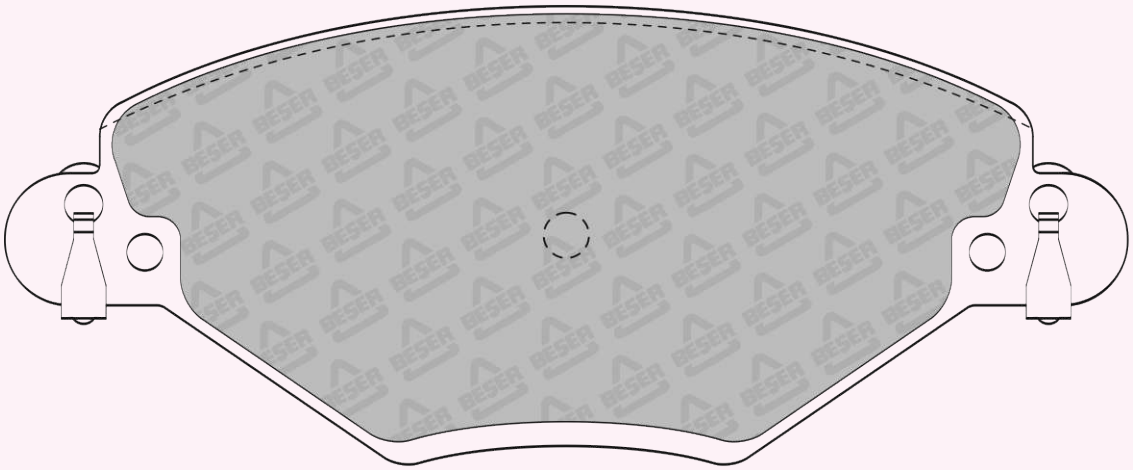

148,6 x 60,48

REFERENCE	T(mm)	REMARKS	MAKE	F/R	WVA No
3938	18	2 PADS RIGHT & 2 PADS LEFT	CITROEN - PEUGEOT	F	23597 23598

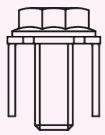

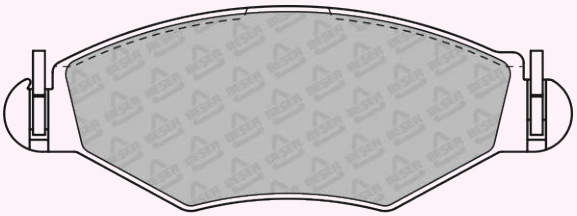

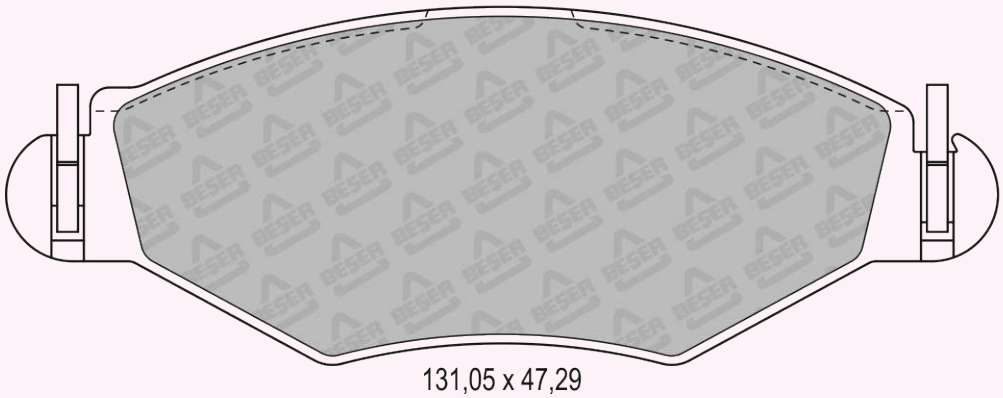

131,05 x 47,29

REFERENCE	T(mm)	REMARKS	MAKE	F/R	WVA No
3939	19,5	4 PADS WITH WEAR SENSOR (410 mm - 455 mm)	PEUGEOT	F	24134 24175

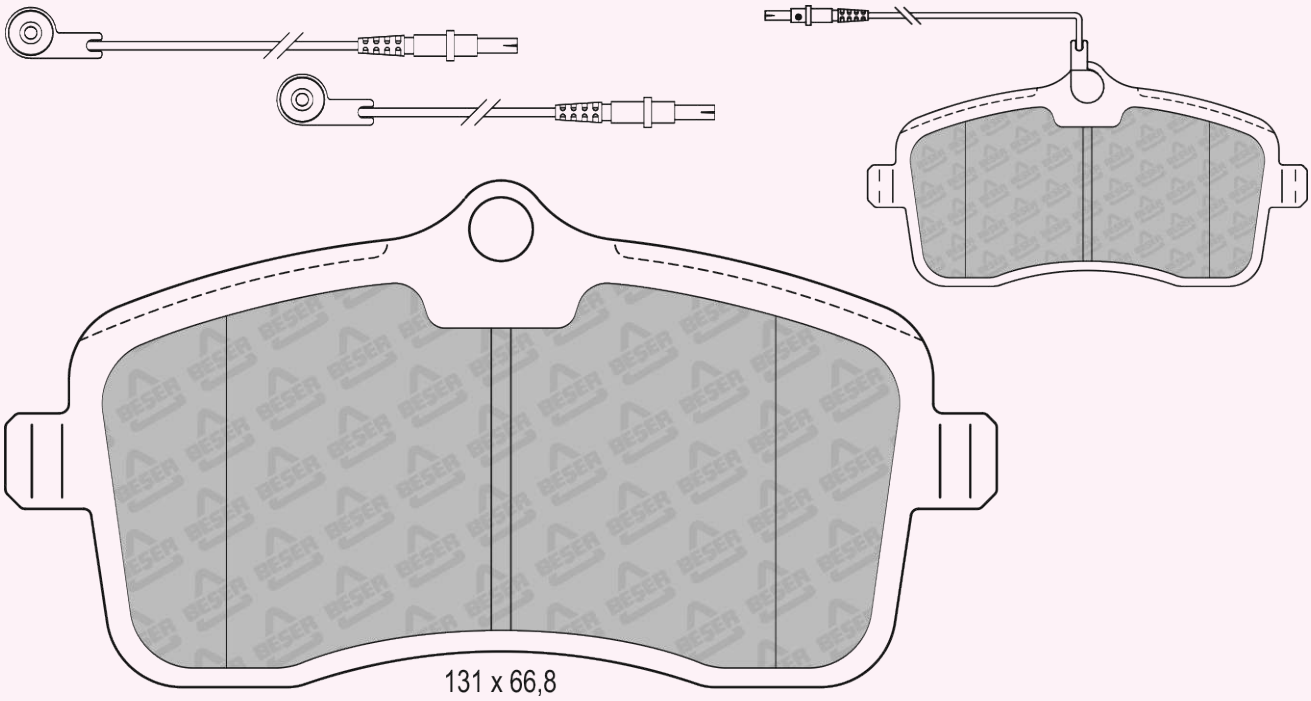

REFERENCE	T(mm)	REMARKS	MAKE	F/R	WVA No
3940	18	4 PADS WITH WEAR SENSOR (410 mm - 455 mm)	CITROËN - PEUGEOT	F	24133 24174

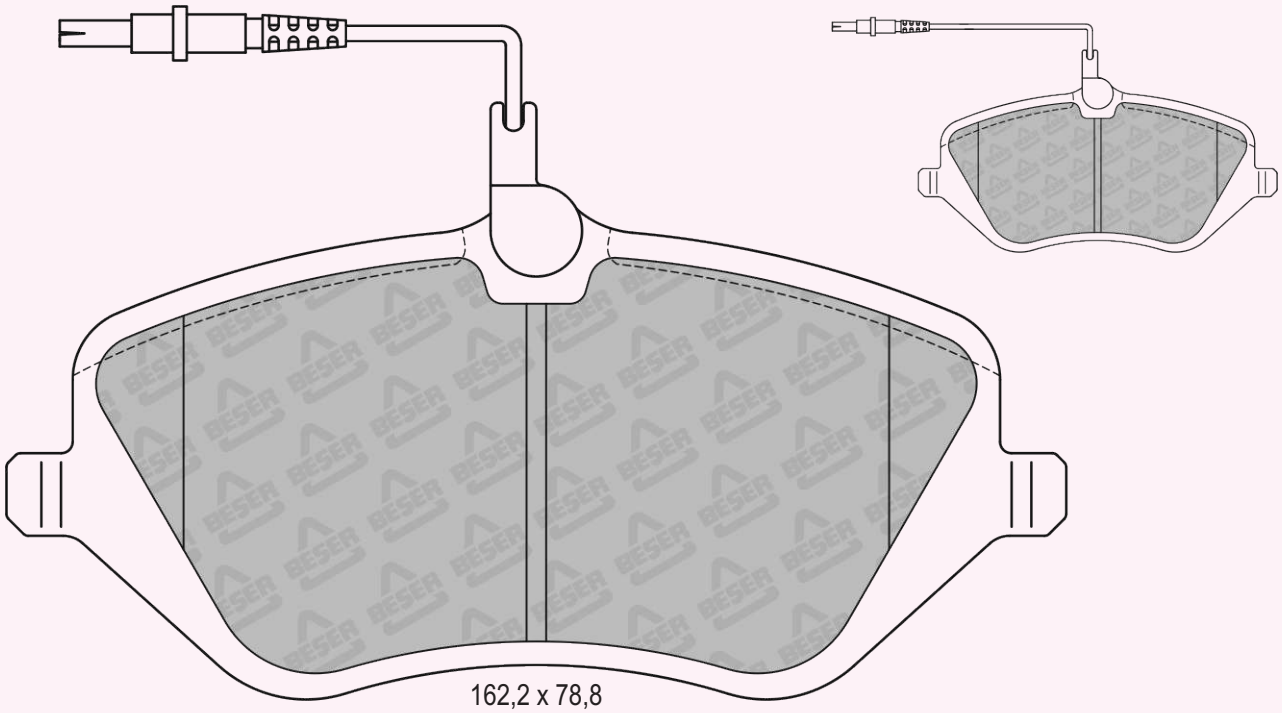

REFERENCE	T(mm)	REMARKS	MAKE	F/R	WVA No
3941	18,7	2 PADS WITH WEAR SENSOR	KARSAN	F	---

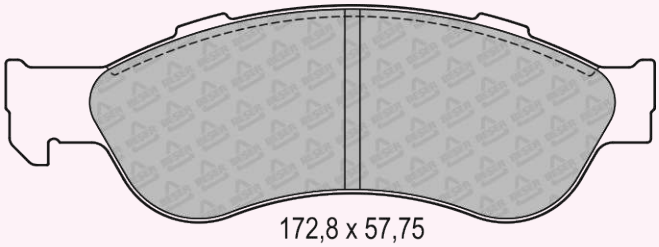

172,8 x 57,75
(NOT SCALE)

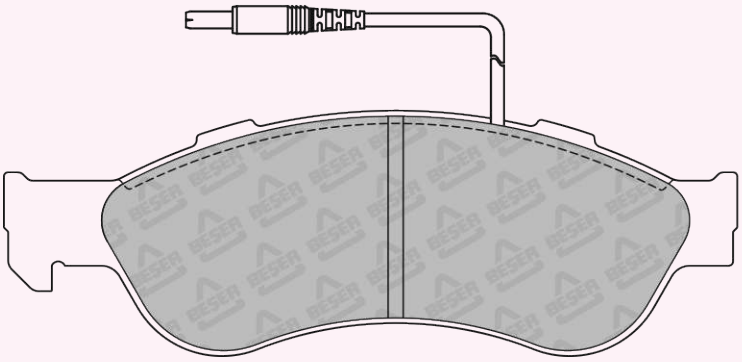

REFERENCE	T(mm)	REMARKS	MAKE	F/R	WVA No
3941/A	18,7	2 PADS RIGHT & 2 PADS LEFT	KARSAN	F	---

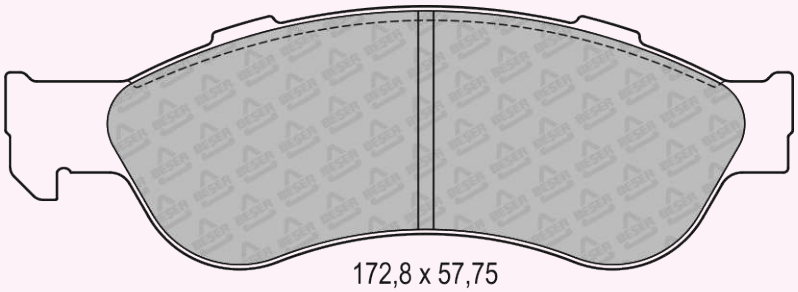

172,8 x 57,75
(NOT SCALE)

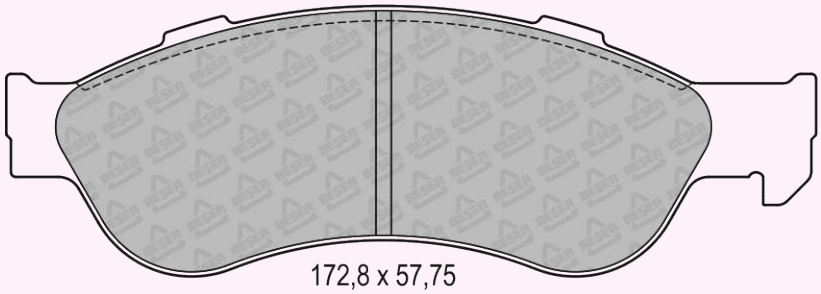

172,8 x 57,75
(NOT SCALE)

REFERENCE	T(mm)	REMARKS	MAKE	F/R	WVA No
3942	20	4 PADS PLAIN	IVECO - NISSAN RENAULT	F	29160



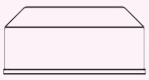

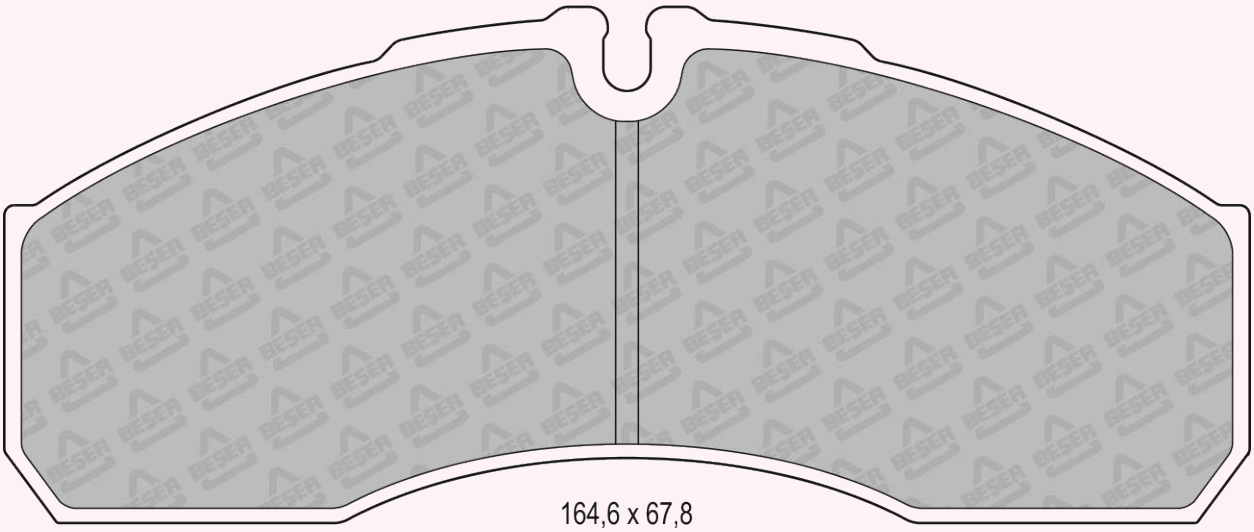

164,6 x 67,8

REFERENCE	T(mm)	REMARKS	MAKE	F/R	WVA No
3942/A	20	4 PADS PLAIN	IVECO - NISSAN RENAULT	F	29160

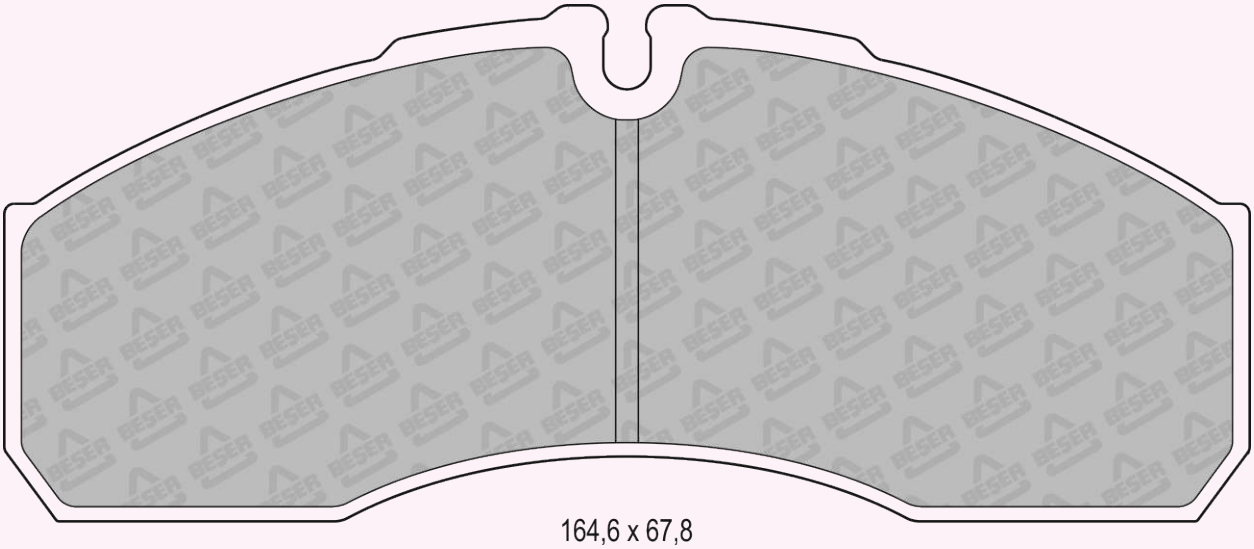

164,6 x 67,8

REFERENCE	T(mm)	REMARKS	MAKE	F/R	WVA No
3943	18,5	2 PADS RIGHT & 2 PADS LEFT 2 PADS PISTON CLIP	MG - ROEWE(SAIC) ROVER	F	23112 23114

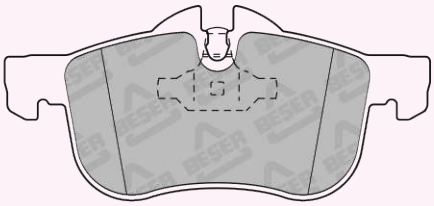

155,3 x 70,05
(NOT SCALE)

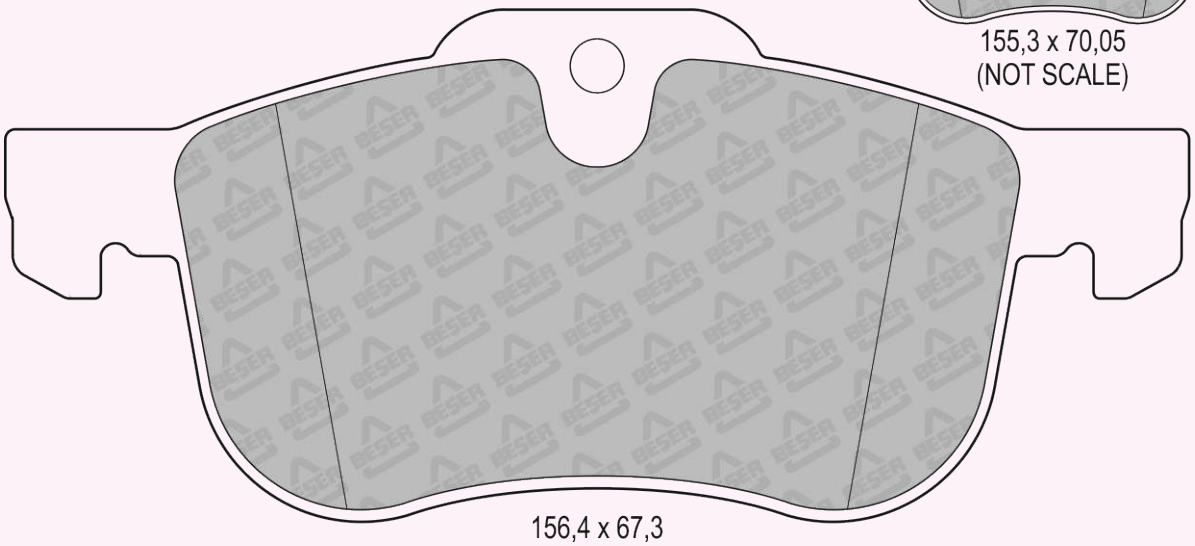

156,4 x 67,3

REFERENCE	T(mm)	REMARKS	MAKE	F/R	WVA No
3944	17,4	4 PADS PLAIN	LAND ROVER	R	24192

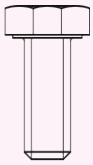

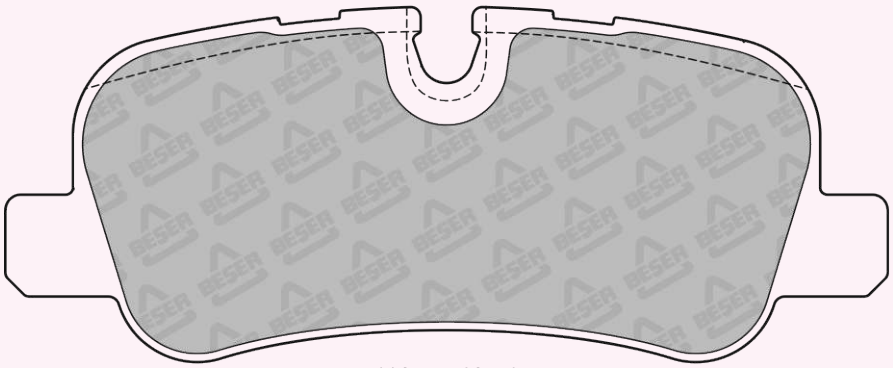

116,5 x 46,54

REFERENCE	T(mm)	REMARKS	MAKE	F/R	WVA No
3945	17,0	4 PADS PLAIN	VW	F	24098

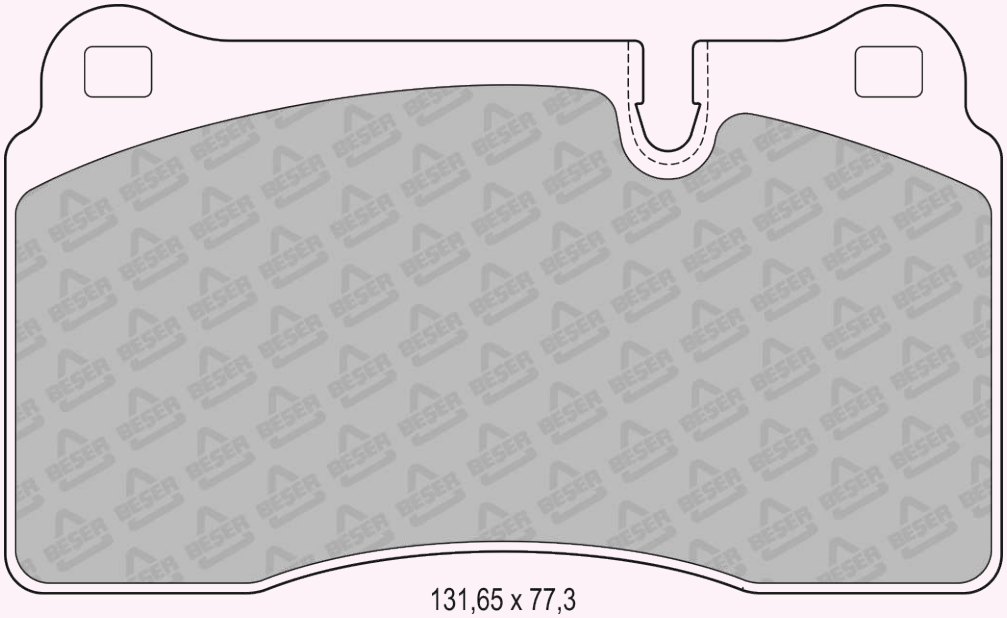

131,65 x 77,3

REFERENCE	T(mm)	REMARKS	MAKE	F/R	WVA No
3946	17,8	4 PADS PLAIN	CITROEN - PEUGEOT	R	24135

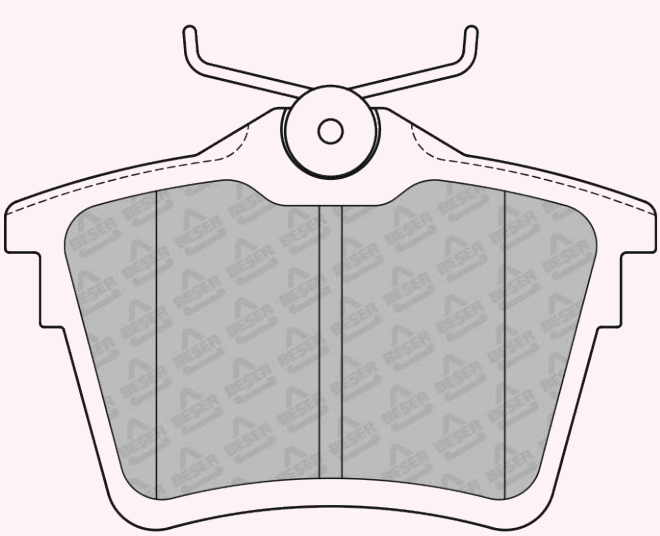

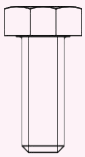

85,9 x 55,7

REFERENCE	T(mm)	REMARKS	MAKE	F/R	WVA No
3948	17,6	4 PADS PLAIN	LEXUS - TOYOTA	F	24350

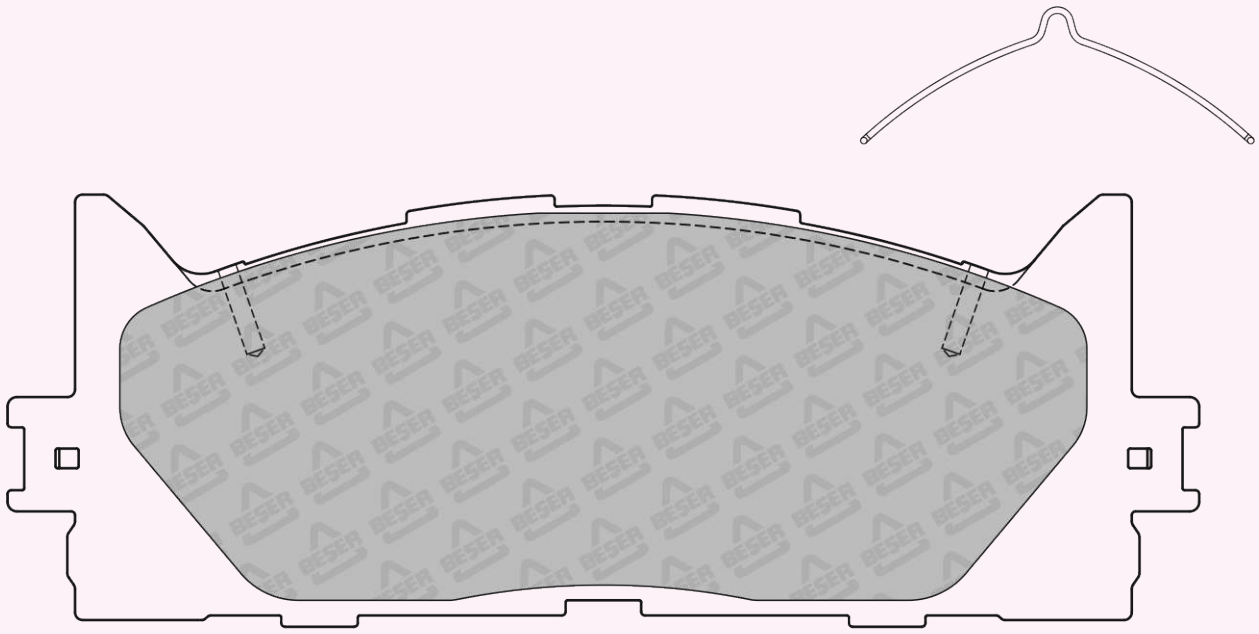

157,5 x 57,1

REFERENCE	T(mm)	REMARKS	MAKE	F/R	WVA No
3949	15,6	4 PADS PLAIN	LEXUS - TOYOTA	R	24338

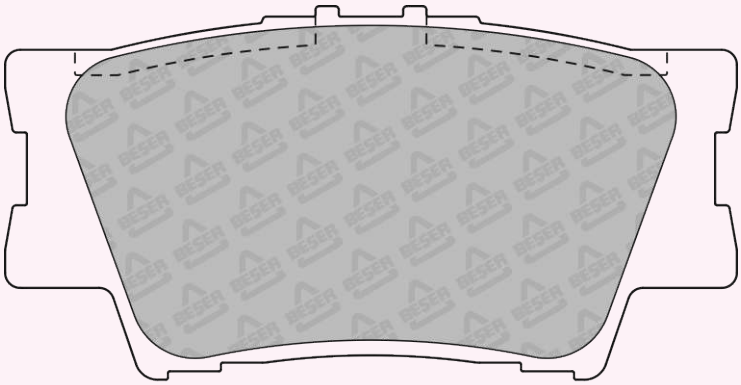

96,65 x 49,25

REFERENCE	T(mm)	REMARKS	MAKE	F/R	WVA No
3950	18	2 PADS PISTON CLIP	RENAULT	F	23215 23217

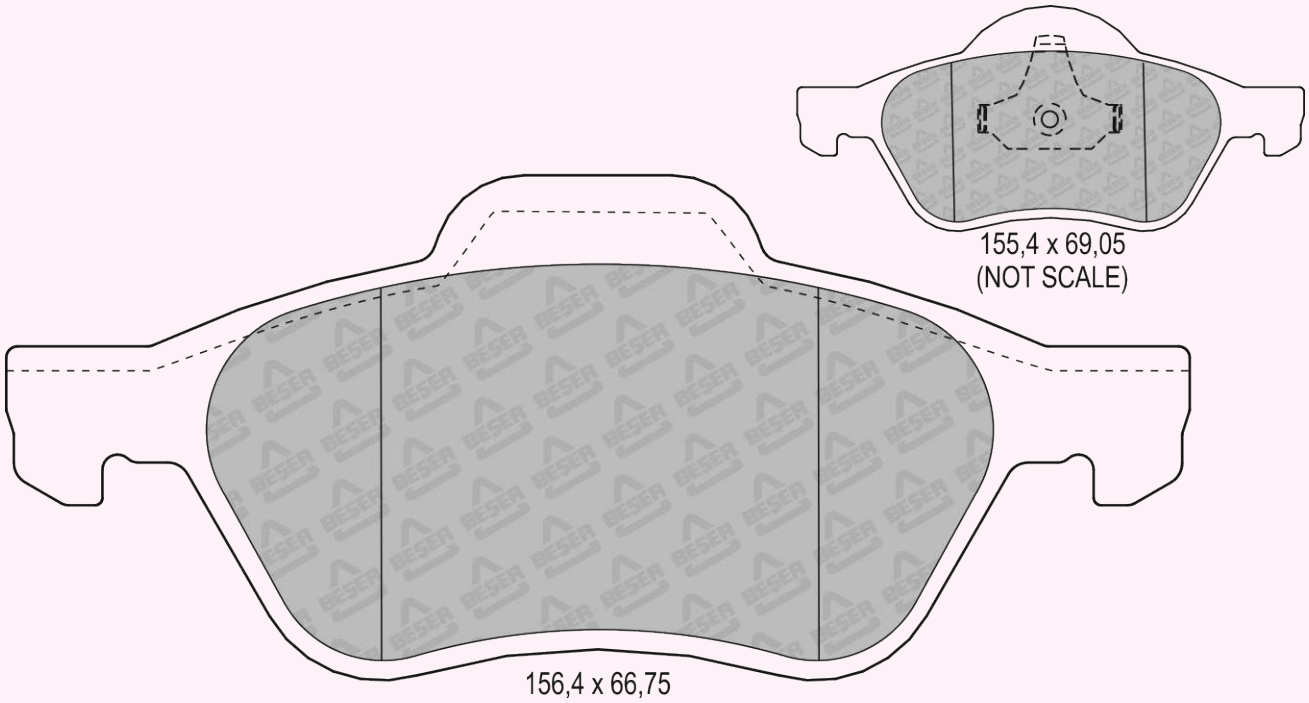

REFERENCE	T(mm)	REMARKS	MAKE	F/R	WVA No
3951	17,7	4 PADS PLAIN	CHEVROLET - DAEWOO HOLDEN - PROTON	F	23974

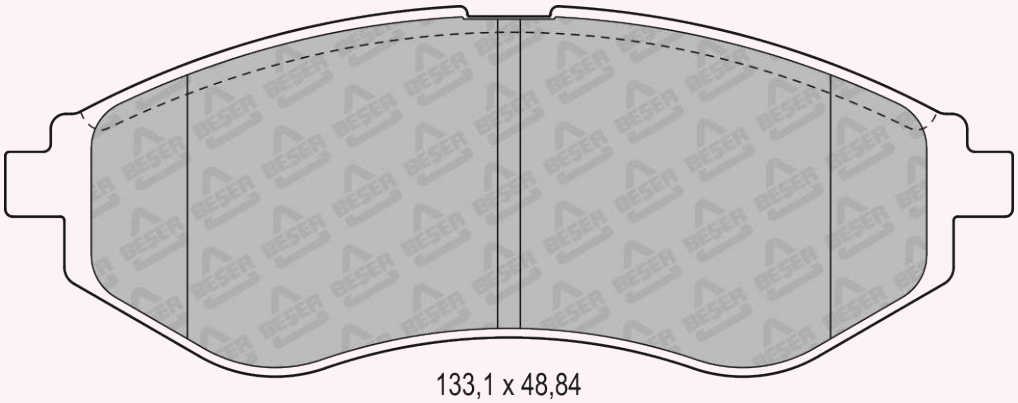

REFERENCE	T(mm)	REMARKS	MAKE	F/R	WVA No
3952	16	2 PADS WITH WEAR SENSOR	NISSAN - SUZUKI	F	24227 24228

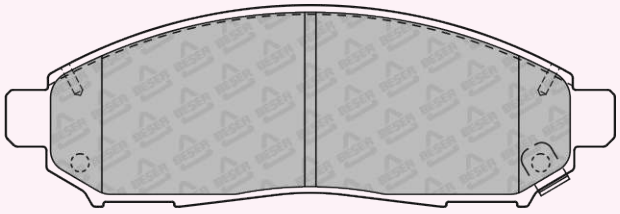

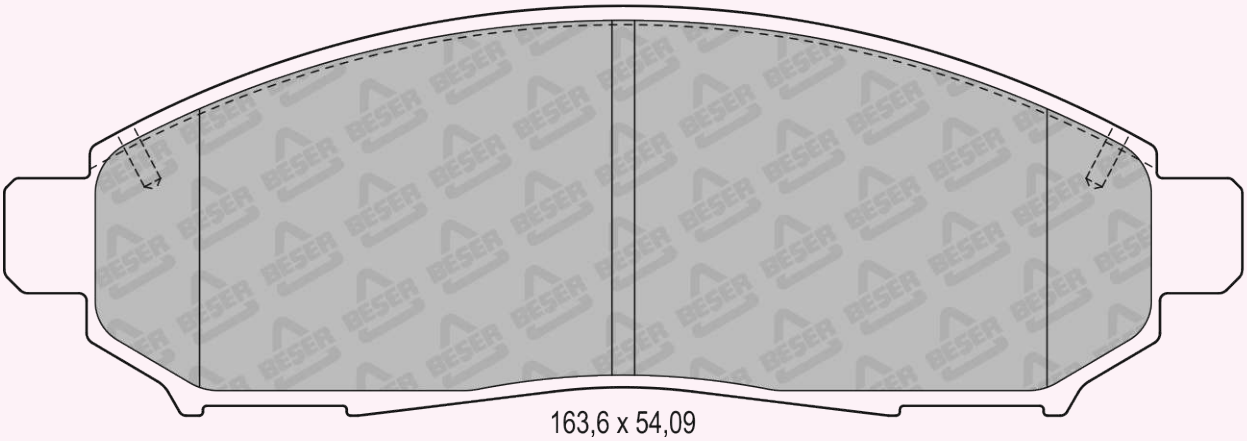

163,6 x 54,09

REFERENCE	T(mm)	REMARKS	MAKE	F/R	WVA No
3953	17,6	4 PADS PLAIN	LEXUS - SUBARU TOYOTA	F	24336

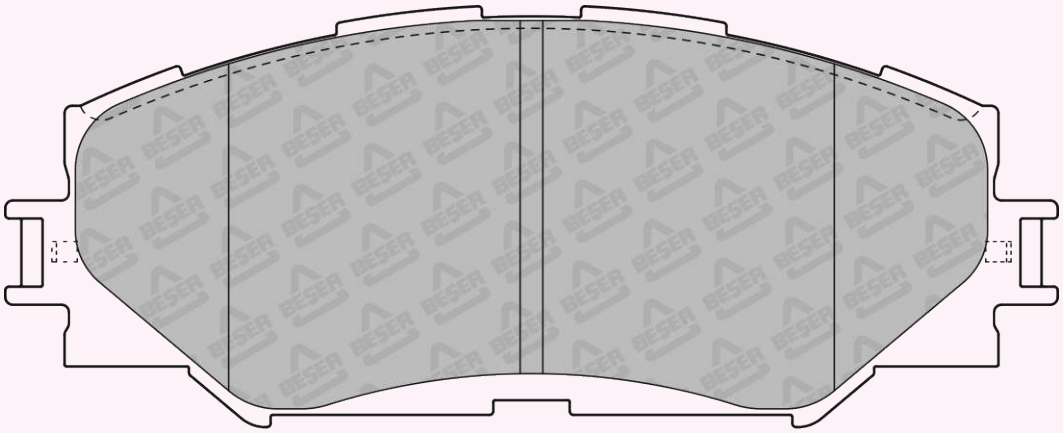

139 x 55,52

REFERENCE	T(mm)	REMARKS	MAKE	F/R	WVA No
3954	14,4	2 PADS WITH WEAR SENSOR	ASTON MARTIN - SUBARU TOYOTA	R	24610 24611 24612

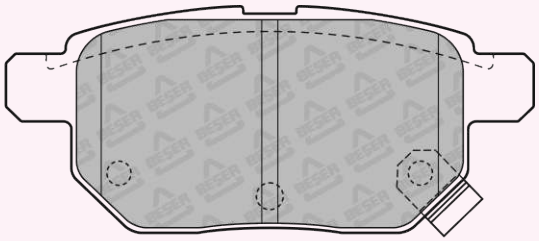

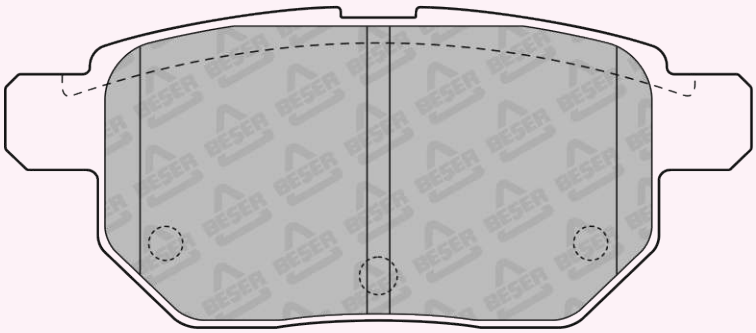

98,55 x 42,33

REFERENCE	T(mm)	REMARKS	MAKE	F/R	WVA No
3955	15,9	2 PADS WITH WEAR SENSOR	CHRYSLER - DODGE JEEP	F	23584

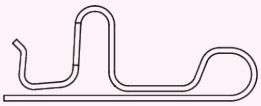

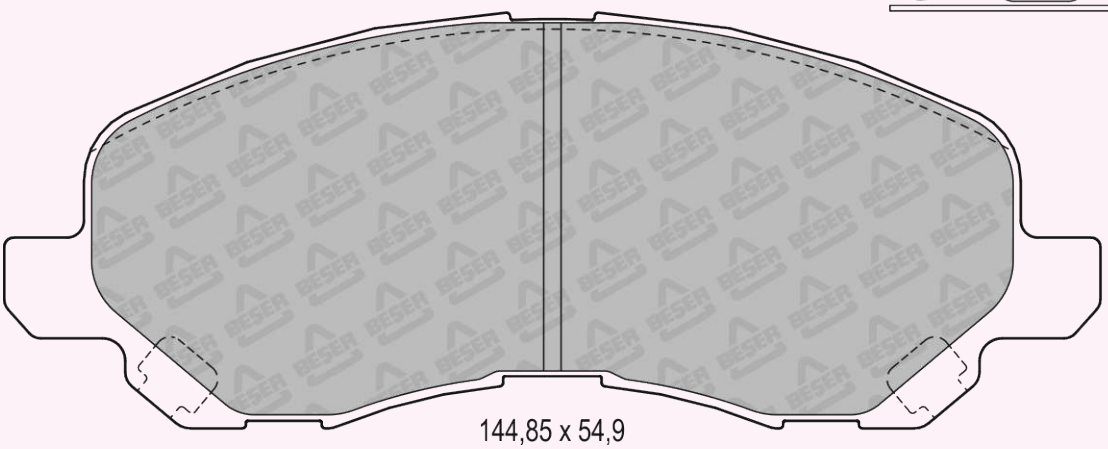

144,85 x 54,9

REFERENCE	T(mm)	REMARKS	MAKE	F/R	WVA No
3956	19,2	2 PADS WITH WEAR SENSOR	TOYOTA	F	24122 24590 24591

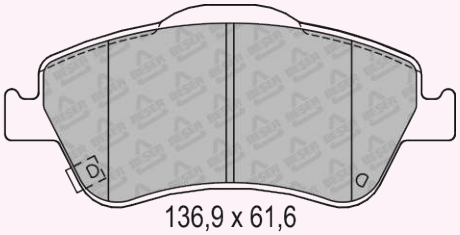

136,9 x 61,6
(NOT SCALE)

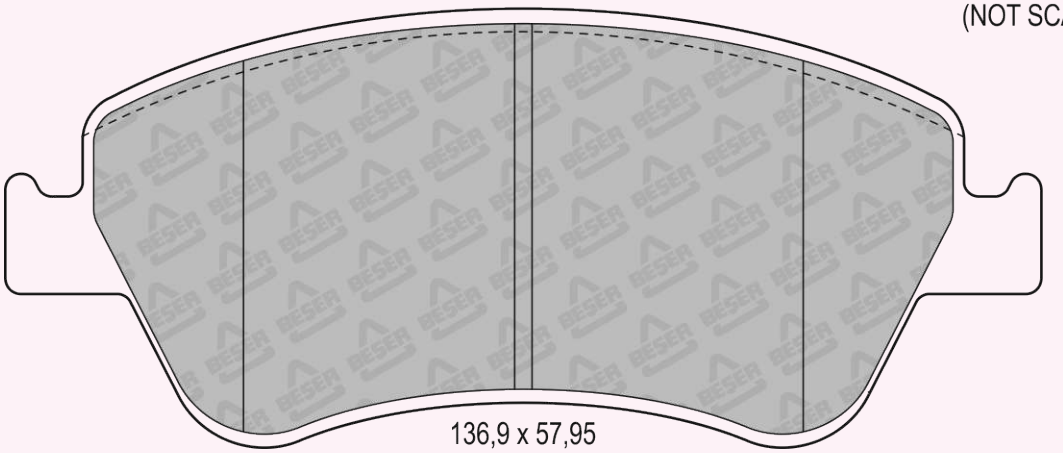

136,9 x 57,95

REFERENCE	T(mm)	REMARKS	MAKE	F/R	WVA No
3957	15,8	2 PADS WITH WEAR SENSOR	KIA	F	-----

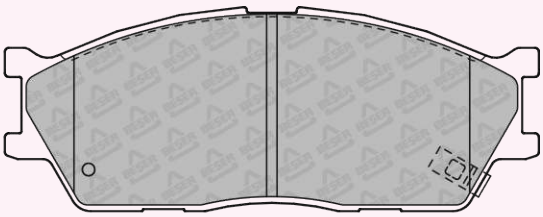

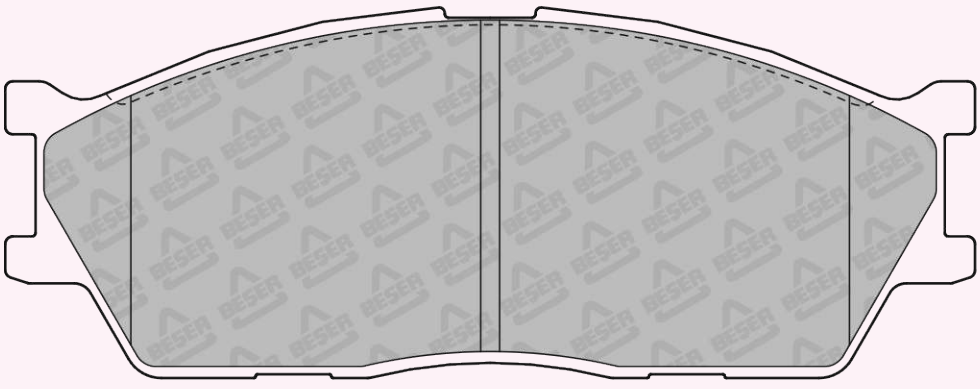

128,2 x 48,96

REFERENCE	T(mm)	REMARKS	MAKE	F/R	WVA No
3958	17,5	4 PADS PLAIN	DAIHATSU - TOYOTA	F	24451

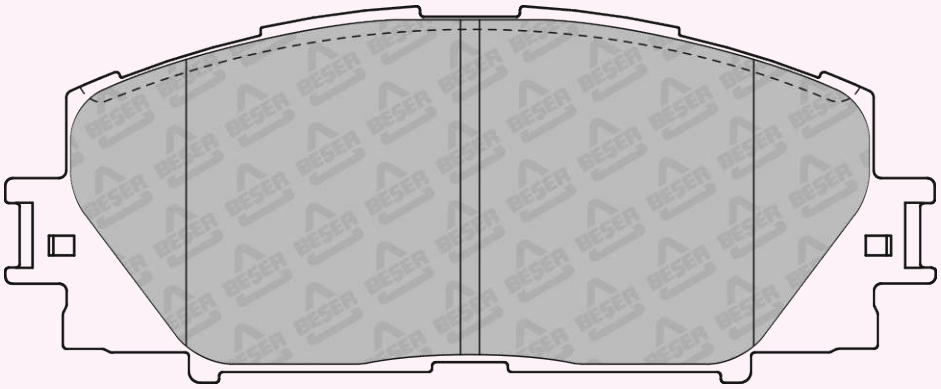

122,8 x 49,67

REFERENCE	T(mm)	REMARKS	MAKE	F/R	WVA No
3959	17,6	2 PADS WITH WEAR SENSOR	HYUNDAI - KIA	F	23891 23892 23893

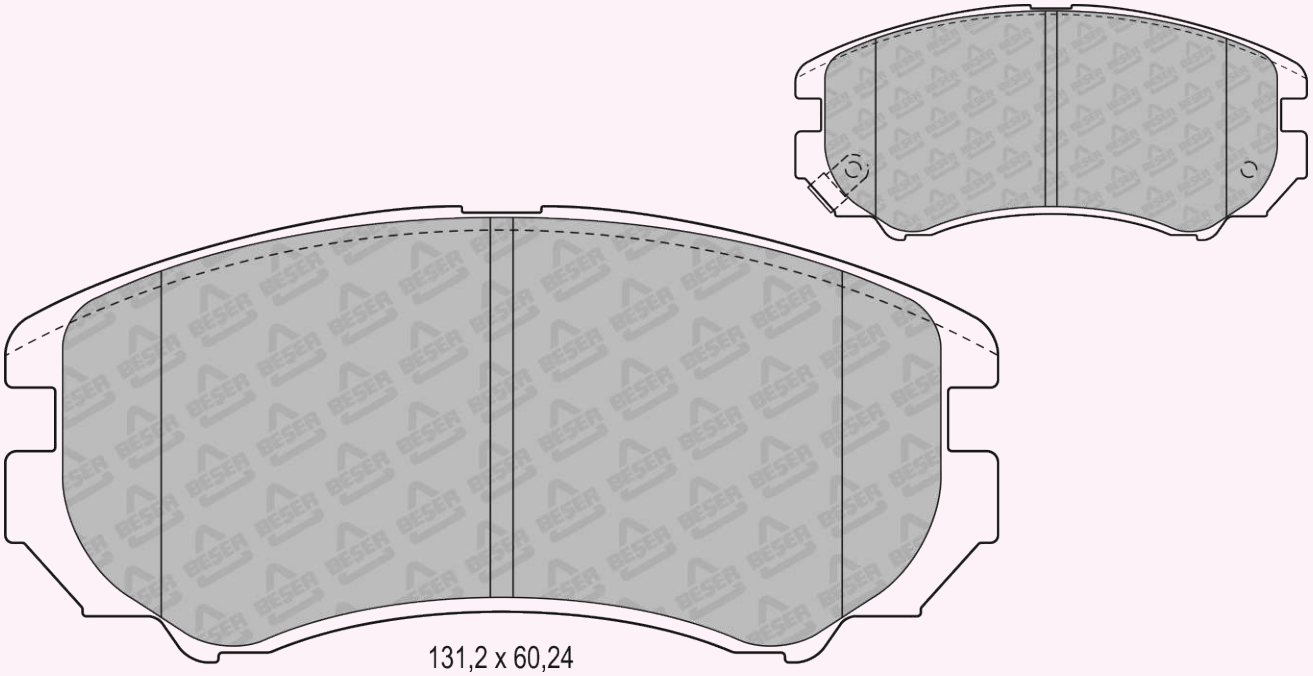

131,2 x 60,24

REFERENCE	T(mm)	REMARKS	MAKE	F/R	WVA No
3960	17,0	2 PADS WITH WEAR SENSOR	HAWTAI - HYUNDAI KIA - SSANGYONG	F	24351 24568 24569

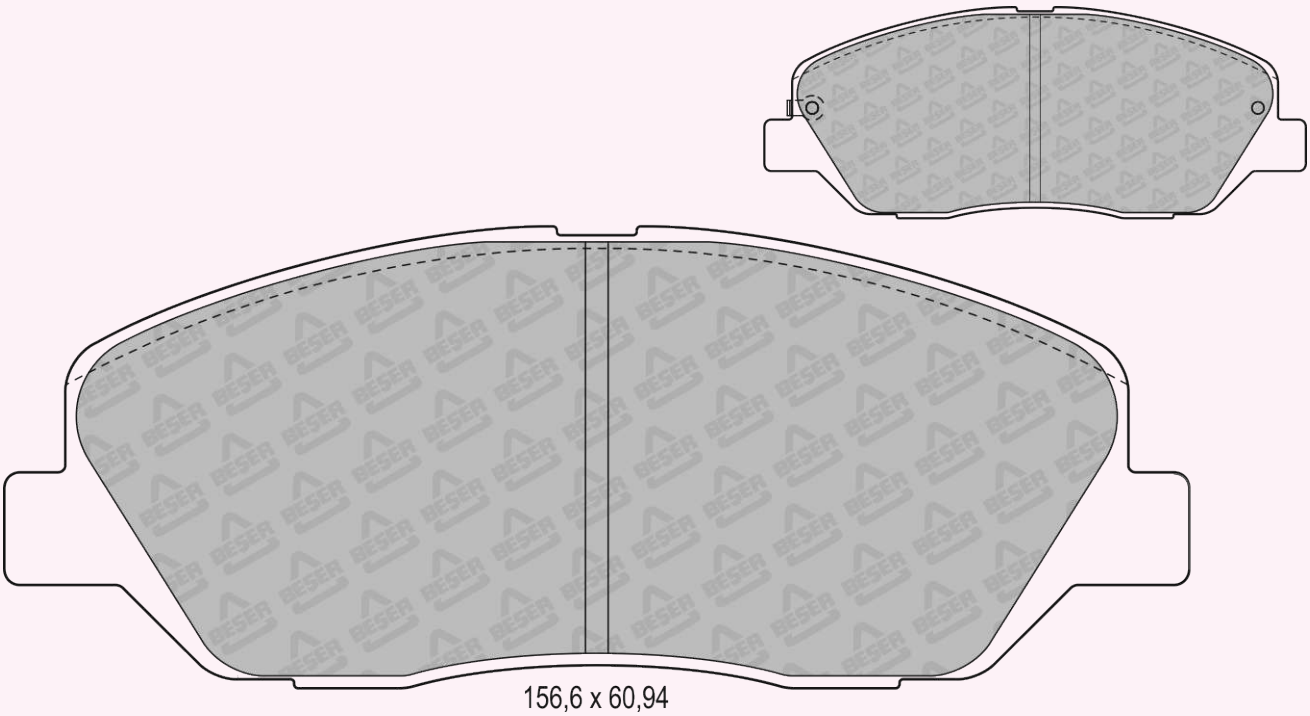

156,6 x 60,94

REFERENCE	T(mm)	REMARKS	MAKE	F/R	WVA No
3961	17,8	2 PADS WITH WEAR SENSOR	HYUNDAI	F	24031 24032 24033

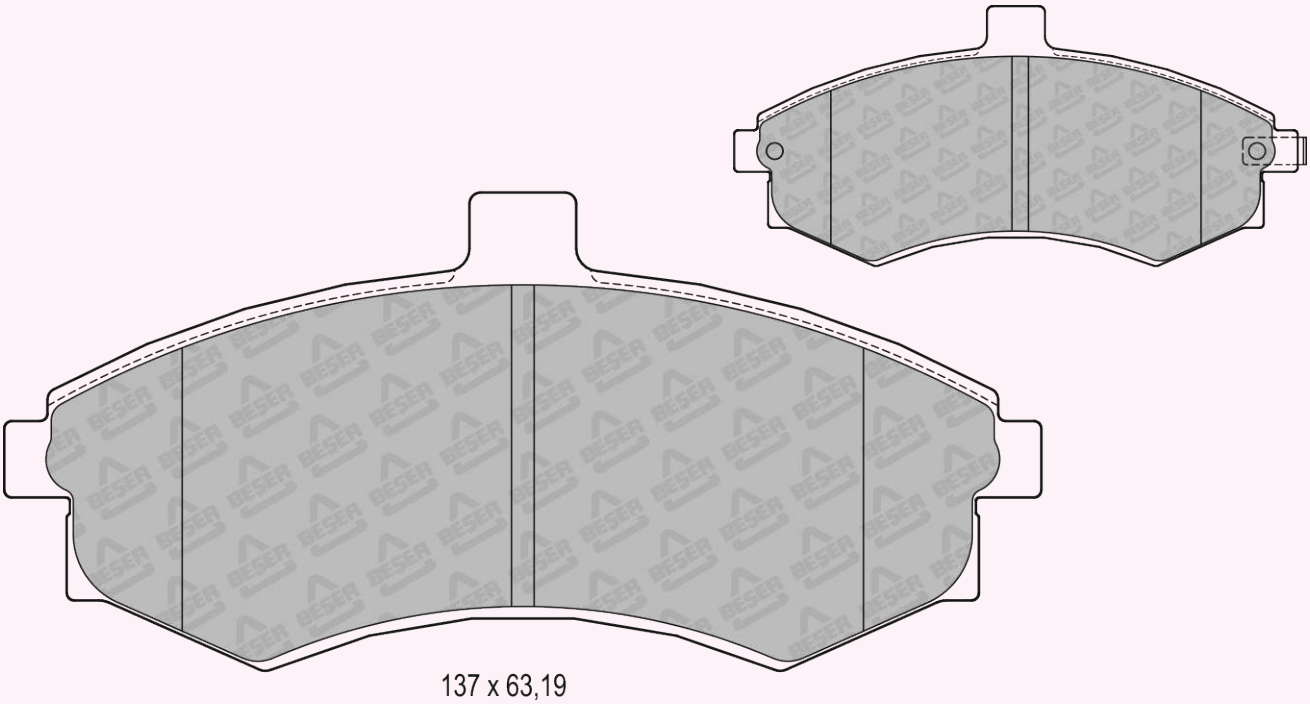

137 x 63,19

REFERENCE	T(mm)	REMARKS	MAKE	F/R	WVA No
3962	20,1	4 PADS PLAIN	MERCEDES BENZ - VW	F	29200

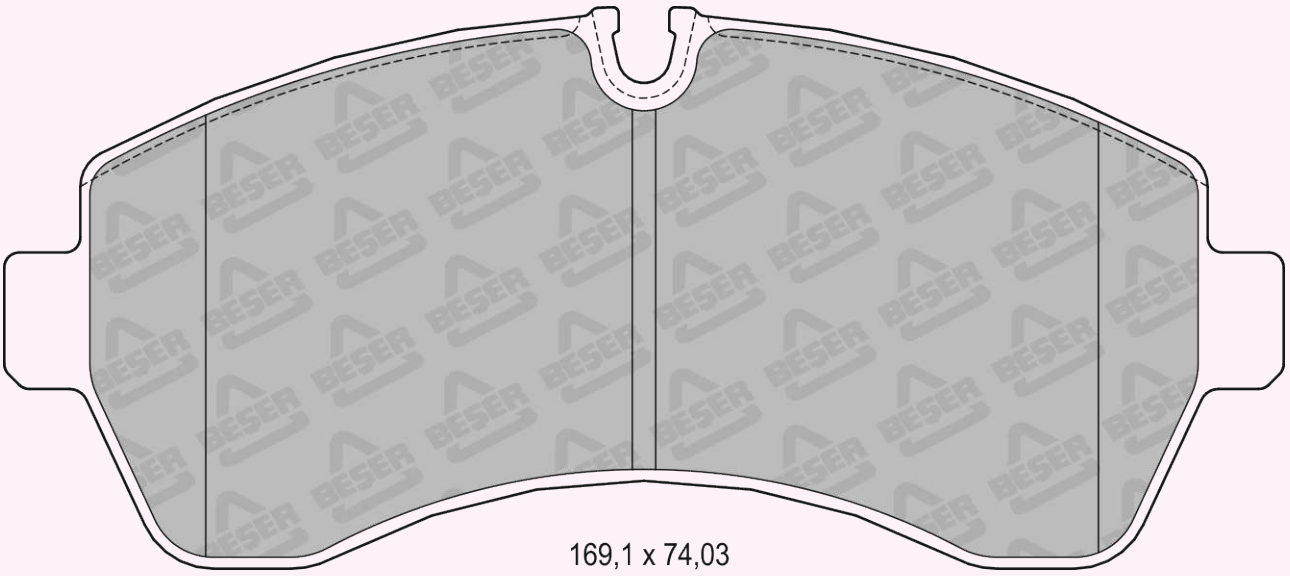

169,1 x 74,03

REFERENCE	T(mm)	REMARKS	MAKE	F/R	WVA No
3962/1	20,1	2 PADS WITH WEAR SENSOR	MERCEDES BENZ - VW	F	29200

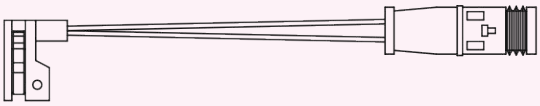

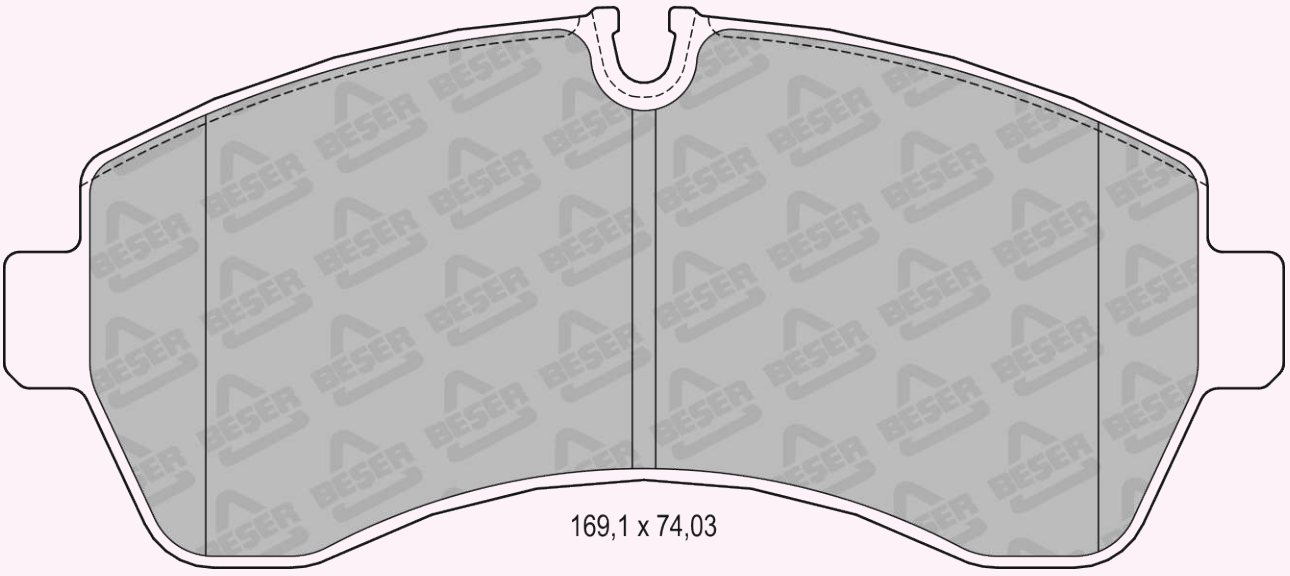

169,1 x 74,03

REFERENCE	T(mm)	REMARKS	MAKE	F/R	WVA No
3963	20,7	4 PADS PLAIN	MERCEDES BENZ - VW	R	29217

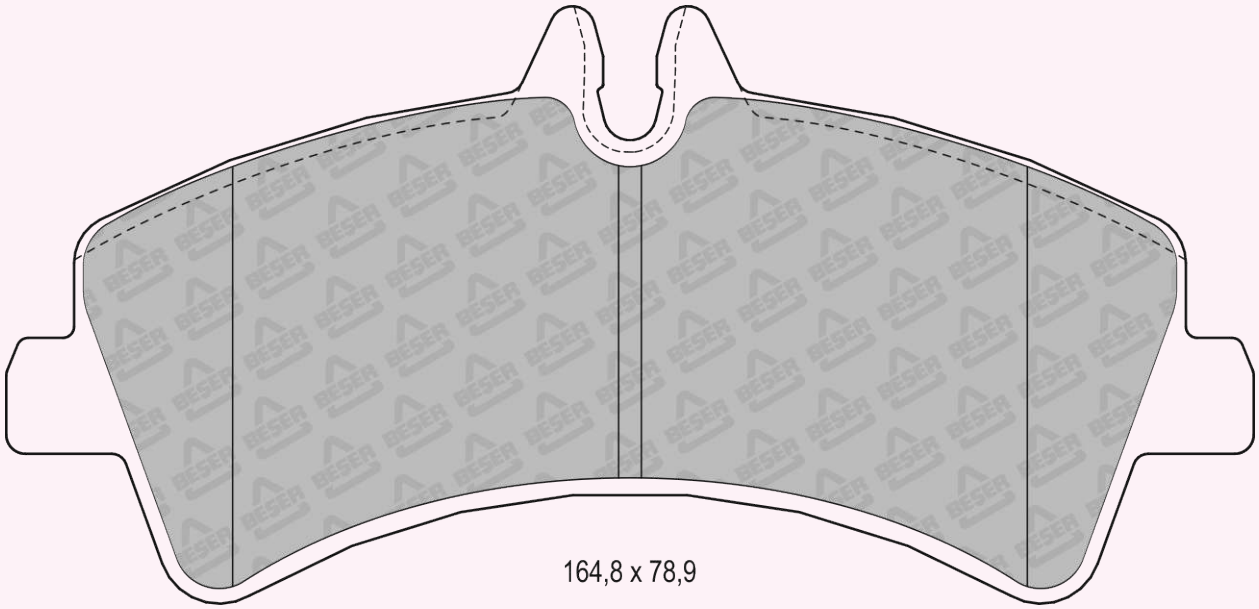

REFERENCE	T(mm)	REMARKS	MAKE	F/R	WVA No
3963/1	20,7	2 PADS WITH WEAR SENSOR	MERCEDES BENZ - VW	R	29217

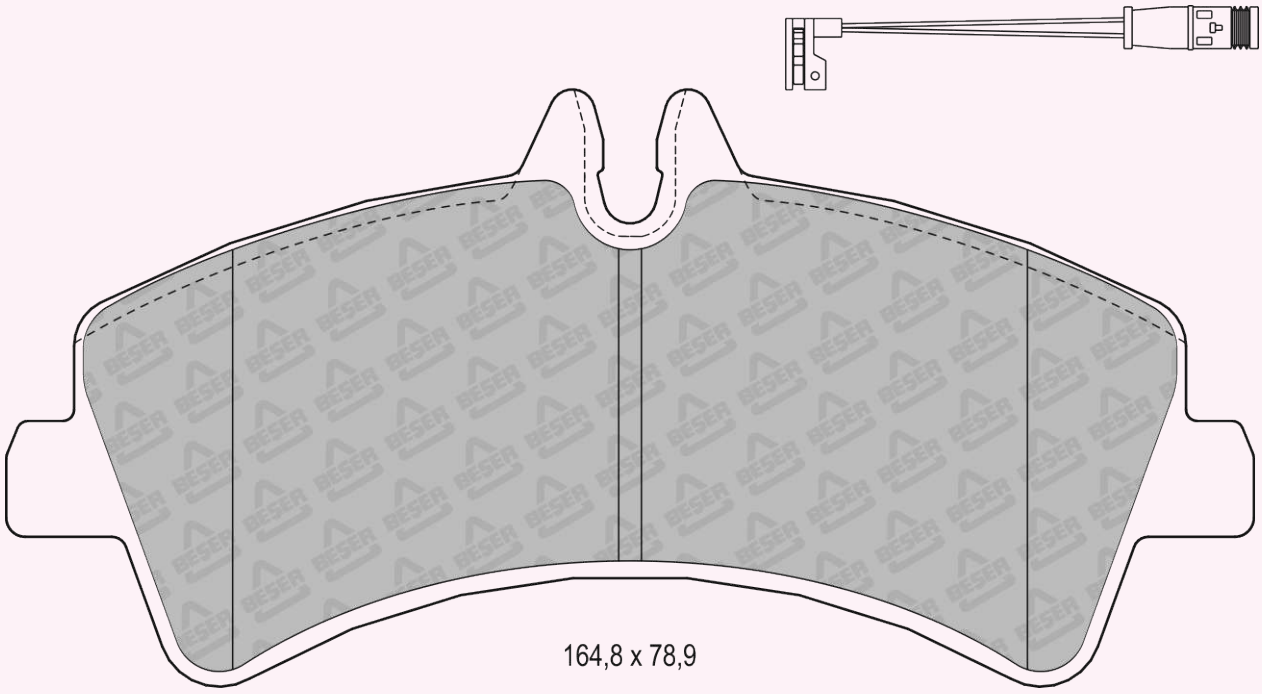

REFERENCE	T(mm)	REMARKS	MAKE	F/R	WVA No
3964	18,6 - 18,1	2 PADS INNER & 2 PADS OUTER 2 PADS PISTON CLIP	CITROEN - DS PEUGEOT	F	24538 24539

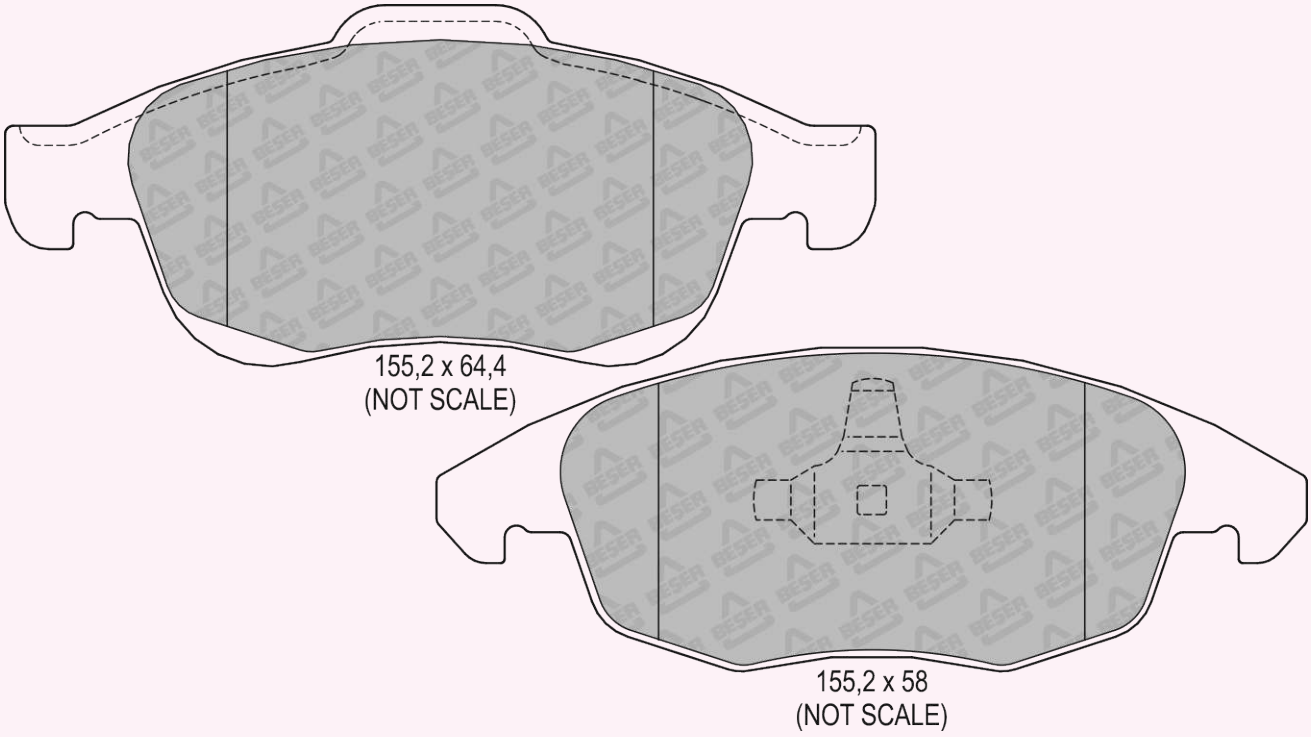

REFERENCE	T(mm)	REMARKS	MAKE	F/R	WVA No
3964/1	17,2	2 PADS INNER & 2 PADS OUTER 2 PADS PISTON CLIP	DACIA - RENAULT	F	24538 24914

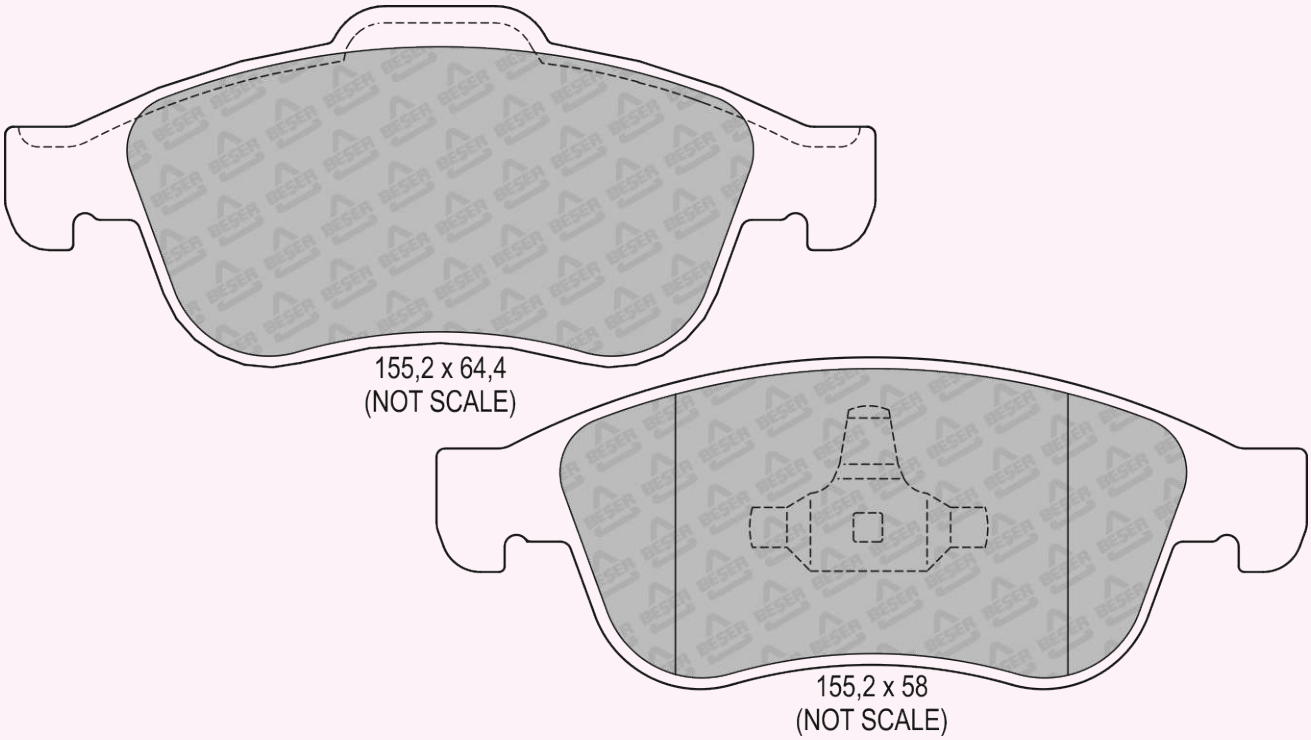

REFERENCE	T(mm)	REMARKS	MAKE	F/R	WVA No
3965	20,8	4 PADS PLAIN	IVECO	F	29229

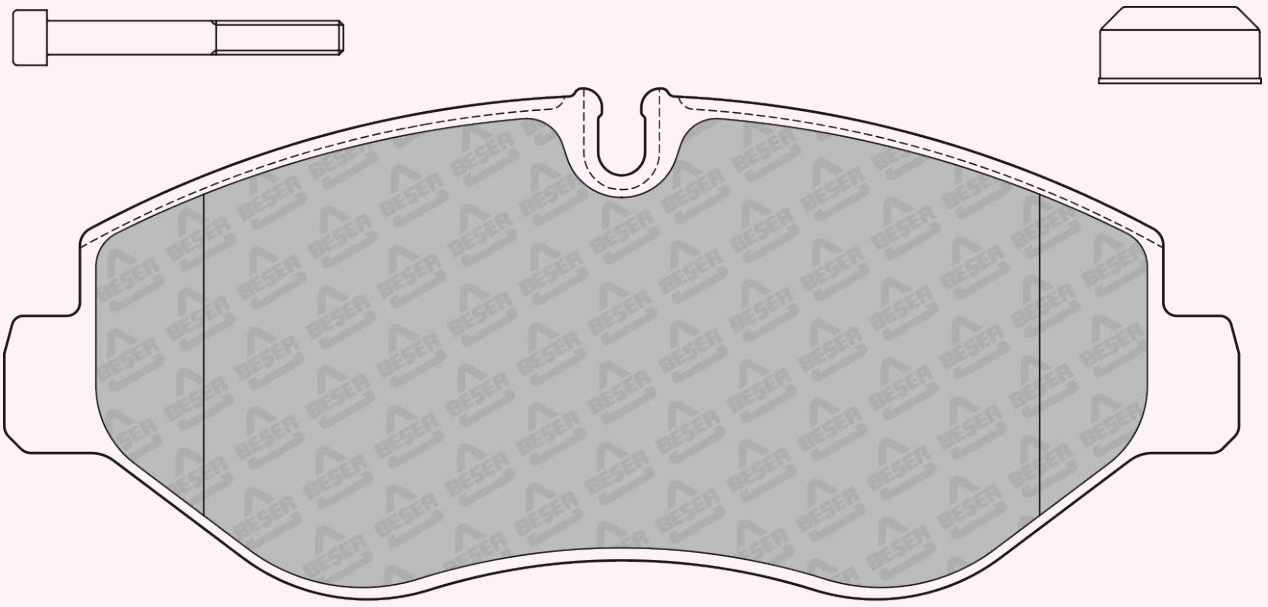

163,2 x 67,4

REFERENCE	T(mm)	REMARKS	MAKE	F/R	WVA No
3965/1	20,8	2 PADS WITH WEAR SENSOR (145 mm)	NISSAN - RENAULT	F	29229 29230

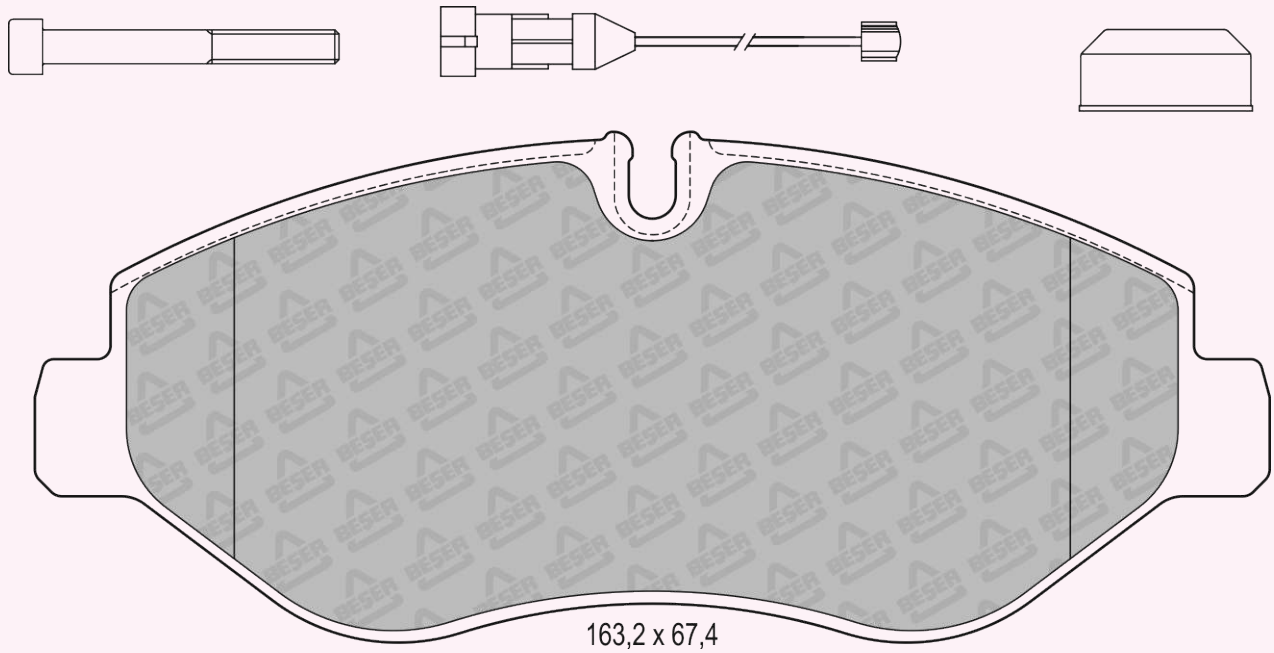

163,2 x 67,4

REFERENCE	T(mm)	REMARKS	MAKE	F/R	WVA No
3966	18,5	4 PADS WHIT CHAMFERS	MERCEDES BENZ - RENAULT	F	24693

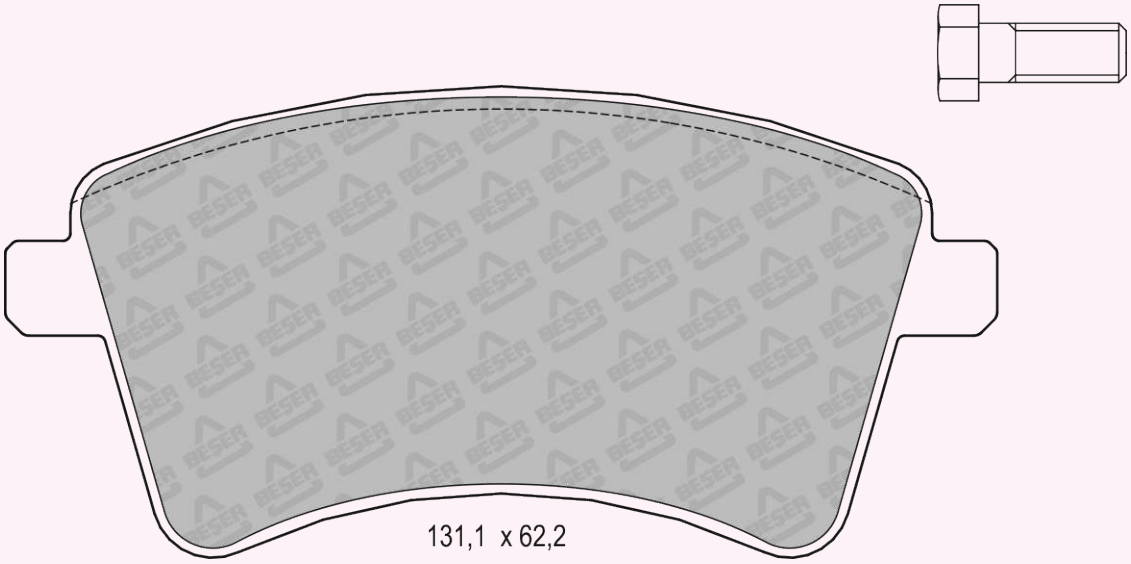

REFERENCE	T(mm)	REMARKS	MAKE	F/R	WVA No
3966/1	18,5	4 PADS WHIT CHAMFERS	MERCEDES BENZ - RENAULT	F	24693

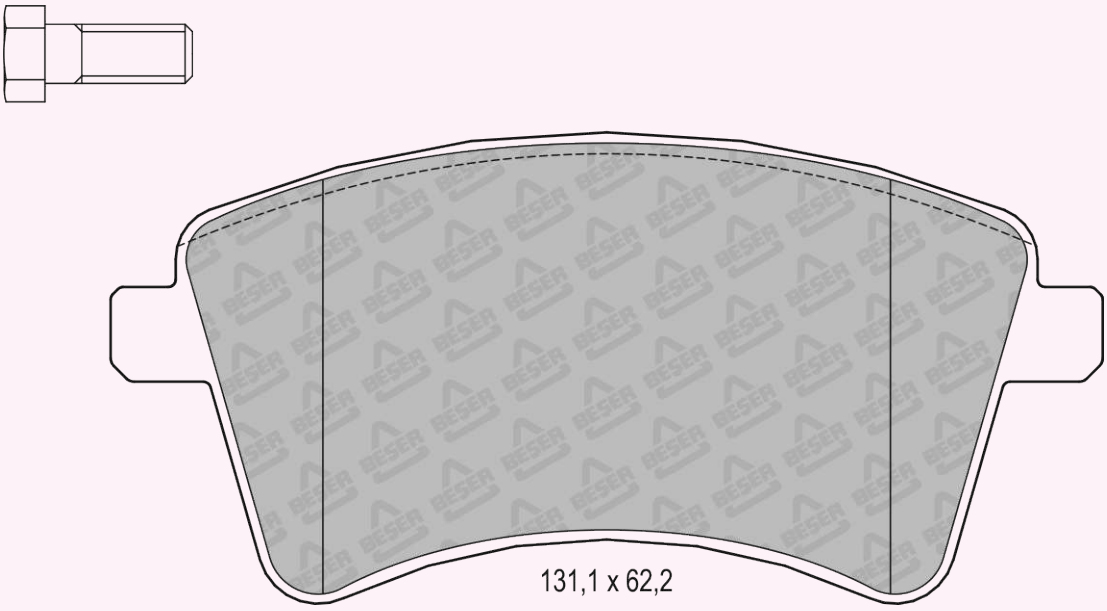

REFERENCE	T(mm)	REMARKS	MAKE	F/R	WVA No
3967	16	4 PADS WHIT CHAMFERS	RENAULT	R	24692

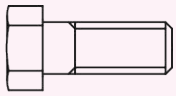

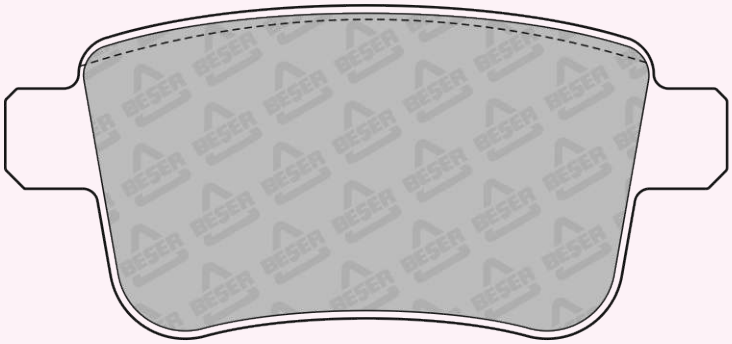

95,4 x 43,98

REFERENCE	T(mm)	REMARKS	MAKE	F/R	WVA No
3968	16	2 PADS WITH WEAR SENSOR	HYUNDAI - KIA NAZA	F	24275 24410 24411

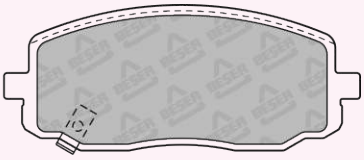

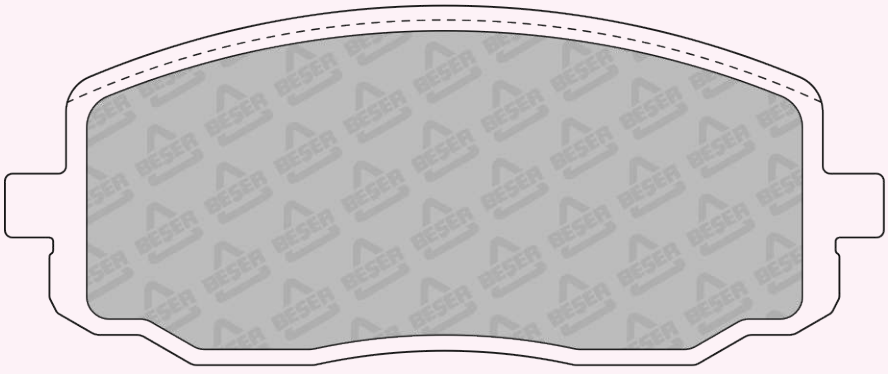

116,15 x 47,5

REFERENCE	T(mm)	REMARKS	MAKE	F/R	WVA No
3969	14,8	2 PADS WITH WEAR SENSOR	HYUNDAI - KIA	R	24276 24479 24480

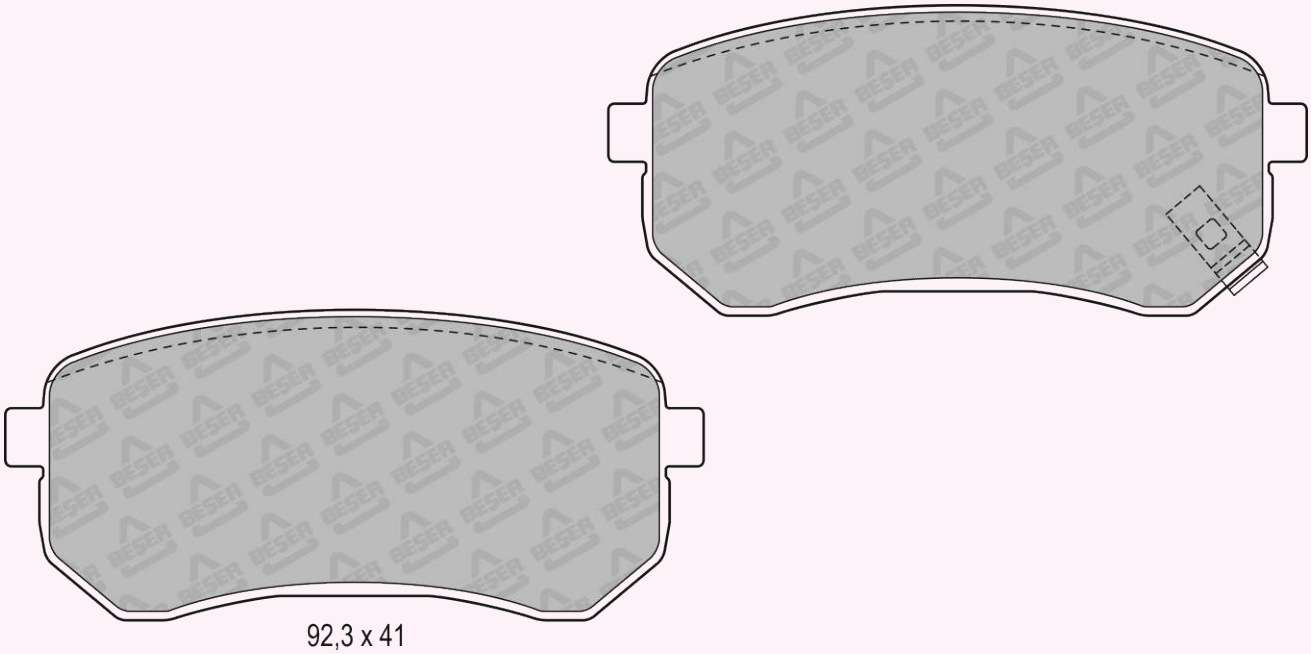

92,3 x 41

REFERENCE	T(mm)	REMARKS	MAKE	F/R	WVA No
3970	18	4 PADS PLAIN	PEUGEOT	F	24660

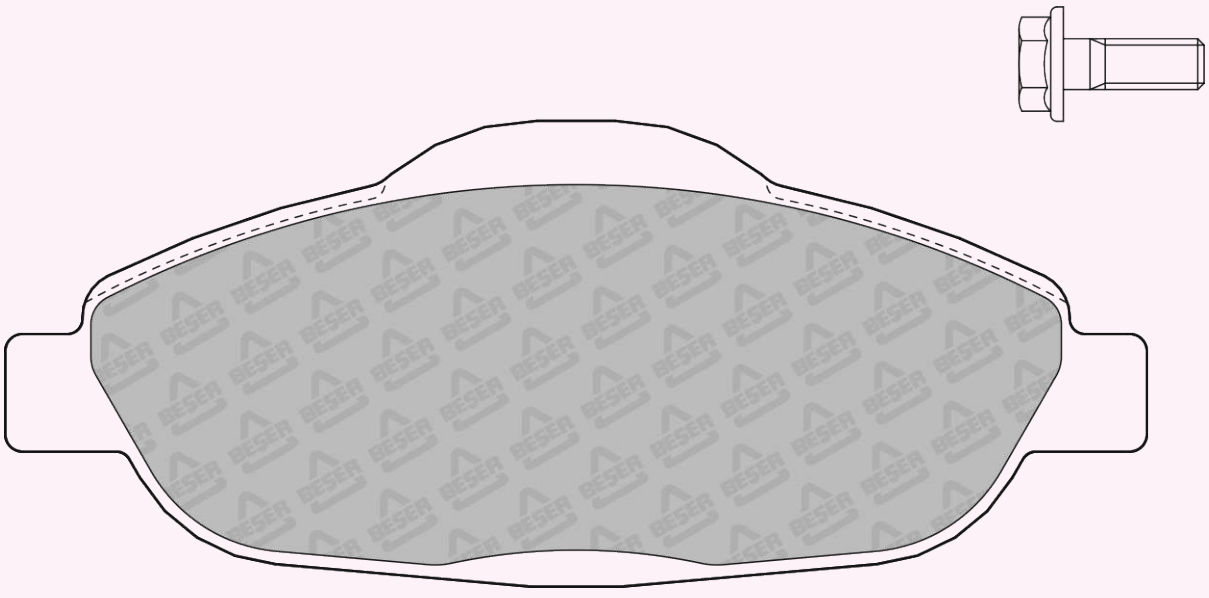

150,9 x 61,5

REFERENCE	T(mm)	REMARKS	MAKE	F/R	WVA No
3971	16,5	4 PADS PLAIN	CITROEN - PEUGEOT	R	24765

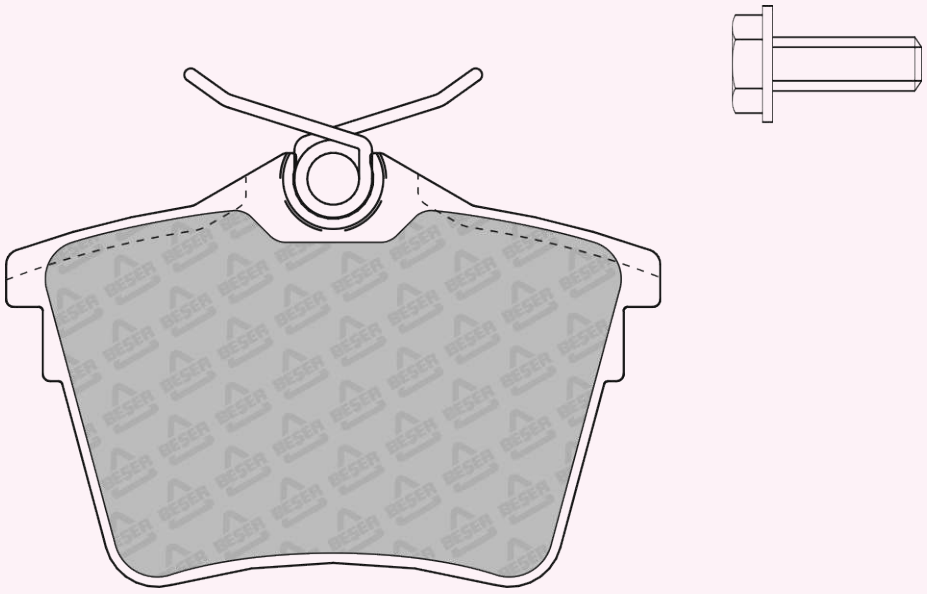

86,4 x 57,25

REFERENCE	T(mm)	REMARKS	MAKE	F/R	WVA No
3972	18,5	1 PAD WITH WEAR SENSOR	CITROEN - FIAT PEUGEOT - TOYOTA	F	24595 24608

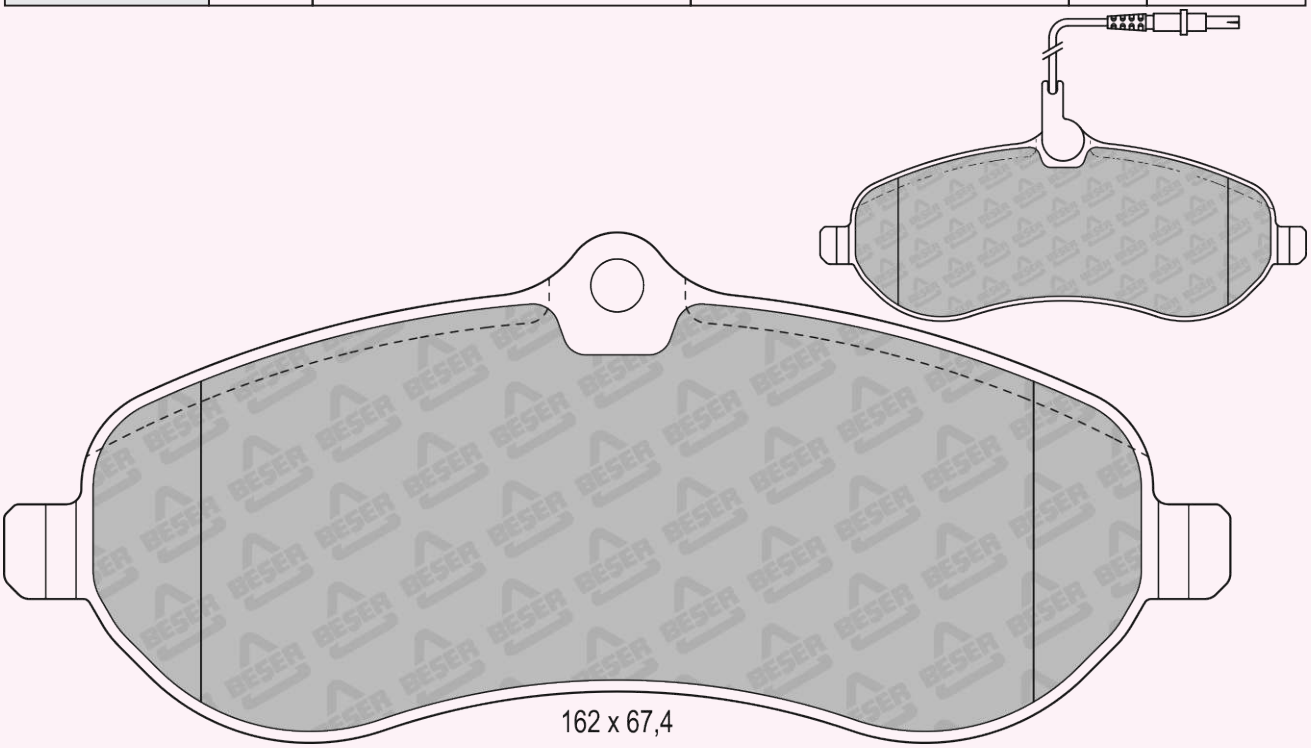

162 x 67,4

REFERENCE	T(mm)	REMARKS	MAKE	F/R	WVA No
3974	15	2 PADS INNER & 2 PADS OUTER	GEELY - HAFEI	---	-----

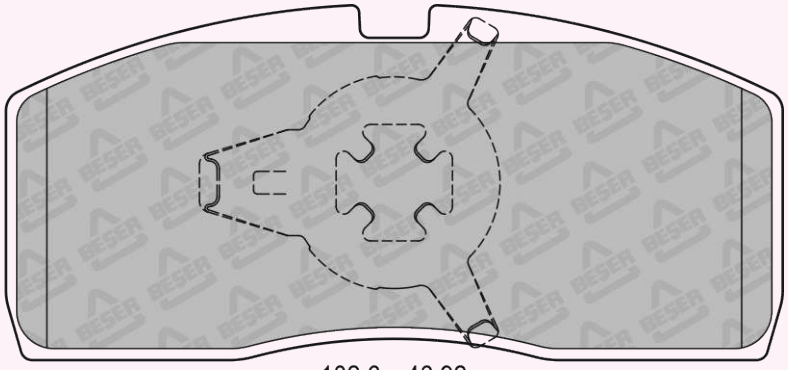

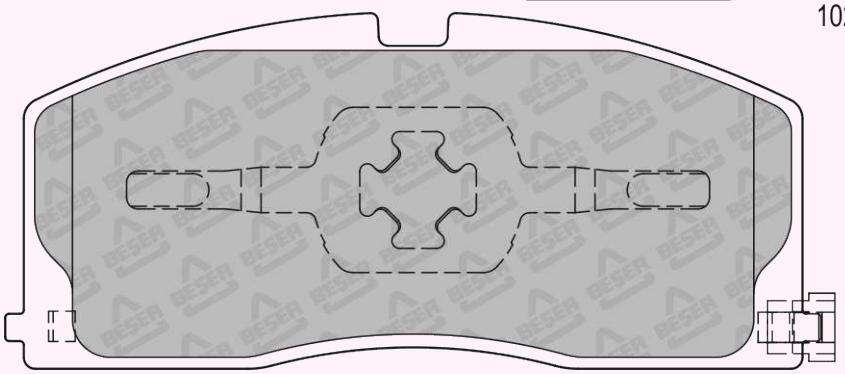

REFERENCE	T(mm)	REMARKS	MAKE	F/R	WVA No
3975	15,9	1 PAD WITH WEAR SENSOR	MITSUBISHI	F	24529 24530

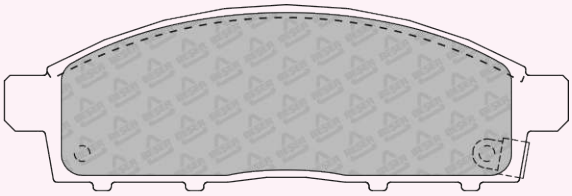

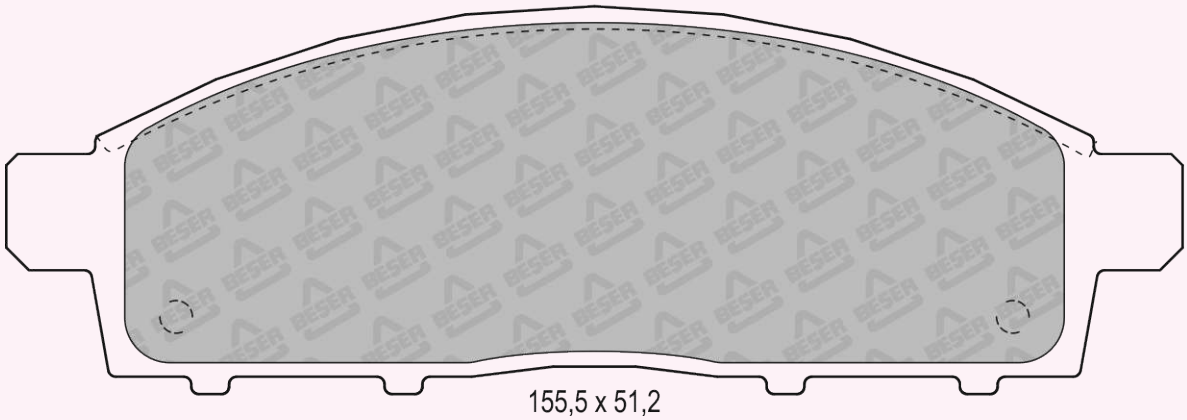

REFERENCE	T(mm)	REMARKS	MAKE	F/R	WVA No
3976	16,5	2 PADS WITH WEAR SENSOR	CHEVROLET - DAEWOO - HOLDEN OPEL - VAUXHALL	F	24510 24511 24512

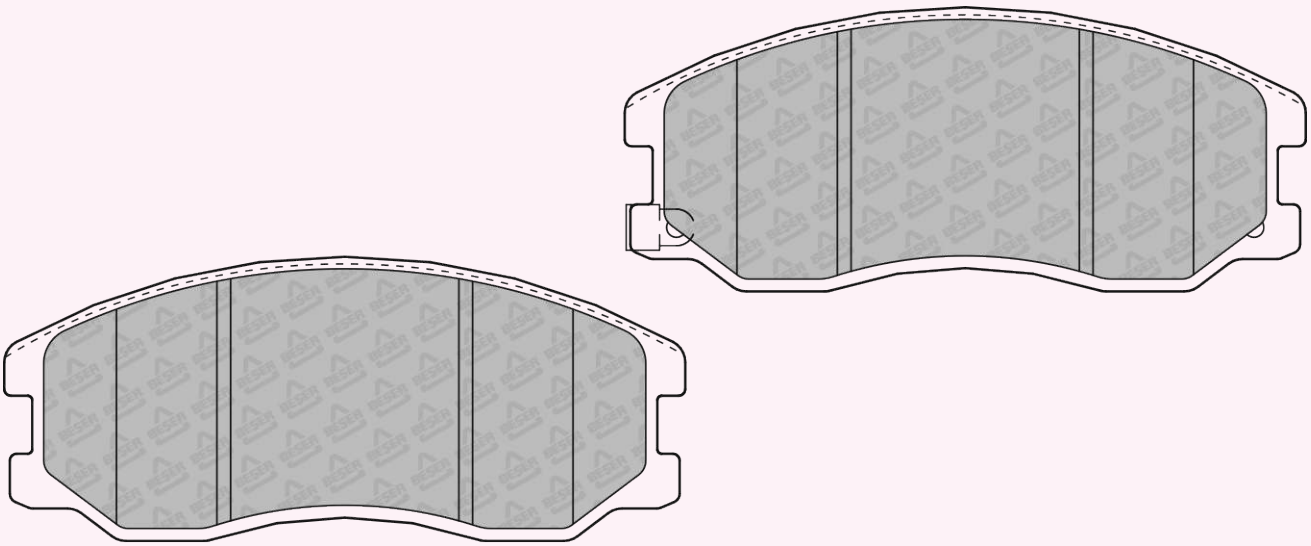

149,15 x 62,11
(NOT SCALE)

REFERENCE	T(mm)	REMARKS	MAKE	F/R	WVA No
3976/1	16,5	2 PADS WITH WEAR SENSOR	HYUNDAI - KIA SSANGYONG	F	23726 23727 23728

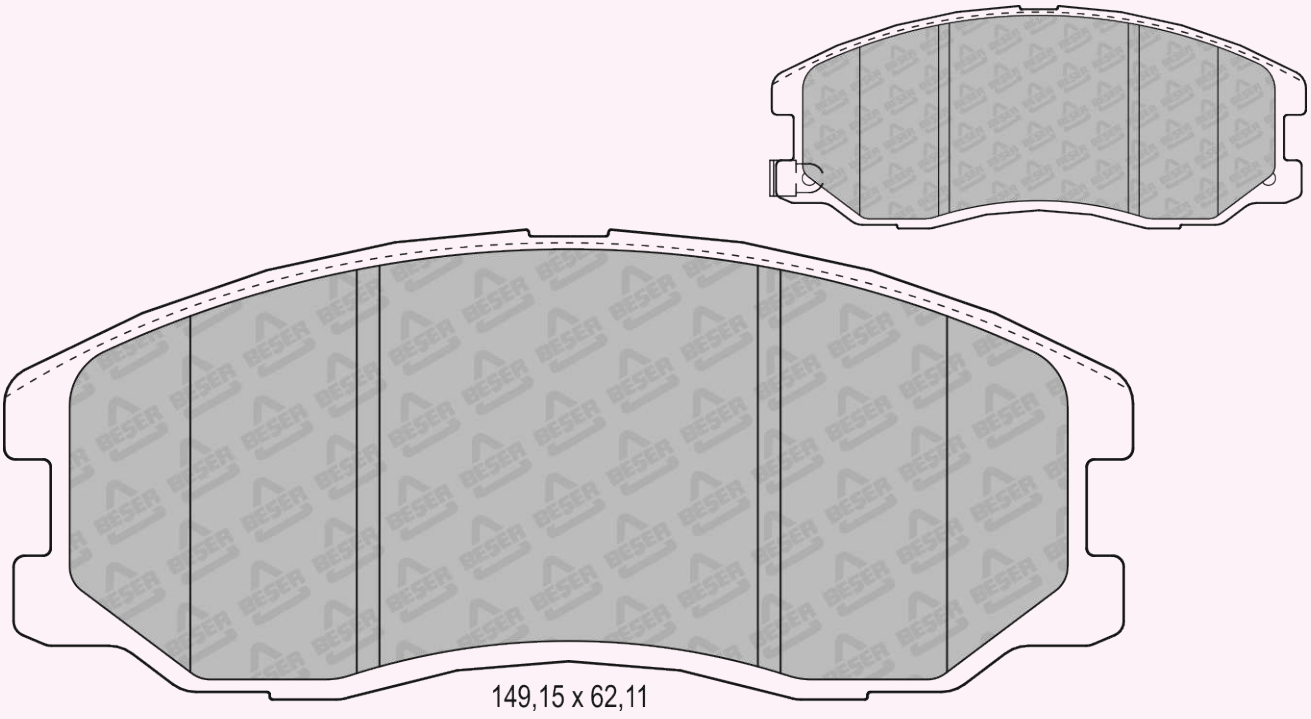

149,15 x 62,11

REFERENCE	T(mm)	REMARKS	MAKE	F/R	WVA No
3978	17,3 - 14,3	2 PADS WITH WEAR SENSOR	KIA	F	24092 24178 24179

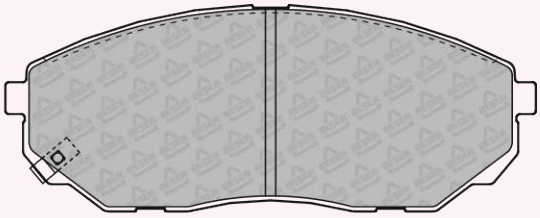

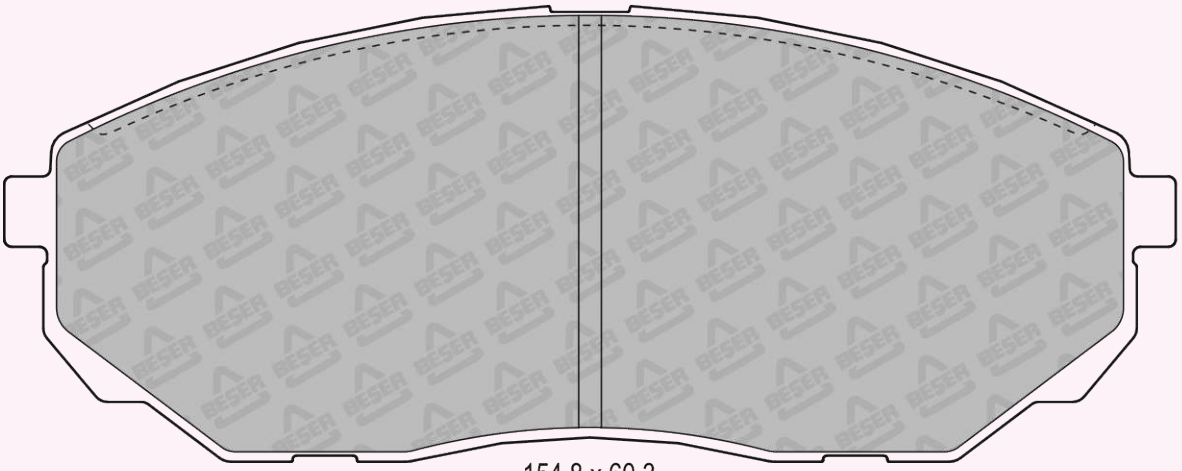

154,8 x 60,3

REFERENCE	T(mm)	REMARKS	MAKE	F/R	WVA No
3979	14,5-15,8	2 PADS WITH WEAR SENSOR	KIA	R	23993 23997 24058

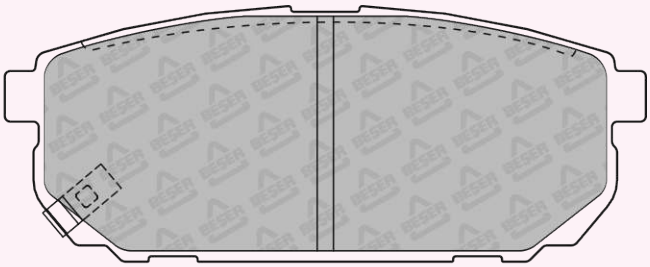

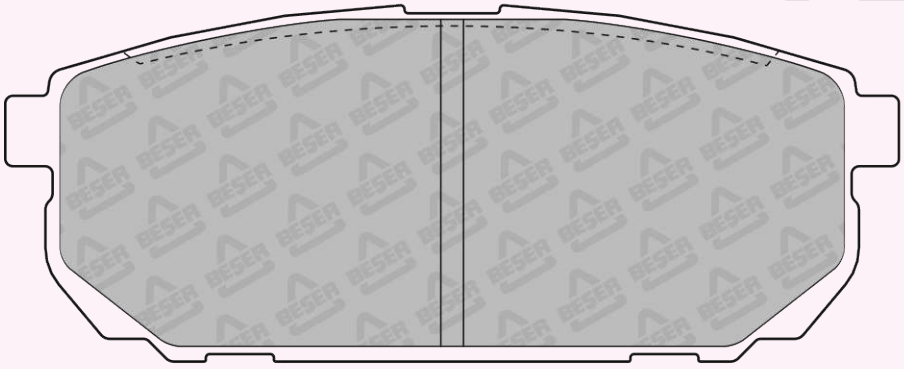

118,1 x 47,04

REFERENCE	T(mm)	REMARKS	MAKE	F/R	WVA No
3980	15,5	2 PADS WITH WEAR SENSOR	HYUNDAI - KIA	R	24320 24321 24322

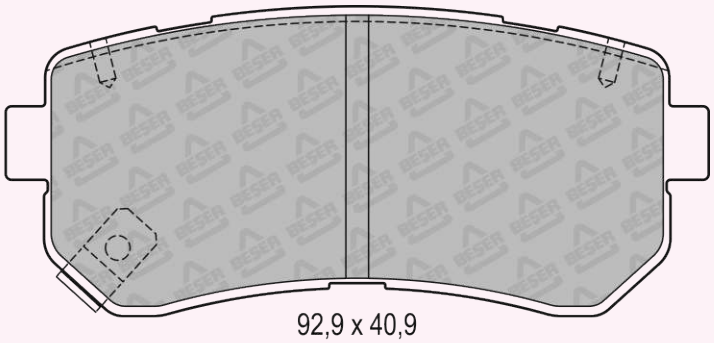

92,9 x 40,9

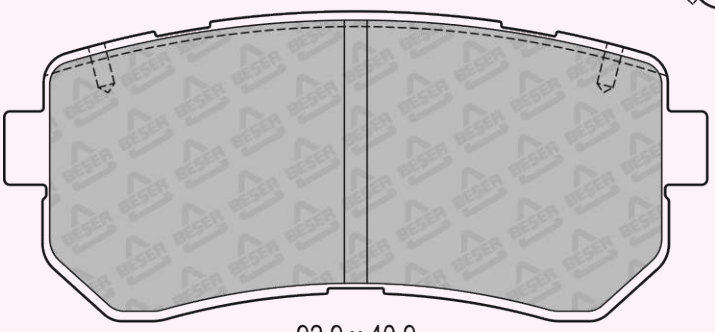

92,9 x 40,9

REFERENCE	T(mm)	REMARKS	MAKE	F/R	WVA No
3981	19,2	1 PAD WITH WEAR SENSOR (135 mm)	CITROEN - FIAT PEUGEOT	F	24468 24469

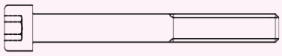

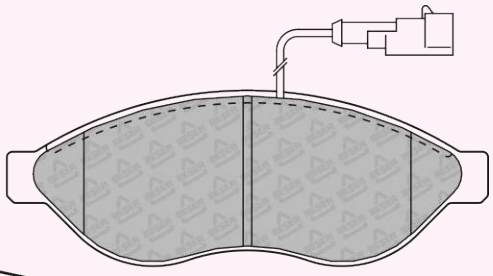

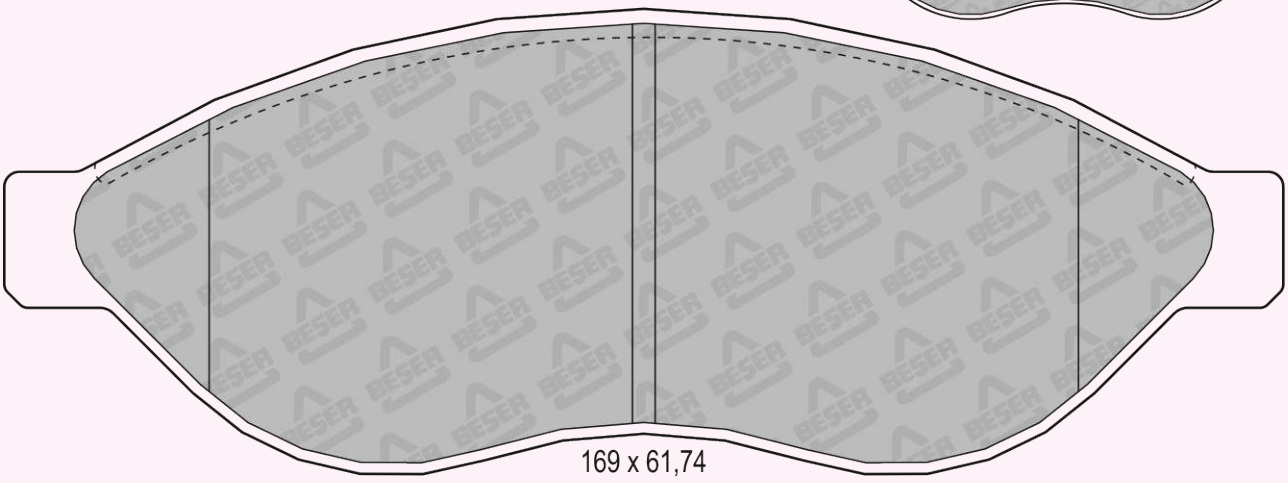

169 x 61,74

REFERENCE	T(mm)	REMARKS	MAKE	F/R	WVA No
3982	16,2	2 PADS WITH WEAR SENSOR	CHRYSLER - TOYOTA	F	24523 24633 24634

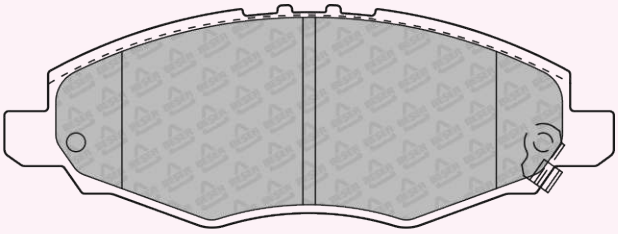

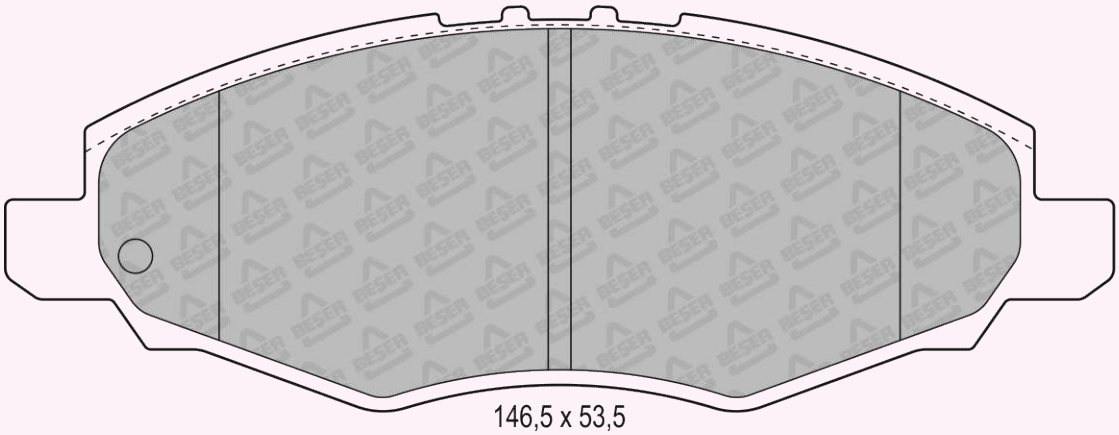

146,5 x 53,5

REFERENCE	T(mm)	REMARKS	MAKE	F/R	WVA No
3983	17,3	4 PADS PLAIN	DACIA - LADA - MERCEDES BENZ NISSAN - RENAULT	F	23973

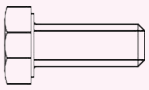

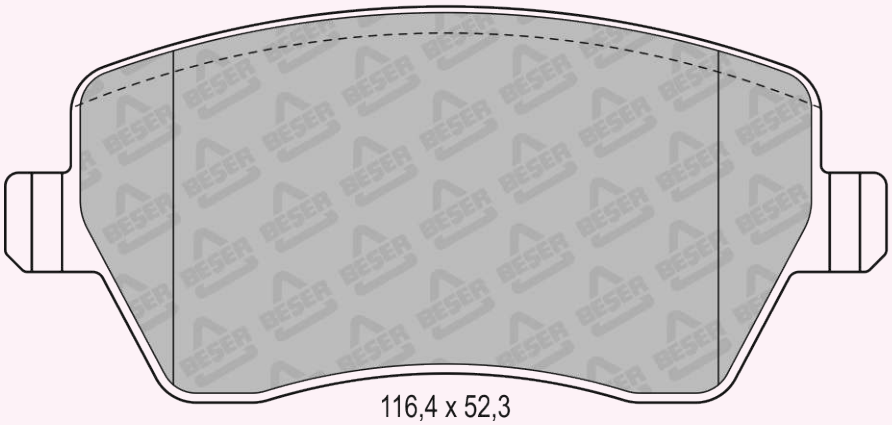

116,4 x 52,3

REFERENCE	T(mm)	REMARKS	MAKE	F/R	WVA No
3983/1	16,5	1 PAD WITH WEAR SENSOR	OPEL - SUZUKI VAUXHALL	F	23973 24403

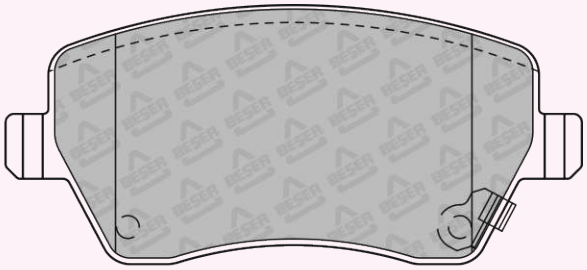

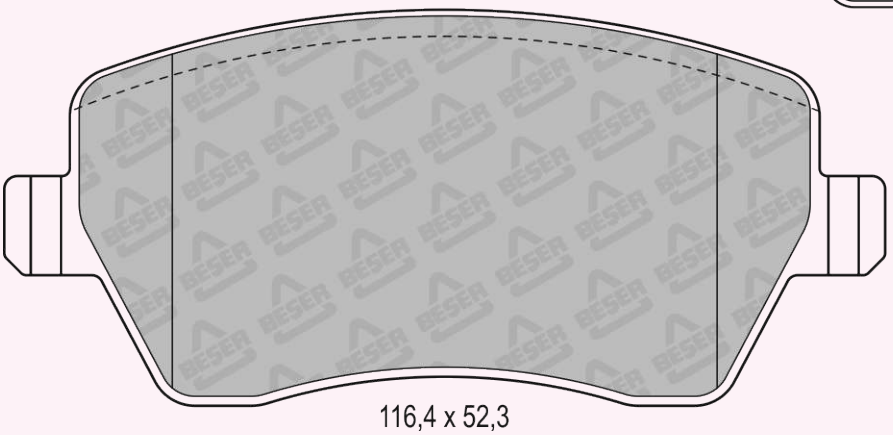

116,4 x 52,3

REFERENCE	T(mm)	REMARKS	MAKE	F/R	WVA No
3983/2	17,3	2 PAD WITH WEAR SENSOR	NISSAN	F	23973 24403

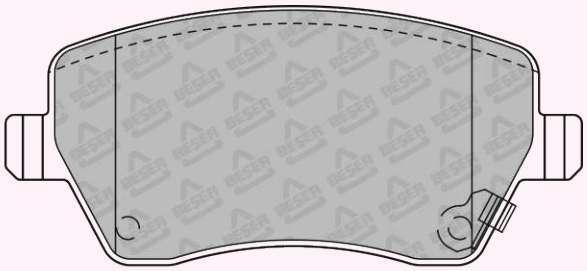

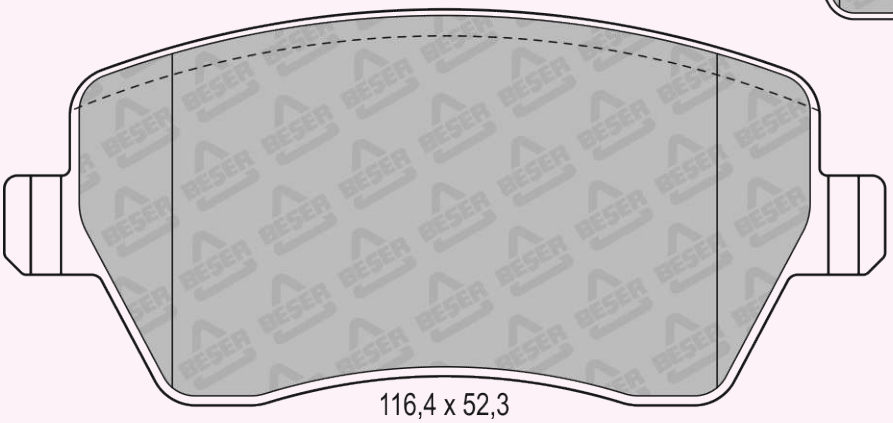

116,4 x 52,3

REFERENCE	T(mm)	REMARKS	MAKE	F/R	WVA No
3983/3	17,3	4 PADS PLAIN	NISSAN	F	23973 24403

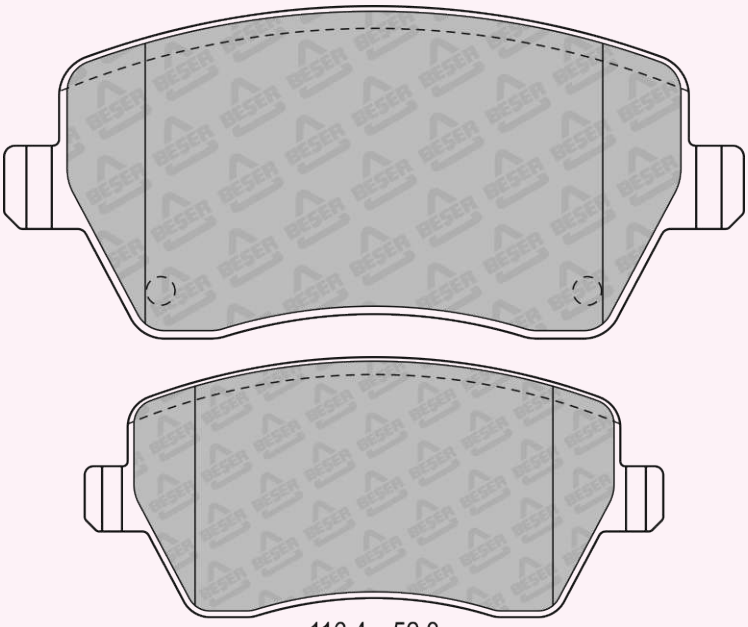

116,4 x 52,3
(NOT SCALE)

REFERENCE	T(mm)	REMARKS	MAKE	F/R	WVA No
3984	17,6	4 PADS PLAIN	CITROEN - PEUGEOT	R	24150

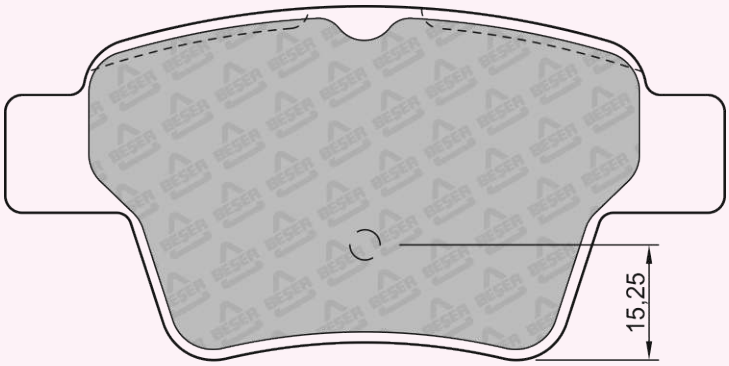

95 x 46,83

REFERENCE	T(mm)	REMARKS	MAKE	F/R	WVA No
3984/1	17,6	4 PADS PLAIN	CITROEN - PEUGEOT	R	24737

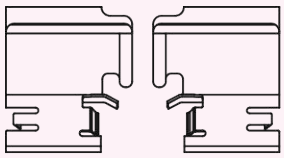

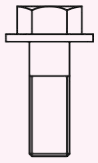

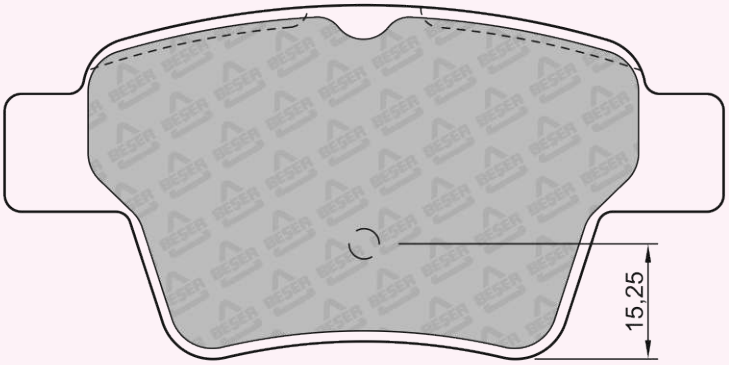

95 x 46,83

REFERENCE	T(mm)	REMARKS	MAKE	F/R	WVA No
3985	16-16,6	2 PADS WITH WEAR SENSOR	HYUNDAI	F	24277 24397 24398

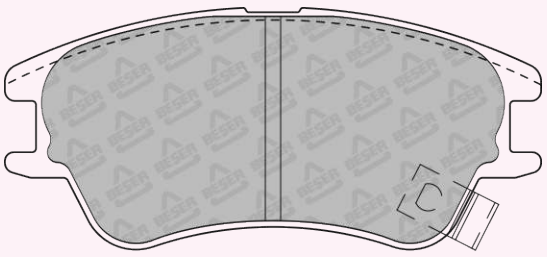

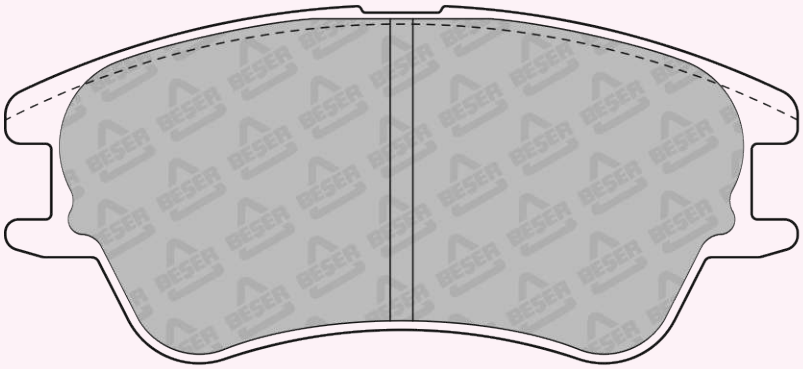

104,7x 47,16

REFERENCE	T(mm)	REMARKS	MAKE	F/R	WVA No
3986	18,8	1 PAD WITH WEAR SENSOR (180mm)	CITROEN - FIAT LANCIA - PEUGEOT	F	20261 20267

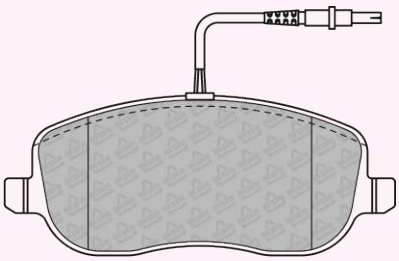

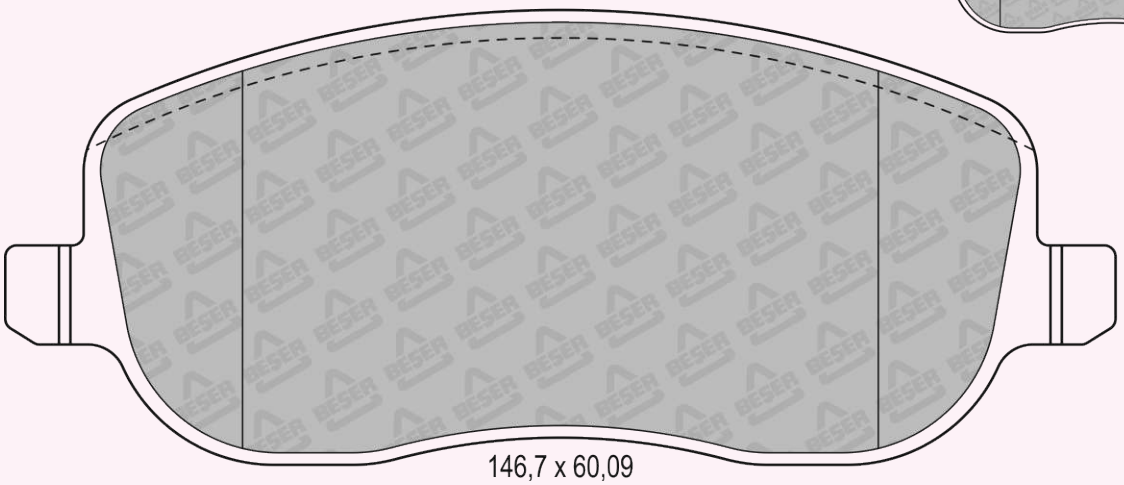

146,7 x 60,09

REFERENCE	T(mm)	REMARKS	MAKE	F/R	WVA No
3987	17,3	4 PADS PLAIN	CITROEN - PEUGEOT TOYOTA	F	23959

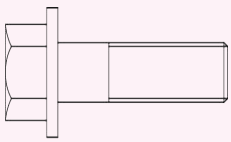

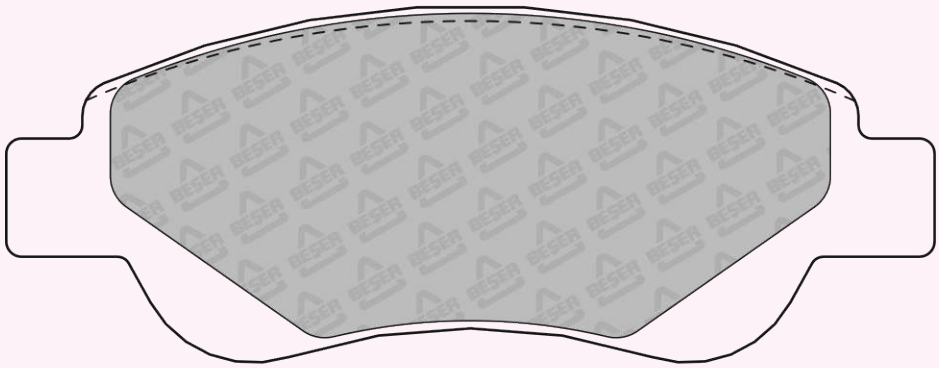

122,7 x 47,13

REFERENCE	T(mm)	REMARKS	MAKE	F/R	WVA No
3988	15,5	4 PADS PLAIN	FORD - MAZDA	F	24353

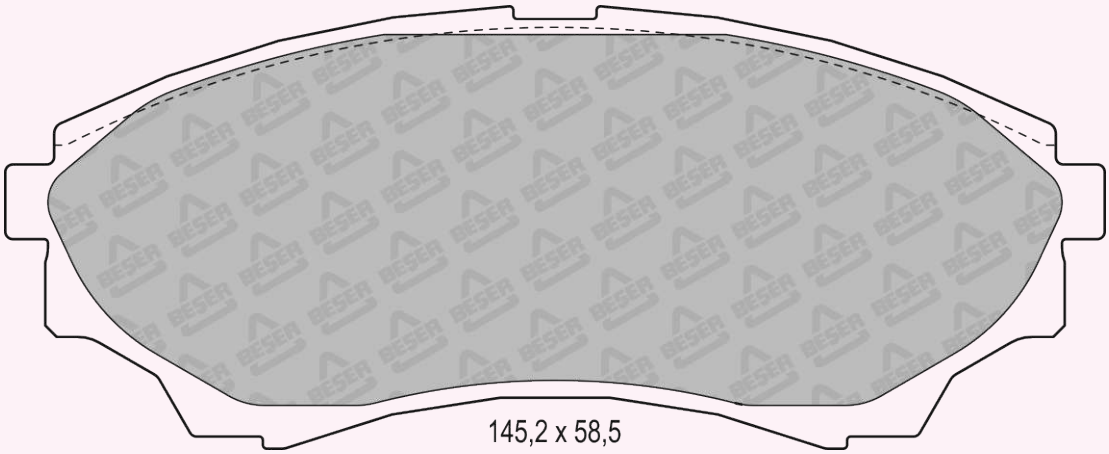

REFERENCE	T(mm)	REMARKS	MAKE	F/R	WVA No
3988/1	15,2	1 PAD WITH WEAR SENSOR	FORD - MAZDA	F	24353 24672

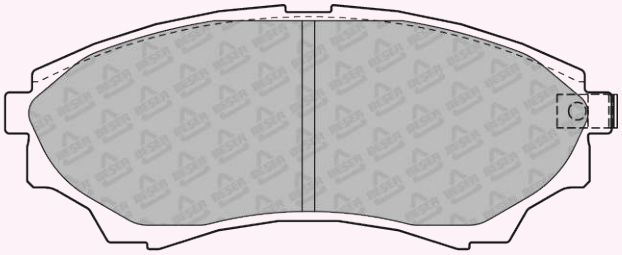

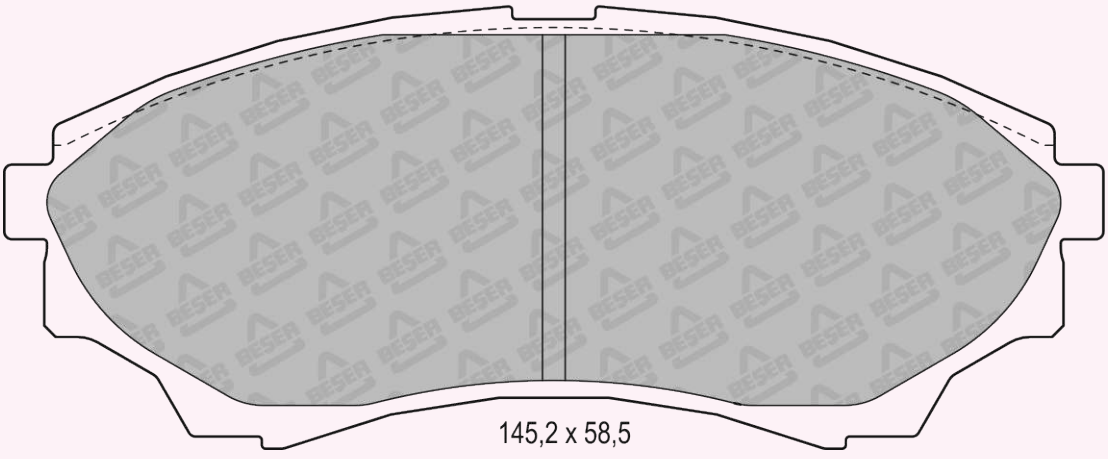

REFERENCE	T(mm)	REMARKS	MAKE	F/R	WVA No
3989	14,8	2 PADS WITH WEAR SENSOR	HAWTAI - HYUNDAI	R	24488 24489 24490

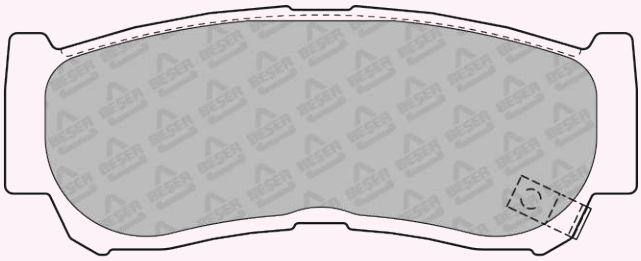

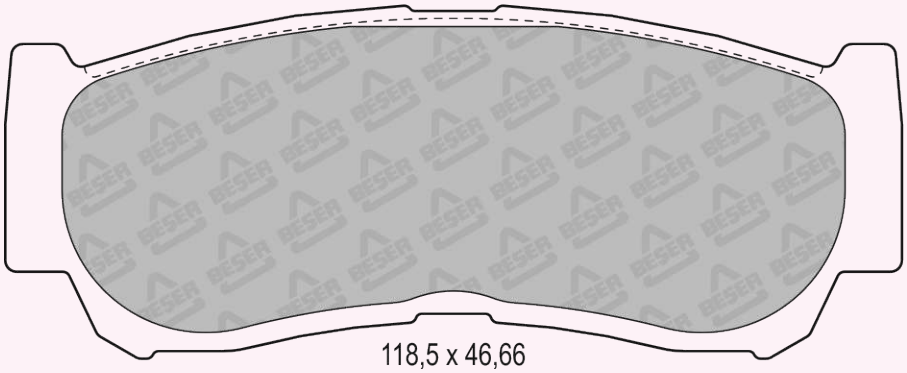

118,5 x 46,66

REFERENCE	T(mm)	REMARKS	MAKE	F/R	WVA No
3993	15,7	2 PADS WITH WEAR SENSOR	HYUNDAI - JAC - KIA	F	23543 23544 23545

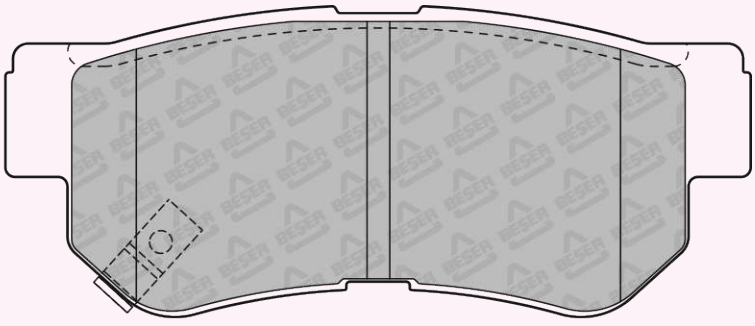

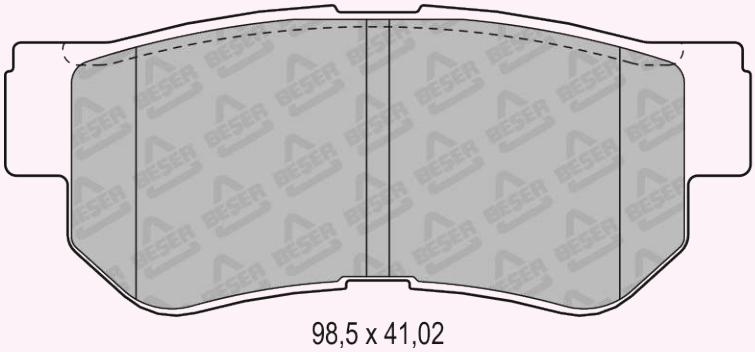

98,5 x 41,02

REFERENCE	T(mm)	REMARKS	MAKE	F/R	WVA No
3994	22	4 PADS PLAIN	IRISBUS - IVECO	F	29122

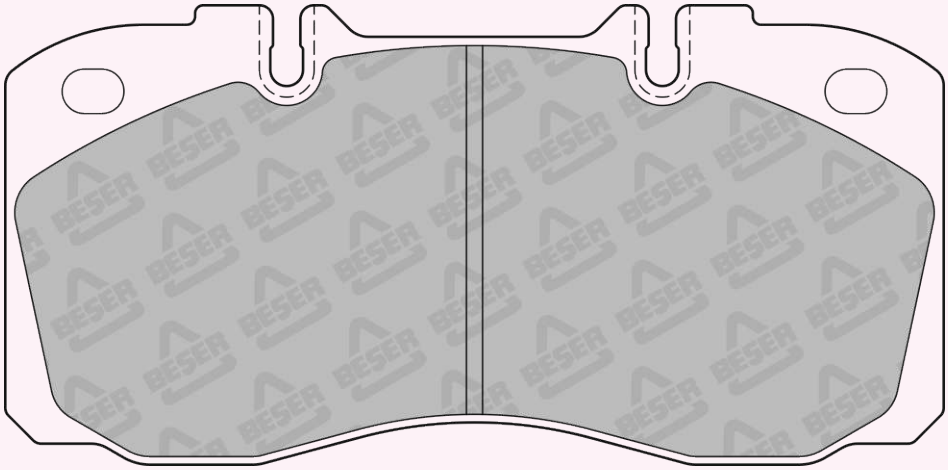

174,6 x 85,3
(NOT SCALE)

REFERENCE	T(mm)	REMARKS	MAKE	F/R	WVA No
3994/1	22	2 PADS WITH WEAR SENSOR	IRISBUS - IVECO	F	29122

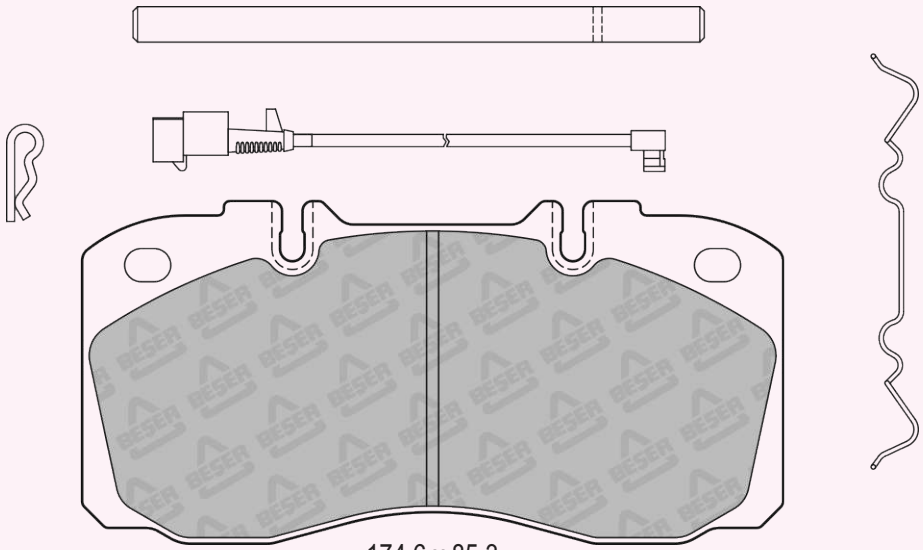

174,6 x 85,3
(NOT SCALE)

REFERENCE	T(mm)	REMARKS	MAKE	F/R	WVA No
3995	23	4 PADS PLAIN	IRISBUS - IVECO	R	29231

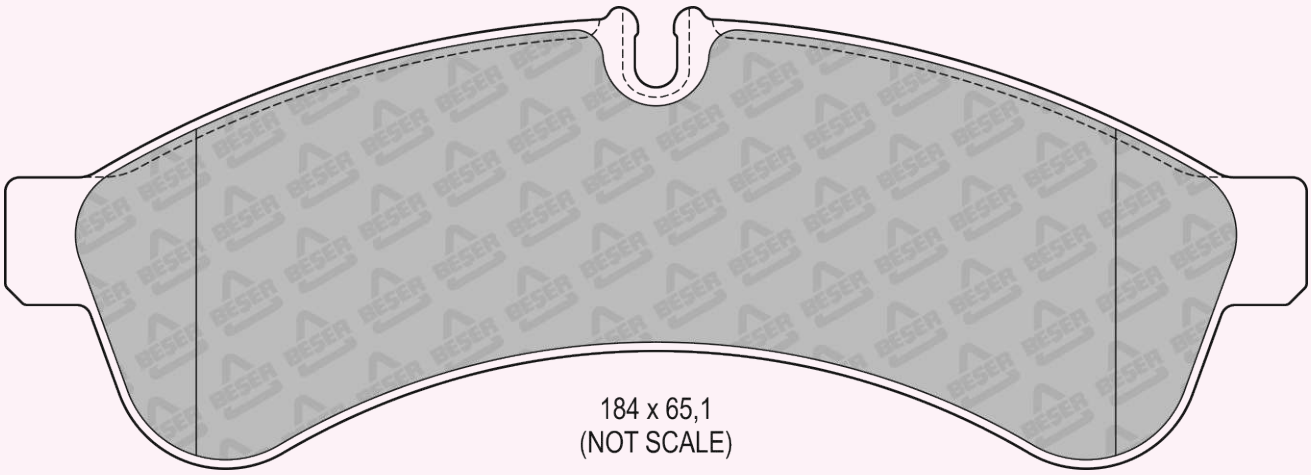

REFERENCE	T(mm)	REMARKS	MAKE	F/R	WVA No
3995/1	23	2 PADS WITH WEAR SENSOR	IRISBUS - IVECO	R	29231

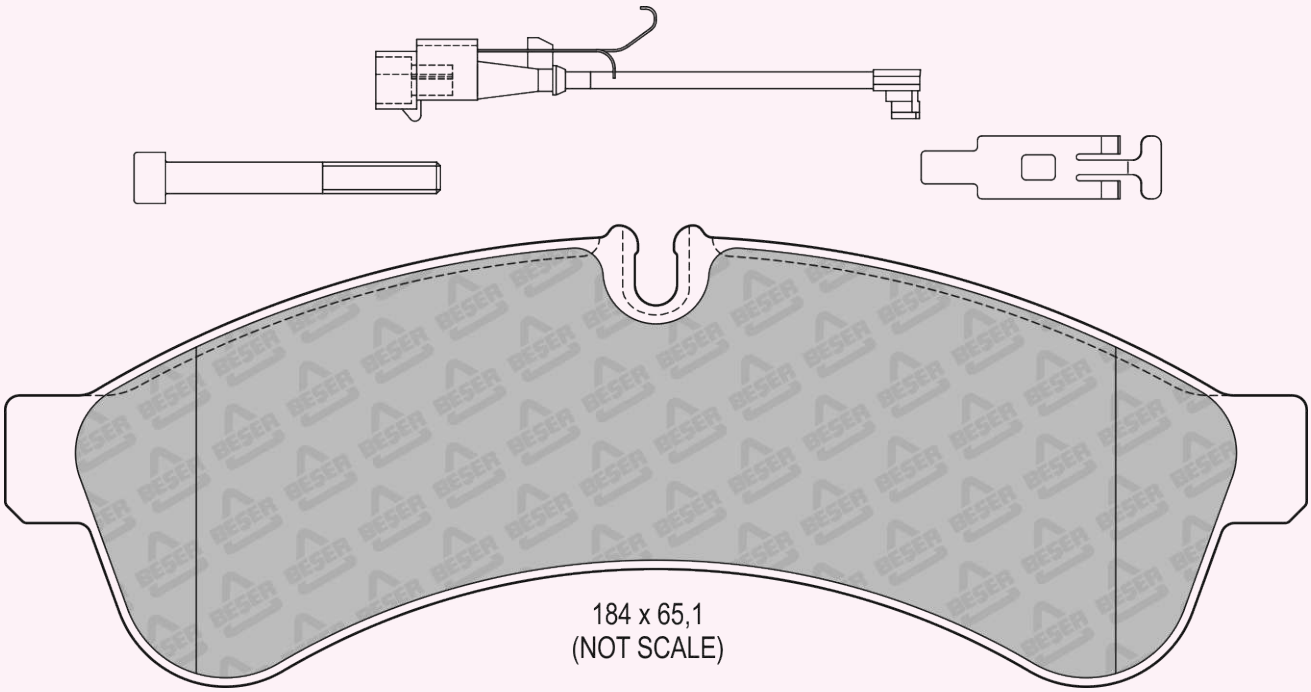

REFERENCE	T(mm)	REMARKS	MAKE	F/R	WVA No
3996	19	2 PADS WITH WEAR SENSOR	LEXUS - TOYOTA	F	24386 24394 24395

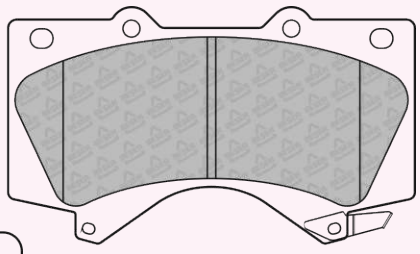

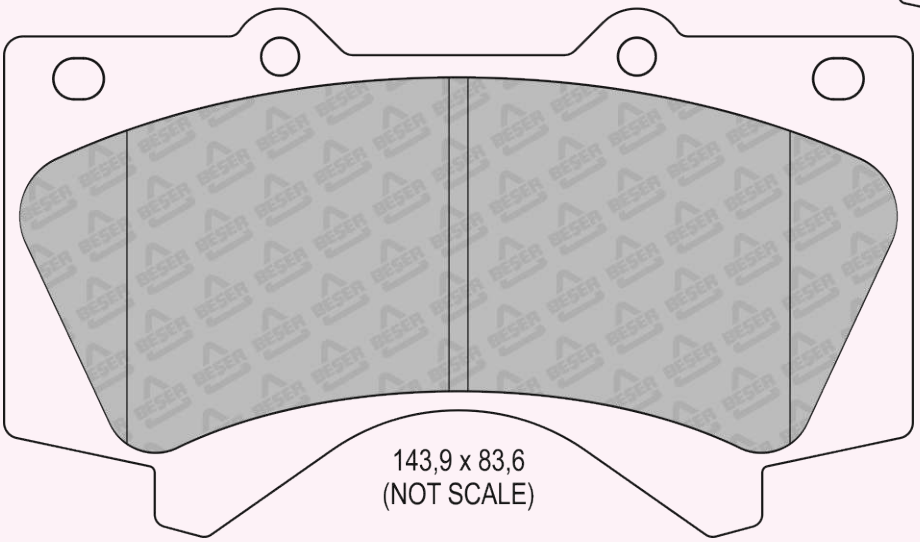

REFERENCE	T(mm)	REMARKS	MAKE	F/R	WVA No
3997	17,4	4 PADS PLAIN	LEXUS - TOYOTA	R	24653

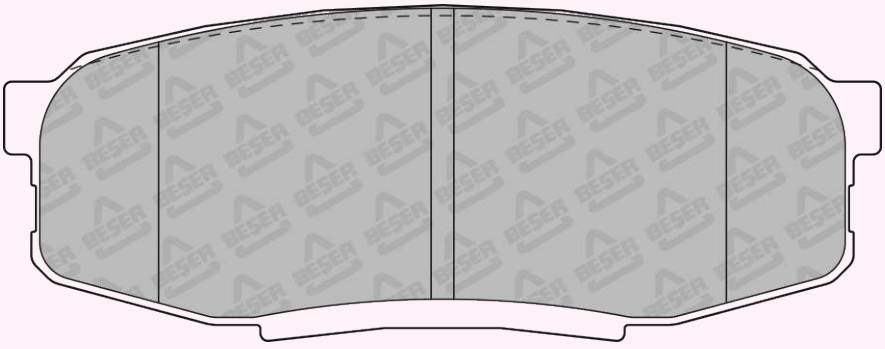

115,8 x 44,3

REFERENCE	T(mm)	REMARKS	MAKE	F/R	WVA No
3998	15,5	4 PADS PLAIN	TOYOTA	F	25246

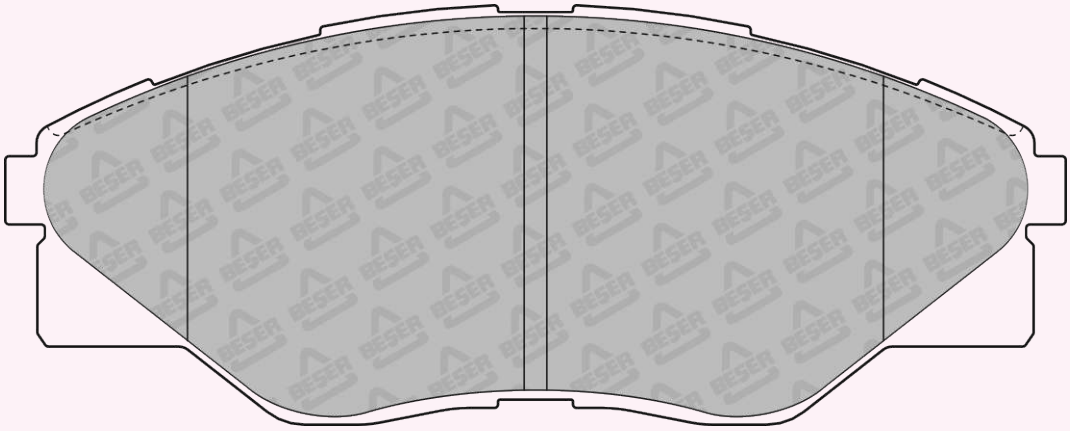

140,15 x 55,29

REFERENCE	T(mm)	REMARKS	MAKE	F/R	WVA No
4000	16,25	4 PADS PLAIN	SUZUKI	F	24301

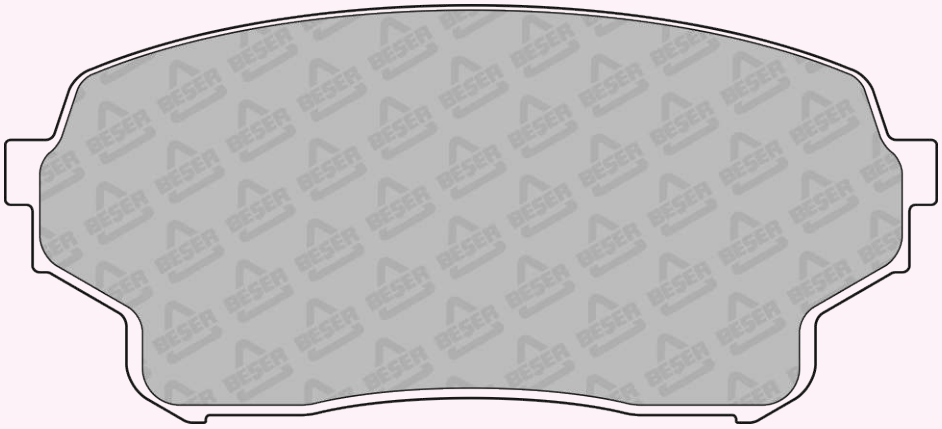

123,1 x 55,34

REFERENCE	T(mm)	REMARKS	MAKE	F/R	WVA No
4001	17,25 17,8	2 PADS WITH WEAR SENSOR	KIA	F	24218 24219 24220

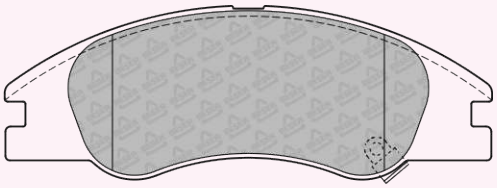

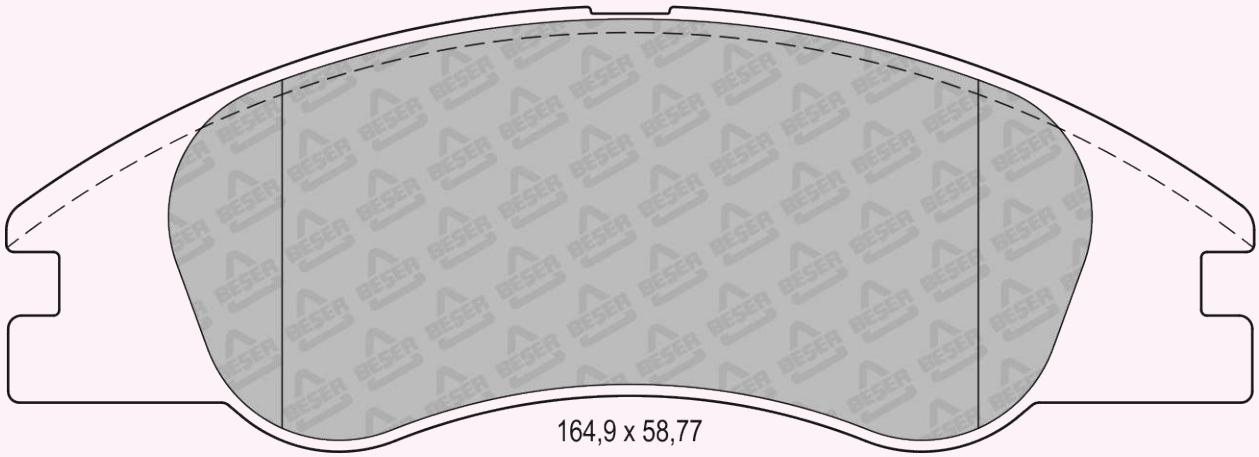

164,9 x 58,77

REFERENCE	T(mm)	REMARKS	MAKE	F/R	WVA No
4002	17	4 PADS PLAIN	NISSAN	F	25870 25871 25872

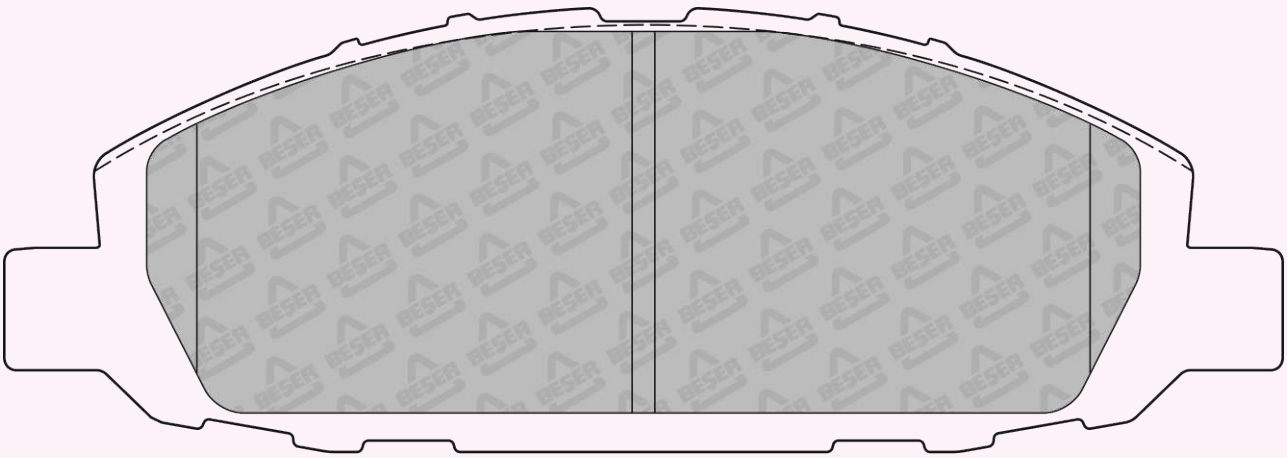

168,8 x 58,21

REFERENCE	T(mm)	REMARKS	MAKE	F/R	WVA No
4003	17,4	4 PADS PLAIN	LEXUS - TOYOTA	F	23855

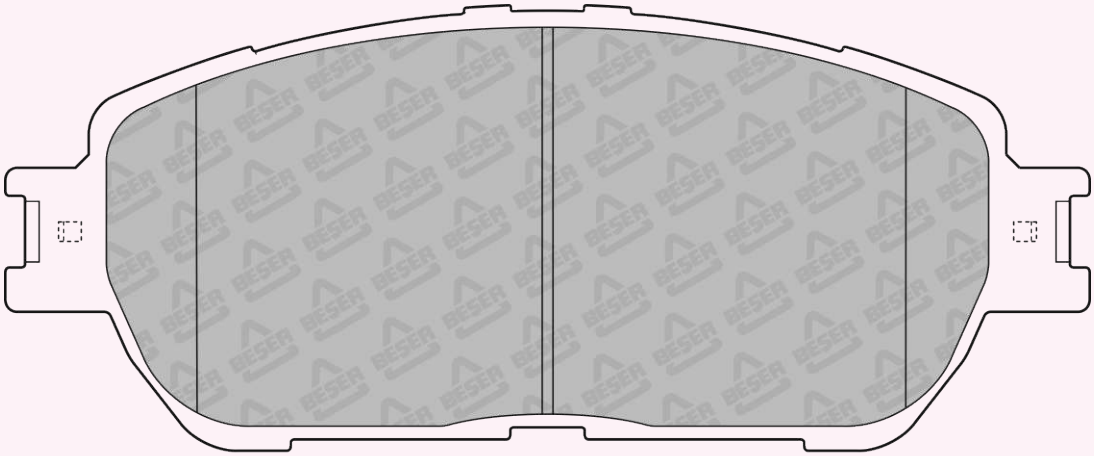

143,2 x 58,46

REFERENCE	T(mm)	REMARKS	MAKE	F/R	WVA No
4004	16,7	2 PADS WITH WEAR SENSOR	DODGE - JEEP	R	24602 24603

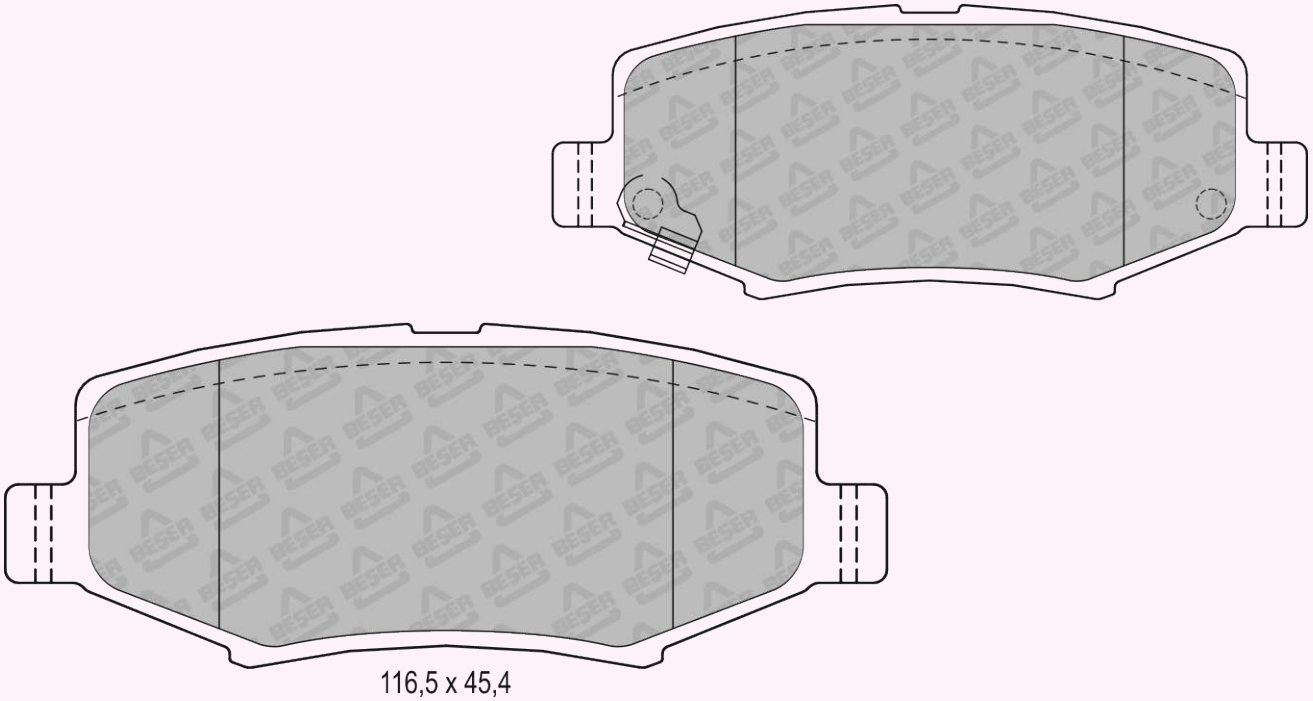

116,5 x 45,4

REFERENCE	T(mm)	REMARKS	MAKE	F/R	WVA No
4005	16,7	2 PADS WITH WEAR SENSOR	CHRYSLER - DODGE FIAT - JEEP - LANCIA	F	24604 24605

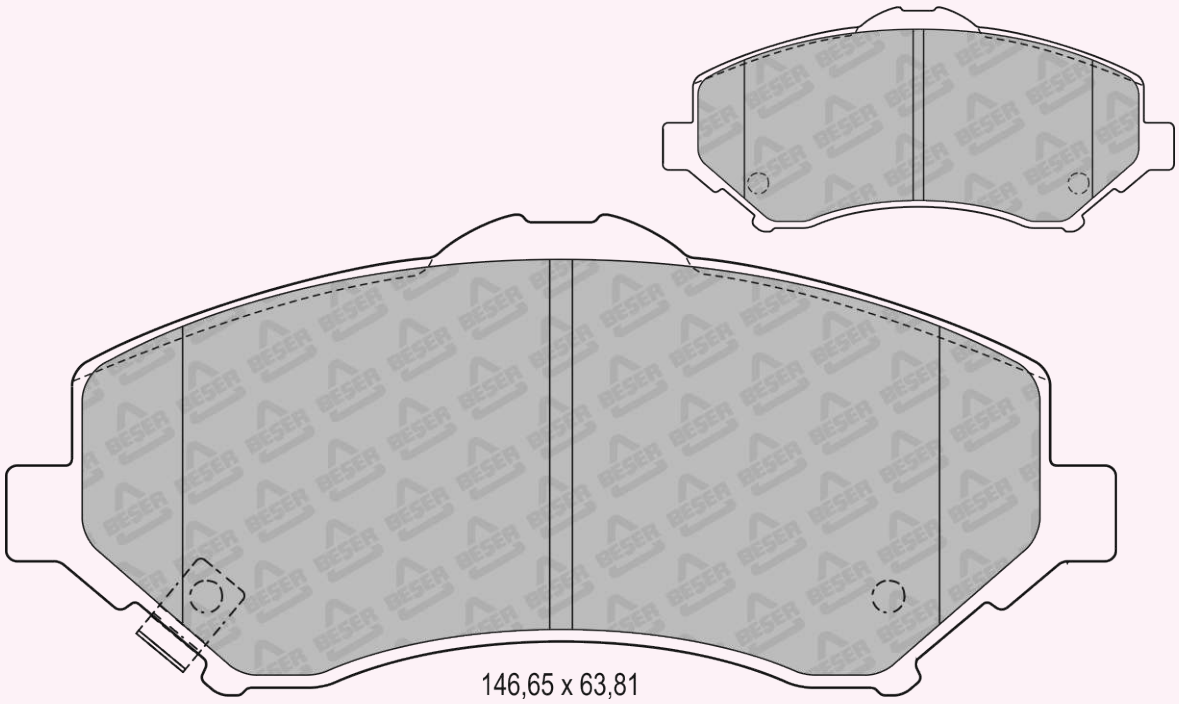

146,65 x 63,81

REFERENCE	T(mm)	REMARKS	MAKE	F/R	WVA No
4006	18,1	4 PADS WITH WEAR SENSOR	CHRYSLER - DODGE LANCIA	F	24166

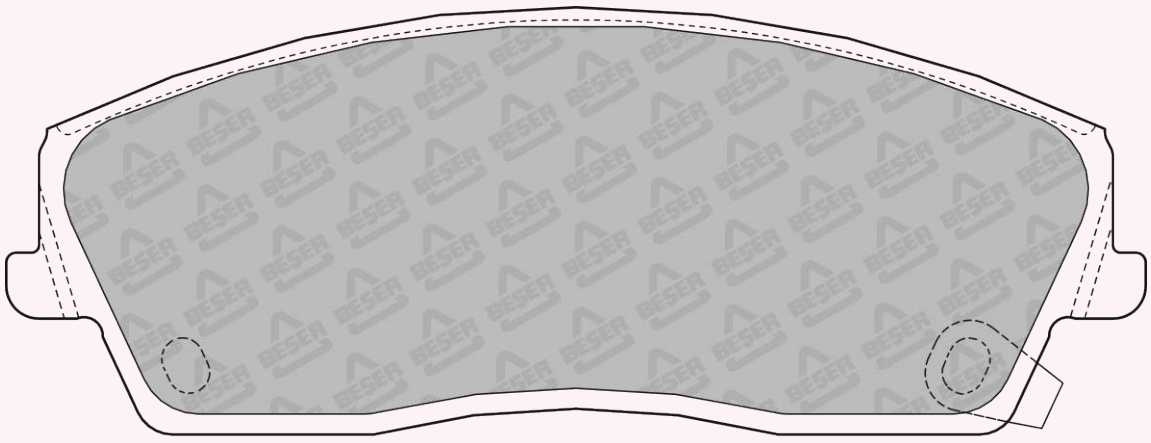

150,5 x 56,4

REFERENCE	T(mm)	REMARKS	MAKE	F/R	WVA No
4008	17,4	2 PADS WITH WEAR SENSOR	BUICK - CADILLAC - CHEVROLET HOLDEN - OPEL - VAUXHALL	F	25034 25035 25036

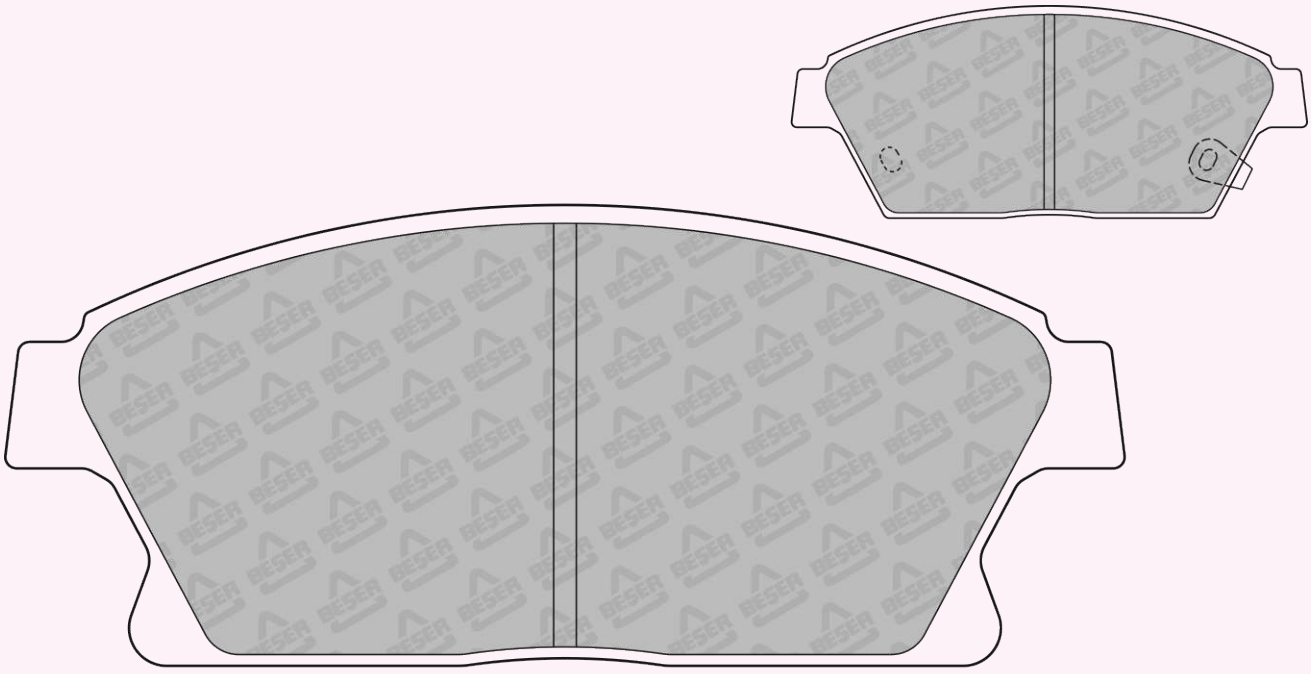

147,9 x 60,9

REFERENCE	T(mm)	REMARKS	MAKE	F/R	WVA No
4009	17	2 PADS WITH WEAR SENSOR	ASIA MOTORS - KIA	F	23442 23443 23444

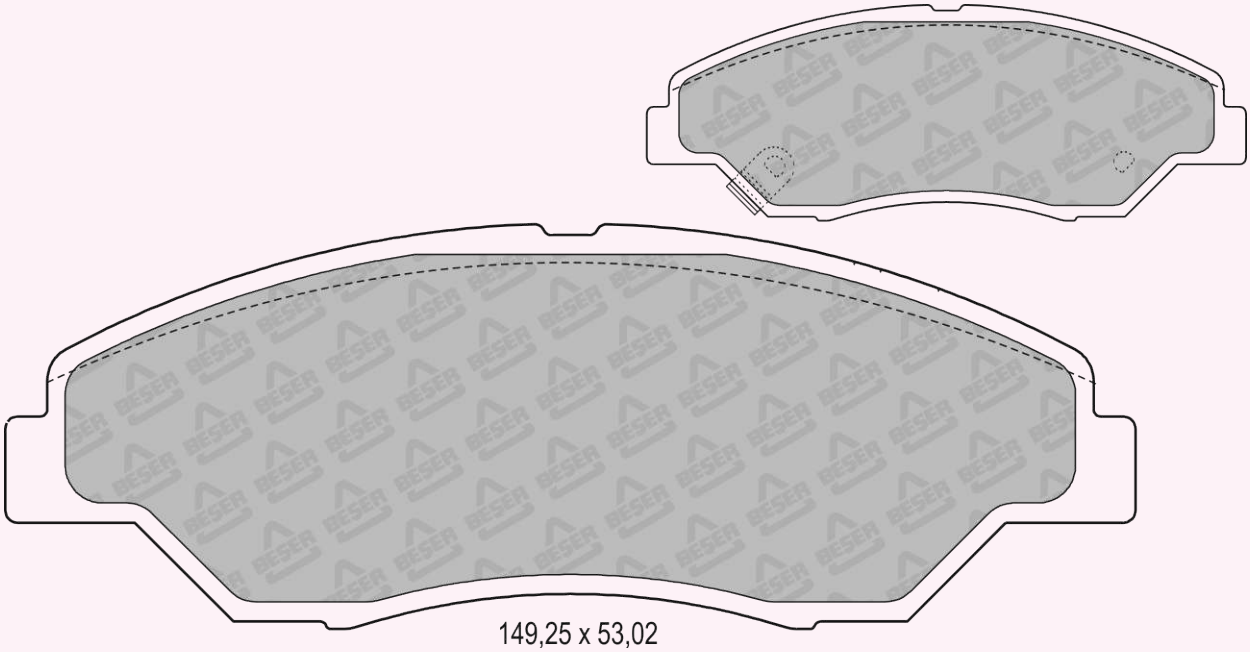

149,25 x 53,02

REFERENCE	T(mm)	REMARKS	MAKE	F/R	WVA No
4010	16	2 PADS WITH WEAR SENSOR	NISSAN	F/R	23502 23503 23504

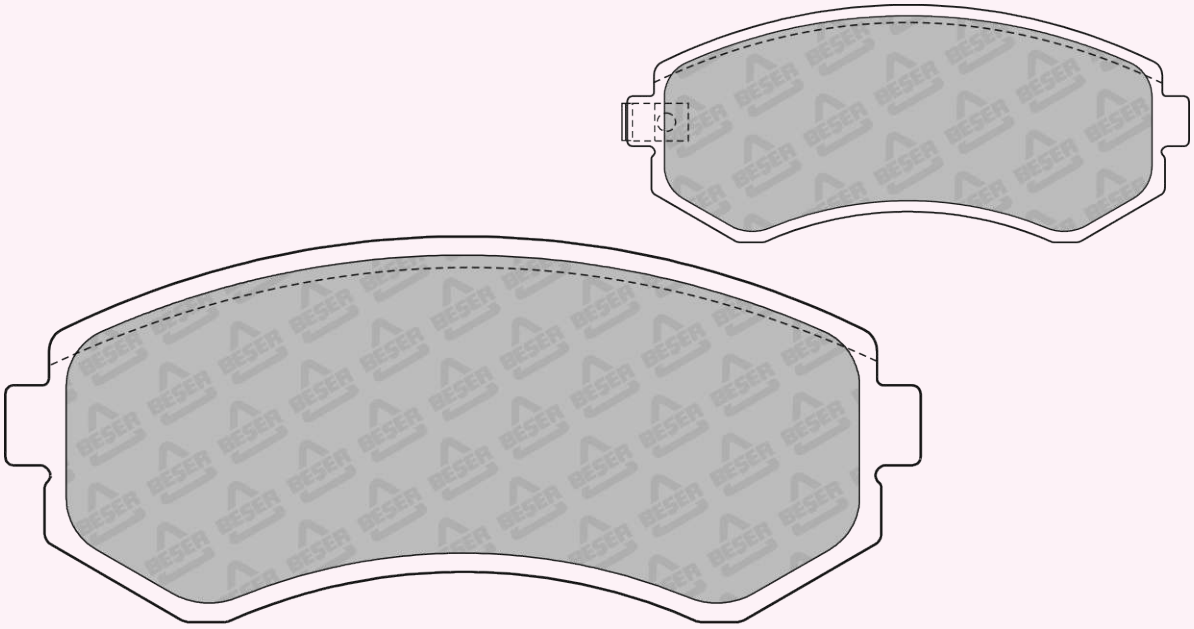

121 x 50,56

REFERENCE	T(mm)	REMARKS	MAKE	F/R	WVA No
4011	18,6	2 PADS WITH WEAR SENSOR	JEEP	F	23631 23632 23633

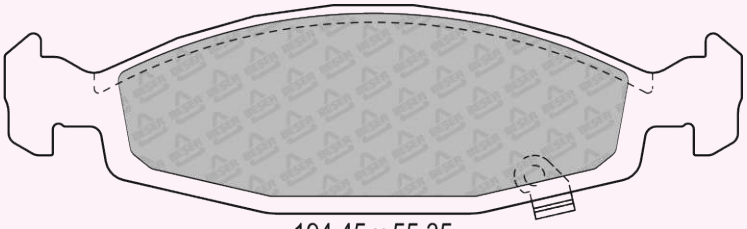

194,45 x 55,35
(NOT SCALE)

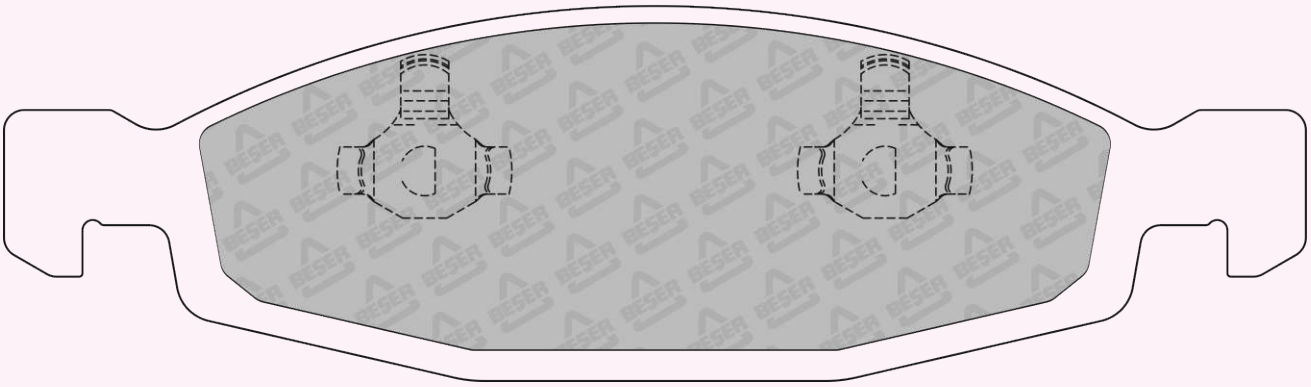

192,3 x 55,35
(NOT SCALE)

REFERENCE	T(mm)	REMARKS	MAKE	F/R	WVA No
4012	18	2 PADS WITH WEAR SENSOR	CHRYSLER - DODGE JEEP	F	23638 23639 24884

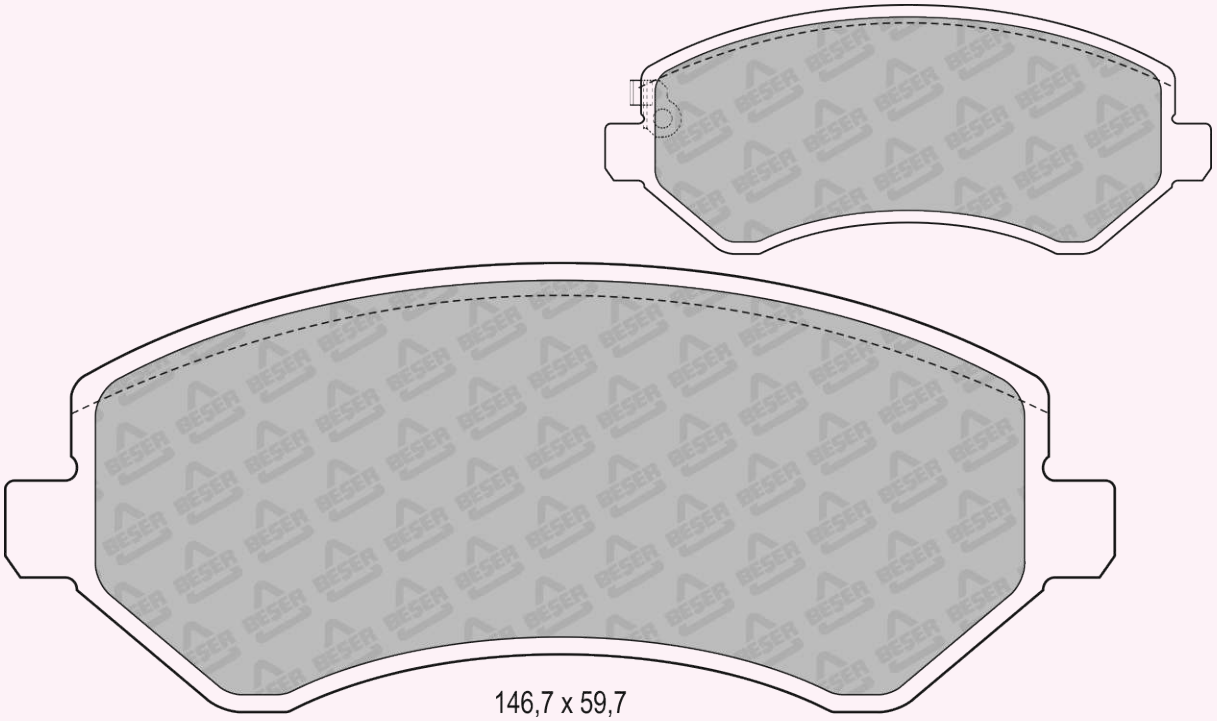

146,7 x 59,7

REFERENCE	T(mm)	REMARKS	MAKE	F/R	WVA No
4013	17	2 PADS WITH WEAR SENSOR	TOYOTA	F	23836

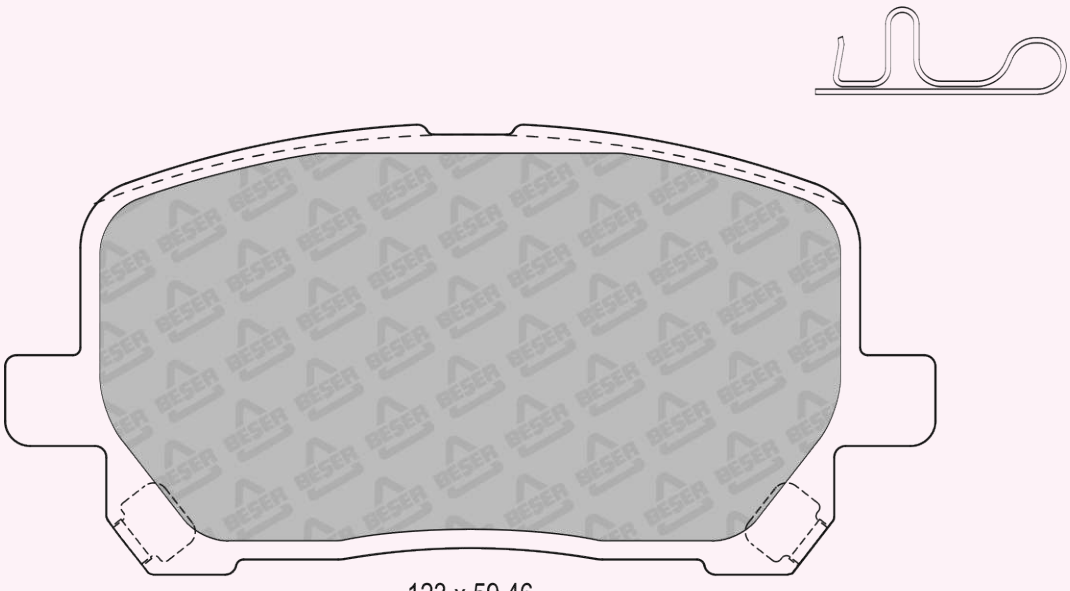

123 x 59,46

REFERENCE	T(mm)	REMARKS	MAKE	F/R	WVA No
4014	16,3	2 PADS WITH WEAR SENSOR	BUICK(SGM) - CHEVROLET HOLDEN - OPEL VAUXHALL	F	25096 25097 25098

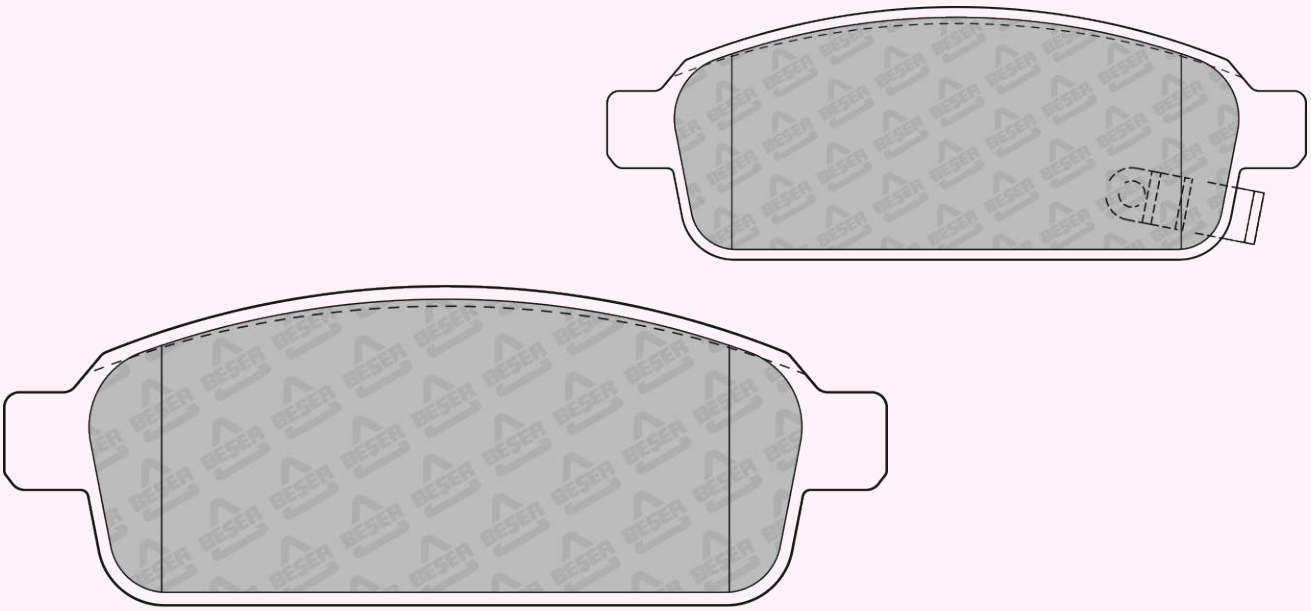

116,6 x 42,15

REFERENCE	T(mm)	REMARKS	MAKE	F/R	WVA No
4015	14,5	4 PADS PLAIN	NISSAN	F	24682 24683 24684

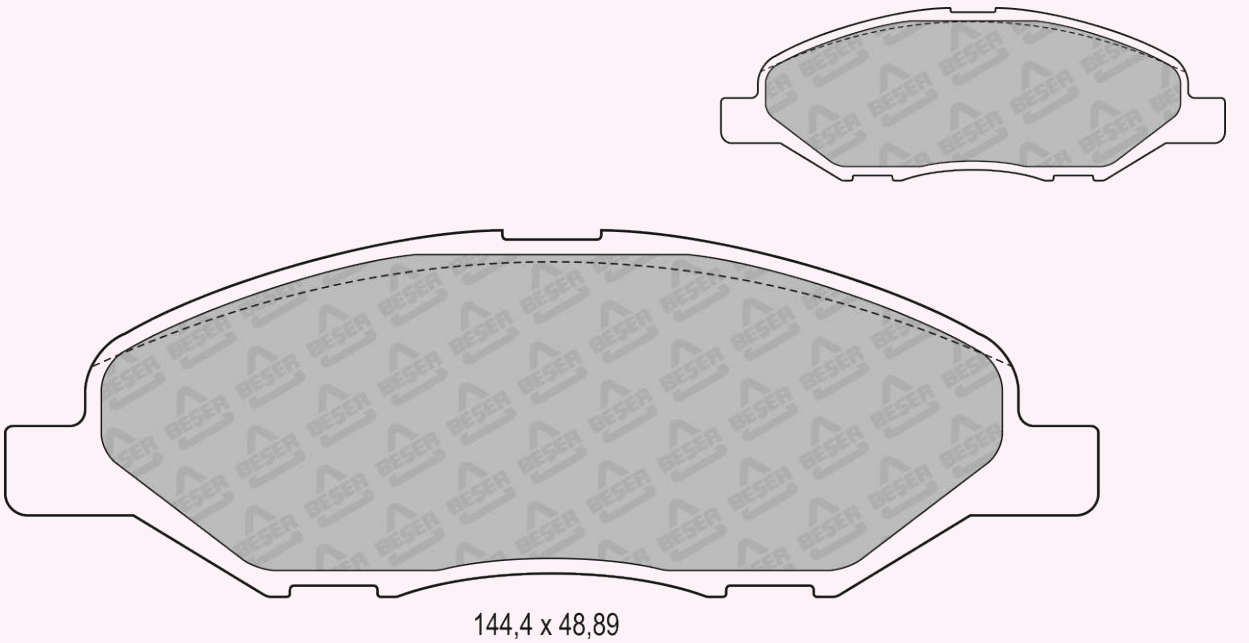

144,4 x 48,89

REFERENCE	T(mm)	REMARKS	MAKE	F/R	WVA No
4016	18	2 PADS WITH WEAR SENSOR	JEEP	F	24250 24251 24252

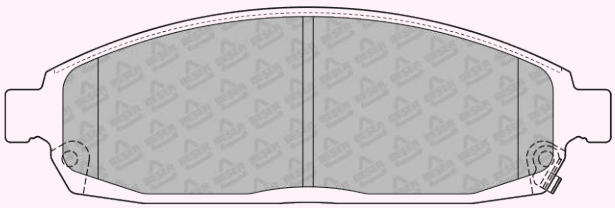

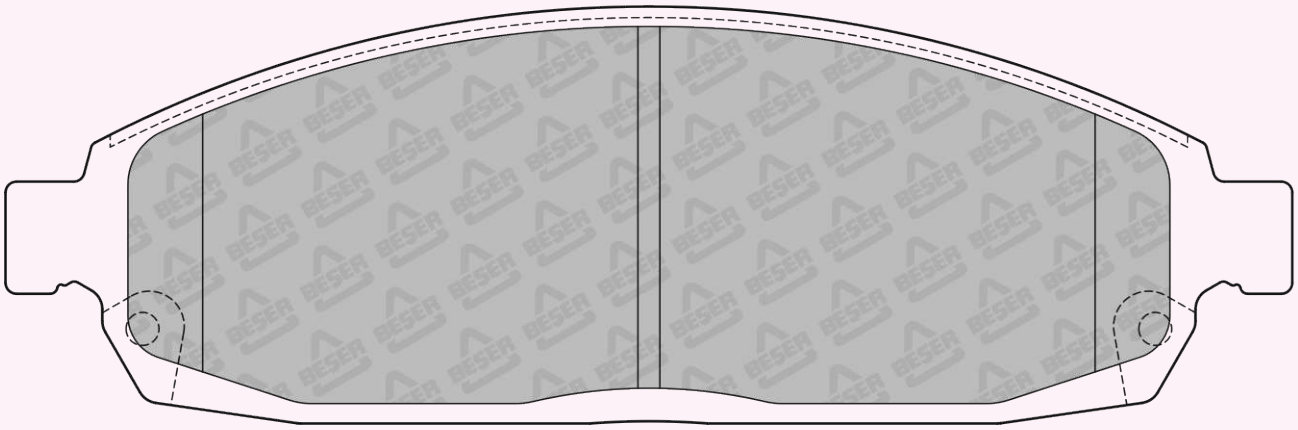

175,9 x 56,90
(NOT SCALE)

REFERENCE	T(mm)	REMARKS	MAKE	F/R	WVA No
4017	15,9	2 PADS WITH WEAR SENSOR	NISSAN	F	23970 23971 23972

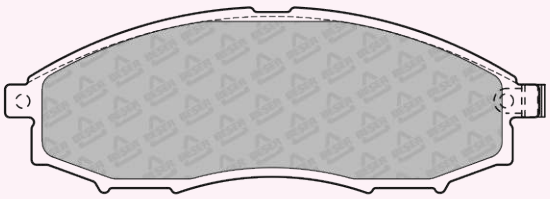

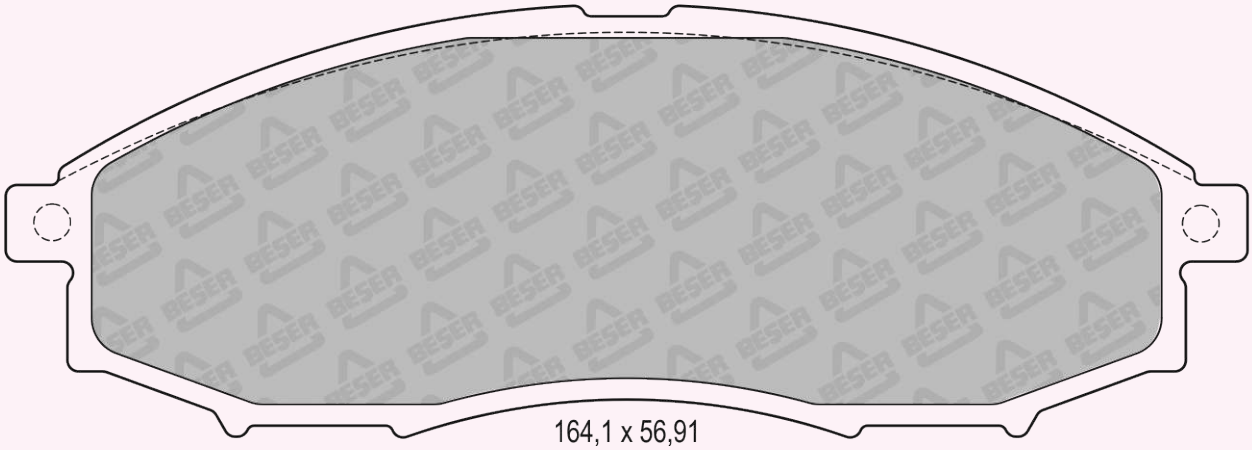

164,1 x 56,91

REFERENCE	T(mm)	REMARKS	MAKE	F/R	WVA No
4017/1	16,9	2 PADS WITH WEAR SENSOR	NISSAN	F	23970 23971 23972

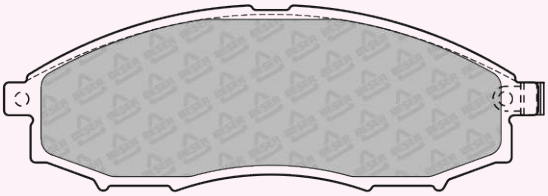

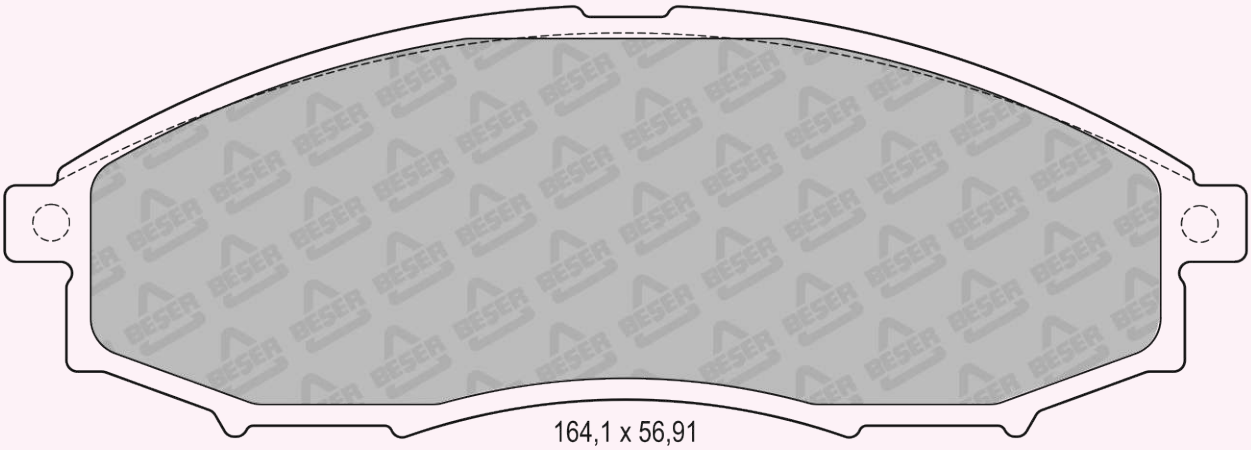

164,1 x 56,91

REFERENCE	T(mm)	REMARKS	MAKE	F/R	WVA No
4018	17,1	4 PADS WITH WEAR SENSOR	CHRYSLER - DODGE LANCIA	R	24163

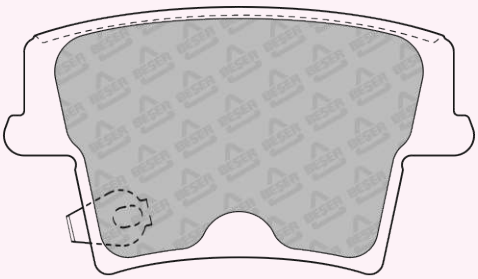

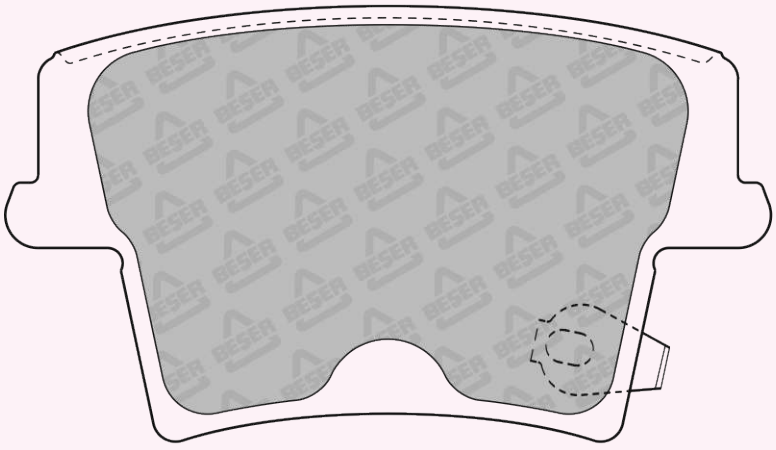

101,19 x 57,48

REFERENCE	T(mm)	REMARKS	MAKE	F/R	WVA No
4019	18,5	2 PADS WITH WEAR SENSOR	GEELY - TOYATA	F	25610 25611 25612

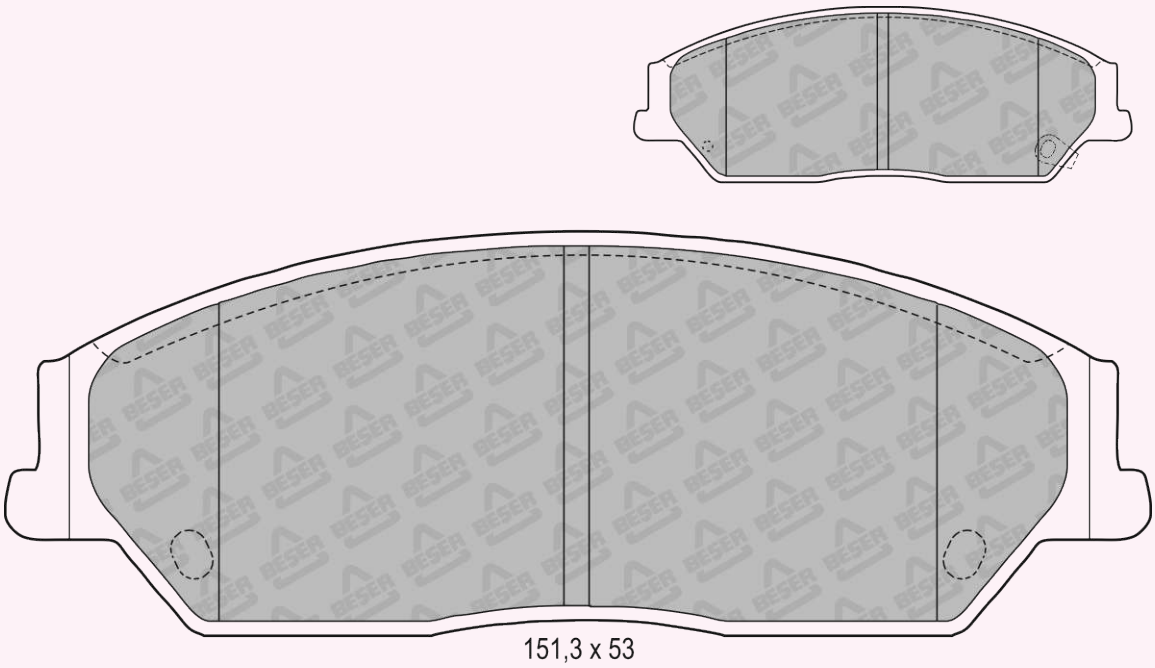

REFERENCE	T(mm)	REMARKS	MAKE	F/R	WVA No
4020	18,2	4 PADS PLAIN	VW	F	20651 21635

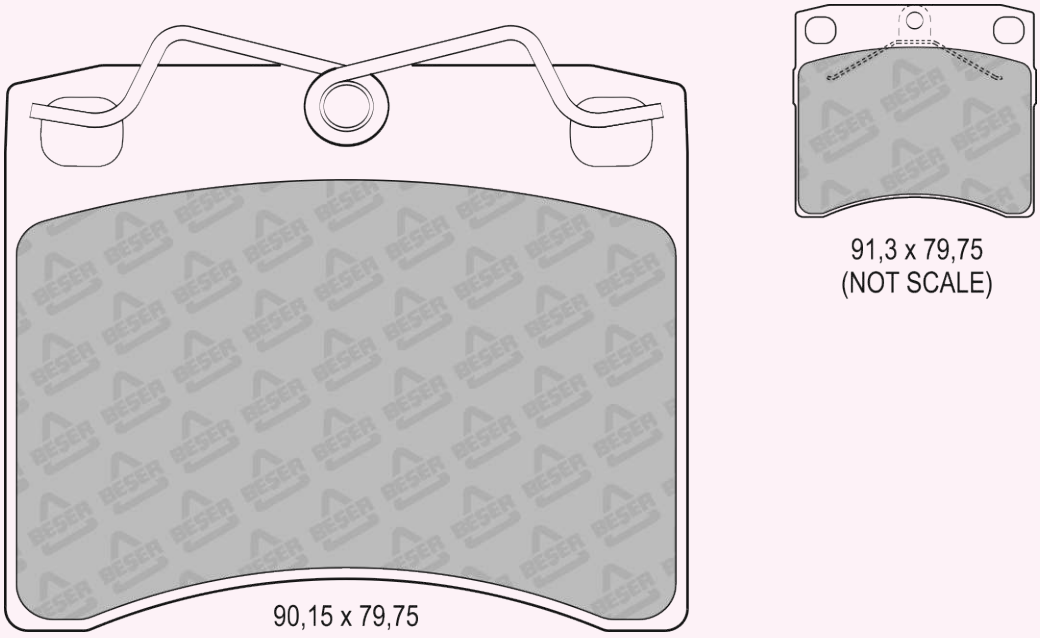

REFERENCE	T(mm)	REMARKS	MAKE	F/R	WVA No
4021	18,2	2 PADS WITH WEAR SENSOR	CADILLAC	F	24628

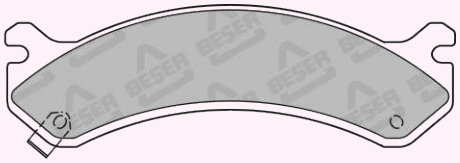

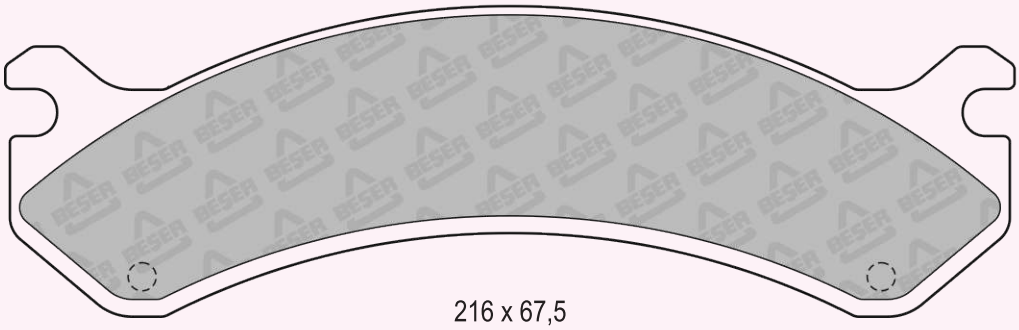

216 x 67,5
(NOT SCALE)

REFERENCE	T(mm)	REMARKS	MAKE	F/R	WVA No
4022	18,4	2 PADS WITH WEAR SENSOR	CHEVROLET - CADILLAC GMC - HUMMER	F-R	24626 24627 24792

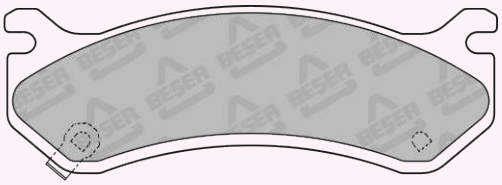

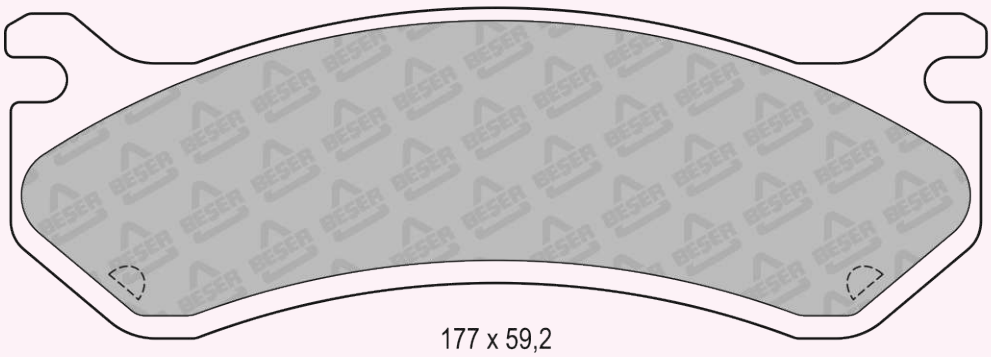

177 x 59,2
(NOT SCALE)

REFERENCE	T(mm)	REMARKS	MAKE	F/R	WVA No
4023	20	2 PADS WITH WEAR SENSOR	CHEVROLET	R	24879 24880 24881 24882

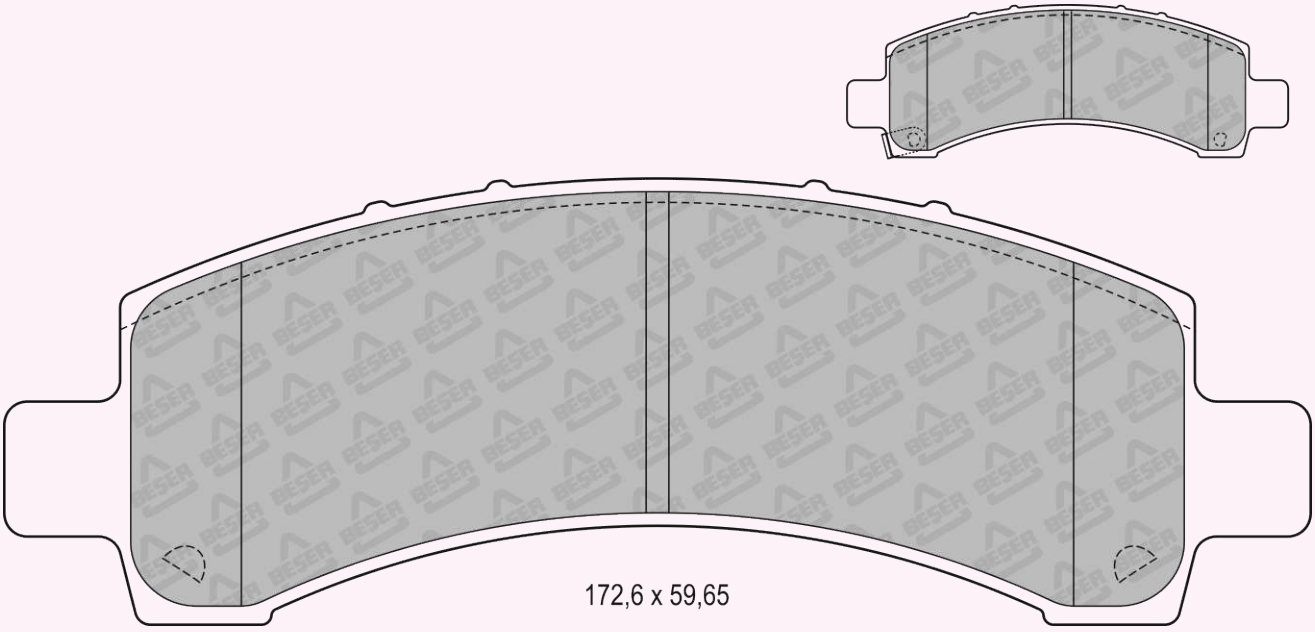

REFERENCE	T(mm)	REMARKS	MAKE	F/R	WVA No
4025	16	2 PADS WITH WEAR SENSOR	NISSAN	R	24240 24242 24243

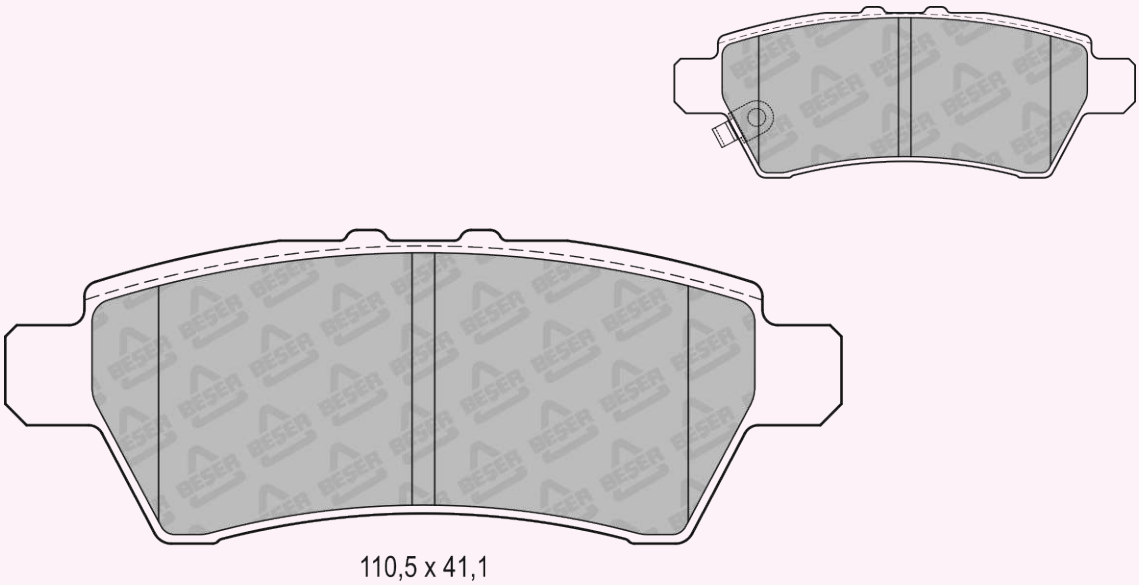

REFERENCE	T(mm)	REMARKS	MAKE	F/R	WVA No
4026	16,7	2 PADS WITH WEAR SENSOR	HUMMER	F	.....

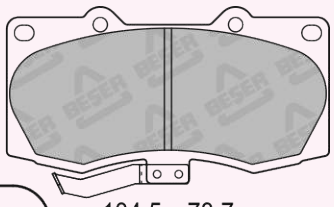

134,5 x 73,7
(NOT SCALE)

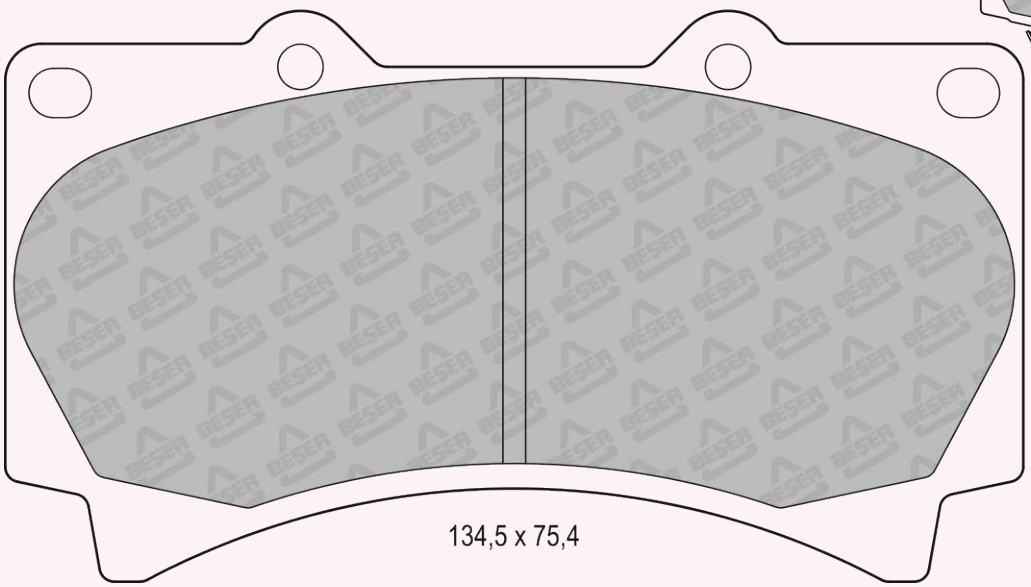

134,5 x 75,4

REFERENCE	T(mm)	REMARKS	MAKE	F/R	WVA No
4027	15	4 PADS PLAIN	DR - SUZUKI	F	23662

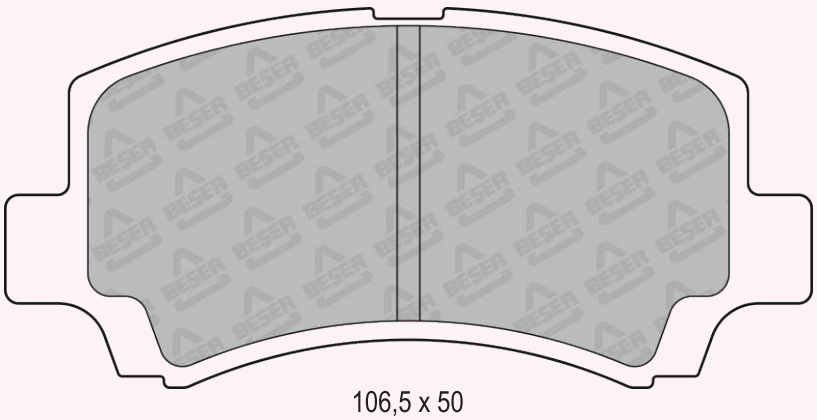

106,5 x 50

REFERENCE	T(mm)	REMARKS	MAKE	F/R	WVA No
4028	17,8	2 PADS WITH WEAR SENSOR	HYUNDAI - KIA	F	23966 23987 23988

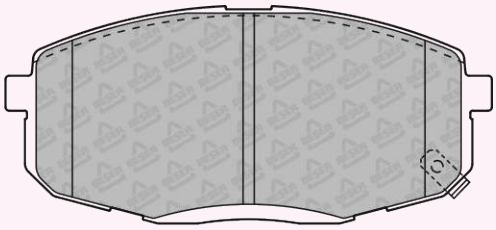

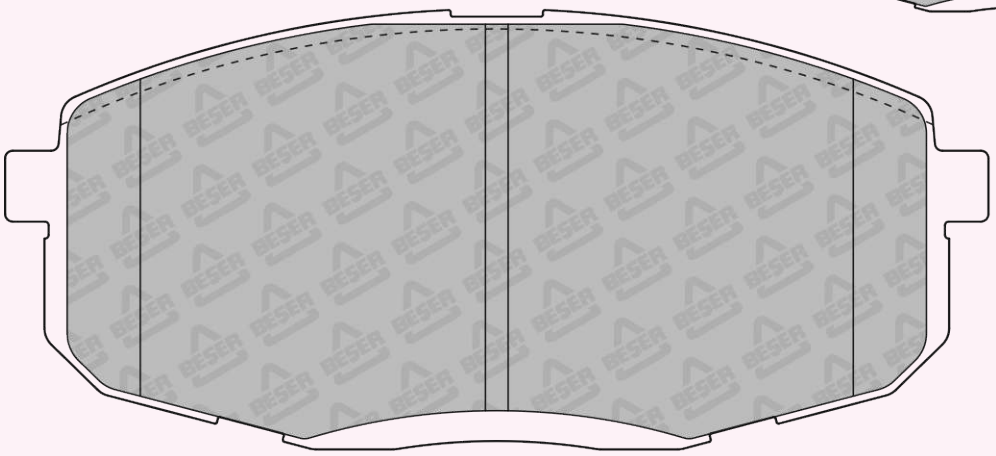

130 x 57,96

REFERENCE	T(mm)	REMARKS	MAKE	F/R	WVA No
4029	17,5	2 PADS WITH WEAR SENSOR	MAZDA	F	24582 24629 24630

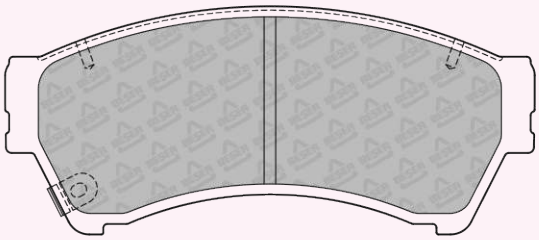

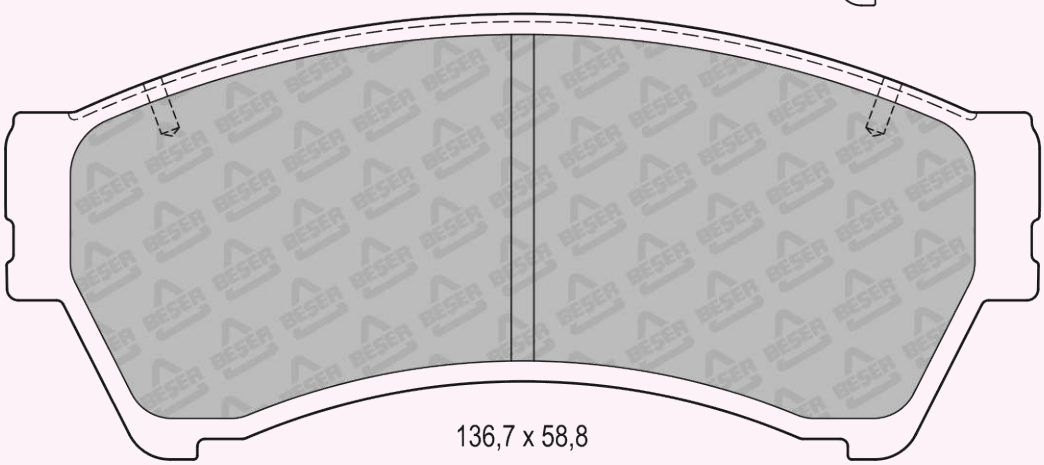

136,7 x 58,8

REFERENCE	T(mm)	REMARKS	MAKE	F/R	WVA No
4030	17,2	2 PADS WITH WEAR SENSOR	JEEP	R	24111 24113 24115

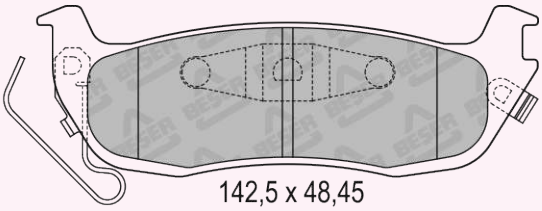

142,5 x 48,45
(NOT SCALE)

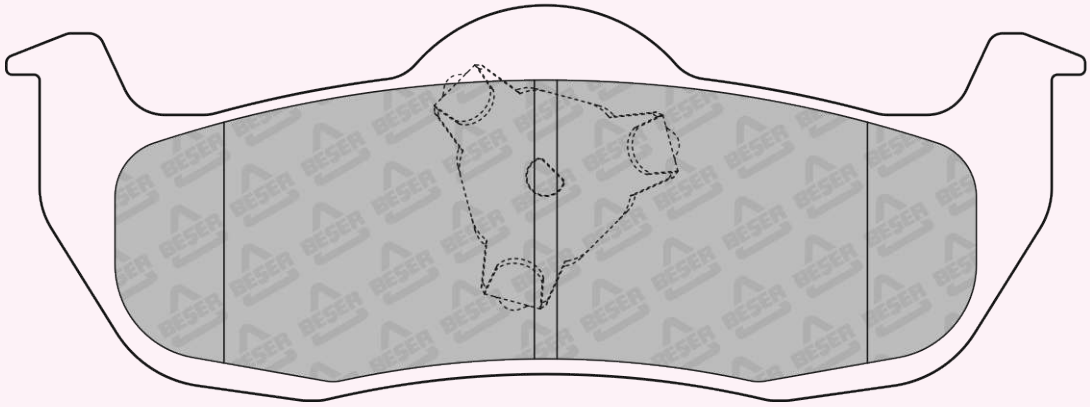

142,5 x 52,15

REFERENCE	T(mm)	REMARKS	MAKE	F/R	WVA No
4031	18,4	2 PADS WITH WEAR SENSOR	JEEP	F	24083

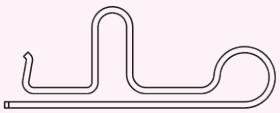

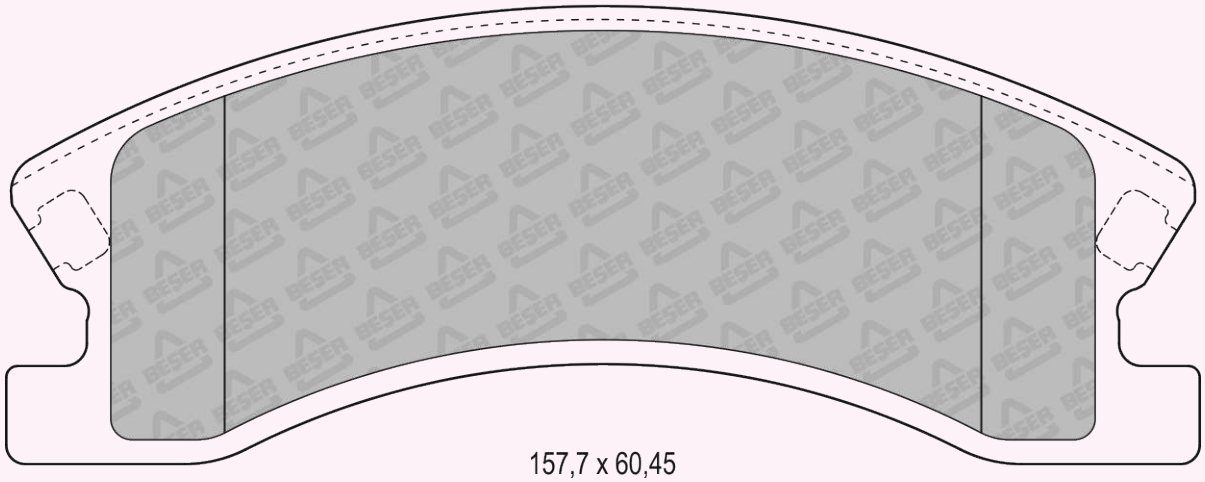

157,7 x 60,45

REFERENCE	T(mm)	REMARKS	MAKE	F/R	WVA No
4032	15	2 PADS WITH WEAR SENSOR	TOYOTA	R	24835

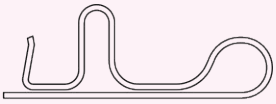

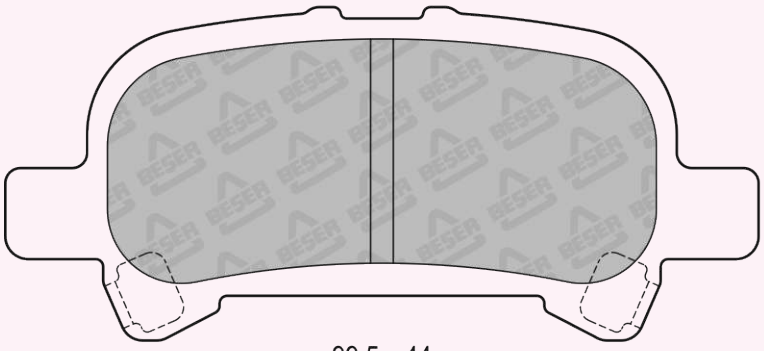

99,5 x 44

REFERENCE	T(mm)	REMARKS	MAKE	F/R	WVA No
4033	15,7	2 PADS WITH WEAR SENSOR	MITSUBISHI	F	24832 24833 24834

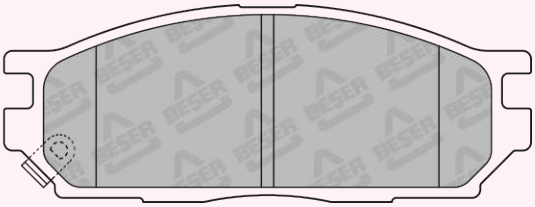

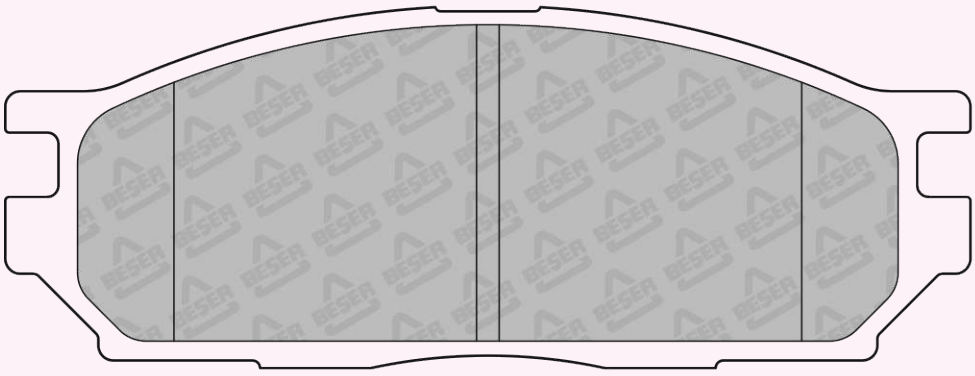

127,6 x 47,65

REFERENCE	T(mm)	REMARKS	MAKE	F/R	WVA No
4034	15,3	4 PADS PLAIN	FORD - HOLDEN - SUZUKI	F	23303 23304

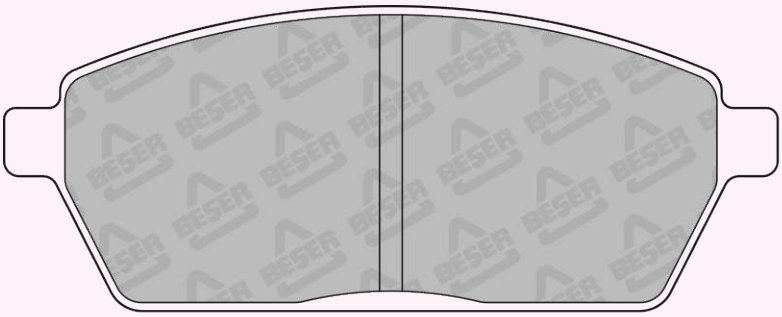

102,2 x 40,25

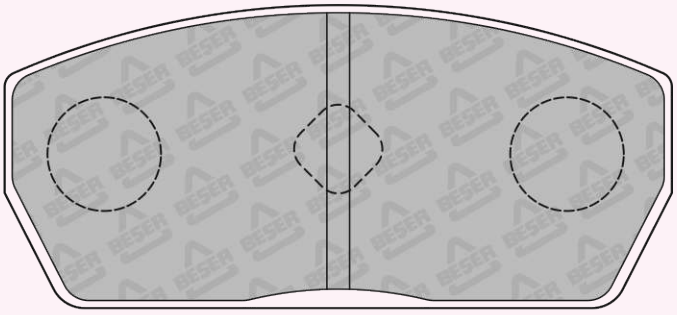

88,15 x 40

REFERENCE	T(mm)	REMARKS	MAKE	F/R	WVA No
4034/1	15,3	2 PADS WITH WEAR SENSOR	FORD - HOLDEN - SUZUKI	F	23303 23304

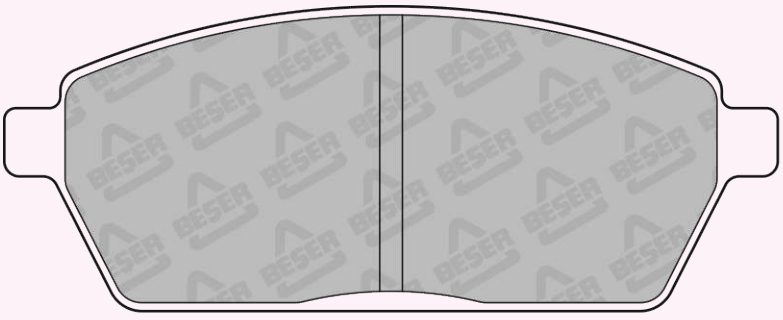

102,2 x 40,25

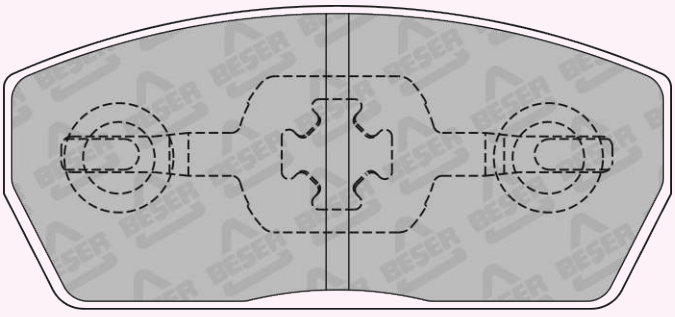

88,15 x 40

REFERENCE	T(mm)	REMARKS	MAKE	F/R	WVA No
4035	17,6	2 PADS WITH WEAR SENSOR	HYUNDAI - KIA	F	24597 24598 24609

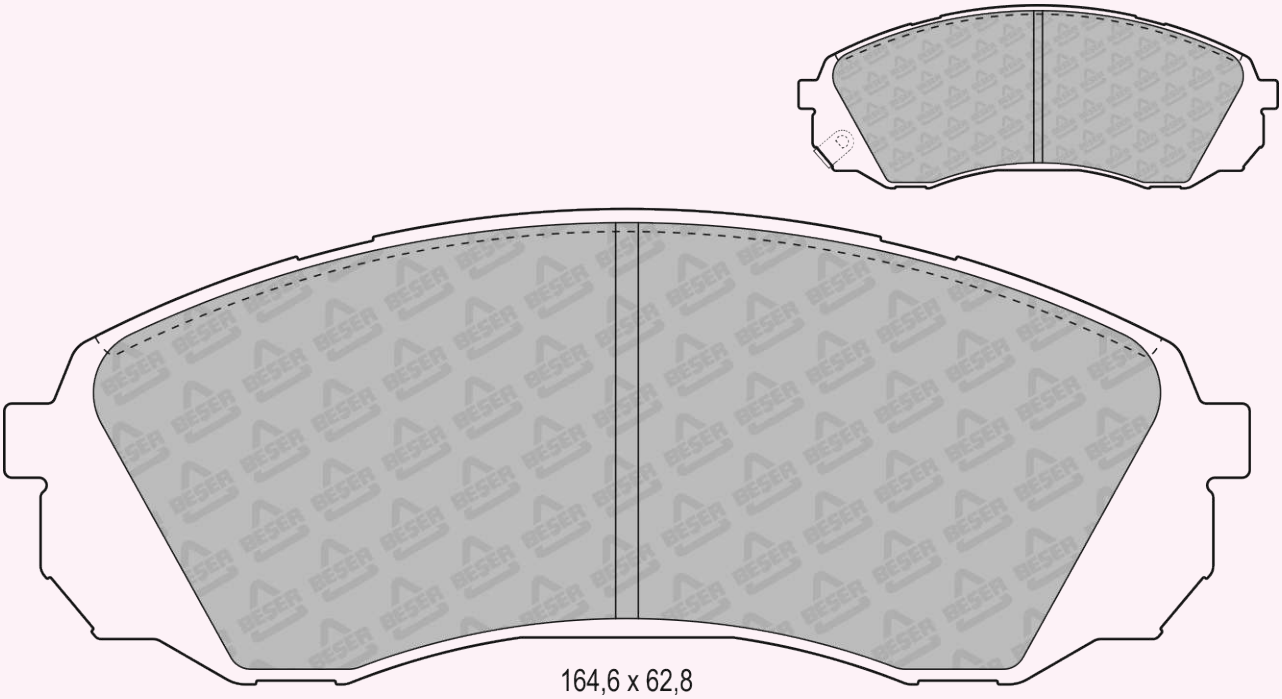

164,6 x 62,8

REFERENCE	T(mm)	REMARKS	MAKE	F/R	WVA No
4036	17,9	2 PADS WITH WEAR SENSOR	SUBARU	F	24372

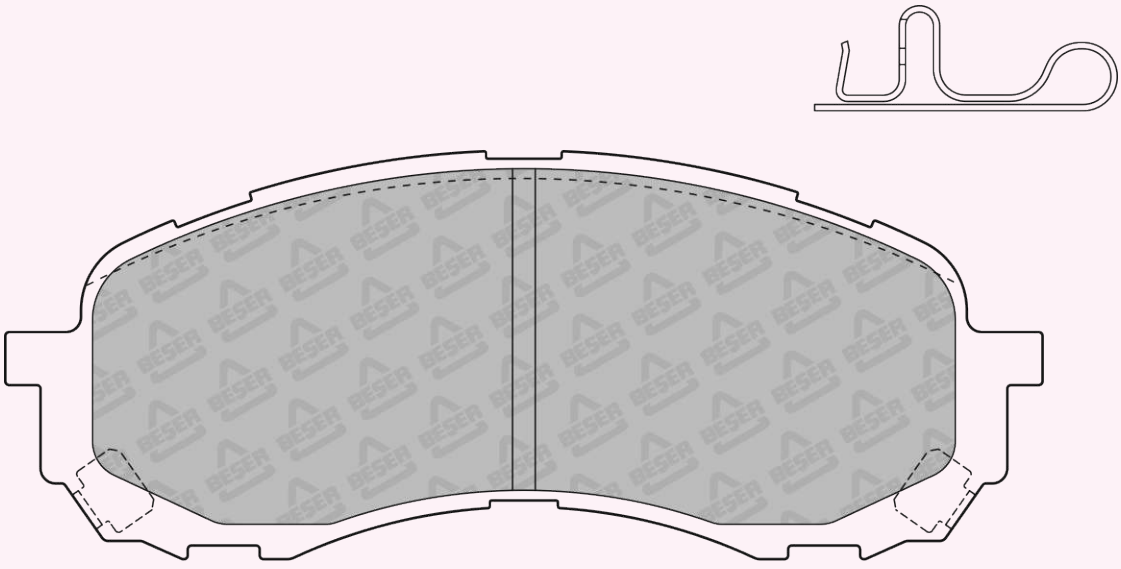

137 x 53,9

REFERENCE	T(mm)	REMARKS	MAKE	F/R	WVA No
4037	16,25	2 PADS WITH WEAR SENSOR	TOYOTA	R	24664 24665 24666

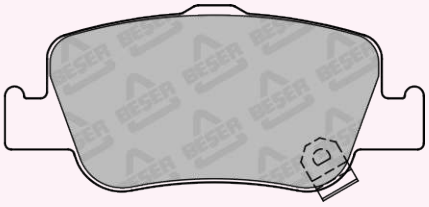

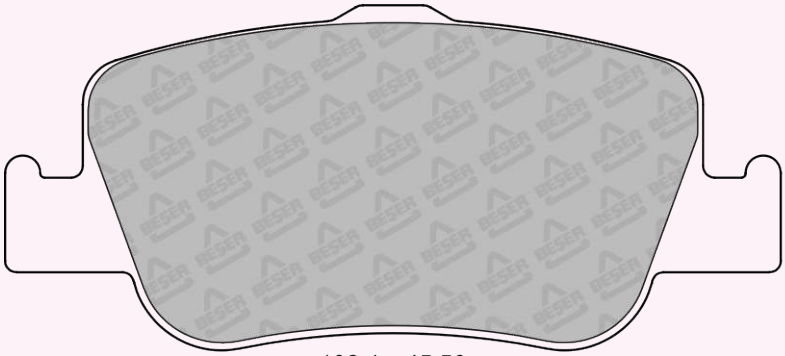

102,4 x 45,56

REFERENCE	T(mm)	REMARKS	MAKE	F/R	WVA No
4037/1	16,25	2 PADS WITH WEAR SENSOR	TOYOTA	R	24664 24665 24666

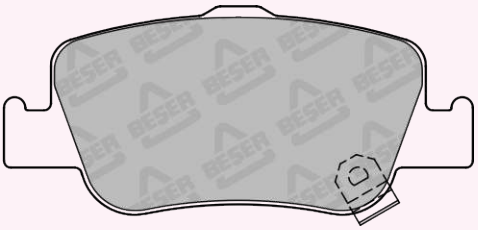

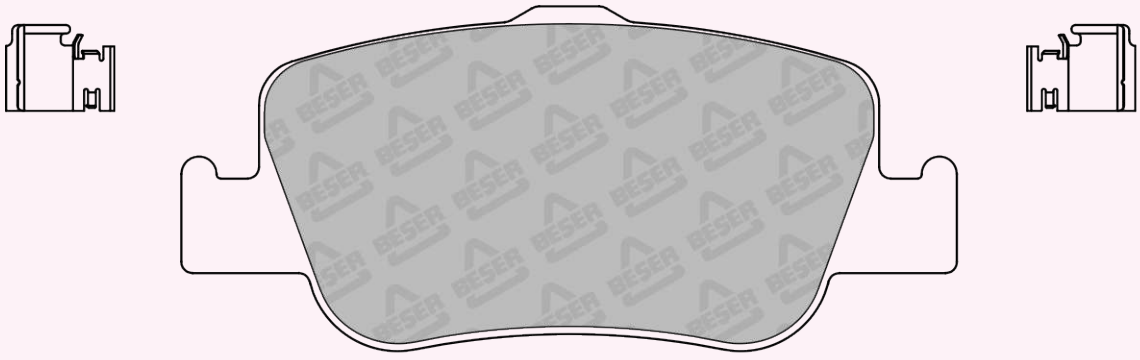

102,4 x 45,56

REFERENCE	T(mm)	REMARKS	MAKE	F/R	WVA No
4038	16,7	4 PADS PLAIN	NISSAN	F	24632 25202

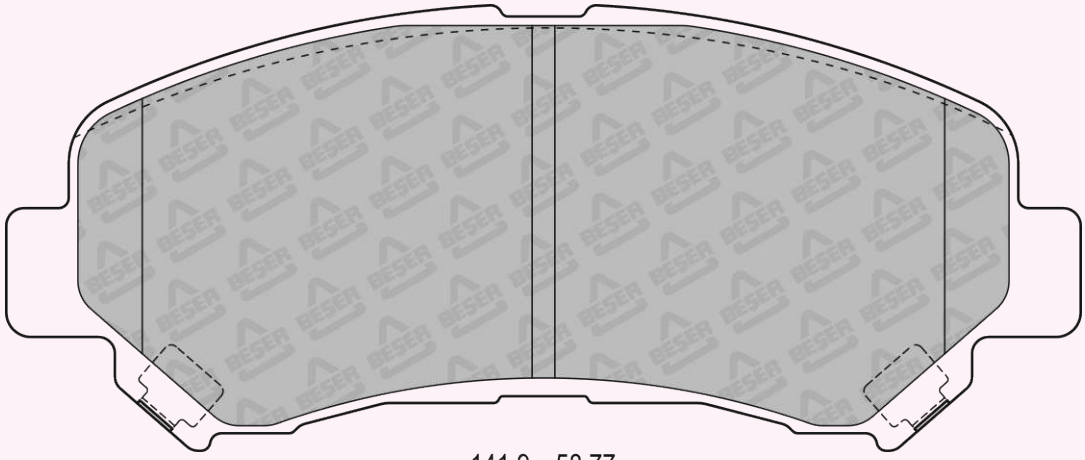

141,9 x 58,77

REFERENCE	T(mm)	REMARKS	MAKE	F/R	WVA No
4039	16,5	2 PADS WITH WEAR SENSOR	KIA	F	24501 24502 24503

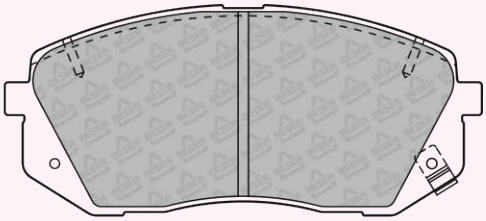

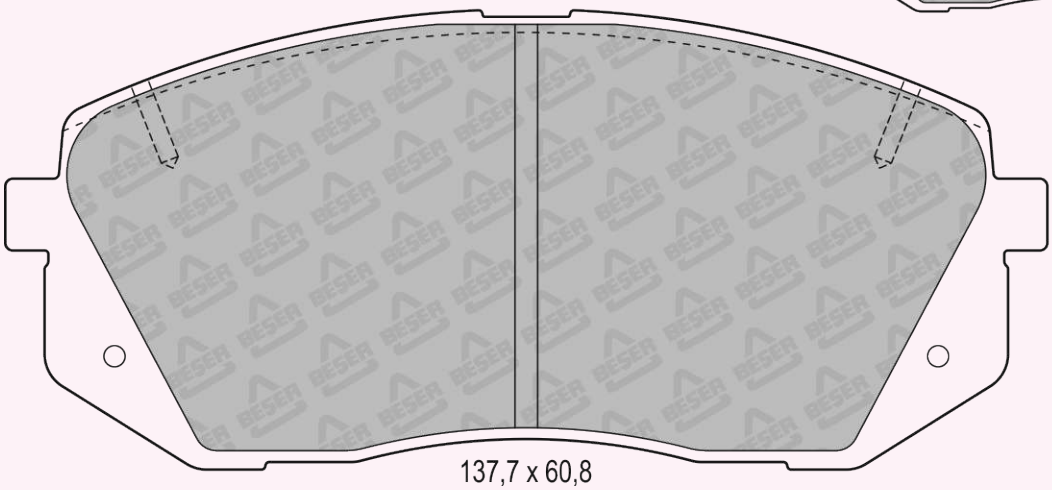

137,7 x 60,8

REFERENCE	T(mm)	REMARKS	MAKE	F/R	WVA No
4040	14,4	2 PADS WITH WEAR SENSOR	CHEVROLET - HOLDEN - KIA OPEL - VAUXHALL	R	23417 23654 23655

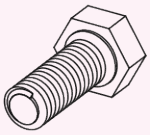

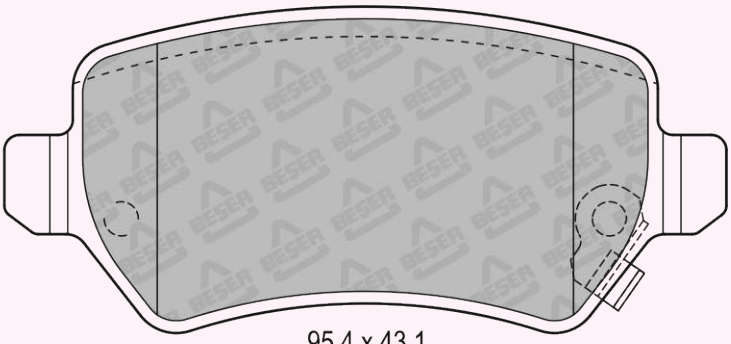

95,4 x 43,1

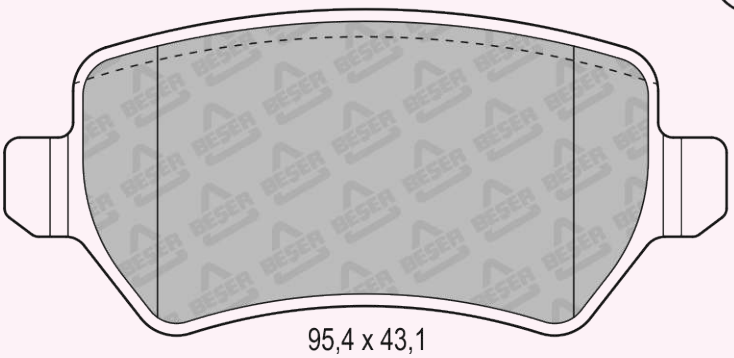

95,4 x 43,1

REFERENCE	T(mm)	REMARKS	MAKE	F/R	WVA No
4041	17,6	2 PADS WITH WEAR SENSOR	KIA	F	25757 25758 25759

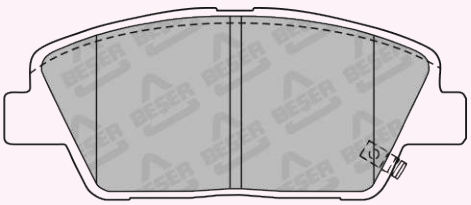

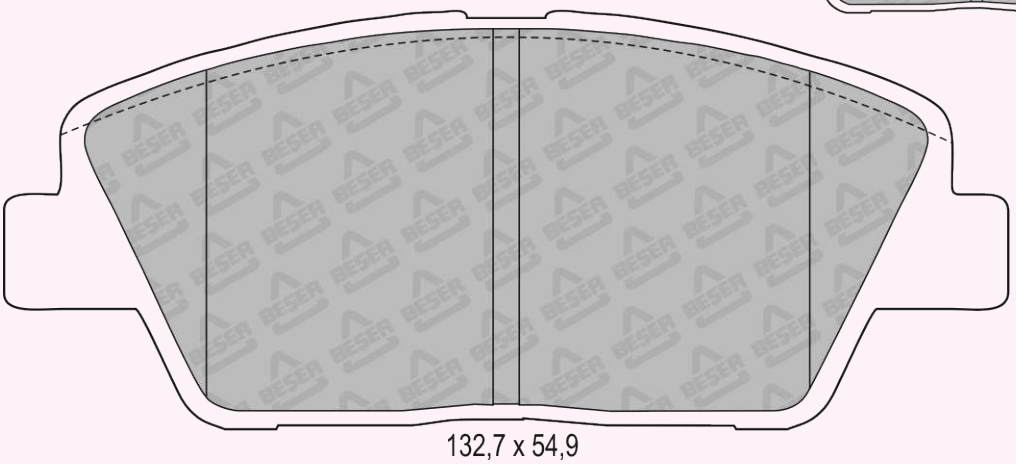

132,7 x 54,9

REFERENCE	T(mm)	REMARKS	MAKE	F/R	WVA No
4042	19,7	2 PADS WITH WEAR SENSOR	CHEVROLET - HOLDEN OPEL - VAUXHALL	F	23832 23833 23844

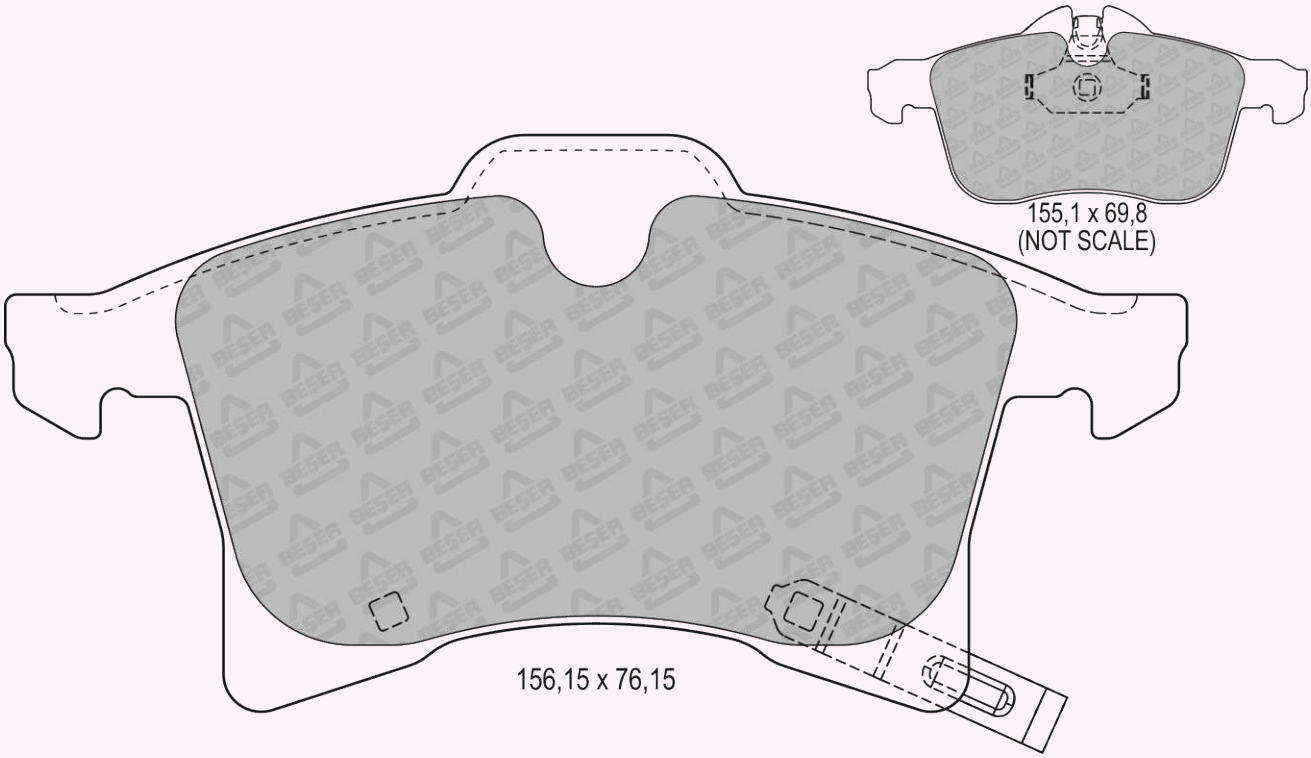

REFERENCE	T(mm)	REMARKS	MAKE	F/R	WVA No
4048	16,1	2 PADS WITH WEAR SENSOR	PEUGEOT	F	....

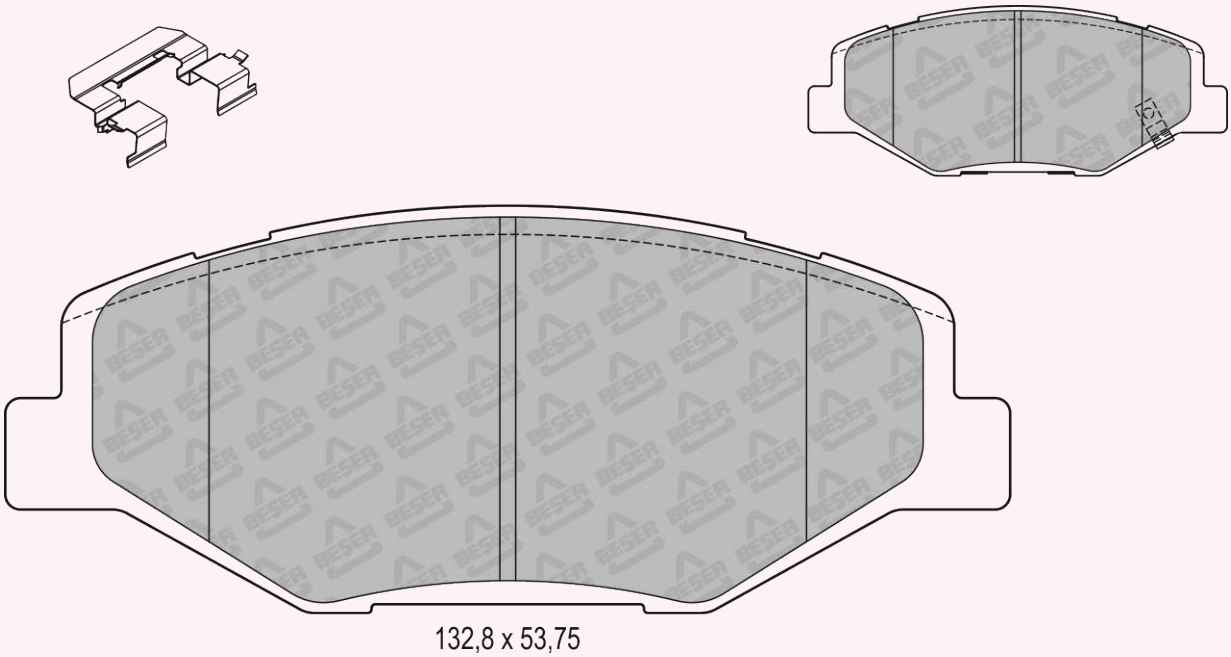

REFERENCE	T(mm)	REMARKS	MAKE	F/R	WVA No
4048/1	16,1	2 PADS WITH WEAR SENSOR	PEUGEOT	F	.....

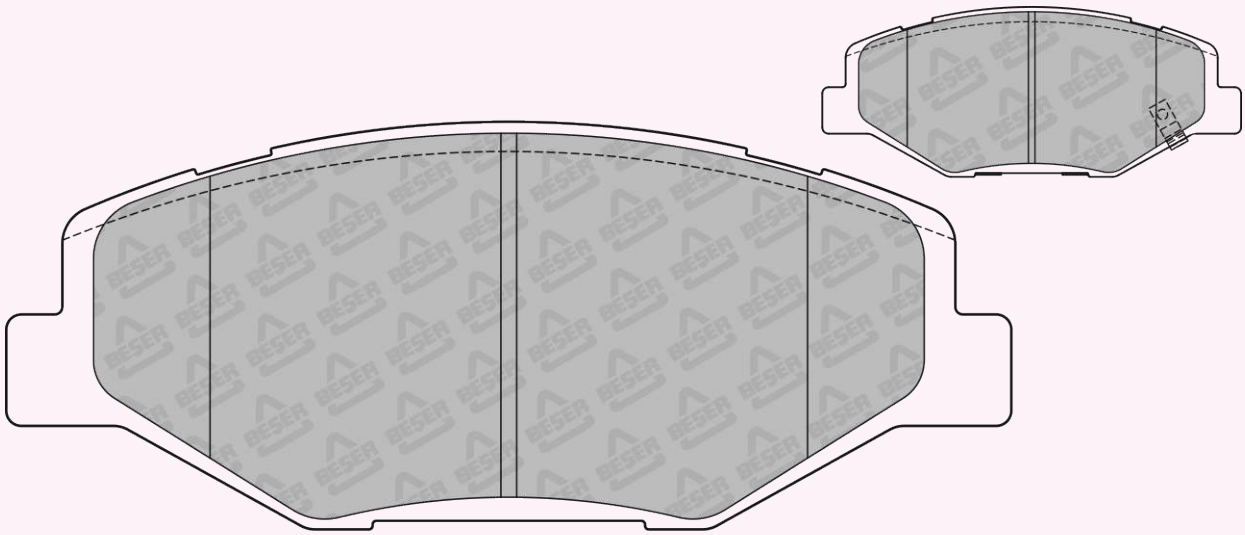

132,8 x 53,75

REFERENCE	T(mm)	REMARKS	MAKE	F/R	WVA No
4049	17,5	2 PADS WITH WEAR SENSOR	HYUNDAI - KIA	F	25187 25188 25189

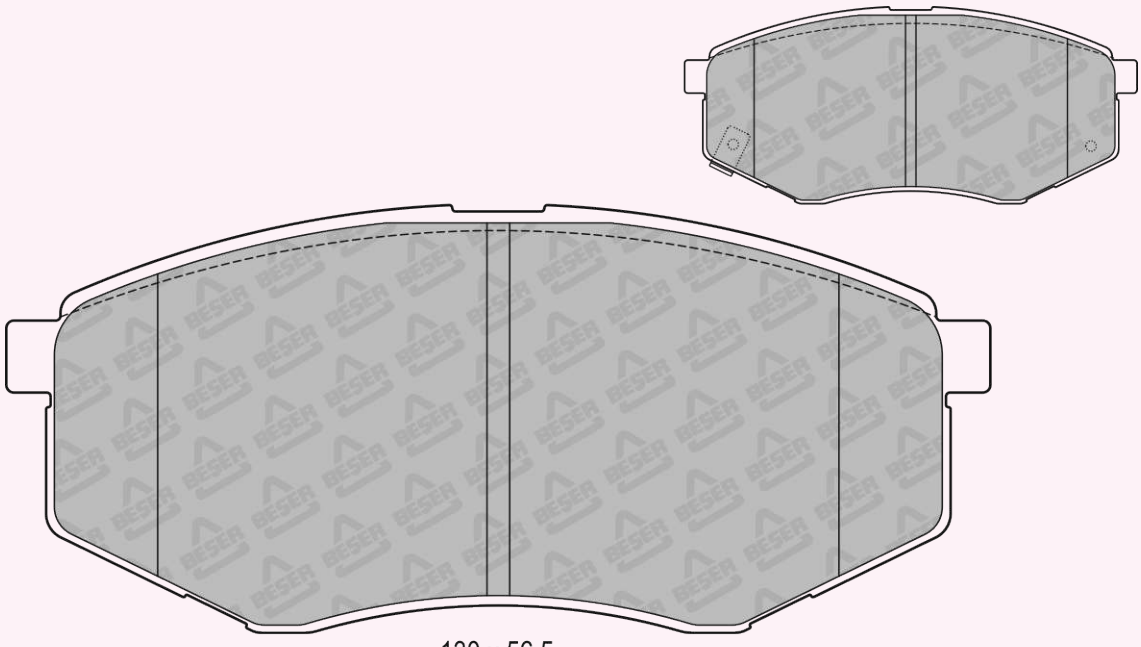

130 x 56,5

REFERENCE	T(mm)	REMARKS	MAKE	F/R	WVA No
4054	17,5	8 PADS PLAIN	MITSUBISHI	F	29240 29241

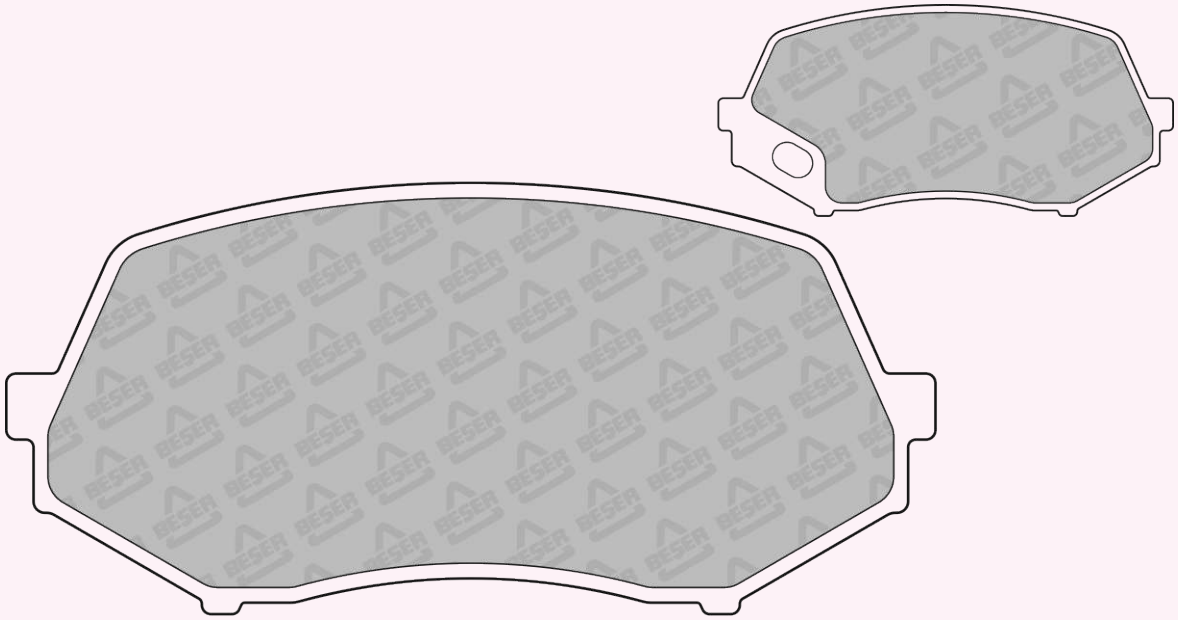

122,8 x 56,85

REFERENCE	T(mm)	REMARKS	MAKE	F/R	WVA No
4055	17,2	8 PADS PLAIN	MITSUBISHI	F	...

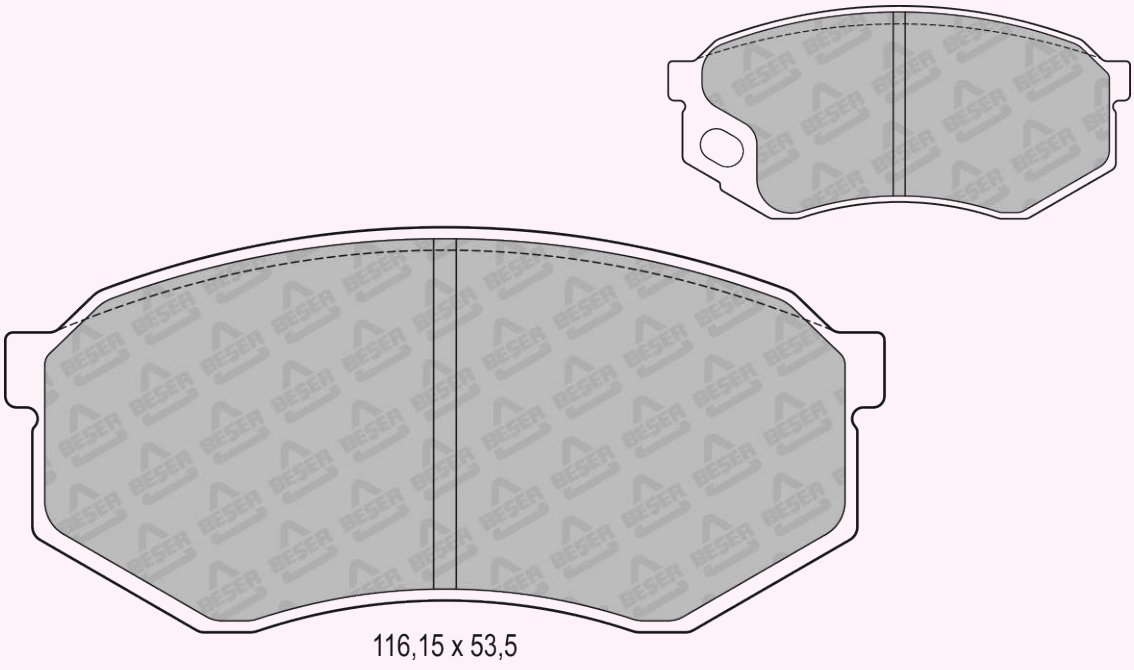

116,15 x 53,5

REFERENCE	T(mm)	REMARKS	MAKE	F/R	WVA No
4056	18	1 PAD WITH WEAR SENSOR	NISSAN - OPEL RENAULT - VAUXHALL	F	25147 25148 25165

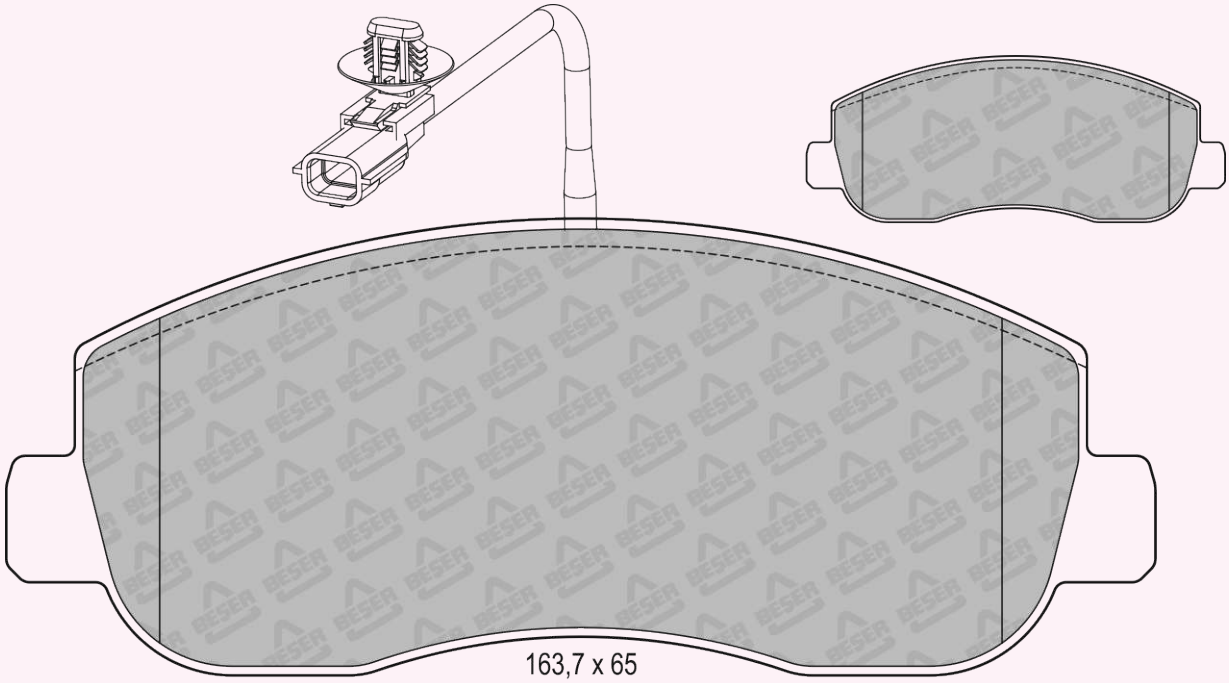

163,7 x 65
(NOT SCALE)

REFERENCE	T(mm)	REMARKS	MAKE	F/R	WVA No
4057	18,2	1 PAD WITH WEAR SENSOR (340 mm)	NISSAN - OPEL - RENAULT VAUXHALL	R	25112 25113

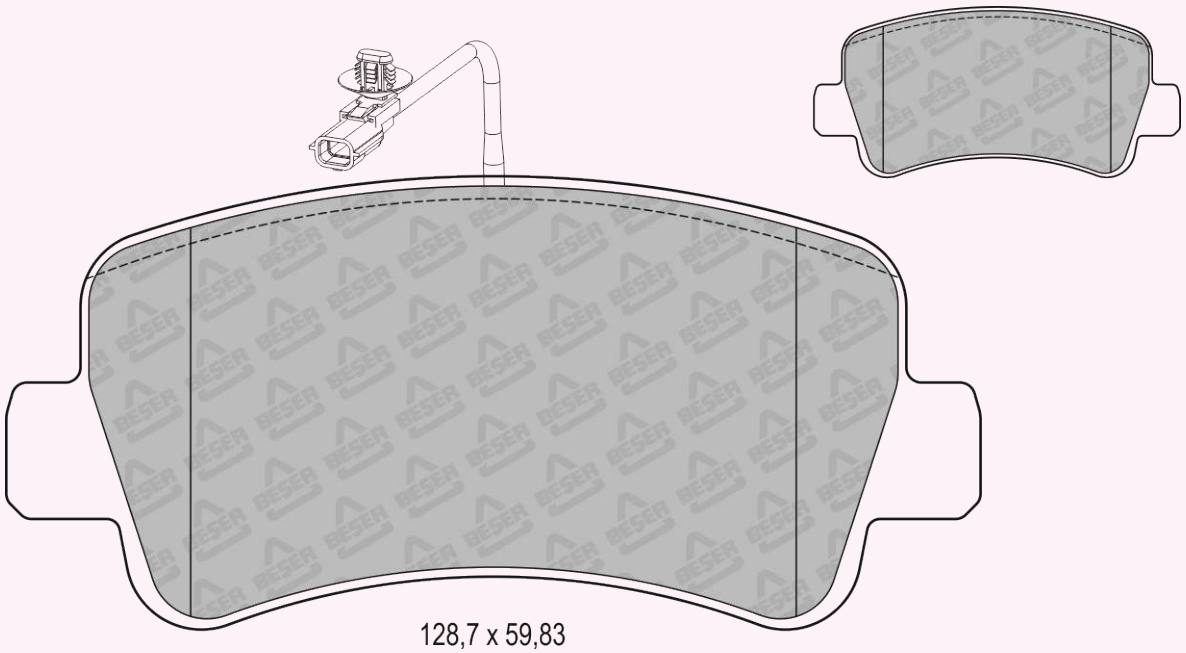

128,7 x 59,83

REFERENCE	T(mm)	REMARKS	MAKE	F/R	WVA No
4058	17,4	4 PADS PLAIN	FORD - JAGUAR	R	24260

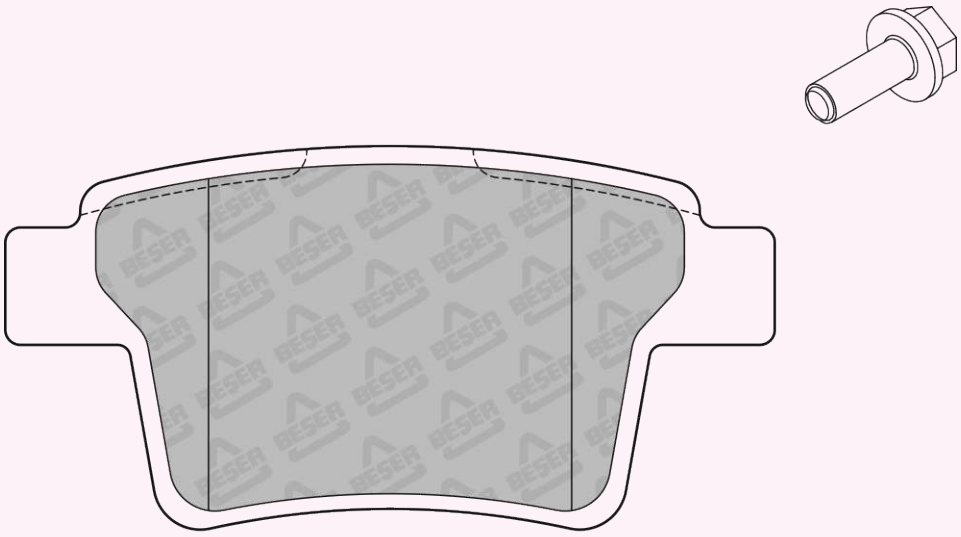

101,7 x 50,64

REFERENCE	T(mm)	REMARKS	MAKE	F/R	WVA No
4058/1	17,4	2 PADS WITH WEAR SENSOR	FORD - JAGUAR	R	24260 24335 25336

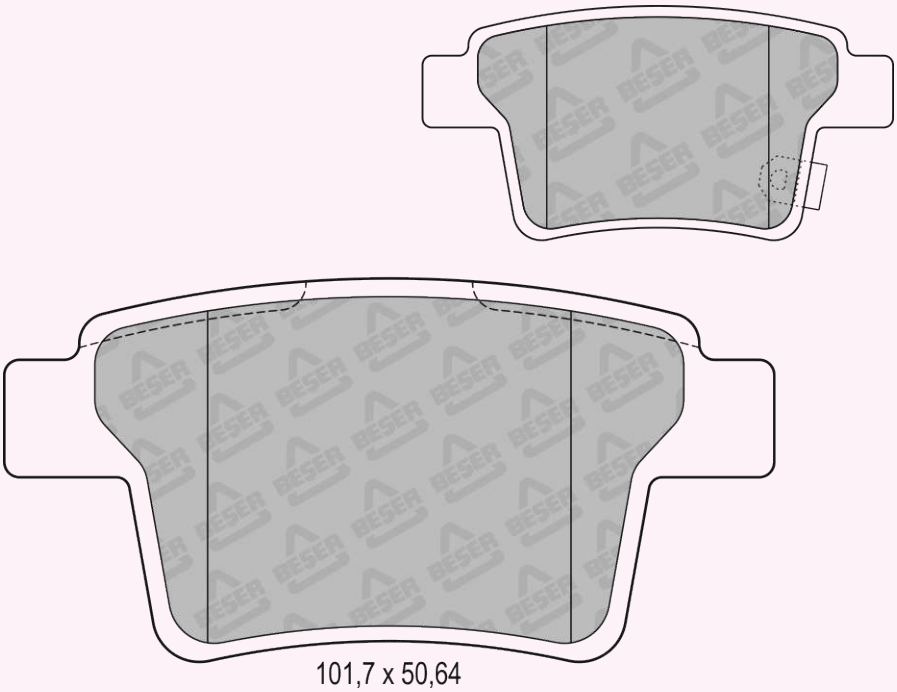

101,7 x 50,64

REFERENCE	T(mm)	REMARKS	MAKE	F/R	WVA No
4059	16,6	2 PADS WITH WEAR SENSOR	MITSUBISHI	F	21982 21983

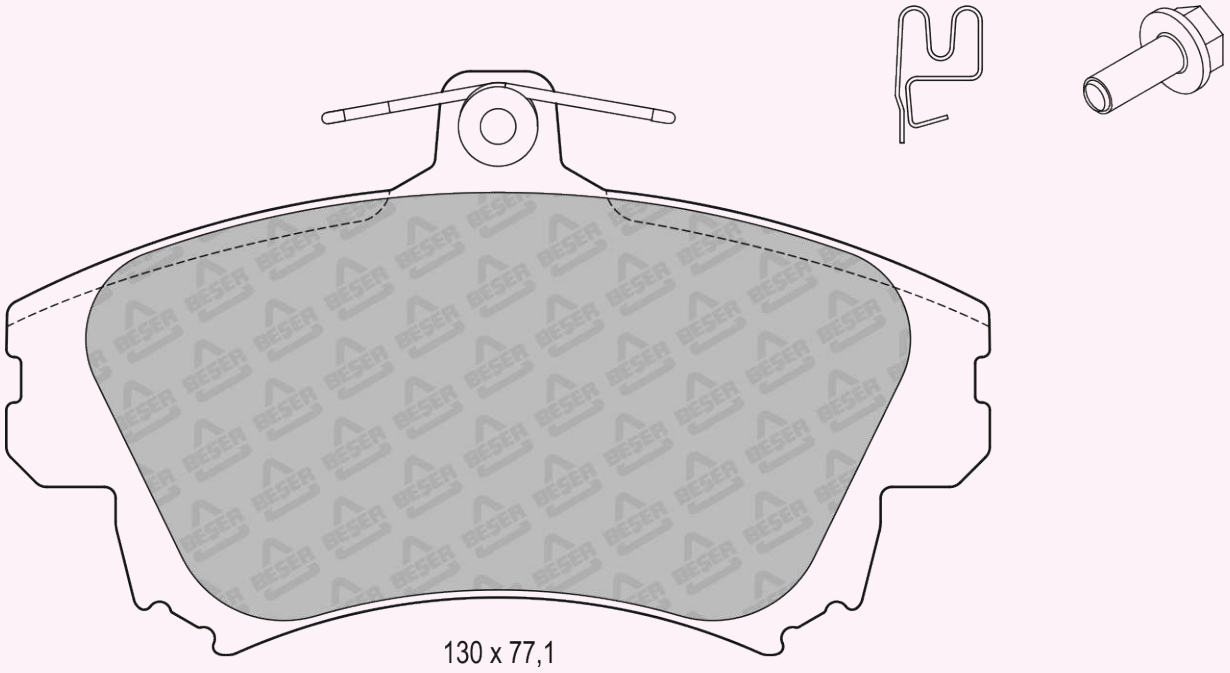

130 x 77,1

REFERENCE	T(mm)	REMARKS	MAKE	F/R	WVA No
4060	15,5	2 PADS WITH WEAR SENSOR	HYUNDAI - KIA	R	25520 25521 25522

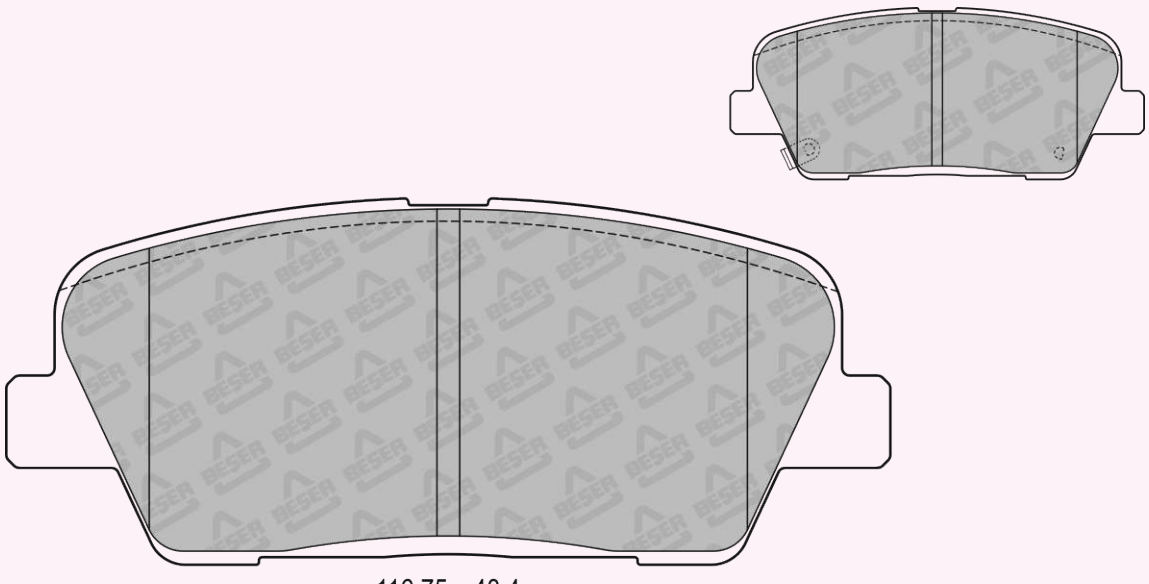

116,75 x 48,4

REFERENCE	T(mm)	REMARKS	MAKE	F/R	WVA No
4061	15,5	2 PADS WITH WEAR SENSOR	HYUNDAI - KIA SSANGYONG	R	24934 24935 24936

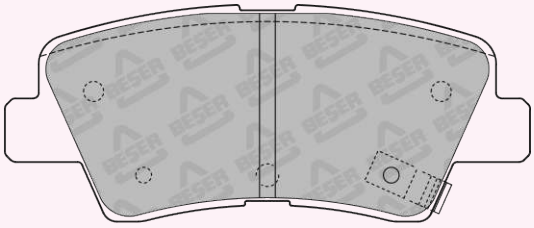

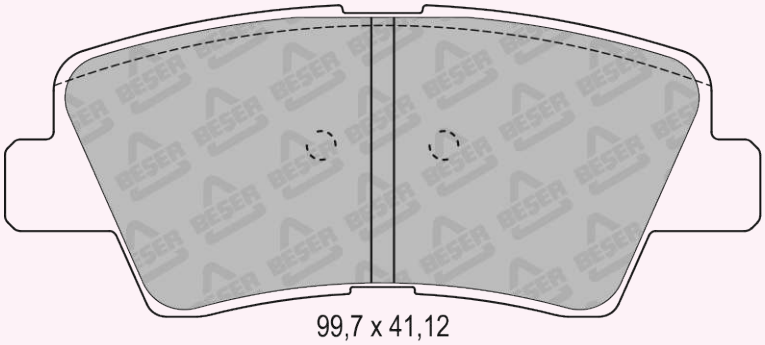

99,7 x 41,12
(NOT SCALE)

REFERENCE	T(mm)	REMARKS	MAKE	F/R	WVA No
4062	14,5	2 PADS WITH WEAR SENSOR	MITSUBISHI - PROTON SMART - VOLVO	R	23549



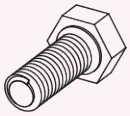

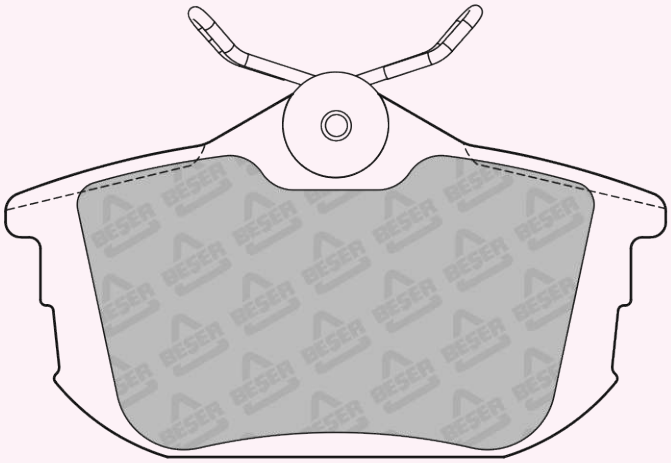

87,2 x 47,1

REFERENCE	T(mm)	REMARKS	MAKE	F/R	WVA No
4069	16,6	2 PADS WITH WEAR SENSOR	MERCEDES-BENZ	R	23189 23190 23191 23192

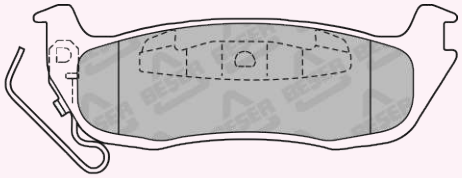

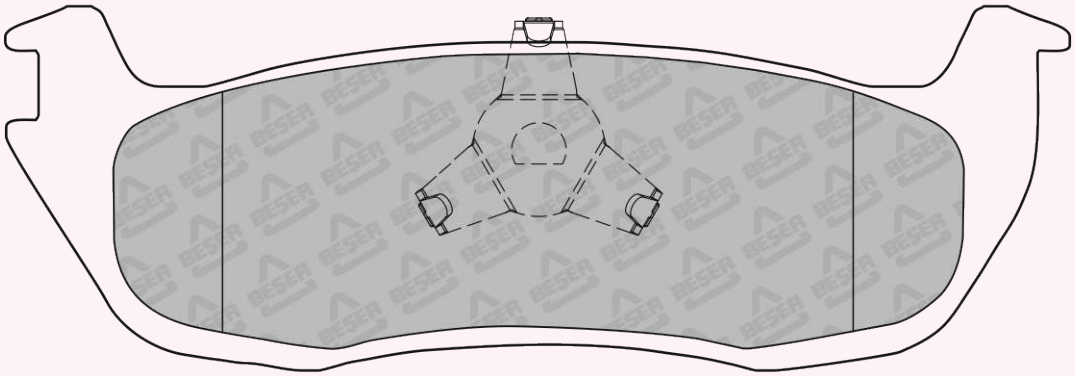

140,6 X 50,2

REFERENCE	T(mm)	REMARKS	MAKE	F/R	WVA No
4071	15,4	2 PADS WITH WEAR SENSOR	TOYOTA	F	23032 23505 23506

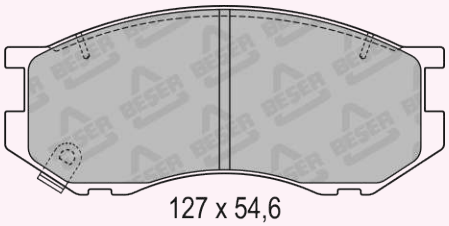

127 x 54,6
(NOT SCALE)

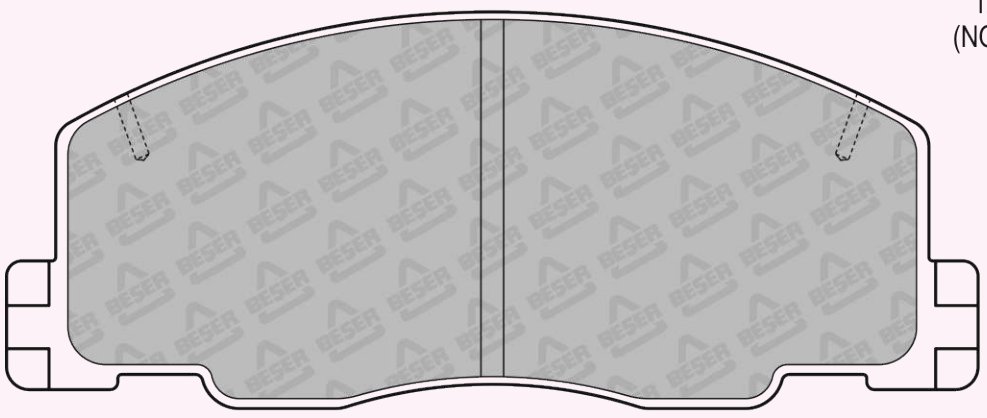

128,4 x 52,4

REFERENCE	T(mm)	REMARKS	MAKE	F/R	WVA No
4072	15,8	4 PADS PLAIN	TOYOTA	R	21688

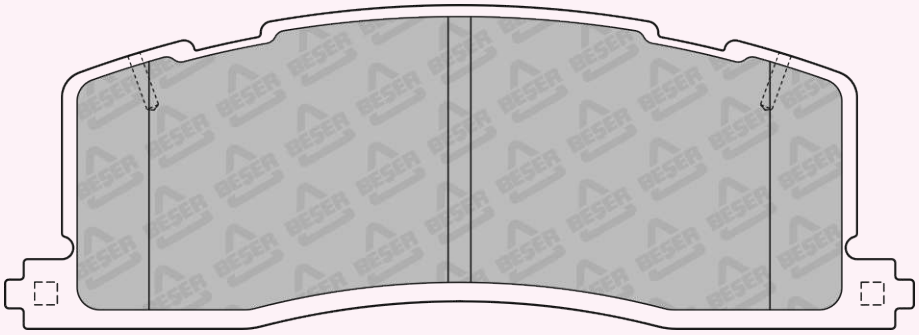

120 x 42,7

REFERENCE	T(mm)	REMARKS	MAKE	F/R	WVA No
4073	17,5	2 PADS WITH WEAR SENSOR	CHEVROLET - HOLDEN	F	24864 24865 24866

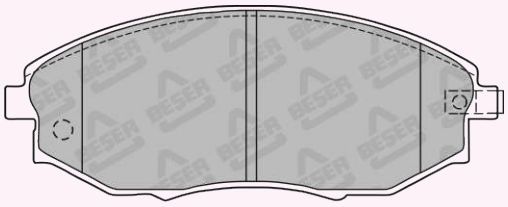

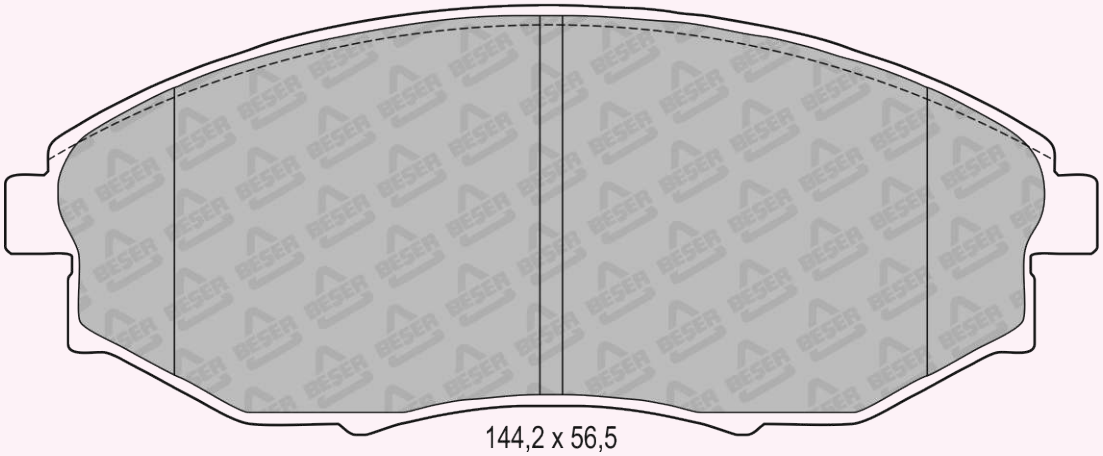

144,2 x 56,5

REFERENCE	T(mm)	REMARKS	MAKE	F/R	WVA No
4074	15	2 PADS WITH WEAR SENSOR	INFINITI - NISSAN	F	24056 24057 24667

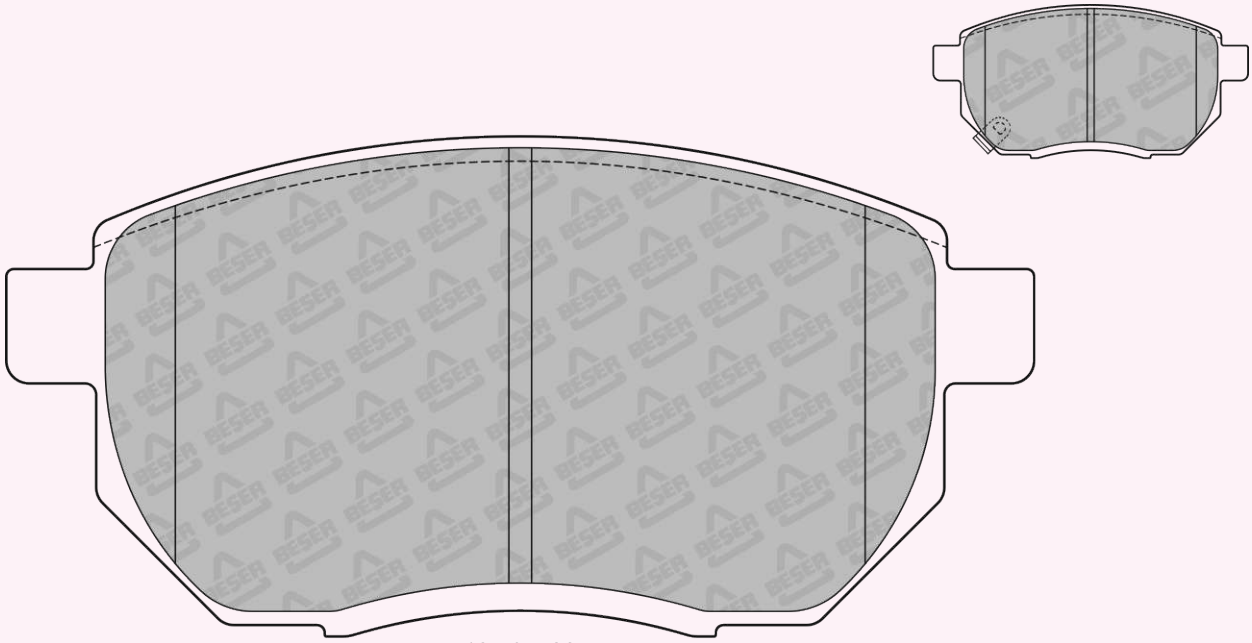

135,8 x 66

REFERENCE	T(mm)	REMARKS	MAKE	F/R	WVA No
4075	15,5	4 PADS PLAIN	AUDI - PORSCHE VW	F	23692

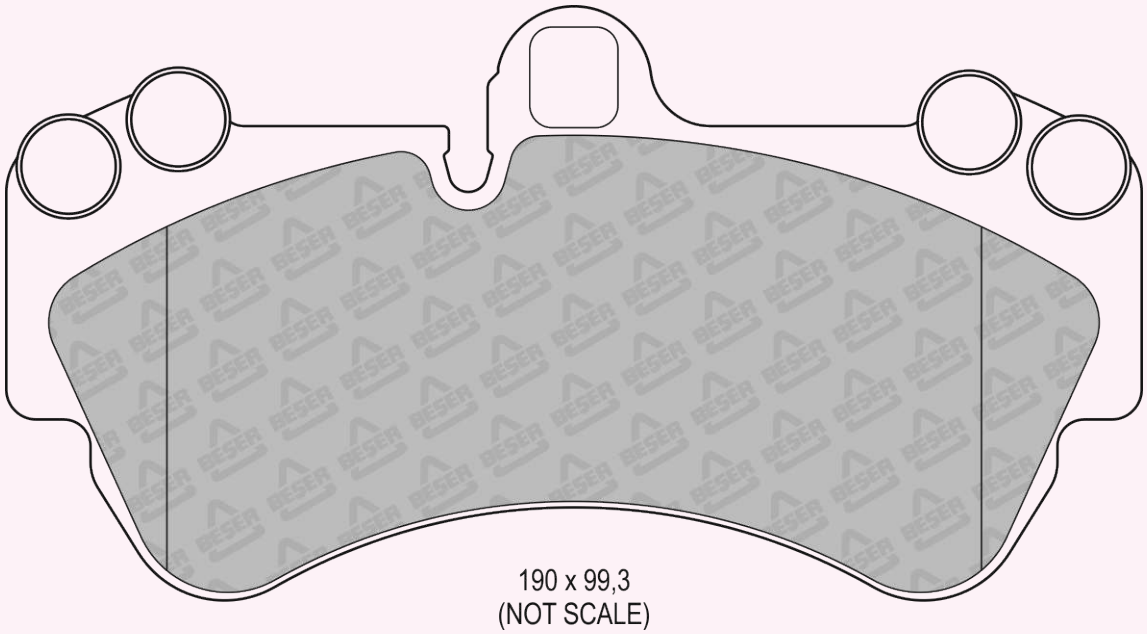

190 x 99,3
(NOT SCALE)

REFERENCE	T(mm)	REMARKS	MAKE	F/R	WVA No
4075/1	16,5	4 PADS PLAIN	AUDI - PORSCHE VW	F	23693

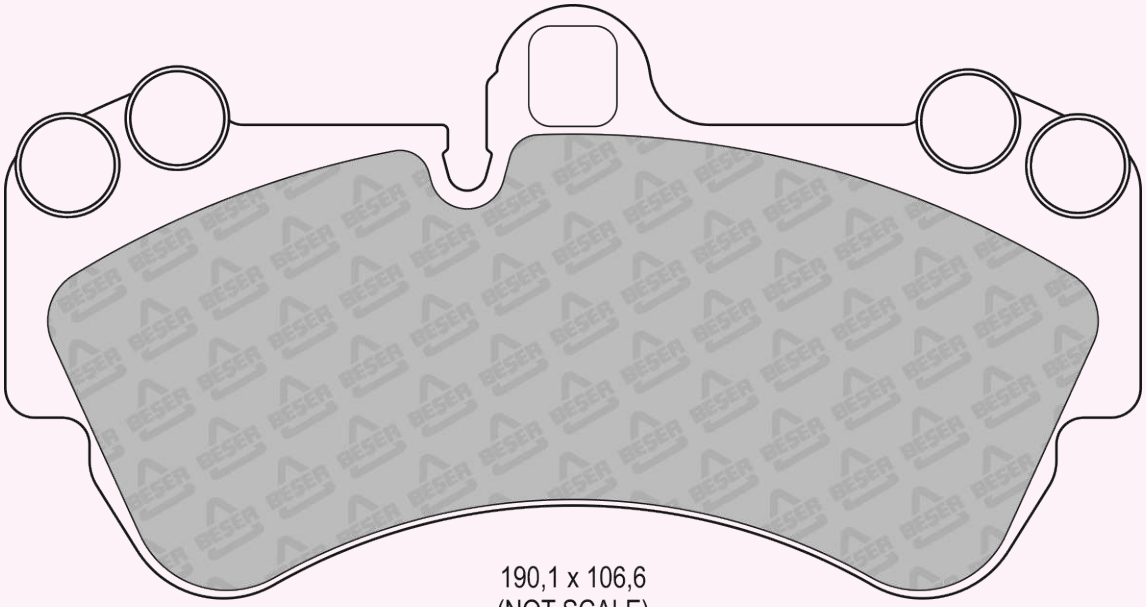

190,1 x 106,6
(NOT SCALE)

REFERENCE	T(mm)	REMARKS	MAKE	F/R	WVA No
4076	15,7	4 PADS PLAIN	AUDI - PORSCHE VW	R	23694

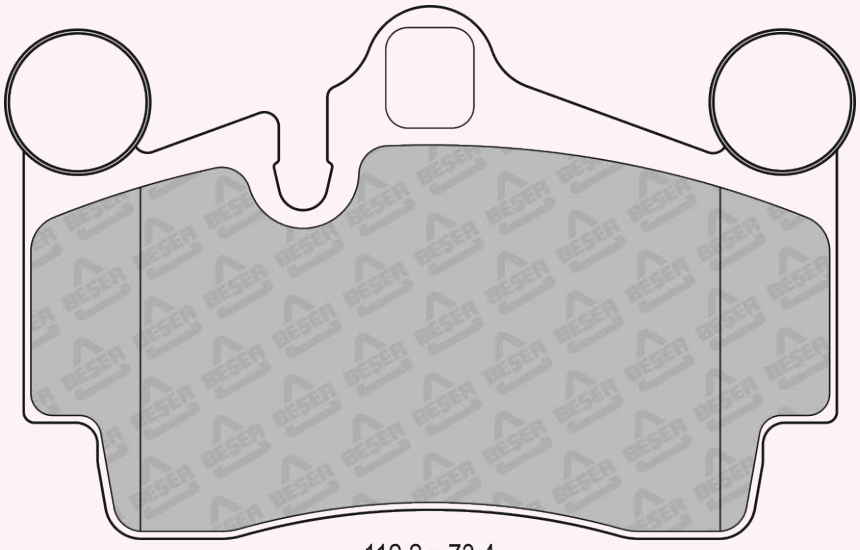

112,2 x 73,4

REFERENCE	T(mm)	REMARKS	MAKE	F/R	WVA No
4077	18	4 PADS PLAIN	TOYOTA	F	24337

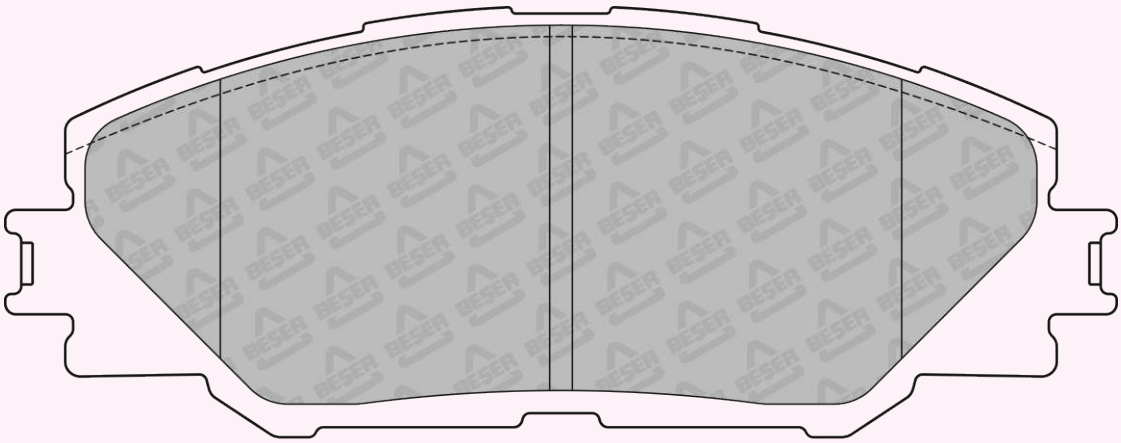

146,8 x 56,7

REFERENCE	T(mm)	REMARKS	MAKE	F/R	WVA No
4078	17,2	2 PADS WITH WEAR SENSOR	SUBARU	F	21482 24389 24390

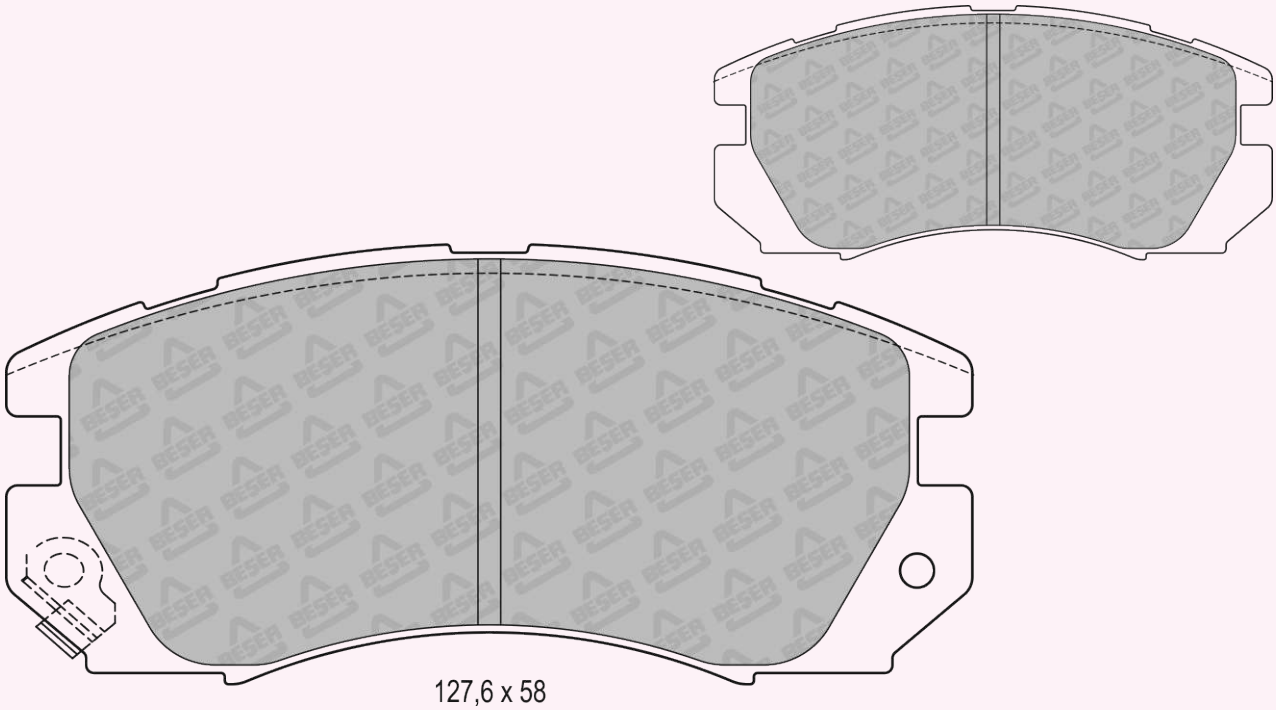

127,6 x 58

REFERENCE	T(mm)	REMARKS	MAKE	F/R	WVA No
4079	16,8	4 PADS PLAIN	SUBARU	F	23558 23559 23560

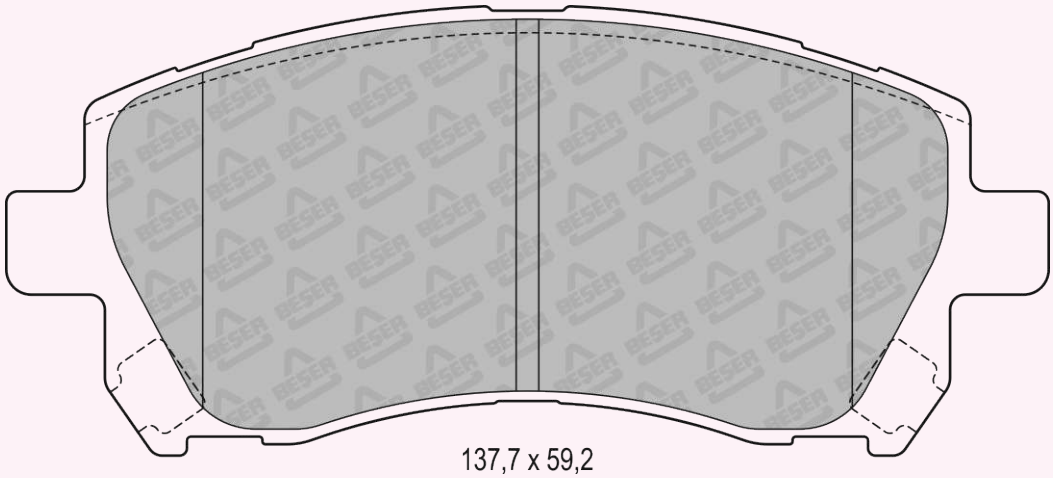

137,7 x 59,2

REFERENCE	T(mm)	REMARKS	MAKE	F/R	WVA No
4080	14,8	2 PADS WITH WEAR SENSOR	SUBARU	R	21703 21704 21705

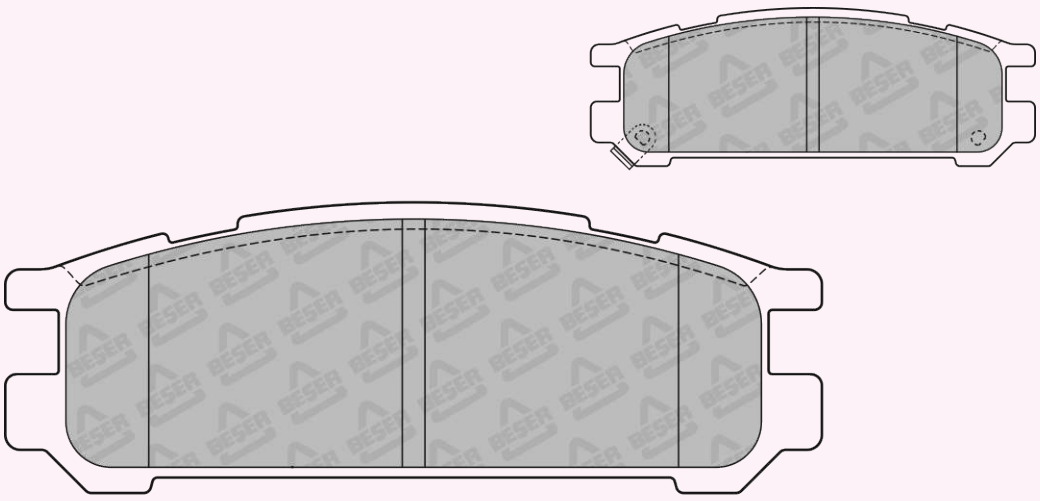

107,9 x 38,4

REFERENCE	T(mm)	REMARKS	MAKE	F/R	WVA No
4081	16,8	2 PADS WITH WEAR SENSOR	SUBARU	F	24222 24223 24224 24225

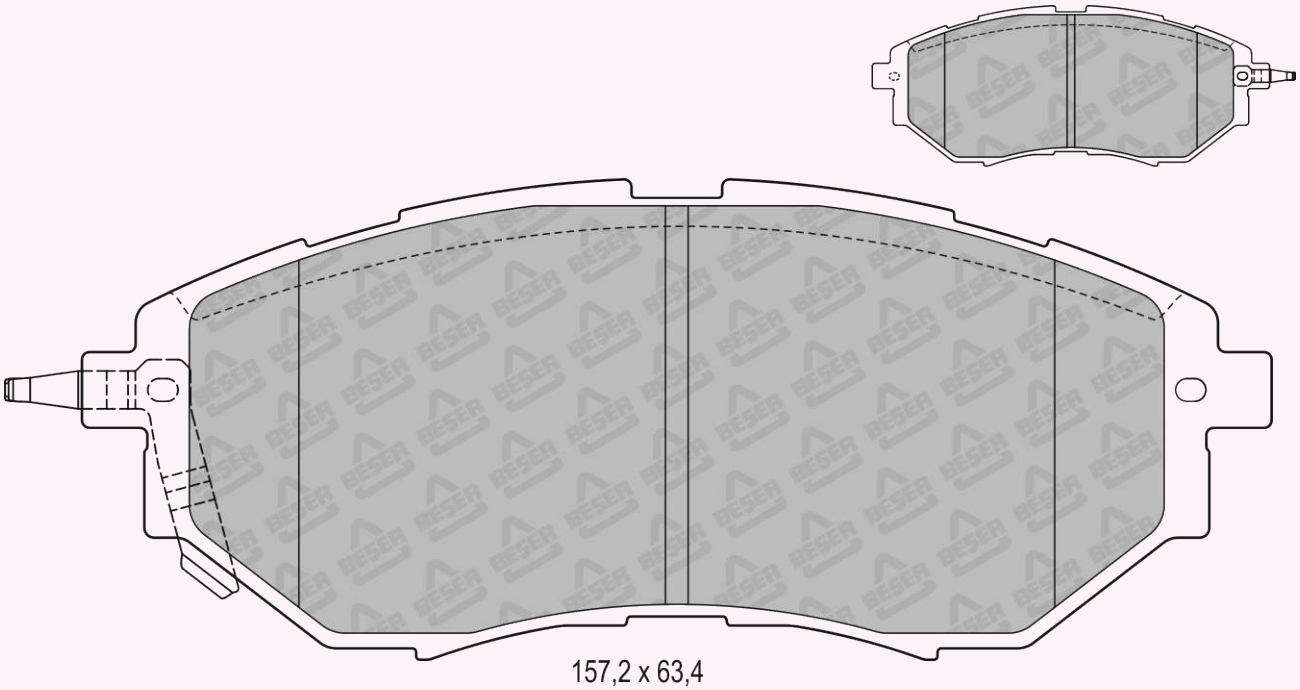

157,2 x 63,4

REFERENCE	T(mm)	REMARKS	MAKE	F/R	WVA No
4082	16,9	4 PADS PLAIN	LEXUS - TOYOTA	F	23703

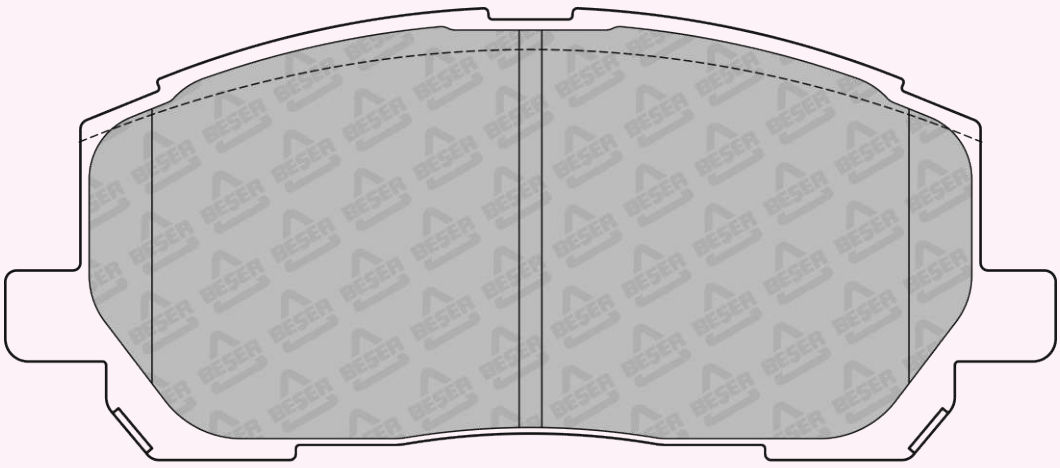

138,75 x 59,55

REFERENCE	T(mm)	REMARKS	MAKE	F/R	WVA No
4083	14,4	4 PADS PLAIN	LEXUS	R	23804

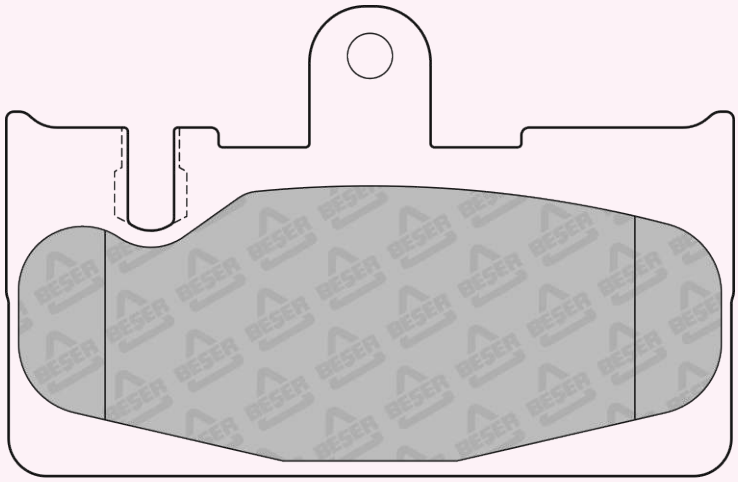

96,1 x 62

REFERENCE	T(mm)	REMARKS	MAKE	F/R	WVA No
4084	14,8	2 PADS WITH WEAR SENSOR	MITSUBISHI	R	23593 23594 23595

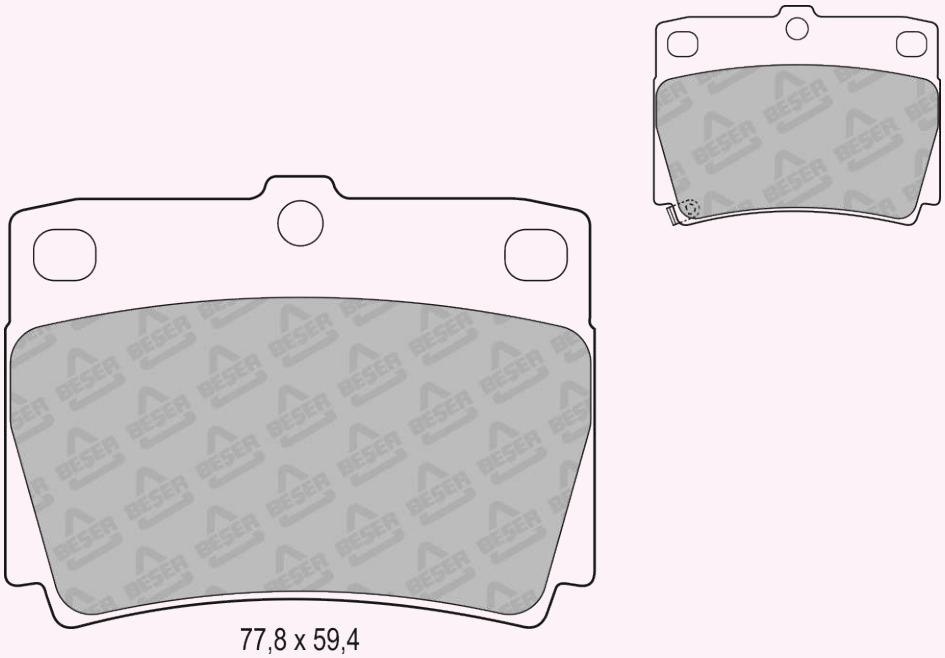

77,8 x 59,4

REFERENCE	T(mm)	REMARKS	MAKE	F/R	WVA No
4085	14,8	2 PADS WITH WEAR SENSOR	LEXUS - TOYOTA	R	23429

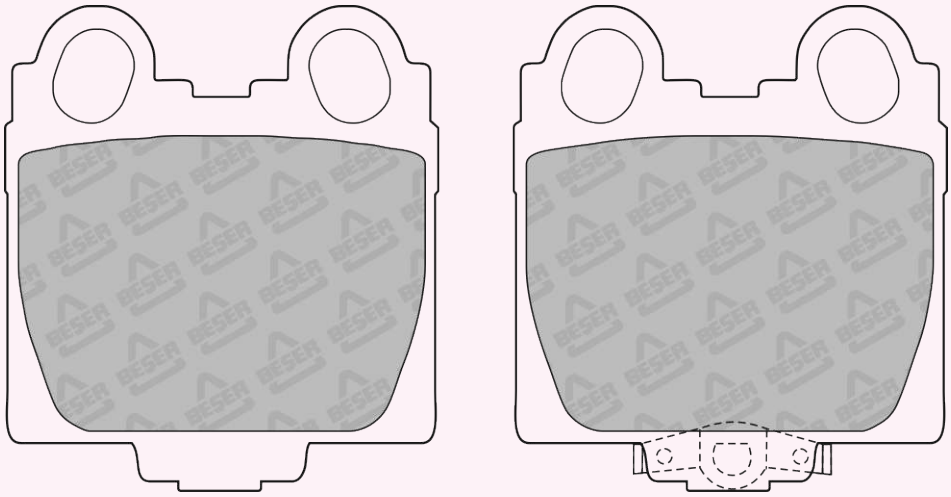

57,2 x 64

REFERENCE	T(mm)	REMARKS	MAKE	F/R	WVA No
4086	16,9	4 PADS PLAIN	HOLDEN - LEXUS TOYOTA	F	21791

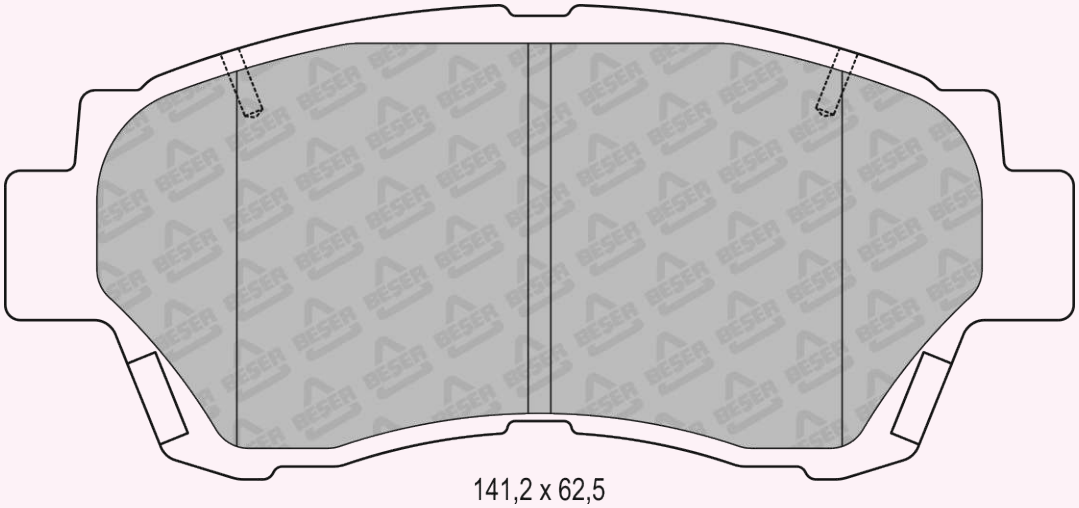

141,2 x 62,5

REFERENCE	T(mm)	REMARKS	MAKE	F/R	WVA No
4087	14	2 PADS WITH WEAR SENSOR	FORD - HYUNDAI KIA - NISSAN	R	21553 21554 24555

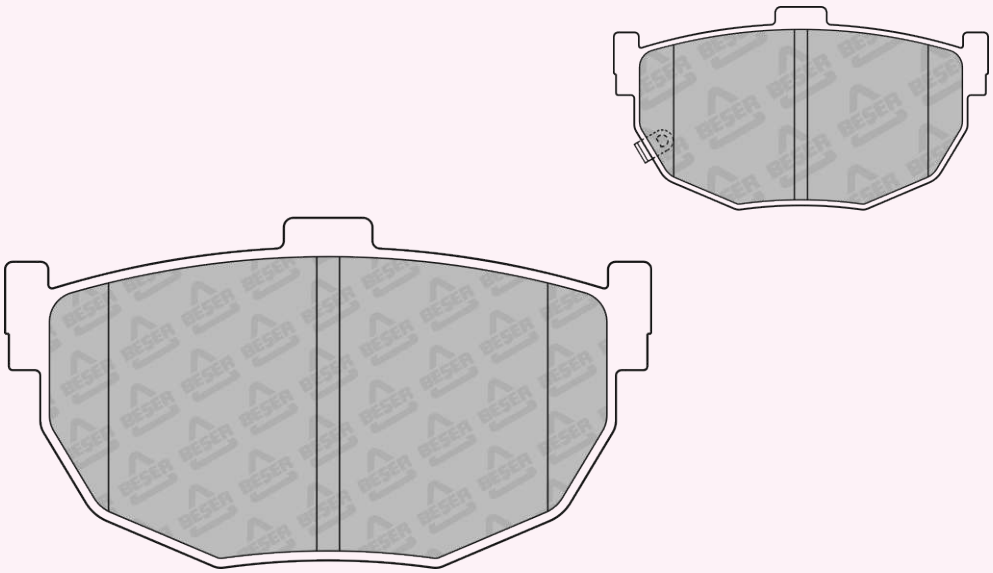

85,3 x 46,2

REFERENCE	T(mm)	REMARKS	MAKE	F/R	WVA No
4088	15,5	2 PADS WITH WEAR SENSOR	TOYOTA	F	21249 23037 23038 21782

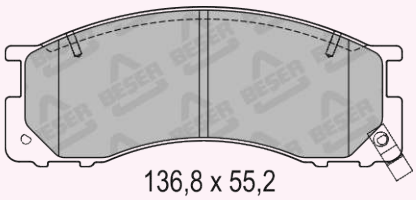

136,8 x 55,2
(NOT SCALE)

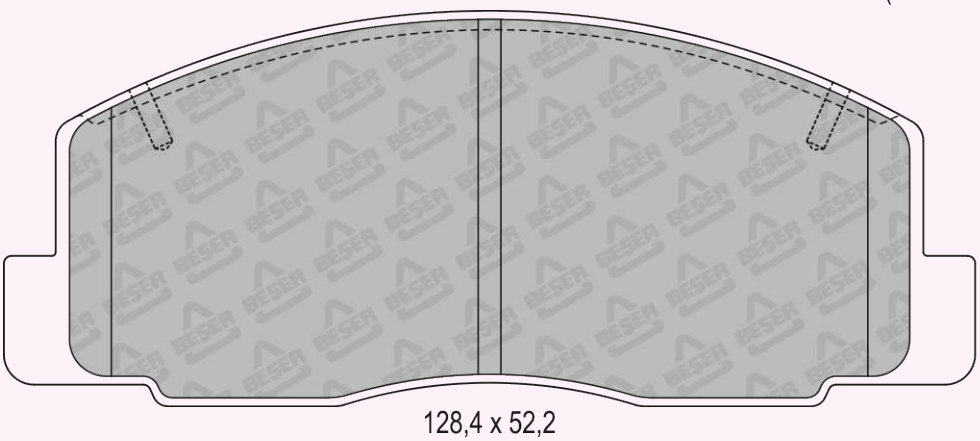

128,4 x 52,2

REFERENCE	T(mm)	REMARKS	MAKE	F/R	WVA No
4090	15,7	2 PADS WITH WEAR SENSOR	KIA MOTORS	F	-----

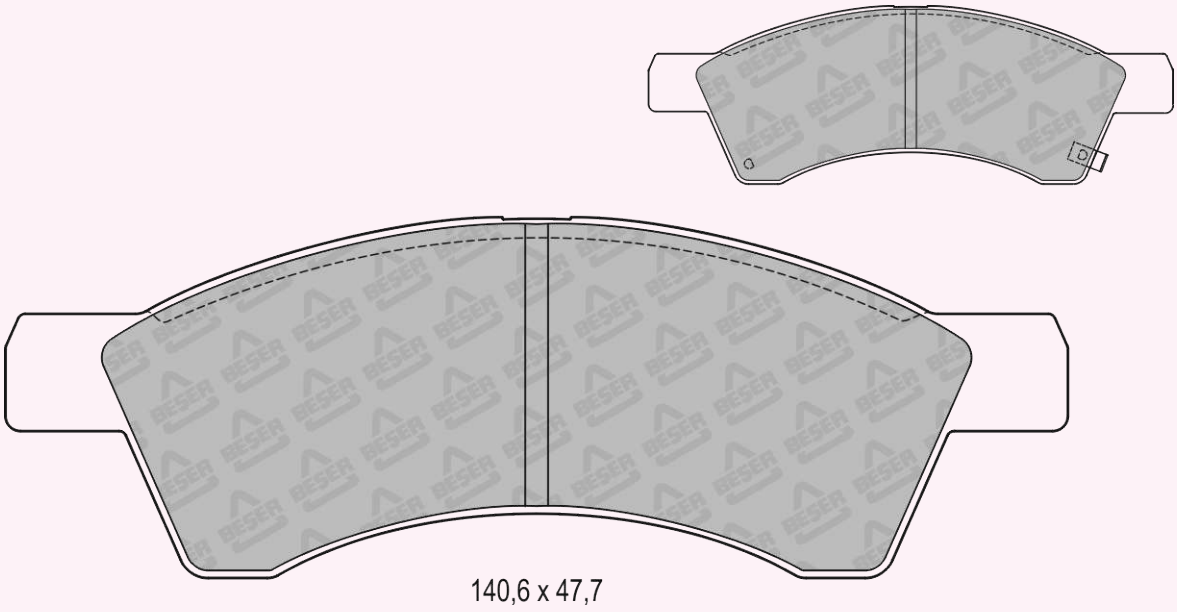

REFERENCE	T(mm)	REMARKS	MAKE	F/R	WVA No
4092	21	4 PADS PLAIN	IVECO	R	29232

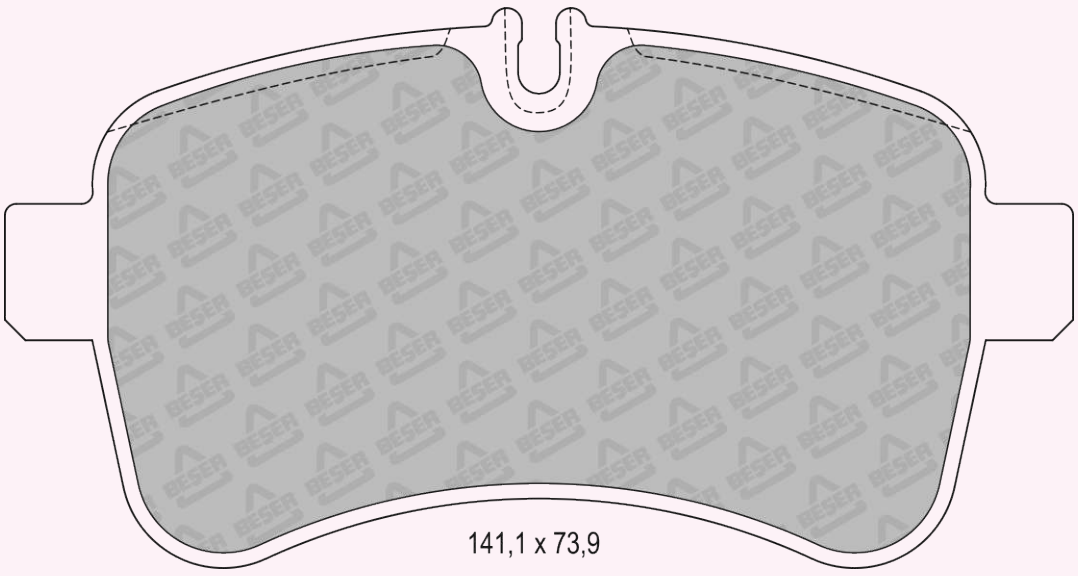

REFERENCE	T(mm)	REMARKS	MAKE	F/R	WVA No
4092/1	21	2 PADS WITH WEAR SENSOR (300 mm)	IVECO	R	24570 29232

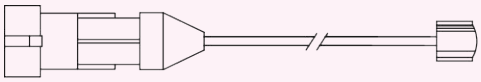

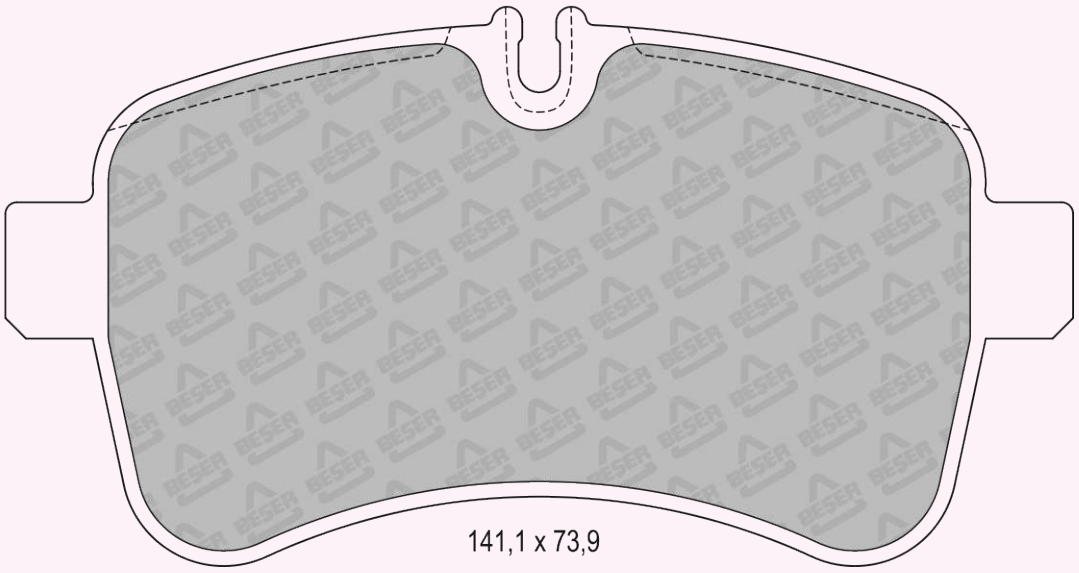

141,1 x 73,9

REFERENCE	T(mm)	REMARKS	MAKE	F/R	WVA No
4093	17	4 PADS PLAIN	FORD - JAGUAR RENAULT	R	23557

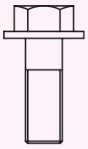

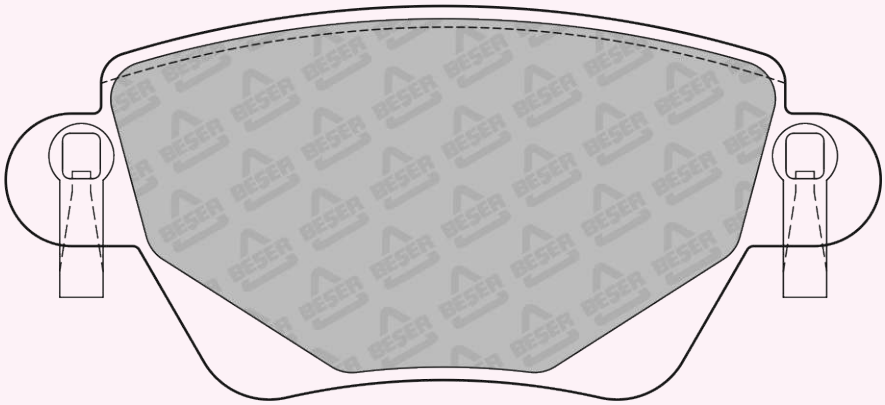

115,6 x 52

REFERENCE	T(mm)	REMARKS	MAKE	F/R	WVA No
4094	18	2 PADS RIGHT CHAMFER 2 PADS LEFT CHAMFER	LAND ROVER	F	23615

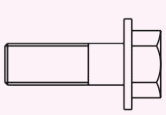

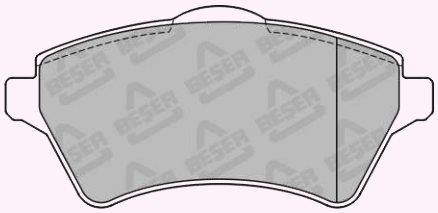

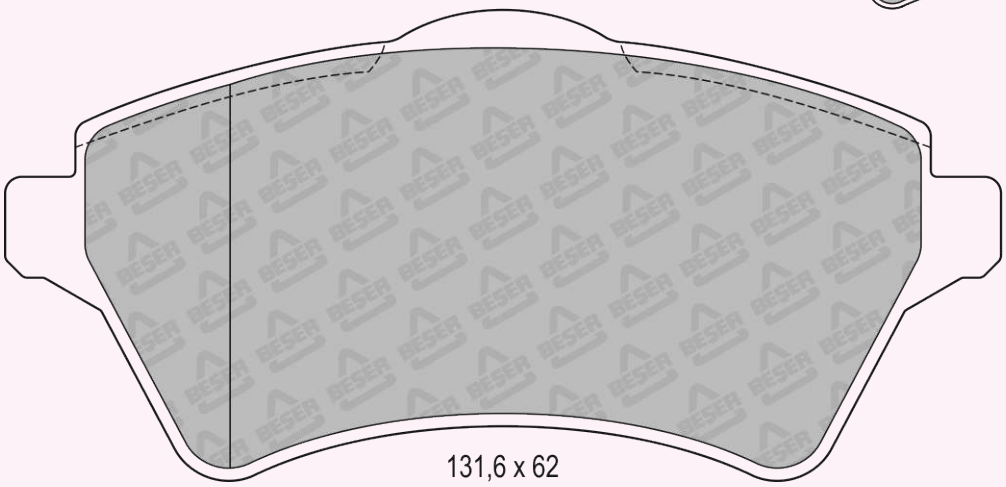

131,6 x 62

REFERENCE	T(mm)	REMARKS	MAKE	F/R	WVA No
4095	19,5	2 PADS WITH WEAR SENSOR (280 mm)	FORD - SEAT VW	F	23269 23270

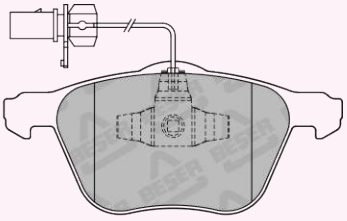

161,3 x 72,9

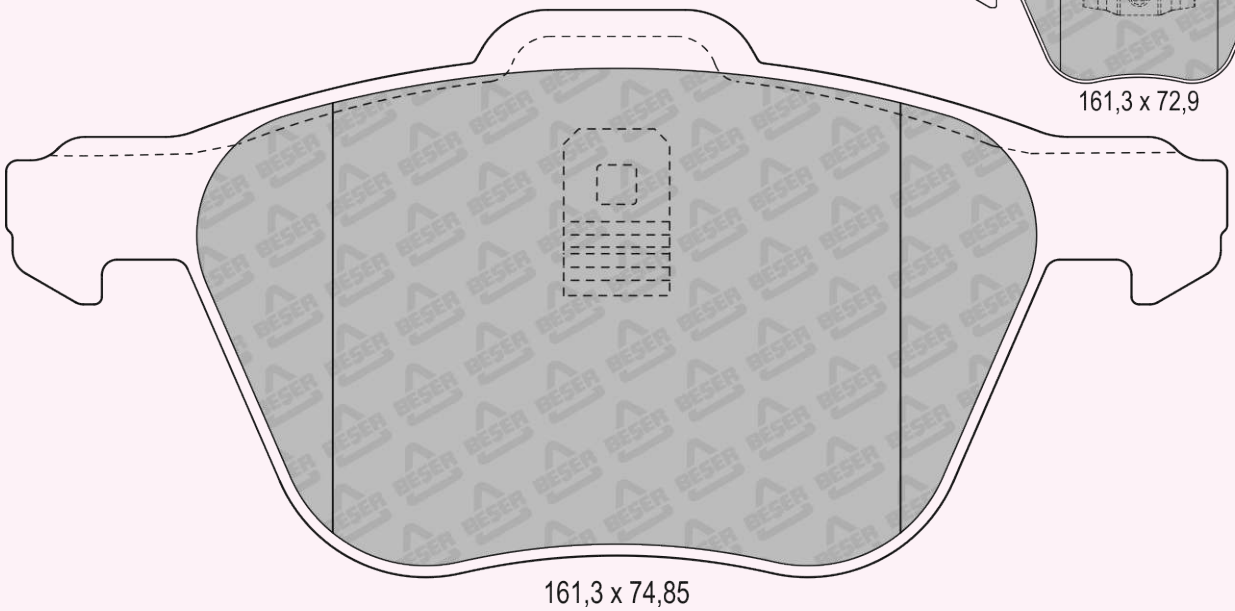

161,3 x 74,85

REFERENCE	T(mm)	REMARKS	MAKE	F/R	WVA No
4096	19	2 PADS WITH WEAR SENSOR	AUDI	F	23763 23801

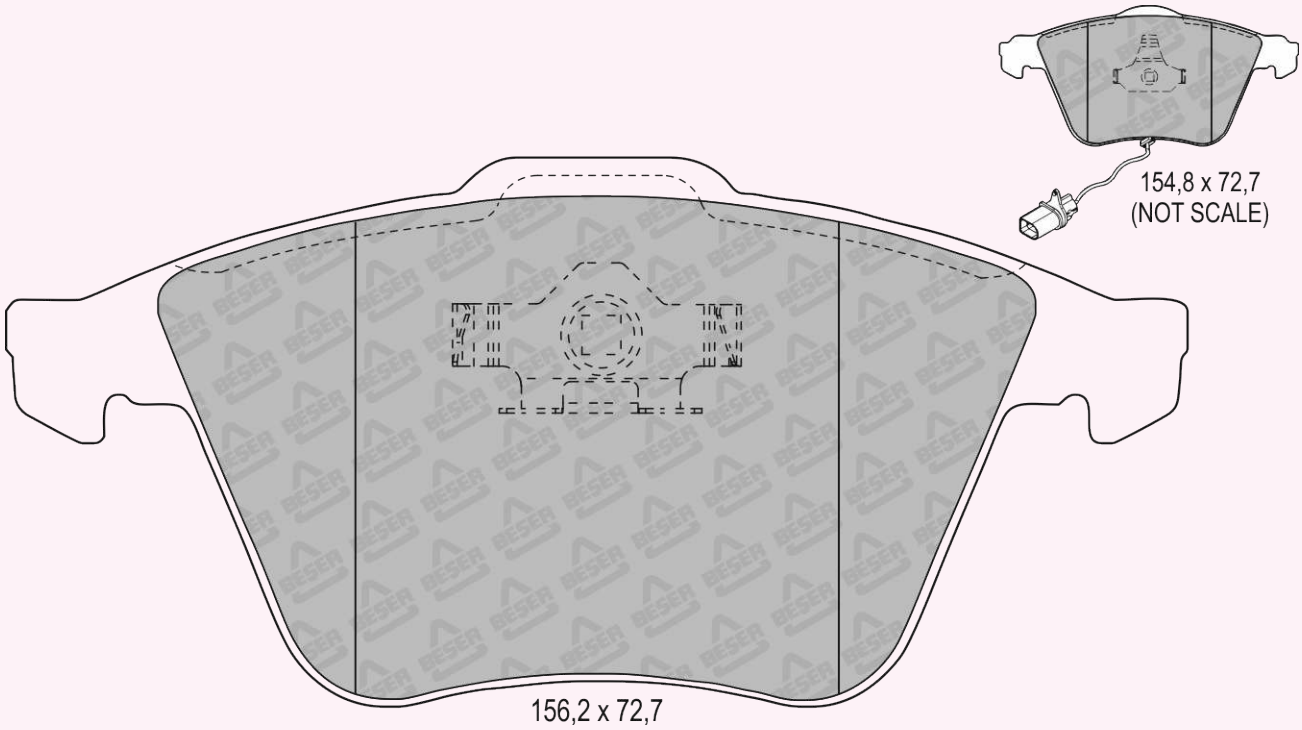

REFERENCE	T(mm)	REMARKS	MAKE	F/R	WVA No
4097	20	2 PADS WITH WEAR SENSOR	MERCEDES BENZ	F	23743 23744

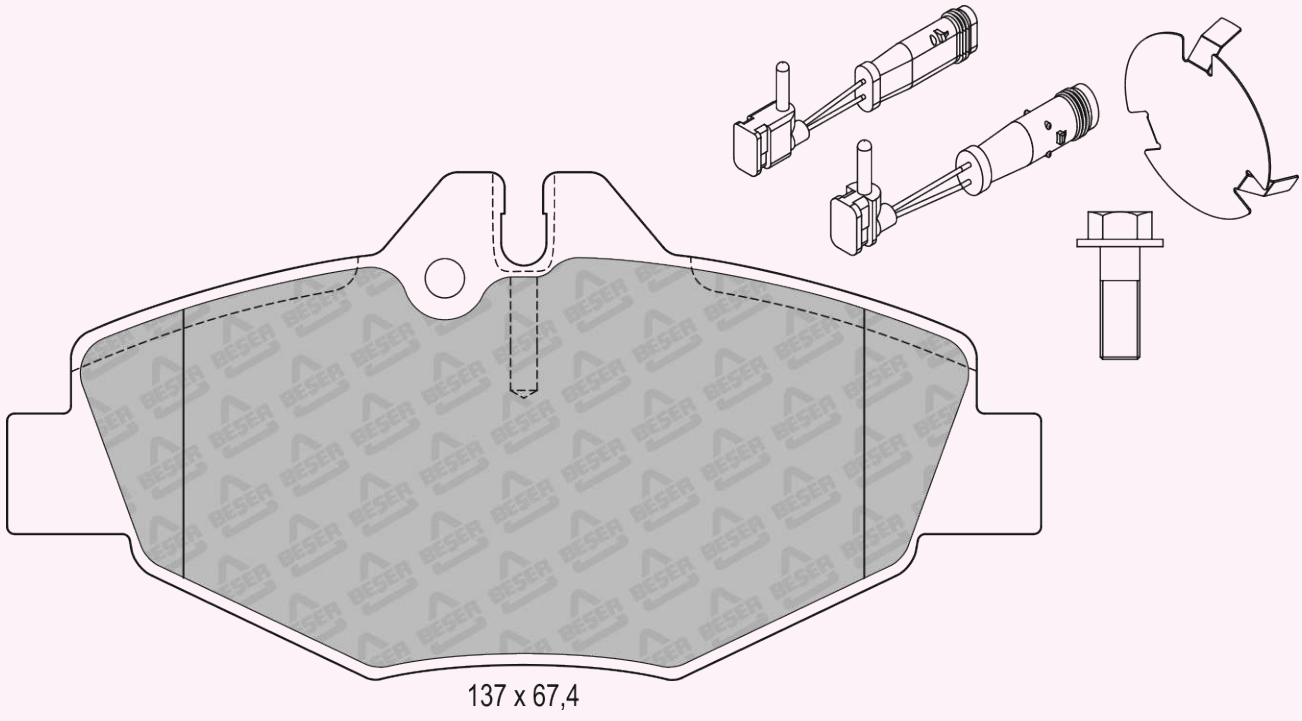

REFERENCE	T(mm)	REMARKS	MAKE	F/R	WVA No
4097/1	20	4 PADS PLAIN	MERCEDES BENZ	F	23743 23744

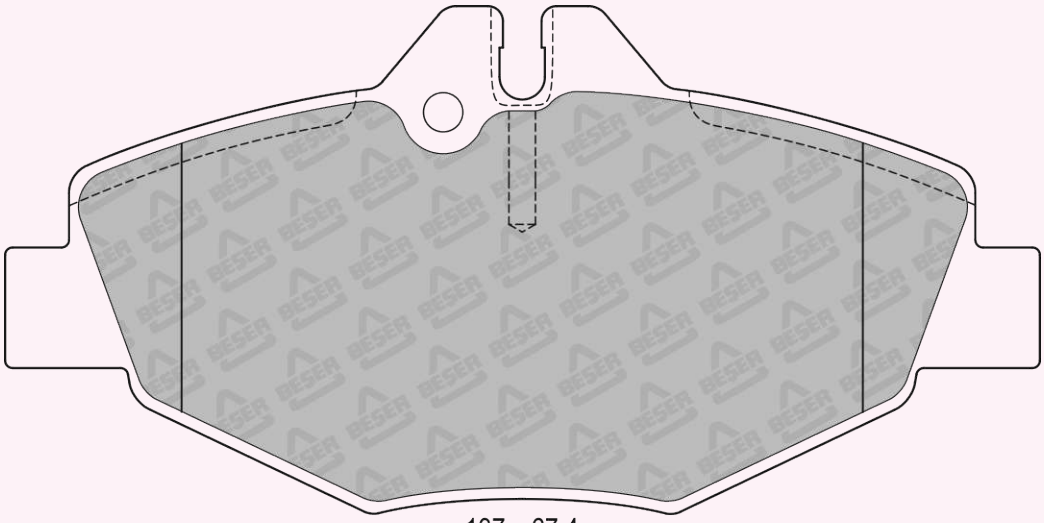

137 x 67,4

REFERENCE	T(mm)	REMARKS	MAKE	F/R	WVA No
4098	17,5	2 PADS WITH WEAR SENSOR	TOYOTA	R	24844 24845 24846

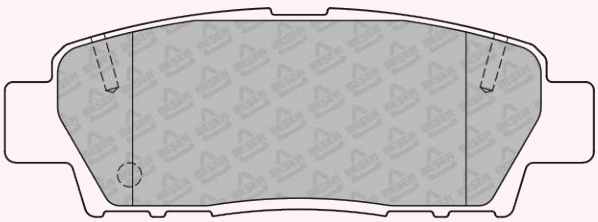

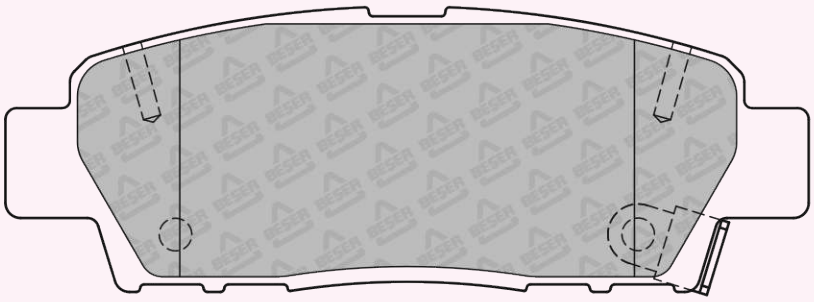

106,2 x 37,2

REFERENCE	T(mm)	REMARKS	MAKE	F/R	WVA No
4099	15,3	4 PADS WITH WEAR SENSOR	LEXUS - TOYOTA	R	24130 24131

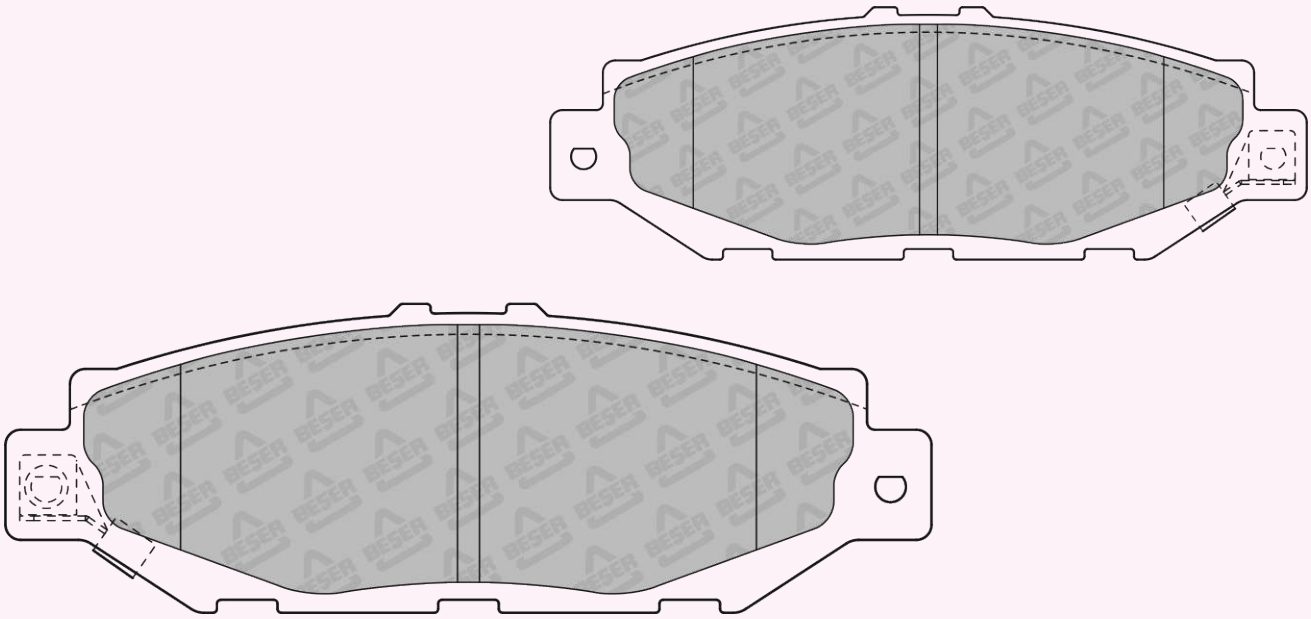

122,4 x 40,7

REFERENCE	T(mm)	REMARKS	MAKE	F/R	WVA No
4100	17,3	4 PADS PLAIN	FORD - JAGUAR	F	23278 23279

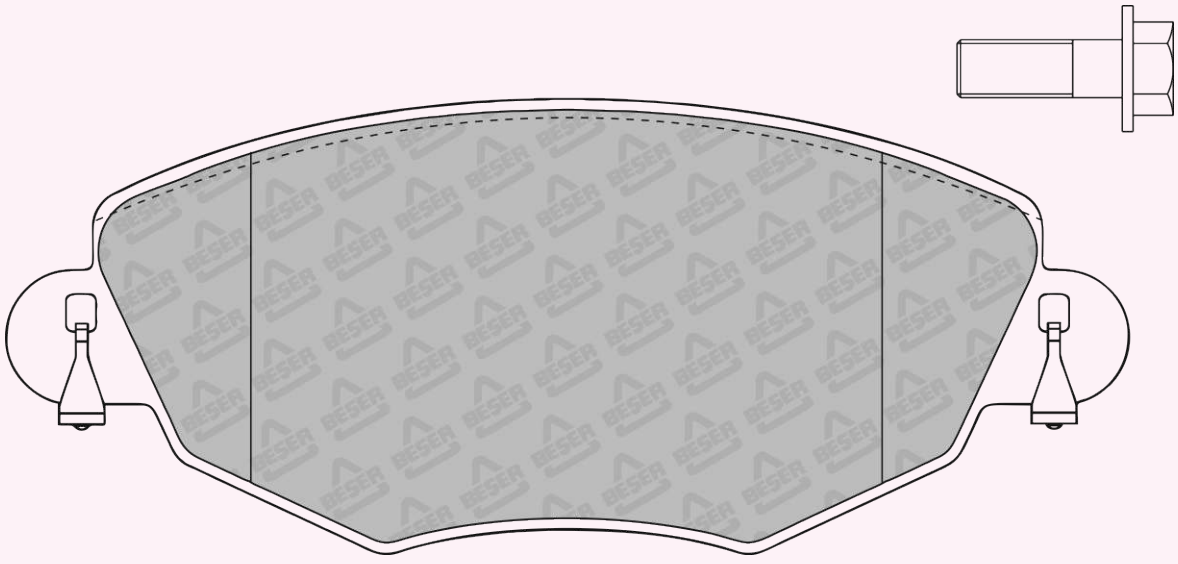

148,7 x 60,6

REFERENCE	T(mm)	REMARKS	MAKE	F/R	WVA No
4101	14,6	4 PADS PLAIN	MERCEDES BENZ	R	23078

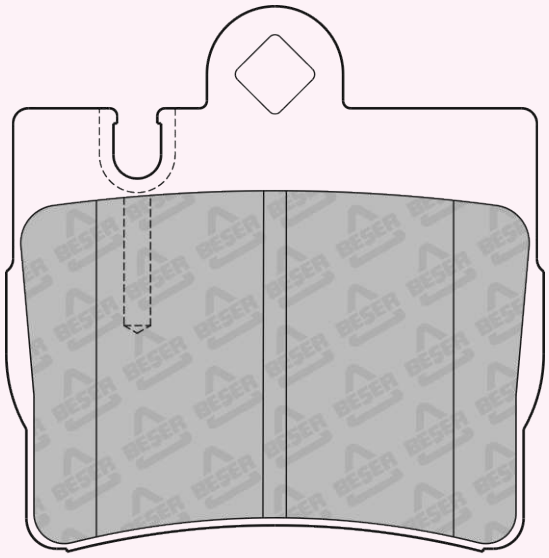

70,92 x 72,01

REFERENCE	T(mm)	REMARKS	MAKE	F/R	WVA No
4102	17,5	4 PADS PLAIN	MERCEDES BENZ	F	23271

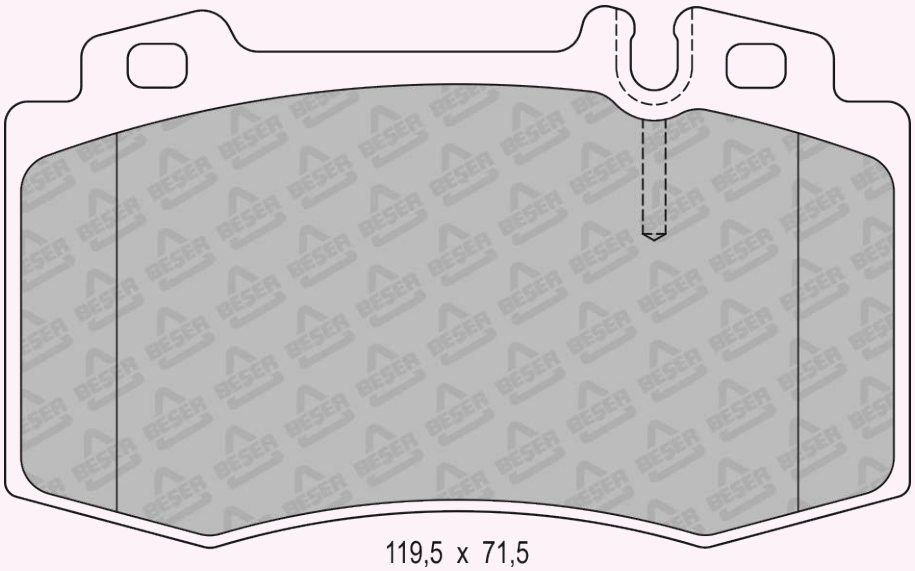

119,5 x 71,5

REFERENCE	T(mm)	REMARKS	MAKE	F/R	WVA No
4103	15,8	4 PADS PLAIN	MASERATI - MERCEDES BENZ	R	23157

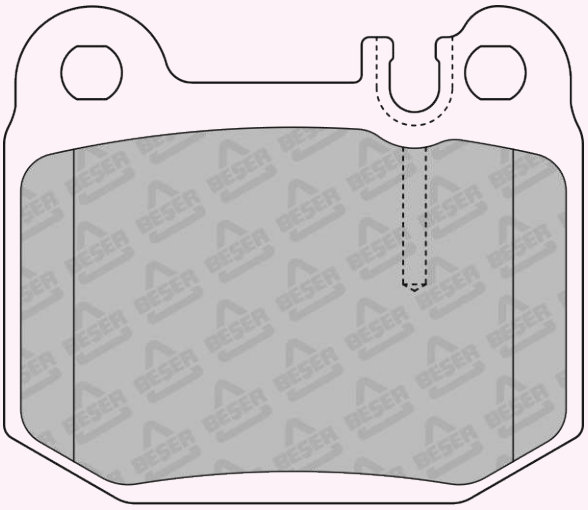

76,4 x 65,7

REFERENCE	T(mm)	REMARKS	MAKE	F/R	WVA No
4104	16	4 PADS PLAIN	NISSAN	F	21280

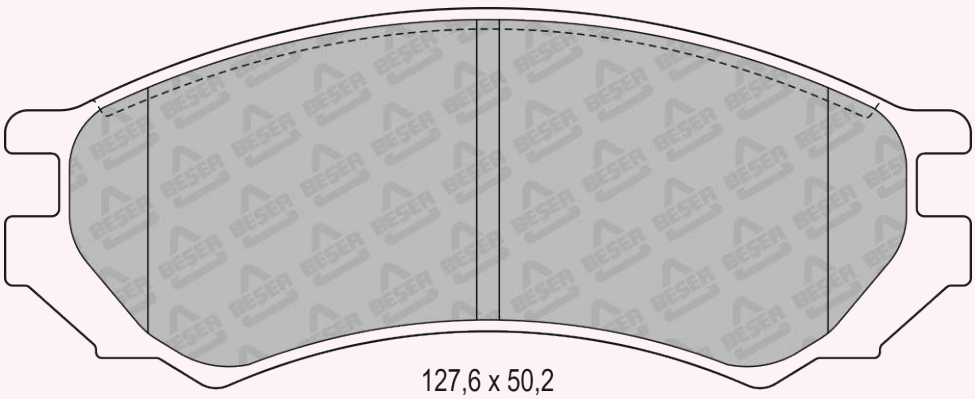

127,6 x 50,2

REFERENCE	T(mm)	REMARKS	MAKE	F/R	WVA No
4105	16,7	4 PADS PLAIN	LEXUS - TOYOTA	F	23734 23989

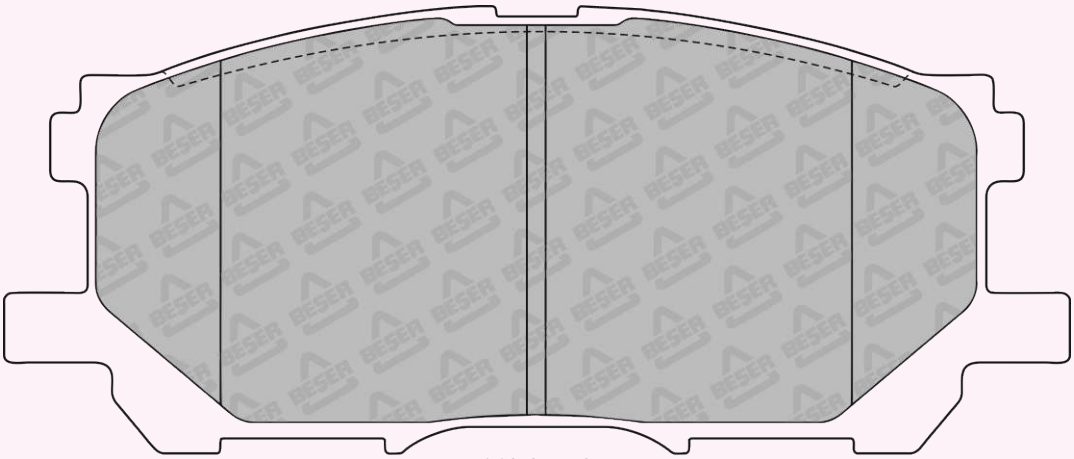

140,8 x 59

REFERENCE	T(mm)	REMARKS	MAKE	F/R	WVA No
4106	15,5	2 PADS WITH WEAR SENSOR	CHRYSLER - DODGE JEEP - MITSUBISHI	R	24014 24015



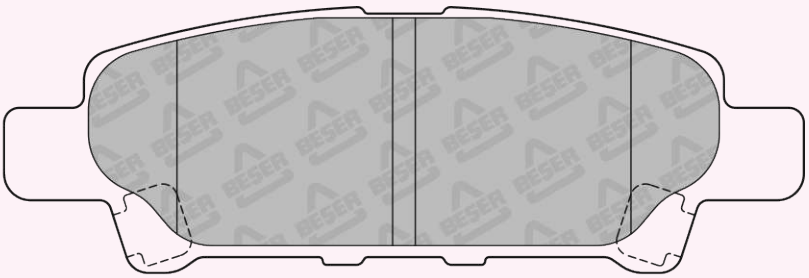

105,7 x 35,1

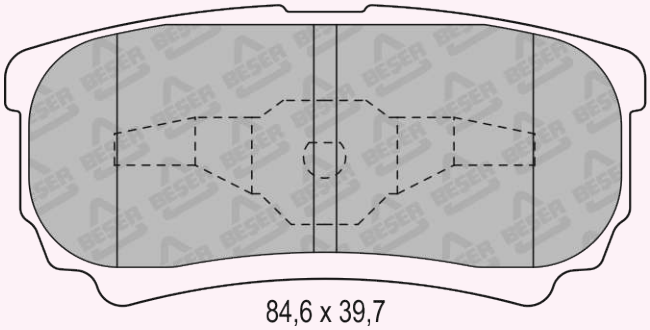

84,6 x 39,7

REFERENCE	T(mm)	REMARKS	MAKE	F/R	WVA No
4107	15,5	2 PADS WITH WEAR SENSOR	MITSUBISHI	F	25030



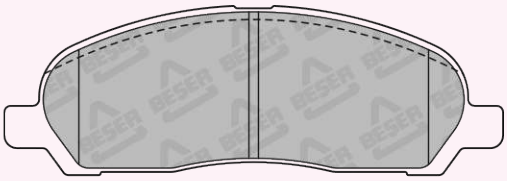

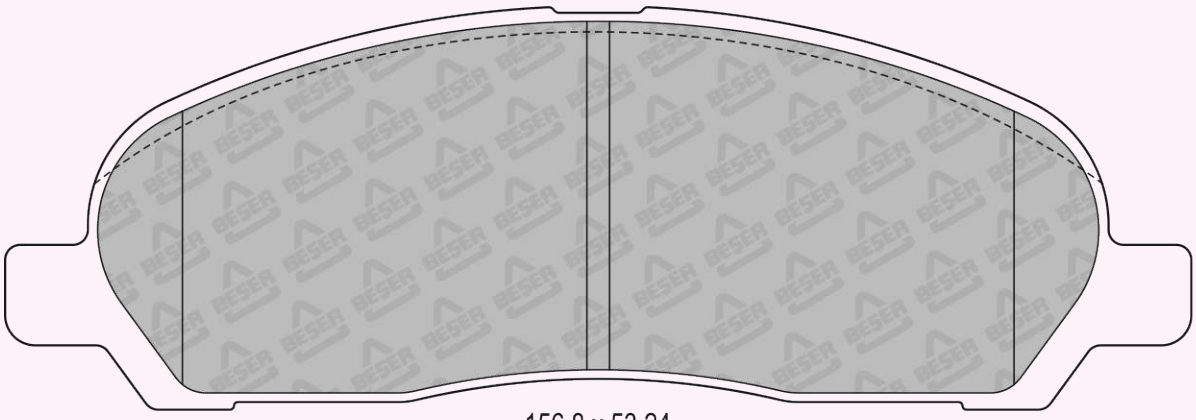

156,8 x 53,24

REFERENCE	T(mm)	REMARKS	MAKE	F/R	WVA No
4108	15,3	2 PADS WITH WEAR SENSOR	CHRYSLER - HYUNDAI MITSUBISHI - PROTON	R	21706 21707 21708

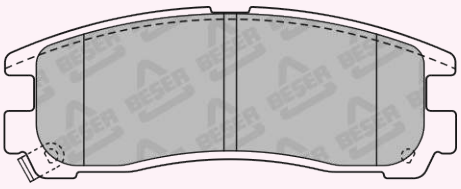

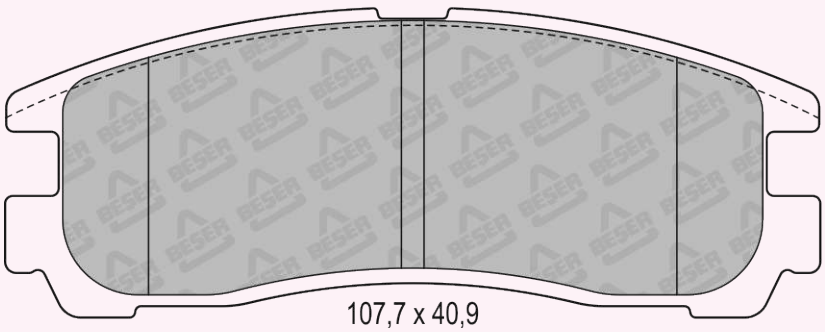

107,7 x 40,9

REFERENCE	T(mm)	REMARKS	MAKE	F/R	WVA No
4109	17	2 PADS WITH WEAR SENSOR	ACURA - HONDA NISSAN	F	23729 24090 24091

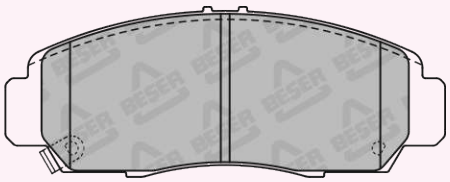

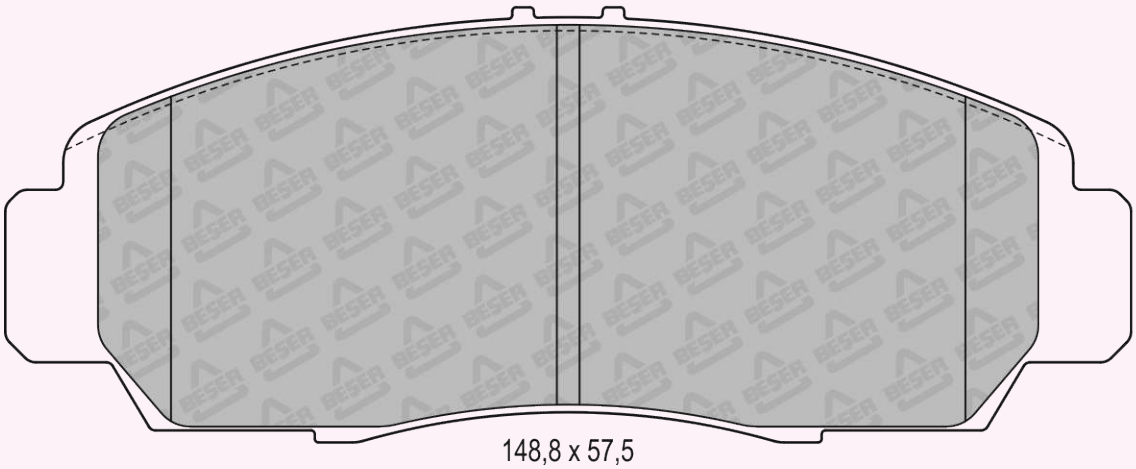

148,8 x 57,5

REFERENCE	T(mm)	REMARKS	MAKE	F/R	WVA No
4110	16,8	2 PADS WITH WEAR SENSOR	HONDA	F	23178 23530 23531

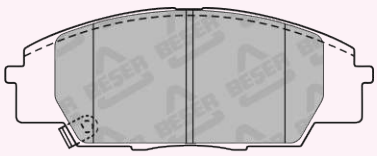

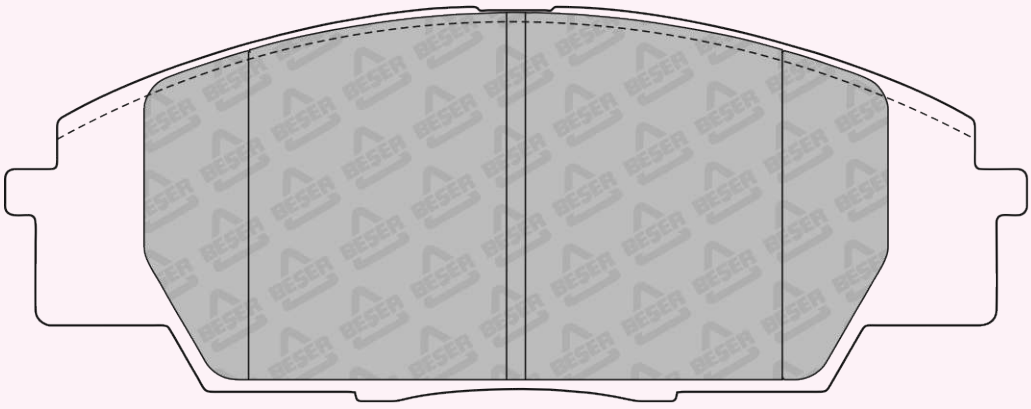

135 x 52

REFERENCE	T(mm)	REMARKS	MAKE	F/R	WVA No
4111	15,3	2 PADS WITH WEAR SENSOR	LEXUS - TOYOTA	R	23967

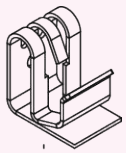

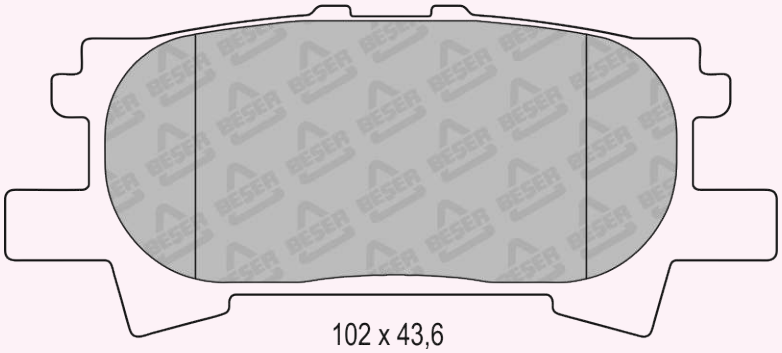

102 x 43,6

REFERENCE	T(mm)	REMARKS	MAKE	F/R	WVA No
4112	16,8	2 PADS INNER & 2 PADS OUTER	TOYOTA	F	23340 23341 23342

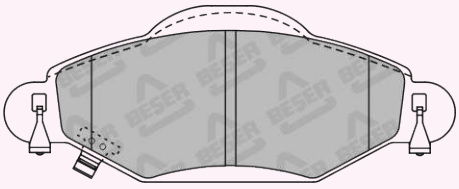

130,6 x 51
(NOT SCALE)

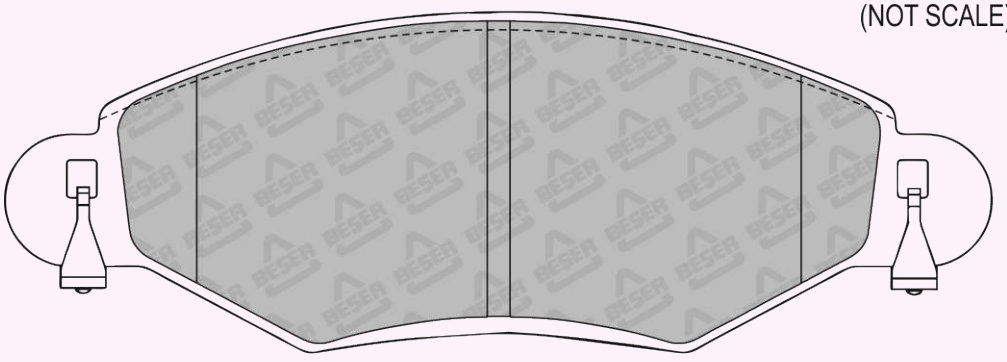

130,6 x 44,9

REFERENCE	T(mm)	REMARKS	MAKE	F/R	WVA No
4113	15	2 PADS INNER & 2 PADS OUTER	LEXUS - TOYOTA	R	24323 24324 24325

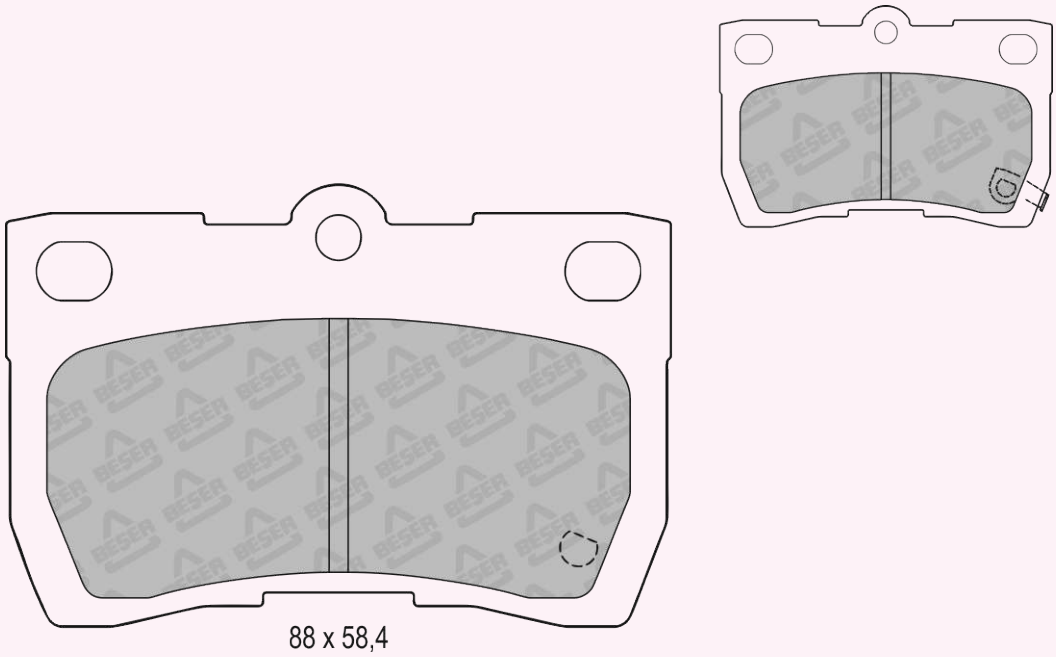

88 x 58,4

REFERENCE	T(mm)	REMARKS	MAKE	F/R	WVA No
4114	17,3	4 PADS PLAIN	TOYOTA	R	-----

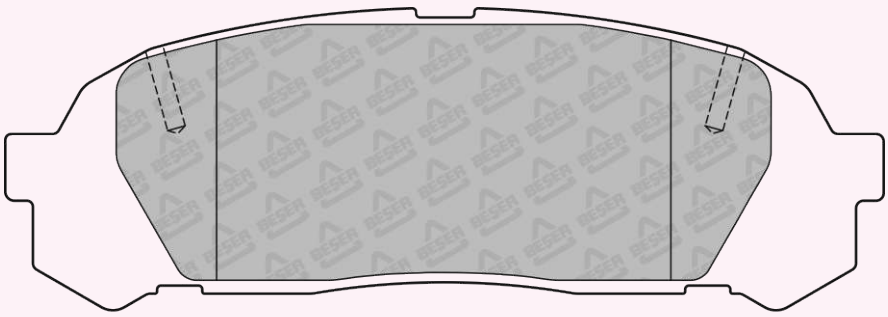

116 x 39,8

REFERENCE	T(mm)	REMARKS	MAKE	F/R	WVA No
4115	16,5	4 PADS PLAIN	HONDA - MG NISSAN	F	23094 23095

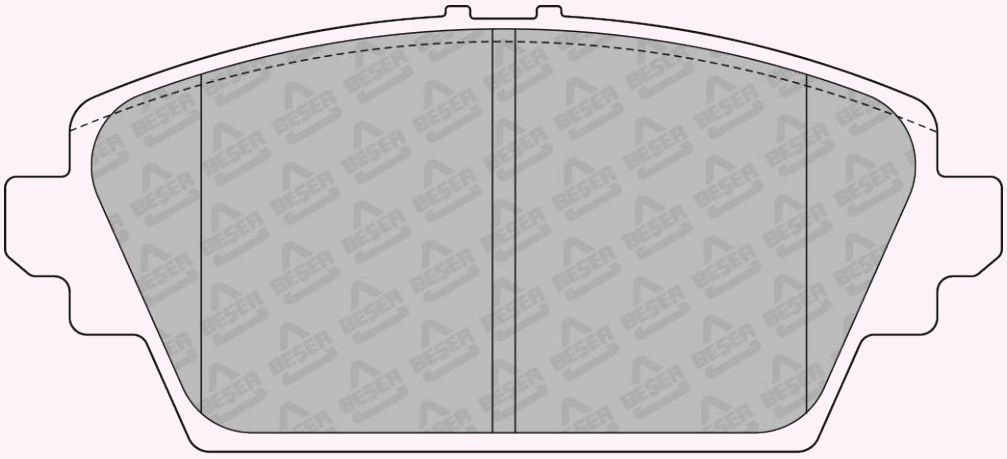

131,7 x 58,8

REFERENCE	T(mm)	REMARKS	MAKE	F/R	WVA No
4116	19,2	4 PADS PLAIN	NISSAN	F	---

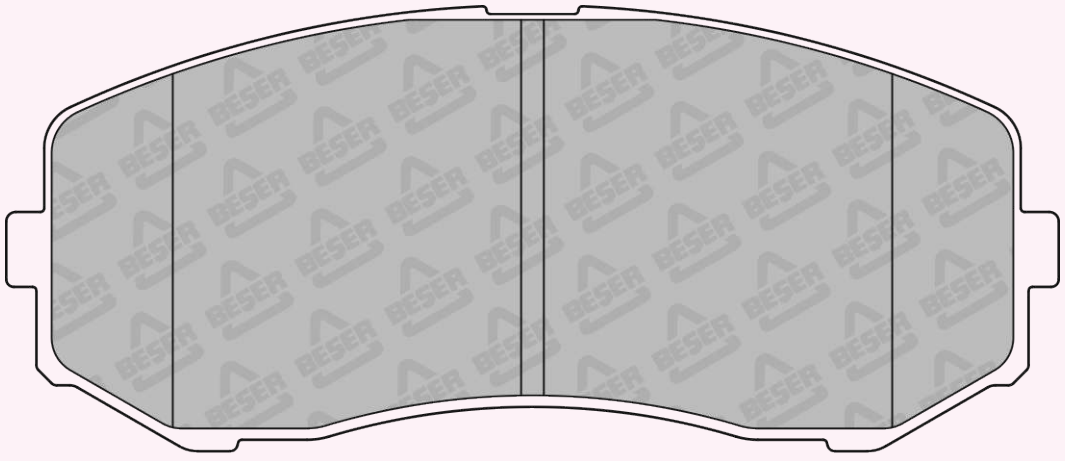

139 x 58,80

REFERENCE	T(mm)	REMARKS	MAKE	F/R	WVA No
4117	17	4 PADS PLAIN	TOYOTA	F	26219

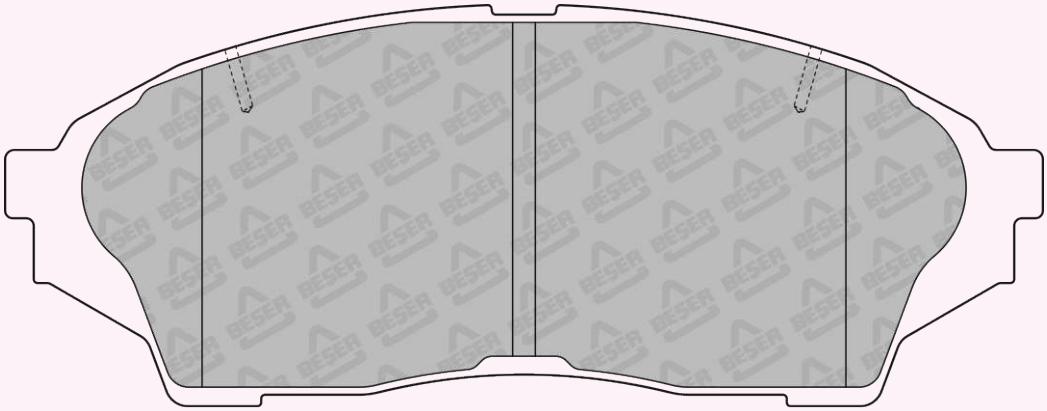

137 x 52,8

REFERENCE	T(mm)	REMARKS	MAKE	F/R	WVA No
4118	17	2 PADS WITH WEAR SENSOR	HAWTAI - HYUNDAI LANDWIND(JMC) - MAZDA	F	24246 24248 24249

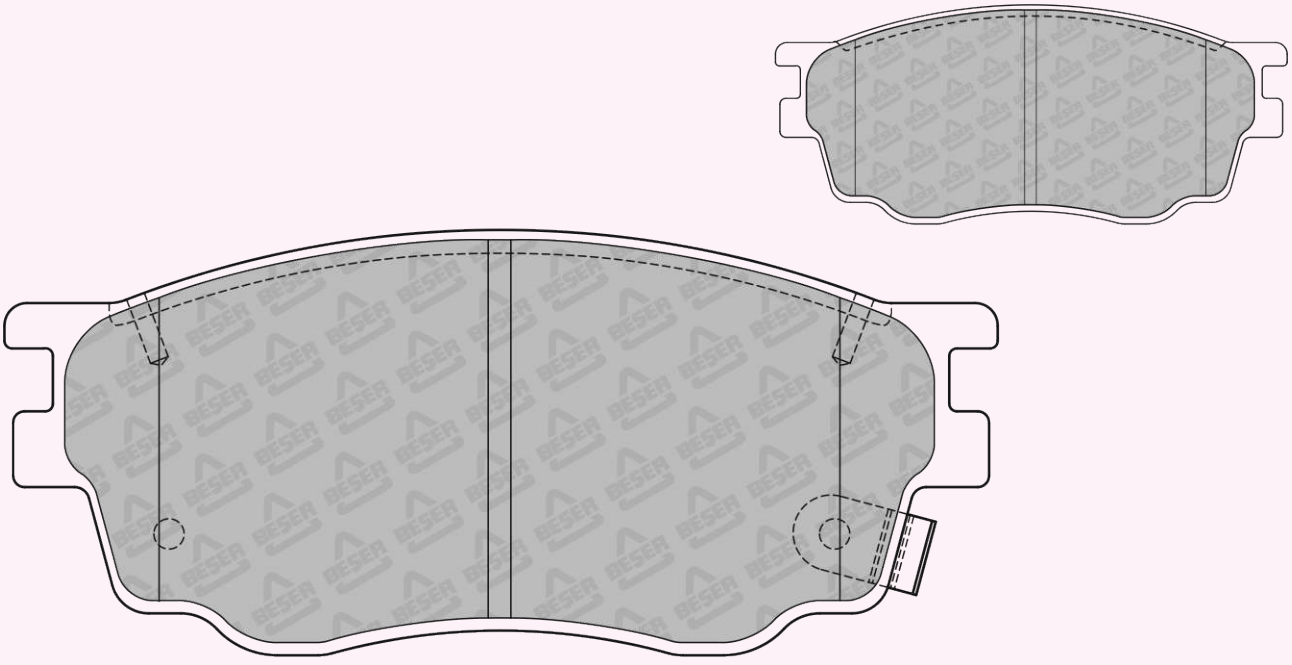

131,3 x 56,2

REFERENCE	T(mm)	REMARKS	MAKE	F/R	WVA No
4119	17,8 18,8	2 PADS PISTON CLIP	FORD - MAZDA	F	23787 23788

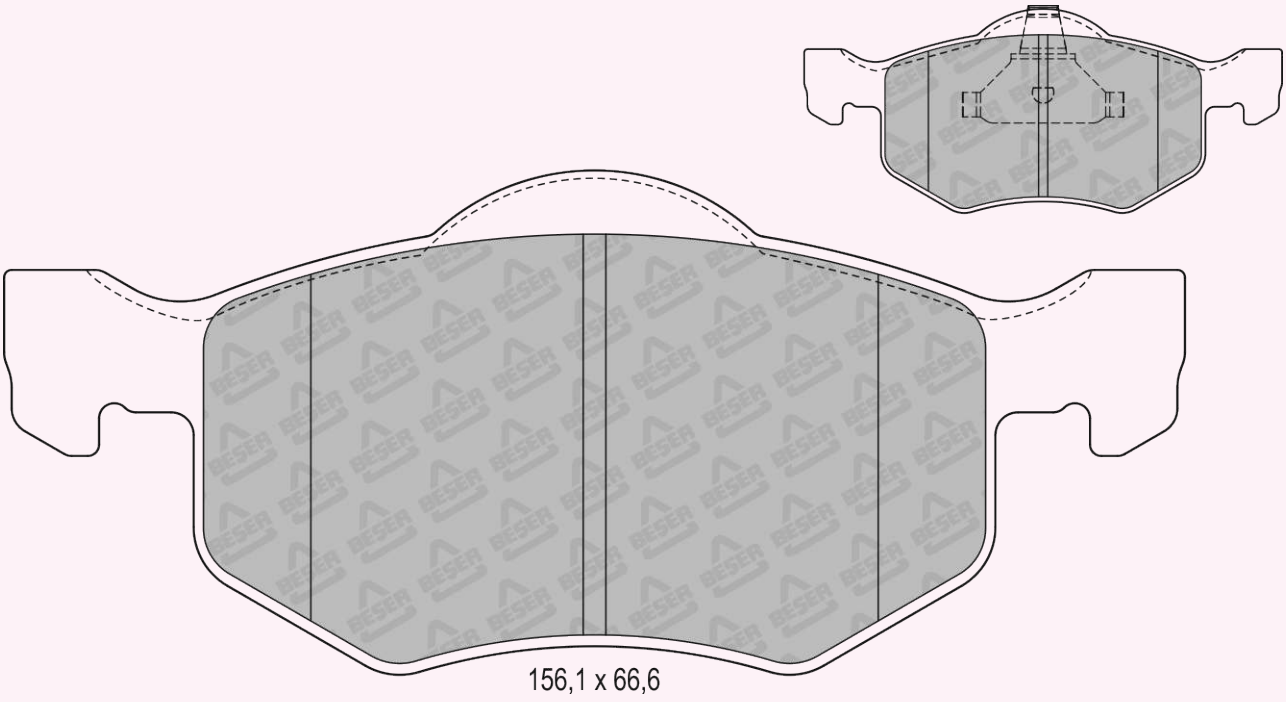

REFERENCE	T(mm)	REMARKS	MAKE	F/R	WVA No
4121	19,8	1 PAD WITH WEAR SENSOR (215 mm)	CHRYSLER - FIAT - LANCIA OPEL - VAUXHALL	F	24727 24728 24729

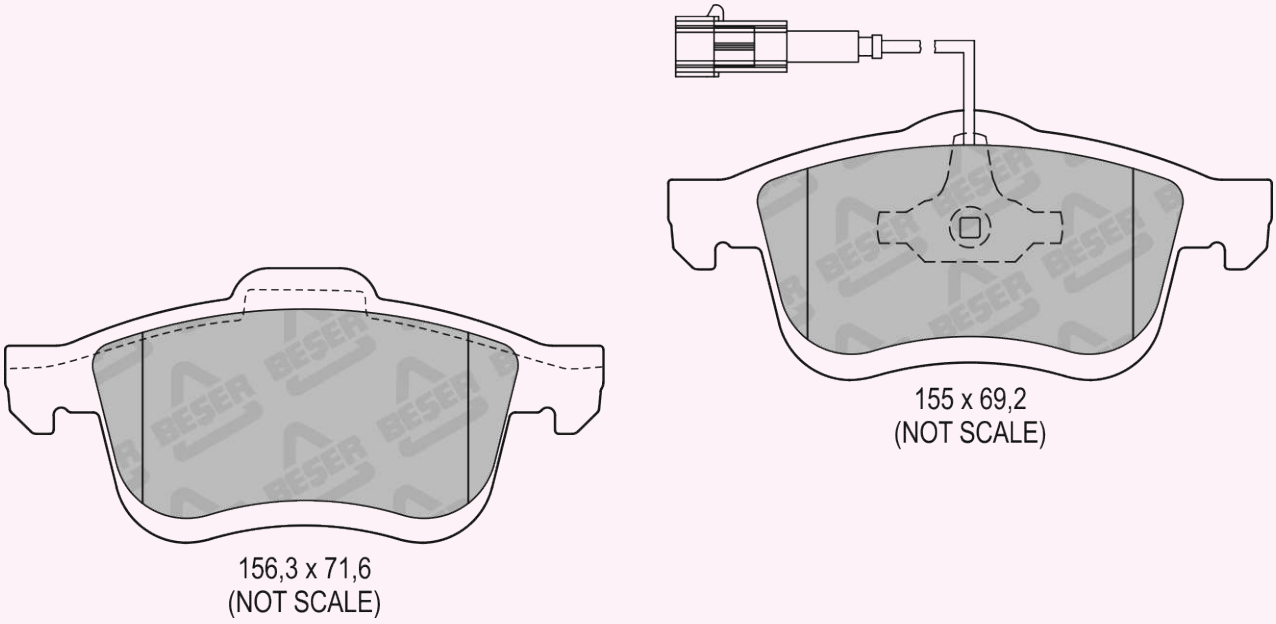

REFERENCE	T(mm)	REMARKS	MAKE	F/R	WVA No
4121/1	19,8	2 PADS WITH WEAR SENSOR (215 mm)	CHRYSLER - FIAT - LANCIA OPEL - VAUXHALL	F	24727 24728 24729

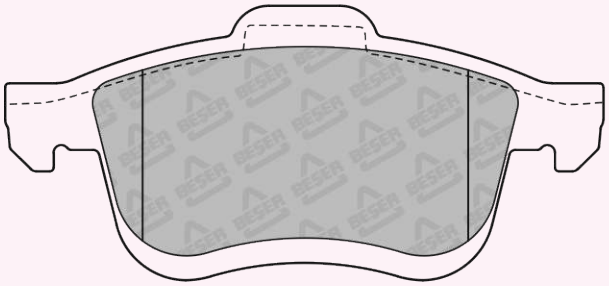

156,3 x 71,6
(NOT SCALE)

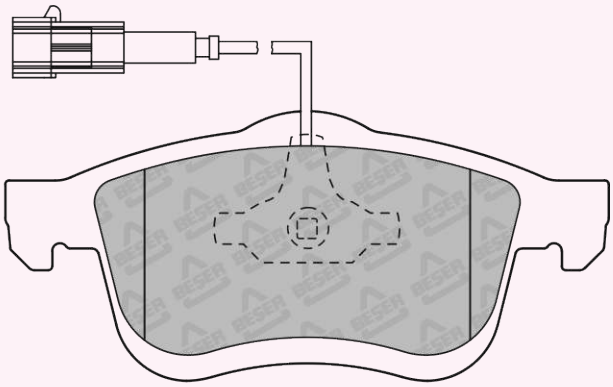

155 x 69,2
(NOT SCALE)

REFERENCE	T(mm)	REMARKS	MAKE	F/R	WVA No
4122	16,5	2 PADS WITH WEAR SENSOR	DAIHATSU - MAZDA SUBARU - SUZUKI	F	24283 24284 24285

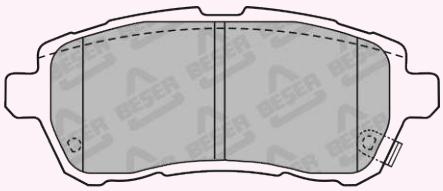

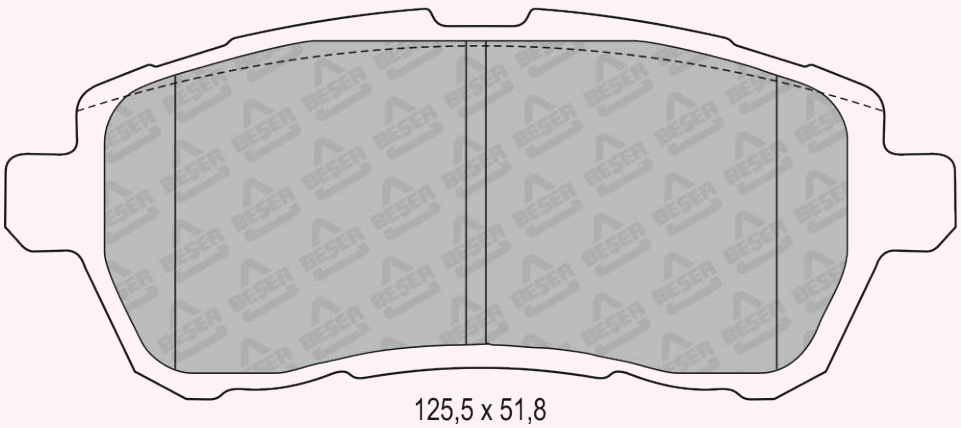

125,5 x 51,8

REFERENCE	T(mm)	REMARKS	MAKE	F/R	WVA No
4123	16,5	4 PADS PLAIN	ALFAROMEO - FIAT LANCIA	R	23517

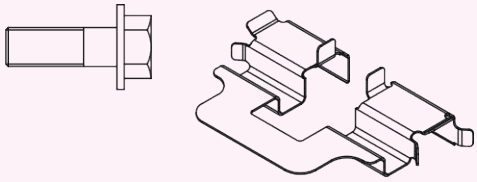

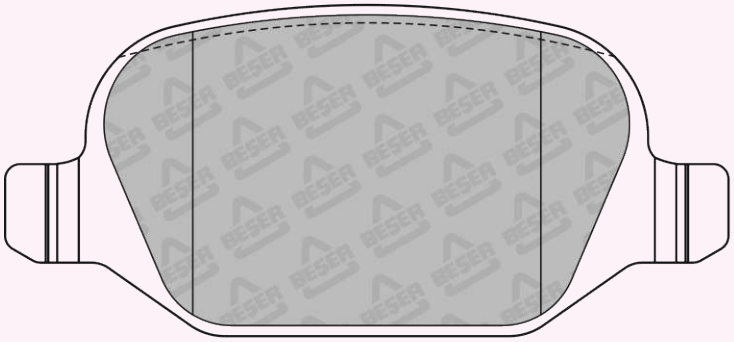

95,6 x 43,7

REFERENCE	T(mm)	REMARKS	MAKE	F/R	WVA No
4124	17	2 PADS WITH WEAR SENSOR	HOLDEN - ISUZU	F	25149 25150 25151

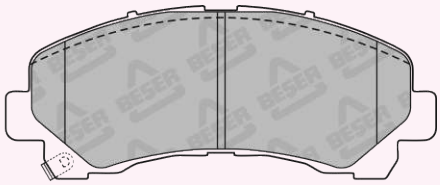

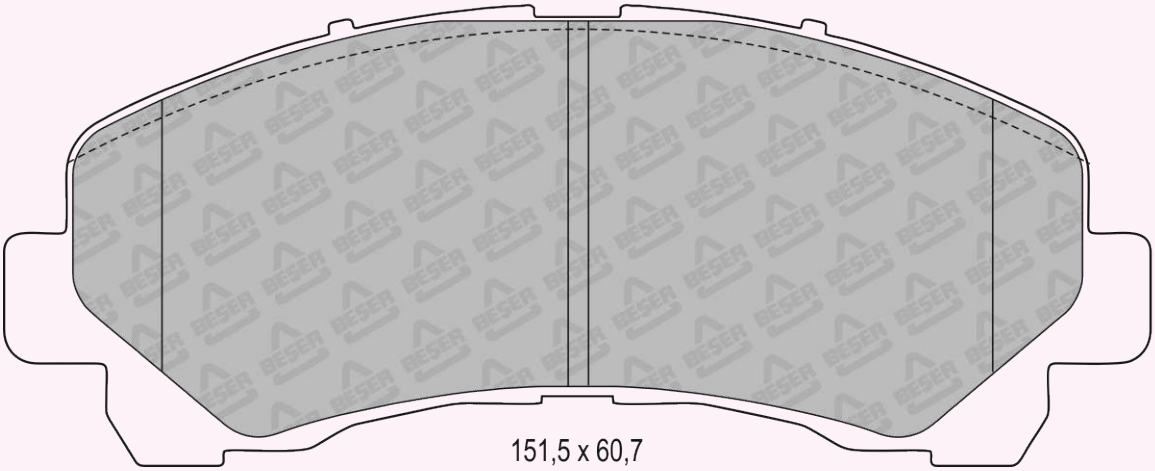

151,5 x 60,7

REFERENCE	T(mm)	REMARKS	MAKE	F/R	WVA No
4125	16,75	4 PADS PLAIN	MERCEDES BENZ	F	23070

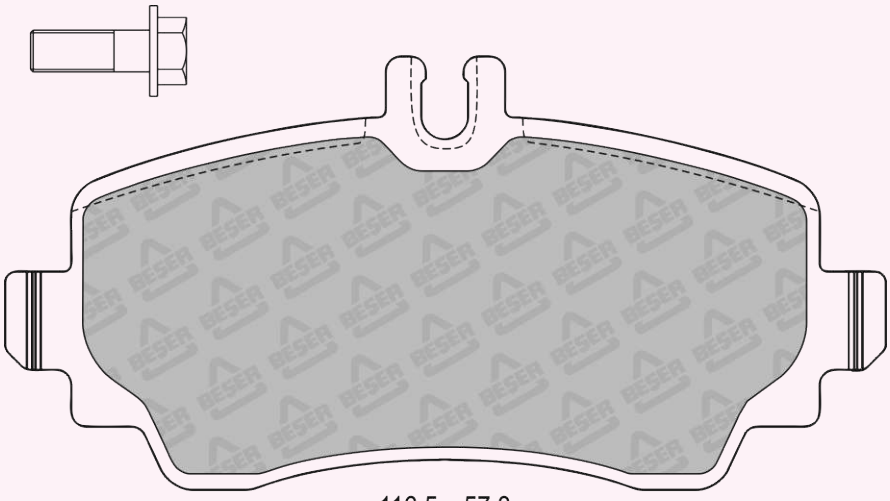

116,5 x 57,3

REFERENCE	T(mm)	REMARKS	MAKE	F/R	WVA No
4126	16,3 17,3	1 PAD WITH WEAR SENSOR	MERCEDES BENZ	F	23193 23194 23195 23196

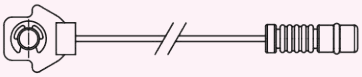

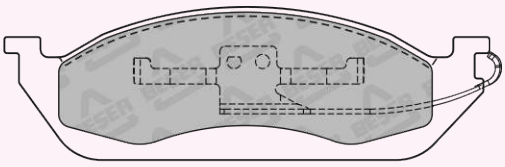

187,7 x 59
(NOT SCALE)

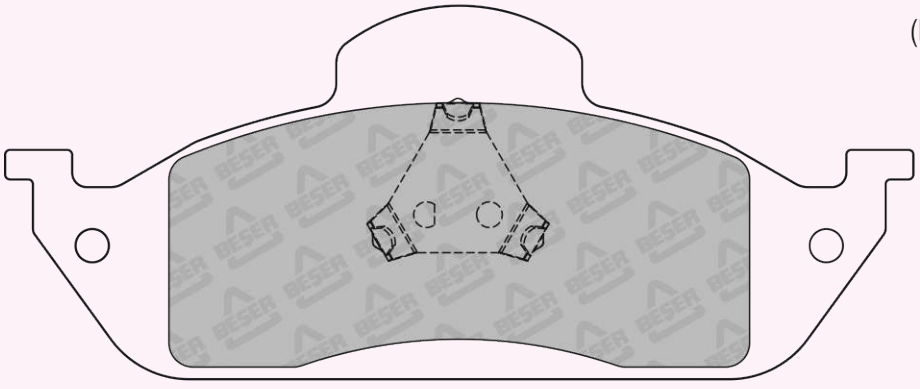

187,7 x 77,2
(NOT SCALE)

REFERENCE	T(mm)	REMARKS	MAKE	F/R	WVA No
4126 /1	16,3 17,3	1 PAD WITH WEAR SENSOR	MERCEDES BENZ	F	23193 23194 23195 23196



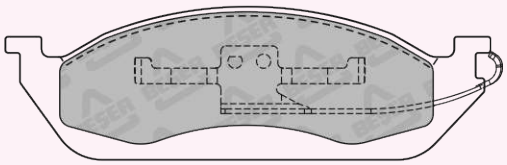

187,7 x 59
(NOT SCALE)

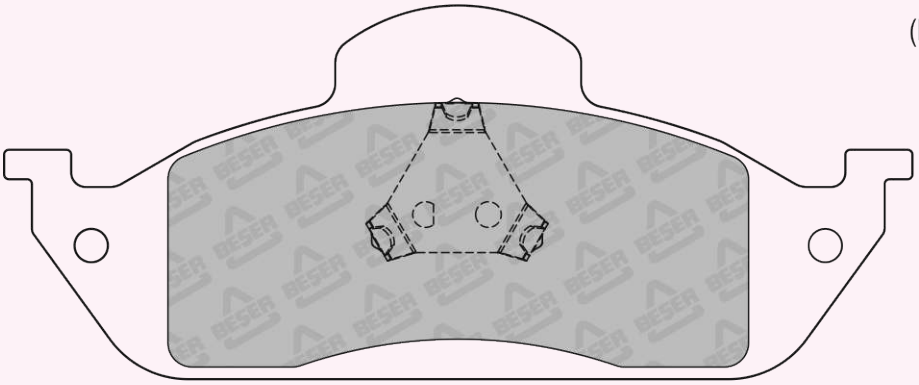

187,7 x 77,2
(NOT SCALE)

REFERENCE	T(mm)	REMARKS	MAKE	F/R	WVA No
4128	15,5	4 PADS PLAIN	NISSAN	F	21626

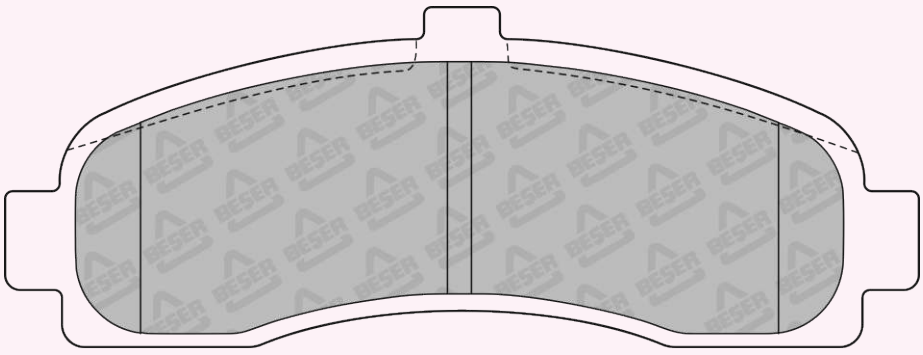

120,7 x 44,8

REFERENCE	T(mm)	REMARKS	MAKE	F/R	WVA No
4132	18,2	1 PAD WITH WEAR SENSOR	NISSAN - OPEL RENAULT - VAUXHALL	R	25172 25173

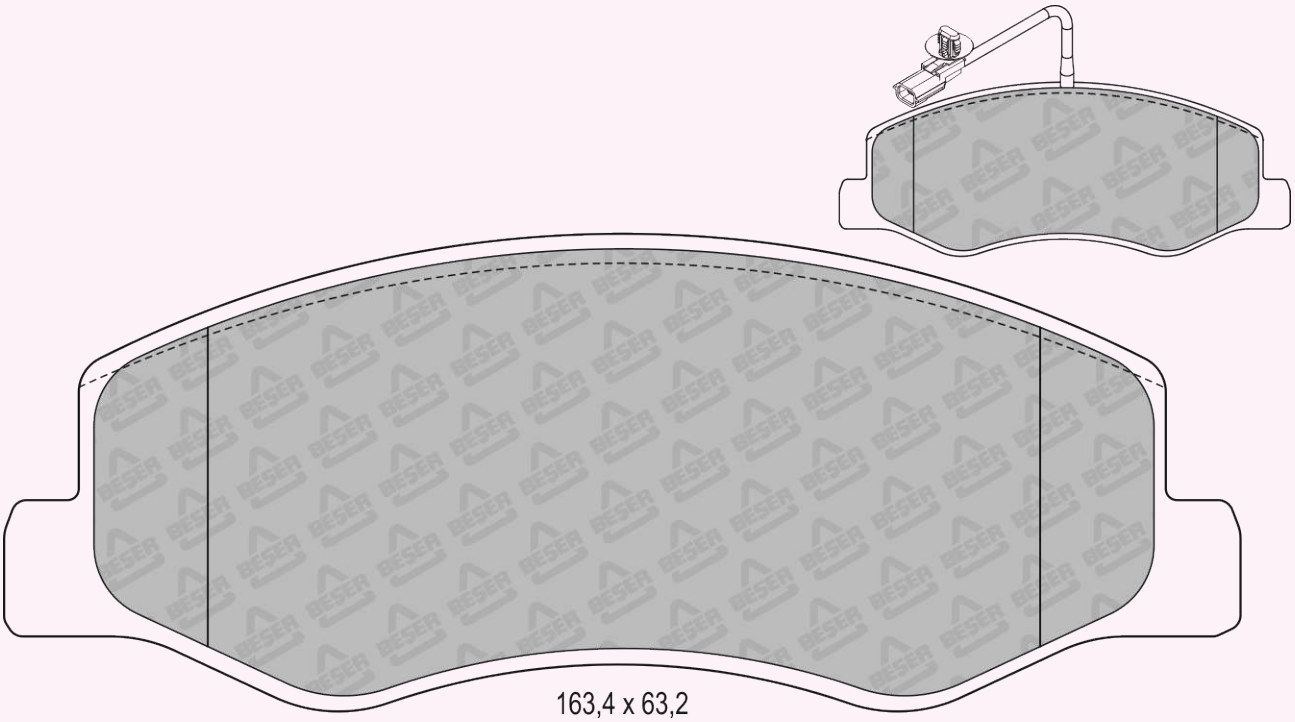

163,4 x 63,2

REFERENCE	T(mm)	REMARKS	MAKE	F/R	WVA No
4133	12,1	4 PADS PLAIN	INDUSTRIAL	---	---

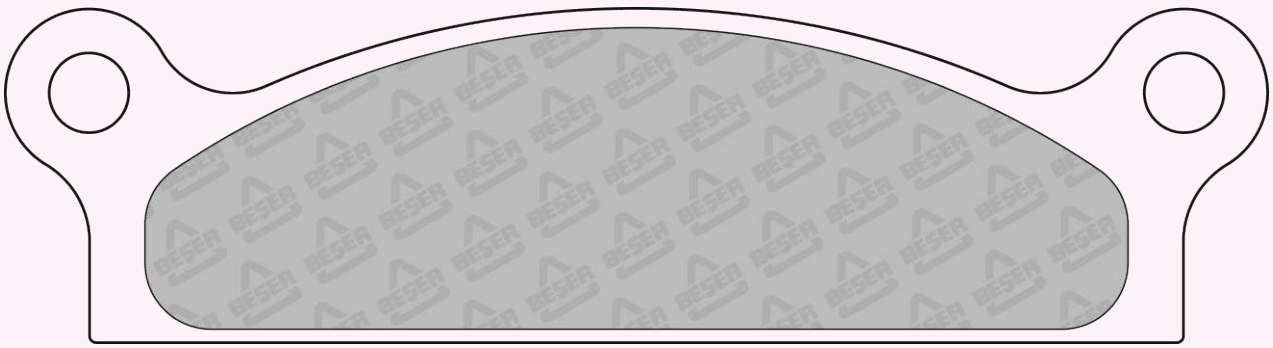

190,4 x 50,3
(NOT SCALE)

REFERENCE	T(mm)	REMARKS	MAKE	F/R	WVA No
4134	18	4 PADS PISTON CLIP	RENAULT	F	24709 24710

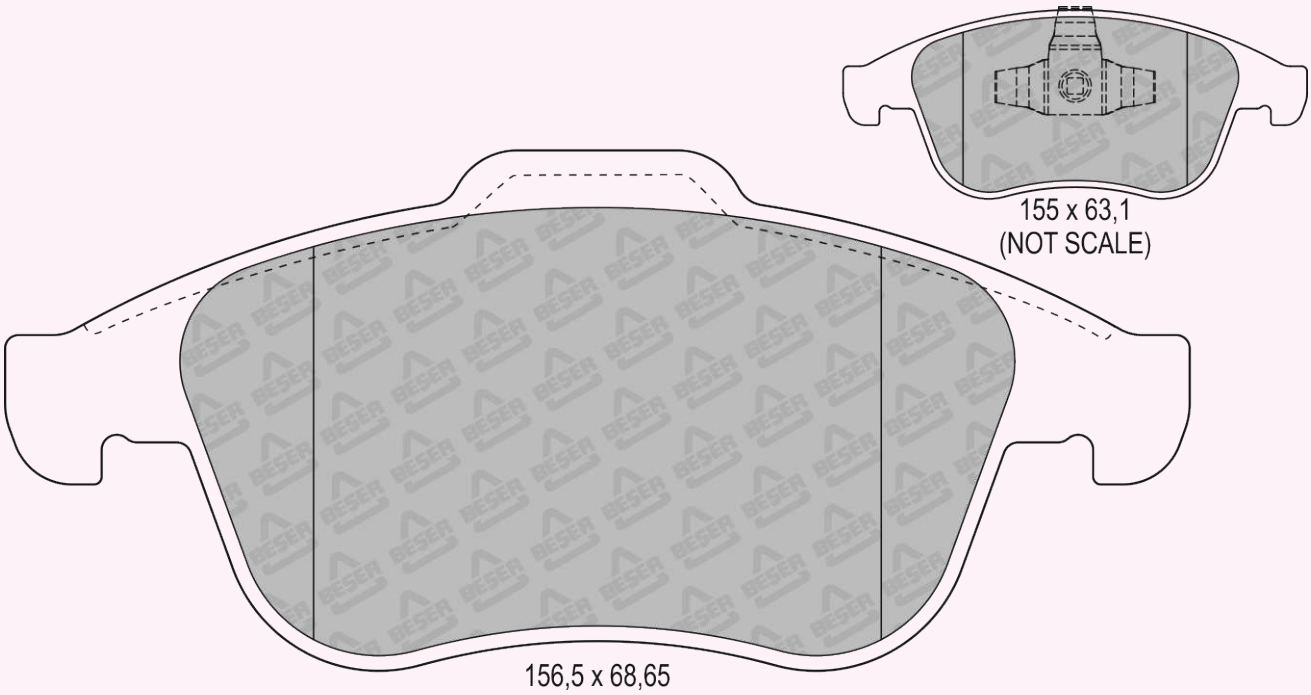

REFERENCE	T(mm)	REMARKS	MAKE	F/R	WVA No
4135	16,5	4 PADS PLAIN	AUDI - SEAT SKODA - VW	R	24563

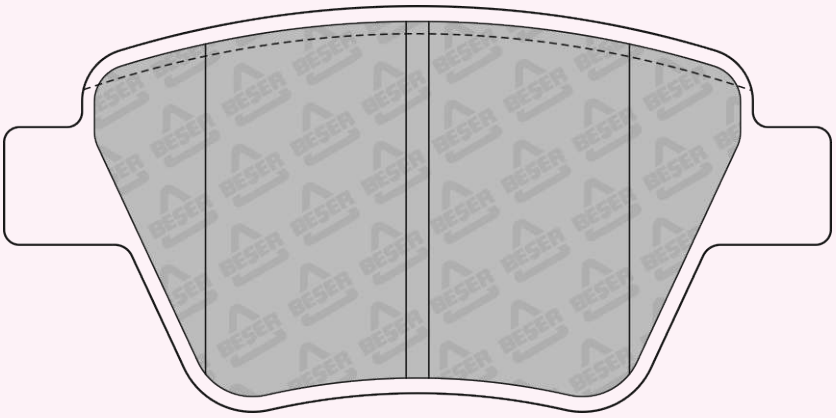

REFERENCE	T(mm)	REMARKS	MAKE	F/R	WVA No
4136	16,8	2 PADS WITH WEAR SENSOR	HYUNDAI - KIA	F	25348 25349 25350

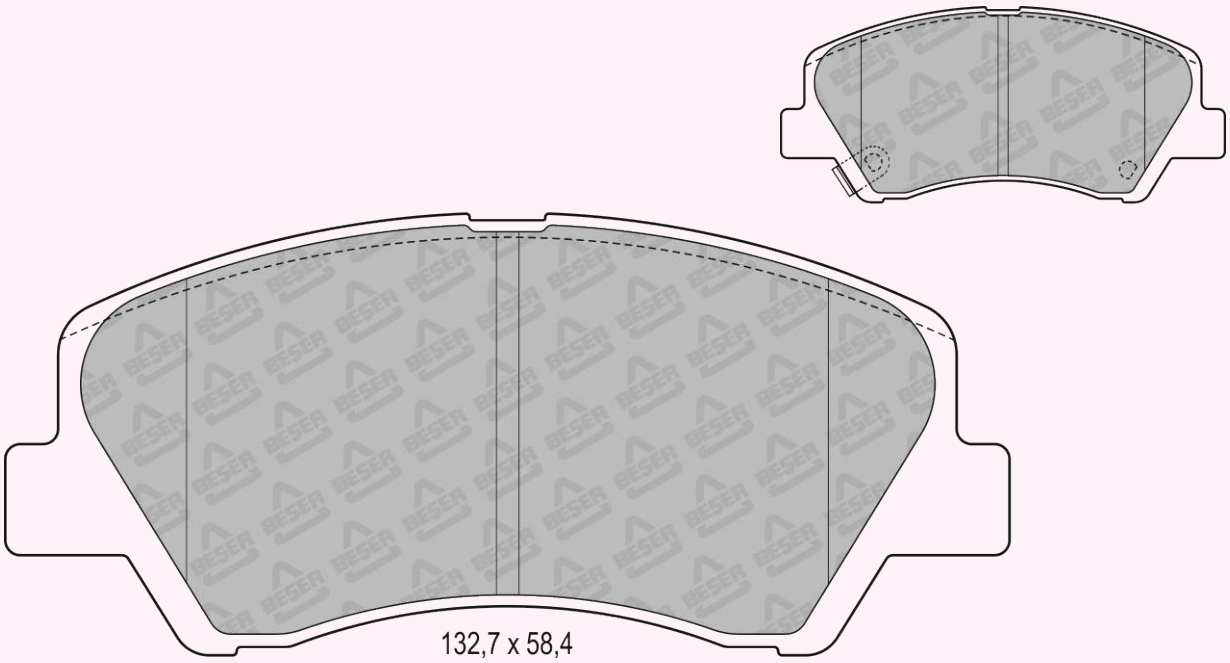

REFERENCE	T(mm)	REMARKS	MAKE	F/R	WVA No
4137	15,2	4 PADS PLAIN	RENAULT	F	24162

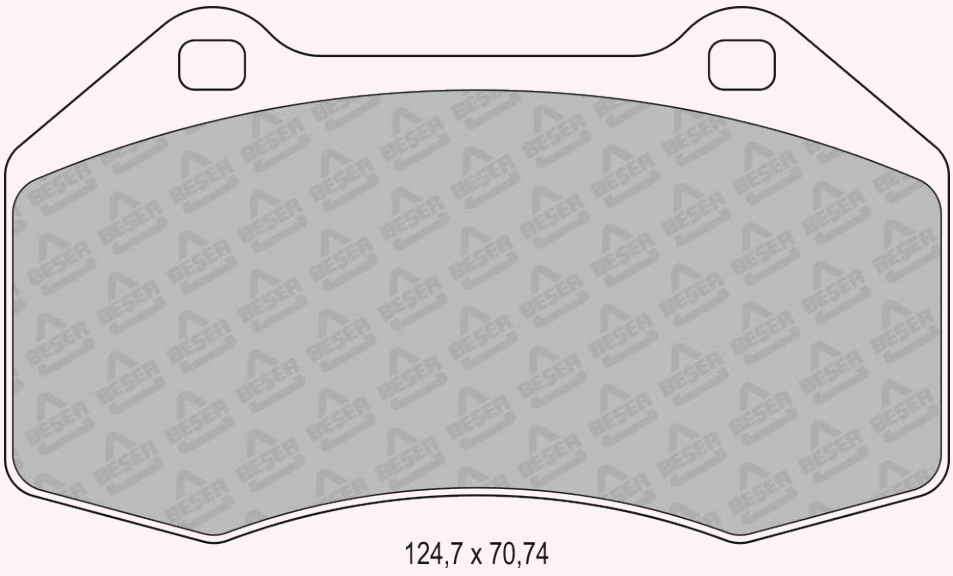

REFERENCE	T(mm)	REMARKS	MAKE	F/R	WVA No
4138	18,4	2 PADS WITH WEAR SENSOR	SEAT - SKODA VW	F	23581 23843

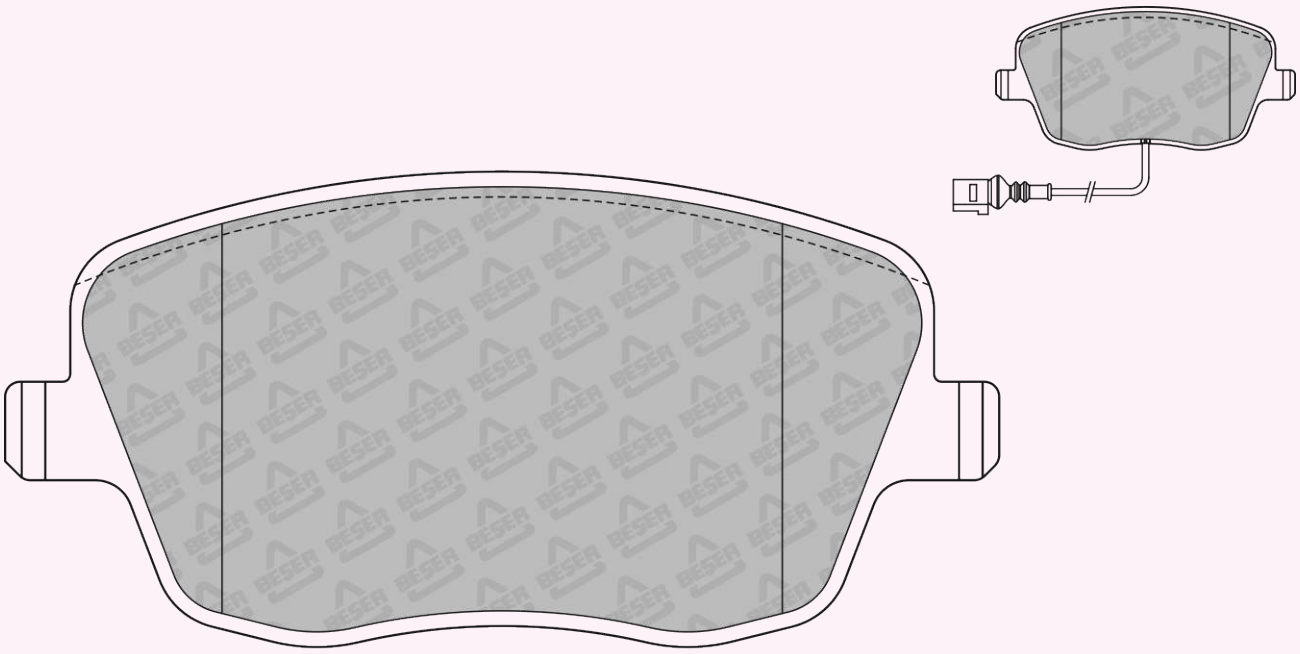

131,3 x 62,8

REFERENCE	T(mm)	REMARKS	MAKE	F/R	WVA No
4138/1	18,4	1 PAD WITH WEAR SENSOR	SEAT - SKODA VW	F	23581 23843

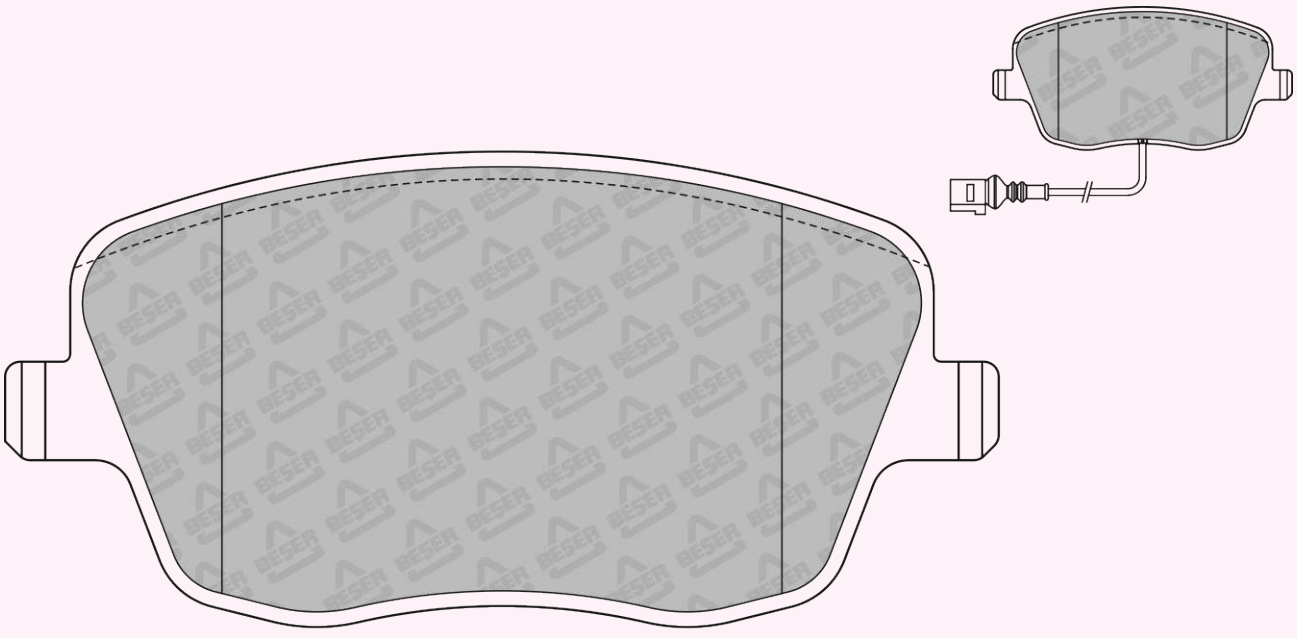

131,3 x 62,8

REFERENCE	T(mm)	REMARKS	MAKE	F/R	WVA No
4140	18	4 PADS PISTON CLIP	DACIA - RENAULT SMART	F	25702 25703

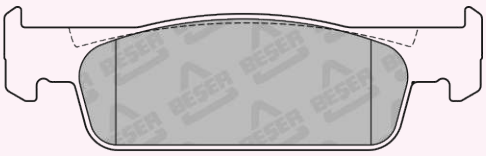

140,2 x 42
(NOT SCALE)

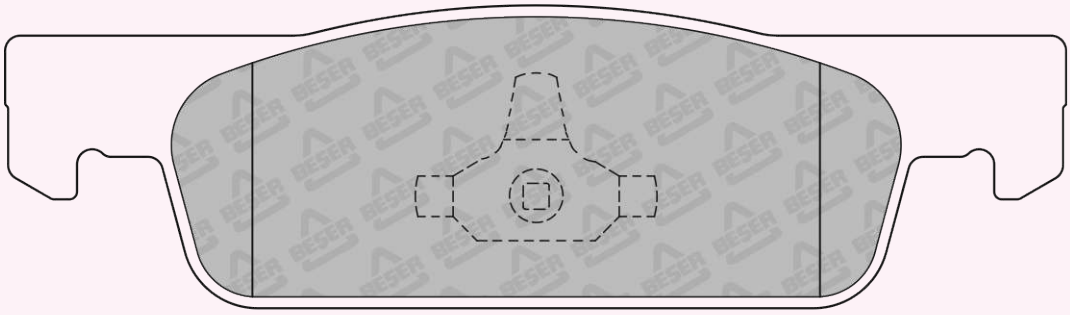

140,2 x 36

REFERENCE	T(mm)	REMARKS	MAKE	F/R	WVA No
4140/1	18	2 PADS PISTON CLIP	DACIA - RENAULT - SMART	F	25702 25703

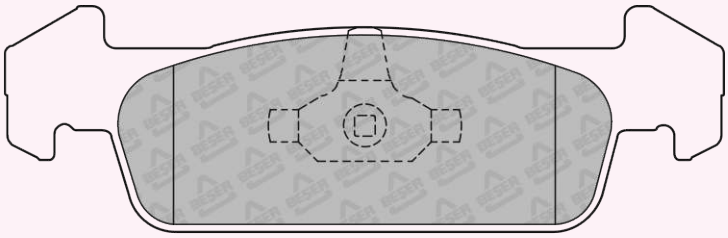

140,2 x 44,2
(NOT SCALE)

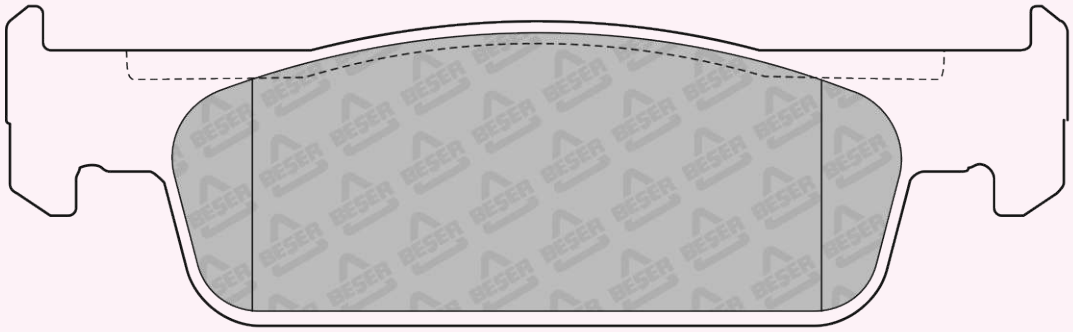

140,2 x 42

REFERENCE	T(mm)	REMARKS	MAKE	F/R	WVA No
4141	18	2 PADS PISTON CLIP	DACIA - LADA RENAULT	F	24673 24674



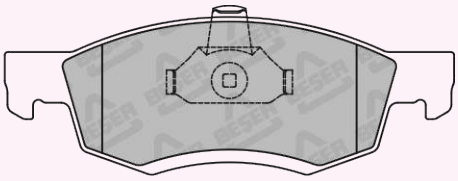

150,1 x 52,6
(NOT SCALE)



150,3 x 52,6

REFERENCE	T(mm)	REMARKS	MAKE	F/R	WVA No
4141/1	18	2 PADS PISTON CLIP	DACIA - LADA RENAULT	F	24673 24674

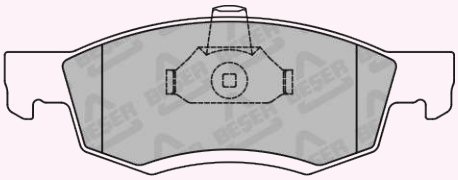

150,1 x 52,6
(NOT SCALE)

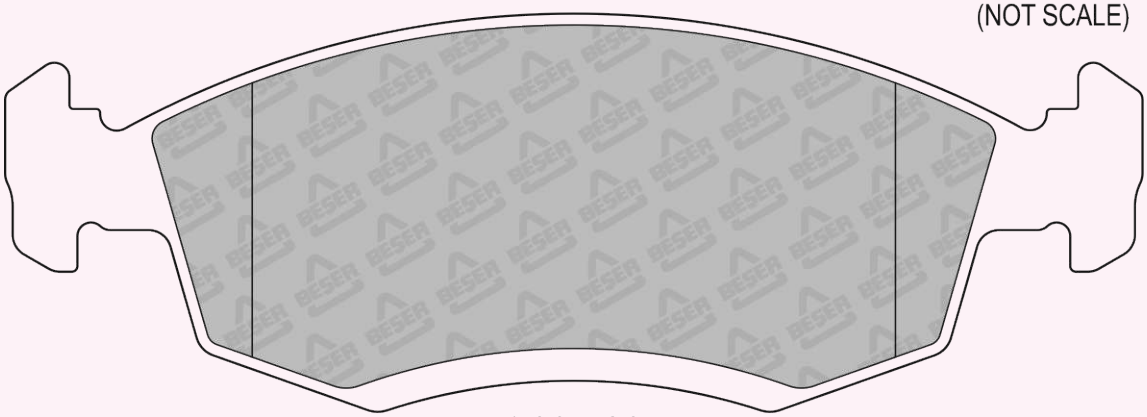

150,3 x 52,6

REFERENCE	T(mm)	REMARKS	MAKE	F/R	WVA No
4142	16	4 PADS PLAIN	RENAULT	R	24820

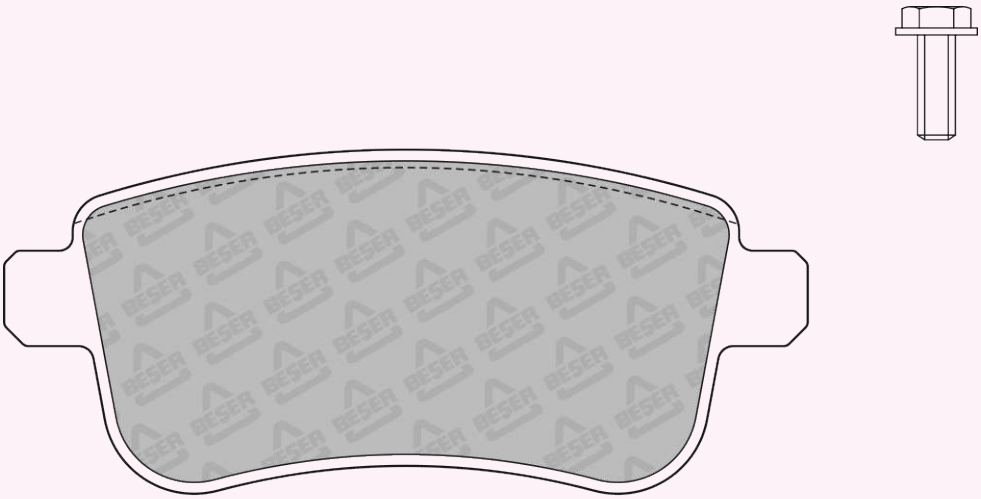

106,1 x 45,4

REFERENCE	T(mm)	REMARKS	MAKE	F/R	WVA No
4143	17	4 PADS WITH WEAR SENSOR	INFINITI - NISSAN - RENAULT SAMSUNG	F	23698 23699

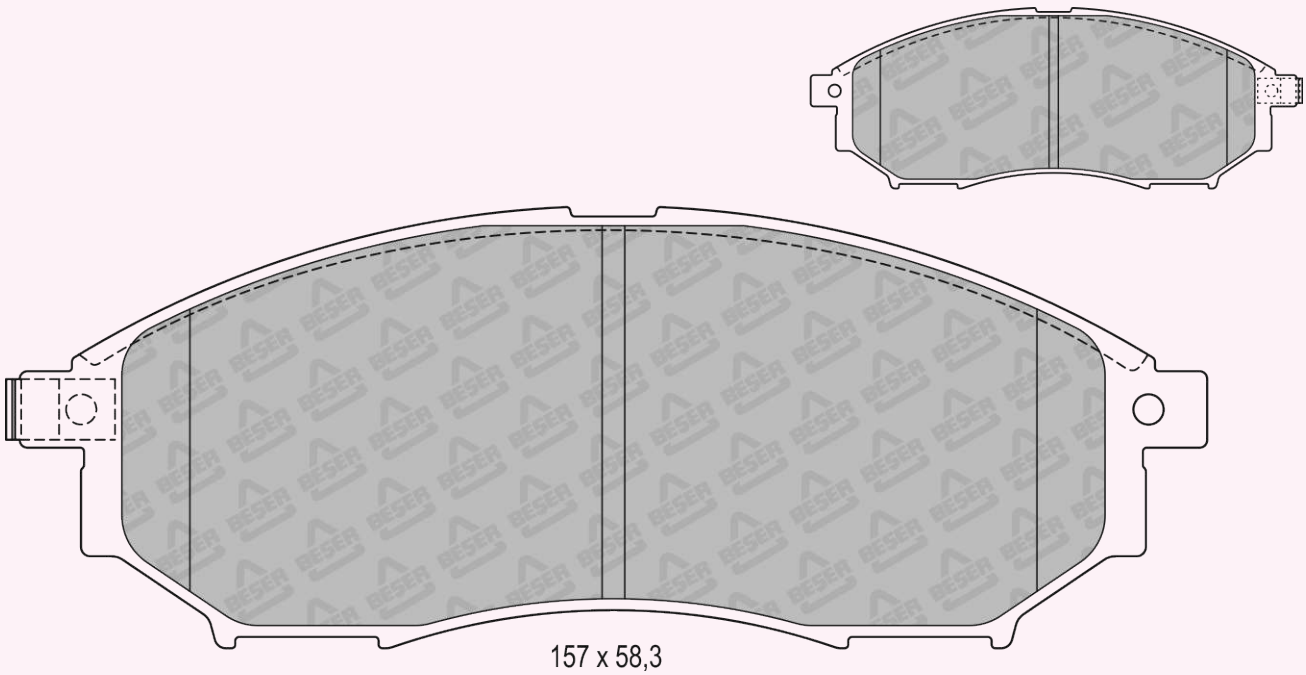

157 x 58,3

REFERENCE	T(mm)	REMARKS	MAKE	F/R	WVA No
4145	18,5	2 PADS INNER & 2 PADS OUTER	CITROEN	F	25220 25221

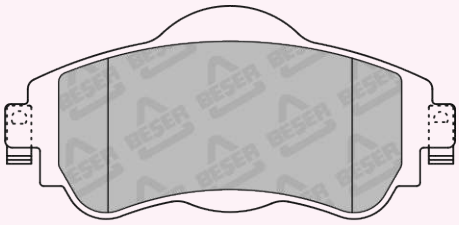

129 x 61,1
(NOT SCALE)

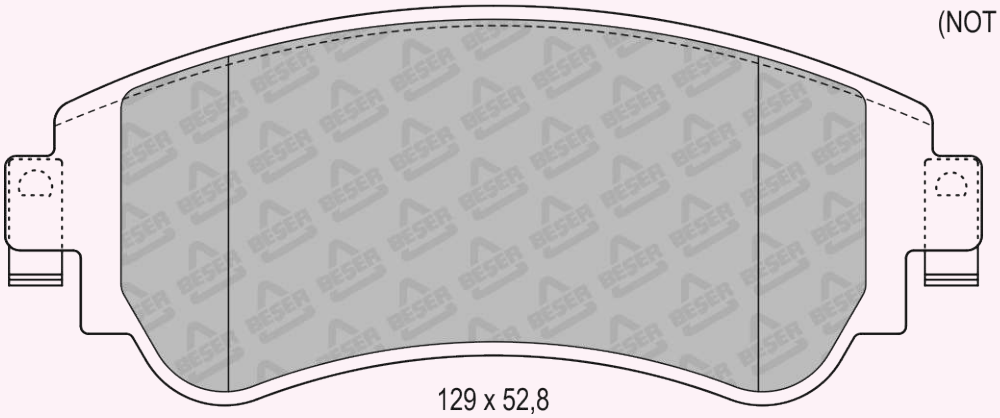

129 x 52,8

REFERENCE	T(mm)	REMARKS	MAKE	F/R	WVA No
4146	15,5	2 PADS WITH WEAR SENSOR	TOYOTA	R	24885 24886 24887

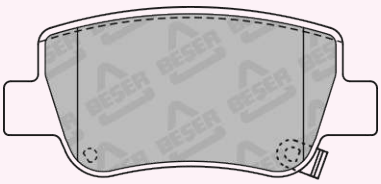

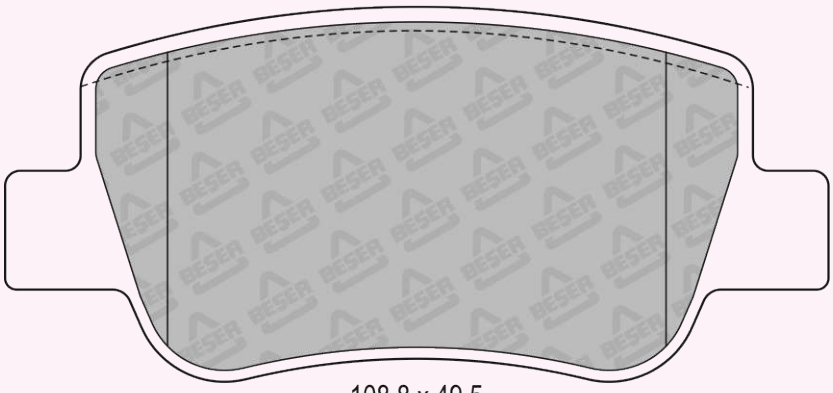

108,8 x 49,5

REFERENCE	T(mm)	REMARKS	MAKE	F/R	WVA No
4147	18,5	2 PADS WITH WEAR SENSOR	TOYOTA	F	24668 24669 24929

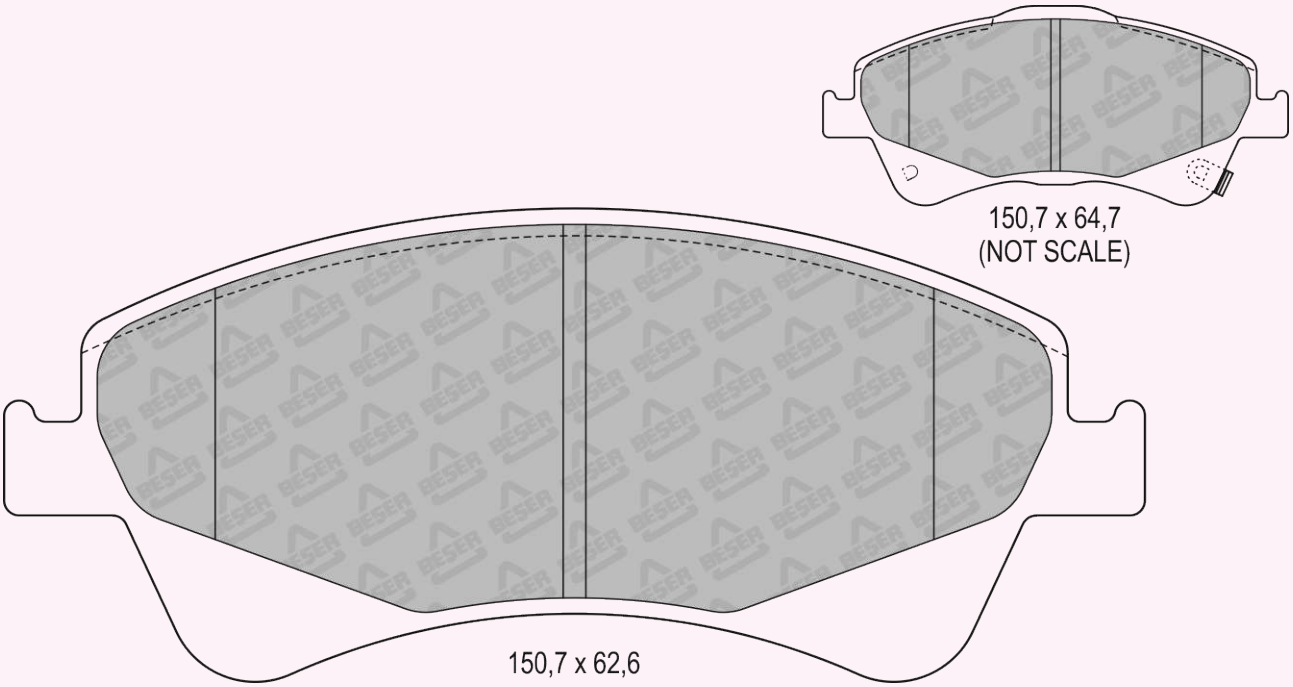

REFERENCE	T(mm)	REMARKS	MAKE	F/R	WVA No
4148	14,6	2 PADS WITH WEAR SENSOR	ACURA - FIAT - HONDA - MG ROVER - SUZUKI	R	21719 21720 21721

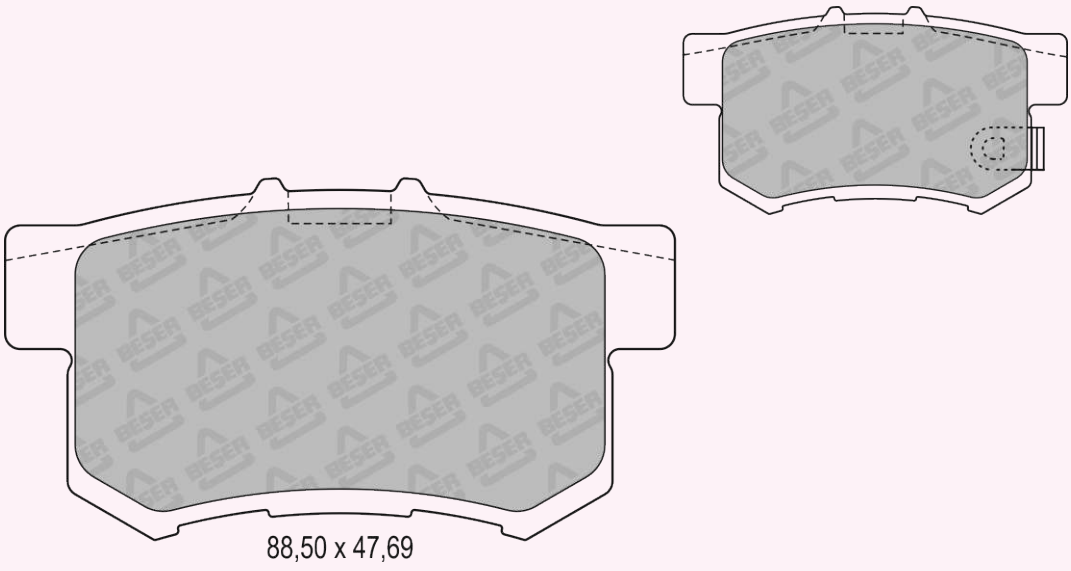

REFERENCE	T(mm)	REMARKS	MAKE	F/R	WVA No
4148/1	14,6	1 PAD WITH SENSOR	ACURA - FIAT - HONDA MG - ROVER - SUZUKI	R	21719 21720 21721

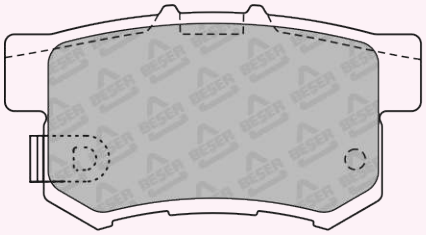

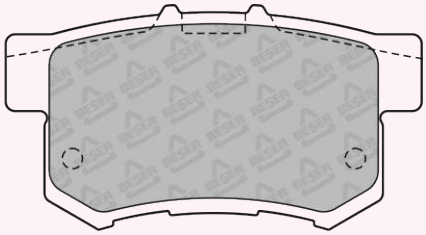

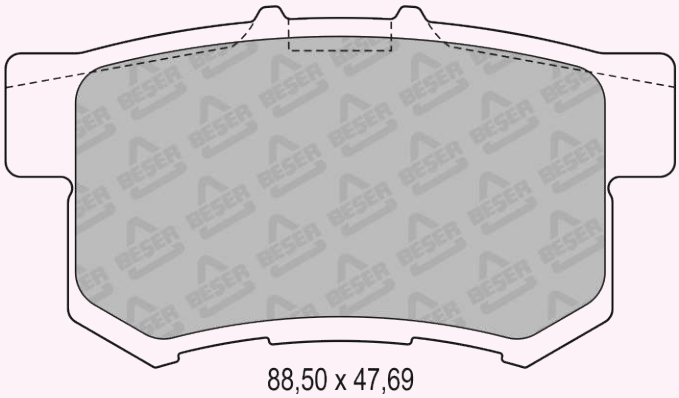

88,50 x 47,69

REFERENCE	T(mm)	REMARKS	MAKE	F/R	WVA No
4149	18	2 PADS WITH WEAR SENSOR	CHEVROLET - HOLDEN - OPEL SAAB - VAUXHALL	F	24412 24413 24414

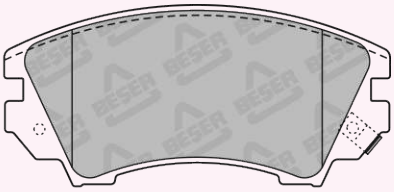

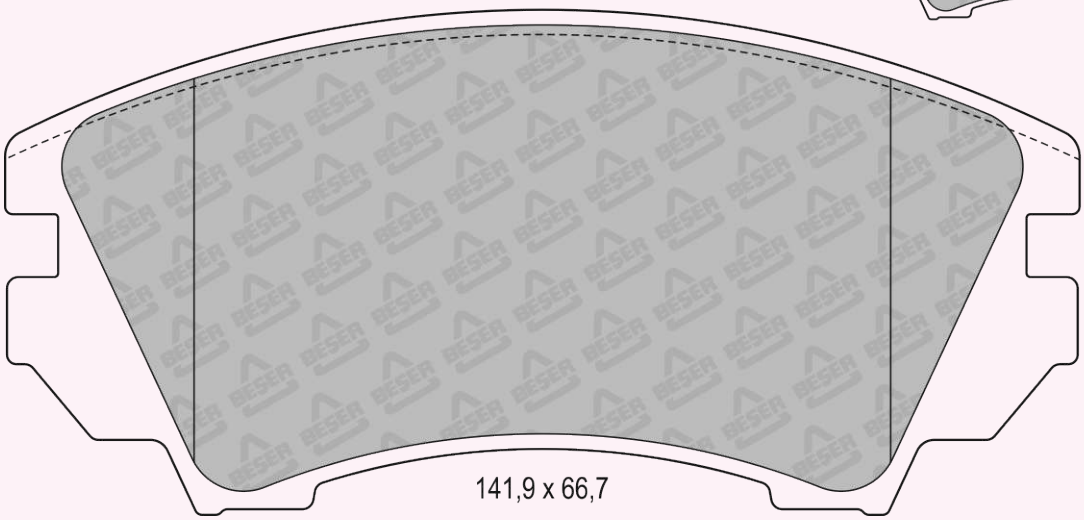

141,9 x 66,7

REFERENCE	T(mm)	REMARKS	MAKE	F/R	WVA No
4150	17	4 PADS WITH WEAR SENSOR	CHEVROLET - HOLDEN - OPEL SAAB - VAUXHALL	R	24421 24422

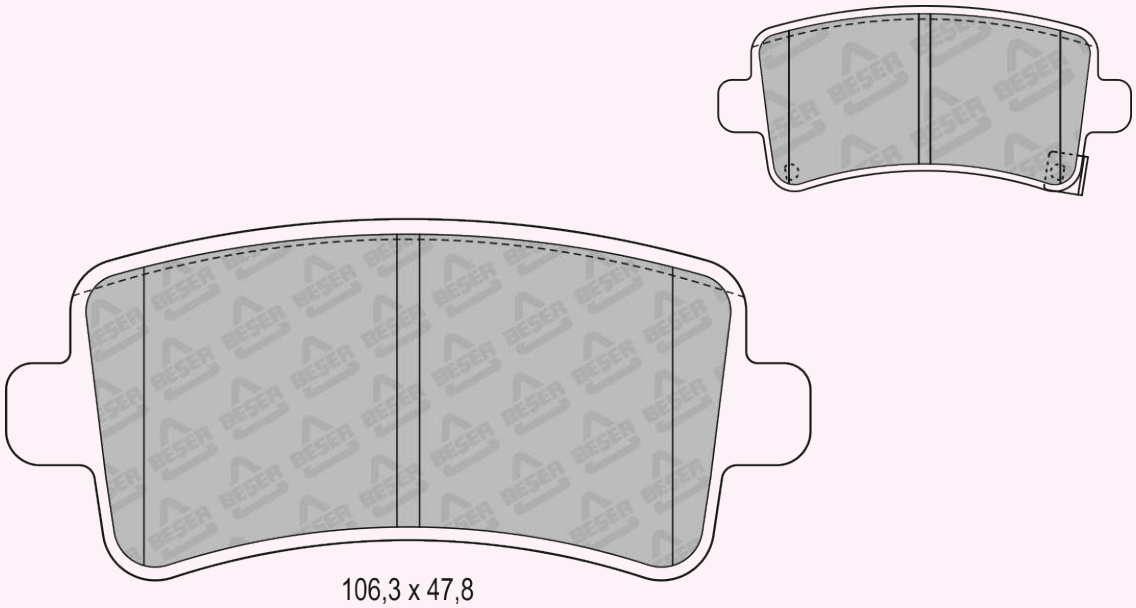

106,3 x 47,8

REFERENCE	T(mm)	REMARKS	MAKE	F/R	WVA No
4151	16,5	4 PADS PLAIN	CITROEN - FIAT PEUGEOT - TOYOTA	R	24578

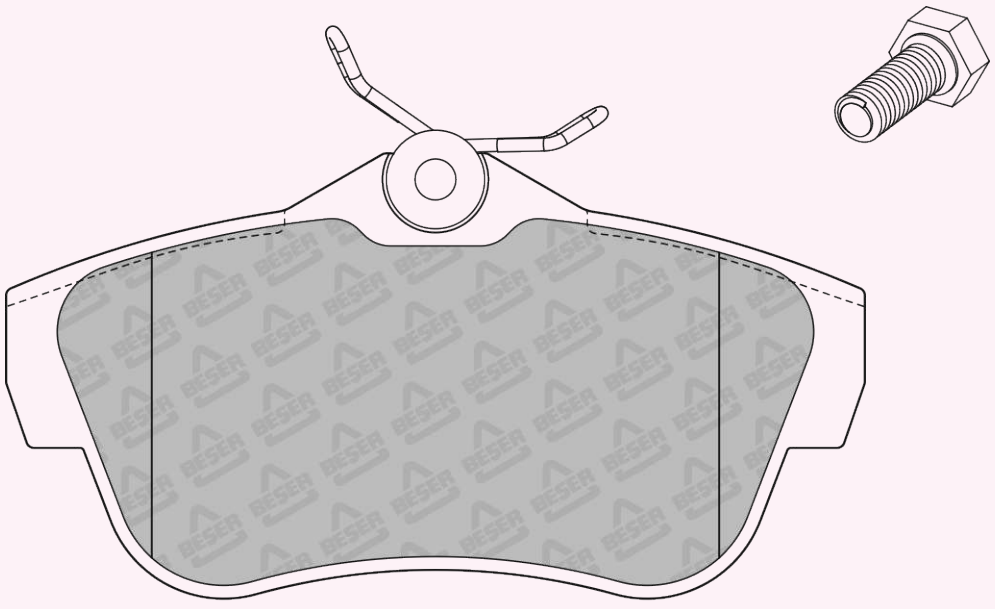

113,5 x 58,8

REFERENCE	T(mm)	REMARKS	MAKE	F/R	WVA No
4151/1	16,5	4 PADS PLAIN	CITROEN - FIAT PEUGEOT - TOYOTA	R	24578

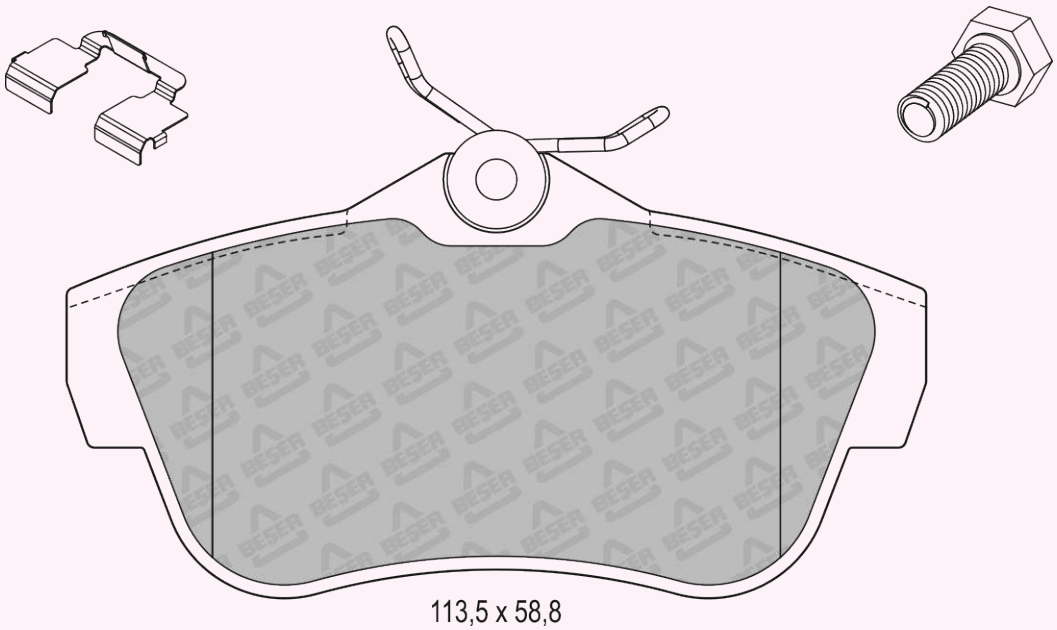

113,5 x 58,8

REFERENCE	T(mm)	REMARKS	MAKE	F/R	WVA No
4152	17	1 PAD WITH WEAR SENSOR	SEAT - SKODA VW	R	23554 23823

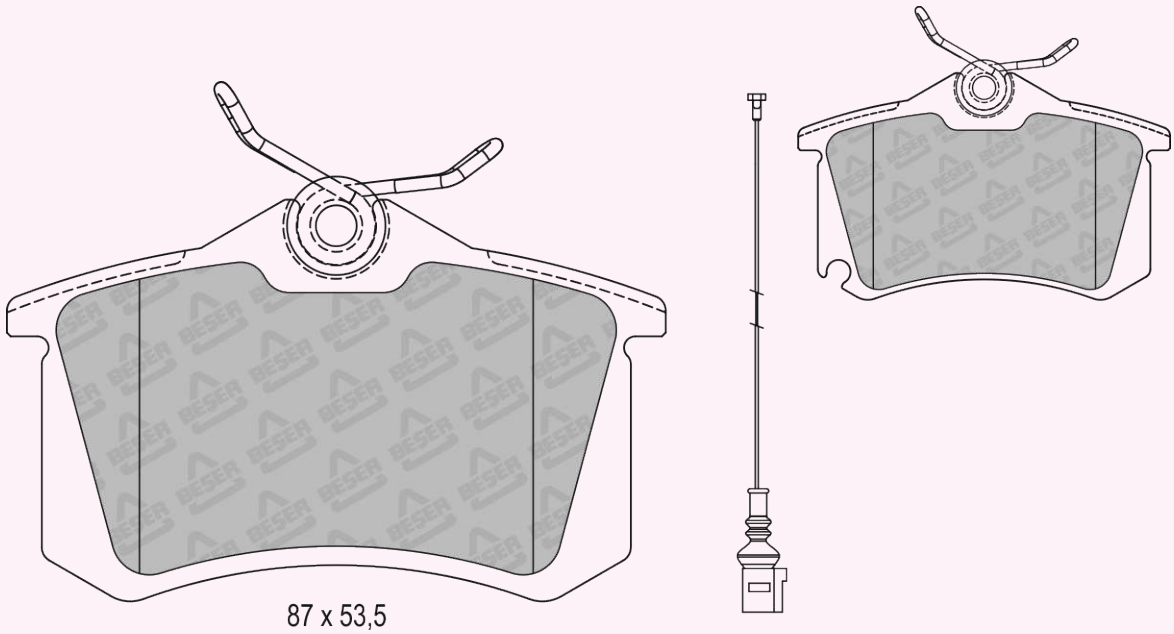

87 x 53,5

REFERENCE	T(mm)	REMARKS	MAKE	F/R	WVA No
4153	13,5	2 PADS WITH WEAR SENSOR	DR - TOYOTA	R	23656 23657 23658

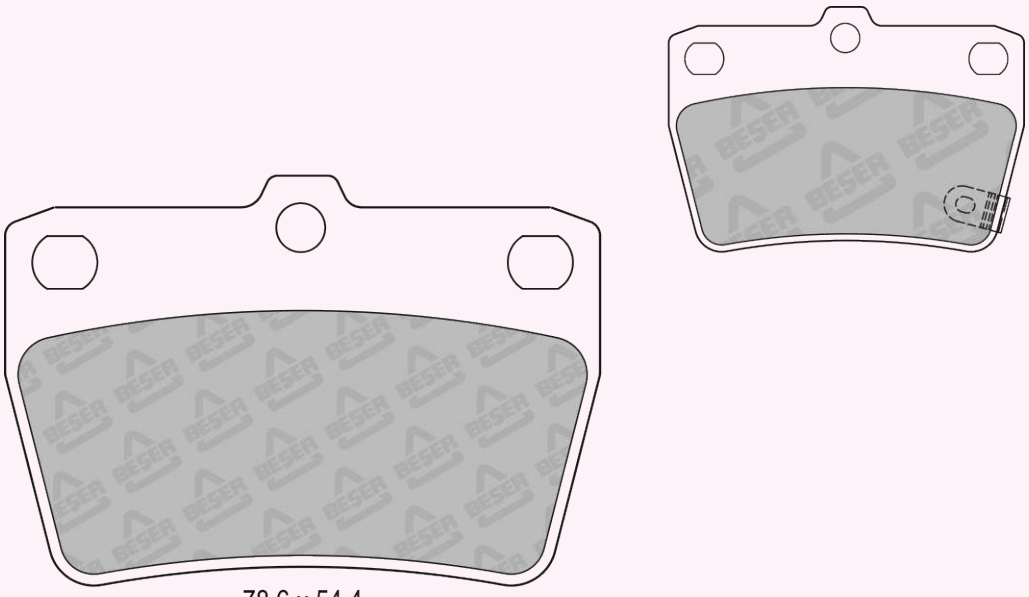

REFERENCE	T(mm)	REMARKS	MAKE	F/R	WVA No
4154	15,8	2 PADS WITH WEAR SENSOR	TOYOTA	R	23620 23621 23622

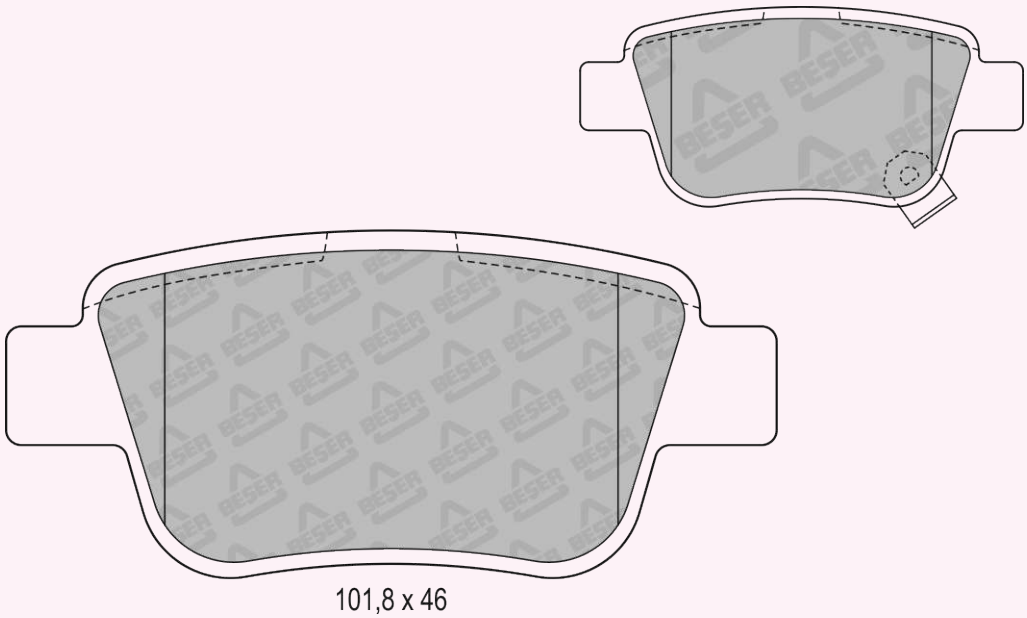

REFERENCE	T(mm)	REMARKS	MAKE	F/R	WVA No
4155	15	2 PADS WITH WEAR SENSOR	HONDA	R	23527

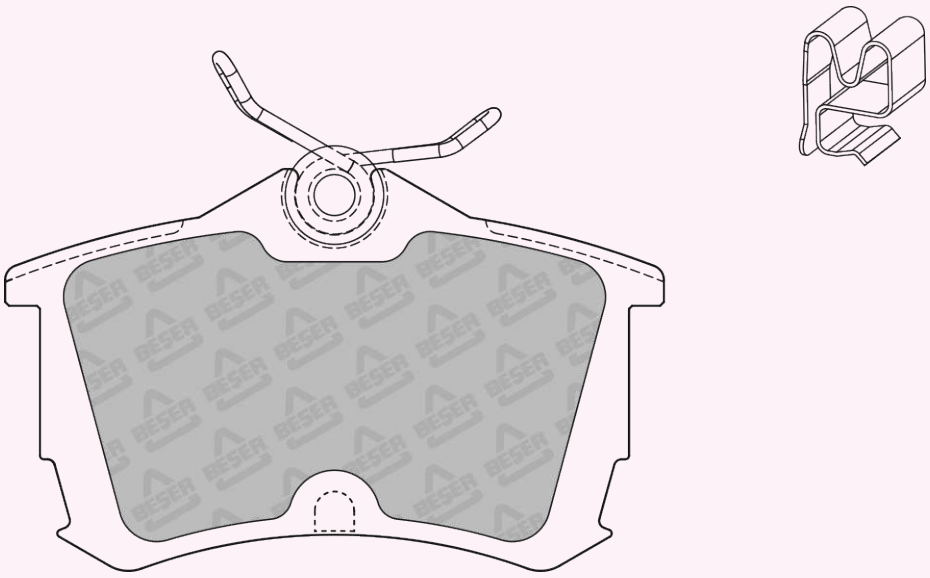

87 x 53

REFERENCE	T(mm)	REMARKS	MAKE	F/R	WVA No
4156	15,8	2 PADS WITH WEAR SENSOR	HONDA	R	24635 24636 24637

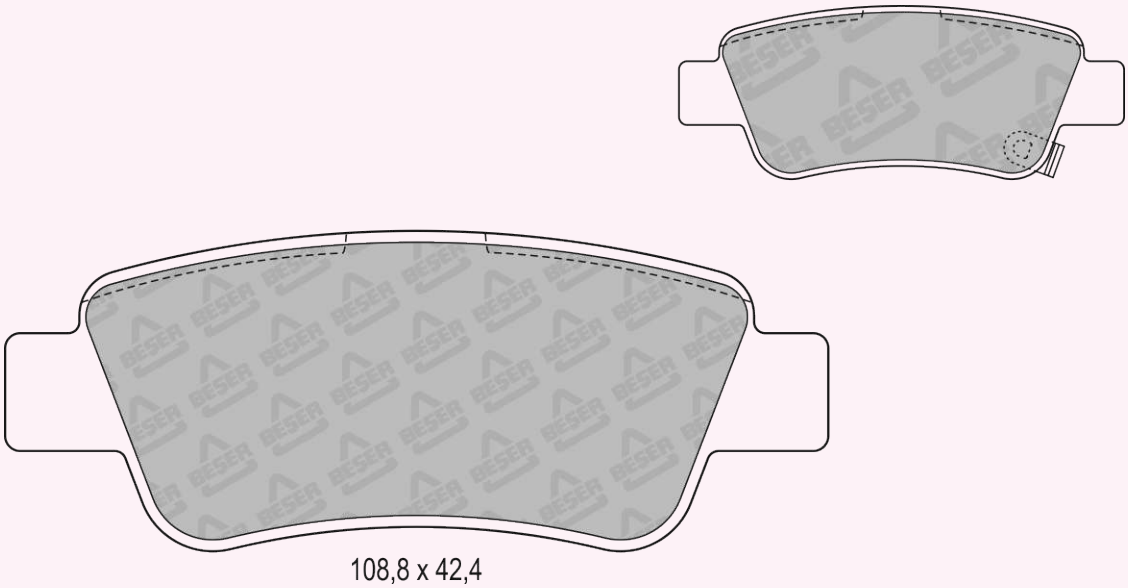

108,8 x 42,4

REFERENCE	T(mm)	REMARKS	MAKE	F/R	WVA No
4157	15	4 PADS PLAIN	FORD - LAND ROVER	R	24537

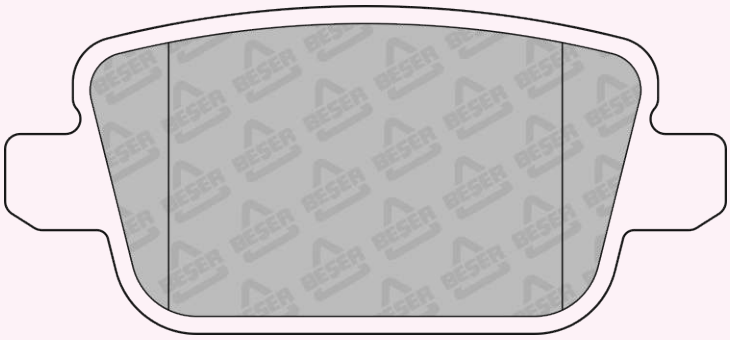

95,2 x 43,3

REFERENCE	T(mm)	REMARKS	MAKE	F/R	WVA No
4158	17,5	4 PADS PLAIN	TOYOTA	F	23585 23586

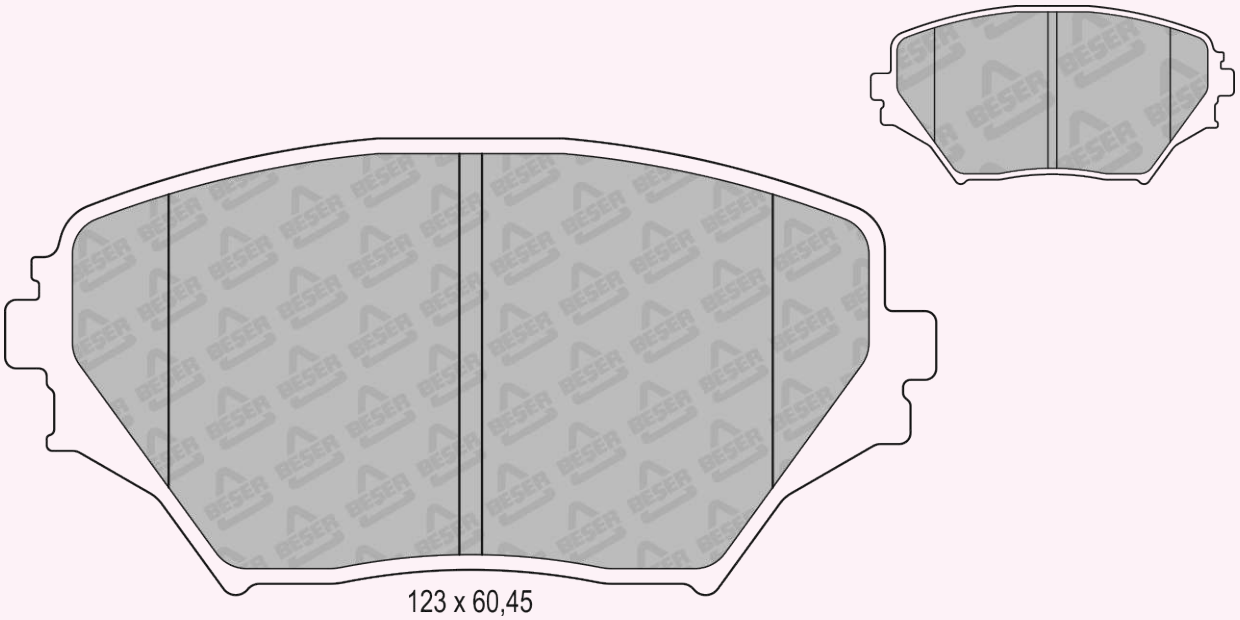

123 x 60,45

REFERENCE	T(mm)	REMARKS	MAKE	F/R	WVA No
4159	17,5	2 PADS PISTON CLIP	HONDA	F	24213 24214 23720

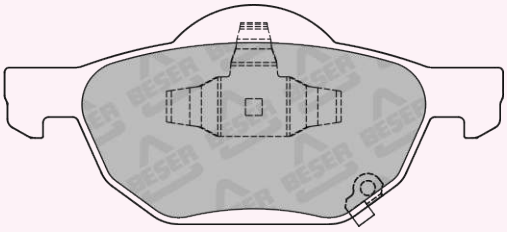

155 x 68,15

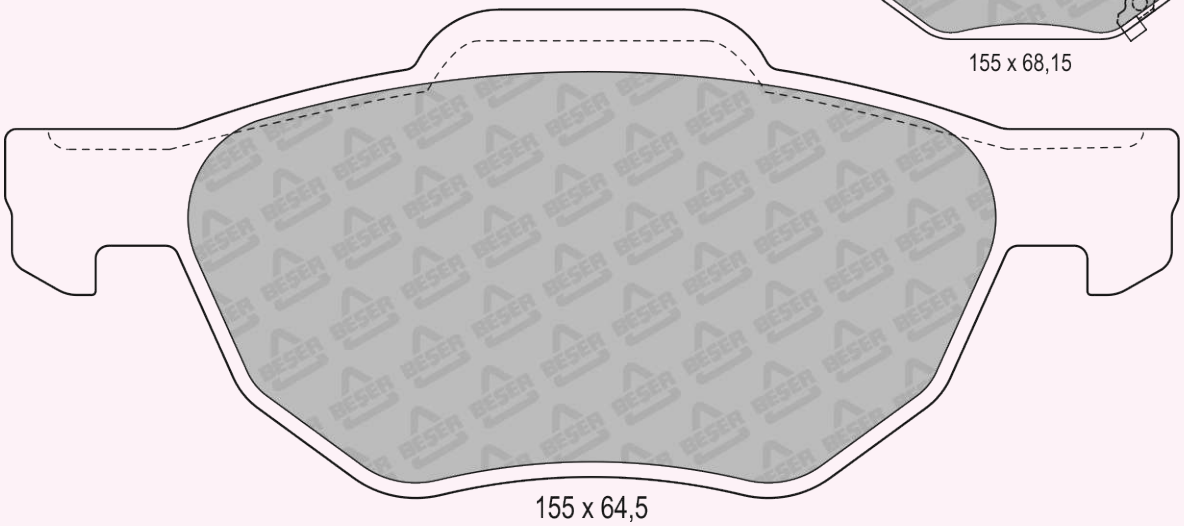

155 x 64,5

REFERENCE	T(mm)	REMARKS	MAKE	F/R	WVA No
4160	18,8	2 PADS WITH WEAR SENSOR	HONDA	F	24638 24639 24640

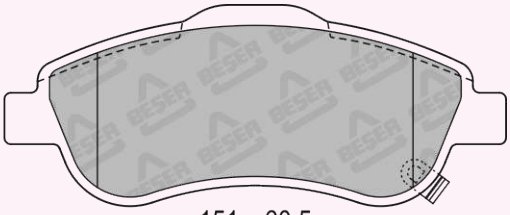

151 x 60,5
(NOT SCALE)

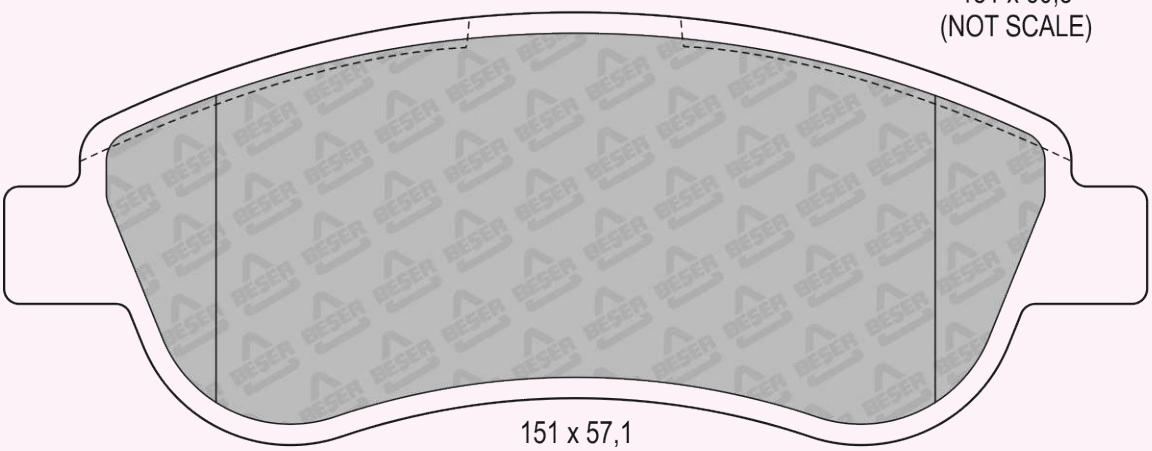

151 x 57,1

REFERENCE	T(mm)	REMARKS	MAKE	F/R	WVA No
4161	18,6	2 PADS WITH WEAR SENSOR	FORD - LANDROVER VOLVO	F	24123 24124

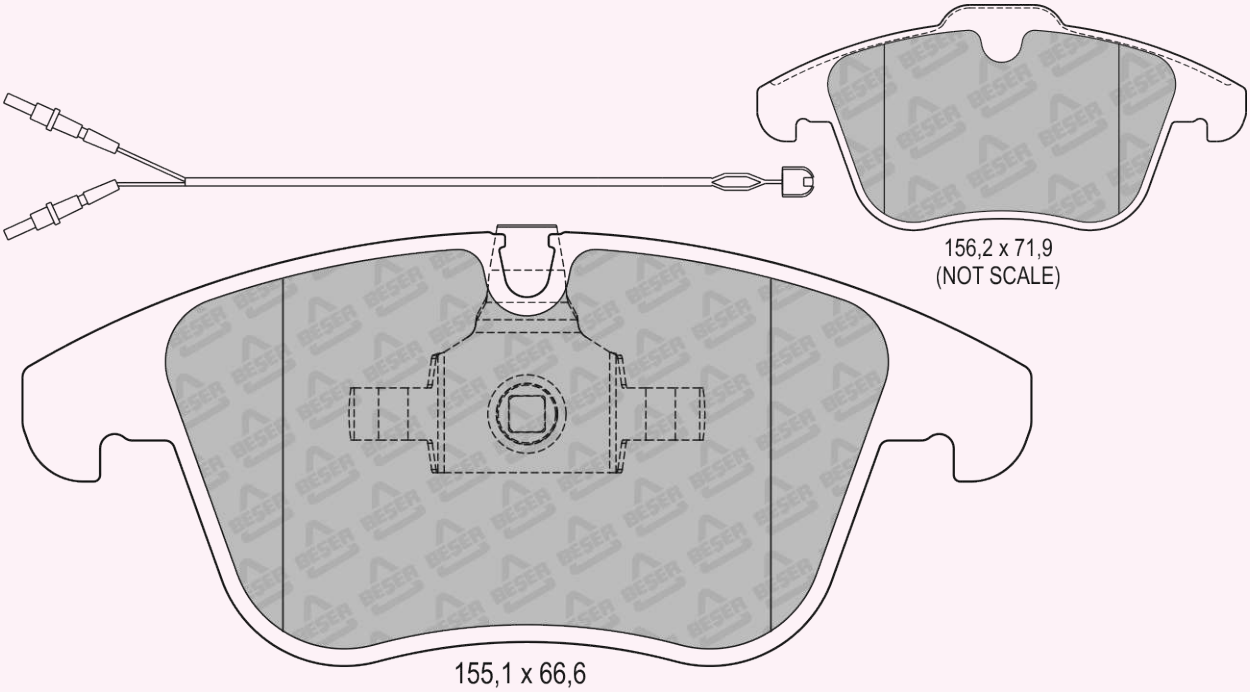

REFERENCE	T(mm)	REMARKS	MAKE	F/R	WVA No
4162	17,5	1 PAD WITH WEAR SENSOR (200 mm)	VW	F	24623 24624 24625

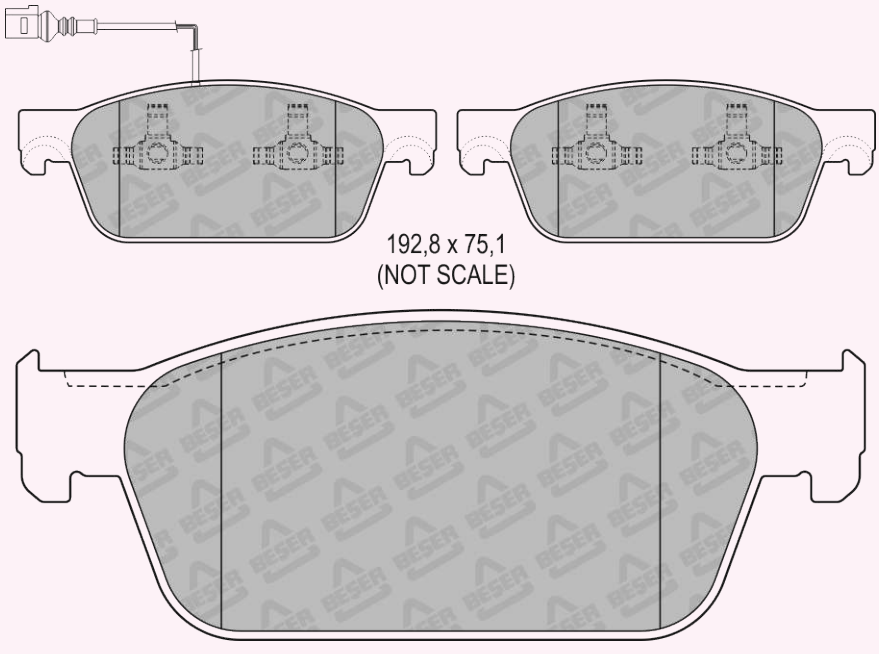

REFERENCE	T(mm)	REMARKS	MAKE	F/R	WVA No
4165	15	2 PADS WITH WEAR SENSOR	KIA	R	24491 24492 24493

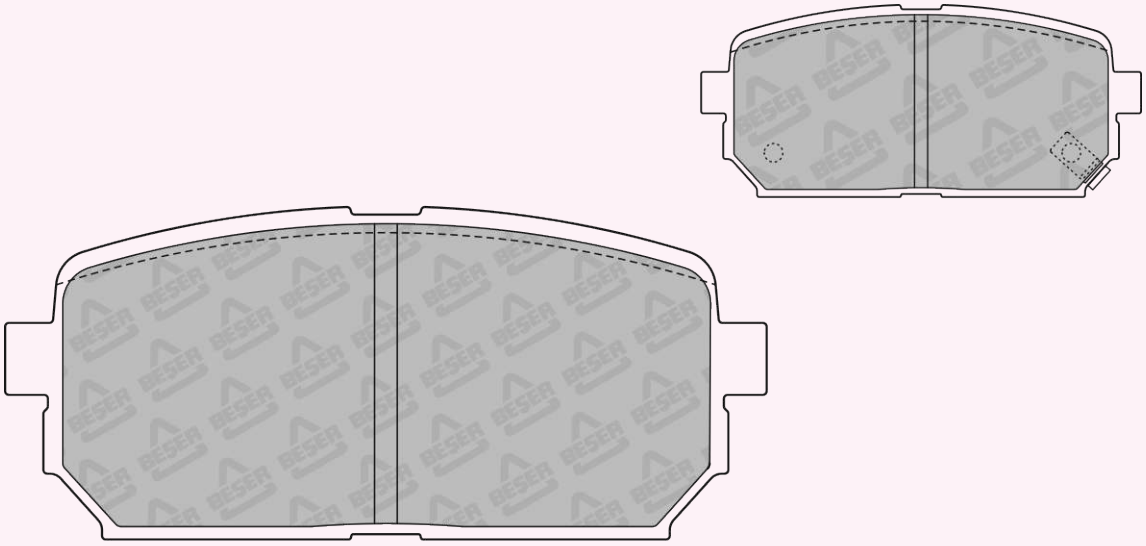

100,6 x 43,9

REFERENCE	T(mm)	REMARKS	MAKE	F/R	WVA No
4166	18	2 PADS WITH WEAR SENSOR	HYUNDAI - KIA	F	25708 25709 25710

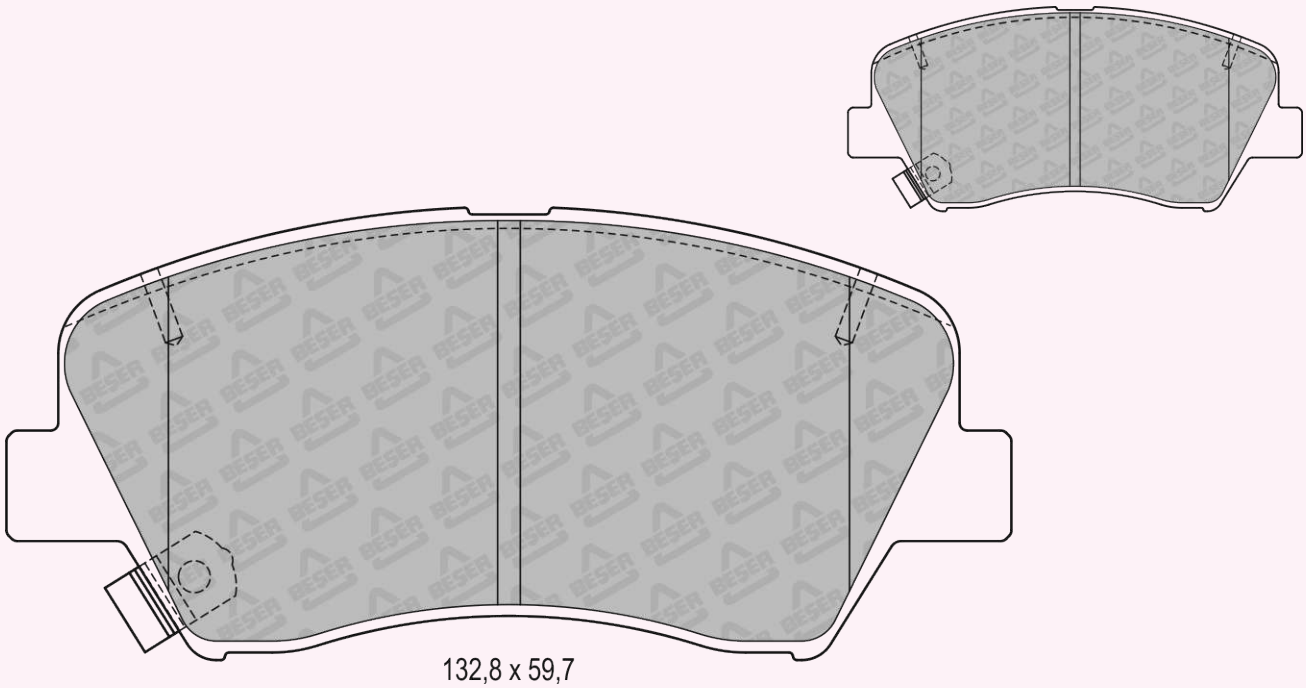

132,8 x 59,7

REFERENCE	T(mm)	REMARKS	MAKE	F/R	WVA No
4167	17	2 PADS WITH WEAR SENSOR	TOYOTA	F	25209 25210

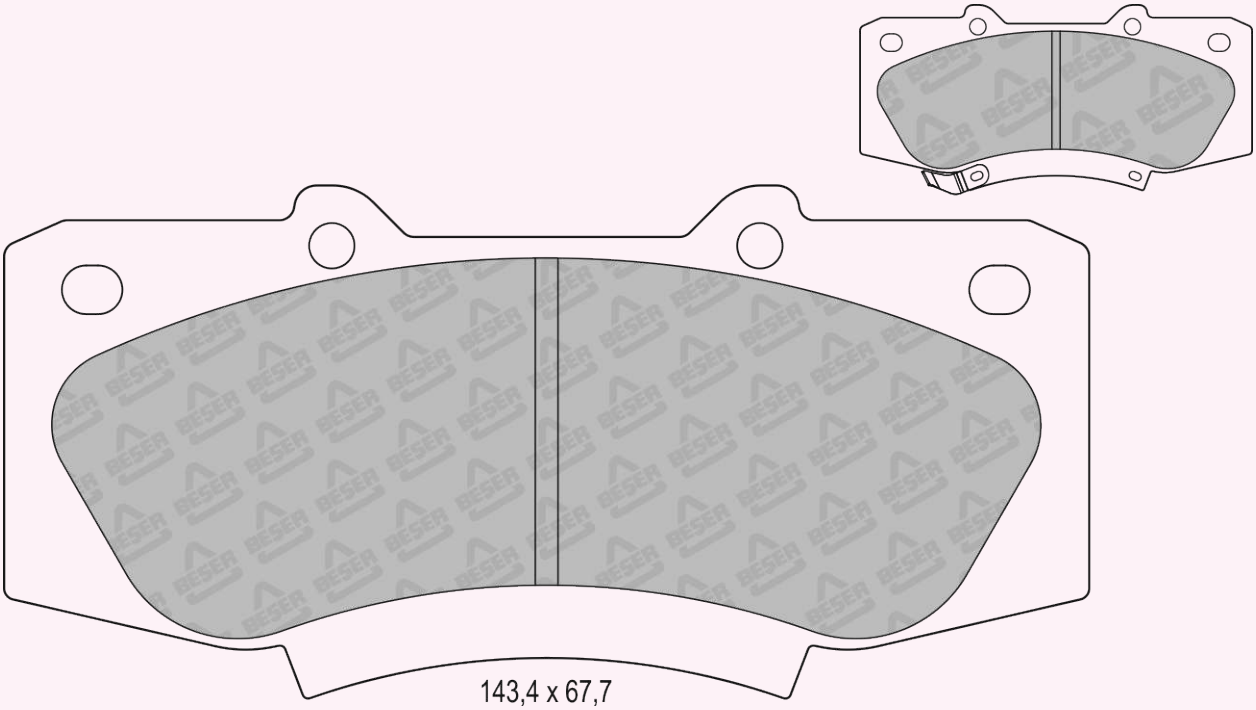

143,4 x 67,7

REFERENCE	T(mm)	REMARKS	MAKE	F/R	WVA No
4169	27	4 PADS PLAIN	IVECO	F - R	29256

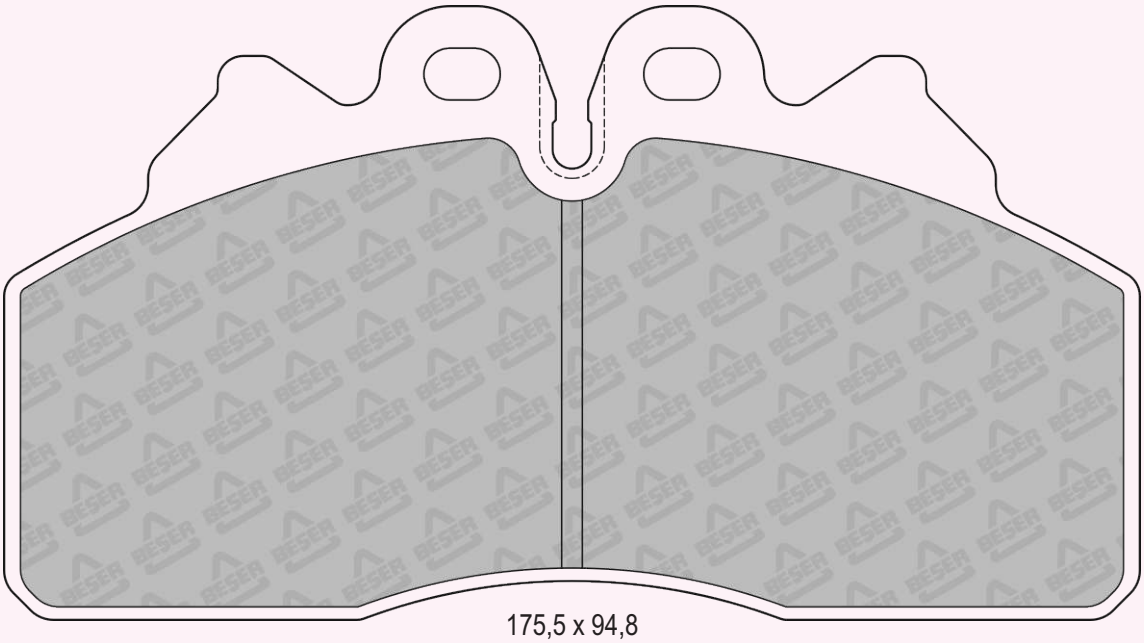

175,5 x 94,8
(NOT SCALE)

REFERENCE	T(mm)	REMARKS	MAKE	F/R	WVA No
4170	19	4 PADS WITH WEAR SENSOR (8 PADS PCS.)	MITSUBISHI	F - R	25749 25750 25751

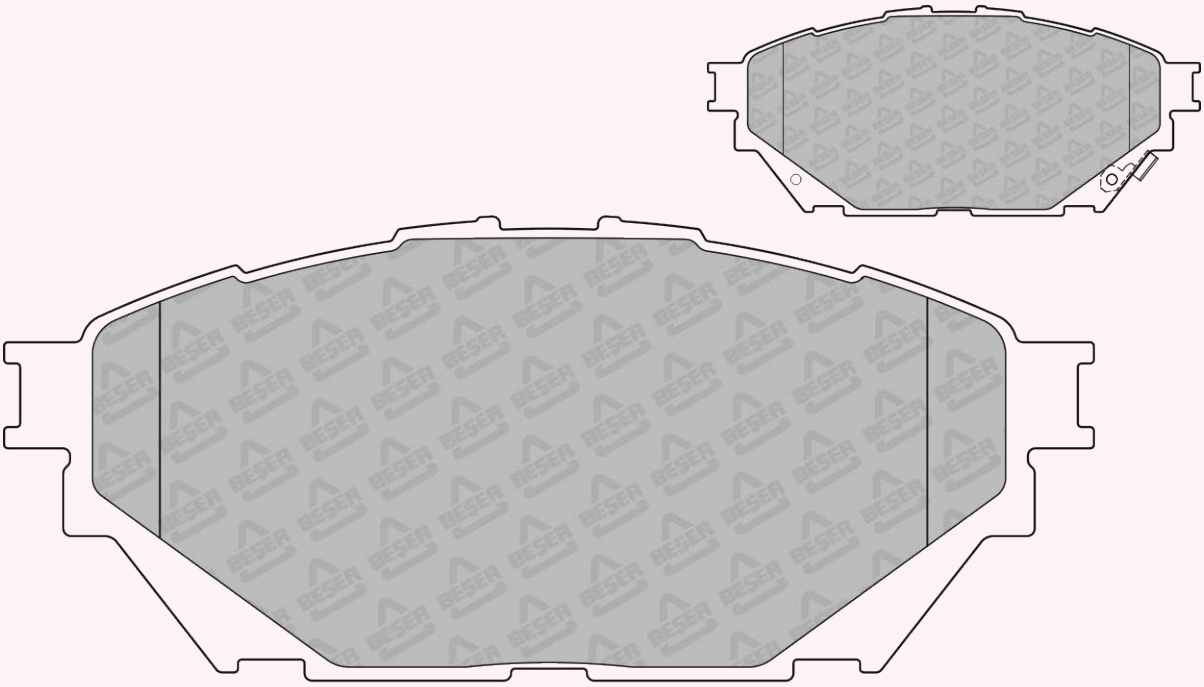

144 x 61,3

REFERENCE	T(mm)	REMARKS	MAKE	F/R	WVA No
4171	19,1	2 PADS WITH WEAR SENSOR (215 mm)	CITROEN - FIAT PEUGEOT	F	24466 24467

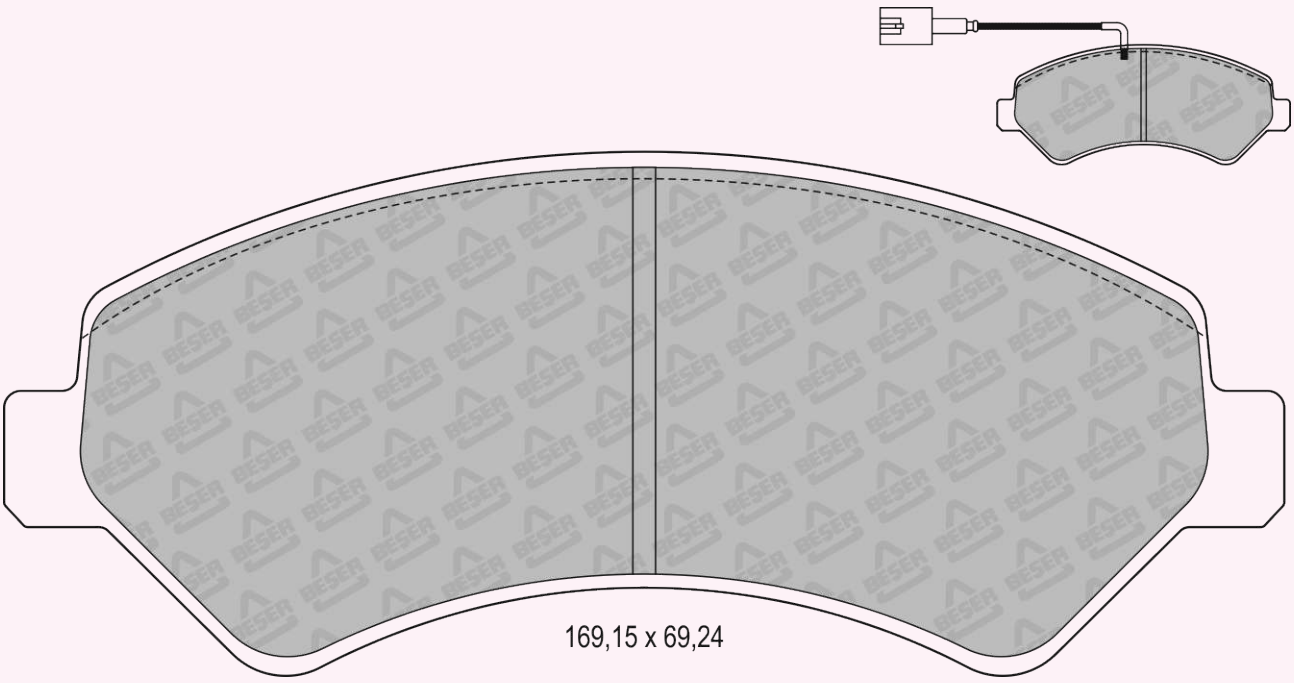

169,15 x 69,24

REFERENCE	T(mm)	REMARKS	MAKE	F/R	WVA No
4171/1	19,1	2 PADS WITH WEAR SENSOR (215 mm)	CITROEN - FIAT PEUGEOT	F	24466 24467

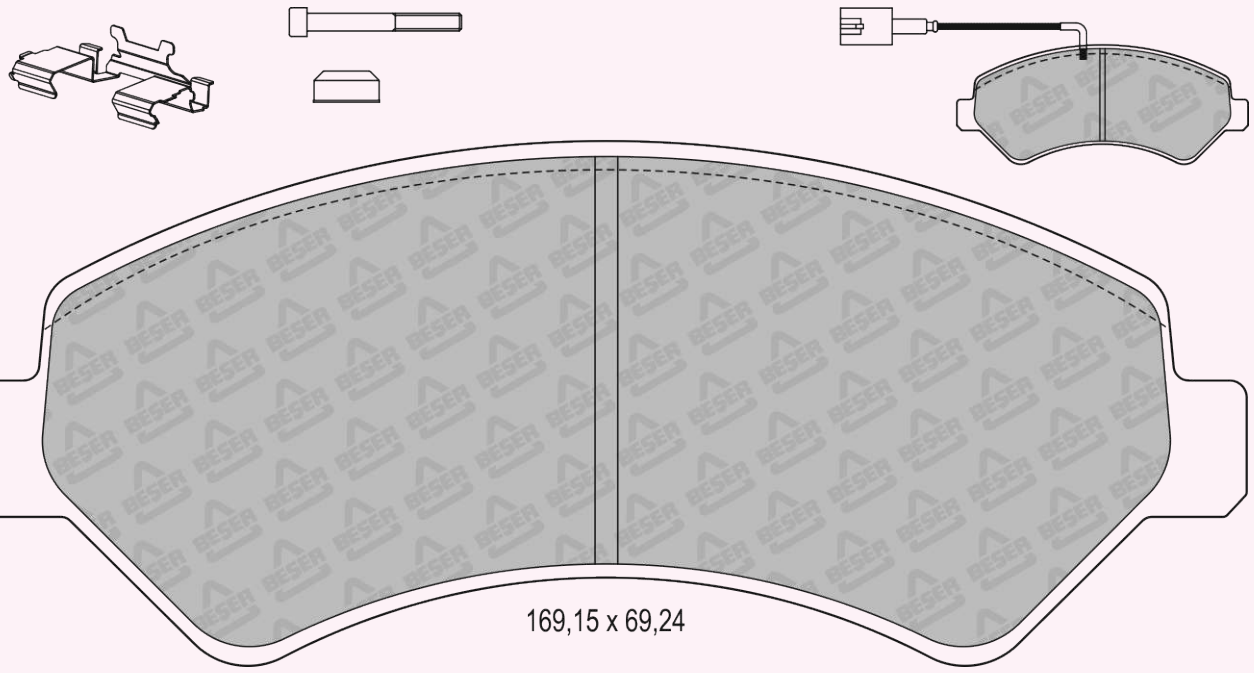

REFERENCE	T(mm)	REMARKS	MAKE	F/R	WVA No
4172	18,2	4 PADS PLAIN	NISSAN - OPEL RENAULT - VAUXHALL	R	25172 25173

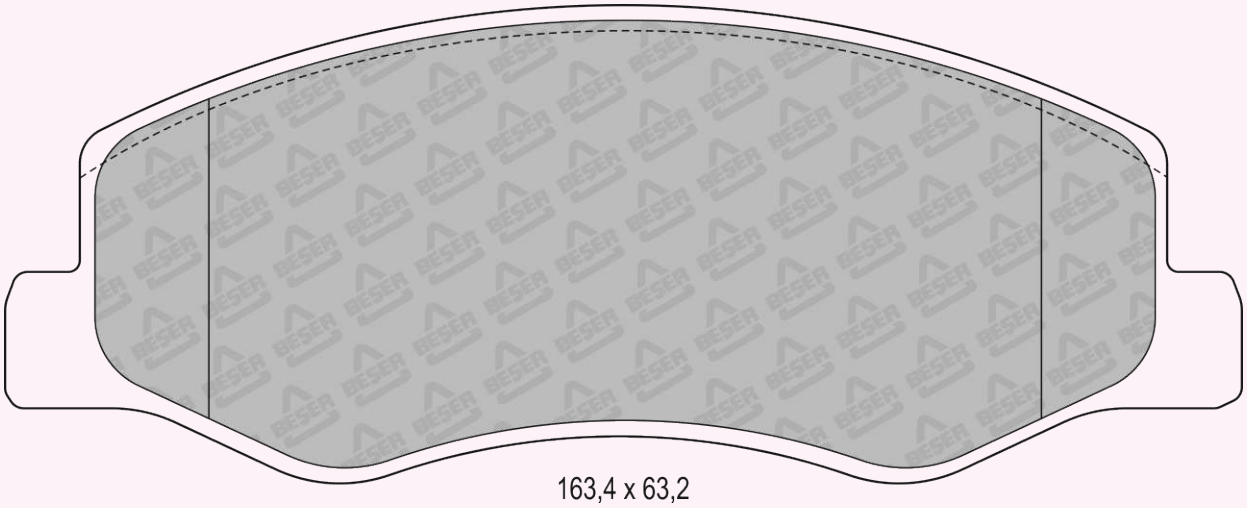

REFERENCE	T(mm)	REMARKS	MAKE	F/R	WVA No
4172/1	18,2	4 PADS PLAIN	NISSAN - OPEL RENAULT - VAUXHALL	R	25172 25173

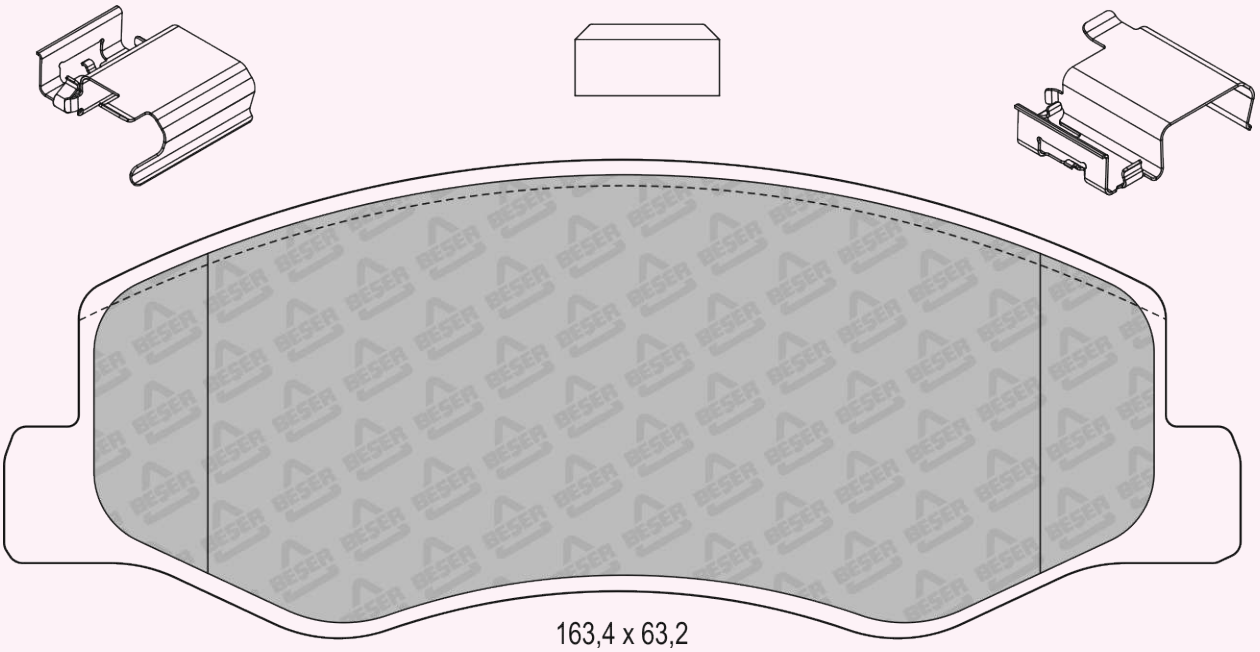

163,4 x 63,2

REFERENCE	T(mm)	REMARKS	MAKE	F/R	WVA No
4173	17,5	4 PADS PLAIN	FIAT - FORD	F	24072

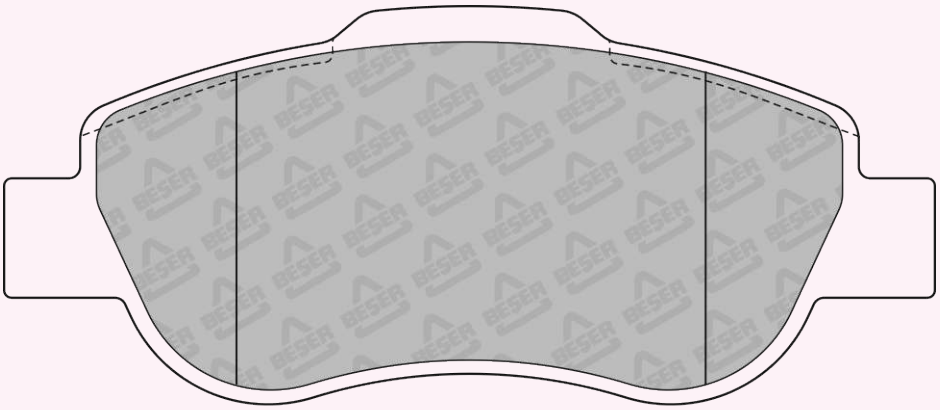

123 x 52,5

REFERENCE	T(mm)	REMARKS	MAKE	F/R	WVA No
4173/1	17,5	1 PAD WITH WEAR SENSOR (205 mm)	FIAT - FORD	F	24072 24764

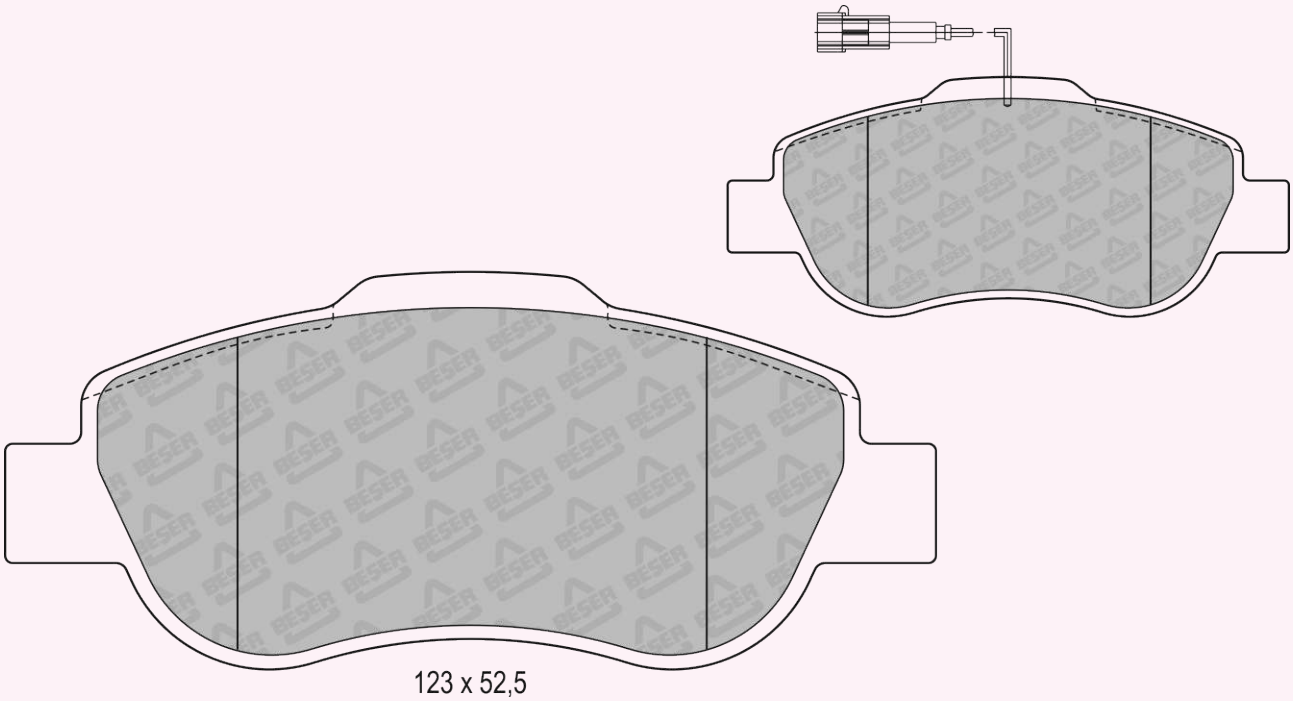

REFERENCE	T(mm)	REMARKS	MAKE	F/R	WVA No
4173/2	17,5	2 PADS WITH WEAR SENSOR (205 mm)	FIAT - FORD	F	24072 24764

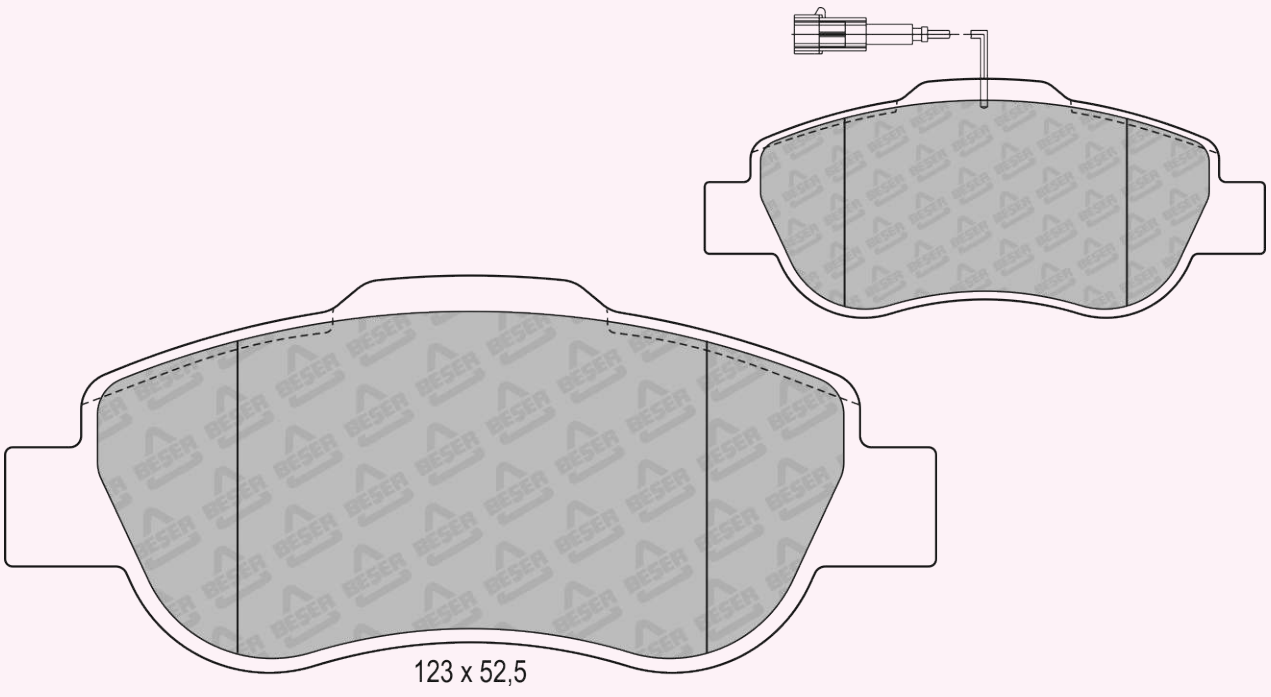

REFERENCE	T(mm)	REMARKS	MAKE	F/R	WVA No
4174	17	4 PADS PLAIN	FORD	F	25602

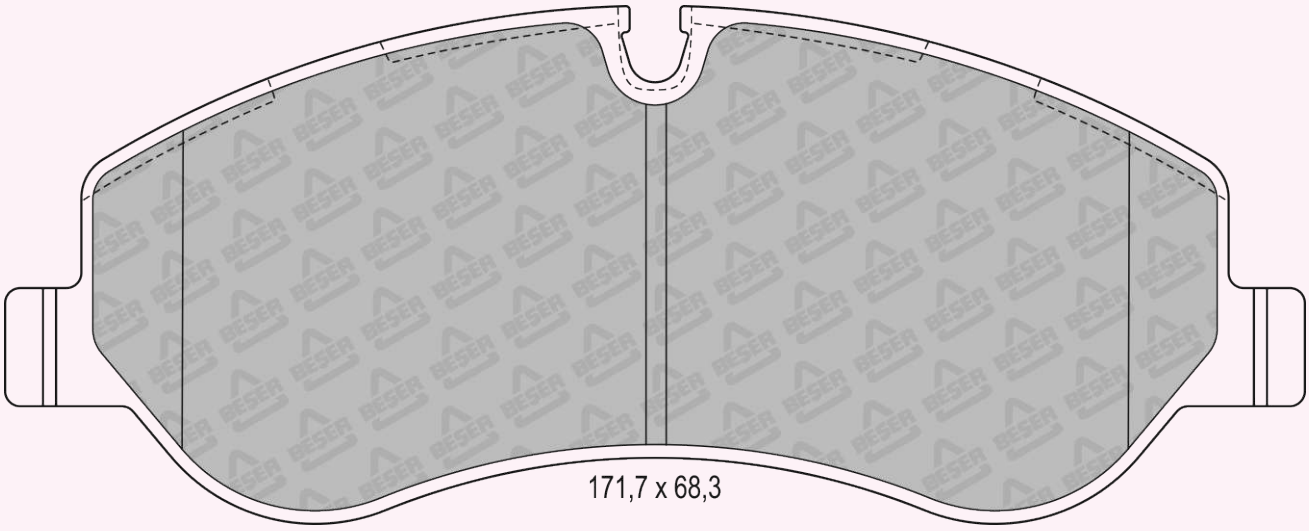

REFERENCE	T(mm)	REMARKS	MAKE	F/R	WVA No
4174/1	17	2 PADS WITH WEAR SENSOR (325 mm)	FORD	F	25602

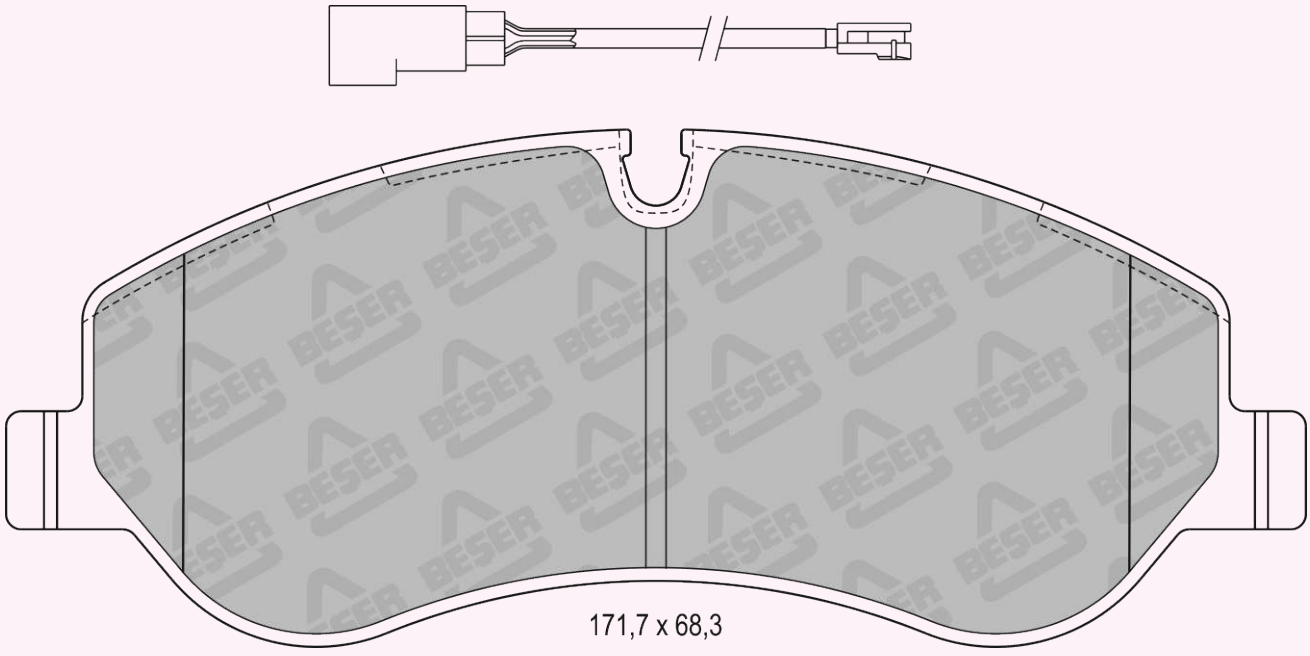

REFERENCE	T(mm)	REMARKS	MAKE	F/R	WVA No
4175	17,6	4 PADS PLAIN	FORD	R	25603 25604

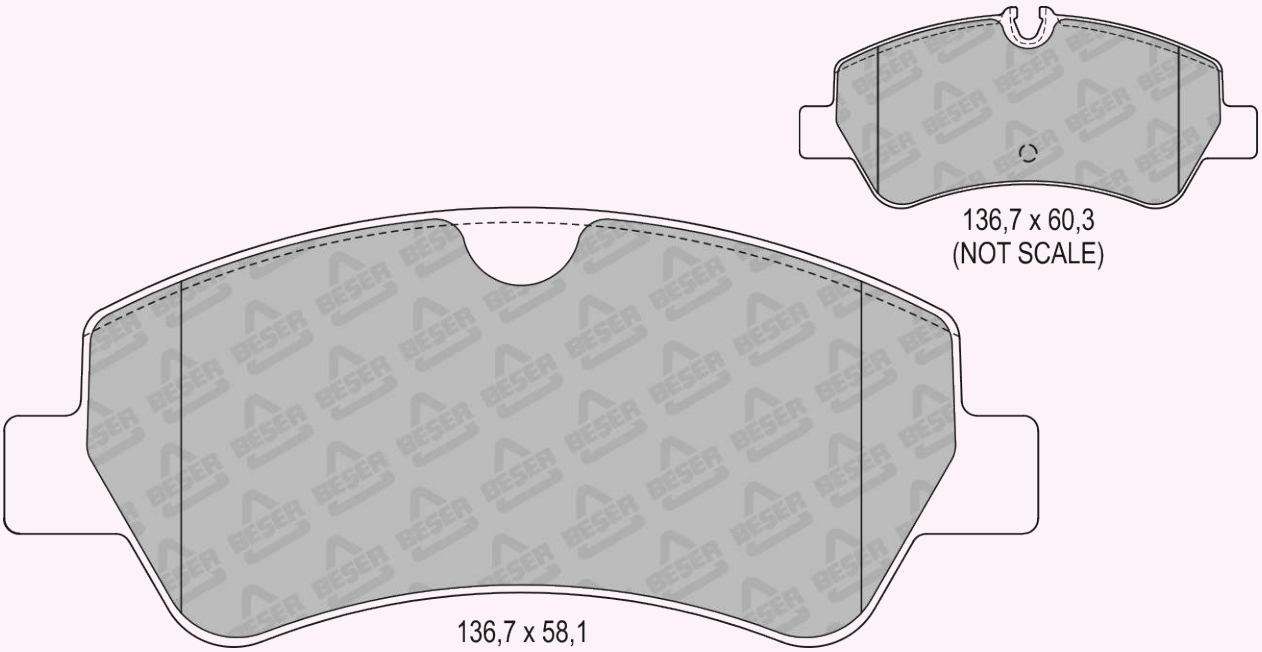

REFERENCE	T(mm)	REMARKS	MAKE	F/R	WVA No
4175/1	17,6	2 PADS WITH WEAR SENSOR (480 mm)	FORD	R	25603 25604

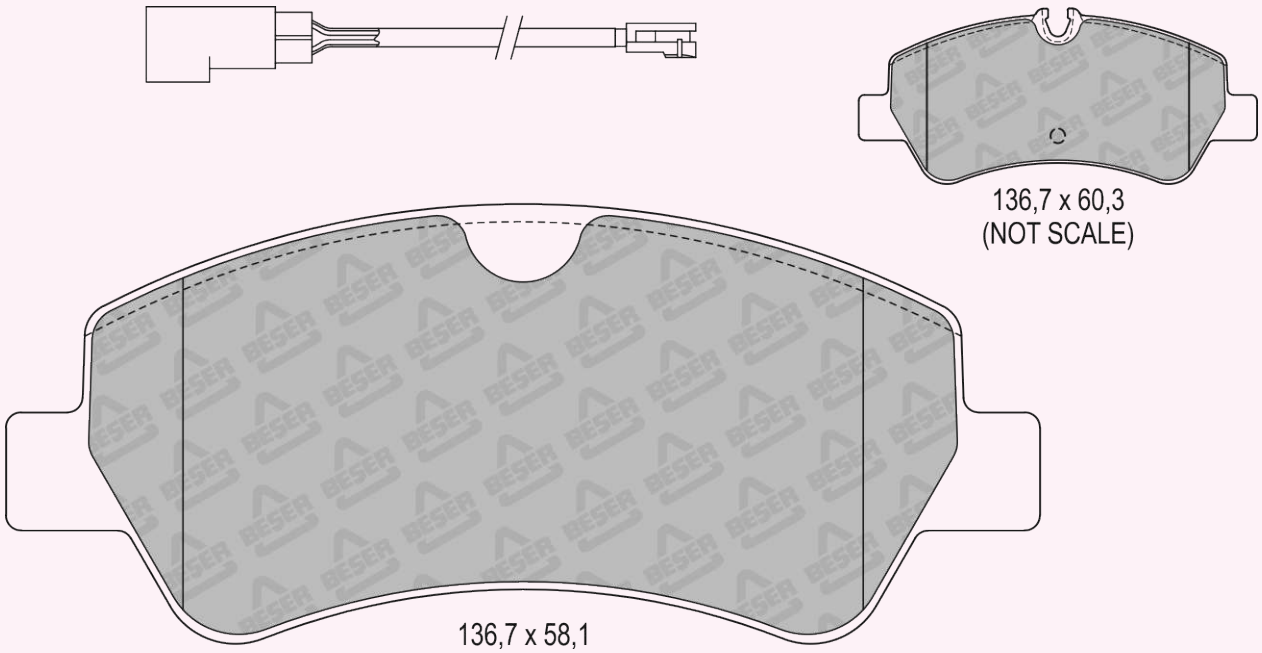

REFERENCE	T(mm)	REMARKS	MAKE	F/R	WVA No
4176	19	2 PADS WITH WEAR SENSOR	TOYOTA	F	25698 25699 25700

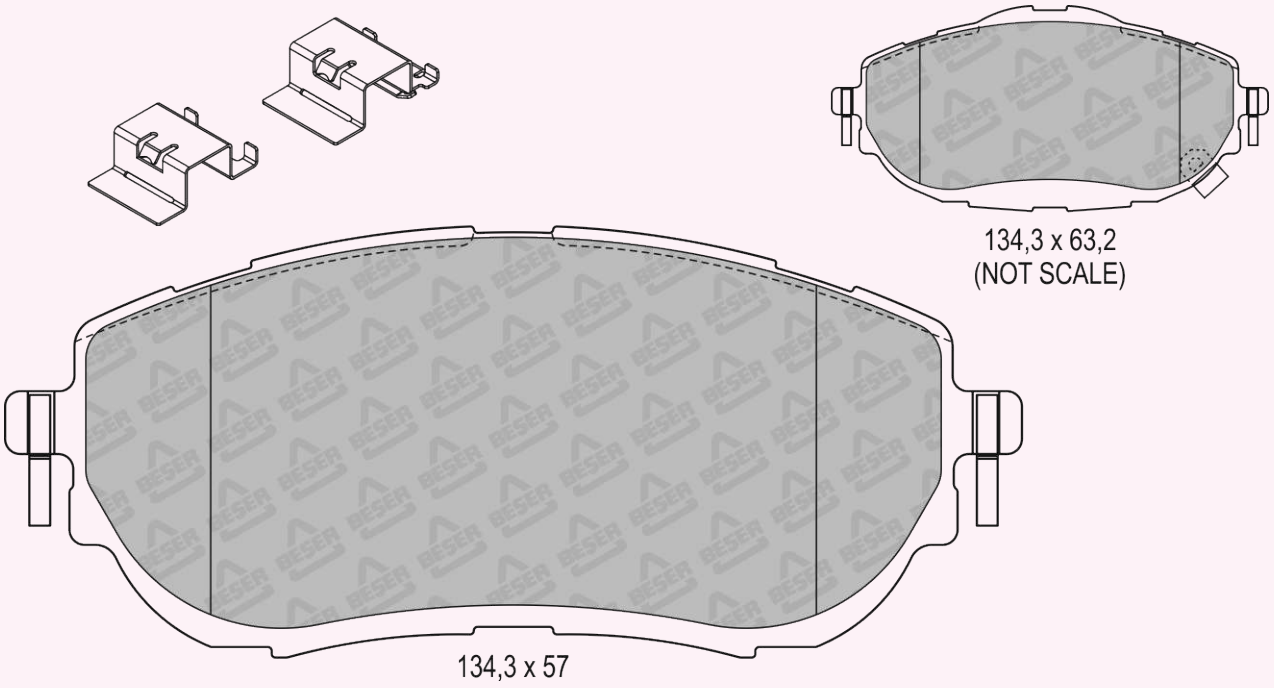

REFERENCE	T(mm)	REMARKS	MAKE	F/R	WVA No
4176/1	19-18,7	2 PADS WITH WEAR SENSOR	TOYOTA	F	25698 25699 25700

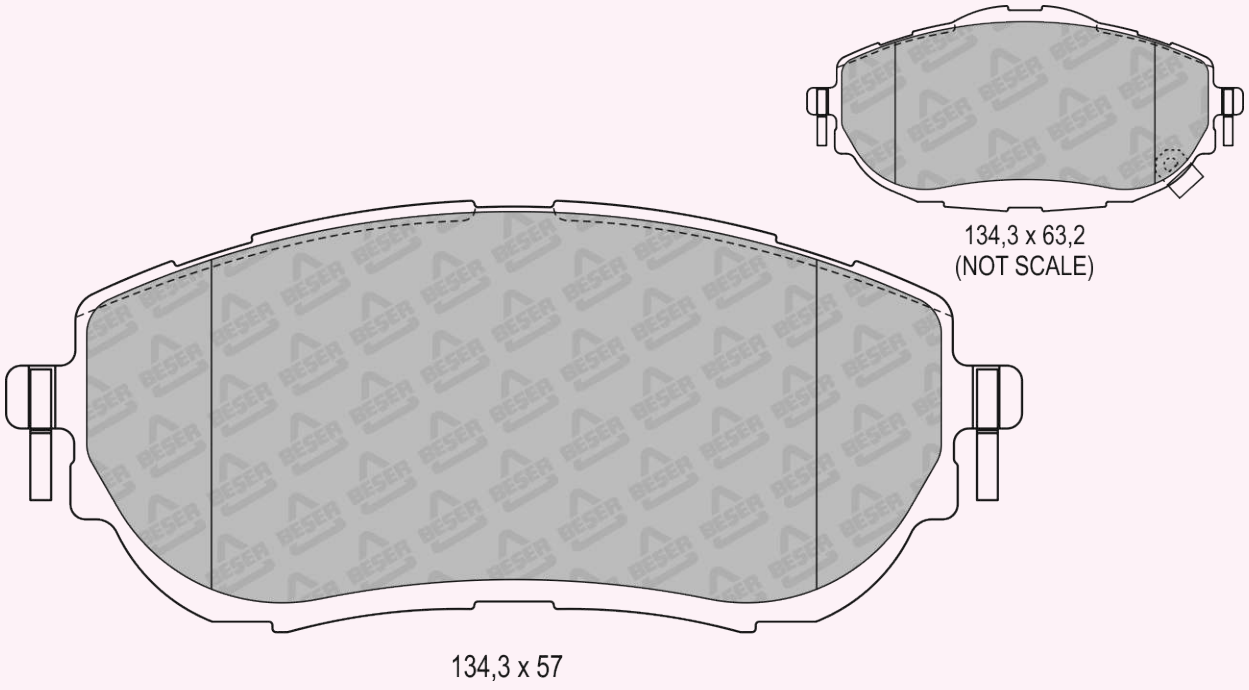

REFERENCE	T(mm)	REMARKS	MAKE	F/R	WVA No
4179	15,9	2 PADS PISTON CLIP	ALPINA - BENTLY- BMW ROLLS ROYCE	R	23309 23310

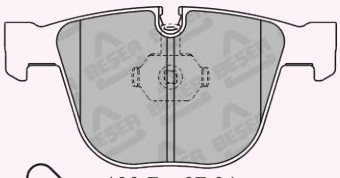

139,7 x 67,91
(NOT SCALE)

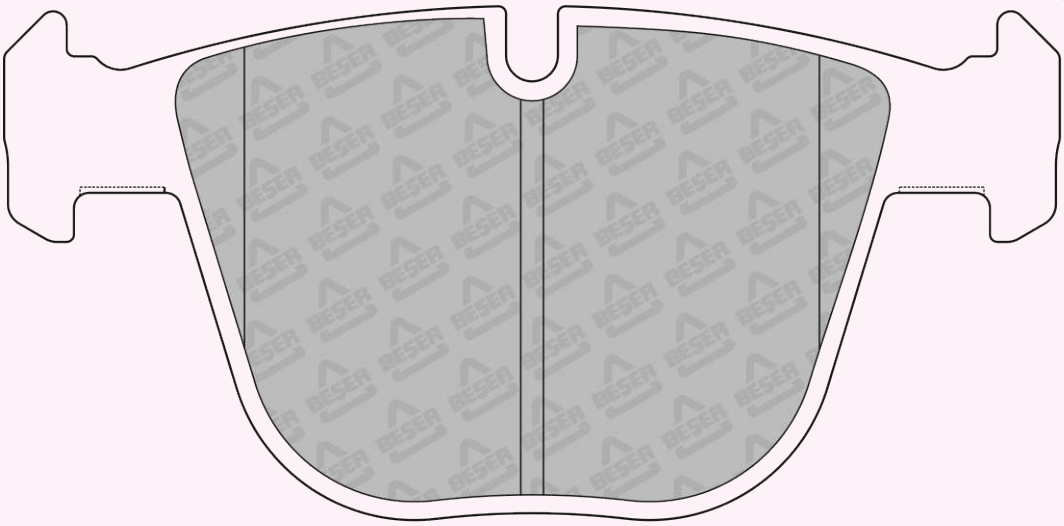

139,45 x 67,91

REFERENCE	T(mm)	REMARKS	MAKE	F/R	WVA No
4180	19,5	4 PADS PISTON CLIP	BMW	F	23312 23347

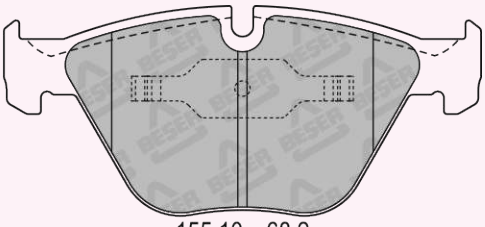

155,10 x 68,2
(NOT SCALE)

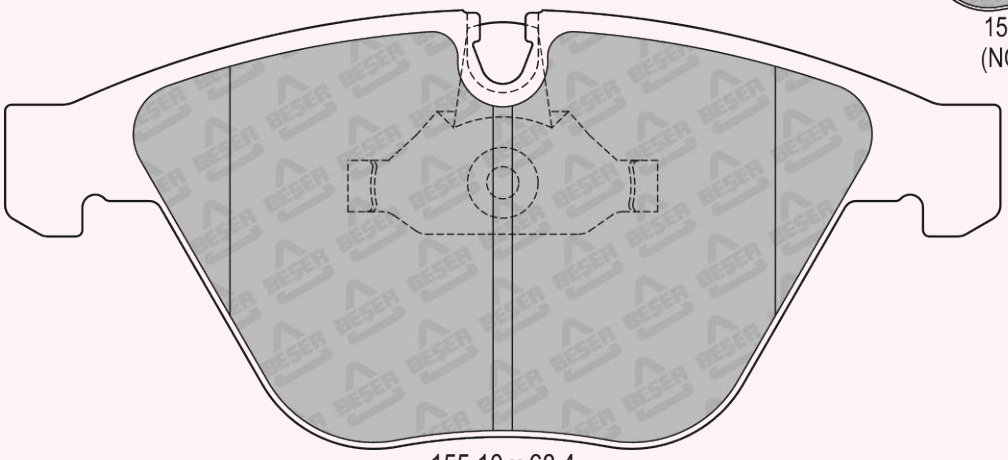

155,10 x 68,4
(NOT SCALE)

REFERENCE	T(mm)	REMARKS	MAKE	F/R	WVA No
4181	16	2 PADS PISTON CLIP	BMW	R	23732 23737

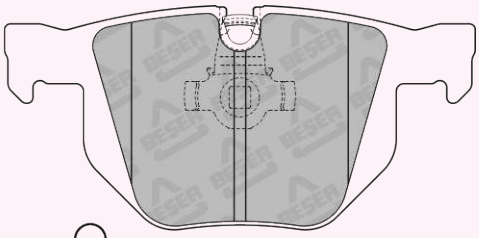

121,92 x 58,14
(NOT SCALE)

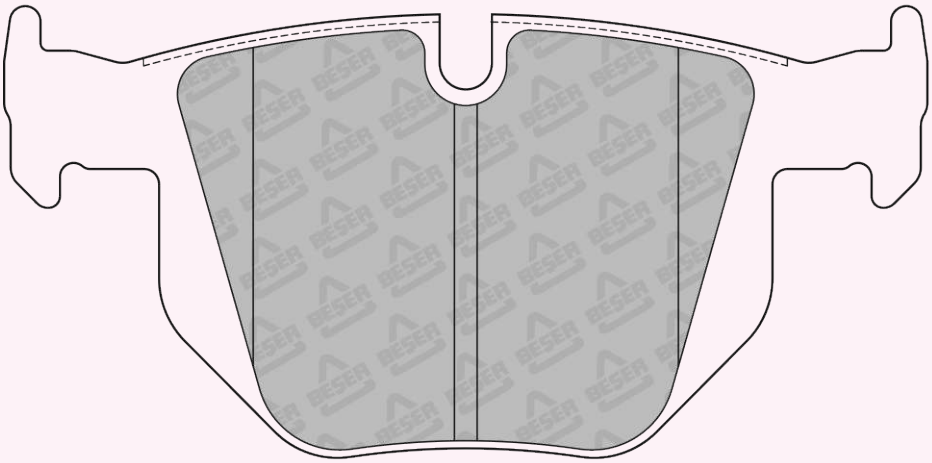

121,92 x 59,18

REFERENCE	T(mm)	REMARKS	MAKE	F/R	WVA No
4181/1	17	2 PADS PISTON CLIP	BMW	R	23732 23737

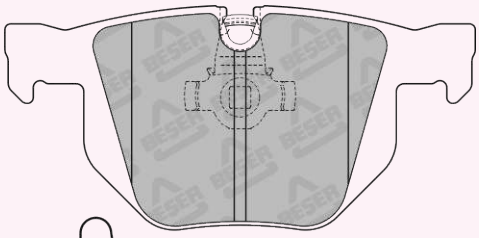

121,92 x 58,14
(NOT SCALE)

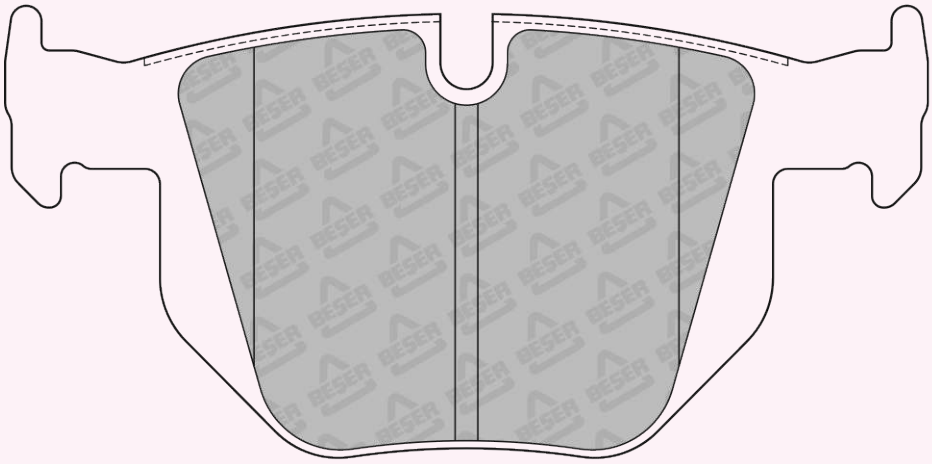

121,92 x 59,18

REFERENCE	T(mm)	REMARKS	MAKE	F/R	WVA No
4182	16,9	2 PADS PISTON CLIP	JEEP - KIA	F	21822 21823 21824 21825

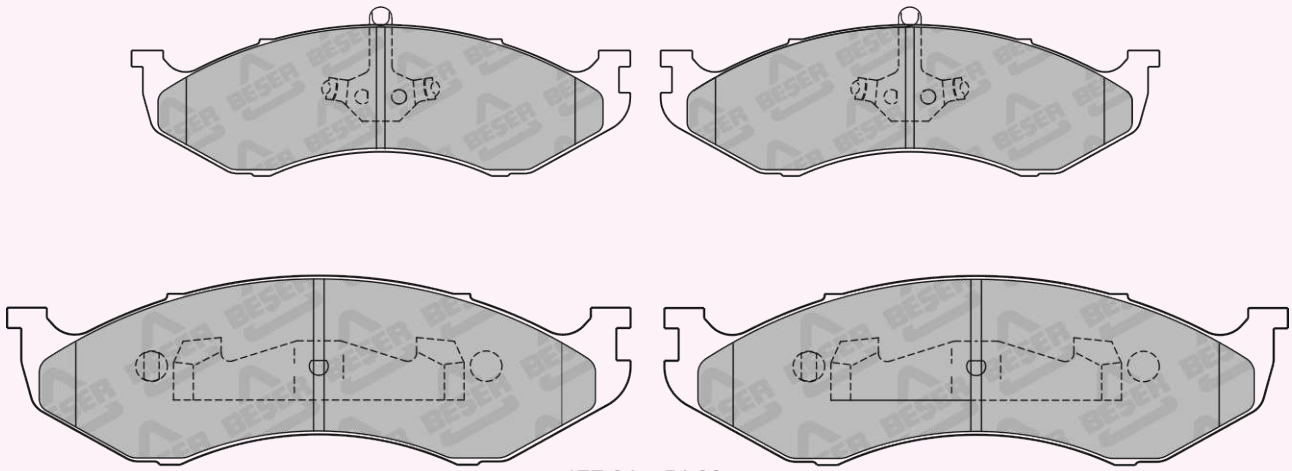

177,04 x 54,90
(NOT SCALE)

REFERENCE	T(mm)	REMARKS	MAKE	F/R	WVA No
4184	16,3	2 PADS WITH WEAR SENSOR	CADILLAC - CHEVROLET GMC	R	.....

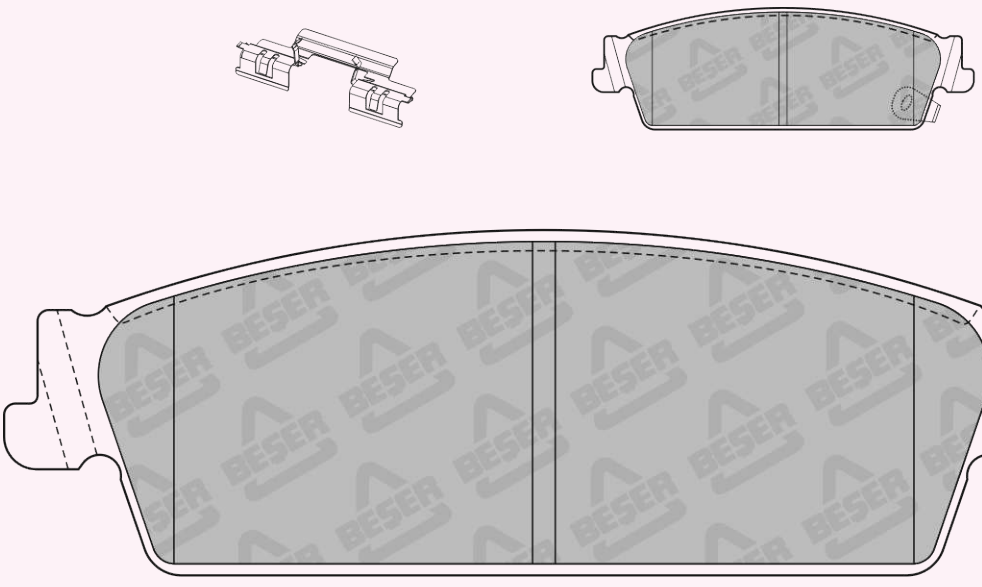

142,70 x 45,60

REFERENCE	T(mm)	REMARKS	MAKE	F/R	WVA No
4185	17,78	2 PADS WITH WEAR SENSOR	CADILLAC	F	.....

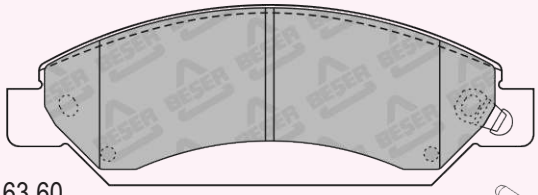

184,30 x 63,60
(NOT SCALE)

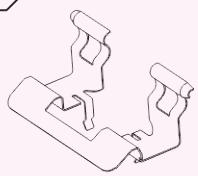

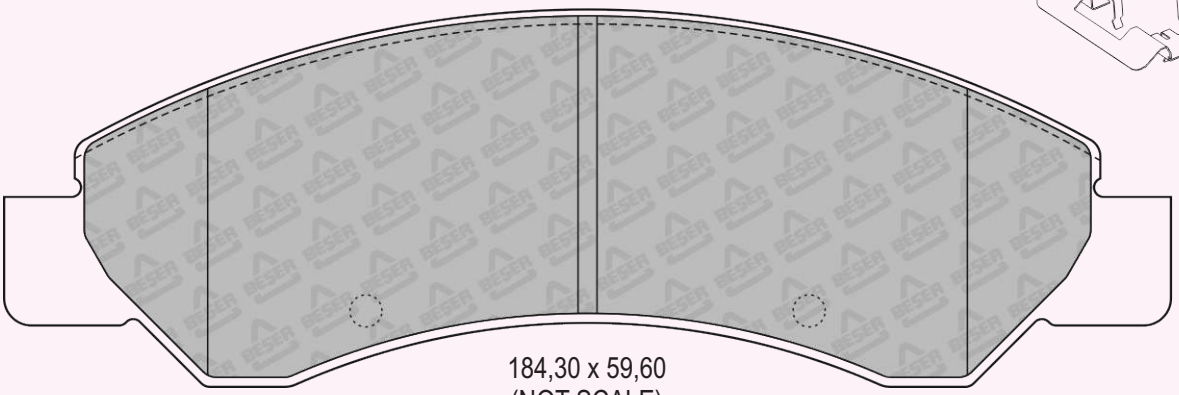

184,30 x 59,60
(NOT SCALE)

REFERENCE	T(mm)	REMARKS	MAKE	F/R	WVA No
4186	15	2 PADS WITH WEAR SENSOR	FORD	R	24381 24382 24383 24384

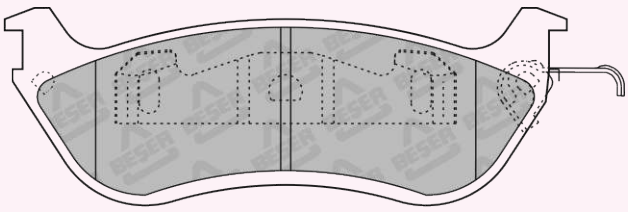

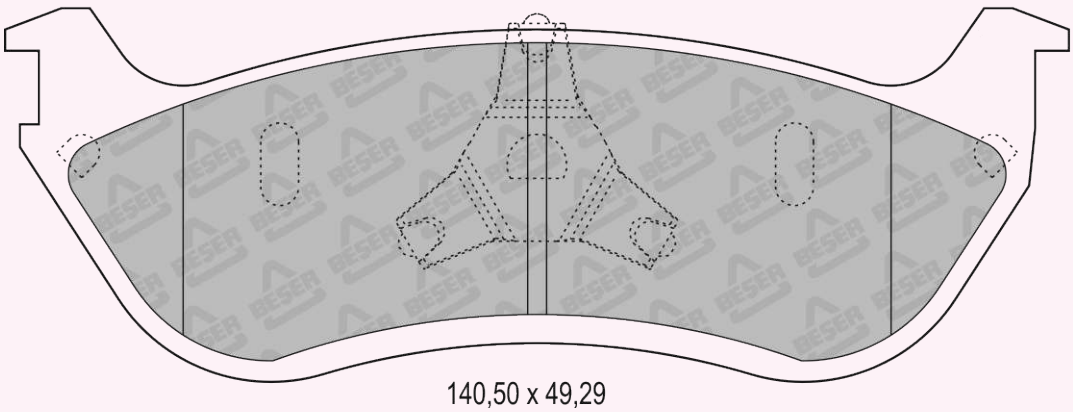

140,50 x 49,29

REFERENCE	T(mm)	REMARKS	MAKE	F/R	WVA No
4187	16	4 PADS WITH WEAR SENSOR	CHEVROLET	R	23987 23988

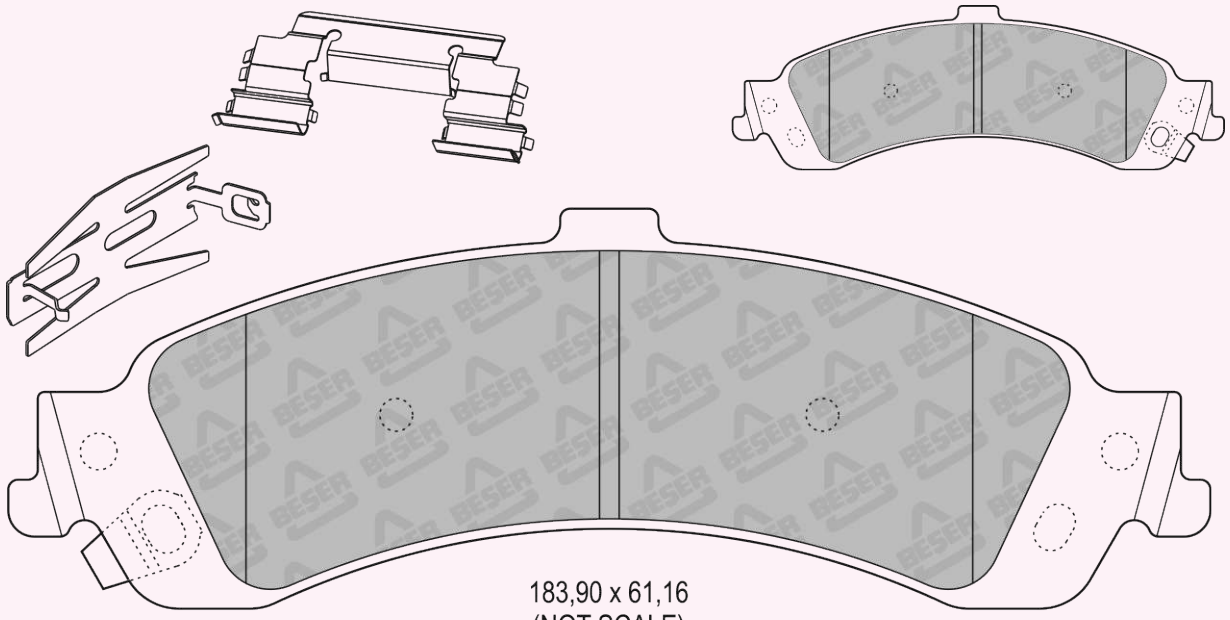

REFERENCE	T(mm)	REMARKS	MAKE	F/R	WVA No
4188	16	4 PADS PLAIN	HOLDEN - HSV VAUXHALL	R	24818 24819

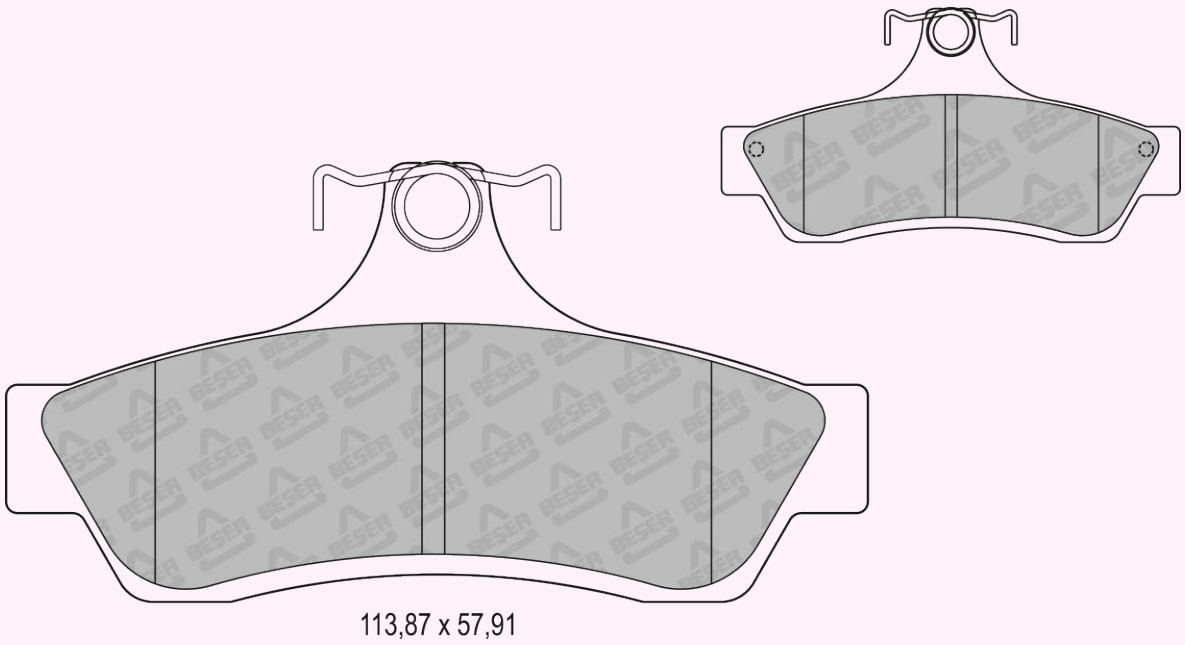

REFERENCE	T(mm)	REMARKS	MAKE	F/R	WVA No
4189	14,3	2 PADS PISTON CLIP	HOLDEN - PONTIAC VAUXHALL	F	24815 24816

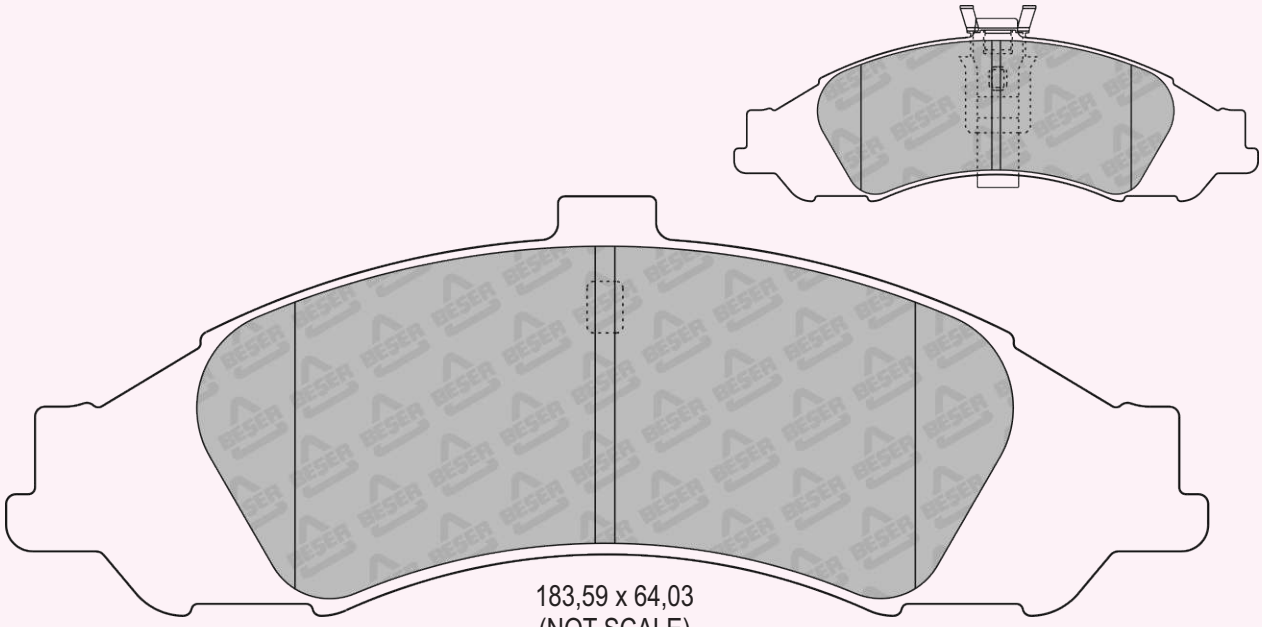

183,59 x 64,03
(NOT SCALE)

REFERENCE	T(mm)	REMARKS	MAKE	F/R	WVA No
4190	18,2	6 PADS WITH WEAR SENSOR	CADILLAC	R	24626 24627 24792

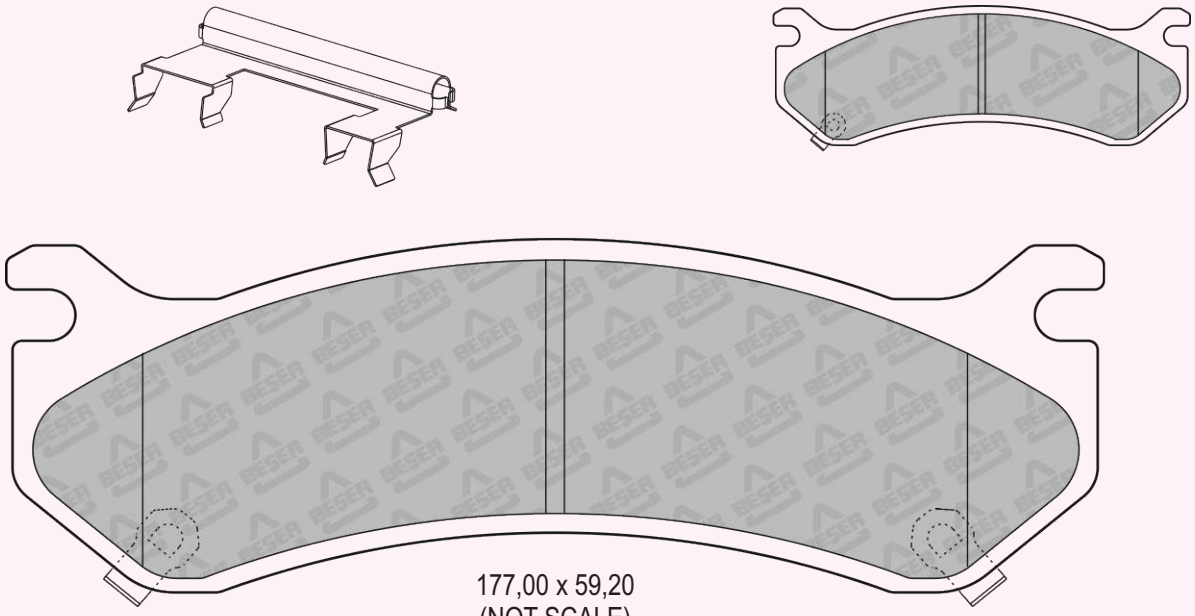

177,00 x 59,20
(NOT SCALE)

REFERENCE	T(mm)	REMARKS	MAKE	F/R	WVA No
4191	17,26	8 PADS WITH WEAR SENSOR	CHEVROLET	R	24879 24880 24881 24882

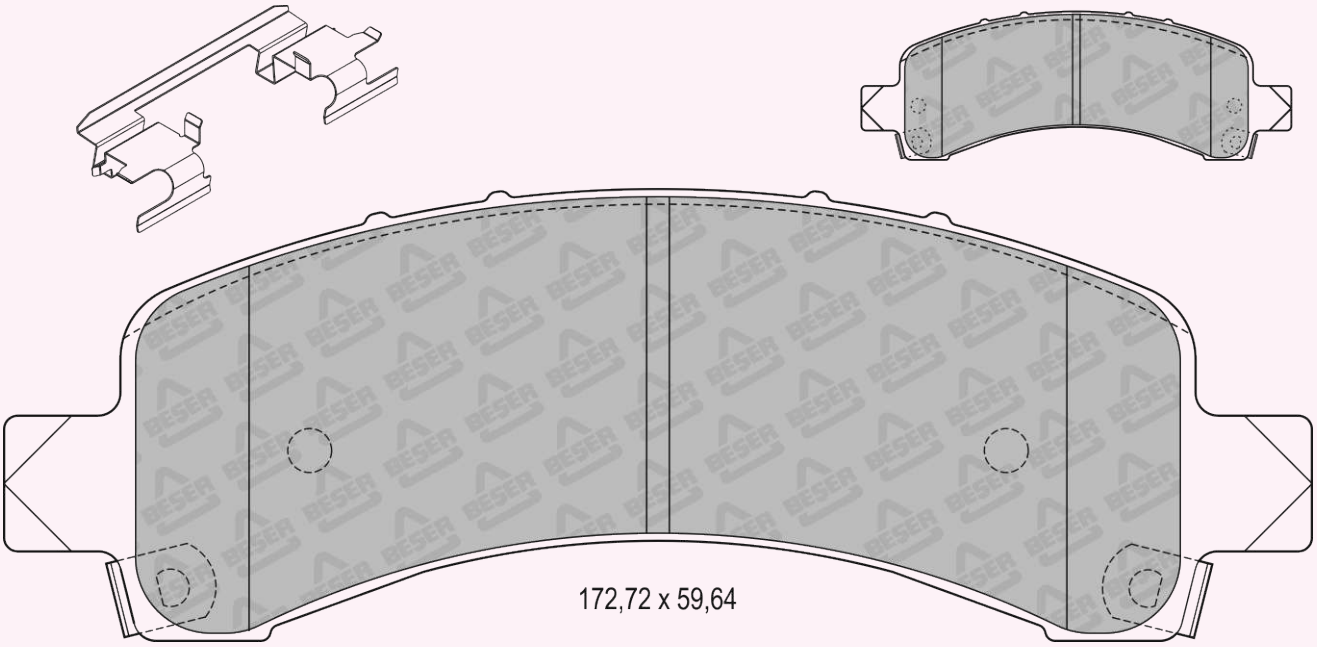

REFERENCE	T(mm)	REMARKS	MAKE	F/R	WVA No
4192	16,3	4 PADS PLAIN	FORD - LINCOLN MERCURY	F	.....

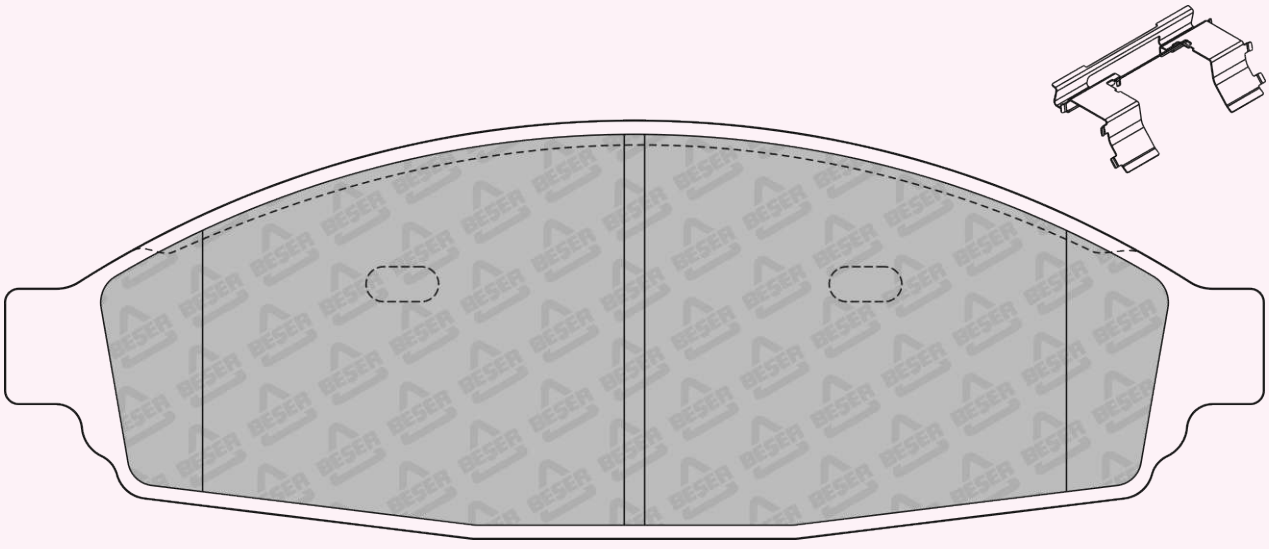

REFERENCE	T(mm)	REMARKS	MAKE	F/R	WVA No
4193	17	4 PADS PLAIN	FORD - LINCOLN	F	.....

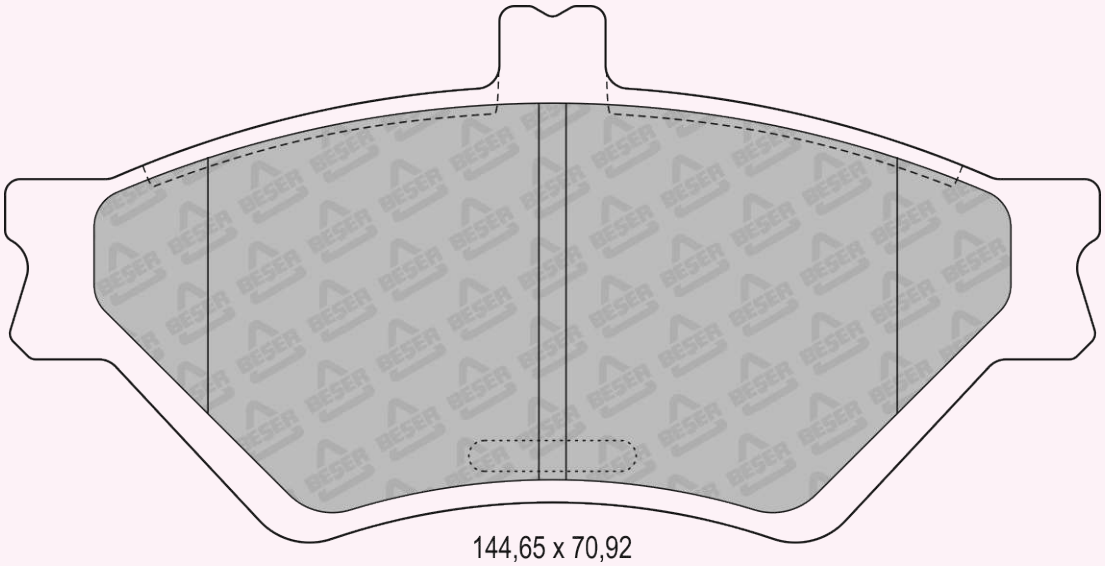

144,65 x 70,92

REFERENCE	T(mm)	REMARKS	MAKE	F/R	WVA No
4194	16	4 PADS PLAIN	LINCOLN	F	.....

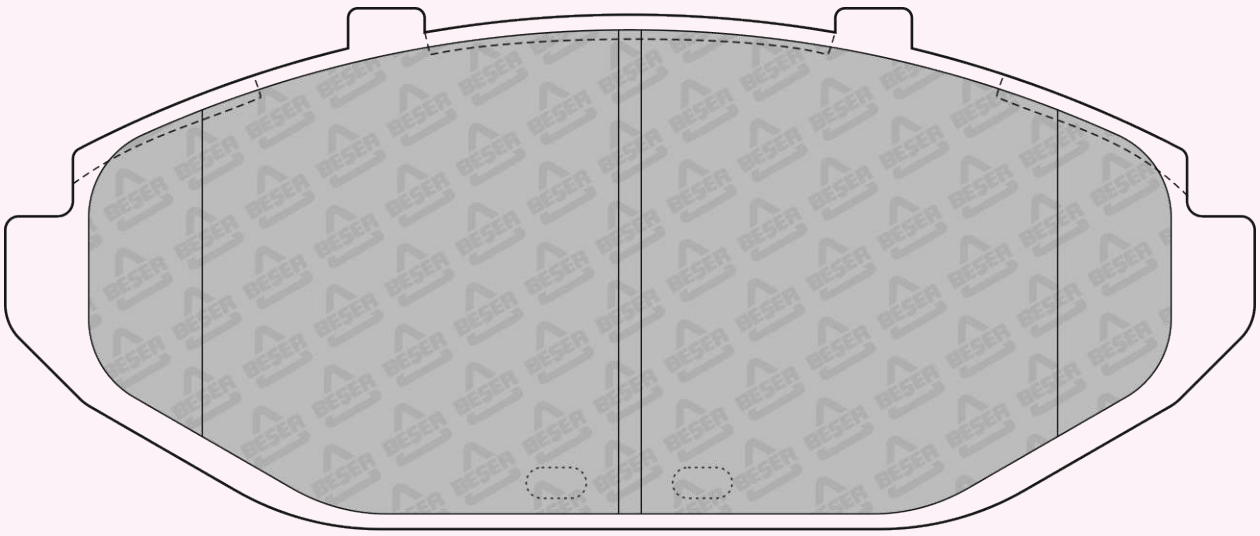

165,1 x 68,83

REFERENCE	T(mm)	REMARKS	MAKE	F/R	WVA No
4195	15,5	2 PADS INNER & 2 PADS OUTER	FORD - LINCOLN MERCURY	F	.....

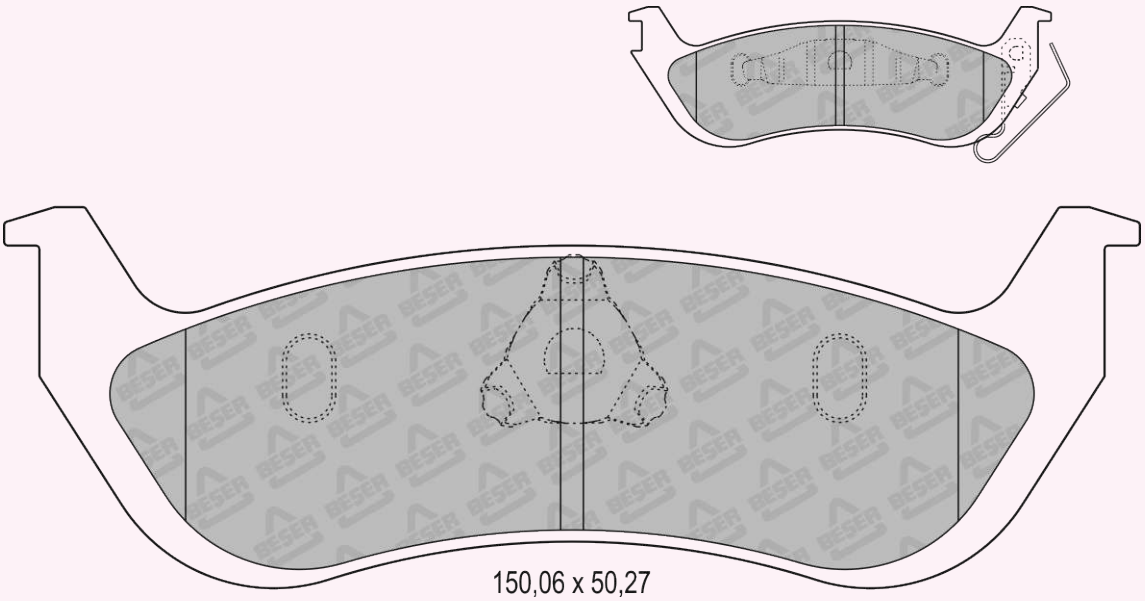

150,06 x 50,27

REFERENCE	T(mm)	REMARKS	MAKE	F/R	WVA No
4196	15	2 PADS PISTON CLIP	FORD - MERCURY	R	.....

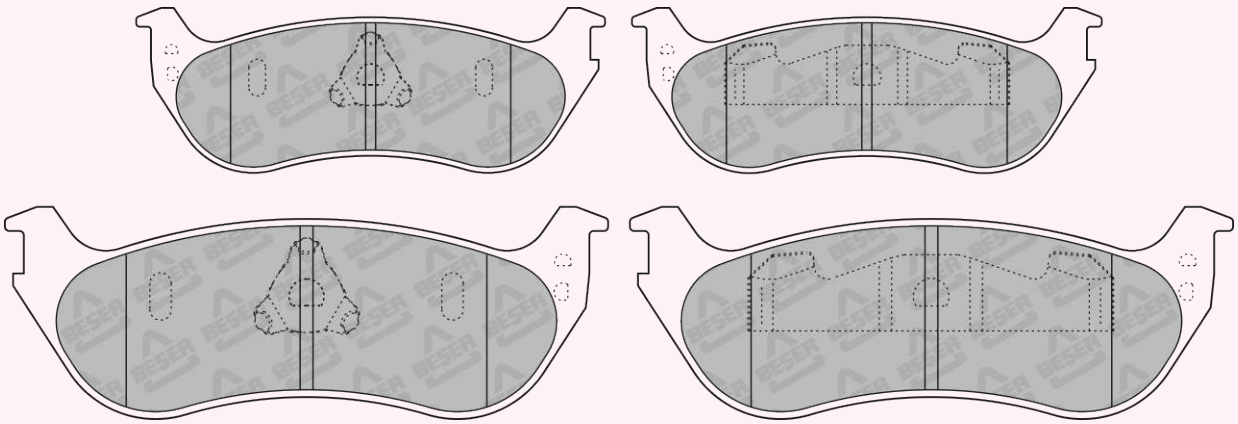

140,5 x 49,29
(NOT SCALE)

REFERENCE	T(mm)	REMARKS	MAKE	F/R	WVA No
4197	15,4-17,4	2 PADS INNER & 2 PADS OUTER	CHRYSLER - DODGE PLYMOUTH - PONTIAC	F	23043 23044

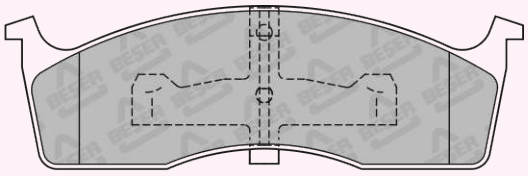

164,6 x 51,57
(NOT SCALE)

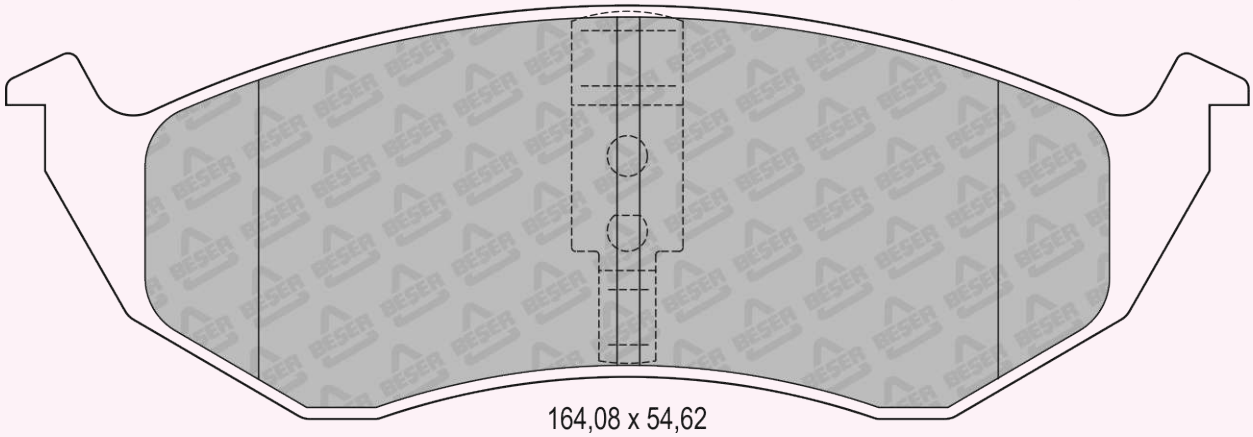

164,08 x 54,62

REFERENCE	T(mm)	REMARKS	MAKE	F/R	WVA No
4198	16,97	4 PADS WITH WEAR SENSOR	CHRYSLER - DODGE LANCIA	F	24164

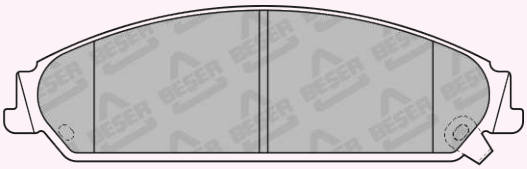

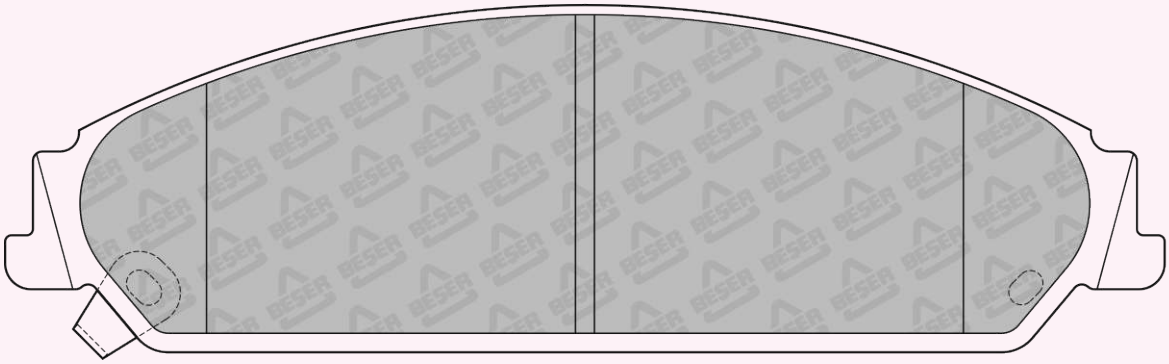

183,39 x 54,90
(NOT SCALE)

REFERENCE	T(mm)	REMARKS	MAKE	F/R	WVA No
4199	16	4 PADS PLAIN	SUZUKI - TOYOTA	F	.....

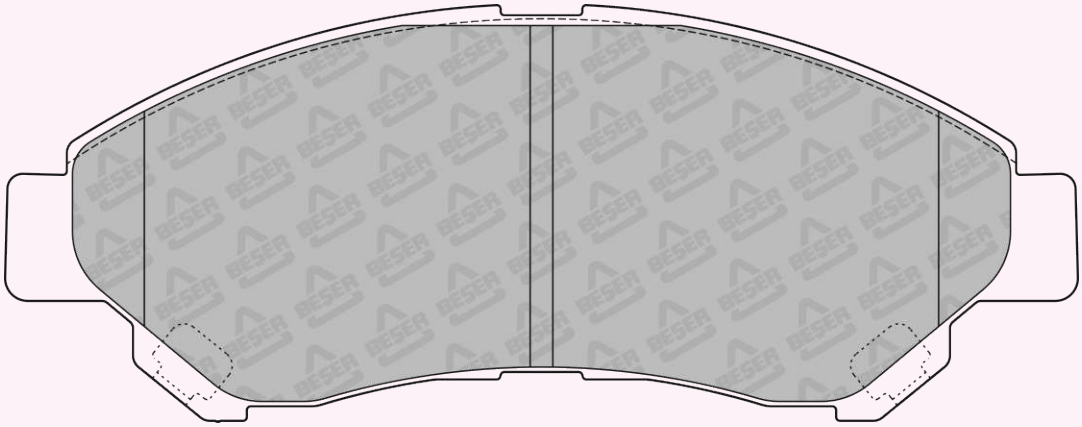

141,8 x 55,05

REFERENCE	T(mm)	REMARKS	MAKE	F/R	WVA No
4200	17,8	4 PADS PLAIN	SKODA - VW	F	25681 25682

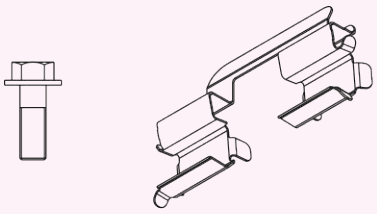

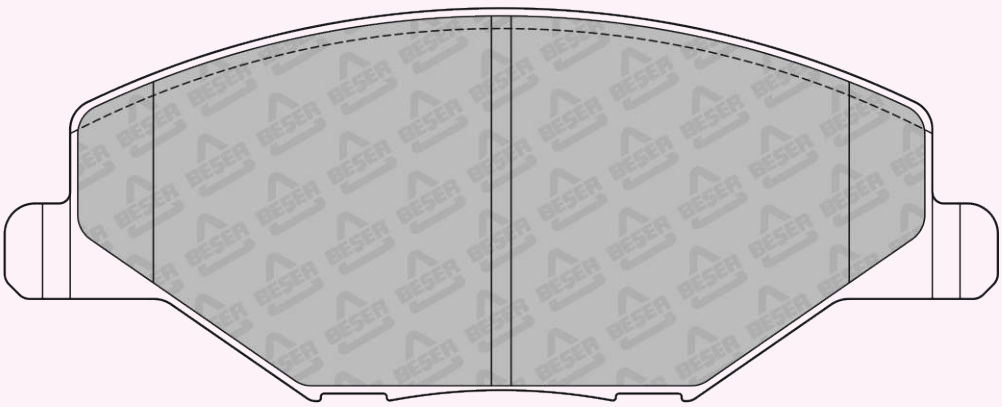

131,2 x 51,84

REFERENCE	T(mm)	REMARKS	MAKE	F/R	WVA No
4201	18	2 PADS INNER & 2 PADS OUTER	CITROEN - PEUGEOT	F	25250 25251

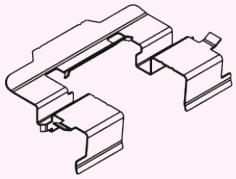

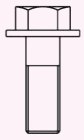

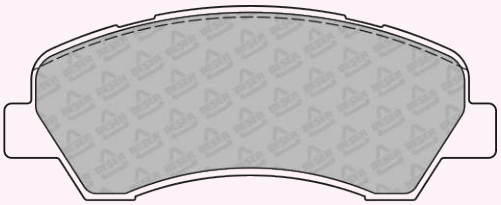

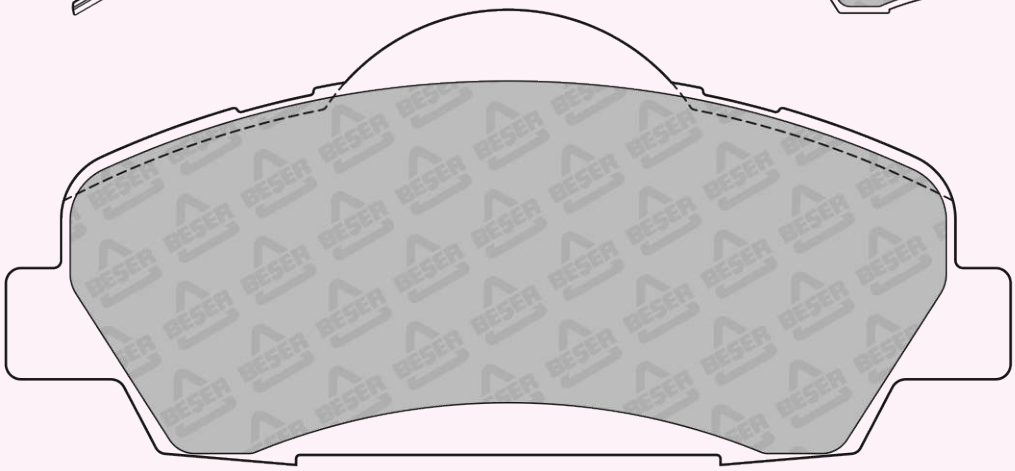

132,8 x 52,4

REFERENCE	T(mm)	REMARKS	MAKE	F/R	WVA No
4201/1	18	2 PADS INNER & 2 PADS OUTER	CITROEN - PEUGEOT	F	25250 25251

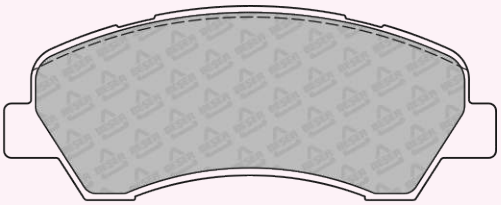

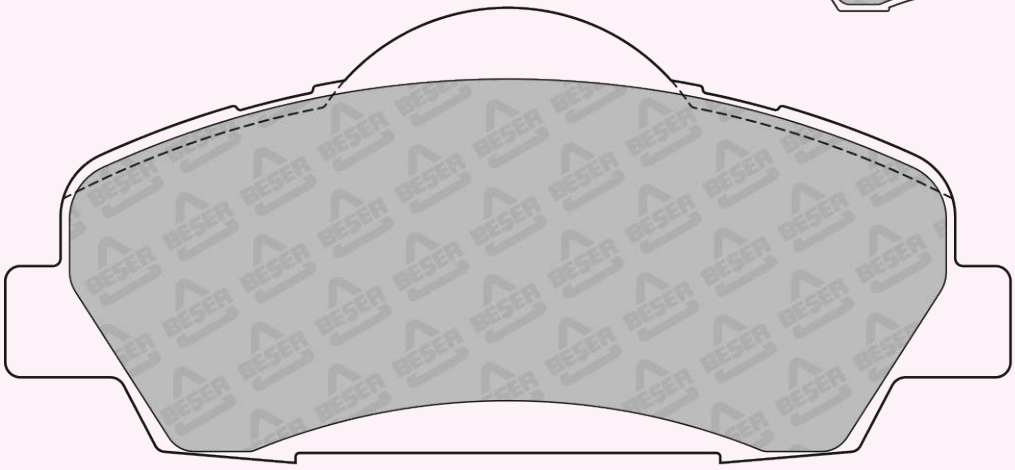

132,8 x 52,4

REFERENCE	T(mm)	REMARKS	MAKE	F/R	WVA No
4202	16	2 PADS WITH WEAR SENSOR	TOYOTA	R	25599 25600 25601

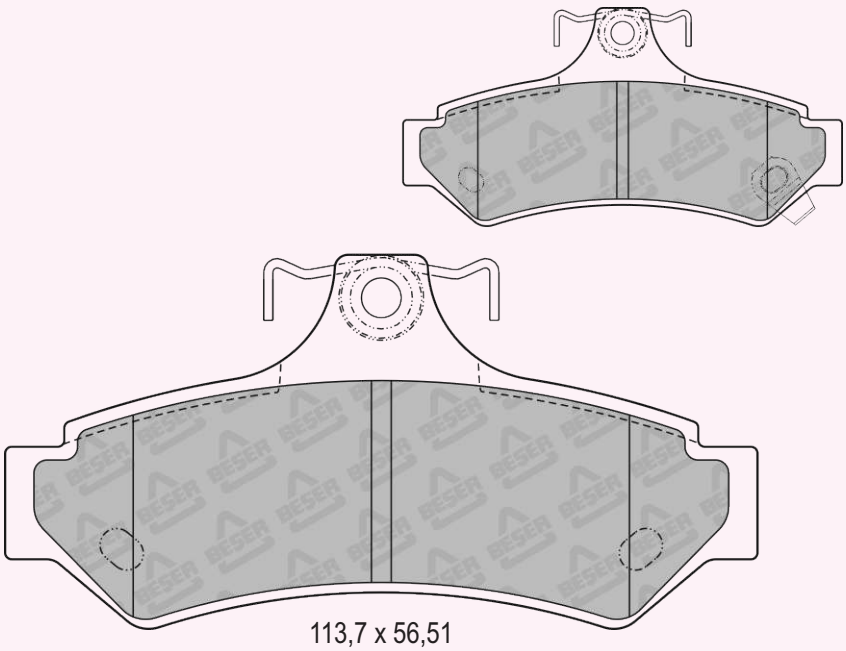

113,7 x 56,51
(NOT SCALE)

REFERENCE	T(mm)	REMARKS	MAKE	F/R	WVA No
4204	17,2	4 PADS PLAIN	FORD	F	25134 25135

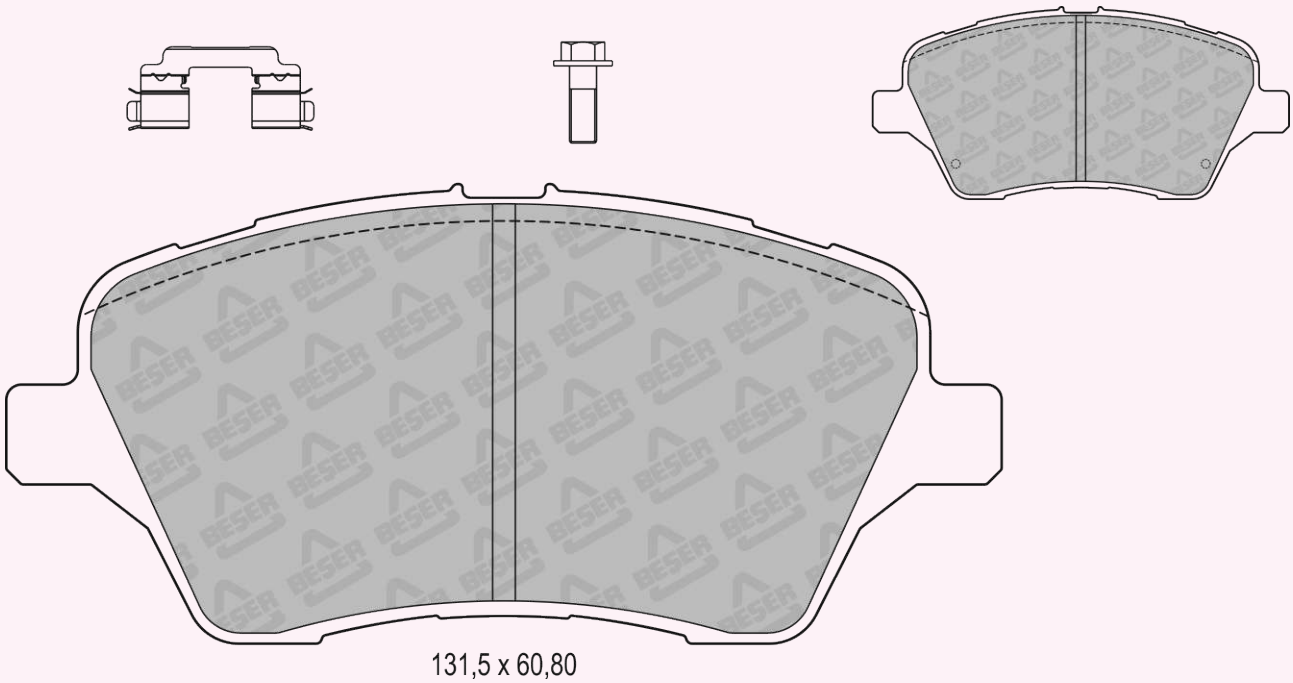

131,5 x 60,80

REFERENCE	T(mm)	REMARKS	MAKE	F/R	WVA No
4205	17,2	4 PADS PLAIN	TOYOTA	F	25823

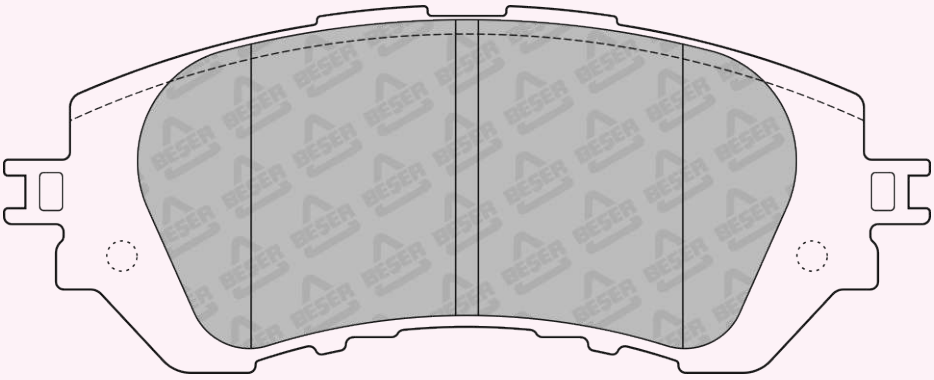

122,20 x 48,30

REFERENCE	T(mm)	REMARKS	MAKE	F/R	WVA No
4206	17,3	2 PADS WITH WEAR SENSOR	PEUGEOT	F	.....

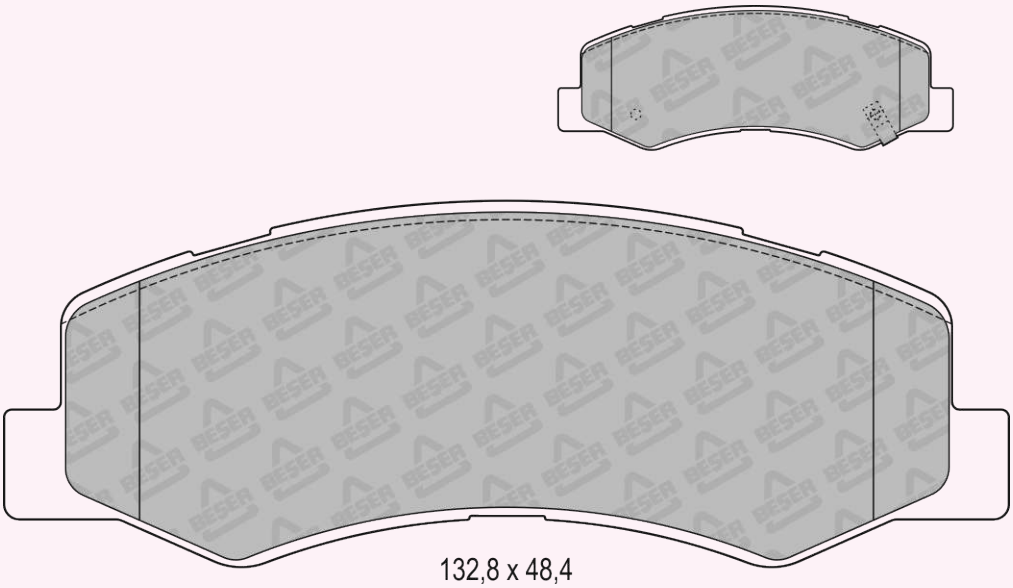

132,8 x 48,4

REFERENCE	T(mm)	REMARKS	MAKE	F/R	WVA No
4207	18,1-18,6	2 PADS PISTON CLIP	BMW	F	24170 24171

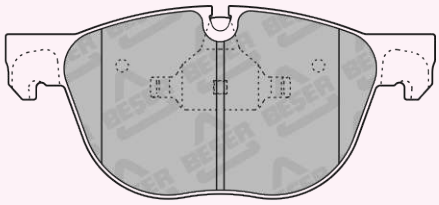

171,20x76,88
(NOT SCALE)

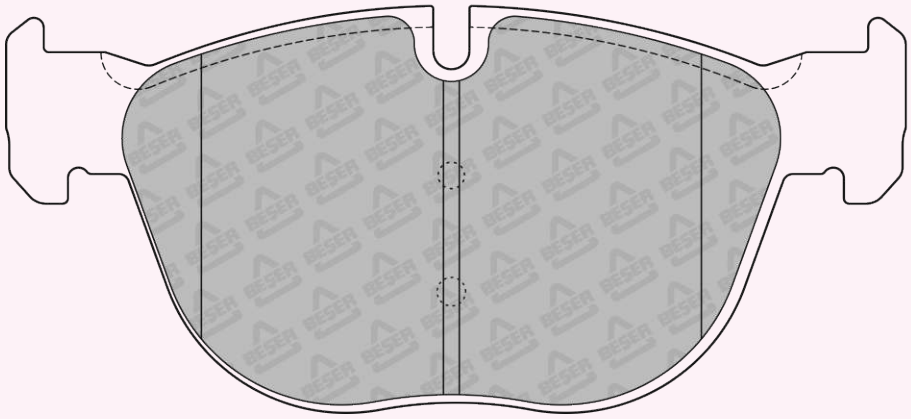

170,20x76,88
(NOT SCALE)

REFERENCE	T(mm)	REMARKS	MAKE	F/R	WVA No
4208	19,3 - 19,5	4 PADS PISTON CLIP	BMW - ROLLS ROYCE	F	23791 23792

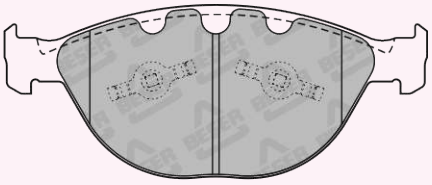

193,15 x 79,16
(NOT SCALE)

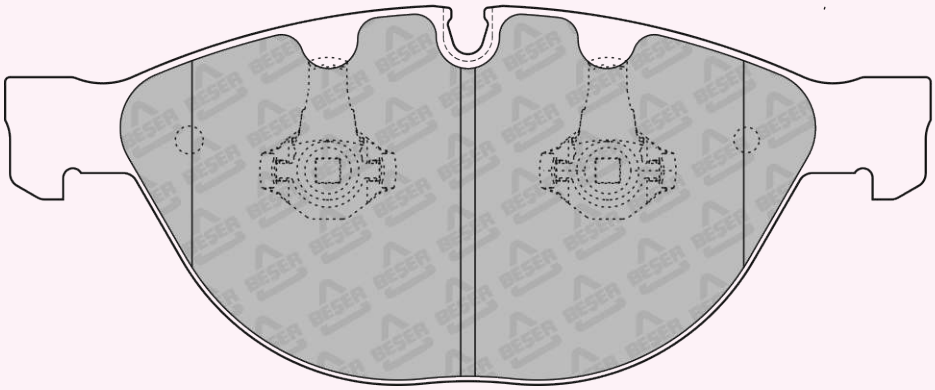

193,15 x 79,01
(NOT SCALE)

REFERENCE	T(mm)	REMARKS	MAKE	F/R	WVA No
4209	14,6	1 PAD WITH WEAR SENSOR	MERCEDES BENZ	R	23078



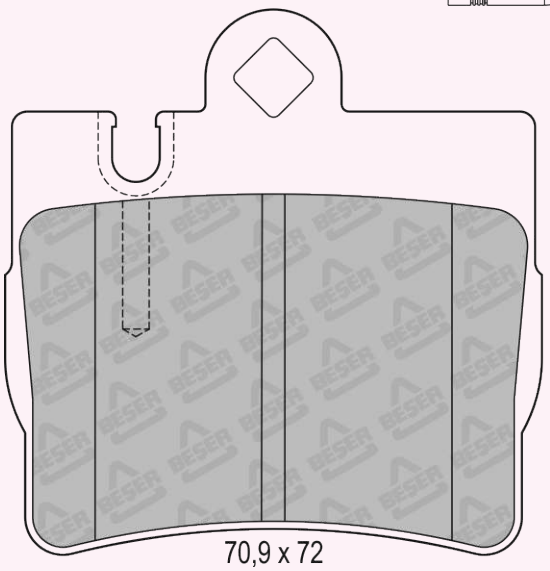

70,9 x 72

REFERENCE	T(mm)	REMARKS	MAKE	F/R	WVA No
4210	19,3 - 19,9	4 PADS PISTON CLIP	MERCEDES BENZ	F	23922 23925

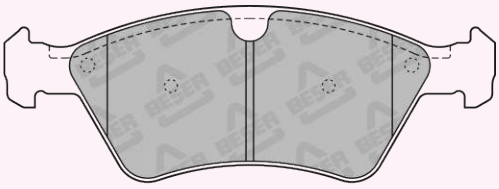

194,45 x 69,90
(NOT SCALE)

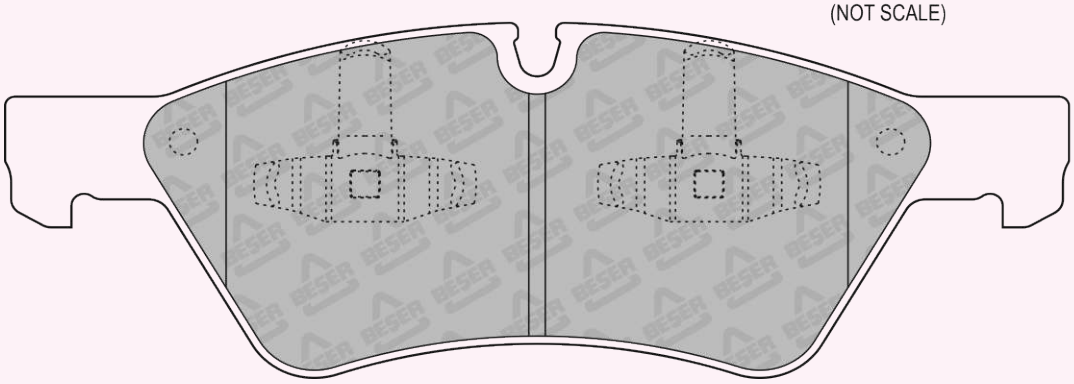

194,45 x 69,90
(NOT SCALE)

REFERENCE	T(mm)	REMARKS	MAKE	F/R	WVA No
4211	19,5	2 PADS PISTON CLIP	CADILLAC - CHEVROLET - FIAT HOLDEN - OPEL - SAAB - VAUXHALL	F	23738 23739

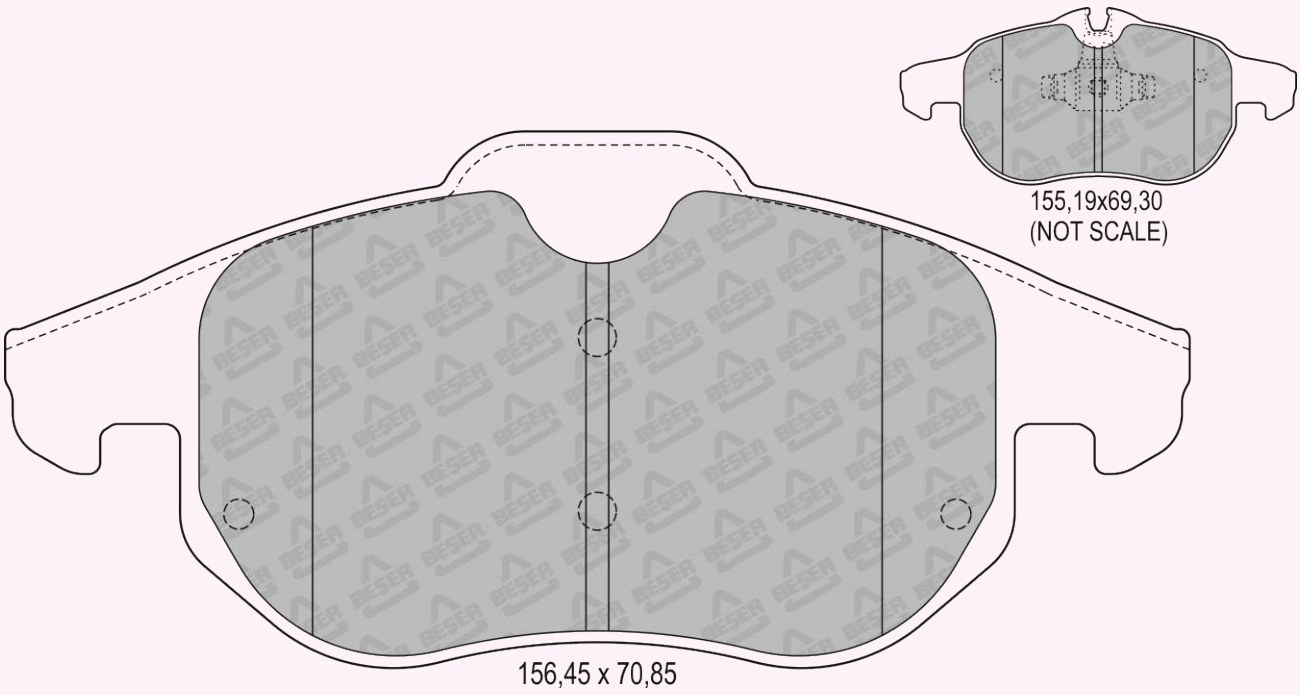

REFERENCE	T(mm)	REMARKS	MAKE	F/R	WVA No
4212	12,2-12,8	2 PADS WITH WEAR SENSOR	ACURA - HONDA MG - ROVER	R	21312 21313 21314

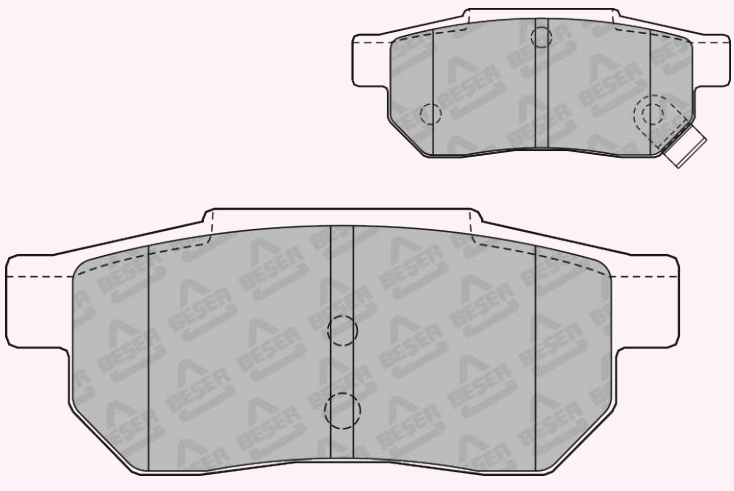

REFERENCE	T(mm)	REMARKS	MAKE	F/R	WVA No
4213	13,5	1 PAD WITH WEAR SENSOR	SUBARU - TOYOTA	R	24271 24272

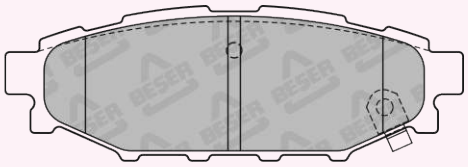

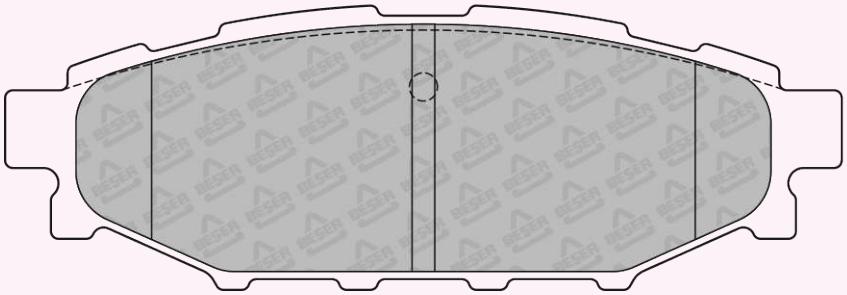

110,5 x 37,49

REFERENCE	T(mm)	REMARKS	MAKE	F/R	WVA No
4214	14,4	4 PADS PLAIN	FORD	R	21586

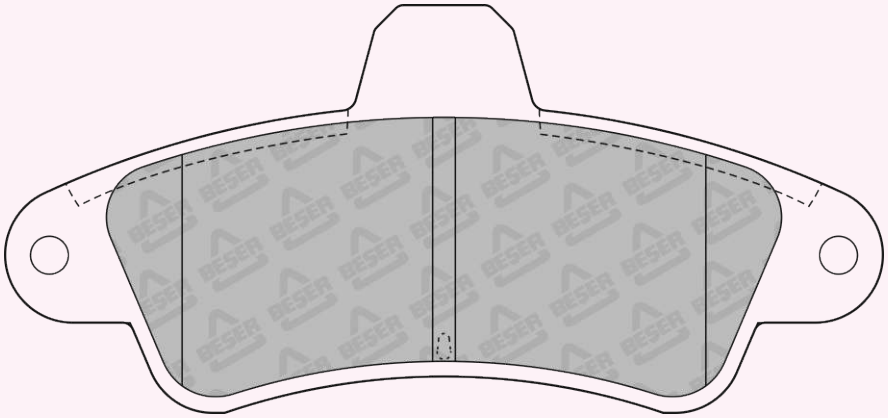

115,9 x 53,75

REFERENCE	T(mm)	REMARKS	MAKE	F/R	WVA No
4215	16,8	2 PADS PISTON CLIP	FORD - MAZDA	R	24670 24671

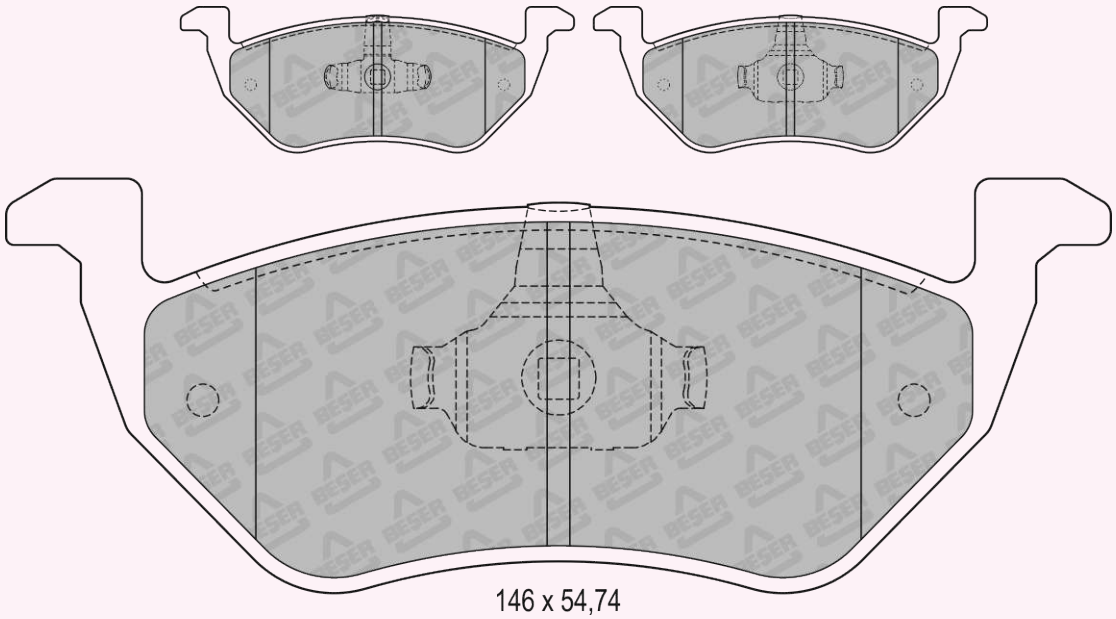

146 x 54,74

REFERENCE	T(mm)	REMARKS	MAKE	F/R	WVA No
4216	18,6	8 PADS PLAIN	MITSUBISHI	F	29242 29243

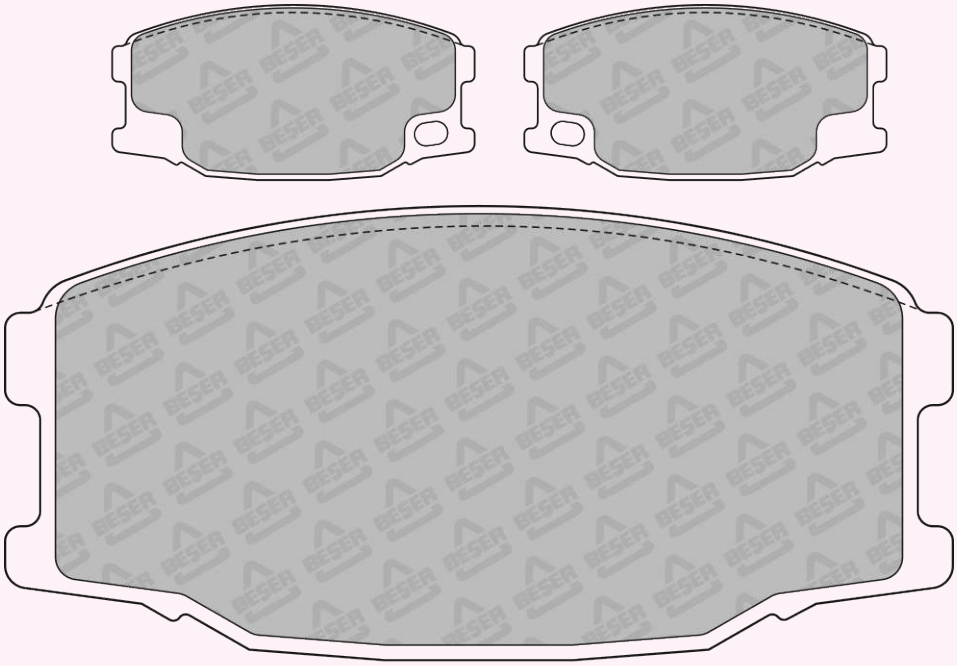

125,2 x 60

REFERENCE	T(mm)	REMARKS	MAKE	F/R	WVA No
4217	15	2 PADS WITH WEAR SENSOR	HYUNDAI	F	-

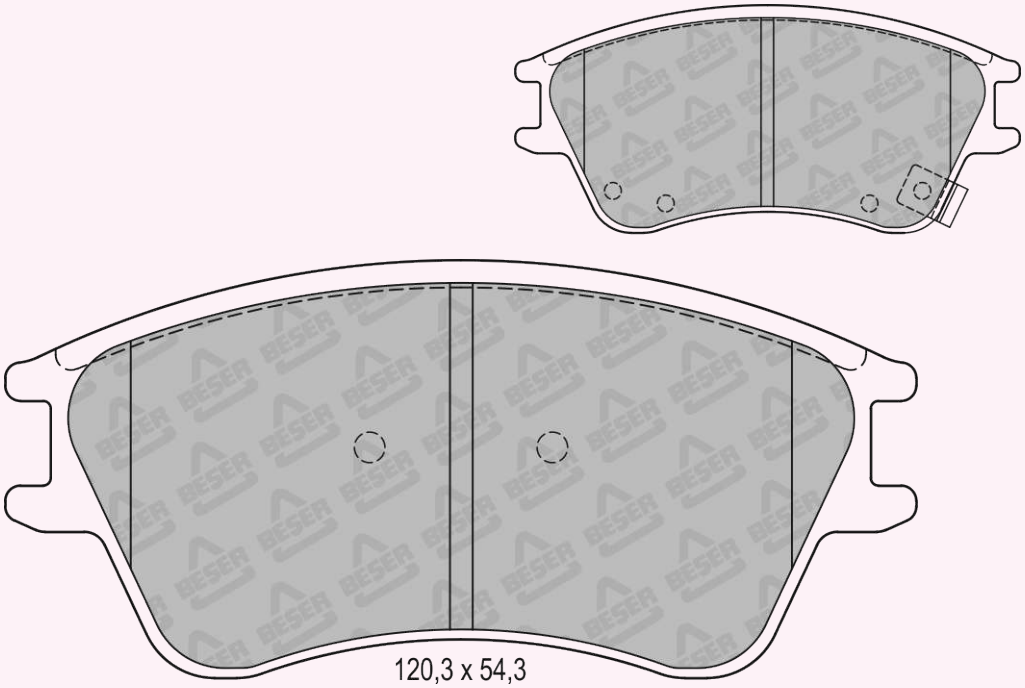

120,3 x 54,3

REFERENCE	T(mm)	REMARKS	MAKE	F/R	WVA No
4218	17,55	2 PADS WITH WEAR SENSOR	BUICK - BMC - CHEVROLET - SAAB	F	.....

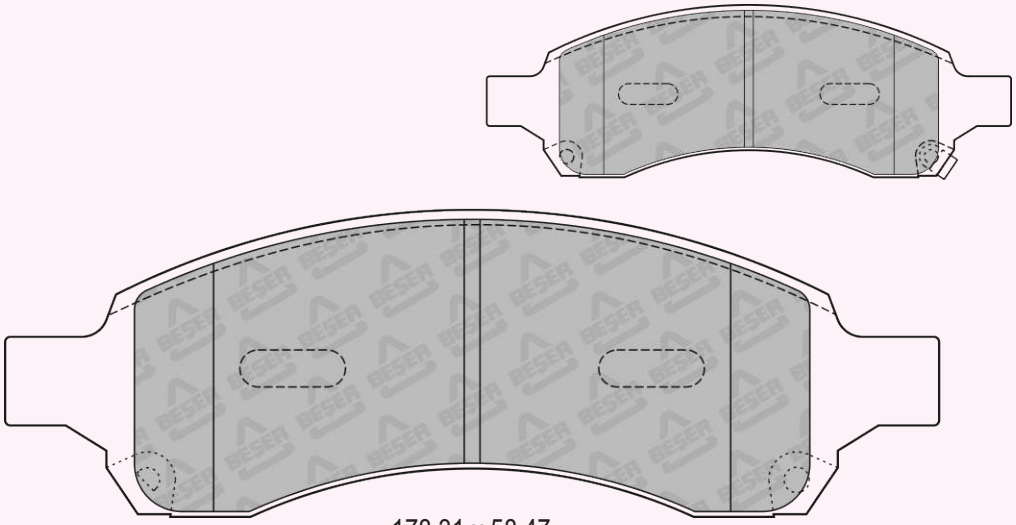

178,31 x 58,47
(NOT SCALE)

REFERENCE	T(mm)	REMARKS	MAKE	F/R	WVA No
4219	16,8	4 PADS WITH WEAR SENSOR	BUICK - CHEVROLET - GMC ISUZU - SAAB	R	24445 24446

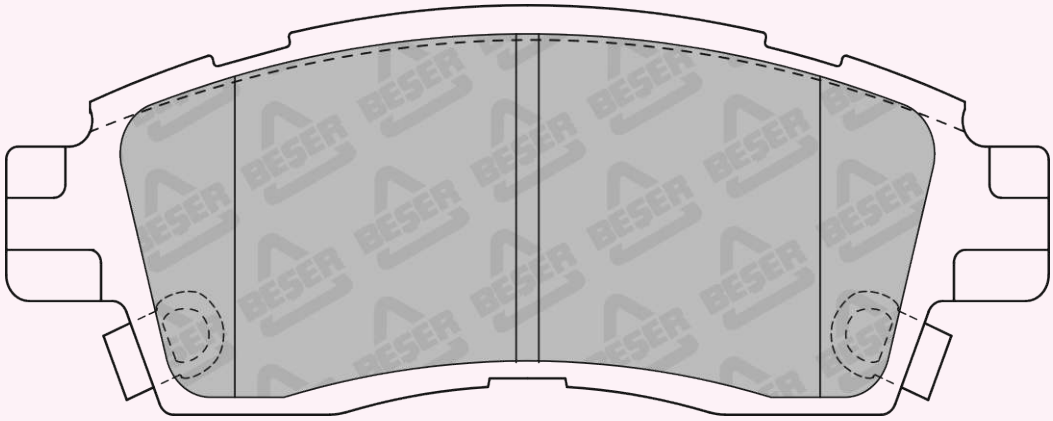

137,67 x 46,99

REFERENCE	T(mm)	REMARKS	MAKE	F/R	WVA No
4220	14,4	2 PADS PISTON CLIP	FORD - MAZDA MERCURY	F	24438 24439 25093

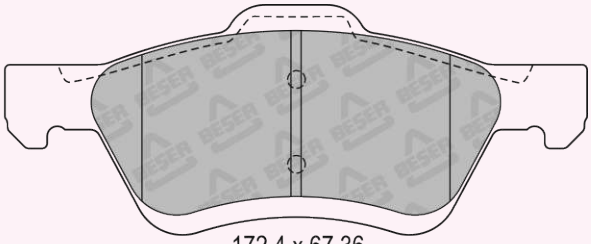

172,4 x 67,36
(NOT SCALE)

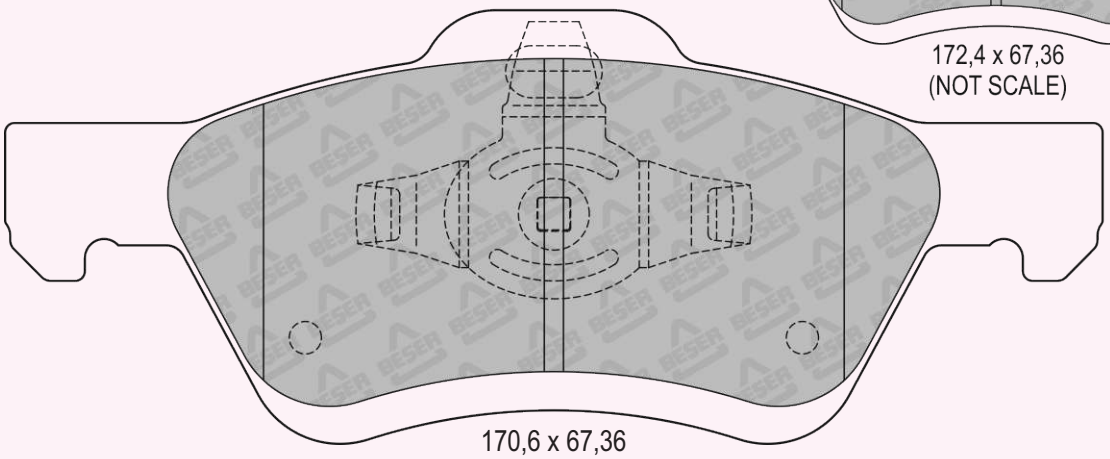

170,6 x 67,36
(NOT SCALE)

REFERENCE	T(mm)	REMARKS	MAKE	F/R	WVA No
4221	16,1	2 PADS WITH WEAR SENSOR	CHEVROLET - ISUZU SAAB	F	24448

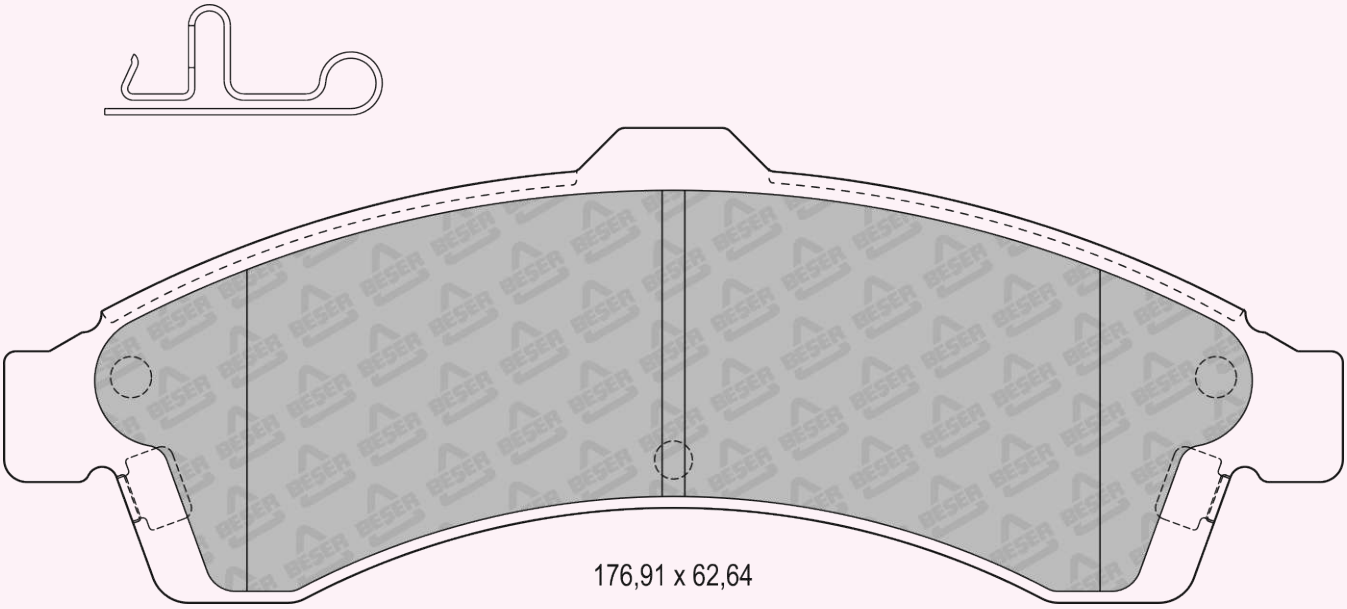

REFERENCE	T(mm)	REMARKS	MAKE	F/R	WVA No
4222	17,6	2 PADS WITH WEAR SENSOR (280 mm)	AUDI	F	23119 23280 23828

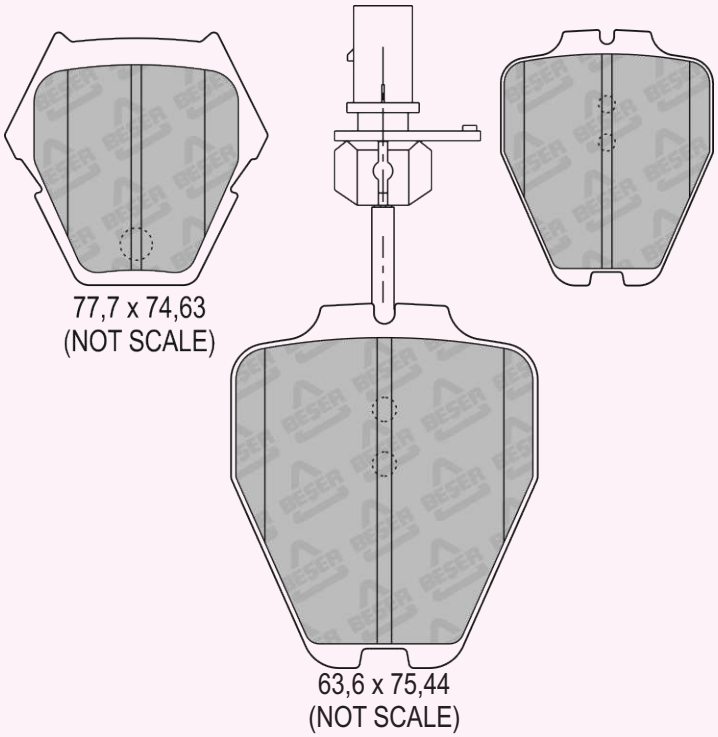

REFERENCE	T(mm)	REMARKS	MAKE	F/R	WVA No
4224	21,25	2 PADS WITH WEAR SENSOR (215 mm)	CITROEN - PEUGEOT	R	25987 25988

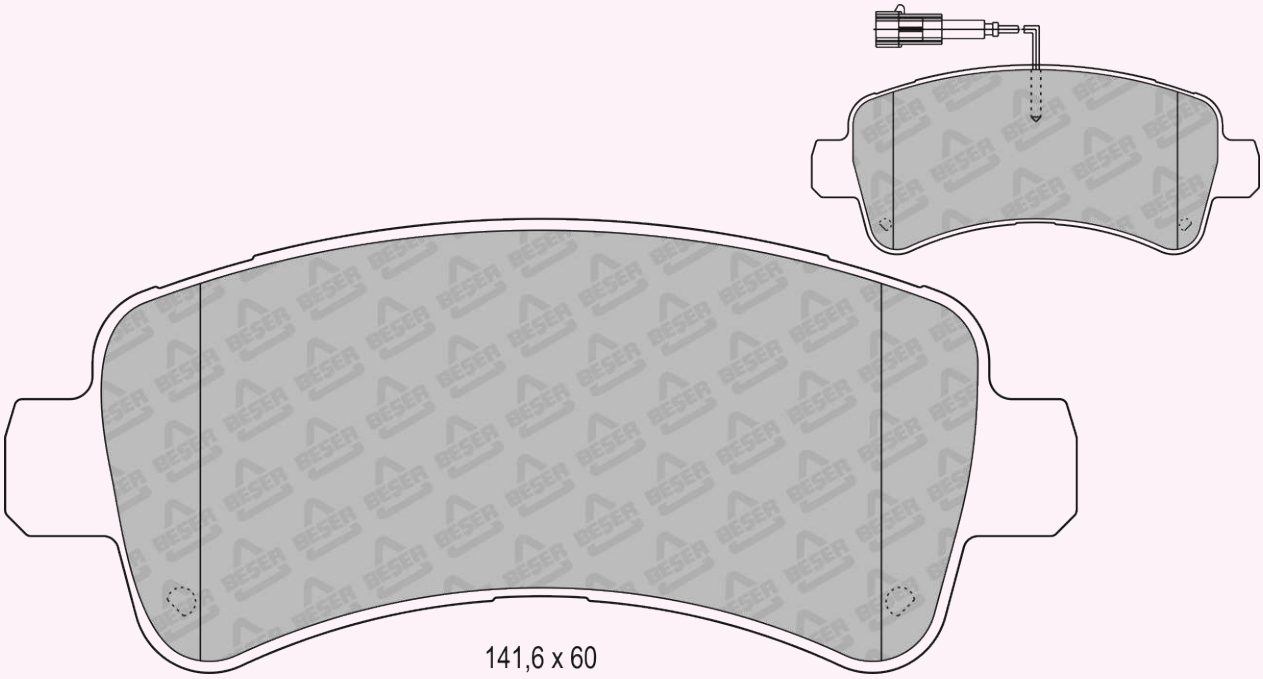

141,6 x 60

REFERENCE	T(mm)	REMARKS	MAKE	F/R	WVA No
4226	17,6-18,2	2 PADS PISTON CLIP	FORD	F	25736 25737

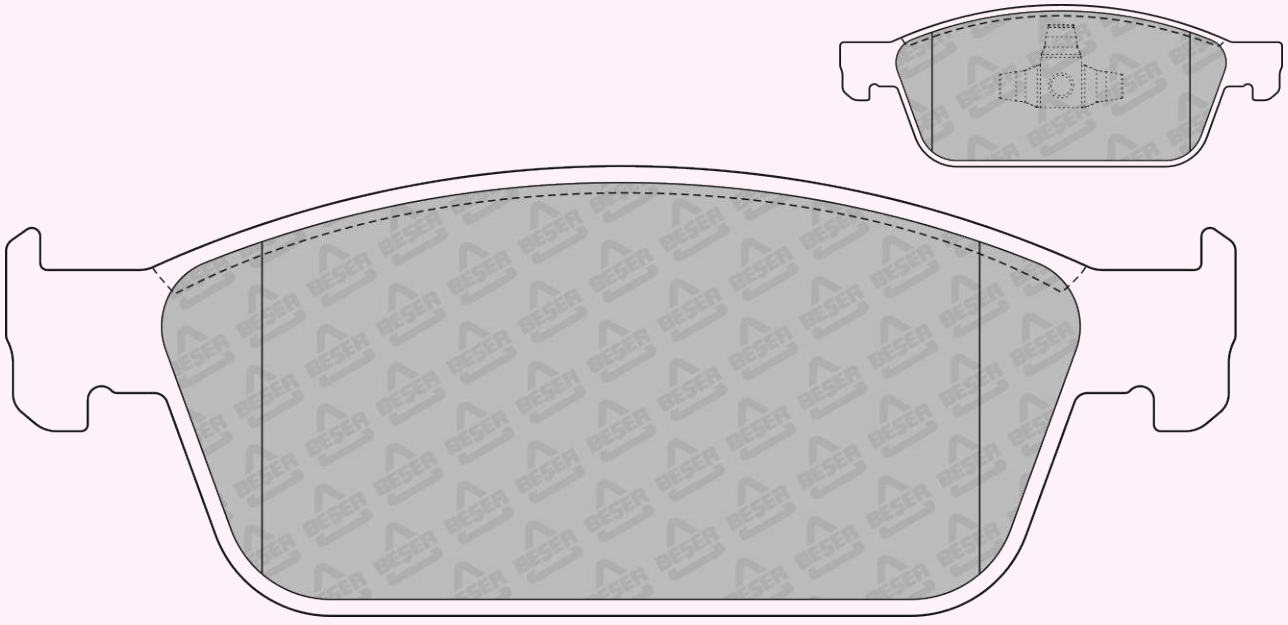

179,9 x 65,8
(NOT SCALE)

REFERENCE	T(mm)	REMARKS	MAKE	F/R	WVA No
4227	18	4 PADS PLAIN	OPEL RENAULT - VAUXHALL	F	22087

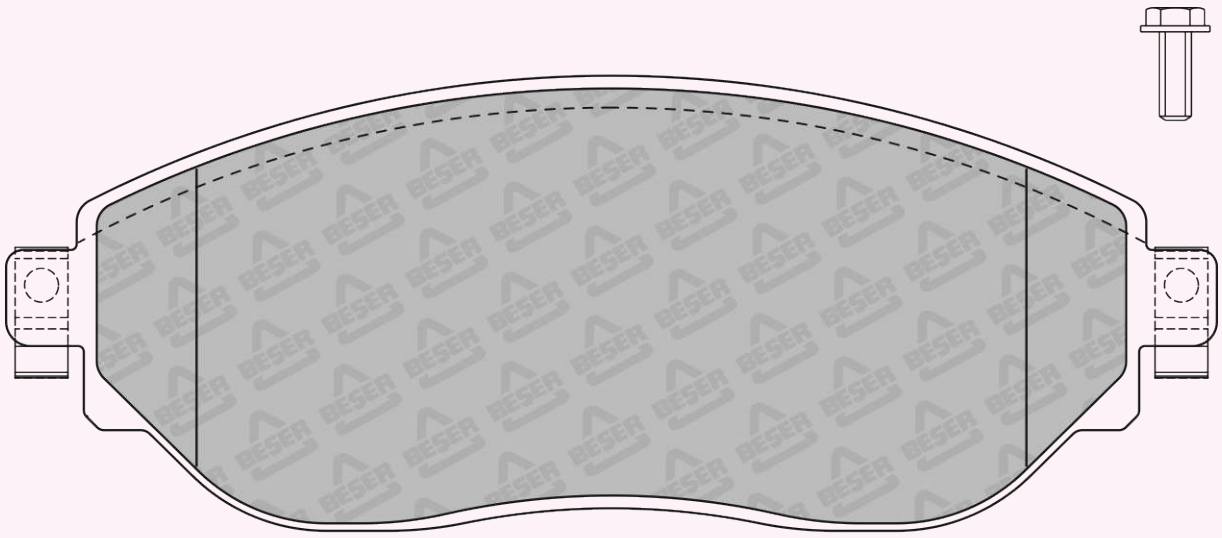

160 x 60,1

REFERENCE	T(mm)	REMARKS	MAKE	F/R	WVA No
4228	19	4 PADS PLAIN	AUDI-SEAT-SKODA VW	F	25683

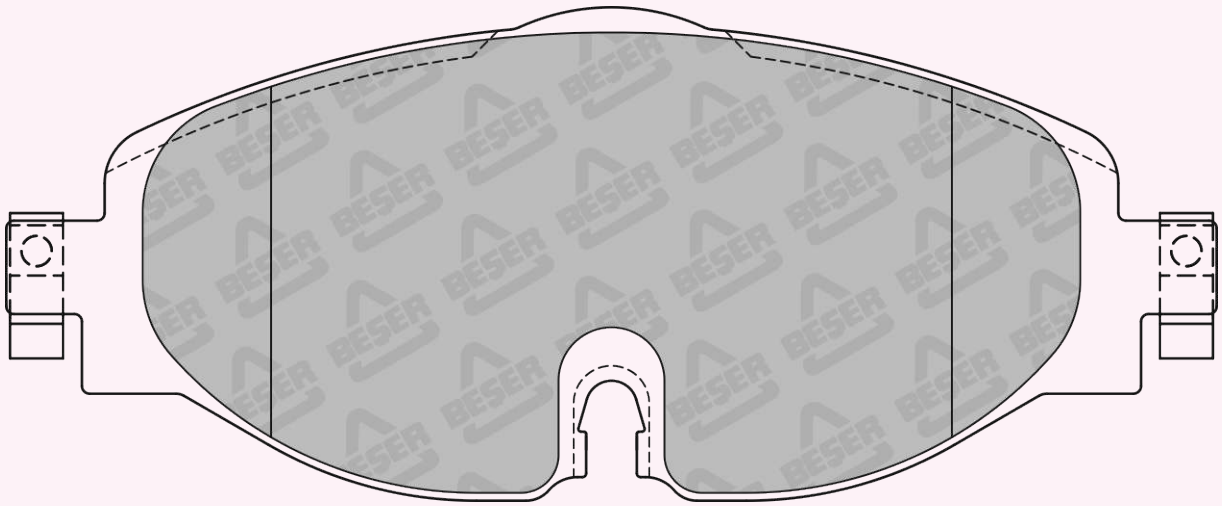

160 x 65

REFERENCE	T(mm)	REMARKS	MAKE	F/R	WVA No
4228/1	19	1 PAD WITH WEAR SENSOR (170 mm)	AUDI-SEAT-SKODA VW	F	25683

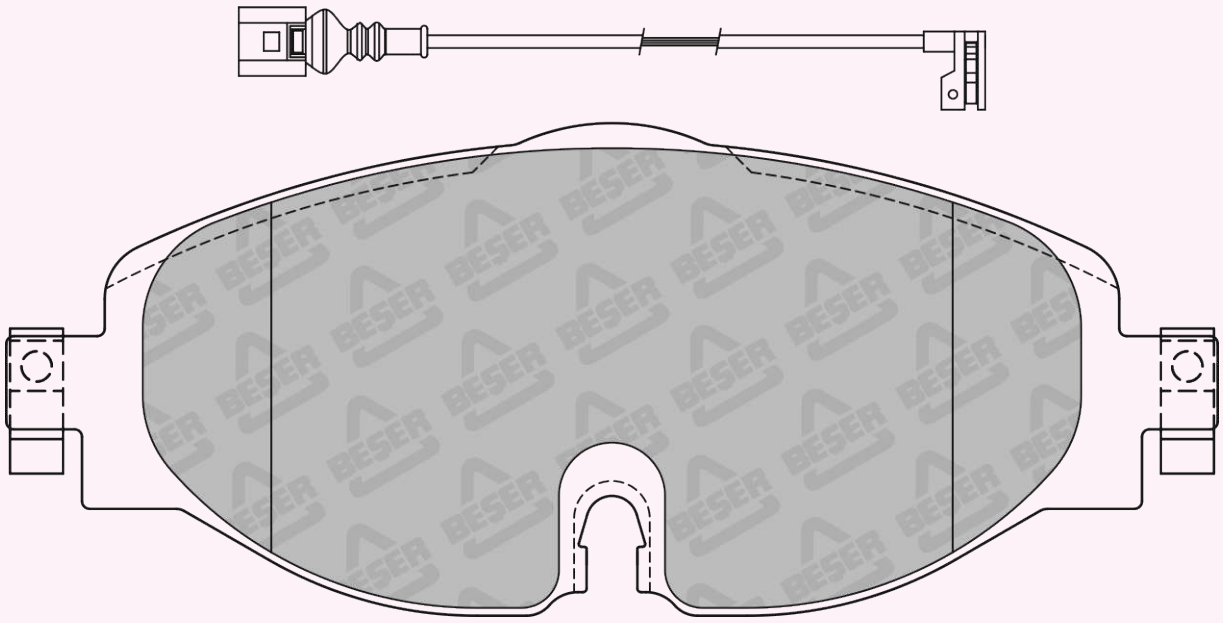

160 x 65

REFERENCE	T(mm)	REMARKS	MAKE	F/R	WVA No
4229	15,5	2 PADS WITH WEAR SENSOR	NISSAN	F	24724 24725 24726

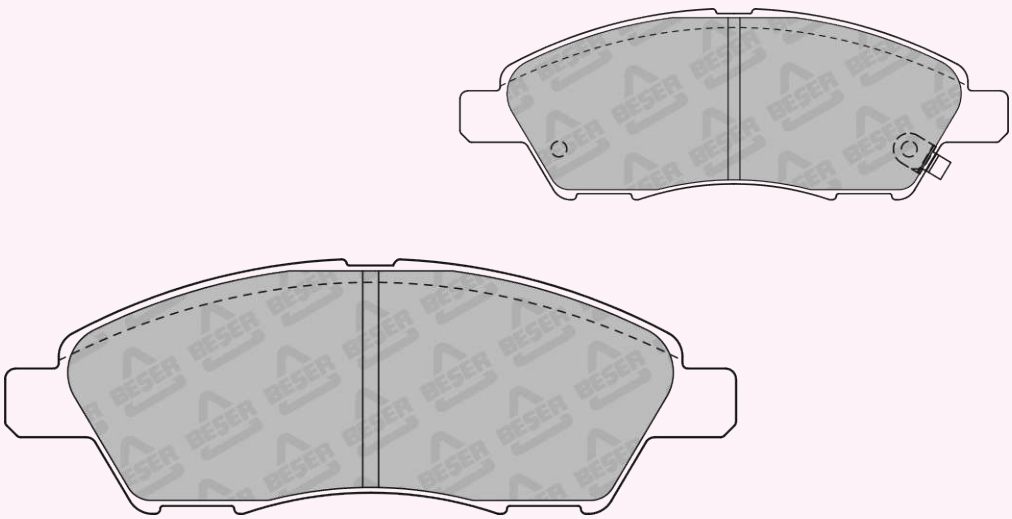

138,5 x 48,3
(NOT SCALE)

REFERENCE	T(mm)	REMARKS	MAKE	F/R	WVA No
4230	18,8	2 PADS WITH WEAR SENSOR	BUICK(SGM) - CHEVROLET - HOLDEN OPEL - VAUXHALL	F	25031 25032 25033

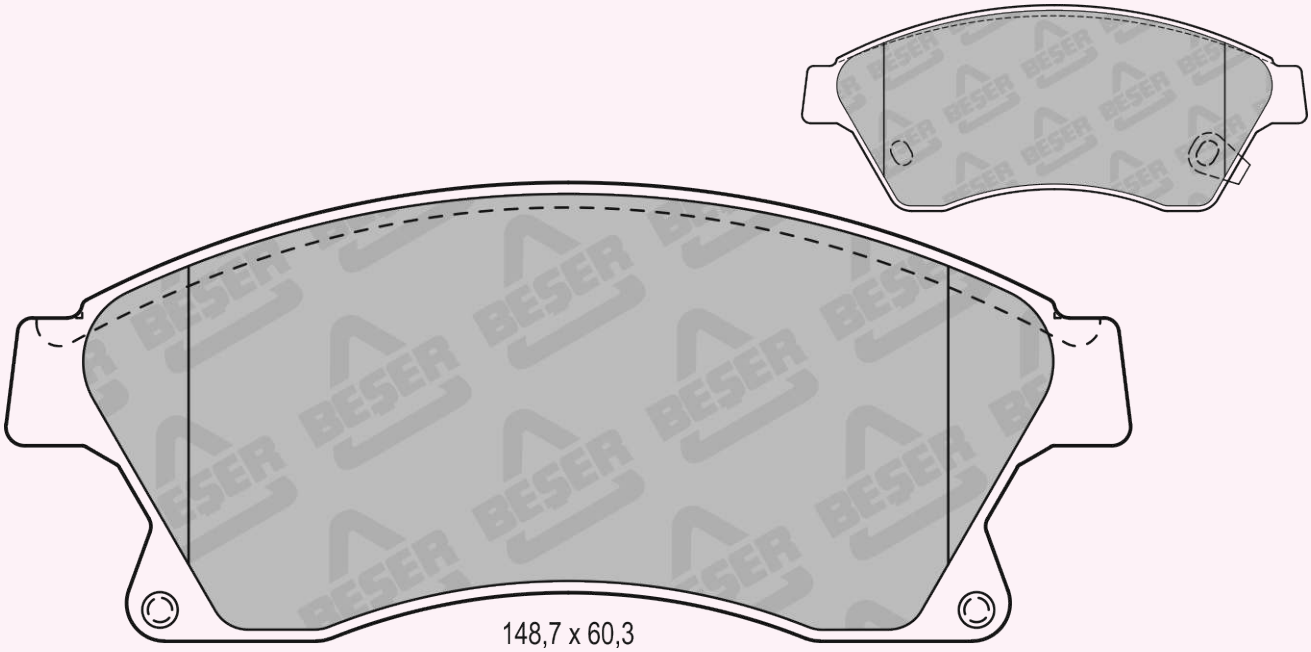

148,7 x 60,3

REFERENCE	T(mm)	REMARKS	MAKE	F/R	WVA No
4231	16,2	2 PADS WITH WEAR SENSOR	HYUNDAI	F	-

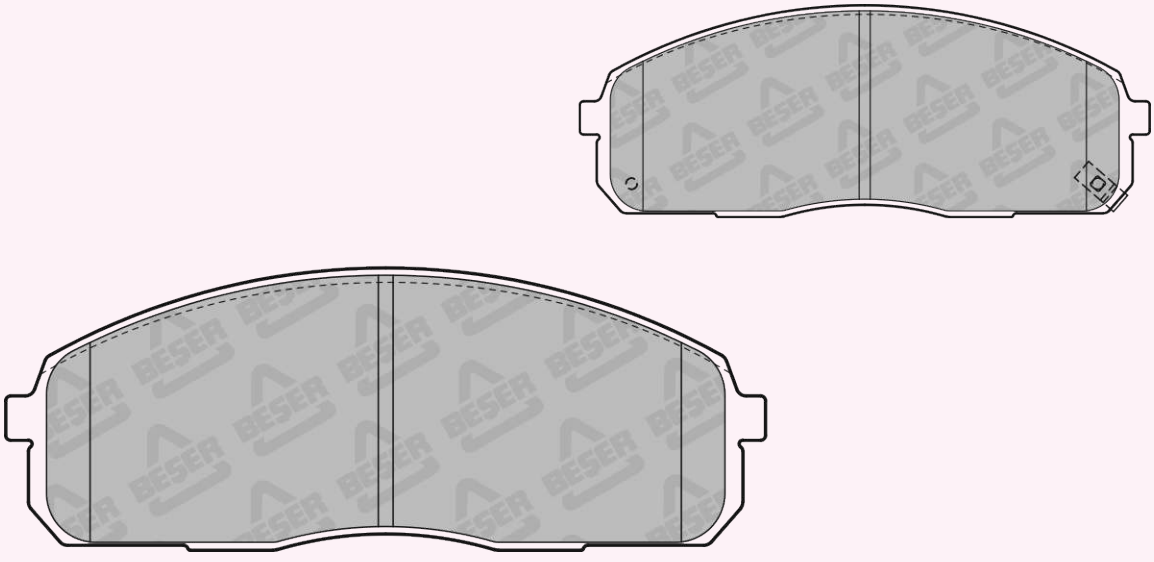

154,2 x 57,5
(NOT SCALE)

REFERENCE	T(mm)	REMARKS	MAKE	F/R	WVA No
4232	16,9	4 PADS PLAIN	ACURA - HONDA NISSAN	F	23729 24090 24091

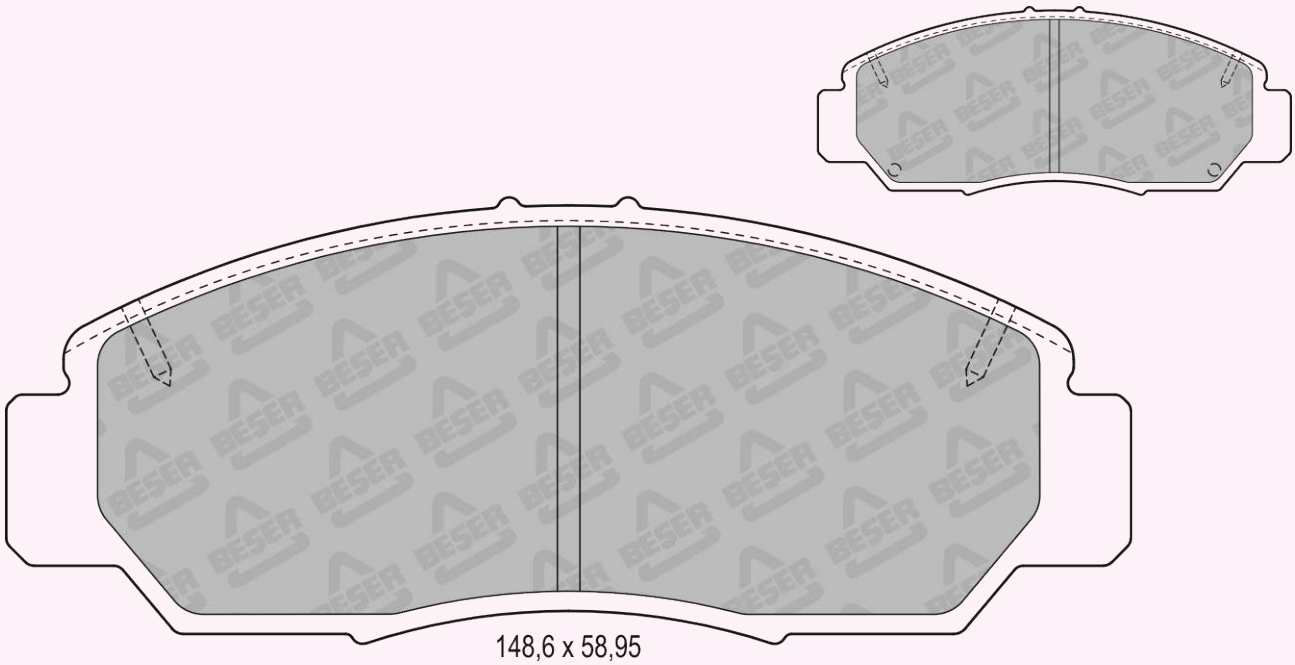

148,6 x 58,95

REFERENCE	T(mm)	REMARKS	MAKE	F/R	WVA No
4233	16,5	2 PADS WITH WEAR SENSOR	KIA	F	25644 25645 25646

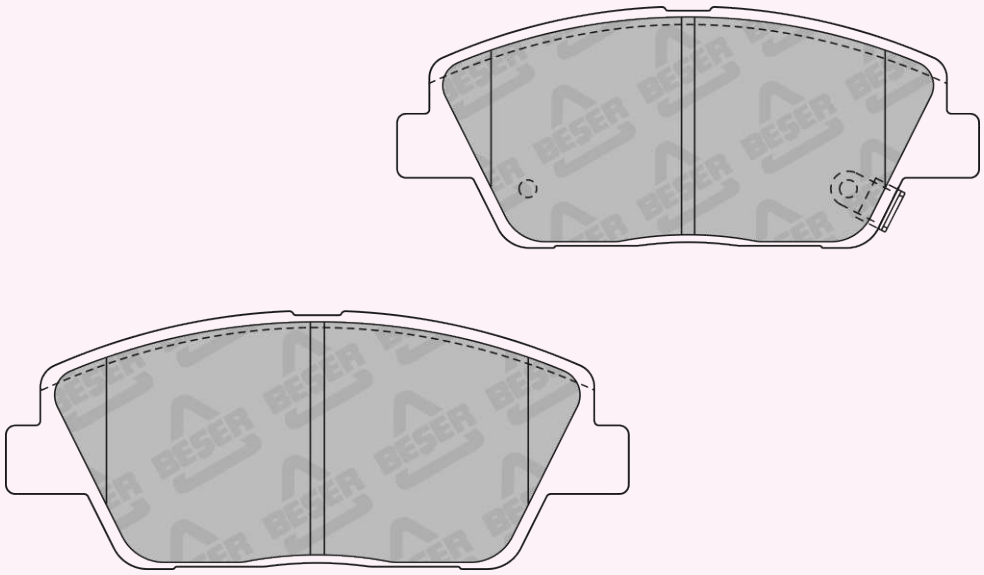

132,75 x 54,97
(NOT SCALE)

REFERENCE	T(mm)	REMARKS	MAKE	F/R	WVA No
4234	19	2 PADS WITH WEAR SENSOR	FIAT	F	22397 22398 22399

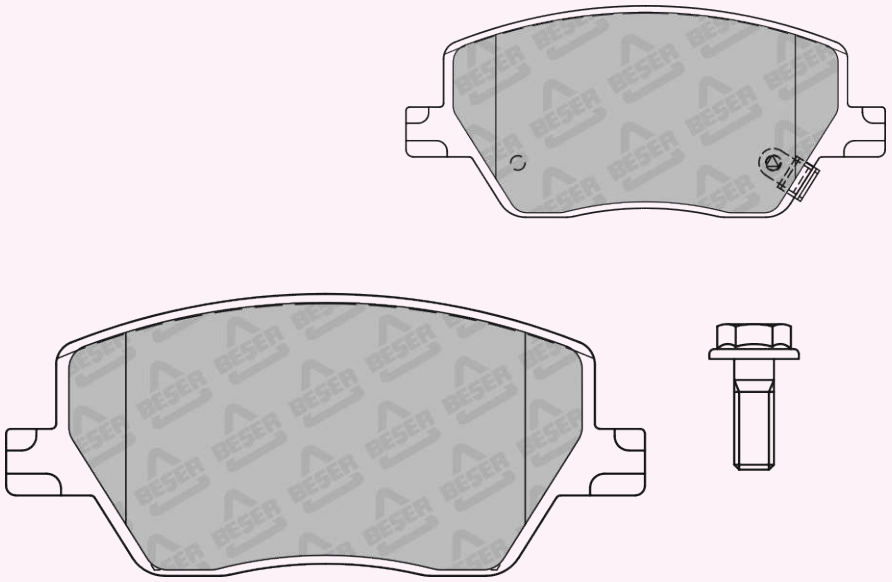

132,8 x 58,5
(NOT SCALE)

REFERENCE	T(mm)	REMARKS	MAKE	F/R	WVA No
4239	16	4 PADS PLAIN	TOYATA	-	21234

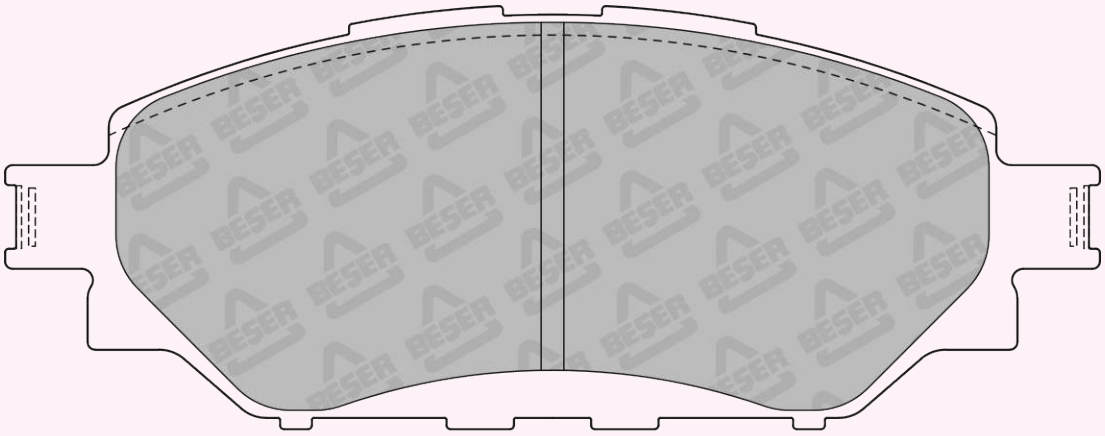

144,7 x 56,1

REFERENCE	T(mm)	REMARKS	MAKE	F/R	WVA No
4240	17,5	4 PADS PLAIN	MERCEDES BENZ	F	23960

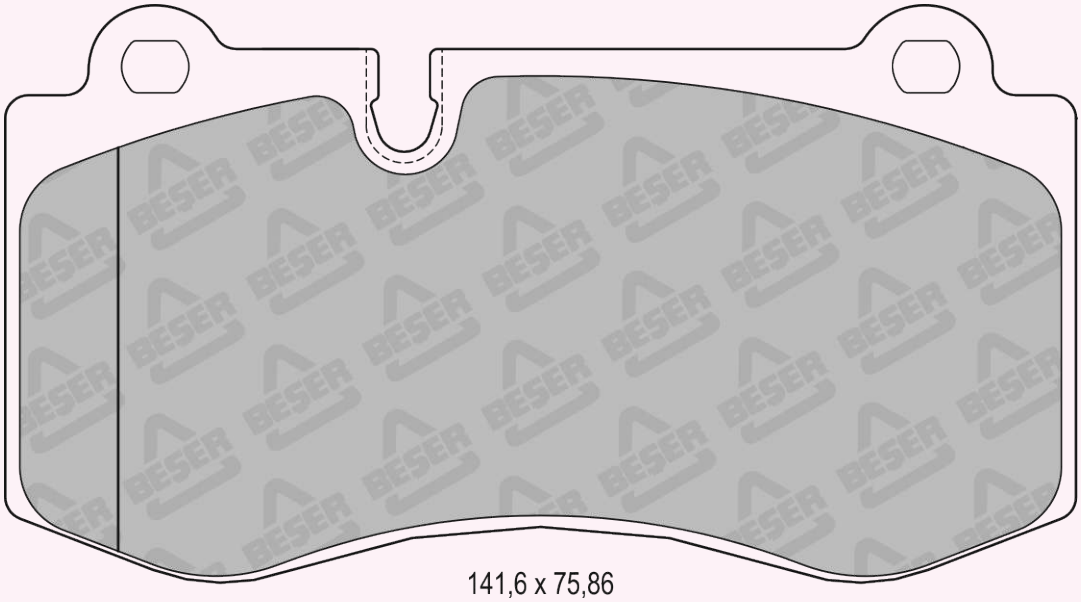

141,6 x 75,86

REFERENCE	T(mm)	REMARKS	MAKE	F/R	WVA No
4241	16,4	2 PADS INNER & 2 PADS OUTER	AUDI - SEAT VW	R	25008 25010

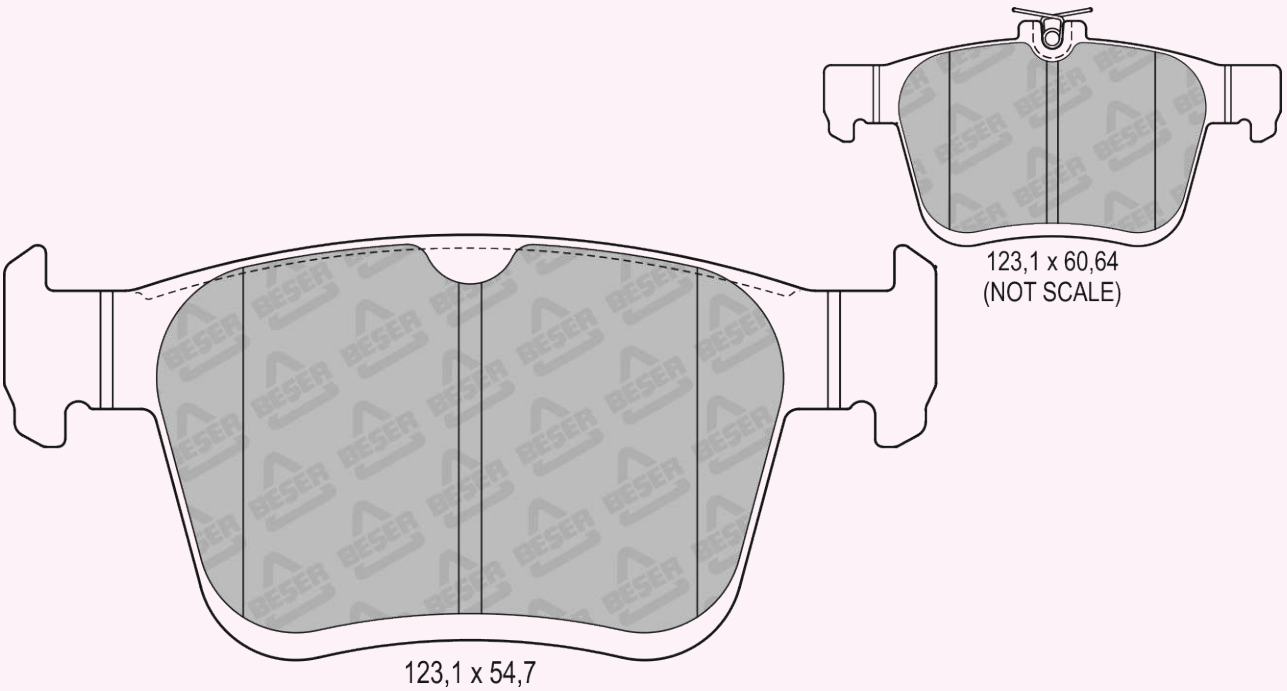

123,1 x 60,64
(NOT SCALE)

123,1 x 54,7

REFERENCE	T(mm)	REMARKS	MAKE	F/R	WVA No
4242	15	4 PADS PLAIN	MAZDA	R	24581 25786 25971

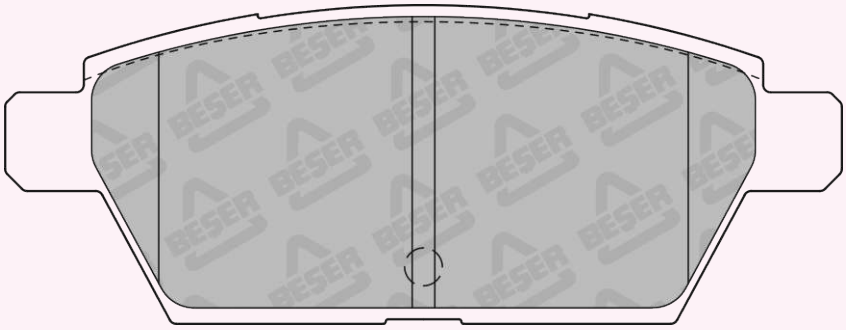

110,6 x 42

REFERENCE	T(mm)	REMARKS	MAKE	F/R	WVA No
4244	20,75	2 PADS WITH WEAR SENSOR	MITSUBISHI	F	-

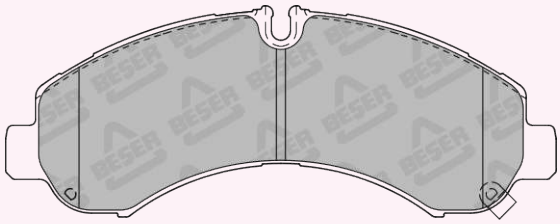

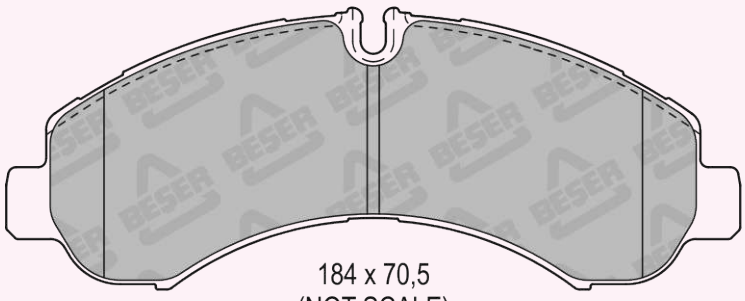

184 x 70,5
(NOT SCALE)

REFERENCE	T(mm)	REMARKS	MAKE	F/R	WVA No
4244/1	20,75	2 PADS WITH WEAR SENSOR	MITSUBISHI	F	-

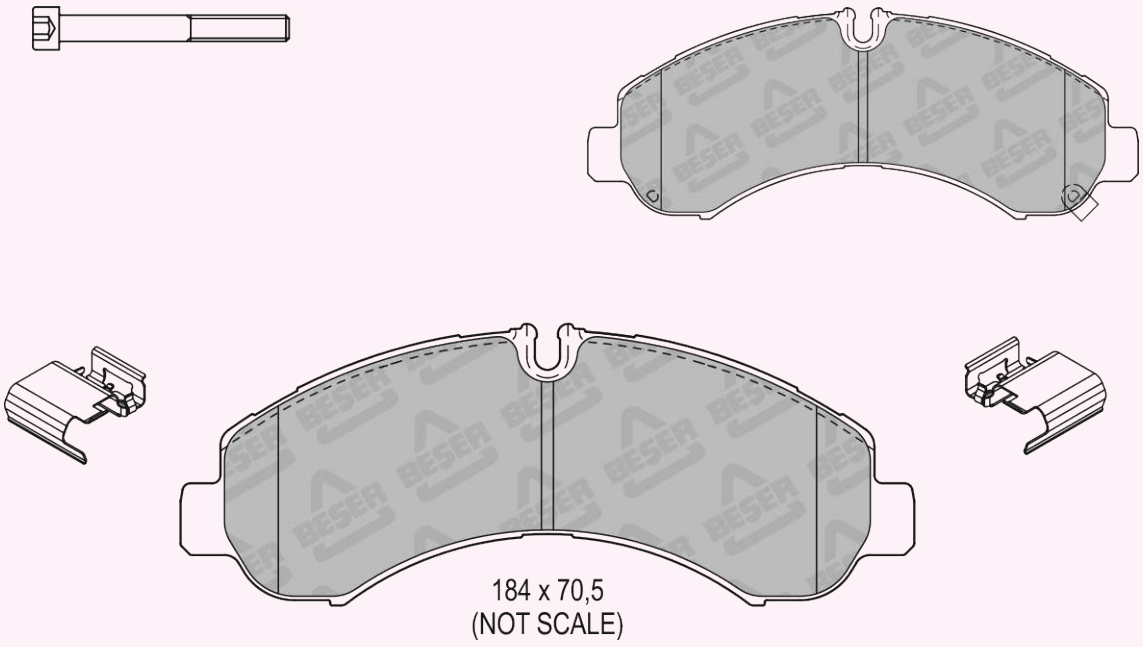

REFERENCE	T(mm)	REMARKS	MAKE	F/R	WVA No
4245	19,8	2 PADS WITH WEAR SENSOR	MITSUBISHI	R	-

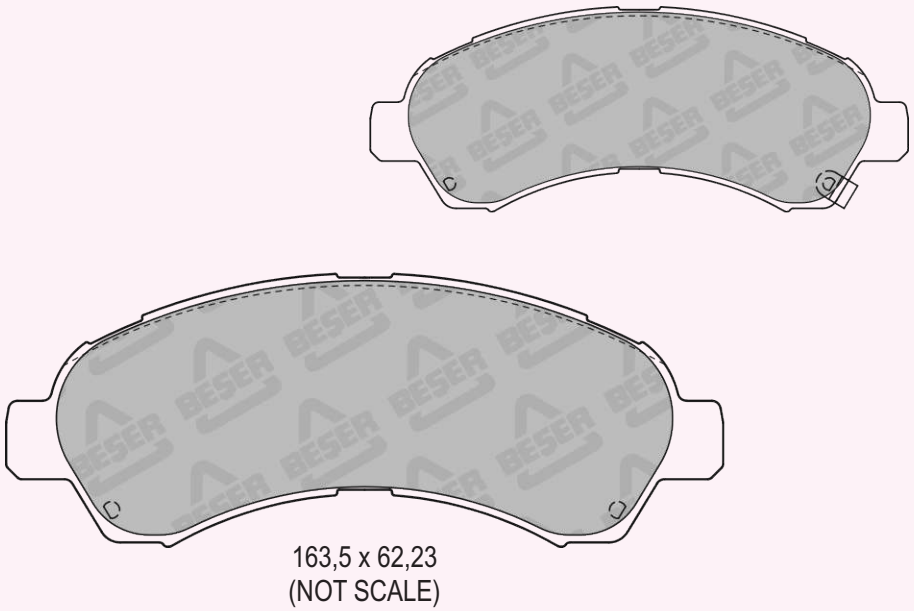

REFERENCE	T(mm)	REMARKS	MAKE	F/R	WVA No
4245/1	19,8	2 PADS WITH WEAR SENSOR	MITSUBISHI	R	-

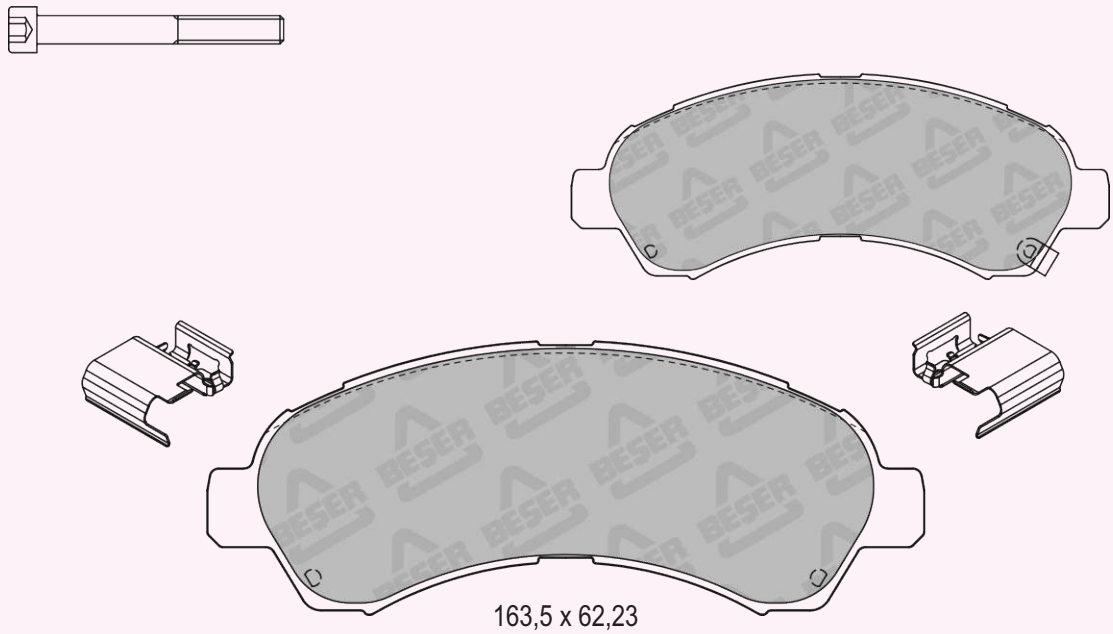

163,5 x 62,23
(NOT SCALE)

REFERENCE	T(mm)	REMARKS	MAKE	F/R	WVA No
4246	17,4	2 PADS WITH WEAR SENSOR	FIAT	R	22449 22450 22451

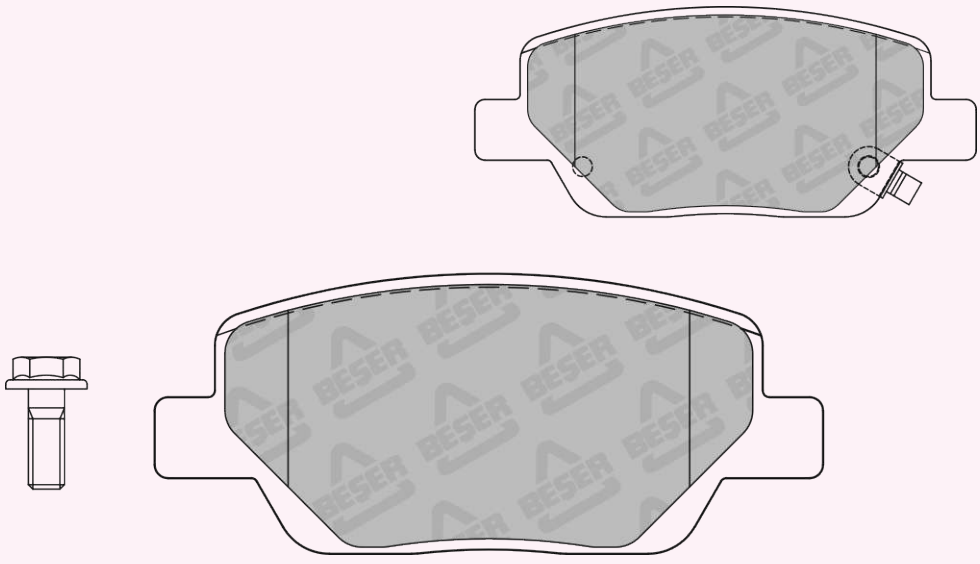

99,85 x 41,85
(NOT SCALE)

REFERENCE	T(mm)	REMARKS	MAKE	F/R	WVA No
4247	17,8	2 PADS PISTON CLIP	MERCEDES BENZ	R	24253 24254

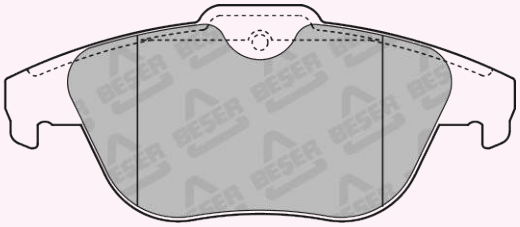

122,6 x 52,64
(NOT SCALE)

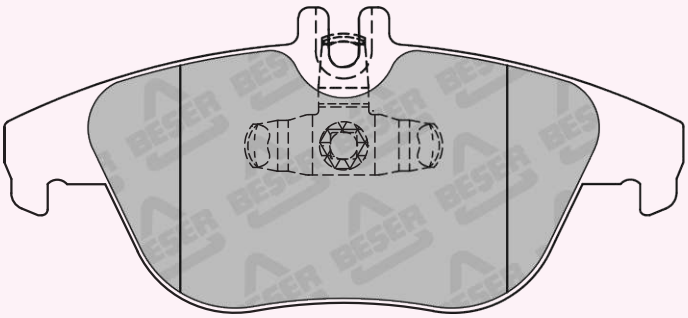

122,6 x 54,54
(NOT SCALE)

REFERENCE	T(mm)	REMARKS	MAKE	F/R	WVA No
4248	19,4	4 PADS PLAIN	MERCEDES BENZ	F	24306

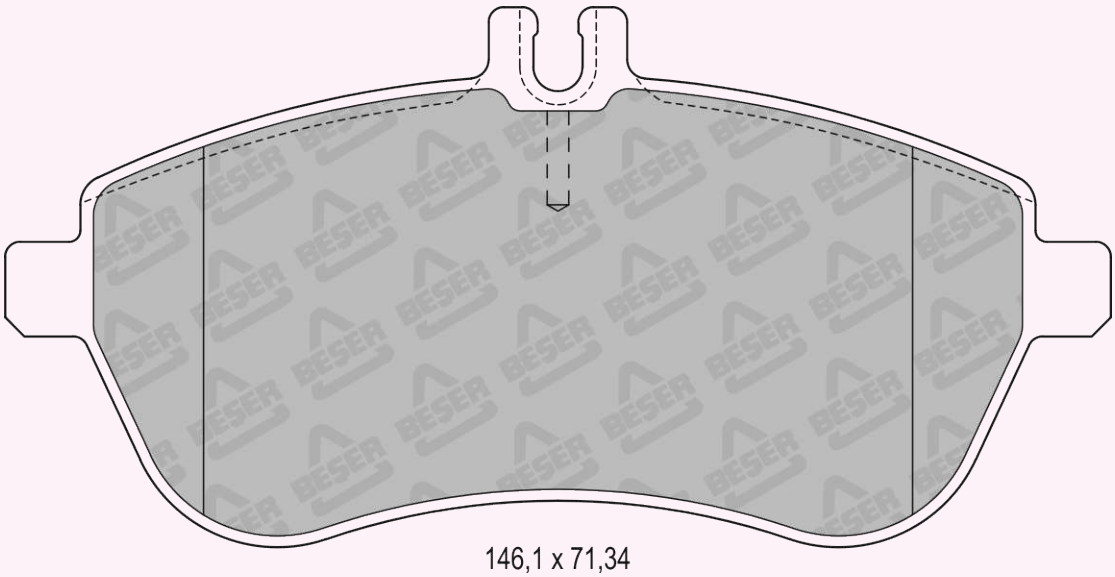

146,1 x 71,34

REFERENCE	T(mm)	REMARKS	MAKE	F/R	WVA No
4249	19	2 PADS INNER & 2 PADS OUTER	MERCEDES BENZ	F	24310 24456



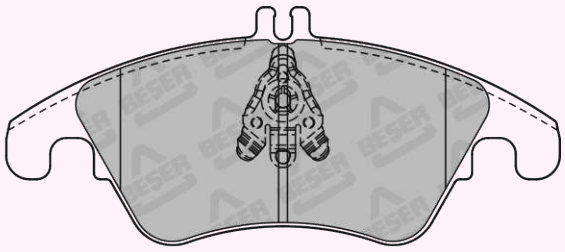

188,1 x 80,8
(NOT SCALE)

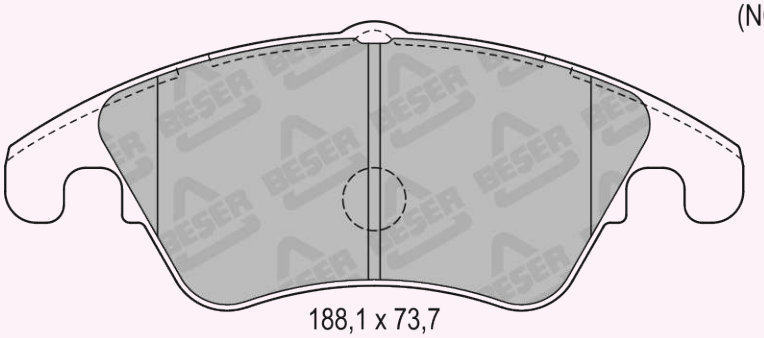

188,1 x 73,7
(NOT SCALE)

REFERENCE	T(mm)	REMARKS	MAKE	F/R	WVA No
4251	21	2 PADS WITH WEAR SENSOR	HYUNDAI	F	22420 22421 22422

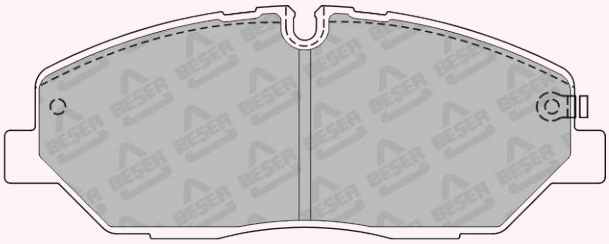

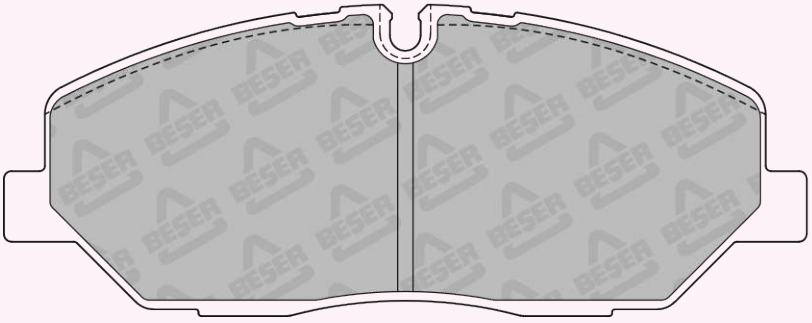

156,8 x 60,84
(NOT SCALE)

REFERENCE	T(mm)	REMARKS	MAKE	F/R	WVA No
4251/1	21	4 PADS PLAIN	HYUNDAI	F	22420 22421 22422

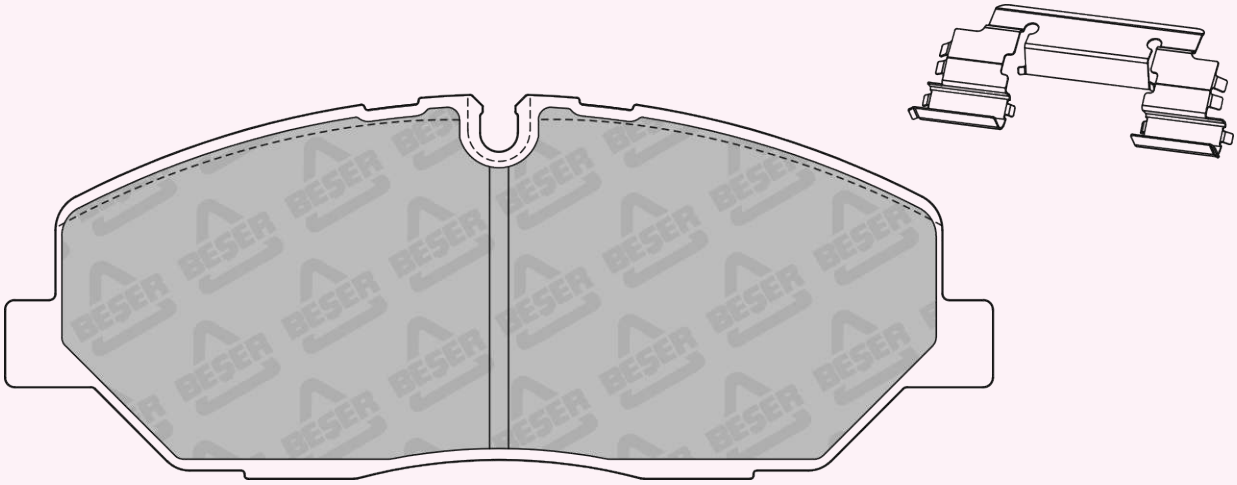

156,8 x 60,84
(NOT SCALE)

REFERENCE	T(mm)	REMARKS	MAKE	F/R	WVA No
4252	17,7	2 PADS WITH WEAR SENSOR	CHEVROLET	-	-

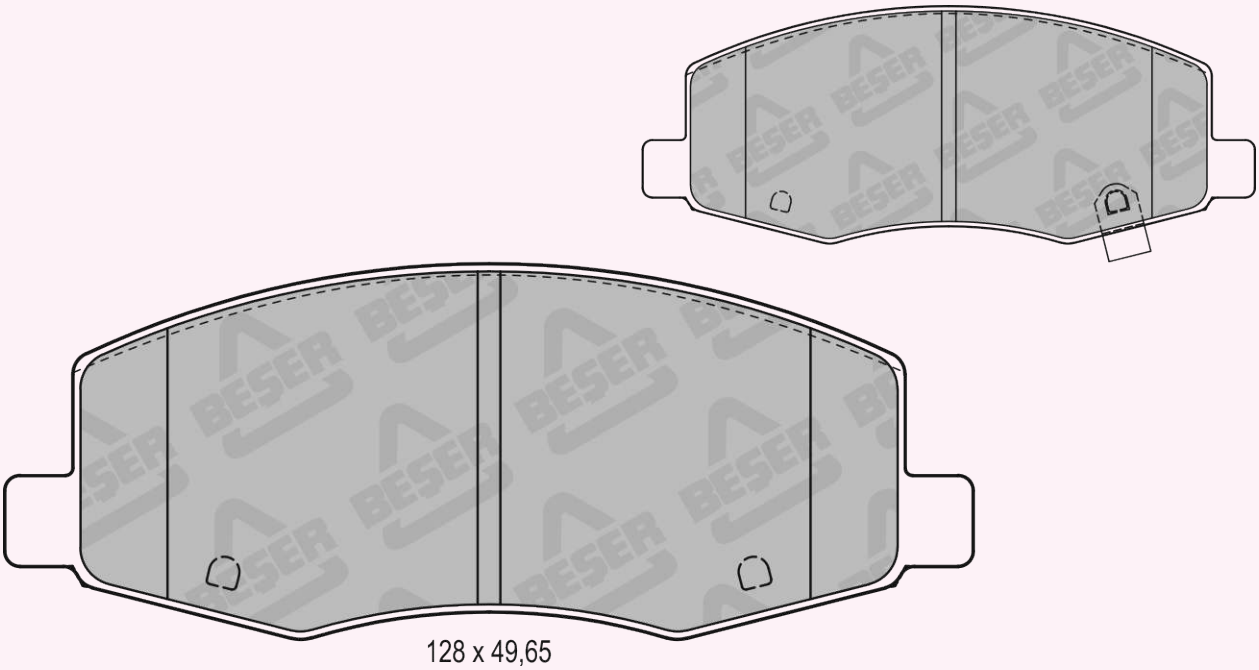

128 x 49,65

REFERENCE	T(mm)	REMARKS	MAKE	F/R	WVA No
4253	17,2	2 PADS PISTON CLIP	DACIA - LADA RENAULT	F	22525 22526

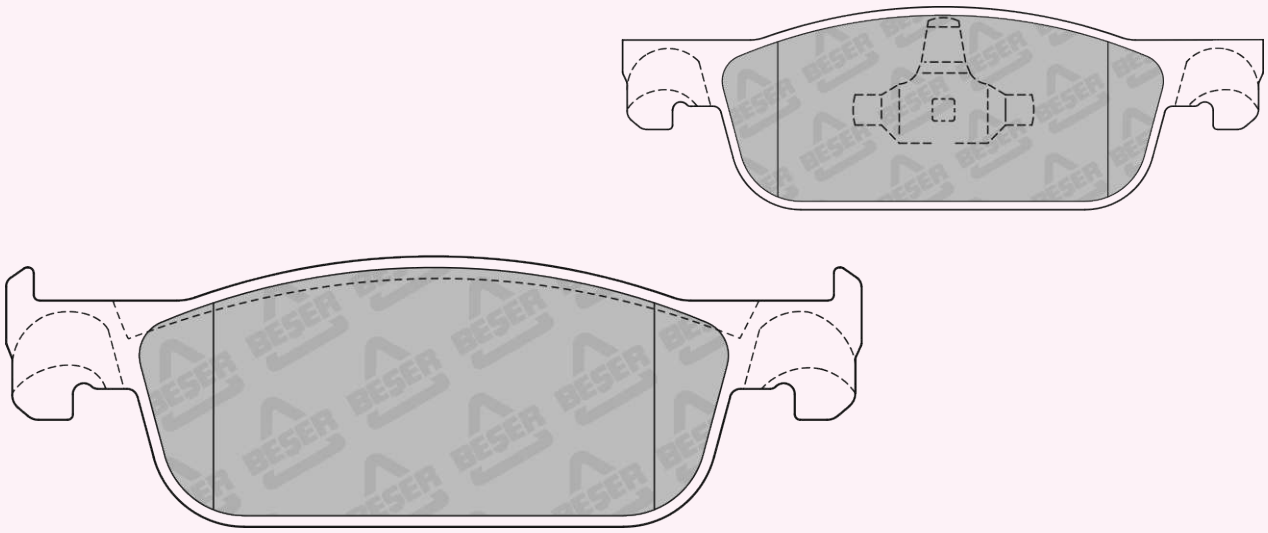

155 x 49
(NOT SCALE)

REFERENCE	T(mm)	REMARKS	MAKE	F/R	WVA No
4254	15,3	4 PADS PLAIN	TOYOTA	R	25481

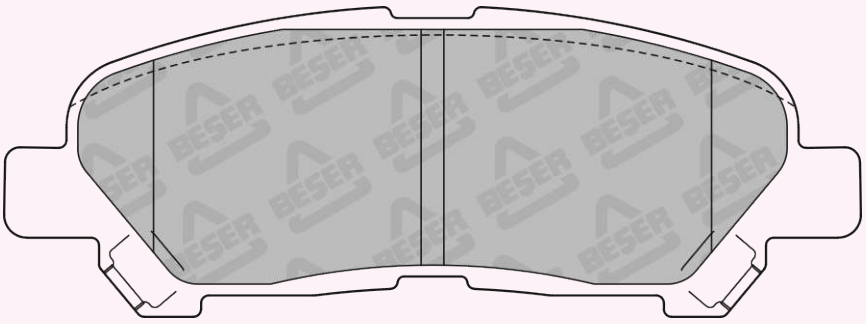

113,20 x 40,73

REFERENCE	T(mm)	REMARKS	MAKE	F/R	WVA No
4255	17,5	4 PADS PLAIN	LEXUS - TOYOTA	F	24452

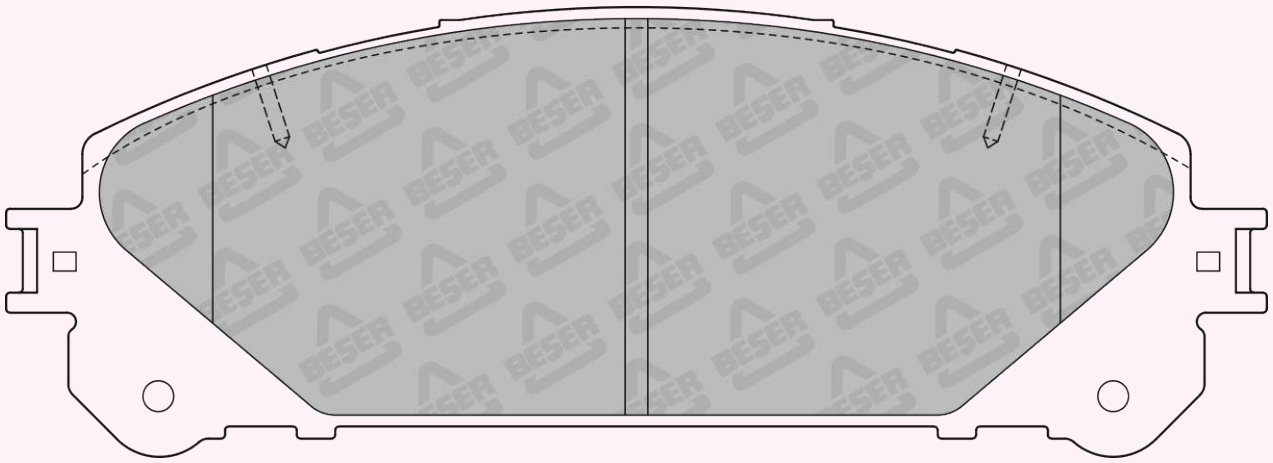

166,6 x 59,34

REFERENCE	T(mm)	REMARKS	MAKE	F/R	WVA No
4256	15,2	4 PADS PLAIN	LEXUS - TOYOTA	R	24918

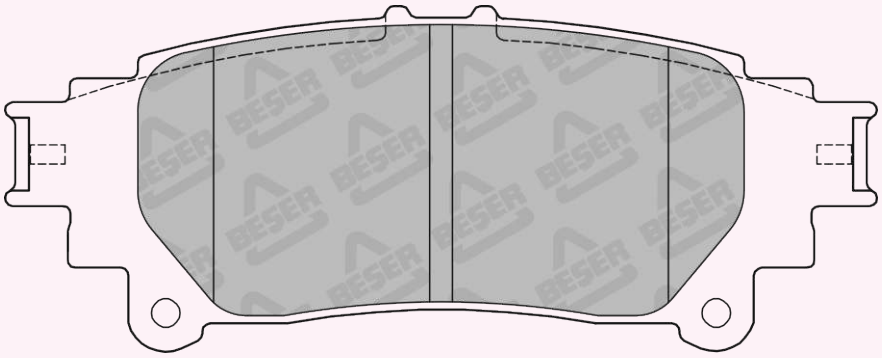

115,1 x 45,59

REFERENCE	T(mm)	REMARKS	MAKE	F/R	WVA No
4258	16	2 PADS WITH WEAR SENSOR	SUBARU	R	24854 24855

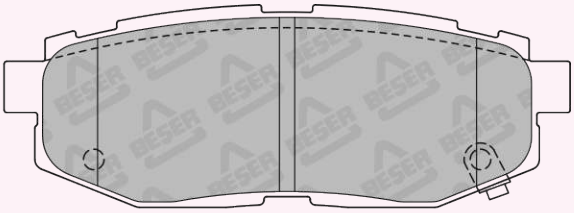

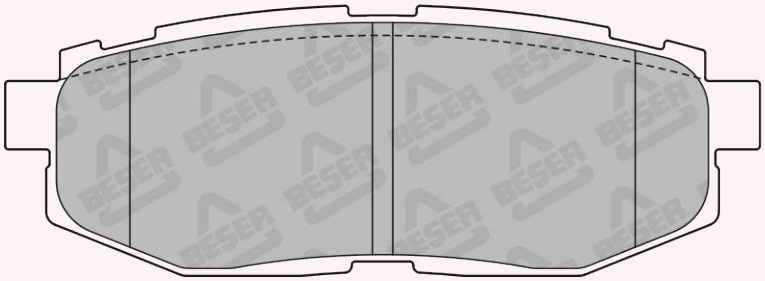

110,5 x 39,51
(NOT SCALE)

REFERENCE	T(mm)	REMARKS	MAKE	F/R	WVA No
4259	18,9	2 PADS PISTON CLIP	AUDI	F	24409 24473

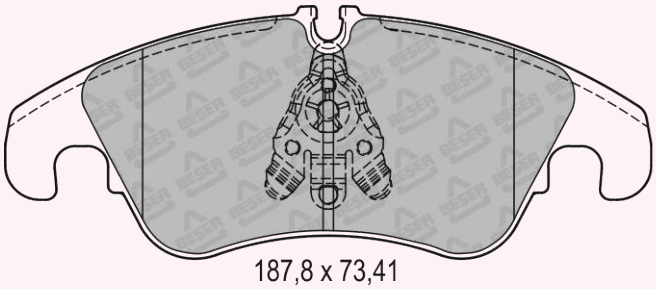

187,8 x 73,41
(NOT SCALE)



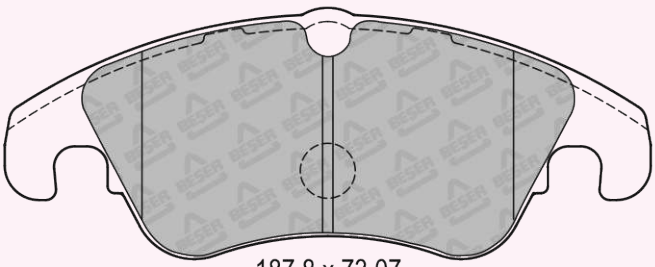

187,8 x 73,07
(NOT SCALE)

REFERENCE	T(mm)	REMARKS	MAKE	F/R	WVA No
4259/1	18,9	2 PADS WITH WEAR SENSOR	AUDI	F	24409 24473

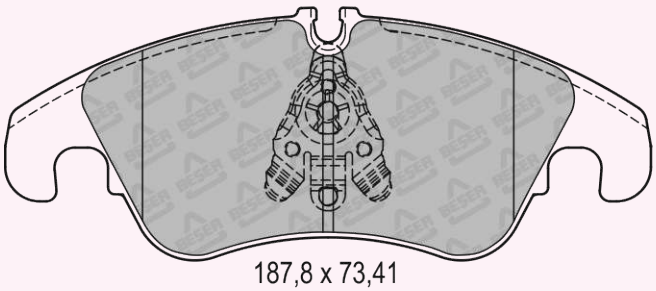

187,8 x 73,41
(NOT SCALE)

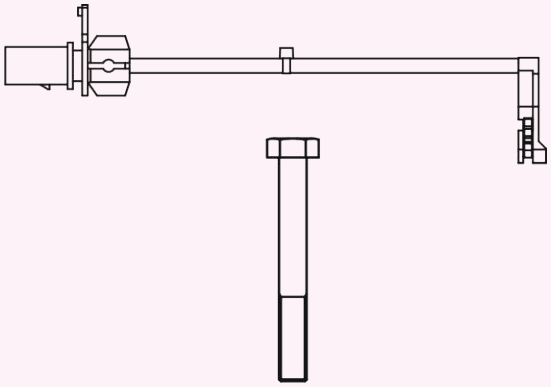

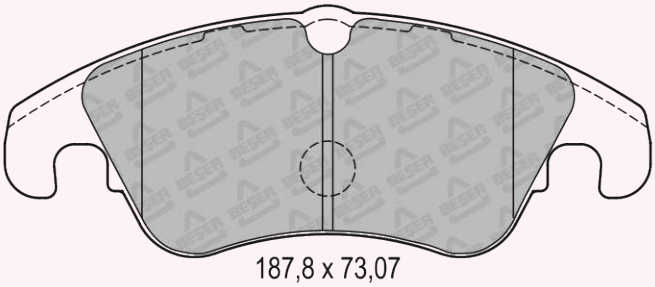

187,8 x 73,07
(NOT SCALE)

REFERENCE	T(mm)	REMARKS	MAKE	F/R	WVA No
4259/2	18,9	1 PAD WITH WEAR SENSOR	AUDI	F	24409 24473

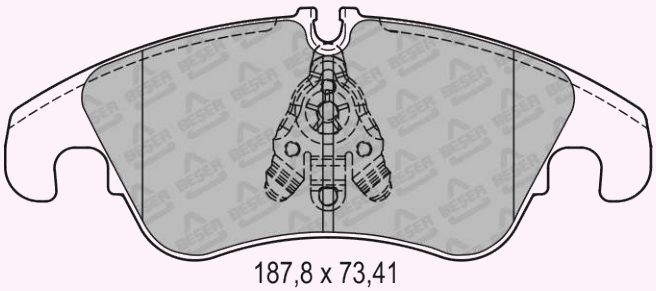

187,8 x 73,41
(NOT SCALE)

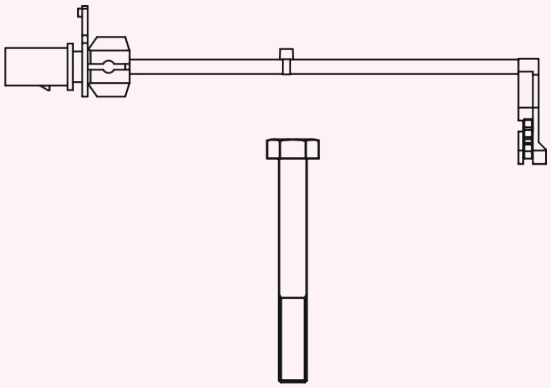

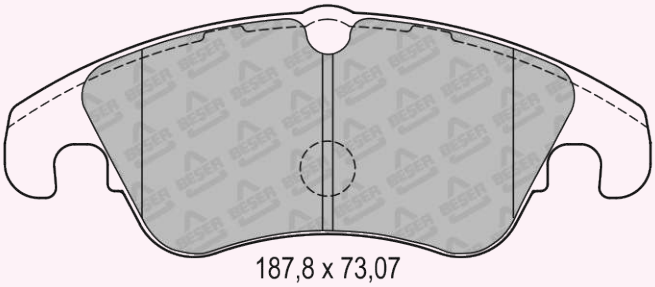

187,8 x 73,07
(NOT SCALE)

REFERENCE	T(mm)	REMARKS	MAKE	F/R	WVA No
4260	17,5	4 PADS PLAIN	AUDI	R	24606

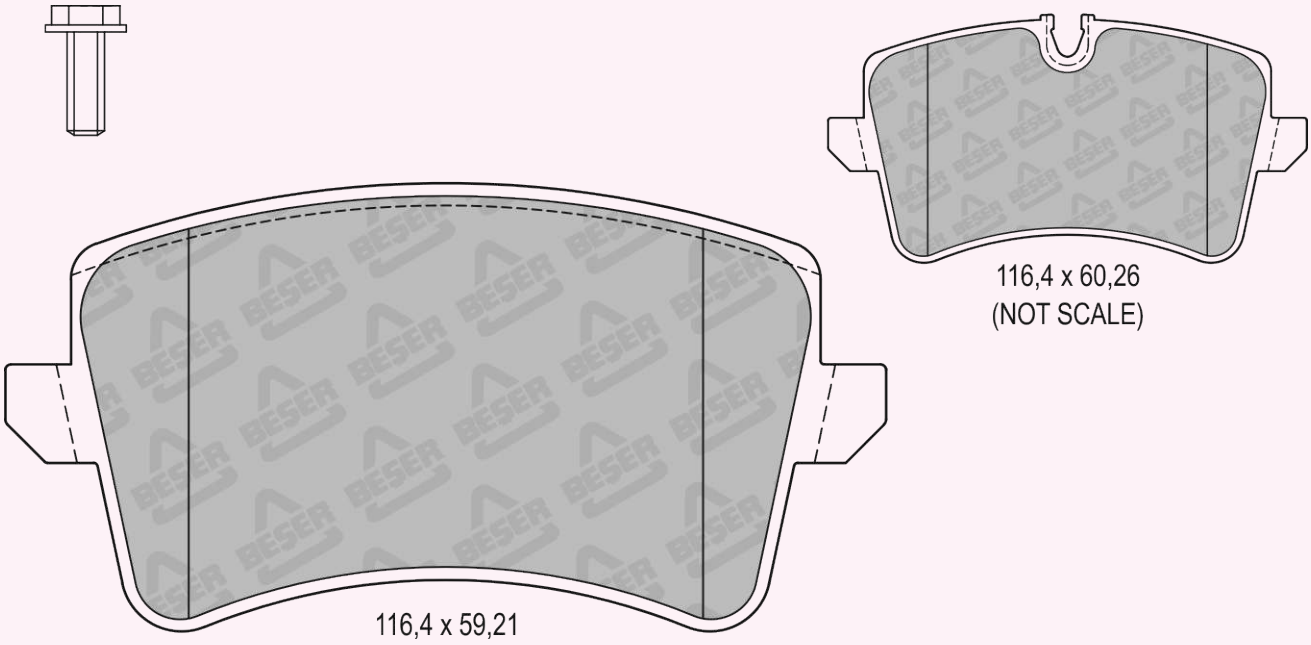

REFERENCE	T(mm)	REMARKS	MAKE	F/R	WVA No
4260/1	17,5	2 PADS WITH WEAR SENSOR	AUDI	R	24606

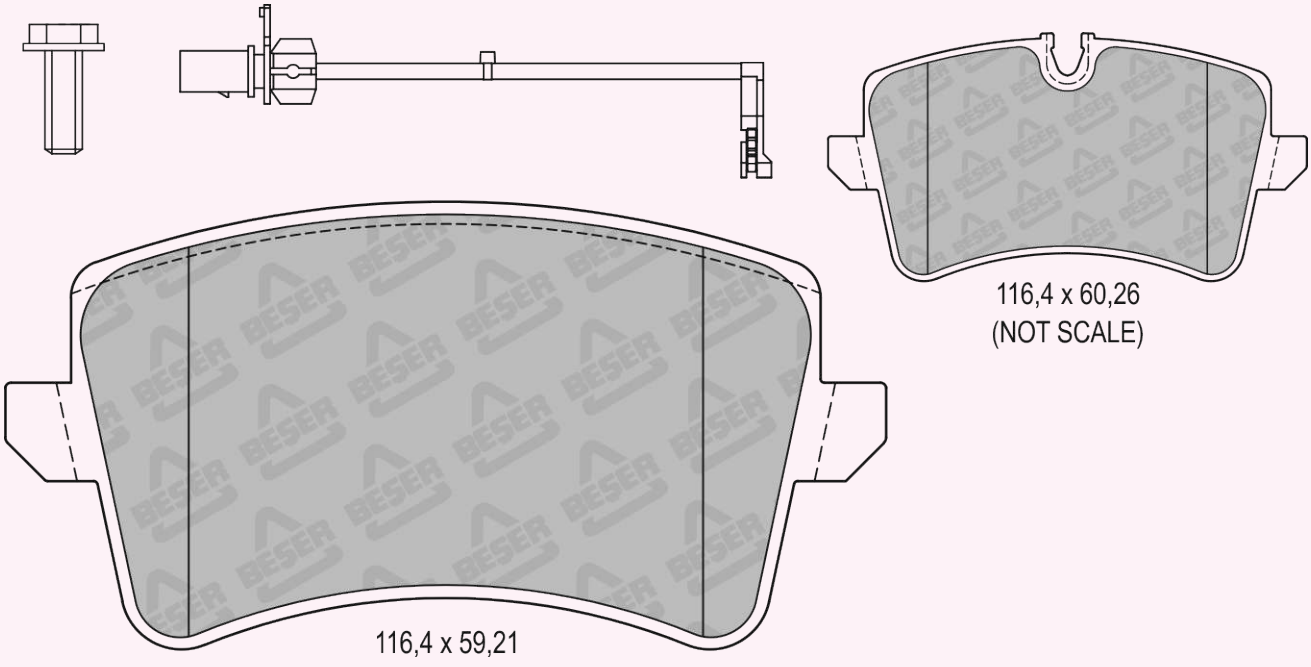

REFERENCE	T(mm)	REMARKS	MAKE	F/R	WVA No
4260/2	17,5	1 PAD WITH WEAR SENSOR	AUDI	R	24606

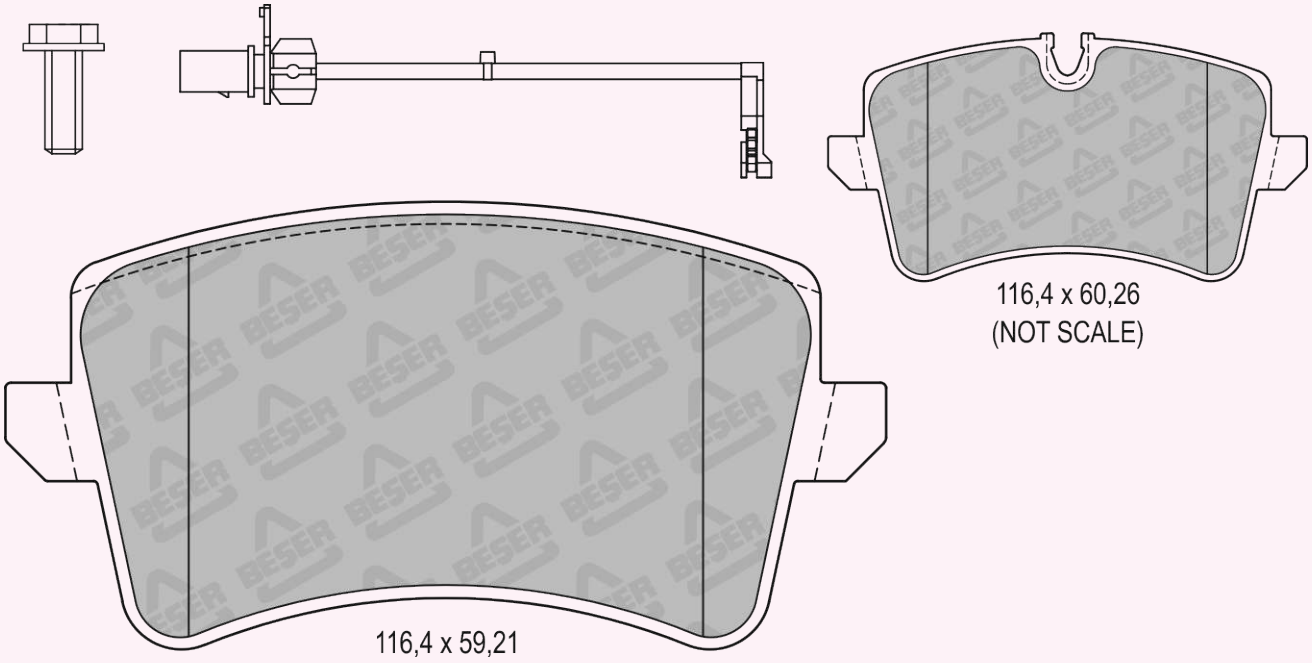

REFERENCE	T(mm)	REMARKS	MAKE	F/R	WVA No
4265	16	2 PADS WITH WEAR SENSOR	KIA	F	25365 25366 25367

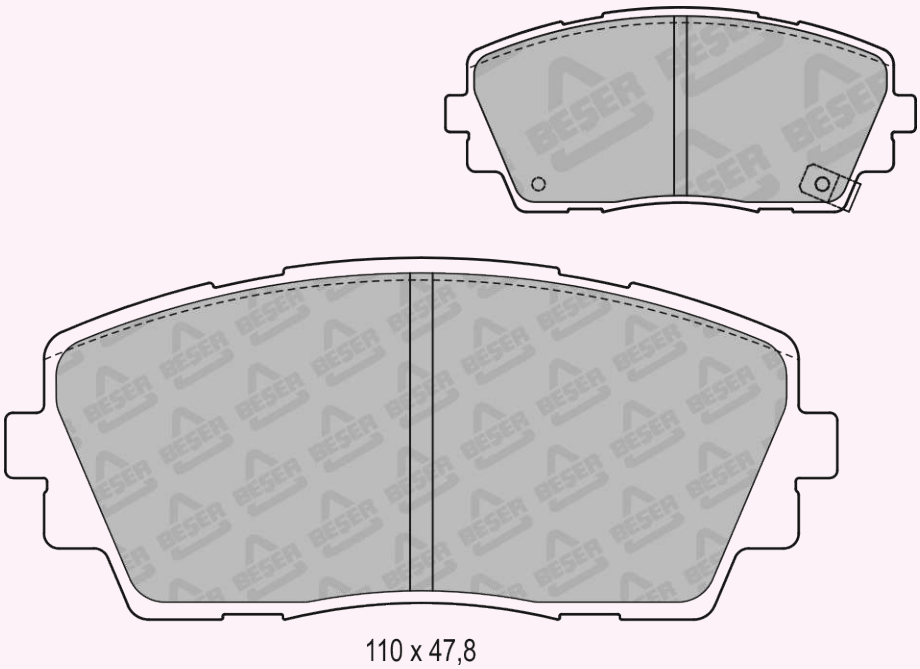

REFERENCE	T(mm)	REMARKS	MAKE	F/R	WVA No
4269	15,9	4 PADS WITH WEAR SENSOR	KIA	F	23873 23874 23875

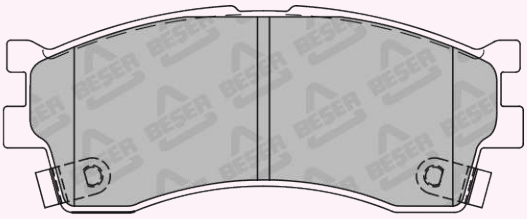

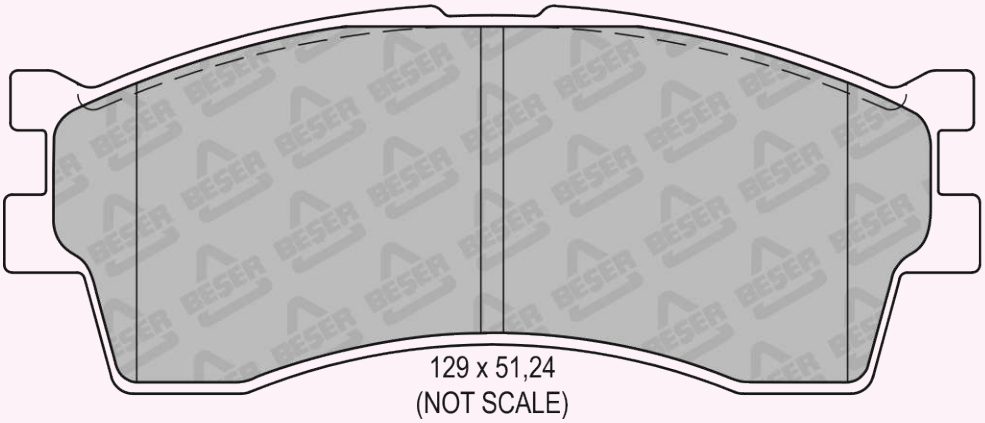

129 x 51,24
(NOT SCALE)

REFERENCE	T(mm)	REMARKS	MAKE	F/R	WVA No
4270	14,7	2 PADS INNER & 2 PADS OUTER	FORD - LINCOLN REX MOTORCYCLES - SKODA	R	22231 22531

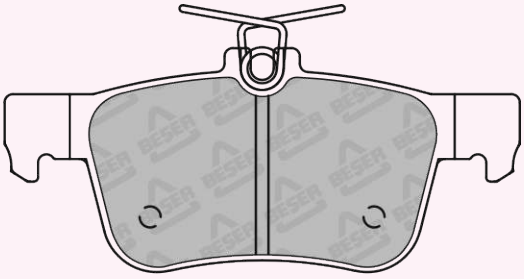

123,1 x 53,53
(NOT SCALE)

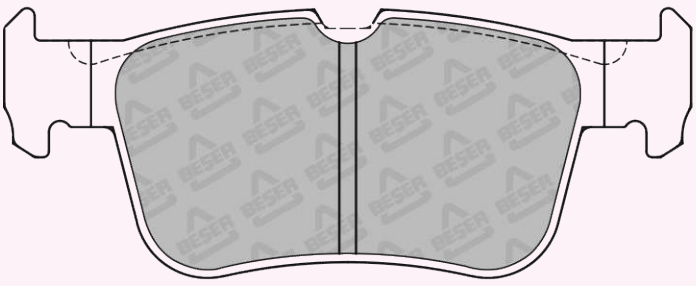

123,1 x 48,33
(NOT SCALE)

REFERENCE	T(mm)	REMARKS	MAKE	F/R	WVA No
4271	15,5	4 PADS PLAIN	MITSUBISHI	F	23487

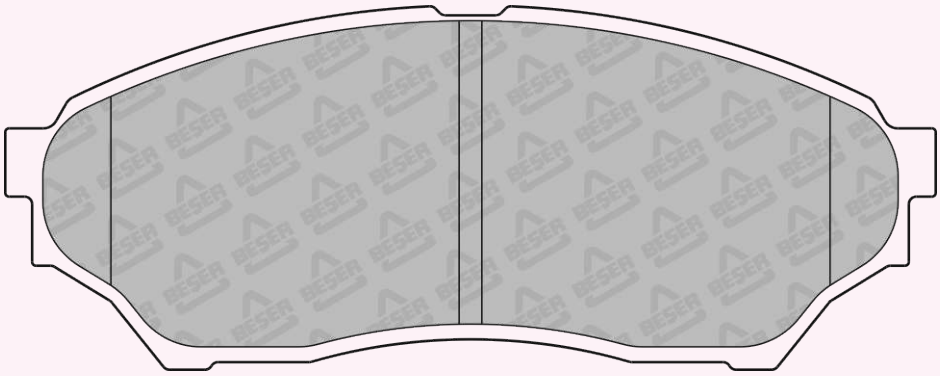

122,9x47,88

REFERENCE	T(mm)	REMARKS	MAKE	F/R	WVA No
4274	16,9	4 PADS PLAIN	LEXUS	F	23499

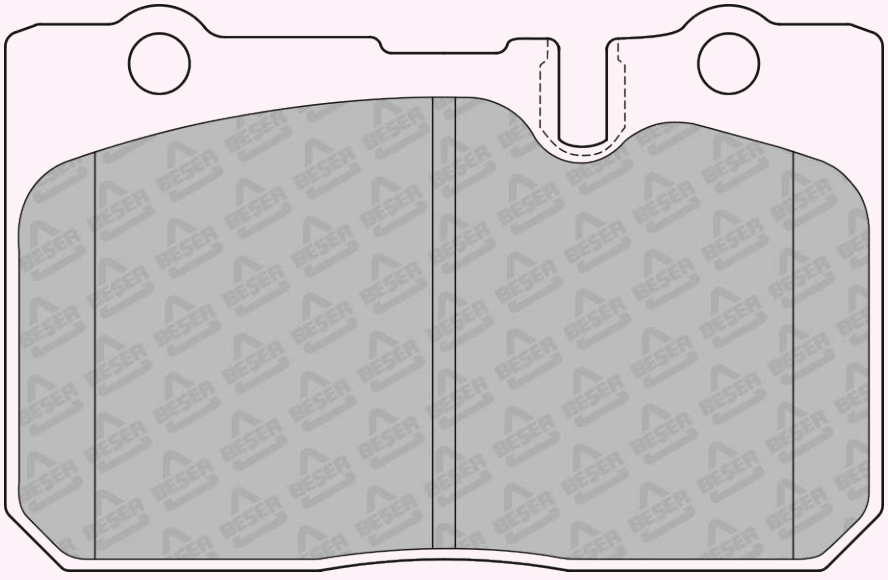

115,8 x 74,6

REFERENCE	T(mm)	REMARKS	MAKE	F/R	WVA No
4275	14,9	2 PADS INNER & 2 PADS OUTER	LEXUS - TOYOTA	R	21786 21787

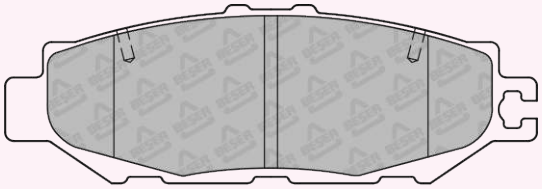

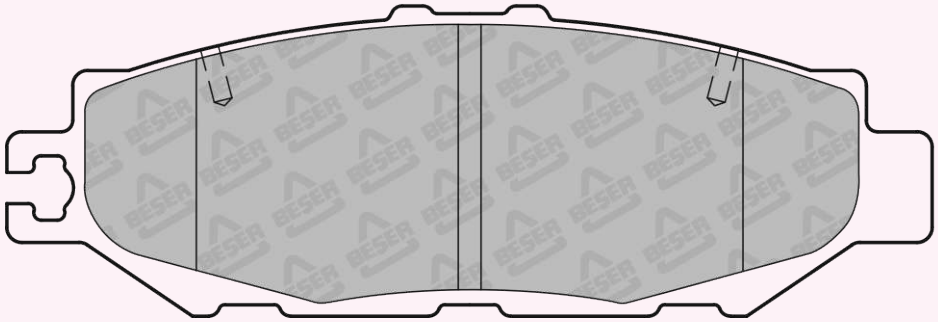

122,2 x 40,9

REFERENCE	T(mm)	REMARKS	MAKE	F/R	WVA No
4276	15,6	4 PADS PLAIN	LEXUS	F	20325 23812 24396

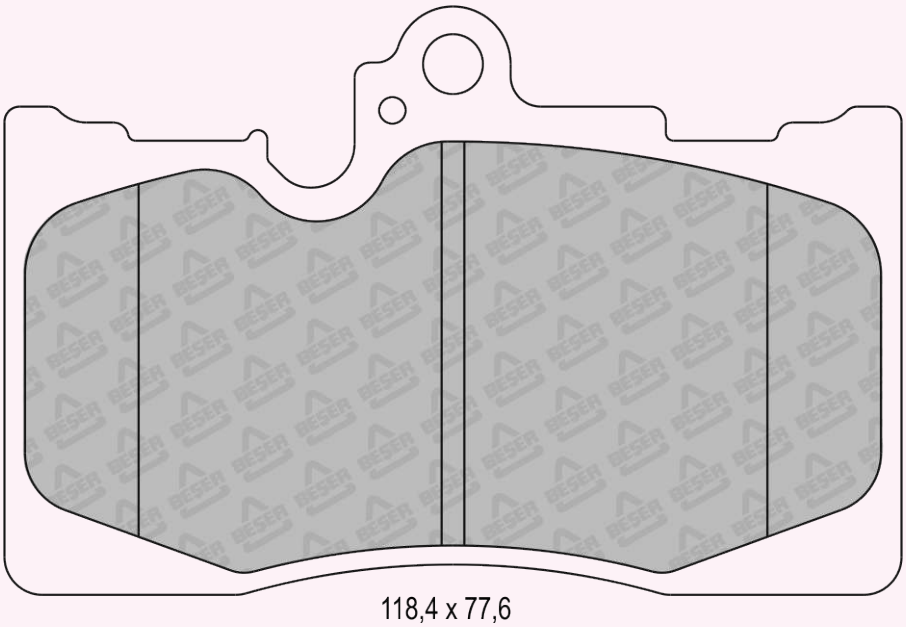

118,4 x 77,6

REFERENCE	T(mm)	REMARKS	MAKE	F/R	WVA No
4276/1	15,6	4 PADS PLAIN	LEXUS	F	23331

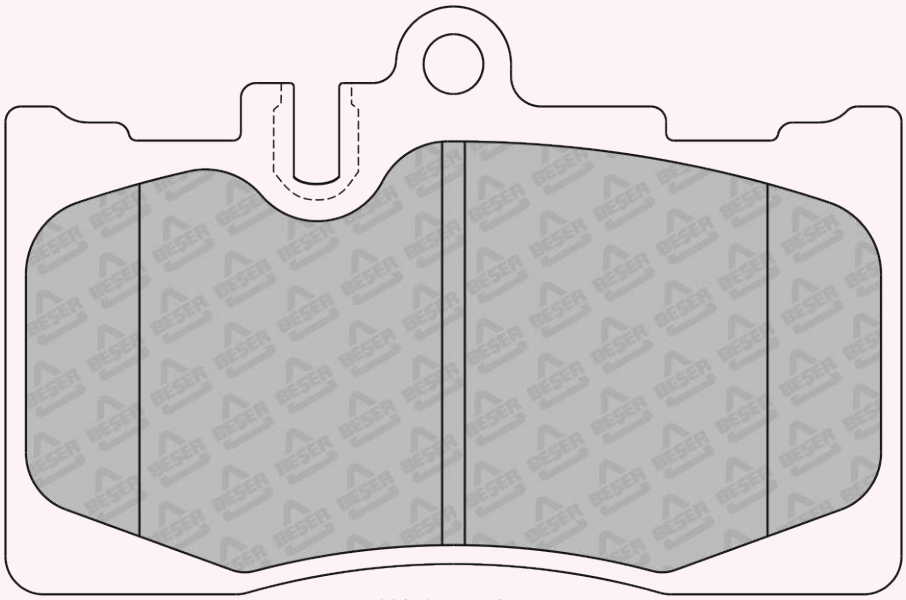

118,4 x 77,6

REFERENCE	T(mm)	REMARKS	MAKE	F/R	WVA No
4277	17,7	4 PADS PLAIN	LEXUS	R	24244

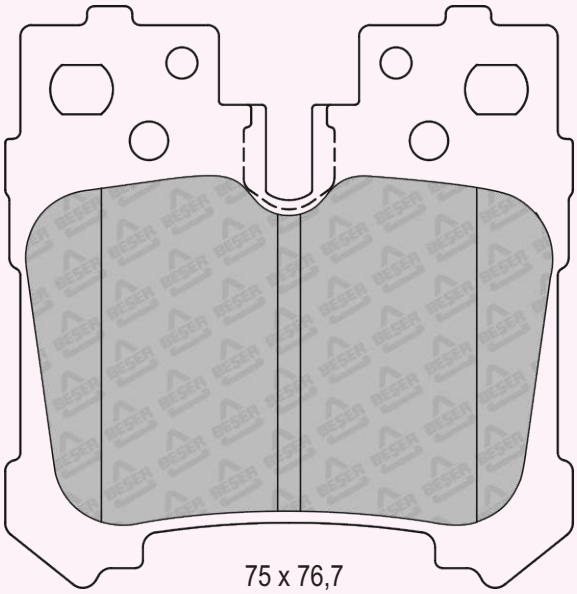

75 x 76,7
(NOT SCALE)

REFERENCE	T(mm)	REMARKS	MAKE	F/R	WVA No
4279	16,6	2 PADS WITH WEAR SENSOR	HONDA	R	25947 25948 25949

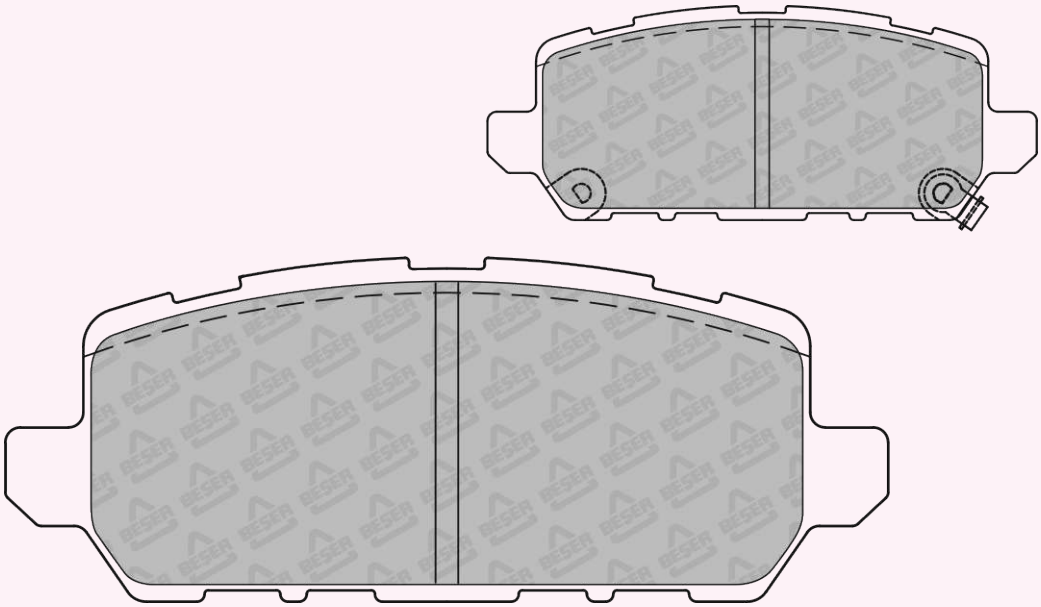

116,6 x 45,39
(NOT SCALE)

REFERENCE	T(mm)	REMARKS	MAKE	F/R	WVA No
4280	17,4	4 PADS PLAIN	RENAULT	F	22610

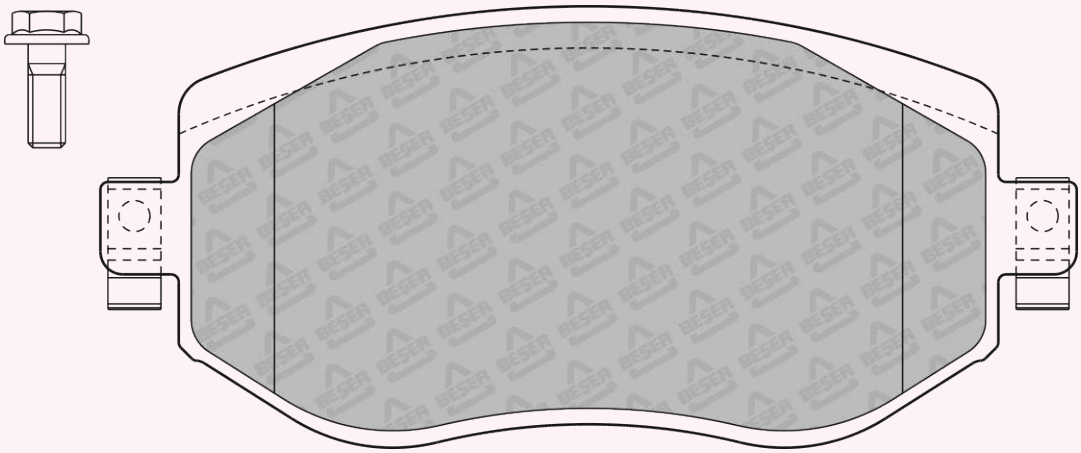

129 x 58,3
(NOT SCALE)

REFERENCE	T(mm)	REMARKS	MAKE	F/R	WVA No
4281	16	2 PADS WITH WEAR SENSOR	SMART	F	21999 23002

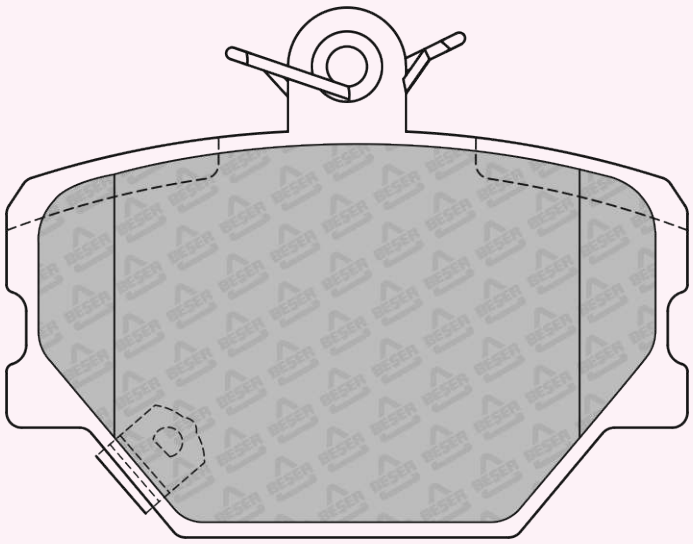

90 x 70

REFERENCE	T(mm)	REMARKS	MAKE	F/R	WVA No
4282	18,2	2 PADS WITH WEAR SENSOR	NISSAN - RENAULT	F	22065 25970

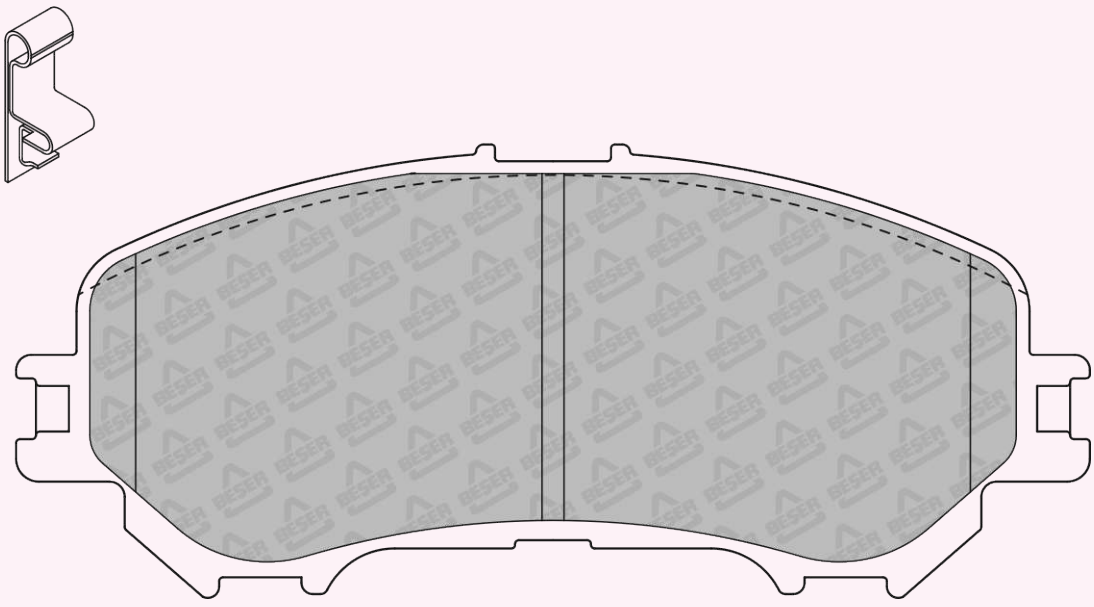

141,85 x 59,7

REFERENCE	T(mm)	REMARKS	MAKE	F/R	WVA No
4282/1	17	2 PADS WITH WEAR SENSOR	NISSAN - RENAULT	F	22065 25970

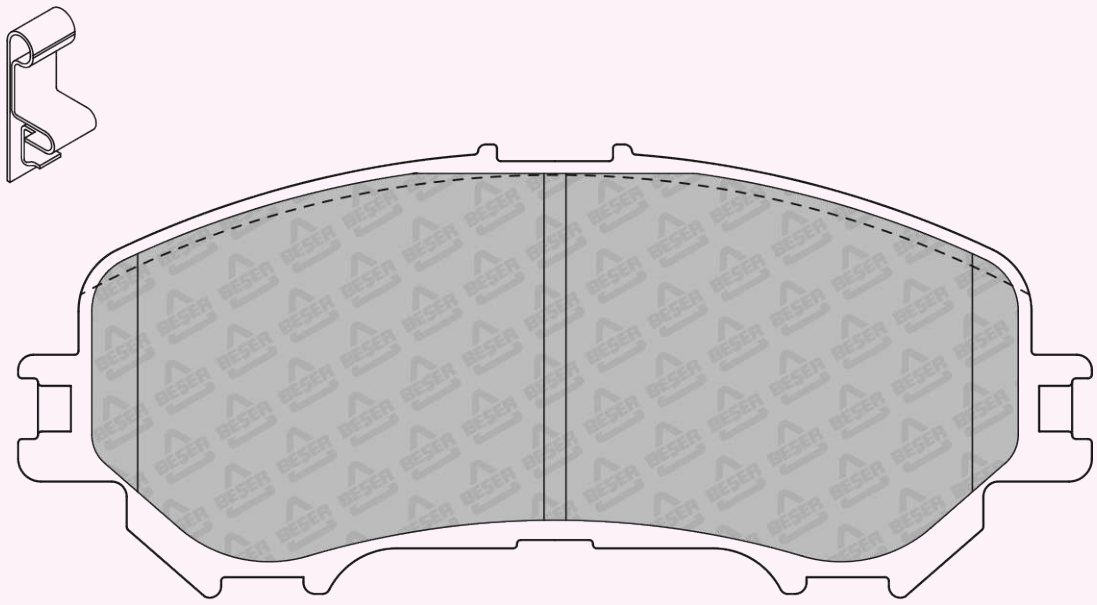

141,85 x 59,7

REFERENCE	T(mm)	REMARKS	MAKE	F/R	WVA No
4283	15,5	2 PADS WITH WEAR SENSOR	NISSAN - RENAULT	R	25965 25966 25967

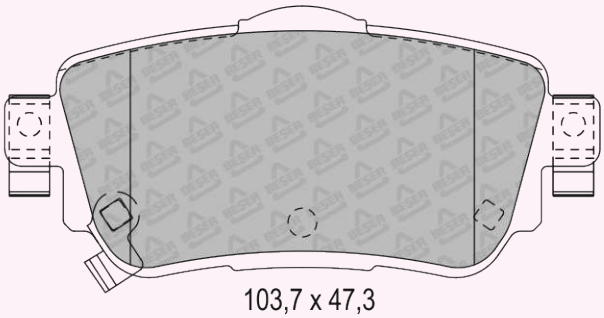

103,7 x 47,3
(NOT SCALE)

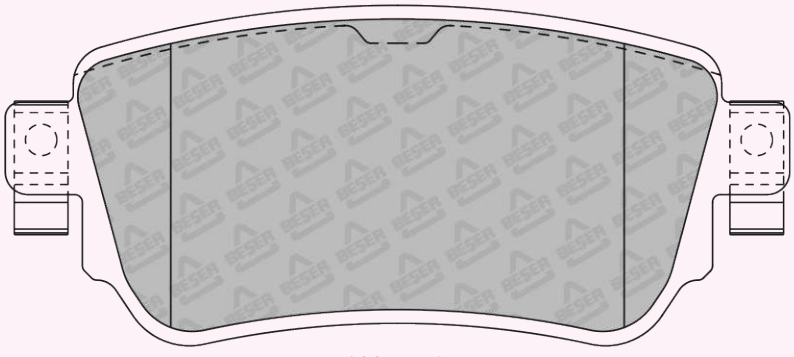

103,7 x 45

REFERENCE	T(mm)	REMARKS	MAKE	F/R	WVA No
4283/1	15	2 PADS WITH WEAR SENSOR	NISSAN - RENAULT	F	25965 25966 25967

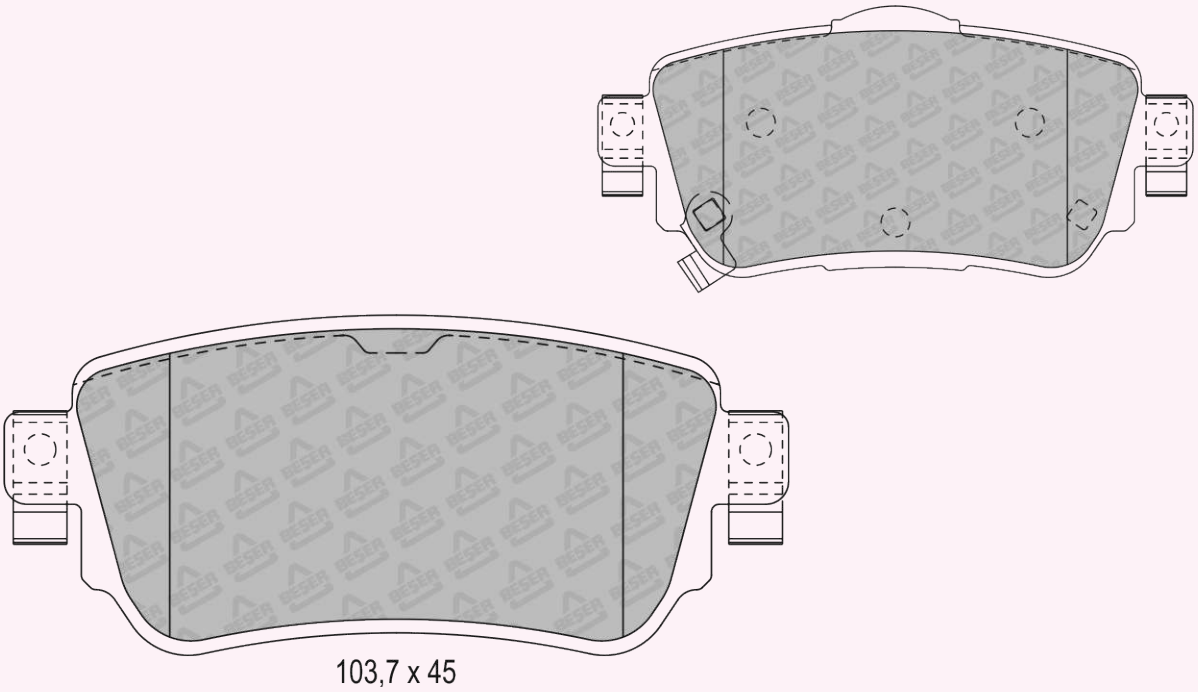

REFERENCE	T(mm)	REMARKS	MAKE	F/R	WVA No
4284	17	2 PADS WITH WEAR SENSOR	OPEL - VAUXHALL	F	22143 22144

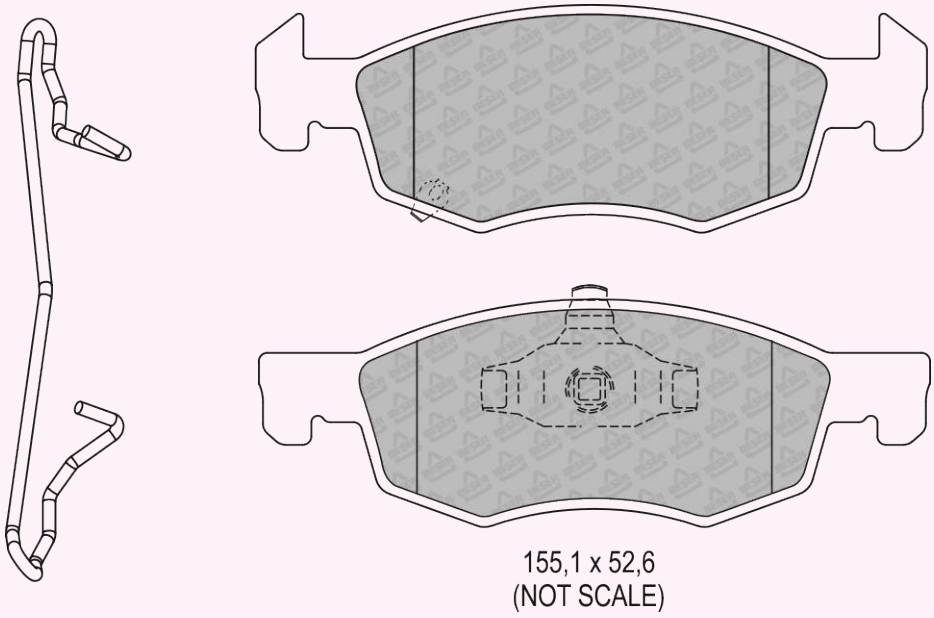

REFERENCE	T(mm)	REMARKS	MAKE	F/R	WVA No
4285	18	2 PADS WITH WEAR SENSOR	OPEL - VAUXHALL	F	22123 22124 22125

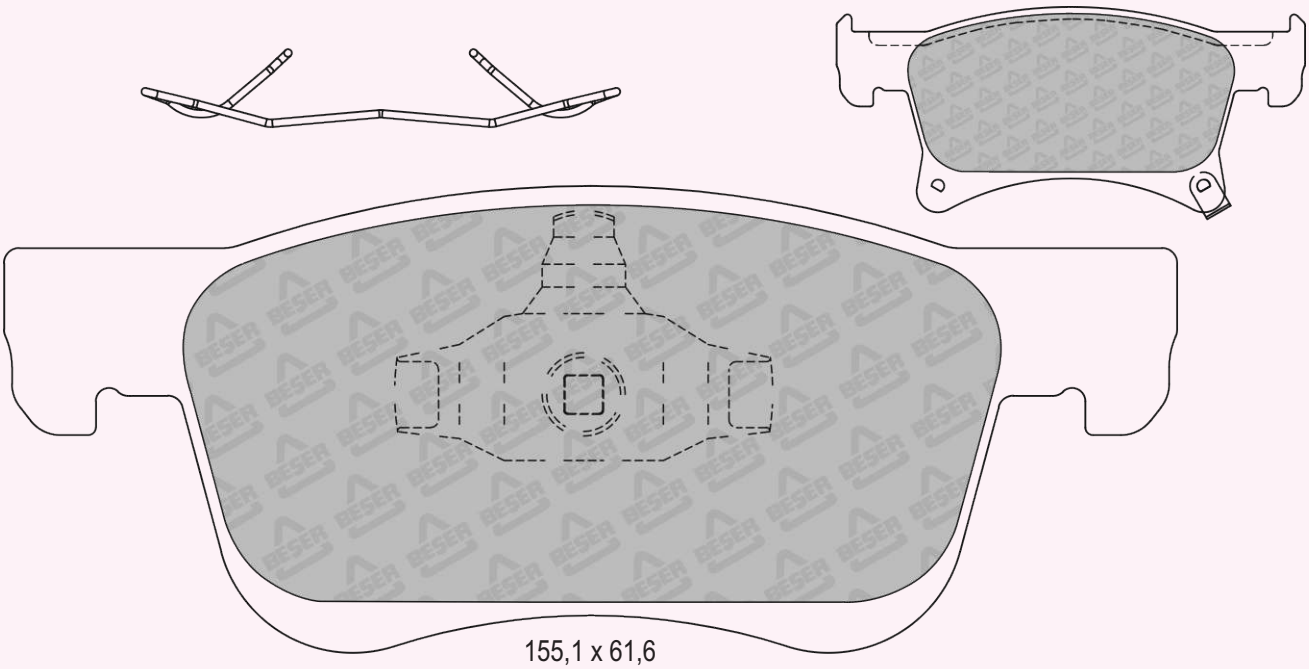

155,1 x 61,6
(NOT SCALE)

REFERENCE	T(mm)	REMARKS	MAKE	F/R	WVA No
4286	17,2	2 PADS WITH WEAR SENSOR	OPEL - VAUXHALL	R	22220 22221 25973 25974 25975

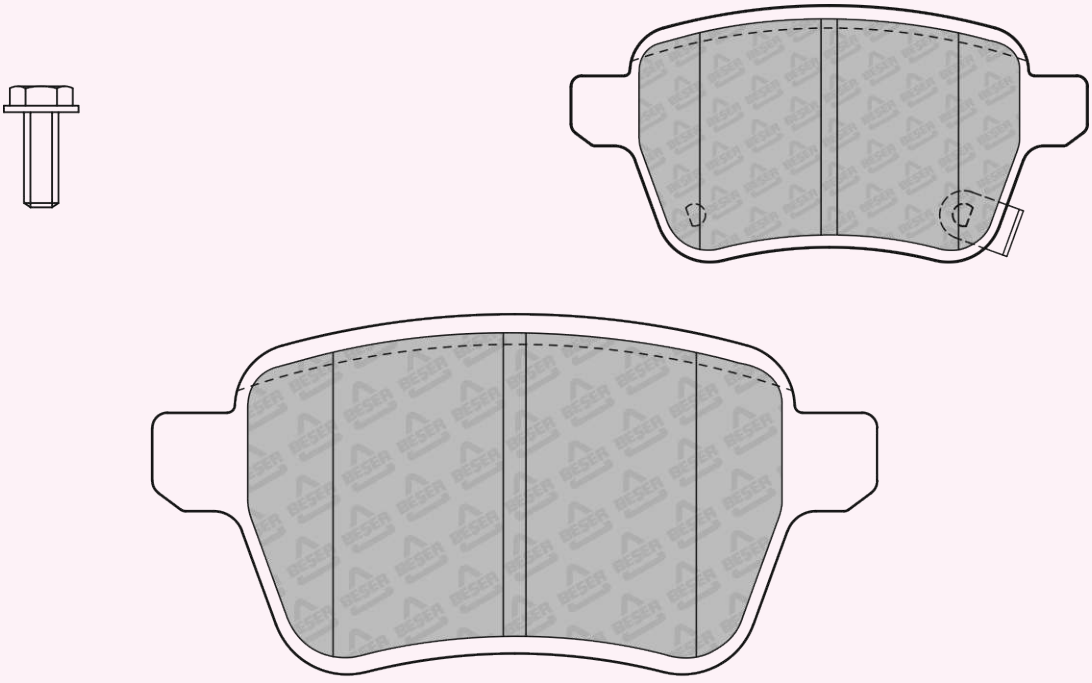

95,8 x 47,6

REFERENCE	T(mm)	REMARKS	MAKE	F/R	WVA No
4287	16	4 PADS PLAIN	RENAULT	R	22103 22356

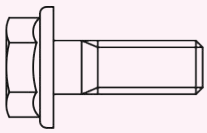

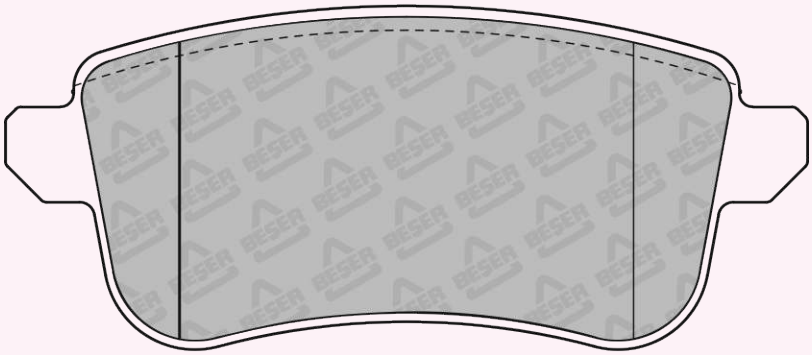

106 x 45,4

REFERENCE	T(mm)	REMARKS	MAKE	F/R	WVA No
4289	14,9	4 PADS PLAIN	OTOKAR	-	-

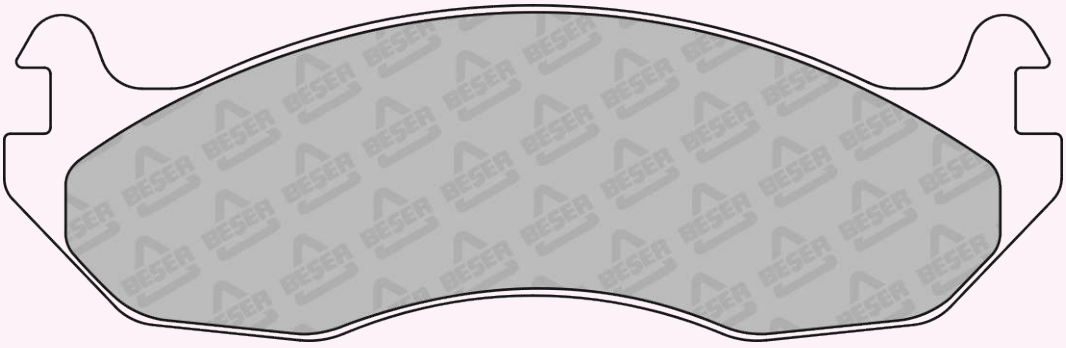

176,7 x 55,9
(NOT SCALE)

REFERENCE	T(mm)	REMARKS	MAKE	F/R	WVA No
4291	16,7	4 PADS PLAIN	LAND ROVER	F	24659

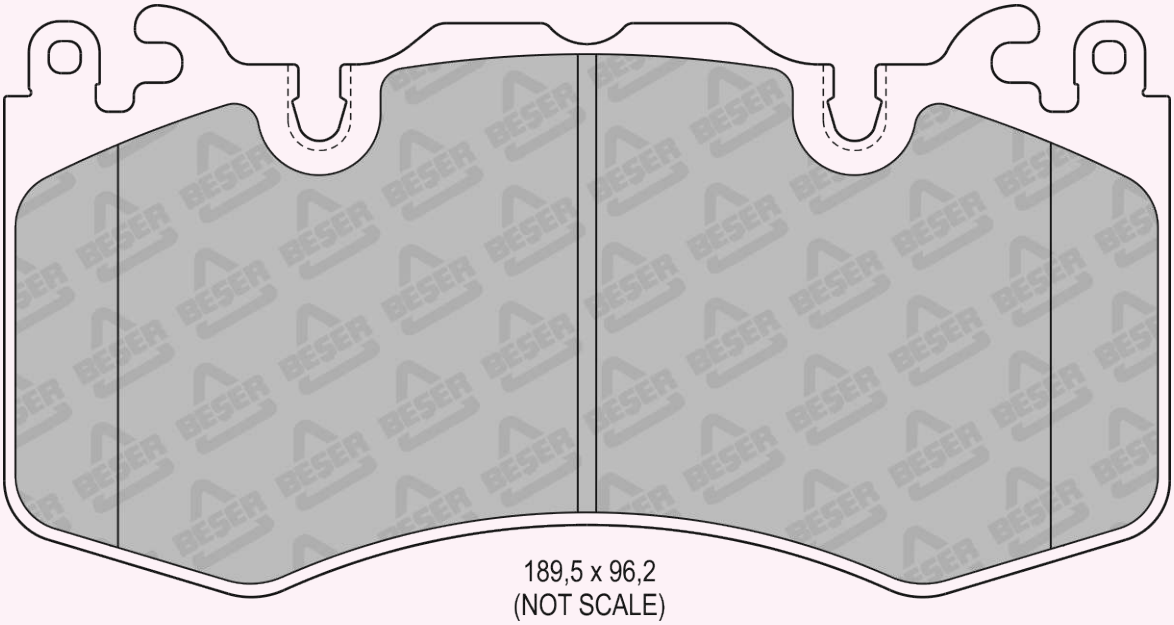

189,5 x 96,2
(NOT SCALE)

REFERENCE	T(mm)	REMARKS	MAKE	F/R	WVA No
4293	18	4 PADS PLAIN	LAND ROVER	F	24191

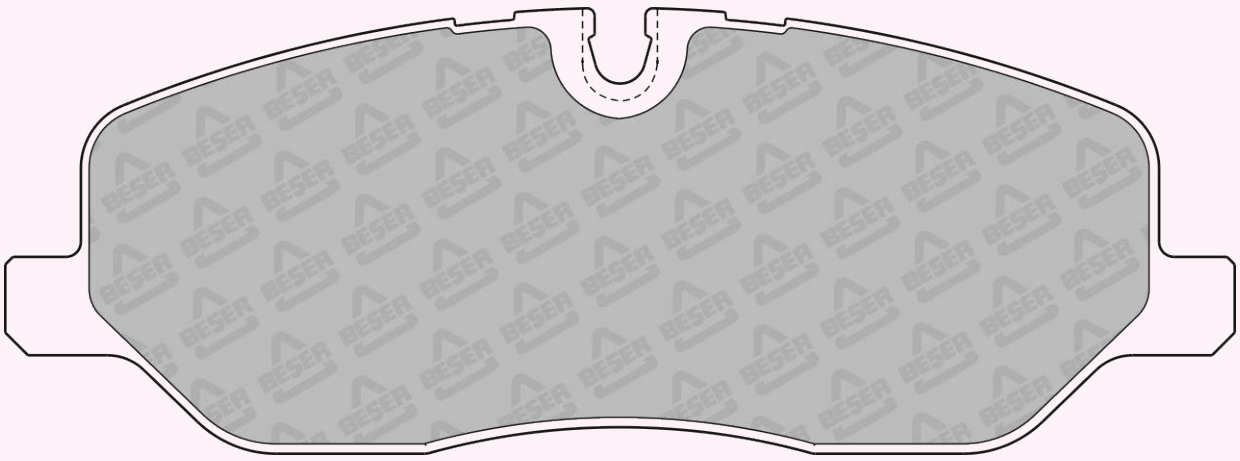

162,4 x 58,74

REFERENCE	T(mm)	REMARKS	MAKE	F/R	WVA No
4295	17,5	4 PADS PISTON CLIP	AUDI - SEAT SKODA - VW	F	22035 22036 22037

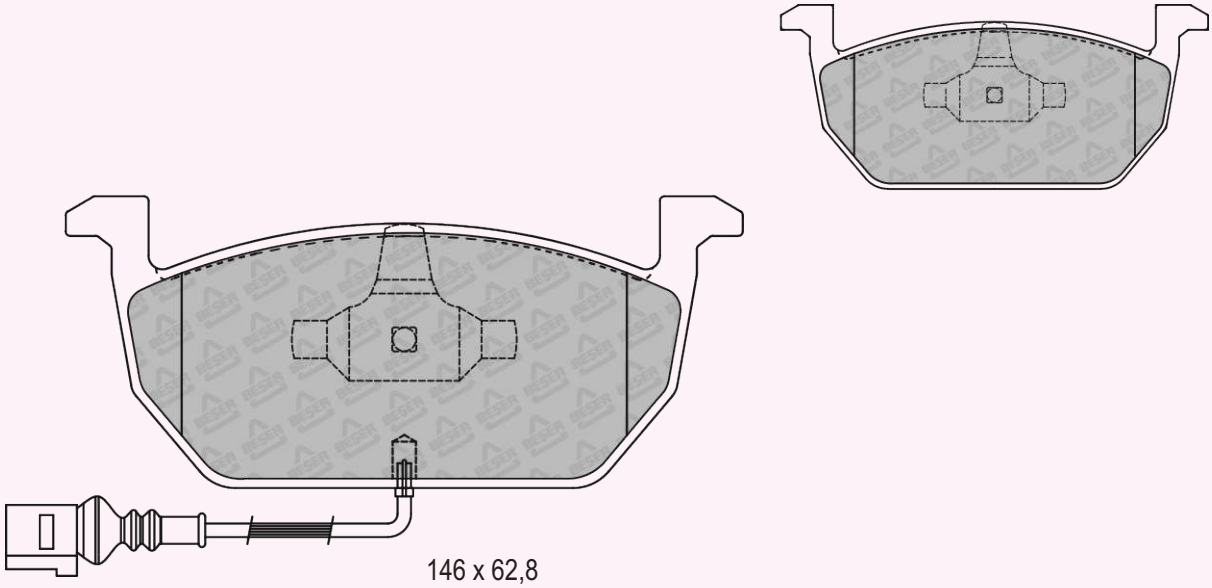

146 x 62,8
(NOT SCALE)

REFERENCE	T(mm)	REMARKS	MAKE	F/R	WVA No
4296	18,1	4 PADS PLAIN	FORD	F	-

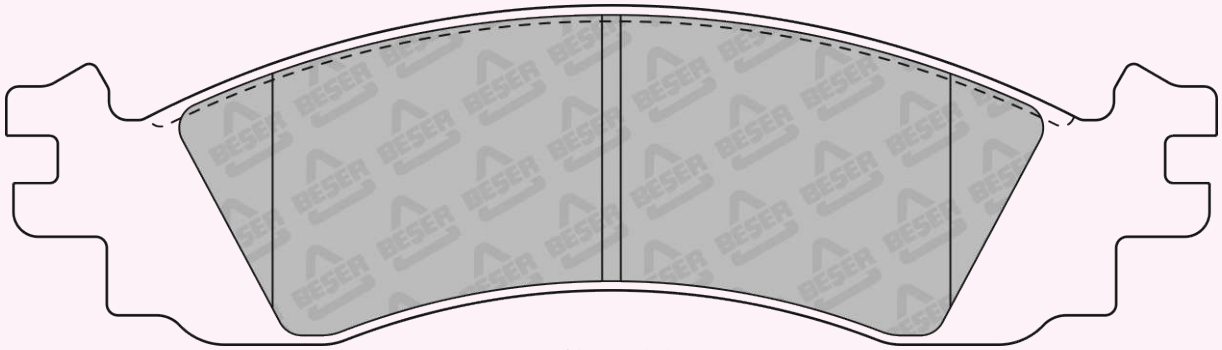

195 x 54,4
(NOT SCALE)

REFERENCE	T(mm)	REMARKS	MAKE	F/R	WVA No
4298	18,3	4 PADS PLAIN	LINCOLN	F	-

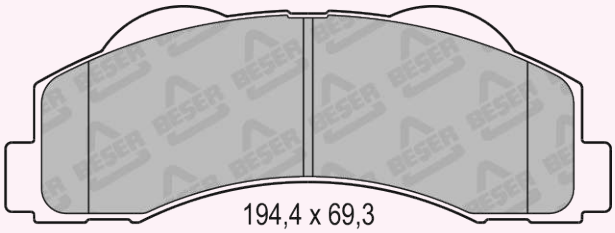

194,4 x 69,3
(NOT SCALE)

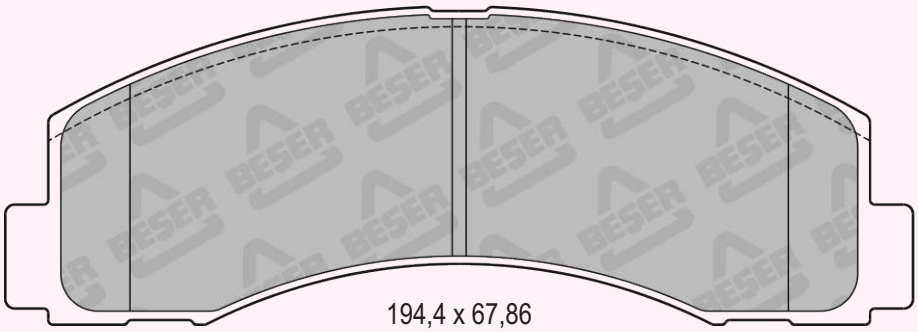

194,4 x 67,86
(NOT SCALE)

REFERENCE	T(mm)	REMARKS	MAKE	F/R	WVA No
4301	19,4	2 PADS WITH WEAR SENSOR	FIAT	F	22476 22477 23713

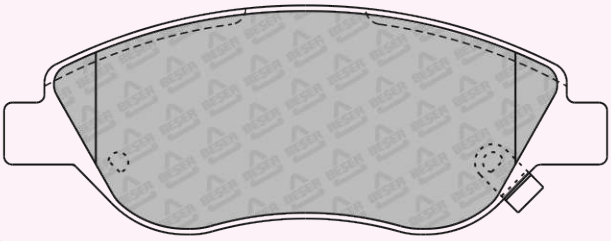

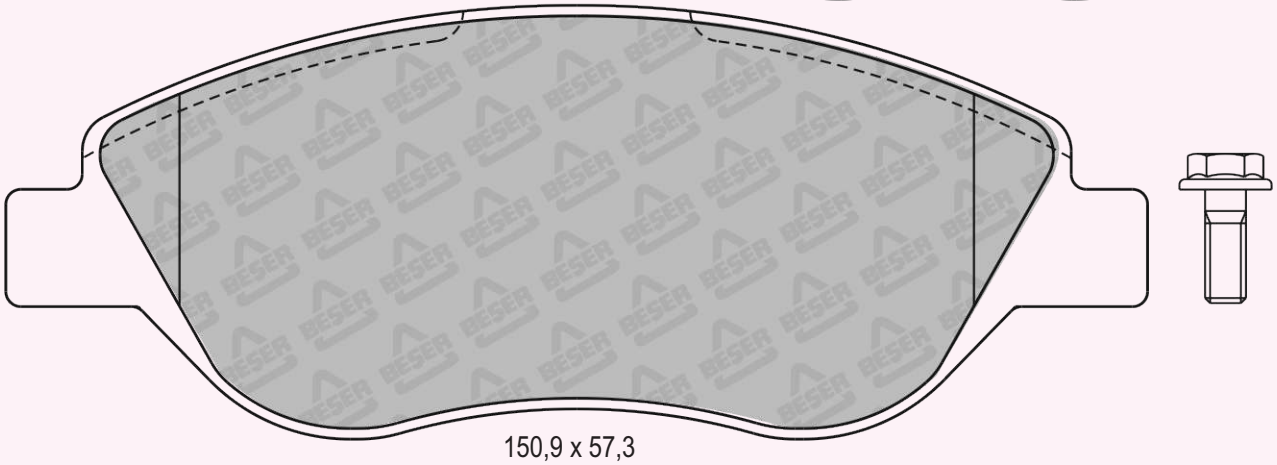

150,9 x 57,3
(NOT SCALE)

REFERENCE	T(mm)	REMARKS	MAKE	F/R	WVA No
4301/1	19,4	2 PADS WITH WEAR SENSOR	FIAT	F	22476 22477 23713

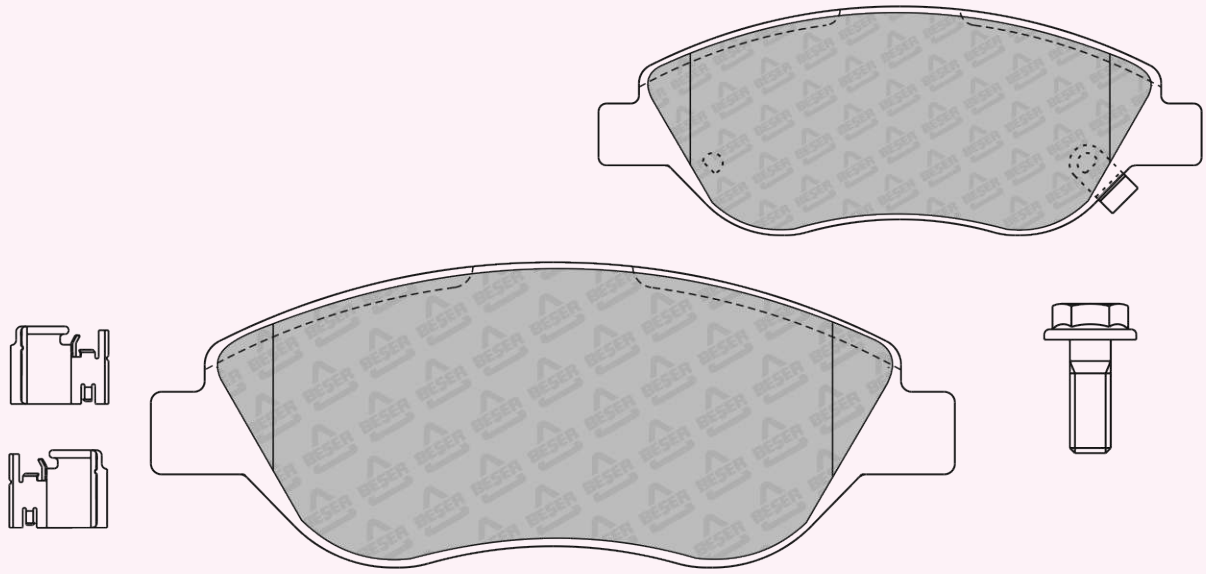

150,9 x 57,3
(NOT SCALE)

REFERENCE	T(mm)	REMARKS	MAKE	F/R	WVA No
4303	15,3	1 PAD WITH WEAR SENSOR	MAZDA - NISSAN	R	24039 24040 24041

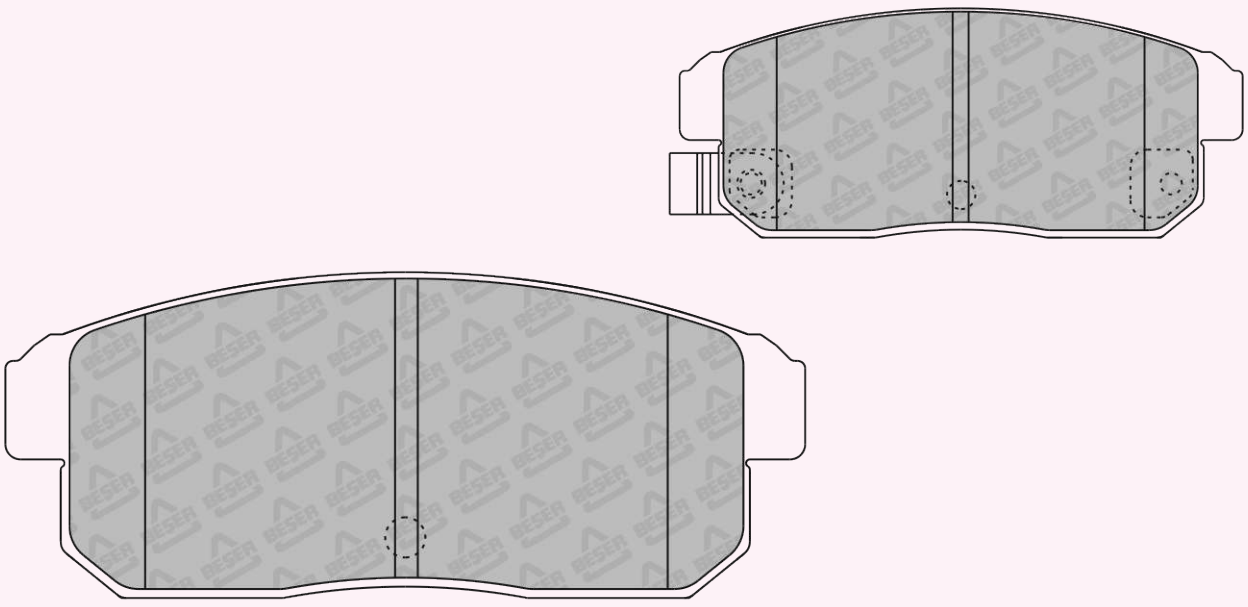

105,66 x 43

REFERENCE	T(mm)	REMARKS	MAKE	F/R	WVA No
4304	14	2 PADS PLAIN	RIMO GO KART	-	-

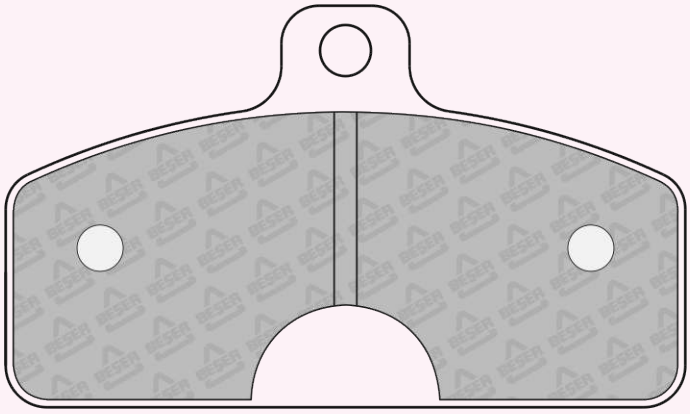

89,8 x 53

REFERENCE	T(mm)	REMARKS	MAKE	F/R	WVA No
4307	16,8	4 PADS WITH WEAR SENSOR	NISSAN - RENAULT	F	22439 22440

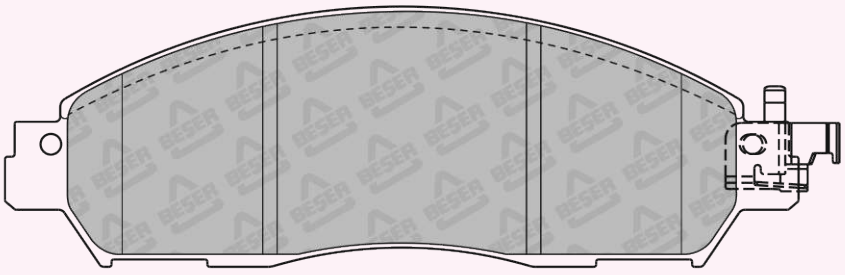

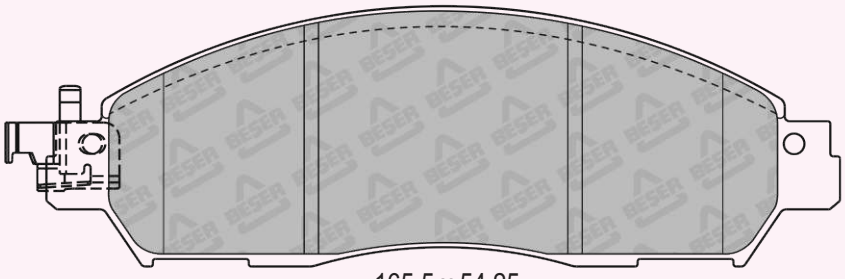

165,5 x 54,25
(NOT SCALE)

REFERENCE	T(mm)	REMARKS	MAKE	F/R	WVA No
4308	15,8	2 PADS WITH WEAR SENSOR	NISSAN - RENAULT	F	22117 22118 22119

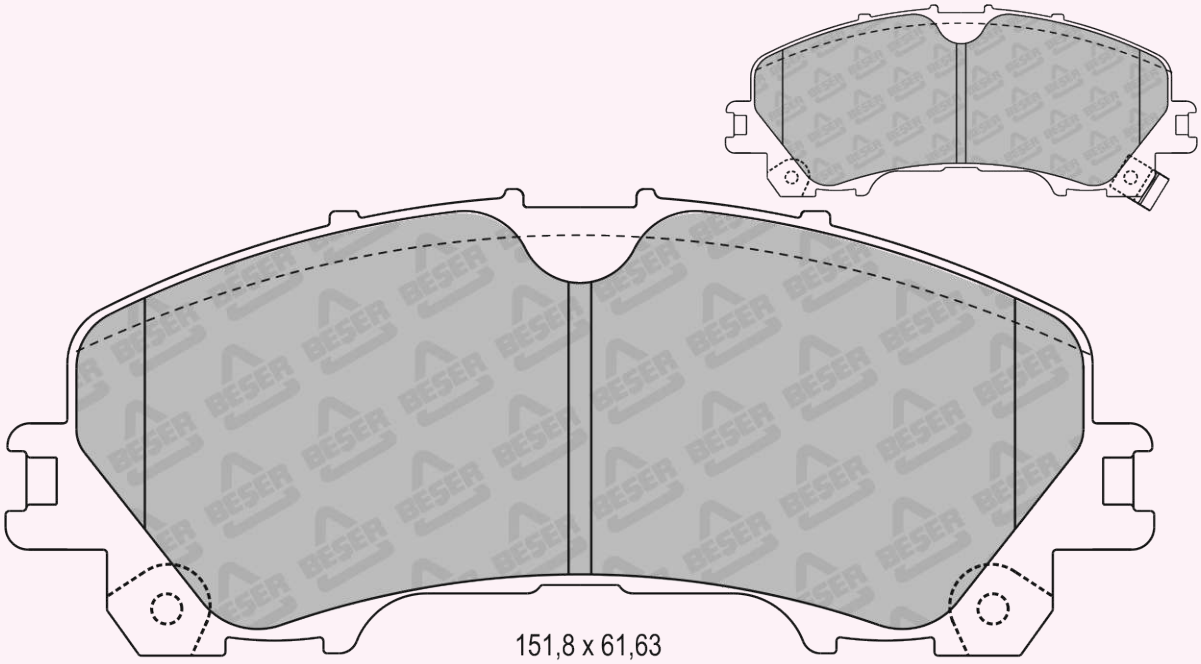

REFERENCE	T(mm)	REMARKS	MAKE	F/R	WVA No
4309	14,3	2 PADS WITH WEAR SENSOR	PORSCHE	F	24295 24553

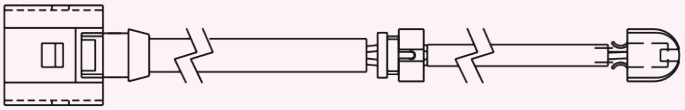

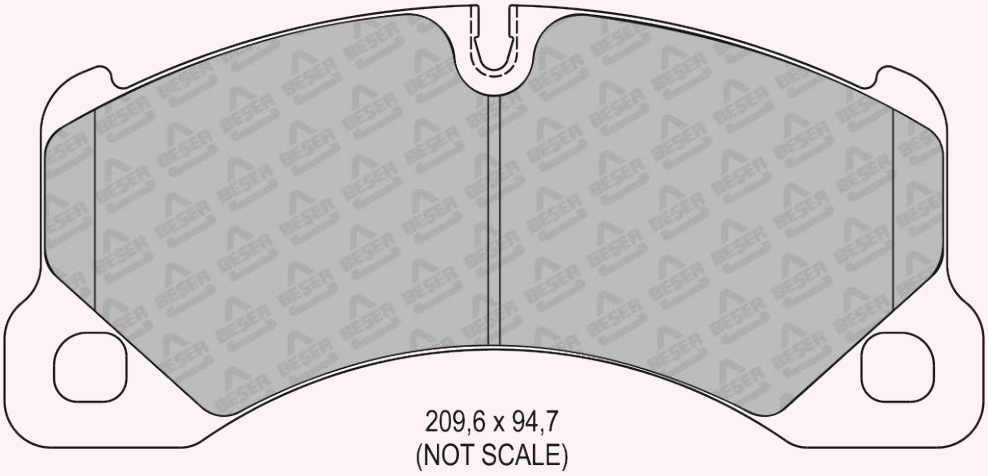

REFERENCE	T(mm)	REMARKS	MAKE	F/R	WVA No
4310	15,8	2 PADS WITH WEAR SENSOR (140mm)	PORSCHE	R	24721

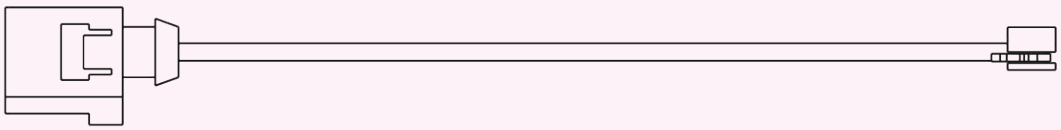

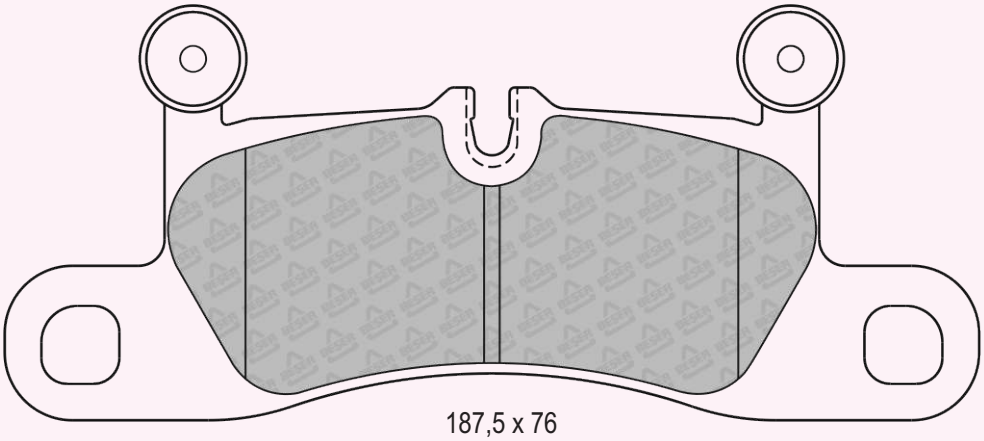

187,5 x 76
(NOT SCALE)

REFERENCE	T(mm)	REMARKS	MAKE	F/R	WVA No
4312	15,5	2 PADS WITH WEAR SENSOR	HONDA	F	25792 25793 25794

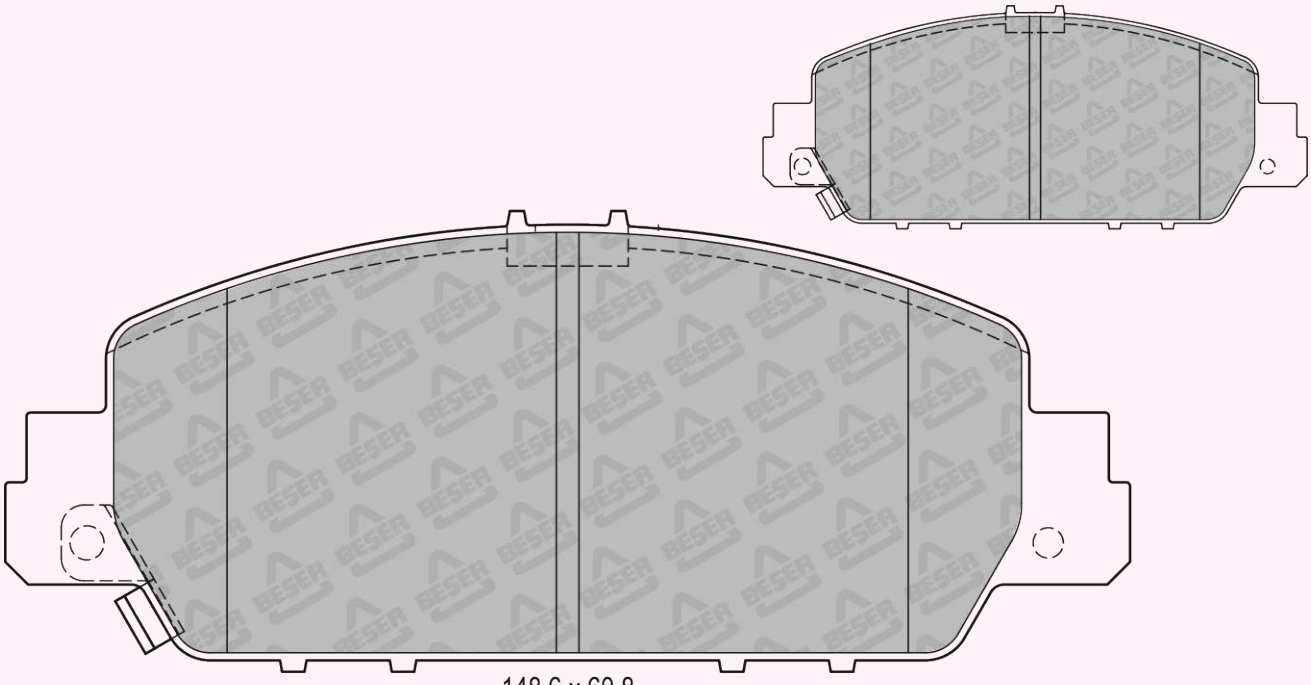

148,6 x 60,8

REFERENCE	T(mm)	REMARKS	MAKE	F/R	WVA No
4313	16,7	4 PADS PLAIN	MERCEDES BENZ	F	25179

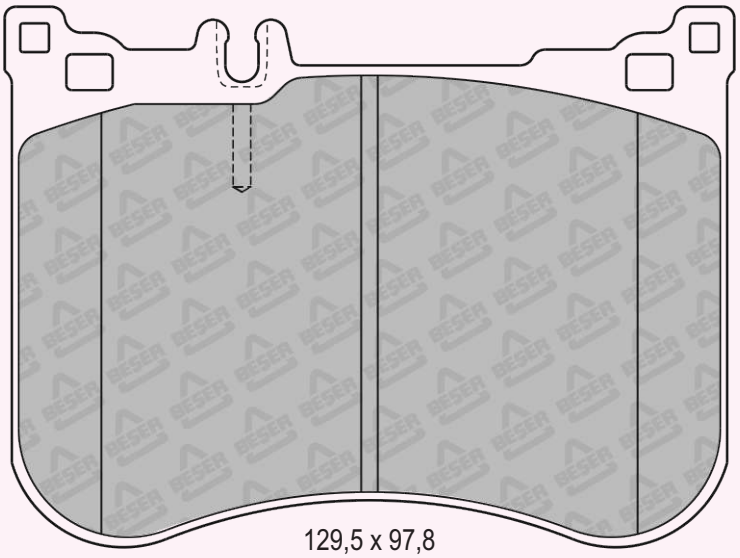

129,5 x 97,8
(NOT SCALE)

REFERENCE	T(mm)	REMARKS	MAKE	F/R	WVA No
4314	17,3	2 PADS INNER & 2 PADS OUTER	LAND ROVER	F	25021 25022 25203 25204

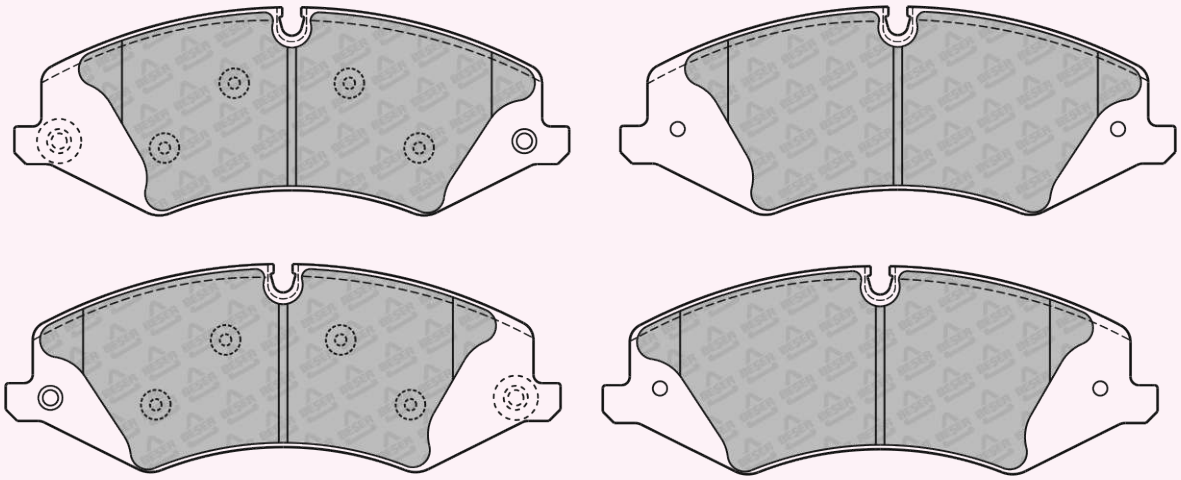

192,8 X 72,3
(NOT SCALE)

REFERENCE	T(mm)	REMARKS	MAKE	F/R	WVA No
4315	15,2	4 PADS PLAIN	MAZDA	F	25725

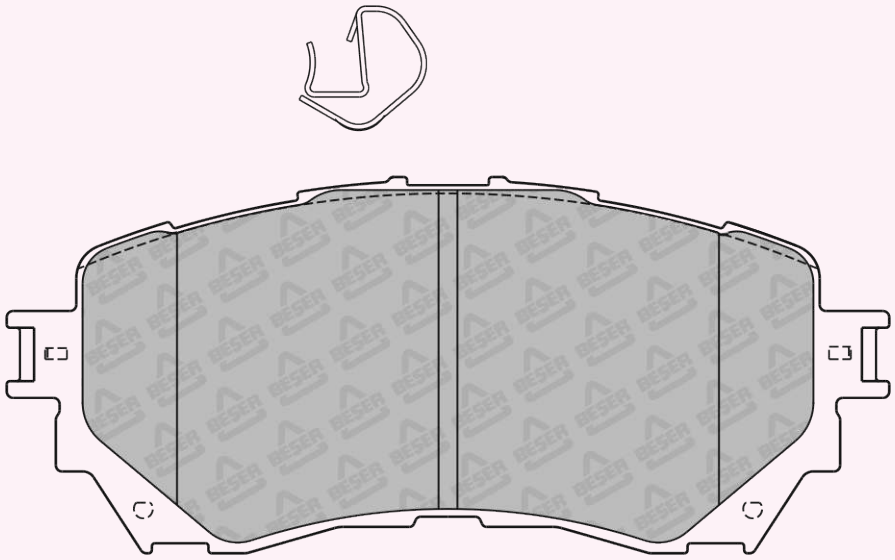

140,2 x 59,8
(NOT SCALE)

REFERENCE	T(mm)	REMARKS	MAKE	F/R	WVA No
4316	14,5	2 PADS WITH WEAR SENSOR	CITROEN - MAZDA MITSUBISHI - PEUGEOT	R	25688 25689 25690

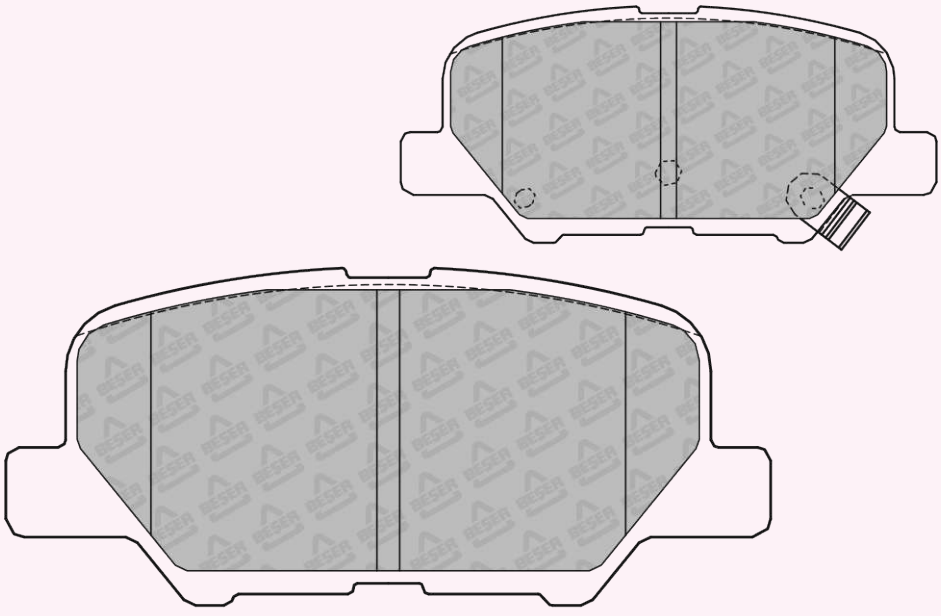

101 x 44,42

REFERENCE	T(mm)	REMARKS	MAKE	F/R	WVA No
4317	15,5	2 PADS WITH WEAR SENSOR	MAZDA	F	25875 25876 25877

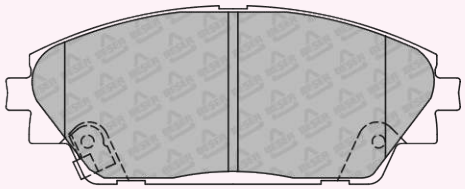

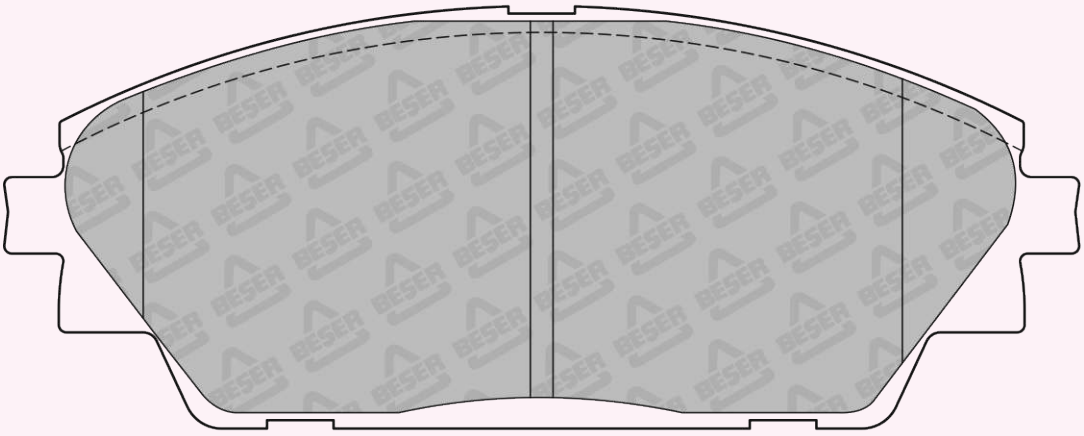

142 x 55,73

REFERENCE	T(mm)	REMARKS	MAKE	F/R	WVA No
4318	13,5	2 PADS WITH WEAR SENSOR	MAZDA	R	25878 25879 25880

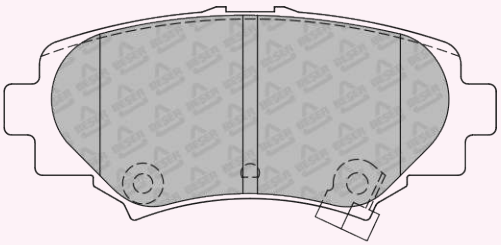

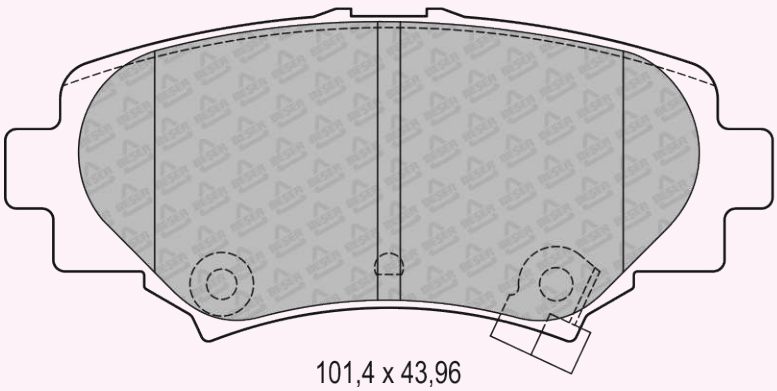

101,4 x 43,96

REFERENCE	T(mm)	REMARKS	MAKE	F/R	WVA No
4319	16,35	4 PADS WITH WEAR SENSOR	NISSAN	F	25581 25582

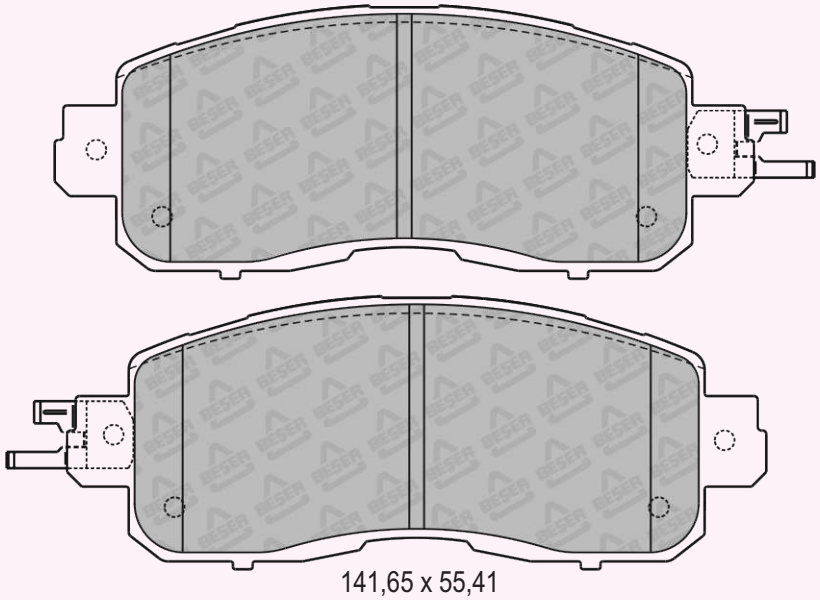

141,65 x 55,41
(NOT SCALE)

REFERENCE	T(mm)	REMARKS	MAKE	F/R	WVA No
4320	17,9	2 PADS PISTON CLIP	FORD U.S.A	R	-

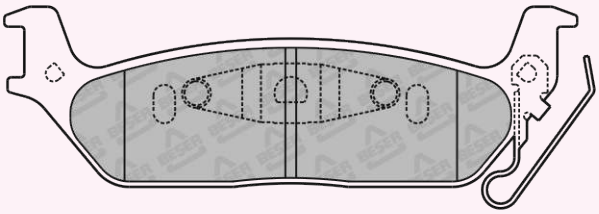

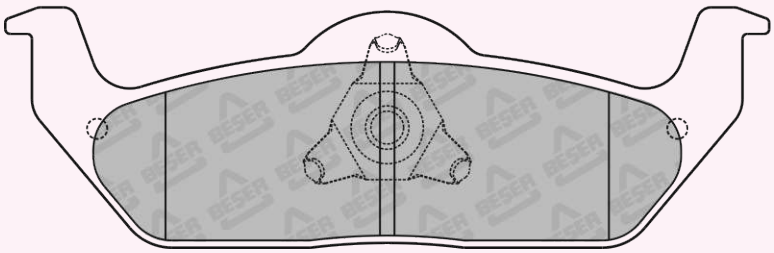

158,5 X 49,8
(NOT SCALE)

REFERENCE	T(mm)	REMARKS	MAKE	F/R	WVA No
4321	16,7	2 PADS WITH WEAR SENSOR	HYUNDAI - KIA	F	25976 25977 25978

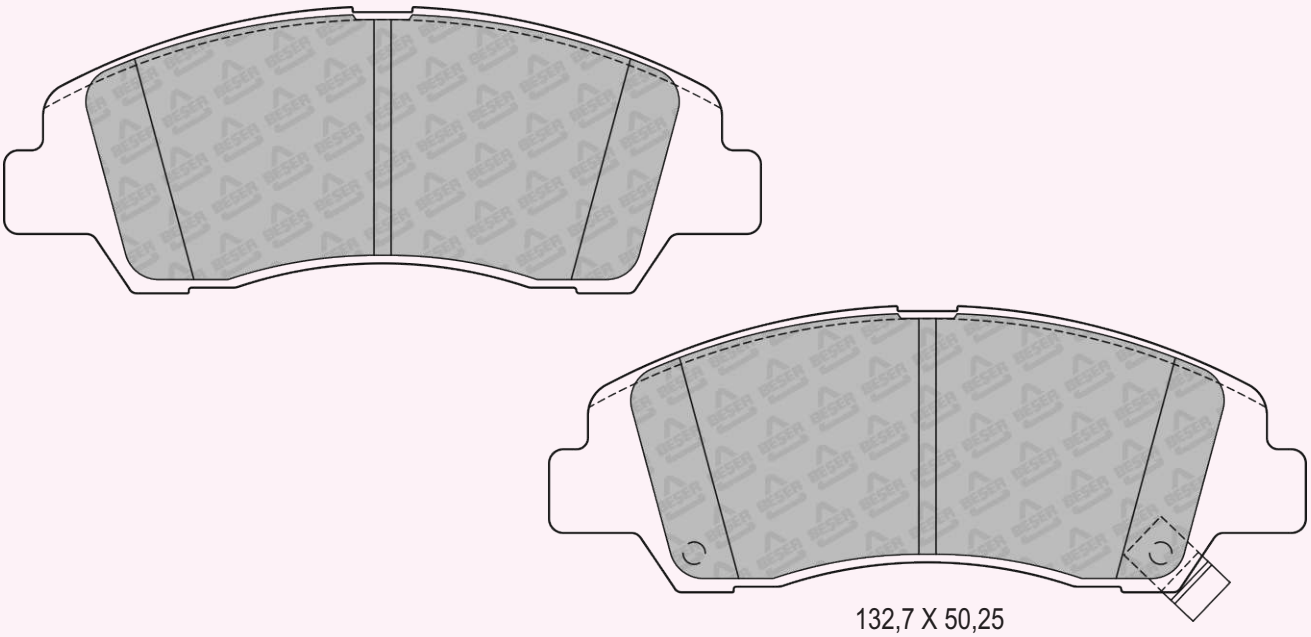

132,7 X 50,25
(NOT SCALE)

REFERENCE	T(mm)	REMARKS	MAKE	F/R	WVA No
4323	17,3	4 PADS PLAIN	LAND ROVER	R	25720

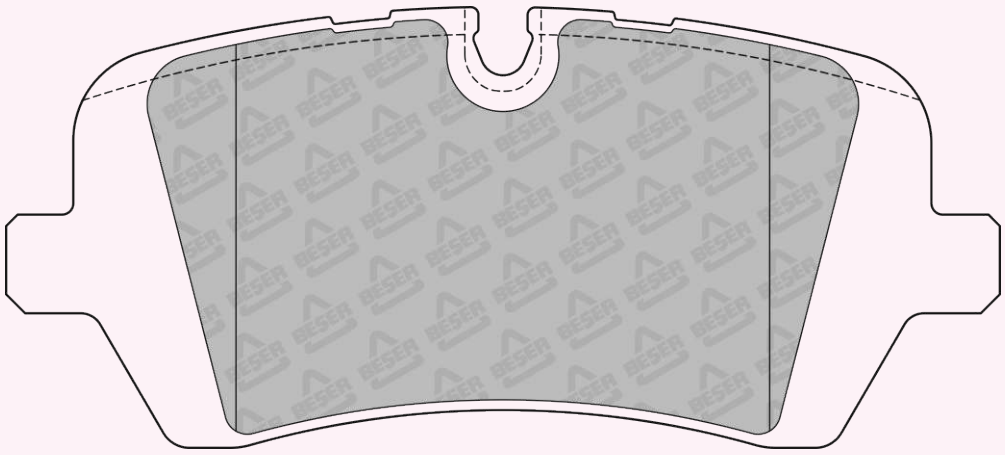

131,3 x 58,1

REFERENCE	T(mm)	REMARKS	MAKE	F/R	WVA No
4324	17,4	2 PADS WITH WEAR SENSOR	NISSAN	F	25240 25241 25242

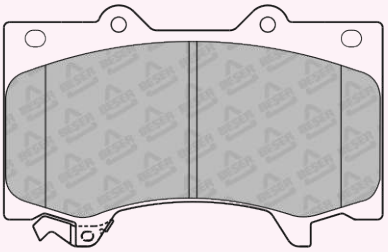

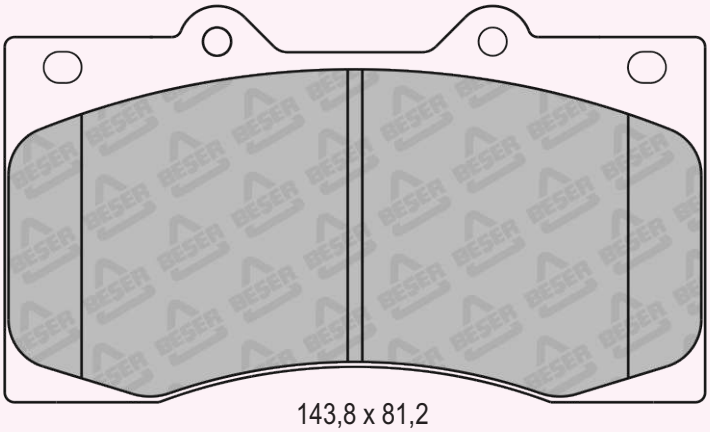

143,8 x 81,2
(NOT SCALE)

REFERENCE	T(mm)	REMARKS	MAKE	F/R	WVA No
4325	16,5	4 PADS PLAIN	BMW	R	24561 24562

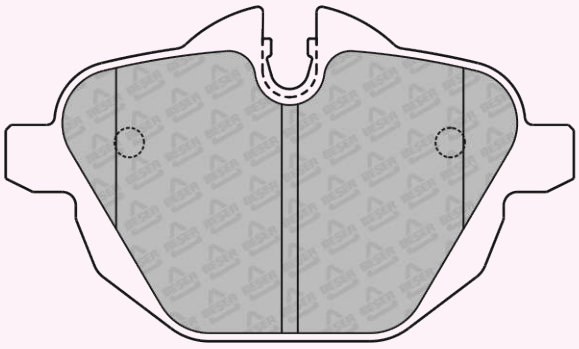

106,2 x 62,3
(NOT SCALE)

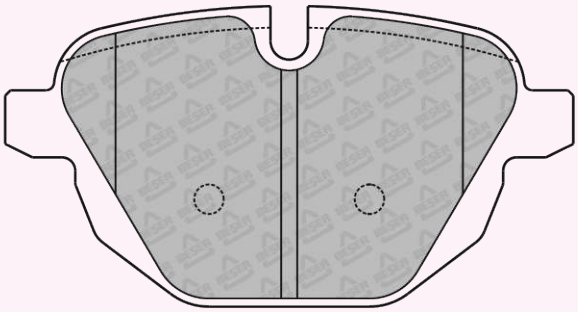

106,2 x 56,0
(NOT SCALE)

REFERENCE	T(mm)	REMARKS	MAKE	F/R	WVA No
4325/1	16,5	4 PADS PLAIN	BMW	R	24561 24562

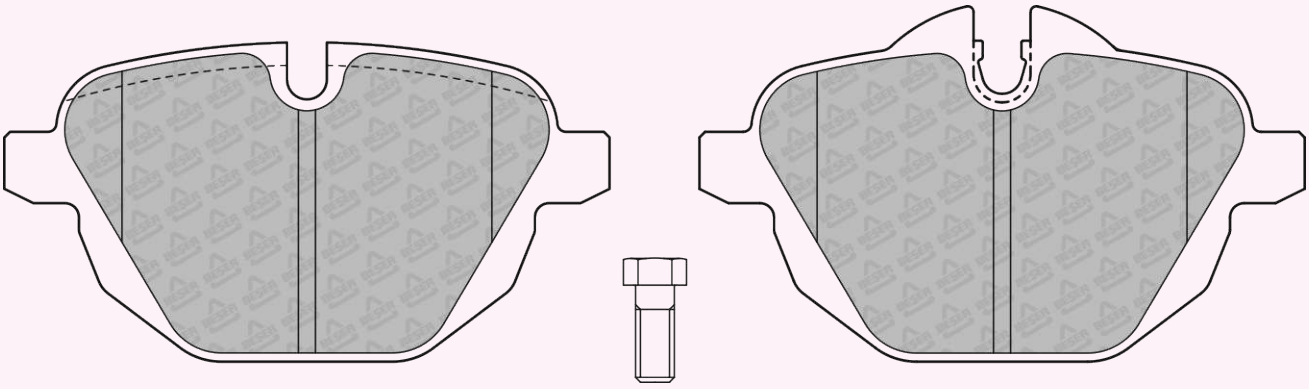

106,2 x 56,1
(NOT SCALE)

106,2 x 62,3
(NOT SCALE)

REFERENCE	T(mm)	REMARKS	MAKE	F/R	WVA No
4326	19	4 PADS PLAIN	MERCEDES BENZ	F	24869

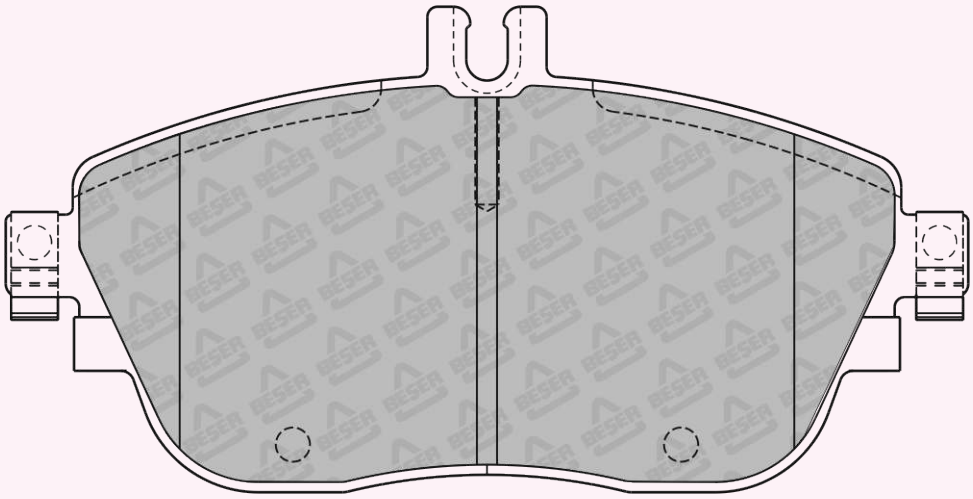

143,8 x 72,4
(NOT SCALE)

REFERENCE	T(mm)	REMARKS	MAKE	F/R	WVA No
4327	16,0	4 PADS PLAIN	DODGE	F	-

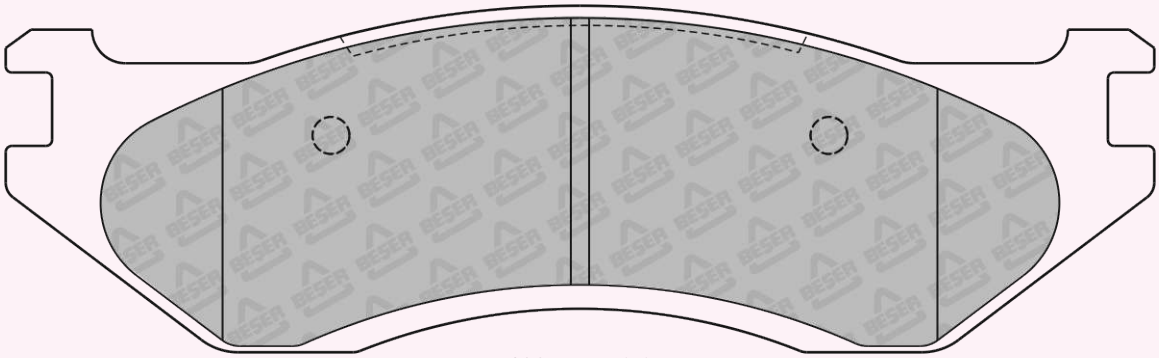

188,57 x 56,6
(NOT SCALE)

REFERENCE	T(mm)	REMARKS	MAKE	F/R	WVA No
4328	17,21	4 PADS PLAIN	NISSAN	F	22223

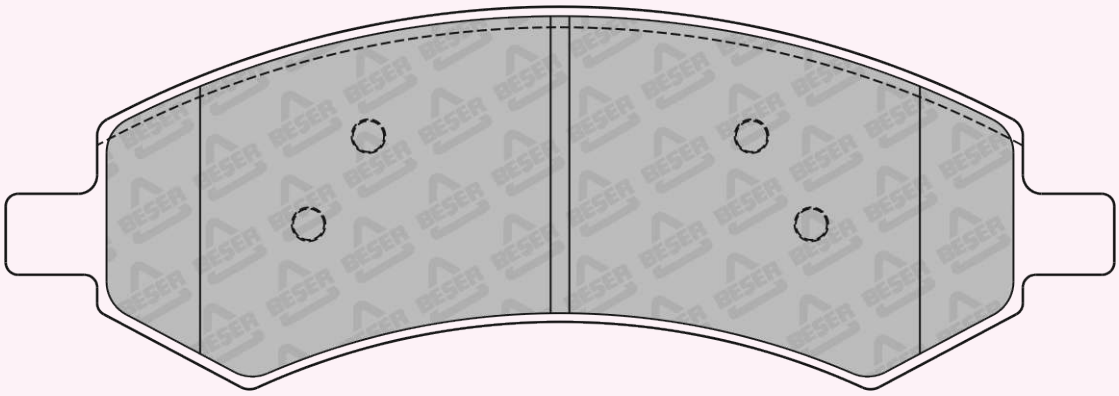

177,8 x 61,2
(NOT SCALE)

REFERENCE	T(mm)	REMARKS	MAKE	F/R	WVA No
4329	15,3	4 PADS PLAIN	CHRYSLER-DODGE	R	24803

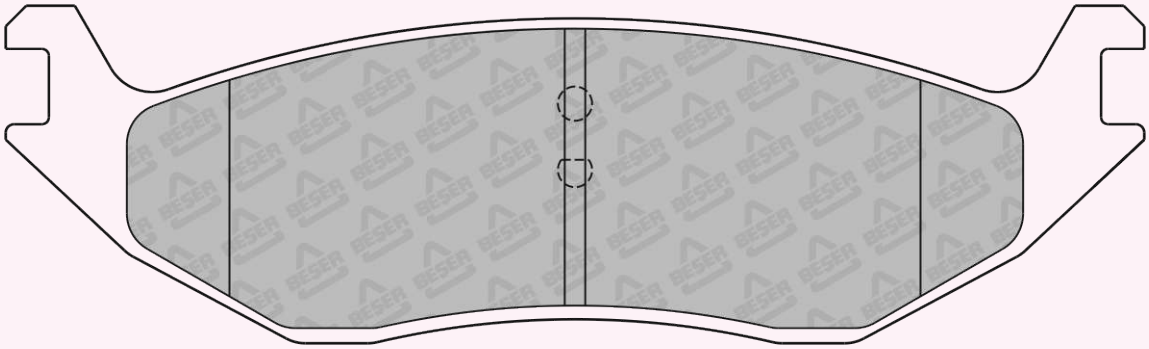

166,2 x 49,3
(NOT SCALE)

REFERENCE	T(mm)	REMARKS	MAKE	F/R	WVA No
4330	16,5	2 PADS WITH WEAR SENSOR	CHEVROLET	F	24817

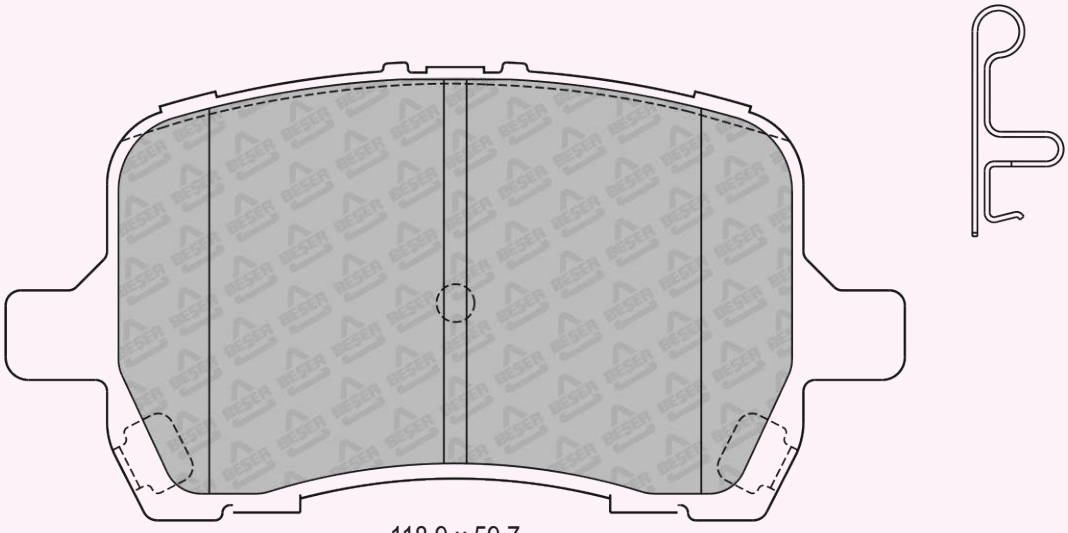

118,9 x 59,7
(NOT SCALE)

REFERENCE	T(mm)	REMARKS	MAKE	F/R	WVA No
4331	13,46	2 PADS WITH WEAR SENSOR	CHEVROLET	R	24789 24790 24791

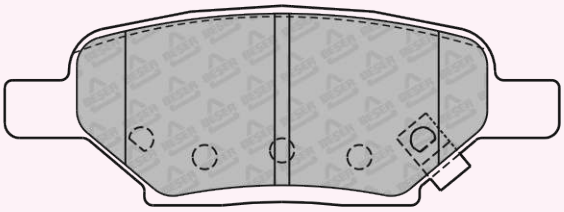

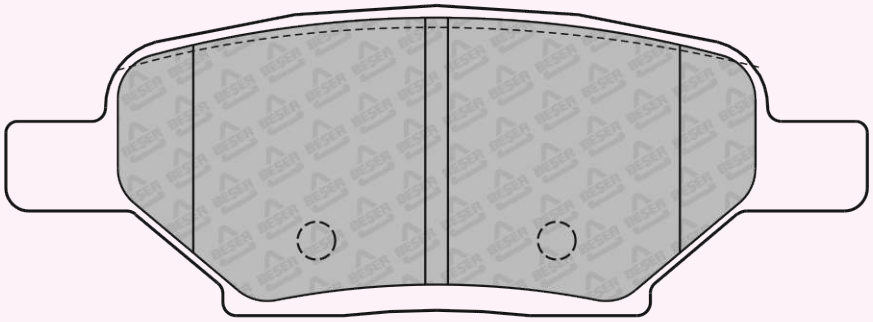

113,84 x 40,9

REFERENCE	T(mm)	REMARKS	MAKE	F/R	WVA No
4332	16,7	4 PADS WITH WEAR SENSOR	FORD	F	24513

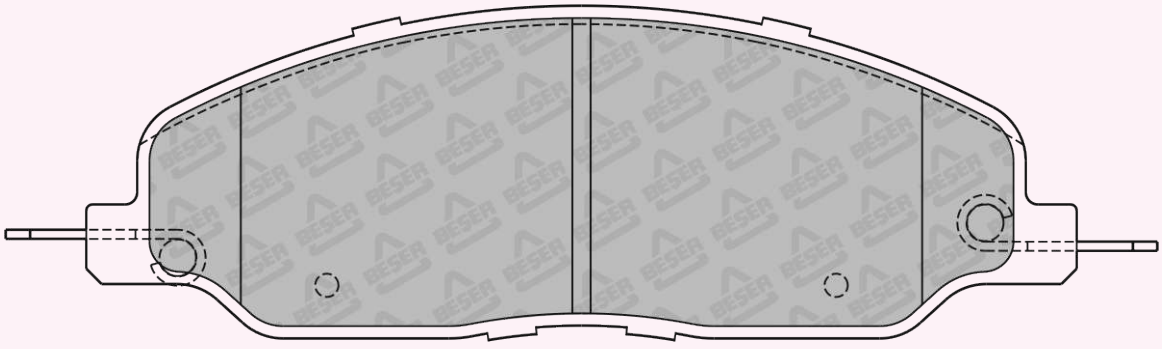

162,6 x 54,5
(NOT SCALE)

REFERENCE	T(mm)	REMARKS	MAKE	F/R	WVA No
4333	16,41	4 PADS PLAIN	FORD	R	24514

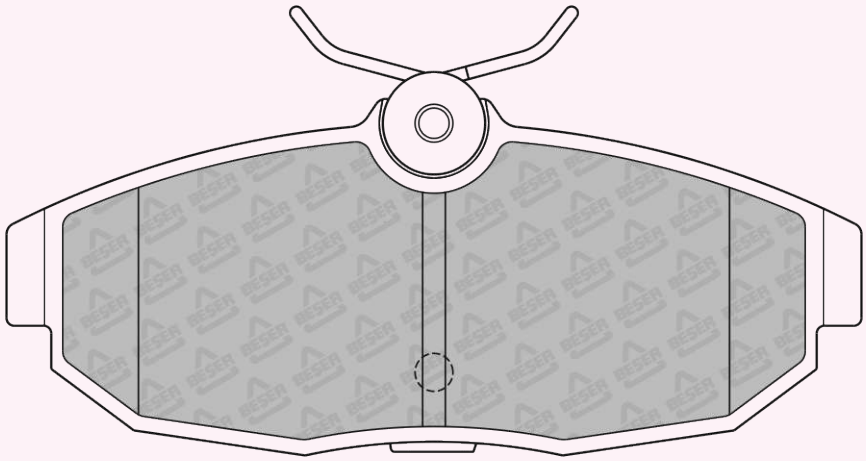

112,9 x 47,2

REFERENCE	T(mm)	REMARKS	MAKE	F/R	WVA No
4334	19	4 PADS PLAIN	MERCEDES BENZ	F	22031 22032

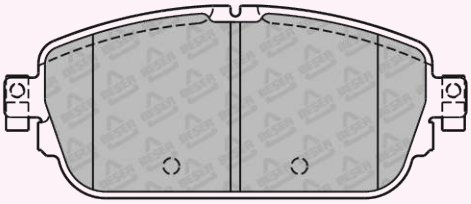

144,2 X 60,2
(NOT SCALE)

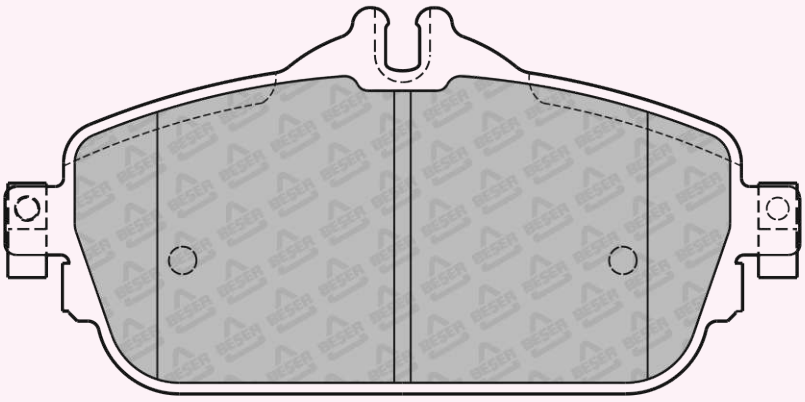

144,2 X 70
(NOT SCALE)

REFERENCE	T(mm)	REMARKS	MAKE	F/R	WVA No
4335	17,5	2 PADS INNER & 2 PADS OUTER	MERCEDES BENZ	R	25071 25072

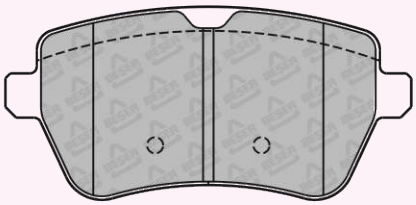

116,4 X 55,3
(NOT SCALE)

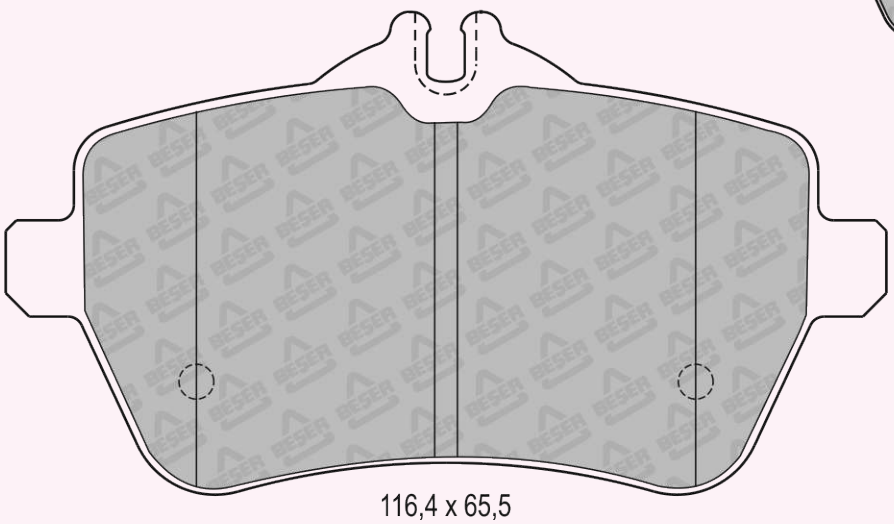

116,4 x 65,5

REFERENCE	T(mm)	REMARKS	MAKE	F/R	WVA No
4336	15,9	4 PADS PLAIN	AUDI - SEAT SKODA - VW	R	25109 25110

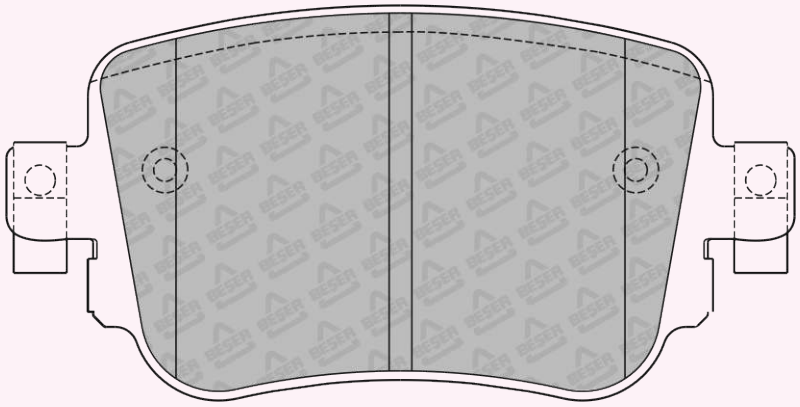

104,1 x 52,1

REFERENCE	T(mm)	REMARKS	MAKE	F/R	WVA No
4337	16,6	2 PADS WITH WEAR SENSOR	CHEVROLET - TOYOTA	F	25268 25269 25270

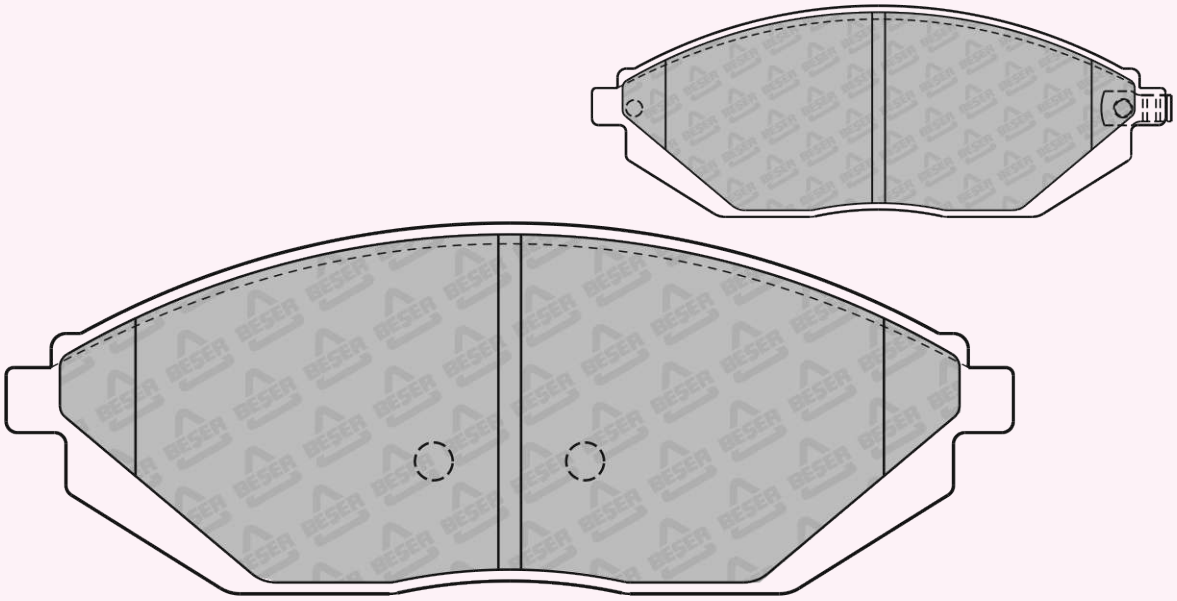

133,1 X 49
(NOT SCALE)

REFERENCE	T(mm)	REMARKS	MAKE	F/R	WVA No
4338	18,1	2 PADS WITH WEAR SENSOR	DODGE - JEEP MERCEDES	F	25190 25191 25192

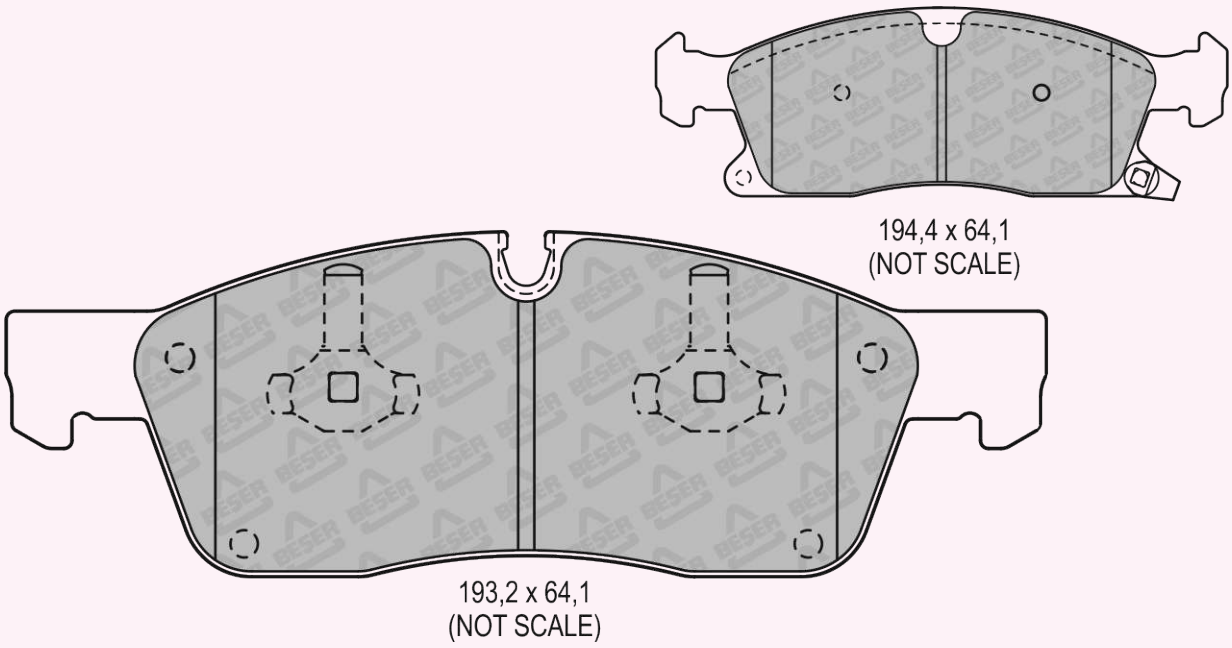

194,4 x 64,1
(NOT SCALE)

193,2 x 64,1
(NOT SCALE)

REFERENCE	T(mm)	REMARKS	MAKE	F/R	WVA No
4339	16,5	2 PADS WITH WEAR SENSOR	DODGE - JEEP	R	25196 25197 25198

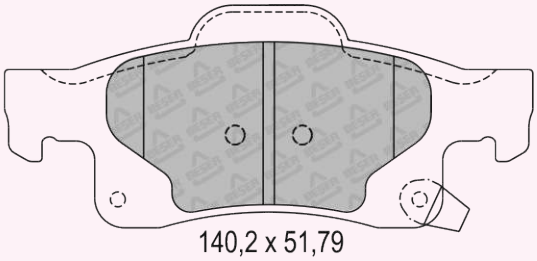

140,2 x 51,79
(NOT SCALE)

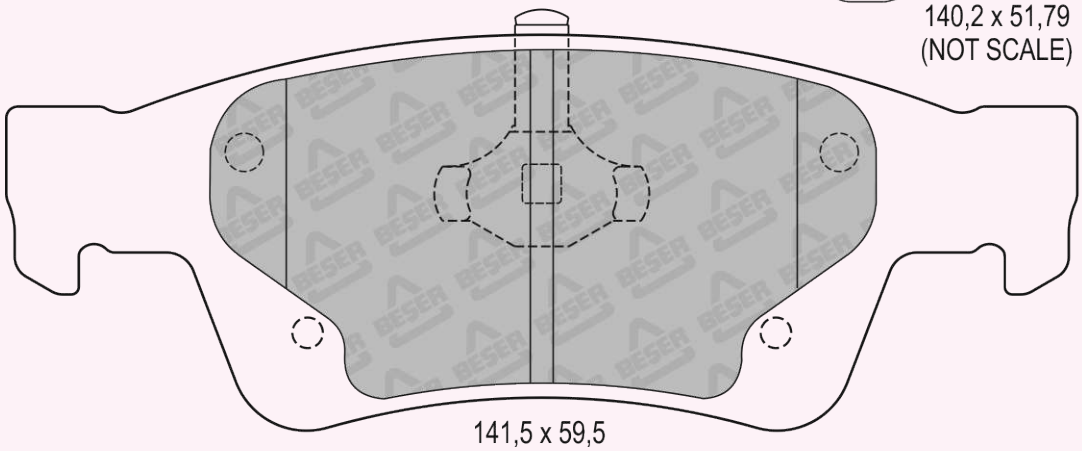

141,5 x 59,5

REFERENCE	T(mm)	REMARKS	MAKE	F/R	WVA No
4340	19,3	4 PADS PLAIN	AUSTRALIA / USA - FORD	F	-

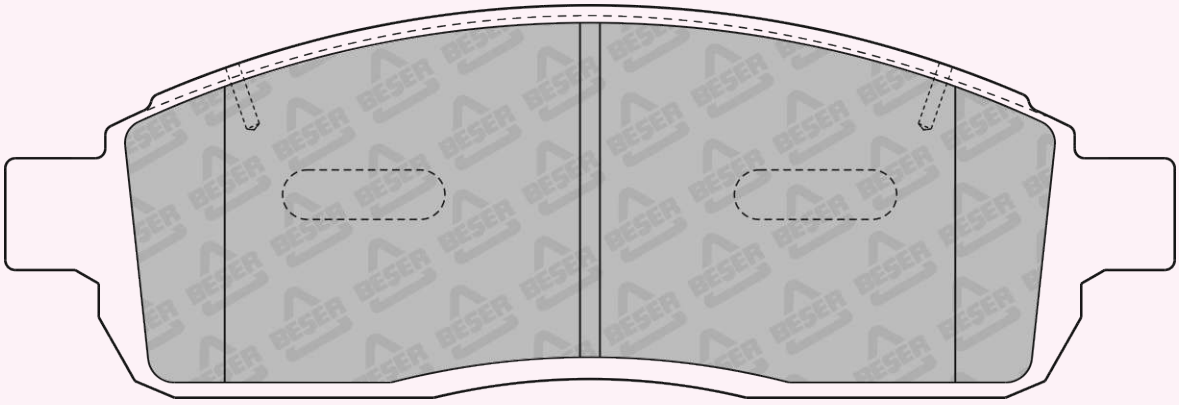

176 x 58,7
(NOT SCALE)

REFERENCE	T(mm)	REMARKS	MAKE	F/R	WVA No
4341	15,5	4 PADS WITH WEAR SENSOR	INFINITY - NISSAN	F	25588 25589

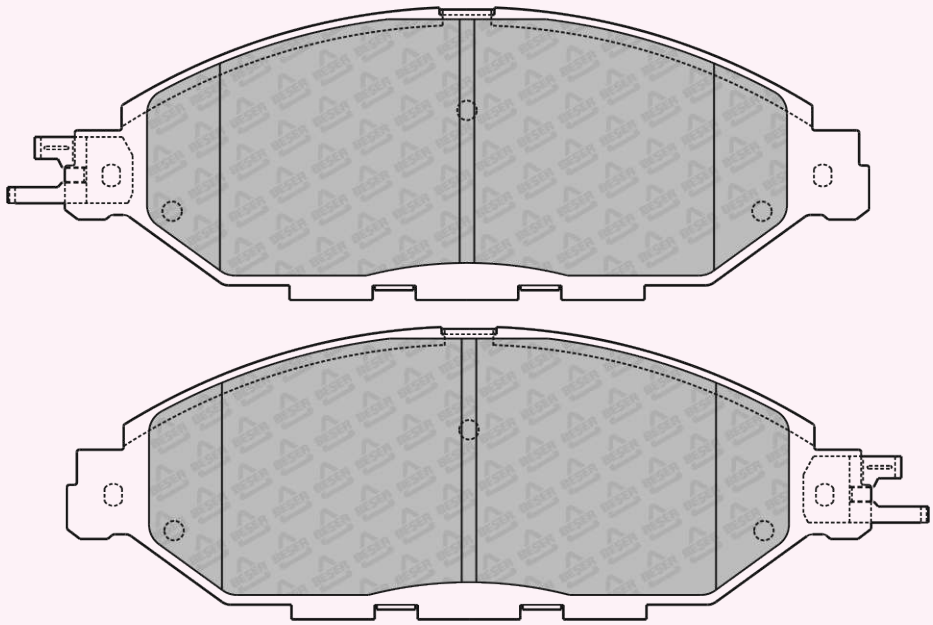

165,4 x 60,1
(NOT SCALE)

REFERENCE	T(mm)	REMARKS	MAKE	F/R	WVA No
4342	18	2 PADS WITH WEAR SENSOR	HYUNDAI - KIA	F	25708 25709 25710

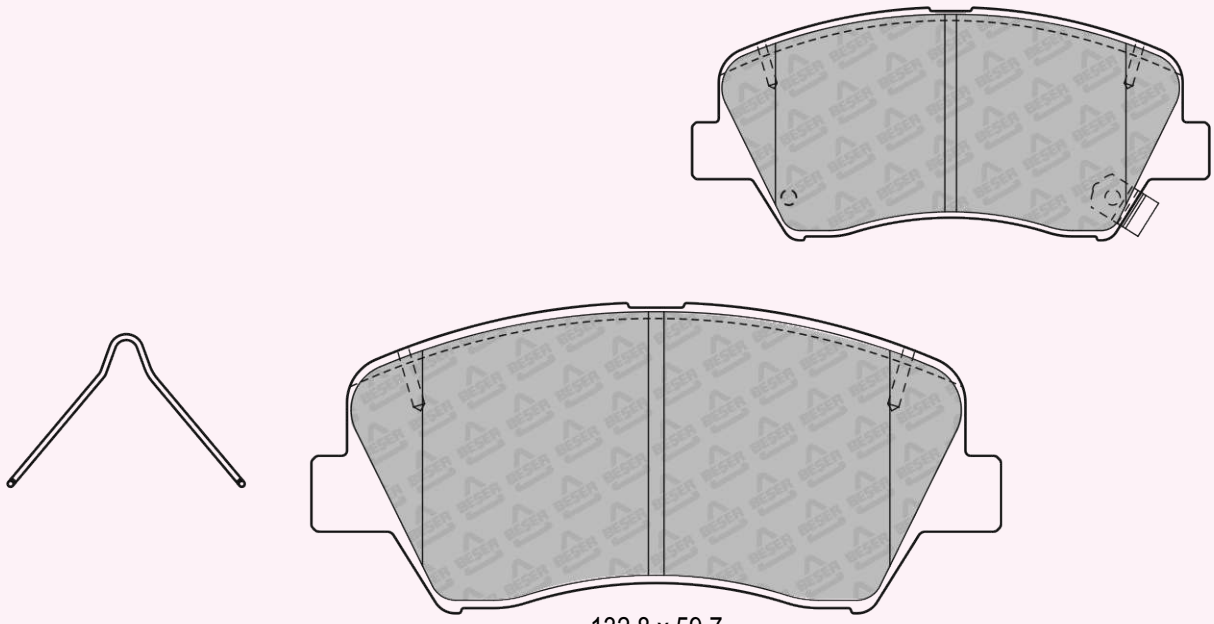

132,8 x 59,7
(NOT SCALE)

REFERENCE	T(mm)	REMARKS	MAKE	F/R	WVA No
4343	15,5	2 PADS WITH WEAR SENSOR	DODGE - HYUNDAI KIA - SSANGYONG	R	25337 25338 25339

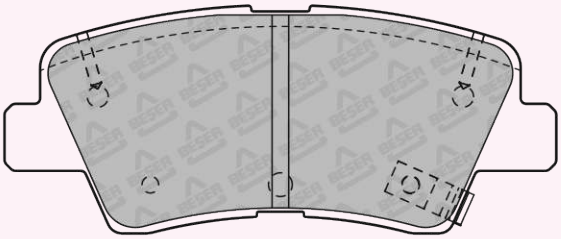

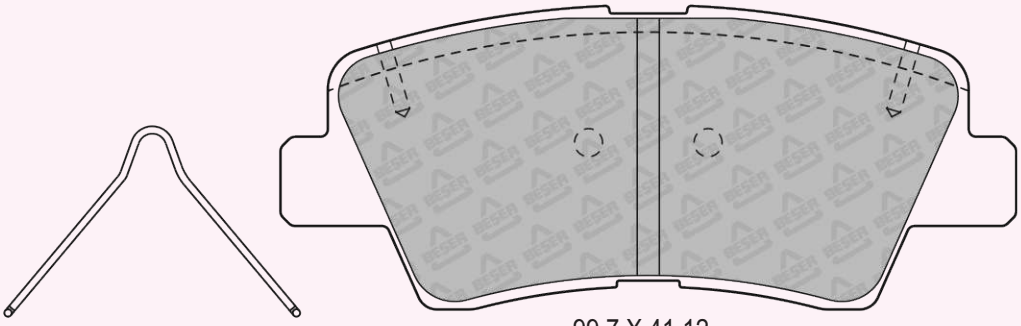

99,7 X 41,12
(NOT SCALE)

REFERENCE	T(mm)	REMARKS	MAKE	F/R	WVA No
4344	18	2 PADS WITH WEAR SENSOR	GAZ	R	-

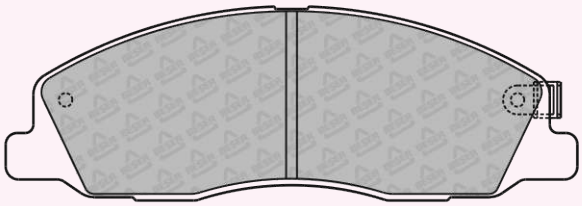

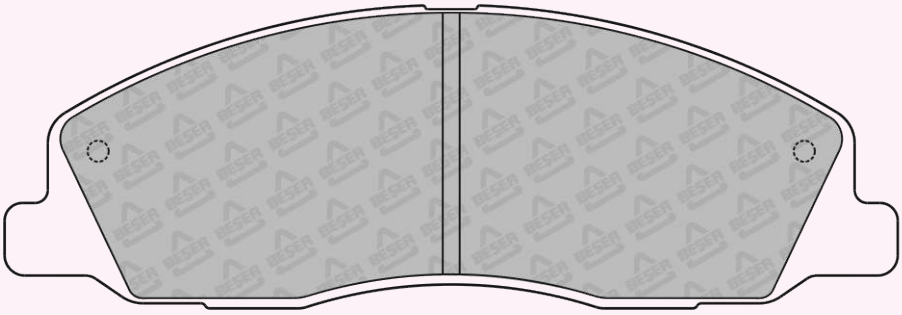

175,4 x 59,63
(NOT SCALE)

REFERENCE	T(mm)	REMARKS	MAKE	F/R	WVA No
4345	16,5	1 PAD WITH WEAR SENSOR	VOLKSWAGEN	R	23224 23446

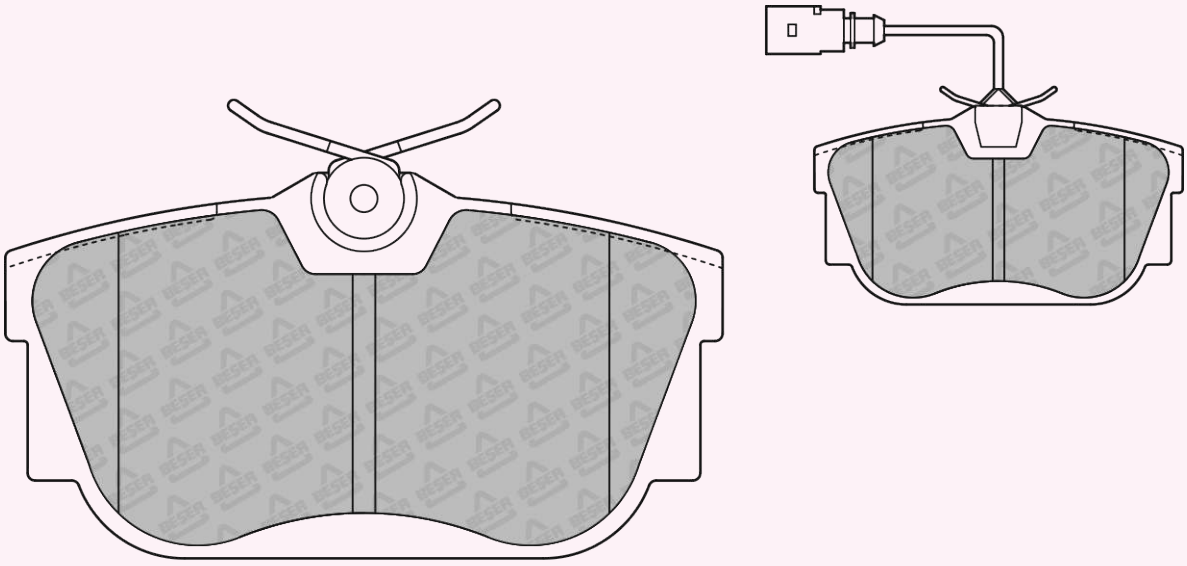

94,8 x 51

REFERENCE	T(mm)	REMARKS	MAKE	F/R	WVA No
4346	20,3	2 PADS PISTON CLIP	BMW	F	23793 23794

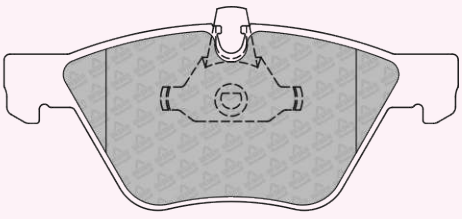

155,1x63,72

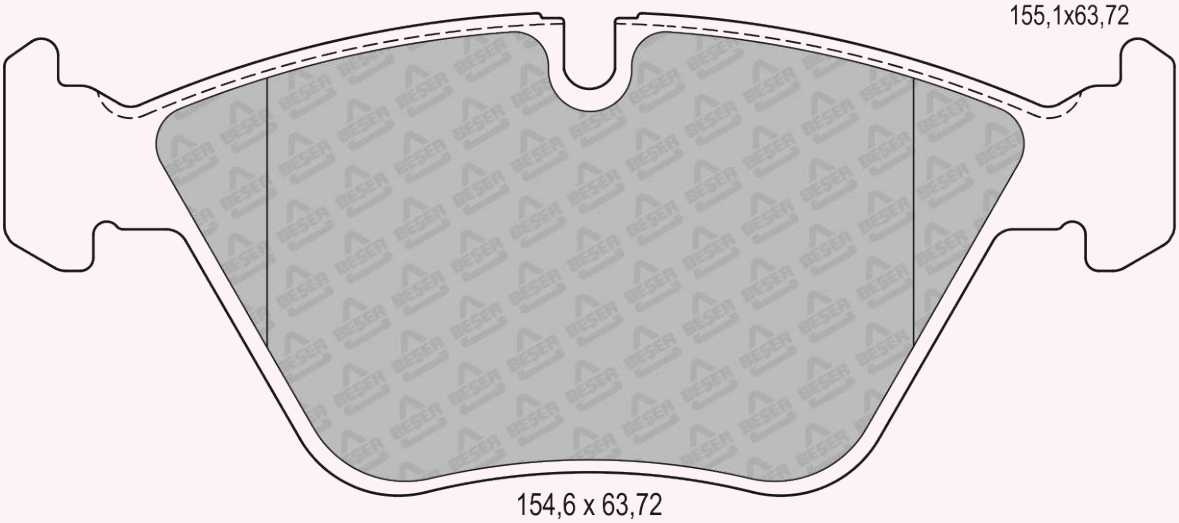

154,6 x 63,72

REFERENCE	T(mm)	REMARKS	MAKE	F/R	WVA No
4349	16,1	2 PADS INNER & 2 PADS OUTER	MERCEDES BENZ	R	25353 25354

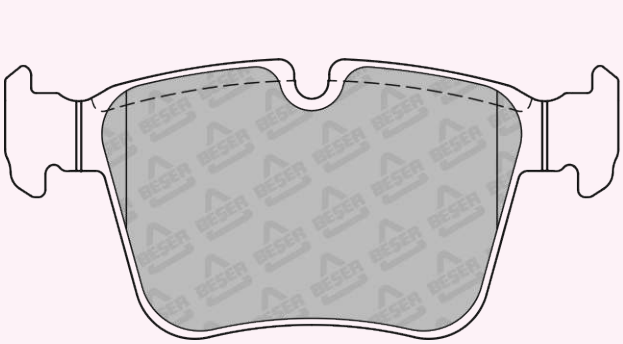

122,4 x 55,7
(NOT SCALE)

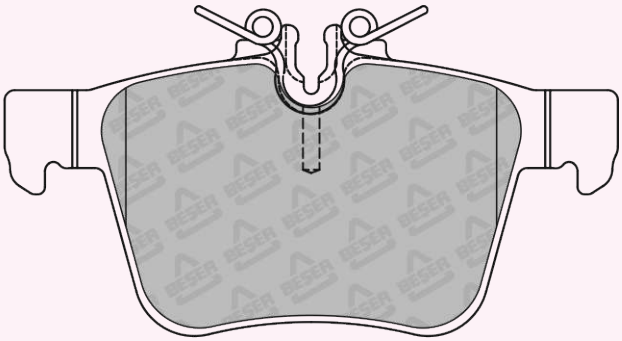

122,4 x 62
(NOT SCALE)

REFERENCE	T(mm)	REMARKS	MAKE	F/R	WVA No
4350	20,6	4 PADS PLAIN	MAN - VOLKSWAGEN	F/R	22147

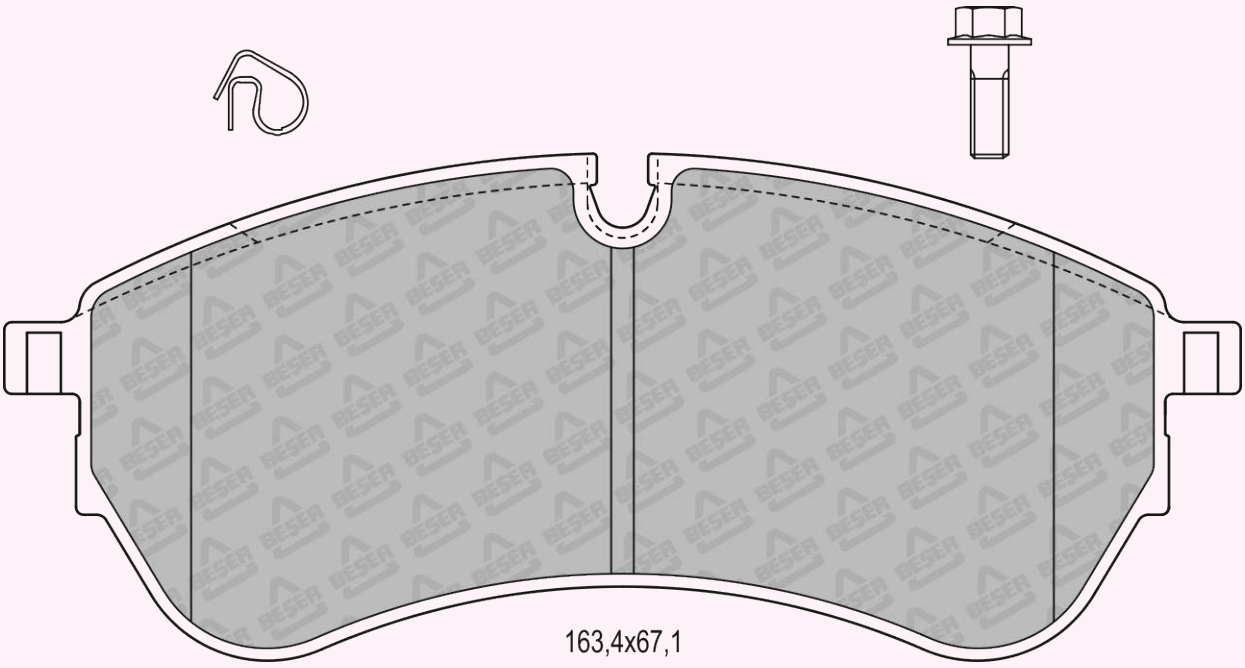

163,4x67,1

REFERENCE	T(mm)	REMARKS	MAKE	F/R	WVA No
4350/1	20,6	4 PADS PLAIN	MAN - VOLKSWAGEN	F/R	22147

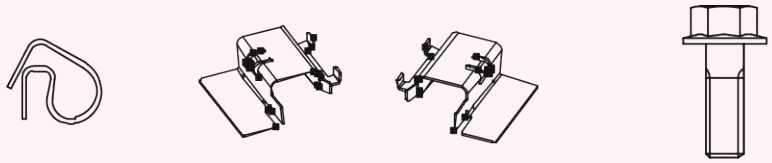

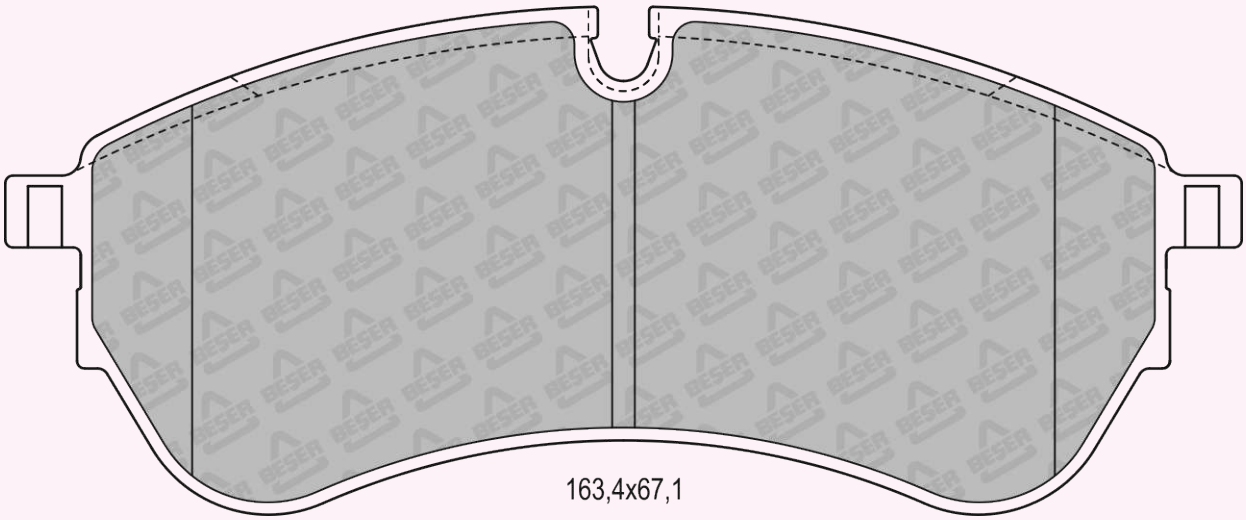

163,4x67,1

REFERENCE	T(mm)	REMARKS	MAKE	F/R	WVA No
4351	17	2 PADS WITH WEAR SENSOR	FORD	F	22034

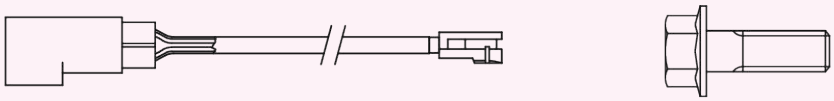

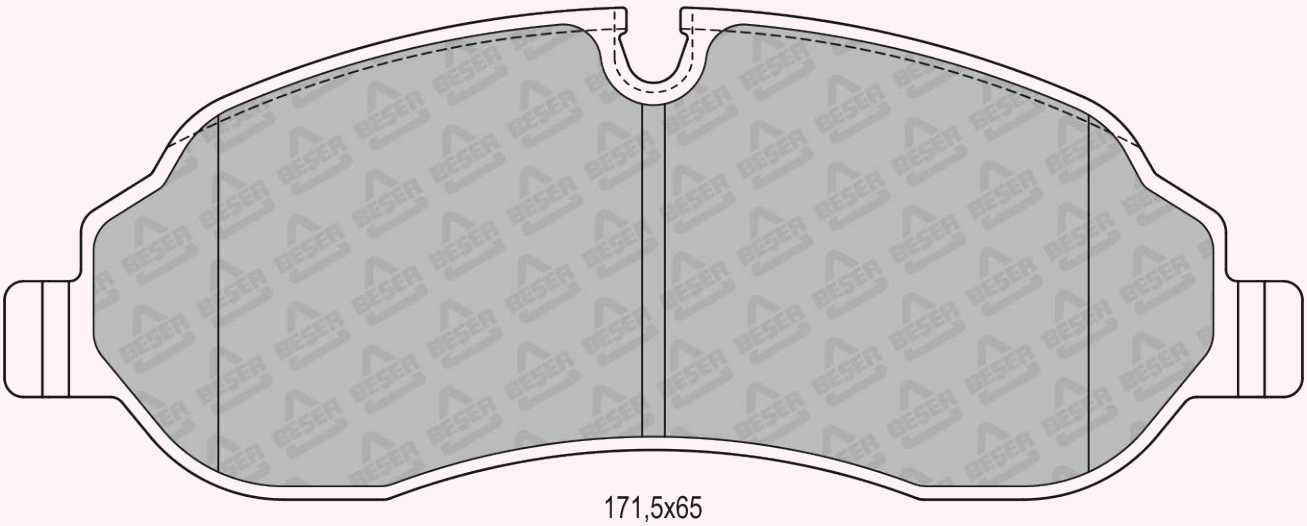

171,5x65

REFERENCE	T(mm)	REMARKS	MAKE	F/R	WVA No
4351/1	17	4 PADS PLAIN	FORD	F	22034

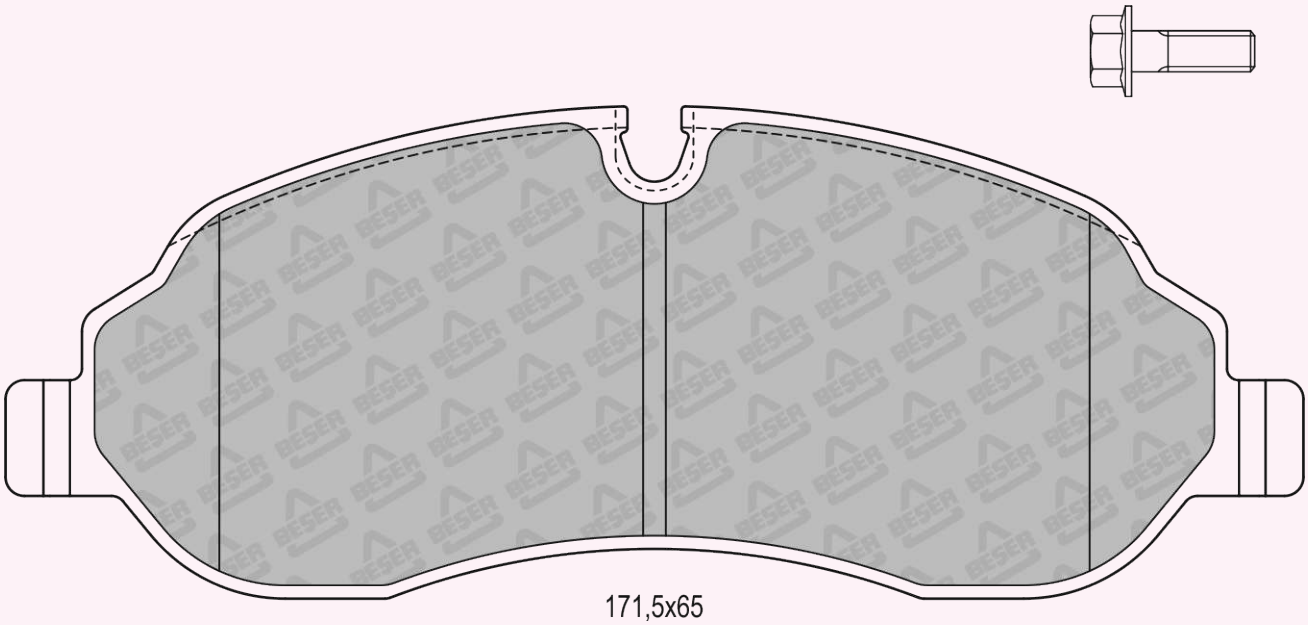

171,5x65

REFERENCE	T(mm)	REMARKS	MAKE	F/R	WVA No
4352	20,5	4 PADS PLAIN	BMC - OTOKAR	F/R	-

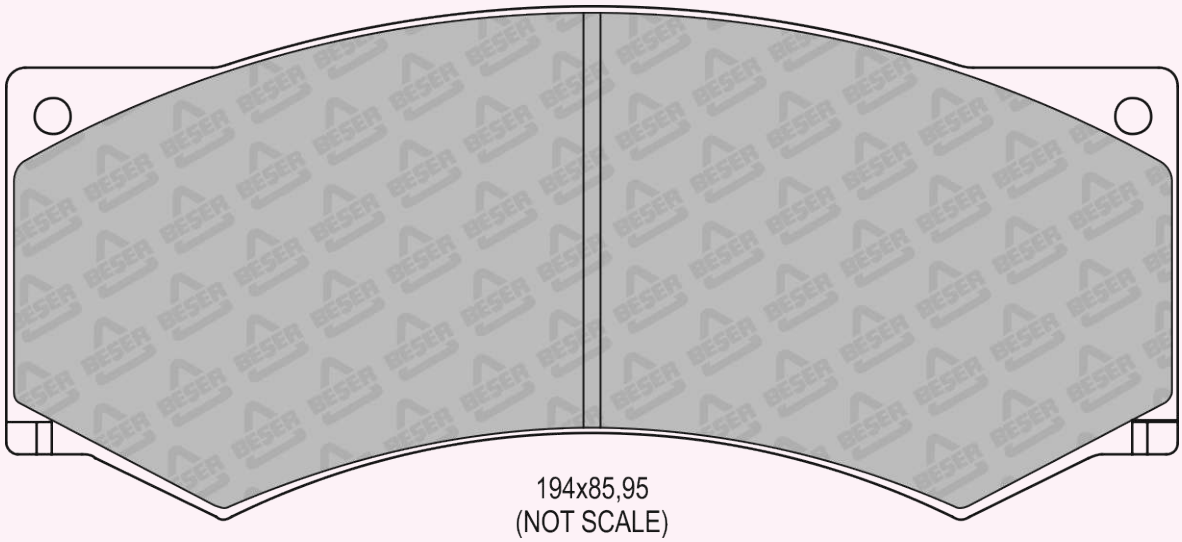

194x85,95
(NOT SCALE)

REFERENCE	T(mm)	REMARKS	MAKE	F/R	WVA No
4353	16,8	2 PADS WITH WEAR SENSOR	HYUNDAI - KIA	F	22329 22330 22331

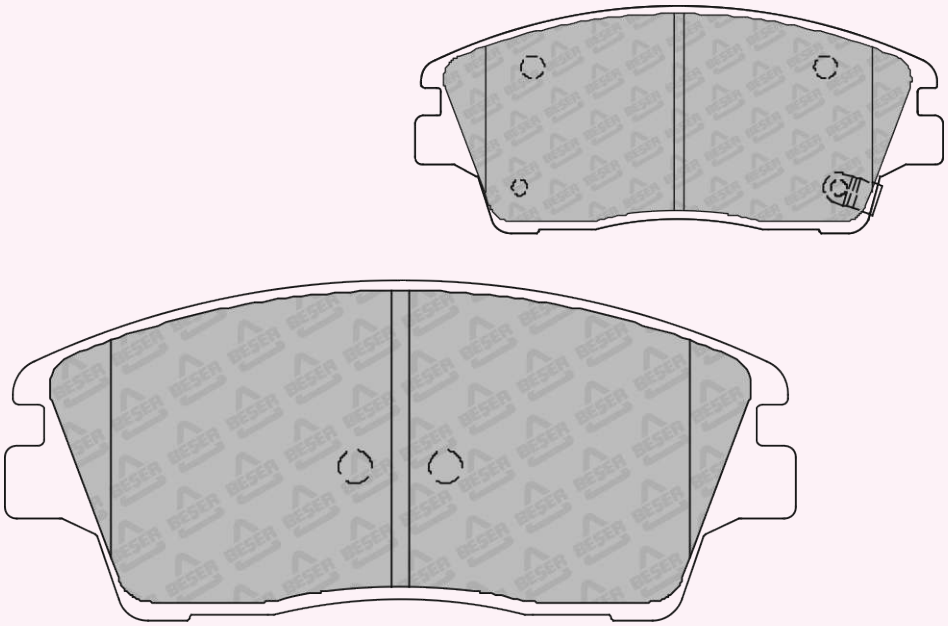

140,5x60,5
(NOT SCALE)

REFERENCE	T(mm)	REMARKS	MAKE	F/R	WVA No
4354	19	4 PADS PLAIN	ISUZU	F	25800

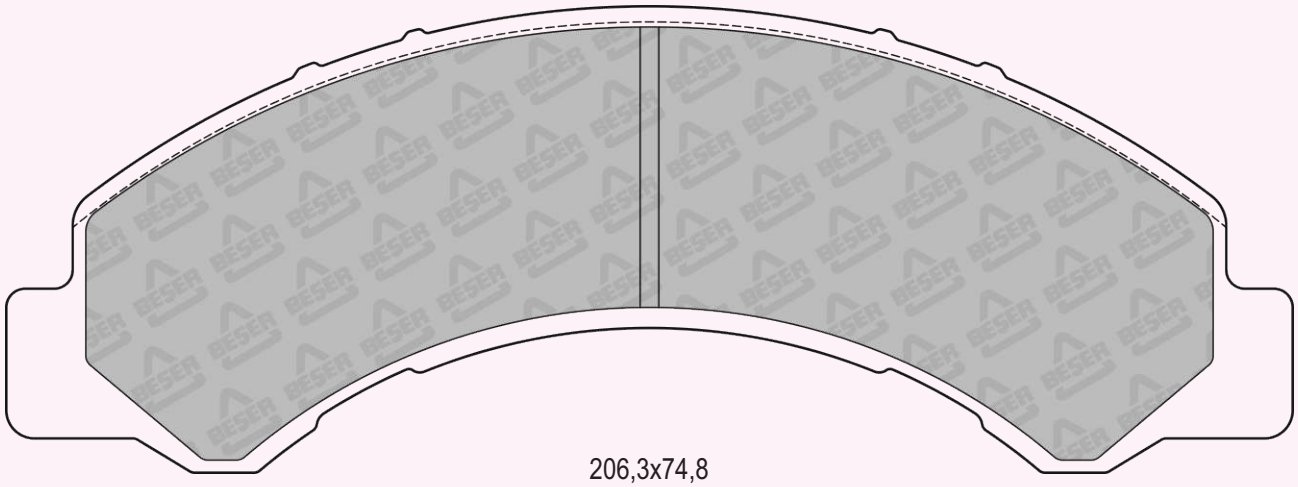

206,3x74,8
(NOT SCALE)

REFERENCE	T(mm)	REMARKS	MAKE	F/R	WVA No
4355	19,8	4 PADS PLAIN	MERCEDES-BENZ	R	20747

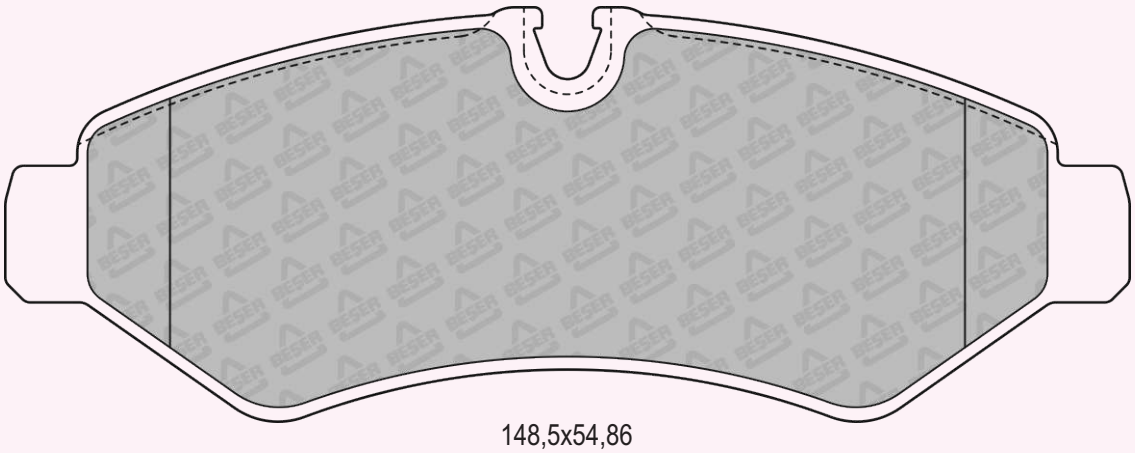

148,5x54,86

REFERENCE	T(mm)	REMARKS	MAKE	F/R	WVA No
4356	20	4 PADS PLAIN	MAN - VOLKSWAGEN	F	22178

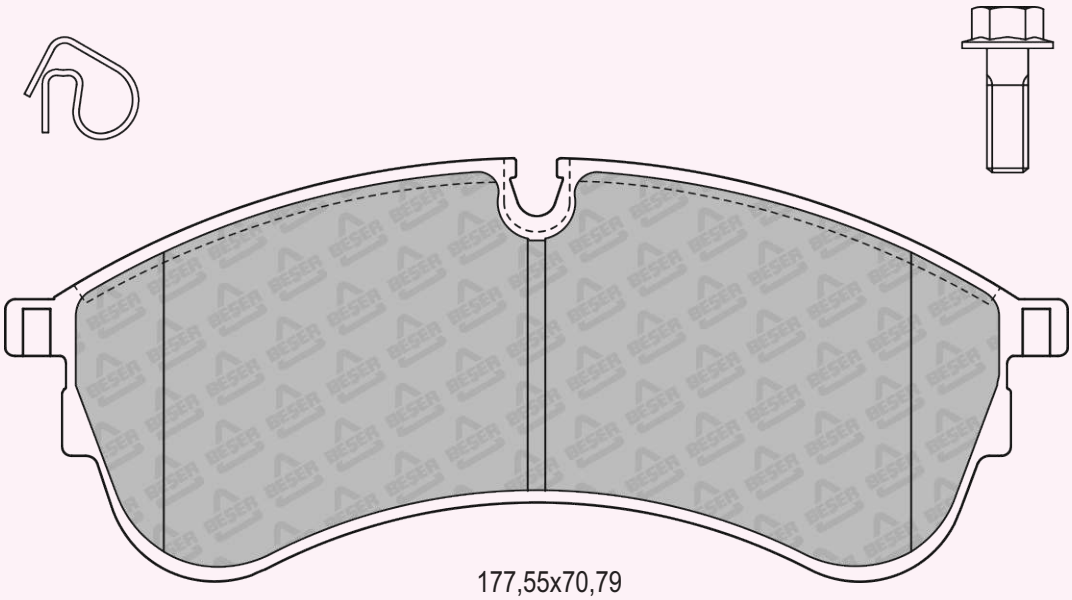

177,55x70,79
(NOT SCALE)

REFERENCE	T(mm)	REMARKS	MAKE	F/R	WVA No
4356/1	20	4 PADS PLAIN	MAN - VOLKSWAGEN	F	22178

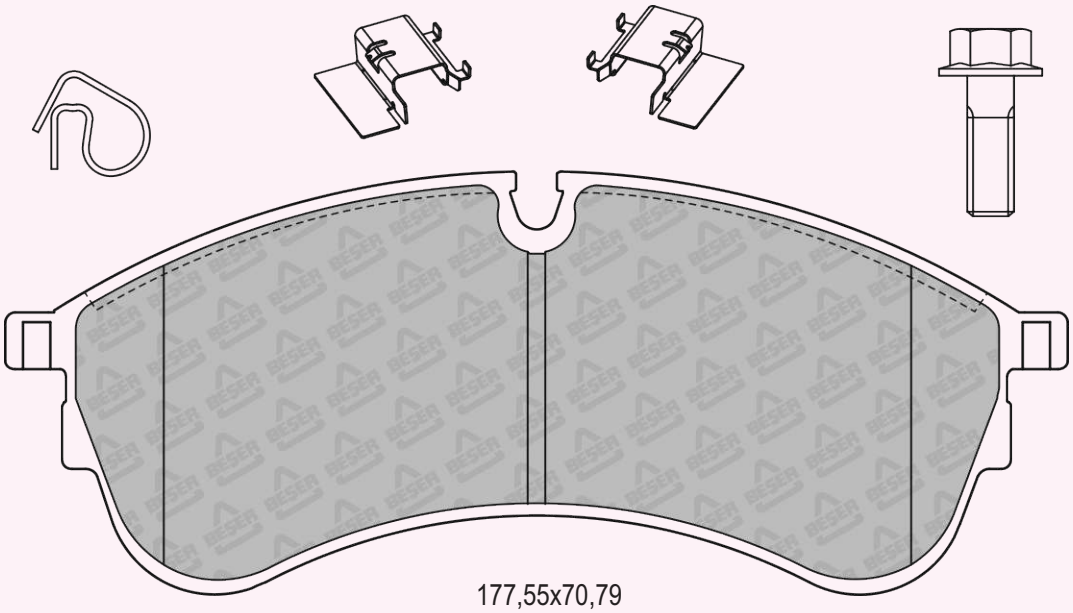

177,55x70,79
(NOT SCALE)

REFERENCE	T(mm)	REMARKS	MAKE	F/R	WVA No
4357	19	4 PADS PLAIN	MAN - VOLKSWAGEN	R	22802

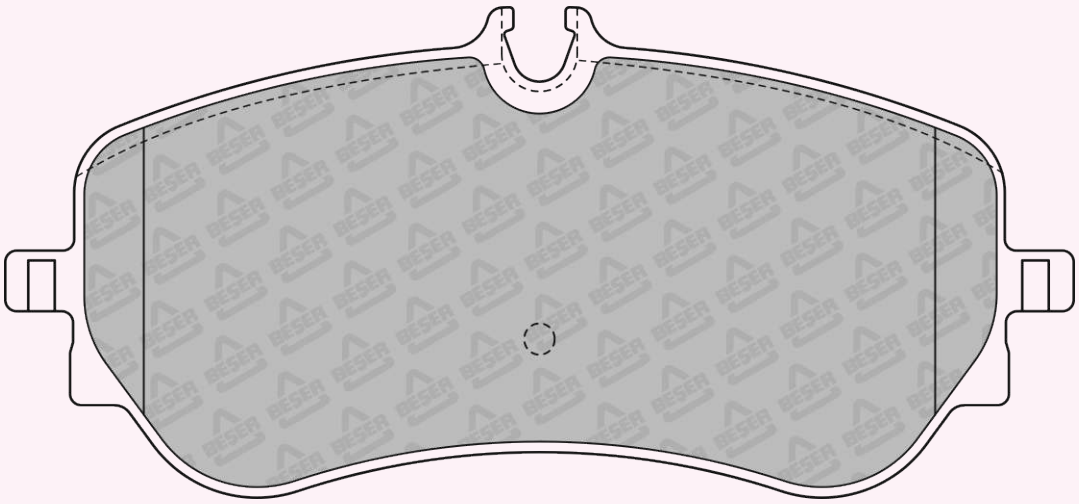

141,2x64,7

REFERENCE	T(mm)	REMARKS	MAKE	F/R	WVA No
4357/1	19	4 PADS PLAIN	MAN - VOLKSWAGEN	R	22802

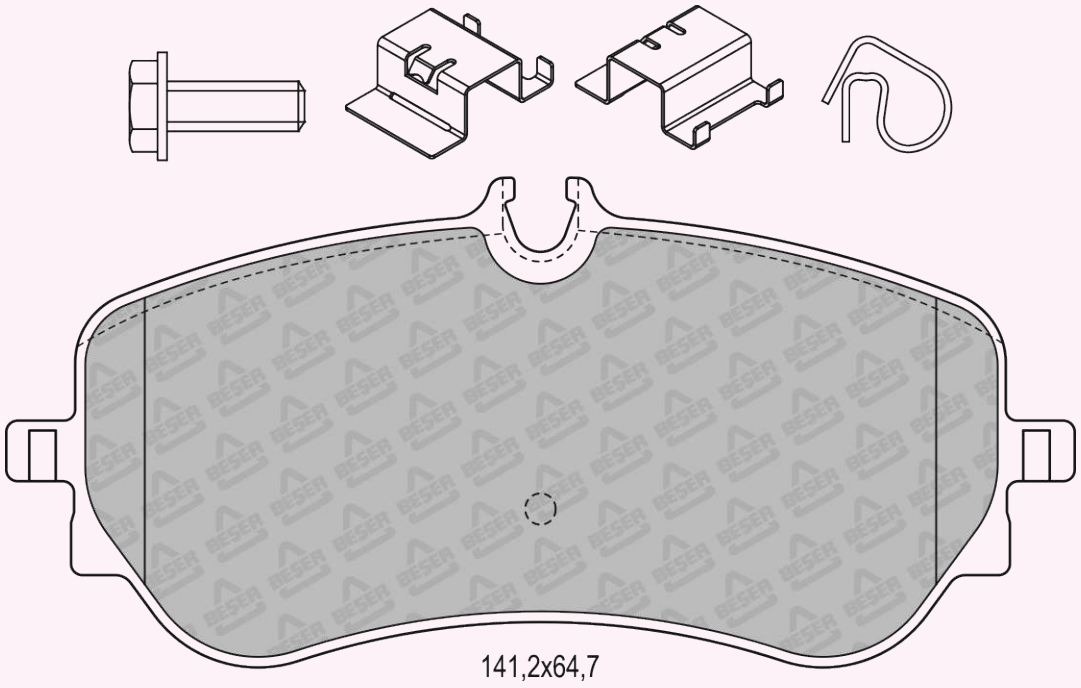

141,2x64,7

REFERENCE	T(mm)	REMARKS	MAKE	F/R	WVA No
4360	18,8	2 PADS WITH WEAR SENSOR	TOYOTA	F	26149 26150 26151

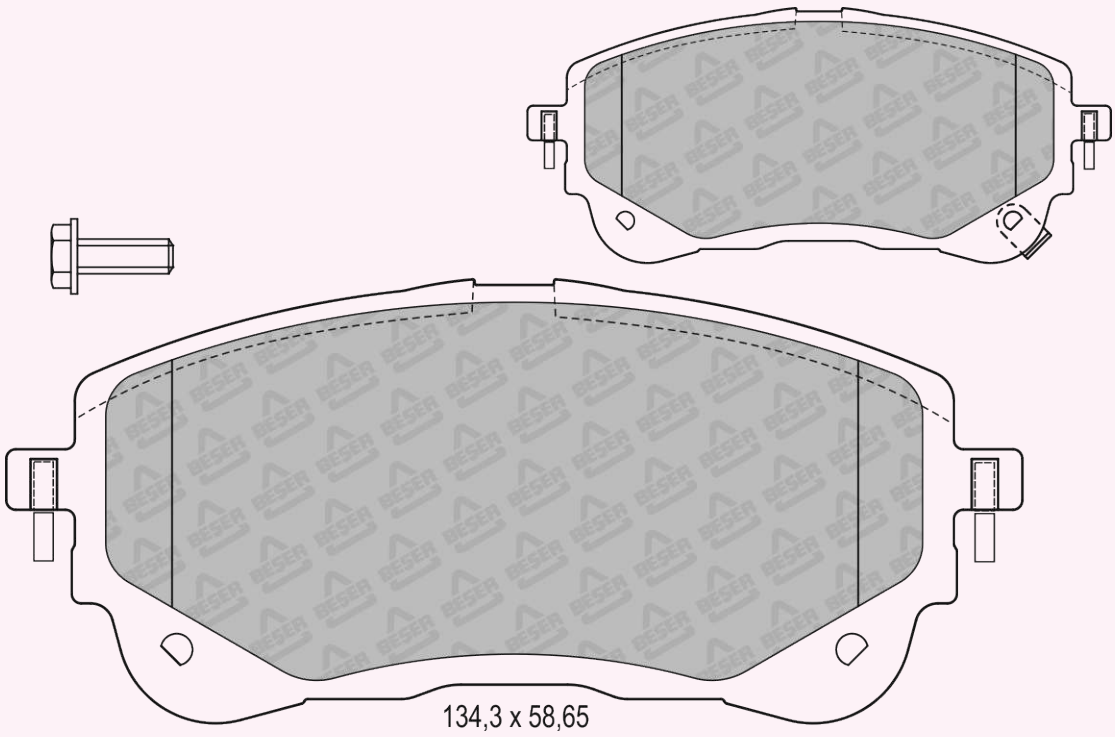

134,3 x 58,65

REFERENCE	T(mm)	REMARKS	MAKE	F/R	WVA No
4361	15,6	2 PADS WITH WEAR SENSOR	TOYOTA	F	26236 26237 26238

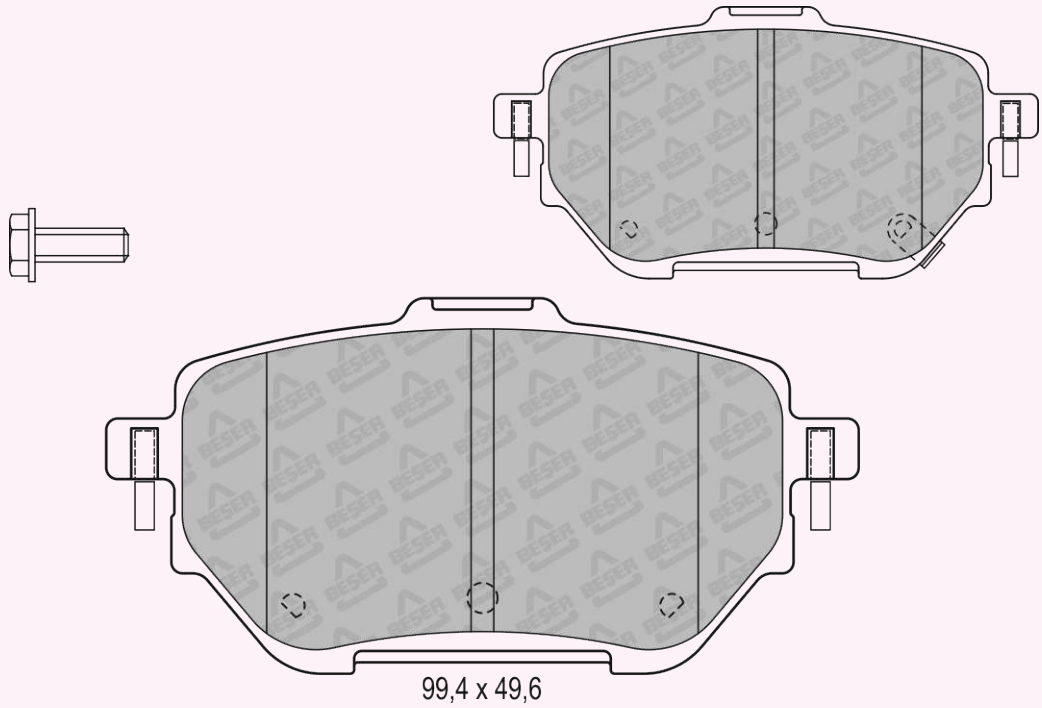

REFERENCE	T(mm)	REMARKS	MAKE	F/R	WVA No
4363	18,2	4 PADS PLAIN	NISSAN - RENAULT	F	26188 26189

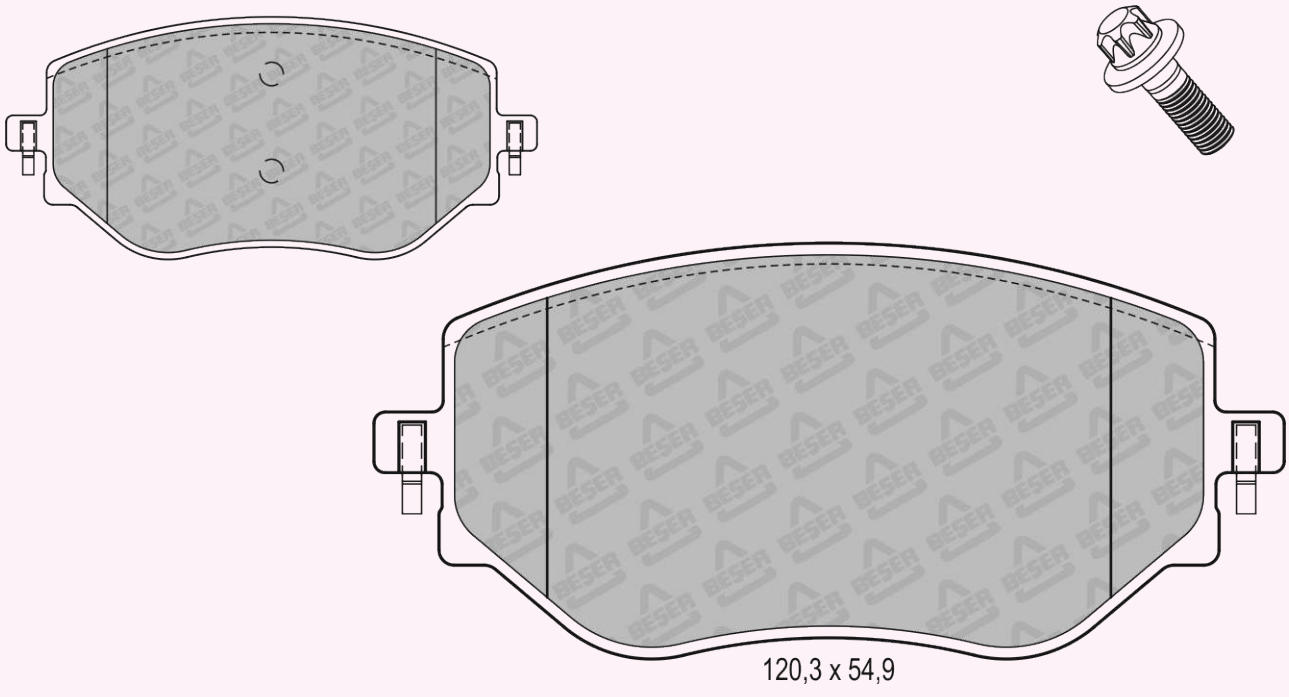

REFERENCE	T(mm)	REMARKS	MAKE	F/R	WVA No
4364	17	1 PAD WITH WEAR SENSOR (280 mm)	AUDI	F	22383 22384 22385

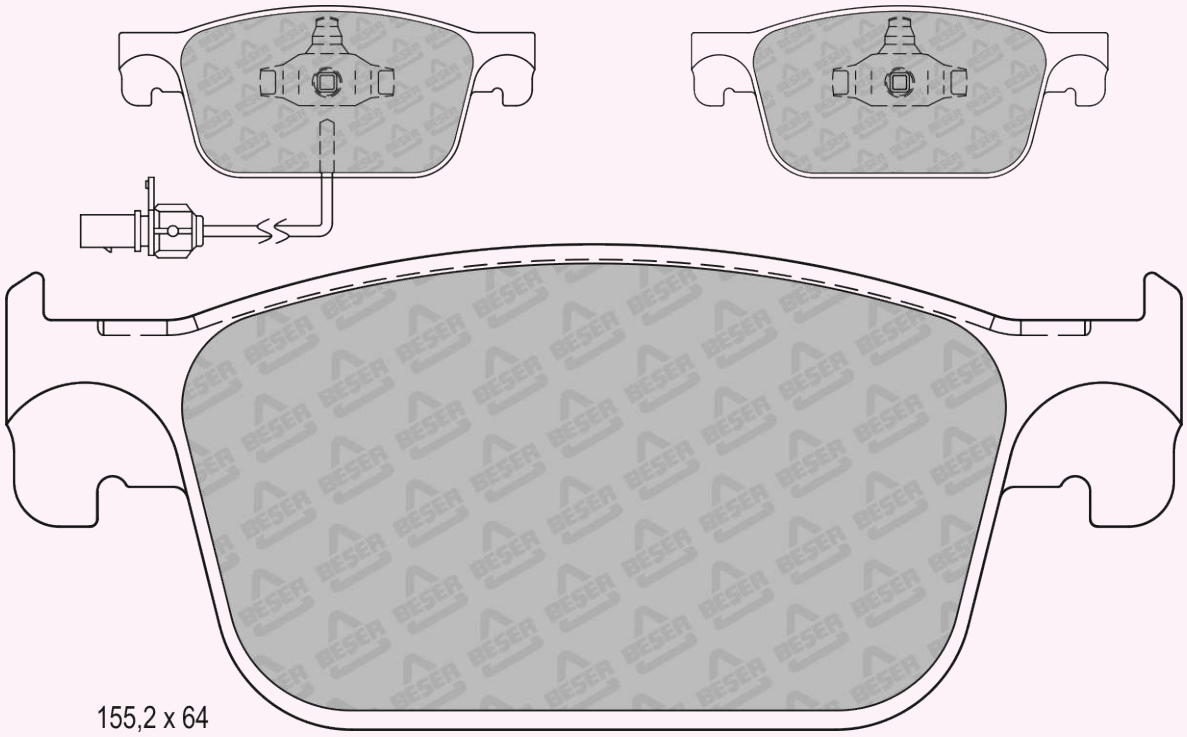

REFERENCE	T(mm)	REMARKS	MAKE	F/R	WVA No
4366	14,6	4 PADS PLAIN	HUMMER	F-R	---

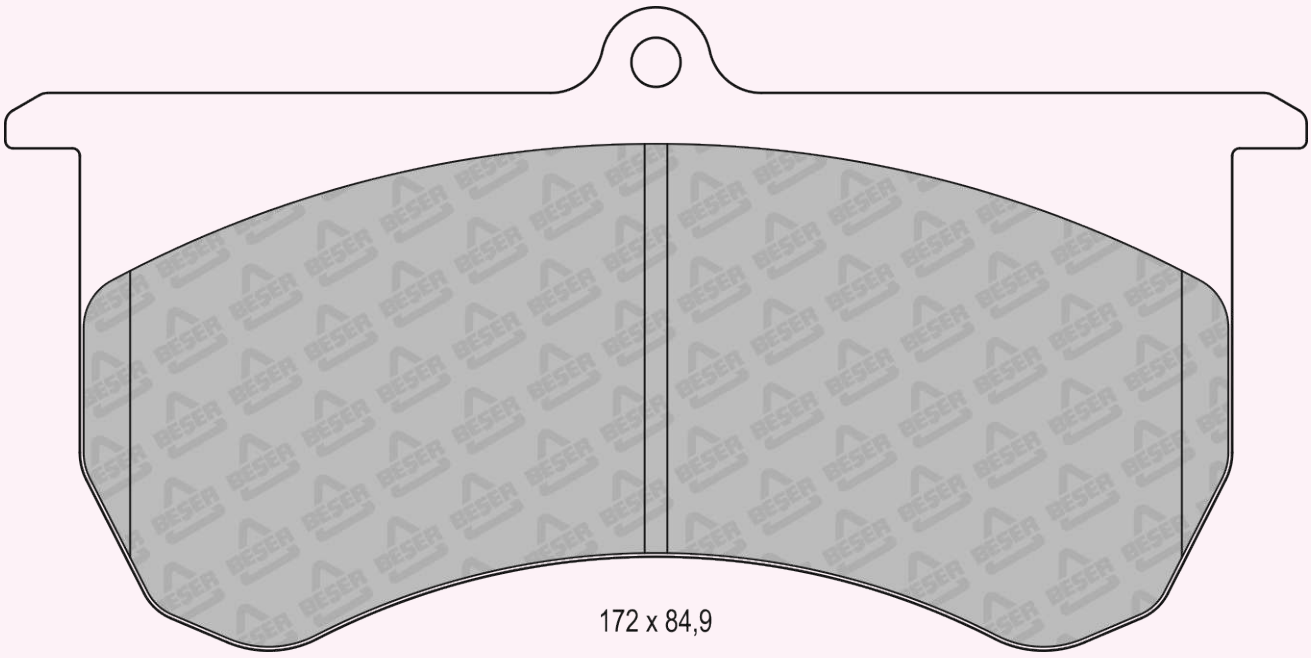

REFERENCE	T(mm)	REMARKS	MAKE	F/R	WVA No
4367	17,7	4 PADS PLAIN	MERCEDES BENZ - TOYOTA	F	26209

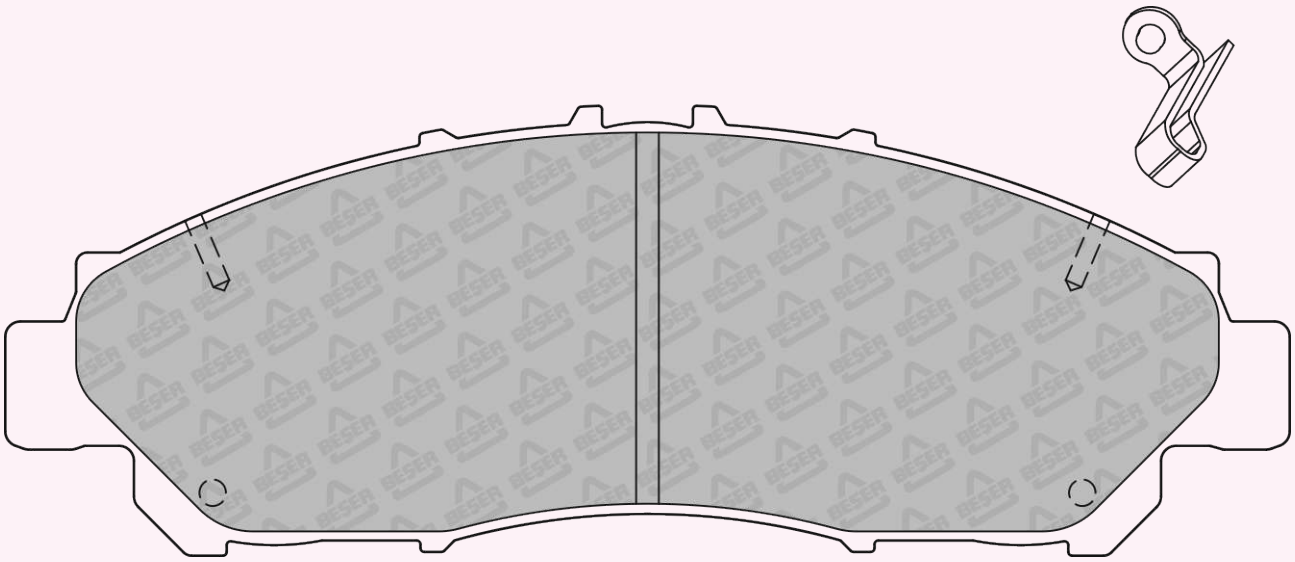

169,7 x 59,4

REFERENCE	T(mm)	REMARKS	MAKE	F/R	WVA No
4368	17,4	4 PADS PLAIN	HONDA - TOYOTA	R	25434

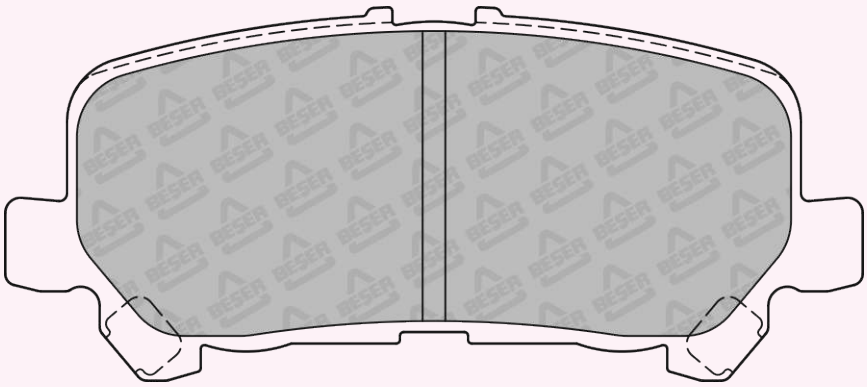

113,2 x 49,3

REFERENCE	T(mm)	REMARKS	MAKE	F/R	WVA No
4369	17,3	4 PADS PLAIN	CITROEN - OPEL - PEUGEOT - TOYOTA	F	22593 22594

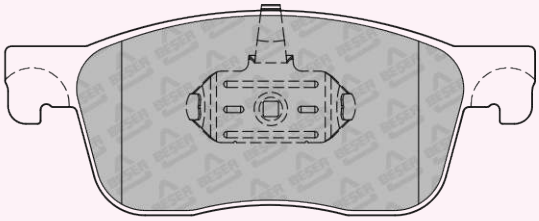

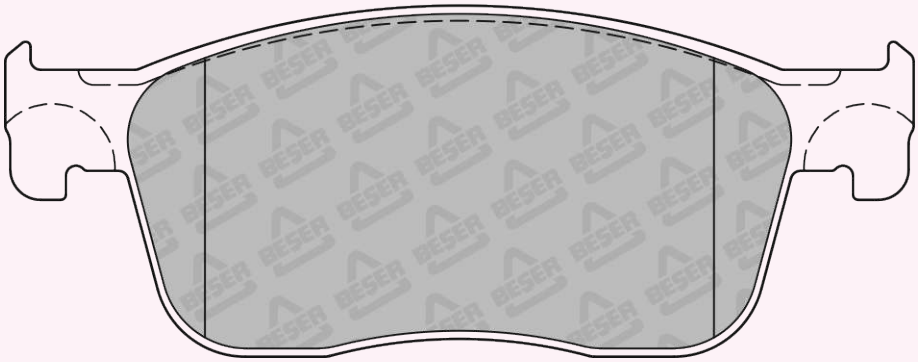

180 x 69,5
(NOT SCALE)

REFERENCE	T(mm)	REMARKS	MAKE	F/R	WVA No
4370	17,4	4 PADS PLAIN	CITROEN - OPEL - PEUGEOT - TOYOTA	R	22588 22589

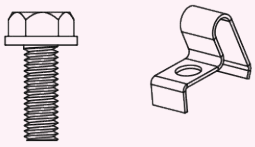

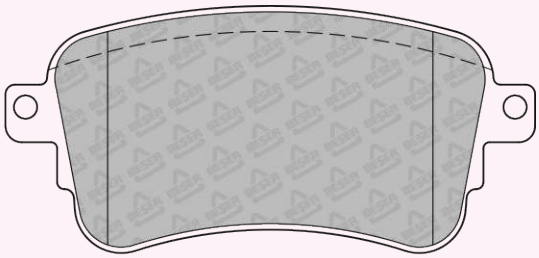

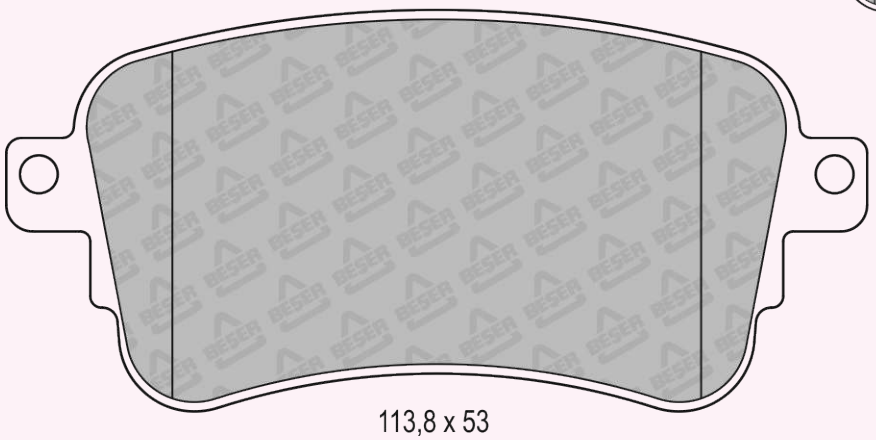

113,8 x 53

REFERENCE	T(mm)	REMARKS	MAKE	F/R	WVA No
4371	17	4 PADS PLAIN	CITROEN DS - OPEL - PEUGEOT - TOYOTA	F	25833 25834

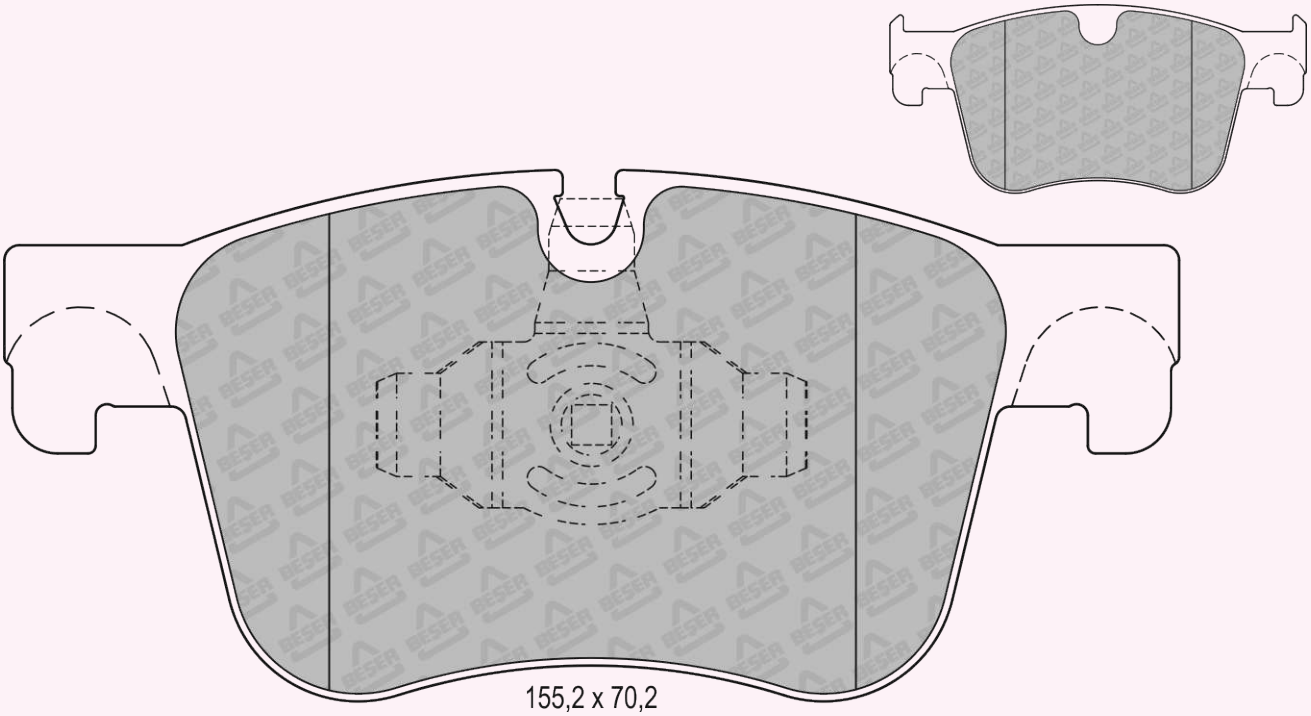

155,2 x 70,2

REFERENCE	T(mm)	REMARKS	MAKE	F/R	WVA No
4372	17,3	4 PADS PLAIN	CITROEN - OPEL - PEUGEOT TOYOTA - VAUXHALL	R	25839 25840

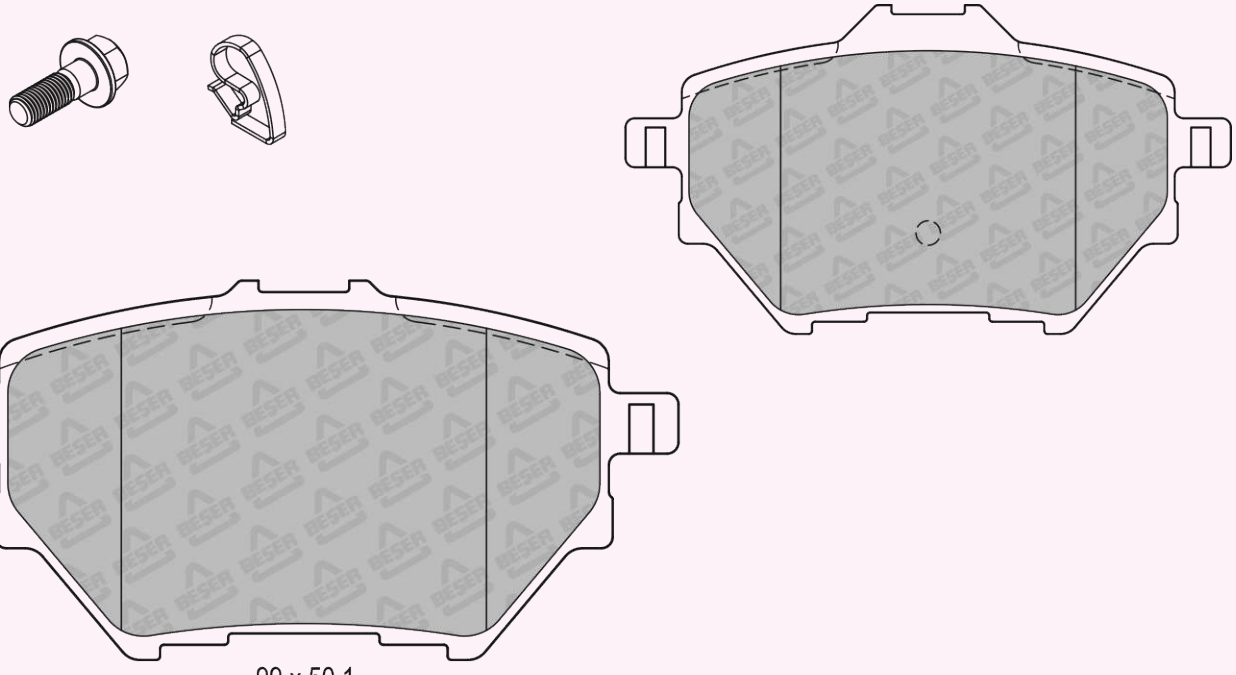

99 x 50,1

REFERENCE	T(mm)	REMARKS	MAKE	F/R	WVA No
4373	17,3	4 PADS PLAIN	CITROEN - OPEL - PEUGEOT TOYOTA - VAUXHALL	R	25839 25840

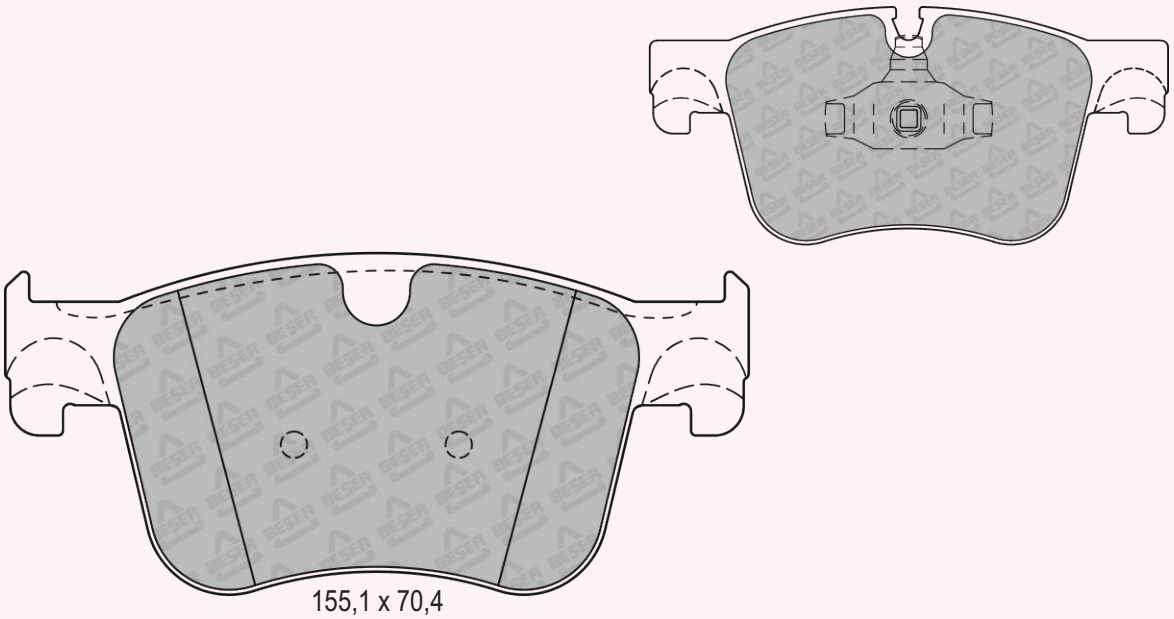

155,1 x 70,4
(NOT SCALE)

REFERENCE	T(mm)	REMARKS	MAKE	F/R	WVA No
4374	17,3	4 PADS PLAIN	CITROEN - DS - OPEL - PEUGEOT	R	25827 25828

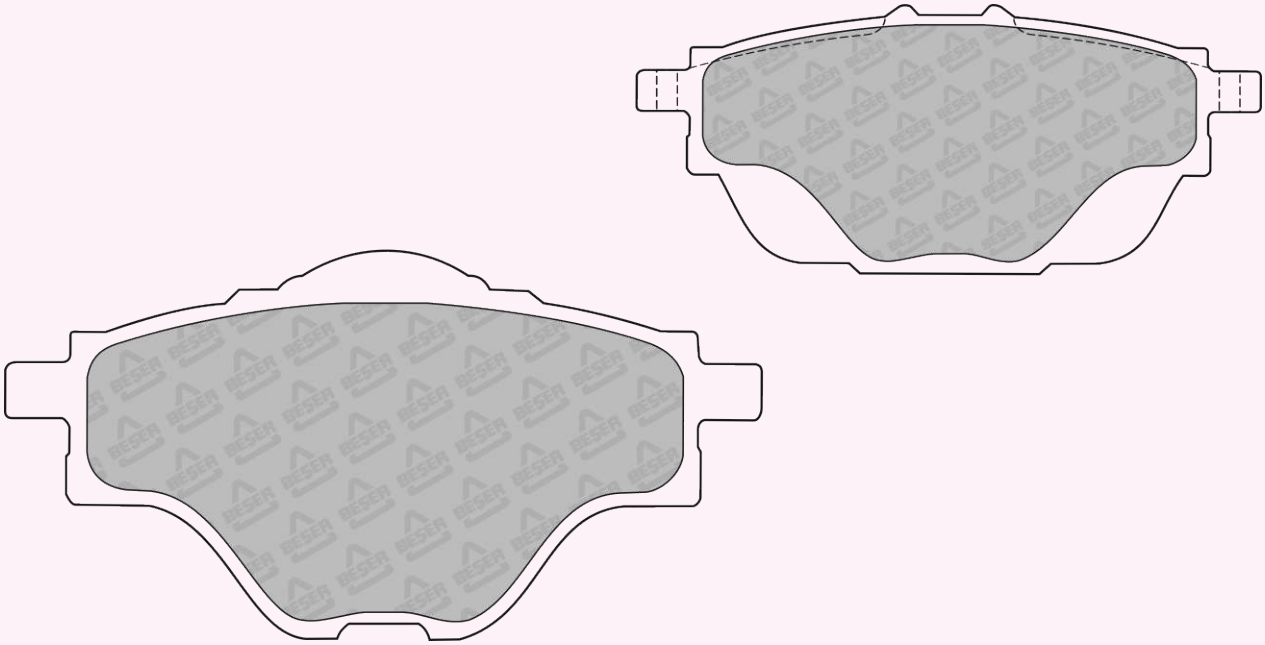

150,9 x 55,3
(NOT SCALE)

REFERENCE	T(mm)	REMARKS	MAKE	F/R	WVA No
4375	18	4 PADS PLAIN	VW	F	26268 26269

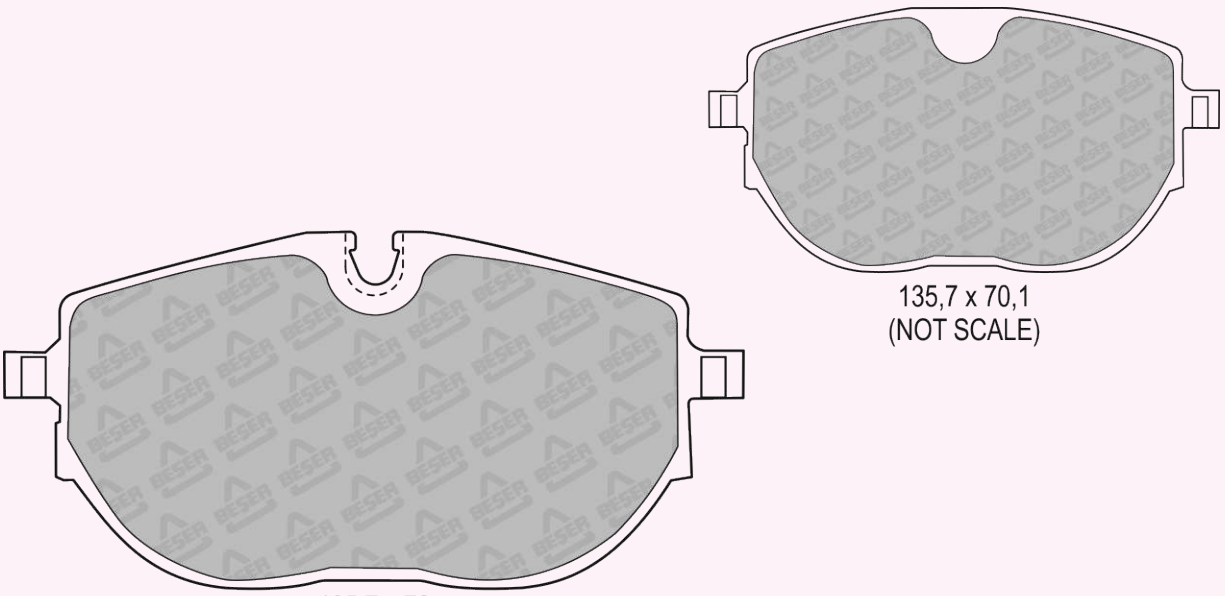

REFERENCE	T(mm)	REMARKS	MAKE	F/R	WVA No
4376	21	2 PADS WITH WEAR SENSOR	MERCEDES BENZ - NISSAN	F	22660 22661 22662

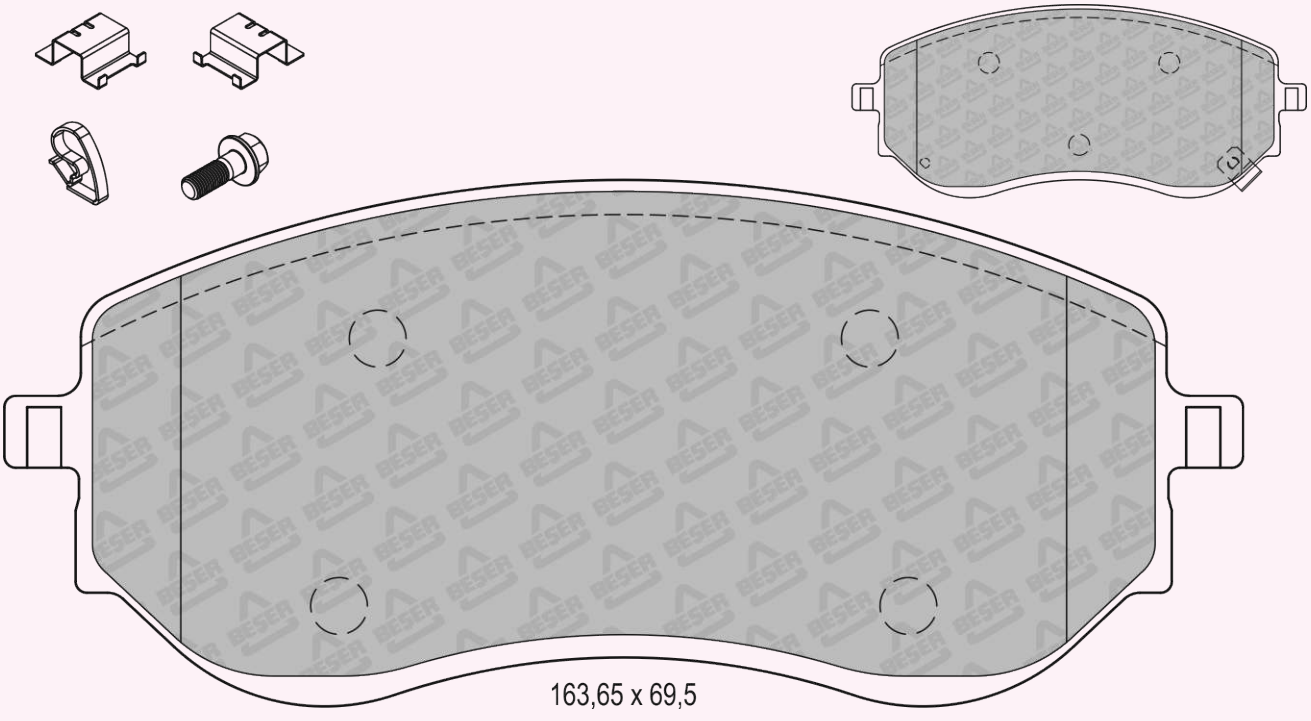

REFERENCE	T(mm)	REMARKS	MAKE	F/R	WVA No
4377	16,6	4 PADS PLAIN	GAZ GAZELLE	R	---

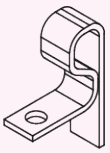

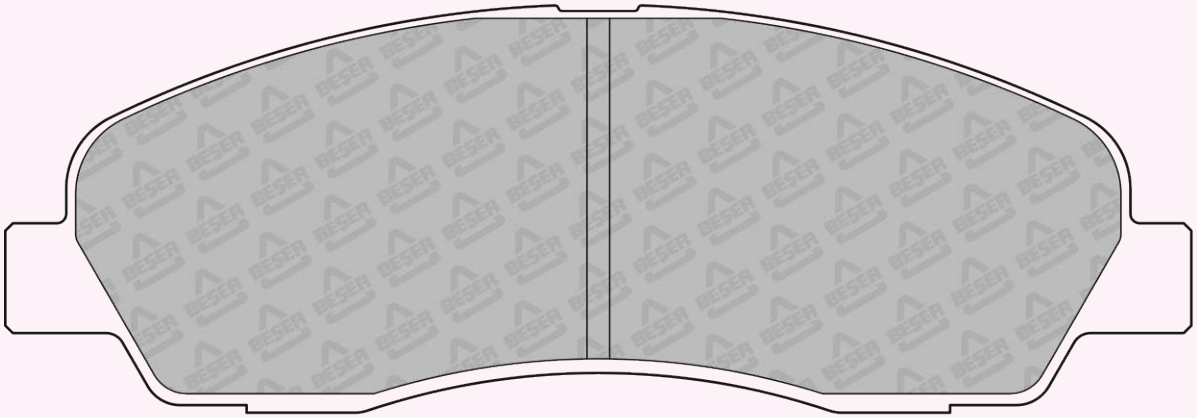

156,8 x 53,7

REFERENCE	T(mm)	REMARKS	MAKE	F/R	WVA No
4378	19,5-19,4	2 PADS PISTON CLIP	BMW	F	23313 24688

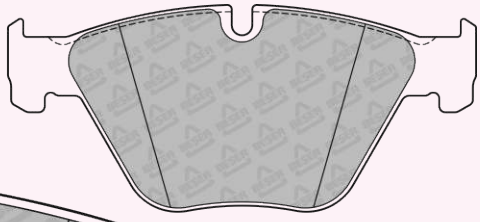

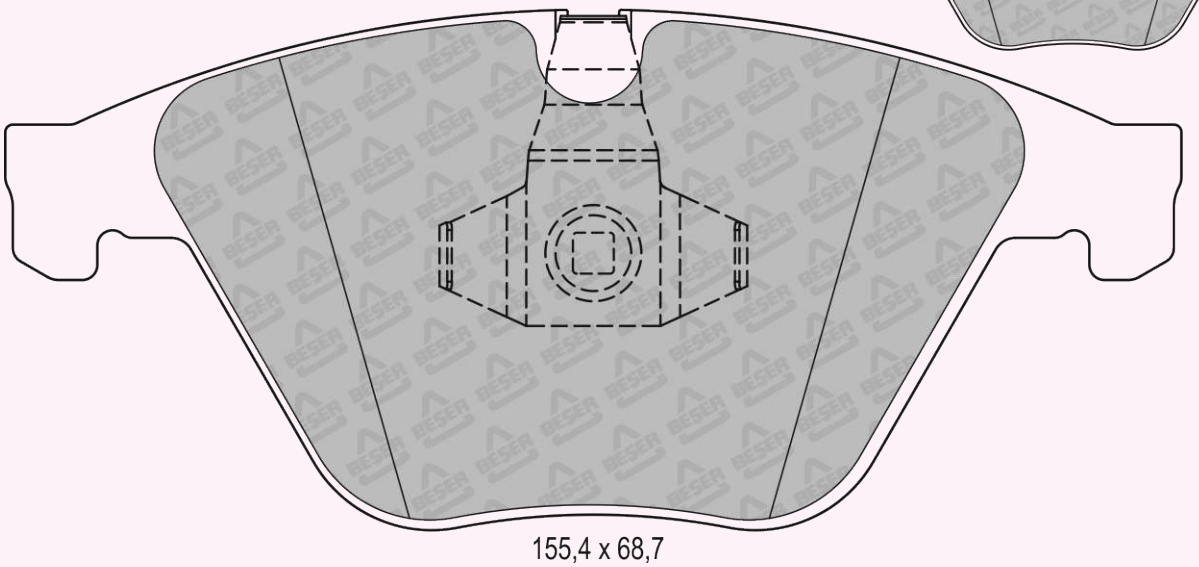

155,4 x 68,7

REFERENCE	T(mm)	REMARKS	MAKE	F/R	WVA No
4379	17,4	4 PADS PLAIN	BMW	R	24703 24704

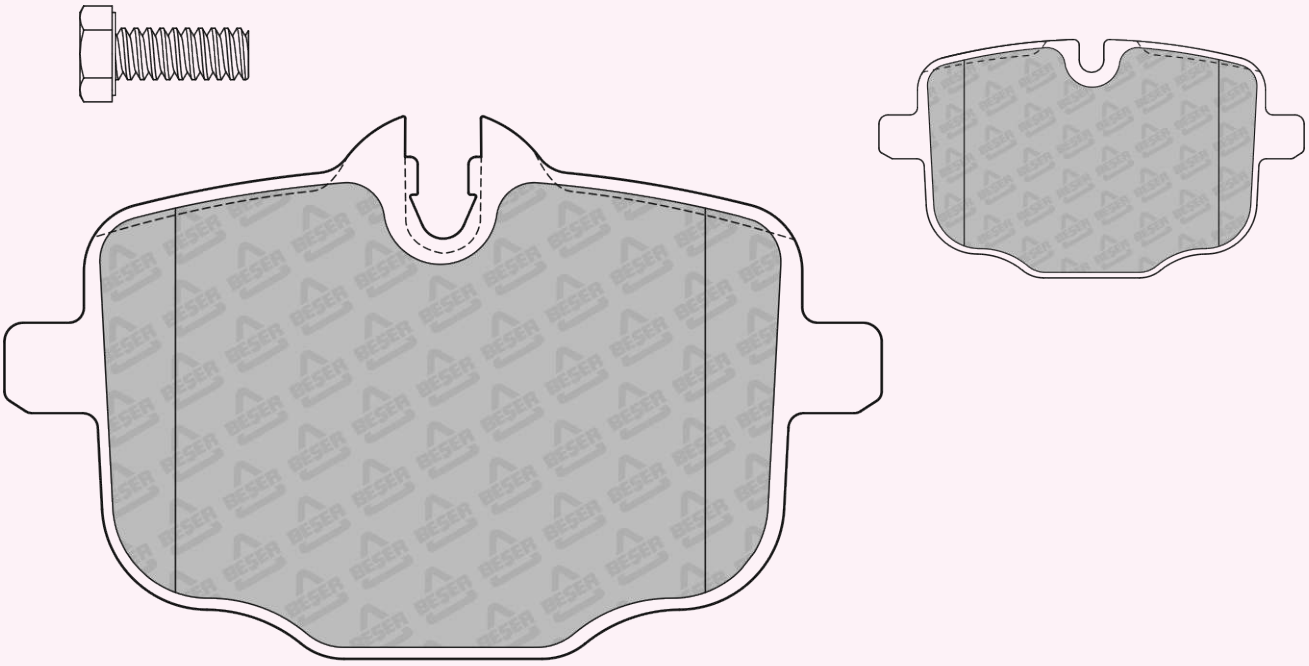

115 x 65

REFERENCE	T(mm)	REMARKS	MAKE	F/R	WVA No
4380	18 - 19	2 PADS PISTON CLIP	BMW	F	23794 24697

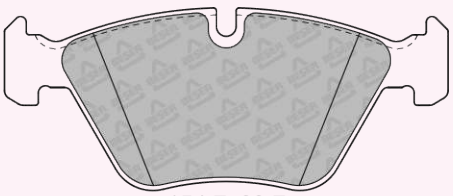

154,7x63,7
(NOT SCALE)

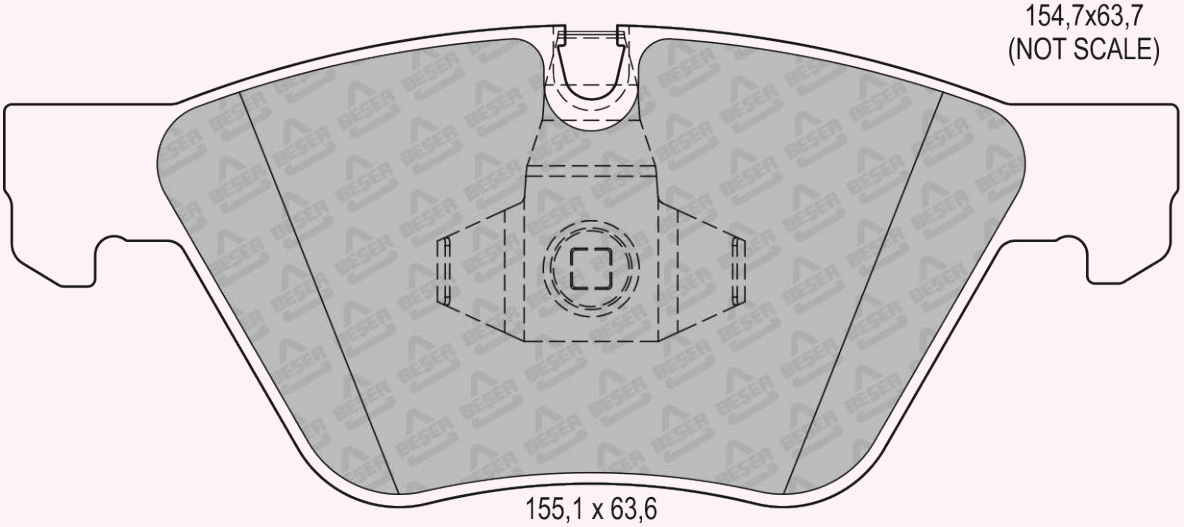

155,1 x 63,6

REFERENCE	T(mm)	REMARKS	MAKE	F/R	WVA No
4381	17,4	2 PADS PISTON CLIP	BMW	F	24912 24913 25506 25507

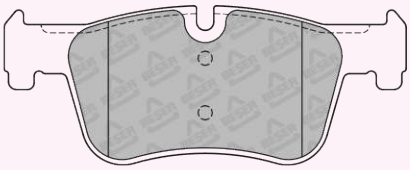

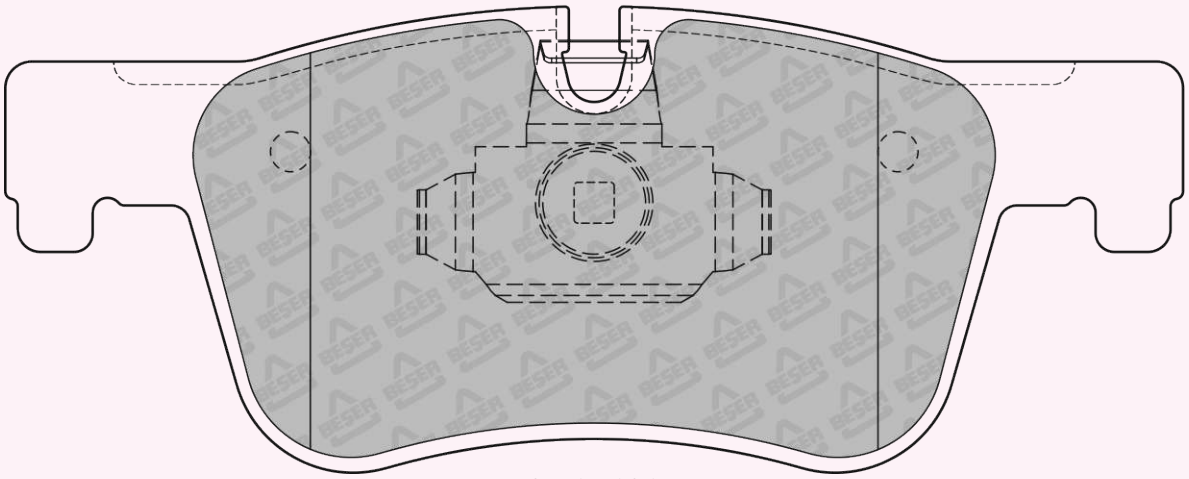

155,6 x 61,6

REFERENCE	T(mm)	REMARKS	MAKE	F/R	WVA No
4382	18,4	2 PADS PISTON CLIP	BMW	F	25199 25200

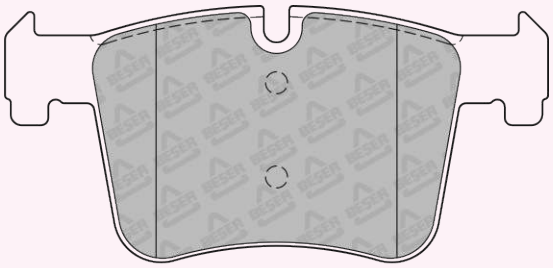

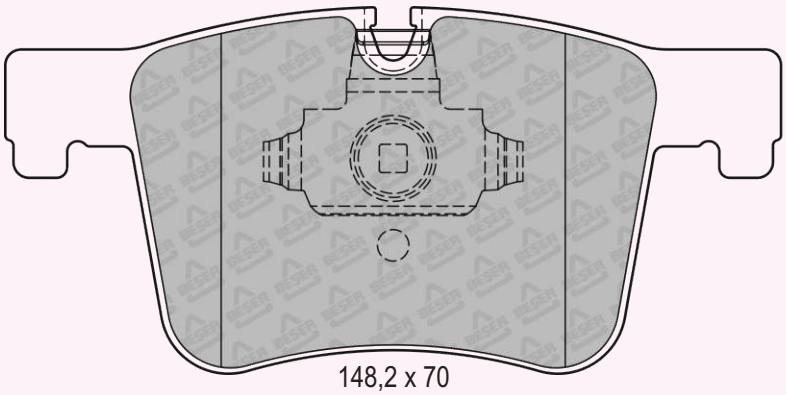

148,2 x 70
(NOT SCALE)

REFERENCE	T(mm)	REMARKS	MAKE	F/R	WVA No
4383	16,4	2 PADS PISTON CLIP	BMW	R	25307 25308

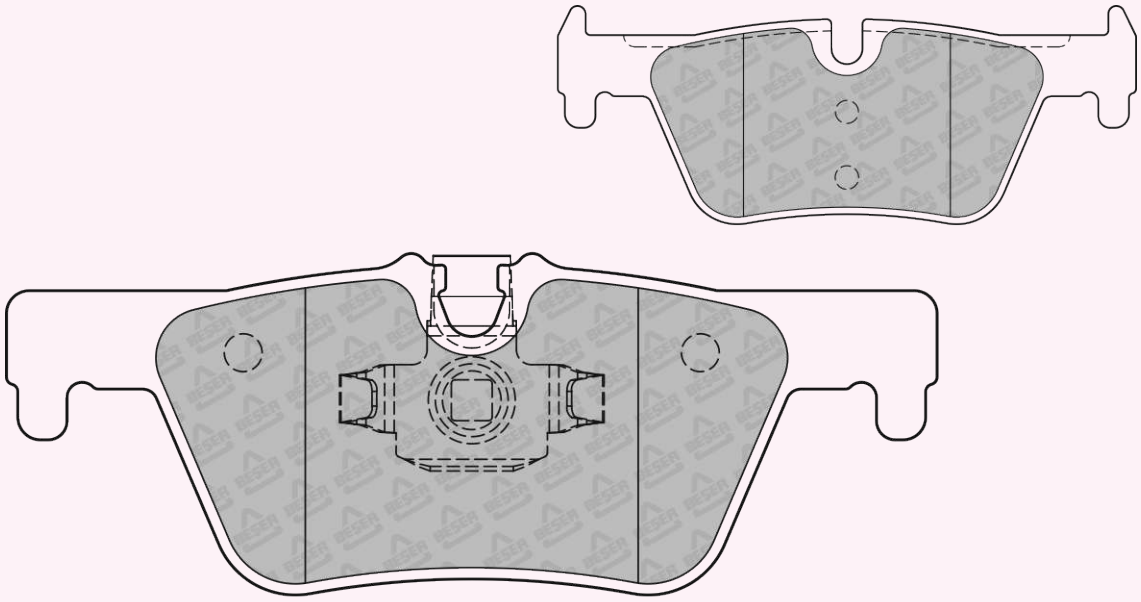

123 x 46,4

REFERENCE	T(mm)	REMARKS	MAKE	F/R	WVA No
4384	20,5	4 PADS PLAIN	MERCEDES BENZ	R	22791

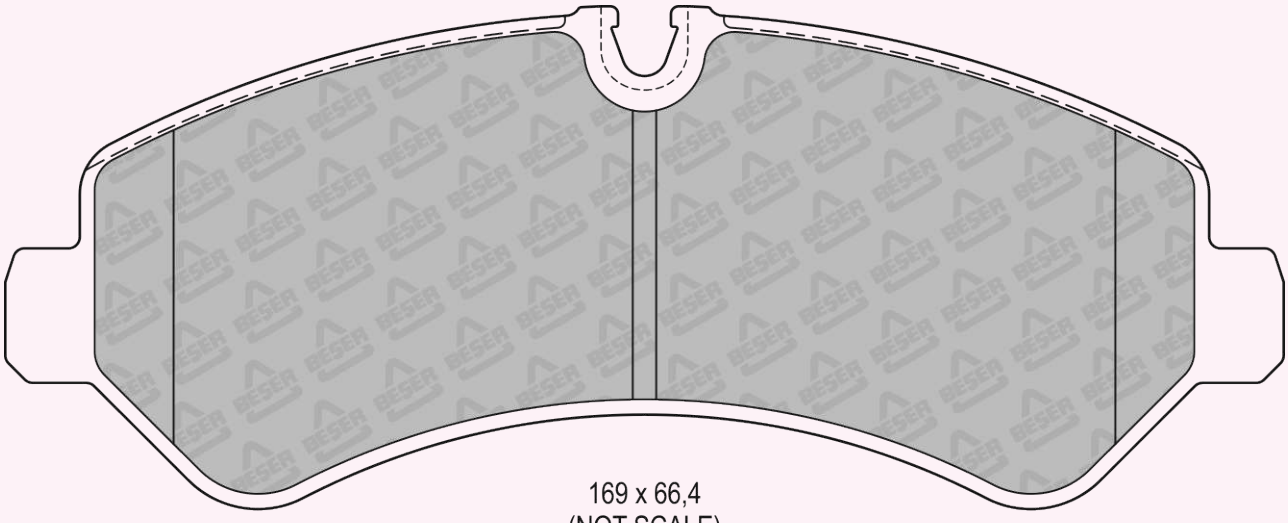

169 x 66,4
(NOT SCALE)

REFERENCE	T(mm)	REMARKS	MAKE	F/R	WVA No
4388	16,8	2 PADS PISTON CLIP	BMW	R	23926 23927 24226

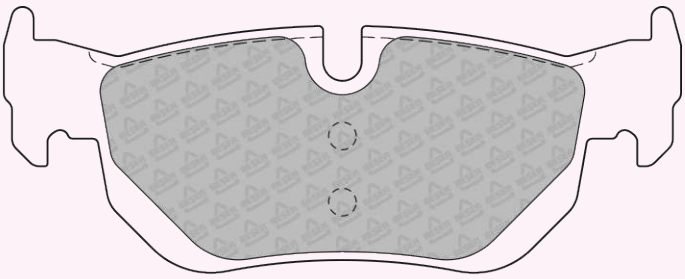

123,25 x 48,3
(NOT SCALE)

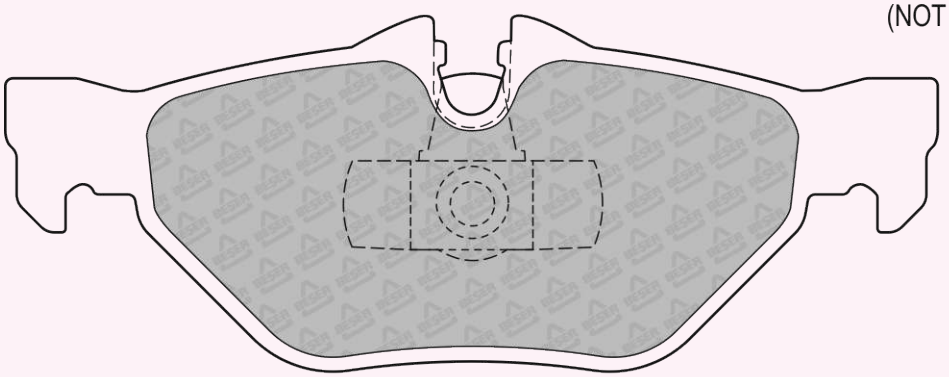

123,25 x 46,9

REFERENCE	T(mm)	REMARKS	MAKE	F/R	WVA No
4389	16,8	4 PADS PLAIN	BMW	R	23623 23624

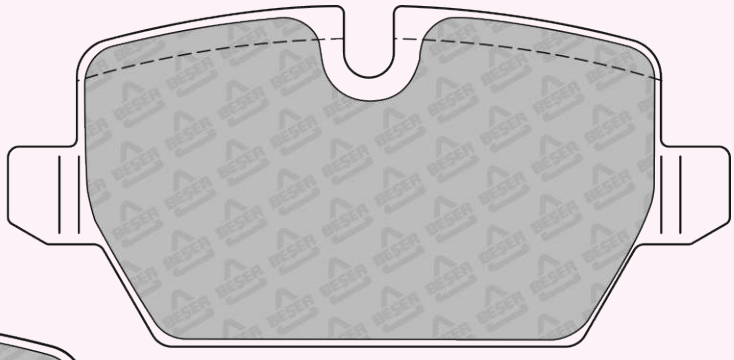

95,4 x 45

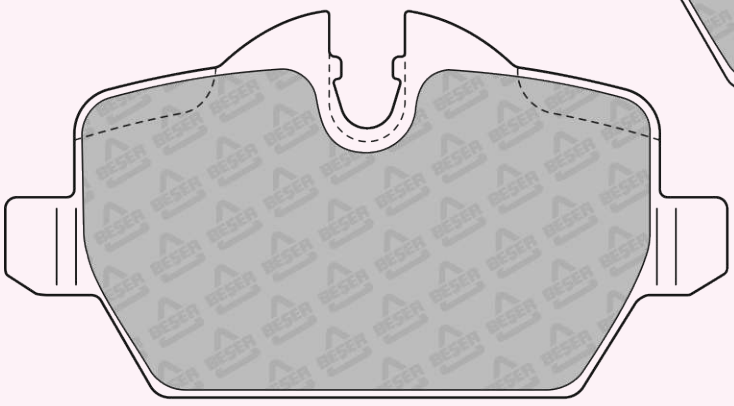

95,4 x 51,9

REFERENCE	T(mm)	REMARKS	MAKE	F/R	WVA No
4390	15,7	4 PADS PLAIN	AUDI - SEAT - SKODA - VW	R	24483

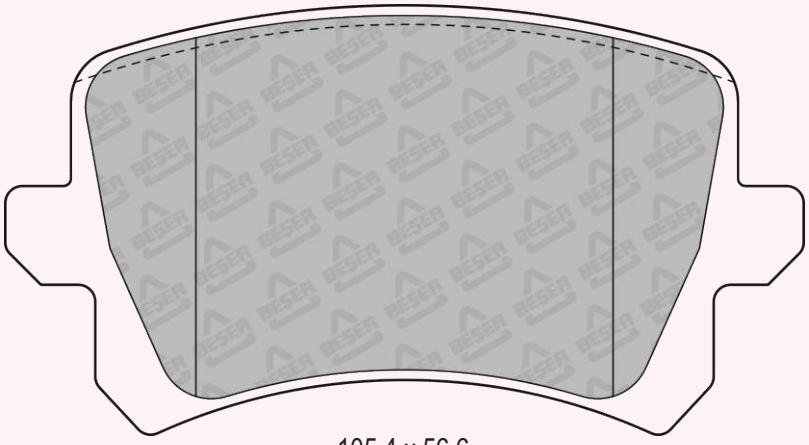

105,4 x 56,6

REFERENCE	T(mm)	REMARKS	MAKE	F/R	WVA No
4391	19,5	4 PADS PLAIN	MERCEDES BENZ	F	24867 24868

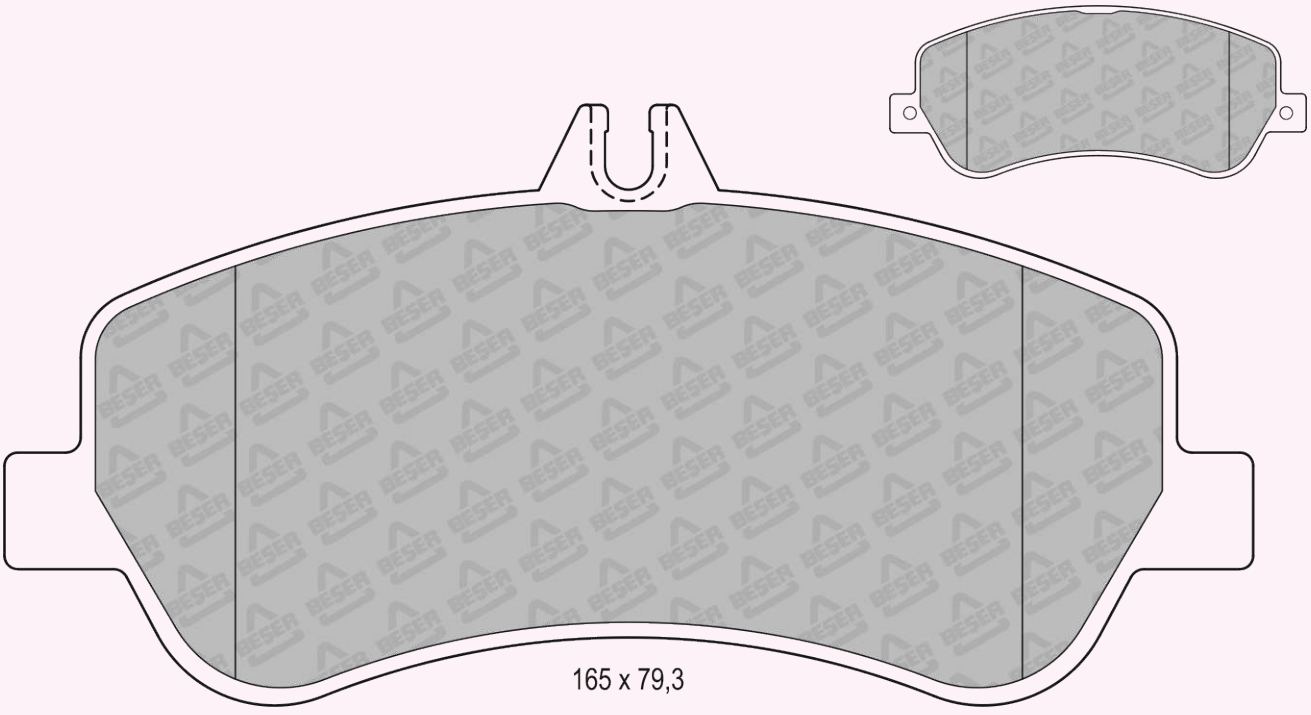

165 x 79,3

REFERENCE	T(mm)	REMARKS	MAKE	F/R	WVA No
4392	19	4 PADS PLAIN	BMW - TOYOTA	F	25617 25618

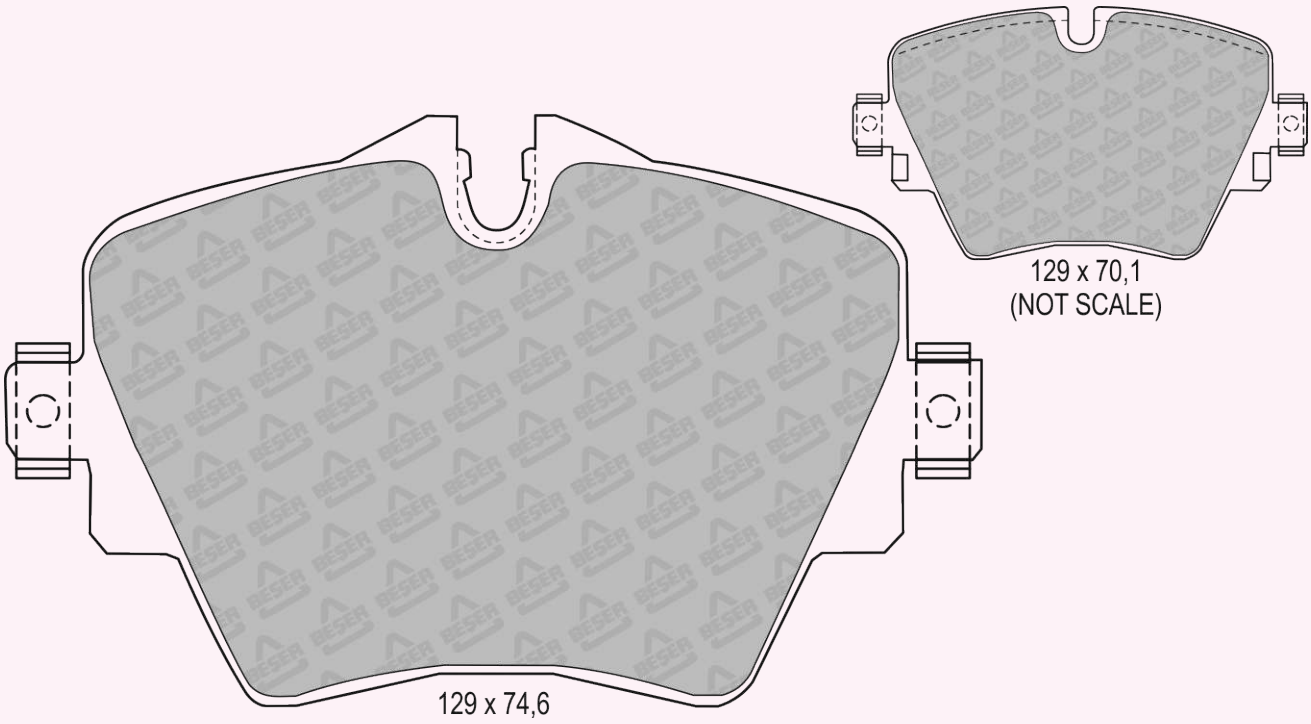

REFERENCE	T(mm)	REMARKS	MAKE	F/R	WVA No
4393	17	4 PADS PLAIN	BMW	R	21421 21422

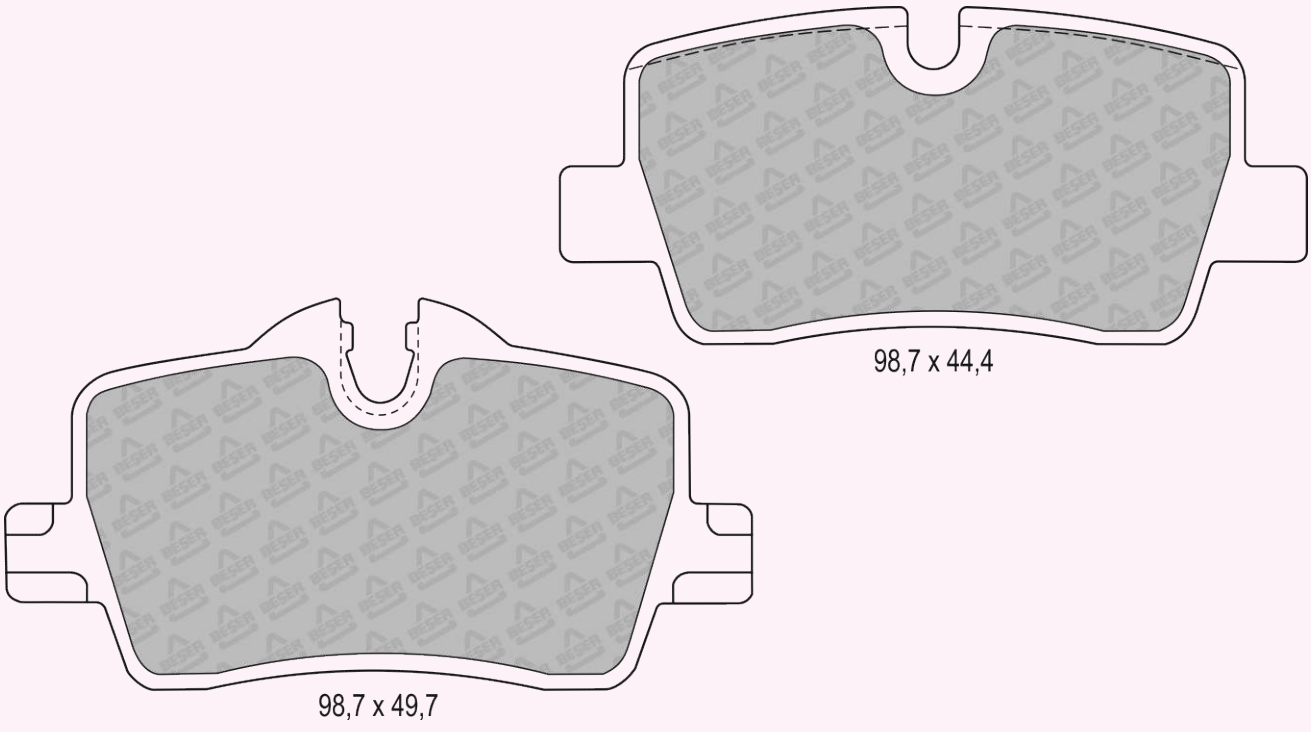

CROSS REFERENCE

A.B.S.	BESER
NO	NO
35014	4312
35019	4374
35020	4372
35021	4371
35021	4373
35062	4308
35147	4301
35185	4370
35186	4369
35215	4376
35260	4319
36003	3317
36004	3316
36009	3318
36010/1	3326
36025	3320
36025/1	3350
36037	3311
36042	3329
36043	3321
36047	3373
36072	3709
36079	3710
36080	3393
36084	3425
36088	3327
36090	3335
36092	3366/1
36102	3416
36105	3315
36105	3515
36106	3343
36106	3483
36107	3405
36108	3374
36109	3312
36124	3423
36125	3661
36125/1	3771
36131	3527
36135	3324
36136	3421
36138	3378
36140	3365
36145	3410
36150	3314
36156	3509
36158	3370
36159	3407
36167	3752
36168	3397
36168/1	3758
36172	3502
36175/1	3634
36177	3641
36178	3400
36341/1	3526
36368	3379
36418	3339
36418	3514
36420	3369
36446	3417
36459	3417/1
36462	3371
36470	3440
36473	3415
36477	3579
36485	3417/1
36486	3484
36488	3573
36489	3572
36489/1	3583
36490	3513
36491	3468
36496	3625
36498	3611
36498/1	3550
36498/2	3550
36503	3493
36504	3413

A.B.S.	BESER
NO	NO
36507	3429
36508	3401
36513	3624
36516	3419
36518	3424/1
36520	3394
36521	3466
36522	3467
36525	3495
36532	3490
36534	3621
36535	3402
36536	3444
36539	3441
36540	3486
36544	3442
36545	3620
36547	3556
36556	3408
36556/1	3408
36565	3380
36570	3482
36571	3875
36574	3723
36575	3605
36576	3422
36577	3428
36578	3603
36588	3436
36589	3543
36593	3462
36594	3449
36603	3714
36604	3776
36611/1	3395
36615	3582
36619	4212
36621	3746
36623	3529
36624/1	3717
36630	3432
36630/1	3491
36632	3757
36632	3857
36636	4212
36642	3499
36642/1	3463
36648	3448
36650	3564
36651	3457
36657	3760
36658	3600
36660	3430
36663	3446
36664	3609
36664S	3609
36665	3679
36666	3437
36667	3470
36675	3882
36678	3563
36678S	3563
36680	3666
36683	3680
36690	4108
36691	3779
36692	4087
36694	3469
36696	3453
36696/1	3662
36701	4088
36702	3777
36707	3589
36709	3464
36713	4086
36715	3879
36716	3629
36720	3426
36721	4080
36722	3696

A.B.S.	BESER
NO	NO
36724	3560
36726	3522
36727	3640
36728	3766
36730	3695
36734	4072
36736	3436
36737	3704
36739	4104
36740	3562
36741	3660
36744	3642
36746	3683
36749	3733
36753	3685
36755	3584
36763	3622
36769	3539
36771	3623
36775	3473
36777	3554
36777	3651
36781	3688
36784	3686
36785	3445
36787	3581
36788	3596
36789	3551
36790	3531
36790S	3531
36793	3674
36794	3887
36796	3833
36798	3366
36805	3736
36808	3593
36809	3558
36814	3545
36818	3536
36824	3578
36828	3689
36831	3607
36836	3819
36837	3878
36840	3523
36844	4214
36848	4128
36850	3528
36852	3883
36853	3585
36853S	3585
36854	3608
36855	3540
36861	3888
36869	3898
36871	3507
36875	3693
36876	3553
36878	4078
36879	3610
36881	3503
36882	3673
36883	3595
36884	3559
36886	3740
36894	3617
36896	3505
36896	3615
36901	3567
36902	3678
36903	3677
36904	3628
36908	3656
36911	3799
36913	3670
36918	3675
36921	4099
36922	4275
36923	3915
36924	4274

A.B.S.	BESER
NO	NO
36925	3809
36931	3749
36939	3512
36943	3863
36948	3574
36950	4062
36953	3667
36955	3577
36958	3909
36960	3602
36961	3881
36961S	3881
36965	3884
36969	3566
36970	3538
36970S	3538
36972	4079
36974	3697
36976	3750
36986	3606
36995	3874
36997	3570
37002	3511
37006	3663
37009	3680
37010	3896
37010S	3896
37013	3618
37016	3636
37017	3745
37020	4059
37021	3676
37022	3821
37033	3822
37040	3659
37044	3653
37065	3762
37078	4125
37079	3552
37081	3932
37082	4010
37084	3859
37086	4027
37092	3637
37092S	3637
37095	3681
37096	4034
37097	3919
37098	3918
37099	4020
37100	3754
37101	3755
37104	3861
37113	3575
37121	3568
37122	3548
37122	3690
37124	3804
37126	3778
37127	3722
37130	3648
37132	3897
37133	3590/1
37133S	3590/1
37134	3769
37135	3768
37136	3788
37137	4009
37138	3539/1
37139	3744
37142	4345
37143	3794
37148	4069
37149	4102
37150	4101
37150	4209
37151	3943
37160	3896
37162	4222
37163	3764

A.B.S	BESER
NO	NO
37164	3913
37165	3836
37169	3901
37170	3790
37174	4110
37175	4155
37180	4269
37184	4123
37186	3780
37193	3767
37194	4103
37195	3877
37198	4126
37200	4271
37202	3955
37203	3892
37205	4115
37209	3932
37213	3846
37215	4100
37216	3853
37218	3852
37220	4281
37222	3928
37226	3830
37227	4153
37230	4158
37231	3829
37240	4095
37247	3993
37252	3993
37254	4093
37255	4119
37256	3921
37260	4082
37272	3820
37273	3800
37274	3553/1
37275	3802
37277	3935
37280	3826/1
37282	3800/1
37284	4084
37285	3934
37286	3790/1
37287	3848
37288	3795/1
37289	3855
37290	3856
37292	3790
37294	3784
37298	3823
37299	3575/2
37300	4211
37303	4094
37307	3854
37308	3931
37309	4112
37312	4109
37312	4232
37321	3933
37328	4013
37329	3986
37331	3834
37332	3835
37333	3914
37334	4152
37338	4138
37340	3748
37341	3747
37346	4180
37349	3801
37351	4118
37352	3951
37355	3911
37356	3910
37359	4159
37360	3826
37361	4042
37362	3979

A.B.S	BESER
NO	NO
37364	3978
37365	4076
37370	4208
37371	4179
37379	3942
37381	3889
37384	4106
37395	3983
37397	3849
37398	3850
37399	4071
37400	3890
37401	4154
37403	3961
37405	3817
37406	3825
37409	4346
37409S	4346
37411	3905
37413	3842
37414	3904
37414S	3904
37415	3841/1
37416	3841
37418	3800
37419	4303
37420	3891
37422	3885
37423	3959
37424	3831
37428	4096
37430	3939
37431	3940
37432	3778
37439	4173
37442	4028
37443	4036
37446	3912
37449	3923/1
37458	4105
37459	4111
37460	3895
37461	3894
37463	4208
37466	3946
37473	4303
37474	3968
37475	3984
37476	3820
37477	3853/1
37478	3983/1
37481	3900
37483	3987
37484	4042
37489	4058
37491	3765
37492	4001
37499	4213
37500	3944
37501	4293
37502	4081
37503	4000
37504	4074
37505	3976/1
37507	4210
37511	4198
37512	4018
37515	3969
37517	4016
37518	3952
37519	4137
37520	3880
37521	4059
37522	3960
37523	3989
37526	3687/1
37531	3929
37533	3980
37538	3940
37540	3988

A.B.S	BESER
NO	NO
37541	4017
37542	3958
37543	4077
37544	3953
37545	3949
37548	3976/1
37552	3962
37553	3925
37554	3963
37555	3926
37556	4113
37558	3906
37559	3920
37560	3907
37561	4157
37564	3800/2
37565	4240
37568	4161
37576	3922
37578	3820/3
37580	3954
37581	4330
37582	3976
37584	4248
37585	4247
37586	4249
37588	4260
37589	3972
37590	4151
37592	4028
37594	4173/1
37598	3964
37606	4122
37607	3970
37609	4006
37614	3945
37616	4037
37618	4035
37620	3956
37621	4165
37622	4039
37623	3827
37624	3975
37625	4038
37630	4092
37633	3965
37637	4207
37638	3995
37647	4181
37650	4160
37651	4156
37654	3886
37656	4122
37657	4216
37659	3965/1
37662	4332
37663	4333
37664	3966
37665	3967
37668	4029
37670	4258
37672	3982
37673	4220
37674	4215
37677	3948
37679	4141
37680	3797
37683	4149
37684	3903
37695	4309
37698	4004
37699	4073
37700	3971
37701	3996
37702	3997
37707	4134
37710	3996
37711	3997
37714	4121
37718	4173/1

A.B.S	BESER
NO	NO
37719	3996
37722	4147
37729	4150
37732	4142
37737	4146
37743	3994
37745	3933
37760	3964/1
37764	4008
37766	3944
37767	4162
37772	4054
37777	4061
37784	4135
37788	4310
37789	4230
37790	4014
37791	4143
37793	3906/1
37795	4060
37800	3826/3
37801	4291
37811	4049
37815	4256
37817	3826
37824	3826/1
37837	3458
37840	4124
37844	4255
37846	4132
37846	4172
37847	4057
37848	4056
37851	3886
37862	3905
37871	3800/3
37873	3983/2
37881	4167
37890	4145
37895	3945
37896	3608
37897	4093
37900	3966
37908	4171
37908	3922/3
37910	4265
37916	4136
37923	4161
37930	4166
37932	4049
37934	4310
37935	3966
37937	3998
37939	4057
37943	4124
37956	4204
37957	4200
37961	4140
37964	4241
37966	4175
37977	4315
37980	4174
37984	3790
37990	4201
38418	4005
38423	4004
38429	4185
38438	4331
38442	4296
38457	4058
38460	4016
38477	4182
38477	4340
38521	3867
38591	4197
38712	4182
38784	4021
38790	4011
38856	4012
38945	4031
38967	4329

ABEX	BESER
NO	NO
G0857	3433/1
G6070	3537
G6198	3679
G6268	3433
G6487	3773
G6495	3773
G6516	3749
G6727	3994
G6802	3433
G6803	3749/1
G6892	3942/A
G6895	3679
G6969	4169
AVR101	3799
AVR102	3856
AVR103	3595
AVR105	3523
AVR106	3855
AVR107	3440
AVR108	3834
AVR109	3835
AVR110	3482
AVR111	3921
AVR112	3559
AVR114	3567
AVR115	3784
AVR116	3795/1
AVR117	3804
AVR119	3527
AVR120	3681
AVR121	3423
AVR123	3526
AVR124	3848
AVR125	3914
AVR126	3603
AVR131	3423/1
AVR133	3473
AVR135	3543
AVR136	3575/2
AVR137	3670
AVR140	3823
AVR141	3513
AVR142	3366/1
C1Y049ABE	4185

ABS	BESER
NO	NO
35025	4176/1
35063	4283/1
35075	4351/1
35147	4301/1
35204	4350/1
35280	4384
36503	3494
36503 OE	3494
36540	3486/1
36540 OE	3486/1
36712	4148/1
36712 OE	4148/1
36746	3872/1
36746 OE	3872/1
36757	4148/1
36757 OE	4148/1
36758	4148/1
36939	3512/1

ABS	BESER
NO	NO
36948	3914/1
36955	3647
36955 OE	3647
37096	4034/1
37198	4126/1
37198 OE	4126/1
37272	3820/1
37272 OE	3820/1
37338	4138/1
37338 OE	4138/1
37379	3942/A
37435	4389
37435 OE	4389
37437	4388
37437 OE	4388
37450	3924/1
37450 OE	3924/1
37476	3820/1
37476 OE	3820/1
37540	3988/1
37540 OE	3988/1
37552	3962/1
37552 OE	3962/1
37553	3925/2
37553 OE	3925/2
37554	3963/1
37554 OE	3963/1
37555	3926/1
37555 OE	3926/1
37558	3906/1
37558	3906/1A
37558	3906/2
37558 OE	3906/1
37558 OE	3906/1A
37558 OE	3906/2
37559	3920/1
37559 OE	3920/1
37560	3907/1
37560	3907/1A
37560	3907/2
37560 OE	3907/1
37560 OE	3907/1A
37560 OE	3907/2
37576	3922/1
37576 OE	3922/1
37590	4151/1
37590 OE	4151/1
37616	4037/1
37616 OE	4037/1
37630	4092/1
37630 OE	4092/1
37631	4181/1
37631 OE	4181/1
37664	3966/1
37664 OE	3966/1
37731	4325/1
37731 OE	4325/1
37739	4390
37739 OE	4390
37748	4391
37748 OE	4391
37786	4380
37786 OE	4380
37787	4379
37787 OE	4379
37829	4378
37829 OE	4378
37846	4172/1
37873	3983/3
37883	4389
37887	4382
37900	3966/1
37904	4383
37908	4171/1
37921	4381
37935	3966/1
37960	4378
37974	4140/1
37980	4174/1
37990	4201/1

AKEBONO	BESER
NO	NO
AN-3995K	3403

AKRON	BESER
NO	NO
1039106	3417
1050003	4011
1050005	3754
1050006	3464
1050007	3470
1050008	3558
1050009	3448
1050010	4158
1050011	3318
1050012	3536
1050013	3444
1050014	3486
1050014	3486/1
1050015	4212
1050017	3659
1050018	3778
1050019	3882
1050020	4042
1050022	3686
1050023	3430
1050028	3632
1050029	3879
1050030	4248
1050030	3800/2
1050032	3935
1050034	3496/1
1050036	4156
1050037	4092
1050037	4092/1
1050038	3820
1050038	3820/1
1050040	3958
1050042	3846
1050044	3912
1050046	3685
1050048	4148/1
1050049	3825
1050051	3985
1050054	3861
1050055	3380
1050056	3495
1050059	3317
1050060	3883
1050062	3896
1050063	3688
1050066	3817
1050067	3681
1050068	3800/1
1050069	3856
1050070	3799
1050071	4141
1050075	3618
1050076	3801
1050077	3575
1050078	3790
1050079	3961
1050080	4038
1050081	4093
1050082	4180
1050083	4179
1050084	3949
1050087	3889
1050089	4109
1050089	4232
1050090	4122
1050091	3637
1050093	4076
1050097	3769
1050098	3984
1050099	3976
1050102	3965
1050109	3529
1050110	3842
1050111	4143

AKRON	BESER
NO	NO
1050113	3885
1050114	3663
1050115	3566
1050116	3854
1050118	3853/1
1050120	3419
1050121	4123
1050122	3855
1050123	3834
1050124	3835
1050125	3914
1050126	3794
1050127	4211
1050130	3768
1050133	3877
1050136	3848
1050137	3986
1050143	4230
1050144	4058
1050145	4014
1050147	3487
1050147	3489
1050148	4293
1050149	3944
1050150	3904
1050151	3397
1050152	3905
1050154	3590/1
1050157	3543
1050161	4104
1050163	4260
1050165	3560
1050168	3931
1050169	4112
1050170	4153
1050171	3849
1050172	3649
1050173	3950
1050175	4142
1050176	3421
1050177	3656
1050178	4094
1050179	3939
1050180	3946
1050183	3430
1050184	4103
1050185	3852
1050186	3441
1050188	3968
1050191	4247
1050193	3951
1050194	3895
1050195	4028
1050196	3978
1050197	4008
1050198	3983
1050199	3826/3
1050200	3880
1050201	4149
1050202	3717
1050203	3979
1050204	3983/2
1050204	3983/3
1050205	3900
1050206	4210
1050207	3987
1050209	3473
1050210	4096
1050211	3980
1050212	3960
1050214	4077
1050215	4173
1050219	3906
1050219	3906/1
1050219	3906/1A
1050219	3906/2
1050220	3975
1050221	3920
1050221	3920/1
1050222	3550

AKRON	BESER
NO	NO
1050223	3907
1050223	3907/1
1050223	3907/1A
1050223	3907/2
1050224	3593
1050225	3924
1050226	4389
1050227	3539/1
1050229	3926
1050229	3926/1
1050230	3925
1050230	3925/2
1050231	3963
1050231	3963/1
1050233	4388
1050234	3922
1050234	3922/1
1050236	4160
1050238	3955
1050239	3890
1050240	4154
1050241	3943
1050242	3972
1050245	4161
1050250	3971
1050252	3967
1050253	3970
1050254	3964
1050257	4325/1
1050259	4150
1050261	4281
1050265	3989
1050268	3966
1050268	3966/1
1050269	4207
1050270	3425
1050272	4121
1050273	4057
1050275	3897
1050276	3928
1050277	4145
1050283	4084
1050286	4382
1050289	3660
1050290	3623
1050292	3821
1050295	3826/3
1050296	3466
1050298	3603
1050300	3881
1050301	3788
1050304	3611
1050305	3424
1050306	4039
1050307	3371
1050310	4152
1050312	3892
1050313	3674
1050314	3887
1050315	3581
1050316	3693
1050320	3884
1050321	3677
1050322	3863
1050323	4126
1050323	4126/1
1050324	3676
1050325	3896
1050326	3919
1050328	3687/1
1050329	3795/1
1050330	3933
1050331	3993
1050332	3769
1050333	4059
1050334	3918
1050334	4062
1050335	4182
1050336	3440
1050337	3595

AKRON	BESER
NO	NO
1050339	3559
1050340	3567
1050342	3419
1050343	3432
1050344	3445
1050346	3755
1050347	4269
1050348	4151
1050348	4151/1
1050349	3959
1050350	3416
1050351	3670
1050354	3836
1050355	3969
1050356	3888
1050357	3744
1050358	4128
1050359	3683
1050359	3872/1
1050360	3722
1050361	3589
1050364	3648
1050366	3585
1050366	3585/1
1050369	3945
1050371	3704
1050372	3553
1050374	3794
1050375	3802
1050378	3523
1050379	3551
1050380	3423
1050381	3503/1
1050382	3819
1050383	3608
1050386	3636
1050387	3678
1050388	3804
1050389	3921
1050390	3784
1050391	3746
1050393	4125
1050394	4157
1050395	4100
1050396	3820/3
1050397	3843
1050398	3809
1050400	3800/3
1050402	4173/1
1050403	3617
1050404	3762
1050412	3618
1050423	3584
1050428	3757
1050428	3857
1050455	3493
1050455	3494
1050459	3873
1050462	3878
1050470	3934
1050473	3415
1050481	3562
1050492	3632
1050495	3577
1050495	3647
1050500	4010
1050509	3749
1050510	3575/2
1050515	3417/1
1050516	3621
1050522	3549
1050527	3545
1050545	3607
1050548	4155
1050549	3831
1050550	4159
1050559	4108
1050561	3675
1050564	4106
1050565	4271

AKRON	BESER
NO	NO
1050590	3874
1050591	3780
1050593	3522
1050596	3767
1050599	3315
1050599	3515
1050600	3339
1050600	3514
1050602	3469
1050606	3513
1050607	3408
1050608	3628
1050609	3689
1050610	3630
1050614	4069
1050616	4101
1050616	4209
1050619	3962
1050619	3962/1
1050628	3740
1050631	4009
1050632	3802
1050633	4269
1050636	3410
1050637	3469
1050650	3457
1050652	3680
1050658	3750
1050659	3610
1050662	3800
1050663	3940
1050665	3482
1050666	3596
1050668	3496
1050677	3850
1050678	4137
1050685	3423/1
1050686	3512
1050686	3512/1
1050687	3662
1050689	3453
1050690	3872
1050704	3764
1050705	4079
1050706	3913
1050710	3402
1050730	3777
1050731	4086
1050741	3829
1050742	3830
1050745	4013
1050751	3891
1050753	3327
1050755	3605
1050759	3619
1050766	4020
1050772	3553/1
1050773	4095
1050775	4345
1050782	4222
1050784	4138
1050784	4138/1
1050791	3373
1050797	3642
1050807	3894
1050812	3901
1050819	4027
1050832	4197
1050836	4016
1050840	3318
1050841	3320
1050852	3436
1050853	3583
1050854	3609
1050856	3714
1050858	3504
1050860	3679
1050867	4208
1050868	4181/1
1050873	4378

AKRON	BESER
NO	NO
1050875	4379
1050876	4388
1050878	4380
1050879	4381
1050880	4383
1050892	3685
1050900	4017
1050901	3933
1050902	3952
1050905	3965/1
1050911	3790/1
1050914	3995
1050917	3568
1050926	4148/1
1050930	4148/1
1050935	4118
1050939	4029
1050944	4249
1050952	3993
1050955	3993
1050956	3632
1050957	3502
1050959	4165
1050961	4035
1050962	4061
1050964	3959
1050965	4049
1050969	4166
1050971	3522
1050972	4001
1050973	4087
1050976	4265
1050977	4061
1050989	3827
1050990	4134
1050992	4132
1050992	4172
1050992	4172/1
1050993	4056
1050995	3964/1
1050996	3771
1050997	4161
1051002	4213
1051003	4081
1051009	4113
1051010	3954
1051013	3956
1051014	4147
1051015	4037
1051015	4037/1
1051016	3903
1051018	4146
1051019	3982
1051023	3953
1051026	3998
1051036	4309
1051045	3976/1
1051047	4073
1051054	4000
1051055	3929
1051056	3933
1051064	4310
1051071	4006
1051072	4018
1051077	4198
1051078	3704
1051082	4135
1051083	4162
1051089	3945
1051107	4391
1051110	4004
1051117	4291
1051121	4226
1051124	4241
1051125	4295
1051129	3826/2
1051136	4371
1051136	4373
1051137	4201
1051137	4201/1

AKRON	BESER
NO	NO
1051138	4282
1051142	4317
1051146	4060
1051147	4140/1
1051148	4200
1051149	4167
1051150	4111
1051153	3886
1051154	4124
1051156	4204
1051159	4176
1051159	4176/1
1051161	4174
1051161	4174/1
1051162	4175
1051164	4315
1051168	4372
1051169	4374
1051289	4351/1
1051313	4283/1
1051337	4301/1
1051347	4376
1051359	4350/1

AKRON	BESER
NO	NO
10302247	4185

AP XENERGY	BESER
NO	NO
X40134	3489
X40166	3486/1
X40405	3872/1
X40411	3489
X40617	4148/1
X40630	3512/1
X40704	4126/1
X40781	3820/1
X40782	3820/1
X40823	4138/1
X40862	4097/1
X40915	3924/1
X40917	4389
X40932	4388
X40953	3962/1
X40954	3925/2
X40957	3926/1
X40960	3920/1
X40961	3906/1
X40961	3906/1A
X40961	3906/2
X40962	3907/1
X40962	3907/1A
X40962	3907/2
X40964	3963/1
X40973	4037/1
X40979	3922/1
X40983	4092/1
X40991	4151/1
X41004	4390
X41015	3966/1
X41180	4172/1
X41183	4174/1
X41207	3922/1
X41207	4171/1
X41209	4379
X41213	4181/1
X41232	4378
X41234	4382
X41242	4325/1
X41262	3942/A
X41277	4283/1
X41278	4301/1
X41351	3988/1

APEC	BESER
NO	NO
PAD476	3714
PAD481	3395
PAD483	3462
PAD489	3482
PAD495	3401
PAD496	3442
PAD497	3603
PAD502	3582
PAD506	3504
PAD507	3449
PAD512	3526
PAD514	3446
PAD518	3605
PAD520	3467
PAD521	3543
PAD528	3428
PAD530	3422
PAD532	3549
PAD533	3529
PAD534	3463
PAD538	3311
PAD546	3610
PAD547	3529
PAD548	3432
PAD556	3484
PAD558	3609
PAD560	3323
PAD561	3589
PAD562	3321
PAD563	3773
PAD567	3583
PAD573	3496/1
PAD576	3373
PAD581	3410
PAD582	3771
PAD586	3746
PAD587	4212
PAD589	3470
PAD590	3578
PAD591	3412
PAD592	3662
PAD596	3564
PAD597	3469
PAD602	3448
PAD605	3760
PAD606	3600
PAD608	3430
PAD611	4212
PAD614	3882
PAD615	3757
PAD615	3857
PAD619	3717
PAD624	3380
PAD625	3503
PAD626	3312
PAD632	3366
PAD636	3543
PAD638	3723
PAD640	3437
PAD641	3469
PAD644	3642
PAD645	3641
PAD650	3873
PAD653	3757
PAD653	3857
PAD655	3584
PAD658	3679
PAD668	4108
PAD669	3779
PAD673	4088
PAD674	4087
PAD676	3583
PAD678	3680
PAD679	3696
PAD680	4148/1
PAD684	3522
PAD685	3464
PAD686	3433/1
PAD687	3640
PAD688	4212

APEC	BESER
NO	NO
PAD689	3683
PAD689	3872/1
PAD690	3491
PAD692	3562
PAD693	3660
PAD694	4104
PAD700	3631
PAD703	3560
PAD704	3631
PAD705	3502
PAD706	3661
PAD707	3531
PAD711	3466
PAD712	3487
PAD712	3489
PAD717	3448
PAD719	3632
PAD721	3695
PAD725	3563
PAD728	3473
PAD729	3445
PAD730	3623
PAD735	3423/1
PAD737	3704
PAD739	3426
PAD740	3523
PAD742	3779
PAD748	4080
PAD749	3596
PAD752	3766
PAD754	4072
PAD756	3628
PAD757	3733
PAD759	3581
PAD761	3545
PAD770	3873
PAD772	3630
PAD773	3556
PAD776	3539
PAD777	3776
PAD781	3685
PAD782	3598
PAD785	4086
PAD792	3554
PAD792	3651
PAD794	3688
PAD797	3674
PAD798	3887
PAD800	4128
PAD801	3558
PAD802	3593
PAD803	3819
PAD804	3878
PAD806	3888
PAD810	3503
PAD812	3608
PAD814	3528
PAD815	3607
PAD816	3686
PAD820	3879
PAD822	3693
PAD823	3833
PAD827	3536
PAD828	3474
PAD833	3714
PAD835	3777
PAD836	3909
PAD844	3883
PAD845	4078
PAD847	3736
PAD848	3553
PAD852	4182
PAD855	3585
PAD859	4148/1
PAD861	3673
PAD863	3915
PAD864	4275
PAD867	3595
PAD868	3559
PAD873	3436

APEC	BESER
NO	NO
PAD875	3506
PAD876	3667
PAD879	3675
PAD880	3577
PAD880	3647
PAD884	3749
PAD886	3677
PAD890	3602
PAD891	3496
PAD892	3470
PAD897	3453
PAD899	3511
PAD901	3750
PAD903	3884
PAD907	3512
PAD907	3512/1
PAD909	3570
PAD910	4020
PAD911	3538
PAD914	3622
PAD915	3457
PAD918	3678
PAD921	3567
PAD922	3740
PAD923	3863
PAD924	3419
PAD929	3670
PAD933	3566
PAD934	4062
PAD935	3799
PAD936	3680
PAD937	3617
PAD942	3656
PAD948	3881
PAD952	3898
PAD954	3606
PAD955	3773
PAD956	3879
PAD962	3822
PAD963	3994
PAD966	3682
PAD967	3663
PAD968	4034
PAD968	4034/1
PAD969	3554
PAD969	3651
PAD970	3636
PAD971	3507
PAD973	3896
PAD974	3637
PAD976	3659
PAD978	4197
PAD979	3867
PAD980	3687/1
PAD984	3575
PAD985	3704
PAD987	3617
PAD988	3781
PAD991	3632
PAD993	4125
PAD995	3417
PAD998	3598/1
PAD999	4087
PD3083	4388
PD3090	3925/2
PD3091	3926/1
PD3094	3920/1
PD3095	3907/1
PD3095	3907/1A
PD3095	3907/2
PD3106	3924/1
PD3150	4389
PD3152	3988/1
PD3211	3963/1
PD3244	4390
PD3245	3966/1
PD3251	4037/1
PD3272	4172/1
PD3286	4383
PD3290	4381

APEC	BESER
NO	NO
PD3341	4181/1
PD3346	4325/1
PD3349	4380
PD3351	4382
PD3355	4171/1
PD3368	4174/1
PD3380	4351/1
PD3504	4126/1
PD3556	4301/1
PD3648	3962/1
PD3664	4092/1
PD3705	4379
PD3732	4201/1
PD3742	4374
PD3744	4371
PD3744	4373
PD3745	4176/1
PD3746	4372
PD3753	4283/1
PD3795	4369
PD3796	4370
PD3832	4140/1
PAD1004	4071
PAD1005	3496/1
PAD1010	4148/1
PAD1014	3704
PAD1015	3994
PAD1017	3778
PAD1018	4099
PAD1019	3872
PAD1021	3722
PAD1022	3762
PAD1026	3874
PAD1028	3745
PAD1031	3505
PAD1031	3615
PAD1034	3754
PAD1036	3674
PAD1038	3744
PAD1039	3755
PAD1040	3380
PAD1046	4155
PAD1047	3887
PAD1049	4274
PAD1051	3897
PAD1053	3618
PAD1056	4182
PAD1059	3809
PAD1063	3676
PAD1066	4148/1
PAD1070	4079
PAD1071	3918
PAD1073	3522
PAD1074	3681
PAD1075	3919
PAD1076	3829
PAD1077	3861
PAD1080	3821
PAD1081	3780
PAD1084	4059
PAD1085	3674
PAD1086	3882
PAD1087	3650
PAD1088	3619
PAD1089	3795/1
PAD1091	3685
PAD1092	3768
PAD1093	4027
PAD1095	4281
PAD1096	3915
PAD1097	3764
PAD1099	3830
PAD1102	4126
PAD1102	4126/1
PAD1103	4069
PAD1104	3804
PAD1110	3590/1
PAD1111	3928
PAD1112	3790
PAD1113	3788

APEC	BESER
NO	NO
PAD1116	3769
PAD1117	3877
PAD1120	3943
PAD1121	3993
PAD1122	3687/1
PAD1124	4009
PAD1128	4110
PAD1131	4011
PAD1136	3704
PAD1140	3686
PAD1141	3539/1
PAD1143	3913
PAD1145	3740
PAD1147	4010
PAD1148	3901
PAD1149	3767
PAD1151	3859
PAD1152	3896
PAD1153	4102
PAD1155	3553/1
PAD1156	4101
PAD1156	4209
PAD1158	4345
PAD1160	4269
PAD1161	4222
PAD1163	3843
PAD1164	3821
PAD1166	3836
PAD1167	3784
PAD1170	4115
PAD1172	4084
PAD1173	3846
PAD1174	4100
PAD1175	4093
PAD1181	4198
PAD1182	3794
PAD1183	3921
PAD1184	4095
PAD1185	3683
PAD1185	3872/1
PAD1186	3852
PAD1187	4109
PAD1187	4232
PAD1188	4269
PAD1193	4103
PAD1194	3800
PAD1195	3853
PAD1196	4153
PAD1197	3855
PAD1198	3820
PAD1198	3820/1
PAD1200	3895
PAD1201	4271
PAD1203	3632
PAD1204	3856
PAD1207	3802
PAD1208	4094
PAD1209	4123
PAD1216	3820
PAD1216	3820/1
PAD1219	3697
PAD1220	4152
PAD1221	3846
PAD1223	3817
PAD1224	3986
PAD1225	3584
PAD1230	3687/1
PAD1237	3843
PAD1239	3834
PAD1240	3848
PAD1243	3825
PAD1245	3993
PAD1248	4211
PAD1250	3931
PAD1251	3835
PAD1252	4138
PAD1252	4138/1
PAD1254	4119
PAD1259	3935
PAD1261	3914

APEC	BESER
NO	NO
PAD1262	4158
PAD1263	4180
PAD1264	3933
PAD1267	4012
PAD1268	3892
PAD1269	3820
PAD1269	3820/1
PAD1270	3950
PAD1274	3826/1
PAD1277	3823
PAD1279	3795/1
PAD1282	4082
PAD1283	3934
PAD1284	3831
PAD1285	4179
PAD1288	3632
PAD1289	3854
PAD1290	3910
PAD1292	3575/2
PAD1293	3800/1
PAD1294	4125
PAD1295	4093
PAD1301	4118
PAD1302	3889
PAD1303	3831
PAD1305	3850
PAD1306	3849
PAD1308	3849
PAD1309	4123
PAD1310	3502
PAD1311	3932
PAD1312	3983
PAD1313	3904
PAD1315	4112
PAD1318	4076
PAD1319	3951
PAD1320	3912
PAD1321	3632
PAD1324	3905
PAD1326	3801
PAD1329	3894
PAD1330	3790/1
PAD1331	3979
PAD1332	4013
PAD1333	3890
PAD1334	4154
PAD1336	3841
PAD1337	3841/1
PAD1338	4105
PAD1341	4346
PAD1343	3978
PAD1344	4181
PAD1345	4111
PAD1348	4042
PAD1350	4028
PAD1352	3842
PAD1353	4208
PAD1355	4096
PAD1361	4216
PAD1362	3912
PAD1364	4074
PAD1369	4303
PAD1371	3777
PAD1376	3955
PAD1382	3891
PAD1384	3959
PAD1385	4186
PAD1388	3961
PAD1389	4031
PAD1390	4106
PAD1393	3863
PAD1394	4159
PAD1395	3632
PAD1396	3617
PAD1399	4303
PAD1400	3826/1
PAD1401	3923/1
PAD1404	3940
PAD1405	3900
PAD1410	3849

APEC	BESER
NO	NO
PAD1412	3827
PAD1413	4173
PAD1415	3885
PAD1416	4137
PAD1417	3939
PAD1426	3946
PAD1429	4017
PAD1430	3748
PAD1431	3879
PAD1433	3984
PAD1436	3924/1
PAD1437	3872
PAD1441	4210
PAD1442	3969
PAD1444	3853/1
PAD1447	4388
PAD1448	3853/1
PAD1449	4001
PAD1450	3800
PAD1451	3959
PAD1453	4213
PAD1454	3912
PAD1455	4081
PAD1458	3968
PAD1459	4389
PAD1460	3987
PAD1461	3765
PAD1462	3895
PAD1463	3928
PAD1465	4016
PAD1466	3983/1
PAD1467	4058
PAD1468	4293
PAD1469	3944
PAD1470	3988
PAD1470	3988/1
PAD1471	3911
PAD1474	3985
PAD1475	3906
PAD1475	3906/1
PAD1475	3906/1A
PAD1475	3906/2
PAD1476	3920
PAD1476	3920/1
PAD1477	3907
PAD1477	3907/1
PAD1477	3907/1A
PAD1477	3907/2
PAD1482	4113
PAD1485	4018
PAD1487	3980
PAD1489	4006
PAD1490	3952
PAD1491	3880
PAD1497	3747
PAD1501	4000
PAD1502	4143
PAD1503	4161
PAD1507	3976/1
PAD1508	3945
PAD1509	3874
PAD1514	3962
PAD1514	3962/1
PAD1515	3925
PAD1515	3925/2
PAD1516	3926
PAD1516	3926/1
PAD1517	3963
PAD1517	3963/1
PAD1519	3975
PAD1520	3883
PAD1525	3964
PAD1528	3993
PAD1532	4157
PAD1533	3800/2
PAD1539	3972
PAD1540	4151
PAD1540	4151/1
PAD1545	3955
PAD1546	3820

APEC	BESER
NO	NO
PAD1546	3820/1
PAD1547	3800
PAD1548	3800
PAD1549	3826/1
PAD1550	3800/1
PAD1553	3959
PAD1555	4028
PAD1556	3978
PAD1557	4198
PAD1558	3984
PAD1560	4240
PAD1561	4240
PAD1563	3980
PAD1564	3960
PAD1565	4248
PAD1568	3989
PAD1571	3965/1
PAD1574	3976
PAD1575	3922
PAD1575	3922/1
PAD1578	3954
PAD1579	3954
PAD1582	4160
PAD1583	4156
PAD1584	4035
PAD1589	3820/3
PAD1591	3949
PAD1592	4077
PAD1593	3953
PAD1596	3929
PAD1597	3965
PAD1598	3958
PAD1599	3982
PAD1606	3903
PAD1608	4092
PAD1608	4092/1
PAD1609	3970
PAD1612	4173/1
PAD1614	4207
PAD1617	4039
PAD1618	4165
PAD1619	4247
PAD1620	4249
PAD1621	4038
PAD1626	4122
PAD1630	3800
PAD1638	3885
PAD1640	3886
PAD1641	3956
PAD1643	4181/1
PAD1644	4036
PAD1645	3995
PAD1649	3950
PAD1654	4390
PAD1655	4260
PAD1656	3966
PAD1656	3966/1
PAD1657	3967
PAD1658	3503/1
PAD1659	3971
PAD1660	3607
PAD1662	4143
PAD1664	3983/1
PAD1669	3964/1
PAD1670	4309
PAD1674	4037
PAD1674	4037/1
PAD1684	4149
PAD1685	3950
PAD1687	4004
PAD1689	4142
PAD1690	4054
PAD1697	4150
PAD1698	4029
PAD1700	4005
PAD1707	4147
PAD1708	4134
PAD1711	4391
PAD1716	3950
PAD1718	4256

APEC	BESER
NO	NO
PAD1723	4146
PAD1728	4169
PAD1731	3904
PAD1733	3944
PAD1736	4124
PAD1737	4291
PAD1742	4208
PAD1745	4073
PAD1751	4135
PAD1752	4325/1
PAD1753	4060
PAD1754	4061
PAD1755	4233
PAD1760	4015
PAD1761	3996
PAD1762	3997
PAD1764	4061
PAD1771	4230
PAD1772	4008
PAD1773	4014
PAD1774	4378
PAD1775	3826/3
PAD1777	3945
PAD1779	4379
PAD1781	4057
PAD1782	4162
PAD1783	4132
PAD1783	4172
PAD1783	4172/1
PAD1789	4380
PAD1793	4121
PAD1796	4310
PAD1797	4056
PAD1813	4145
PAD1816	3906/1
PAD1817	4389
PAD1821	3885
PAD1822	3853/1
PAD1826	3933
PAD1827	3826/3
PAD1828	4148/1
PAD1829	4148/1
PAD1830	4382
PAD1836	4314
PAD1839	3998
PAD1840	4167
PAD1847	3894
PAD1849	3945
PAD1850	4383
PAD1853	4255
PAD1859	4171
PAD1859	3922/3
PAD1859	4171/1
PAD1860	4039
PAD1864	4014
PAD1865	4166
PAD1867	3952
PAD1869	4038
PAD1872	4167
PAD1875	4381
PAD1877	4265
PAD1878	4161
PAD1883	4136
PAD1887	3983/2
PAD1887	3983/3
PAD1902	4228
PAD1903	4241
PAD1905	4204
PAD1918	3955
PAD1919	4378
PAD1930	4174
PAD1930	4174/1
PAD1931	4175
PAD1937	4201
PAD1937	4201/1
PAD1940	4156
PAD1944	4140
PAD1945	4140/1
PAD1949	4226
PAD1954	4258

APEC	BESER
NO	NO
PAD1956	3959
PAD1957	4213
PAD1958	4200
PAD1968	4317
PAD1969	4318
PAD1972	4371
PAD1972	4373
PAD1973	4176
PAD1973	4176/1
PAD1974	4372
PAD1976	4374
PAD1988	3885
PAD2001	3826/3
PAD2002	3826/2
PAD2013	4283/1
PAD2028	4295
PAD2031	4349
PAD2036	4351/1
PAD2171	4301
PAD2171	4301/1
PAD2182	4370
PAD2189	4369
PAD2239	4376

ASHIKA	BESER
NO	NO
50-00-000	3421
50-00-003	3872
50-00-004	3955
50-00-0048	4346
50-00-005	3872
50-00-0051	3820/1
50-00-0078	3585/1
50-00-010	4104
50-00-0104	4381
50-00-0106	4382
50-00-011	4211
50-00-012	4128
50-00-0126	4378
50-00-013	3983
50-00-015	3562
50-00-017	3888
50-00-018	4016
50-00-021	3748
50-00-0244	4301/1
50-00-031	3964/1
50-00-0319	4174/1
50-00-032	3619
50-00-0320	4351/1
50-00-0324	3906/1
50-00-0324	3906/1A
50-00-0324	3906/2
50-00-0325	3920/1
50-00-0534	4391
50-00-0535	4126/1
50-00-0538	3925/2
50-00-0539	3962/1
50-00-0548	4376
50-00-056	3867
50-00-057	4182
50-00-0613	4371
50-00-0613	4373
50-00-0625	4171/1
50-00-0645	4201/1
50-00-0649	4171/1
50-00-090	4031
50-00-0942	4228/1
50-00-097	4011
50-00-099	4197
50-00-190	3562
50-01-101	3394
50-01-106	3370
50-01-109	3848
50-01-111	3397
50-01-114	3659
50-01-115	4143

ASHIKA	BESER
NO	NO
50-01-116	3369
50-01-117	3965/1
50-01-118	4074
50-01-121	3952
50-01-122	3942/A
50-01-123	4038
50-01-127	4015
50-01-130	3397
50-01-133	3758
50-01-134	3415
50-01-137	3760
50-01-139	3760
50-01-143	3779
50-01-149	3598
50-01-150	3797
50-01-151	3856
50-01-153	4002
50-01-154	3932
50-01-156	4056
50-01-164	4308
50-01-176	4115
50-01-177	4010
50-01-178	3859
50-01-183	3779
50-01-189	3779
50-01-191	3577
50-01-191	3647
50-01-194	3632
50-01-195	3758
50-01-198	3577
50-01-198	3647
50-01-199	3882
50-02-2000	4176
50-02-2000	4176/1
50-02-2001	4255
50-02-2004	3998
50-02-2006	4274
50-02-2007	4071
50-02-2008	3822
50-02-2009	3927
50-02-203	3769
50-02-204	4112
50-02-205	3891
50-02-206	3890
50-02-207	3915
50-02-208	3324
50-02-209	4105
50-02-210	3710
50-02-211	3817
50-02-213	4013
50-02-215	3768
50-02-217	3987
50-02-218	3910
50-02-219	3958
50-02-224	3379
50-02-225	3982
50-02-230	4077
50-02-234	3369
50-02-235	3402
50-02-236	3371
50-02-239	3634
50-02-240	3714
50-02-242	4088
50-02-243	3903
50-02-247	3714
50-02-248	3777
50-02-250	3956
50-02-253	3379
50-02-254	3560
50-02-257	3402
50-02-261	3554
50-02-261	3651
50-02-262	4088
50-02-264	3554
50-02-264	3651
50-02-265	4086
50-02-268	3829
50-02-269	3953
50-02-272	3996
50-02-273	4082

ASHIKA	BESER
NO	NO
50-02-277	3948
50-02-278	4167
50-02-280	4158
50-02-281	3768
50-02-288	3673
50-02-289	3554
50-02-289	3651
50-02-290	3554
50-02-290	3651
50-02-292	3673
50-02-297	3666
50-03-300	3885
50-03-302	3877
50-03-305	4118
50-03-306	3889
50-03-307	3889
50-03-309	4317
50-03-310	3709
50-03-311	3780
50-03-315	4220
50-03-317	4220
50-03-322	4119
50-03-323	3988
50-03-323	3988/1
50-03-325	3462
50-03-326	3449
50-03-330	3666
50-03-331	3437
50-03-332	3723
50-03-333	3449
50-03-334	3436
50-03-338	3632
50-03-339	3502
50-03-341	3522
50-03-342	3640
50-03-345	3723
50-03-346	4029
50-03-373	3767
50-03-375	3687/1
50-03-376	3470
50-03-377	3312
50-03-378	3484
50-03-379	3740
50-03-384	3874
50-03-386	3640
50-03-387	3522
50-03-389	3687/1
50-03-390	3623
50-03-393	3874
50-03-396	3892
50-03-398	3740
50-03-594	3502
50-04-401	3831
50-04-404	3509
50-04-405	4160
50-04-414	3501
50-04-417	4212
50-04-418	3582
50-04-419	3752
50-04-420	3504
50-04-424	3582
50-04-425	3686
50-04-426	3631
50-04-427	3683
50-04-427	3872/1
50-04-432	3704
50-04-435	3607
50-04-438	4312
50-04-440	3631
50-04-452	4159
50-04-490	4110
50-04-492	3695
50-04-493	3696
50-04-496	3683
50-04-496	3872/1
50-04-497	3704
50-04-498	3704
50-04-499	3704
50-05-501	3955
50-05-503	3765

ASHIKA	BESER
NO	NO
50-05-504	3975
50-05-505	4271
50-05-508	3407
50-05-509	3892
50-05-512	4054
50-05-514	4216
50-05-515	3900
50-05-516	4059
50-05-517	3916
50-05-518	4107
50-05-521	3401
50-05-524	3400
50-05-525	3401
50-05-527	3448
50-05-530	3622
50-05-582	3900
50-05-583	3778
50-05-585	3809
50-05-587	3622
50-05-588	3675
50-05-591	3632
50-05-592	3675
50-05-595	3507
50-05-598	3622
50-05-599	3685
50-06-601	3436
50-06-602	3620
50-06-605	3746
50-06-606	3600
50-06-607	3436
50-06-612	3928
50-06-615	3901
50-06-698	3436
50-06-699	3898
50-07-700	3394
50-07-701	3579
50-07-703	3395
50-07-705	3426
50-07-706	3912
50-07-708	4078
50-07-709	4081
50-07-711	3764
50-07-712	4036
50-07-796	4079
50-08-800	3983/1
50-08-802	3929
50-08-806	3882
50-08-807	4000
50-08-809	3928
50-08-811	3883
50-08-813	4027
50-08-816	3602
50-08-886	4034
50-08-886	4034/1
50-08-887	3633
50-08-893	3884
50-08-895	3511
50-08-896	3745
50-08-897	3883
50-09-901	3446
50-09-902	3462
50-09-903	3674
50-09-904	3757
50-09-904	3857
50-09-906	3623
50-09-908	3886
50-09-910	4005
50-09-911	4198
50-09-913	4006
50-09-914	4124
50-09-994	4012
50-09-999	3674
50-0H-H14	3960
50-0H-H17	4049
50-0H-H18	4166
50-0H-H22	4251/1
50-0K-010	3968
50-0K-019	4035
50-0K-K11	4001
50-0K-K12	3880

ASHIKA	BESER
NO	NO
50-0K-K20	4039
50-0K-K23	4265
50-0K-K24	4136
50-0K-K28	4233
50-0L-L00	4161
50-0L-L01	4293
50-0L-L02	3453
50-0L-L03	4094
50-0L-L10	3662
50-0L-L11	3413
50-0M-000	4281
50-0S-S01	3976/1
50-0W-008	3539
50-0W-W09	4073
50-0W-W10	3976
50-0W-W12	4230
50-0W-W13	4008
50-0W-W16	4149
50-H0-002	3648
50-H0-003	3843
50-H0-004	3632
50-H0-005	3843
50-H0-007	3648
50-H0-008	3985
50-H0-009	3502
50-H0-010	3959
50-H0-013	3961
50-K0-000	4009
50-K0-001	3653
50-K0-005	3802
50-K0-005P	3802
50-K0-006	3778
50-K0-007	4269
50-K0-008	3978
50-K0-009	4028
50-K0-014	3632
50-K0-015	3959
50-K0-017	4269
50-W0-000	3511
50-W0-002	3510
50-W0-003	3687/1
50-W0-004	3744
50-W0-007	3951
51.04.402	4212
51.04.425	4212
51-00-00008	4388
51-00-00019	4374
51-00-002	4106
51-00-005	3853/1
51-00-008	3747
51-00-0100	4389
51-00-0102	4383
51-00-0112	4325/1
51-00-0113	4379
51-00-0116	4181/1
51-00-015	3660
51-00-0218	4092/1
51-00-0308	3907/1
51-00-0308	3907/1A
51-00-0308	3907/2
51-00-0522	3926/1
51-00-0523	3963/1
51-00-0614	4372
51-01-102	3855
51-01-106	4172/1
51-01-107	4283/1
51-01-109	3795/1
51-01-123	4087
51-01-137	4010
51-01-138	3853
51-01-154	3933
51-02-200	4154
51-02-2002	4151/1
51-02-201	3693
51-02-203	3788
51-02-210	3693
51-02-211	4111
51-02-213	3776
51-02-214	3954
51-02-215	3830

ASHIKA	BESER
NO	NO
51-02-216	3911
51-02-217	4113
51-02-218	3949
51-02-220	4037
51-02-220	4037/1
51-02-221	3997
51-02-223	4146
51-02-256	4153
51-02-257	3825
51-02-259	3830
51-02-262	4072
51-02-295	4275
51-02-297	3693
51-02-298	3693
51-03-302	3875
51-03-304	4303
51-03-307	3833
51-03-310	4215
51-03-390	3833
51-03-392	3833
51-04-400	4156
51-04-402	4212
51-04-404	4212
51-04-405	4148/1
51-04-407	4155
51-04-408	4148/1
51-04-409	4148/1
51-04-414	4279
51-04-425	4212
51-04-495	4148/1
51-04-497	4148/1
51-04-498	4148/1
51-05-503	4108
51-05-506	3335
51-05-507	4062
51-05-508	4106
51-05-592	4084
51-05-594	4108
51-05-595	4087
51-05-599	3688
51-07-701	4080
51-07-702	3913
51-07-704	4213
51-07-705	4258
51-09-901	4004
51-09-902	4018
51-09-903	3887
51-09-999	3887
51-0A-A01	3777
51-0H-H04	3993
51-0H-H05	4087
51-0H-H06	3993
51-0H-H08	3989
51-0K-004	3969
51-0K-K01	3545
51-0K-K03	3979
51-0K-K06	4061
51-0K-K08	3993
51-0K-K09	3980
51-0K-K10	4165
51-0K-K11	4060
51-0L-L00	3879
51-0L-L01	3944
51-0L-L03	4157
51-0L-L04	3661
51-0L-L06	3512
51-0L-L06	3512/1
51-0L-L07	3771
51-0S-S01	3895
51-0W-W02	3894
51-0W-W05	4014
51-0W-W06	4150
51-H0-H07	3993

ASHUKI	BESER
NO	NO
US104242	4185

ASIMCO	BESER
NO	NO
KD6340	4185

ATE	BESER
NO	NO
13.0460.7091.2	3665
13.0460-0030.2	3564
13.0460-0032.2	3590/1
13.0460-0035.2	3551
13.0460-0036.2	3503
13.0460-0037.2	3836
13.0460-0038.2	3444/1
13.0460-0039.2	3470
13.0460-0040.2	3677
13.0460-0041.2	3863
13.0460-0045.2	3877
13.0460-0046.2	3896
13.0460-0048.2	3623
13.0460-0049.2	3762
13.0460-0050.2	3531
13.0460-0058.2	3570
13.0460-0059.2	3754
13.0460-2600.2	4283
13.0460-2600.2	4283/1
13.0460-2604.2	4323
13.0460-2609.2	4228
13.0460-2609.2	4228/1
13.0460-2611.2	4174/1
13.0460-2623.2	3529/2
13.0460-2624.2	4287
13.0460-2632.2	4370
13.0460-2709.2	3983
13.0460-2713.2	4389
13.0460-2716.2	4379
13.0460-2718.2	4094
13.0460-2719.2	3944
13.0460-2723.2	4157
13.0460-2726.2	3836
13.0460-2727.2	3408
13.0460-2727.2	3836
13.0460-2728.2	4293
13.0460-2731.2	3944
13.0460-2732.2	4248
13.0460-2733.2	4248
13.0460-2734.2	4249
13.0460-2737.2	4157
13.0460-2738.2	3972
13.0460-2739.2	4151
13.0460-2739.2	4151/1
13.0460-2740.2	3529/1
13.0460-2741.2	3966
13.0460-2741.2	3966/1
13.0460-2742.2	3966
13.0460-2744.2	3967
13.0460-2745.2	3971
13.0460-2747.2	4260
13.0460-2748.2	4260
13.0460-2749.2	4390
13.0460-2753.2	3529/2
13.0460-2755.2	4150
13.0460-2756.2	4142
13.0460-2757.2	4142
13.0460-2758.2	4150
13.0460-2760.2	4325
13.0460-2760.2	4325/1
13.0460-2762.2	4314
13.0460-2774.2	3983/2
13.0460-2774.2	3983/3
13.0460-2776.2	4125
13.0460-2779.2	4326
13.0460-2780.2	4335
13.0460-2784.2	4204
13.0460-2787.2	3529/1
13.0460-2790.2	4336
13.0460-2792.2	4334
13.0460-2794.2	4040
13.0460-2801.2	3624
13.0460-2803.2	3683
13.0460-2803.2	3872/1
13.0460-2813.2	3466

ATE	BESER
NO	NO
13.0460-2815.2	3733
13.0460-2816.2	3750
13.0460-2818.2	3671
13.0460-2819.2	3529/1
13.0460-2820.2	3529/1
13.0460-2822.2	3896
13.0460-2824.2	3526
13.0460-2825.2	3556
13.0460-2829.2	3636
13.0460-2831.2	4062
13.0460-2833.2	4125
13.0460-2834.2	3503
13.0460-2835.2	3755
13.0460-2837.2	3896
13.0460-2838.2	3553/1
13.0460-2840.2	3795/1
13.0460-2842.2	3529
13.0460-2843.2	3773
13.0460-2845.2	3529/2
13.0460-2853.2	4059
13.0460-2854.2	3836
13.0460-2856.2	3323
13.0460-2857.2	3846
13.0460-2860.2	3529/2
13.0460-2861.2	3539/1
13.0460-2862.2	3644
13.0460-2863.2	3986
13.0460-2864.2	3529/1
13.0460-2867.2	4123
13.0460-2868.2	4040
13.0460-2869.2	3557
13.0460-2869.2	3610
13.0460-2870.2	3848
13.0460-2871.2	3854
13.0460-2874.2	3795
13.0460-2874.2	4345
13.0460-2876.2	4222
13.0460-2877.2	4152
13.0460-2880.2	3905
13.0460-2881.2	3931
13.0460-2882.2	3842
13.0460-2884.2	4138
13.0460-2884.2	4138/1
13.0460-2886.2	3529/2
13.0460-2887.2	3905
13.0460-2891.2	3939
13.0460-2892.2	3940
13.0460-2893.2	3946
13.0460-2895.2	3539/1
13.0460-2897.2	4062
13.0460-2899.2	4012
13.0460-2901.2	3440
13.0460-2902.2	3543
13.0460-2903.2	3605
13.0460-2905.2	3328
13.0460-2912.2	3419
13.0460-2913.2	3429
13.0460-2921.2	3609
13.0460-2923.2	3430
13.0460-2924.2	3378
13.0460-2925.2	3619
13.0460-2926.2	3649
13.0460-2927.2	3408
13.0460-2934.2	3650
13.0460-2935.2	3642
13.0460-2936.2	3490
13.0460-2937.2	3529
13.0460-2938.2	3378
13.0460-2939.2	3467
13.0460-2941.2	3466
13.0460-2942.2	3466
13.0460-2944.2	3468
13.0460-2948.2	3432
13.0460-2949.2	3466
13.0460-2953.2	3373
13.0460-2954.2	3311
13.0460-2955.2	3503
13.0460-2956.2	3474
13.0460-2957.2	3531
13.0460-2958.2	3551

ATE	BESER
NO	NO
13.0460-2962.2	3536
13.0460-2964.2	3419
13.0460-2964.2	3731
13.0460-2965.2	3422
13.0460-2966.2	3393
13.0460-2967.2	3374
13.0460-2971.2	3457
13.0460-2973.2	4020
13.0460-2975.2	3658
13.0460-2976.2	3595
13.0460-2977.2	3559
13.0460-2981.2	3555
13.0460-2982.2	3553
13.0460-2983.2	3539
13.0460-2984.2	3529/1
13.0460-3009.2	3326
13.0460-3024.2	3326/1
13.0460-3306.2	3583
13.0460-3503.2	3630
13.0460-3504.2	3630
13.0460-3602.2	3536
13.0460-3800.2	3856
13.0460-3803.2	3578
13.0460-3806.2	3855
13.0460-3807.2	3643
13.0460-3808.2	3318
13.0460-3809.2	4173
13.0460-3810.2	3826
13.0460-3811.2	3800
13.0460-3813.2	3984
13.0460-3814.2	3850
13.0460-3815.2	3849
13.0460-3817.2	3800/1
13.0460-3818.2	3826/1
13.0460-3819.2	3923/1
13.0460-3821.2	3924/1
13.0460-3823.2	3496
13.0460-3826.2	3826/1
13.0460-3827.2	3800/1
13.0460-3829.2	3987
13.0460-3831.2	4058
13.0460-3832.2	3926
13.0460-3832.2	3926/1
13.0460-3833.2	3920
13.0460-3833.2	3920/1
13.0460-3834.2	3906
13.0460-3834.2	3906/1
13.0460-3834.2	3906/1A
13.0460-3834.2	3906/2
13.0460-3835.2	3907
13.0460-3835.2	3907/1
13.0460-3835.2	3907/1A
13.0460-3835.2	3907/2
13.0460-3837.2	3926
13.0460-3837.2	3926/1
13.0460-3840.2	3800/2
13.0460-3842.2	3963
13.0460-3842.2	3963/1
13.0460-3846.2	4173/1
13.0460-3847.2	3970
13.0460-3849.2	3827
13.0460-3850.2	3826
13.0460-3851.2	3984
13.0460-3851.2	3984/1
13.0460-3852.2	4391
13.0460-3853.2	4146
13.0460-3857.2	4382
13.0460-3858.2	4135
13.0460-3859.2	4383
13.0460-3860.2	3906/1
13.0460-3863.2	3826/3
13.0460-3864.2	3800/3
13.0460-3866.2	4381
13.0460-3867.2	4201
13.0460-3867.2	4201/1
13.0460-3868.2	4176/1
13.0460-3871.2	4372
13.0460-3872.2	4374
13.0460-3875.2	4351
13.0460-3875.2	4351/1

ATE	BESER
NO	NO
13.0460-3878.2	4301/1
13.0460-3886.2	4350
13.0460-3900.2	3439
13.0460-3903.2	3442
13.0460-3904.2	3425
13.0460-3911.2	3380
13.0460-3911.2	3580
13.0460-3914.2	3641
13.0460-3915.2	3493
13.0460-3915.2	3494
13.0460-3926.2	3496
13.0460-3928.2	3333
13.0460-3933.2	3428
13.0460-3935.2	3464
13.0460-3936.2	3316
13.0460-3937.2	3317
13.0460-3939.2	3424
13.0460-3940.2	3424/1
13.0460-3944.2	3603
13.0460-3945.2	3689
13.0460-3950.2	3643
13.0460-3951.2	3608
13.0460-3952.2	3487
13.0460-3952.2	3489
13.0460-3954.2	3496/1
13.0460-3955.2	3495
13.0460-3956.2	3819
13.0460-3957.2	3799
13.0460-3959.2	3445
13.0460-3960.2	3473
13.0460-3965.2	3722
13.0460-3968.2	3527
13.0460-3969.2	3482
13.0460-3970.2	3366/1
13.0460-3971.2	3366
13.0460-3972.2	3878
13.0460-3974.2	3659
13.0460-3975.2	3938
13.0460-3979.2	4281
13.0460-3980.2	3681
13.0460-3982.2	3826/1
13.0460-3983.2	3800/1
13.0460-3985.2	3861
13.0460-3987.2	4100
13.0460-3988.2	4093
13.0460-3990.2	3804
13.0460-3992.2	3921
13.0460-3993.2	3784
13.0460-3994.2	3820
13.0460-3994.2	3820/1
13.0460-3997.2	3935
13.0460-3998.2	3934
13.0460-4014.2	3680
13.0460-4028.2	3327
13.0460-4029.2	3343
13.0460-4029.2	3483
13.0460-4030.2	3611
13.0460-4033.2	3318
13.0460-4034.2	3550
13.0460-4035.2	3318
13.0460-4040.2	3717
13.0460-4043.2	3469
13.0460-4044.2	3318
13.0460-4047.2	3581
13.0460-4058.2	3545
13.0460-4059.2	3680
13.0460-4060.2	3663
13.0460-4063.2	3806
13.0460-4064.2	3676
13.0460-4065.2	3821
13.0460-4069.2	4101
13.0460-4069.2	4209
13.0460-4201.2	3629
13.0460-4202.2	3628
13.0460-4401.2	3513
13.0460-4805.2	4137
13.0460-4807.2	3981
13.0460-4809.2	3981
13.0460-4810.2	3922
13.0460-4810.2	3922/1

ATE	BESER
NO	NO
13.0460-4811.2	3922
13.0460-4811.2	4171/1
13.0460-4812.2	3820/3
13.0460-4817.2	4240
13.0460-4823.2	4092
13.0460-4823.2	4092/1
13.0460-4826.2	3925
13.0460-4826.2	3925/2
13.0460-4827.2	3962
13.0460-4827.2	3962/1
13.0460-4828.2	3994
13.0460-4829.2	3995
13.0460-4830.2	3965
13.0460-4833.2	3945
13.0460-4844.2	4169
13.0460-4847.2	3942
13.0460-4852.2	4309
13.0460-4856.2	4056
13.0460-4857.2	4132
13.0460-4857.2	4172
13.0460-4857.2	4172/1
13.0460-4858.2	4057
13.0460-4866.2	3965/1
13.0460-4870.2	4313
13.0460-4872.2	4310
13.0460-4877.2	3925
13.0460-4877.2	3925/2
13.0460-4914.2	3994
13.0460-4955.2	3523
13.0460-4956.2	3873
13.0460-4957.2	3596
13.0460-4965.2	3909
13.0460-4966.2	3575
13.0460-4976.2	4076
13.0460-4977.2	4103
13.0460-4978.2	3834
13.0460-4979.2	3835
13.0460-4980.2	3914
13.0460-4984.2	4102
13.0460-4989.2	3575/2
13.0460-4992.2	4075
13.0460-4993.2	4075/1
13.0460-4996.2	3823
13.0460-5030.2	3335
13.0460-5032.2	3365
13.0460-5409.2	3459
13.0460-5418.2	3405
13.0460-5423.2	3484
13.0460-5469.2	3320
13.0460-5538.2	4307
13.0460-5600.2	4039
13.0460-5601.2	4165
13.0460-5602.2	3956
13.0460-5604.2	4037
13.0460-5604.2	4037/1
13.0460-5609.2	3929
13.0460-5610.2	4029
13.0460-5612.2	4149
13.0460-5616.2	3903
13.0460-5618.2	3996
13.0460-5619.2	3997
13.0460-5622.2	3976/1
13.0460-5623.2	3895
13.0460-5629.2	4004
13.0460-5631.2	3975
13.0460-5632.2	4017
13.0460-5633.2	4060
13.0460-5634.2	4255
13.0460-5637.2	3989
13.0460-5641.2	4049
13.0460-5642.2	4337
13.0460-5645.2	4166
13.0460-5645.2	4342
13.0460-5646.2	4136
13.0460-5649.2	4265
13.0460-5650.2	4343
13.0460-5652.2	4282
13.0460-5653.2	4321
13.0460-5654.2	4316
13.0460-5657.2	4318

ATE	BESER
NO	NO
13.0460-5661.2	4041
13.0460-5676.2	3876
13.0460-5677.2	4246
13.0460-5691.2	4282/1
13.0460-5700.2	3983/1
13.0460-5711.2	4148
13.0460-5711.2	4148/1
13.0460-5713.2	3604
13.0460-5714.2	4159
13.0460-5717.2	4010
13.0460-5718.2	3507
13.0460-5722.2	3777
13.0460-5725.2	3802
13.0460-5734.2	4111
13.0460-5735.2	4106
13.0460-5738.2	3911
13.0460-5739.2	3894
13.0460-5742.2	4028
13.0460-5743.2	3910
13.0460-5744.2	3693
13.0460-5745.2	3673
13.0460-5746.2	3829
13.0460-5747.2	3891
13.0460-5749.2	3830
13.0460-5750.2	4105
13.0460-5751.2	4010
13.0460-5752.2	4038
13.0460-5753.2	4160
13.0460-5754.2	4156
13.0460-5755.2	4110
13.0460-5760.2	3955
13.0460-5763.2	3745
13.0460-5764.2	3948
13.0460-5765.2	3949
13.0460-5766.2	4077
13.0460-5767.2	3953
13.0460-5769.2	3954
13.0460-5772.2	3978
13.0460-5773.2	3979
13.0460-5774.2	3899
13.0460-5775.2	3969
13.0460-5776.2	3968
13.0460-5777.2	3960
13.0460-5778.2	4143
13.0460-5779.2	3880
13.0460-5780.2	3980
13.0460-5782.2	3989
13.0460-5783.2	3952
13.0460-5785.2	3976
13.0460-5786.2	4061
13.0460-5787.2	3912
13.0460-5790.2	4113
13.0460-5791.2	4001
13.0460-5792.2	3648
13.0460-5793.2	4036
13.0460-5794.2	4122
13.0460-5795.2	3988
13.0460-5795.2	3988/1
13.0460-5797.2	4081
13.0460-5799.2	4035
13.0460-5800.2	4112
13.0460-5801.2	3983
13.0460-5802.2	3780
13.0460-5803.2	3778
13.0460-5806.2	3463
13.0460-5810.2	3769
13.0460-5811.2	3768
13.0460-5812.2	3788
13.0460-5813.2	3890
13.0460-5814.2	4154
13.0460-5815.2	3817
13.0460-5816.2	3436
13.0460-5818.2	3696
13.0460-5819.2	3825
13.0460-5820.2	3607
13.0460-5821.2	3889
13.0460-5822.2	4118
13.0460-5827.2	4155
13.0460-5829.2	3985
13.0460-5830.2	3872

ATE	BESER
NO	NO
13.0460-5832.2	3843
13.0460-5833.2	3993
13.0460-5836.2	4027
13.0460-5838.2	3602
13.0460-5843.2	3933
13.0460-5846.2	4013
13.0460-5848.2	4158
13.0460-5849.2	4153
13.0460-5850.2	4080
13.0460-5851.2	4079
13.0460-5852.2	3901
13.0460-5853.2	3892
13.0460-5854.2	4271
13.0460-5856.2	4303
13.0460-5857.2	3884
13.0460-5860.2	3831
13.0460-5862.2	4072
13.0460-5863.2	3687/1
13.0460-5864.2	3883
13.0460-5868.2	4269
13.0460-5872.2	3502
13.0460-5873.2	3959
13.0460-5874.2	4087
13.0460-5875.2	3961
13.0460-5878.2	4109
13.0460-5878.2	4232
13.0460-5879.2	3859
13.0460-5881.2	3397
13.0460-5882.2	4082
13.0460-5884.2	3874
13.0460-5887.2	3928
13.0460-5889.2	3604
13.0460-5890.2	3809
13.0460-5891.2	3822
13.0460-5895.2	3764
13.0460-5896.2	4009
13.0460-5898.2	3898
13.0460-5899.2	3951
13.0460-5916.2	3509
13.0460-5917.2	3646
13.0460-5918.2	3582
13.0460-5919.2	3752
13.0460-5922.2	3631
13.0460-5923.2	3740
13.0460-5924.2	3545
13.0460-5925.2	3470
13.0460-5926.2	3674
13.0460-5927.2	3887
13.0460-5928.2	3607
13.0460-5929.2	4148/1
13.0460-5931.2	3449
13.0460-5932.2	3437
13.0460-5933.2	3632
13.0460-5935.2	3371
13.0460-5936.2	3504
13.0460-5937.2	3758
13.0460-5938.2	3414
13.0460-5938.2	3714
13.0460-5940.2	3448
13.0460-5941.2	3766
13.0460-5942.2	3657
13.0460-5942.2	3757
13.0460-5942.2	3857
13.0460-5943.2	3686
13.0460-5944.2	3522
13.0460-5945.2	3709
13.0460-5947.2	3401
13.0460-5948.2	3400
13.0460-5949.2	4104
13.0460-5950.2	3562
13.0460-5951.2	3554
13.0460-5951.2	3651
13.0460-5952.2	3622
13.0460-5956.2	4128
13.0460-5957.2	3760
13.0460-5958.2	3685
13.0460-5959.2	3888
13.0460-5960.2	3415
13.0460-5963.2	3394
13.0460-5964.2	3731

ATE	BESER
NO	NO
13.0460-5967.2	3882
13.0460-5970.2	3723
13.0460-5973.2	3833
13.0460-5974.2	3640
13.0460-5976.2	3402
13.0460-5976.2	3472
13.0460-5978.2	3426
13.0460-5980.2	4108
13.0460-5981.2	3688
13.0460-5982.2	3704
13.0460-5985.2	3721
13.0460-5986.2	3660
13.0460-5987.2	3675
13.0460-5988.2	3577
13.0460-5988.2	3647
13.0460-5990.2	3600
13.0460-5991.2	3395
13.0460-5992.2	3560
13.0460-5994.2	3687/1
13.0460-5996.2	3744
13.0460-5998.2	4212
13.0460-6015.2	3679
13.0460-6027.2	3320
13.0460-6028.2	3350
13.0460-6030.2	3315
13.0460-6030.2	3515
13.0460-6031.2	3315
13.0460-6031.2	3515
13.0460-6033.2	3564
13.0460-6036.2	3626
13.0460-6905.2	3423
13.0460-6908.2	3423/1
13.0460-6910.2	3416
13.0460-6911.2	3423
13.0460-6916.2	3662
13.0460-6917.2	3771
13.0460-6923.2	3512
13.0460-6923.2	3512/1
13.0460-6924.2	3512/2
13.0460-6925.2	3453
13.0460-7005.2	3621
13.0460-7027.2	3417/1
13.0460-7030.2	3441
13.0460-7032.2	3444/1
13.0460-7033.2	3486
13.0460-7036.2	3572
13.0460-7038.2	3410
13.0460-7040.2	3549
13.0460-7042.2	3312
13.0460-7046.2	3573
13.0460-7047.2	3572
13.0460-7048.2	3410
13.0460-7050.2	3590
13.0460-7051.2	3623
13.0460-7052.2	3505
13.0460-7052.2	3615
13.0460-7056.2	3593
13.0460-7057.2	3558
13.0460-7058.2	3528
13.0460-7059.2	3585
13.0460-7059.2	3585/1
13.0460-7060.2	3593
13.0460-7067.2	3618
13.0460-7069.2	3617
13.0460-7071.2	3570
13.0460-7072.2	3538
13.0460-7073.2	3594
13.0460-7075.2	3583
13.0460-7076.2	3506
13.0460-7078.2	3881
13.0460-7079.2	3879
13.0460-7080.2	3736
13.0460-7082.2	3567
13.0460-7083.2	3678
13.0460-7084.2	3670
13.0460-7085.2	3680
13.0460-7086.2	3677
13.0460-7087.2	3863
13.0460-7090.2	3656
13.0460-7100.2	3566

ATE	BESER
NO	NO
13.0460-7101.2	3637
13.0460-7102.2	3606
13.0460-7103.2	3682
13.0460-7108.2	3548
13.0460-7108.2	3690
13.0460-7109.2	3563
13.0460-7111.2	3782/1
13.0460-7114.2	3897
13.0460-7115.2	3762
13.0460-7117.2	3782
13.0460-7121.2	3754
13.0460-7122.2	3590/1
13.0460-7124.2	3794
13.0460-7126.2	3790
13.0460-7127.2	3569
13.0460-7128.2	3568
13.0460-7132.2	3569
13.0460-7133.2	3618/1
13.0460-7135.2	3918
13.0460-7137.2	3853
13.0460-7138.2	3584
13.0460-7141.2	3790/1
13.0460-7142.2	3877
13.0460-7143.2	3590/2
13.0460-7144.2	3943
13.0460-7145.2	3919
13.0460-7153.2	4095
13.0460-7157.2	3950
13.0460-7158.2	3852
13.0460-7160.2	3853
13.0460-7167.2	4180
13.0460-7169.2	4179
13.0460-7171.2	4127
13.0460-7172.2	4211
13.0460-7174.2	4181
13.0460-7175.2	3853
13.0460-7176.2	4346
13.0460-7179.2	4042
13.0460-7181.2	3617
13.0460-7184.2	3904
13.0460-7185.2	3564/1
13.0460-7186.2	3801
13.0460-7192.2	3841/1
13.0460-7193.2	3885
13.0460-7194.2	3853/1
13.0460-7195.2	3853/1
13.0460-7201.2	4096
13.0460-7205.2	4119
13.0460-7206.2	4011
13.0460-7209.2	3853/1
13.0460-7210.2	4208
13.0460-7217.2	4388
13.0460-7220.2	4210
13.0460-7226.2	3904
13.0460-7228.2	4161
13.0460-7229.2	3964
13.0460-7231.2	4207
13.0460-7232.2	4181/1
13.0460-7234.2	4220
13.0460-7235.2	4215
13.0460-7236.2	3841
13.0460-7240.2	3841/1
13.0460-7244.2	4247
13.0460-7248.2	3950
13.0460-7249.2	4134
13.0460-7251.2	3853/1
13.0460-7253.2	3853/1
13.0460-7254.2	3964
13.0460-7258.2	4121
13.0460-7259.2	4127
13.0460-7262.2	4230
13.0460-7263.2	4008
13.0460-7264.2	4014
13.0460-7265.2	4121
13.0460-7266.2	3964/1
13.0460-7268.2	4380
13.0460-7270.2	4141
13.0460-7275.2	4378
13.0460-7282.2	4338
13.0460-7286.2	4162

ATE	BESER
NO	NO
13.0460-7293.2	4241
13.0460-7298.2	4140
13.0460-7300.2	4371
13.0460-7300.2	4373
13.0460-7303.2	4295
13.0460-7304.2	4349
13.0460-7308.2	4285
13.0460-7310.2	4284
13.0460-7314.2	4364
13.0460-7331.2	4369
13.0460-7332.2	4253
13.0460-7906.2	3749
13.0460-8003.2	4197
13.0460-8004.2	4126
13.0460-8004.2	4126/1
13.0460-8005.2	4069
13.0460-8006.2	3421
13.0460-9028.2	3315
13.0460-9028.2	3515
13.0460-9029.2	3339
13.0460-9029.2	3514
13.0460-9030.2	3331
13.0460-9032.2	3625
13.0463.7091.2	3665
13.0463-2975.2	3658
13.0463-7117.2	3782
13.460-5410.2	3461
27.0460-0102-2	3325
27.0460-1709.2	3705
27.0460-1902.2	3450
27.0460-2012.2	3672
27.0460-2505.2	3601
27.0460-2509.2	3418
270004	3325
270056	3705
270061	3450
270072	3672
270104	3601
270107	3418
600030	3564
600032	3590/1
600035	3551
600036	3503
600037	3836
600038	3444/1
600039	3470
600040	3677
600041	3863
600042	3665
600044	3782
600045	3877
600046	3896
600047	3658
600048	3623
600049	3762
600050	3531
600058	3570
600059	3754
602600	4283
602604	4323
602609	4228
602623	3529/2
602624	4287
602709	3983
602713	4389
602716	4379
602718	4094
602719	3944
602723	4157
602726	3836
602727	3408
602728	4293
602731	3944
602732	4248
602733	4248
602734	4249
602737	4157
602738	3972
602739	4151
602739	4151/1

ATE	BESER
NO	NO
602740	3529/1
602741	3966
602741	3966/1
602742	3966
602744	3967
602745	3971
602747	4260
602748	4260
602749	4390
602753	3529/2
602755	4150
602758	4150
602760	4325
602779	4326
602780	4335
602787	3529/1
602790	4336
602792	4334
602794	4040
602801	3624
602803	3683
602803	3872/1
602813	3466
602815	3733
602816	3750
602818	3671
602819	3529/1
602820	3529/1
602822	3896
602824	3526
602825	3556
602829	3636
602831	4062
602833	4125
602834	3503
602835	3755
602837	3896
602838	3553/1
602840	3795/1
602842	3529
602843	3773
602845	3529/2
602853	4059
602854	3836
602856	3323
602857	3846
602860	3529/2
602861	3539/1
602862	3644
602863	3986
602864	3529/1
602867	4123
602868	4040
602869	3557
602869	3610
602870	3848
602871	3854
602874	3795
602874	4345
602876	4222
602877	4152
602880	3905
602881	3931
602882	3842
602884	4138
602884	4138/1
602886	3529/2
602887	3905
602891	3939
602892	3940
602893	3946
602895	3539/1
602897	4062
602899	4012
602901	3440
602902	3543
602903	3605
602905	3328
602912	3419
602913	3429

ATE	BESER
NO	NO
602921	3609
602923	3430
602924	3378
602925	3619
602926	3649
602927	3408
602934	3650
602935	3642
602936	3490
602937	3529
602938	3378
602939	3467
602941	3466
602942	3466
602944	3468
602948	3432
602949	3466
602953	3373
602954	3311
602955	3503
602956	3474
602957	3531
602958	3551
602962	3536
602964	3419
602964	3731
602965	3422
602966	3393
602967	3374
602971	3457
602973	4020
602975	3658
602976	3595
602977	3559
602981	3555
602982	3553
602983	3539
602984	3529/1
603009	3326
603306	3583
603503	3630
603504	3630
603602	3536
603800	3856
603803	3578
603806	3855
603807	3643
603808	3318
603809	4173
603810	3826
603811	3800
603813	3984
603814	3850
603815	3849
603817	3800/1
603818	3826/1
603819	3923/1
603821	3924/1
603823	3496
603826	3826/1
603827	3800/1
603829	3987
603831	4058
603832	3926
603832	3926/1
603833	3920
603833	3920/1
603834	3906
603834	3906/1
603834	3906/1A
603834	3906/2
603835	3907
603835	3907/1
603835	3907/1A
603835	3907/2
603837	3926
603837	3926/1
603840	3800/2
603842	3963
603842	3963/1

ATE	BESER
NO	NO
603846	4173/1
603847	3970
603849	3827
603850	3826
603851	3984
603851	3984/1
603852	4391
603853	4146
603859	4383
603860	3906/1
603875	4351
603886	4350
603900	3439
603903	3442
603904	3425
603911	3380
603911	3580
603914	3641
603915	3493
603915	3494
603926	3496
603928	3333
603933	3428
603935	3464
603936	3316
603937	3317
603939	3424
603940	3424/1
603944	3603
603945	3689
603950	3643
603951	3608
603952	3487
603952	3489
603954	3496/1
603955	3495
603956	3819
603957	3799
603959	3445
603960	3473
603965	3722
603966	3800
603968	3527
603969	3482
603970	3366/1
603971	3366
603972	3878
603974	3659
603975	3938
603979	4281
603980	3681
603982	3826/1
603983	3800/1
603985	3861
603987	4100
603988	4093
603990	3804
603992	3921
603993	3784
603994	3820
603994	3820/1
603997	3935
603998	3934
604014	3680
604028	3327
604029	3343
604029	3483
604030	3611
604033	3318
604034	3550
604035	3318
604040	3717
604043	3469
604044	3318
604047	3581
604058	3545
604059	3680
604060	3663
604063	3806
604064	3676

ATE	BESER
NO	NO
604065	3821
604069	4101
604069	4209
604201	3629
604202	3628
604401	3513
604805	4137
604807	3981
604809	3981
604810	3922
604810	3922/1
604811	3922
604811	3922/1
604812	3820/3
604817	4240
604823	4092
604823	4092/1
604826	3925
604826	3925/2
604827	3962
604827	3962/1
604828	3994
604829	3995
604830	3965
604833	3945
604844	4169
604847	3942
604856	4056
604857	4132
604857	4172
604857	4172/1
604858	4057
604870	4313
604914	3994
604955	3523
604956	3873
604957	3596
604965	3909
604966	3575
604976	4076
604977	4103
604978	3834
604979	3835
604980	3914
604984	4102
604989	3575/2
604993	4075/1
604996	3823
605030	3335
605032	3365
605409	3459
605418	3405
605423	3484
605469	3320
605538	4307
605600	4039
605601	4165
605602	3956
605604	4037
605604	4037/1
605608	4277
605609	3929
605610	4029
605612	4149
605616	3903
605618	3996
605619	3997
605622	3976/1
605629	4004
605631	3975
605632	4017
605642	4337
605645	4342
605650	4343
605652	4282
605653	4321
605654	4316
605657	4318
605661	4041
605676	3876

ATE	BESER
NO	NO
605677	4246
605691	4282/1
605700	3983/1
605711	4148
605711	4148/1
605713	3604
605714	4159
605717	4010
605718	3507
605722	3777
605725	3802
605734	4111
605735	4106
605738	3911
605739	3894
605742	4028
605743	3910
605744	3693
605745	3673
605746	3829
605747	3891
605749	3830
605750	4105
605751	4010
605752	4038
605753	4160
605754	4156
605755	4110
605760	3955
605763	3745
605764	3948
605765	3949
605766	4077
605767	3953
605769	3954
605772	3978
605773	3979
605774	3899
605775	3969
605776	3968
605777	3960
605778	4143
605779	3880
605780	3980
605782	3989
605783	3952
605785	3976
605787	3912
605790	4113
605791	4001
605792	3648
605794	4122
605795	3988
605795	3988/1
605797	4081
605799	4035
605800	4112
605801	3983
605802	3780
605803	3778
605806	3463
605810	3769
605811	3768
605812	3788
605813	3890
605814	4154
605815	3817
605816	3436
605818	3696
605819	3825
605820	3607
605821	3889
605822	4118
605827	4155
605829	3985
605830	3872
605832	3843
605833	3993
605836	4027
605838	3602

ATE	BESER
NO	NO
605843	3933
605846	4013
605848	4158
605849	4153
605850	4080
605851	4079
605852	3901
605853	3892
605854	4271
605856	4303
605857	3884
605860	3831
605862	4072
605863	3687/1
605864	3883
605868	4269
605872	3502
605873	3959
605874	4087
605875	3961
605878	4109
605878	4232
605879	3859
605881	3397
605882	4082
605884	3874
605887	3928
605889	3604
605890	3809
605891	3822
605895	3764
605896	4009
605898	3898
605899	3951
605916	3509
605917	3646
605918	3582
605919	3752
605922	3631
605923	3740
605924	3545
605925	3470
605926	3674
605927	3887
605928	3607
605929	4148/1
605931	3449
605932	3437
605933	3632
605935	3371
605936	3504
605937	3758
605938	3714
605940	3448
605941	3766
605942	3657
605942	3757
605942	3857
605943	3686
605944	3522
605945	3709
605947	3401
605948	3400
605949	4104
605950	3562
605951	3554
605951	3651
605952	3622
605956	4128
605957	3760
605958	3685
605959	3888
605960	3415
605963	3394
605964	3731
605967	3882
605970	3723
605973	3833
605974	3640
605976	3402

ATE	BESER
NO	NO
605976	3472
605978	3426
605980	4108
605981	3688
605982	3704
605985	3721
605986	3660
605987	3675
605988	3577
605988	3647
605990	3600
605991	3395
605992	3560
605994	3687/1
605996	3744
605998	4212
606015	3679
606027	3320
606028	3350
606030	3315
606030	3515
606031	3315
606031	3515
606033	3564
606036	3626
606905	3423
606908	3423/1
606910	3416
606911	3423
606916	3662
606917	3771
606923	3512
606923	3512/1
606924	3512/2
606925	3453
607005	3621
607027	3417/1
607030	3441
607032	3444/1
607033	3486
607036	3572
607038	3410
607040	3549
607042	3312
607046	3573
607047	3572
607048	3410
607050	3590
607051	3623
607052	3505
607052	3615
607056	3593
607057	3558
607058	3528
607059	3585
607059	3585/1
607060	3593
607067	3618
607069	3617
607071	3570
607072	3538
607073	3594
607075	3583
607076	3506
607078	3881
607079	3879
607080	3736
607082	3567
607083	3678
607084	3670
607085	3680
607086	3677
607087	3863
607090	3656
607091	3665
607100	3566
607101	3637
607102	3606
607108	3548
607108	3690

ATE	BESER
NO	NO
607109	3563
607111	3782/1
607114	3897
607115	3762
607117	3782
607121	3754
607122	3590/1
607124	3794
607126	3790
607127	3569
607128	3568
607132	3569
607133	3618/1
607135	3918
607137	3853
607138	3584
607141	3790/1
607142	3877
607143	3590/2
607144	3943
607145	3919
607153	4095
607157	3950
607158	3852
607160	3853
607167	4180
607169	4179
607171	4127
607172	4211
607174	4181
607175	3853
607176	4346
607179	4042
607181	3617
607184	3904
607185	3564/1
607186	3801
607192	3841/1
607193	3885
607194	3853/1
607195	3853/1
607201	4096
607205	4119
607206	4011
607209	3853/1
607210	4208
607217	4388
607220	4210
607226	3904
607228	4161
607229	3964
607231	4207
607232	4181/1
607234	4220
607235	4215
607236	3841
607240	3841/1
607244	4247
607248	3950
607249	4134
607251	3853/1
607253	3853/1
607254	3964
607258	4121
607259	4127
607262	4230
607263	4008
607264	4014
607265	4121
607266	3964/1
607268	4380
607270	4141
607282	4338
607308	4285
607310	4284
607314	4364
607332	4253
607906	3749
608003	4197
608004	4126

ATE	BESER
NO	NO
608004	4126/1
608005	4069
608006	3421
609028	3315
609028	3515
609029	3339
609029	3514
609032	3625

B.M.	BESER
NO	NO
DB23	3325
DB103	3328
DB109	3328
DB112	3601
DB198	3705
DB281	3418
DB285	3646
DB308	3472
DB356	3472
DB359	3439
DB395	3450
S7276	3672
S7580	3671
S7755	3795
S7878	4075/1
S8216	3529/2
DB1111	3672
DB1116	3657
DB1141	3672
DB1155	3721
DB1182	3580
DB1187	3699
DB1230	4148
DB1232	3699
DB1248	3626
DB1277	3604
DB1295	3658
DB1300	3555
DB1362	3832
DB1373	3594
DB1387	3782/1
DB1404	3590
DB1405	3782
DB1434	3876
DB1485	3699
DB1511	4040
DB1657	4127
DB1676	4075/1
GDB1039	3557
GDB1295	3644
GDB1360	3529/2
GDB1577	3564/1
GDB1681	3981
DB2055/2	3795

BARUM	BESER
NO	NO
BA2010	3683
BA2010	3872/1
BA2015	3750
BA2020	3556
BA2021	3636
BA2023	3503
BA2024	3440
BA2025	3605
BA2026	3609
BA2027	3430
BA2028	3619
BA2029	3408
BA2031	3650
BA2032	3529
BA2033	3432
BA2034	3466
BA2036	3474
BA2037	3531

BARUM	BESER
NO	NO
BA2038	3551
BA2039	3419
BA2040	3422
BA2041	3393
BA2043	3457
BA2045	3595
BA2046	3559
BA2049	3553
BA2050	3539
BA2052	3536
BA2054	3578
BA2055	3380
BA2056	3493
BA2056	3494
BA2060	3428
BA2064	3424
BA2065	3424/1
BA2068	3689
BA2072	3643
BA2073	3608
BA2074	3487
BA2074	3489
BA2076	3496/1
BA2077	3495
BA2078	3819
BA2079	3799
BA2080	3445
BA2081	3473
BA2084	3722
BA2086	3482
BA2089	3938
BA2091	3681
BA2093	3611
BA2094	3550
BA2095	3717
BA2098	3469
BA2099	3680
BA2101	3513
BA2106	3873
BA2107	3596
BA2110	3437
BA2111	3504
BA2112	3448
BA2113	3766
BA2114	3757
BA2114	3857
BA2115	3522
BA2116	3554
BA2116	3651
BA2117	3622
BA2119	3888
BA2121	3402
BA2122	3687/1
BA2123	3744
BA2125	3564
BA2131	3441
BA2132	3444/1
BA2133	3486
BA2134	3410
BA2136	3623
BA2137	3505
BA2137	3615
BA2138	3593
BA2139	3558
BA2140	3528
BA2141	3585
BA2141	3585/1
BA2144	3570
BA2145	3538
BA2147	3506
BA2149	3567
BA2150	3677
BA2152	3566
BA2153	3637
BA2160	3896
BA2163	3581
BA2164	3676
BA2166	3881
BA2167	3879
BA2168	3863

BARUM	BESER
NO	NO
BA2170	3656
BA2171	3606
BA2173	3762
BA2175	3733
BA2176	4125
BA2177	3836
BA2178	3649
BA2182	3629
BA2184	4102
BA2185	3365
BA2187	3662
BA2188	3573
BA2189	3572
BA2191	4126
BA2191	4126/1
BA2192	4069
BA2195	3904
BA2196	3905
BA2198	3896
BA2199	3877
BA2201	3794
BA2202	4345
BA2205	3590/1
BA2206	3821
BA2208	3755
BA2209	3754
BA2210	3846
BA2213	3663
BA2214	3820
BA2214	3820/1
BA2215	3670
BA2216	3804
BA2217	4281
BA2219	3539/1
BA2224	4100
BA2225	4093
BA2226	4062
BA2227	3660
BA2230	3849
BA2232	4128
BA2233	3678
BA2234	3885
BA2235	3853/1
BA2236	4211
BA2237	4059
BA2238	3853
BA2240	4181
BA2241	3834
BA2242	3841/1
BA2243	3842
BA2245	4180
BA2247	3795/1
BA2249	3685
BA2251	3856
BA2252	4346
BA2253	3919
BA2254	3848
BA2255	4042
BA2259	4096
BA2261	3855
BA2262	3921
BA2263	3923/1
BA2265	3820/3
BA2270	3817
BA2271	4123
BA2274	3686
BA2277	3926
BA2277	3926/1
BA2279	3918
BA2280	4148/1
BA2281	3925
BA2281	3925/2
BA2282	3854
BA2283	3826/1
BA2284	3983
BA2285	3986
BA2287	4058
BA2288	3852
BA2289	3800
BA2290	3861

BARUM	BESER
NO	NO
BA2291	3993
BA2292	3502
BA2293	3788
BA2294	3769
BA2295	3890
BA2296	3987
BA2298	4138
BA2298	4138/1
BA2299	3800/1
BA2300	3984
BA2301	3983/1
BA2304	3907
BA2304	3907/1
BA2304	3907/1A
BA2304	3907/2
BA2305	3920
BA2305	3920/1
BA2306	3906
BA2306	3906/1
BA2306	3906/1A
BA2306	3906/2
BA2308	4389
BA2309	4388
BA2313	4157
BA2314	4161
BA2318	4095
BA2321	3553/1
BA2322	4020
BA2323	3914
BA2324	3835
BA2326	4154
BA2328	3922
BA2328	3922/1
BA2329	3972
BA2330	4151
BA2330	4151/1
BA2331	3825
BA2332	3897
BA2334	3790/1
BA2335	4141
BA2339	3963
BA2339	3963/1
BA2343	4382
BA2354	4383
BA2360	4325/1

BENDIX	BESER
NO	NO
510132	4148
510214	4127
510579	4075/1
510764	4287
510793	4338
510795	4343
510956	4368
510972	4338
511095	4242
511121	4316
511126	4323
511129	4175/1
511148	4058/1
511165	4318
511198	4287
511205	4351
511205	4351/1
511217	4341
511219	4286
511229	4282/1
511230	4283
511266	4285
511267	4284
511289	4321
511317	4287
511326	4246
511329	4364
511354	4353
511411	4253
511425	4357

BENDIX	BESER
NO	NO
511430	4307
511799	4343
511802	4355
511810	4356
571202	3393
571202B	3393
571202X	3393
571204	3311
571204B	3311
571204X	3311
571206	3321
571206B	3321
571206X	3321
571215	3320
571215B	3320
571215X	3320
571217	3366/1
571217B	3366/1
571217X	3366/1
571218	3323
571218B	3323
571218X	3323
571221	3327
571221B	3327
571221X	3327
571224	3333
571224B	3333
571224X	3333
571226	3317
571226B	3317
571226X	3317
571228	3405
571228B	3405
571228X	3405
571232	3343
571232	3483
571232B	3343
571232B	3483
571232X	3343
571232X	3483
571233	3416
571233B	3416
571233X	3416
571234	3373
571234B	3373
571234X	3373
571236	3350
571236B	3350
571236X	3350
571246	3527
571246B	3527
571246X	3527
571247	3312
571247B	3312
571247X	3312
571248B	3806
571250	3423
571250B	3423
571250X	3423
571251	3374
571251B	3374
571251X	3374
571262	3442
571262B	3442
571262X	3442
571265	3421
571265B	3421
571265X	3421
571271	3365
571271B	3365
571271X	3365
571272	3513
571272B	3513
571272X	3513
571276	3410
571276B	3410
571276X	3410
571278	3339
571278	3514
571278B	3339

BENDIX	BESER
NO	NO
571278B	3514
571278X	3339
571278X	3514
571279	3318
571279B	3318
571279X	3318
571291	3417/1
571291B	3417/1
571291X	3417/1
571297	3424/1
571297B	3424/1
571297X	3424/1
571298	3484
571298B	3484
571298X	3484
571300	3572
571300B	3572
571300X	3572
571302	3493
571302	3494
571302B	3493
571302B	3494
571302X	3493
571302X	3494
571304	3440
571304B	3440
571304X	3440
571305	3625
571305B	3625
571305X	3625
571306	3482
571306B	3482
571306X	3482
571307B	3439
571308	3429
571308B	3429
571308X	3429
571309	3466
571309B	3466
571309X	3466
571312	3621
571312B	3621
571312X	3621
571313B	3546
571315	3441
571315B	3441
571315X	3441
571316	3486
571316B	3486
571316X	3486
571317	3444/1
571317B	3444/1
571317X	3444/1
571319	3474
571319B	3474
571319X	3474
571321	3526
571321B	3526
571321X	3526
571327	3503
571327B	3503
571327X	3503
571330	3432
571330B	3432
571330X	3432
571331	3495
571331B	3495
571331X	3495
571332	3380
571332B	3380
571332B	3580
571332X	3380
571332X	3580
571333	3380
571333B	3380
571333B	3580
571333X	3380
571333X	3580
571334	3496/1
571334B	3496/1

BENDIX	BESER
NO	NO
571334X	3496/1
571336	3603
571336B	3603
571336X	3603
571339	3428
571339B	3428
571339X	3428
571340	3366
571340B	3366
571340X	3366
571344	3611
571344B	3611
571344X	3611
571346	3422
571346B	3422
571346X	3422
571350	3536
571350B	3536
571350X	3536
571352	3609
571352B	3609
571352X	3609
571353	3430
571353B	3430
571353X	3430
571355	3564
571355B	3564
571355X	3564
571356	3619
571356B	3619
571356X	3619
571357	3650
571357B	3650
571357X	3650
571359	3457
571359B	3457
571359X	3457
571361	3529
571361B	3529
571361X	3529
571363	3873
571363B	3873
571363X	3873
571368	3537
571368B	3537
571368X	3537
571370	3641
571370B	3641
571370X	3641
571372	3315
571372	3515
571372B	3315
571372B	3515
571372X	3315
571372X	3515
571375	3490
571375B	3490
571375X	3490
571376	3531
571376B	3531
571376X	3531
571380	3605
571380B	3605
571380X	3605
571382	3408
571382B	3408
571382X	3408
571387	3578
571387B	3578
571387X	3578
571389	3717
571389B	3717
571389X	3717
571391	3505
571391	3615
571391B	3505
571391B	3615
571391X	3505
571391X	3615
571393	3543

BENDIX	BESER
NO	NO
571393B	3543
571393X	3543
571394	3584
571394B	3584
571394X	3584
571398	3680
571398B	3680
571398X	3680
571400	4104
571400B	4104
571400X	4104
571401	3624
571401B	3624
571401X	3624
571405B	3555
571406	3556
571406B	3556
571406X	3556
571407	3469
571407B	3469
571407X	3469
571411	3563
571411B	3563
571411X	3563
571412	3589
571412B	3589
571412X	3589
571413	3629
571413B	3629
571413X	3629
571418	3642
571418B	3642
571418X	3642
571421	3660
571421B	3660
571421X	3660
571422	3523
571422B	3523
571422X	3523
571425	3596
571425B	3596
571425X	3596
571428	3583
571428B	3583
571428X	3583
571429	3326
571429B	3326
571429X	3326
571438	3683
571438	3872/1
571438B	3683
571438B	3872/1
571438X	3683
571438X	3872/1
571439	3662
571439B	3662
571439X	3662
571440	3771
571440B	3771
571440X	3771
571442	3423/1
571442B	3423/1
571442X	3423/1
571448	3459
571448B	3459
571448X	3459
571452	3467
571452B	3467
571452X	3467
571462	3536
571462B	3536
571462X	3536
571463	3316
571463B	3316
571463X	3316
571464	3424
571464B	3424
571464X	3424
571474	3425
571474B	3425

BENDIX	BESER
NO	NO
571474X	3425
571476	3539
571476B	3539
571476X	3539
571478B	3626
571491	3378
571491B	3378
571491X	3378
571492	3623
571492B	3623
571492X	3623
571493	3733
571493B	3733
571493X	3733
571509	3528
571509B	3528
571509X	3528
571510	3610
571510B	3557
571510B	3610
571510X	3610
571512B	3590
571513	3529
571513B	3529
571513X	3529
571515	3867
571515B	3867
571515X	3867
571519	4182
571519B	4182
571519X	4182
571520B	3866
571522	3593
571522B	3593
571522X	3593
571523	3608
571523B	3608
571523X	3608
571525	3487
571525	3489
571525B	3487
571525B	3489
571525X	3487
571525X	3489
571526	3503
571526B	3503
571526X	3503
571528	3643
571528B	3643
571528X	3643
571530	3736
571530B	3736
571530X	3736
571536	3417
571536B	3417
571536X	3417
571539	3410
571539B	3410
571539X	3410
571540	3419
571540B	3419
571540X	3419
571542	3573
571542B	3573
571542X	3573
571543	3335
571543B	3335
571543X	3335
571546	3578
571546B	3578
571546X	3578
571552	3339
571552	3514
571552B	3339
571552B	3514
571552X	3339
571552X	3514
571553	3315
571553	3515
571553B	3315

BENDIX	BESER
NO	NO
571553B	3515
571553X	3315
571553X	3515
571555	3550
571555B	3550
571555X	3550
571556	3611
571556B	3611
571556X	3611
571557	3572
571557B	3572
571557X	3572
571560	3408
571560B	3408
571560X	3408
571561	3609
571561B	3609
571561X	3609
571722	3581
571722B	3581
571722X	3581
571725	3464
571725B	3464
571725X	3464
571726	3464
571726B	3464
571726X	3464
571743	3487
571743	3489
571743B	3487
571743B	3489
571743X	3487
571743X	3489
571744	3496/1
571744B	3496/1
571744X	3496/1
571745	3473
571745B	3473
571745X	3473
571746	3445
571746B	3445
571746X	3445
571753	3630
571753B	3630
571753X	3630
571754	4214
571754B	4214
571754X	4214
571756	3878
571756B	3878
571756X	3878
571757	3819
571757B	3819
571757X	3819
571800B	3325
571801B	3319
571803	3661
571803B	3661
571803X	3661
571807B	3328
571822	3413
571822B	3413
571822X	3413
571827	3453
571827B	3453
571827X	3453
571828B	3658
571828X	3658
571832	3558
571832B	3558
571832X	3558
571833	3410
571833B	3410
571833X	3410
571839	3595
571839B	3595
571839X	3595
571840	3559
571840B	3559
571840X	3559

BENDIX	BESER
NO	NO
571841B	3658
571843	3799
571843B	3799
571843X	3799
571844	3567
571844B	3567
571844X	3567
571845	3680
571845B	3680
571845X	3680
571846	3678
571846B	3678
571846X	3678
571847	3553
571847B	3553
571847X	3553
571848	3585
571848	3585/1
571848B	3585
571848B	3585/1
571848X	3585
571848X	3585/1
571850	3545
571850B	3545
571850X	3545
571852	3909
571852B	3909
571852X	3909
571868	3430
571868B	3430
571868X	3430
571869	3491
571869B	3491
571869X	3491
571870	3346
571870B	3346
571870X	3346
571873	3881
571873B	3881
571873X	3881
571875B	3671
571876	3863
571876B	3863
571876X	3863
571877	3677
571877B	3677
571877X	3677
571879	3628
571879B	3628
571879X	3628
571884	3617
571884B	3617
571884X	3617
571885	3537
571885B	3537
571885X	3537
571888	3618
571888B	3618
571888X	3618
571893	3608
571893B	3608
571893X	3608
571897	3750
571897B	3750
571897X	3750
571900	3506
571900B	3506
571900X	3506
571904	3610
571904B	3557
571904B	3610
571904X	3610
571906B	3529/1
571910	3670
571910B	3670
571910X	3670
571913	3589
571913	3594
571913B	3589
571913B	3594

BENDIX	BESER
NO	NO
571913X	3589
571914	3570
571914B	3570
571914X	3570
571915	3538
571915B	3538
571915X	3538
571916	3569
571916B	3569
571916X	3569
571918	3879
571918B	3879
571918X	3879
571919	3636
571919B	3636
571919X	3636
571923	3566
571923B	3566
571923X	3566
571924	3623
571924B	3623
571924X	3623
571925	3676
571925B	3676
571925X	3676
571929	3682
571929B	3682
571929X	3682
571930	3938
571930B	3938
571930X	3938
571934	3606
571934B	3606
571934X	3606
571936	3656
571936B	3656
571936X	3656
571939	3637
571939B	3637
571939X	3637
571941	4062
571941B	4062
571941X	4062
571942	3675
571942B	3675
571942X	3675
571944	4125
571944B	4125
571944X	4125
571945	4125
571945B	4125
571945X	4125
571946	3681
571946B	3681
571946X	3681
571947	3861
571947B	3861
571947X	3861
571948	4020
571948B	4020
571948X	4020
571949	3897
571949B	3897
571949X	3897
571950	3804
571950B	3804
571950X	3804
571954	3938
571954B	3938
571954X	3938
571955	3896
571955B	3896
571955X	3896
571961	4102
571961B	4102
571961X	4102
571962	4101
571962	4209
571962B	4101
571962B	4209

BENDIX	BESER
NO	NO
571962X	4101
571962X	4209
571964	3722
571964B	3722
571964X	3722
571966B	3644
571967	3754
571967B	3754
571967X	3754
571968	3762
571968B	3762
571968X	3762
571971B	3782
571973B	3618/1
571974	3549
571974B	3549
571974X	3549
571976	3683
571976	3872/1
571976B	3683
571976B	3872/1
571976X	3683
571976X	3872/1
571977	4212
571977B	4212
571977X	4212
571980	3943
571980B	3943
571980X	3943
571984	3590/1
571984B	3590/1
571984X	3590/1
571985	3682
571985B	3682
571985B	3782/1
571985SB	3782/1
571985X	3682
571986	3836
571986B	3836
571986X	3836
571987	3836
571987B	3836
571987X	3836
571988	3821
571988B	3821
571988X	3821
571989B	4127
571990	4180
571990B	4180
571990X	4180
571991	4179
571991B	4179
571991X	4179
571995	4281
571995B	4281
571995X	4281
571998	3755
571998B	3755
571998X	3755
572100	3723
572100B	3723
572100X	3723
572118	3746
572118B	3746
572118X	3746
572119	3710
572119B	3710
572119X	3710
572120	3709
572120B	3709
572120X	3709
572127	4087
572127B	4087
572127X	4087
572135	4212
572135B	4212
572135X	4212
572136	4212
572136B	4212
572136X	4212

BENDIX	BESER
NO	NO
572138	4148/1
572138B	4148/1
572138X	4148/1
572140	3560
572140B	3560
572140X	3560
572143	3449
572143B	3449
572143X	3449
572144	3449
572144B	3449
572144X	3449
572145	3522
572145B	3522
572145X	3522
572146	3640
572146B	3640
572146X	3640
572161	3833
572161B	3833
572161X	3833
572164	3600
572164B	3600
572164X	3600
572166	3882
572166B	3882
572166X	3882
572177	3579
572177B	3579
572177X	3579
572178	3371
572178B	3371
572178X	3371
572179B	3721
572180B	3646
572181	3633
572181B	3633
572181X	3633
572186	4108
572186B	4108
572186X	4108
572188	3776
572188B	3776
572188X	3776
572193	3875
572193B	3875
572193X	3875
572197	4080
572197B	4080
572197X	4080
572200	3688
572200B	3688
572200X	3688
572204B	3601
572205	3324
572205B	3324
572205X	3324
572206	3394
572206B	3394
572206X	3394
572209	3400
572209B	3400
572209X	3400
572210	3766
572210B	3766
572210X	3766
572216	3407
572216B	3407
572216X	3407
572217	3745
572217B	3745
572217X	3745
572221	3887
572221B	3887
572221X	3887
572229B	3705
572230	3370
572230B	3370
572230X	3370
572237	3501

BENDIX	BESER
NO	NO
572237B	3501
572237X	3501
572238	3752
572238B	3752
572238X	3752
572240B	3672
572241B	3672
572244B	3672
572245	3693
572245B	3693
572245X	3693
572246B	3418
572247	3883
572247B	3883
572247X	3883
572250	3509
572250B	3509
572250X	3509
572253	3673
572253B	3673
572253X	3673
572255	3402
572255B	3402
572255B	3472
572255X	3402
572257	4128
572257B	4128
572257X	4128
572258	3446
572258B	3446
572258B	3450
572258X	3446
572262	3620
572262B	3620
572262X	3620
572267	3395
572267B	3395
572267X	3395
572268	3504
572268B	3504
572268X	3504
572269	3502
572269B	3502
572269X	3502
572271	3757
572271	3857
572271B	3657
572271B	3757
572271B	3857
572271X	3757
572271X	3857
572272	3757
572272	3857
572272B	3757
572272B	3857
572272X	3757
572272X	3857
572275	3426
572275B	3426
572275X	3426
572281	3448
572281B	3448
572281X	3448
572284B	3691
572288	3582
572288B	3582
572288X	3582
572293	3436
572293B	3436
572293X	3436
572294	3436
572294B	3436
572294X	3436
572295	3401
572295B	3401
572295X	3401
572303	3634
572303B	3634
572303X	3634
572304	3634

BENDIX	BESER
NO	NO
572304B	3634
572304X	3634
572309	3631
572309B	3631
572309X	3631
572310	3562
572310B	3562
572310X	3562
572312	3397
572312B	3397
572312X	3397
572313	3758
572313B	3758
572313X	3758
572316	3369
572316B	3369
572316X	3369
572317	3437
572317B	3437
572317X	3437
572318	3437
572318B	3437
572318X	3437
572324	3686
572324B	3686
572324X	3686
572326	3379
572326B	3379
572326X	3379
572331	3499
572331B	3499
572331X	3499
572332	3463
572332B	3463
572332X	3463
572333	3554
572333	3651
572333B	3554
572333B	3651
572333X	3554
572333X	3651
572335	3462
572335B	3462
572335X	3462
572338B	3700
572340	3607
572340B	3607
572340X	3607
572345	3779
572345B	3779
572345X	3779
572346	3779
572346B	3699
572346B	3779
572346X	3779
572347	3632
572347B	3632
572347X	3632
572348	3674
572348B	3674
572348X	3674
572349	3696
572349B	3696
572349X	3696
572354	3695
572354B	3695
572354X	3695
572355	3714
572355B	3714
572355X	3714
572361	3415
572361B	3415
572361X	3415
572363	3714
572363B	3714
572363X	3714
572367	3777
572367B	3777
572367X	3777
572370	3685

BENDIX	BESER
NO	NO
572370B	3685
572370X	3685
572373	3760
572373B	3760
572373X	3760
572377	4078
572377B	4078
572377X	4078
572380	3915
572380B	3915
572380X	3915
572381	3622
572381B	3622
572381X	3622
572382	3888
572382B	3888
572382X	3888
572386	4072
572386B	4072
572386X	4072
572388	3740
572388B	3740
572388X	3740
572392	4086
572392B	4086
572392X	4086
572393	3704
572393B	3704
572393X	3704
572396	3577
572396	3647
572396B	3577
572396B	3647
572396X	3577
572396X	3647
572399	3602
572399B	3602
572399X	3602
572401	3778
572401B	3778
572401X	3778
572402	3744
572402B	3744
572402X	3744
572403	3687/1
572403B	3687/1
572403X	3687/1
572404	3768
572404B	3768
572404X	3768
572405	3769
572405B	3769
572405X	3769
572408	3687/1
572408B	3687/1
572408X	3687/1
572409	3898
572409B	3898
572409X	3898
572411	3507
572411B	3507
572411X	3507
572419	3809
572419B	3809
572419X	3809
572420	3884
572420B	3884
572420X	3884
572423	4079
572423B	4079
572423X	4079
572424	3913
572424B	3913
572424X	3913
572428	4115
572428B	4115
572428X	4115
572432	4110
572432B	4110
572432X	4110

BENDIX	BESER
NO	NO
572434B	3832
572435	3874
572435B	3874
572435X	3874
572437	3780
572437B	3780
572437X	3780
572441B	3604
572442	3648
572442B	3648
572442X	3648
572447	3685
572447B	3685
572447X	3685
572448	3859
572448B	3859
572448X	3859
572449	4109
572449	4232
572449B	4109
572449B	4232
572449X	4109
572449X	4232
572450	3788
572450B	3788
572450X	3788
572451	4010
572451B	4010
572451X	4010
572453	3843
572453B	3843
572453X	3843
572471	3928
572471B	3928
572471X	3928
572477	3764
572477B	3764
572477X	3764
572478	4155
572478B	4155
572478X	4155
572480	4159
572480B	4159
572480X	4159
572482	3889
572482B	3889
572482X	3889
572485	3890
572485B	3890
572485X	3890
572487	4158
572487B	4158
572487X	4158
572488	4153
572488B	4153
572488X	4153
572489	4118
572489B	4118
572489X	4118
572491	3817
572491B	3817
572491X	3817
572492	3825
572492B	3825
572492X	3825
572494	3512
572494	3512/1
572494B	3512
572494B	3512/1
572494X	3512
572494X	3512/1
572496	3632
572496B	3632
572496X	3632
572497	3892
572497B	3892
572497X	3892
572499	4271
572499B	4271
572499X	4271

BENDIX	BESER
NO	NO
572500	3900
572500B	3900
572500X	3900
572501	3933
572501B	3933
572501X	3933
572503	4119
572503B	4119
572503X	4119
572504	3831
572504B	3831
572504X	3831
572510	4112
572510B	4112
572510X	4112
572511	3978
572511B	3978
572511X	3978
572513	3961
572513B	3961
572513X	3961
572514	3959
572514B	3959
572514X	3959
572515	3891
572515B	3891
572515X	3891
572516	4154
572516B	4154
572516X	4154
572518	3976/1
572518B	3976/1
572518X	3976/1
572519	4084
572519B	4084
572519X	4084
572521	4293
572521B	4293
572521X	4293
572522	3944
572522B	3944
572522X	3944
572524	3956
572524B	3956
572524X	3956
572526	3968
572526B	3968
572526X	3968
572527	3969
572527B	3969
572527X	3969
572528	3829
572528B	3829
572528X	3829
572530	3511
572530B	3511
572530X	3511
572532	3802
572532B	3802
572532X	3802
572536	4009
572536B	4009
572536X	4009
572537	3767
572537B	3767
572537X	3767
572538	3822
572538B	3822
572538X	3822
572539	3951
572539B	3951
572539X	3951
572541	4010
572541B	4010
572541X	4010
572542	3598/1
572542B	3598/1
572542X	3598/1
572543	3554
572543	3651

BENDIX	BESER
NO	NO
572543B	3554
572543B	3651
572543X	3554
572543X	3651
572546	4013
572546B	4013
572546X	4013
572547	4106
572547B	4106
572547X	4106
572548	3830
572548B	3830
572548X	3830
572549	3979
572549B	3979
572549X	3979
572550	3912
572550B	3912
572550X	3912
572551	4017
572551B	4017
572551X	4017
572553	3910
572553B	3910
572553X	3910
572557	3993
572557B	3993
572557X	3993
572559B	3876
572560	4269
572560B	4269
572560X	4269
572562	4105
572562B	4105
572562X	4105
572565	3901
572565B	3901
572565X	3901
572566	3764
572566B	3764
572566X	3764
572567	3574
572567	3914/1
572567B	3574
572567B	3914/1
572567X	3574
572567X	3914/1
572569	4077
572569B	4077
572569X	4077
572570	3976
572570B	3976
572570X	3976
572571	4036
572571B	4036
572571X	4036
572572	3988
572572	3988/1
572572B	3988
572572B	3988/1
572572X	3988
572572X	3988/1
572573	3933
572573B	3933
572573X	3933
572574	3975
572574B	3975
572574X	3975
572575	4143
572575B	4143
572575X	4143
572577	4028
572577B	4028
572577X	4028
572578	3958
572578B	3958
572578X	3958
572583	3911
572583B	3911
572583X	3911

BENDIX	BESER
NO	NO
572584	3929
572584B	3929
572584X	3929
572585	4001
572585B	4001
572585X	4001
572591B	3954
572591J	3954
572593	3880
572593B	3880
572593X	3880
572595	3949
572595B	3949
572595X	3949
572597	3997
572597B	3997
572597X	3997
572598B	3953
572598J	3953
572599	3996
572599B	3996
572599X	3996
572600	4147
572600B	4147
572600X	4147
572601	4037
572601	4037/1
572601B	4037
572601B	4037/1
572601X	4037
572601X	4037/1
572604	3980
572604B	3980
572604J	3980
572604X	3980
572605	4160
572605B	4160
572605J	4160
572605X	4160
572606	4156
572606B	4156
572606J	4156
572606X	4156
572607	3960
572607B	3960
572607J	3960
572607X	3960
572608	3989
572608B	3989
572608J	3989
572608X	3989
572612	4039
572612B	4039
572612J	4039
572612X	4039
572613	4165
572613B	4165
572613J	4165
572613X	4165
572617	3928
572617B	3928
572617J	3928
572617X	3928
572619	4035
572619B	4035
572619J	4035
572619X	4035
572621	4111
572621B	4111
572621J	4111
572621X	4111
572627	4146
572627B	4146
572627J	4146
572627X	4146
572628	4029
572628B	4029
572628J	4029
572628X	4029
572629	4061

BENDIX	BESER
NO	NO
572629B	4061
572629J	4061
572629X	4061
572636	4082
572636B	4082
572636J	4082
572636X	4082
572638	4081
572638B	4081
572638J	4081
572638X	4081
572639	4060
572639B	4060
572639J	4060
572639X	4060
572641	3982
572641B	3982
572641J	3982
572641X	3982
572642	3903
572642B	3903
572642J	3903
572642X	3903
572643	3886
572643B	3886
572643J	3886
572643X	3886
572648B	4277
572649	4074
572649B	4074
572649J	4074
572649X	4074
572651	3948
572651B	3948
572651J	3948
572651X	3948
572653B	4242
572654	3933
572654B	3933
572654J	3933
572654X	3933
572655	4255
572655B	4255
572655X	4255
572656	4256
572656B	4256
572656X	4256
573003	3919
573003B	3919
573003X	3919
573005B	3529/2
573006	3896
573006B	3896
573006X	3896
573008	3539/1
573008B	3539/1
573008X	3539/1
573011	3846
573011B	3846
573011X	3846
573012	4093
573012B	4093
573012X	4093
573013	4100
573013B	4100
573013X	4100
573014	4123
573014B	4123
573014X	4123
573015	3784
573015B	3784
573015X	3784
573016	3950
573016B	3950
573016X	3950
573017	3852
573017B	3852
573017X	3852
573018	3853
573018B	3853

BENDIX	BESER
NO	NO
573018X	3853
573021	3918
573021B	3918
573021X	3918
573022B	3590/2
573027	3935
573027B	3935
573027X	3935
573029	3934
573029B	3934
573029X	3934
573030	3820
573030	3820/1
573030B	3820
573030B	3820/1
573030X	3820
573030X	3820/1
573031	3800
573031B	3800
573031X	3800
573032B	3529/1
573034	4126
573034	4126/1
573034B	4126
573034B	4126/1
573034X	4126
573034X	4126/1
573035	4069
573035B	4069
573035X	4069
573039	4059
573039B	4059
573039X	4059
573041	3877
573041B	3877
573041X	3877
573042	3617
573042B	3617
573042X	3617
573047	4095
573047B	4095
573047X	4095
573048B	3795
573050	3553/1
573050B	3553/1
573050X	3553/1
573053	3663
573053B	3663
573053X	3663
573055	3855
573055B	3855
573055X	3855
573058	3848
573058B	3848
573058X	3848
573059	3795/1
573059B	3795/1
573059X	3795/1
573068	3512
573068	3512/1
573068B	3512
573068B	3512/1
573068X	3512
573068X	3512/1
573072	4197
573072B	4197
573072X	4197
573074	3826/1
573074B	3826/1
573074X	3826/1
573075	3800/1
573075B	3800/1
573075X	3800/1
573077	4011
573077B	4011
573077X	4011
573083	3854
573083B	3854
573083X	3854
573084	3931

BENDIX	BESER
NO	NO
573084B	3931
573084X	3931
573085	3801
573085B	3801
573085X	3801
573089	4211
573089B	4211
573089X	4211
573092	4102
573092B	4102
573092X	4102
573093	3676
573093B	3676
573093X	3676
573094	3548
573094	3690
573094B	3548
573094B	3690
573094X	3548
573094X	3690
573096	3986
573096B	3986
573096X	3986
573102	4094
573102B	4094
573102X	4094
573106	3794
573106B	3794
573106X	3794
573107	3856
573107B	3856
573107X	3856
573109	3568
573109B	3568
573109X	3568
573110	3921
573110B	3921
573110X	3921
573112	4152
573112B	4152
573112X	4152
573113	3834
573113B	3834
573113X	3834
573114	3835
573114B	3835
573114X	3835
573115	3914
573115B	3914
573115X	3914
573118	4012
573118B	4012
573118X	4012
573120	4093
573120B	4093
573120X	4093
573122	4040
573122B	4040
573123	3850
573123B	3850
573123X	3850
573124	3849
573124B	3849
573124X	3849
573125	3983
573125B	3983
573125X	3983
573127	4138
573127	4138/1
573127B	4138
573127B	4138/1
573127X	4138
573127X	4138/1
573128	3904
573128B	3904
573128X	3904
573130	3790/1
573130B	3790/1
573130X	3790/1
573131	3940

BENDIX	BESER
NO	NO
573131B	3940
573131X	3940
573132	3939
573132B	3939
573132X	3939
573133	3946
573133B	3946
573133X	3946
573135	3987
573135B	3987
573135X	3987
573136	4389
573136B	4389
573136X	4389
573139	4388
573139B	4388
573139X	4388
573147	4103
573147B	4103
573147X	4103
573150	4208
573150B	4208
573150J	4208
573150X	4208
573151	4346
573151B	4346
573151X	4346
573153	4042
573153B	4042
573153X	4042
573158	3905
573158B	3905
573158X	3905
573159	3841
573159B	3841
573159X	3841
573160	3841/1
573160B	3841/1
573160X	3841/1
573164	3826/1
573164B	3826/1
573164X	3826/1
573165	3800/1
573165B	3800/1
573165X	3800/1
573168	4173
573168B	4173
573168X	4173
573169	3643
573169B	3643
573169X	3643
573170	3826
573170B	3826
573170X	3826
573171	3800
573171B	3800
573171X	3800
573172	3800/1
573172B	3800/1
573172X	3800/1
573175	4210
573175B	4210
573175X	4210
573178	4240
573178B	4240
573178X	4240
573183	3820
573183	3820/1
573183B	3820
573183B	3820/1
573183X	3820
573183X	3820/1
573184	3800
573184B	3800
573184X	3800
573185B	3564/1
573186	3853/1
573186B	3853/1
573186X	3853/1
573189	4180

BENDIX	BESER
NO	NO
573189B	4180
573189X	4180
573192	3964
573192B	3964
573192X	3964
573196	4096
573196B	4096
573196X	4096
573198	4096
573198B	4096
573198X	4096
573201	4161
573201B	4161
573201X	4161
573203	3872
573203B	3872
573203X	3872
573208	4222
573208B	4222
573208X	4222
573209	3885
573209B	3885
573209X	3885
573216	3894
573216B	3894
573216X	3894
573218	4058
573218B	4058
573218X	4058
573220	3842
573220B	3842
573220X	3842
573221	3923/1
573221B	3923/1
573221X	3923/1
573222	3924/1
573222B	3924/1
573222X	3924/1
573224	4181
573224B	4181
573224X	4181
573227	4076
573227B	4076
573227X	4076
573235	3984
573235B	3984
573235X	3984
573241	3970
573241B	3970
573241X	3970
573243	4134
573243B	4134
573243J	4134
573243X	4134
573247	4259
573247B	4259
573247J	4259
573247X	4259
573249	4122
573249B	4122
573249J	4122
573249X	4122
573253	4137
573253B	4137
573253X	4137
573255	3983/1
573255B	3983/1
573255J	3983/1
573255X	3983/1
573257B	4248
573259	4260
573259B	4260
573259X	4260
573261	3922
573261	3922/1
573261B	3922
573261B	3922/1
573261J	3922
573261J	3922/1
573261X	3922

BENDIX	BESER
NO	NO
573261X	3922/1
573263B	4157
573266	4173/1
573266B	4173/1
573266X	4173/1
573268	3964/1
573268B	3964/1
573268J	3964/1
573268X	3964/1
573270	4149
573270B	4149
573270J	4149
573270X	4149
573272	3967
573272B	3967
573272X	3967
573274	3820/3
573274B	3820/3
573274X	3820/3
573275	3906
573275	3906/1
573275	3906/1A
573275	3906/2
573275B	3906
573275B	3906/1
573275B	3906/1A
573275B	3906/2
573275X	3906
573275X	3906/1
573275X	3906/1A
573275X	3906/2
573276	3920
573276	3920/1
573276B	3920
573276B	3920/1
573276X	3920
573276X	3920/1
573277	3907
573277	3907/1
573277	3907/1A
573277	3907/2
573277B	3907
573277B	3907/1
573277B	3907/1A
573277B	3907/2
573277X	3907
573277X	3907/1
573277X	3907/1A
573277X	3907/2
573278	3955
573278B	3955
573278X	3955
573280	3972
573280B	3972
573280X	3972
573281	4151
573281	4151/1
573281B	4151
573281B	4151/1
573281X	4151
573281X	4151/1
573282B	4075/1
573284	3966
573284	3966/1
573284B	3966
573284B	3966/1
573284X	3966
573284X	3966/1
573289B	3971
573289J	3971
573291	4249
573291B	4249
573291X	4249
573295	4141
573295B	4141
573295J	4141
573295X	4141
573296	3945
573296B	3945
573296J	3945

BENDIX	BESER
NO	NO
573296X	3945
573300	4207
573300B	4207
573300J	4207
573300X	4207
573305	4378
573305B	4378
573305J	4378
573305X	4378
573306	3800/3
573306B	3800/3
573306X	3800/3
573308	3800/2
573308B	3800/2
573308X	3800/2
573312	4135
573312B	4135
573312J	4135
573312X	4135
573313	4150
573313B	4150
573313J	4150
573313X	4150
573320	4093
573320B	4093
573320J	4093
573320X	4093
573321	4391
573321B	4391
573321J	4391
573321X	4391
573323	4004
573323B	4004
573323J	4004
573323X	4004
573325	4008
573325B	4008
573325J	4008
573325X	4008
573329	4309
573329B	4309
573329X	4309
573330	4162
573330B	4162
573330J	4162
573330X	4162
573332	4230
573332B	4230
573332J	4230
573332X	4230
573334	4121
573334B	4121
573334J	4121
573334X	4121
573335	4014
573335B	4014
573335J	4014
573335X	4014
573340	4016
573340B	4016
573340X	4016
573343	4291
573343B	4291
573343X	4291
573352	4325/1
573352B	4325
573352B	4325/1
573352X	4325/1
573353	4379
573353B	4379
573353X	4379
573357	4056
573357B	4056
573357X	4056
573358	4132
573358	4172
573358	4172/1
573358B	4132
573358B	4172
573358B	4172/1

BENDIX	BESER
NO	NO
573358X	4132
573358X	4172
573358X	4172/1
573359	4057
573359B	4057
573359X	4057
573363	4204
573363B	4204
573363X	4204
573364	4380
573364B	4380
573364X	4380
573365	4215
573365B	4215
573365X	4215
573368	4136
573368B	4136
573368X	4136
573375B	4148
573375B	4148/1
573375X	4148/1
573377	3895
573377B	3895
573377X	3895
573379	4038
573379B	4038
573379X	4038
573380	4213
573380B	4213
573380X	4213
573385B	4337
573388B	4313
573393	4113
573393B	4113
573393X	4113
573395	4310
573395B	4310
573395X	4310
573397B	4324
573399	4145
573399B	4145
573399X	4145
573401	4383
573401B	4383
573401X	4383
573403B	4326
573404	4198
573404B	4198
573404X	4198
573406	4166
573406B	4166
573406B	4342
573406X	4166
573408	4220
573408B	4220
573408X	4220
573409	4241
573409B	4241
573409X	4241
573414	3966
573414	3966/1
573414B	3966
573414B	3966/1
573414X	3966
573414X	3966/1
573416	3998
573416B	3998
573416X	3998
573419	4381
573419B	4381
573419X	4381
573420	4265
573420B	4265
573420X	4265
573422	4140
573422B	4140
573422X	4140
573430	3980
573430B	3980
573430X	3980

BENDIX	BESER
NO	NO
573431	3952
573431B	3952
573431X	3952
573432	4382
573432B	4382
573432X	4382
573434	4175
573434B	4175
573434X	4175
573435	4167
573435B	4167
573435X	4167
573438	4174
573438	4174/1
573438B	4174
573438B	4174/1
573438X	4174
573438X	4174/1
573439B	4323
573440	4176
573440	4176/1
573440B	4176
573440B	4176/1
573440X	4176
573440X	4176/1
573441	4140/1
573441B	4140/1
573441X	4140/1
573442B	4316
573444	4315
573444B	4315
573444X	4315
573451B	4335
573454	4049
573454B	4049
573454X	4049
573459B	4338
573461	4201
573461	4201/1
573461B	4201
573461B	4201/1
573461X	4201
573461X	4201/1
573506	3575
573506B	3575
573506X	3575
573507	3926
573507	3926/1
573507B	3926
573507B	3926/1
573507X	3926
573507X	3926/1
573508	3925
573508	3925/2
573508B	3925
573508B	3925/2
573508X	3925
573508X	3925/2
573509	3962
573509	3962/1
573509B	3962
573509B	3962/1
573509X	3962
573509X	3962/1
573510	3963
573510	3963/1
573510B	3963
573510B	3963/1
573510X	3963
573510X	3963/1
573511	3965
573511B	3965
573511X	3965
573512	4092
573512	4092/1
573512B	4092
573512B	4092/1
573512X	4092
573512X	4092/1
573513	3749

BENDIX	BESER
NO	NO
573513B	3749
573513X	3749
573514	3823
573514B	3823
573514X	3823
573515B	3614
573517	3995
573517B	3995
573517X	3995
573518B	3679
573518X	3679
573519	3926
573519	3926/1
573519B	3926
573519B	3926/1
573519X	3926
573519X	3926/1
573520B	3575/2
573520X	3575/2
573524B	3575/2
573524X	3575/2
57PC3017	4041
BPD1008	3925/2
BPD1017	4383
BPD1023	4388
BPD1038	3966/1
BPD1048	3926/1
BPD1069	4325/1
BPD1074	4174/1
BPD1078	4382
BPD1080	4092/1
BPD1082	4390
BPD1089	3924/1
BPD1099	4151/1
BPD1110	3962/1
BPD1116	3963/1
BPD1121	3907/1
BPD1121	3907/1A
BPD1121	3907/2
BPD1122	4381
BPD1158	4372
BPD1162	4374
BPD1165	4283/1
BPD1166	4181/1
BPD1183	4037/1
BPD1200	4389
BPD1202	4172/1
BPD1203	4301/1
BPD1211	4380
BPD1220	4171/1
BPD1248	4351/1
BPD1262	4201/1
BPD1270	4371
BPD1270	4373
BPD1275	3920/1
BPD1310	4176/1
BPD1349	4391
BPD1366	4378
BPD1381	4140/1
BPD1388	4228/1
BPD1467	4379
BPD1495	3942/A
BPD1583	4350/1
BPD1615	3995/1
BPD1624	4369
BPD1627	4384
BPD1942	4126/1
BPD2137	3988/1
BPD2310	4370
DB2424 4WD	4353

BERAL	BESER
NO	NO
2976520	3390
2157619004045070	3567
2159218804045070	3670
2162117004045070	3678
2190417004145070	3680
2302017904048010	3861
2302118604048010	3804
2302220604048010	3681
2900120004134750	3749
2901723004017200	3433/1
2901723004034220	3433
2902423004117210	3433
2904118304117210	3523
2906722004017210	3773
2906722004034750	3773
2910720004134750	3749/1
2912117304144010	3575/2
2912120304017170	3575
2912120304144010	3575
2912222004017210	3994
2912320304044010	3823
2916020304144014	3942/A
2919019704141560	3926
2919019704141563	3926/1
2919220804140200	3925
2919220804140204	3925/2
2920020704140200	3962
2920020704140204	3962/1
2921720604141560	3963
2921720604141564	3963/1
2925627004034220	4169
2958115004045080	3515
2970617004017080	3537
2978418004017200	3513
2983521704040270	3679
2983522004017200	3679
2983522004040270	3679
21 576 19.00 40 3	3567
21 592 18.80 40 3	3670
21 621 17.00 40 3	3678
21 904 17.00 41 3	3680
23 020 17.90 40 4	3861
23 021 18.60 40 4	3804
23 022 20.60 40 4	3681
29 017 23.00 40 3	3433
29 017 23.00 40 4	3433/1
29 024 23.00 41 3	3433
29 041 18.30 41 4	3523
29 067 22.00 40 3	3773
29 067 22.00 40 4	3773
29 121 17.30 41 4	3575/2
29 121 20.30 41 4	3575
29 122 22.00 40 4	3994
29 123 20.30 40 4	3823
29 160 20.30 41 4	3942/A
29 190 19.70 41 3	3926
29 190 19.70 41 3	3926/1
29 192 20.80 41 4	3925
29 192 20.80 41 4	3925/2
29 200 20.70 41 4	3962
29 200 20.70 41 4	3962/1
29 217 20.60 41 4	3963
29 217 20.60 41 4	3963/1
29 256 27.00 40 3	4169
29 581 15.00 40 4	3315
29 581 15.00 40 4	3515
29 581 19.00 40 4	3315/1
29 706 17.00 40 3	3537
29 784 18.00 40 4	3513
29 835 21.70 40 4	3679
29 835 22.00 40 4	3679

BLUE PRINT	BESER
NO	NO
ADG04293	3914/1
ADH24247	4148/1
ADH24250	4148/1
ADH24260	3872/1
ADH24264	4148/1
ADK84212	4034/1
ADK84236	3983/3
ADM54286	3988/1
ADA104242	4185
ADB114211	4325/1
ADF124211	4174/1
ADF124211	4351/1
ADF124219	3920/1
ADF124220	3906/1
ADF124220	3906/1A
ADF124220	3906/2
ADF124221	3907/1
ADF124221	3907/1A
ADF124221	3907/2
ADG042171	4251/1
ADL144220	4092/1
ADN142177	4283/1
ADP154202	3820/1
ADP154212	4371
ADP154212	4373
ADP154213	4372
ADP154221	3922/1
ADP154230	4201/1
ADP154252	4374
ADR164205	3966/1
ADR164218	4140/1
ADT342173	4037/1
ADT342198	4176/1
ADT342208	4151/1
ADT342229	4370
ADT342230	4369
ADU174211	3962/1
ADU174212	3925/2
ADU174240	3963/1
ADU174253	4376
ADU174260	4126/1
ADV184203	4138/1
ADV184226	3926/1
ADBP420000	3924/1
ADBP420004	4350/1
ADBP420040	4301/1
ADBP420058	4384

BLUEPRINT	BESER
NO	NO
ADB114208	4378
ADB114210	4378
ADB114212	4379
ADB114214	4389
ADB114222	4383
ADB114223	4388
ADB114225	4381
ADB114226	4382
ADB114242	4380
ADU174207	4391
ADV184217	4390
ADV184231	4390

BOSCH	BESER
NO	NO
0 986 424 011	4282
0 986 424 021	4253
0 986 424 030	3595
0 986 424 031	3559
0 986 424 042	4301/1
0 986 424 045	3366/1
0 986 424 046	3366
0 986 424 047	3625
0 986 424 055	3324
0 986 424 086	3705
0 986 424 098	3424/1
0 986 424 099	3746
0 986 424 100	3467
0 986 424 105	3450
0 986 424 113	3413
0 986 424 124	4150
0 986 424 130	3418
0 986 424 133	3634
0 986 424 134	3673
0 986 424 135	3504
0 986 424 135	3691
0 986 424 144	3523
0 986 424 151	3624
0 986 424 155	3509
0 986 424 157	3462
0 986 424 160	3394
0 986 424 170	3628
0 986 424 180	3436
0 986 424 185	3879
0 986 424 190	3626
0 986 424 192	3369
0 986 424 202	3437
0 986 424 204	3888
0 986 424 209	3909
0 986 424 211	4078
0 986 424 214	3683
0 986 424 214	3872/1
0 986 424 215	3632
0 986 424 218	3567
0 986 424 219	3670
0 986 424 227	3750
0 986 424 229	3680
0 986 424 232	4086
0 986 424 236	3506
0 986 424 248	3617
0 986 424 251	3883
0 986 424 260	3631
0 986 424 266	3833
0 986 424 267	3771
0 986 424 268	3560
0 986 424 276	3867
0 986 424 277	4214
0 986 424 278	3878
0 986 424 284	4182
0 986 424 286	3453
0 986 424 287	3662
0 986 424 295	3875
0 986 424 297	3436
0 986 424 313	3693
0 986 424 319	3777
0 986 424 340	3697
0 986 424 347	3538
0 986 424 348	3740
0 986 424 358	3630
0 986 424 359	3593
0 986 424 361	3566
0 986 424 363	4197
0 986 424 364	3782/1
0 986 424 365	3879
0 986 424 366	3674
0 986 424 367	3887
0 986 424 368	3507
0 986 424 369	3577
0 986 424 369	3647
0 986 424 370	3675
0 986 424 373	3419
0 986 424 373	3731
0 986 424 375	3671
0 986 424 376	3556
0 986 424 379	3608

BOSCH	BESER
NO	NO
0 986 424 381	3429
0 986 424 382	3714
0 986 424 395	4251/1
0 986 424 402	3606
0 986 424 414	3636
0 986 424 415	3799
0 986 424 416	3594
0 986 424 418	4087
0 986 424 422	3710
0 986 424 427	4062
0 986 424 436	4369
0 986 424 437	4370
0 986 424 449	3637
0 986 424 450	3754
0 986 424 453	3659
0 986 424 455	3659
0 986 424 456	3762
0 986 424 462	3570
0 986 424 463	3678
0 986 424 465	3602
0 986 424 469	4125
0 986 424 470	4125
0 986 424 471	4281
0 986 424 472	3755
0 986 424 474	3687/1
0 986 424 475	4102
0 986 424 476	3681
0 986 424 487	3659
0 986 424 489	4010
0 986 424 496	3676
0 986 424 501	3590/1
0 986 424 503	3782
0 986 424 510	3618
0 986 424 512	3744
0 986 424 514	3569
0 986 424 515	3548
0 986 424 515	3690
0 986 424 516	3804
0 986 424 517	3836
0 986 424 518	3836
0 986 424 519	3676
0 986 424 523	3685
0 986 424 527	3846
0 986 424 531	3848
0 986 424 533	3539/1
0 986 424 534	3769
0 986 424 535	3768
0 986 424 537	3794
0 986 424 539	3918
0 986 424 540	3919
0 986 424 541	4059
0 986 424 544	3897
0 986 424 547	3581
0 986 424 553	4123
0 986 424 554	3790
0 986 424 558	3877
0 986 424 563	3661
0 986 424 566	3872
0 986 424 567	3423
0 986 424 572	3809
0 986 424 575	3778
0 986 424 581	3934
0 986 424 582	3935
0 986 424 583	3644
0 986 424 584	3881
0 986 424 590	3898
0 986 424 596	3800/1
0 986 424 597	3826/1
0 986 424 610	3780
0 986 424 611	4126
0 986 424 611	4126/1
0 986 424 614	3856
0 986 424 617	3853
0 986 424 618	3852
0 986 424 619	3950
0 986 424 625	4151/1
0 986 424 626	4027
0 986 424 630	3788
0 986 424 633	3590/2
0 986 424 634	3854

BOSCH	BESER
NO	NO
0 986 424 635	3931
0 986 424 636	3848
0 986 424 639	3822
0 986 424 640	3829
0 986 424 641	3830
0 986 424 644	3722
0 986 424 646	4040
0 986 424 648	4069
0 986 424 650	3913
0 986 424 656	3781
0 986 424 657	3921
0 986 424 659	3800
0 986 424 660	3938
0 986 424 661	4155
0 986 424 662	3795/1
0 986 424 666	4011
0 986 424 669	3884
0 986 424 670	3648
0 986 424 671	4093
0 986 424 672	3553/1
0 986 424 675	3855
0 986 424 677	4211
0 986 424 683	4093
0 986 424 689	4222
0 986 424 691	3921
0 986 424 695	3928
0 986 424 696	4009
0 986 424 697	3901
0 986 424 698	4179
0 986 424 699	4127
0 986 424 700	4079
0 986 424 701	3801
0 986 424 703	3834
0 986 424 704	3914
0 986 424 707	4042
0 986 424 709	3892
0 986 424 711	4084
0 986 424 713	4271
0 986 424 714	3802
0 986 424 715	3932
0 986 424 716	3955
0 986 424 719	4158
0 986 424 720	3767
0 986 424 721	4094
0 986 424 722	4109
0 986 424 722	4232
0 986 424 726	3653
0 986 424 728	3993
0 986 424 729	3843
0 986 424 730	3876
0 986 424 735	3817
0 986 424 739	4075/1
0 986 424 740	4075
0 986 424 741	4076
0 986 424 748	3795
0 986 424 748	4345
0 986 424 750	3823
0 986 424 754	3717
0 986 424 758	3943
0 986 424 761	4013
0 986 424 764	4180
0 986 424 766	4181
0 986 424 769	3835
0 986 424 770	3764
0 986 424 771	4148
0 986 424 771	4148/1
0 986 424 774	3850
0 986 424 777	4095
0 986 424 783	3552
0 986 424 784	3826/1
0 986 424 785	3849
0 986 424 786	4173
0 986 424 787	4097
0 986 424 787	4097/1
0 986 424 788	4112
0 986 424 789	3986
0 986 424 790	3825
0 986 424 791	4115
0 986 424 794	3885
0 986 424 795	3983

BOSCH	BESER
NO	NO
0 986 424 796	3905
0 986 424 797	3904
0 986 424 798	4154
0 986 424 803	3769
0 986 424 805	4103
0 986 424 806	4096
0 986 424 809	3831
0 986 424 810	3961
0 986 424 811	4028
0 986 424 812	4179
0 986 424 813	4152
0 986 424 814	4106
0 986 424 815	3959
0 986 424 818	3951
0 986 424 820	4389
0 986 424 821	4388
0 986 424 823	4031
0 986 424 824	3905
0 986 424 827	3512
0 986 424 827	3512/1
0 986 424 828	3584
0 986 424 830	4101
0 986 424 830	4209
0 986 424 831	3890
0 986 424 833	3575/2
0 986 424 898	4360
0 986 424 929	4350/1
0 986 424 930	4356
0 986 424 933	3782/1
0 986 460 002	3861
0 986 460 020	3463
0 986 460 090	3326
0 986 460 100	3326
0 986 460 101	3326
0 986 460 110	3320
0 986 460 111	3350
0 986 460 113	3320
0 986 460 114	3350
0 986 460 343	3318
0 986 460 345	3318
0 986 460 346	3318
0 986 460 390	3449
0 986 460 735	3316
0 986 460 736	3316
0 986 460 741	3317
0 986 460 880	3311
0 986 460 881	3311
0 986 460 932	3526
0 986 460 936	3582
0 986 460 937	3590
0 986 460 938	3623
0 986 460 939	3733
0 986 460 943	3531
0 986 460 944	3551
0 986 460 946	3482
0 986 460 947	3689
0 986 460 949	3464
0 986 460 953	3428
0 986 460 955	3469
0 986 460 958	3873
0 986 460 960	3657
0 986 460 960	3757
0 986 460 960	3857
0 986 460 961	3641
0 986 460 962	3445
0 986 460 963	3473
0 986 460 965	3581
0 986 460 966	3629
0 986 460 967	3680
0 986 460 969	3558
0 986 460 970	3496/1
0 986 460 971	3593
0 986 460 974	3640
0 986 460 975	3832
0 986 460 977	3658
0 986 460 978	3448
0 986 460 979	3622
0 986 460 981	4104
0 986 460 983	3487
0 986 460 983	3489

BOSCH	BESER
NO	NO
0 986 460 984	3426
0 986 460 986	3459
0 986 460 993	3660
0 986 460 995	3642
0 986 460 996	3583
0 986 460 997	3766
0 986 460 998	3543
0 986 461 006	4148/1
0 986 461 106	3585
0 986 461 111	3572
0 986 461 117	3555
0 986 461 119	3643
0 986 461 122	4128
0 986 461 123	3554
0 986 461 123	3651
0 986 461 124	3696
0 986 461 126	3686
0 986 461 127	3502
0 986 461 129	3736
0 986 461 131	4212
0 986 461 134	3395
0 986 461 136	3776
0 986 461 139	3700
0 986 461 139	3779
0 986 461 140	4072
0 986 461 141	3522
0 986 461 142	3704
0 986 461 143	4080
0 986 461 145	4108
0 986 461 147	3562
0 986 461 148	3596
0 986 461 151	3566
0 986 461 395	3329
0 986 461 396	3329
0 986 461 397	3329
0 986 461 398	3424/1
0 986 461 661	3393
0 986 461 730	3318
0 986 461 731	3318
0 986 461 750	3882
0 986 461 753	3553
0 986 461 757	3819
0 986 461 759	3607
0 986 461 764	3528
0 986 461 765	3539
0 986 461 768	3688
0 986 461 769	3529/1
0 986 461 770	3425
0 986 462 000	3373
0 986 462 001	3373
0 986 462 280	3327
0 986 462 282	3327
0 986 462 283	3343
0 986 462 283	3483
0 986 462 285	3327
0 986 462 532	3323
0 986 463 232	3335
0 986 463 411	3339
0 986 463 411	3514
0 986 463 412	3339
0 986 463 412	3514
0 986 463 641	3416
0 986 463 736	3806/1
0 986 463 920	3315
0 986 463 920	3515
0 986 463 921	3315
0 986 463 921	3515
0 986 464 361	3326/1
0 986 464 801	3374
0 986 464 881	3527
0 986 464 910	3312
0 986 464 911	3484
0 986 464 913	3312
0 986 464 914	3312
0 986 465 140	3410
0 986 465 141	3410
0 986 465 740	3378
0 986 465 744	3378
0 986 465 745	3490
0 986 465 760	3406

BOSCH	BESER
NO	NO
0 986 465 880	3365
0 986 465 881	3365
0 986 465 961	3444
0 986 465 962	3444
0 986 465 963	3486
0 986 465 963	3486/1
0 986 466 310	3442
0 986 466 311	3442
0 986 466 346	3495
0 986 466 350	3493
0 986 466 350	3494
0 986 466 402	3417
0 986 466 403	3417/1
0 986 466 601	3421
0 986 466 683	3529
0 986 466 693	3619
0 986 466 698	3649
0 986 466 699	3650
0 986 466 700	3650
0 986 466 750	3572
0 986 466 751	3572
0 986 466 870	3611
0 986 466 871	3550
0 986 466 874	3611
0 986 467 031	3709
0 986 467 310	3509
0 986 467 311	3509
0 986 467 410	3440
0 986 467 411	3440
0 986 467 570	3573
0 986 467 720	3503
0 986 467 760	3424/1
0 986 467 840	3513
0 986 467 841	3513
0 986 467 930	3484
0 986 468 350	3679
0 986 468 380	3466
0 986 468 520	3371
0 986 468 540	3579
0 986 468 541	3579
0 986 468 570	3621
0 986 468 610	3419
0 986 468 611	3419
0 986 468 613	3419
0 986 468 630	3415
0 986 468 701	3402
0 986 468 701	3472
0 986 468 870	3444
0 986 468 871	3486
0 986 468 871	3486/1
0 986 468 872	3444
0 986 468 873	3444
0 986 468 890	3441
0 986 468 901	3408
0 986 468 902	3430
0 986 468 950	3633
0 986 469 070	3549
0 986 469 191	3546
0 986 469 370	3503
0 986 469 371	3503
0 986 469 390	3410
0 986 469 410	3408
0 986 469 550	3401
0 986 469 580	3394
0 986 469 610	3529
0 986 469 790	3605
0 986 469 860	3580
0 986 469 905	3370
0 986 469 906	3415
0 986 469 912	3495
0 986 469 960	3578
0 986 469 961	3578
0 986 490 440	3752
0 986 490 500	3717
0 986 490 550	3430
0 986 490 640	3564
0 986 490 641	3564
0 986 490 990	3758
0 986 491 050	3432
0 986 491 260	3400

BOSCH	BESER
NO	NO
0 986 491 410	3603
0 986 491 700	3422
0 986 491 730	3609
0 986 491 900	3470
0 986 492 020	3589
0 986 492 090	3457
0 986 493 180	3666
0 986 493 180	3672
0 986 493 340	3721
0 986 493 390	3600
0 986 493 480	3760
0 986 493 550	3723
0 986 493 790	3437
0 986 494 000	3680
0 986 494 001	3863
0 986 494 002	3677
0 986 494 003	3506
0 986 494 004	3617
0 986 494 005	3566
0 986 494 006	3879
0 986 494 008	3606
0 986 494 009	3656
0 986 494 011	3755
0 986 494 012	4102
0 986 494 013	3681
0 986 494 015	3563
0 986 494 016	3676
0 986 494 017	3663
0 986 494 018	3590/1
0 986 494 019	3782
0 986 494 021	3896
0 986 494 022	3821
0 986 494 024	3539/1
0 986 494 026	4100
0 986 494 027	3820
0 986 494 027	3820/1
0 986 494 028	3881
0 986 494 031	3856
0 986 494 032	3853
0 986 494 033	3852
0 986 494 034	3950
0 986 494 035	3590/2
0 986 494 037	3921
0 986 494 038	3800
0 986 494 039	3938
0 986 494 040	3795/1
0 986 494 042	3896
0 986 494 043	3855
0 986 494 044	4211
0 986 494 046	4093
0 986 494 047	3921
0 986 494 048	3834
0 986 494 049	3914
0 986 494 051	3795
0 986 494 051	4345
0 986 494 053	3905
0 986 494 054	3890
0 986 494 055	3680
0 986 494 057	3585
0 986 494 058	3430
0 986 494 059	3536
0 986 494 061	4388
0 986 494 062	3905
0 986 494 064	3968
0 986 494 065	3987
0 986 494 066	3511
0 986 494 070	3826/1
0 986 494 074	3800
0 986 494 076	4058
0 986 494 078	4118
0 986 494 079	3889
0 986 494 081	3923/1
0 986 494 082	3924/1
0 986 494 090	3933
0 986 494 095	3946
0 986 494 097	3939
0 986 494 098	3940
0 986 494 099	3984
0 986 494 104	4096
0 986 494 105	4138

BOSCH	BESER
NO	NO
0 986 494 105	4138/1
0 986 494 107	3841/1
0 986 494 108	3842
0 986 494 109	3922
0 986 494 109	3922/1
0 986 494 110	3820/3
0 986 494 112	3968
0 986 494 113	3826/1
0 986 494 114	4173/1
0 986 494 121	3925
0 986 494 121	3925/2
0 986 494 122	3963
0 986 494 122	3963/1
0 986 494 123	3926
0 986 494 123	3926/1
0 986 494 127	3853/1
0 986 494 128	4212
0 986 494 132	3826
0 986 494 133	3894
0 986 494 135	4159
0 986 494 139	3880
0 986 494 140	3980
0 986 494 143	3978
0 986 494 144	4269
0 986 494 145	3969
0 986 494 146	4001
0 986 494 147	4293
0 986 494 148	3944
0 986 494 150	3859
0 986 494 151	3952
0 986 494 152	4017
0 986 494 153	3891
0 986 494 154	3949
0 986 494 155	3985
0 986 494 157	3800/2
0 986 494 158	3644
0 986 494 160	3983/1
0 986 494 161	4248
0 986 494 162	4247
0 986 494 163	3972
0 986 494 165	4210
0 986 494 167	4240
0 986 494 169	4161
0 986 494 170	3906
0 986 494 170	3906/1
0 986 494 170	3906/1A
0 986 494 170	3906/2
0 986 494 171	3907
0 986 494 171	3907/1
0 986 494 171	3907/1A
0 986 494 171	3907/2
0 986 494 174	4077
0 986 494 178	4389
0 986 494 180	4096
0 986 494 182	4037
0 986 494 182	4037/1
0 986 494 183	3854
0 986 494 184	3677
0 986 494 186	3881
0 986 494 191	4207
0 986 494 192	4151
0 986 494 192	4151/1
0 986 494 193	3749/1
0 986 494 194	3962
0 986 494 194	3962/1
0 986 494 197	4141
0 986 494 198	3958
0 986 494 204	3874
0 986 494 206	4309
0 986 494 207	3945
0 986 494 208	4149
0 986 494 211	3975
0 986 494 214	4157
0 986 494 218	4105
0 986 494 221	4029
0 986 494 223	4303
0 986 494 224	4111
0 986 494 227	3960
0 986 494 230	3989
0 986 494 234	4249

BOSCH	BESER
NO	NO
0 986 494 235	3964
0 986 494 236	3920
0 986 494 236	3920/1
0 986 494 237	3895
0 986 494 241	3929
0 986 494 242	3953
0 986 494 244	4038
0 986 494 246	4161
0 986 494 247	4157
0 986 494 250	3976
0 986 494 253	4113
0 986 494 254	4260
0 986 494 255	3954
0 986 494 259	4259
0 986 494 260	3956
0 986 494 261	3970
0 986 494 262	3854
0 986 494 263	4249
0 986 494 266	3942/A
0 986 494 268	3975
0 986 494 269	4389
0 986 494 270	3820
0 986 494 270	3820/1
0 986 494 272	4388
0 986 494 275	4149
0 986 494 277	3779
0 986 494 284	3754
0 986 494 285	4097
0 986 494 285	4097/1
0 986 494 293	3965
0 986 494 294	4179
0 986 494 295	4143
0 986 494 297	4150
0 986 494 299	3686
0 986 494 302	4391
0 986 494 304	3971
0 986 494 311	4110
0 986 494 312	4034
0 986 494 312	4034/1
0 986 494 314	3914/1
0 986 494 321	4122
0 986 494 323	3988/1
0 986 494 328	3954
0 986 494 329	4156
0 986 494 330	3970
0 986 494 331	3967
0 986 494 332	3966
0 986 494 332	3966/1
0 986 494 334	3965
0 986 494 335	3995
0 986 494 342	4161
0 986 494 344	4390
0 986 494 346	3949
0 986 494 350	4153
0 986 494 358	4148
0 986 494 358	4148/1
0 986 494 359	3911
0 986 494 361	4119
0 986 494 369	4025
0 986 494 370	4016
0 986 494 373	4036
0 986 494 379	4160
0 986 494 380	3997
0 986 494 381	4134
0 986 494 384	4142
0 986 494 387	3529/2
0 986 494 389	3561
0 986 494 390	3590/2
0 986 494 399	3529/2
0 986 494 400	4165
0 986 494 410	4103
0 986 494 416	4135
0 986 494 417	3993
0 986 494 418	3910
0 986 494 422	4039
0 986 494 424	4277
0 986 494 425	3903
0 986 494 430	3948
0 986 494 432	4325
0 986 494 432	4325/1

BOSCH	BESER
NO	NO
0 986 494 433	4230
0 986 494 434	4008
0 986 494 435	4014
0 986 494 441	3964/1
0 986 494 442	4216
0 986 494 444	4213
0 986 494 445	3913
0 986 494 449	3996
0 986 494 451	3681
0 986 494 452	4142
0 986 494 454	3827
0 986 494 457	3379
0 986 494 460	4092
0 986 494 460	4092/1
0 986 494 461	4389
0 986 494 462	3421
0 986 494 464	3800/3
0 986 494 483	4198
0 986 494 484	3940
0 986 494 487	4382
0 986 494 491	3968
0 986 494 494	4150
0 986 494 498	4056
0 986 494 499	4132
0 986 494 499	4172
0 986 494 499	4172/1
0 986 494 500	4057
0 986 494 501	4038
0 986 494 502	4106
0 986 494 504	3567
0 986 494 506	4062
0 986 494 510	3846
0 986 494 511	3877
0 986 494 512	3877
0 986 494 513	4042
0 986 494 515	3529
0 986 494 516	3529/2
0 986 494 517	3529/2
0 986 494 519	3529
0 986 494 520	3529
0 986 494 521	3529/2
0 986 494 522	3503
0 986 494 523	3717
0 986 494 524	3782
0 986 494 525	3782
0 986 494 549	4378
0 986 494 554	4383
0 986 494 557	4343
0 986 494 579	3375
0 986 494 580	3922/1
0 986 494 587	3988/1
0 986 494 589	3922/1
0 986 494 600	3529/2
0 986 494 601	3926/1
0 986 494 603	3924/1
0 986 494 613	3920/1
0 986 494 624	3906/1
0 986 494 624	3906/1A
0 986 494 624	3906/2
0 986 494 626	4390
0 986 494 648	4391
0 986 494 662	4326
0 986 494 672	4338
0 986 494 676	4176/1
0 986 494 677	4354
0 986 494 684	4337
0 986 494 689	4381
0 986 494 693	4324
0 986 494 696	4371
0 986 494 696	4373
0 986 494 697	4140/1
0 986 494 703	4371
0 986 494 703	4373
0 986 494 712	4342
0 986 494 713	4201/1
0 986 494 716	4372
0 986 494 720	4282/1
0 986 494 728	3925/2
0 986 494 731	4390
0 986 494 759	4379

BOSCH	BESER
NO	NO
0 986 494 773	4312
0 986 494 798	3981
0 986 494 799	4171/1
0 986 494 805	4374
0 986 494 816	4283
0 986 494 816	4283/1
0 986 494 821	4308
0 986 494 824	4284
0 986 494 838	4279
0 986 494 844	4174/1
0 986 494 845	4351/1
0 986 494 849	3557
0 986 494 862	4181/1
0 986 494 908	4343
0 986 494 910	4041
0 986 494 925	3782/1
0 986 494 981	4041
0 986 495 004	3782/1
0 986 495 077	3393
0 986 495 079	3312
0 986 495 122	4275
0 986 495 126	4082
0 986 495 131	3874
0 986 495 133	4015
0 986 495 135	4258
0 986 495 138	4083
0 986 495 138	4276
0 986 495 142	3635
0 986 495 146	3797
0 986 495 149	4019
0 986 495 155	4004
0 986 495 156	4081
0 986 495 158	3765
0 986 495 159	3886
0 986 495 164	4219
0 986 495 165	4060
0 986 495 166	4071
0 986 495 169	4255
0 986 495 170	3955
0 986 495 171	3667
0 986 495 173	4202
0 986 495 174	4256
0 986 495 289	4383
0 986 495 299	4326
0 986 495 322	4032
0 986 495 328	3699
0 986 495 330	3701
0 986 495 331	3418
0 986 495 343	4041
0 986 495 344	4058/1
0 986 495 349	4337
0 986 495 351	4343
0 986 495 358	4316
0 986 495 442	4325/1
0 986 498 406	4332
0 986 524 373	3731
0 986 561 117	3555
0 986 568 701	3472
0 986 593 340	3721
0 986 BB0 449	4298
0 986 TB2 269	3864
0 986 TB2 271	3868
0 986 TB2 315	3759
BE1267H	4388
BE536H	4148/1
BE537H	4148/1

BRECK	BESER
NO	NO
20904	3413
29017	3433/1
29024	3433
29041	3523
29067	3773
29071	3537
29107	3749/1
29190	3926
29190	3926/1
29200	3962

BRECK	BESER
NO	NO
29200	3962/1
29217	3963
29581	3315
29581	3515
29706	3537
20162 00 704 00	3873
20168 00 701 00	3531
20168 10 701 00	3551
20261 00 W	3986
20293 00	4076
20341 00 701 10	3339
20341 00 701 10	3514
20359 00 701 00	3423
20392 00	3315
20392 00	3515
20410 00 704 00	3596
20547 00 702 00	3623
20574 00 701 00	3490
20574 10 701 00	3378
20629 00	3573
20635 00 702 10	3493
20635 00 702 10	3494
20640 00	3570
20668 00	3536
20669 00 701 00	3649
20669 10	3650
20669 10 701 10	3619
20687 00 704 00	3611
20687 10 704 00	3550
20708 00 C	3648
20753 00 701 00	3570
20775 00 C1	3424
20775 00 C2	3424/1
20784 00 703 10	3513
20788 00 C	3955
20833 00 701 10	3466
20857 00	3621
20861 00 702 00	3419
20870 00 701 10	3402
20887 00 702 00	3486
20887 00 702 00	3486/1
20887 10 702 00	3585
20887 20 702 00	3444
20889 00 702 00	3441
20905 00 702 10	3380
20906 00 702 10	3487
20906 00 702 10	3489
20907 10 1	3790/1
20907 10 3	3790
20908 00 702 00	3549
20939 00 702 00	3410
20941 00 701 00	3408
20950 00 702 10	3424/1
20961 00 704 00	3529
20968 00 701 00	3584
20968 10 701 00	3564
20973 00 704 00	3496/1
20974 00	3496
20979 00 703 00	3605
20989 00 W	3474
20995 00 704 00	3578
21012 00 701 00	3504
21012 00 C	3502
21050 00 704 00	3717
21055 00 701 00	3430
21140 00 704 00	3469
21141 00 701 00	3603
21144 00 704 00	3536
21153 00 701 20	3628
21153 10 701 20	3629
21171 00 702 00	3464
21173 00 701 00	3609
21190 00 701 00	3470
21202 00 702 00	3589
21205 00 703 10	3543
21209 00 501 10	3457
21278 00 W	3680
21282 00	3879
21282 00 702 00	3879
21301 00 704 20	3630

BRECK	BESER
NO	NO
21305 00 704 20	3581
21312 00 C	4212
21363 00 C	3685
21368 00 701 00	3733
21388 00 702 10	3539
21394 00 701 00	3558
21396 00 W	3593
21411 00	3736
21436 00 702 00	3643
21463 00 702 10	3503
21463 00 W	3503
21469 00 701 00	3445
21470 00 701 00	3473
21471 00	3909
21479 00 703 00	3553
21479 00 W	3553/1
21486 00	3881
21486 00 701 00	3881
21490 00 C	3915
21515 00	3872
21515 00 702 10	3683
21515 00 702 10	3872/1
21539 00 C	3640
21545 00 704 00	3660
21546 00 701 00	3562
21553 00 C	4087
21573 00 706 00	3689
21576 00 703 10	3567
21586 00	4214
21592 00 705 10	3670
21601 00 701 10	3554
21601 00 701 10	3651
21614 00 W	3556
21621 00 705 10	3678
21626 00 701 00	4128
21631 00 701 10	3819
21632 00 W	3878
21635 00 703 00	4020
21636 00 701 10	3617
21643 00 701 00	3563
21647 00 701 10	3622
21651 00 C	3704
21654 00 702 10	3522
21654 10 C	3764
21664 00 701 20	3677
21670 00 701 20	3863
21691 00 702 00	3656
21694 00 701 10	3607
21697 00 C	3686
21719 00 C	4148/1
21724 00 701 10	3750
21725 00 C	3632
21739 00	4086
21766 00	3833
21797 00 703 10	3595
21799 00 703 10	3559
21832 00	3545
21848 00 701 00	3506
21861 00 704 10	4062
21861 10 704 10	4062
21862 00 701 00	3505
21862 00 701 00	3615
21866 00 702 00	3637
21866 10 702 00	3566
21866 20 702 00	3538
21883 00 701 00	3606
21885 00 701 10	3794
21899 00 702 20	3821
21900 00 702 00	3663
21904 00 701 10	3680
21919 00 702 00	3676
21920 00	3693
21927 00 W2	3618
21945 10 701 00	3896
21980 00 702 00	3659
21983 00 701 10	4059
22034 00 703 00	4351/1
22147 00 703 00	4350/1
22476 00 701 00	4301/1
22588 00 703 00	4370

BRECK	BESER
NO	NO
22593 00 703 00	4369
23004 00 701 10	3577
23004 00 701 10	3647
23005 00 C	3598/1
23020 00 704 00	3861
23021 00 704 20	3804
23022 00 703 20	3681
23042 00 701 10	3799
23043 00	4197
23063 00 702 10	3762
23070 00 701 20	4125
23073 00 703 00	3919
23076 00 702 00	3918
23078 00	4101
23078 00	4209
23080 00 C	3675
23081 00 C	3507
23094 00	4115
23095 00	4115
23099 00 703 00	3848
23112 00	3943
23118 00 W	4222
23124 00 701 10	3636
23144 00 701 20	3836
23144 00 701 30	3836
23154 00 702 00	3754
23157 00	4103
23169 00 W	3610
23172 00 702 00	3539/1
23181 00	3897
23189 00 C	4069
23193 00 W	4126
23193 00 W	4126/1
23202 00	3877
23202 00 702 00	3877
23215 00 701 00	3877
23225 00 702 10	3846
23227 00 W	3548
23227 00 W	3690
23234 00 701 10	3687/1
23238 00 702 10	3778
23241 00 702 00	3744
23271 00 701 20	4102
23273 00 W	3934
23277 00 701 10	3935
23277 00 W	3935
23279 00 701 10	4100
23290 00 C	3809
23300 00 702 10	3722
23309 00	4179
23312 00	4180
23314 00 C	3884
23326 00 703 10	3842
23326 00 W	3842
23348 00 701 10	3768
23353 00 704 00	3755
23384 00 C	3740
23392 00 701 10	3590/1
23393 00 W	3896
23400 00 C	3602
23402 00 701 00	4211
23407 00	3854
23407 00 702 00	3854
23407 10	3931
23420 00 C	3932
23434 00 703 10	3921
23440 00	3801
23440 00 701 00	3801
23442 00 C	4009
23447 00 554 10	4181/1
23480 00 C	3890
23482 00 702 00	3853
23507 00 C	3928
23510 00 702 10	3769
23513 00	3822
23517 00	4123
23521 00 704 10	3788
23521 00 C	3788
23524 00 C	3829
23527 00 C	4155

BRECK	BESER
NO	NO
23539 00	3830
23543 00 704 10	3993
23543 00 C	3993
23545 00 C	3993
23552 00 702 00	3790
23557 00 704 10	4093
23558 00 C	4079
23572 00 C	3913
23577 00 703 10	3784
23581 00 702 10	4138
23581 00 702 10	4138/1
23585 00	4158
23585 00 701 00	4158
23587 00 701 10	3904
23587 00 W	3904
23597 00 702 10	3938
23599 00 701 00	3820
23599 00 701 00	3820/1
23600 00 702 00	3800
23601 00	4123
23613 00 703 00	3856
23620 00 702 10	4154
23623 00 704 00	4389
23652 00 C	4148/1
23656 00 702 10	4153
23656 00 C	4153
23669 00 703 10	3855
23705 00	3826
23705 00 701 10	3826/1
23705 00 W	3826/1
23705 10 W	3826/1
23708 00 701 10	3800/1
23708 00 W	3800/1
23720 00 701 10	4159
23723 00 701 00	3885
23732 00 702 00	4181
23746 00 W	3841
23746 10 703 10	3841
23749 00 W	3841/1
23763 00 W	4096
23766 00 701 10	3817
23768 00 701 10	3890
23794 00 701 00	4346
23816 00 704 10	3825
23816 00 C	3825
23823 10 704 10	4152
23832 00 702 10	4042
23836 00	4013
23836 00 701 00	4013
23865 00 C	3912
23868 00 C	3831
23871 00 702 10	3933
23871 00 C	3933
23873 00 501 10	4269
23873 00 C	4269
23891 00 701 10	3959
23891 00 C	3959
23904 00 C	3769
23914 00	3905
23914 00 704 00	3905
23917 00 703 10	3834
23919 00 703 10	3835
23921 00	3914
23926 00	4388
23927 00 704 00	4388
23928 00	3910
23930 00 702 00	3849
23934 00	3850
23959 00 702 00	3987
23966 00 701 10	4028
23973 00	3983
23973 00 702 00	3983
23974 00 702 00	3951
23979 00 701 10	3826/1
23980 00 703 00	3795/1
24008 00	3924
24008 00 703 00	3924
24014 00 C	4106
24024 00 C	3891
24031 00 C	3961

BRECK	BESER
NO	NO
24046 00 701 10	3889
24046 00 C	3889
24058 00 C	3979
24065 00	3849
24066 00 C	3892
24092 00 C	3978
24122 00 701 10	3956
24133 00 701 10	3940
24133 00 W	3940
24134 00 701 10	3939
24135 00 704 00	3946
24137 00 702 00	3853/1
24150 00	3984
24246 00 701 10	4118
24260 00 704 00	4058
24320 00 704 10	3980
24412 00 701 10	4149
24421 00 702 10	4150
24465 00 703 00	3820/3
24483 00 704 10	4390
24484 00 703 10	3906
24484 00 703 10	3906/1
24484 00 703 10	3906/1A
24484 00 703 10	3906/2
24485 00 703 10	3920
24485 00 703 10	3920/1
24486 00 702 10	3907
24486 00 702 10	3907/1
24486 00 702 10	3907/1A
24486 00 702 10	3907/2
24538 00 701 00	3964
24561 00 552 00	4325/1
24561 00 552 10	4325/1
24561 00 552 20	4325/1
24578 00 702 00	4151/1
24582 00 701 10	4029
24638 00 701 10	4160
24664 00 704 10	4037/1
24688 00 551 10	4378
24688 00 701 10	4378
24692 00 704 00	3967
24693 00 701 00	3966
24693 00 701 00	3966/1
24765 00 704 00	3971
24820 00 704 00	4142
25199 00 551 00	4382
25199 00 551 10	4382
25250 00 701 00	4201/1
25353 00 704 00	4349
25602 00 703 00	4174/1
25738 00 702 00	4140/1
25833 00 701 00	4371
25833 00 701 00	4373
25839 00 704 00	4372
25965 00 702 00	4283/1
29001 00 902 10	3749
29121 00 703 00	3575
29122 00 902 10	3994
29123 00 703 00	3823
29190 00 703	3926
29190 00 703	3926/1
29190 00 703 10	3926
29190 00 703 10	3926/1
29192 00 703 00	3925
29192 00 703 00	3925/2
29200 00 703	3962
29200 00 703	3962/1
29200 00 703 00	3962
29200 00 703 00	3962/1
29217 00 702 00	3963
29217 00 702 00	3963/1
29217 00 703	3963
29217 00 703 00	3963/1
29232 00 703 00	4092/1
29835 00 902 10	3679
New 086 C	3632
New 093	3853
New 094 C	4118

BREMBO	BESER
NO	NO
P 00 010	3609
P 05 001	4179
P 06 003	3332
P 06 004	3326/1
P 06 006	3365
P 06 008	3573
P 06 009	3572
P 06 010	3609
P 06 011	3578
P 06 012	3564
P 06 014	3563
P 06 017	3658
P 06 018	3909
P 06 020	3879
P 06 021	3881
P 06 023	3656
P 06 026	4179
P 06 031	4180
P 06 033	4181
P 06 037	4389
P 06 038	4388
P 06 042	3564/1
P 06 044	3879
P 06 046	4180
P 06 047	4208
P 06 048	3881
P 06 049	4207
P 06 056	4181/1
P 06 057	4346
P 06 060	4380
P 06 061	4379
P 06 064	4325
P 06 064	4325/1
P 06 070	4381
P 06 071	4383
P 06 074	4378
P 06 075	4382
P 06 080	4389
P 10 001	3894
P 10 003	3976
P 10 005	4303
P 10 007	4073
P 10 009	4221
P 10 011	4211
P 10 013	4040
P 10 014	4330
P 10 054	4337
P 11 017	4198
P 11 018	4018
P 11 019	4006
P 11 025	4005
P 11 026	3955
P 15 001	3511
P 15 002	3687/1
P 15 006	3744
P 15 007	3687/1
P 15 010	3895
P 16 002	3436
P 16 003	3746
P 16 004	3620
P 16 005	3600
P 16 007	3898
P 16 008	3901
P 16 013	4122
P 18 024	4004
P 18 025	4136
P 23 001	3320
P 23 002	3317
P 23 013	3424/1
P 23 015	3333
P 23 017	3466
P 23 021	3424
P 23 022	3440
P 23 023	3543
P 23 025	3625
P 23 028	3467
P 23 029	3439
P 23 037	3536
P 23 039	3461
P 23 040	3459

BREMBO	BESER
NO	NO
P 23 044	3432
P 23 056	3540
P 23 058	3617
P 23 060	3608
P 23 065	4123
P 23 068	3595
P 23 069	3559
P 23 071	3618
P 23 072	3799
P 23 077	3617
P 23 079	3790
P 23 081	3618/1
P 23 085	3826/1
P 23 087	3800/1
P 23 090	3986
P 23 091	3834
P 23 092	3835
P 23 093	3914
P 23 096	3643
P 23 097	4173
P 23 099	3826
P 23 107	4173/1
P 23 108	3826/1
P 23 118	3790/1
P 23 119	3800
P 23 120	3800/1
P 23 122	3568
P 23 123	3569
P 23 125	3897
P 23 130	4121
P 23 136	4171
P 23 136	3922/3
P 23 136	4171/1
P 23 137	3800/3
P 23 140	3826/1
P 23 141	3826/3
P 23 143	3981
P 23 144	3981
P 23 156	4286
P 23 170	4234
P 23 178	4301
P 23 178	4301/1
P 23 179	4246
P 23076	3548
P 24 001	3311
P 24 002	3312
P 24 004	3416
P 24 005	3480
P 24 006	3417
P 24 008	3423
P 24 010	3484
P 24 012	3417/1
P 24 013	3419
P 24 014	3429
P 24 016	3621
P 24 017	3499
P 24 019	3549
P 24 023	3603
P 24 024	3437
P 24 028	3589
P 24 029	3464
P 24 030	3545
P 24 031	3464
P 24 032	3473
P 24 033	3445
P 24 034	3593
P 24 036	3833
P 24 037	3558
P 24 039	3888
P 24 041	3781
P 24 043	3417
P 24 044	3594
P 24 045	3722
P 24 046	3754
P 24 047	3755
P 24 048	3951
P 24 051	3767
P 24 052	3784
P 24 053	3921
P 24 055	3877

BREMBO	BESER
NO	NO
P 24 056	4119
P 24 058	3801
P 24 059	4093
P 24 060	4100
P 24 061	3885
P 24 062	3853
P 24 063	4058
P 24 064	3906
P 24 064	3906/1
P 24 064	3906/1A
P 24 064	3906/2
P 24 065	3920
P 24 065	3920/1
P 24 066	3907
P 24 066	3907/1
P 24 066	3907/1A
P 24 066	3907/2
P 24 067	3853/1
P 24 068	4186
P 24 071	3801
P 24 075	4157
P 24 076	4161
P 24 084	3823
P 24 085	4215
P 24 086	3988
P 24 086	3988/1
P 24 148	3853/1
P 24 151	4204
P 24 157	4226
P 24 171	4351
P 24 171	4351/1
P 24 187	4175/1
P 24152	4174
P 24152	4174/1
P 28 002	3324
P 28 003	3705
P 28 004	3646
P 28 006	3501
P 28 008	3752
P 28 010	3582
P 28 011	4212
P 28 013	3631
P 28 017	4212
P 28 018	3691
P 28 020	3683
P 28 020	3872/1
P 28 022	4148/1
P 28 023	3607
P 28 024	3686
P 28 026	3704
P 28 028	3704
P 28 030	4155
P 28 032	4110
P 28 034	4109
P 28 034	4232
P 28 035	3831
P 28 036	4159
P 28 039	4148
P 28 039	4148/1
P 28 042	3696
P 28 045	4160
P 28 046	4156
P 28 077	4312
P 28 090	4279
P 30 001	3504
P 30 003	4087
P 30 005	3507
P 30 009	3740
P 30 010	3648
P 30 011	3778
P 30 012	3802
P 30 013	3843
P 30 014	3993
P 30 015	4009
P 30 016	4269
P 30 018	3959
P 30 019	3978
P 30 020	3961
P 30 023	3979
P 30 024	3502

BREMBO	BESER
NO	NO
P 30 025	3980
P 30 026	3880
P 30 027	3985
P 30 028	3976/1
P 30 032	3968
P 30 033	3969
P 30 034	4028
P 30 036	3960
P 30 037	3989
P 30 039	4039
P 30 040	4165
P 30 041	4035
P 30 042	4001
P 30 043	3959
P 30 044	3653
P 30 046	3980
P 30 047	4061
P 30 051	3980
P 30 053	4145
P 30 054	4061
P 30 055	4049
P 30 056	4039
P 30 062	3740
P 30 063	4060
P 30 067	4343
P 30 070	4041
P 30 073	4342
P 30 076	4321
P 30 090	4251
P 30 090	4251/1
P 30 094	4343
P 30 096	4353
P 30 120	4040
P 34 002	3446
P 34 002	3450
P 34 005	3886
P 34 007	4124
P 34 009	4354
P 36 001	3455
P 36 007	3584
P 37 003	4182
P 37 004	4182
P 37 005	4011
P 37 007	4012
P 37 008	4031
P 37 010	4016
P 37 015	4338
P 37 016	4339
P 37 017	4338
P 41 001	3393
P 41 002	3421
P 41 003	3422
P 41 004	3552
P 41 005	3421
P 44 001	3661
P 44 003	3771
P 44 004	3662
P 44 005	3453
P 44 006	3512/2
P 44 007	3512
P 44 007	3512/1
P 44 010	3872
P 44 011	4094
P 44 013	3944
P 44 014	4293
P 44 015	3453
P 44 016	4157
P 44 017	4157
P 44 019	3944
P 44 020	4161
P 44 021	4323
P 49 006	3449
P 49 007	3449
P 49 010	3463
P 49 011	3640
P 49 013	3723
P 49 016	3522
P 49 023	3832
P 49 024	3874
P 49 027	3780

BREMBO	BESER
NO	NO
P 49 028	3874
P 49 032	3889
P 49 033	4118
P 49 035	4303
P 49 037	3875
P 49 039	4029
P 49 049	4318
P 49 051	4242
P 50 001	3318
P 50 002	3315
P 50 002	3515
P 50 003	3513
P 50 004	3339
P 50 004	3514
P 50 007	3611
P 50 008	3408
P 50 010	3629
P 50 011	3430
P 50 012	3630
P 50 013	3550
P 50 016	3626
P 50 017	3581
P 50 019	3670
P 50 020	3804
P 50 021	3689
P 50 022	3628
P 50 023	3677
P 50 024	3663
P 50 025	3676
P 50 026	3863
P 50 027	3678
P 50 028	3614
P 50 029	3567
P 50 030	3680
P 50 031	3681
P 50 032	3861
P 50 033	3821
P 50 034	3679
P 50 035	4125
P 50 036	4125
P 50 038	4281
P 50 039	4126
P 50 039	4126/1
P 50 040	4069
P 50 041	4102
P 50 042	4101
P 50 042	4209
P 50 043	4103
P 50 045	3836
P 50 046	3836
P 50 049	4097
P 50 050	3923/1
P 50 051	3924/1
P 50 052	4127
P 50 059	3962
P 50 059	3962/1
P 50 060	3963
P 50 060	3963/1
P 50 063	4210
P 50 065	3679
P 50 067	4248
P 50 068	4247
P 50 069	4249
P 50 070	4248
P 50 071	4248
P 50 072	3676
P 50 074	4240
P 50 084	3926
P 50 084	3926/1
P 50 085	3925
P 50 085	3925/2
P 50 086	4391
P 50 093	4326
P 50 095	4313
P 50 103	4335
P 50 107	3967
P 50 108	4338
P 50 109	4338
P 50 114	4313
P 50 117	4335

BREMBO	BESER
NO	NO
P 50 118	4334
P 50 119	4334
P 50 122	4349
P 50 144	4376
P 50 150	4384
P 50 155	4355
P 52 001	3319
P 52 003	3311
P 52 010	3423
P 52 011	3624
P 52 012	3413
P 52 016	3683
P 52 016	3872/1
P 52 017	3943
P 54 001	3709
P 54 006	3401
P 54 008	3448
P 54 009	3400
P 54 012	4108
P 54 014	3622
P 54 015	3604
P 54 017	3685
P 54 018	3688
P 54 020	3809
P 54 021	3675
P 54 023	4062
P 54 026	4084
P 54 028	4271
P 54 029	3892
P 54 030	3955
P 54 032	3697
P 54 033	3900
P 54 034	4106
P 54 035	4216
P 54 036	4059
P 54 038	3975
P 54 041	3765
P 54 044	4054
P 54 046	3916
P 56 004	3370
P 56 010	4087
P 56 011	3394
P 56 014	3397
P 56 015	3415
P 56 021	3699
P 56 021	3779
P 56 022	3562
P 56 023	4104
P 56 024	3660
P 56 026	3598/1
P 56 027	3598
P 56 031	4128
P 56 033	3577
P 56 033	3647
P 56 039	4010
P 56 040	3932
P 56 041	3859
P 56 043	3699
P 56 043	3779
P 56 044	4115
P 56 046	3933
P 56 049	4017
P 56 051	4074
P 56 056	3758
P 56 058	4143
P 56 059	3952
P 56 060	4025
P 56 061	3848
P 56 062	4038
P 56 066	3965/1
P 56 068	3933
P 56 070	4229
P 56 072	3667
P 56 081	4324
P 56 083	3797
P 56 086	3983/2
P 56 086	3983/3
P 56 098	4283
P 56 098	4283/1
P 56 099	4282/1

BREMBO	BESER
NO	NO
P 56 100	4282
P 56 103	4341
P 56 106	4308
P 56 107	4341
P 56 118	4307
P 59 001	3318
P 59 002	3320
P 59 004	3335
P 59 005	3410
P 59 006	3410
P 59 007	3509
P 59 008	3462
P 59 011	3623
P 59 012	3416
P 59 013	3470
P 59 014	3717
P 59 015	3657
P 59 015	3757
P 59 015	3857
P 59 016	3733
P 59 017	3505
P 59 017	3615
P 59 018	3469
P 59 019	3736
P 59 020	3674
P 59 021	3887
P 59 026	3596
P 59 030	3762
P 59 034	3561
P 59 036	3846
P 59 038	4040
P 59 038X	4040
P 59 039	3856
P 59 040	3855
P 59 041	3795/1
P 59 042	3853/1
P 59 043	4211
P 59 044	3853
P 59 045	4042
P 59 050	3983/1
P 59 052	3800/2
P 59 055	4149
P 59 059	4150
P 59 060	4150
P 59 076	4230
P 59 077	4008
P 59 078	4014
P 59 080	4014
P 59 082	4227
P 59 083	4285
P 59 084	4284
P 61 004	3321
P 61 005	3323
P 61 011	3366/1
P 61 017	3405
P 61 018	3806
P 61 028	3380
P 61 028	3580
P 61 029	3493
P 61 029	3494
P 61 031	3556
P 61 032	3496/1
P 61 033	3366
P 61 035	3457
P 61 037	3873
P 61 038	3680
P 61 041	3556
P 61 042	3487
P 61 042	3489
P 61 043	3555
P 61 050	3557
P 61 050	3610
P 61 052	3819
P 61 053	3878
P 61 054	3528
P 61 056	3750
P 61 060	3636
P 61 062	3873
P 61 063	3938
P 61 066	3820

BREMBO	BESER
NO	NO
P 61 066	3820/1
P 61 068	3800
P 61 069	3644
P 61 071	3935
P 61 072	3934
P 61 074	3854
P 61 075	3931
P 61 077	3939
P 61 078	3940
P 61 079	3946
P 61 080	3984
P 61 081	3987
P 61 082	3820
P 61 082	3820/1
P 61 083	3964
P 61 084	3971
P 61 089	3685
P 61 091	3820/3
P 61 093	3922
P 61 093	3922/1
P 61 094	3922
P 61 094	3922/1
P 61 095	4151
P 61 095	4151/1
P 61 096	3972
P 61 098	3659
P 61 099	3487
P 61 099	3489
P 61 100	3984
P 61 100	3984/1
P 61 101	3970
P 61 109	3939
P 61 111	4316
P 61 113	4201
P 61 113	4201/1
P 61 118	4171/1
P 61 122	4372
P 61 124	4374
P 61 127	4371
P 61 127	4373
P 61 130	4224
P 61 133	4370
P 61 134	4369
P 65 001	3320
P 65 017	4309
P 65 027	4310
P 66 001	3826/2
P 66 002	4058
P 66 002	4058/1
P 68 001	3333
P 68 005	3374
P 68 006	3482
P 68 007	3527
P 68 008	3503
P 68 009	3380
P 68 010	3380
P 68 010	3580
P 68 011	3442
P 68 012	3526
P 68 013	3537
P 68 014	3539
P 68 015	3495
P 68 016	3428
P 68 017	3596
P 68 024	3529/2
P 68 027	3539/1
P 68 028	4093
P 68 029	3950
P 68 030	3852
P 68 031	3850
P 68 033	3983
P 68 034	3849
P 68 035	3529/2
P 68 036	4137
P 68 037	3503
P 68 038	3503/1
P 68 039	4141
P 68 043	3967
P 68 044	3966
P 68 044	3966/1

BREMBO	BESER
NO	NO
P 68 046	4134
P 68 049	3827
P 68 050	3964/1
P 68 053	3966
P 68 053	3966/1
P 68 054	4142
P 68 059	4140
P 68 060	4140/1
P 68 061	4172/1
P 68 064	4287
P 68 065	4253
P 68 068	4280
P 68 073	4363
P 71 003	3583
P 71 008	3717
P 78 001	3601
P 78 002	3579
P 78 004	3426
P 78 005	4080
P 78 007	4078
P 78 009	3764
P 78 010	3764
P 78 011	3913
P 78 013	3912
P 78 015	4036
P 78 017	4081
P 78 018	4258
P 78 020	4213
P 79 004	3745
P 79 005	3721
P 79 006	3882
P 79 008	3883
P 79 009	3884
P 79 010	3602
P 79 011	4027
P 79 012	3928
P 79 016	3928
P 79 017	4034
P 79 017	4034/1
P 79 018	3929
P 79 019	4000
P 79 020	3928
P 79 021	3899
P 79 027	4148/1
P 79 028	4038
P 82 001	3872
P 83 003	3710
P 83 005	3579
P 83 006	3371
P 83 007	3634
P 83 008	3418
P 83 009	3560
P 83 011	3402
P 83 011	3472
P 83 013	3414
P 83 013	3714
P 83 015	3776
P 83 024	3693
P 83 025	3673
P 83 027	4086
P 83 030	4072
P 83 034	3554
P 83 034	3651
P 83 036	4275
P 83 037	3915
P 83 038	4099
P 83 039	4274
P 83 040	3822
P 83 046	3890
P 83 047	4154
P 83 048	3829
P 83 049	3830
P 83 050	3768
P 83 051	3769
P 83 052	3788
P 83 053	4112
P 83 055	4158
P 83 057	4153
P 83 058	4276
P 83 059	4083

BREMBO	BESER
NO	NO
P 83 061	4013
P 83 062	3910
P 83 063	3876
P 83 064	3817
P 83 065	3825
P 83 066	3891
P 83 067	4105
P 83 068	4111
P 83 071	4077
P 83 073	4113
P 83 076	4277
P 83 078	4082
P 83 079	3956
P 83 080	4037
P 83 080	4037/1
P 83 082	3953
P 83 083	3954
P 83 086	3958
P 83 088	3911
P 83 089	3949
P 83 092	3777
P 83 093	4071
P 83 094	3982
P 83 096	3903
P 83 098	3997
P 83 102	3891
P 83 103	3769
P 83 107	3996
P 83 109	4147
P 83 111	4098
P 83 112	4146
P 83 117	3948
P 83 137	3998
P 83 138	4254
P 83 140	4167
P 83 145	4255
P 83 150	4176/1
P 83 167	4239
P 83 170	4239
P 83 173	4367
P 83 177	4360
P 83 182	4361
P 83110	4032
P 85 001	3406
P 85 002	3350
P 85 003	3327
P 85 004	3343
P 85 004	3483
P 85 005	3486
P 85 005	3486/1
P 85 006	3404
P 85 008	3605
P 85 010	3378
P 85 011	3551
P 85 012	3444
P 85 013	3536
P 85 014	3490
P 85 015	3531
P 85 016	3619
P 85 017	3529
P 85 019	3441
P 85 020	3529/1
P 85 020X	3529/1
P 85 022	3419
P 85 022	3731
P 85 024	3585
P 85 025	3566
P 85 026	3590
P 85 027	4020
P 85 029	3553
P 85 030	3538
P 85 031	3637
P 85 038	4222
P 85 039	3506
P 85 041	3782/1
P 85 041X	3782/1
P 85 042	3896
P 85 043	3782
P 85 044	3896
P 85 045	3590/1

BREMBO	BESER
NO	NO
P 85 046	3671
P 85 046	3795
P 85 046	4345
P 85 047	3606
P 85 049	3794
P 85 050	3553/1
P 85 060	3590/2
P 85 061	4095
P 85 064	3842
P 85 065	4075/1
P 85 066	4152
P 85 069	4075
P 85 070	4076
P 85 072	3782
P 85 072X	3782
P 85 073	3905
P 85 075	3904
P 85 077	4138
P 85 077	4138/1
P 85 081	3841
P 85 082	3841/1
P 85 083	3842
P 85 084	4096
P 85 086	4096
P 85 089	3529/1
P 85 092	3551
P 85 093	3649
P 85 095	3905
P 85 097	4096
P 85 098	4259
P 85 099	4260
P 85 100	4260
P 85 108	4390
P 85 109	4390
P 85 110	3945
P 85 114	4135
P 85 115	3906/1
P 85 116	3945
P 85 121	4200
P 85 125	4241
P 85 135	4336
P 85 140	4336
P 85 147	4228/1
P 85 153	4364
P 85 153X	4364
P 85 168	4356
P 85 169	4350
P 85 169	4350/1
P 85 172	4357
P 85 187	4375
P 86 001	3311
P 86 003	3373
P 86 006	3641
P 86 008	3583
P 86 009	3642
P 86 014	3918
P 86 016	3919
P 86 020	3919
P 99 003	3574
P 99 003	3914/1
P A6 001	3423
P A6 006	3423/1
P A6 007	3749
P A6 012	3523
P A6 017	3575
P A6 018	3749/1
P A6 021	3575/2
P A6 022	3942
P A6 022	3942/A
P A6 023	3823
P A6 025	3994
P A6 026	3965
P A6 027	4092
P A6 027	4092/1

BREMSI	BESER
NO	NO
BP2015	3322
BP2043	3331
BP2050	3403
BP2153	3330
BP2168	3376
BP2360	3372
BP3480	3793
BP7237	3390

CHAMPION	BESER
NO	NO
573438CH	4351/1

COMLINE	BESER
NO	NO
ADB0101	3327
ADB0104	3343
ADB0104	3483
ADB0105	3490
ADB0108	3529
ADB0111	3709
ADB0112	3316
ADB0117	3469
ADB0118	3417
ADB0124	3605
ADB0125	3315
ADB0125	3515
ADB0130	3509
ADB0131	3710
ADB0132	3473
ADB0134	3623
ADB0135	3410
ADB0136	3441
ADB0139	3549
ADB0144	3419
ADB0147	3339
ADB0147	3514
ADB0148	3486
ADB0148	3486/1
ADB0149	3444
ADB0150	3470
ADB0152	3531
ADB0156	3312
ADB0161	3410
ADB0173	3422
ADB0177	3397
ADB0180	3637
ADB0186	3606
ADB0187	3324
ADB0189	3401
ADB0192	3421
ADB0193	4104
ADB0201	3790
ADB0202	3745
ADB0207	3394
ADB0212	3567
ADB0220	3663
ADB0222	3378
ADB0223	3373
ADB0224	3661
ADB0228	3459
ADB0232	3872
ADB0235	3400
ADB0238	3513
ADB0239	3416
ADB0242	4212
ADB0247	3350
ADB0253	3504
ADB0264	3379
ADB0265	3371
ADB0270	3407
ADB0274	3677
ADB0276	3415
ADB0281	3393
ADB0297	3714
ADB0306	3462

COMLINE	BESER
NO	NO
ADB0307	3550
ADB0309	3611
ADB0312	3335
ADB0319	3423
ADB0323	3436
ADB0327	3833
ADB0328	3430
ADB0331	4086
ADB0352	3578
ADB0355	3573
ADB0356	3572
ADB0358	3564
ADB0360	3408
ADB0361	3609
ADB0368	3370
ADB0382	3365
ADB0389	3311
ADB0390	3603
ADB0391	3369
ADB0393	3464
ADB0397	3621
ADB0404	3693
ADB0410	3620
ADB0419	3553
ADB0435	3687/1
ADB0439	3436
ADB0444	3570
ADB0447	3888
ADB0453	3678
ADB0454	3676
ADB0459	3777
ADB0476	3667
ADB0478	3670
ADB0479	3897
ADB0480	3681
ADB0485	3659
ADB0486	3744
ADB0490	3754
ADB0493	3733
ADB0502	3589
ADB0508	4128
ADB0511	3551
ADB0513	3563
ADB0514	3558
ADB0522	3496/1
ADB0526	3539/1
ADB0558	3536
ADB0559	3598
ADB0566	3562
ADB0589	4088
ADB0702	3581
ADB0703	3585
ADB0704	3938
ADB0705	3755
ADB0706	3538
ADB0707	3566
ADB0709	3822
ADB0710	4274
ADB0715	3506
ADB0725	3642
ADB0729	3918
ADB0730	3919
ADB0731	3318
ADB0732	3583
ADB0734	4034
ADB0734	4034/1
ADB0736	3896
ADB0737	3682
ADB0738	3736
ADB0741	3717
ADB0748	4125
ADB0770	3746
ADB0773	4027
ADB0788	4275
ADB0798	3584
ADB0802	4115
ADB0819	3875
ADB0826	4271
ADB0832	3830
ADB0845	4182

COMLINE	BESER
NO	NO
ADB0854	3836
ADB0873	4094
ADB0874	3795/1
ADB0877	3545
ADB0878	3660
ADB0888	3861
ADB0891	3877
ADB0898	3943
ADB0909	3575/2
ADB0913	3863
ADB0914	3804
ADB0915	3821
ADB0924	3445
ADB0928	3419
ADB0931	3575
ADB0944	4158
ADB0946	3853
ADB0953	4020
ADB0960	4119
ADB0984	3983
ADB1118	3417/1
ADB1133	3503
ADB1142	3432
ADB1144	3429
ADB1152	3635
ADB1156	3484
ADB1174	3636
ADB1191	3474
ADB1201	3548
ADB1201	3690
ADB1224	3771
ADB1254	3440
ADB1275	3559
ADB1319	3423/1
ADB1396	3624
ADB1401	3662
ADB1419	3553/1
ADB1431	3503
ADB1433	3750
ADB1437	3523
ADB1455	3680
ADB1511	3619
ADB1512	3457
ADB1514	3593
ADB1515	3474
ADB1526	3539
ADB1570	3528
ADB1736	3896
ADB1852	3794
ADB1897	3617
ADB1911	4126
ADB1911	4126/1
ADB1926	3556
ADB2219	3595
ADB2258	3380
ADB2310	3493
ADB2310	3494
ADB2416	3487
ADB2416	3489
ADB2509	3608
ADB2533	3495
ADB2568	3819
ADB2714	3799
ADB3115	3449
ADB3127	3426
ADB3163	3402
ADB3168	3463
ADB3170	3673
ADB3172	3892
ADB3182	3723
ADB3184	3395
ADB3185	3752
ADB3206	3640
ADB3218	4080
ADB3225	3507
ADB3229	3674
ADB3232	3683
ADB3232	3872/1
ADB3233	3688
ADB3234	3685

COMLINE	BESER
NO	NO
ADB3242	4212
ADB3245	3522
ADB3253	3502
ADB3255	3437
ADB3260	3554
ADB3260	3651
ADB3263	3602
ADB3267	3582
ADB3269	3809
ADB3273	3882
ADB3295	3448
ADB3322	3757
ADB3322	3857
ADB3325	3600
ADB3333	3560
ADB3363	3622
ADB3387	3758
ADB3393	3722
ADB3399	3579
ADB3422	3634
ADB3436	3631
ADB3443	4072
ADB3444	3740
ADB3445	4148/1
ADB3449	3577
ADB3449	3647
ADB3452	3675
ADB3457	3898
ADB3461	3887
ADB3468	4108
ADB3471	4148/1
ADB3475	3884
ADB3484	4010
ADB3488	3778
ADB3499	3598/1
ADB3551	3704
ADB3555	3607
ADB3556	3686
ADB3559	3766
ADB3582	3768
ADB3584	3762
ADB3587	3883
ADB3591	3932
ADB3722	4079
ADB3745	4071
ADB3747	3776
ADB3751	3779
ADB3757	3764
ADB3775	4084
ADB3776	3697
ADB3777	3859
ADB3789	3915
ADB3792	3867
ADB3803	4155
ADB3813	4059
ADB3816	3901
ADB3817	3780
ADB3831	3829
ADB3835	4099
ADB3840	4078
ADB3841	3788
ADB3843	4009
ADB3850	4197
ADB3863	3760
ADB3866	3674
ADB3867	3696
ADB3879	3993
ADB3882	3913
ADB3901	3769
ADB3902	3843
ADB3910	4069
ADB3912	3933
ADB3922	3502
ADB3935	3993
ADB3936	3740
ADB3938	3843
ADB3941	4269
ADB3942	3825
ADB3945	4062
ADB3947	4110

COMLINE	BESER
NO	NO
ADB3948	4118
ADB3949	4109
ADB3949	4232
ADB3950	3889
ADB3968	3802
ADB3984	3983/2
ADB3984	3983/3
ADB4129	3424/1
ADB4137	3466
ADB4155	3641
CBP0148	3486/1
CBP0734	4034/1
CBP1911	4126/1
CBP2310	3494
CBP2416	3489
CBP3232	3872/1
CBP3445	4148/1
CBP3449	3647
CBP3471	4148/1
CBP3984	3983/3
ADB01006	3628
ADB01007	3505
ADB01007	3615
ADB01011	3656
ADB01018	3897
ADB01033	3820
ADB01033	3820/1
ADB01034	3823
ADB01035	3856
ADB01036	3855
ADB01038	3800
ADB01042	3914
ADB01052	3453
ADB01053	3583
ADB01066	3413
ADB01067	3630
ADB01078	3512
ADB01078	3512/1
ADB01081	3596
ADB01088	4216
ADB01096	3881
ADB01097	3909
ADB01110	4100
ADB01114	4093
ADB01115	3950
ADB01117	4102
ADB01127	3848
ADB01132	4013
ADB01137	4211
ADB01143	4101
ADB01143	4209
ADB01145	3854
ADB01146	3931
ADB01150	3801
ADB01159	3850
ADB01160	3849
ADB01173	3942/A
ADB01186	3951
ADB01191	3894
ADB01199	3910
ADB01209	4097
ADB01209	4097/1
ADB01215	4180
ADB01221	3790/1
ADB01252	3946
ADB01279	4111
ADB01284	3905
ADB01300	4346
ADB01306	3924
ADB01316	4076
ADB01323	3885
ADB01507	4082
ADB01515	3953
ADB01517	4093
ADB01525	3820
ADB01525	3820/1
ADB01533	4293
ADB01535	3826
ADB01547	3879
ADB01552	3987

COMLINE	BESER
NO	NO
ADB01555	3925
ADB01555	3925/2
ADB01557	4058
ADB01559	4123
ADB01569	3962
ADB01569	3962/1
ADB01575	3963
ADB01575	3963/1
ADB01577	4038
ADB01581	3949
ADB01591	4161
ADB01599	3853/1
ADB01600	4173
ADB01604	3820/3
ADB01610	4157
ADB01612	3958
ADB01616	3965
ADB01617	4092
ADB01617	4092/1
ADB01622	4151
ADB01622	4151/1
ADB01625	4077
ADB01626	3945
ADB01629	3853/1
ADB01658	3984
ADB01677	3964/1
ADB01703	4137
ADB01707	3966
ADB01707	3966/1
ADB01708	4388
ADB01709	4260
ADB01710	4389
ADB01712	4390
ADB01715	3967
ADB01719	3964
ADB01725	4134
ADB01726	3944
ADB01727	3995
ADB01738	3827
ADB01748	3800
ADB01750	4105
ADB01763	4186
ADB01765	3970
ADB01773	3903
ADB01778	4036
ADB01780	3848
ADB01783	3800
ADB01786	4248
ADB01792	4247
ADB01794	4179
ADB01797	3971
ADB02007	4054
ADB02014	4142
ADB02020	3852
ADB02021	3944
ADB02022	4135
ADB02130	4381
ADB02131	4383
ADB02143	4175
ADB02144	4140
ADB02149	4382
ADB02158	4228/1
ADB02196	4226
ADB02197	4204
ADB02199	4201/1
ADB02223	4140/1
ADB02250	4371
ADB02250	4373
ADB02295	4181/1
ADB02351	4370
ADB02354	4369
ADB02388	4350/1
ADB06001	4181
ADB06030	3945
ADB06072	4379
ADB06078	4256
ADB06092	4325/1
ADB06097	4378
ADB06125	4280
ADB06138	4391

COMLINE	BESER
NO	NO
ADB11016	3618
ADB11037	3826/1
ADB11038	3800/1
ADB11040	3834
ADB11041	3835
ADB11060	3680
ADB11063	3491
ADB11098	3610
ADB11111	3590/1
ADB11136	4095
ADB11147	4138
ADB11147	4138/1
ADB11158	3986
ADB11224	3904
ADB11250	3939
ADB11251	3940
ADB11275	4152
ADB11312	3841/1
ADB11313	3842
ADB11600	4173/1
ADB11621	3972
ADB11623	3922
ADB11623	3922/1
ADB11702	3826/1
ADB11753	4096
ADB11770	4222
ADB12047	3826/3
ADB12105	4057
ADB12106	4056
ADB12108	4132
ADB12108	4172
ADB12108	4172/1
ADB16002	4162
ADB21048	3482
ADB21056	3428
ADB21079	3878
ADB21120	3935
ADB21121	3934
ADB21511	3920
ADB21511	3920/1
ADB21512	3906
ADB21512	3906/1
ADB21512	3906/1A
ADB21512	3906/2
ADB21554	3907
ADB21554	3907/1
ADB21554	3907/1A
ADB21554	3907/2
ADB21555	3925/2
ADB21556	3926
ADB21556	3926/1
ADB21615	3380
ADB22142	4174
ADB22142	4174/1
ADB22214	4351/1
ADB31019	4281
ADB31038	3800/2
ADB31107	3921
ADB31108	3784
ADB31109	4011
ADB31112	3846
ADB31113	3928
ADB31126	3993
ADB31134	4153
ADB31140	3890
ADB31141	4154
ADB31152	4112
ADB31154	3817
ADB31162	4012
ADB31176	3961
ADB31178	3978
ADB31189	3687/1
ADB31192	3895
ADB31193	4017
ADB31194	3831
ADB31195	4159
ADB31196	3959
ADB31201	3891
ADB31202	4031
ADB31208	3912

COMLINE	BESER
NO	NO
ADB31245	3767
ADB31256	3955
ADB31277	4028
ADB31283	4303
ADB31288	3979
ADB31290	4106
ADB31298	3985
ADB31307	4042
ADB31319	3968
ADB31320	3969
ADB31321	4001
ADB31508	3982
ADB31519	3880
ADB31520	3952
ADB31523	4000
ADB31524	4143
ADB31543	3980
ADB31572	4037
ADB31572	4037/1
ADB31573	3886
ADB31576	3956
ADB31578	3929
ADB31579	3954
ADB31582	3976
ADB31584	3975
ADB31585	4073
ADB31620	4122
ADB31674	4156
ADB31676	3960
ADB31680	4149
ADB31705	4160
ADB31714	3989
ADB31729	4113
ADB31730	3954
ADB31732	3874
ADB31745	4074
ADB31749	3900
ADB31757	4165
ADB31760	3912
ADB31762	4081
ADB31768	4039
ADB31774	3959
ADB31776	3959
ADB31777	3883
ADB31782	4035
ADB31787	4029
ADB31795	4150
ADB31798	4028
ADB31799	4147
ADB32008	3983/1
ADB32012	3988
ADB32012	3988/1
ADB32013	3978
ADB32016	3980
ADB32023	4061
ADB32024	4014
ADB32026	4146
ADB32037	4008
ADB32038	4230
ADB32159	4265
ADB32213	4301
ADB32213	4301/1
ADB32234	4372
ADB32235	4374
ADB32277	4283/1
ADB32457	4376
ADB36006	4124
ADB36009	4060
ADB36044	4015
ADB36052	4213
ADB36080	4233
CBP01033	3820/1
CBP01078	3512/1
CBP01173	3942/A
CBP01209	4097/1
CBP01525	3820/1
CBP01555	3925/2
CBP01569	3962/1
CBP01575	3963/1
CBP01617	4092/1

COMLINE	BESER
NO	NO
CBP01622	4151/1
CBP01707	3966/1
CBP01708	4388
CBP01710	4389
CBP01712	4390
CBP02130	4381
CBP02131	4383
CBP02149	4382
CBP02158	4228/1
CBP02199	4201/1
CBP02223	4140/1
CBP02250	4371
CBP02250	4373
CBP02295	4181/1
CBP02351	4370
CBP02354	4369
CBP02388	4350/1
CBP06072	4379
CBP06092	4325/1
CBP06097	4378
CBP06125	4280
CBP06138	4391
CBP11147	4138/1
CBP11623	3922/1
CBP12108	4172/1
CBP21511	3920/1
CBP21512	3906/1
CBP21512	3906/1A
CBP21512	3906/2
CBP21554	3907/1
CBP21554	3907/1A
CBP21554	3907/2
CBP21555	3925/2
CBP21556	3926/1
CBP22142	4174/1
CBP22214	4351/1
CBP31572	4037/1
CBP32012	3988/1
CBP32213	4301
CBP32213	4301/1
CBP32234	4372
CBP32235	4374
CBP32277	4283/1
CBP32457	4376

DELPHI	BESER
NO	NO
LP7	3319
LP15	3311
LP17	3455
LP17	3471
LP18	3318
LP20	3320
LP26	3481
LP28	3346
LP29	3317
LP30	3316
LP39	3373
LP41	3423
LP45	3416
LP56	3333
LP58	3325
LP61	3350
LP73	3710
LP74	3709
LP76	3327
LP78	3375
LP84	3315
LP84	3515
LP86	3343
LP86	3483
LP87	3335
LP92	3393
LP99	3329
LP105	3403
LP106	3321
LP108	3405
LP119	3328

DELPHI	BESER
NO	NO
LP145	3806/1
LP154	3312
LP160	3806
LP161	3365
LP170	3374
LP178	3340
LP179	3378
LP184	3480
LP186	3324
LP189	3421
LP195	3705
LP197	3527
LP199	3379
LP204	3417
LP208	3509
LP211	3661
LP219	3370
LP220	3579
LP221	3339
LP221	3514
LP231	3601
LP241	3484
LP248	3503
LP249	3429
LP250	3419
LP254	3624
LP255	3417/1
LP261	3394
LP275	3468
LP286	3407
LP350	3492
LP350	3493
LP350	3494
LP351	3621
LP353	3424/1
LP355	3646
LP358	3397
LP373	3415
LP378	3440
LP382	3381
LP399	3620
LP400	3436
LP401	3875
LP403	3691
LP409	3634
LP412	3446
LP412	3450
LP415	3410
LP420	3486
LP420	3486/1
LP421	3444
LP424	3649
LP427	3315
LP427	3515
LP429	3650
LP431	3635
LP440	3611
LP441	3573
LP442	3572
LP443	3326/1
LP444	3619
LP445	3752
LP448	3371
LP451	3536
LP453	3490
LP458	3401
LP459	3466
LP460	3402
LP460	3472
LP461	3418
LP463	3625
LP467	3400
LP468	3513
LP472	3423/1
LP475	3771
LP476	3462
LP488	3603
LP489	3428
LP490	3380
LP490	3580

DELPHI	BESER
NO	NO
LP491	3495
LP493	3474
LP496	3467
LP499	3408
LP504	3482
LP505	3441
LP506	3453
LP509	3424
LP523	3425
LP525	3582
LP530	3463
LP531	3449
LP538	3714
LP542	3546
LP543	3760
LP547	3395
LP548	3605
LP551	3422
LP555	3578
LP564	3457
LP565	3529/1
LP566	3432
LP567	3543
LP568	3526
LP571	3529
LP573	3583
LP576	3583
LP577	3701
LP578	3746
LP581	3410
LP585	3470
LP586	3469
LP587	3549
LP588	3366/1
LP589	3366
LP590	3717
LP591	3589
LP593	3504
LP594	3543
LP595	3437
LP596	3609
LP597	3430
LP599	3662
LP602	3564
LP604	3461
LP606	3632
LP608	3408
LP616	3562
LP617	3660
LP619	3683
LP619	3872/1
LP620	3723
LP625	4212
LP626	3600
LP629	3757
LP629	3857
LP630	3666
LP633	3448
LP637	3642
LP643	3641
LP645	3700
LP647	3609
LP655	3873
LP660	3433/1
LP661	3773
LP662	3679
LP665	3631
LP667	3680
LP670	4104
LP673	3464
LP675	3491
LP676	3721
LP677	3459
LP684	3882
LP695	3555
LP696	3487
LP696	3489
LP697	3513
LP699	3496/1
LP702	3623

DELPHI	BESER
NO	NO
LP704	3502
LP705	3584
LP707	3758
LP710	3563
LP720	3501
LP726	3692
LP733	3695
LP734	3696
LP735	3689
LP739	4088
LP743	3522
LP755	3486
LP756	3444/1
LP760	3441
LP766	3473
LP767	3445
LP770	3531
LP772	4212
LP777	3512
LP777	3512/1
LP778	3551
LP779	4128
LP781	3593
LP782	3558
LP783	3598
LP784	3590
LP787	3819
LP788	3539
LP789	3554
LP789	3651
LP792	3878
LP793	3528
LP802	3833
LP803	3622
LP804	3766
LP809	3607
LP810	3686
LP812	3699
LP812	3779
LP813	3426
LP814	4080
LP821	3596
LP823	3556
LP828	3537
LP834	3776
LP838	3503/1
LP840	3626
LP841	3581
LP847	3888
LP848	3733
LP851	3608
LP854	3560
LP857	3433
LP858	3994
LP859	3773
LP863	3523
LP871	3685
LP872	3704
LP873	3736
LP877	3595
LP878	3559
LP879	3872/1
LP881	3658
LP885	3503
LP904	3545
LP911	3872/1
LP912	3740
LP915	3550
LP918	3553
LP930	4078
LP935	3640
LP936	4086
LP943	4072
LP945	3745
LP947	3630
LP948	4148/1
LP954	3688
LP955	4108
LP962	3673
LP963	3693

DELPHI	BESER
NO	NO
LP964	3674
LP965	3887
LP967	3883
LP978	3506
LP979	3585
LP980	3567
LP985	3750
LP989	3777
LP992	3675
LP1003	3881
LP1004	3909
LP1007	3617
LP1008	3677
LP1009	3863
LP1010	3809
LP1011	3577
LP1011	3647
LP1014	3602
LP1015	3884
LP1016	3538
LP1019	3671
LP1022	3799
LP1023	4062
LP1025	3604
LP1044	3678
LP1045	3670
LP1064	3898
LP1068	3507
LP1069	3665
LP1073	4087
LP1075	3667
LP1077	3566
LP1081	3594
LP1082	3570
LP1083	3505
LP1083	3615
LP1084	3557
LP1084	3610
LP1085	3636
LP1092	3606
LP1095	3874
LP1100	3511
LP1104	3682
LP1107	3656
LP1109	3872
LP1111	3659
LP1137	4182
LP1138	3575
LP1139	3722
LP1140	3915
LP1143	3879
LP1144	3822
LP1167	3868
LP1169	3544
LP1206	4020
LP1208	3339
LP1208	3514
LP1210	3872
LP1242	4214
LP1249	3637
LP1299	4126
LP1299	4126/1
LP1304	3687/1
LP1305	3859
LP1307	3763
LP1308	3829
LP1310	3762
LP1314	3938
LP1315	3754
LP1316	3755
LP1390	3744
LP1398	4059
LP1399	3930
LP1401	4125
LP1402	3663
LP1403	3676
LP1410	3896
LP1413	3618
LP1414	3768
LP1416	3548

DELPHI	BESER
NO	NO
LP1416	3690
LP1425	3681
LP1429	3419
LP1429	3731
LP1430	4034
LP1430	4034/1
LP1433	3574
LP1433	3914/1
LP1434	3648
LP1436	3782/1
LP1437	3804
LP1438	3830
LP1439	4027
LP1440	3780
LP1441	3717
LP1442	3928
LP1447	3788
LP1448	4271
LP1450	3872
LP1455	3671
LP1458	3919
LP1460	4274
LP1461	4071
LP1462	3892
LP1465	4281
LP1469	3877
LP1471	3861
LP1474	3897
LP1501	4069
LP1502	3778
LP1504	3918
LP1507	4148
LP1507	4148/1
LP1508	4099
LP1509	3913
LP1513	3788
LP1514	3782
LP1518	3832
LP1521	3943
LP1524	3539/1
LP1525	3590/1
LP1530	4222
LP1532	4197
LP1533	4100
LP1537	3617
LP1539	3993
LP1541	4345
LP1542	3553/1
LP1544	4010
LP1545	3764
LP1546	4084
LP1549	3790
LP1551	3901
LP1555	3767
LP1557	4011
LP1559	4110
LP1564	3909
LP1582	3784
LP1583	3921
LP1587	3617
LP1588	3677
LP1589	3863
LP1590	3577
LP1590	3647
LP1591	3538
LP1592	3799
LP1593	4062
LP1594	3604
LP1595	3678
LP1596	3670
LP1599	3507
LP1600	3665
LP1601	3566
LP1603	3594
LP1604	3570
LP1605	3505
LP1605	3615
LP1606	3557
LP1606	3610
LP1607	3636

DELPHI	BESER
NO	NO
LP1610	3659
LP1615	4182
LP1616	3575
LP1617	3759
LP1617	3938
LP1618	3821
LP1619	3672
LP1622	3887
LP1624	3644
LP1625	3781
LP1626	4155
LP1628	3685
LP1631	3896
LP1632	4158
LP1633	4222
LP1634	4009
LP1652	4094
LP1653	3800
LP1654	3935
LP1655	3934
LP1659	3932
LP1663	4079
LP1664	3653
LP1671	3802
LP1673	3762
LP1676	3846
LP1679	3820
LP1679	3820/1
LP1682	4093
LP1684	3955
LP1685	4123
LP1688	4102
LP1689	4276
LP1690	4083
LP1695	3848
LP1696	3836
LP1697	4101
LP1697	4209
LP1699	3938
LP1701	3853
LP1702	4269
LP1704	4109
LP1704	4232
LP1705	4103
LP1706	3590/2
LP1707	3794
LP1708	3852
LP1711	4013
LP1713	3529/2
LP1714	3950
LP1715	3931
LP1716	3854
LP1717	4040
LP1718	3912
LP1721	3800/1
LP1722	3826/1
LP1723	4211
LP1724	3801
LP1725	4093
LP1726	3853
LP1727	3820
LP1727	3820/1
LP1729	3877
LP1730	3849
LP1732	4115
LP1734	3618/1
LP1735	3598/1
LP1737	3817
LP1738	3910
LP1740	3876
LP1742	3769
LP1743	3843
LP1744	3539/1
LP1745	3795/1
LP1746	3856
LP1747	3855
LP1750	3834
LP1751	3835
LP1754	4138
LP1754	4138/1

DELPHI	BESER
NO	NO
LP1758	4088
LP1759	3900
LP1765	3895
LP1769	3978
LP1773	4012
LP1778	3496/1
LP1779	3687/1
LP1782	3891
LP1785	4154
LP1786	3890
LP1788	3961
LP1789	4109
LP1789	4232
LP1790	3914
LP1791	4097
LP1791	4097/1
LP1792	3986
LP1793	4179
LP1794	4180
LP1796	3790/1
LP1799	3889
LP1800	3552
LP1801	4095
LP1802	3575/2
LP1803	3879
LP1806	3831
LP1807	3933
LP1808	3900
LP1811	3568
LP1815	4152
LP1816	3687/1
LP1819	4028
LP1823	4105
LP1824	3905
LP1826	3823
LP1827	3769
LP1829	4303
LP1836	3986
LP1837	3904
LP1840	4112
LP1847	3512/2
LP1849	3978
LP1850	3979
LP1852	4106
LP1855	3568
LP1857	3976/1
LP1861	4042
LP1864	3825
LP1865	3983
LP1866	3850
LP1868	4127
LP1869	3885
LP1870	3853
LP1890	3939
LP1891	3940
LP1892	3946
LP1895	3951
LP1896	3769
LP1899	3826
LP1900	4119
LP1901	3765
LP1902	3959
LP1906	4031
LP1908	4082
LP1909	3892
LP1910	3894
LP1911	3842
LP1913	3841
LP1914	3841/1
LP1915	4388
LP1916	4118
LP1922	4096
LP1924	4389
LP1926	3984
LP1927	4181
LP1929	4173
LP1931	4016
LP1932	4001
LP1933	3968
LP1935	4293

DELPHI	BESER
NO	NO
LP1936	3944
LP1939	3924/1
LP1940	4137
LP1941	4081
LP1942	4153
LP1947	3923/1
LP1949	3987
LP1951	3880
LP1952	3980
LP1953	3920
LP1953	3920/1
LP1954	3906
LP1954	3906/1
LP1954	3906/1A
LP1954	3906/2
LP1955	3907
LP1955	3907/1
LP1955	3907/1A
LP1955	3907/2
LP1956	4346
LP1957	4058
LP1958	3853/1
LP1962	3564/1
LP1967	4161
LP1969	4157
LP1976	3969
LP1980	4240
LP1981	3962
LP1981	3962/1
LP1982	3925
LP1982	3925/2
LP1983	3926
LP1983	3926/1
LP1984	3963
LP1984	3963/1
LP1986	4074
LP1987	3976
LP1990	3800/2
LP1993	3922
LP1993	3922/1
LP1994	3820/3
LP1995	3972
LP1997	4075/1
LP1998	4076
LP1999	4213
LP2000	4000
LP2001	3929
LP2002	3953
LP2003	4077
LP2004	3949
LP2006	3958
LP2011	3952
LP2012	3945
LP2014	4173/1
LP2015	3826/1
LP2016	4025
LP2028	4248
LP2029	4247
LP2030	4143
LP2031	4038
LP2033	4198
LP2034	4006
LP2035	4018
LP2036	3988
LP2036	3988/1
LP2037	3886
LP2039	3965
LP2040	4092
LP2040	4092/1
LP2041	4208
LP2043	3965/1
LP2047	4156
LP2048	3960
LP2049	3989
LP2050	4039
LP2051	4165
LP2059	3982
LP2060	3903
LP2062	3985
LP2068	4181/1

DELPHI	BESER
NO	NO
LP2070	3970
LP2071	4151
LP2071	4151/1
LP2073	4216
LP2074	3975
LP2075	3827
LP2077	4259
LP2078	3966
LP2078	3966/1
LP2079	4134
LP2081	4149
LP2084	4150
LP2090	4207
LP2093	4160
LP2094	4035
LP2099	4249
LP2101	3964
LP2102	3956
LP2103	4037
LP2103	4037/1
LP2105	3954
LP2106	4260
LP2111	4029
LP2117	4309
LP2125	4210
LP2126	3967
LP2127	3895
LP2128	4036
LP2130	4113
LP2134	3996
LP2137	4141
LP2138	3994
LP2142	4230
LP2146	4391
LP2147	3971
LP2152	3964/1
LP2153	4142
LP2154	3997
LP2158	4215
LP2161	4220
LP2162	4325
LP2162	4325/1
LP2167	4014
LP2168	4121
LP2169	3948
LP2170	4008
LP2171	4230
LP2172	4004
LP2178	4135
LP2183	4073
LP2184	3797
LP2187	4291
LP2188	4040
LP2190	4056
LP2191	4057
LP2192	4132
LP2192	4172
LP2192	4172/1
LP2195	4061
LP2196	4256
LP2199	4162
LP2201	4255
LP2205	3899
LP2206	4146
LP2208	4054
LP2209	4040
LP2214	4277
LP2218	4337
LP2219	3928
LP2227	4049
LP2228	4145
LP2229	4124
LP2230	3826/3
LP2233	4310
LP2234	4382
LP2240	3800/3
LP2244	4167
LP2245	4378
LP2246	4379
LP2247	4389

DELPHI	BESER
NO	NO
LP2251	4339
LP2255	3529
LP2257	3906/1
LP2275	4338
LP2276	3826/3
LP2285	4381
LP2286	4383
LP2293	4166
LP2293	4342
LP2294	4039
LP2296	4265
LP2298	4338
LP2303	3980
LP2306	4122
LP2441	4326
LP2444	4200
LP2445	4313
LP2474	4204
LP2478	3826/2
LP2479	4140
LP2480	3755
LP2483	3893
LP2485	4201
LP2485	4201/1
LP2487	4315
LP2490	4241
LP2492	4171
LP2492	3922/3
LP2492	4171/1
LP2493	4242
LP2495	4226
LP2496	3998
LP2497	4136
LP2498	3981
LP2501	4316
LP2505	4372
LP2508	4323
LP2509	4374
LP2659	4335
LP2661	4174/1
LP2663	4140/1
LP2690	4371
LP2690	4373
LP2691	4176/1
LP2700	4202
LP2701	4317
LP2702	4318
LP2709	4336
LP2712	4324
LP2714	4019
LP2764	4334
LP2769	4354
LP3136	4351
LP3136	4351/1
LP3140	4287
LP3144	4282
LP3145	4283
LP3145	4283/1
LP3146	4295
LP3163	4284
LP3164	4285
LP3170	4229
LP3173	4338
LP3183	4308
LP3185	4224
LP3219	4364
LP3243	4312
LP3244	4279
LP3247	4390
LP3250	4239
LP3251	4319
LP3260	4369
LP3261	4370
LP3265	4321
LP3278	4341
LP3290	4246
LP3293	4251
LP3293	4251/1
LP3306	4280
LP3309	4343

DELPHI	BESER
NO	NO
LP3360	4301/1
LP3367	4357
LP3401	4376
LP3410	4350
LP3410	4350/1
LP3499	4041
LP3519	4353
LP3534	4380
LP3537	4343
LP3545	4356
LP3548	4384
LP3549	4355
LP3550	3983/3
LP3579	4379
LP3584	4228/1
LP3602	4367
LP3609	4360
LP3615	4040
LP3616	3914/1
LP3618	4388
LP3619	4175/1
LP3628	4338
LP3636	4361
LP3640	3529/1
LP3644	4363
LP3660	3820/1
LP3682	4351
LP3682	4351/1
LP8040	3749
LP5014EV	3782/1
LP5051EV	4379

DEX	BESER
NO	NO
2001.0	3316
2001.1	3346
2002.0	3326
2003.0	3318
2005.0	3329
2005.5	3333
2006.0	3373
2008.0	3393
2011.0	3327
2011.1	3343
2011.1	3483
2013.0	3315
2013.0	3515
2013.1	3339
2013.1	3514
2014.0	3374
2015.1	3335
2016.0	3513
2018.0	3423
2018.2	3423/1
2019.0	3366/1
2019.1	3366
2022.0	3311
2023.0	3405
2025.0	3312
2025.1	3484
2026.0	3378
2026.1	3490
2029.0	3365
2030.0	3625
2031.0	3417
2031.1	3417/1
2032.0	3468
2032.1	3466
2032.2	3467
2033.0	3440
2035.0	3424
2035.1	3424/1
2037.0	3425
2038.0	3493
2038.0	3494
2038.1	3381
2038.2	3495
2039.0	3380

DEX	BESER
NO	NO
2039.1	3487
2039.1	3489
2040.0	3496/1
2040.2	3496
2041.0	3419
2041.1	3429
2043.0	3430
2044.0	3609
2045.0	3621
2046.0	3410
2047.0	3486
2047.0	3486/1
2047.0K	3486
2047.1	3444
2047.1K	3444/1
2047.2	3585
2047.2K	3585
2047.2K	3585/1
2048.0	3421
2049.0	3441
2049.0K	3441
2050.0	3536
2051.0	3474
2051.2	3556
2052.0	3531
2052.2	3551
2053.2	3523
2056.2	3633
2057.0	3689
2058.0	3603
2059.1	3540
2059.2	3459
2059.5	3458
2060.1	3543
2061.0	3432
2061.1	3491
2063.0	3408
2064.0	3422
2064.1	3552
2068.0	3397
2068.1	3758
2070.0	3437
2072.0	3583
2072.1	3572
2073.0	3464
2073.1	3722
2075.0	3589
2077.0	3641
2079.0	3623
2080.0	3350
2080.1	3320
2081.1	3897
2082.0	3321
2082.1	3340
2083.0	3504
2083.1	3502
2084.1	3618
2085.0	3617
2086.0	3323
2088.0	3317
2089.0	3509
2091.1	3526
2092.0	3442
2093.0	3573
2094.0	3611
2094.1	3550
2095.0	3570
2096.2	3549
2098.0	3428
2100.0	3482
21001.0	4371
21001.0	4373
21003.0	4372
21004.0	4374
21005.0	4226
21006.0	4174
21006.0	4174/1
21007.0	4175
21008.0	4317
21009.0	4318

DEX	BESER
NO	NO
2101.0	3457
2101.1	3610
21010.0	4315
21014.0	4176
21014.0	4176/1
21019.0	4227
2102.0	3529
2102.4	4152
21030.0	4200
21034.0	4282
21035.0	4283/1
21044.0	4349
21048.0	4291
2105.0	3449
21052.0	4295
21056.0	4351/1
21057.0	4224
2107.0	3799
2109.1	3760
2110.0	3402
2111.0	3371
2112.0	3415
2113.1	3537
2116.0	3401
2117.0	3448
2118.0	3882
2119.0	3470
2122.0	3503/1
2122.0W	3503
2124.0	3564
2124.1	3584
2125.0	3562
2126.0	3563
2127.0	3578
2129.0	3740
2130.0	3736
2131.0	3560
2133.0	3642
2136.0	3685
2137.0	3426
2138.0	3883
2140.0	3686
2142.0	4078
2143.0	3469
2144.0	3539
2144.2	3539/1
2145.0	4214
2146.0	3819
2147.0	4128
2148.0	3558
2148.1	3593
2151.0	3650
2151.1	3619
2151.2	3649
2151.3	3635
2152.0	3554
2152.0	3651
2154.0	3688
2156.0	3673
2157.0	3595
2158.0	3559
2159.0	3528
2160.0	3878
2162.0	3608
2162.1	3643
2164.1	3776
2166.1	4020
2167.0	3553
2167.1	3553/1
2168.0	3596
2170.0	4086
2173.0	4212
2173.1	4212
2174.0	3631
2176.0	4148/1
2177.0	3683
2177.0	3872/1
2177.1	3872
2178.0	3607
2180.0	3662

DEX	BESER
NO	NO
2184.0	4104
2188.4	3590/1
2193.0	3527
2195.0	3632
2198.0	3624
2199.0	3680
2201.0	3473
2202.0	3445
2203.0	3522
2205.0	3640
2206.0	3888
2207.0	3660
2210.0	3746
2211.1	3394
2213.0	4080
2215.0	3566
2215.1	3538
2215.2	3637
2217.0	3505
2217.0	3615
2219.0	3656
2220.0	3682
2221.0	3575
2221.3	3575/2
2222.0	3750
2224.0	3896
2224.2	3896
2226.0	3636
2227.0	4182
2228.0	3677
2233.0	3622
2236.0	3714
2237.0	3709
2241.0	3499
2241.1	3463
2246.1	3582
2247.0	3400
2248.0	3436
2249.0	3600
2250.0	3395
2253.0	3757
2253.0	3857
2254.0	3370
2255.0	3598
2255.1	3766
2256.0	3501
2256.1	3752
2257.0	3602
2258.0	3884
2259.0	3675
2261.0	3863
2262.0	3659
2263.0	3938
2264.0	3663
2265.0	3567
2266.0	3762
2272.0	3606
2272.1	3794
2274.0	3462
2276.0	3679
2277.0	3994
2278.0	3773
2282.1	3568
2282.2	3569
2283.0	3548
2283.0	3690
2283.2	3790/1
2283.3	3790
2284.0	3717
2286.0	3577
2286.0	3647
2287.0	3598/1
2288.0	3506
2289.0	4088
2294.0	3873
2295.0	4059
2300.0	3754
2301.0	3768
2302.0	3744
2303.0	3687/1

DEX	BESER
NO	NO
2304.0	3764
2305.0	4079
2306.0	3648
2307.0	3704
2311.0	3875
2312.0	3833
2313.0	4010
2315.0	3697
2316.0	3943
2318.0	3919
2319.0	4125
2320.0	3670
2325.0	3877
2326.0	3755
2327.0	4100
2328.0	4093
2329.0	3784
2330.0	3826/1
2330.1	3826
2330.3	3826/3
2330.4	3826/2
2331.0	3800/1
2331.1	3800
2331.2	3800/2
2331.3	3800/3
2333.1	4123
2334.0	3834
2335.0	3835
2336.0	3820
2336.0	3820/1
2337.0	3854
2338.0	3931
2340.0	3935
2341.0	3934
2344.0	3950
2345.0	3852
2346.0	3853
2346.1	3853/1
2347.2	3848
2349.0	3846
2350.0	4281
2351.0	3836
2352.0	3676
2353.0	3821
2355.1	4345
2356.0	4062
2357.0	3918
2358.0	4094
2361.0	3453
2361.1	3412
2362.0	3661
2362.1	3771
2363.0	3512
2363.0	3512/1
2363.1	3512/2
2365.0	4197
2366.0	3674
2367.0	3887
2369.0	3446
2370.0	3778
2371.0	4087
2373.0	3843
2374.0	3993
2375.0	3507
2376.0	3511
2379.0	3723
2382.0	3653
2383.0	3802
2385.0	4009
2386.0	3574
2386.0	3914/1
2388.0	3898
2389.0	3620
2390.0	3901
2393.0	3696
2394.0	3695
2396.0	3780
2412.0	4271
2413.0	4108
2414.0	3892

DEX	BESER
NO	NO
2415.1	3893
2416.0	3809
2419.0	3779
2421.1	3932
2422.0	3859
2429.0	3913
2430.0	3928
2432.0	3745
2434.0	4027
2436.0	4112
2438.0	3769
2439.0	3788
2441.0	4072
2442.0	4013
2444.0	3822
2445.0	4158
2446.0	4153
2447.0	3693
2449.0	3777
2450.0	4110
2454.0	4034
2454.0	4034/1
2456.0	3710
2462.0	3817
2463.0	3825
2466.0	3890
2467.0	4154
2468.0	3829
2469.0	3830
2470.0	3891
2471.0	3634
2472.0	4071
2473.0	3379
2477.0	3324
2478.0	4109
2478.0	4232
2480.0	4115
2481.0	4155
2487.0	3666
2491.0	4118
2492.0	3889
2493.0	3874
2495.0	3767
2496.0	3407
2497.0	3955
2498.0	3900
2500.0	4084
2501.0	3983
2501.1	3983/1
2501.2	3983/2
2501.2	3983/3
2506.0	3369
2511.0	3667
2514.0	3579
2516.0	3912
2518.0	3985
2519.0	3959
2520.0	3961
2524.0	3951
2527.0	3894
2528.0	4269
2529.0	4028
2531.0	3978
2532.0	3979
2533.0	3793
2535.0	3895
2540.0	4012
2541.0	4011
2546.0	3986
2548.0	3914
2549.0	3801
2550.0	3885
2551.0	3545
2552.0	3921
2554.0	3733
2555.0	4042
2556.0	4211
2559.0	3850
2560.0	3849
2561.0	3856

DEX	BESER
NO	NO
2562.0	3855
2563.1	4138
2563.1	4138/1
2564.0	3904
2565.1	4096
2567.0	4095
2568.0	3841
2568.1	3841/1
2569.0	3905
2570.0	3842
2573.0	4346
2574.0	4180
2575.0	3881
2576.0	3879
2578.0	4097
2578.0	4097/1
2579.0	4102
2580.0	4103
2582.0	3630
2583.0	3581
2585.0	4126
2585.0	4126/1
2586.0	4069
2587.0	3678
2588.0	3804
2589.0	3681
2590.0	3861
2591.0W	3923/1
2592.0	3924
2592.0W	3924/1
2594.0	3942
2594.3	3942/A
2595.0	3433/1
2595.1	3433
2613.0	4101
2613.0	4209
2616.0	3939
2617.0	3940
2618.0	3946
2620.0	3823
2622.0	3831
2625.0	4119
2626.0	3988
2626.0	3988/1
2627.0	4017
2628.0	3933
2632.0	4082
2634.0	4105
2635.0	4111
2638.0	4216
2642.0	4031
2645.0	3968
2646.0	4001
2649.0	3976/1
2651.0	3795/1
2652.0	3605
2653.0	3987
2654.0	4173
2654.1	4173/1
2654.2	4173/2
2655.0	3984
2657.0	4389
2658.0	4388
2660.0	4181
2660.4	4181/1
2661.0	3909
2667.0	4137
2671.0	4076
2675.0	3945
2681.0	4248
2682.0	4247
2683.0	3629
2683.1	3628
2685.0	4240
2686.0	4210
2687.0	3925
2687.0	3925/2
2687.1	3965
2687.4	3965/1
2688.0	3926

DEX	BESER
NO	NO
2688.0	3926/1
2689.0	3962
2689.0	3962/1
2690.0	3963
2690.0	3963/1
2691.0	4161
2693.0	4058
2694.0	3416
2695.0	3920
2695.0	3920/1
2696.0	3906
2696.0	3906/1
2696.0	3906/1A
2696.0	3906/2
2696.1	3906/1
2697.0	3907
2697.0	3907/1
2697.0	3907/1A
2697.0	3907/2
2699.0	3781
2703.0	4186
2708.0	3413
2709.0	4293
2710.0	3944
2723.0	3972
2725.0	3922
2725.0	3922/1
2725.1	4171
2725.1	3922/3
2725.1	4171/1
2726.0	3820/3
2727.0	4092
2727.0	4092/1
2728.0	4151
2728.0	4151/1
2730.0	3867
2732.0	4006
2733.0	4198
2734.0	4018
2735.0	4016
2740.0	3880
2741.0	3980
2742.0	3510
2746.0	4159
2747.0	3886
2749.0	4303
2752.0	3765
2753.0	4106
2757.0	4074
2759.0	3952
2761.0	3958
2762.0	3954
2763.0	3953
2764.0	4077
2765.0	3949
2767.0	3910
2769.0	3911
2772.0	3915
2773.0	4274
2775.0	4099
2775.1	4275
2777.0	4113
2778.0	4036
2779.0	4081
2780.0	4213
2781.0	4000
2782.0	3929
2783.1	3748
2786.0	4207
2788.0	4208
2789.0	4179
2790.0	4222
2791.0	4259
2791.2	4249
2792.0	4260
2794.0	3976
2796.0	4157
2797.0	3827
2799.0	4039
2799.1	4039

DEX	BESER
NO	NO
2800.0	4165
2801.0	4035
2803.0	3960
2804.0	3989
2805.0	4160
2806.0	4156
2807.0	3975
2808.0	4038
2809.1	4122
2810.0	3956
2812.0	4037
2812.0	4037/1
2813.0	3903
2814.0	3982
2816.0	3964
2818.0	4141
2819.0	4134
2820.0	3970
2822.0	4390
2826.0	3797
2827.0	4015
2828.0	3966
2828.0	3966/1
2830.0	3967
2831.0	3969
2832.0	3971
2833.0	3964/1
2834.0	4142
2835.0	4143
2837.0	3996
2838.0	3997
2840.0	4121
2841.0	4391
2848.0	4162
2853.6	4314
2855.0	4230
2856.0	4008
2857.0	4014
2859.0	4149
2861.0	4150
2862.0	4073
2866.0	3749
2866.1	3749/1
2867.0	4169
2868.0	3995
2879.0	4005
2880.0	4004
2886.0	4029
2891.0	4054
2892.0	4258
2895.0	4147
2898.0	4146
2899.0	3948
2903.0	4061
2906.0	4135
2915.0	4056
2916.0	4057
2917.0	4132
2917.0	4172
2917.0	4172/1
2918.0	4060
2919.0	4124
2921.0	4002
2923.0	4220
2924.0	4215
2929.0	3747
2935.0	4380
2936.0	4378
2938.0	4325/1
2939.0	4379
2944.0	3927
2952.0	3998
2953.0	4167
2954.0	4255
2955.0	4256
2956.0	3916
2957.0	4265
2958.0	4049
2959.0	4136
2960.0	4166

DEX	BESER
NO	NO
2961.0	4233
2965.0	4145
2966.0	4228
2966.0	4228/1
2967.0	4241
2973.0	4309
2974.0	4310
2976.0	4381
2977.0	4382
2978.0	4383
2991.0	4140
2991.1	4140/1
2992.0	4204
2998.0	4201
2998.0	4201/1

DON	BESER
NO	NO
29581	3339
29581	3514
CVP002	3679
CVP003	3433/1
CVP007	3773
CVP017	3749
CVP019	3773
CVP025	3994
CVP027	3433
CVP070	3567
CVP071	3678
CVP072	3670
CVP097	3942/A
PCP1006	4388
PCP1034	4325/1
PCP1042	4383
PCP1060	4390
PCP1115	4037/1
PCP1118	4389
PCP1173	4140/1
PCP1196	4151/1
PCP1218	3988/1
PCP1221	3966/1
PCP1227	4176/1
PCP1237	4382
PCP1248	4380
PCP1289	4381
PCP1364	4201/1
PCP1423	4228/1
PCP1493	4378
PCP1526	4379
PCP1629	3925/2
PCP1632	3926/1
PCP1633	3907/1
PCP1633	3907/1A
PCP1633	3907/2
PCP1637	3920/1
PCP1640	3924/1
PCP1646	4174/1
PCP1650	4171/1
PCP1674	3962/1
PCP1680	4092/1
PCP1688	4172/1
PCP1713	3963/1

DURON	BESER
NO	NO
DBP200471	3771
DBP200520	3662
DBP200549	3746
DBP200844	3661
DBP200871	3453
DBP200872	3512
DBP200872	3512/1
DBP201116	3687/1
DBP201291	3872
DBP201337	3744
DBP201355	3943

DURON	BESER
NO	NO
DBP201473	4094
DBP201613	3944
DBP201615	4293
DBP201639	3912
DBP201699	3951
DBP201736	3979
DBP201783	3968
DBP201869	4028
DBP201902	3969
DBP201937	3895
DBP210725	3563
DBP210997	3881
DBP211075	3656
DBP211483	3879
DBP211628	4180
DBP211748	4181
DBP211773	4346
DBP211806	4389
DBP211807	4388
DBP214052	4207
DBP220002	3318
DBP220415	3408
DBP221038	3567
DBP221049	3677
DBP221050	3863
DBP221162	4281
DBP221303	4125
DBP221304	3681
DBP221305	3861
DBP221306	3804
DBP221311	3676
DBP221322	3821
DBP221426	4102
DBP221428	3836
DBP221512	4103
DBP221778	3925
DBP221778	3925/2
DBP221780	3926
DBP221780	3926/1
DBP221830	4210
DBP221980	4247
DBP230022	3317
DBP230029	3316
DBP230222	3536
DBP230287	3440
DBP230351	3424
DBP230370	3466
DBP230519	3459
DBP230524	3432
DBP230896	3569
DBP230912	3540
DBP230925	3608
DBP230967	3595
DBP230968	3559
DBP231052	3617
DBP231102	3575
DBP231137	3618
DBP231160	3897
DBP231349	4123
DBP231376	3790/1
DBP231377	3548
DBP231377	3690
DBP231466	3826/1
DBP231467	3800/1
DBP231478	3834
DBP231479	3835
DBP231652	4173
DBP231666	3826
DBP231925	3922
DBP231925	3922/1
DBP231927	3820/3
DBP231945	4173/1
DBP234184	4121
DBP240589	3589
DBP240617	3464
DBP240700	3473
DBP240701	3445
DBP240766	3593
DBP240884	3558
DBP241055	3506

DURON	BESER
NO	NO
DBP241081	3570
DBP241276	3722
DBP241318	3754
DBP241319	3755
DBP241381	3784
DBP241394	3877
DBP241416	4093
DBP241425	4100
DBP241461	3921
DBP241568	3801
DBP241594	3885
DBP241885	4058
DBP241897	4161
DBP241917	4157
DBP241928	3906
DBP241928	3906/1
DBP241928	3906/1A
DBP241928	3906/2
DBP241929	3920
DBP241929	3920/1
DBP241930	3907
DBP241930	3907/1
DBP241930	3907/1A
DBP241930	3907/2
DBP241931	3853/1
DBP250584	3470
DBP250686	3733
DBP250732	3623
DBP251015	3674
DBP251067	3505
DBP251067	3615
DBP251117	3717
DBP251293	3762
DBP251424	3846
DBP251520	4211
DBP251640	4042
DBP251919	3800/2
DBP251934	3976
DBP254208	4149
DBP254262	4230
DBP254263	4014
DBP254264	4008
DBP260435	3502
DBP260613	3683
DBP260613	3872/1
DBP260621	4212
DBP260777	3686
DBP260905	3704
DBP260956	4148/1
DBP261506	4155
DBP261704	4159
DBP271326	3778
DBP271595	3802
DBP271605	3843
DBP271606	3993
DBP271733	3959
DBP271950	3985
DBP281017	3887
DBP290655	3523
DBP291315	3575/2
DBP294037	4092
DBP294037	4092/1
DBP310765	3685
DBP310804	3688
DBP311095	4062
DBP314023	3975
DBP320715	3522
DBP321619	3889
DBP330604	3562
DBP330707	3660
DBP330859	4128
DBP330909	3888
DBP331091	3577
DBP331091	3647
DBP331580	4115
DBP334051	4038
DBP340558	3496/1
DBP340619	3680
DBP340719	3487
DBP340719	3489

DURON	BESER
NO	NO
DBP340845	3503
DBP340874	3819
DBP340876	3528
DBP341002	3799
DBP341062	3750
DBP341112	3636
DBP341378	3938
DBP341399	3820
DBP341399	3820/1
DBP341411	3935
DBP341476	3800
DBP341480	3914
DBP341542	3854
DBP341543	3931
DBP341556	3986
DBP341725	3939
DBP341727	3946
DBP341771	3972
DBP341772	4151
DBP341772	4151/1
DBP341784	3984
DBP341790	3987
DBP341971	3964
DBP344003	3970
DBP344250	3971
DBP350393	3380
DBP350406	3539
DBP350440	3495
DBP351135	3659
DBP351420	3539/1
DBP351440	3950
DBP351441	3852
DBP351452	3856
DBP351453	3855
DBP351515	3848
DBP351516	3795/1
DBP351540	3853
DBP351544	3849
DBP351617	3983
DBP354180	3964/1
DBP354185	3966
DBP354185	3966/1
DBP360712	3882
DBP361020	3883
DBP361532	3928
DBP361565	3884
DBP364060	3929
DBP364069	3983/1
DBP370308	3402
DBP370797	3560
DBP370867	3554
DBP370867	3651
DBP371021	3693
DBP371368	3768
DBP371392	3769
DBP371395	3788
DBP371513	4112
DBP371531	4153
DBP371573	3817
DBP371574	3825
DBP371648	3890
DBP371649	4154
DBP371892	3949
DBP374048	4037
DBP374048	4037/1
DBP381382	3919
DBP381383	3918
DBP381384	4059
DBP390419	3444
DBP390541	3529
DBP390610	3419
DBP390774	3531
DBP390775	3551
DBP391072	3585
DBP391094	3682
DBP391101	3566
DBP391288	3637
DBP391463	3590/1
DBP391518	3794
DBP391629	4096
DBP391636	3905
DBP391641	3904
DBP391642	3841
DBP391645	4152

ETF	BESER
NO	NO
12-0001	3346
12-0003	3317
12-0004	3316
12-0009	3318
12-0011	3320
12-0014	3321
12-0019	3311
12-0035	3373
12-0047	3326
12-0054	3327
12-0058	3840
12-0065	3393
12-0066	3323
12-0079	3710
12-0082	3350
12-0085	3335
12-0091	3343
12-0091	3483
12-0096	3318
12-0097	3315
12-0097	3515
12-0102	3416
12-0103	3661
12-0108	3315
12-0108	3515
12-0109	3423
12-0118	3405
12-0124	3374
12-0132	3527
12-0134	3366/1
12-0138	3421
12-0139	3312
12-0143	3378
12-0144	3365
12-0150	3324
12-0156	3625
12-0163-1	3417
12-0167-1	3579
12-0172	3339
12-0172	3514
12-0176	3509
12-0178	3468
12-0180	3369
12-0187	3536
12-0192	3407
12-0196	3440
12-0198	3709
12-0201	3503
12-0203	3424/1
12-0205	3484
12-0208	3419
12-0209	3429
12-0210	3467
12-0212	3425
12-0216	3493
12-0216	3494
12-0217	3496
12-0220	3329
12-0227	3611
12-0229	3381
12-0230	3442
12-0231	3573
12-0234	3415
12-0236	3572
12-0237	3370
12-0238	3513
12-0239	3379
12-0242	3371
12-0246	3394
12-0252	3413
12-0255	3402
12-0258	3624
12-0260	3486
12-0260	3486/1
12-0261	3444
12-0262	3441
12-0263	3621
12-0266	3417/1
12-0268	3466
12-0269	3380

ETF	BESER
NO	NO
12-0270	3400
12-0271	3410
12-0276-1	3474
12-0280	3620
12-0281	3490
12-0286	3408
12-0287	3649
12-0288	3633
12-0289	3752
12-0293	3502
12-0297	3436
12-0299	3401
12-0301	3758
12-0302	3397
12-0307	3634
12-0312	3482
12-0314	3550
12-0315-1	3423/1
12-0316	3603
12-0320	3428
12-0321	3462
12-0322	3714
12-0327	3449
12-0333	3422
12-0334	3495
12-0335	3605
12-0337	3543
12-0340	3526
12-0343-1	3459
12-0349	3582
12-0351	4212
12-0353	3746
12-0357	4087
12-0358	3395
12-0360	3503
12-0361	3771
12-0367	3757
12-0367	3857
12-0368	3717
12-0370	3760
12-0375	3432
12-0379	3457
12-0381	3564
12-0386	3641
12-0387	3448
12-0389	3499
12-0390	3463
12-0396	4212
12-0400	3446
12-0409	3679
12-0414	3529
12-0415	3578
12-0417	3470
12-0418	3469
12-0419	3882
12-0421	3666
12-0423	3437
12-0425	3430
12-0427	3589
12-0428	4108
12-0429	3723
12-0431	3680
12-0432	3563
12-0435	4088
12-0437	3600
12-0438	3777
12-0443	3779
12-0448	3875
12-0451	3609
12-0455	3873
12-0456	3583
12-0461	3436
12-0462	3464
12-0463	3560
12-0468	4104
12-0470	3562
12-0471	3660
12-0473	4010
12-0475	3491
12-0477	3373

EFT NO	BESER NO
12-0480	3631
12-0482	3696
12-0483	4148/1
12-0485	3408
12-0487	3410
12-0489	3522
12-0491	3640
12-0494	3632
12-0497	3619
12-0499	3549
12-0501	3501
12-0502	3683
12-0502	3872/1
12-0506	3629
12-0509	3622
12-0511	3766
12-0514	3733
12-0517	3523
12-0518	3662
12-0519	3695
12-0520	3623
12-0524	3366
12-0525	3473
12-0526	3554
12-0526	3651
12-0527	3539
12-0530	4212
12-0531	3531
12-0532	3551
12-0535	3426
12-0536	4080
12-0538	4072
12-0539	4088
12-0542	3642
12-0543	3704
12-0544	4148/1
12-0546	3607
12-0547	3686
12-0549	3445
12-0550	3487
12-0550	3489
12-0553	3596
12-0561	3593
12-0563	4128
12-0564	3819
12-0565	3878
12-0566	3689
12-0568	3994
12-0569	3779
12-0573	3685
12-0574	3688
12-0577	3892
12-0578	3874
12-0580	3674
12-0581	3887
12-0584	3623
12-0585	3736
12-0589	3540
12-0590	3503
12-0592	3558
12-0593	4214
12-0595	3528
12-0596	3745
12-0597	3693
12-0600	3643
12-0601	3898
12-0603	3556
12-0604	3556
12-0612	3536
12-0614	3595
12-0615	3559
12-0620	3883
12-0623	3673
12-0624	3888
12-0625	3553
12-0626	3608
12-0630	3545
12-0631	3630
12-0632	3833
12-0635	4086

EFT NO	BESER NO
12-0641	3649
12-0642	3650
12-0643	3619
12-0644	3635
12-0645	3585
12-0646	3610
12-0647	3740
12-0652	3879
12-0653	3581
12-0660	3909
12-0663	4078
12-0665	3584
12-0668	3511
12-0672	3538
12-0673	3617
12-0674	3896
12-0675	3570
12-0677	3618
12-0678	3799
12-0682	3566
12-0684	3602
12-0686	3750
12-0687	3567
12-0688	3678
12-0689	3670
12-0691	3577
12-0691	3647
12-0694	3677
12-0695	3863
12-0700	3675
12-0703	4059
12-0704	3505
12-0704	3615
12-0705	3680
12-0706	3575
12-0708	3507
12-0709	3628
12-0711	3636
12-0712	3682
12-0713	3884
12-0715	4182
12-0716	3512
12-0716	3512/1
12-0717	3453
12-0718	3687/1
12-0721	3598/1
12-0723	3606
12-0734	3779
12-0735	3552
12-0739	3867
12-0742	4062
12-0743	3697
12-0749	3659
12-0750	4148/1
12-0753	4275
12-0761	3822
12-0762	3667
12-0763	4125
12-0768	3523
12-0770	3897
12-0771	3663
12-0774	3881
12-0775	3809
12-0802	4020
12-0803	3687/1
12-0804	3744
12-0807	3529
12-0808	3637
12-0810	3762
12-0819	4079
12-0820	3764
12-0821	3681
12-0824	3754
12-0825	3778
12-0826	3598/1
12-0827	3722
12-0828	3648
12-0829	3781
12-0831	4099
12-0832	3915

EFT NO	BESER NO
12-0833	3687/1
12-0839	3768
12-0841	4197
12-0842	3919
12-0843	3918
12-0844	3755
12-0845	3804
12-0847	3938
12-0849	3539
12-0858	4274
12-0861	3676
12-0865	4011
12-0868	3794
12-0872	3877
12-0874	3539/1
12-0878	3943
12-0880	3861
12-0881	4281
12-0887	3784
12-0890	4123
12-0892	4069
12-0894	4027
12-0895	3780
12-0896	3836
12-0897	4126
12-0897	4126/1
12-0898	3829
12-0899	3830
12-0901	3653
12-0902	3928
12-0905	3767
12-0909	3843
12-0911	4009
12-0915	3846
12-0925	3575/2
12-0926	4100
12-0927	4093
12-0928	3820
12-0928	3820/1
12-0931	3769
12-0935	3896
12-0936	3821
12-0937	3934
12-0939	3935
12-0942	3826/1
12-0943	3800/1
12-0945	4115
12-0950	3790
12-0951	3790/1
12-0952	3942/A
12-0953	3685
12-0959	3569
12-0960	3918
12-0964	3632
12-0966	3993
12-0967	4087
12-0968	3932
12-0970	3852
12-0972	3800
12-0975	3856
12-0976	4155
12-0980	3853
12-0981	3950
12-0984	3590/1
12-0989	4082
12-0993	4158
12-0994	3553/1
12-0996	3914
12-0997	3834
12-0998	3835
12-0999	4101
12-0999	4209
12-1000	3846
12-1001	3892
12-1005	4152
12-1007	3859
12-1008	3854
12-1009	3931
12-1010	3921
12-1012	3848

EFT NO	BESER NO
12-1013	4138
12-1013	4138/1
12-1014	4211
12-1018	3901
12-1025	3823
12-1026	3983
12-1028	3986
12-1030	3817
12-1036	3780
12-1039	3802
12-1040	3826
12-1043	3993
12-1044	3574
12-1044	3914/1
12-1047	4034
12-1047	4034/1
12-1050	4153
12-1055	4269
12-1056	3913
12-1057	4084
12-1058	4119
12-1059	4109
12-1059	4232
12-1060	3911
12-1061	3788
12-1067	3933
12-1068	3932
12-1070	3825
12-1072	3849
12-1073	4180
12-1074	3855
12-1076	4095
12-1077	4110
12-1078	3801
12-1079	3961
12-1080	3955
12-1082	4112
12-1083	4109
12-1083	4232
12-1089	3889
12-1091	3853
12-1092	4118
12-1093	4042
12-1094	3890
12-1095	4208
12-1097	4076
12-1100	3923/1
12-1101	3924
12-1102	3879
12-1103	3904
12-1105	3979
12-1106	4106
12-1110	3918
12-1111	3951
12-1112	4154
12-1113	3850
12-1115	4179
12-1116	3978
12-1117	3831
12-1122	4222
12-1124	3504
12-1125	3598
12-1126	3910
12-1127	4013
12-1129	4179
12-1130	3905
12-1132	3900
12-1133	3885
12-1134	3841/1
12-1138	3985
12-1139	3891
12-1140	3842
12-1141	4036
12-1144	4071
12-1145	3800
12-1146	3959
12-1147	4028
12-1148	3894
12-1149	4222
12-1150	4096

EFT	BESER
NO	NO
12-1158	3912
12-1168	4105
12-1169	4111
12-1171	4303
12-1177	4103
12-1178	4173
12-1181	3940
12-1182	3939
12-1183	3946
12-1184	4303
12-1185	4159
12-1186	3827
12-1192	3765
12-1194	4388
12-1196	4389
12-1198	3984
12-1199	3886
12-1200	4001
12-1201	3769
12-1202	3632
12-1203	3895
12-1204	3968
12-1205	4000
12-1206	4293
12-1207	3944
12-1208	3797
12-1211	4081
12-1212	3969
12-1214	4096
12-1217	3853/1
12-1218	4213
12-1221	4012
12-1225	3987
12-1230	4017
12-1232	3988
12-1232	3988/1
12-1234	3687/1
12-1237	4002
12-1238	4016
12-1240	3880
12-1241	3980
12-1243	3826/1
12-1244	3929
12-1248	3983/1
12-1249	3958
12-1250	4077
12-1251	3953
12-1252	3949
12-1253	3948
12-1256	3952
12-1266	4058
12-1269	4031
12-1272	3982
12-1273	3920
12-1273	3920/1
12-1274	3906
12-1274	3906/1
12-1274	3906/1A
12-1274	3906/2
12-1275	3907
12-1275	3907/1
12-1275	3907/1A
12-1275	3907/2
12-1277	4198
12-1278	4018
12-1279	4210
12-1281	3976/1
12-1283	3972
12-1284	4151
12-1284	4151/1
12-1286	3820/3
12-1289	3945
12-1290	3962
12-1290	3962/1
12-1291	3963
12-1291	3963/1
12-1292	3925
12-1292	3925/2
12-1293	3926
12-1293	3926/1

EFT	BESER
NO	NO
12-1295	3800/2
12-1296	3975
12-1297	4161
12-1300	4157
12-1303	3976
12-1313	3960
12-1314	3989
12-1315	4092
12-1315	4092/1
12-1316	4122
12-1317	4249
12-1318	4216
12-1321	4038
12-1322	3954
12-1323	3922
12-1323	3922/1
12-1324	3965
12-1325	4173/1
12-1327	4248
12-1328	4247
12-1329	3964
12-1334	3965/1
12-1335	4015
12-1336	4035
12-1340	3956
12-1341	4037
12-1341	4037/1
12-1343	4029
12-1347	4259
12-1349	4260
12-1350	4143
12-1351	3933
12-1352	4160
12-1353	4156
12-1355	4137
12-1358	4039
12-1359	4165
12-1362	4240
12-1363	4388
12-1364	3970
12-1365	3995
12-1366	4390
12-1367	3966
12-1367	3966/1
12-1368	3967
12-1371	4207
12-1375	3903
12-1377	4149
12-1379	4150
12-1381	3996
12-1382	3997
12-1384	4142
12-1385	4391
12-1386	3971
12-1389	4006
12-1391	4141
12-1392	3964/1
12-1395	3933
12-1398	4004
12-1399	4073
12-1404	4230
12-1405	4008
12-1406	4014
12-1408	4258
12-1413	4121
12-1414	4291
12-1417	3944
12-1420	4113
12-1422	4147
12-1423	4146
12-1425	3826/3
12-1426	3800/3
12-1429	4135
12-1430	4134
12-1435	4060
12-1439	4056
12-1440	4132
12-1440	4172
12-1440	4172/1
1214403	3537

EFT	BESER
NO	NO
12-1441	4057
12-1442	4124
12-1444	3945
12-1447	4380
12-1449	4325/1
12-1450	4379
12-1452	4378
12-1453	4382
12-1456	4061
12-1457	4309
12-1459	4310
12-1466	4122
12-1470	4136
12-1471	4061
12-1478	4162
12-1481	4255
12-1482	4256
12-1488	4346
12-1491	4145
12-1494	4383
12-1495	3983/2
12-1495	3983/3
12-1500	4378
12-1503	4381
12-1504	3820
12-1504	3820/1
12-1508	3841
12-1509	4181/1
12-1512	4140
12-1518	4241
12-1525	4174/1
12-1537	4176/1
12-1559	4201/1
12-1561	4372
12-1562	4374
12-1567	4371
12-1567	4373
12-1587	4171/1
12-1589	4283/1
12-1598	4351/1
12-1616	4349
12-1627	4312
12-1644	4301
12-1644	4301/1
12-1667	4185
1216959	3433/1
12-1699	4369
12-1700	4370
12-1705	4251/1
12-1755	4384
12-1759	4350/1
1218786	3433
1219881	3773
1224995	3749
1226821	3773
1231569	3773
1231935	3994
1243256	3749/1
1251292	4169

FEBI	BESER
NO	NO
16000	3564
16002	3563
16005	3444/1
16006	3538
16008	3551
16011	3441
16012	3585
16012	3585/1
16016	3423
16017	3416
16018	3423/1
16021	3549
16023	3417
16024	3417/1
16026	3573
16027	3677

FEBI	BESER
NO	NO
16028	3863
16030	3470
16031	3733
16033	3513
16035	3593
16038	3464
16039	3722
16040	3570
16044	3566
16045	3339
16045	3514
16048	3531
16049	3543
16051	3440
16055	3623
16057	3315
16057	3515
16059	3408
16061	3430
16066	3619
16068	3327
16069	3559
16070	3490
16072	3637
16076	3486
16077	3424
16078	3650
16079	3466
16084	3608
16092	3643
16093	3897
16094	3681
16095	3628
16098	3484
16109	3909
16114	3683
16114	3872/1
16119	3704
16128	3448
16134	3320
16135	3469
16137	3680
16141	3572
16142	3536
16144	3536
16146	3529
16147	3676
16148	3529
16149	3821
16152	3663
16154	3550
16155	3717
16156	3611
16158	3581
16160	3670
16162	3678
16163	3545
16167	3755
16168	3425
16173	3680
16175	3879
16189	3496/1
16190	3656
16191	3503
16192	3380
16193	3408
16194	3833
16197	3609
16200	4020
16201	3562
16202	3558
16203	3410
16204	3598
16207	4062
16211	3641
16214	4059
16221	3750
16222	3496/1
16225	3799
16226	3938

FEBI	BESER
NO	NO
16233	3762
16234	3736
16236	3495
16237	3636
16240	3595
16241	3503
16244	3617
16247	3629
16251	3567
16255	3861
16258	3610
16259	3528
16262	4128
16263	3415
16264	3888
16267	3577
16267	3647
16268	4104
16274	3660
16279	3754
16280	3506
16282	3437
16286	3760
16293	3617
16296	3696
16297	4148/1
16298	3605
16299	3752
16300	3350
16303	3686
16304	3553
16305	3607
16306	3606
16307	3683
16307	3872/1
16308	3619
16309	4212
16318	3649
16320	3378
16323	3757
16323	3857
16327	3622
16329	3448
16334	3590/1
16335	3423/1
16336	3896
16337	3523
16339	3470
16340	3896
16341	3744
16345	3881
16348	3575
16354	3943
16355	3872
16359	3919
16360	3918
16371	3549
16373	4125
16374	4125
16378	3836
16379	3428
16381	3539
16386	3419
16389	4115
16390	3548
16390	3690
16393	4214
16397	3540
16399	3821
16401	3877
16402	4100
16403	3596
16410	4126
16410	4126/1
16412	4345
16413	3819
16415	3878
16417	3935
16419	3934
16422	3800

FEBI	BESER
NO	NO
16423	3846
16424	3921
16425	3784
16426	4093
16427	3852
16428	3853
16429	3539/1
16432	3820
16432	3820/1
16433	4180
16437	4103
16438	4101
16438	4209
16443	3482
16444	3526
16449	3553/1
16450	3804
16453	4062
16461	4076
16462	3841
16464	3794
16465	3841/1
16466	4181
16467	4179
16471	3978
16472	3795/1
16473	3848
16474	3676
16476	3905
16477	3849
16479	3885
16481	4102
16485	4281
16487	3923/1
16489	3959
16491	4042
16492	4211
16493	3855
16495	3856
16498	3780
16499	3640
16502	3904
16503	4346
16510	3687/1
16519	4208
16520	3767
16523	3983
16524	3979
16533	4388
16535	3924/1
16537	3560
16539	3817
16540	3905
16541	3778
16542	3502
16547	3939
16548	3946
16549	3879
16551	3704
16552	3831
16553	4109
16553	4232
16554	3800/1
16555	3826/1
16557	4009
16560	4389
16566	3679
16570	3801
16571	4058
16576	4112
16577	3825
16579	3371
16581	3402
16582	3892
16584	4096
16586	4096
16589	3987
16590	3854
16591	3931
16595	3773

FEBI	BESER
NO	NO
16598	3994
16599	3749/1
16600	3749
16603	4042
16604	3433/1
16613	4161
16616	3554
16616	3651
16619	4076
16621	4210
16623	3850
16624	3975
16629	4095
16630	3800/2
16632	3976
16633	4181/1
16637	3906
16637	3906/1
16637	3906/1A
16637	3906/2
16639	4152
16641	3887
16642	4157
16643	3912
16644	3955
16645	3809
16646	3685
16647	3884
16648	3929
16649	3983/1
16650	3953
16651	3949
16652	4154
16653	3890
16656	3882
16657	3883
16659	3913
16660	4079
16662	3928
16663	3835
16667	3960
16668	3989
16673	3920
16673	3920/1
16674	3993
16675	3993
16676	4087
16678	3993
16679	3961
16680	3648
16682	3843
16683	3502
16699	3880
16701	3907
16701	3907/1
16701	3907/1A
16701	3907/2
16702	3823
16704	3575
16705	3575/2
16706	3942
16708	3926
16708	3926/1
16709	3963
16709	3963/1
16710	3925
16710	3925/2
16712	4096
16713	3964
16715	3984
16718	3853/1
16720	3426
16721	3951
16723	4153
16725	3769
16726	3891
16729	4207
16731	3830
16732	3693
16734	3945

FEBI	BESER
NO	NO
16735	3926
16735	3926/1
16736	4247
16737	3630
16738	4038
16739	3988
16739	3988/1
16741	3955
16744	3853/1
16745	4240
16748	3846
16749	4248
16750	4141
16753	3962
16753	3962/1
16755	4260
16763	4222
16764	3873
16765	3820
16765	3820/1
16769	4069
16774	4106
16775	4148/1
16776	3685
16777	4249
16783	3964/1
16784	4142
16788	4008
16789	4230
16790	4155
16795	4390
16797	4135
16799	3993
16800	3683
16800	3872/1
16805	4156
16806	4160
16808	4391
16812	4379
16813	3984
16814	3820/3
16816	4039
16817	4165
16818	3457
16819	4132
16819	4172
16819	4172/1
16824	4162
16825	4380
16827	3986
16829	3940
16830	3972
16831	3971
16839	4325/1
16840	3922
16840	3922/1
16841	4173/1
16843	4057
16844	3970
16845	4056
16849	3617
16853	4123
16855	3569
16857	3827
16859	3826
16860	3842
16861	4382
16863	4383
16864	3853/1
16865	4378
16866	4145
16871	3885
16873	4148/1
16876	3826/3
16879	3826/1
16884	4381
16891	4151
16891	4151/1
16892	4149
16893	4014

FEBI	BESER
NO	NO
16894	4014
16896	3966/1
16899	4378
16937	4092/1
16955	4174/1
16955	4351/1
16958	4371
16958	4373
16959	4372
16967	4369
16976	4140/1
16991	4390
16998	4138
16998	4138/1
16999	4222
40586	4092
40586	4092/1
116000	3618
116003	3617
116008	3617
116028	3879
116029	4325/1
116034	3556
116040	3873
116042	4309
116043	3380
116047	3914
116049	3834
116052	3568
116054	3800/1
116055	3826/1
116056	3790/1
116057	3800/3
116058	4151
116058	4151/1
116059	4121
116067	4119
116069	3473
116070	3445
116071	4220
116080	4093
116083	3584
116086	3584
116096	3466
116104	4121
116108	4198
116109	4018
116112	4198
116113	4094
116114	3944
116115	3512/2
116117	3512
116117	3512/1
116118	3944
116119	4293
116120	3453
116123	4161
116124	4314
116126	4291
116147	4150
116161	3496/1
116179	3333
116180	3983
116181	3374
116183	3527
116184	3966
116184	3966/1
116185	3496
116186	4134
116188	4143
116189	3596
116197	4182
116198	3933
116199	3983/2
116199	3983/3
116206	4211
116209	3419
116210	3904
116217	3458
116219	3945

FEBI	BESER
NO	NO
116229	4376
116242	4374
116246	4350/1
116268	4283/1
116424	4201/1
170285	4037/1
170291	4176/1
170383	4370
173457	4301/1
175673	4384

FERODO	BESER
NO	NO
FDB2	3318
FDB9	3471
FDB9	3455
FDS2	3318
FSL2	3318
FDB11	3320
FDB21	3346
FDB22	3317
FDB29	3316
FDB2H	3318
FDB2M	3318
FDB42	3321
FDB46	3377
FDB55	3406
FDB71	3323
FDB72	3329
FDB77	3324
FDB84	3350
FDB85	3709
FDB87	3710
FDB96	3393
FDS11	3320
FDS96	3393
FSL29	3316
FSL84	3350
FVR84	3350
FCV239	3513
FCV376	3433/1
FCV501	3679
FCV503	3433
FCV733	3773
FCV791	3537
FCV852	3749
FCV958	3521
FDB103	3328
FDB105	3327
FDB113	3329
FDB116	3335
FDB128	3343
FDB128	3483
FDB142	3405
FDB143	3315
FDB143	3515
FDB144	3864
FDB160	3806
FDB161	3331
FDB162	3326/1
FDB167	3312
FDB169	3375
FDB170	3376
FDB173	3410
FDB175	3378
FDB176	3374
FDB179	3527
FDB186	3379
FDB192	3365
FDB195	3421
FDB198	3705
FDB206	3417
FDB208	3509
FDB210	3706
FDB211	3650
FDB2	3318
FDB9	3471

FERODO	BESER
NO	NO
FDB219	3579
FDB222	3536
FDB225	3370
FDB230	3407
FDB243	3339
FDB243	3514
FDB254	3381
FDB256	3573
FDB270	3372
FDB274	3624
FDB275	3419
FDB281	3418
FDB285	3646
FDB286	3484
FDB287	3440
FDB288	3371
FDB289	3429
FDB296	3572
FDB300	3501
FDB302	3366/1
FDB306	3634
FDB308	3402
FDB308	3472
FDB318	3414
FDB318	3714
FDB328	3611
FDB340	3397
FDB343	3619
FDB343	3635
FDB346	3424/1
FDB350	3467
FDB351	3424
FDB357	3400
FDB359	3439
FDB361	3333
FDB365	3621
FDB368	3401
FDB370	3466
FDB372	3875
FDB375	3410
FDB385	3441
FDB392	3486
FDB392	3486/1
FDB393	3380
FDB393	3580
FDB402	3442
FDB405	3758
FDB406	3539
FDB407	3620
FDB412	3490
FDB413	3531
FDB414	3482
FDB415	3408
FDB418	3462
FDB419	3444
FDB420	3625
FDB428	3493
FDB428	3494
FDB434	3474
FDB435	3502
FDB440	3495
FDB450	3603
FDB454	3582
FDB456	3425
FDB458	3320
FDB471	3771
FDB472	4212
FDB477	3701
FDB478	3776
FDB484	4087
FDB487	3449
FDB489	3395
FDB505	3446
FDB505	3450
FDB506	3583
FDB509	3461
FDB510	3543
FDB517	3605
FDB519	3459
FDB520	3662

FERODO	BESER
NO	NO
FDB524	3432
FDB525	3717
FDB527	3422
FDB532	3436
FDB534	3428
FDB537	3381
FDB540	3457
FDB541	3529
FDB547	3499
FDB549	3746
FDB554	3777
FDB556	3448
FDB558	3496/1
FDB562	3583
FDB576	3437
FDB577	3584
FDB578	3578
FDB579	3549
FDB584	3470
FDB585	3752
FDB586	3469
FDB588	3721
FDB589	3589
FDB590	3590
FDB596	3536
FDB597	3723
FDB600	3632
FDB604	3562
FDB610	3419
FDB610	3731
FDB613	3683
FDB613	3872/1
FDB615	3873
FDB617	3464
FDB619	3680
FDB621	4212
FDB626	3366
FDB628	3641
FDB635	3491
FDB638	4087
FDB643	3415
FDB646	3629
FDB648	3745
FDB655	3523
FDB656	3423/1
FDB660	3609
FDB667	4104
FDB669	3430
FDB676	3642
FDB678	3657
FDB678	3757
FDB678	3857
FDB683	3659
FDB686	3733
FDB687	3556
FDB690	3413
FDB691	3699
FDB691	3779
FDB692	3700
FDB693	3630
FDB700	3473
FDB701	3445
FDB707	3660
FDB708	3691
FDB712	3882
FDB714	3640
FDB715	3522
FDB718	3600
FDB719	3487
FDB719	3489
FDB720	3555
FDB725	3563
FDB732	3623
FDB748	3631
FDB757	3463
FDB761	3696
FDB763	3598
FDB764	3622
FDB765	3685
FDB766	3593

FERODO	BESER
NO	NO
FDB772	3545
FDB774	3531
FDB775	3551
FDB776	3607
FDB777	3686
FDB779	3564
FDB789	3426
FDB790	4080
FDB797	3560
FDB798	3626
FDB799	3581
FDB800	3627
FDB802	3930
FDB803	4108
FDB804	3688
FDB805	3526
FDB809	3311
FDB813	3373
FDB823	3319
FDB826	3481
FDB829	3423
FDB833	3416
FDB844	3661
FDB845	3503
FDB853	3635
FDB854	3658
FDB859	4128
FDB867	3554
FDB867	3651
FDB868	4086
FDB869	3833
FDB871	3453
FDB872	3512
FDB872	3512/1
FDB874	3819
FDB875	3878
FDB876	3528
FDB878	3596
FDB884	3558
FDB886	3423
FDB896	3569
FDB901	3736
FDB902	3672
FDB905	3704
FDB909	3888
FDB912	3540
FDB925	3608
FDB929	4182
FDB931	4072
FDB941	3689
FDB948	4078
FDB954	3619
FDB956	4148/1
FDB967	3595
FDB968	3559
FDB970	3553
FDB976	3867
FDB979	3550
FDB982	3740
FDB984	3832
FDB989	3423
FDB991	3872
FDB993	3449
FDB997	3881
FDB998	3909
FDB999	3557
FDB999	3610
FDS167	3312
FDS173	3410
FDS212	3417/1
FDS256	3573
FDS308	3402
FDS370	3466
FDS392	3486
FDS392	3486/1
FDS393	3380
FDS406	3539
FDS434	3474
FDS458	3320
FDS541	3529

FERODO	BESER
NO	NO
FDS558	3496/1
FDS578	3578
FDS584	3470
FDS586	3469
FDS596	3536
FDS600	3632
FDS604	3562
FDS610	3419
FDS613	3683
FDS613	3872/1
FDS617	3464
FDS691	3779
FDS725	3563
FDS732	3623
FDS765	3685
FDS766	3593
FDS774	3531
FDS775	3551
FDS776	3607
FDS777	3686
FDS779	3564
FDS789	3426
FDS790	4080
FDS845	3503
FDS867	3554
FDS867	3651
FDS905	3704
FDS925	3608
FDS948	4078
FDS956	4148/1
FDS998	3909
FQT393	3380
FQT406	3539
FQT558	3496/1
FQT613	3683
FQT613	3872/1
FQT619	3680
FQT719	3487
FQT719	3489
FQT725	3563
FQT732	3623
FQT774	3531
FQT775	3551
FQT845	3503
FQT867	3554
FQT867	3651
FQT874	3819
FQT875	3878
FQT876	3528
FQT884	3558
FQT925	3608
FQT997	3881
FQT998	3909
FSL105	3327
FSL142	3405
FSL143	3315
FSL143	3515
FSL167	3312
FSL173	3410
FSL175	3378
FSL176	3374
FSL179	3527
FSL195	3421
FSL206	3417
FSL208	3509
FSL212	3417/1
FSL222	3536
FSL243	3339
FSL243	3514
FSL274	3624
FSL275	3419
FSL287	3440
FSL296	3572
FSL300	3501
FSL308	3402
FSL318	3714
FSL328	3611
FSL340	3397
FSL346	3424/1
FSL351	3424

FERODO	BESER
NO	NO
FSL365	3621
FSL368	3401
FSL370	3466
FSL372	3875
FSL385	3441
FSL392	3486
FSL392	3486/1
FSL393	3380
FSL405	3758
FSL406	3539
FSL414	3482
FSL415	3408
FSL418	3462
FSL419	3444
FSL428	3493
FSL428	3494
FSL434	3474
FSL435	3502
FSL440	3495
FSL450	3603
FSL471	3771
FSL472	4212
FSL478	3776
FSL484	4087
FSL487	3449
FSL489	3395
FSL506	3583
FSL510	3543
FSL517	3605
FSL519	3459
FSL520	3662
FSL524	3432
FSL525	3717
FSL532	3436
FSL534	3428
FSL540	3457
FSL541	3529
FSL549	3746
FSL556	3448
FSL558	3496/1
FSL562	3583
FSL576	3437
FSL577	3584
FSL578	3578
FSL579	3549
FSL584	3470
FSL585	3752
FSL586	3469
FSL589	3589
FSL597	3723
FSL600	3632
FSL604	3562
FSL610	3419
FSL613	3683
FSL613	3872/1
FSL615	3873
FSL617	3464
FSL619	3680
FSL621	4212
FSL626	3366
FSL628	3641
FSL638	4087
FSL655	3523
FSL656	3423/1
FSL660	3609
FSL667	4104
FSL669	3430
FSL676	3642
FSL678	3757
FSL678	3857
FSL686	3733
FSL687	3556
FSL690	3413
FSL693	3630
FSL700	3473
FSL701	3445
FSL707	3660
FSL712	3882
FSL714	3640
FSL715	3522

FERODO	BESER
NO	NO
FSL719	3487
FSL719	3489
FSL725	3563
FSL732	3623
FSL757	3463
FSL763	3598
FSL764	3622
FSL765	3685
FSL766	3593
FSL774	3531
FSL775	3551
FSL776	3607
FSL777	3686
FSL779	3564
FSL789	3426
FSL790	4080
FSL797	3560
FSL799	3581
FSL803	4108
FSL804	3688
FSL805	3526
FSL813	3373
FSL829	3423
FSL833	3416
FSL844	3661
FSL845	3503
FSL859	4128
FSL867	3554
FSL867	3651
FSL869	3833
FSL871	3453
FSL872	3512
FSL872	3512/1
FSL874	3819
FSL875	3878
FSL876	3528
FSL878	3596
FSL884	3558
FSL886	3423
FSL896	3569
FSL901	3736
FSL905	3704
FSL909	3888
FSL912	3540
FSL925	3608
FSL929	4182
FSL931	4072
FSL948	4078
FSL954	3619
FSL956	4148/1
FSL967	3595
FSL968	3559
FSL970	3553
FSL979	3550
FSL997	3881
FSL998	3909
FSL999	3610
FVC959	3390
FVR179	3527
FVR215	3369
FVR239	3513
FVR287	3440
FVR302	3366/1
FVR414	3482
FVR418	3462
FVR450	3603
FVR501	3679
FVR505	3446
FVR505	3450
FVR510	3543
FVR517	3605
FVR547	3499
FVR549	3746
FVR626	3366
FVR655	3523
FVR656	3423/1
FVR690	3413
FVR700	3473
FVR701	3445
FVR757	3463

FERODO	BESER
NO	NO
FVR791	3537
FVR805	3526
FVR829	3423
FVR833	3416
FVR852	3749
FVR886	3423
FVR941	3689
FVR967	3595
FVR968	3559
FVR970	3553
FCV1102	3575
FCV1126	3994
FCV1315	3575/2
FCV1390	3942
FCV1405	3823
FCV1522	3679
FCV4254	4169
FDB1002	3799
FDB1004	3574
FDB1004	3914/1
FDB1009	3898
FDB1014	3507
FDB1015	3674
FDB1017	3887
FDB1020	3883
FDB1021	3693
FDB1035	3510
FDB1037	3628
FDB1038	3567
FDB1039	3678
FDB1044	3680
FDB1045	3670
FDB1049	3677
FDB1050	3863
FDB1052	3617
FDB1054	3538
FDB1055	3506
FDB1062	3750
FDB1066	3643
FDB1067	3505
FDB1067	3615
FDB1068	3665
FDB1072	3585
FDB1072	3585/1
FDB1075	3656
FDB1081	3570
FDB1082	3594
FDB1083	3529/1
FDB1085	3539
FDB1091	3577
FDB1091	3647
FDB1092	3675
FDB1095	4062
FDB1098	4197
FDB1100	3602
FDB1101	3566
FDB1103	3598/1
FDB1108	3511
FDB1112	3636
FDB1116	3687/1
FDB1117	3717
FDB1129	3781
FDB1131	4020
FDB1132	3671
FDB1137	3618
FDB1160	3897
FDB1162	4281
FDB1163	3606
FDB1166	4010
FDB1263	3932
FDB1267	4182
FDB1276	3722
FDB1288	3637
FDB1289	3896
FDB1291	3872
FDB1293	3762
FDB1303	4125
FDB1304	3681
FDB1305	3861
FDB1306	3804

FERODO	BESER
NO	NO
FDB1310	3663
FDB1311	3676
FDB1318	3754
FDB1319	3755
FDB1322	3821
FDB1325	3552
FDB1326	3778
FDB1327	4079
FDB1333	3913
FDB1337	3744
FDB1349	4123
FDB1355	3943
FDB1357	4125
FDB1368	3768
FDB1369	3687/1
FDB1376	3790/1
FDB1377	3548
FDB1377	3690
FDB1378	3938
FDB1380	4093
FDB1381	3784
FDB1382	3919
FDB1383	3918
FDB1384	4059
FDB1385	3561
FDB1392	3769
FDB1394	3877
FDB1395	3788
FDB1398	3782
FDB1399	3820
FDB1399	3820/1
FDB1400	4126
FDB1400	4126/1
FDB1401	4069
FDB1409	3850
FDB1411	3935
FDB1412	3934
FDB1416	4093
FDB1420	3539/1
FDB1421	4027
FDB1422	3809
FDB1424	3846
FDB1425	4100
FDB1426	4102
FDB1427	4101
FDB1427	4209
FDB1428	3836
FDB1429	3836
FDB1437	3822
FDB1440	3950
FDB1441	3852
FDB1444	4110
FDB1445	3874
FDB1451	3896
FDB1452	3856
FDB1453	3855
FDB1455	3780
FDB1456	3829
FDB1457	3830
FDB1461	3921
FDB1463	3590/1
FDB1466	3826/1
FDB1467	3800/3
FDB1473	4094
FDB1476	3800
FDB1477	3644
FDB1478	3834
FDB1479	3835
FDB1480	3914
FDB1483	3879
FDB1491	3529/2
FDB1493	3923/1
FDB1494	3924/1
FDB1496	3590/2
FDB1497	4095
FDB1498	3648
FDB1501	3901
FDB1502	3673
FDB1505	3704
FDB1506	4155

FERODO	BESER
NO	NO
FDB1512	4103
FDB1513	4112
FDB1514	4158
FDB1515	3848
FDB1516	3795/1
FDB1518	3794
FDB1519	3553/1
FDB1520	4211
FDB1521	4040
FDB1523	4011
FDB1526	4127
FDB1527	3767
FDB1529	4013
FDB1531	4153
FDB1532	3928
FDB1536	4009
FDB1540	3853
FDB1542	3854
FDB1543	3931
FDB1544	3849
FDB1554	4274
FDB1556	3986
FDB1559	3699
FDB1559	3779
FDB1564	3915
FDB1565	3884
FDB1568	3801
FDB1570	4084
FDB1571	4119
FDB1573	3817
FDB1574	3825
FDB1576	4012
FDB1577	3859
FDB1580	4115
FDB1594	3885
FDB1595	3802
FDB1596	4271
FDB1602	4269
FDB1603	3892
FDB1605	3843
FDB1606	3993
FDB1612	3764
FDB1613	3944
FDB1615	4293
FDB1617	3983
FDB1619	3889
FDB1620	3910
FDB1621	3955
FDB1625	4075
FDB1626	4075/1
FDB1627	4076
FDB1628	4180
FDB1629	4096
FDB1630	3643
FDB1635	3782
FDB1636	3905
FDB1637	3529/1
FDB1639	3912
FDB1640	4042
FDB1641	3904
FDB1642	3841
FDB1643	3841/1
FDB1644	3842
FDB1645	4152
FDB1648	3890
FDB1649	4154
FDB1651	3618/1
FDB1652	4173
FDB1658	3831
FDB1659	4031
FDB1662	4138
FDB1662	4138/1
FDB1666	3826
FDB1667	4137
FDB1669	4109
FDB1669	4232
FDB1672	4179
FDB1675	3853
FDB1679	4148
FDB1679	4148/1

FERODO	BESER
NO	NO
FDB1684	4275
FDB1686	3876
FDB1688	4276
FDB1689	4083
FDB1693	3933
FDB1698	3891
FDB1699	3951
FDB1702	3900
FDB1703	4099
FDB1704	4159
FDB1707	4118
FDB1708	3933
FDB1710	4222
FDB1715	4105
FDB1725	3939
FDB1726	3940
FDB1727	3946
FDB1731	4111
FDB1733	3959
FDB1735	3978
FDB1736	3979
FDB1737	3632
FDB173C	3410
FDB173G	3410
FDB1745	4017
FDB1748	4181
FDB1757	3874
FDB1759	4303
FDB175C	3378
FDB1766	3853/1
FDB1770	3529/2
FDB1771	3972
FDB1772	4151
FDB1772	4151/1
FDB1773	4346
FDB1781	3503/1
FDB1783	3968
FDB1784	3984
FDB1785	3849
FDB1786	4074
FDB1788	3529/1
FDB1790	3987
FDB1793	4186
FDB1806	4389
FDB1807	4388
FDB1816	3886
FDB1817	3988
FDB1817	3988/1
FDB1827	4096
FDB1829	3958
FDB1830	4210
FDB1836	3982
FDB1839	4106
FDB1840	3961
FDB1863	4036
FDB1869	4028
FDB1877	3945
FDB1881	4143
FDB1883	4208
FDB1885	4058
FDB1886	3765
FDB1887	3903
FDB1889	3894
FDB1891	3953
FDB1892	3949
FDB1897	4161
FDB1902	3969
FDB1909	3911
FDB1910	3989
FDB1911	4082
FDB1917	4157
FDB1919	3800/2
FDB1926	3922
FDB1926	3922/1
FDB1927	3820/3
FDB1931	3853/1
FDB1932	4157
FDB1933	4157
FDB1934	3976
FDB1937	3895

FERODO	BESER
NO	NO
FDB1945	4173/1
FDB1946	3826/3
FDB1947	4213
FDB1950	3985
FDB1953	4018
FDB1954	4006
FDB1955	3880
FDB1956	3980
FDB1971	3964
FDB1978	4248
FDB1979	4249
FDB1980	4247
FDB1981	3598/1
FDB1984	4081
FDB1985	3769
FDB1990	3802
FDB1991	3948
FDB1993	3685
FDB1994	3512/2
FDB1997	3952
FDB1999	3976/1
FDB287B	3440
FDB351B	3424
FDB370B	3466
FDB393C	3380
FDB393C	3580
FDB393D	3380
FDB393D	3580
FDB393F	3380
FDB4001	4113
FDB4002	4016
FDB4003	3970
FDB4013	3748
FDB4014	4001
FDB4023	3975
FDB4035	4141
FDB4037	4092
FDB4037	4092/1
FDB4039	3995
FDB4042	3954
FDB4046	3956
FDB4048	4037
FDB4048	4037/1
FDB4050	4260
FDB4051	4038
FDB4052	4207
FDB4055	4240
FDB4058	4390
FDB4060	3929
FDB4062	4029
FDB4064	4309
FDB4066	3820
FDB4066	3820/1
FDB4067	4181/1
FDB4068	4134
FDB4069	3983/1
FDB4074	4005
FDB4076	3502
FDB4077	4000
FDB4078	4198
FDB4105	3944
FDB4111	3960
FDB4113	4035
FDB4136	4077
FDB4140	3823
FDB4177	4143
FDB4178	3529/1
FDB4180	3964/1
FDB4182	4142
FDB4183	3529/2
FDB4184	4121
FDB4185	3966
FDB4185	3966/1
FDB4186	3967
FDB4187	4258
FDB4190	4260
FDB4192	4390
FDB4193	4165
FDB4194	4039
FDB4199	4248

FERODO	BESER
NO	NO
FDB4208	4149
FDB4209	4150
FDB4210	4277
FDB4219	4391
FDB4222	3529/2
FDB4228	4160
FDB4229	3996
FDB4230	3997
FDB4233	4156
FDB4235	3980
FDB4239	4004
FDB4245	4326
FDB4247	3993
FDB4250	3971
FDB4252	4150
FDB4256	3966
FDB4256	3966/1
FDB4262	4230
FDB4263	4014
FDB4264	4008
FDB4265	4014
FDB4279	4122
FDB428B	3493
FDB428B	3494
FDB4290	3748
FDB4299	4124
FDB4302	4162
FDB4304	4073
FDB4309	3747
FDB4316	4135
FDB4324	3933
FDB4326	4147
FDB4333	4002
FDB4336	4145
FDB4347	4056
FDB4354	4255
FDB4376	4325
FDB4376	4325/1
FDB4379	4291
FDB4380	4380
FDB4381	4379
FDB4382	4378
FDB4383	4389
FDB4387	4061
FDB4388	3955
FDB4394	4382
FDB4395	4256
FDB4396	4041
FDB4403	4338
FDB4408	3980
FDB440D	3495
FDB4411	4146
FDB4416	4226
FDB4424	4310
FDB4426	4122
FDB4432	3944
FDB4434	4241
FDB4435	4287
FDB4443	4019
FDB4446	4317
FDB4447	4049
FDB4448	4028
FDB4454	4295
FDB4455	4314
FDB4457	4202
FDB4485	4336
FDB4486	3826/2
FDB4487	4349
FDB4489	4381
FDB4491	4201
FDB4491	4201/1
FDB4567	3574
FDB4567	3914/1
FDB4590	4200
FDB4612	4204
FDB4613	4166
FDB4613	4342
FDB4615	4140
FDB4623	4136
FDB4648	4176

FERODO	BESER
NO	NO
FDB4648	4176/1
FDB4669	4337
FDB4670	4383
FDB4678	4323
FDB4680	4372
FDB4699	4287
FDB4700	4318
FDB4715	4167
FDB4754	3555
FDB4765	4371
FDB4765	4373
FDB4766	4374
FDB4799	4234
FDB4822	4140/1
FDB4823	4201/1
FDB4833	4343
FDB4841	4285
FDB4842	4283
FDB4842	4283/1
FDB4843	4282
FDB4866	4284
FDB4871	4364
FDB4879	4286
FDB4907	4253
FDB4920	4321
FDB4936	4239
FDB4966	3983/3
FDB4997	4242
FDB5026	3529/1
FDB5138	4301
FDB5138	4301/1
FDB524B	3432
FDB527H	3422
FDB558D	3496/1
FDB610B	3419
FDB617C	3464
FDB774D	3531
FDB775D	3551
FDB809H	3311
FDB809M	3311
FDB845B	3503
FDB845F	3503
FDS1049	3677
FDS1050	3863
FDS1052	3617
FDS1067	3505
FDS1067	3615
FDS1072	3585
FDS1081	3570
FDS1101	3566
FDS1112	3636
FDS1160	3897
FDS1162	4281
FDS1288	3637
FDS1289	3896
FDS1293	3762
FDS1303	4125
FDS1318	3754
FDS1327	4079
FDS1333	3913
FDS1349	4123
FDS1376	3790/1
FDS1378	3938
FDS1399	3820
FDS1399	3820/1
FDS1444	4110
FDS1463	3590/1
FDS1466	3826/1
FDS1467	3800/3
FDS1543	3931
FDS1568	3801
FDS1573	3817
FDS1617	3983
FDS1628	4180
FDS1629	4096
FDS1641	3904
FDS1667	4137
FDS1672	4179
FDS1725	3939
FDS1773	4346

FERODO	BESER
NO	NO
FDS1806	4389
FDS1807	4388
FQT1002	3799
FQT1049	3677
FQT1050	3863
FQT1052	3617
FQT1067	3505
FQT1067	3615
FQT1075	3656
FQT1095	4062
FQT1098	4197
FQT1101	3566
FQT1112	3636
FQT1117	3717
FQT1276	3722
FQT1288	3637
FQT1293	3762
FQT1303	4125
FQT1311	3676
FQT1318	3754
FQT1319	3755
FQT1322	3821
FQT1349	4123
FQT1355	3943
FQT1378	3938
FQT1382	3919
FQT1384	4059
FQT1394	3877
FQT1399	3820
FQT1399	3820/1
FQT1400	4126
FQT1400	4126/1
FQT1411	3935
FQT1412	3934
FQT1416	4093
FQT1420	3539/1
FQT1424	3846
FQT1425	4100
FQT1426	4102
FQT1427	4101
FQT1427	4209
FQT1428	3836
FQT1429	3836
FQT1440	3950
FQT1441	3852
FQT1451	3896
FQT1463	3590/1
FQT1467	3800/3
FQT1473	4094
FQT1476	3800
FQT1483	3879
FQT1497	4095
FQT1506	4155
FQT1512	4103
FQT1514	4158
FQT1520	4211
FQT1523	4011
FQT1531	4153
FQT1540	3853
FQT1544	3849
FQT1556	3986
FQT1580	4115
FQT1594	3885
FQT1605	3843
FQT1606	3993
FQT1619	3889
FQT1627	4076
FQT1628	4180
FQT1629	4096
FQT1640	4042
FQT1641	3904
FQT1648	3890
FQT1649	4154
FQT1659	4031
FQT1672	4179
FQT1704	4159
FQT1766	3853/1
FQT1931	3853/1
FSL1002	3799
FSL1004	3574

FERODO	BESER
NO	NO
FSL1004	3914/1
FSL1014	3507
FSL1015	3674
FSL1017	3887
FSL1020	3883
FSL1021	3693
FSL1038	3567
FSL1039	3678
FSL1044	3680
FSL1045	3670
FSL1049	3677
FSL1050	3863
FSL1052	3617
FSL1054	3538
FSL1055	3506
FSL1062	3750
FSL1067	3505
FSL1067	3615
FSL1072	3585
FSL1075	3656
FSL1081	3570
FSL1091	3577
FSL1091	3647
FSL1092	3675
FSL1095	4062
FSL1098	4197
FSL1100	3602
FSL1101	3566
FSL1102	3575
FSL1112	3636
FSL1116	3687/1
FSL1117	3717
FSL1129	3781
FSL1131	4020
FSL1160	3897
FSL1162	4281
FSL1163	3606
FSL1166	4010
FSL1263	3932
FSL1267	4182
FSL1276	3722
FSL1288	3637
FSL1289	3896
FSL1291	3872
FSL1293	3762
FSL1303	4125
FSL1304	3681
FSL1305	3861
FSL1306	3804
FSL1310	3663
FSL1311	3676
FSL1315	3575/2
FSL1318	3754
FSL1319	3755
FSL1322	3821
FSL1326	3778
FSL1327	4079
FSL1333	3913
FSL1337	3744
FSL1349	4123
FSL1355	3943
FSL1368	3768
FSL1369	3687/1
FSL1378	3938
FSL1381	3784
FSL1382	3919
FSL1383	3918
FSL1384	4059
FSL1390	3942
FSL1392	3769
FSL1394	3877
FSL1395	3788
FSL1399	3820
FSL1399	3820/1
FSL1400	4126
FSL1400	4126/1
FSL1405	3823
FSL1409	3850
FSL1411	3935
FSL1412	3934

FERODO	BESER
NO	NO
FSL1416	4093
FSL1420	3539/1
FSL1421	4027
FSL1422	3809
FSL1424	3846
FSL1425	4100
FSL1426	4102
FSL1427	4101
FSL1427	4209
FSL1428	3836
FSL1440	3950
FSL1441	3852
FSL1444	4110
FSL1445	3874
FSL1451	3896
FSL1452	3856
FSL1453	3855
FSL1455	3780
FSL1456	3829
FSL1457	3830
FSL1461	3921
FSL1463	3590/1
FSL1466	3826/1
FSL1467	3800/3
FSL1473	4094
FSL1476	3800
FSL1478	3834
FSL1479	3835
FSL1480	3914
FSL1483	3879
FSL1493	3923/1
FSL1494	3924/1
FSL1501	3901
FSL1505	3704
FSL1506	4155
FSL1512	4103
FSL1513	4112
FSL1514	4158
FSL1515	3848
FSL1516	3795/1
FSL1518	3794
FSL1519	3553/1
FSL1520	4211
FSL1523	4011
FSL1527	3767
FSL1529	4013
FSL1531	4153
FSL1532	3928
FSL1536	4009
FSL1540	3853
FSL1542	3854
FSL1543	3931
FSL1544	3849
FSL1556	3986
FSL1564	3915
FSL1565	3884
FSL1568	3801
FSL1570	4084
FSL1571	4119
FSL1573	3817
FSL1574	3825
FSL1576	4012
FSL1580	4115
FSL1594	3885
FSL1595	3802
FSL1596	4271
FSL1602	4269
FSL1603	3892
FSL1605	3843
FSL1606	3993
FSL1612	3764
FSL1613	3944
FSL1615	4293
FSL1617	3983
FSL1619	3889
FSL1621	3955
FSL1627	4076
FSL1628	4180
FSL1636	3905
FSL1639	3912

FERODO	BESER
NO	NO
FSL1640	4042
FSL1641	3904
FSL1642	3841
FSL1643	3841/1
FSL1644	3842
FSL1645	4152
FSL1648	3890
FSL1649	4154
FSL1652	4173
FSL1658	3831
FSL1659	4031
FSL1662	4138
FSL1662	4138/1
FSL1666	3826
FSL1669	4109
FSL1669	4232
FSL1672	4179
FSL1679	4148/1
FSL1684	4275
FSL1693	3933
FSL1698	3891
FSL1699	3951
FSL1702	3900
FSL1703	4099
FSL1704	4159
FSL1707	4118
FSL1715	4105
FSL1725	3939
FSL1726	3940
FSL1727	3946
FSL1731	4111
FSL1733	3959
FSL1735	3978
FSL1736	3979
FSL1737	3632
FSL1745	4017
FSL1748	4181
FSL1757	3874
FSL1759	4303
FSL1766	3853/1
FSL1771	3972
FSL1772	4151
FSL1772	4151/1
FSL1773	4346
FSL1777	3962
FSL1777	3962/1
FSL1778	3925
FSL1778	3925/2
FSL1779	3963
FSL1780	3926
FSL1780	3926/1
FSL1781	3503/1
FSL1783	3968
FSL1784	3984
FSL1790	3987
FSL1806	4389
FSL1807	4388
FSL1816	3886
FSL1817	3988
FSL1817	3988/1
FSL1827	4096
FSL1829	3958
FSL1830	4210
FSL1836	3982
FSL1839	4106
FSL1840	3961
FSL1863	4036
FSL1869	4028
FSL1877	3945
FSL1881	4143
FSL1884	3777
FSL1885	4058
FSL1889	3894
FSL1891	3953
FSL1892	3949
FSL1897	4161
FSL1902	3969
FSL1906	4216
FSL1909	3911
FSL1910	3989

FERODO	BESER
NO	NO
FSL1917	4157
FSL1919	3800/2
FSL1925	3922
FSL1926	3922
FSL1926	3922/1
FSL1927	3820/3
FSL1928	3906
FSL1928	3906/1
FSL1928	3906/1A
FSL1928	3906/2
FSL1929	3920
FSL1929	3920/1
FSL1930	3907
FSL1930	3907/1
FSL1930	3907/1A
FSL1930	3907/2
FSL1931	3853/1
FSL1933	4157
FSL1934	3976
FSL1937	3895
FSL1946	3826/3
FSL1950	3985
FSL1953	4018
FSL1954	4006
FSL1955	3880
FSL1956	3980
FSL1971	3964
FSL1978	4248
FSL1979	4249
FSL1980	4247
FSL1985	3769
FSL1993	3685
FSL1994	3512/2
FSL1997	3952
FSL1999	3976/1
FSL4001	4113
FSL4002	4016
FSL4003	3970
FSL4014	4001
FSL4023	3975
FSL4035	4141
FSL4036	3965
FSL4037	4092
FSL4037	4092/1
FSL4039	3995
FSL4042	3954
FSL4046	3956
FSL4048	4037
FSL4048	4037/1
FSL4050	4260
FSL4051	4038
FSL4052	4207
FSL4053	3965/1
FSL4058	4390
FSL4060	3929
FSL4062	4029
FSL4066	3820
FSL4066	3820/1
FSL4067	4181/1
FSL4068	4134
FSL4069	3983/1
FSL4074	4005
FSL4077	4000
FSL4078	4198
FSL4111	3960
FSL4113	4035
FSL4136	4077
FSL4140	3823
FSL4177	4143
FSL4180	3964/1
FSL4182	4142
FSL4185	3966
FSL4185	3966/1
FSL4186	3967
FSL4187	4258
FSL4192	4390
FSL4193	4165
FSL4194	4039
FSL4208	4149
FSL4209	4150

FERODO	BESER
NO	NO
FSL4219	4391
FSL4228	4160
FSL4229	3996
FSL4233	4156
FSL4235	3980
FSL4239	4004
FSL4247	3993
FSL4250	3971
FSL4256	3966
FSL4256	3966/1
FSL4262	4230
FSL4263	4014
FSL4264	4008
FSL4265	4014
FSL4279	4122
FSL428B	3494
FSL4299	4124
FSL4302	4162
FSL4304	4073
FSL4316	4135
FSL4324	3933
FSL4326	4147
FSL4336	4145
FSL4376	4325/1
FSL4380	4380
FSL4381	4379
FSL4382	4378
FSL4383	4389
FSL4387	4061
FSL4388	3955
FSL4394	4382
FSL4408	3980
FSL4411	4146
FSL4424	4310
FSL4426	4122
FSL4432	3944
FSL4447	4049
FSL4448	4028
FSL4455	4314
FSL4486	3826/2
FSL4487	4349
FSL4489	4381
FSL4491	4201/1
FSL4567	3574
FSL4567	3914/1
FSL4648	4176
FSL4648	4176/1
FSL4670	4383
FSL4680	4372
FSL4765	4373
FSL4766	4374
FSL4822	4140/1
FSL4823	4201/1
FSL4842	4283/1
FSL4966	3983/3
FSL5138	4301/1
FVR1002	3799
FVR1014	3507
FVR1038	3567
FVR1039	3678
FVR1044	3680
FVR1045	3670
FVR1102	3575
FVR1126	3994
FVR1131	4020
FVR1132	3671
FVR1163	3606
FVR1304	3681
FVR1305	3861
FVR1306	3804
FVR1315	3575/2
FVR1350	3749/1
FVR1381	3784
FVR1390	3942
FVR1405	3823
FVR1452	3856
FVR1453	3855
FVR1461	3921
FVR1478	3834
FVR1479	3835

FERODO	BESER
NO	NO
FVR1480	3914
FVR1493	3923
FVR1493	3923/1
FVR1494	3924/1
FVR1497	4095
FVR1498	3648
FVR1515	3848
FVR1516	3795/1
FVR1518	3794
FVR1519	3553/1
FVR1522	3679
FVR1568	3801
FVR1642	3841
FVR1643	3841/1
FVR1644	3842
FVR1771	3972
FVR1772	4151
FVR1772	4151/1
FVR1777	3962
FVR1777	3962/1
FVR1778	3925
FVR1778	3925/2
FVR1779	3963
FVR1779	3963/1
FVR1780	3926
FVR1780	3926/1
FVR1879	3614
FVR1884	3777
FVR1906	4216
FVR1925	3922
FVR1925	4171/1
FVR1926	3922
FVR1927	3820/3
FVR1928	3906
FVR1928	3906/1
FVR1928	3906/1A
FVR1928	3906/2
FVR1929	3920
FVR1929	3920/1
FVR1930	3907
FVR1930	3907/1
FVR1930	3907/1A
FVR1930	3907/2
FVR4036	3965
FVR4037	4092
FVR4037	4092/1
FVR4038	3994
FVR4039	3995
FVR4053	3965/1
FVR4140	3823
FVR4302	4162
FVR4347	4056
FVR4348	4057
FVR4349	4132
FVR4349	4172
FVR4349	4172/1
FVR4398	4175
FVR4429	3963
FVR4429	3963/1
FVR4469	3925
FVR4469	3925/2
FVR4470	3962
FVR4470	3962/1
FVR4661	4174
FVR4661	4351
FVR4661	4351/1
FVR4840	4227
FVR4909	4174/1
FVR5067	4350
FVR5067	4350/1
FVR5068	4357
FVR5075	3614
FVR5076	3614
FVR5105	4356
FVR5119	4369
FVR5120	4370
FCV5000B	4354
FDB1052B	3617
FDB1117B	3717
FDB1318B	3754

FERODO	BESER
NO	NO
FDB1319B	3755
FDB4066B	3820/1
FSL4066B	3820/1
7210-D307	3585
7243-D280	3585
7386-D507	4104
8252-D1141	4042
8470-D1361	4042
9566-D2331	3466

FMSI	BESER
NO	NO
D681	3881
D0263	3634
D0280	3444/1
D0280	3585/1
D0307	3486
D0307	3486/1
D0371	3489
D0374	4212
D0389	3666
D0536	4148/1
D0537	4148/1
D0556	3883
D0668	3647
D0760	4126/1
D0780	3896
D0808	3795/1
D0987	4097/1
D1013	3976/1
D1031	4073
D1042	4181/1
D1095	3853/1
D1171	4388
D1213	3820/1
D1220	3494
D1226	4389
D1267	4388
D1268	3962/1
D1316	3925/2
D1317	3926/1
D1318	3963/1
D1348	4390
D1349	4309
D1406	4391
D1437	4138/1
D1469	4379
D1473	4325/1
D1487	3575
D1501	3852
D1502	3907/1
D1502	3907/1A
D1502	3907/2
D1504	4380
D1505	4378
D1513	3914/1
D1514	3916
D1528	3920/1
D1540	3922
D1540	3922/1
D1540	4171/1
D1554	4389
D1555	3906/1
D1555	3906/1A
D1555	3906/2
D1561	4382
D1570	3820/1
D1572	4037/1
D1574	3988/1
D1613	4383
D1615	3924/1
D1622	3942/A
D1639	3907/1
D1639	3907/1A
D1639	3907/2
D1699	3962/1
D1760	4228/1
D1774	4351/1

FMSI	BESER
NO	NO
D1787	4174/1
D1850	4379
D1858	3983/3
D1891	4372
D1922	4381
D1943	3820/1
D1964	4176/1
D1965	4283/1
D1974	4371
D1974	4373
D1980	4151/1
D2090	4374
D2120	4201/1
D2123	4201/1
D2153	4251/1
D2236	4384
D2245	4369
D2246	4370
D2247	4350/1
D2347	4092/1
D2358	3995/1
724-D4	3455
724-D4	3471
724-D7	3446
734-D45	3320
734-D47	3370
734-D48	3410
735-D30	3326
736-D31	3318
736-D31	3374
754-D44	3311
760-D68	3840
764-D43	3373
764-D45	3406
765-D44	3311
770-D40	3325
784-D43	3373
790-D54	3346
790-D57	3515
791-D57	3374
792-D54	3316
793-D49	3329
793-D97	3329
793-D97	3333
796-D58	3318
796-D61	3413
797-D59	3312
797-D59	3484
797-D79	3312
797-D79	3484
798-D54	3316
798-D54	3346
7001-D71	3317
7001-D74	3331
7006-D74	3481
7007-D80	3393
7007-D82	3620
7008-D71	3317
7010-D77	3321
7014-D81	3416
7015-D82	3332
7021-D45	3350
7022-D88	3328
7025-D94	3709
7031-D96	3327
7031-D96	3343
7031-D96	3483
7031-D97	3527
7032-D96	3327
7032-D96	3343
7034-D99	3313
7036-D45	3315/1
7075-D82	3332
7206D304	3701
7206D337	3701
7214-D52	3864
7214-D52	4182
7254-D43	3373
7276-389	3666
7319D337	3701

FMSI	BESER
NO	NO
7319D432	3701
7319D622	3701
785-D112	3601
795-D161	3375
7015-D163	3331
7036-D100	3339
7036-D102	3415
7036-D145	3315
7036-D145	3339
7036-D145	3514
7036-D145	3515
7037-D101	3375
7037-D101	3709
7037-D101	3710
7043-D111	3440
7045-D156	3806
7045-D201	3379
7058-D127	3421
7061-D130	3324
7067-D135	3526
7068-D136	3376
7069-D137	3371
7073-D141	3405
7073-D455	3405
7076-D136	3376
7078-D192	3329
7079-D147	3378
7079-D147	3490
7086-D157	3323
7090-D163	3331
7091-D164	3326/1
7093-D166	3369
7093-D166	3415
7096-D169	3710
7099-D172	3709
7099-D173	3378
7099-D174	3621
7100-D173	3375
7100-D244	3375
7101-D174	3365
7103-D176	3705
7104-D177	3509
7104-D281	3509
7105-D260	3314
7110-D186	3370
7110-D234	3370
7110-D274	3370
7110-D312	3370
7111-D145	3339
7111-D145	3514
7113-D189	3579
7116-D193	3442
7118-D195	3376
7120-D197	3379
7126-D206	3444
7127-D207	3418
7132-D212	3705
7143-D227	3619
7143-D227	3649
7143-D227	3650
7143-D290	3619
7143-D290	3650
7144-D228	3536
7145-D229	3369
7146-D323	4087
7146-D429	4087
7147-D233	3394
7150-D246	3375
7151-D239	3436
7152-D241	3402
7152-D241	3472
7153-D242	3402
7153-D242	3472
7153-D302	3402
7155-D233	3394
7155-D275	3394
7156-D247	3646
7160-D253	3573
7162-D256	3501
7162-D256	3752

FMSI	BESER
NO	NO
7170-D265	3397
7170-D265	3758
7171-D266	3397
7171-D266	3758
7175-D271	3401
7175-D328	3401
7176-D147	3378
7176-D147	3490
7177-D227	3531
7177-D227	3649
7177-D227	3650
7178-D273	3691
7181-D278	3609
7182-D279	3572
7182-D279	3578
7183-D280	3444
7183-D280	3486
7183-D569	3486
7184-D282	3314
7186-D283	3875
7186-D332	3875
7186-D482	3875
7188-D285	3446
7188-D285	3450
7194-D292	3372
7194-D292	3503
7201-D298	3548
7201-D298	3549
7201-D298	3690
7202-D299	3400
7204-D301	3441
7205-D303	3414
7205-D303	3714
7205-D438	3414
7205-D438	3714
7208-D306	3536
7209-D280	3444
7209-D569	3444
7213-D311	3395
7214-D313	3864
7218-D365	4148
7219-D319	3449
7219-D466	3522
7221-D322	3583
7223-D325	3776
7226-D330	3312
7226-D330	3484
7228-D333	3692
7229-D334	3582
7232-D338	3605
7233-D339	4212
7233-D374	4212
7234-D340	3529
7235-D341	3631
7235-D409	3631
7241-D349	3448
7242-D350	3417
7242-D350	3570
7243-D280	3486
7244-D351	3428
7246-D355	4088
7246-D388	4088
7251-D233	3394
7252-D362	3888
7253-D363	3657
7253-D363	3757
7253-D363	3857
7256-D365	4148
7259-D369	3868
7261-D371	3380
7261-D371	3580
7264-D375	3544
7267-D378	3510
7272-D383	4108
7273-D384	3320
7276-D389	3672
7279-D391	3642
7282-D266	3397
7282-D266	3758
7282-D441	3758

FMSI	BESER
NO	NO
7283-D323	4087
7284-D394	3564
7284-D394	3584
7285-D395	3573
7286-D396	3578
7286-D396	3656
7286-D692	3656
7288-D399	3437
7288-D514	3437
7291-D402	3723
7293-D404	3502
7293-D404	3504
7298-D410	3560
7298-D436	3560
7298-D502	3673
7305-D418	3882
7307-D422	4010
7309-D225	3536
7309-D228	3536
7311-D423	3408
7315-D335	3550
7316-D427	3469
7317-D428	3437
7318-D430	3779
7318-D653	3699
7318-D653	3779
7318-D815	3699
7320-D433	3666
7320-D433	3672
7320-D589	3666
7320-D589	3672
7321-D434	3414
7321-D434	3714
7329-D449	3632
7329-D700	3632
7329-D747	3632
7331-D451	3721
7333-D453	3442
7334-D454	3457
7335-D340	3529
7335-D340	3529/1
7336-D456	3600
7342-D462	3700
7344-D464	4087
7345-D465	3696
7347-D363	3757
7347-D363	3857
7349-D469	3700
7350-D470	3426
7351-D471	4080
7353-D473	3640
7355-D474	3691
7356-D475	3750
7357-D476	4086
7357-D697	4086
7357-D718	4086
7358-D477	4182
7358-D712	4182
7359-D510	3598
7359-D510	3766
7361-D375	3544
7367-D487	3430
7371-D491	3596
7372-D492	3641
7373-D493	3609
7375-D496	3695
7381-D501	4072
7382-D503	3704
7389-D510	3598
7389-D510	3766
7391-D109	3335
7398-D518	3771
7399-D518	3771
7400-D519	3423
7400-D519	3423/1
7400-D521	3314
7401-D520	3662
7403-D521	3867
7407-D526	3699
7407-D526	3779

FMSI	BESER
NO	NO
7407-D653	3699
7407-D653	3779
7412-D530	3685
7416-D534	4033
7418-D537	4148
7420-D539	3402
7420-D539	3472
7427-D683	3879
7429-D550	3892
7430-D551	3874
7433-D333	3692
7433-D333	3760
7434-D555	3506
7434-D555	3590
7434-D687	3506
7434-D687	3590
7434-D687	3590/1
7437-D558	3563
7440-D561	3628
7440-D561	3629
7441-D562	3554
7441-D562	3651
7441-D695	3554
7441-D695	3651
7442-D563	4078
7445-D409	3631
7447-D567	3688
7449-D396	3656
7452-D572	4099
7457-D577	3581
7457-D577	3627
7458-D578	3626
7459-D579	3674
7460-D580	3887
7463-D583	3832
7464-D584	3833
7469-D590	3636
7470-D591	4197
7472-D491	3596
7483-D602	3604
7484-D603	3581
7487-D606	3693
7491-D613	4275
7495-D619	3915
7496-D620	3630
7497-D621	3607
7498-D228	3536
7500-D433	3672
7507-D477	4182
7515-D637	3832
7516-D638	3553
7516-D638	3733
7516-D638	3553/1
7517-D639	3909
7523-D645	3658
7525-D561	3628
7526-D603	3581
7528-D648	3558
7528-D745	3558
7529-D649	3740
7529-D766	3740
7532-D652	3781
7538-D561	3628
7541-D661	4214
7544-D665	4274
7546-D668	3577
7546-D668	3598/1
7548-D433	3672
7549-D436	3560
7551-D671	3412
7551-D671	3453
7552-D671	3412
7552-D671	3453
7553-D672	4098
7556-D676	3595
7557-D677	3602
7559-D680	3884
7562-D685	3776
7563-D688	3623
7566-D691	3932

FMSI	BESER
NO	NO
7566-D855	3932
7568-D693	3545
7569-D694	3538
7569-D694	3566
7569-D694	3637
7570-D696	3531
7571-D684	3551
7571-D684	3619
7572-D696	3531
7573-D465	3696
7573-D764	3696
7577-D581	4020
7577-D703	4020
7579-D705	3606
7580-D706	3557
7580-D706	3610
7580-D706	3671
7581-D707	3822
7582-D709	3550
7582-D709	3717
7583-D710	3677
7585-D579	3674
7586-D580	3887
7587-D716	4071
7588-D720	3733
7589-D721	4079
7590-D722	3764
7592-D946	3564/1
7592-D947	3564/1
7597-D730	4197
7598-D730	41974197
7601-D493	3609
7603-D734	4216
7605-D736	3665
7605-D815	3699
7605-D815	3779
7608-D739	3663
7609-D740	3863
7611-D707	3822
7612-D742	3553
7613-D466	3522
7614-D709	3717
7615-D744	4086
7623-D730	41974197
7628-D760	4126
7629-D761	4069
7635-D768	3682
7635-D768	3782/1
7635-D785	4190
7637-D770	3913
7639-D772	3829
7640-D773	3830
7641-D774	4009
7649-D781	3563
7652-D784	4021
7653-D785	4022
7656-D787	4109
7656-D787	4232
7659-D789	3868
7660-D790	4011
7660-D942	4011
7665-D795	3918
7666-D796	3470
7666-D796	3505
7666-D796	3615
7670-D798	3780
7670-D798	4271
7671-D799	3560
7672-D648	3558
7672-D801	3558
7672-D801	3593
7673-D493	3609
7678-D730	41974197
7688-D813	3993
7688-D863	3993
7690-D816	3754
7695-D822	3769
7695-D990	3769
7696-D823	3788
7697-D825	4354

FMSI	BESER
NO	NO
7701-D828	4032
7702-D829	4110
7703-D830	4017
7704-D831	3768
7707-D834	4187
7707-D975	4187
7708-D835	3876
7709-D768	3782
7710-D687	3506
7710-D687	3590/1
7711-D840	3665
7712-D837	4059
7713-D838	4062
7719-D843	4119
7722-D846	3769
7723-D847	4102
7724-D848	4209
7725-D839	4222
7725-D912	4222
7727-D851	3536
7728-D705	3794
7729-D852	3553
7729-D852	3553/1
7730-D853	3863
7732-D856	4012
7738-D862	4158
7739-D864	3843
7741-D866	3955
7742-D867	3892
7743-D868	3893
7745-D870	4276/1
7746-D871	4083
7747-D872	3836
7748-D873	3821
7749-D874	4103
7753-D876	3821
7754-D877	3795
7755-D877	3795
7755-D877	4345
7757-D880	4095
7757-D880	3590/2
7758-D881	4186
7759-D882	4221
7761-D884	4082
7762-D885	3911
7763-D886	3755
7765-D887	3632
7766-D888	4143
7767-D889	4269
7772-D893	3832
7773-D894	3529/1
7774-D897	4327
7774-D966	4327
7779-D902	3687/1
7781-D903	3843
7782-D904	3765
7783-D815	3699
7783-D815	3779
7784-D873	3821
7784-D905	3933
7786-D885	3911
7787-D908	3910
7789-D910	4100
7790-D911	4093
7792-D864	3843
7795-D914	3831
7795-D958	3831
7799-D918	4180
7820-D919	4179
7824-D923	4013
7825-D924	3959
7827-D926	4094
7828-D927	3513
7829-D928	3804
7830-D929	3912
7832-D430	3699
7832-D815	3699
7832-D815	3779
7839-D937	3899
7843-D941	3961

FMSI	BESER
NO	NO
7844-D943	3831
7846-D945	4031
7849-D950	3567
7850-D951	3678
7856-D957	3889
7866-D966	4327
7867-D967	4329
7870-D969	4074
7871-D970	3801
7873-D972	4211
7874-D973	3853
7875-D974	4023
7875-D974	4191
7877-D976	3891
7878-D977	4075/1
7879-D978	4076
7880-D929	3912
7881-D974	4023
7888-D986	4127
7889-D987	4097
7897-D967	4329
7897-D996	4111
7907-D881	4186
8275-D109	3335
8322-1202	3960
846-D1324	4255
8659-1459	3896
8661-1461	3763
8702-D694	3566
8793D1581	3965/1
8979-D602	3604
9131-D825	4354
9242-2012	4115
D156-7045	3806/1
D176-7103	3705
D215-7136	3866
D333-7228	3692
D7602-733	4084
D7724-848	4101
7143-D0290	3635
7156-D0276	3633
7230-D0335	3611
7335-D1112	3529
7365-D0384	3622
7365-D0484	3622
7398-D0518	3661
7427-D1042	4181
7522--D644	3736
7647-D0779	3676
7656-D1506	4109
7657-D0779	3676
7664-D0794	3919
7743-D1343	3893
7773-D1023	3529/1
7773-D1112	3529/2
7779-D1035	3687/1
7796-D1111	4096
7799-D1260	4180
7821-D1151	4208
7873-D1106	4211
7878-D1014	4075/1
7906-D1005	4105
7909-D1006	3670
7912-D1008	4303
7915-D1011	4340
7915-D1083	4340
7915-D1392	4340
7916-D1012	4320
7920-D1017	3529/1
7921-D1018	3842
7930-D1026	3433
7931-D1027	3773
7937-D1033	4331
7939-D1036	3894
7940-D1037	4106
7943-D1039	3886
7945-D1041	4030
7945-D1087	4030
7947-D1044	3885
7950-D1047	4220

FMSI	BESER
NO	NO
7951-D1048	4188
7955-D1051	4153
7961-D1055	4215
7962-D1056	4006
7963-D1057	4018
7964-D1057	4018
7965-D1058	4198
7967-D1061	4346
7968-D1062	3679
7976-D1071	4058
7979-D1074	4001
7983-D1078	4081
7985-D1080	4016
7986-D1081	4332
7987-D1082	4333
7991-D1084	4328
7997-D1092	4185
8200-D1094	3952
8200-D1900	3952
8202-D1098	4293
8203-D1099	3944
8204-D1101	4025
8207-D1007	4075
8211-D1105	4000
8212-D1107	3904
8212-D1319	3904
8213-D1108	3905
8216-D1112	3529/2
8217-D1113	4113
8218-D1114	4213
8223-D1048	4188
8224-D1118	4276
8224-D1586	4276
8229-D1123	4210
8231-D1124	4258
8236-D1058	4198
8238-D1129	3945
8246-D1136	3614
8247-D1137	3507
8250-D1139	3623
8253-D1142	3985
8254-D1143	3938
8254-D1499	3659
8254-D2362	3759
8255-D1145	3539/1
8256-D1146	3503
8256-D1146	3503/1
8256-D1579	3503/1
8266-D1156	3880
8267-D1157	3980
8268-D1158	4296
8270-D1160	4330
8272-D1161	4242
8277-D1192	4029
8284-D1173	3561
8287-D1174	3841
8289-D1175	3877
8290-D1176	3846
8291-D1618	3800/2
8297-D1181	4016
8301-D1184	3958
8305-D1187	3660
8307-D1188	3929
8309-D1190	3636
8310-D1191	4002
8311-D1193	3797
8313-D1008	4303
8316-D1196	3594
8318-D1198	3834
8319-D1199	3463
8325-D1205	3855
8330-D1210	3953
8331-D1211	4077
8331-D1222	3948
8331-D1293	3948
8332-D1212	3949
8332-D1632	3949
8333-D1213	3820
8334-D1214	3900
8335-D1215	3817

FMSI	BESER
NO	NO
8336-D1216	3825
8337-D1217	3873
8340-D1219	3854
8341-D1220	3492
8343-D1223	4240
8348-D1229	3670
8362-D1245	3940
8366-D1014	4075/1
8368-D1250	4125
8369-D1251	3689
8370-D1252	4281
8371-D1253	3681
8374-D1255	3683
8374-D1255	3872
8376-D1257	3986
8379-D1261	3979
8381-D1264	3976
8383-D1268	3962
8385-D1269	3951
8388-D1272	4210
8389-D1273	4005
8390-D1274	4004
8397-D1281	4368
8399-D1283	4277
8405-D1288	3933
8411-D1294	4207
8412-D1295	4039
8413-D1296	4165
8414-D1297	3989
8419-D1303	3996
8420-D1304	3997
8421-D1306	4161
8428-D1313	4061
8428-D1544	4343
8428-D1594	4343
8429-D1314	4157
8430-D1316	3925
8431-D1317	3926
8432-D1318	3963
8433-D0132	3744
8433-D1321	3744
8434-D1322	4259
8436-D1354	3954
8437-D1325	4254
8439-D1327	4005
8449-D1338	4038
8449-D1374	4038
8449-D1737	4282
8451-D1340	4248
8452-D1341	4247
8453-D1342	4249
8455-D1344	3777
8456-D1345	4015
8471-D1362	4040
8471-D1932	4040
8474-D1364	4331
8481-D1327	4005
8489-D1651	4137
8494-D1386	4260
8500-D1391	4256
8505-D1397	4028
8505-D2035	4028
8517--D987	4097
8521-D1192	4029
8524-D1284	4060
8528-D1414	4298
8540-D1424	4127
8542-D1479	4314
8543-D1426	4291
8547-D1430	4150
8549-D1432	4041
8549-D1687	4041
8549-D1815	4041
8553-D1435	3983
8554-D1436	3410
8555-D1437	4138
8595-D1444	4233
8615-D1447	4049
8643-D1453	4310
8655-D1455	4338

FMSI	BESER
NO	NO
8655-D1629	4338
8656-D1456	4135
8658-D1458	3496/1
8658-D1482	3496/1
8662-D1462	3943
8666-D1099	3944
8667-D1467	4008
8667-D1470	4008
8668-D1468	4014
8670-D1160	4330
8671-D1471	3927
8674-D1475	4112
8675-D1476	3617
8679-D1480	3680
8683-D1483	3528
8685-D1486	3946
8688-D1488	4173
8689-D1489	3981
8690-D1490	3820/3
8691-D1491	3983/1
8692-D1492	4123
8695-D1495	3849
8696-D1496	3539
8697-D1497	4230
8697-D1522	4230
8698-D1498	4339
8699-D1500	3848
8700-D1501	3950
8701-D1502	3907
8720-D1511	3974
8724-D1515	4269
8728-D1519	3975
8729-D1520	3648
8729-D1520	4231
8731-D1523	3998
8736-D1528	3920
8737-D1502	3907
8741-D1532	3762
8744-D1295	4039
8747-D1538	3790
8749-D1541	3800
8750-D1542	3950
8751-D1543	4166
8751-D1543	4342
8759-D1550	3930
8760-D1107	3904
8767-D1555	3906
8767-D1555	3906/1
8769-D1557	4149
8775-D1566	4035
8776-D1567	4167
8779-D1570	3820
8779-D1943	3820
8780-D1571	3956
8781-D1572	4037
8784-D1574	3988
8801-D1590	4337
8804-D1592	4229
8806-D1593	4136
8810-D1595	4166
8810-D1595	4342
8815-D1601	3968
8828-D1615	3924
8829-D1616	3826/1
8830-D1618	3800/1
8831-D1619	3643
8833-D1621	3984
8833-D1621	3984/1
8844-D1627	3964/1
8846-D1354	3954
8856-D1455	4338
8856-D1629	4338
8866-D1639	3907
8869-D1642	4118
8870-D1643	3686
8873-D1645	4226
8878-D1650	4319
8883-D1654	4312
8895-D1667	4342
8896-D1668	4226

FMSI	BESER
NO	NO
8900-D1671	3635
8906-D1677	4124
8906-D1736	4308
8908-D1679	4316
8911-D1007	4075
8912-D1682	4170
8914-D1686	4276
8915-D1688	4313
8915-D1782	4313
8916-D1689	4335
8919-D1692	4323
8920-D1694	4326
8922-D1696	3970
8933-D1213	3820
8934-D1710	3903
8936-D1711	4315
8939-D1714	3969
8939-D2041	3969
8942-D1717	3964
8950-D1726	4019
8951-D1727	4202
8952-D1728	4317
8953-D1729	4318
8954-D1730	4204
8972-D1540	3922/3
8974-D1746	4224
8976-D1748	4324
8984-D1765	4134
8989-D1760	4228
8990-D1761	4241
9004-D1774	4351
9006-D1776	4200
9008-D1779	4336
9013-D1786	4175
9014-D1787	4174
9024-D1795	4349
9027-D1797	3784
9028-D1797	3784
9028-D2073	3921
9029-D1798	3529/2
9056-D1820	4142
9066-D1837	4334
9069-D1841	4279
9071-D1540	3922/3
9075-D1847	4353
9086-D1858	3983/2
9140-D1830	4140
9141-D1911	4307
9142-D1721	4121
9151-D1926	3971
9154-D1736	4308
9159-D1935	4321
9162-D1937	3744
9169-D1945	4146
9170-D1946	4160
9171-D1947	4156
9172-D1616	3826/3
9173-D1948	3939
9175-D1950	4205
9179-D1573	3767
9184-D1959	3859
9189-D1964	4176
9193-D1968	4295
9199-D1972	4147
9200-D1973	4155
9208-D1980	4151
9209-D1981	4152
9210-D1982	3856
9212-D1984	4056
9213-D1985	4057
9224-D1994	3923/1
9226-D1996	4231
9227-D1997	3653
9229-D1999	4036
9230-D2000	4227
9235-D2005	3928
9238-D2008	4159
9244-D2013	3967
9245-D2014	3850
9246-D2015	3618/1

FMSI	BESER
NO	NO
9247-D1582	3914
9267-D2033	4162
9283-D1848	4343
9283-D2098	4343
9287-D2054	4040
9302-D2070	3722
9304-D2005	3928
9309-D2075	3931
9323-D2086	4252
9330-D2095	3964
9356-D2120	4201
9359-D2123	4201
9360-D2124	3972
9369-D2131	3473
9386-D2146	3667
9404-D2161	4284
9438-D2197	4357
9442-D2201	4355
9456-D2311	4027
9483-D2247	4350
9484-D2248	4356
9498-D2260	3445
9504-D2264	4145
9551-D2315	4253
9555-D2320	3982
9559-D2326	4265
9579-D2347	4092
9593-D1555	3906
D1144-7433	3692
D1194-8312	4184
D1235-9159	4321
D1473-8672	4325
D1649-8877	4341
D1692-8919	4323
D1722-8946	4286
D1725-8947	4199
D1786-9013	4175/1
D1935-9159	4321
D1953-9180	4364
D1965-9190	4283
D2058-9236	4239
D2153-9396	4251
D2268-9508	4367

FRAS-LE	BESER
NO	NO
PD/1	3320
PD/6	3318
PD/13	3350
PD/16	3327
PD/17	3343
PD/17	3483
PD/18	3625
PD/24	3417
PD/31	3393
PD/32	3421
PD/34	3417
PD/35	3722
PD/36	3545
PD/37	3470
PD/38	3717
PD/39	3549
PD/41	3469
PD/42	3623
PD/46	3846
PD/47	3459
PD/48	3790
PD/52	3505
PD/52	3615
PD/57	3762
PD/60	3569
PD/64	3653
PD/65	3570
PD/66	3617
PD/68	3790
PD/69	3802
PD/73	3682
PD/74	4271

FRAS-LE	BESER
NO	NO
PD/80	3877
PD/104	3679
PD/115	3560
PD/118	3804
PD/132	3640
PD/139	3994
PD/189	3965
PD/328	3444
PD/330	3746
PD/331	3574
PD/331	3914/1
PD/332	3781
PD/333	3463
PD/334	3536
PD/338	3503/1
PD/341	3670
PD/346	3800
PD/347	3856
PD/352	3558
PD/362	3529
PD/367	3566
PD/368	3637
PD/376	3522
PD/377	3448
PD/378	3882
PD/382	3502
PD/383	3685
PD/385	3563
PD/387	3554
PD/387	3651
PD/390	3417
PD/397	3696
PD/404	3686
PD/412	3659
PD/416	3512
PD/416	3512/1
PD/417	3567
PD/418	4182
PD/419	3883
PD/422	3559
PD/423	3426
PD/427	3760
PD/429	3714
PD/431	3410
PD/432	3884
PD/435	3938
PD/442	3754
PD/444	4148/1
PD/449	3704
PD/450	3688
PD/465	3496
PD/469	3622
PD/473	3507
PD/474	3453
PD/475	3687/1
PD/478	3778
PD/480	3755
PD/482	3596
PD/486	4009
PD/488	3578
PD/490	3873
PD/491	3817
PD/493	3607
PD/494	3790/1
PD/497	3877
PD/501	3914
PD/505	3820
PD/505	3820/1
PD/512	3825
PD/514	3931
PD/516	3855
PD/528	3891
PD/532	3766
PD/535	3985
PD/536	4017
PD/538	3892
PD/550	3779
PD/554	4148/1
PD/561	3932
PD/580	4012

FRAS-LE	BESER
NO	NO
PD/585	3933
PD/586	4100
PD/599	4093
PD/601	3849
PD/611	3602
PD/612	4071
PD/613	4079
PD/614	3764
PD/616	4084
PD/619	3913
PD/620	4011
PD/628	4158
PD/629	4153
PD/630	3843
PD/631	3955
PD/633	3968
PD/634	3978
PD/635	3959
PD/638	4074
PD/644	3831
PD/647	4029
PD/648	3854
PD/662	3925/2
PD/665	4001
PD/666	4087
PD/668	3979
PD/669	3956
PD/672	4015
PD/681	3894
PD/689	4037
PD/689	4037/1
PD/695	3693
PD/708	4182
PD/711	3976
PD/725	3993
PD/745	3910
PD/767	3885
PD/771	3975
PD/811	3952
PD/1030	3905
PD/24-A	3417/1
PD/47-A	3540
PD/66-A	3617
PD/67-A	4125
PD/78-A	3617
PD/305-A	3503
PD/318-A	3482
PD/321-A	3428
PD/322-A	3380
PD/326-A	3457
PD/335-A	3466
PD/338-A	3503
PD/339-A	3749/1
PD/340-B	3590/1
PD/352-A	3593
PD/358-A	3595
PD/391-A	3539
PD/411-E	3636
PD/414-E	3750
PD/422-A	3559
PD/458-B	3662
PD/464-B	3771
PD/498-A	3834
PD/509-B	3826/1
PD/511-B	3800/1
PD/592-B	3842
PD/649-E	3935
PD/650-E	3934
PD/652-B	3835
PD/1000-B	3904

FREMAX	BESER
NO	NO
FBP0126	3320
FBP0137	3318
FBP0170	3373
FBP0248	3327
FBP0249	3343
FBP0249	3483
FBP0294	3339
FBP0294	3514
FBP0300	3522
FBP0304	3723
FBP0308	3350
FBP0315	3513
FBP0351	3570
FBP0353	3417
FBP0368	3424/1
FBP0425	3611
FBP0443	3650
FBP0444	3536
FBP0446	3619
FBP0459	3621
FBP0461	3486
FBP0461	3486/1
FBP0462	3444
FBP0464	3380
FBP0467	3441
FBP0473	3410
FBP0476	3466
FBP0477	3495
FBP0492	3422
FBP0494	3573
FBP0498	3603
FBP0537	3449
FBP0539	3417/1
FBP0540	3605
FBP0554	3501
FBP0558	3490
FBP0564	3572
FBP0573	3457
FBP0596	3432
FBP0615	3529
FBP0618	3641
FBP0624	3564
FBP0625	3584
FBP0663	4212
FBP0681	3589
FBP0728	3609
FBP0731	3470
FBP0732	3469
FBP0733	3578
FBP0735	3583
FBP0740	3437
FBP0743	3680
FBP0746	3430
FBP0755	3683
FBP0755	3872/1
FBP0756	3464
FBP0758	3623
FBP0761	3487
FBP0761	3489
FBP0771	3445
FBP0774	3473
FBP0779	3596
FBP0797	3640
FBP0810	3531
FBP0813	3619
FBP0825	3642
FBP0827	3607
FBP0828	3686
FBP0837	3629
FBP0842	4020
FBP0868	3590/1
FBP0881	3539
FBP0885	3819
FBP0887	3878
FBP0902	3528
FBP0906	3558
FBP0911	3608
FBP0914	3559
FBP0915	3595
FBP0920	3503

FREMAX	BESER
NO	NO
FBP0923	3685
FBP0927	3630
FBP0930	3704
FBP0933	3799
FBP0938	3553
FBP0957	3888
FBP0968	3897
FBP0972	3617
FBP0978	3674
FBP0981	3736
FBP0984	3538
FBP0985	3566
FBP0986	4182
FBP0996	3733
FBP1032	3567
FBP1034	3678
FBP1035	3670
FBP1040	3677
FBP1047	3863
FBP1049	3750
FBP1050	3896
FBP1052	4062
FBP1061	3606
FBP1062	4059
FBP1068	3636
FBP1069	3682
FBP1073	3663
FBP1076	3762
FBP1080	4125
FBP1083	3659
FBP1084	3659
FBP1092	3744
FBP1094	3754
FBP1095	4197
FBP1118	4126
FBP1118	4126/1
FBP1119	4069
FBP1130	3681
FBP1131	3804
FBP1133	4281
FBP1134	3861
FBP1136	3755
FBP1139	3676
FBP1142	3821
FBP1143	3768
FBP1145	3919
FBP1146	3918
FBP1152	3795/1
FBP1154	4123
FBP1160	3877
FBP1170	3790/1
FBP1181	3836
FBP1191	3935
FBP1193	3934
FBP1196	4100
FBP1197	4093
FBP1203	3784
FBP1207	3887
FBP1212	3820
FBP1212	3820/1
FBP1213	3820
FBP1213	3820/1
FBP1214	3311
FBP1217	3800
FBP1218	3826/1
FBP1224	3856
FBP1239	4012
FBP1251	3950
FBP1253	3852
FBP1254	3853
FBP1257	4095
FBP1265	4211
FBP1268	3854
FBP1269	3931
FBP1271	3986
FBP1272	3848
FBP1275	3855
FBP1280	3850
FBP1281	3849
FBP1293	3834

FREMAX	BESER
NO	NO
FBP1295	3835
FBP1299	4102
FBP1325	4011
FBP1332	3881
FBP1334	3879
FBP1337	3983
FBP1351	3904
FBP1362	3885
FBP1370	3909
FBP1373	3875
FBP1388	4180
FBP1519	3849
FBP1520	3925
FBP1520	3925/2
FBP1521	3926
FBP1521	3926/1
FBP1522	4210
FBP1538	3972
FBP1584	4141
FBP1703	4198
FBP1738	4087
FBP1739	3693
FBP1741	3993
FBP1747	3891
FBP1748	4152
FBP1749	3371
FBP1751	3771
FBP1753	3673
FBP1754	3453
FBP1758	3648
FBP1763	4132
FBP1763	4172
FBP1763	4172/1
FBP1767	3536
FBP1770	4104
FBP1773	4080
FBP1775	3602
FBP1779	3764
FBP1780	3898
FBP1784	3548
FBP1784	3690
FBP1786	4119
FBP1794	3765
FBP1797	3895
FBP1799	4303
FBP1800	4081
FBP1802	3976/1
FBP1803	4000
FBP1804	3829
FBP1805	3830
FBP1814	4165
FBP1817	3996
FBP1818	3997
FBP1825	4004
FBP1828	4391
FBP1829	4309
FBP1840	3661
FBP1849	4310
FBP1853	4380
FBP1854	4325/1
FBP1857	4382
FBP1867	4061
FBP1883	4006
FBP1885	4124
FBP1886	4258
FBP1890	4049
FBP1896	4226
FBP1900	4110
FBP1903	4073
FBP1907	3512/2
FBP1914	3933
FBP1935	4121
FBP1939	4056
FBP1947	4145
FBP1951	4201
FBP1951	4201/1
FBP1952	4175
FBP1958	4378
FBP-0086	4185
FBP-0760	4372

FREMAX	BESER
NO	NO
FBP-1874	4383
FBP-1973	4174/1
FBP-1981	4283/1
FBP042501	3550
FBP044301	3531
FBP046101	3585
FBP050601	3556
FBP050901	3539/1
FBP057301	3610
FBP071701	3717
FBP073101	3505
FBP073101	3615
FBP073301	3656
FBP074301	3680
FBP075601	3722
FBP081001	3551
FBP083701	3628
FBP090601	3593
FBP093801	3553/1
FBP097101	3618
FBP098401	3637
FBP098501	3566
FBP105001	3896
FBP106101	3794
FBP108301	3938
FBP116901	3820
FBP116901	3820/1
FBP120301	3921
FBP121901	3800/1
FBP125401	3853/1
FBP125601	4138
FBP125601	4138/1

FRI-TECH	BESER
NO	NO
001.0	3316
001.1	3346
002-1	3326/1
003.0	3318
005-0	3329
005-5	3333
006-0	3373
008-0	3393
011-0	3327
011-1	3343
011-1	3483
013.0	3515
013.0	3315/1
013.1	3339
014-0	3374
015-1	3335
016.0	3513
018-0	3423
018-2	3423/1
019-0	3366/1
019-1	3366
022.0	3311
023-0	3405
025.0	3312
025.1	3484
026-0	3378
026-1	3490
029-0	3365
030.0	3625
031.1	3417/1
031-0	3417
031-1	3417/1
032-0	3468
032-1	3466
032-2	3467
033-0	3440
035-0	3424
035-1	3424
037-0	3425
038-1	3381
038-2	3495
039-0	3380
039-1	3487

FRI-TECH	BESER
NO	NO
040-0	3496/1
040-2	3496
041-0	3419
041-1	3429
043.0	3430
044.0	3609
045.0	3621
046-0	3410
047-0	3486
047-0K	3486
047-1	3444
047-1K	3444
047-2	3585
048.0	3536
048-0	3421
049.2	3556
049-0	3441
049-0K	3441
051-0	3474
052-0	3531
052-2	3551
053.2	3523
056.0	3646
056.2	3633
057.0	3689
058.0	3603
059.0	3461
059-1	3540
059-2	3459
059-5	3458
061-0	3432
061-1	3491
063-0	3408
064-0	3422
064-1	3552
068-0	3397
068-1	3758
070-0	3437
072.0	3583
072.1	3572
073-0	3464
073-1	3722
074.1	3375
075.0	3589
077.0	3641
079.0	3623
080.0	3350
080.1	3320
080-1	3320
081.1	3897
082-0	3321
082-1	3340
083-0	3504
083-1	3502
084.1	3618
085.0	3617
086-0	3323
088.0	3317
091.1	3526
092-0	3442
093.0	3573
094.0	3611
094.1	3550
095.0	3570
096.2	3549
098-0	3428
100-0	3482
1005.0	4226
1006.0	4174
1007.0	4175
101-0	3457
101-1	3610
1014.0	4176
1019.0	4227
102.0	3529
102.1	3529/2
102.2	3529/1
102.4	4152
1030.0	4200
1034.0	4282

FRI-TECH	BESER
NO	NO
105.0	3449
1057.0	4224
107.0	3799
1076.0	4030
109.0	3692
109.1	3760
110-0	3402
111-0	3371
112-0	3415
113.1	3537
116-0	3401
117-0	3448
118.0	3882
119.0	3470
122-0	3503/1
122-0W	3503
1222.0	4170
124.1	3584
124-0	3564
125-0	3562
126.0	3563
129.0	3740
130.0	3736
131.0	3560
133.0	3642
136.0	3685
137-0	3426
138.0	3883
140.0	3686
142.0	4078
143-0	3469
144-0	3539
145.0	4214
146.0	3819
147.0	4128
148-0	3558
148-1	3593
151.0	3650
151.2	3649
151.3	3635
152.0	3651
152-0	3554
154.0	3688
156.0	3673
157-0	3595
158-0	3559
159.0	3528
160.0	3878
161.0	3658
162.0	3608
162.1	3643
164.1	3776
166.1	4020
167-1	3553/1
168.0	3596
170.0	4086
173.0	4212
173.1	4212
174.0	3631
176.0	4148
177.1	3872
178.0	3607
180.0	3662
184.0	4104
188-4	3590/1
193.0	3527
195.0	3632
197.0	3700
198.0	3624
199.0	3680
201-0	3473
202-0	3445
203.0	3522
205.0	3640
206.0	3888
207.0	3660
210.0	3746
211-1	3394
213.0	4080
215-0	3566

FRI-TECH	BESER
NO	NO
215-1	3538
215-2	3637
217-0	3615
219.0	3656
220.0	3682
220.1	3782
221.0	3575
221.3	3575/2
222.0	3750
224.0	3896
224.2	3896
226.0	3636
227.0	4182
228.0	3677
233.0	3622
236.0	3414
236.0	3714
237.0	3709
241-0	3499
241-1	3463
246.01	3582
247-0	3400
248-0	3436
249.0	3600
250-0	3395
253.0	3757
253.0	3857
254-0	3370
255.0	3598
255.1	3765
256-0	3501
256-1	3752
257.0	3602
258.0	3884
259.0	3675
261.0	3863
262.0	3659
263.0	3938
264.0	3663
265-0	3567
266.0	3762
272.0	3606
272.1	3794
274-0	3462
276.0	3679
277.0	3994
278.0	3773
282-1	3568
282-2	3569
283.0	3548
283.0	3690
283.2	3790/1
284.0	3717
286-0	3577
287.0	3598/1
288-0	3506
289.0	4088
294.0	3873
295.0	4059
300.0	3754
301.0	3768
302.0	3744
304.0	3764
305.0	4079
306.0	3648
307.0	3704
311.0	3875
312.0	3833
313.0	4010
315.0	3697
316.0	3943
318.0	3919
319.0	4125
320.0	3670
325.0	3877
326.0	3755
327.0	4100
328.0	4093
329.0	3784
330.0	3826/1

FRI-TECH	BESER
NO	NO
330.1	3826
330.3	3826/3
330.4	3826/2
331.0	3800/1
331.1	3800
331.1	4123
331.2	3800/2
331.3	3800/3
334.0	3834
335.0	3835
336.0	3820
337.0	3854
338.0	3931
340.0	3935
341.0	3934
344.0	3950
345.0	3852
346.0	3853
346.1	3853/1
347.2	3848
349.0	3846
350.0	4281
351.0	3836
352.0	3676
353.0	3821
356.0	4062
357.0	3918
359.0	4094
361.1	3412
361-0	3453
362.0	3661
362.1	3771
363.0	3512
366.0	3674
367.0	3887
369-0	3446
370.0	3778
371.0	4087
373.0	3843
374.0	3993
376.0	3511
379.0	3723
382.0	3653
383.0	3802
385.0	4009
386.0	3574
388.0	3898
389.0	3620
390.0	3901
393.0	3696
394.0	3695
396.0	3780
412.0	4271
413.0	4108
414.0	3892
415.1	3893
416.0	3809
419.0	3779
421.1	3932
422.0	3859
429.0	3913
430.0	3928
432.0	3745
434.0	4027
436.0	4112
438.0	3769
439.0	3788
441.0	4072
442.0	4013
444.0	3822
445.0	4158
446.0	4153
447.0	3693
449.0	3777
450.0	4110
454.0	4034
456.0	3710
462.0	3817
463.0	3825
466.0	3890

FRI-TECH	BESER
NO	NO
467.0	4154
468.0	3829
469.0	3830
470.0	3891
471.0	3634
472.0	4071
473-0	3379
477-0	3324
478.0	4109
478.0	4232
480.0	4115
481.0	4155
487.0	3666
491.0	4118
492.0	3889
493.0	3874
495.0	3767
496-0	3407
497.0	3955
497.0	3326/1
498.0	3900
500.0	4084
501.0	3983
501.1	3983/1
501.2	3983/2
506-0	3369
511.0	3667
514.0	3579
516.0	3912
518.0	3985
519.0	3959
520.0	3961
524.0	3951
527.0	3894
528.0	4269
529.0	4028
531.0	3978
532.0	3979
533.0	3793
535.0	3895
540.0	4012
541.0	4011
546.0	3986
548.0	3914
549.0	3801
550.0	3885
551.0	3545
552.0	3921
554.0	3733
555.0	4042
556.0	4211
559.0	3850
560.0	3849
561.0	3856
562.0	3855
563.1	4138
564.0	3904
565.1	4096
567.0	4095
568.0	3841
568.1	3841/1
569.0	3905
570.0	3842
574.0	4180
575.0	3881
576.0	3879
578.0	4097
579.0	4102
580.0	4103
582.0	3630
583.0	3581
585.0	4126
586.0	4069
587.0	3678
588.0	3804
589.0	3681
590.0	3861
591.0	3923
591.W	3923/1
592.0	3924

FRI-TECH	BESER
NO	NO
594.0	3942
595-0	3433/1
595-1	3433
613.0	4101
613.0	4209
616.0	3939
617.0	3940
618.0	3946
620.0	3823
622.0	3831
625.0	4119
626.0	3988
627.0	4017
628.0	3933
632.0	4082
634.0	4105
635.0	4111
638.0	4216
642.0	4031
645.0	3968
646.0	4001
649.0	3976/1
651.0	3795/1
652.0	3605
653.0	3987
654.0	4173
654.1	4173/1
654.2	4173/2
655.0	3984
660.0	4181
661.0	3909
667.0	4137
669.0	4075
670.0	4075
671.0	4076
675.0	3945
681.0	4248
682.0	4247
683.0	3628
683.0	3629
685.0	4240
686.0	4210
687.0	3925
687.1	3965
687.4	3965/1
688.0	3926
689.0	3962
690.0	3963
691.0	4161
693.0	4058
694-0	3416
695.0	3920
696.0	3906
696.1	3906/1
697.0	3907
699.0	3781
702.0	4296
703.0	4186
708-0	3413
710.0	3944
723.0	3972
725.0	3922
725.1	4171
725.1	3922/3
726.0	3820/3
727.0	4092
728.0	4151
730.0	3867
732.0	4006
733.0	4198
734.0	4018
735.0	4016
740.0	3880
741.0	3980
742.0	3510
746.0	4159
747.0	3886
752.0	3765
753.0	4106
757.0	4074

FRI-TECH	BESER
NO	NO
759.0	3952
761.0	3958
762.0	3954
763.0	3953
764.0	4077
765.0	3949
767.0	3910
768.0	3876
769.0	3911
772.0	3915
773.0	4274
775.0	4099
775.1	4275
777.0	4113
778.0	4036
779.0	4081
780.0	4213
781.0	4000
782.0	3929
783.1	3748
786.0	4207
788.0	4208
789.0	4179
790.0	4222
791.0	4259
791.2	4249
792.0	4260
796.0	4157
797.0	3827
799.0	4039
799.1	4039
800.0	4165
801.0	4035
803.0	3960
804.0	3989
805.0	4160
806.0	4156
807.0	3975
808.0	4038
809.1	4122
810.0	3956
812.0	4037
813.0	3903
814.0	3982
816.0	3964
818.0	4141
819.0	4134
820.0	3970
826.0	3797
827.0	4015
828.0	3966
830.0	3967
831.0	3969
832.0	3971
833.0	3964/1
834.0	4142
835.0	4143
837.0	3996
838.0	3997
840.0	4121
848.0	4162
855.0	4230
856.0	4008
857.0	4014
859.0	4149
861.0	4150
862.0	4073
866.0	3749
866.1	3749/1
867.0	4169
868.0	3995
879.0	4005
880.0	4004
886.0	4029
891.0	4054
892.0	4258
895.0	4147
898.0	4146
899.0	3948
903.0	4061

FRI-TECH	BESER
NO	NO
906.0	4135
915.0	4056
916.0	4057
917.0	4132
917.0	4172
918.0	4060
919.0	4124
921.0	4002
923.0	4220
924.0	4215
929.0	3747
944.0	3927
952.0	3998
953.0	4167
954.0	4255
955.0	4256
956.0	3916
957.0	4265
958.0	4049
959.0	4136
960.0	4166
961.0	4233
965.0	4145
966.0	4228
967.0	4241
991.0	4140
992.0	4204
998.0	4201

FRIXA	BESER
NO	NO
FPD02	3510
FPD05	3470
FPD06	3687/1
FPD08	3687/1
FPD09	3744
FPD12	3687/1
FPD13	3951
FPD14	4073
FPD16	3976
FPH01	3502
FPH02	3632
FPH06	3507
FPH09	3648
FPH11	3843
FPH18	3960
FPH20	4028
FPH21	3959
FPK15	3978
FPK17	3961
FPK20	3968
FPK24	4269
FPK25	4039
FPS02	3797
FXD02	3687/1
FXH03	3843
FXH05	3959
FXH08	3502
FXK03	4001
S1H01	3502
S1H20	4028
FPD12R	3894
FPH01R	4087
FPH02F	3632
FPH17R	3993
FPHXGR	3993
FPK01N	3880
FPK04N	4269
FPK10N	3802
FPK14N	4028
FPK15R	3979
FPK17N	4001
FPK20R	3969
FPK25R	4165
FPY03R	3895
S1H17R	3993
S1HXGR	3993
S1K01N	3880
FPH02NF	3959
FPK01NR	3980
S1H02NF	3959

FTE	BESER
NO	NO
BL2513A1	4189

GALFER	BESER
NO	NO
20009	3444
20010	3486
20010	3486/1
20013	3350
20015	3410
20025	3441
20026	3549
20031	3317
20034	3316
20038	3335
20040	3423
20044	3408
20080	3318
20093	3625
20097	3327
20098	3312
20100	3343
20100	3483
20103	3365
20105	3320
20107	3315
20107	3515
20121	3374
20123	3378
20136	3468
20139	3424
20140	3466
20141	3424/1
20144	3467
20147	3440
20158	3503
20160	3339
20160	3514
20167	3466
20179	3425
20180	3459
20182	3536
20183	3543
20184	3432
20194	3417/1
20196	3650
20197	3619
20198	3649
20200	3572
20201	3529
20202	3621
20203	3573
20204	3419
20205	3429
20209	3605
20214	3380
20216	3496/1
20218	3493
20218	3494
20219	3495
20225	3490
20230	3466
20231	3423/1
20232	3523
20240	3680
20243	3740
20246	3536
20247	3433
20249	3773
20252	3609
20253	3444
20256	3457
20257	3430
20258	3470
20265	3593
20266	3593
20271	3717
20272	3469
20273	3531

GALFER	BESER
NO	NO
20274	3551
20286	3464
20290	3545
20292	3528
20295	3487
20295	3489
20297	3470
20298	3608
20299	3556
20301	3595
20302	3559
20305	3643
20306	3689
20308	3578
20309	3513
20315	4020
20317	3623
20320	3558
20326	3539
20327	3596
20328	3819
20329	3873
20332	3589
20334	3417
20336	3506
20343	3618
20344	3585
20347	3553
20349	3540
20350	3799
20351	3897
20354	3563
20355	3538
20357	3575
20360	3617
20362	3750
20365	4214
20367	3879
20368	3881
20369	3736
20371	3733
20372	3909
20373	3680
20374	3994
20376	3466
20386	3335
20388	3569
20390	3637
20394	3567
20395	3680
20396	3678
20397	3670
20398	3677
20400	3581
20401	3863
20408	3566
20415	3656
20419	3606
20421	3896
20422	3663
20423	3722
20426	3569
20427	3568
20434	3548
20434	3690
20440	4125
20441	3676
20442	3821
20445	3942
20448	3790
20451	3636
20454	3878
20455	3659
20458	4062
20464	3938
20470	3853
20473	3617
20474	3564
20478	4112
20480	3918

GALFER	BESER
NO	NO
20491	3800
20494	3679
20496	3790/1
20501	3503
20502	3826/1
20503	3800/1
20505	3754
20507	3755
20511	3896
20512	3590/1
20514	3986
20516	3834
20517	3835
20518	3914
20519	3877
20522	3496
20524	3553/1
20534	3794
20535	3853
20537	4059
20538	3983
20539	3827
20540	4281
20542	3762
20545	3846
20547	3852
20552	3836
20562	4100
20563	4093
20568	4123
20569	3539/1
20574	4102
20575	4103
20576	3950
20578	3919
20580	4095
20582	3681
20583	3804
20584	3861
20586	4346
20588	4181
20595	3921
20597	3784
20599	3853
20602	3935
20603	3934
20613	4173
20614	3800/1
20616	3820
20616	3820/1
20617	3473
20618	3445
20620	3617
20621	3643
20622	3885
20624	3856
20625	4058
20627	3855
20629	3826/1
20630	3984
20631	3575/2
20634	4180
20636	3610
20638	4179
20650	4211
20656	4042
20658	4345
20660	3946
20662	3890
20663	4154
20668	3983/1
20670	3853
20680	3904
20682	3905
20684	3850
20685	3849
20686	3854
20687	3931
20692	3801
20703	3800/1

GALFER	BESER
NO	NO
20706	3841/1
20707	3841/1
20711	4076
20712	3817
20713	3825
20717	4118
20719	3889
20722	3607
20727	3853/1
20730	3820/3
20733	4138
20733	4138/1
20734	3905
20735	3800
20736	3823
20737	3826/1
20738	3800/1
20740	3826/1
20741	3983
20746	4208
20748	3853/1
20751	3923/1
20752	3924/1
20754	4096
20761	3939
20762	3940
20764	3922
20764	3922/1
20765	4042
20766	3926
20766	3926/1
20768	4037
20768	4037/1
20769	3925
20769	3925/2
20770	3962
20770	3962/1
20780	4062
20786	4157
20790	3964
20800	3920
20800	3920/1
20801	3906
20801	3906/1
20801	3906/1A
20801	3906/2
20802	3907
20802	3907/1
20802	3907/1A
20802	3907/2
20803	4181
20806	4207
20810	3904
20812	4159
20817	4160
20819	4156
20825	4092
20825	4092/1
20826	3994
20827	3995
20828	3965
20830	3987
20833	3800/2
20834	4134
20836	4211
20838	3853/1
20842	3950
20844	4389
20850	4388
20859	3970
20860	4210
20866	4038
20868	4137
20873	3922
20873	3922/1
20874	3967
20875	3966
20875	3966/1
20876	3966
20876	3966/1

GALFER	BESER
NO	NO
20877	4240
20880	3320
20889	4161
20897	4146
20901	4094
20905	4056
20906	4132
20906	4172
20906	4172/1
20907	4057
20908	3853/1
20915	4169
20918	3964
20921	3971
20922	3926
20922	3926/1
20924	3836
20925	3836
20926	4230
20928	4008
20933	4248
20934	4248
20935	4249
20937	3972
20938	4151
20938	4151/1
20940	3963
20940	3963/1
20947	4391
20952	4173/1
20953	4014
20955	3642
20957	4121
20963	4247
20972	3841
20975	3954
20979	3976
20987	3826
20988	3956
20993	4390
20994	4077
20995	3984
21004	3624
21006	3683
21006	3872/1
21011	3526
21014	3642
21016	3373
21017	3311
21019	3422
21020	3393
21022	3326
21024	3583
21028	3630
21033	3318
21034	3442
21035	3641
21036	3428
21037	3603
21038	3445
21039	3473
21041	3527
21042	3482
21043	3366/1
21044	3366
21048	3339
21048	3514
21052	3545
21053	3629
21054	3628
21065	3405
21066	3484
21071	3509
21073	3582
21074	3752
21077	3674
21078	3887
21080	3449
21081	3437
21083	3371

GALFER	BESER
NO	NO
21084	3504
21085	3397
21086	3714
21088	3448
21089	3633
21090	3757
21090	3857
21091	3686
21092	3522
21093	3709
21096	3400
21097	4104
21098	3562
21099	3554
21099	3651
21100	3622
21104	4128
21105	3760
21106	3685
21107	3888
21108	3415
21111	3394
21114	3882
21116	3723
21118	3402
21119	3600
21120	3395
21121	4212
21124	3994
21125	3315
21125	3515
21128	3416
21139	3462
21146	3687/1
21148	3744
21149	3436
21150	3436
21151	3746
21158	3696
21159	4148/1
21160	3631
21161	3704
21162	3607
21164	3632
21166	3507
21169	4281
21170	3640
21172	3892
21176	4103
21177	3675
21180	3809
21181	4108
21182	3688
21183	3577
21183	3647
21184	3660
21197	3662
21198	3771
21200	3661
21203	3717
21204	3426
21205	4080
21209	3602
21210	3884
21211	3883
21214	3776
21215	4086
21216	3560
21217	3693
21222	3496/1
21225	3502
21230	3584
21242	3539/1
21243	3496
21244	3943
21246	3453
21249	3768
21257	4126
21257	4126/1
21258	4069

GALFER	BESER
NO	NO
21259	3421
21261	3320
21262	3778
21268	4197
21271	3872
21278	3648
21280	4011
21282	4013
21283	4009
21287	4182
21288	4078
21289	3867
21291	3673
21292	3829
21293	3769
21294	4158
21295	3843
21296	3449
21297	3522
21298	3552
21299	4010
21300	3632
21301	3632
21302	3632
21303	3683
21303	3872/1
21306	3892
21308	4269
21309	4269
21311	3915
21313	3667
21318	3822
21321	3872
21323	4079
21325	4274
21327	4115
21328	3780
21331	3932
21332	3859
21335	3901
21336	3928
21340	4110
21343	4222
21345	4109
21345	4232
21350	4119
21351	3802
21352	4094
21353	4271
21355	4082
21357	3723
21358	3687/1
21367	3833
21368	3823
21369	3873
21375	3830
21378	3512
21378	3512/1
21382	3693
21387	4087
21388	4148/1
21391	3688
21392	4108
21393	4275
21397	4155
21401	4084
21404	3779
21407	3795/1
21408	3933
21414	3951
21415	3831
21417	3959
21418	3961
21419	3993
21420	3900
21422	4031
21423	4028
21424	3978
21425	3979
21428	4101

GALFER	BESER
NO	NO
21428	4209
21431	4017
21433	3912
21434	4152
21435	3913
21436	3764
21438	4027
21441	3788
21442	3825
21444	3891
21446	3955
21447	3892
21448	4106
21455	4198
21456	4001
21457	3968
21458	3985
21459	3872
21460	3697
21461	4153
21466	3895
21467	3944
21471	3969
21472	4016
21473	3976/1
21474	4000
21477	3894
21479	4111
21481	4213
21483	3975
21484	3903
21485	4165
21487	3996
21488	3997
21502	4061
201002	4028
201004	4028
201005	4260
201008	3948
201010	3945
201022	3949
201023	3978
201025	3979
201028	4113
201029	4143
201030	3952
201031	3960
201033	3880
201035	3980
201037	3989
201047	3968
201049	4039
201053	4122
201055	4081
201056	3745
201061	3906/1
201065	3953
201081	4029
201082	4293
201085	3929
201126	3964/1
201127	4152
201134	4157
201135	4157
201145	4149
201148	4150
201149	4150
201152	4383
201183	4141
205135	3829
205171	4011
205192	4082
205196	3764
205213	4119
205238	4012
205241	3955
205242	3910
205262	3831
205274	4105
205279	3830

GALFER	BESER
NO	NO
205295	3673
205322	3915
205333	3891
205344	4110
205373	4009
205404	3693
205418	3912
B1.G120-1393.2	4369

GIRLING	BESER
NO	NO
6101032	3325
6101141	3555
6101723	3439
6101859	3705
6102692	3806
6102849	3646
6102939	3418
6103239	3472
6103273	3580
6104251	3546
6105911	3328
6107499	3450
6107649	3691
6107659	3700
6108709	3657
6108839	3721
6110039	3699
6110179	3692
6110269	3672
6110391	3557
6110492	3590
6110551	3529/1
6110941	3658
6111222	3626
6111961	3529/1
6112212	3594
6112801	3731
6112951	3644
6113301	3529/1
6113524	3763
6113575	3782/1
6113601	3529/2
6113721	3529/1
6113865	3782
6114225	3782
6114391	3529/2
6114402	3590/2
6114581	3529/1
6114671	3529/2
6114872	3618/1
6115041	3529/1
6115151	4040
6115462	4127
6115489	4075/1
6115772	3564/1
6116582	3782
6116784	3984/1
6117591	3561
6118131	3529/2
6118311	4040
6118404	4325
6119321	4326
6119462	4338
6119552	4338
6119731	3529/2
6119842	3782/1
6120121	3546
6120141	4335
6120195	4313
6120291	4323
6120321	4286
6120401	3529/1
6120421	4336
6120702	4334
6120821	4287
6120912	4285
6120992	4284

GIRLING	BESER
NO	NO
6121176	4351
6121302	4338
6121445	4313
6121572	4253
6121828	4307
6121968	4239
6130469	3604
6131549	4148
6131619	3657
6131849	3472
6131929	3832
6132149	3604
6132699	4148
6132789	3876
6134479	4148
6134759	4277
6135179	4242
6135495	4041
6135526	4342
6135605	4324
6135837	4316
6135857	4040
6136136	4229
6136146	4019
6136171	4283
6136186	4321
6144482	4339
6146032	4338
6146042	4338
6146069	4337

GRANTEX	BESER
NO	NO
PAS - 258	3679
PAS - 352	3433
PAS - 429	3773
PAS - 473	3749
PAS - 490	3575
PAS - 549	3994

HELLA	BESER
NO	NO
8DB 355 005-351	3926/1
8DB 355 005-401	3942/A
8DB 355 005-521	3925/2
8DB 355 005-531	3962/1
8DB 355 005-541	3963/1
8DB 355 005-551	4092/1
8DB 355 008-661	4126/1
8DB 355 010-661	3924/1
8DB 355 011-071	3820/1
8DB 355 011-271	4389
8DB 355 011-301	4388
8DB 355 012-381	3988/1
8DB 355 012-771	3920/1
8DB 355 012-781	3907/1
8DB 355 012-781	3907/1A
8DB 355 012-781	3907/2
8DB 355 013-421	4151/1
8DB 355 013-571	4037/1
8DB 355 013-921	4325/1
8DB 355 013-941	4181/1
8DB 355 013-961	3966/1
8DB 355 014-221	4391
8DB 355 014-351	4380
8DB 355 014-361	4379
8DB 355 015-261	4378
8DB 355 015-311	4172/1
8DB 355 015-781	4382
8DB 355 019-771	4381
8DB 355 019-901	4171/1
8DB 355 019-971	4383
8DB 355 020-281	4176/1
8DB 355 020-421	4140/1
8DB 355 020-691	4174/1
8DB 355 020-771	4201/1

HELLA	BESER
NO	NO
8DB 355 020-981	4371
8DB 355 020-981	4373
8DB 355 020-991	4372
8DB 355 021-001	4374
8DB 355 021-281	4171/1
8DB 355 021-471	4312
8DB 355 021-491	4283/1
8DB 355 021-571	4351/1
8DB 355 023-171	4228/1
8DB 355 024-621	4308
8DB 355 025-331	4390
8DB 355 025-341	4390
8DB 355 025-631	4301
8DB 355 025-631	4301/1
8DB 355 025-751	4251/1
8DB 355 031-541	4369
8DB 355 032-921	4350/1
8DB 355 037-681	4370
8DB 355 039-261	3995/1

HELLA-PAGID	BESER
NO	NO
8DB 355 008-051	3594
8DB 355 008-551	3782
8DB 355 008-591	3782/1
8DB 355 010-361	3529/1
8DB 355 018-111	3529/1
8DB 355 018-541	3644
8DB 355 018-751	4127
8DB 355 018-781	4040
8DB 355 018-961	3580
8DB 355 019-981	4343
8DB 355 020-291	4316
8DB 355 020-351	4339
8DB 355 020-361	4323
8DB 355 020-471	4335
8DB 355 020-581	4313
8DB 355 020-601	4368
8DB 355 020-651	3981
8DB 355 020-661	3981
8DB 355 020-741	4019
8DB 355 020-871	4041
8DB 355 021-211	4313
8DB 355 021-291	4336
8DB 355 021-441	4286
8DB 355 021-491	4283
8DB 355 021-511	4335
8DB 355 021-541	4334
8DB 355 021-551	4334
8DB 355 021-711	4341
8DB 355 021-781	4342
8DB 355 021-861	4282/1
8DB 355 021-911	4336
8DB 355 023-021	4285
8DB 355 023-211	4287
8DB 355 023-261	4284
8DB 355 024-951	4364
8DB 355 025-101	4341
8DB 355 025-161	4175/1
8db 355 025-471	4253
8DB 355 025-751	4251
8DB 355 025-861	4246
8DB 355 031-671	4353
8DB 355 032-071	4307
8DB 355 032-921	4350
8DB 355 032-931	4356
8DB 355 032-981	3930
8DB 355 036-861	4355
8DB 355 037-711	4354
8DB 355 037-751	4357
8DB 355 037-801	4239
8DB 355 040-171	4343
C4068	3614
T0015	3450
T0022	3691
T0023	3672
T0032	3721
T0205	3328

HELLA-PAGID	BESER
NO	NO
T0318	3472
T0324	3646
T0330	3472
T0379	3418
T0448	3325
T0804	3601
T0834	3705
T1035	3590
T1076	3626
T1113	3594
T1163	3782
T1165	3782/1
T1194	3590/2
T1263	4148
T1268	3832
T1272	3564/1
T1308	3876
T1326	3618/1
T1351	3529/1
T1352	3561
T1557	3832
T1560	4277
T1577	3529/2
T1644	3529/1
T1742	4242
T1759	3984/1
T1769	4325
T1787	4229
T1859	4325
T1889	3899
T1899	4127
T1935	4242
T2044	4324
T2051	4337
T2053	4338
T2107	4338
T2146	4338
T2149	4326
T2179	4338
T2211	3529/2
T2264	3981
T2265	3981
T3003	3657
T3005	3930
T3009	3699
T3109	3604
T3139	4343
T4036	3806
T4081	3806/1
T5054	3731
T5060	3555
T5067	3658
T5075	3529/1
T5089	3671
T5117	3557
T5131	3644
T5148	4075/1
T5155	4127
T5158	4040
T6028	3492
T6050	3580
T6088	3580
T6112	3546

ICER	BESER
NO	NO
140187	3366/1
140313	3379
140315	3369
140316	3537
140347	3415
140352	3371
140365	3527
140403	3440
140403-700	3440
140405	3513
140444	4087
140503	3413

ICER	BESER
NO	NO
140506	3397
140518	3758
140521	3462
140523	3634
140524	3634
140526	3397
140526-087	3397
140526-87	3397
140542	3603
140544	3526
140604	3436
140610	3446
140614	3414
140614	3714
140620	3482
140648	3605
140648-700	3605
140687	3499
140690	3463
140700	3543
140700-700	3543
140701	3448
140702	3771
140799	3412
140814	3513
140834	3537
140839	3662
140853	3757
140853	3857
140853-700	3757
140853-700	3857
140854	3757
140854	3857
140885	3760
140892	3523
140892-066	3523
140896	3473
140897	3445
140926	3459
140927	3461
140933	3888
140933-700	3888
140965	3749
140968	4182
140979	3685
140990	3674
140991	3887
141002	3882
141007	3560
141009	3714
141021	3436
141022	3436
141026	3673
141027	3693
141028	3366
141049	3553
141049-700	3553
141053	3595
141053-700	3595
141054	3559
141054-700	3559
141089	3453
141089-071	3453
141090	3512
141090	3512/1
141090-201	3512/1
141090-201	3512/2
141096	3883
141102	3678
141102-046	3678
141103	3670
141103-046	3670
141104	3567
141104-046	3567
141111	3507
141111-700	3507
141122	3799
141122-700	3799
141166	3606
141168	4020

ICER	BESER
NO	NO
141170	3777
141175	3544
141208	3575
141208-117	3575
141208-200	3575/2
141224	3574
141224	3914/1
141228	3781
141232	3872
141232-701	3872
141234	3809
141241	3680
141246	3653
141251	4034
141251	4034/1
141266	3648
141284	3861
141288	3681
141289	3804
141315	3848
141315-701	3848
141320	3794
141328	3749/1
141345	3874
141351	3795/1
141351-700	3795/1
141367	3784
141367-701	3784
141425	3553/1
141425-700	3553/1
141442	3856
141455	3802
141498	3921
141498-701	3921
141511	3855
141511-703	3855
141522	3835
141522-066	3835
141523	3834
141523-066	3834
141524	3914
141524-066	3914
141563	3868
141785	3962
141785	3962/1
141785-203	3962/1
141786	3925
141786	3925/2
141786-203	3925/2
141787	3926
141787	3926/1
141787-204	3926
141787-204	3926/1
141792	3920
141792	3920/1
141793	3906
141793	3906/1
141793	3906/1A
141793	3906/2
141793-204	3906/1
141794	3907
141794	3907/1
141794	3907/1A
141794	3907/2
141802	3972
141804	3820/3
141813	4002
141813-202	4002
141823	4151
141823	4151/1
141832	3965
141836	3922
141836	3922/1
141836-203	4171
141836-203	3922/3
141836-203	4171/1
141837	4092
141837	4092/1
141837-203	4092/1
141846	3965/1

ICER	BESER
NO	NO
141849	3963
141849	3963/1
141849-203	3963/1
141953	4162
141999	4056
142000	4132
142000	4172
142000	4172/1
142001	4057
142116	4175
142119	4174
142119	4174/1
142217	4351/1
142219	4227
142284	4350/1
142362	4384
150277	3390
150565	3521
150722	3679
150722-204	3679
150759	3433
150764	3433/1
150894	3773
150894-066	3773
151078	3773
151078-110	3773
151078-111	3773
151078-116	3773
151078-117	3773
151161	3994
151161-116	3994
151161-117	3994
151161-203	3994/1
151640	3823
151640-117	3823
151880	3995
151880-203	3995/1
151958	4169
151958-117	4169
180009	3455
180011	3350
180020	3320
180033	3311
180038	3326
180041	3346
180060	3333
180060-067	3333
180067	3317
180068	3316
180070	3840
180088	3373
180091	3377
180092	3416
180093	3312
180101	3329
180102	3329
180120	3321
180121	3322
180127	3323
180130	3313
180140	3315
180140	3515
180142	3373
180155	3393
180162	3318
180164	3709
180169	3327
180169	3375
180170	3335
180185	3710
180197	3315
180197	3515
180198	3405
180207	3376
180219	3343
180219	3483
180221	3327
180229	3324
180230	3423
180231	3661

ICER	BESER
NO	NO
180235	3374
180235-700	3374
180248	3340
180255	3312
180257	3527
180258	3329
180269	3421
180272	3481
180281	3378
180281-700	3378
180284	3404
180286	3407
180293	3314
180301	3416
180302	3326/1
180307	3365
180311	3509
180317	3370
180318	3378
180323	3339
180323	3514
180324	3339
180324	3514
180329	3417
180337	3536
180337-700	3536
180348	3579
180353	3418
180375	3381
180397	3468
180402	3484
180409	3394
180410	3417/1
180413	3419
180413-700	3419
180414	3429
180414-700	3429
180415	3466
180415-700	3466
180417	3493
180417	3494
180417-066	3493
180417-066	3494
180418	3424/1
180420	3611
180422	3572
180423	3573
180448	3490
180448-700	3490
180451	3621
180454	3410
180454-066	3410
180454-072	3410
180454-073	3410
180455	3624
180455-700	3624
180457	3381
180459	3486
180460	3444/1
180461	3441
180462	3402
180467	3620
180469	3442
180473	3625
180474	3424
180484	3633
180494	3752
180497	3400
180509	3395
180510	3408
180510-700	3408
180511	3315
180511	3515
180517	3550
180543	3549
180552	3422
180552-700	3422
180553-203	3474
180554	3503
180554-700	3503

ICER	BESER
NO	NO
180555	3474
180555-700	3474
180556	3428
180602	3401
180611	3449
180616	3504
180619	3701
180622	3372
180633	3380
180646	4087
180649	3496/1
180660	3467
180671	3423/1
180692	3717
180696	3457
180696-700	3457
180723	3495
180725	3746
180729	3432
180729-203	3432
180729-700	3432
180734	3776
180737	3406
180741	3419
180745	3430
180745-700	3430
180750	3582
180751	4212
180752	4212
180752-701	4212
180758	3470
180766	3609
180766-006	3609
180766-6	3609
180766-700	3609
180771	3622
180773	3564
180775	3583
180776	3589
180778	3583
180784	3536
180784-700	3536
180787	3680
180789	3529
180789-700	3529
180790	3464
180795	3437
180797	3696
180798	4148/1
180801	3563
180803	3562
180803-700	3562
180804	3660
180804-700	3660
180807	3469
180809	3649
180809-700	3649
180812	3873
180835	3650
180835-700	3650
180836	3619
180836-700	3619
180837	3641
180838	3424/1
180858	3623
180860	3683
180860	3872/1
180860-701	3683
180860-701	3872/1
180861	3629
180861-200	3628
180862	3556
180862-700	3556
180864	3487
180864	3489
180865	3378
180874	3596
180878	4104
180879	3640
180882	3766

ICER	BESER
NO	NO
180883	3584
180887	3502
180916	3558
180917	3593
180918	4214
180920	3819
180921	3878
180922	4128
180924	3608
180928	3491
180930	3539
180930-700	3539
180932	3528
180937	3598
180938	3545
180950	3635
180950-700	3635
180951	3600
180953	3608
180958	3686
180959	3607
180960	4212
180962	3631
180969	3723
180970	3522
180972	3408
180972-700	3408
180974	3630
180976	3581
180981	4108
180988	3736
180989	3733
180989-700	3733
180993	3503
180993-204	3503/1
180993-700	3503
180998	3426
180999	4078
181000	4080
181001	3745
181005	3554
181005	3651
181011	3551
181011-700	3551
181012	3531
181012-700	3531
181018	3643
181019	3704
181023	3717
181045	4212
181048	3585
181048	3585/1
181051	3578
181084	3623
181092	3510
181094	3577
181094	3647
181101	3779
181107	3750
181107-700	3750
181110	3833
181115	3677
181116	3602
181117	3675
181117-700	3675
181119	3538
181125	3617
181128	3665
181130	3566
181133	3695
181134	3511
181134-700	3511
181136	3636
181136-700	3636
181139	3506
181141	3656
181142	3570
181144	4087
181152	3505
181152	3615

ICER	BESER
NO	NO
181153	3598/1
181155	3642
181155-700	3642
181157	3896
181157-203	3896
181157-700	3896
181158	3627
181159	3863
181165	4062
181165-700	4062
181178	3637
181179	3697
181184	3682
181185	3740
181187	4148/1
181204	3659
181204-702	3659
181210	3554
181210	3651
181215	3458
181217	3659
181217-702	3659
181229	3722
181233	4125
181233-701	4125
181236	4059
181236-701	4059
181243	3618
181247	4079
181249	3762
181255	3938
181255-702	3759
181255-702	3938
181259	3863
181260	3687/1
181262	3744
181263	3687/1
181264	3754
181265	3755
181265-700	3755
181267	3632
181268	3778
181273	3748
181274	4281
181274-704	4281
181276	4126
181276	4126/1
181277	4069
181282	3618
181282-700	3618
181283	3617
181285	3610
181285-700	3610
181287	4155
181287-703	4155
181297	3919
181298	3918
181299	3717
181300	4010
181304	3768
181308	3552
181309	3780
181310	3663
181311	3676
181312	3821
181312-202	3821
181317	3419
181317-700	3419
181318	3764
181319	3884
181332	3872
181335	3943
181335-203	3943
181340	3898
181342	3901
181343	3877
181348	3897
181353	3846
181353-701	3846
181358	3685

ICER	BESER
NO	NO
181366	3470
181369	3836
181369-701	3836
181370	4009
181372	3843
181374	3892
181375-202	3893
181380	4100
181380-701	4100
181381	4093
181381-701	4093
181386	3769
181388	3820
181388	3820/1
181388-701	3820
181388-701	3820/1
181390	4101
181390	4209
181391	4103
181395	4095
181396	3590/1
181398	4011
181406	3934
181406-701	3934
181414	3866
181415	3864
181419	3935
181419-701	3935
181428	4094
181428-701	4094
181429	3800
181429-701	3800
181431	3950
181432	3852
181433	3853
181436	4197
181438	3539/1
181438-700	3539/1
181439	3938
181439-702	3938
181440	3800/1
181440-203	3800/3
181440-701	3800/1
181441	3790
181443	4271
181444	3826/1
181444-203	3826/3
181444-701	3826/1
181445-208	4301
181445-208	4301/1
181448	3859
181450	3854
181450-700	3854
181451	3931
181451-700	3931
181452	3928
181502	4123
181502-703	4123
181507	3900
181508	3790/1
181509	3933
181512	4012
181513	3817
181514	3825
181517	4010
181518	3548
181518	3690
181519	4158
181520	4153
181521	3932
181526	3846
181526-701	3846
181527	4097
181530	3881
181532	4119
181534	3983
181534-700	3983
181535	3849
181535-701	3849
181536	4211

ICER	BESER
NO	NO
181537	3801
181540	4028
181542	4118
181543	4109
181543	4232
181548	3879
181549	3879
181552	3879
181553	3986
181553-701	3986
181557	3985
181558	3831
181565	4222
181566	3951
181567	3904
181572	3850
181572-701	3850
181573	3890
181577	4180
181578	3889
181579	3849
181579-701	3849
181580	3767
181581	4115
181583	3769
181584	4105
181587	4112
181589	4027
181592	4042
181593	4152
181593-703	4152
181596	3569
181597	4138
181597	4138/1
181597-701	4138
181597-701	4138/1
181600	3905
181600-703	3905
181604	3569
181606	3978
181607	3788
181610	4269
181611	4076
181614	4345
181614-700	4345
181617	3885
181617-202	3885
181617-203	3885
181618	3765
181620	4075
181632	3822
181635	3797
181643	3961
181644	3959
181645	3993
181646	3895
181648	3826
181648-701	3826
181649	3849
181649-701	3849
181651	3853/1
181654	4096
181656	3939
181656-700	3939
181657	3940
181657-700	3940
181658	3946
181658-703	3946
181659	4173
181659-700	4173
181660	4293
181660-700	4293
181661	3944
181661-700	3944
181663	4388
181664	4389
181664-700	4389
181665	3891
181667	4303
181673	3800

ICER	BESER
NO	NO
181673-701	3800
181674-203	3842
181675-701	3923/1
181676	3924
181676-701	3924/1
181679	4137
181682	4093
181682-701	4093
181683	4346
181684	4181
181685-202	4181/1
181687	4179
181688	4154
181689	3910
181695	4159
181696	4074
181697	4081
181702	3987
181702-701	3987
181703	4017
181705	4082
181706	3911
181708	4001
181709	3968
181710	3969
181711	3880
181712	3980
181713	4016
181714	3976/1
181715	4000
181717	3912
181719	4084
181720	3979
181722	4058
181722-701	4058
181723	3829
181727	3894
181729	3984
181729-701	3984
181734	3830
181736	3913
181743	3853
181744	3853/1
181746	4106
181747	3929
181748	3983/1
181751	4111
181753	4188
181754	4189
181759	4213
181760	3953
181761	3949
181762	4077
181764	3948
181765	3984
181771	4210
181774	3958
181775	4161
181778	3841/1
181779	3841
181784	3975
181789	3945
181790	3945
181794	3907
181794	3907/1
181794	3907/1A
181794	3907/2
181796	4240
181798	3976
181800	4036
181801	4157
181806	3955
181809	3800/2
181810-203	3826/2
181817	4072
181820	4013
181821	4248
181822	3988
181822	3988/1
181823	4151

ICER	BESER
NO	NO
181823	4151/1
181824	3903
181825	3853/1
181826	4039
181826-201	4039
181827	4165
181828	3960
181829	3989
181834	4038
181835	4260
181838	3933
181843	4173/1
181843-203	4173/2
181851	3970
181852	3964
181854	3966
181854	3966/1
181854-200	3966
181854-203	3966/1
181855	3967
181856	4134
181857	4390
181863	4247
181865	4249
181867	3982
181868	4029
181869	3956
181870	4037
181870	4037/1
181873	3747
181874	3996
181875	3997
181876	4143
181881	4122
181881-200	4122
181883	3827
181887	4160
181888	4156
181891	4211
181892	4147
181895	3971
181899	3954
181901	3933
181901-203	3933
181903	4121
181904	4142
181908	4005
181909	4004
181911	4035
181913	4149
181915	3964/1
181916	4146
181917	4391
181919	4207
181921	4309
181924	4141
181929	4150
181936	4277
181939	4008
181939-202	4008
181942	4230
181942-202	4230
181943	4014
181946	3944
181948	3969
181954	4060
181955	3980
181956	4291
181957-203	4314
181967	4135
181972	4208
181973	4208
181974	3886
181976	4061
181982	4255
181983	4256
181987	4310
181998	4378
182002	4380
182003	3952

ICER	BESER
NO	NO
182003-200	3952
182004	4325/1
182005	4379
182005-200	4379
182005-202	4379
182006	4167
182008	4389
182019	3983/2
182019	3983/3
182020	4382
182027	4145
182029	4166
182030	4220
182031	4215
182034	4265
182035	4136
182048	4381
182049	4383
182060	4113
182065	4378
182066	3998
182067	4006
182068	4198
182069	4018
182074	4015
182075	4031
182078	4202
182082	4124
182088	4258
182099	4241
182108	4204
182110	4200
182111-204	4228
182111-204	4228/1
182115	4140
182115-202	4140/1
182126	4315
182129	4176
182129	4176/1
182131	4201
182131	4201/1
182131-067	4201/1
182133	3748
182134	4226
182136	4233
182139	4184
182153	4312
182161	4374
182162	4372
182166	4371
182166	4373
182169	4318
182171	4317
182180	4205
182181	4282
182188	4283/1
182189	4295
182198	4270
182202	4308
182214	4349
182222	4287
182222-208	4287
182268	4251/1
182268-204	4251/1
182294	4370
182297	4369
182342	4376
182822	4142

INFINITI	BESER
NO	NO
41060-5DA0B	4326
41060-HG00B	4326

INTERBRAKES	BESER
NO	NO
PNT034	3872/1
PNT102	3494
PNT116	3512/1
PNT208	3820/1
PNT379	4138/1
PNT389	4126/1
PNT422	3486/1
PNT483	3489
PNT622	3486/1
PNT639	4034/1
PNT716	3647
PNT805	4148/1
PNT957	3647
PNT987	3820/1
PNT0302	4369
PNT0621	3906/1
PNT0621	3906/1A
PNT0621	3906/2
PNT0641	4151/1
PNT0751	4172/1
PNT0771	4201/1
PNT0931	4390
PNT1002	4301/1
PNT1261	3983/3
PNT1271	4171/1
PNT1361	4379
PNT1441	3512/2
PNT1461	4380
PNT1471	4383
PNT1621	3907/1
PNT1621	3907/1A
PNT1621	3907/2
PNT208K	3820/1
PNT2371	4382
PNT2521	4388
PNT2671	4391
PNT2741	4181/1
PNT2991	4283/1
PNT3241	4148/1
PNT3581	4371
PNT3581	4373
PNT3781	4374
PNT3921	3926/1
PNT4101	4148/1
PNT4211	4097/1
PNT4302	4370
PNT4871	4176/1
PNT4891	4351/1
PNT4921	3963/1
PNT5131	4037/1
PNT5641	3966/1
PNT5721	3925/2
PNT5921	3962/1
PNT6421	3924/1
PNT6781	4388
PNT6871	4174/1
PNT6921	4092/1
PNT6971	4140/1
PNT7001	3914/1
PNT7231	3820/1
PNT7502	4251/1
PNT7602	4228/1
PNT8161	4325/1
PNT8381	4372
PNT8811	3820/1
PNT8821	3922/1
PNT9011	3942/A
PNT9161	4378
PNT9371	4381
PNT9421	4389
PNT9521	3920/1
PNT9941	3988/1

IRQ	BESER
NO	NO
900001	3318
900006	3317
900007	3316
900009	3311
900052	3327
900067	3321
900075	3315
900075	3515
900076	3339
900076	3514
900078	3423
900098	3393
900103	3405
900117	3527
900121	3340
900123	3421
900124	3365
900127	3410
900133	3513
900135	3468
900138	3417
900140	3440
900141	3625
900142	3378
900151	3466
900153	3467
900158	3493
900158	3494
900162	3381
900166	3424/1
900173	3417/1
900178	3611
900180	3486
900180	3486/1
900181	3380
900182	3573
900184	3572
900185	3621
900186	3624
900187	3619
900188	3536
900189	3441
900190	3444
900191	3495
900192	3379
900199	3484
900213	3650
900214	3635
900215	3649
900222	3474
900223	3526
900228	3423/1
900229	3543
900230	3603
900232	3371
900233	3490
900234	3428
900235	3422
900236	3758
900238	3459
900239	3432
900244	3709
900248	3509
900254	3523
900258	3641
900259	3589
900263	3609
900264	3449
900265	3400
900267	3463
900269	3564
900274	3457
900277	3757
900277	3857
900281	3448
900282	3560
900299	3470
900300	3469
900302	3717
900304	3529

IRQ	BESER
NO	NO
900306	3430
900308	3563
900310	3464
900313	3680
900321	3882
900323	3436
900324	3578
900326	3487
900326	3489
900332	3473
900333	3445
900335	3633
900336	3501
900338	4212
900341	3504
900349	3683
900349	3872/1
900351	3752
900358	3632
900366	3522
900386	3401
900388	3407
900390	3666
900409	4104
900410	3562
900416	3415
900420	3623
900431	3662
900432	3531
900444	3402
900456	3714
900458	3551
900471	3634
900473	3482
900474	3462
900484	3679
900491	3491
900497	3640
900507	3733
900510	3539
900520	3596
900538	3983/1
900551	3831
900554	4119
900555	3988
900555	3988/1
900556	3933
900560	4082
900562	4105
900563	4111
900569	3968
900570	4001
900573	3976/1
900576	3987
900577	4173
900578	3984
900580	4389
900585	4181
900588	3909
900598	4137
900778	4020
900782	3682
900786	3678
900789	3507
900790	3570
900792	3636
900813	3442
900817	3670
900818	3567
900821	3740
900825	4062
900828	3566
900830	3884
900831	3538
900834	3750
900838	3577
900838	3647
900843	3512
900843	3512/1
900845	3799

IRQ	BESER
NO	NO
900863	3585
900867	3554
900867	3651
900874	3583
900886	3528
900887	3503/1
900894	4128
900898	3766
900908	3408
900922	3502
900924	3686
900935	3593
900936	3558
900938	3608
900939	3617
900943	3556
900944	3878
900945	3819
900965	3553
900968	3673
900969	3883
900975	3688
900976	3685
900980	4182
900991	3674
900992	3888
900995	3559
900996	3595
901009	4260
901011	4259
901012	4222
901021	4208
901023	4179
901024	4181/1
901025	4207
901034	4006
901035	4018
901039	3867
901041	3964
901044	3820/3
901047	3922
901047	3922/1
901052	4141
901053	3510
901055	3925
901055	3925/2
901057	4173/1
901065	3826
901072	3781
901075	4186
901076	3853/1
901078	4161
901079	4058
901080	4157
901082	3416
901083	3920
901083	3920/1
901084	3906
901084	3906/1
901084	3906/1A
901084	3906/2
901085	3907
901085	3907/1
901085	3907/1A
901085	3907/2
901087	4159
901090	4160
901091	4156
901096	3980
901097	3960
901098	3989
901100	3886
901101	3965
901102	4092
901102	4092/1
901104	3852
901107	4106
901108	4016
901110	4039
901111	4165

IRQ	BESER
NO	NO
901112	4035
901114	3969
901115	3880
901119	3412
901120	3512/2
901121	4293
901122	3944
901126	3413
901127	4099
901129	3915
901132	4113
901134	4274
901135	4275
901143	4303
901146	4247
901147	4249
901149	3628
901150	4210
901151	4240
901153	3962
901153	3962/1
901154	3926
901154	3926/1
901155	3963
901155	3963/1
901157	3748
901163	3975
901164	3765
901171	3797
901172	3965/1
901178	4074
901179	3952
901182	4038
901183	4015
901186	3976
901189	3800/2
901197	3970
901209	3966
901209	3966/1
901210	3967
901212	4134
901217	3827
901232	4036
901235	4081
901236	4213
901237	4000
901242	3956
901244	4037
901244	4037/1
901245	3910
901246	3911
901249	3903
901251	3982
901253	3949
901254	4077
901255	3953
901258	3958
901259	3954
901274	4390
901276	3945
901326	3505
901326	3615
901347	4017
901350	3622
901354	3637
901355	4076
901363	3575
901364	3777
901384	3659
901385	3744
901395	3820
901395	3820/1
901400	3856
901408	4125
901438	3453
901487	3778
901492	3746
901500	3790/1
901501	3964/1
901502	3997

IRQ	BESER
NO	NO
901509	3877
901514	3784
901516	3780
901517	3836
901525	4009
901527	3846
901530	4093
901531	3425
901534	3590/1
901537	3935
901540	3826/1
901541	3800/1
901590	4088
901591	3722
901621	3419
901628	3598/1
901629	3602
901634	3822
901639	3896
901647	3938
901672	3754
901673	3648
901689	3755
901704	4069
901708	3762
901714	3768
901731	4281
901732	4094
901786	4248
901790	3629
901864	4198
905002	3677
905004	3429
905007	3630
905008	3873
905011	3675
905013	4197
905014	3809
905015	3931
905018	3643
905020	3581
905021	3854
905022	4095
905023	3374
905026	4148/1
905031	3550
905033	3312
905034	3329
905039	3794
905040	3804
905041	3861
905047	3333
905051	3760
905052	3397
905057	3681
905058	3607
905059	3553/1
905061	3736
905066	3863
905067	3606
905071	3323
905074	3618
905077	3879
905081	3610
905084	3496/1
905085	4010
905090	3872
905092	3776
905102	3642
905103	3660
905104	3545
905105	4345
905106	3934
905109	3549
905112	3539/1
905114	3598
905116	3366
905117	3897
905119	3696
905121	3687/1

IRQ	BESER
NO	NO
905122	4102
905123	3663
905126	3896
905127	4103
905128	4126
905128	4126/1
905129	3887
905137	3343
905137	3483
905141	3369
905144	3779
905147	3366/1
905148	3676
905149	4123
905152	3943
905155	3704
905167	4100
905168	3605
905169	3723
905171	4108
905174	3821
905175	4059
905176	3769
905182	4151
905182	4151/1
905184	3972
905185	3848
905188	4012
905191	3921
905192	3320
905196	4138
905196	4138/1
905197	3346
905198	3373
905202	3710
905205	3335
905215	3350
905224	3324
905226	3370
905228	3579
905232	3540
905234	3568
905237	3620
905242	3395
905246	3584
905247	3771
905248	3994
905252	3631
905254	3499
905261	3446
905264	3656
905265	3600
905266	3437
905271	3426
905277	3433/1
905278	3433
905287	4214
905295	4080
905297	3511
905298	3745
905308	4078
905309	3582
905315	4087
905318	4072
905324	3575/2
905328	3697
905331	3919
905332	3918
905336	3795/1
905345	3833
905350	3800
905352	3817
905353	4086
905356	3695
905363	3950
905364	3853
905365	4158
905366	4153
905369	4112
905370	4211

IRQ	BESER
NO	NO
905371	3802
905372	3986
905375	4027
905376	3855
905377	4079
905378	3764
905379	3850
905380	3849
905382	3898
905383	3901
905385	4110
905386	3834
905387	3835
905388	3914
905390	4101
905390	4209
905392	4097
905392	4097/1
905393	3801
905394	3955
905396	4109
905396	4232
905397	3843
905398	4269
905399	4271
905400	3892
905401	3928
905403	3829
905404	4011
905407	3881
905408	3983
905416	3904
905417	4042
905419	3326
905432	3496
905441	3552
905450	4152
905468	4212
905473	3394
905512	3773
905517	3569
905518	3548
905518	3690
905519	3506
905522	3875
905538	3993
905541	3653
905543	3574
905543	3914/1
905552	3859
905556	3913
905557	3788
905558	4013
905560	3693
905561	4034
905561	4034/1
905566	3825
905569	3890
905570	4154
905571	3830
905572	3891
905573	4071
905576	4155
905578	4118
905579	3889
905580	3874
905581	3767
905582	3900
905584	4084
905588	3667
905591	3912
905593	3985
905594	3959
905595	3961
905599	3951
905602	3894
905603	4028
905605	3978
905606	3979
905609	3895

IRQ	BESER
NO	NO
905615	3885
905621	4096
905622	3841
905623	3841/1
905625	3905
905626	3842
905631	4346
905633	4180
905662	3924
905664	3942
905666	3942/A
905667	3932
905673	3971
905675	4142
905676	4143
905678	3996
905681	4121
905682	4391
905717	3939
905718	3940
905719	3946
905892	3929
905993	3823
905994	4031
905996	4216
905997	4388
906017	3790
906019	3826/3
906020	3800/3
906068	4162
906080	4230
906081	4008
906082	4014
906084	4149
906086	4150
906087	4073
906091	3749
906092	3749/1
906093	4169
906095	3995
906108	4005
906110	4004
906116	4029
906121	4054
906122	4258
906126	4147
906129	4146
906130	3948
906134	4061
906137	4135
906154	4056
906155	4057
906156	4132
906156	4172
906156	4172/1
906170	3893
906171	3983/2
906171	3983/3
906172	4122
906176	3927
906186	4060
906187	4124
906189	4002
906191	4220
906192	4215
906196	3747
906201	4380
906202	4378
906204	4325/1
906205	4379
906209	4171
906209	3922/3
906209	4171/1
906211	3906/1
906214	4314
906218	3458
906226	4265
906229	4166
906235	4145
906237	4241

IRQ	BESER
NO	NO
906243	3998
906244	4167
906245	4255
906247	4256
906248	3916
906250	4049
906251	4136
906253	4233
906259	4228
906259	4228/1
906266	4309
906269	3826/2
906278	4173/2
906287	4140
906288	4204
906291	4381
906292	4382
906293	4383
906301	4310
915068	3486
915069	3444/1
915070	3585
915070	3585/1
915071	3441
915149	3923/1
915150	3924/1
915208	3503

JAPANLINE	BESER
NO	NO
6000	3421
6001	4281
6002	3446
06005	4126/1
6005	4126
6006	4012
6010	4104
6012	4128
6015	3562
6017	3888
6020	3507
6030	3662
6057	4182
6058	4011
6061	4197
6062	4182
6115	3660
6132	3771
16000	3577
16000	3647
16001	3394
16002	3779
16006	3758
16007	3859
16009	4010
16011	3397
16033	3758
16034	3415
16037	3760
16049	3766
16094	3632
16107	4010
16123	4087
26004	3829
26005	3768
26006	3769
26007	3769
26008	4158
26009	3822
26013	3817
26035	3402
26036	3371
26040	3714
26055	3673
26057	3560
26064	3554
26064	3651
26065	4086

JAPANLINE	BESER
NO	NO
26103	4072
26104	3830
26105	3776
26107	3788
26198	3693
36001	3874
36002	3623
36003	3687/1
36005	4009
36006	3744
36007	3802
36009	3653
36010	3709
36012	3767
36013	3723
36014	3978
36015	3951
36016	3968
36031	3437
36039	3502
36041	3522
36042	3640
36045	3723
36098	3740
36104	3979
36107	3833
46000	3696
46001	3752
46004	3509
46014	3501
46018	3582
46019	3501
46021	3695
46022	3631
46024	3582
46025	3686
46026	3631
46027	3683
46027	3872/1
46032	3704
46035	3607
46093	3696
46102	4212
46104	4212
46105	4148/1
46108	4148/1
56000	3809
56001	3675
56005	3778
56007	3648
56008	3892
56009	3843
56010	4271
56011	3632
56024	3400
56025	3401
56027	3448
56030	3622
56098	3622
56099	3685
56101	4084
56102	4087
56103	4108
56106	3993
56107	4108
56199	3688
66001	3436
66004	3898
66005	3746
66006	3600
66007	3436
76000	4079
76003	3395
76005	3426
76008	4078
76101	4080
86000	3745
86001	4027
86002	3884
86004	3602

JAPANLINE	BESER
NO	NO
86006	3882
86097	3883
96001	3446
96002	3462
96004	3757
96004	3857
96006	3623
96099	3674
96101	3895
96199	3887

JAPANPARTS	BESER
NO	NO
JPA-000	3421
JPA-003	3872
JPA-004	3955
JPA-005	3872
JPA-010	4104
JPA-011	4211
JPA-012	4128
JPA-013	3983
JPA-015	3562
JPA-017	3888
JPA-018	4016
JPA-031	3964/1
JPA-032	3619
JPA-039	4140/1
JPA-056	3867
JPA-057	4182
JPA-090	4031
JPA-097	4011
JPA-099	4197
JPA-101	3394
JPA-106	3370
JPA-109	3848
JPA-111	3397
JPA-114	3659
JPA-115	4143
JPA-116	3369
JPA-117	3965/1
JPA-121	3952
JPA-122	3942/A
JPA-123	4038
JPA-127	4015
JPA-129	3909
JPA-130	4017
JPA-133	3758
JPA-134	3415
JPA-137	3760
JPA-139	3760
JPA-143	3779
JPA-149	3598
JPA-153	4002
JPA-154	3932
JPA-156	4056
JPA-176	4115
JPA-177	4010
JPA-178	3859
JPA-183	3779
JPA-189	3779
JPA-190	3562
JPA-191	3577
JPA-191	3647
JPA-194	3632
JPA-195	3758
JPA-198	3577
JPA-198	3647
JPA-199	3882
JPA-203	3769
JPA-204	4112
JPA-205	3891
JPA-206	3890
JPA-209	4105
JPA-210	3710
JPA-211	3817
JPA-213	4013
JPA-215	3769
JPA-217	3987

JAPANPARTS	BESER
NO	NO
JPA-218	3910
JPA-219	3958
JPA-224	3379
JPA-225	3982
JPA-230	4077
JPA-233	3634
JPA-234	3369
JPA-235	3402
JPA-236	3371
JPA-239	3634
JPA-240	3714
JPA-242	4088
JPA-243	3903
JPA-247	3714
JPA-248	3777
JPA-250	3956
JPA-253	3379
JPA-254	3560
JPA-257	3402
JPA-261	3554
JPA-261	3651
JPA-262	4088
JPA-264	3554
JPA-264	3651
JPA-265	4086
JPA-268	3829
JPA-269	3953
JPA-272	3996
JPA-273	4082
JPA-277	3948
JPA-280	4158
JPA-281	3768
JPA-286	3777
JPA-288	3673
JPA-289	3554
JPA-289	3651
JPA-290	3554
JPA-290	3651
JPA-292	3673
JPA-300	3885
JPA-302	3877
JPA-305	4118
JPA-307	3889
JPA-309	4317
JPA-310	3709
JPA-311	3780
JPA-315	4220
JPA-321	4110
JPA-322	4119
JPA-323	3988
JPA-323	3988/1
JPA-325	3462
JPA-326	3449
JPA-330	3666
JPA-331	3437
JPA-332	3723
JPA-333	3449
JPA-334	3436
JPA-339	3502
JPA-341	3522
JPA-342	3640
JPA-345	3723
JPA-346	4029
JPA-373	3767
JPA-375	3687/1
JPA-376	3470
JPA-377	3312
JPA-378	3484
JPA-379	3740
JPA-384	3874
JPA-386	3640
JPA-389	3744
JPA-390	3623
JPA-393	3874
JPA-396	3892
JPA-398	3740
JPA-401	3831
JPA-404	3509
JPA-405	4160
JPA-406	3324

JAPANPARTS	BESER
NO	NO
JPA-414	3501
JPA-417	4212
JPA-418	3582
JPA-419	3752
JPA-420	3504
JPA-424	3582
JPA-425	3686
JPA-426	3631
JPA-427	3683
JPA-427	3872/1
JPA-429	3633
JPA-432	3704
JPA-435	3607
JPA-440	3631
JPA-452	4159
JPA-490	4110
JPA-491	4109
JPA-491	4232
JPA-492	3695
JPA-493	3696
JPA-496	3683
JPA-496	3872/1
JPA-497	3704
JPA-498	3704
JPA-499	3704
JPA-501	3955
JPA-503	3765
JPA-504	3975
JPA-505	4271
JPA-506	3335
JPA-508	3407
JPA-509	3892
JPA-514	4216
JPA-515	3900
JPA-516	4059
JPA-517	3916
JPA-521	3401
JPA-524	3400
JPA-525	3401
JPA-527	3448
JPA-530	3622
JPA-583	3778
JPA-585	3809
JPA-587	3622
JPA-588	3675
JPA-590	3632
JPA-591	3632
JPA-592	3675
JPA-594	3502
JPA-595	3507
JPA-598	3622
JPA-599	3685
JPA-601	3436
JPA-602	3620
JPA-605	3746
JPA-606	3600
JPA-607	3436
JPA-612	3928
JPA-615	3901
JPA-698	3436
JPA-699	3898
JPA-700	3394
JPA-701	3579
JPA-703	3395
JPA-705	3426
JPA-706	3912
JPA-708	4078
JPA-709	4081
JPA-711	3764
JPA-712	4036
JPA-796	4079
JPA-800	3983/1
JPA-802	3929
JPA-806	3882
JPA-807	4000
JPA-809	3928
JPA-811	3883
JPA-813	4027
JPA-816	3602
JPA-886	4034

JAPANPARTS NO	BESER NO
JPA-886	4034/1
JPA-893	3884
JPA-895	3511
JPA-896	3745
JPA-897	3883
JPA-901	3446
JPA-902	3462
JPA-903	3674
JPA-904	3757
JPA-904	3857
JPA-906	3623
JPA-908	3886
JPA-910	4005
JPA-911	4198
JPA-913	4006
JPA-994	4012
JPA-999	3674
JPA-H02	3648
JPA-H04	3632
JPA-H05	3843
JPA-H07	3648
JPA-H08	3985
JPA-H09	3951
JPA-H10	3959
JPA-H13	3961
JPA-H14	3960
JPA-H22	4251/1
JPA-K00	4009
JPA-K01	3653
JPA-K05	3802
JPA-K06	3778
JPA-K07	4269
JPA-K08	3978
JPA-K09	4028
JPA-K10	3968
JPA-K11	4001
JPA-K12	3880
JPA-K14	3632
JPA-K17	4269
JPA-K19	4035
JPA-K20	4039
JPA-K28	4233
JPA-L10	3662
JPA-L11	3413
JPA-M00	4281
JPA-S01	3976/1
JPA-W00	3511
JPA-W01	3410
JPA-W02	3510
JPA-W03	3687/1
JPA-W04	3744
JPA-W07	3951
JPA-W09	4073
JPA-W10	3976
JPA-W12	4230
JPA-W13	4008
JPP-005	3853/1
JPP-015	3660
JPP-106	4172/1
JPP-107	4283/1
JPP-109	3795/1
JPP-122	4087
JPP-123	4087
JPP-137	4010
JPP-138	3853
JPP-154	3933
JPP-194	4087
JPP-200	4154
JPP-201	3693
JPP-203	3788
JPP-209	3776
JPP-210	3693
JPP-211	4111
JPP-214	3954
JPP-216	3911
JPP-217	4113
JPP-218	3949
JPP-220	4037
JPP-220	4037/1
JPP-221	3997

JAPANPARTS NO	BESER NO
JPP-223	4146
JPP-256	4153
JPP-257	3825
JPP-259	3830
JPP-262	4072
JPP-295	4275
JPP-297	3693
JPP-298	3693
JPP-302	3875
JPP-304	4303
JPP-307	3833
JPP-310	4215
JPP-390	3833
JPP-392	3833
JPP-400	4156
JPP-402	4212
JPP-404	4212
JPP-405	4148/1
JPP-407	4155
JPP-408	4148/1
JPP-409	4148/1
JPP-425	4212
JPP-495	4148/1
JPP-497	4148/1
JPP-498	4148/1
JPP-503	4108
JPP-506	3335
JPP-507	4062
JPP-508	4106
JPP-592	4084
JPP-594	4108
JPP-595	4087
JPP-701	4080
JPP-702	3913
JPP-704	4213
JPP-705	4258
JPP-901	4004
JPP-902	4018
JPP-903	3887
JPP-999	3887
JPP-A01	3777
JPP-H04	3993
JPP-H08	3989
JPP-K01	3545
JPP-K03	3979
JPP-K04	3969
JPP-K06	4061
JPP-K09	3980
JPP-K10	4165
JPP-L03	4157
JPP-L06	3512
JPP-L06	3512/1
JPP-L07	3771
JPP-S01	3895
JPP-W02	3894
JPP-W05	4014
PA-017P	3888
PA-0325	3920/1
PA-057P	4182
PA-099P	4197
PA-111P	3397
PA-134P	3415
PA-236P	3371
PA-254P	3560
PA-509P	3892
PA-527P	3448
PA-585P	3809
PA-599P	3685
PA-806P	3882
PA-K05P	3802
PP-599P	3688
JPA-0048	4346
JPA-0051	3820/1
JPA-0078	3585/1
JPA-0104	4381
JPA-0106	4382
JPA-0124	4380
JPA-0126	4378
JPA-017P	3888
JPA-0244	4301/1

JAPANPARTS NO	BESER NO
JPA-0319	4174/1
JPA-0320	4351/1
JPA-0324	3906/1
JPA-0324	3906/1A
JPA-0324	3906/2
JPA-0325	3920/1
JPA-0534	4391
JPA-0535	4126/1
JPA-0538	3925/2
JPA-0539	3962/1
JPA-0548	4376
JPA-057P	4182
JPA-0602	3489
JPA-0604	3494
JPA-0613	4371
JPA-0613	4373
JPA-0625	4171/1
JPA-0645	4201/1
JPA-0649	4171/1
JPA-0942	4228/1
JPA-0956	4138/1
JPA-099P	4197
JPA-111P	3397
JPA-134P	3415
JPA-2000	4176/1
JPA-2001	4255
JPA-2004	3998
JPA-2006	4274
JPA-2007	4071
JPA-2008	3822
JPA-2009	3927
JPA-236P	3371
JPA-254P	3560
JPA-509P	3892
JPA-527P	3448
JPA-585P	3809
JPA-599P	3685
JPA-806P	3882
JPA-K05P	3802
JPP-0008	4388
JPP-0019	4374
JPP-0048	4346
JPP-0051	3820/1
JPP-0078	3585/1
JPP-0100	4389
JPP-0102	4383
JPP-0112	4325/1
JPP-0113	4379
JPP-0116	4181/1
JPP-0218	4092/1
JPP-0308	3907/1
JPP-0308	3907/1A
JPP-0308	3907/2
JPP-0522	3926/1
JPP-0523	3963/1
JPP-0614	4372
JPP-0904	4390
JPP-2002	4151/1
JPP-2004	4370
JPP-599P	3688
PA-000AF	3421
PA-000MK	3421
PA-003AF	3872
PA-003MK	3872
PA-004AF	3955
PA-004MK	3955
PA-005AF	3872
PA-005MK	3872
PA-010AF	4104
PA-010MK	4104
PA-011AF	4211
PA-011MK	4211
PA-012AF	4128
PA-012MK	4128
PA-013AF	3983
PA-013MK	3983
PA-015AF	3562
PA-015MK	3562
PA-017AF	3888
PA-017MK	3888

JAPANPARTS NO	BESER NO
PA-018AF	4016
PA-018MK	4016
PA-021AF	3748
PA-031AF	3964/1
PA-031MK	3964/1
PA-032AF	3619
PA-032MK	3619
PA-039AF	4140/1
PA-039MK	4140/1
PA-056AF	3867
PA-056MK	3867
PA-057AF	4182
PA-057MK	4182
PA-090AF	4031
PA-090MK	4031
PA-097AF	4011
PA-097MK	4011
PA-099AF	4197
PA-099MK	4197
PA-101AF	3394
PA-101MK	3394
PA-106AF	3370
PA-106MK	3370
PA-109AF	3848
PA-109MK	3848
PA-111AF	3397
PA-111MK	3397
PA-114AF	3659
PA-114MK	3659
PA-115AF	4143
PA-115MK	4143
PA-116AF	3369
PA-116MK	3369
PA-117AF	3965/1
PA-117MK	3965/1
PA-118AF	4074
PA-121AF	3952
PA-121MK	3952
PA-122AF	3942/A
PA-122MK	3942/A
PA-123AF	4038
PA-123MK	4038
PA-127AF	4015
PA-129AF	3909
PA-129MK	3909
PA-130AF	4017
PA-130MK	4017
PA-133AF	3758
PA-133MK	3758
PA-134AF	3415
PA-134MK	3415
PA-137AF	3760
PA-137MK	3760
PA-139AF	3760
PA-139MK	3760
PA-143AF	3779
PA-143MK	3779
PA-149AF	3598
PA-149MK	3598
PA-150AF	3797
PA-151AF	3856
PA-153AF	4002
PA-153MK	4002
PA-154AF	3932
PA-154MK	3932
PA-156AF	4056
PA-156MK	4056
PA-164AF	4308
PA-176AF	4115
PA-176MK	4115
PA-177AF	4010
PA-177MK	4010
PA-178AF	3859
PA-178MK	3859
PA-183AF	3779
PA-183MK	3779
PA-189AF	3779
PA-189MK	3779
PA-190AF	3562
PA-190MK	3562

JAPANPARTS NO	BESER NO
PA-191AF	3577
PA-191AF	3647
PA-191MK	3577
PA-191MK	3647
PA-194AF	3632
PA-194MK	3632
PA-195AF	3758
PA-195MK	3758
PA-198AF	3577
PA-198AF	3647
PA-198MK	3577
PA-198MK	3647
PA-199AF	3882
PA-199MK	3882
PA-203AF	3769
PA-203MK	3769
PA-204AF	4112
PA-204MK	4112
PA-205AF	3891
PA-205MK	3891
PA-206AF	3890
PA-206MK	3890
PA-209AF	4105
PA-209MK	4105
PA-210AF	3710
PA-210MK	3710
PA-211AF	3817
PA-211MK	3817
PA-213AF	4013
PA-213MK	4013
PA-215AF	3769
PA-215MK	3769
PA-217AF	3987
PA-217MK	3987
PA-218AF	3910
PA-218MK	3910
PA-219AF	3958
PA-219MK	3958
PA-224AF	3379
PA-224MK	3379
PA-225AF	3982
PA-225MK	3982
PA-230AF	4077
PA-230MK	4077
PA-233AF	3634
PA-233MK	3634
PA-234AF	3369
PA-234MK	3369
PA-235AF	3402
PA-235MK	3402
PA-236AF	3371
PA-236MK	3371
PA-239AF	3634
PA-239MK	3634
PA-240AF	3714
PA-240MK	3714
PA-242AF	4088
PA-242MK	4088
PA-243AF	3903
PA-243MK	3903
PA-247AF	3714
PA-247MK	3714
PA-248AF	3777
PA-248MK	3777
PA-250AF	3956
PA-250MK	3956
PA-253AF	3379
PA-253MK	3379
PA-254AF	3560
PA-254MK	3560
PA-257AF	3402
PA-257MK	3402
PA-261AF	3554
PA-261AF	3651
PA-261MK	3554
PA-261MK	3651
PA-262AF	4088
PA-262MK	4088
PA-264AF	3554
PA-264AF	3651

JAPANPARTS NO	BESER NO
PA-264MK	3554
PA-264MK	3651
PA-265AF	4086
PA-265MK	4086
PA-268AF	3829
PA-268MK	3829
PA-269AF	3953
PA-269MK	3953
PA-272AF	3996
PA-272MK	3996
PA-273AF	4082
PA-273MK	4082
PA-277AF	3948
PA-277MK	3948
PA-278AF	4167
PA-280AF	4158
PA-280MK	4158
PA-281AF	3768
PA-281MK	3768
PA-286AF	3777
PA-286MK	3777
PA-288AF	3673
PA-288MK	3673
PA-289AF	3554
PA-289AF	3651
PA-289MK	3554
PA-289MK	3651
PA-290AF	3554
PA-290AF	3651
PA-290MK	3554
PA-290MK	3651
PA-292AF	3673
PA-292MK	3673
PA-300AF	3885
PA-300MK	3885
PA-302AF	3877
PA-302MK	3877
PA-305AF	4118
PA-305MK	4118
PA-307AF	3889
PA-307MK	3889
PA-309AF	4317
PA-309MK	4317
PA-310AF	3709
PA-310MK	3709
PA-311AF	3780
PA-311MK	3780
PA-315AF	4220
PA-315MK	4220
PA-321AF	4110
PA-321MK	4110
PA-322AF	4119
PA-322MK	4119
PA-323AF	3988
PA-323AF	3988/1
PA-323MK	3988
PA-323MK	3988/1
PA-325AF	3462
PA-325MK	3462
PA-326AF	3449
PA-326MK	3449
PA-330AF	3666
PA-330MK	3666
PA-331AF	3437
PA-331MK	3437
PA-332AF	3723
PA-332MK	3723
PA-333AF	3449
PA-333MK	3449
PA-334AF	3436
PA-334MK	3436
PA-339AF	3502
PA-339MK	3502
PA-341AF	3522
PA-341MK	3522
PA-342AF	3640
PA-342MK	3640
PA-345AF	3723
PA-345MK	3723
PA-346AF	4029

JAPANPARTS NO	BESER NO
PA-346MK	4029
PA-373AF	3767
PA-373MK	3767
PA-375AF	3687/1
PA-375MK	3687/1
PA-376AF	3470
PA-376MK	3470
PA-377AF	3312
PA-377MK	3312
PA-378AF	3484
PA-378MK	3484
PA-379AF	3740
PA-379MK	3740
PA-384AF	3874
PA-384MK	3874
PA-386AF	3640
PA-386MK	3640
PA-389AF	3744
PA-389MK	3744
PA-390AF	3623
PA-390MK	3623
PA-393AF	3874
PA-393MK	3874
PA-396AF	3892
PA-396MK	3892
PA-398AF	3740
PA-398MK	3740
PA-401AF	3831
PA-401MK	3831
PA-404AF	3509
PA-404MK	3509
PA-405AF	4160
PA-405MK	4160
PA-406AF	3324
PA-406MK	3324
PA-414AF	3501
PA-414MK	3501
PA-417AF	4212
PA-417MK	4212
PA-418AF	3582
PA-418MK	3582
PA-419AF	3752
PA-419MK	3752
PA-420AF	3504
PA-420MK	3504
PA-424AF	3582
PA-424MK	3582
PA-425AF	3686
PA-425MK	3686
PA-426AF	3631
PA-426MK	3631
PA-427AF	3683
PA-427AF	3872/1
PA-427MK	3683
PA-427MK	3872/1
PA-429AF	3633
PA-429MK	3633
PA-432AF	3704
PA-432MK	3704
PA-435AF	3607
PA-435MK	3607
PA-438AF	4312
PA-440AF	3631
PA-440MK	3631
PA-452AF	4159
PA-452MK	4159
PA-490AF	4110
PA-490MK	4110
PA-491AF	4109
PA-491AF	4232
PA-491MK	4109
PA-491MK	4232
PA-492AF	3695
PA-492MK	3695
PA-493AF	3696
PA-493MK	3696
PA-496AF	3683
PA-496AF	3872/1
PA-496MK	3683
PA-496MK	3872/1

JAPANPARTS NO	BESER NO
PA-497AF	3704
PA-497MK	3704
PA-498AF	3704
PA-498MK	3704
PA-499AF	3704
PA-499MK	3704
PA-501AF	3955
PA-501MK	3955
PA-503AF	3765
PA-503MK	3765
PA-504AF	3975
PA-504MK	3975
PA-505AF	4271
PA-505MK	4271
PA-506AF	3335
PA-506MK	3335
PA-508AF	3407
PA-508MK	3407
PA-509AF	3892
PA-509MK	3892
PA-512AF	4054
PA-512MK	4054
PA-514AF	4216
PA-514MK	4216
PA-515AF	3900
PA-515MK	3900
PA-516AF	4059
PA-516MK	4059
PA-517AF	3916
PA-517MK	3916
PA-518AF	4107
PA-521AF	3401
PA-521MK	3401
PA-524AF	3400
PA-524MK	3400
PA-525AF	3401
PA-525MK	3401
PA-527AF	3448
PA-527MK	3448
PA-530AF	3622
PA-530MK	3622
PA-583AF	3778
PA-583MK	3778
PA-585AF	3809
PA-585MK	3809
PA-587AF	3622
PA-587MK	3622
PA-588AF	3675
PA-588MK	3675
PA-590AF	3632
PA-590MK	3632
PA-591AF	3632
PA-591MK	3632
PA-592AF	3675
PA-592MK	3675
PA-594AF	3502
PA-594MK	3502
PA-595AF	3507
PA-595MK	3507
PA-598AF	3622
PA-598MK	3622
PA-599AF	3685
PA-599MK	3685
PA-601AF	3436
PA-601MK	3436
PA-602AF	3620
PA-602MK	3620
PA-605AF	3746
PA-605MK	3746
PA-606AF	3600
PA-606MK	3600
PA-607AF	3436
PA-607MK	3436
PA-612AF	3928
PA-612MK	3928
PA-615AF	3901
PA-615MK	3901
PA-698AF	3436
PA-698MK	3436
PA-699AF	3898

JAPANPARTS	BESER
NO	NO
PA-699MK	3898
PA-700AF	3394
PA-700MK	3394
PA-701AF	3579
PA-701MK	3579
PA-703AF	3395
PA-703MK	3395
PA-705AF	3426
PA-705MK	3426
PA-706AF	3912
PA-706MK	3912
PA-708AF	4078
PA-708MK	4078
PA-709AF	4081
PA-709MK	4081
PA-711AF	3764
PA-711MK	3764
PA-712AF	4036
PA-712MK	4036
PA-796AF	4079
PA-796MK	4079
PA-800AF	3983/1
PA-800MK	3983/1
PA-802AF	3929
PA-802MK	3929
PA-806AF	3882
PA-806MK	3882
PA-807AF	4000
PA-807MK	4000
PA-809AF	3928
PA-809MK	3928
PA-811AF	3883
PA-811MK	3883
PA-813AF	4027
PA-813MK	4027
PA-816AF	3602
PA-816MK	3602
PA-886AF	4034
PA-886AF	4034/1
PA-886MK	4034
PA-886MK	4034/1
PA-893AF	3884
PA-893MK	3884
PA-895AF	3511
PA-895MK	3511
PA-896AF	3745
PA-896MK	3745
PA-897AF	3883
PA-897MK	3883
PA-901AF	3446
PA-901MK	3446
PA-902AF	3462
PA-902MK	3462
PA-903AF	3674
PA-903MK	3674
PA-904AF	3757
PA-904AF	3857
PA-904MK	3757
PA-904MK	3857
PA-906AF	3623
PA-906MK	3623
PA-908AF	3886
PA-908MK	3886
PA-910AF	4005
PA-910MK	4005
PA-911AF	4198
PA-911MK	4198
PA-913AF	4006
PA-914AF	4124
PA-994AF	4012
PA-994MK	4012
PA-999AF	3674
PA-999MK	3674
PA-H02AF	3648
PA-H02MK	3648
PA-H04AF	3632
PA-H04MK	3632
PA-H05AF	3843
PA-H05MK	3843
PA-H07AF	3648

JAPANPARTS	BESER
NO	NO
PA-H07MK	3648
PA-H08AF	3985
PA-H08MK	3985
PA-H09AF	3951
PA-H09MK	3951
PA-H10AF	3959
PA-H10MK	3959
PA-H13AF	3961
PA-H13MK	3961
PA-H14AF	3960
PA-H14MK	3960
PA-H16AF	3976/1
PA-H17AF	4049
PA-H18AF	4166
PA-H22AF	4251/1
PA-H22MK	4251/1
PA-K00AF	4009
PA-K00MK	4009
PA-K01AF	3653
PA-K01MK	3653
PA-K05AF	3802
PA-K05MK	3802
PA-K06AF	3778
PA-K06MK	3778
PA-K07AF	4269
PA-K07MK	4269
PA-K08AF	3978
PA-K08MK	3978
PA-K09AF	4028
PA-K09MK	4028
PA-K10AF	3968
PA-K10MK	3968
PA-K11AF	4001
PA-K11MK	4001
PA-K12AF	3880
PA-K12MK	3880
PA-K14AF	3632
PA-K14MK	3632
PA-K16AF	3959
PA-K17AF	4269
PA-K17MK	4269
PA-K19AF	4035
PA-K19MK	4035
PA-K20AF	4039
PA-K20MK	4039
PA-K23AF	4265
PA-K24AF	4136
PA-K28AF	4233
PA-K28MK	4233
PA-L00AF	4161
PA-L01AF	4293
PA-L02AF	3453
PA-L03AF	4094
PA-L10AF	3662
PA-L10MK	3662
PA-L11AF	3413
PA-L11MK	3413
PA-M00AF	4281
PA-M00MK	4281
PA-S01AF	3976/1
PA-S01MK	3976/1
PA-W00AF	3511
PA-W00MK	3511
PA-W01AF	3410
PA-W01MK	3410
PA-W02AF	3510
PA-W02MK	3510
PA-W03AF	3687/1
PA-W03MK	3687/1
PA-W04AF	3744
PA-W04MK	3744
PA-W07AF	3951
PA-W07MK	3951
PA-W09AF	4073
PA-W09MK	4073
PA-W10AF	3976
PA-W10MK	3976
PA-W12AF	4230
PA-W12MK	4230
PA-W13AF	4008

JAPANPARTS	BESER
NO	NO
PA-W13MK	4008
PA-W16AF	4149
PA-W16MK	4149
PP-005AF	3853/1
PP-005MK	3853/1
PP-008AF	3747
PP-015AF	3660
PP-015MK	3660
PP-102AF	3855
PP-106AF	4172/1
PP-106MK	4172/1
PP-107AF	4283/1
PP-107MK	4283/1
PP-109AF	3795/1
PP-109MK	3795/1
PP-122AF	4087
PP-122MK	4087
PP-123AF	4087
PP-123MK	4087
PP-137AF	4010
PP-137MK	4010
PP-138AF	3853
PP-138MK	3853
PP-154AF	3933
PP-154MK	3933
PP-194AF	4087
PP-194MK	4087
PP-200AF	4154
PP-200MK	4154
PP-201AF	3693
PP-201MK	3693
PP-203AF	3788
PP-203MK	3788
PP-209AF	3776
PP-209MK	3776
PP-210AF	3693
PP-210MK	3693
PP-211AF	4111
PP-211MK	4111
PP-214AF	3954
PP-214MK	3954
PP-216AF	3911
PP-216MK	3911
PP-217AF	4113
PP-217MK	4113
PP-218AF	3949
PP-218MK	3949
PP-220AF	4037
PP-220AF	4037/1
PP-220MK	4037
PP-220MK	4037/1
PP-221AF	3997
PP-221MK	3997
PP-223AF	4146
PP-223MK	4146
PP-256AF	4153
PP-256MK	4153
PP-257AF	3825
PP-257MK	3825
PP-259AF	3830
PP-259MK	3830
PP-262AF	4072
PP-262MK	4072
PP-295AF	4275
PP-295MK	4275
PP-297AF	3693
PP-297MK	3693
PP-298AF	3693
PP-298MK	3693
PP-302AF	3875
PP-302MK	3875
PP-304AF	4303
PP-304MK	4303
PP-307AF	3833
PP-307MK	3833
PP-310AF	4215
PP-310MK	4215
PP-390AF	3833
PP-390MK	3833
PP-392AF	3833

JAPANPARTS	BESER
NO	NO
PP-392MK	3833
PP-400AF	4156
PP-400MK	4156
PP-402AF	4212
PP-402MK	4212
PP-404AF	4212
PP-404MK	4212
PP-405AF	4148/1
PP-405MK	4148/1
PP-407AF	4155
PP-407MK	4155
PP-408AF	4148/1
PP-408MK	4148/1
PP-409AF	4148/1
PP-409MK	4148/1
PP-414AF	4279
PP-425AF	4212
PP-425MK	4212
PP-495AF	4148/1
PP-495MK	4148/1
PP-497AF	4148/1
PP-497MK	4148/1
PP-498AF	4148/1
PP-498MK	4148/1
PP-503AF	4108
PP-503MK	4108
PP-506AF	3335
PP-506MK	3335
PP-507AF	4062
PP-507MK	4062
PP-508AF	4106
PP-508MK	4106
PP-592AF	4084
PP-592MK	4084
PP-594AF	4108
PP-594MK	4108
PP-595AF	4087
PP-595MK	4087
PP-701AF	4080
PP-701MK	4080
PP-702AF	3913
PP-702MK	3913
PP-704AF	4213
PP-704MK	4213
PP-705AF	4258
PP-705MK	4258
PP-901AF	4004
PP-901MK	4004
PP-902AF	4018
PP-902MK	4018
PP-903AF	3887
PP-903MK	3887
PP-995AF	3688
PP-995MK	3688
PP-999AF	3887
PP-999MK	3887
PP-H04AF	3993
PP-H04MK	3993
PP-H08AF	3989
PP-H08MK	3989
PP-K01AF	3545
PP-K01MK	3545
PP-K03AF	3979
PP-K03MK	3979
PP-K04AF	3969
PP-K04MK	3969
PP-K06AF	4061
PP-K06MK	4061
PP-K09AF	3980
PP-K09MK	3980
PP-K10AF	4165
PP-K10MK	4165
PP-K11AF	4060
PP-L00AF	3879
PP-L01AF	3944
PP-L03AF	4157
PP-L04AF	3661
PP-L06AF	3512
PP-L06AF	3512/1
PP-L06MK	3512

JAPANPARTS NO	BESER NO
PP-L06MK	3512/1
PP-L07AF	3771
PP-L07MK	3771
PP-S01AF	3895
PP-S01MK	3895
PP-W02AF	3894
PP-W02MK	3894
PP-W05AF	4014
PP-W05MK	4014
PP-W06AF	4150
PP-W06MK	4150
JPA-000AF	3421
JPA-003AF	3872
JPA-005AF	3872
JPA-010AF	4104
JPA-012AF	4128
JPA-013AF	3983
JPA-015AF	3562
JPA-017AF	3888
JPA-018AF	4016
JPA-031AF	3964/1
JPA-032AF	3619
JPA-039AF	4140/1
JPA-056AF	3867
JPA-057AF	4182
JPA-090AF	4031
JPA-097AF	4011
JPA-099AF	4197
JPA-101AF	3394
JPA-106AF	3370
JPA-109AF	3848
JPA-111AF	3397
JPA-114AF	3659
JPA-115AF	4143
JPA-116AF	3369
JPA-121AF	3952
JPA-122AF	3942/A
JPA-129AF	3909
JPA-130AF	4017
JPA-133AF	3758
JPA-134AF	3415
JPA-137AF	3760
JPA-139AF	3760
JPA-143AF	3779
JPA-149AF	3598
JPA-153AF	4002
JPA-154AF	3932
JPA-156AF	4056
JPA-176AF	4115
JPA-177AF	4010
JPA-178AF	3859
JPA-183AF	3779
JPA-189AF	3779
JPA-190AF	3562
JPA-191AF	3577
JPA-191AF	3647
JPA-194AF	3632
JPA-195AF	3758
JPA-198AF	3577
JPA-198AF	3647
JPA-199AF	3882
JPA-203AF	3769
JPA-204AF	4112
JPA-205AF	3891
JPA-206AF	3890
JPA-209AF	4105
JPA-210AF	3710
JPA-211AF	3817
JPA-213AF	4013
JPA-215AF	3769
JPA-217AF	3987
JPA-218AF	3910
JPA-219AF	3958
JPA-224AF	3379
JPA-233AF	3634
JPA-234AF	3369
JPA-235AF	3402
JPA-236AF	3371
JPA-239AF	3634
JPA-240AF	3714

JAPANPARTS NO	BESER NO
JPA-496AF	3872/1
JPA-497AF	3704
JPA-498AF	3704
JPA-499AF	3704
JPA-501AF	3955
JPA-503AF	3765
JPA-505AF	4271
JPA-506AF	3335
JPA-508AF	3407
JPA-509AF	3892
JPA-512AF	4054
JPA-512MK	4054
JPA-514AF	4216
JPA-515AF	3900
JPA-516AF	4059
JPA-517AF	3916
JPA-521AF	3401
JPA-524AF	3400
JPA-525AF	3401
JPA-527AF	3448
JPA-530AF	3622
JPA-583AF	3778
JPA-585AF	3809
JPA-587AF	3622
JPA-588AF	3675
JPA-590AF	3632
JPA-591AF	3632
JPA-592AF	3675
JPA-594AF	3502
JPA-595AF	3507
JPA-598AF	3622
JPA-599AF	3685
JPA-601AF	3436
JPA-602AF	3620
JPA-605AF	3746
JPA-606AF	3600
JPA-607AF	3436
JPA-615AF	3901
JPA-698AF	3436
JPA-699AF	3898
JPA-700AF	3394
JPA-701AF	3579
JPA-703AF	3395
JPA-705AF	3426
JPA-706AF	3912
JPA-708AF	4078
JPA-712AF	4036
JPA-796AF	4079
JPA-800AF	3983/1
JPA-806AF	3882
JPA-809AF	3928
JPA-811AF	3883
JPA-813AF	4027
JPA-816AF	3602
JPA-886AF	4034
JPA-886AF	4034/1
JPA-893AF	3884
JPA-895AF	3511
JPA-896AF	3745
JPA-897AF	3883
JPA-901AF	3446
JPA-902AF	3462
JPA-903AF	3674
JPA-904AF	3757
JPA-904AF	3857
JPA-906AF	3623
JPA-908AF	3886
JPA-994AF	4012
JPA-999AF	3674
JPA-H02AF	3648
JPA-H04AF	3632
JPA-H05AF	3843
JPA-H07AF	3648
JPA-H08AF	3985
JPA-H09AF	3951
JPA-H10AF	3959
JPA-H13AF	3961
JPA-H22AF	4251/1
JPA-K00AF	4009
JPA-K01AF	3653

JAPANPARTS NO	BESER NO
JPA-K05AF	3802
JPA-K06AF	3778
JPA-K07AF	4269
JPA-K08AF	3978
JPA-K09AF	4028
JPA-K10AF	3968
JPA-K11AF	4001
JPA-K12AF	3880
JPA-K14AF	3632
JPA-K17AF	4269
JPA-K28AF	4233
JPA-L10AF	3662
JPA-L11AF	3413
JPA-M00AF	4281
JPA-S01AF	3976/1
JPA-W00AF	3511
JPA-W01AF	3410
JPA-W02AF	3510
JPA-W03AF	3687/1
JPA-W04AF	3744
JPA-W07AF	3951
JPA-W16AF	4149
JPA-W16MK	4149
JPP-015AF	3660
JPP-106AF	4172/1
JPP-107AF	4283/1
JPP-109AF	3795/1
JPP-122AF	4087
JPP-123AF	4087
JPP-137AF	4010
JPP-138AF	3853
JPP-154AF	3933
JPP-194AF	4087
JPP-200AF	4154
JPP-201AF	3693
JPP-203AF	3788
JPP-209AF	3776
JPP-210AF	3693
JPP-211AF	4111
JPP-216AF	3911
JPP-220AF	4037/1
JPP-256AF	4153
JPP-257AF	3825
JPP-259AF	3830
JPP-262AF	4072
JPP-295AF	4275
JPP-297AF	3693
JPP-298AF	3693
JPP-302AF	3875
JPP-304AF	4303
JPP-307AF	3833
JPP-310AF	4215
JPP-390AF	3833
JPP-392AF	3833
JPP-402AF	4212
JPP-404AF	4212
JPP-405AF	4148/1
JPP-407AF	4155
JPP-408AF	4148/1
JPP-409AF	4148/1
JPP-425AF	4212
JPP-495AF	4148/1
JPP-497AF	4148/1
JPP-498AF	4148/1
JPP-503AF	4108
JPP-506AF	3335
JPP-507AF	4062
JPP-508AF	4106
JPP-592AF	4084
JPP-594AF	4108
JPP-595AF	4087
JPP-701AF	4080
JPP-702AF	3913
JPP-704AF	4213
JPP-903AF	3887
JPP-995AF	3688
JPP-999AF	3887
JPP-H04AF	3993
JPP-K01AF	3545
JPP-K03AF	3979

JAPANPARTS NO	BESER NO
JPP-K04AF	3969
JPP-K09AF	3980
JPP-L06AF	3512
JPP-L06AF	3512/1
JPP-L07AF	3771
JPP-S01AF	3895
JPP-W02AF	3894
JPP-W06AF	4150
JPP-W06MK	4150
PA-0048AF	4346
PA-0048MK	4346
PA-0051AF	3820/1
PA-0051MK	3820/1
PA-0078AF	3585/1
PA-0078MK	3585/1
PA-0104AF	4381
PA-0104MK	4381
PA-0106AF	4382
PA-0106MK	4382
PA-0124AF	4380
PA-0124MK	4380
PA-0126AF	4378
PA-0126MK	4378
PA-0244AF	4301/1
PA-0244MK	4301/1
PA-0319AF	4174/1
PA-0319MK	4174/1
PA-0320AF	4351/1
PA-0320MK	4351/1
PA-0324AF	3906/1
PA-0324AF	3906/1A
PA-0324AF	3906/2
PA-0324MK	3906/1
PA-0324MK	3906/1A
PA-0324MK	3906/2
PA-0325AF	3920/1
PA-0534AF	4391
PA-0534MK	4391
PA-0535AF	4126/1
PA-0535MK	4126/1
PA-0538AF	3925/2
PA-0538MK	3925/2
PA-0539AF	3962/1
PA-0539MK	3962/1
PA-0548AF	4376
PA-0548MK	4376
PA-0602AF	3489
PA-0602MK	3489
PA-0604AF	3494
PA-0604MK	3494
PA-0613AF	4371
PA-0613AF	4373
PA-0613MK	4371
PA-0613MK	4373
PA-0625AF	4171/1
PA-0625MK	4171/1
PA-0645AF	4201/1
PA-0645MK	4201/1
PA-0649AF	4171/1
PA-0649MK	4171/1
PA-0942AF	4228/1
PA-0942MK	4228/1
PA-0956AF	4138/1
PA-0956MK	4138/1
PA-2000AF	4176
PA-2000AF	4176/1
PA-2000MK	4176/1
PA-2001AF	4255
PA-2001MK	4255
PA-2004AF	3998
PA-2004MK	3998
PA-2006AF	4274
PA-2006MK	4274
PA-2007AF	4071
PA-2007MK	4071
PA-2008AF	3822
PA-2008MK	3822
PA-2009AF	3927
PA-2009MK	3927
PA-2023AF	4369

JAPANPARTS

NO	NO
PP-0008AF	4388
PP-0008MK	4388
PP-0019AF	4374
PP-0019MK	4374
PP-0100AF	4389
PP-0100MK	4389
PP-0102AF	4383
PP-0102MK	4383
PP-0112AF	4325/1
PP-0112MK	4325/1
PP-0113AF	4379
PP-0113MK	4379
PP-0116AF	4181/1
PP-0116MK	4181/1
PP-0218AF	4092/1
PP-0218MK	4092/1
PP-0308AF	3907/1
PP-0308AF	3907/1A
PP-0308AF	3907/2
PP-0308MK	3907/1
PP-0308MK	3907/1A
PP-0308MK	3907/2
PP-0522AF	3926/1
PP-0522MK	3926/1
PP-0523AF	3963/1
PP-0523MK	3963/1
PP-0614AF	4372
PP-0614MK	4372
PP-0904AF	4390
PP-0904MK	4390
PP-2002AF	4151/1
PP-2002MK	4151/1
PP-2004AF	4370
PP-2004MK	4370
PP-A-01AF	3777
JPA-0048AF	4346
JPA-0051AF	3820/1
JPA-0078AF	3585/1
JPA-0104AF	4381
JPA-0106AF	4382
JPA-0124AF	4380
JPA-0126AF	4378
JPA-0244AF	4301/1
JPA-0319AF	4174/1
JPA-0320AF	4351/1
JPA-0324AF	3906/1
JPA-0324AF	3906/1A
JPA-0324AF	3906/2
JPA-0325AF	3920/1
JPA-0534AF	4391
JPA-0535AF	4126/1
JPA-0538AF	3925/2
JPA-0539AF	3962/1
JPA-0548AF	4376
JPA-0602AF	3489
JPA-0604AF	3494
JPA-0613AF	4371
JPA-0613AF	4373
JPA-0625AF	4171/1
JPA-0645AF	4201/1
JPA-0649AF	4171/1
JPA-0942AF	4228/1
JPA-0956AF	4138/1
JPA-2000AF	4176/1
JPA-2001AF	4255
JPA-2004AF	3998
JPA-2006AF	4274
JPA-2007AF	4071
JPA-2008AF	3822
JPA-2009AF	3927
JPP-0008AF	4388
JPP-0019AF	4374
JPP-0048AF	4346
JPP-0051AF	3820/1
JPP-0078AF	3585/1
JPP-0100AF	4389
JPP-0102AF	4383
JPP-0112AF	4325/1
JPP-0113AF	4379
JPP-0116AF	4181/1

JAPANPARTS

NO	NO
JPP-0218AF	4092/1
JPP-0308AF	3907/1
JPP-0308AF	3907/1A
JPP-0308AF	3907/2
JPP-0522AF	3926/1
JPP-0523AF	3963/1
JPP-0614AF	4372
JPP-0904AF	4390
JPP-2002AF	4151/1
JPP-2004AF	4370

JAPKO

NO	NO
50039	4140/1
50122	3942/A
50191	3647
50323	3988/1
50427	3872/1
50438	4312
50886	4034/1
51106	4172/1
51107	4283/1
51220	4037/1
51405	4148/1
51414	4279
500051	3820/1
500078	3585/1
500319	4174/1
500320	4351/1
500324	3906/1
500324	3906/1A
500324	3906/2
500613	4371
500613	4373
500645	4201/1
502000	4176/1
510008	4388
510019	4374
510102	4383
510614	4372
512002	4151/1
50H22	4251/1
51L06	3512/1

JNBK

NO	NO
PN0312	3866

JP PARTS

NO	NO
900260	3661
900580	4389
900977	3689
901274	4390
905124	3537
905222	3424
905268	3436
905444	3340
905575	4115
905682	4391
905997	4388
915050	4102
915051	4102
915054	3879
915055	3879
915056	3879
915057	3879
915058	3879
915059	3315
915059	3515
915060	3339
915060	3514
915061	3513
915062	3513

JP PARTS

NO	NO
915063	3365
915064	3430
915065	3609
915066	3410
915067	3410
915072	3408
915073	3572
915074	3623
915075	3573
915076	3470
915078	3564
915080	3563
915081	3578
915082	3736
915083	3736
915090	3505
915090	3615
915091	3505
915091	3615
915092	3656
915093	3656
915094	3575
915095	3575
915096	3575/2
915097	3677
915098	3863
915099	3567
915104	3679
915105	3994
915106	3994
915107	3994
915108	3994
915109	3773
915110	3773
915112	3773
915114	3943
915115	4125
915117	3670
915119	3836
915120	3821
915121	3821
915122	3733
915123	4211
915124	4211
915127	4346
915129	4180
915130	4180
915131	3881
915132	3881
915133	3881
915134	3881
915136	4097
915136	4097/1
915139	4103
915140	3630
915141	3581
915142	3581
915145	3678
915146	3804
915147	3681
915148	3861
915151	3942
915189	4101
915189	4209
915191	3823
915192	3823
915194	4389
915195	4388
915197	4181
915199	3909
915204	4076
915224	3945
915228	4248
915229	4247
915230	3629
915231	3628
915233	4240
915234	4210
915235	3925
915235	3925/2

JP PARTS

NO	NO
915236	3965
915237	3926
915237	3926/1
915238	3962
915238	3962/1
915239	3963
915239	3963/1
915240	4293
915241	3944
915244	4092
915244	4092/1
915248	4207
915250	4208
915251	4208
915252	4179
915253	4179
915254	4179
915256	4249
915269	4181/1
915272	4179
915274	4391

JURATEK

NO	NO
JCP011	4092/1
JCP022	4171/1
JCP060	4390
JCP099	4172/1
JCP112	3906/1
JCP112	3906/1A
JCP112	3906/2
JCP113	3907/1
JCP113	3907/1A
JCP113	3907/2
JCP115	3925/2
JCP116	3926/1
JCP117	3920/1
JCP121	3962/1
JCP124	3963/1
JCP148	4151/1
JCP173	3988/1
JCP733	3773
JCP1102	3575
JCP1126	3994
JCP1390	3942
JCP1390	3942/A
JCP1400	4126/1
JCP1414	4097/1
JCP1773	4380
JCP1806	4389
JCP1807	4388
JCP4048	4037/1
JCP4067	4181/1
JCP4491	4201/1
JCP8014	4381
JCP8021	4382
JCP8028	4325/1
JCP8029	4379
JCP8039	4174/1
JCP8061	4351/1
JCP8064	4372
JCP8065	4374
JCP8098	4371
JCP8098	4373
JCP8147	4283/1
JCP8174	4369
JCP8175	4370
JCP8204	4350/1
JCP8214	4140/1

JURID	BESER
NO	NO
2900109561	3749
2901709560	3433/1
2906509560	3773
2906709560	3773
2912109561	3575/2
2912114530	3575/2
2912309560	3823
2916009560	3942
2919009560	3926
2919009560	3926/1
2919009561	3926
2919009561	3926/1
2919209560	3925
2919209560	3925/2
2920009560	3962
2920009560	3962/1
2921709560	3963
2921709560	3963/1
2922909560	3965
2922909561	3965/1
2923109560	3995
2923209560	4092
2923209560	4092/1
2925609560	4169
2935709560	3575
2937409560	3994
2955405880	3315
2955405880	3515
2983505440	3679
2983509560	3679
571202D	3393
571202J	3393
571203J	3377
571204D	3311
571204J	3311
571206D	3321
571206J	3321
571215D	3320
571215J	3320
571217D	3366/1
571217J	3366/1
571218D	3323
571218J	3323
571221D	3327
571221J	3327
571224D	3333
571224J	3333
571226D	3317
571226J	3317
571228D	3405
571228J	3405
571232D	3343
571232D	3483
571232J	3343
571232J	3483
571233D	3416
571233J	3416
571234D	3373
571234J	3373
571236D	3350
571236J	3350
571246D	3527
571246J	3527
571247D	3312
571247J	3312
571250D	3423
571250J	3423
571251D	3374
571251J	3374
571260J	3331
571262D	3442
571262J	3442
571265D	3421
571265J	3421
571271D	3365
571271J	3365
571272D	3513
571272J	3513
571276D	3410
571276J	3410

JURID	BESER
NO	NO
571278D	3339
571278D	3514
571278J	3339
571278J	3514
571279D	3318
571279J	3318
571291D	3417/1
571291J	3417/1
571297D	3424/1
571297J	3424/1
571298D	3484
571298J	3484
571300D	3572
571300J	3572
571302D	3493
571302D	3494
571302J	3493
571302J	3494
571304D	3440
571304J	3440
571305D	3625
571305J	3625
571306D	3482
571306J	3482
571308D	3429
571308J	3429
571309D	3466
571309J	3466
571312D	3621
571312J	3621
571315D	3441
571315J	3441
571316D	3486
571316J	3486
571317D	3444/1
571317J	3444/1
571319D	3474
571319J	3474
571321D	3526
571321J	3526
571327D	3503
571327J	3503
571330D	3432
571330J	3432
571331D	3495
571331J	3495
571332D	3380
571332J	3380
571333D	3380
571333J	3380
571334D	3496/1
571334J	3496/1
571336D	3603
571336J	3603
571339D	3428
571339J	3428
571340D	3366
571340J	3366
571344D	3611
571344J	3611
571346D	3422
571346J	3422
571350D	3536
571350J	3536
571352D	3609
571352J	3609
571353D	3430
571353J	3430
571355D	3564
571355J	3564
571356D	3619
571356J	3619
571357D	3650
571357J	3650
571359D	3457
571359J	3457
571361D	3529
571361J	3529
571363D	3873
571363J	3873

JURID	BESER
NO	NO
571368D	3537
571368J	3537
571370D	3641
571370J	3641
571372D	3315
571372D	3515
571372J	3315
571372J	3515
571374J	3326/1
571375D	3490
571375J	3490
571376D	3531
571376J	3531
571380D	3605
571380J	3605
571382D	3408
571382J	3408
571387D	3578
571387J	3578
571389D	3717
571389J	3717
571391D	3505
571391D	3615
571391J	3505
571391J	3615
571393D	3543
571393J	3543
571394D	3584
571394J	3584
571398D	3680
571398J	3680
571400D	4104
571400J	4104
571401D	3624
571401J	3624
571406D	3556
571406J	3556
571407D	3469
571407J	3469
571411D	3563
571411J	3563
571412D	3589
571412J	3589
571413D	3629
571413J	3629
571418D	3642
571418J	3642
571421D	3660
571421J	3660
571422D	3523
571422J	3523
571425D	3596
571425J	3596
571428D	3583
571428J	3583
571429D	3326
571429J	3326
571438D	3683
571438D	3872/1
571438J	3683
571438J	3872/1
571439D	3662
571439J	3662
571440D	3771
571440J	3771
571442D	3423/1
571442J	3423/1
571448D	3459
571448J	3459
571449D	3461
571452D	3467
571452J	3467
571462D	3536
571462J	3536
571463D	3316
571463J	3316
571464D	3424
571464J	3424
571474D	3425
571474J	3425

JURID	BESER
NO	NO
571476D	3539
571476J	3539
571477J	3627
571489J	3706
571491D	3378
571491J	3378
571492D	3623
571492J	3623
571493D	3733
571493J	3733
571509D	3528
571509J	3528
571510D	3610
571510J	3610
571513D	3529
571513J	3529
571515D	3867
571515J	3867
571519D	4182
571519J	4182
571522D	3593
571522J	3593
571523D	3608
571523J	3608
571525D	3487
571525D	3489
571525J	3487
571525J	3489
571526D	3503
571526J	3503
571528D	3643
571528J	3643
571530D	3736
571530J	3736
571536D	3417
571536J	3417
571539D	3410
571539J	3410
571540D	3419
571540J	3419
571542D	3573
571542J	3573
571543D	3335
571543J	3335
571546D	3578
571546J	3578
571552D	3339
571552D	3514
571552J	3339
571552J	3514
571553D	3315
571553D	3515
571553J	3315
571553J	3515
571555D	3550
571555J	3550
571556D	3611
571556J	3611
571557D	3572
571557J	3572
571560D	3408
571560J	3408
571561D	3609
571561J	3609
571722D	3581
571722J	3581
571725D	3464
571725J	3464
571726D	3464
571726J	3464
571743D	3487
571743D	3489
571743J	3487
571743J	3489
571744D	3496/1
571744J	3496/1
571745D	3473
571745J	3473
571746D	3445
571746J	3445

JURID	BESER
NO	NO
571753D	3630
571753J	3630
571754D	4214
571754J	4214
571756D	3878
571756J	3878
571757D	3819
571757J	3819
571803D	3661
571803J	3661
571805J	3313
571822D	3413
571822J	3413
571823J	3404
571827D	3453
571827J	3453
571832D	3558
571832J	3558
571833D	3410
571833J	3410
571839D	3595
571839J	3595
571840D	3559
571840J	3559
571843D	3799
571843J	3799
571844D	3567
571844J	3567
571845D	3680
571845J	3680
571846D	3678
571846J	3678
571847D	3553
571847J	3553
571848D	3585
571848D	3585/1
571848J	3585
571848J	3585/1
571850D	3545
571850J	3545
571852D	3909
571852J	3909
571868D	3430
571868J	3430
571869D	3491
571869J	3491
571870D	3346
571870J	3346
571873D	3881
571873J	3881
571876D	3863
571876J	3863
571877D	3677
571877J	3677
571879D	3628
571879J	3628
571884D	3617
571884J	3617
571885D	3537
571885J	3537
571888D	3618
571888J	3618
571893D	3608
571893J	3608
571897D	3750
571897J	3750
571900D	3506
571900J	3506
571904D	3610
571904J	3610
571909J	3455
571910D	3670
571910J	3670
571913D	3589
571913J	3589
571914D	3570
571914J	3570
571915D	3538
571915J	3538
571916D	3569

JURID	BESER
NO	NO
571916J	3569
571918D	3879
571918J	3879
571919D	3636
571919J	3636
571923D	3566
571923J	3566
571924D	3623
571924J	3623
571925D	3676
571925J	3676
571929D	3682
571929J	3682
571930D	3938
571930J	3938
571934D	3606
571934J	3606
571936D	3656
571936J	3656
571939D	3637
571939J	3637
571941D	4062
571941J	4062
571942D	3675
571942J	3675
571944D	4125
571944J	4125
571945D	4125
571945J	4125
571946D	3681
571946J	3681
571947D	3861
571947J	3861
571948D	4020
571948J	4020
571949D	3897
571949J	3897
571950D	3804
571950J	3804
571954D	3938
571954J	3938
571955D	3896
571955J	3896
571961D	4102
571961J	4102
571962D	4101
571962D	4209
571962J	4101
571962J	4209
571964D	3722
571964J	3722
571967D	3754
571967J	3754
571968D	3762
571968J	3762
571974D	3549
571974J	3549
571976D	3683
571976D	3872/1
571976J	3683
571976J	3872/1
571977D	4212
571977J	4212
571980D	3943
571980J	3943
571984D	3590/1
571984J	3590/1
571985D	3682
571985J	3682
571986D	3836
571986J	3836
571987D	3836
571987J	3836
571988D	3821
571988J	3821
571990D	4180
571990J	4180
571991D	4179
571991J	4179
571995D	4281

JURID	BESER
NO	NO
571995J	4281
571998D	3755
571998J	3755
572100D	3723
572100J	3723
572115J	3375
572118D	3746
572118J	3746
572119D	3710
572119J	3710
572120D	3709
572120J	3709
572127D	4087
572127J	4087
572135D	4212
572135J	4212
572136D	4212
572136J	4212
572138D	4148/1
572138J	4148/1
572140D	3560
572140J	3560
572143D	3449
572143J	3449
572144D	3449
572144J	3449
572145D	3522
572145J	3522
572146D	3640
572146J	3640
572161D	3833
572161J	3833
572164D	3600
572164J	3600
572166D	3882
572166J	3882
572177D	3579
572177J	3579
572178D	3371
572178J	3371
572181D	3633
572181J	3633
572186D	4108
572186J	4108
572188D	3776
572188J	3776
572193D	3875
572193J	3875
572197D	4080
572197J	4080
572200D	3688
572200J	3688
572205D	3324
572205J	3324
572206D	3394
572206J	3394
572209D	3400
572209J	3400
572210D	3766
572210J	3766
572216D	3407
572216J	3407
572217D	3745
572217J	3745
572221D	3887
572221J	3887
572230D	3370
572230J	3370
572237D	3501
572237J	3501
572238D	3752
572238J	3752
572245D	3693
572245J	3693
572247D	3883
572247J	3883
572250D	3509
572250J	3509
572253D	3673
572253J	3673

JURID	BESER
NO	NO
572255D	3402
572255J	3402
572257D	4128
572257J	4128
572258D	3446
572258J	3446
572262D	3620
572262J	3620
572267D	3395
572267J	3395
572268D	3504
572268J	3504
572269D	3502
572269J	3502
572271D	3757
572271D	3857
572271J	3757
572271J	3857
572272D	3757
572272D	3857
572272J	3757
572272J	3857
572275D	3426
572275J	3426
572281D	3448
572281J	3448
572288D	3582
572288J	3582
572293D	3436
572293J	3436
572294D	3436
572294J	3436
572295D	3401
572303D	3634
572303J	3634
572304D	3634
572304J	3634
572309D	3631
572309J	3631
572310D	3562
572310J	3562
572312D	3397
572312J	3397
572313D	3758
572313J	3758
572316D	3369
572316J	3369
572317D	3437
572317J	3437
572318D	3437
572318J	3437
572324D	3686
572324J	3686
572326D	3379
572326J	3379
572331D	3499
572331J	3499
572332D	3463
572332J	3463
572333D	3554
572333D	3651
572333J	3554
572333J	3651
572335D	3462
572335J	3462
572340D	3607
572340J	3607
572345D	3779
572345J	3779
572346D	3779
572346J	3779
572347D	3632
572347J	3632
572348D	3674
572348J	3674
572349D	3696
572349J	3696
572354D	3695
572354J	3695
572355D	3714

JURID	BESER
NO	NO
572355J	3414
572355J	3714
572361D	3415
572361J	3415
572363D	3714
572363J	3714
572367D	3777
572367J	3777
572370D	3685
572370J	3685
572373D	3760
572373J	3760
572377D	4078
572377J	4078
572380D	3915
572380J	3915
572381D	3622
572381J	3622
572382D	3888
572382J	3888
572386D	4072
572386J	4072
572388D	3740
572388J	3740
572392D	4086
572392J	4086
572393D	3704
572393J	3704
572396D	3577
572396D	3647
572396J	3577
572396J	3647
572399D	3602
572399J	3602
572401D	3778
572401J	3778
572402D	3744
572402J	3744
572403D	3687/1
572403J	3687/1
572404D	3768
572404J	3768
572405D	3769
572405J	3769
572408D	3687/1
572408J	3687/1
572409D	3898
572409J	3898
572411D	3507
572411J	3507
572419D	3809
572419J	3809
572420D	3884
572420J	3884
572423D	4079
572423J	4079
572424D	3913
572424J	3913
572428D	4115
572428J	4115
572432D	4110
572432J	4110
572435D	3874
572435J	3874
572437D	3780
572437J	3780
572442D	3648
572442J	3648
572447D	3685
572447J	3685
572448D	3859
572448J	3859
572449D	4109
572449D	4232
572449J	4109
572449J	4232
572450D	3788
572450J	3788
572451D	4010
572451J	4010

JURID	BESER
NO	NO
572453D	3843
572453J	3843
572471D	3928
572471J	3928
572477D	3764
572477J	3764
572478D	4155
572478J	4155
572480D	4159
572480J	4159
572482D	3889
572482J	3889
572485D	3890
572485J	3890
572487D	4158
572487J	4158
572488D	4153
572488J	4153
572489D	4118
572489J	4118
572491D	3817
572491J	3817
572492D	3825
572492J	3825
572494D	3512
572494D	3512/1
572494J	3512
572494J	3512/1
572496D	3632
572496J	3632
572497D	3892
572497J	3892
572499D	4271
572499J	4271
572500D	3900
572500J	3900
572501D	3933
572501J	3933
572503D	4119
572503J	4119
572504D	3831
572504J	3831
572510D	4112
572510J	4112
572511D	3978
572511J	3978
572513D	3961
572513J	3961
572514D	3959
572514J	3959
572515D	3891
572515J	3891
572516D	4154
572516J	4154
572518D	3976/1
572518J	3976/1
572519D	4084
572519J	4084
572521D	4293
572521J	4293
572522D	3944
572522J	3944
572526D	3968
572526J	3968
572527D	3969
572527J	3969
572528D	3829
572528J	3829
572530D	3511
572530J	3511
572532D	3802
572532J	3802
572536D	4009
572536J	4009
572537D	3767
572537J	3767
572538D	3822
572538J	3822
572539D	3951
572539J	3951

JURID	BESER
NO	NO
572541D	4010
572541J	4010
572542J	3598/1
572543D	3554
572543D	3651
572543J	3554
572543J	3651
572546D	4013
572546J	4013
572547D	4106
572547J	4106
572548D	3830
572548J	3830
572549D	3979
572549J	3979
572550D	3912
572550J	3912
572551D	4017
572551J	4017
572553D	3910
572553J	3910
572557D	3993
572557J	3993
572560D	4269
572560J	4269
572562D	4105
572562J	4105
572565D	3901
572565J	3901
572566D	3764
572566J	3764
572567D	3574
572567D	3914/1
572567J	3574
572567J	3914/1
572569D	4077
572569J	4077
572570D	3976
572570J	3976
572571D	4036
572571J	4036
572572D	3988
572572D	3988/1
572572J	3988
572572J	3988/1
572573D	3933
572573J	3933
572575D	4143
572575J	4143
572577D	4028
572577J	4028
572578D	3958
572578J	3958
572583D	3911
572583J	3911
572584D	3929
572584J	3929
572585D	4001
572585J	4001
572589D	4027
572589J	4027
572590D	3980
572590J	3980
572591D	3954
572592D	4303
572592J	4303
572593D	3880
572593J	3880
572595D	3949
572595J	3949
572597D	3997
572597J	3997
572598D	3953
572599D	3996
572599J	3996
572600D	4147
572600J	4147
572601D	4037
572601D	4037/1
572601J	4037

JURID	BESER
NO	NO
572601J	4037/1
572604D	3980
572605D	4160
572606D	4156
572607D	3960
572608D	3989
572612D	4039
572613D	4165
572617D	3928
572619D	4035
572621D	4111
572627D	4146
572628D	4029
572629D	4061
572636D	4082
572638D	4081
572639D	4060
572641D	3982
572642D	3903
572643D	3886
572648J	4277
572649D	4074
572651D	3948
572654D	3933
572655D	4255
572655J	4255
572656D	4256
572656J	4256
573003D	3919
573003J	3919
573006D	3896
573006J	3896
573008D	3539/1
573008J	3539/1
573011D	3846
573011J	3846
573012D	4093
573012J	4093
573013D	4100
573013J	4100
573014D	4123
573014J	4123
573015D	3784
573015J	3784
573016D	3950
573016J	3950
573017D	3852
573017J	3852
573018D	3853
573018J	3853
573021D	3918
573021J	3918
573027D	3935
573027J	3935
573029D	3934
573029J	3934
573030D	3820
573030D	3820/1
573030J	3820
573030J	3820/1
573031D	3800
573031J	3800
573034D	4126
573034D	4126/1
573034J	4126
573034J	4126/1
573035D	4069
573035J	4069
573039D	4059
573039J	4059
573041D	3877
573041J	3877
573042D	3617
573042J	3617
573047D	4095
573047J	4095
573050D	3553/1
573050J	3553/1
573053D	3663
573053J	3663

JURID	BESER
NO	NO
573055D	3855
573055J	3855
573058D	3848
573058J	3848
573059D	3795/1
573059J	3795/1
573068D	3512
573068D	3512/1
573068J	3512
573068J	3512/1
573072D	4197
573072J	4197
573074D	3826/1
573074J	3826/1
573075D	3800/1
573075J	3800/1
573077D	4011
573077J	4011
573083D	3854
573083J	3854
573084D	3931
573084J	3931
573085D	3801
573085J	3801
573089D	4211
573089J	4211
573092D	4102
573092J	4102
573093D	3676
573093J	3676
573094D	3548
573094D	3690
573094J	3548
573094J	3690
573096D	3986
573096J	3986
573102D	4094
573102J	4094
573106D	3794
573106J	3794
573107D	3856
573107J	3856
573109D	3568
573109J	3568
573110D	3921
573110J	3921
573112D	4152
573112J	4152
573113D	3834
573113J	3834
573114D	3835
573114J	3835
573115D	3914
573115J	3914
573118D	4012
573118J	4012
573120D	4093
573120J	4093
573123D	3850
573123J	3850
573124D	3849
573124J	3849
573125D	3983
573125J	3983
573127D	4138
573127D	4138/1
573127J	4138
573127J	4138/1
573128D	3904
573128J	3904
573130D	3790/1
573130J	3790/1
573131D	3940
573131J	3940
573132D	3939
573132J	3939
573133D	3946
573133J	3946
573135D	3987
573135J	3987

JURID	BESER
NO	NO
573136D	4389
573136J	4389
573139D	4388
573139J	4388
573147D	4103
573147J	4103
573150D	4208
573151D	4346
573151J	4346
573153D	4042
573153J	4042
573158D	3905
573158J	3905
573159D	3841
573159J	3841
573160D	3841/1
573160J	3841/1
573164D	3826/1
573164J	3826/1
573165D	3800/1
573165J	3800/1
573168D	4173
573168J	4173
573169D	3643
573169J	3643
573170D	3826
573170J	3826
573171D	3800
573171J	3800
573172D	3800/1
573172J	3800/1
573175D	4210
573175J	4210
573178D	4240
573178J	4240
573183D	3820
573183D	3820/1
573183J	3820
573183J	3820/1
573184D	3800
573184J	3800
573186D	3853/1
573186J	3853/1
573189D	4180
573189J	4180
573192D	3964
573192J	3964
573196D	4096
573196J	4096
573198D	4096
573198J	4096
573201D	4161
573201J	4161
573203D	3872
573203J	3872
573208D	4222
573208J	4222
573209D	3885
573209J	3885
573216D	3894
573216J	3894
573218D	4058
573218J	4058
573220D	3842
573220J	3842
573221D	3923/1
573221J	3923/1
573222D	3924/1
573222J	3924/1
573224D	4181
573224J	4181
573227D	4076
573227J	4076
573235D	3984
573235J	3984
573241D	3970
573241J	3970
573243D	4134
573247D	4259
573248J-AS	4247

JURID	BESER
NO	NO
573249D	4122
573253D	4137
573253J	4137
573255D	3983/1
573257J	4248
573259D	4260
573259J	4260
573261D	3922
573261D	3922/1
573261J	4171/1
573263J	4157
573266D	4173/1
573266J	4173/1
573268D	3964/1
573270D	4149
573272D	3967
573272J	3967
573274D	3820/3
573274J	3820/3
573275D	3906
573275D	3906/1
573275D	3906/1A
573275D	3906/2
573275J	3906
573275J	3906/1
573275J	3906/1A
573275J	3906/2
573276D	3920
573276D	3920/1
573276J	3920
573276J	3920/1
573277D	3907
573277D	3907/1
573277D	3907/1A
573277D	3907/2
573277J	3907
573277J	3907/1
573277J	3907/1A
573277J	3907/2
573278D	3955
573278J	3955
573280D	3972
573280J	3972
573281D	4151
573281D	4151/1
573281J	4151
573281J	4151/1
573284D	3966
573284D	3966/1
573284J	3966
573284J	3966/1
573286D	4142
573286J	4142
573289D	3971
573291D	4249
573291J	4249
573295D	4141
573296D	3945
573300D	4207
573305D	4378
573305J	4378
573306D	3800/3
573306J	3800/3
573308D	3800/2
573308J	3800/2
573312D	4135
573313D	4150
573320D	4093
573321D	4391
573321J	4391
573323D	4004
573325D	4008
573329D	4309
573329J	4309
573330D	4162
573332D	4230
573334D	4121
573335D	4014
573340D	4016
573340J	4016

JURID	BESER
NO	NO
573343D	4291
573343J	4291
573352D	4325/1
573352J	4325/1
573353D	4379
573353J	4379
573357D	4056
573357J	4056
573358D	4132
573358D	4172
573358D	4172/1
573358J	4132
573358J	4172
573358J	4172/1
573359D	4057
573359J	4057
573363D	4204
573363J	4204
573363JC	4204
573364D	4380
573364J	4380
573365D	4215
573365J	4215
573368D	4136
573368J	4136
573375D	4148/1
573375J	4148/1
573376J	4075
573377D	3895
573377J	3895
573379D	4038
573379J	4038
573380D	4213
573380J	4213
573393D	4113
573393J	4113
573395D	4310
573395J	4310
573399D	4145
573399J	4145
573401D	4383
573401J	4383
573404D	4198
573404J	4198
573406D	4166
573406J	4166
573408D	4220
573408J	4220
573409D	4241
573409J	4241
573414D	3966
573414J	3966
573416D	3998
573416J	3998
573419D	4381
573419J	4381
573420D	4265
573420J	4265
573422D	4140
573422J	4140
573430D	3980
573430J	3980
573431D	3952
573431J	3952
573432D	4382
573432J	4382
573434D	4175
573434J	4175
573435D	4167
573435J	4167
573438D	4174
573438D	4174/1
573438J	4174
573438J	4174/1
573438J	4351/1
573440D	4176
573440D	4176/1
573440J	4176
573440J	4176/1
573441D	4140/1

JURID	BESER
NO	NO
573441J	4140/1
573444D	4315
573444J	4315
573454D	4049
573454J	4049
573461D	4201
573461D	4201/1
573461J	4201
573461J	4201/1
573506D	3575
573506J	3575
573507D	3926
573507D	3926/1
573507J	3926
573507J	3926/1
573508D	3925
573508D	3925/2
573508J	3925
573508J	3925/2
573509D	3962
573509D	3962/1
573509J	3962
573509J	3962/1
573510D	3963
573510D	3963/1
573510J	3963
573510J	3963/1
573511D	3965
573511J	3965
573512D	4092
573512D	4092/1
573512J	4092
573512J	4092/1
573513D	3749
573513J	3749
573514D	3823
573514J	3823
573517D	3995
573517J	3995
573518D	3679
573518J	3679
573519D	3926
573519D	3926/1
573519J	3926
573519J	3926/1
573520D	3575/2
573520J	3575/2
573524D	3575/2
573524J	3575/2
573605J	4372
573621J	4371
573621J	4373
573622J	4374
573656J	4227
573658J	4283/1
573667J	4390
573744J	4181/1
573770J	3983/3
573862J	4369
573863J	4370

KAWE	BESER
NO	NO
0887.04	4327
1120.02	4107

LPR	BESER
NO	NO
05P001	3346
05P002	3317
05P003	3316
05P006	3424
05P007	3424/1
05P010	3625
05P011	3543
05P012	3440
05P014	3423/1

LPR	BESER
NO	NO
05P016	3459
05P024	3318
05P026	3350
05P027	3320
05P035	3723
05P036	3437
05P039	3499
05P043	4108
05P047	3395
05P053	3446
05P055	3600
05P056	3746
05P058	3560
05P063	4088
05P072	4212
05P073	3582
05P076	3633
05P090	3779
05P092	3758
05P094	3466
05P095	3425
05P096	3467
05P1001	4112
05P1002	3817
05P1003	3769
05P1004	3846
05P1005	4012
05P1007	3574
05P1007	3914/1
05P1009	3507
05P1012	3622
05P1013	4072
05P1014	4148/1
05P1015	3648
05P102	3432
05P1020	3653
05P1021	4071
05P1025	3764
05P1028	4027
05P1029	4084
05P1030	3697
05P1033	3915
05P1037	4155
05P1042	3901
05P1050	3829
05P1053	4009
05P1062	3769
05P1065	4069
05P1067	3740
05P1068	3825
05P1070	4110
05P1071	4109
05P1071	4232
05P1072	3802
05P1076	3618
05P1079	3609
05P1080	3951
05P1081	3898
05P1082	3436
05P1088	3877
05P109	3327
05P1091	4119
05P1096	3674
05P1097	3632
05P1100	3680
05P1101	3598/1
05P1106	3659
05P1107	3503/1
05P1108	3380
05P1109	3942/A
05P1109B	3942
05P111	3318
05P1110	3928
05P1113	4154
05P1114	3890
05P1115	3911
05P1117	3560
05P112	3318
05P1124	4097
05P1124	4097/1

LPR	BESER
NO	NO
05P1129	3609
05P113	3311
05P1131	3628
05P1131A	3628
05P1132	3874
05P1133	3662
05P1134	3680
05P1138	3502
05P1142	3433/1
05P1143	3433
05P1164	3994
05P118	3321
05P1188	3820
05P1188	3820/1
05P1189	3853
05P1190	3885
05P1191	3643
05P1192	3800
05P1193	4180
05P1194	4181
05P1195	3946
05P1196	3939
05P1197	4042
05P1199	3894
05P1202	3940
05P1205	3841/1
05P1206	3842
05P1207	3978
05P1208	3687/1
05P1210	3895
05P1211	4159
05P1212	3985
05P1219	3905
05P1220	3968
05P1222	3502
05P1225	3826/1
05P1226	4075
05P1228	3923/1
05P1229	3983/1
05P1231	3879
05P1235	3987
05P1236	3853/1
05P1239	4096
05P1240	4173
05P1246	3924/1
05P1249	4389
05P125	3484
05P1252	4388
05P1253	4210
05P1255	4161
05P1256	3842
05P1258	3953
05P1259	3920
05P1259	3920/1
05P126	3312
05P1260	3906
05P1260	3906/1
05P1260	3906/1A
05P1260	3906/2
05P1261	3907
05P1261	3907/1
05P1261	3907/1A
05P1261	3907/2
05P1263	4173/1
05P1264	3826/1
05P1266	3826/1
05P1268	3800/1
05P127	3393
05P1271	4346
05P1272	4157
05P1274	4247
05P1275	3925
05P1275	3925/2
05P1275A	3925/2
05P1278	3984
05P1281	3949
05P1282	4077
05P1288	3922
05P1288	3922/1
05P1289	3820/3

LPR	BESER
NO	NO
05P1293	3926
05P1293	3926/1
05P1293A	3926/1
05P1294	3963
05P1294	3963/1
05P1294A	3963/1
05P1295	3962
05P1295	3962/1
05P1295A	3962/1
05P1295K	3962
05P1295K	3962/1
05P1296	4092
05P1296	4092/1
05P1296A	4092
05P1296A	4092/1
05P1297	3965
05P1297A	3965/1
05P1297B	3965
05P1301	3536
05P131	3323
05P1310	3339
05P1310	3514
05P1311	3687/1
05P1312	3954
05P1314	4038
05P1315	4037
05P1315	4037/1
05P1316	3956
05P1318	3929
05P1319	3975
05P1322	3976
05P1326	4058
05P1327	3820
05P1327	3820/1
05P1328	3800/2
05P133	3873
05P1333	3958
05P1334	3900
05P1340	4248
05P1342	4074
05P1343	4017
05P1344	3980
05P1345	3880
05P1346	3797
05P1347	3955
05P1348	3972
05P1349	4001
05P135	3343
05P135	3483
05P1351	3964
05P1355	3767
05P1357	3779
05P1359	3944
05P136	3710
05P1360	4293
05P1361	3910
05P1362	4076
05P1363	3912
05P1364	3831
05P1365	4031
05P1367	4179
05P1368	4105
05P1369	3959
05P137	3335
05P1370	3979
05P1372	3886
05P1373	4106
05P1374	3961
05P1375	4028
05P1376	3945
05P1376A	3945
05P1376B	3945
05P1379	3891
05P1382	3960
05P1388	4134
05P1389	4137
05P139	3366/1
05P1390	4390
05P1398	3905
05P1399	4006

LPR	BESER
NO	NO
05P140	3423
05P1400	4018
05P1401	4198
05P1402	4081
05P1403	4016
05P1406	4143
05P1407	4113
05P1408	4213
05P141	3315
05P141	3515
05P1410	4208
05P1411	3969
05P1413	4029
05P1415	4039
05P1416	4165
05P1417	3989
05P1418	3996
05P1419	3997
05P141A	3315
05P141A	3515
05P1420	4259
05P1421	4249
05P1423	4148/1
05P143	3416
05P1432	4303
05P1436	4111
05P1441	3512/2
05P1448	3976/1
05P1449	3982
05P1451	4035
05P1452	3903
05P1454	4036
05P1455	4156
05P1456	4160
05P146	3405
05P1460	4151
05P1460	4151/1
05P1461	3995
05P1461A	3995
05P1464A	4122
05P1465	3966
05P1465	3966/1
05P1467	4149
05P1471	3970
05P1472	4181/1
05P1483	4000
05P1484	4142
05P1487	3967
05P1489	4260
05P1491	3827
05P1493	3964/1
05P1494	4121
05P1495	3952
05P1496	4207
05P1497	4015
05P1499	3988
05P1499	3988/1
05P1500	3971
05P1506	4240
05P151	3374
05P1516	4082
05P1522	4146
05P1536	3841
05P1548	4005
05P1551	4162
05P1555	4004
05P1558	4061
05P1562	4008
05P1563	4008
05P1570	4132
05P1570	4172
05P1570	4172/1
05P1574	4054
05P1575	4014
05P1577	4258
05P1578	4057
05P1579	4056
05P158	3611
05P1580	4230
05P1581	4230

LPR	BESER
NO	NO
05P1584	4150
05P1586	4169
05P1586A	4169
05P1589	4147
05P1593	3948
05P1608	4135
05P161	3373
05P1616	4314
05P1616A	4314
05P1616B	4314
05P1618	4325/1
05P1619	4378
05P1620	4215
05P1621	3983/2
05P1621	3983/3
05P1622	4220
05P1625	4060
05P1630	4124
05P1631	4379
05P1635	4002
05P1639	3893
05P164	3709
05P1640	3747
05P1641	4380
05P1649	3748
05P1654	4141
05P1656	3826/3
05P1657	3800/3
05P1669	3965/1
05P1673	4122
05P1679	3906/1
05P1682	4167
05P1689	4039
05P169	3709
05P1691	4255
05P1693	4256
05P1702	4140
05P1718	3998
05P1721	4171
05P1721	3922/3
05P1721	4171/1
05P1726	4265
05P1727	4303
05P1732	4382
05P1733	3916
05P1736	4233
05P1739	4381
05P1740	4145
05P1741	4383
05P1744	4136
05P1753	4166
05P1754	4309
05P1755	4310
05P1757	4049
05P1762	4391
05P1770	4201
05P1770	4201/1
05P1784	4176
05P1784	4176/1
05P1786	4174
05P1786	4174/1
05P1786A	4174/1
05P1787	4175
05P179	3421
05P1796	4140/1
05P181	3550
05P183	3324
05P1835	4241
05P1836	4295
05P1838	4372
05P1853	4371
05P1853	4373
05P187	3490
05P1873	4374
05P1876	4388
05P1879	4226
05P188	3378
05P1882	3853/1
05P1886	4312
05P190	3410

LPR	BESER
NO	NO
05P1984	4351/1
05P1992	4283/1
05P2001	4301
05P2001	4301/1
05P2005	4280
05P201	3493
05P201	3494
05P2012	4308
05P202	3371
05P2020	4349
05P203	3326/1
05P2030	4369
05P2034	4370
05P2057	4251/1
05P2066	4350/1
05P2066K	4350/1
05P2067	4228/1
05P207	3331
05P208	3332
05P210	3365
05P211	3339
05P211	3514
05P211A	3339
05P211A	3514
05P213	3511
05P215	3536
05P216	3650
05P217	3642
05P220	3503
05P221	3619
05P223	3441
05P224	3486
05P224	3486/1
05P225	3444
05P226	3486/1
05P228	3442
05P230	3381
05P231	3495
05P232	3621
05P233	3417
05P234	3419
05P235	3429
05P236	3624
05P237	3573
05P238	3572
05P242	3417/1
05P245	3509
05P249	3369
05P250	3379
05P252	3370
05P254	3407
05P257	3620
05P260	3401
05P261	3413
05P264	3397
05P265	3400
05P266	3714
05P268	3402
05P270	3634
05P271	3380
05P274	3474
05P275	3496/1
05P276	3428
05P277	3603
05P278	3482
05P280	3408
05P284	3462
05P288	3422
05P289	3415
05P293	3457
05P294	3529
05P295	3589
05P296	3564
05P297	3578
05P299	3649
05P300	3635
05P302	3430
05P304	3470
05P306	3583
05P307	3496/1

LPR	BESER
NO	NO
05P314	3436
05P315	3448
05P318	3641
05P319	3609
05P322	3752
05P324	3662
05P325	3605
05P327	3417/1
05P330	3680
05P331	3563
05P331A	3563
05P333	3469
05P334	3717
05P335	3463
05P336	3875
05P342	3882
05P346	3799
05P348	3632
05P349	3503
05P354	4104
05P355	3562
05P360	3679
05P364	3504
05P366	3522
05P372	3526
05P374	3666
05P378	3760
05P381	3436
05P383	3464
05P384	3487
05P384	3489
05P387	3660
05P392	3661
05P396	3883
05P406	3863
05P406A	3863
05P408	3513
05P408A	3513
05P409	3677
05P409A	3677
05P411	3366
05P417	3584
05P420	3675
05P423	3629
05P423A	3629
05P425	3523
05P427	3596
05P430	3683
05P430	3872/1
05P431	3771
05P440	3536
05P445	3539
05P449	3733
05P450	3528
05P455	3867
05P457	3898
05P459	4182
05P460	3866
05P461	3593
05P462	3608
05P464	3643
05P465	3736
05P467	3579
05P468	3491
05P470	3888
05P471	3558
05P472	3704
05P474	3994
05P477	3581
05P477A	3581
05P479	4078
05P481	3473
05P482	3445
05P485	3630
05P485A	3630
05P486	3878
05P487	3819
05P493	3595
05P494	3559
05P500	3773

LPR	BESER
NO	NO
05P506	4212
05P508	4148/1
05P510	3640
05P512	3833
05P514	3776
05P517	4080
05P518	3688
05P520	3766
05P522	3745
05P524	3887
05P537	3673
05P539	4128
05P542	3502
05P544	3757
05P544	3857
05P546	3426
05P555	3631
05P558	3686
05P561	3554
05P561	3651
05P564	3607
05P565	3674
05P566	3696
05P569	3892
05P570	3874
05P571	3695
05P577	3777
05P578	3685
05P582	3496
05P585	3474
05P586	3773
05P587	3449
05P591	3585
05P599	3623
05P600	3551
05P605	3553
05P608	3567
05P608A	3567
05P609	3678
05P610	3670
05P611	3512
05P611	3512/1
05P612	3506
05P613	3531
05P614	3617
05P617	3577
05P617	3647
05P619	3750
05P621	4062
05P623	3680
05P626	3453
05P627	3538
05P628	3570
05P629	4197
05P631	4020
05P636	3610
05P638	3566
05P645	3606
05P650	3656
05P651	3419
05P656	3505
05P656	3615
05P658	3674
05P659	3327
05P661	3659
05P662	3659
05P665	3602
05P667	3637
05P668	3682
05P670	4125
05P670A	4125
05P671	4125
05P672	3681
05P676	3468
05P678	3549
05P679	3569
05P680	3568
05P682	3687/1
05P683	3636
05P684	3575

LPR	BESER
NO	NO
05P685	3757
05P685	3857
05P686	3809
05P687	3897
05P691	3548
05P691	3690
05P693	3744
05P695	3778
05P696	3754
05P697	3755
05P698	3762
05P700	3768
05P701	4086
05P702	4274
05P704	3919
05P705	3918
05P708	3938
05P710	3687/1
05P711	4059
05P712	3822
05P713	4079
05P714	4214
05P717	3722
05P719	3896
05P725	3663
05P726	3676
05P729	3687/1
05P731	3527
05P737	3740
05P738	3495
05P747	3545
05P749	3693
05P756	3790/1
05P758	3846
05P759	3577
05P759	3647
05P760	3994
05P761	4281
05P763	3826/1
05P763A	3826/3
05P764	3800/1
05P764A	3800/3
05P767	3836
05P771	3881
05P775	3784
05P785	3790
05P786	4345
05P787	3794
05P789	3820
05P789	3820/1
05P791	3855
05P793	3935
05P796	3928
05P798	3884
05P799	3934
05P802	3820
05P802	3820/1
05P802K	3820/1
05P805	3854
05P806	3931
05P807	3800
05P809	4269
05P813	3780
05P814	4211
05P815	3853
05P816	3539/1
05P819	4271
05P826	3765
05P829	3852
05P830	3823
05P830A	3823
05P831	3986
05P833	4094
05P835	3830
05P836	3788
05P838	3913
05P840	4011
05P844	3667
05P845	3859
05P846	3932

LPR	BESER
NO	NO
05P847	3993
05P848	3993
05P849	4102
05P853	4152
05P856	4010
05P857	3933
05P858	3843
05P859	3843
05P860	3843
05P865	4100
05P866	3904
05P867	3983
05P869	3848
05P870	4214
05P871	4123
05P877	4118
05P878	3889
05P879	3749
05P880	3749/1
05P884	3856
05P885	3914
05P887	3583
05P893	4216
05P896	4182
05P897	4093
05P898	3950
05P899A	4102
05P899B	4102
05P900	4101
05P900	4209
05P901	4103
05P901A	4103
05P903	3938
05P904	4013
05P905	4101
05P905	4209
05P906	3801
05P907	3853
05P910	3850
05P911	3849
05P913	3801
05P919	3501
05P920	3507
05P922	3872
05P924	3872
05P926	3600
05P928	4212
05P934	3598
05P936	4034
05P936	4034/1
05P939	4275
05P940	4115
05P946	3795/1
05P948	3861
05P949	3877
05P952	3943
05P955	3575/2
05P956	3804
05P957	3821
05P957A	3821
05P958	4158
05P961	3537
05P966	3834
05P967	3835
05P969	3590/1
05P971	4095
05P973	4138
05P973	4138/1
05P977	3553/1
05P979	3896
05P983	4126
05P983	4126/1
05P986	3408
05P988	3552
05P989	3781
05P994	3921
05P997	4153

MARELLI	BESER
NO	NO
PF0174	3820/1
PF0194	4151/1
PF0658	4390
PF0661	3966/1
PF0848	4174/1
PF0889	4283/1
PF0906	4371
PF0906	4373
PF0909	4301/1
PF0911	4383
22-0686-0	4296
363700424171	4351/1
363700450086	4391
363700461113	4201/1
363700483080	4037/1
363700483150	4176/1
363700485147	4228/1
363916060148	4389
363916060149	4388
363916060174	3820/1
363916060190	3922/1
363916060194	4151/1
363916060273	3907/1
363916060273	3907/1A
363916060273	3907/2
363916060284	4092/1
363916060298	3925/2
363916060299	3963/1
363916060300	3926/1
363916060318	4097/1
363916060439	3988/1
363916060477	3942/A
363916060487	4181/1
363916060582	4378
363916060643	4171/1
363916060647	3962/1
363916060648	3920/1
363916060658	4390
363916060661	3966/1
363916060718	4140/1
363916060848	4174/1
363916060889	4283/1
363916060906	4371
363916060906	4373
363916060909	4301/1
363916060911	4383

MERITOR	BESER
NO	NO
MDP376	3433/1
MDP501	3679
MDP503	3433
MDP700	3473
MDP701	3445
MDP1038	3567
MDP1039	3678
MDP1045	3670
MDP1126	3994
MDP3017	3433/1
MDP3024	3433
MDP3122	3994
MDP5020	3773
MDP5040	3679
MDP5453	3773
MDP5481	3679
MDP3835K	3679

MEYLE	BESER
NO	NO
0252214721/PD	4350/1

MGA	BESER
NO	NO
164	3494
191	3486/1
282	3489
303	3872/1
365	3647
380	4148/1
459	3512/1
618	4126/1
648	4138/1
696	3962/1
700	4097/1
726	3820/1
794	4389
796	4388
851	3925/2
852	3926/1
855	3906/1
855	3906/1A
855	3906/2
856	3920/1
857	3907/1
857	3907/1A
857	3907/2
877	3922/1
887	4151/1
891	4092/1
903	4390
911	3966/1
925	4037/1
978	4391
1006	3988/1
1022	4380
1023	4379
1027	4325/1
1030	4380
1040	4389
1050	4172/1
1063	3983/3
1072	4382
1084	4383
1086	4381
1091	4181/1
1101	3966/1

MINTEX	BESER
NO	NO
MLB31	3481
MLB40	3416
MLB41	3423
MLB43	3661
MLB69	3413
MLB79	3423/1
MDB550	3403
MDB576	3373
MGB443	3526
MGB533	3311
MGB560	3323
MGB633	3312
MGB693	3484
MLB040	3416
MLB041	3423
MLB043	3661
MLB069	3413
MLB079	3423/1
MLB105	3771
MLB114	3453
MLB116	3662
MDB1002	3318
MDB1003	3320
MDB1005	3350
MDB1008	3317
MDB1009	3346
MDB1013	3316
MDB1021	3325
MDB1023	3377
MDB1027	3333
MDB1035	3406
MDB1054	3375

MGA	BESER
NO	NO
MDB1063	3710
MDB1068	3318
MDB1069	3709
MDB1074	3393
MDB1079	3315
MDB1079	3515
MDB1080	3328
MDB1081	3327
MDB1083	3343
MDB1083	3483
MDB1086	3366/1
MDB1092	3601
MDB1099	3335
MDB1103	3806/1
MDB1104	3806
MDB1108	3405
MDB1109	3339
MDB1109	3514
MDB1114	3315
MDB1114	3515
MDB1115	3331
MDB1116	3326/1
MDB1118	3374
MDB1119	3324
MDB1131	3513
MDB1139	3371
MDB1141	3410
MDB1143	3527
MDB1144	3379
MDB1150	3378
MDB1151	3333
MDB1153	3365
MDB1154	3706
MDB1156	3421
MDB1158	3522
MDB1162	3369
MDB1165	3404
MDB1166	3579
MDB1174	3417/1
MDB1175	3417
MDB1180	3339
MDB1180	3514
MDB1183	3370
MDB1184	3509
MDB1185	3705
MDB1186	3407
MDB1190	3650
MDB1191	3536
MDB1192	3321
MDB1204	3415
MDB1205	3440
MDB1207	3394
MDB1209	3493
MDB1209	3494
MDB1211	3429
MDB1212	3419
MDB1214	3372
MDB1214	3503/1
MDB1215	3381
MDB1217	3490
MDB1218	3424/1
MDB1222	3611
MDB1223	3609
MDB1224	3624
MDB1225	3621
MDB1228	3439
MDB1230	3573
MDB1235	3320
MDB1237	3401
MDB1239	3572
MDB1240	3466
MDB1241	3501
MDB1243	3752
MDB1244	3633
MDB1245	3513
MDB1251	3402
MDB1251	3472
MDB1252	3418
MDB1253	3649
MDB1256	3625

MGA	BESER
NO	NO
MDB1257	3468
MDB1259	3646
MDB1266	3486
MDB1266	3486/1
MDB1267	3444
MDB1273	3441
MDB1278	3467
MDB1279	3397
MDB1280	3758
MDB1282	3400
MDB1290	3549
MDB1291	3380
MDB1291	3580
MDB1293	3619
MDB1297	3634
MDB1298	3504
MDB1305	3620
MDB1310	3462
MDB1312	3408
MDB1316	3546
MDB1322	3701
MDB1327	3474
MDB1328	3436
MDB1331	3495
MDB1333	3482
MDB1334	3714
MDB1339	3496/1
MDB1341	3603
MDB1344	3582
MDB1346	3499
MDB1348	3449
MDB1350	3875
MDB1353	3422
MDB1354	3395
MDB1355	3428
MDB1360	4212
MDB1362	3605
MDB1369	3578
MDB1370	3717
MDB1371	3635
MDB1372	3692
MDB1376	3457
MDB1377	3529/1
MDB1381	3394
MDB1382	3529
MDB1384	3432
MDB1385	3469
MDB1386	3470
MDB1388	3543
MDB1393	3564
MDB1395	3723
MDB1397	3446
MDB1397	3450
MDB1398	3777
MDB1401	3609
MDB1402	3430
MDB1404	3589
MDB1410	3683
MDB1410	3872/1
MDB1411	4212
MDB1415	3641
MDB1417	3700
MDB1421	3657
MDB1421	3757
MDB1421	3857
MDB1423	3562
MDB1427	3600
MDB1429	3746
MDB1430	3461
MDB1431	3691
MDB1436	3436
MDB1437	3408
MDB1439	3463
MDB1440	3666
MDB1440	3672
MDB1441	3437
MDB1442	3680
MDB1443	4104
MDB1445	3596
MDB1446	3448

MGA	BESER
NO	NO
MDB1447	3448
MDB1451	3699
MDB1451	3779
MDB1459	3583
MDB1464	3882
MDB1465	4088
MDB1467	3642
MDB1468	3491
MDB1471	3537
MDB1474	3721
MDB1479	3366
MDB1480	3469
MDB1481	4108
MDB1482	3760
MDB1488	3632
MDB1489	3660
MDB1493	3464
MDB1496	3426
MDB1497	4080
MDB1499	3455
MDB1502	3598
MDB1503	3629
MDB1507	3502
MDB1509	3622
MDB1510	3695
MDB1513	3459
MDB1516	3584
MDB1519	3487
MDB1519	3489
MDB1520	3555
MDB1530	3522
MDB1531	3590
MDB1533	3696
MDB1538	3563
MDB1539	3685
MDB1540	3733
MDB1543	3704
MDB1547	4072
MDB1549	3583
MDB1552	3879
MDB1554	3545
MDB1556	3623
MDB1558	3473
MDB1559	3445
MDB1560	3550
MDB1564	4148/1
MDB1570	3531
MDB1571	3551
MDB1575	3640
MDB1577	3672
MDB1578	4086
MDB1583	3609
MDB1585	3513
MDB1589	3631
MDB1600	3866
MDB1610	3607
MDB1611	3556
MDB1613	3539
MDB1615	3686
MDB1620	3558
MDB1622	3593
MDB1623	4128
MDB1626	3626
MDB1627	3581
MDB1628	3503
MDB1629	3819
MDB1630	3878
MDB1642	3658
MDB1643	3630
MDB1644	3523
MDB1645	3512
MDB1645	3512/1
MDB1646	3688
MDB1647	3560
MDB1648	3619
MDB1651	3717
MDB1657	3888
MDB1658	3554
MDB1658	3651
MDB1659	3683

MGA	BESER
NO	NO
MDB1659	3872/1
MDB1662	3528
MDB1666	3608
MDB1679	3511
MDB1680	3833
MDB1682	3553
MDB1683	3736
MDB1685	3674
MDB1688	4078
MDB1690	3883
MDB1695	3673
MDB1696	3693
MDB1698	3887
MDB1703	3595
MDB1704	3559
MDB1708	3915
MDB1710	4099
MDB1719	3745
MDB1720	3766
MDB1722	3604
MDB1724	3628
MDB1725	3930
MDB1726	3675
MDB1731	3750
MDB1735	3617
MDB1736	3677
MDB1737	3678
MDB1738	3670
MDB1739	3567
MDB1740	3602
MDB1741	3506
MDB1744	3671
MDB1745	3881
MDB1749	3697
MDB1750	3884
MDB1751	4075/1
MDB1752	3909
MDB1754	3740
MDB1760	3577
MDB1760	3647
MDB1761	4034
MDB1761	4034/1
MDB1762	3507
MDB1769	4182
MDB1770	3544
MDB1783	4197
MDB1785	3781
MDB1789	3867
MDB1793	3585
MDB1794	4079
MDB1804	3538
MDB1805	3566
MDB1811	3682
MDB1812	3636
MDB1813	3665
MDB1814	3606
MDB1815	3799
MDB1822	4020
MDB1823	3809
MDB1829	3618
MDB1830	3874
MDB1831	4062
MDB1833	3667
MDB1837	3659
MDB1837	3759
MDB1841	4275
MDB1842	3722
MDB1844	4010
MDB1845	3892
MDB1848	4033
MDB1855	3680
MDB1858	3663
MDB1862	3898
MDB1866	4148
MDB1866	4148/1
MDB1869	3557
MDB1869	3610
MDB1871	3863
MDB1872	3637
MDB1879	3656

MGA	BESER
NO	NO
MDB1883	3570
MDB1884	3594
MDB1885	4214
MDB1889	3505
MDB1889	3615
MDB1900	3687/1
MDB1902	3859
MDB1903	3648
MDB1905	3830
MDB1906	3829
MDB1908	3762
MDB1909	4071
MDB1910	3901
MDB1913	3419
MDB1913	3731
MDB1915	3574
MDB1915	3914/1
MDB1917	3764
MDB1918	3717
MDB1919	3896
MDB1921	3822
MDB1923	3653
MDB1924	4125
MDB1926	3676
MDB1927	3872
MDB1932	3552
MDB1936	4126
MDB1936	4126/1
MDB1937	4069
MDB1938	3778
MDB1941	3744
MDB1942	4274
MDB1943	3918
MDB1944	3919
MDB1945	4027
MDB1946	3780
MDB1948	3548
MDB1948	3690
MDB1956	3897
MDB1958	3754
MDB1959	3755
MDB1960	3759
MDB1960	3938
MDB1962	3425
MDB1965	4084
MDB1967	3681
MDB1972	3872
MDB1975	3932
MDB1987	3928
MDB1990	4155
MDB1991	3821
MDB1995	4059
MDB1996	4271
MDB1997	3804
MDB1999	3913
MDB2002	3861
MDB2004	3879
MDB2006	3768
MDB2010	3740
MDB2011	3943
MDB2014	3788
MDB2026	3575
MDB2029	3769
MDB2033	4281
MDB2034	3782/1
MDB2036	3993
MDB2040	3782
MDB2041	3590/1
MDB2043	4109
MDB2043	4232
MDB2044	4110
MDB2050	4269
MDB2051	4123
MDB2053	3767
MDB2054	3832
MDB2060	3877
MDB2061	3784
MDB2062	4100
MDB2063	3843
MDB2064	4102

MGA	BESER
NO	NO
MDB2067	3644
MDB2068	3617
MDB2069	3836
MDB2070	3836
MDB2071	4101
MDB2071	4209
MDB2073	3846
MDB2074	3539/1
MDB2075	3896
MDB2076	3790
MDB2078	3921
MDB2081	4093
MDB2083	4119
MDB2084	3876
MDB2085	4222
MDB2090	3788
MDB2094	4009
MDB2096	3795
MDB2102	3590/2
MDB2104	3794
MDB2112	4103
MDB2113	4345
MDB2117	4115
MDB2119	3802
MDB2123	3618/1
MDB2126	4095
MDB2127	3561
MDB2134	3955
MDB2135	4276
MDB2135	4276/1
MDB2136	4083
MDB2144	3598/1
MDB2152	4094
MDB2153	4011
MDB2155	4158
MDB2159	3848
MDB2160	4153
MDB2165	4098
MDB2174	3685
MDB2177	3553/1
MDB2178	4222
MDB2180	4017
MDB2183	3820
MDB2183	3820/1
MDB2184	3436
MDB2186	3800
MDB2187	3935
MDB2188	3934
MDB2191	4212
MDB2192	3503/1
MDB2200	4032
MDB2206	3897
MDB2210	3853
MDB2211	4082
MDB2212	3911
MDB2215	4012
MDB2218	4221
MDB2219	4219
MDB2225	3852
MDB2226	3950
MDB2239	3826/1
MDB2240	3800/1
MDB2247	4143
MDB2252	3900
MDB2253	3854
MDB2254	3931
MDB2256	3529/1
MDB2257	3817
MDB2258	3795/1
MDB2259	3900
MDB2260	3765
MDB2261	3933
MDB2262	4211
MDB2263	3910
MDB2265	3831
MDB2266	4013
MDB2267	3959
MDB2268	3856
MDB2269	3855
MDB2272	3801

MGA	BESER
NO	NO
MDB2274	3912
MDB2275	3899
MDB2281	3853
MDB2282	3823
MDB2283	3820
MDB2283	3820/1
MDB2290	4303
MDB2295	3895
MDB2308	3889
MDB2314	3877
MDB2322	4187
MDB2327	3849
MDB2328	3834
MDB2329	3835
MDB2330	4331
MDB2352	4087
MDB2357	4040
MDB2363	4021
MDB2364	4022
MDB2364	4190
MDB2376	4031
MDB2386	4329
MDB2387	4074
MDB2415	3584
MDB2418	4180
MDB2419	4179
MDB2434	3496
MDB2471	3436
MDB2472	3695
MDB2479	3557
MDB2484	3643
MDB2505	3466
MDB2514	3487
MDB2514	3489
MDB2517	3555
MDB2526	3424/1
MDB2529	4088
MDB2531	3986
MDB2532	3790/1
MDB2534	3879
MDB2538	4138
MDB2538	4138/1
MDB2539	4097
MDB2539	4097/1
MDB2540	3914
MDB2541	4109
MDB2541	4232
MDB2542	3961
MDB2545	3890
MDB2546	4154
MDB2552	4023
MDB2552	4191
MDB2553	3891
MDB2555	3496/1
MDB2560	3687/1
MDB2561	3539/1
MDB2566	4152
MDB2570	4028
MDB2571	3575/2
MDB2572	4111
MDB2578	4105
MDB2579	3512/2
MDB2580	3905
MDB2585	3978
MDB2586	3769
MDB2587	4127
MDB2588	4303
MDB2590	3979
MDB2591	3850
MDB2594	3976/1
MDB2595	3983
MDB2596	3825
MDB2599	4159
MDB2602	3634
MDB2603	3749/1
MDB2604	3904
MDB2608	4028
MDB2609	4112
MDB2611	3894
MDB2612	4106

MGA	BESER
NO	NO
MDB2615	3569
MDB2616	3569
MDB2617	3568
MDB2626	4220
MDB2627	4215
MDB2628	3820
MDB2628	3820/1
MDB2632	3886
MDB2633	4042
MDB2634	3885
MDB2635	3853
MDB2637	3951
MDB2638	3842
MDB2642	3841
MDB2644	3826
MDB2646	4208
MDB2648	4096
MDB2649	4073
MDB2651	4030
MDB2655	4173
MDB2663	3800
MDB2664	3841/1
MDB2667	4188
MDB2668	4189
MDB2678	3923
MDB2678	3923/1
MDB2679	3924/1
MDB2681	4389
MDB2683	4388
MDB2686	3853/1
MDB2687	4303
MDB2690	4118
MDB2691	4058
MDB2693	3984
MDB2694	4096
MDB2695	4018
MDB2696	4198
MDB2697	4006
MDB2698	3976/1
MDB2700	3940
MDB2701	3939
MDB2702	3946
MDB2703	4001
MDB2704	4081
MDB2705	4016
MDB2712	4293
MDB2713	3944
MDB2715	3952
MDB2719	4181
MDB2720	3968
MDB2722	3564/1
MDB2723	4036
MDB2725	4137
MDB2728	4113
MDB2729	4210
MDB2732	4213
MDB2733	3880
MDB2734	3980
MDB2735	4242
MDB2736	4029
MDB2739	3945
MDB2743	3987
MDB2746	4093
MDB2750	4075
MDB2752	4076
MDB2755	3797
MDB2757	3832
MDB2759	3717
MDB2760	4277
MDB2762	3985
MDB2765	4179
MDB2767	4059
MDB2774	3929
MDB2776	3958
MDB2777	3960
MDB2778	3988
MDB2778	3988/1
MDB2780	4000
MDB2782	3529/2
MDB2784	3919

MGA	BESER
NO	NO
MDB2785	3953
MDB2786	4077
MDB2787	3949
MDB2788	3948
MDB2792	3827
MDB2793	3801
MDB2795	3614
MDB2796	3983/1
MDB2799	3969
MDB2802	3926
MDB2802	3926/1
MDB2803	3925
MDB2803	3925/2
MDB2804	3962
MDB2804	3962/1
MDB2805	3963
MDB2805	3963/1
MDB2819	3672
MDB2820	3529
MDB2821	4240
MDB2823	3895
MDB2827	4207
MDB2830	4248
MDB2831	4249
MDB2832	3421
MDB2833	4309
MDB2837	4211
MDB2845	4247
MDB2848	3922
MDB2848	3922/1
MDB2850	3820/3
MDB2851	3906
MDB2851	3906/1
MDB2851	3906/1A
MDB2851	3906/2
MDB2852	3920
MDB2852	3920/1
MDB2853	3907
MDB2853	3907/1
MDB2853	3907/1A
MDB2853	3907/2
MDB2855	3989
MDB2857	3453
MDB2860	4161
MDB2865	4039
MDB2866	4165
MDB2867	4150
MDB2868	3496/1
MDB2869	4149
MDB2872	3976
MDB2873	4332
MDB2874	4333
MDB2878	3996
MDB2880	3982
MDB2882	3975
MDB2887	4157
MDB2888	4390
MDB2890	3964
MDB2895	3800/2
MDB2901	3972
MDB2903	4151
MDB2903	4151/1
MDB2904	3458
MDB2906	3995
MDB2907	3965
MDB2908	4092
MDB2908	4092/1
MDB2915	3903
MDB2917	3965/1
MDB2921	4035
MDB2923	3956
MDB2924	4037
MDB2924	4037/1
MDB2925	3954
MDB2926	4156
MDB2929	4260
MDB2935	4029
MDB2936	3997
MDB2938	4038
MDB2939	4160

MGA	BESER
NO	NO
MDB2948	4325
MDB2948	4325/1
MDB2949	4216
MDB2950	3970
MDB2951	3984/1
MDB2961	4181/1
MDB2962	4141
MDB2963	3966
MDB2963	3966/1
MDB2964	3967
MDB2965	4134
MDB2968	4122
MDB2972	4135
MDB2977	4229
MDB2978	3971
MDB2984	3891
MDB2985	3955
MDB2987	4309
MDB2990	4054
MDB2993	3748
MDB2994	3748
MDB2999	4391
MDB3000	4005
MDB3001	4121
MDB3006	4258
MDB3007	4380
MDB3008	4379
MDB3009	4015
MDB3011	4004
MDB3015	3800/1
MDB3019	4173/1
MDB3026	3933
MDB3027	4061
MDB3029	4142
MDB3034	3964/1
MDB3036	4146
MDB3042	3823
MDB3047	3945
MDB3048	4127
MDB3053	4147
MDB3056	3980
MDB3060	4162
MDB3067	4346
MDB3072	3928
MDB3074	4242
MDB3076	4310
MDB3087	4014
MDB3088	4230
MDB3089	4008
MDB3092	4378
MDB3093	4056
MDB3094	4057
MDB3095	4132
MDB3095	4172
MDB3095	4172/1
MDB3098	4230
MDB3099	4008
MDB3100	4241
MDB3103	3560
MDB3104	4256
MDB3107	3906/1
MDB3114	4255
MDB3118	4058/1
MDB3124	4314
MDB3129	4291
MDB3131	4389
MDB3134	4148/1
MDB3136	3779
MDB3144	4324
MDB3150	3853/1
MDB3152	4337
MDB3153	4382
MDB3154	4338
MDB3155	3800/3
MDB3160	4167
MDB3164	4354
MDB3165	4339
MDB3166	4039
MDB3172	4038
MDB3174	4145

MGA	BESER
NO	NO
MDB3177	4259
MDB3182	4014
MDB3185	4124
MDB3186	3983/2
MDB3186	3983/3
MDB3193	3826/3
MDB3199	3959
MDB3201	3952
MDB3202	3993
MDB3203	4338
MDB3205	3942/A
MDB3212	3916
MDB3215	4383
MDB3216	4381
MDB3232	3980
MDB3239	4338
MDB3241	3768
MDB3242	4326
MDB3248	4254
MDB3252	4343
MDB3260	4049
MDB3267	4060
MDB3272	3998
MDB3273	4338
MDB3276	4136
MDB3279	4313
MDB3284	4335
MDB3290	4019
MDB3297	4265
MDB3298	4171
MDB3298	3922/3
MDB3298	4171/1
MDB3300	4200
MDB3302	4202
MDB3305	4233
MDB3306	4061
MDB3308	4368
MDB3310	3942/A
MDB3312	3529/2
MDB3316	4173/2
MDB3322	4204
MDB3334	4176
MDB3334	4176/1
MDB3336	4316
MDB3337	3967
MDB3338	4361
MDB3343	4323
MDB3345	4201
MDB3345	4201/1
MDB3347	4363
MDB3360	4140
MDB3363	4342
MDB3364	4226
MDB3365	3981
MDB3368	3939
MDB3369	4174
MDB3369	4174/1
MDB3370	4175
MDB3375	4140/1
MDB3378	4041
MDB3382	4336
MDB3386	4315
MDB3394	4371
MDB3394	4373
MDB3396	3933
MDB3399	4143
MDB3401	4372
MDB3402	4374
MDB3406	3826/2
MDB3416	4318
MDB3417	4317
MDB3420	4313
MDB3423	4286
MDB3428	4002
MDB3431	4312
MDB3458	4367
MDB3488	4270
MDB3675	4283
MDB3675	4283/1
MDB3704	4334

MGA	BESER
NO	NO
MDB3708	4341
MDB3711	4349
MDB3717	4282
MDB3719	4351
MDB3719	4351/1
MDB3747	4282/1
MDB3748	4308
MDB3755	4227
MDB3765	4287
MDB3772	4284
MDB3778	4336
MDB3784	4285
MDB3822	4030
MDB3827	4228
MDB3827	4228/1
MDB3867	4279
MDB3871	4364
MDB3888	4205
MDB3896	4234
MDB3914	4307
MDB3926	4341
MDB3927	3995/1
MDB3930	4253
MDB3931	4251
MDB3931	4251/1
MDB3975	4301
MDB3975	4301/1
MDB3986	4280
MDB3989	4239
MDB3991	4370
MDB3992	4369
MDB3994	4246
MDB4004	4350
MDB4004	4350/1
MDB4005	4356
MDB4047	4170
MDB4082	4376
MDB4095	4384
MDB4118	4357
MDB4129	3662
MDB4134	4338
MDB4179	4040
MDB4191	4355
MDB4200	4360
MDB4283	4375
MVK0069	4092/1
MVK0070	4092/1
MVK0071	4092/1
MVK0080	3925/2
MDB16250	3627

MK KASHIYAMA	BESER
NO	NO
D0004	3746
D0005	3620
D0020	3436
D0034	3901
D1012	3370
D1014	3415
D1017	3369
D1025	3397
D1038	3444
D1040	3486
D1040	3486/1
D1050	3369
D1082	3650
D1083	3529
D1143	3778
D1155	3779
D1158	3766
D1162	4104
D1177	3667
D1180	3562
D1187	4087
D1191	4128
D1213	3888
D1214	3660
D1247	4115

MK KASHIYAMA	BESER
NO	NO
D1253	4002
D1261	3983
D1300	3507
D1301	3843
D1302	3648
D1305	3993
D2006	3710
D2007	3379
D2011	3369
D2020	3371
D2023	3402
D2026	3634
D2057	4088
D2069	3714
D2087	3666
D2088	4086
D2090	3693
D2104	3777
D2105	4072
D2123	4275
D2154	4274
D2166	3822
D2174	3768
D2177	3829
D2179	3830
D2202	4158
D2217	4013
D2231	4082
D2992	4105
D2993	4111
D3015	3436
D3025	3462
D3043	3666
D3049	3449
D3088	3892
D3099	3874
D3109	3780
D3110	3874
D3114	4119
D3119	3767
D4001	3462
D5004	3324
D5009	3509
D5018	4212
D5100	4109
D5100	4232
D5109	4155
D5285	3662
D5300	3661
D6000	3709
D6004	3407
D6008	3401
D6010	3400
D6017	3401
D6081	3809
D6085	3892
D6089	4271
D6091	4216
D6102	3675
D6120	4062
D7017	4078
D7042	3913
D7051	3545
D7057	3410
D7058	3470
D7059	3687/1
D7061	3687/1
D7062	3744
D7063	3623
D7064	4269
D7069	3895
D7070	4269
D7074	3802
D7076	3632
D7077	3653
D7078	3978
D7079	3979
D7080	3895
D7150	3959
D7152	3985

MK KASHIYAMA	BESER
NO	NO
D7153	3502
D7154	3959
D7155	3951
D7156	4028
D7158	4087
D9013	3511
D9015	3745
D9017	4034
D9017	4034/1
D9023	3511
D9024	3884
D9025	3602
D9026	4027
D0008M	3600
D10000	4197
D10025	4011
D10031	4126
D10031	4126/1
D10032	4069
D10041	3781
D10044	4012
D10048	3432
D10049	4281
D10050	4094
D10051	3748
D10055	3853
D10058	3928
D10064	3574
D10064	3914/1
D10065	4031
D10068	3802
D10079	4102
D10080	4101
D10080	4209
D10081	4001
D10083	3976/1
D10085	3968
D10087	3687/1
D10088	3894
D10089	3856
D10090	3855
D10091	3848
D10092	3795/1
D10095	3748
D10098	3423
D10099	3413
D10100	3453
D10102	3771
D10103	3872
D10104	3512
D10104	3512/1
D10107	4106
D10109	3632
D10110	3863
D10111	3676
D10112	3877
D10113	3853
D1031M	3758
D1044M	4087
D1063M	3760
D1084M	4104
D1099M	4087
D1110M	3779
D1116M	4010
D1142M	3632
D1144M	3632
D1145M	3632
D1218M	3859
D1224M	3697
D1227M	3577
D1227M	3647
D1239M	4303
D1244M	3933
D1258M	3859
D1290H	3942/A
D1341M	4283/1
D2050M	3634
D2053M	3776
D2077M	4088
D2082M	3560

MK KASHIYAMA	BESER
NO	NO
D2094M	3673
D2118M	3554
D2118M	3651
D2121M	3634
D2125M	4099
D2126M	3915
D2183M	3769
D2188M	4153
D2204M	3788
D2224M	3817
D2227M	3825
D2228M	3891
D2233M	3890
D2239M	4154
D2990M	4112
D3028M	3449
D3047M	3463
D3050M	3723
D3053M	3437
D3062M	3522
D3066M	3640
D3083M	3833
D3120M	3877
D3122M	4118
D3125M	3889
D4014M	3446
D4029M	3757
D4029M	3857
D4031M	3674
D4034M	3887
D5019M	3752
D5022M	3582
D5042M	4212
D5046M	4148/1
D5050M	3631
D5053M	3695
D5056M	4148/1
D5060M	3704
D5066M	4148/1
D5070M	3607
D5073M	3686
D5080M	3696
D5091M	3696
D5094M	4110
D5103M	3683
D5103M	3872/1
D5113M	4109
D5113M	4232
D5119M	4110
D5128M	3831
D5200M	4159
D5201M	4155
D5270M	3683
D5270M	3872/1
D6018M	3448
D6024M	4108
D6039M	3685
D6053M	3622
D6054M	3688
D6068M	4062
D6086M	4084
D6110M	3900
D7005M	3579
D7011M	3395
D7014M	3426
D7020M	4080
D7036M	4079
D7039M	3764
D7067M	4009
D7090M	3912
D9010M	3882
D9019M	3883
D9029M	3928
D9990M	3867
D9991M	4182
D11302M	4233
D20149H	4351/1
D2299MH	4037/1
D2330MH	4176/1
D3137MH	3988/1
D20226MH	3920/1

NECTO	BESER
NO	NO
FD50A	3318
FD51A	3320
FD674	3439
FD211V	3526
FD213A	3419
FD215A	3429
FD221A	3466
FD222A	3432
FD225A	3374
FD236A	3373
FD252A	3474
FD254A	3323
FD262A	3536
FD265A	3321
FD267A	3378
FD290V	3440
FD403A	3621
FD406A	3417
FD409A	3589
FD412A	3572
FD413A	3573
FD449A	3327
FD451A	3343
FD451A	3483
FD465A	3335
FD497V	3350
FD571V	3416
FD578V	3423
FD580V	3413
FD602A	3333
FD604A	3317
FD607A	3316
FD611A	3410
FD620A	3442
FD6588	3672
FD671A	3424/1
FD686V	3603
FD690V	3527
FD691A	3380
FD691A	3580
FD691E	3580
FD692A	3329
FD695A	3493
FD695A	3494
FD697A	3495
FD804A	3324
FD809A	3709
FD810A	3393
FD812A	3710
FD817A	3410
FD825A	3421
FD827A	3397
FD834A	3705
FD838A	3370
FD853A	3418
FD854A	3509
FD865V	3369
FD882A	3371
FD897A	3502
FD902A	3501
FD903A	3401
FD906A	3745
FD2010A	3490
FD2012V	3513
FD2020A	3408
FD2023A	3467
FD2024A	3624
FD2112A	3539
FD2112A	3546
FD2112E	3546
FD2405A	3457
FD4018A	3405
FD4023A	3312
FD4093A	3339
FD4093A	3514
FD4137A	3315
FD4137A	3515
FD4143A	3365
FD4150A	3441
FD4151A	3486

NECTO	BESER
NO	NO
FD4151A	3486/1
FD4154A	3444
FD4162A	3484
FD4167A	3625
FD4173A	3611
FD6008V	3366/1
FD6065A	3496/1
FD6070V	3537
FD6089A	3428
FD6091V	3482
FD6105A	3646
FD6108V	3366
FD6130V	3423/1
FD6136A	3641
FD6138A	3771
FD6164A	3806/1
FD6188A	3873
FD6198V	3679
FD6200A	3402
FD6200A	3472
FD6200E	3472
FD6210A	3680
FD6216A	3422
FD6238V	3543
FD6244A	3536
FD6249A	3459
FD6250A	3425
FD6253A	3424
FD6259A	3662
FD6262V	3462
FD6263V	3605
FD6264A	3714
FD6265A	3634
FD6276A	3469
FD6277A	3470
FD6278A	3578
FD6279A	3584
FD6284A	3583
FD6285A	3583
FD6287A	3717
FD6290A	3582
FD6314A	3464
FD6319A	3487
FD6319A	3489
FD6320V	3523
FD6324A	3555
FD6332A	3601
FD6337A	3400
FD6344A	4212
FD6345A	3776
FD6349A	4087
FD6350A	3449
FD6353A	3436
FD6354A	3529
FD6355V	3746
FD6357A	3437
FD6358A	3632
FD6374A	3609
FD6375A	3430
FD6376A	3609
FD6377A	3430
FD6378A	3311
FD6382A	3562
FD6385A	3683
FD6385A	3872/1
FD6386A	3419
FD6386A	3731
FD6391A	3623
FD6400A	3723
FD6401A	3531
FD6403V	3473
FD6404V	3445
FD6409A	3806
FD6428A	3417/1
FD6438A	3556
FD6452A	3819
FD6453A	3878
FD6454A	3691
FD6458A	4212
FD6460A	3752

NECTO	BESER
NO	NO
FD6461A	3448
FD6462V	3499
FD6463A	3395
FD6472A	3564
FD6475A	3593
FD6476A	3563
FD6477A	3660
FD6480A	4104
FD6481A	3590
FD6481E	3590
FD6482A	3528
FD6483A	3503
FD6485A	3596
FD6486A	3558
FD6489A	3551
FD6504A	3608
FD6513A	4128
FD6516V	3749
FD6521V	3595
FD6522V	3559
FD6523A	3557
FD6523A	3610
FD6524V	3446
FD6524V	3450
FD6525A	3549
FD6527A	3657
FD6527A	3757
FD6527A	3857
FD6528A	3640
FD6529A	3882
FD6532A	3733
FD6533A	3522
FD6535A	3631
FD6537A	3686
FD6554A	3875
FD6560A	3721
FD6564A	4087
FD6568A	3699
FD6568A	3779
FD6571V	3463
FD6572A	3598
FD6574A	3622
FD6575A	3685
FD6577A	3545
FD6579A	3560
FD6580A	3607
FD6583A	3658
FD6584A	3554
FD6584A	3651
FD6585A	3453
FD6586A	3512
FD6586A	3512/1
FD6587A	3736
FD6591A	3704
FD6597A	4182
FD6599V	3689
FD6602A	3619
FD6605A	3867
FD6608A	3550
FD6609A	3832
FD6618A	3629
FD6623A	3888
FD6625A	4148/1
FD6626V	3553
FD6635A	4086
FD6636A	3449
FD6640A	3626
FD6641A	3581
FD6649A	3833
FD6653A	3617
FD6656A	3750
FD6664A	3426
FD6665A	3674
FD6667A	3600
FD6673A	3872
FD6674A	3628
FD6675A	3567
FD6675V	3567
FD6676V	3678
FD6677A	3680

NECTO	BESER
NO	NO
FD6677V	3680
FD6680A	3538
FD6681A	3585
FD6683A	4078
FD6684A	3799
FD6684V	3799
FD6689A	3566
FD6691V	3575
FD6693A	3506
FD6695A	3909
FD6696A	3636
FD6697V	3507
FD6698A	3693
FD6700A	3661
FD6701A	4108
FD6706A	3630
FD6708A	4080
FD6709A	3505
FD6709A	3615
FD6711A	3570
FD6712A	3594
FD6713A	4197
FD6715A	3717
FD6716A	3642
FD6718A	3415
FD6720A	3529/1
FD6720E	3529/1
FD6724A	3781
FD6725A	3569
FD6730A	3897
FD6733A	3659
FD6734A	3618
FD6736A	3688
FD6739A	3656
FD6741A	3873
FD6745A	3883
FD6749A	3677
FD6754A	3682
FD6756A	3722
FD6757A	3863
FD6759V	3606
FD6761A	3540
FD6766A	3872
FD6769A	4010
FD6770A	3637
FD6772V	3671
FD6773V	4020
FD6774A	4281
FD6777A	3896
FD6779A	3577
FD6779A	3647
FD6780A	3598/1
FD6782A	3681
FD6782V	3681
FD6783A	3861
FD6783V	3861
FD6784V	3804
FD6785A	3755
FD6788A	3762
FD6789A	3763
FD6790A	3754
FD6791A	4062
FD6794A	3663
FD6795A	3676
FD6798A	3675
FD6803V	3749/1
FD6809A	3881
FD6811A	4123
FD6815A	3687/1
FD6818A	3744
FD6819A	3687/1
FD6828A	3887
FD6834A	3602
FD6835A	3511
FD6844A	4093
FD6846A	3790/1
FD6847A	3938
FD6848V	3784
FD6853V	3942
FD6854A	3943

NECTO	BESER
NO	NO
FD6855A	3919
FD6856A	3918
FD6857A	4059
FD6858A	3561
FD6864A	3850
FD6866A	4125
FD6867A	3778
FD6869A	4125
FD6870A	3768
FD6873A	3782
FD6873E	3782
FD6874A	3820
FD6874A	3820/1
FD6875A	3935
FD6876A	3934
FD6878A	4093
FD6885V	3423
FD6886V	3575/2
FD6887V	3823
FD6892A	3644
FD6893V	3856
FD6894V	3855
FD6895V	3834
FD6896V	3835
FD6897V	3914
FD6899A	3539/1
FD6901V	3921
FD6902A	3896
FD6904A	4072
FD6906A	3898
FD6907A	3548
FD6907A	3690
FD6908A	3769
FD6909A	3877
FD6910A	3788
FD6912A	4027
FD6913A	3809
FD6915A	3590/1
FD6916A	3826/1
FD6917A	3800/1
FD6920A	3590/2
FD6929A	3923/1
FD6929V	3923/1
FD6930A	3924
FD6931A	4100
FD6938A	3780
FD6940A	3529/2
FD6942A	3673
FD6944A	3848
FD6944V	3848
FD6945V	3795/1
FD6946V	3794
FD6947A	4211
FD6948A	3800
FD6949V	3553/1
FD6951V	3648
FD6952A	4182
FD6953A	4011
FD6955A	4040
FD6956A	4155
FD6957A	3879
FD6958A	3849
FD6960A	3846
FD6961A	3836
FD6962A	3836
FD6964A	3817
FD6965A	3825
FD6966A	3704
FD6967A	4112
FD6971A	3884
FD6973A	3822
FD6974A	3874
FD6978A	3830
FD6981A	4274
FD6984A	3699
FD6984A	3779
FD6989A	3852
FD6991A	3767
FD6992A	4013
FD6993A	4084

NECTO	BESER
NO	NO
FD6998A	3859
FD6999A	4158
FD7000A	4094
FD7001A	4153
FD7004A	3821
FD7005A	4126
FD7005A	4126/1
FD7006A	4069
FD7007A	4097
FD7007A	4097/1
FD7008A	4102
FD7009A	4101
FD7009A	4209
FD7010A	3950
FD7012A	4110
FD7015A	4095
FD7015V	4095
FD7016A	3901
FD7018A	4103
FD7019A	4127
FD7022A	3928
FD7026A	3853
FD7027A	3854
FD7028A	3931
FD7032A	3986
FD7033A	3915
FD7034V	3801
FD7036A	4119
FD7038A	4012
FD7039A	4115
FD7047A	3802
FD7048A	4271
FD7050A	3820
FD7050A	3820/1
FD7052A	3829
FD7055A	3892
FD7057A	3843
FD7058A	3993
FD7060A	3764
FD7061A	3932
FD7063A	3983
FD7065A	3910
FD7066A	3955
FD7067A	3889
FD7069A	4075/1
FD7070A	4076
FD7071A	4180
FD7073A	4096
FD7075A	3643
FD7076A	3618/1
FD7077A	3912
FD7078A	3885
FD7085A	3782
FD7089A	3826
FD7090A	4137
FD7091A	3831
FD7092A	4031
FD7094A	4099
FD7095A	4275
FD7097A	4105
FD7101A	3876
FD7104A	3939
FD7105A	3940
FD7106A	3946
FD7108A	4269
FD7109A	3890
FD7111A	3904
FD7112A	3951
FD7113A	4173
FD7115A	3905
FD7119A	3944
FD7120A	4042
FD7121A	4152
FD7122A	4154
FD7123A	3891
FD7124A	4138
FD7124A	4138/1
FD7126A	4109
FD7126A	4232
FD7129A	4179

NECTO	BESER
NO	NO
FD7134A	3900
FD7135A	4159
FD7138A	4118
FD7139A	3933
FD7140A	4222
FD7147A	3959
FD7148A	3978
FD7149A	3979
FD7150A	3632
FD7155A	4017
FD7156V	3841
FD7157V	3841/1
FD7159A	4293
FD7163A	4181
FD7170A	4111
FD7171A	3874
FD7173A	4303
FD7174V	3842
FD7177A	3853/1
FD7179A	3529/2
FD7180A	4346
FD7181A	3503/1
FD7182A	3984
FD7184A	4074
FD7188A	4148
FD7188A	4148/1
FD7189A	3987
FD7190A	4186
FD7197A	4389
FD7198A	4388
FD7206A	4096
FD7208A	4210
FD7212A	4058
FD7215A	4106
FD7216A	3961
FD7218A	4079
FD7219A	3913
FD7231A	4028
FD7234A	3945
FD7236V	3614
FD7238A	4143
FD7240A	4208
FD7241V	3777
FD7243A	3953
FD7244A	3949
FD7249A	4161
FD7251A	3969
FD7252A	3968
FD7254A	3894
FD7256V	4216
FD7259A	4082
FD7260A	4157
FD7262A	3800/2
FD7268V	3922
FD7268V	3922/1
FD7269V	3922
FD7269V	3922/1
FD7270V	3820/3
FD7271V	3906
FD7271V	3906/1
FD7271V	3906/1A
FD7271V	3906/2
FD7272V	3920
FD7272V	3920/1
FD7273V	3907
FD7273V	3907/1
FD7273V	3907/1A
FD7273V	3907/2
FD7274A	3853/1
FD7275A	4157
FD7276A	4157
FD7279A	4173/1
FD7280A	3826/1
FD7281A	4213
FD7285A	3985
FD7287A	4018
FD7288A	4006
FD7289A	3880
FD7290A	3980
FD7296A	3964

NECTO	BESER
NO	NO
FD7301A	4248
FD7302A	4249
FD7303A	4247
FD7304A	3598/1
FD7307A	4081
FD7308A	3769
FD7312A	3802
FD7313V	4151
FD7313V	4151/1
FD7317A	3512/2
FD7319A	3976/1
FD7321A	4113
FD7322A	4016
FD7324A	3685
FD7327A	4141
FD7328V	3965
FD7339A	4260
FD7344A	4207
FD7345V	3965/1
FD7347A	4240
FD7354A	4181/1
FD7358A	4005
FD7362A	4001
FD7365A	4198
FD7388A	3529/1
FD7394A	3529/2
FD7415A	4277
FD7425A	3529/2
FD7521A	4325
FD7542A	4338
FD7567A	4326
FD7568A	4019
FD7577A	3976
FD7580V	3962
FD7580V	3962/1
FD7581V	3925
FD7581V	3925/2
FD7582V	3963
FD7582V	3963/1
FD7583V	3926
FD7583V	3926/1
FD7584A	3895
FD7592A	4336
FD7595A	4201
FD7595A	4201/1
FD7618A	4337
FD7620A	4323
FD7641A	4335
FD7652A	4313
FD7665A	4285
FD7666A	4283
FD7667A	4282/1
FD7668A	4287
FD7673A	4284
FD7678A	4364
FD7687A	4316
FD7696A	4321
FD7733A	4287
FD7736A	4239
FD7737A	4242
FD7772V	4357

NIPPARTS	BESER
NO	NO
J3600101	3914/1
N3603069	3988/1

NK	BESER
NO	NO
221017	3618
221018	3617
221023	4123
221207	3624
221214	3584
221402	3446
221403	3462
221405	3757
221405	3857
221407	3757
221407	3857
221501	3365
221506	3573
221507	3578
221508	3564
221509	3572
221510	3563
221512	3583
221514	3909
221515	3879
221517	3881
221518	3879
221520	3656
221530	4389
221532	4388
221533	4180
221534	4208
221536	4179
221538	4181/1
221540	4207
221545	4325/1
221547	4378
221549	4379
221550	4388
221552	4382
221553	4380
221554	4381
221555	4383
221558	4378
221918	3493
221918	3494
221919	3474
221923	3873
221924	3474
221925	3487
221925	3489
221926	3503
221930	3819
221931	3878
221932	3873
221934	3799
221937	3636
221942	3556
221944	3935
221945	3934
221947	3834
221948	3835
221949	3914
221950	3854
221951	3931
221952	3986
221954	3984
221955	3964
221960	3820/3
221961	3972
221962	3922
221962	4171/1
221964	4151
221964	4151/1
221965	3685
221970	4145
221974	4371
221974	4373
221975	4372
221976	4374
221977	4201
221977	4201/1
222205	3369
222207	3394
222208	3415

NK	BESER
NO	NO
222210	3369
222211	3370
222212	3397
222214	3758
222219	4104
222220	3562
222221	3660
222222	4087
222223	3779
222236	3598
222238	3888
222239	4128
222244	3577
222244	3647
222249	3667
222251	3697
222252	3632
222253	4010
222255	3859
222256	3932
222257	3933
222258	3983
222260	4017
222261	4143
222262	3933
222264	3952
222268	3965/1
222269	4038
222273	4283/1
222305	3316
222306	3317
222307	3393
222310	3421
222314	3424
222316	3468
222319	3625
222321	3422
222322	3466
222325	3432
222326	3543
222329	3425
222334	3608
222337	3441
222340	3617
222343	3523
222344	3773
222347	3749
222353	3994
222358	3575
222361	3994
222362	3790
222363	3897
222364	3800/1
222365	3826/1
222367	3575/2
222368	3823
222374	3643
222375	4173
222376	3790/1
222377	3800
222380	3826/1
222382	3965
222383	4092
222383	4092/1
222384	4173/1
222387	3995
222388	3826/3
222389	3800/3
222390	4121
222392	3569
222502	3429
222503	3417/1
222504	3621
222507	3417/1
222508	3417
222509	3484
222512	3419
222514	3603
222515	3589
222516	3549

NK	BESER
NO	NO
222518	3464
222519	3593
222522	3445
222533	3545
222534	3558
222546	3781
222549	3722
222550	3755
222551	3754
222553	4100
222554	4093
222557	3877
222558	3921
222559	3784
222560	3801
222561	3885
222562	3853
222563	4058
222564	3920
222564	3920/1
222565	3907
222565	3907/1
222565	3907/1A
222565	3907/2
222566	3906
222566	3906/1
222566	3906/1A
222566	3906/2
222567	4157
222568	4161
222569	4119
222573	4122
222574	3988
222574	3988/1
222579	4204
222582	4351/1
222602	3324
222603	3509
222606	3504
222607	3582
222609	3501
222610	4212
222612	3631
222613	3501
222621	4148/1
222623	3696
222624	3695
222625	3686
222626	3607
222631	4155
222632	3704
222633	3831
222634	4148/1
222635	4148/1
222636	4159
222637	4109
222637	4232
222640	4160
222641	4156
223001	3407
223003	3400
223004	3401
223006	3448
223016	4108
223018	3685
223019	3688
223020	3622
223021	3675
223023	3809
223026	3892
223027	4106
223028	3955
223029	4271
223030	4084
223031	3900
223033	3975
223211	3449
223213	3437
223214	3463
223216	3666

NK	BESER
NO	NO
223220	3522
223221	3640
223225	3875
223230	3723
223233	3833
223238	3874
223239	3780
223242	3522
223244	4118
223245	3889
223248	4303
223250	3767
223255	4029
223303	3315
223303	3515
223304	3339
223304	3514
223306	3611
223307	3513
223308	3408
223309	3550
223312	3679
223318	3408
223319	3628
223320	3689
223322	3630
223323	3581
223326	3680
223327	3567
223328	3678
223329	3670
223330	3677
223331	3863
223333	4125
223334	3663
223335	3676
223338	3804
223339	3821
223340	3681
223341	3861
223342	4126
223342	4126/1
223343	4069
223344	4281
223345	3836
223350	4103
223351	3923/1
223352	3924/1
223354	4101
223354	4209
223360	4210
223362	3925
223362	3925/2
223363	3926
223363	3926/1
223364	3962
223364	3962/1
223365	3963
223365	3963/1
223366	4248
223367	4249
223368	4247
223375	4391
223401	3632
223403	3502
223404	3507
223407	3632
223408	3778
223409	3648
223411	3993
223412	3632
223413	3961
223414	3843
223415	3993
223418	3632
223420	3843
223421	3993
223422	3993
223423	3632
223424	3502

NK	BESER
NO	NO
223425	3959
223426	3985
223427	3960
223428	3989
223430	4039
223431	4165
223433	4035
223434	4061
223435	3959
223436	3959
223437	4049
223439	4233
223440	4039
223448	4049
223501	3740
223504	3802
223505	4009
223506	4028
223507	4269
223508	3978
223509	3979
223511	3653
223512	3802
223513	3968
223514	3969
223515	3522
223516	4269
223517	4001
223518	4087
223520	3880
223521	3980
223525	4136
223602	3410
223604	3717
223606	3410
223607	3470
223608	3469
223609	3623
223611	3733
223614	3623
223618	3762
223620	3887
223621	3674
223624	3846
223626	3848
223627	3795/1
223628	4211
223629	3853
223631	3856
223632	3855
223633	4042
223636	3800/2
223638	3976
223641	4149
223643	4150
223644	4230
223645	4014
223646	4008
223647	4014
223648	4057
223704	3321
223709	3381
223710	3442
223714	3380
223715	3457
223716	3529
223719	3680
223723	3366/1
223724	3366
223728	3496/1
223729	3750
223733	3610
223735	3938
223740	3800
223741	3820
223741	3820/1
223743	3939
223744	3940
223745	3946
223747	3970

NK	BESER
NO	NO
223748	3971
223753	3853/1
223911	3374
223913	3527
223915	3503
223917	3495
223918	3380
223919	3482
223920	3380
223921	3526
223925	3539
223926	3596
223928	3496/1
223929	3503
223938	3659
223944	3503/1
223946	3539/1
223948	3950
223949	3852
223950	3428
223951	3849
223952	3850
223953	3503/1
223954	3827
223955	4137
223958	4141
223959	3966
223959	3966/1
223960	3967
223961	4134
223963	4142
223965	4132
223965	4172
223965	4172/1
223966	4056
223969	3964/1
223970	4140
223971	4140/1
224005	3771
224009	3683
224009	3872/1
224010	3413
224013	3512
224013	3512/1
224014	3662
224016	3433
224018	3412
224019	3943
224022	3872
224023	4094
224030	4293
224031	3944
224105	3609
224106	3609
224303	3419
224402	3579
224403	3395
224406	3426
224408	4080
224409	3764
224410	4079
224411	3913
224413	3912
224414	4213
224415	4081
224501	3710
224507	3379
224508	3402
224509	3371
224510	3714
224513	3634
224519	4088
224523	4072
224528	3554
224528	3651
224534	3777
224535	4086
224536	3554
224536	3651
224538	3693

NK	BESER
NO	NO
224539	3673
224543	3915
224544	4275
224545	4071
224547	3768
224548	3829
224549	3830
224550	3822
224552	3769
224553	4013
224555	4158
224556	4153
224557	3788
224558	3769
224559	3817
224560	3825
224562	3890
224563	4154
224568	3910
224569	3891
224570	4112
224572	3987
224574	4113
224575	4077
224576	3958
224577	3949
224580	3954
224582	3954
224584	3956
224586	4037
224586	4037/1
224587	3903
224589	4174
224589	4174/1
224595	3953
224599	4176
224599	4176/1
224704	3327
224705	3343
224705	3483
224706	3350
224711	3619
224712	3536
224714	3444
224715	3441
224716	3486
224716	3486/1
224717	3531
224718	3605
224719	3529
224720	3649
224723	3490
224725	3650
224727	3650
224731	3553
224733	3538
224735	3585
224736	3606
224737	3566
224738	4020
224739	3896
224743	3637
224747	4345
224750	3794
224751	3553/1
224754	4095
224756	3896
224757	3590/1
224758	4096
224759	4345
224761	3841
224762	3841/1
224764	3842
224770	3904
224773	4076
224775	3905
224776	4222
224779	4138
224779	4138/1
224781	4152

NK	BESER
NO	NO
224782	4096
224788	3945
224796	4260
224797	4259
224798	4309
224802	3373
224808	3641
224809	3642
224815	4062
224820	3919
224821	3918
224822	4059
225001	3511
225002	3687/1
225004	3744
225007	3951
225008	3687/1
225009	3894
225011	3895
225012	3976/1
225014	4073
225102	3620
225104	3600
225106	3436
225107	3746
225109	3898
225110	3436
225112	3901
225204	3882
225207	3602
225208	3883
225210	4027
225213	3928
225214	3884
225217	3983/1
225219	4000
225220	3929
225221	3933
229306	3867
229308	4197
229310	4182
229311	4197
229318	4012
229322	4011
229325	4006
229326	4018
229328	4016
229333	4198
229906	3318
229907	3320
229911	3311
229922	3416
229923	3312
229926	3709
229927	3378
229930	3423
229937	3408
229938	3405
229940	3440
229941	3323
229945	3378
229946	3572
229948	3436
229950	3433/1
229952	3536
229953	3380
229954	3543
229955	3496/1
229957	3503
229958	3419
229959	3583
229960	3609
229961	3463
229962	3560
229963	3714
229964	3440
229967	3504
229968	3531
229969	3444
229970	3529

NK	BESER
NO	NO
229971	3487
229971	3489
229972	4212
229974	3595
229975	3559
229976	3679
229978	3736
229980	4148/1
229981	3704
229982	3466
229985	3506
229997	4369
229998	4370
2223106	4301/1
2247101	4135
2247102	4162
2247105	3906/1
2247114	4241
2247154	4350/1
12497782	4221
88892464	4221
88964423	4221
88964424	4221
88982932	4221
8124977820	4221
8888924640	4221
8889644230	4221
8889644240	4221
8889829320	4221
-	3329
-	3449
-	4179

OE	BESER
NO	NO
177.0	3683
6G065	3748
6L065	3748
108073	3331
118589	3570
134848	3331
172059	3636
172201	3496
178479	3570
182043	3747
245050	3580
270987	3455
270987	3471
271179	3641
271182	3641
271706	3641
271739	3373
272401	3919
272675	3318
272867	3373
424538	3403
424539	3377
424541	3322
424543	3322
424552	3403
424553	3377
424561	3322
424582	3322
424862	3580
424865	3580
424874	3580
424878	3580
424893	3311
425005	3318
425008	3322
425013	3377
425014	3377
425017	3580
425018	3580
425032	3580
425033	3580
425034	3580
425035	3580

OE	BESER
NO	NO
425036	3580
425041	3372
425041	3503
425043	3580
425049	3580
425050	3580
425051	3580
425052	3580
425056	3529
425057	3580
425069	3580
425070	3372
425070	3503
425071	3496
425072	3580
425076	3580
425081	3680
425088	3580
425091	3487
425092	3487
425097	3580
425102	3487
425104	3496
425108	3529
425116	3595
425117	3595
425120	3487
425127	3487
425140	3580
425141	3580
425146	3496
425148	3496
425154	3636
425155	3636
425165	3487
425178	3403
425193	3680
425196	3496
425197	3496
425204	3759
425212	3759
425212	3938
425213	3644
425228	3759
425228	3938
425234	3644
425256	3496
425257	3496
425261	3580
425262	3580
425263	3487
425264	3487
425265	3580
425271	3496
425272	3580
425273	3580
425274	3496
425275	3580
425302	3759
425302	3938
425303	3759
425303	3938
425305	3938
425310	3503
425311	3496
425314	3487
425320	3759
425320	3938
425322	3984
425325	3984
425333	3644
425378	3644
425379	3644
425380	3644
425381	3938
425398	3984
425399	3984
425437	3984
425442	3496
425451	3595

OE	BESER
NO	NO
425476	3984
425483	3580
425485	3636
425487	3938
425490	3496
425494	3759
425494	3938
425498	3580
425499	3487
425499	3580
542039	4014
542040	4014
542115	4008
542120	4230
542125	4150
607783	3335
790362	3468
790475	3317
790605	3316
790710	3748
791449	3468
792043	3468
792159	3467
792282	3468
792383	3425
792424	3468
792426	3467
792466	3468
792486	3466
792486	3468
792487	3466
792487	3468
792489	3466
792489	3468
792533	3467
792558	3432
792561	3424/1
792588	3466
792588	3468
792698	3466
792698	3468
792700	3467
792701	3467
792703	3425
792725	3424/1
793120	3432
793120	3491
793132	3467
793184	3466
793184	3468
793211	3467
793220	3466
793220	3468
793221	3466
793221	3468
793230	3467
793271	3468
793322	3424/1
793323	3424/1
793330	3466
793330	3468
793355	3466
793355	3468
793356	3466
793356	3468
793357	3466
793357	3468
793382	3466
793382	3468
793385	3468
793460	3468
793465	3468
793465	3424/1
793470	3466
793470	3468
794079	3432
794079	3491
794091	3466
794091	3468
794858	3466

OE	BESER
NO	NO
794858	3468
794870	3432
794870	3491
794962	3466
794962	3468
794963	3466
794963	3468
795121	3466
795121	3468
4253.4	3984/1
4254.1	3940
4254.2	3529/2
4254.4	3984/1
4254.8	3940
C39136	3455
C39136	3471
FDB163	3332
GBP184	3455
GBP184	3471
GBP202	3319
GBP208	3455
GBP208	3471
GBP256	3319
GBP266	3661
GBP267	3423
GBP270	3423
GBP271	3661
GBP272	3413
GBP287	3423/1
GBP292	3423/1
GBP635	3705
GBP663	3423/1
GPB106	3481
NP1335	3470
NP1335	3615
VBP178	3377
VBP227	3706
VBP277	3705
1001095	3506
1010502	3594
1010503	3570
1013843	3594
1015598	3464
1022079	3593
1027703	3506
1030601	3594
1030602	3570
1031843	3506
1039106	3570
1042687	3594
1042688	3570
1064762	3594
1064763	3570
1073731	3558
1073732	3593
1079347	3558
1079348	3593
1079919	3594
1079920	3570
1090276	3594
1095201	3558
1095202	3593
1096940	3593
1096942	3558
1101462	3877
1101463	3877
1101464	3877
1115107	3529/1
1121894	4100
1121895	4093
1126718	4100
1128463	3877
1130120	4093
1130751	3464
1130758	3593
1130759	3558
1133445	3590/2
1133446	4095
1135167	3784
1143349	3590/2

OE	BESER
NO	NO
1144180	3506
1144288	3921
1145299	3877
1145455	3593
1152316	4093
1153196	3572
1153913	3572
1154398	3572
1154399	3572
1154458	3864
1154613	3572
1154614	3572
1155077	3572
1155332	3864
1156744	3572
1156745	3572
1156746	3572
1156747	3572
1156748	3572
1156749	3572
1157039	3584
1157044	3578
1157334	3578
1157514	3572
1157563	3578
1157569	3584
1157570	3584
1157757	3572
1157758	3572
1157813	3584
1157814	3578
1157925	3572
1157926	3572
1158108	3578
1158221	3578
1158265	3584
1158266	3578
1158267	3584
1158270	3578
1158323	3572
1158562	3578
1158642	3578
1158643	3572
1158912	3572
1159003	3572
1159259	3584
1159273	3572
1159276	3572
1159279	3584
1159814	3578
1160198	3578
1160199	3578
1160450	3584
1160451	3584
1160458	3584
1160459	3584
1161975	3909
1162210	3909
1162535	3584
1162536	3578
1162900	3909
1163324	3879
1163326	3879
1163833	3879
1163921	3909
1163922	3909
1163923	3909
1164581	3879
1164582	3879
1204843	4100
1204845	4093
1205695	3590/2
1205696	4095
1206064	3877
1207104	4093
1219892	4093
1219894	4093
1219897	4093
1223682	3885
1227108	4093

OE	BESER
NO	NO
1230032	3864
1230038	3864
1233679	3853/1
1236880	3877
1237132	3590/2
1250015	3864
1250688	4100
1301592	3445
1318139	3784
1318147	3921
1321517	3885
1324300	3853/1
1356392	4058
1356600	3988
1356600	3988/1
1360254	3853/1
1360290	3988
1360290	3988/1
1360304	3853/1
1360305	3885
1360306	3853/1
1371402	3906
1371402	3906/1
1371402	3906/1A
1371402	3906/2
1371403	3920
1371403	3920/1
1371454	3907
1371454	3907/1
1371454	3907/1A
1371454	3907/2
1379971	4161
1415166	3784
1415168	3921
1427386	4161
1430934	3885
1432363	4161
1433952	3906
1433952	3906/1
1433952	3906/1A
1433952	3906/2
1433954	3920
1433954	3920/1
1433958	3907
1433958	3907/1
1433958	3907/1A
1433958	3907/2
1436498	4161
1437761	4161
1439867	4157
1458247	4161
1459408	4157
1465126	3589
1465166	3784
1465167	3784
1465168	3921
1477803	4157
1479223	3784
1488962	3906
1488962	3906/1
1488962	3906/1A
1488962	3906/2
1508074	3885
1517765	3885
1519528	3885
1521325	3593
1521328	3877
1521329	4058
1522062	4100
1522073	4058
1530602	3907
1530602	3907/1
1530602	3907/1A
1530602	3907/2
1534428	3920
1534428	3920/1
1540738	3312
1540739	3312
1540740	3312
1540857	3311

OE	BESER
NO	NO
1543009	3480
1553797	3906
1553797	3906/1
1553797	3906/1A
1553797	3906/2
1554523	3920
1554523	3920/1
1554524	3907
1554524	3907/1
1554524	3907/1A
1554524	3907/2
1559697	4173/1
1560014	3906
1560014	3906/1
1560014	3906/1A
1560014	3906/2
1560023	3920
1560023	3920/1
1560026	3907
1560026	3907/1
1560026	3907/1A
1560026	3907/2
1566093	3885
1566096	3853/1
1566232	4161
1566234	4157
1571569	3416
1571570	3423
1571571	3423
1571572	3423
1574839	3312
1576827	3312
1576829	3312
1576830	3312
1576835	3312
1576947	3480
1595523	3417
1595523	3570
1595524	3417/1
1605005	3717
1605017	3674
1605021	3561
1605047	3717
1605080	4042
1605081	3846
1605087	3623
1605088	4211
1605089	3470
1605089	3505
1605089	3615
1605092	3846
1605094	4211
1605095	4211
1605098	4211
1605099	4042
1605103	4150
1605113	4211
1605117	3853/1
1605135	4008
1605136	4211
1605137	4211
1605139	4211
1605140	4014
1605143	3320
1605157	3800/1
1605164	4121
1605170	4014
1605176	4014
1605178	4008
1605179	4150
1605180	4014
1605181	3800/1
1605182	4121
1605184	3826/2
1605186	4149
1605196	3853/1
1605198	3848
1605199	3795/1
1605223	4150
1605252	4042

OE	BESER
NO	NO
1605263	4008
1605282	4211
1605283	4211
1605291	3335
1605293	4121/1
1605300	3335
1605366	4150
1605367	4150
1605398	3335
1605434	4149
1605449	3318
1605454	3470
1605454	3505
1605454	3615
1605455	3623
1605456	4042
1605466	3318
1605531	3410
1605543	3318
1605556	3335
1605557	3335
1605586	3410
1605654	3410
1605670	3410
1605671	3410
1605687	3717
1605693	3469
1605696	3470
1605696	3615
1605703	3410
1605713	3335
1605714	3335
1605715	3335
1605723	3318
1605728	3469
1605746	3470
1605746	3505
1605746	3615
1605783	3410
1605787	3410
1605788	3410
1605789	3470
1605789	3615
1605791	3410
1605797	3318
1605799	3717
1605808	3470
1605808	3615
1605810	3623
1605820	3410
1605824	3623
1605825	3757
1605825	3857
1605848	3674
1605851	3887
1605852	3674
1605870	3410
1605877	3469
1605879	3717
1605881	3623
1605907	3623
1605911	3470
1605911	3505
1605911	3615
1605913	3674
1605916	3757
1605916	3857
1605924	3717
1605931	3757
1605931	3857
1605964	3846
1605972	4211
1605973	3853/1
1605974	3846
1605975	4211
1605982	3855
1605992	4042
1605993	3853/1
1605996	4042
1605997	4042

OE	BESER
NO	NO
1605998	4042
1619145	3480
1619209	3570
1642643	3416
1647730	3549
1650317	3480
1659935	3570
1659938	3589
1661468	3419
1665599	3480
1682005	4157
1683374	3853/1
1695810	3885
1712024	3885
1721086	3920
1721086	3920/1
1721087	3906
1721087	3906/1
1721087	3906/1A
1721087	3906/2
1731171	4173/1
1736937	4173/1
1747043	4161
1751951	4204
1753844	3885
1759370	3885
1763677	3853/1
1763915	4174
1763915	4174/1
1763916	4175
1765066	4204
1765766	3885
1775091	4226
1775672	4204
1782890	3885
1785193	4204
1805813	3853/1
1809256	3885
1809259	3853/1
1816524	3885
1819638	3907
1819638	3907/1
1819638	3907/1A
1819638	3907/2
1820037	3885
1820122	3853/1
1824121	4351/1
1824346	3906/1
1824346	3906/1A
1824346	3906/2
1824347	3920/1
1824348	3907/1
1824348	3907/1A
1824348	3907/2
1826241	3885
1829400	4351/1
1840037	4175
1840479	4351/1
1842632	4174
1842632	4174/1
1848532	4204
1852717	3907/1
1852717	3907/1A
1852717	3907/2
1860476	4204
1865326	3885
1891191	3988/1
1903486	3433
1903486	3433/1
1906039	3523
1906043	3773
1906111	3423/1
1906157	3423/1
1906159	3523
1906297	3773
1906298	3994
1906345	3433
1906345	3433/1
1906401	3575
1906416	3994

OE	BESER
NO	NO
1906427	3749/1
1906999	3994
1916326	4174/1
1947389	3594
1947391	3590/2
2005967	4351/1
2005987	4351/1
2006026	4351/1
2006028	4351/1
2157576	3879
2162266	4174/1
2180421	3879
2188058	3885
2218086	3988/1
2221820	4174/1
2225860	3578
2225865	3578
2226013	3572
2226092	3578
2227331	3909
2227334	3909
2227863	3909
2228248	3584
2229935	3584
2253406	3885
2271968	3885
2282416	3584
2282554	3584
2282555	3584
2282736	3584
2357231	3879
2361234	4174/1
2390587	3885
2701639	3373
2711794	3641
2711828	3641
2717064	3641
2717395	3373
2724011	3919
2725661	3373
2726735	3373
2726750	3318
2728673	3373
2728772	3318
2758944	3373
2992339	3575
2994086	3575/2
2995631	3575/2
2995632	3942
2995633	3575
2995693	3575
2996091	3575/2
2996465	3575
2996518	4169
2996520	4169
2996532	3942
2996535	3575
2996605	3575/2
3079354	4161
3250077	3499
3256541	3499
3342534	3583
3344996	3378
3649088	3820/1
3894956	3767
4001314	3909
4077636	3784
4095132	3921
4096346	4119
4099896	4119
4114749	3921
4119192	3767
4196317	3583
4206320	3315/1
4206420	3315/1
4206520	3315/1
4206820	3315/1
4206920	3455
4209220	3390
4209320	3390

OE	BESER
NO	NO
4210008	3455
4216110	3923
4216210	3924
4218573	3316
4230230	4127
4237110	3614
4295800	3462
4308239	3983/1
4309780	3316
4310069	3450
4310431	3757
4310431	3857
4310469	3757
4310469	3857
4312810	3450
4320858	3450
4387371	3853/1
4387374	3853/1
4403271	3482
4403272	3482
4403467	3855
4406239	4132
4406239	4172
4406239	4172/1
4414021	3848
4414029	3795/1
4414519	3848
4414520	3795/1
4419950	4056
4420066	4057
4421289	4132
4421289	4172
4421289	4172/1
4423332	4227
4423575	3867
4423587	4227
4423715	3867
4423725	3867
4431470	3423
4432201	3988
4432201	3988/1
4432234	3988
4432234	3988/1
4432514	3988
4432514	3988/1
4434816	3316
4434879	3466
4434879	3468
4467072	3469
4502883	4132
4502883	4172
4502883	4172/1
4509526	3767
4509599	3767
4532488	4215
4532718	3781
4547849	4119
4586794	3781
4588141	4119
4592554	4215
4641690	4220
4647371	3868
4701305	3983/1
4708239	3983/1
4711040	3983/1
4713175	4182
4717737	4215
4728124	4197
4740776	3867
4746371	3868
4773575	3867
4778058	4182
4778223	4220
4780654	4220
4780682	4215
4808814	4330
4808861	3976
4817764	3976
4837241	3717
4882106	4197

OE	BESER
NO	NO
4882107	4197
4883344	4182
4901992	3781
5010553	3423
5015919	3570
5015924	3312
5015930	3480
5015935	3423
5018111	3480
5018194	3570
5018898	3621
5018899	3417
5018899	3570
5018900	3417/1
5018902	3312
5018906	3480
5018907	3416
5018908	3423
5018981	3419
5018982	3429
5020817	3549
5022397	3416
5022398	3423
5023993	3621
5023994	3417
5023994	3570
5023995	3417/1
5023998	3549
5025048	3589
5025929	3589
5025948	3464
5026169	3312
5028176	3464
5028764	3445
5029147	3558
5029148	3593
5055967	3583
5057336	3717
5059479	3840
5134102	3885
5252531	4182
5333787	4270
5333798	4270
5341207	4270
5521050	3511
5860343	3315/1
5860442	3455
5861042	3455
5862042	3455
5862742	3455
5863642	3315/1
5864042	3455
5864342	3455
5864542	3455
5882984	3459
5882985	3461
5888147	3466
5888147	3468
5888149	3316
5888153	3468
5888154	3316
5888528	3459
5888529	3461
5888575	3466
5888575	3468
5888781	3432
5888781	3491
5888939	3425
5889089	3466
5889089	3468
5892309	3424
5892310	3424/1
5892330	3432
5892330	3491
5892481	3466
5892481	3468
5892549	3466
5892549	3468
5892580	3467
5892601	3466

OE	BESER
NO	NO
5892608	3466
5892608	3468
5892650	3536
5892727	3466
5892727	3468
5892728	3466
5892728	3468
5892730	3466
5892730	3468
5892732	3466
5892732	3468
5892733	3466
5892733	3468
5892734	3466
5892734	3468
5892735	3466
5892735	3468
5892737	3643
5892738	3466
5892738	3468
5951660	3424/1
5951671	3424/1
5983918	3466
5983918	3468
5983919	3466
5983919	3468
5983924	3466
5983924	3468
5983948	3468
5983950	3466
5983950	3468
5984031	3468
6077760	3468
6080703	3480
6095773	3570
6099243	3312
6099244	3312
6107094	3480
6109375	3417/1
6117994	3570
6121606	3417/1
6121696	3570
6127520	3570
6127527	3549
6130483	3570
6132471	3621
6132472	3621
6132807	3570
6132808	3417/1
6136892	3549
6136893	3570
6144685	3570
6147496	3570
6155611	3417/1
6157428	3570
6158945	3570
6162190	3589
6165965	3423
6166951	3429
6166952	3570
6166953	3417/1
6174117	3570
6174786	3570
6178479	3417
6178479	3570
6178480	3570
6180371	3464
6188427	3589
6189145	3570
6189146	3570
6189147	3549
6189148	3549
6197739	3445
6198768	3570
6203650	3589
6500952	3464
6500954	3464
6500959	3545
6511773	3570
6567001	3416

OE	BESER
NO	NO
6567002	3423
6613708	3423
6669779	4214
6704267	3570
6704268	3417
6704268	3570
6704269	3549
6704271	3464
6752632	3879
6761247	3879
6761248	3879
6761249	3909
6761250	3879
6761251	3879
6761253	3578
6827586	3593
6877836	3558
6877837	3593
6882582	3593
6882584	3558
6962492	3464
7018203	3445
7075049	3464
7075050	3464
7114005	3545
7153476	4214
7261715	3593
7663999	3423/1
7872906	3318
7873730	3318
7963999	3423/1
8623861	3919
8634921	3919
8683615	3853/1
8830570	3319
8961856	3583
8967101	3583
8967119	3583
8968026	3583
8993230	3326
9099240	3312
9111271	3482
9111272	3482
9111467	3855
9193476	3717
9195058	3717
9199257	3848
9199262	3795/1
9200108	3846
9711388	3674
9739269	3887
9938109	3333
9938205	3440
9938853	3466
9938853	3468
9939028	3440
9939503	3536
9940092	3440
9940969	3536
9941207	3440
9941208	3543
9941211	3536
9941873	3536
9943830	3432
9943830	3491
9944861	3543
9945070	3440
9945076	3543
9945629	3536
9945750	3536
9945788	3595
9945810	3559
9947156	3617
9947468	3643
9947482	3466
9947482	3468
9947776	3618
9947934	3897
9947935	3617
9947954	3548

OE	BESER
NO	NO
9947954	3690
9947955	3617
9947996	3540
9948037	3568
9948038	3569
9948045	3643
9948054	3643
9948095	3617
9948131	3790
9948334	3617
9948338	4123
9948358	3468
9948476	3617
9949124	3569
9949125	3790
9949134	3617
9949183	3643
9949273	3826/1
9949276	3800/1
9949332	4123
9949362	3835
9949407	3914
9949408	3914
9949409	3834
9949482	3834
9949508	4123
9949516	3834
9949517	3835
9949552	3986
9949556	3826
9950637	3617
9950778	3617
9951222	4123
1720.82	3659
17D883M	4219
4245.04	3806
4245.11	3405
4245.16	3405
4245.57	3323
4245.74	3366/1
4245.81	3806
4245.84	3405
4248.16	3323
4248.18	3405
4248.33	3440
4248.34	3405
4248.35	3405
4248.58	3405
4248.61	3806/1
4248.62	3380
4248.68	3806/1
4248.82	3405
4248.86	3806
4248.93	3311
4250.05	3318
4250.06	3321
4250.07	3323
4250.08	3323
4250.09	3806/1
4250.12	3366/1
4250.16	3405
4250.19	3366/1
4250.20	3405
4250.22	3405
4250.24	3405
4250.25	3442
4250.26	3405
4250.28	3440
4250.30	3366
4250.32	3380
4250.37	3474
4250.40	3405
4250.42	3496/1
4250.50	3380
4250.51	3380
4250.54	3440
4250.55	3457
4250.58	3543
4250.64	3806
4250.68	3806

OE	BESER
NO	NO
4250.71	3496/1
4250.72	3380
4250.73	3323
4250.85	3366/1
4250.88	3380
4250.93	3457
4250.95	3457
4250.96	3321
4250.97	3380
4250.99	3440
4251.02	3489
4251.03	3528
4251.04	3496/1
4251.05	3543
4251.06	3440
4251.07	3557
4251.07	3610
4251.13	3878
4251.18	3559
4251.19	3559
4251.22	3528
4251.25	3799
4251.26	3799
4251.31	3750
4251.35	3457
4251.40	3380
4251.46	3496/1
4251.48	3496/1
4251.50	3799
4251.51	3799
4251.56	3819
4251.57	3878
4251.69	3659
4251.72	3873
4251.79	3318
4251.83	3873
4251.88	3528
4251.92	3659
4251.96	3496/1
4251.97	3496/1
4252.05	3659
4252.15	3935
4252.16	3934
4252.18	3820
4252.18	3820/1
4252.20	3986
4252.21	3820
4252.21	3820/1
4252.22	3800
4252.31	3986
4252.32	3529/1
4252.33	3529/1
4252.35	3800
4252.36	3854
4252.37	3931
4252.38	3820
4252.38	3820/1
4252.39	3820
4252.39	3820/1
4252.40	3820
4252.40	3820/1
4252.42	3834
4252.43	3834
4252.44	3835
4252.45	3835
4252.46	3914
4252.47	3914
4252.48	3935
4252.49	3934
4252.50	3800
4252.52	3800
4252.53	3800
4252.56	3496/1
4252.57	3496/1
4252.58	3854
4252.59	3820
4252.59	3820/1
4252.61	3380
4252.62	3380
4252.68	3750

OE	BESER
NO	NO
4252.70	3457
4252.71	3496/1
4252.74	3496/1
4252.76	3820
4252.76	3820/1
4252.77	3939
4252.78	3940
4252.79	3946
4252.88	3935
4252.89	3934
4252.91	3819
4252.92	3878
4252.94	3940
4252-04	3759
4252-12	3759
4252-28	3759
4253.05	3659
4253.08	3442
4253.11	3496/1
4253.12	3366/1
4253.16	3528
4253.26	3946
4253.27	3987
4253.28	3987
4253.30	3820
4253.30	3820/1
4253.31	3800
4253.35	3939
4253.36	3940
4253.37	3940
4253.38	3820
4253.38	3820/1
4253.39	3800
4253.41	3820
4253.41	3820/1
4253.42	3820
4253.42	3820/1
4253.45	3854
4253.46	3935
4253.47	3939
4253.48	3940
4253.59	3820/3
4253.60	3820/3
4253.61	3964
4253.63	3972
4253.64	3972
4253.65	3972
4253.66	3972
4253.67	4151
4253.67	4151/1
4253.68	4151
4253.68	4151/1
4253.69	3854
4253.70	3800
4253.72	3931
4253.73	3922
4253.73	3922/1
4253.74	3922
4253.74	3922/1
4253.75	3922
4253.75	3922/1
4253.76	3922
4253.76	3922/1
4253.79	3820/1
4253.83	3940
4253.84	3854
4253.85	3800
4253.93	3970
4253.95	3972
4253.96	3529/2
4253-02	3759
4253-03	3759
4253-20	3759
4254.01	3984/1
4254.04	3946
4254.05	3853/1
4254.06	3826/1
4254.07	3826/1
4254.08	3800/1
4254.09	3800/1

OE	BESER
NO	NO
4254.11	3940
4254.12	3964
4254.13	3964
4254.14	3971
4254.15	3971
4254.18	3800
4254.19	3984/1
4254.21	3946
4254.22	3939
4254.23	3820
4254.23	3820/1
4254.25	3964
4254.26	3970
4254.29	3971
4254.42	3496/1
4254.48	3893
4254.52	3559
4254.58	3834
4254.59	3835
4254.63	4171
4254.63	3922/3
4254.63	4171/1
4254.64	4171
4254.64	3922/3
4254.64	4171/1
4254.65	3964
4254.67	3529/1
4254.68	3914
4254.69	3820/3
4254.74	3987
4254.75	3820
4254.75	3820/1
4254.83	3380
4254.86	3820
4254.86	3820/1
4254.90	3496/1
4254.91	3946
4254.96	3826/1
4254.97	4151
4254.97	4151/1
4254.99	3380
4254.A0	3940
4254.A1	3972
4254.A2	3972
4254.A3	3940
4254.A9	4145
4254.C0	3964
4254.C8	3826/3
4254-94	3759
4448.82	3381
9H0M013	4107
9H0M015	3955
BBU8177	3433/1
BBU8178	3433
BHM7237	3624
BR-1274	3754
C8G8834	3319
E172009	3557
E172009	3610
E172059	3636
E172073	3644
E172082	3938
E172118	3503
E172131	3938
E172155	3940
E172171	3503
E172193	3873
E172223	3680
E172236	3939
E172237	3940
E172240	3946
E172270	3984/1
E172281	3529/1
E172283	3987
E172314	3940
E172532	3636
E172536	3644
E172539	3938
E172562	3938
E172569	3940

OE	BESER
NO	NO
E172596	3940
EJP1437	4212
GBP 106	3481
GBP5220	3455
GBP5220	3471
M850976	4059
M850978	4062
RTC3163	3423
RTC3164	3661
RTC3272	3423
RTC3279	3423
RTC3348	3413
RTC4518	3423/1
RTC5574	3412
RTC5574	3453
STC1275	3453
STC1276	3661
STC1601	3512
STC1601	3512/1
STC2950	3413
STC2952	3412
STC2953	3661
STC2956	3423
STC8568	3423/1
STC8569	3661
STC9146	3423/1
STC9147	3661
STC9186	3423/1
STC9187	3423/1
10030811	3529/1
10365723	4331
11046148	3623
11046152	3470
11046152	3615
11046156	3470
11046156	3615
12300192	3864
12300213	3864
12321410	3866
12321422	3866
12321430	3868
12321436	3864
12321448	3868
12497782	4221
12510004	3866
12510008	3866
12799240	3853/1
12800120	4211
12803551	4211
13237751	4149
13237765	4150
13237766	4150
13300867	4014
13301207	4230
13301234	4008
13319293	4014
13319294	4014
13322091	3853/1
13338368	4150
13343450	4150
13374966	4230
13411380	4014
13411383	4014
13412272	4230
13412809	4008
13412810	4008
13417473	4014
14207820	3315/1
14208220	3455
14208220	3471
14208820	3390
14208920	3390
14209020	3390
14209120	3390
14209220	3315/1
14210910	3923
14211010	3924
15243254	4331
15243704	4330
15271565	3853/1

OE	BESER
NO	NO
30715023	3885
30736610	3853/1
30736923	3885
30742030	3885
30742031	3853/1
30769199	4059
30793107	4161
30793540	4161
30793618	3885
30793941	4161
30794553	4157
30850976	4059
30850978	4062
31262503	3919
31262506	3919
31341301	3885
31341327	3853/1
31341331	3853/1
32017848	3853/1
32874224	3378
33422650	3378
33425349	3583
33456781	4062
34200020	3680
34201720	3614
34203020	3581
34203620	3315/1
34203720	3315/1
34203820	3315/1
34204820	3581
34204920	3581
34205120	4127
34207420	3315/1
34207520	3315/1
34207620	3315/1
34207820	3923
34207910	3923
34208120	3924
41137937	3462
42470835	3575/2
42470841	3823
42470846	3575
42535791	3575
42536101	3942
42548191	3575/2
42548192	3942
42548194	3575
42555406	3823
42555633	3995
42555669	3994
42555917	4092
42555917	4092/1
42559248	4169
42559249	4169
42560080	3823
42561101	3823
42561102	3823
43224000	3405
43224100	3405
44201520	3614
44201620	3581
44202420	3614
44202620	3614
44204420	4127
44206820	3962
44208220	3962
44209220	3581
44209320	3581
54200320	3658
54204620	3658
54205320	3962
54207920	4127
54208620	3614
54209320	4127
54209420	4127
60711959	3318
60713601	3320
60723584	3320
60727286	3318
60729251	3318

OE	BESER
NO	NO
60736109	3331
60737389	3331
60743565	3536
60743578	3536
60760120	3536
60777600	3466
60777600	3468
60778263	3318
60778315	3335
60810239	3466
60810239	3468
64200120	4127
64204320	3923
64204420	3924
64205020	4313
64209320	4313
71711135	3799
71713143	3617
71737179	3643
71738151	3548
71738151	3690
71738152	3790
71738153	3459
71738155	3568
71738155	3569
71738156	3540
71738156	3568
71738157	3540
71738158	3569
71748384	3424/1
71748385	3466
71748385	3468
71748388	3617
71750931	4148/1
71752978	3835
71752979	3834
71752980	3595
71752981	3897
71752985	3914
71752993	3559
71752994	3466
71752994	3468
71752995	3617
71753039	3617
71753043	3618
71754802	3826/1
71754803	3800/1
71768576	4148/1
71769056	3643
71770012	3800/1
71770042	3922
71770042	3922/1
71770062	3643
71770094	3800/1
71770104	3826/3
71770106	3800/3
71770118	3826/3
71770122	3800/3
71770132	3799
71770948	3468
71770951	3491
71770955	3618
71770956	3540
71770972	3595
71770985	3643
71771813	4005
71772210	3569
71772524	3468
71772525	3835
71772817	3820/3
71773145	3922
71773145	3922/1
71773149	3820/3
74201020	4127
74206720	4127
74206820	4127
77362091	3826/1
77362092	3800/1
77362171	3569
77362175	3540

OE	BESER
NO	NO
77362177	3790
77362178	3548
77362178	3690
77362179	3826
77362180	3790
77362185	3643
77362187	3536
77362190	3897
77362194	3826/1
77362195	3800/1
77362202	3617
77362209	3559
77362212	3595
77362216	3835
77362219	3834
77362222	3617
77362236	3986
77362238	3799
77362245	3643
77362266	3424
77362267	3643
77362268	3466
77362268	3468
77362274	3914
77362276	4123
77362300	3618
77362309	3468
77362310	3540
77362310	3568
77362311	3569
77362479	3643
77362548	3826/1
77362675	4123
77362683	3617
77362689	4173
77362691	4173
77362712	3800/1
77362743	3800
77363035	3826
77363341	4123
77363420	3800/1
77363604	4211
77363942	3826/1
77363956	3986
77363958	3800/1
77363974	3826/1
77363992	3800/1
77364015	3922
77364015	3922/1
77364016	3820/3
77364158	3826/1
77364161	3922
77364161	3922/1
77364281	3800
77364318	3922
77364318	3922/1
77364319	3922
77364319	3922/1
77364393	3826/1
77364394	3826/1
77364473	3800/1
77364477	3826
77364511	3972
77364512	3972
77364513	4151
77364513	4151/1
77364517	3826/1
77364588	3826/1
77364599	3800/1
77364633	4173/1
77364636	4173/1
77364637	3826/1
77364798	3826/1
77364832	3826/1
77364839	4123
77364859	3835
77364860	3914
77364862	3834
77364874	3826/1
77364875	3800/1

OE	BESER
NO	NO
77364893	3826/1
77364897	3800
77364919	3826
77364929	4121
77365113	3800/1
77365311	4121
77365337	3643
77365379	3800/1
77365396	4121
77365465	3826/3
77365468	3800/3
77365543	3826/3
77365623	3800/1
77365651	3826/3
77365716	3800/3
77365796	4121/1
77365810	3800/3
77365817	4173/1
77365857	3826/3
77365865	3800/3
77365928	3799
77366021	4171
77366021	3922/3
77366021	4171/1
77366022	4171
77366022	3922/3
77366022	4171/1
77366023	3922
77366023	3922/1
77366024	4171
77366024	3922/3
77366024	4171/1
77366134	3826/3
77366135	3826/1
77366528	3800/3
77366659	3617
77366761	3986
77367090	4171
77367090	3922/3
77367090	4171/1
77367094	4224
77367628	4234
77367717	4246
77367910	4234
77367923	4301
77367923	4301/1
77368553	4301
81349230	3375
83501356	4182
83504371	4182
84200920	4313
84203320	4313
84204620	3614
84204720	3962
84204920	3614
88928158	4022
88928158	4190
88964192	4187
88964423	4221
88964424	4221
88972092	4013
88972096	4013
88982932	4221
88983902	4023
88983902	4191
89027019	4023
89027019	4191
89059034	4187
90018692	3335
90167765	3410
90297410	3335
90297411	3335
90297412	3335
90297537	3469
90297770	3470
90297770	3505
90297770	3615
90374747	3623
90374748	3623
90398758	3410

OE	BESER
NO	NO
90398759	3410
90398760	3470
90398760	3615
90399495	3470
90399495	3615
90421528	3717
90421736	3623
90442995	3623
90443902	3410
90485138	3717
90485140	3623
90496733	3470
90496733	3615
90496734	3470
90496734	3615
90510331	3623
90511162	3470
90511162	3505
90511162	3615
90540177	3717
90541257	3757
90541257	3857
92175205	4188
92210619	4188
93166942	3853/1
93166943	4211
93167551	4056
93167662	4057
93172174	4211
93172190	3853/1
93172261	3846
93173182	3855
93173641	3848
93173646	3795/1
93175378	4211
93176115	4042
93176116	3853/1
93176120	3623
93176122	3470
93176122	3505
93176122	3615
93176429	4042
93179707	4042
93179708	4042
93181189	4042
93183140	3853/1
93183728	4211
93184269	3846
93185751	4211
93185752	4211
93186003	4211
93186713	4042
93188111	4211
93188112	4211
93189697	4042
93189698	4042
93190338	3853/1
93192063	3848
93192578	4042
93192637	3470
93192637	3615
93192639	3623
93192962	3983/1
93196814	3983/1
93220081	3623
93267112	3561
93273400	3561
93806190	3423
94130145	3462
94136642	3446
94136642	3450
94137937	3462
94314492	3450
94337740	3462
94337742	3462
94337743	3462
94460851	3446
94460851	3450
94461155	3757
94461155	3857

OE NO	BESER NO
94467328	3446
94467328	3450
94483220	3757
94483220	3857
95459512	3976
95507110	4132
95507110	4172
95507110	4172/1
95511321	3800/1
95511378	4121
95513810	3826/2
95513821	4057
95513823	4132
95513823	4172
95513823	4172/1
95515197	3855
95516193	4008
95518219	4121/1
95518304	4227
95518893	4227
95521680	4132
95521680	4172
95521680	4172/1
95525378	4372
95525386	4374
95525468	4121/1
95528497	4132
95528497	4172
95528497	4172/1
95530017	4008
95589273	3493
95589273	3494
95616818	3474
95624484	3493
95624484	3494
95624970	3440
95647733	3474
95659340	3487
95659341	3496
95659341	3496/1
95659616	3487
95661871	3474
95666671	3496/1
95666970	3487
95666970	3489
95666971	3496
95666971	3496/1
95667764	3440
95667765	3543
95667786	3819
95667787	3878
96245178	3687/1
96253367	3687/1
96253382	3687/1
96253383	3687/1
96273708	3744
96281937	3687/1
96281939	3470
96281939	3615
96281939	3687/1
96281945	3744
96288629	3744
96316582	3744
96319060	3687/1
96391891	3687/1
96405129	3687/1
96405130	3687/1
96405131	3894
96446176	3744
96475027	4073
96496765	4073
96534653	3951
96534655	3687/1
96566892	3951
96626069	3976
96626070	3976
96666971	3496
96952179	4073
97039269	3887
97113888	3674

OE NO	BESER NO
97114300	3757
97114300	3857
97180525	3674
99939353	3316
03H17D03	4175
03H23D05	4174
03H23D05	4174/1
190 6183	3749
190 6264	3749
190 6402	3773
2 709 23	3642
2 715 73	3642
2 718 29	3642
2 719 58	3642
2 722 91	3642
2 723 99	3918
2 729 44	3918
2 743 34	3918
4605A041	3892
4605A198	3975
4605A261	3955
4605A284	3975
4605A317	3955
4605A336	4106
4605A337	4106
4605A364	3955
4605A389	3693
4605A458	3693
4605A471	3892
4605A486	3955
4605A491	3955
4605A492	3685
4605A502	3893
4605A530	3955
4605A557	3955
4605A562	3685
4605A658	4059
4605A717	3685
4605A730	3685
4605A774	3685
4605A930	3975
4605B415	3685
4605B802	3685
4728 124	4197
4762 682	4197
4773 264	4197
4882 106	4197
4882 107	4197
C2C27271	3853/1
C2D23143	3853/1
C2P17595	3853/1
C2S17129	4100
C2S17362	4093
C2S20893	4093
C2S33408	4093
C2S38068	4058
C2S48022	4100
C2S48024	4058
C2S52079	4100
C2S52080	4093
C2S52081	4058
CW650649	3955
CW650653	3955
GBP90202	3319
GBP90256	3319
GBP90276	3624
GBP90288	3624
GBP90290	3423/1
GBP90294	3624
GBP90295	3624
GBP90296	3624
GBP90313	3683
GBP90315	3683
GBP90315	3872/1
GBP90316	4212
GBP90317	3624
GBP90324	3683
GBP90324	3872/1
GBP90325	3683
GBP90325	3872/1

OE NO	BESER NO
GBP90336	3683
GBP90336	3872/1
GBP90340	3683
GBP90340	3872/1
GBP90656	3624
JLM11903	3623
JLM21344	3623
LR003655	4157
LR003657	4157
LR004936	4161
LR015519	3944
LR016684	4291
LR016808	3944
LR019618	4293
LR019627	3944
LR020362	4291
LR021316	3944
LR021899	4094
LR023888	4157
LR039526	4291
LR055454	3944
LR064181	4291
LR083935	4291
LR093886	4291
LR110075	4291
LR110087	4291
LR114004	4291
LR134694	4293
MB058197	3376
MB058916	3376
MB081588	3376
MB082418	3376
MB082439	3376
MB082440	3376
MB134729	3376
MB134815	3407
MB150673	3376
MB151323	3407
MB151324	3407
MB193216	3407
MB193295	3376
MB193296	3376
MB193299	3376
MB238509	3376
MB334911	3685
MB377821	3407
MB377823	3376
MB389549	3685
MB407659	4108
MB500812	3448
MB500813	3448
MB500814	3448
MB500815	3448
MB500816	3448
MB500819	3448
MB500960	3401
MB534483	3401
MB534583	3400
MB534587	3400
MB534653	4108
MB534712	3401
MB587016	3376
MB587053	3401
MB587054	3401
MB587056	3401
MB587061	3401
MB587284	3401
MB597721	3376
MB618116	3401
MB618576	3400
MB668399	3401
MB668722	3400
MB699452	3685
MB699453	3685
MB699577	4033
MB857336	4108
MB857987	3685
MB858380	4108
MB858399	3685
MB858400	3685

OE NO	BESER NO
MB858584	3685
MB895090	3685
MB895091	3685
MB895096	4033
MB895168	3401
MB895250	3685
MB911312	3685
MB928049	3685
MB950350	4108
MC894601	4216
MK328619	4216
MK499872	4216
MK528944	4054
MK528945	4054
MK529908	4054
MK585740	4170
MK585782	4244
ML252415	4170
MN102608	3685
MN102610	3685
MN102611	3685
MN102615	4271
MN102618	3955
MN102626	4084
MN116151	3916
MN116445	3892
MN116929	4106
MN125772	4062
MQ700006	4015
MQ703583	4015
MR128312	3685
MR129103	3685
MR129104	3685
MR129432	3685
MR129433	4108
MR162521	3400
MR162522	3401
MR162523	3448
MR162524	3448
MR205144	4108
MR205256	3809
MR205257	3809
MR205380	3685
MR249060	3685
MR249240	3675
MR289610	3685
MR290240	3675
MR334911	3685
MR334950	4271
MR334953	4271
MR389519	3675
MR389523	3448
MR389524	3448
MR389526	3448
MR389531	3401
MR389542	3685
MR389543	3685
MR389544	3685
MR389545	3685
MR389546	3685
MR389547	3809
MR389548	3685
MR389549	3685
MR389550	3809
MR389552	3685
MR389575	4084
MR389576	4108
MR389577	4108
MR389578	4108
MR407127	4107
MR407422	3892
MR407944	3675
MR449854	4271
MR475453	4271
MR493985	3685
MR510533	4271
MR510539	3892
MR510619	3892
MR510680	3809
MR527656	4059

OE	BESER
NO	NO
MR527674	3955
MR527675	3955
MR527868	3892
MR569403	3955
MR569780	4108
MR727674	3955
MR913846	4062
MR955068	4106
MR955351	4059
MR977238	3685
MZ390010	4108
MZ690006	3685
MZ690007	3685
MZ690010	4108
MZ690020	4107
MZ690025	4271
MZ690039	3685
MZ690040	4107
MZ690045	4271
MZ690186	3955
MZ690187	4106
MZ690188	3916
MZ690332	3685
MZ690333	3675
MZ690335	3401
MZ690337	3400
MZ690339	4059
MZ690340	3892
MZ690341	4108
MZ690348	3955
MZ690349	3685
MZ690350	4106
MZ690356	3975
MZ690574	3893
MZ690576	3685
MZ690587	3975
PC351641	4058/1
PW890084	4062
PW891182	4058/1
PW891729	3951
PW892497	3951
QA104493	4002
RTC-4519	3771
RTC-5762	3771
RTC-6590	3662
RTC-6591	3771
RTC-6592	3662
RTC-6781	3662
S4510004	3744
S4510011	3687/1
S4510019	3687/1
STC-1273	3662
STC-1274	3771
STC-1276	3771
STC-1673	3662
STC-1674	3771
STC-2953	3771
STC-8569	3771
STC-8570	3771
STC-8571	3662
STC-8572	3662
STC-8574	3771
STC-9147	3771
STC-9148	3771
STC-9149	3662
STC-9150	3662
STC-9188	3771
STC-9189	3771
STC-9190	3662
STC-9191	3662
TS200041	3685
TS200052	3975
X3511003	3685
X3511004	3675
X3511005	3448
X3511006	3401
X3511008	3400
X3511009	3809
X3511010	4059
X3511011	3892

OE	BESER
NO	NO
X3516001	4108
X3516005	4062
113395241	3406
113430200	3406
113430201	3406
114430200	3406
114430201	3406
114430280	3404
114430281	3404
191698151	3441
191698451	3529
240400001	3536
307420310	3853/1
307936180	3885
308509769	4059
377698151	3561
380201039	3909
425556633	3995
437698151	3619
446502070	4013
446502080	4013
446502170	4147
446502190	4147
446502220	3953
446502240	3953
446502280	4147
446502310	3953
446502390	4176
446502391	4176
446502400	3953
446502410	3953
446502420	4176
446502430	4176
446506030	3910
446506070	3948
446506080	3948
446506100	3948
446506110	3948
446506130	3948
446506131	3948
446506140	3948
446507010	3948
446512070	3579
446512080	3314
446512270	3579
446512410	3579
446512430	3314
446512610	3953
446522040	3666
446522050	3666
446522060	3666
446522090	3666
446522110	3666
446522150	3375
446522170	3375
446522180	3666
446522220	3666
446526010	3414
446526060	3414
446526080	3414
446526100	3414
446526140	3414
446526200	3414
446526210	3414
446526230	3414
446526270	3414
446526280	3414
446526330	3414
446530340	3910
446533240	3910
446533246	3910
446533250	3910
446533260	3910
446533320	3910
446533340	3910
446533440	3948
446533450	3948
446533470	3948
446533471	3948
446535010	3414

OE	BESER
NO	NO
446535020	3414
446535320	3414
446540010	3414
446542160	3953
446542200	3953
446543010	3666
446543020	3666
446543030	3666
446544050	4013
446544060	4013
446544080	4013
446544090	4013
446544100	4013
446544140	3910
446544170	3910
446548020	4276/1
446548090	4276/1
446550170	4276/1
446550171	4276/1
446550180	4276
446550180	4276/1
446550190	4276/1
446550230	4276/1
446550240	4276/1
446550250	4276/1
446552180	3958
446552260	3958
446562260	3958
446568010	3910
446602220	3949
446606030	4032
446606060	3949
446606070	3949
446606090	3949
446606100	3949
446606200	3949
446606210	3949
446606220	3949
446607010	4098
446607011	4098
446607020	4098
446614010	3701
446614030	3701
446622040	3701
446622070	3701
446622090	3701
446622110	3701
446622140	4098
446624010	4099
446624020	4099
446626030	4368
446630010	3701
446630020	4099
446630050	4099
446630080	4098
446630100	4099
446630140	4099
446633060	4032
446633080	4032
446633160	3949
446633180	3949
446633200	3949
446633210	3949
446640010	3701
446640020	3701
446640030	3701
446641020	4032
446642060	3949
446647051	4256
446647070	4256
446647071	4256
446648130	4256
446648140	4256
446650040	4099
446650041	4099
446650090	4083
446650091	4083
446650100	4083
446650120	4083
446650130	4277

OE	BESER
NO	NO
446650150	4277
446650160	4277
446650170	4277
446650180	4277
446650190	4277
446652180	4256
446660010	3693
446660020	3693
446660040	3693
446660050	3693
446660060	3693
446660080	3693
446660090	3693
446660140	3693
446675010	3949
446690020	3693
449112130	3579
449112160	3579
449112161	3579
449112260	3579
449112261	3579
449114040	3376
449114041	3376
449114042	3376
449114060	3376
449114061	3376
449120110	3314
449120120	3376
449122260	3666
449122270	3666
449122290	3666
449122310	3666
449122311	3666
449122330	3666
449122331	3666
449122340	3666
449122350	3666
449122390	3666
449122410	3666
449126030	3414
449126040	3414
449126041	3414
449126070	3414
449126071	3414
449126072	3414
449126080	3414
449126090	3414
449126091	3414
449126120	3414
449126130	3414
449126131	3414
449126141	3414
449126150	3414
449126151	3414
449126152	3414
449126190	3414
449126191	3414
449126200	3414
449126220	3414
449126300	3414
449135050	3414
449135051	3414
449135060	3414
449135061	3414
449135062	3414
449135063	3414
449135130	3414
449135200	3414
449135230	3666
449140030	3414
449140040	3414
449140041	3414
449160060	3436
449187103	3600
449187104	3600
449187109	3600
449187503	3746
449187606	3436
449187607	3436
449187610	3436

OE	BESER
NO	NO
449187706	3600
449187708	3600
449187710	3600
449187715	3600
449197201	3901
449197205	3901
449197401	3901
449197403	3901
449197405	3901
449207010	4098
449214090	3701
449214100	3701
449214110	3701
449214150	4099
449214160	4099
449214161	4099
449217040	3701
449222030	3701
449222040	3701
449222041	3701
449222042	3701
449222043	3701
449222050	3701
449222070	3701
449222080	3701
449222100	3701
449222140	3701
449222141	3701
449222150	4098
449224060	4099
449224070	4099
449224080	4099
449224090	4099
449224100	4099
449230080	3701
449230100	3701
449230101	3701
449230140	4099
449230150	4099
449230160	4099
449230161	4099
449240101	3701
449242150	4098
449242160	4098
449250011	3579
449250020	3579
449250040	4099
449250060	4099
449260010	3693
449260020	3693
500055564	4092
500055564	4092/1
504093779	3942
504232812	4092
504232812	4092/1
504232980	3995
586001057	3695
586005262	3686
586005263	3686
586005264	3686
586009208	3686
586009209	3686
586009576	3686
586014124	3686
586014125	3686
586014394	3695
586014835	3686
586015191	3686
586019530	3695
598154611	3899
717552994	3466
720050005	3809
725191074	3579
725191075	3579
725191083	3579
725191220	3394
725191221	3394
725191360	3394
725191630	3394
725191631	3394

OE	BESER
NO	NO
725191990	3394
725193121	3394
853698151	3531
855698151	3490
867698151	3585
897035266	3887
897039269	3887
897070080	3887
897175530	3887
897191015	3887
897206870	3887
897206872	3887
897206873	3887
897217816	3887
04466E020	4254
01018 89S	4197
04728 124	4197
04762 682	4197
04773 264	4197
04882 106	4197
04882 107	4197
1 001 096	3529/1
1 015 308	3722
1 027 640	3529/1
1 048 308	3722
1 048 310	3722
1 064 230	3754
1 074 971	3473
1 075 558	3754
1 075 565	3755
1 107 697	3754
1 107 698	3755
1 121 667	3722
1 130 753	3722
1 133 750	3722
1 134 158	3473
1 136 519	3754
1 151 049	3754
1 177 227	3625
1 203 933	3888
1 205 557	3529/1
1 301 589	3473
1 343 514	3529/1
1 345 340	3529/1
1 355 950	3801
1 359 884	3801
1 360 303	3801
1 425 406	3754
1 425 407	3755
1 495 951	3888
1 541 678	3313
1 565 491	3484
1 591 096	3484
1 591 098	3484
1 595 913	3484
1 610 637	3484
1 619 209	3603
1 659 935	3603
1 682 498	3754
1 763 301	3754
1 763 678	3801
1 780 884	3755
1 802 317	3755
1 810 990	3755
1 824 121	4351
1 829 400	4351
1 840 479	4351
1 848 556	3755
1 916 327	4175/1
1 954 459	3888
1 954 460	3888
1 956 421	3888
1 956 495	3888
1 957 042	3888
1579 2633	4184
1594 5636	4184
16 05 000	3762
16 05 003	3736
16 05 004	3733
16 05 025	3763

OE	BESER
NO	NO
16 05 033	3733
16 05 034	3762
16 05 036	3665
16 05 039	3763
16 05 040	3763
16 05 070	3762
16 05 086	4040
16 05 091	3762
16 05 121	3762
16 05 140	4014
16 05 210	3856
16 05 280	4284
16 05 281	4285
16 05 354	3800/2
16 05 625	4040
16 05 654	3665
16 05 782	3733
16 05 825	3657
16 05 855	3736
16 05 912	3665
16 05 916	3657
16 05 931	3657
16 05 932	3733
16 05 959	3762
16 05 961	3763
16 05 966	3665
16 05 967	4040
16 05 980	3856
17 77 990	3665
1915 9252	4184
1932 9677	4184
1A003323Z	4034
1E003323Z	3594
1E033323Z	3594
1E063323Z	3570
1H0690451	3529
1HS698151	3486
1J0615115	3682
1J0698151	3682
1JO698151	3682
1KD698151	3682
1N183328Z	3598/1
1N243328Z	3598/1
1N263328Z	4015
1N283328Z	4015
1S0698151	3682
1U023328Z	3640
1V693328Z	3511
2 005 967	4351
2 005 987	4351
2 006 026	4351
2 006 028	4351
2 006 029	4175/1
2 177 227	3801
2 391 870	4351
2 709 236	3642
2 715 738	3642
2 718 294	3642
2 719 581	3642
2 722 916	3642
2311 2025	4184
2594 9454	4184
2Q0698151	3682
2QB698151	3682
3 352 413	3781
3 649 110	3529/2
3 787 544	3781
3 858 244	3781
3 868 298	3833
3 898 005	3833
3 975 890	3833
3 983 657	3833
4 346 371	3801
4 382 263	3625
4 387 361	3801
4 427 737	3801
4 435 009	3625
4 444 107	3781
43 10 431	3657
43 10 469	3657

OE	BESER
NO	NO
44 02 993	3856
44 04 585	3856
44 67 049	3736
44 67 899	3736
44 83 723	3736
46 05B805	4316
46 46 899	3736
46 48 457	3736
47 78 254	3665
4778058AB	4182
4778058AC	4182
48 05 468	4330
48 08 814	4330
48 39 924	3665
48 51 570	3833
4883344AB	4182
4897664AA	4197
5 012 130	3484
5 018 902	3484
5 018 903	3484
5 018 904	3313
5 018 905	3484
5 023 486	3603
5 028 763	3473
5 382 847	3755
5 888 553	3625
5 892 736	3608
50 55 371	3665
50 62 203	3665
50 62 211	3665
50 64 795	3665
5019984AA	4012
5080556AA	4327
5080563AD	4329
5080868AA	4016
5080871AA	4030
5080871AB	4030
5093260AA	4031
51 24 078	3665
5126300AA	3676
5139902AA	3676
5139902AB	3676
5142558AB	4198
5142559AB	4198
5143350AB	4328
5143350AC	4328
5174001AC	4006
5191229AA	3955
5191231AA	3955
5191271AC	4106
5191955AA	4182
53 92 485	3665
55 32 544	3665
5C0698151	3682
5R3Z2200B	4333
6 080 699	3484
6 099 237	3484
6 099 239	3484
6 127 521	3484
6 136 893	3603
6 150 947	3603
6 174 117	3603
6 178 479	3603
6 184 245	3603
6 189 145	3603
6 197 738	3473
6 511 773	3603
6 965 579	3473
6C0698151	3682
6L2Z2001A	4296
6L2Z2200A	4186
6L2Z2200B	4186
6L8Z2001A	4220
6L8Z2200B	4215
6Q0698151	3682
6R3Z2001A	4332
7 017 948	3722
7 018 202	3473
7 354 162	3529/1
7 501 077	3439

OE	BESER
NO	NO
7D0698151	3606
7D698151B	4020
7E0698451	3842
7H0698151	3841/1
7H0698451	3842
7LA698151	4375
7M0698151	3506
7M3698151	3590/2
7R3Z2001B	4332
7R3Z2200A	4333
8 623 862	3918
8 634 925	3918
8A0698151	3619
8L2Z2200A	4186
8L3Z2200A	4320
8R3Z2001A	4332
8R3Z2200A	4333
9 192 123	3736
9 948 623	3618/1
9 948 870	3790/1
9 949 125	3790/1
9 949 555	3618/1
91 109 93	3856
91 125 85	3856
91 177 17	3763
91 921 24	3733
91 932 51	3763
91 95 144	3762
91 950 77	3733
91 951 46	3665
91 956 07	3762
91 956 41	3763
91 956 42	3763
91 986 88	3665
9215 5977	4189
9319 3613	4040
9610 1972	3510
9668 2858	4337
9716 8633	4354
9732 9266	4354
9778 0424	4354
A00133625	3511
A0X13323Z	3511
A0X23323Z	3511
A0Y13323Z	3511
AL3Z2001A	4298
B0YW3323Z	3640
B0YW3328Z	3640
B2YV3323Z	3640
B2YV3328Z	3640
B3YH3323Z	3885
B45533292	3522
B4Y53329Z	3640
B4YB3323Z	3885
BCYA3323Z	3640
BCYW3329Z	3640
BL3Z2001A	4298
BL3Z2001B	4298
BL3Z2001C	4298
BOYW3323Z	3640
BPYK3323Z	3885
BRY43323Z	3640
BRY43328Z	3640
BRY53323Z	3640
BRY63323Z	3640
C2Y33323Z	3885
CK4Z2001B	4351/1
CV6Z2001A	3885
CV6Z2001C	3885
CV6Z2200A	3853/1
DBP511116	3675
DBP511118	3685
DG9Z2200B	4270
DG9Z2200C	4270
DG9Z2200H	4270
DG9Z2200K	4270
DL3Z2001A	4298
F1CZ2001B	3640
F4CZ2001B	3640
GPYB2643Z	4242

OE	BESER
NO	NO
GPYB2648Z	4242
GR.05.017	3763
H3303328Z	3666
H7223323Z	3666
H7223328Z	3666
HE213328Z	3666
JZW698151	3782
K04423715	3867
K04423725	3867
K04773575	3867
LR-021253	4314
LR-026220	4314
LR-026221	4314
LR-032063	4314
LR-032954	3771
LR-036574	4323
LR-047589	4314
LR-047859	4314
LR-051626	4314
LR-057725	4314
LR-065492	4323
LR-068303	4323
LR-079910	4323
LR-079935	4323
LR-084118	4323
LR-101981	4314
LR-106326	4323
LR-108260	4323
LR-123717	4323
LR-134700	4314
LR-139173	4323
LR-140696	4314
P96245178	3687/1
P96273708	3744
RTGBP6560	3624
SA4107754	3423
SB1631660	3764
SEB000290	3683
SFP000010	4094
SFP000020	4094
SFP000080	4148/1
SFP000130	3512/2
SFP000150	3661
SFP000150	3771
SFP000160	3512
SFP000160	3512/1
SFP000250	3512/2
SFP000260	3453
SFP000270	3661
SFP000270	3771
SFP000280	3512
SFP000280	3512/1
SFP000390	3683
SFP000390	3872/1
SFP000410	3683
SFP000410	3872/1
SFP100260	3683
SFP100260	3872/1
SFP100360	3872
SFP100511	3943
SFP500010	4293
SFP500020	3944
SFP500021	3944
SFP500022	3944
SFP500100	4094
SFP500140	3944
SFP500160	3662
SFP500180	3662
SFP500190	3771
SFP500200	3771
SFP500220	3423/1
TT0029999	3872
V91182011	3693
V9118B011	3693
V9118X026	3672
ZZS049230	4034
ZZS149230	4034
ZZSA49230	4034
ZZSB49230	4034
0004206920	3471

OE	BESER
NO	NO
0004210008	3471
0005860442	3471
0005861042	3471
0005862042	3471
0005862742	3471
0005864042	3471
0005864342	3471
0005864542	3471
0024200420	3627
0024201220	3627
0024201420	3390
0024202620	3627
0054200520	3627
0446648120	4254
1012799240	3853/1
1034001121	3974
1064001725	3984
1607690380	3955
1607690480	3955
1607878980	4171
1607878980	3922/3
1607878980	4171/1
1607961680	3984
1608520480	3971
1608691380	4201
1608691380	4201/1
1609000680	4372
1609000980	4374
1609252980	3938
1609898580	4371
1609898580	4373
1610489680	3820
1610489680	3820/1
1610699280	4201
1610699280	4201/1
1611293980	3820
1611293980	3820/1
1611335080	3636
1611457280	3984
1611457980	3487
1611457980	3580
1611458080	3595
1611460280	3503
1612412380	4371
1612412380	4373
1612433680	4171
1612433680	3922/3
1612433680	4171/1
1612434080	4224
1614005880	3820
1614005880	3820/1
1617247780	3580
1617247980	3496
1617272480	3984
1617273180	3644
1617273280	4145
1617280480	3595
1617535380	4372
1617535480	4374
1617936880	4370
1619790580	4201/1
1619790880	4372
1619791180	4371
1619791180	4373
1619791280	4374
1623180780	3529
1636413980	4372
1637014580	3820/1
1647860380	4374
1647863480	4201/1
2420162005	3581
2420212005	3658
2420222005	3658
3420302037	3581
4106072025	4017
4114500040	3769
4145960002	4281
4154210510	3983
4420442067	4127
4502169301	3705

OE	BESER
NO	NO
4514210010	4281
4514210110	4281
4534210100	4140
4544201020	4062
4544210010	4059
4841305100	3895
4841305102	3895
5001844747	3575/2
5001844748	3942
5001850859	3575/2
5301253104	3404
5511077501	3501
5520050850	3511
5520060860	4034
5520060880	4034
5520061860	4034
5520062870	4034
5520062871	4034
5520062872	4034
5520062873	4034
5520062874	4034
5810132300	3504
5810132310	3504
5860010570	3695
5860052620	3686
5860052630	3686
5860052640	3686
5860092080	3686
5860092090	3686
5860095760	3686
5860141240	3686
5860141250	3686
5860143940	3695
5860148350	3686
5860151910	3686
5860185300	3695
5860195300	3695
5861290720	4002
5861422320	4002
5861493080	4002
6000609714	3975
6000609715	3975
6000620046	4227
6000620052	3795/1
6001547619	3503
6001547911	3503
6025071042	3372
6025308186	3596
6384230110	3680
6614203021	3793
7701201059	3330
7701201449	3330
7701201456	3330
7701201464	3330
7701201542	3580
7701201775	3372
7701202057	3580
7701202210	3496
7701202216	3580
7701202227	3381
7701202283	3580
7701202285	3372
7701202302	3580
7701202308	3496
7701202475	3580
7701202481	3428
7701202516	3372
7701202517	3381
7701202518	3580
7701202539	3372
7701202540	3372
7701202662	3496
7701202711	3580
7701202712	3372
7701202785	3428
7701202815	3428
7701202833	3580
7701202847	3580
7701202892	3580
7701202894	3372

OE	BESER
NO	NO
7701202895	3372
7701202974	3330
7701203069	3428
7701203087	3428
7701203124	3596
7701203129	3372
7701203213	3381
7701203282	3372
7701203633	3596
7701203635	3596
7701203726	3596
7701203969	3596
7701204087	3428
7701204357	3580
7701204520	3580
7701204530	3487
7701204626	3496
7701204664	3496
7701204708	3580
7701204845	3496
7701204903	3580
7701205015	3596
7701205317	3580
7701206784	3529
7701207034	3496
7701207066	3503
7701208265	3503
7701208422	3983
7701209164	3983
7701349449	3330
7701349869	3580
7701349969	3580
7701349970	3372
7701349973	3372
7711130008	3580
7711130034	3580
8124977820	4221
8305252531	4182
8660004059	4282/1
8660004449	3596
8660004559	4282/1
8660004726	3983
8660005291	4253
8671000107	3503
8888924640	4221
8889644230	4221
8889644240	4221
8889829320	4221
8941301450	3462
8941336421	3446
8941336421	3450
8941336851	3450
8941367328	3450
8941379370	3462
8942424940	3462
8943141920	3450
8943377400	3462
8943377411	3462
8943377421	3462
8943377430	3462
8943377431	3462
8944608510	3446
8944608510	3450
8944611550	3757
8944611550	3857
8944673280	3450
8944705980	3462
8944705990	3462
8944832200	3757
8944832200	3857
8944832201	3757
8944832201	3857
8970352660	3887
8970392690	3887
8970392691	3887
8970700800	3887
8971755300	3887
8971910150	3887
8972068700	3887
8972068730	3887

OE	BESER
NO	NO
8972178160	3887
8972178161	3887
8980791040	4124
9024210110	3614
9064210300	3962
9064210800	3962
9404245119	3405
9404251518	3799
9467548887	3972
9467548888	3972
9467548987	3972
9467548988	3972
9467549087	4151
9467549087	4151/1
016 05 280	4284
044650D200	3953
044650F010	4147
044650F011	4147
044650F012	4147
044650W030	4276
044650W030	4276/1
044650W060	4276/1
04465D8000	3953
04465YZZAJ	3414
04465YZZCT	4013
04465YZZDR	3953
04465YZZDZ	3910
04465YZZEE	4147
04465YZZEG	3948
04465YZZEH	4147
04465YZZEQ	4176
044660K010	4256
044660W010	4277
044660W020	4277
04466WY050	3949
04466YZZC8	3693
04466YZZE8	3949
04491B2090	3901
04491B4010	3901
04491BZ020	3901
04778058AB	4182
05011067AA	4197
05011969AA	4011
05014438AA	4197
05014527AA	4197
05018592AA	4011
05018595AA	4197
05019984AA	4012
05066427AA	4012
05080563AD	4329
05080868AA	4016
05080868AC	4016
05080871AA	4030
05080871AB	4030
05093183AA	4031
05093183AB	4031
05093260AA	4031
05096349AA	4012
05114555AA	3863
05126300AA	3676
05137666AA	4198
05139191AA	4018
05139218AA	3863
05139902AA	3676
05142555AA	4006
05142558AA	4198
05142558AB	4198
05142559AA	4198
05142559AB	4198
05142560AA	4018
05142561AA	4018
05142561AB	4018
05142566AA	4018
05142566AB	4018
05143350AB	4328
05143350AC	4328
05174001AA	4006
05175208AA	4198
05175818AA	4018
05191217AA	3955

OE	BESER
NO	NO
05191229AA	3955
05191244AA	3955
05191271AA	4106
05191271AC	4106
0690-52940	3397
0K5533323Z	4182
113430282R	3406
114430281R	3404
161698451D	3529
171698151G	3486
19 149 111	4219
191615115K	3441
191615415A	3529
191615415D	3529
191698151A	3441
191698151B	3486
191698151E	3441
191698151F	3441
191698151G	3486
191698151L	3486
191698451A	3529
191698451B	3529
191698451C	3529
191698451D	3529
1A6133280B	3511
1A6133280C	3511
1E033323ZA	3594
1E033323ZB	3594
1E063323ZA	3570
1E063323ZB	3570
1E0698451A	3529
1H0690451A	3529
1H0698151A	3538
1H0698151B	3637
1H0698451B	3529
1H0698451C	3529
1H0698451E	3529
1H0698451F	3529
1H0698451G	3529
1H0698451H	3529
1HS698151A	3486
1J0698151A	3682
1J0698151B	3682
1J0698151C	3682
1J0698151D	3782
1J0698151E	3782
1J0698151F	3782
1J0698151G	3782
1J0698151H	3682
1J0698151J	3682
1JE698151B	3682
1K0698151A	3782
1K0698151D	3782
1K0698151F	3782
1K0698151G	3782
1K0698151J	3782
1K0698151K	3782
1N003328ZA	3598/1
1S0698151A	3682
1S0698151B	3682
1S0698151C	3682
1V3A3328ZA	3598/1
1V693328ZA	3511
2 723 99 7	3918
25191GA130	3395
25191GA500	3395
25191GA560	3395
25191GA720	3395
25191GA730	3395
25191GA840	3395
25191GA930	3395
25193GA130	3395
26296-AA00	3426
26296AC030	4079
26296AC040	4079
26296AC041	4079
26296AC050	4079
26296AC060	4079
26296AC070	4079
26296AC200	4079

OE	BESER
NO	NO
26296AE020	4079
26296AE080	4079
26296AE081	4079
26296AE100	4079
26296AE140	4079
26296AE141	4079
26296AE210	4079
26296AE220	4079
26296AF020	4079
2D0698151A	3614
2D0698151B	3614
2E0698151A	3962
2E0698151C	3962
2E0698151F	3962
2E0698151G	3962
2E0698451G	3963
2K5698451A	4336
2K5698451B	4336
2L2Z2200AA	4186
2L54-2001A	3781
2M342001AA	3988/1
2M342001CA	3988/1
2M342001CB	3988/1
2M342001EA	3767
2M342001FA	3767
2M352001BA	3988/1
2Q0698151A	3682
321698151B	3486
321698151D	3486
321698151E	3486
321698151H	3486
323 250 92	3671
3502150K00	3887
377698151E	3561
377698151J	3561
377698151K	3561
39 122 150	4285
3L2Z2200BA	4186
3M342001CA	3988
3M342001CA	3988/1
3M352001AA	3988/1
3M352001BA	3988
3M352001BA	3988/1
4106000Q0K	3983
4106001A25	3394
4106001A26	3394
4106001A85	3394
4106003A25	3394
410601073R	4227
4106012A25	3394
4106013A25	3394
4106013A90	3394
4106014A25	3394
410601596R	4282/1
410601797R	3983/2
410601817R	3983
410601HA0B	3983/2
4106025A25	3394
410602N290	4010
410602N390	4010
410602N392	4010
410603407R	4280
4106034Y90	4010
4106037J90	3667
4106037J91	3667
4106037J92	3667
4106037J93	3667
4106037J94	3667
4106038U90	3697
410603L190	3697
410603N390	4010
410604076R	3983
4106040F90	4010
4106040F91	4010
4106040F92	4010
4106040F93	4010
4106040F94	4010
410604682R	4253
410604775R	3983
4106050Y90	3598/1

OE	BESER
NO	NO
4106050Y91	3598/1
4106050Y93	3598/1
4106050Y94	3598/1
4106054C91	4010
410605536R	4253
4106057C90	4010
4106057C91	4010
4106060R90	3598/1
4106060R91	3598/1
4106060Y91	3598/1
4106060Y94	3598/1
4106061A90	3394
4106062A90	3394
4106062A91	3394
4106062A92	3394
4106062C90	3598/1
4106062Y90	4010
4106063C90	3598/1
4106063Y90	3598/1
4106067A90	3394
410606A00C	4271
4106072B25	3598/1
4106075F90	4010
4106077A90	3394
410607Z026	4017
410608481R	3983
410608638R	4227
4106089A90	3394
4106089A91	3394
41060A1786	3394
41060AX085	4015
41060AX601	3983
41060AX625	3983
41060AZ625	3983
41060EA025	3952
41060EB326	3952
41060EE30J	4015
41060HA00A	3885
41060HA00B	3885
41060HJ00A	4244
41060MB625	3942
41060RN22A	4015
41060VK190	4017
41060VW085	4002
41060VW086	4002
41060ZP025	3952
425 558 81	3965
425 613 55	3965
425 769 75	3965
4406000Q0G	4132
4406000Q0G	4172
4406000Q0M	4132
4406000Q0M	4172
4406000Q1K	4132
4406000Q1K	4172
440600866R	4132
440600866R	4172
440600941R	4132
440600941R	4172
4406085V25	3529
440608697R	4132
440608697R	4172
44060V4810	3529
44060V4811	3529
44060V4812	3529
44060V4813	3529
44060VB190	4010
44060VB191	4010
44060VB290	4010
44060VC090	4010
44060VC290	4010
44060VC291	4010
44060Y9090	3529
443398151F	3619
443698151C	3619
443698151D	3619
443698151E	3619
443698151F	3619
443698151G	3619
443698151H	3619

OE	BESER
NO	NO
46 05A 472	3891
46 05A 481	3891
46 05A 802	4316
46 05A 998	4316
46 05B 070	4316
46 05B 071	4316
46 05B 384	4316
46 05B 806	4316
46 05B 807	4316
46 05B 808	4316
46 05B 914	4316
46 05B 915	4316
46 05B 916	4316
46 05B 994	3891
48413380B0	4060
4897 664AA	4197
4897 665AA	4197
4B0698151Q	4096
4B0698151R	4096
4R332001AB	4332
4R3Z2001BA	4332
4S4Z2001AA	3885
5011 067AA	4197
5011 743AA	4197
5014 438AA	4197
5014 527AA	4197
5018 595AA	4197
533698151A	3531
5510261G50	3602
5510261G61	3602
5510261G62	3602
5510262G61	3602
5520050FA0	4034
5520065J00	3929
5520065J03	3929
5520065J10	3929
5520065J11	3929
5520065J21	3929
5520065J22	3929
5520065J23	3929
5520065J24	3929
5520065J25	3929
5520067D11	3929
5521050Z00	3952
5521050Z10	3952
5521050Z11	3952
5521070B00	3511
5521070B10	3511
5521082Z00	3952
5521082Z20	3952
5580060G00	3602
5580060G01	3602
5580060G50	3602
5580061G50	3602
5580061G60	3602
5580061G61	3602
5580061G70	3602
5580061G71	3602
5580061G72	3602
5580061G73	3602
5580061G74	3602
5580061G75	3602
5580062G60	3602
5581051Z00	3952
5581051Z20	3952
5581054G11	3899
5581054G12	3899
5581054G13	3899
5581054G41	3899
5581054G42	3899
5581060F00	3511
5581060F01	3511
5581060F02	3511
5581060F03	3511
5581060F10	3511
5581061G74	3602
5581062J00	3983/1
5581062J01	3983/1
5581062J20	3983/1
5581062J30	3983/1

OE	BESER
NO	NO
5581062J31	3983/1
5581062J50	3983/1
5810102A10	3985
5810105A10	3985
5810105A30	3985
581011CA10	3504
581011UA00	4041
581011UA50	4041
5810124A00	3504
581012TA00	4041
5810132B00	3504
581013TA10	4041
581013VA70	4041
581013VA90	4041
581014DA00	4035
581014DC00	4035
581014DE00	4035
581014HA00	4035
581014HA01	4035
581014HA10	4035
581014HA50	4035
581014ZA00	4041
581014ZA70	4041
5810159A00	4251
58101A0A00	4041
58101A4A01	4041
58101A4A11	4041
58101A4A15	4041
58101A4A17	4041
58101B1A00	4041
58101B2A10	4049
58101B2A70	4049
58101D1A00	4049
58101F5A00	4041
58101M5A10	4041
58281390AA	4121/1
583020WA00	4060
583021RA30	4343
583021UA50	4060
583021WA30	4343
583021WA35	4343
583022BA00	3989
583022BA20	3989
583022BA40	3989
583022BA50	4060
583022JA00	4060
583022PA70	4060
583022VA30	4343
583022VA50	4343
583022WA00	4060
583022WA01	4060
583022WA30	4060
583022WA70	4060
583023KA35	4343
583023MA01	4060
583023NA91	4060
583023RA70	4343
583023XA30	4343
583023ZA00	4343
583023ZA10	4343
583023ZA16	4343
583023ZA70	4343
583023ZA76	4343
583024AA00	3989
583024DU02	4060
58302A1A00	4060
58302A4B00	4343
58302A4B10	4343
58302A4B60	4343
58302A5A20	4343
58302A5B30	4343
58302A6A20	4343
58302A6A30	4343
58302A6A31	4343
58302A6A33	4343
58302A7B30	4343
58302A7B31	4343
58302B2A00	4343
58302B2A10	4343
58302B2A70	4343

OE	BESER
NO	NO
58302B4A35	4343
58302C1A50	4343
58302C8A30	4343
58302D4A55	4343
58302D4A65	4343
58302D5A50	4343
58302D7A70	4343
58302E4A10	4343
58302F0A00	4343
58302F2A30	4343
58302H5A00	4343
58302J3A40	4343
58302J5A05	4060
58302K0A50	4343
58302K7A00	4343
5C0698151A	3682
5C0698151B	3682
5Q0698451B	4336
5Q0698451F	4336
5Q0698451L	4336
5R3Z2001AA	4333
5R3Z2200AA	4333
5S4Z2001AA	3885
5U2Z2V200G	4215
5Z0698151A	3682
5Z0698151B	3682
62503-1130	3601
62503-1131	3601
62903-1090	3601
68003701AA	4005
68003701AB	4005
68003776AA	4004
68028671AA	3893
68033078AA	3893
68052369AA	4338
68052369AB	4338
68052369AC	4338
68052370AA	4338
68052370AB	4338
68052370AC	4338
68052386AA	4339
68052387AA	4339
68071076AB	4329
68093323AB	4005
68230095AA	4224
6C0698151A	3682
6C0698151B	3682
6C0698151C	3682
6L3Z2200CD	4320
6R0698151A	3682
6R0698151B	3682
6R332001AA	4332
6RD698151A	3682
701698151A	4020
701698151B	4020
701698151D	3553
701698151E	3553
701698151F	4020
701698151G	4020
701698151H	4020
701698151J	3553
7D0698151B	3553/1
7D0698151D	3794
7D0698151E	3606
7D0698151F	3794
7D0698151G	3553/1
7E0698451A	3842
7E0698451B	3842
7H0698151A	3841
7H0698151D	3841/1
7H0698451B	3842
7H0698451C	3842
7LA698151B	4375
7M0698151A	3506
7M0698151B	3506
7R332001AA	4332
853698151A	3531
855698151B	3490
88 935 752	4219
88 983 915	4219

OE	BESER
NO	NO
8-90403-17	3886
8-97049429	3757
8-97049429	3857
8E0098301S	3782
8E0698151E	3962
8E0698451B	3529
8E0698451D	3529
8E0698451E	3529
8E0698451L	3529
8L2Z2200AB	4186
8P0098301A	3782
8R332001CA	4332
8Z0698151A	3782
90 345 077	3733
90 398 116	3733
90 443 873	3736
90 498 270	3763
90 512 037	3665
90 541 293	3733
90 544 025	3762
90 544 439	3665
90 576 254	3763
93 169 175	3800/2
93 170 602	4040
93 171 035	3762
93 173 180	3856
93 173 379	3762
93 176 118	4040
93 181 519	3762
93 184 518	3762
93 184 519	3762
93 188 726	3762
93 189 816	3800/2
93 191 802	3665
93 192 749	3665
93 213 481	3733
93 284 746	3762
94 461 155	3657
94 483 220	3657
95 517 028	4284
95 517 029	4285
95 524 972	4284
95 524 973	4285
95 588 903	3806/1
95 589 273	3492
95 599 218	3856
95 620 859	3492
95 624 484	3492
95 650 872	3873
95 651 047	3873
95 654 085	3873
95 658 557	3555
95 659 353	3556
95 659 642	3873
95 666 894	3557
95 666 894	3610
95 666 973	3873
95 667 788	3873
95WX2K021A	3506
97 114 300	3657
9R331001AA	4332
A054200320	3658
A0X23323ZA	3511
A670960000	3404
AA35010119	3622
AY040FJ003	3395
AY040HN005	3631
AY040HN006	3695
AY040HN010	3501
AY040HN011	3686
AY040HN014	3696
AY040KE004	3511
AY040KE006	4034
AY040KE118	3901
AY040KE125	3394
AY040MA031	3885
AY040MT002	3685
AY040MT012	4271
AY040NS010	4010
AY040NS030	4010

OE	BESER
NO	NO
AY040NS064	3598/1
AY040NS105	4002
AY040NS110	4015
AY040NS120	4015
AY040NS130	3952
AY040NS133	4015
AY040NS135	4002
AY040NS137	3952
AY040NS142	4015
AY040NS154	4002
AY040NS156	3952
AY040NS163	3952
AY040NS165	4002
AY040NS174	3952
AY040NS175	3952
AY040NS812	3394
AY040NS819	3598/1
AY040NS834	3598/1
AY040NS835	3598/1
AY040NS836	4010
AY040NS843	3598/1
AY040NS901	3598/1
AY040NS902	3598/1
AY040NS903	3598/1
AY040NS904	3598/1
AY040NS910	4010
AY040NS911	4010
AY040TY005	3666
AY040TY006	3666
AY040TY008	3414
AY040TY041	3666
AY040TY042	3414
AY040TY043	3666
AY060SZ001	3887
AY060TY006	3693
AY060TY007	4099
AY060TY014	4098
B0YW3323ZA	3640
B0YW3323ZB	3640
B0YW3323ZC	3640
B0YW3328ZA	3640
B3YH3323ZA	3885
B4Y6-33-23	3522
BOYW3328ZA	3640
BPYK3323ZA	3885
BPYK3323ZC	3885
BR4Y53329Z	3640
BRY43323ZA	3640
BRY43328ZA	3640
BRY53323ZA	3640
BRY53328ZA	3640
BRY63323ZA	3640
BV612001BA	3885
BV612001CB	3885
C2Y33323ZA	3885
C2Y33323ZB	3885
CS25820893	4093
CV612001BC	3885
D10601HA0A	3983/2
D10601HA0B	3983/2
D10601HA0C	3983/2
D10601HD0A	3983/2
D10601JY00	4015
D10602N290	4010
D10602N390	4010
D106037J90	3667
D106037J91	3667
D106038U90	3697
D10603N390	4010
D10603TA0A	4319
D10603TS0A	4319
D10603XA0A	4002
D106040F90	4010
D106040F91	4010
D10604CA0A	4282/1
D10604JA0A	4307
D10604KH0C	4307
D10604KJ1A	4307
D106050Y90	3598/1
D106050Y92	3598/1

OE	BESER
NO	NO
D106050Y93	3598/1
D106050Y94	3598/1
D106067A90	3394
D106072B25	3598/1
D106075A90	3394
D106076A86	3394
D106094M86	3394
D1060AX60A	3983
D1060AX61A	3983
D1060AX61F	3983
D1060BH40A	3983
D1060EE52A	4015
D1060VK100	4017
D1060VK10B	4017
D1060VK190	4017
D106M2N290	4010
D106M37J90	3667
D106M38U90	3697
D106M40F25	4010
D106M40F94	4010
D106M4EAXA	4282/1
D106M50Y93	3598/1
D106M50Y94	3598/1
D106M67A90	3394
D106MN1885	3394
D106MN2288	4010
D106MS1825	3394
D106MS1826	3598/1
D106MS3686	3667
D1M601HA0B	3983/2
D1M601HAVA	3983/2
D1M601HD0A	3983/2
D1M604BA0A	4282/1
D1M604JA0A	4307
D1MFM4KJ1J	4307
D1N601HA0B	3983/2
D4060VC090	4010
D4060VC290	4010
DA06013A85	3394
DA060EB326	3952
DA06M2N290	4010
DA06M40F25	4010
DA19-33-28	3723
DCY1-33-23	3522
F0T-2001-A	3544
F72Z-2200A	3833
F7CZ2001BA	3640
GBP90311AF	3631
GBP90315AF	3683
GBP90315AF	3872/1
GBP90316AF	4212
GBP90324AF	3683
GBP90325AF	3683
GBP90325AF	3872/1
GBP90331AF	4148/1
GBP90336AF	3683
GBP90336AF	3872/1
GBP90339AF	4148/1
GBP90340AF	3683
GBP90340AF	3872/1
GBP90342AF	3943
GBP90347AF	4148/1
GPYA2648ZC	4242
GPYA2648ZD	4242
GSYD3329ZA	4029
H2603328ZB	3666
H3303328ZA	3666
H7223323ZA	3666
H7223323ZB	3666
H7223328ZA	3666
HE213328ZA	3666
HE213328ZB	3666
JZW698151A	3682
JZW698151Q	3841
JZW698151Q	3841/1
JZW698451B	3529
JZW698451K	3842
JZW698451P	3963
K5533323ZB	4182
MB 003 968	3709

OE	BESER
NO	NO
MB 003 993	3709
MB 003 994	3709
MB 044 689	3709
MB 058 708	3709
MB 058 709	3709
MB 082 118	3709
MB 082 119	3709
MB 193 425	3709
MB 238 889	3709
MB 316 650	3709
MB 334 326	3672
MB 334 327	3672
MB 334 338	3672
MB 334 339	3672
MB 377 817	3709
MB 377 818	3709
MB 377 822	3709
MB 389 532	3622
MB 389 533	3622
MB 389 538	3622
MB 389 541	3622
MB 389 572	3688
MB 699 174	3622
MB 699 266	3622
MB 699 463	3604
MB 699 702	3622
MB 858 375	3622
MB 858 380	3688
MB 858 463	3688
MB 858 583	3622
MB 895 072	3622
MB 895 161	3709
MB 928 461	3604
MB 928 463	3604
MB 928 817	3604
MC 112 140	3672
MC 112 189	3672
MC 112 190	3672
MC 112 193	3672
MC 112 194	3672
MC 837 978	3672
MC 862 934	3672
MC 862 936	3672
MC 869 778	3672
MC 869 779	3672
MN 102 605	3604
MN 102 607	3622
MN 102 622	3900
MN 102 623	3688
MN 105 622	3900
MN 116 604	3765
MN 116 764	3765
MR 129 592	3622
MR 205 143	3622
MR 205 269	3688
MR 249 779	3604
MR 334 657	3622
MR 389 507	3604
MR 389 508	3604
MR 389 511	3604
MR 389 512	3604
MR 389 532	3622
MR 389 533	3622
MR 389 535	3604
MR 389 537	3622
MR 389 538	3622
MR 389 539	3622
MR 389 540	3622
MR 389 541	3622
MR 389 571	3688
MR 475 244	3622
MR 493 984	3622
MR 527 564	3900
MR 569 224	3765
MR 569 225	3765
MR 569 233	3765
MR 569 588	3622
MR 569 839	3622
MR 977 365	3900
MZ 690 185	3765

OE	BESER
NO	NO
MZ 690 331	3622
MZ 690 344	3688
MZ 690 563	3765
MZ 690 583	3891
MZ 690 592	4316
O446650100	4083
P96101972S	3510
PC 351 101	3604
PC 351 104	3622
PZ 351 102	3604
SFP5000010	4293
V1010058AB	4182
V1012369AA	4338
V2010563AD	4329
V2010871AB	4030
V2010871AC	4030
V9115-0012	3777
V9115-0013	3930
V9118-1020	3777
V9118-1049	3930
V9118-A020	3777
V9118-A049	3930
V9118-A079	3930
V9118-A092	3891
X3 511 001	3604
X3 511 002	3622
X3 516 004	3688
X3B3485453	3632
XS4Z2001AA	3640
YL8Z2001BA	4119
YM21K021BA	4095
ZF09937786	3440
ZF09938205	3440
ZZMO-49280	3781
ZZS149230A	4034
ZZS149230B	4034
ZZS149230C	4034
ZZS149230D	4034
11046948322	3623
11046948372	3623
11046952012	3470
11046952012	3615
21083501080	3552
21103501080	3422
21103501080	3552
21213501090	3421
34111116007	3332
34111117878	3332
34111119117	3332
34111119176	3332
34111119177	3332
34111150525	3706
34111151081	3332
34111152656	3332
34111155711	3332
34111156464	3332
34111157039	3584
34111157569	3584
34111157570	3584
34111157813	3584
34111158265	3584
34111158267	3584
34111158360	3332
34111159259	3584
34111159261	3332
34111159263	3332
34111159279	3584
34111160450	3584
34111160451	3584
34111160458	3584
34111160459	3584
34111161975	3909
34111162175	3909
34111162210	3909
34111162535	3584
34111162900	3909
34111163921	3909
34111163922	3909
34111163923	3909
34112226009	3332

OE	BESER
NO	NO
34112227331	3909
34112227334	3909
34112227863	3909
34112228248	3584
34112229935	3584
34112282416	3584
34112282554	3584
34112282555	3584
34112282736	3584
34114001314	3909
34116761249	3909
34211108854	3326/1
34211111650	3326/1
34211150525	3706
34211152252	3706
34211152653	3326/1
34211153196	3572
34211153913	3572
34211154398	3572
34211154399	3572
34211154613	3572
34211154614	3572
34211155077	3572
34211156744	3572
34211156745	3572
34211156746	3572
34211156747	3572
34211156748	3572
34211156749	3572
34211157044	3578
34211157334	3578
34211157514	3572
34211157563	3578
34211157757	3572
34211157758	3572
34211157814	3578
34211157925	3572
34211157926	3572
34211158108	3578
34211158136	3578
34211158221	3578
34211158266	3578
34211158270	3578
34211158323	3572
34211158562	3578
34211158642	3578
34211158643	3572
34211158912	3572
34211159003	3572
34211159252	3706
34211159253	3706
34211159255	3706
34211159267	3326/1
34211159273	3572
34211159276	3572
34211159814	3578
34211160198	3578
34211160199	3578
34211162536	3578
34211163324	3879
34211163326	3879
34211163395	3656
34211163833	3879
34211164581	3879
34211164582	3879
34212157576	3879
34212157591	3656
34212157592	3656
34212180421	3879
34212225860	3578
34212225865	3578
34212226013	3572
34212226092	3578
34212357231	3879
34216752632	3879
34216761247	3879
34216761248	3879
34216761250	3879
34216761251	3879
34216761253	3578

OE	BESER
NO	NO
34216761281	3656
34321154398	3572
44202420010	3614
44654216079	3953
44664206079	3949
44664813079	4256
45022692670	3705
45022692671	3705
45022692672	3705
45022693600	3705
45022693601	3705
65508206000	4350
65508206000	4350/1
65508206001	4356
65508206002	4357
65508206005	4357
91135194901	3320
91135195000	3320
91135195001	3320
91135195002	3320
91135195006	3320
94435195006	3320
95535293900	4076
95535293901	4076
95535293902	4076
95535293903	4076
95535293950	4076
95835293900	4310
5,52105E+31	3511
0001431V002	4281
0001431V003	4281
0376-33-625	3709
0376-49-230	3709
0376-49-280	3709
04465 06090	4019
04465 0W060	4276
04465 22150	3375
04465 22170	3375
04465 50170	4276
04465 50171	4276
04465 50190	4276
04465 50230	4276
04465 50250	4276
04465-01010	3472
04465-02020	3651
04465-02061	3817
04465-02130	3817
04465-02160	3956
04465-02170	3956
04465-02200	3956
04465-02210	3956
04465-02230	4077
04465-02270	3956
04465-02370	3956
04465-02390	4176/1
04465-02391	4176/1
04465-02420	4176/1
04465-02430	4176/1
04465-02470	4360
04465-02471	4360
04465-04020	3672
04465-04040	3672
04465-04070	3891
04465-04090	3891
04465-05010	3554
04465-05010	3651
04465-05130	3890
04465-05131	3890
04465-05140	3890
04465-05150	3890
04465-05170	3890
04465-05190	3890
04465-05210	3890
04465-05220	3890
04465-05221	3890
04465-05270	3890
04465-05280	3890
04465-06010	3651
04465-06070	3948
04465-06080	3948

OE	BESER
NO	NO
04465-06090	3948
04465-06110	3948
04465-09020	4205
04465-0C020	3996
04465-0D010	4112
04465-0D040	4112
04465-0D150	4205
04465-0D160	4205
04465-0D170	4205
04465-0D190	4205
04465-0E010	4255
04465-0H010	3987
04465-0H020	3987
04465-0H030	3987
04465-0H031	3987
04465-0K010	3903
04465-0K030	3891
04465-0K040	3982
04465-0K090	3891
04465-0K100	3982
04465-0K110	3982
04465-0K130	3982
04465-0K160	3903
04465-0K240	4167
04465-0K260	4167
04465-0K280	3891
04465-0K290	3998
04465-0K300	4167
04465-0K320	4167
04465-0K330	4167
04465-0K340	4167
04465-0K350	4239
04465-0K360	3891
04465-0K370	3891
04465-0K390	3891
04465-0K400	3891
04465-0K401	3891
04465-0K420	4239
04465-0K580	3891
04465-0W070	4105
04465-10040	3402
04465-10040	3472
04465-12010	3472
04465-12020	3472
04465-12030	3472
04465-12040	3402
04465-12040	3472
04465-12090	3402
04465-12090	3472
04465-12110	3651
04465-12150	3651
04465-12180	3314
04465-12200	3709
04465-12210	3472
04465-12220	3472
04465-12230	3651
04465-12240	3402
04465-12250	3472
04465-12320	3710
04465-12360	3709
04465-12490	3472
04465-12500	3651
04465-12510	3472
04465-12530	3651
04465-12540	3554
04465-12540	3651
04465-12550	3651
04465-12592	3769
04465-12593	3554
04465-12593	3651
04465-12600	3472
04465-13020	3769
04465-13050	3769
04465-14220	3314
04465-16010	3472
04465-16020	3472
04465-16030	3472
04465-16031	3472
04465-16040	3472
04465-16060	3472

OE	BESER
NO	NO
04465-16070	3472
04465-16090	3472
04465-16120	3402
04465-16120	3472
04465-17010	3472
04465-17020	3472
04465-17021	3472
04465-17070	3472
04465-17080	3472
04465-17090	3472
04465-17100	3769
04465-17101	3769
04465-17140	3769
04465-20020	3472
04465-20030	3472
04465-20060	3472
04465-20080	3472
04465-20110	3651
04465-20120	3651
04465-20130	3651
04465-20140	3651
04465-20180	3402
04465-20450	3651
04465-20480	3769
04465-20490	3651
04465-20550	3822
04465-21010	3402
04465-22070	3418
04465-22080	3418
04465-22090	3672
04465-22140	3418
04465-22300	3651
04465-22300	4117
04465-24010	4086
04465-25040	3777
04465-25050	3777
04465-25060	3777
04465-25090	3777
04465-26050	3379
04465-26070	3777
04465-26090	3777
04465-26100	3777
04465-26120	3777
04465-26130	3777
04465-26160	3777
04465-26170	3777
04465-26180	3777
04465-26200	3714
04465-26210	3714
04465-26250	3777
04465-26260	3777
04465-26300	3777
04465-26301	3777
04465-26310	3777
04465-26320	3777
04465-26330	3714
04465-26340	3777
04465-26350	3777
04465-26370	3777
04465-26390	3777
04465-26440	4367
04465-28040	4088
04465-28090	4088
04465-28130	4088
04465-28230	4088
04465-28240	4088
04465-28340	4071
04465-28350	4071
04465-28370	4071
04465-28380	4071
04465-28381	4071
04465-28420	4071
04465-28470	4071
04465-30021	3369
04465-30240	3651
04465-30320	3915
04465-33020	3651
04465-33021	3651
04465-33040	3554
04465-33040	3651

OE	BESER
NO	NO
04465-33050	3554
04465-33050	3651
04465-33070	4086
04465-33090	3651
04465-33120	3822
04465-33130	3822
04465-33150	3822
04465-33160	3651
04465-33180	3822
04465-33210	3651
04465-33230	3822
04465-33440	3948
04465-33445	3948
04465-33450	3948
04465-33470	3948
04465-35031	3560
04465-35040	3560
04465-35050	3379
04465-35070	3672
04465-35080	3560
04465-35160	3379
04465-35170	3371
04465-35250	3891
04465-35290	3891
04465-35320	3777
04465-35330	3891
04465-36010	3379
04465-36010	3930
04465-36020	3930
04465-36050	3379
04465-36080	3930
04465-36090	3930
04465-37010	3930
04465-37030	3930
04465-37070	4354
04465-37090	4354
04465-37091	4354
04465-37100	3930
04465-37110	4354
04465-37250	3930
04465-42010	3554
04465-42010	3651
04465-42011	3554
04465-42011	3651
04465-42012	3554
04465-42012	3651
04465-42020	3651
04465-42050	3554
04465-42050	3651
04465-42060	3554
04465-42060	3651
04465-42070	4158
04465-42071	4158
04465-42080	4158
04465-42100	3651
04465-42110	4158
04465-42120	3651
04465-42130	4158
04465-42140	4077
04465-42150	4077
04465-42170	4077
04465-42180	4077
04465-42190	4077
04465-43020	3672
04465-44020	3651
04465-44030	3651
04465-44040	3651
04465-44070	3651
04465-44120	3651
04465-44130	3651
04465-47030	3769
04465-47050	3769
04465-48020	4082
04465-48030	4082
04465-48080	4105
04465-48090	4082
04465-48100	4105
04465-48110	4105
04465-48150	4255
04465-48160	4255

OE	BESER
NO	NO
04465-50060	4274
04465-50220	4274
04465-52010	3769
04465-52011	3769
04465-52021	3769
04465-52022	3769
04465-52070	3768
04465-52090	3768
04465-52100	3769
04465-52130	3768
04465-52140	3768
04465-52180	3672
04465-53010	3915
04465-60020	3673
04465-60030	3560
04465-60110	3673
04465-60120	3829
04465-60140	3829
04465-60150	3829
04465-60151	3829
04465-60160	3829
04465-60170	3829
04465-60210	3891
04465-60220	3829
04465-60230	3829
04465-60240	3829
04465-60250	3829
04465-60270	3891
04465-60280	3996
04465-60300	3996
04465-60320	3891
04465-60340	3829
04465-AZ100	3891
04465-B1020	3928
04465-B1040	3928
04465-B1110	3928
04465-B1120	4122
04465-B1190	4122
04465-B1320	4122
04465-B2050	3928
04465-B4010	3604
04465-B4020	3604
04465-B4030	3604
04465-B4040	3604
04465-B4050	3604
04465-BZ010	3927
04465-BZ131	4199
04465-YZZ50	3402
04465-YZZ51	3651
04465-YZZ56	3714
04465-YZZ57	3560
04465-YZZA7	3672
04465-YZZAA	3402
04465-YZZAB	3554
04465-YZZAB	3651
04465-YZZAD	3777
04465-YZZAF	3560
04465-YZZAJ	3777
04465-YZZAL	3673
04465-YZZAM	4086
04465-YZZAU	3634
04465-YZZAV	4088
04465-YZZAY	4088
04465-YZZBD	3560
04465-YZZCA	3371
04465-YZZCH	4071
04465-YZZCJ	3768
04465-YZZCL	3822
04465-YZZCM	3829
04465-YZZCN	4158
04465-YZZDB	3891
04465-YZZDC	3817
04465-YZZDT	3987
04465-YZZDW	3903
04465-YZZDY	4077
04465-YZZE6	3930
04465-YZZEB	3890
04465-YZZEC	3956
04465-YZZEQ	4176/1
04466 06080	4202

OE	BESER
NO	NO
04466 14010	3701
04466 14030	3701
04466 22040	3701
04466 22070	3701
04466 22090	3701
04466 22110	3701
04466 30010	3701
04466 40010	3701
04466 40020	3701
04466 40030	3701
04466-02020	3825
04466-02070	3825
04466-02110	3825
04466-02160	3825
04466-02170	4037
04466-02170	4037/1
04466-02180	4037
04466-02180	4037/1
04466-02181	4037
04466-02181	4037/1
04466-02182	4037
04466-02182	4037/1
04466-02190	3954
04466-02190	4037/1
04466-02191	4037
04466-02191	4037/1
04466-02210	3954
04466-02280	4037
04466-02280	4037/1
04466-02290	4037/1
04466-02291	4037/1
04466-02292	4037/1
04466-02300	4037/1
04466-02410	4361
04466-05010	4154
04466-05020	4154
04466-05040	4146
04466-05041	4146
04466-06010	3911
04466-0C010	3997
04466-12130	3954
04466-12150	3954
04466-20010	3776
04466-20020	3776
04466-20040	3776
04466-20060	3776
04466-20070	3776
04466-20080	3776
04466-20090	3788
04466-20100	3776
04466-20110	3776
04466-21010	3911
04466-22150	4114
04466-22170	4114
04466-22190	4113
04466-28010	4072
04466-28011	4072
04466-28020	4072
04466-28090	4072
04466-28110	4154
04466-30030	4099
04466-30240	4113
04466-32010	3776
04466-32020	3776
04466-32030	3876
04466-32040	3876
04466-32050	3776
04466-33010	3776
04466-33030	3776
04466-33040	3776
04466-33050	3776
04466-33090	3911
04466-33100	3911
04466-33110	3776
04466-33130	3911
04466-33140	3911
04466-37030	4354
04466-42010	4153
04466-42020	4153
04466-42030	4153

OE	BESER
NO	NO
04466-42040	4153
04466-42050	4153
04466-47010	3876
04466-47080	3954
04466-48010	3776
04466-48020	3911
04466-48030	4111
04466-48040	4111
04466-48050	3776
04466-48060	4111
04466-48080	3911
04466-48090	4111
04466-52010	3788
04466-52020	3788
04466-52030	3788
04466-52040	3788
04466-52050	3788
04466-52060	3788
04466-52120	3954
04466-52121	3954
04466-52140	3954
04466-52141	3954
04466-52150	3954
04466-52151	3954
04466-52170	3954
04466-53010	4113
04466-60030	3830
04466-60070	3830
04466-60120	3997
04466-60160	3997
04466-60280	3997
04466-YZZC2	4275
04466-YZZC3	3776
04466-YZZC4	3830
04466-YZZC6	3776
04466-YZZD5	3788
04466-YZZD9	3825
04466-YZZE3	4037/1
04491-02030	3651
04491-05010	3554
04491-12016	3710
04491-12030	3314
04491-12031	3314
04491-12032	3314
04491-12060	3710
04491-12063	3710
04491-12080	3710
04491-12081	3710
04491-12082	3710
04491-12092	3314
04491-12093	3314
04491-12094	3314
04491-12440	3402
04491-12650	3554
04491-14010	3314
04491-14011	3314
04491-14030	3314
04491-14031	3314
04491-14032	3314
04491-14033	3314
04491-14090	3314
04491-20030	3314
04491-20031	3314
04491-20032	3314
04491-20040	3314
04491-20050	3314
04491-20051	3314
04491-20110	3314
04491-20111	3314
04491-20880	3554
04491-20890	3554
04491-21010	3314
04491-22130	3418
04491-22140	3418
04491-22150	3418
04491-22160	3418
04491-22161	3418
04491-22162	3418
04491-22163	3418
04491-22170	3418

OE	BESER
NO	NO
04491-22171	3418
04491-22172	3418
04491-22173	3418
04491-22180	3418
04491-22181	3418
04491-22190	3418
04491-22200	3418
04491-22220	3418
04491-22230	3418
04491-22250	3418
04491-22260	3672
04491-22280	3672
04491-22340	3672
04491-22370	3554
04491-26061	3379
04491-26070	3714
04491-26071	3714
04491-26090	3777
04491-26100	3777
04491-26110	3777
04491-26111	3777
04491-26150	3714
04491-26151	3714
04491-26160	3777
04491-26170	3777
04491-26180	3777
04491-26191	3777
04491-26210	3777
04491-26261	3777
04491-26262	3777
04491-26270	3777
04491-26320	3777
04491-26340	3777
04491-28010	3314
04491-28020	3634
04491-28080	4088
04491-28081	4088
04491-28083	4088
04491-28120	4088
04491-28170	4088
04491-2B010	3554
04491-2B060	4086
04491-30101	3369
04491-30341	3915
04491-32020	3402
04491-32030	3402
04491-32031	3402
04491-32032	3402
04491-32050	3402
04491-32080	3402
04491-32081	3402
04491-32090	3402
04491-32100	3402
04491-32180	3402
04491-33010	3554
04491-33011	3554
04491-33030	3554
04491-33040	4086
04491-33041	4086
04491-33042	4086
04491-33060	3554
04491-33080	3554
04491-35010	3379
04491-35020	3379
04491-35021	3379
04491-35022	3379
04491-35062	3714
04491-35063	3714
04491-35070	3371
04491-35071	3371
04491-35080	3371
04491-35090	3418
04491-35120	3371
04491-35130	3714
04491-35160	3560
04491-35170	3371
04491-35171	3371
04491-35180	3371
04491-35181	3371
04491-35190	3560

OE	BESER
NO	NO
04491-35200	3714
04491-35220	3418
04491-35230	3672
04491-35240	3560
04491-35260	3560
04491-35270	3672
04491-36010	3379
04491-36030	3930
04491-36070	3930
04491-50020	4086
04491-50060	3402
04491-60010	3371
04491-60011	3371
04491-60030	3371
04491-60040	3371
04491-60050	3371
04491-60070	3560
04491-60080	3560
04491-60150	3673
04491-60160	3673
04491-60170	3673
04491-60180	3673
04491-87106	3709
04491-87203	3746
04491-87211	3746
04491-87222	3746
04491-87223	3746
04491-87227	3746
04491-87401	3604
04491-87403	3604
04491-87404	3604
04491-87501	3746
04491-87503	3746
04491-87504	3746
04491-87510	3746
04491-87700	3620
04491-87702	3620
04491-87710	3600
04491-87716	3620
04491-87722	3600
04491-87724	3898
04491-87725	3898
04491-87727	3898
04491-87728	3898
04491-87731	3898
04491-87Z01	3927
04491-97217	3928
04491-97402	3928
04491-97404	3928
04491-97507	3604
04492 14090	3701
04492 14100	3701
04492 14110	3701
04492 17040	3701
04492 22030	3701
04492 22040	3701
04492 22041	3701
04492 22042	3701
04492 22043	3701
04492 22050	3701
04492 22070	3701
04492 22080	3701
04492 22100	3701
04492 22140	3701
04492 22141	3701
04492 30080	3701
04492 30100	3701
04492 30101	3701
04492 40101	3701
04492-20010	3776
04492-20011	3776
04492-20012	3776
04492-20020	3776
04492-20021	3776
04492-20022	3776
04492-20030	3776
04492-20040	3776
04492-20050	3776
04492-20051	3776
04492-20060	3776

OE	BESER
NO	NO
04492-20061	3776
04492-20062	3776
04492-20070	3776
04492-20071	3776
04492-20080	3776
04492-20090	3776
04492-20100	3776
04492-20130	3776
04492-20131	3776
04492-20140	3776
04492-20150	3776
04492-28010	4072
04492-28020	4072
04492-32010	3776
04492-32011	3776
04492-32020	3776
04492-50030	4275
04897 664AA	4197
04897 665AA	4197
05011 743AA	4197
06450S2G000	3686
06450S2GJ01	3686
06450S5A010	3686
06450S5DA00	3696
06450S5DA01	3696
06450S7H000	3686
06450S9A000	3696
06450S9A010	3696
06450SAA900	3686
06450SAA901	3686
06450SAAB00	3686
06450SAAE50	3686
06450SAAG00	3686
06450SELT00	3686
06450SELT01	3686
068071076AB	4329
0866-33-625	3709
0866-49-230	3709
0870-33-625	3709
0870-49-230	3709
0870-49-280	3709
095 517 028	4284
095 524 972	4284
0K5533323ZA	4182
0K5533323ZB	4182
115 430 261	3419
115 430 261	3731
115 430 280	3419
115 430 281	3419
115 430 284	3419
115 430 284	3731
115 430 285	3419
115 430 285	3731
115 430 287	3419
150 698 451	3529/1
180 698 151	3782/1
18D 698 151	3782/1
1C1J2K021AA	3921
1C1J2K021AB	3921
1C1J2K021AC	3921
1E10-33-23X	3877
1E10-33-23Z	3877
1GD 698 151	3444/1
1GD 6981 51	3444/1
1H0 698 151	3444/1
1J0 698 151	3782/1
1JE 698 151	3782/1
1K0 698 151	3904
1K0 698 451	3905
1M2J2K021BA	3590/2
1S0 698 151	3782/1
1S712M008AE	4093
1S7J2K021AA	4100
251 698 151	3350
26296-AA040	4078
26296-AA041	4078
26296-AA061	4080
26296-AA062	4080
26296-AA080	4080
26296-AA081	4080

OE	BESER
NO	NO
26296-AA082	4080
26296-AA120	3426
26296-AA121	3426
26296-AA142	3426
26296-AA143	3426
26296-AC010	3764
26296-AC011	3764
26296-AC020	3764
26296-AC021	3764
26296-AC040	4079
26296-AC041	4079
26296-AC050	4079
26296-AC080	3764
26296-AC090	3764
26296-AE020	4079
26296-AE160	3912
26296-AE190	4036
26296-AE200	4036
26296-AE210	4079
26296-AG000	4081
26296-AG030	4081
26296-AG040	3912
26296-AG050	4081
26296-AJ000	4081
26296-AJ001	4081
26296-AJ010	4081
26296-FA000	3426
26296-FA001	3426
26296-FA040	4078
26296-FA041	4078
26296-FC002	3913
26296-FE000	3912
26296-FE020	3912
26296-FE080	3912
26296-FE081	3912
26296-FG001	4036
26296-PA040	4080
26296-PA060	4080
26296-SA000	3912
26296-SA010	3912
26296-SA011	3912
26296-SA020	3912
26296-SA030	3912
26296-SA031	3912
26296-SG010	4081
26296-TC060	3752
26296-XA000	4081
26296-XA010	4081
26696-AG010	4213
26696-AG020	4213
26696-AG030	4213
26696-AG031	4213
26696-AG051	4213
26696-CA000	4258
26696-FA010	3913
26696-FC000	3913
26696-FC001	3913
26696-FC002	3913
26696-FC020	3913
26696-FJ000	4213
26696-SG000	4213
26696-XA000	4258
26696-XA010	4258
26696-XA011	4258
291 698 151	3513
29296-PA060	4080
2D0 698 151	3567
2D0 698 451	3670
2D0 698151C	3567
2E0 698 151	3925
2E0 698 151	3925/2
2E0 698 451	3926
2E0 698 451	3926/1
2H0 698 151	3906/1
2H6 698 451	4357
2K5 698 151	4228
2K5 698 151	4228/1
2M3420014EA	3767
2N0 698 151	4350
2N0 698 151	4350/1

OE	BESER
NO	NO
2N0 698 451	4357
2Q0 698 151	3782/1
2QB 698 151	3782/1
2T142M008AA	3853/1
3 064 838 2	3918
3 126 118 6	3642
321 698 151	3444/1
3502177K00J	3887
3502277K00J	3887
3502278K00J	3887
357 698 151	3551
374 698 151	3458
3AA 698 451	4390
3C0 698 151	3904
3C0 698 451	3905
3M512K021AA	3885
3M512K021AB	3885
3M512M008AA	3853/1
3M512M008AB	3853/1
3M512M008AC	3853/1
3M5J2K021AA	3885
41000-10G08	3692
41060 18W25	3375
41060 B9500	3375
41060 B9525	3375
41060 B9526	3375
41060 B9527	3375
41060 D8593	3375
41060 M3025	3375
41060 N3000	3375
41060 N3025	3375
41060 N3026	3375
41060 N3027	3375
41060 N3028	3375
41060 N4425	3375
41060 N4426	3375
41060 N4427	3375
41060 N4428	3375
41060 N8525	3375
41060 R1000	3375
41060 R1025	3375
41060 R5225	3375
41060 R5725	3375
41060 R5726	3375
41060 R5727	3375
41060 S0128	3375
41060 S0425	3375
41060 S0426	3375
41060 S3426	3375
41060 S3427	3375
41060 S5025	3375
41060 S6025	3375
41060 S6085	3375
41060 U3425	3375
41060 U3426	3375
41060 U8725	3375
41060 U8925	3375
41060-00Q0L	4056
41060-00Q1B	3964/1
41060-00Q1C	3964/1
41060-00Q1L	3964/1
41060-00QAD	3856
41060-00QAE	3848
41060-03R85	3758
41060-03R86	3758
41060-05N90	3760
41060-05N92	3760
41060-05N93	3760
41060-08N90	3692
41060-08N91	3692
41060-08N92	3692
41060-09G90	3760
41060-09W25	3397
41060-0E591	3700
41060-0F025	3888
41060-0H590	3760
41060-0M8XC	3647
41060-0V090	3699
41060-0V090	3779
41060-0V790	4143

OE	BESER
NO	NO
41060-11P26	3758
41060-11P29	3758
41060-11P86	3758
41060-11P88	3758
41060-11P91	3758
41060-11P93	3758
41060-11P94	3758
41060-18V92	3760
41060-1E590	3699
41060-1E590	3779
41060-1N025	3577
41060-1N060	3577
41060-1N060	3647
41060-1N090	3577
41060-1N090	3647
41060-1N890	3577
41060-1W385	3932
41060-1W387	3932
41060-1W388	3932
41060-21P92	3758
41060-23C90	3760
41060-23C91	3760
41060-23C92	3760
41060-23C93	3760
41060-23C94	3760
41060-25N25	3760
41060-27N91	3760
41060-27N93	3760
41060-2F025	3562
41060-2F026	3562
41060-2F027	3562
41060-2N391	3577
41060-2S790	3760
41060-2S791	3760
41060-2S792	3760
41060-2X825	3888
41060-2Y090	3699
41060-2Y090	3779
41060-2Y091	3699
41060-2Y091	3779
41060-31E93	3397
41060-31P92	3758
41060-32E80	3758
41060-32E90	3758
41060-32E92	3758
41060-32E94	3758
41060-32G90	3760
41060-32G91	3760
41060-32G92	3760
41060-32G94	3760
41060-32R90	3700
41060-32R91	3700
41060-32R93	3700
41060-32R94	3632
41060-3S525	3760
41060-3S590	3760
41060-3S591	3692
41060-40U90	3699
41060-40U90	3779
41060-40U92	3699
41060-40U92	3779
41060-44F91	3700
41060-44F92	3632
41060-49867	3439
41060-4A00B	3928
41060-4L090	3699
41060-4L090	3779
41060-4L091	3699
41060-4L091	3779
41060-4L092	3699
41060-4L092	3779
41060-4M490	3797
41060-4M526	3562
41060-4U125	4115
41060-4U126	4115
41060-4U127	4115
41060-4Z090	3700
41060-50Y90	3766
41060-50Y94	3766
41060-51E85	4104

OE	BESER
NO	NO
41060-51E86	3758
41060-55F90	3699
41060-55F90	3779
41060-57G90	3760
41060-5T091	3760
41060-5Y725	3699
41060-5Y725	3779
41060-61J93	3700
41060-63C90	3766
41060-65E90	3700
41060-6F625	4128
41060-6F626	4128
41060-6J090	3700
41060-6J091	3700
41060-6N090	3797
41060-6N091	3797
41060-6N0X1	3797
41060-71E92	3700
41060-71J25	3562
41060-71J26	3562
41060-72J25	4104
41060-73L91	3699
41060-73L91	3779
41060-73L92	3699
41060-73L92	3779
41060-73L93	3699
41060-73L93	3779
41060-75J25	4104
41060-76L90	3700
41060-76L91	3700
41060-78J91	3700
41060-80N90	3632
41060-84L91	3700
41060-85F90	3699
41060-85F90	3779
41060-88E90	3699
41060-88E90	3779
41060-88E94	3699
41060-88E94	3779
41060-89E90	3699
41060-89E90	3779
41060-89E91	3699
41060-89E91	3779
41060-89TB6	4354
41060-89TC8	4354
41060-8J090	3699
41060-8J090	3779
41060-8M190	3700
41060-95F0A	3797
41060-95F0B	3797
41060-99B25	4128
41060-99B26	4128
41060-9C125	3888
41060-9C525	3888
41060-9C526	3888
41060-9G125	3888
41060-9J425	3699
41060-9J425	3779
41060-9X129	3942/A
41060-AL590	3699
41060-AL590	3779
41060-AU091	3699
41060-AU091	3779
41060-AV125	4115
41060-AV126	4115
41060-C7194	3415
41060-C7892	3415
41060-C8186	3415
41060-CA090	4074
41060-CA092	4074
41060-CA093	4074
41060-CC090	4143
41060-CC093	4143
41060-CG00J	4074
41060-EB325	4143
41060-F1725	3562
41060-F6494	3758
41060-G06S0	3692
41060-G8190	3700
41060-G8191	3700

OE	BESER
NO	NO
41060-G9800	3415
41060-R9025	3369
41060-T7893	3415
41060-V6786	3758
41060-V6790	3758
41060-V6791	3397
41060-V6793	3760
41060-V7085	3692
41060-V7090	3760
41060-V7091	3760
41060-V7092	3692
41060-V7093	3760
41060-VB290	3859
41060-VC091	3859
41060-VH385	3932
41060-VJ490	3760
41060-W2285	3370
41060-WA490	3797
41060-WK60J	4116
41060-ZA525	4074
41060-ZB590	3699
41060-ZB590	3779
41060-ZG025	3700
41060-ZG225	3699
41060-ZG225	3779
41080-09G25	3692
41080-09G27	3692
41080-09G28	3692
41080-09W25	3692
41080-09W28	3692
41080-09W29	3692
41080-09W85	3692
41080-13V25	3692
41080-31E25	3692
41080-31E26	3692
41080-41L27	3692
41080-41L28	3692
41080-41L29	3692
41080-V7025	3692
411 698 151	3318
43022T2JH00	4279
43022T2JH01	4279
43022T7JH01	4279
43022T8MG00	4279
43022T8MG01	4279
437 698 151	3650
437 698 451	3536
44060-00Q0G	4057
44060-00Q0G	4172/1
44060-00Q0H	4057
44060-00Q0M	4057
44060-00Q0M	4172/1
44060-00Q1K	4172/1
44060-00QAE	3855
44060-00QAF	3795/1
44060-0866R	4172/1
44060-08E91	4087
44060-0941R	4172/1
44060-3F025	3660
44060-3F085	3660
44060-4U092	4303
44060-61E90	4087
44060-61E91	4087
44060-65E90	4087
44060-70J25	3660
44060-70J26	3660
44060-8H385	3933
44060-90E90	4087
44060-AL585	3933
44060-AL586	3933
44060-AU090	4303
44060-AV625	3853
44060-AV725	3853
44060-BM425	3660
44060-BM426	3660
44060-D3590	4087
44060-D3591	4087
44060-EB325	4025
44060-EG00J	3933
443 698 151	3650

OE	BESER
NO	NO
45022504G00	3686
45022692N50	3705
45022692N51	3705
45022693N50	3705
45022S01A02	3696
45022S01A03	3696
45022S04000	3686
45022S04010	3686
45022S04020	3686
45022S04409	3686
45022S04505	3686
45022S04E50	3686
45022S04E60	3686
45022S04G00	3686
45022S04G01	3686
45022S04G02	3686
45022S04G03	3686
45022S04J00	3686
45022S04J01	3686
45022S04J02	3686
45022S07000	3686
45022S07010	3686
45022S07020	3686
45022S07030	3686
45022S07408	3686
45022S10000	3696
45022S10010	3696
45022S10020	3696
45022S2G000	3686
45022S5A010	3686
45022S5DA00	3696
45022S5DH00	3696
45022S6DE01	3683
45022S6DE50	3683
45022S6DE51	3683
45022S74E10	3683
45022S74E50	3683
45022S7H000	3686
45022S84A01	3696
45022S9A000	3696
45022SA0505	3646
45022SA0680	3646
45022SA0681	3646
45022SA0N60	3646
45022SA0N61	3646
45022SA4A11	3631
45022SA4A12	3631
45022SA7951	3501
45022SAA900	3686
45022SAA901	3686
45022SAAB00	3686
45022SAAE50	3686
45022SAAE51	3686
45022SAAG00	3686
45022SAO680	3646
45022SB2506	3501
45022SB2526	3501
45022SB2673	3501
45022SB2780	3582
45022SB2930	3501
45022SB2931	3501
45022SB2G00	3582
45022SB6000	3501
45022SBO671	3501
45022SBO672	3501
45022SD2505	3582
45022SD2506	3582
45022SD2507	3501
45022SD2508	3582
45022SD2509	3582
45022SD2518	3582
45022SD2519	3582
45022SD2527	3501
45022SD2528	3582
45022SD2529	3582
45022SD2A00	3582
45022SD2A01	3582
45022SD2A02	3582
45022SD2A03	3582
45022SD2A10	3582

OE	BESER
NO	NO
45022SH3903	3501
45022SH3G01	3501
45022SH3G02	3501
45022SH3G03	3501
45022SH3G50	3501
45022SK3E00	3683
45022SK7010	3631
45022SK7505	3631
45022SK7506	3631
45022SK7518	3631
45022SK7526	3631
45022SM2000	3695
45022SM2010	3695
45022SM2020	3695
45022SM2030	3695
45022SM2408	3695
45022SM2505	3695
45022SM2515	3695
45022SM2525	3695
45022SM4505	3696
45022SM4517	3696
45022SM4A00	3696
45022SM4A01	3696
45022SM4G00	3696
45022SNAA50	3696
45022SNEA00	3696
45022SO4505	3686
45022SR3000	3686
45022SR3507	3631
45022SR3516	3501
45022SR3920	3501
45022SR3G00	3686
45022SR3G01	3686
45022SR3N30	3631
45022SR3N31	3631
45022SR7000	3686
45022SR7010	3686
45022SR7030	3686
45022ST3E00	3683
45022ST3E01	3683
45022ST3E10	3683
45022ST3E11	3683
45022ST3E30	3683
45022ST7408	3686
45022ST7J00	3686
45022ST7J01	3686
45022ST7J02	3686
45022SV4000	3695
45022SV4020	3695
45022SW3000	3695
45022T2GA00	4312
45022T2GA01	4312
45022T2MT01	4312
45022T3VA00	4312
45022T3VA01	4312
45022T3ZA01	4312
45022T4NH01	4312
45022T6AJ00	4312
45022T6MH02	4312
45022T8MG00	4312
45022TG1T00	3686
45022TR3A01	3696
47746-0W050	4105
47746-0W070	4105
48130-08260	3843
48130-090A1	3843
48130-091A0	3843
48130-341A0	3960
48130-36B00	3960
48130-36B10	3960
4A0 698 451	3536
4B0698151AC	4096
4B0698151AD	4096
4S712M008AA	4058
500 0555 63	3965
533 698 151	3649
55120-78460	3509
55200-50FA0	4034/1
55200-50J01	4000
55200-50J02	4000

OE	BESER
NO	NO
55200-51810	3721
55200-51811	3721
55200-56830	3883
55200-56831	3883
55200-56870	3883
55200-56B41	3883
55200-60810	3882
55200-60811	3882
55200-60821	3882
55200-60860	4034/1
55200-60A41	3882
55200-60B10	3721
55200-60B11	3721
55200-61832	3745
55200-61870	3882
55200-61880	3721
55200-62840	3721
55200-62850	3745
55200-62851	3745
55200-62852	3745
55200-62874	4034/1
55200-63810	3882
55200-65D00	3883
55200-65D00	3884
55200-65D01	3883
55200-65D01	3884
55200-65D10	3884
55200-65D11	3884
55200-65D21	3883
55200-65D30	3884
55200-65D31	3884
55200-65D32	3884
55200-65D50	3884
55200-65D51	3884
55200-65J23	4118
55200-70820	3509
55200-70860	3509
55200-70861	3509
55200-70862	3509
55200-77E00	3884
55200-77E01	3884
55200-84A00	3883
55200-85Z00	3687/1
55200-86810	3721
55200-86830	3721
55210-56A50	3509
55210-60B50	3745
55210-62B50	3745
55210-70820	3509
55210-78450	3509
55210-78460	3509
55210-84500	3509
55210-85000	3509
55250-60B80	3721
55250-64B10	3721
55251-60B80	3721
55251-64B10	3721
553 698 151	3649
55300-86810	3721
55500-85Z00	3894
55800-57L00	4148/1
55800-57L50	4148/1
55800-57L51	4148/1
55800-60J00	4303
55800-60J10	4303
55800-77K00	3933
55800-80J00	4148/1
55800-80J01	4148/1
55800-80J02	4148/1
55800-80J03	4148/1
55810-25F10	4027
55810-57L00	4038
55810-57L50	4038
55810-68L00	4122
55810-75F00	4027
55810-75F10	4027
55810-75F11	4027
55810-75F12	4027
55810-75F30	4027
55810-75F31	4027

OE NO	BESER NO
55810-75F32	4027
55810-76A01	3928
55810-76A10	3928
55810-80G01	3928
55810-80G02	3928
55810-80G10	3928
55810-80G12	3928
55810-80G13	3928
55810-84M00	3928
55860-60B90	3745
55870-60B90	3745
58101-02A00	3778
58101-05A10	3778
58101-07A00	3968
58101-07A10	3968
58101-07A20	3968
58101-0WA00	3960
58101-0XA01	3968
58101-0XA10	3968
58101-0ZA00	4039
58101-17A10	3961
58101-1CA00	3502
58101-1CA10	3502
58101-1DA00	4039
58101-1DE00	4039
58101-1FA00	3959
58101-1FE00	3959
58101-1GA00	3880
58101-1GE00	3880
58101-1HA00	4028
58101-1HA10	4028
58101-1HA20	4028
58101-1JA10	3880
58101-1KA00	4049
58101-1MA00	4028
58101-1MA20	4028
58101-1RA00	4136
58101-1RA01	4136
58101-1RA05	4136
58101-1WA05	4136
58101-1WA35	4136
58101-1YA00	4265
58101-1YA10	4265
58101-1YA30	4265
58101-1YA31	4265
58101-1YA40	4265
58101-20A00	3632
58101-22A00	3502
58101-22A10	3502
58101-24A00	3502
58101-24B00	3502
58101-24C00	3502
58101-25A00	3502
58101-25A10	3502
58101-25A20	3502
58101-26A00	3843
58101-26A10	3843
58101-26A20	3843
58101-26A30	3843
58101-26A40	3843
58101-28A00	3632
58101-28A10	3502
58101-28A20	3632
58101-29A00	3632
58101-29A10	3632
58101-29A20	3632
58101-29A40	3632
58101-29B00	3632
58101-2BA00	3960
58101-2BA10	3960
58101-2CA10	3959
58101-2CA20	3959
58101-2DA20	3632
58101-2DA30	3961
58101-2DA31	3961
58101-2DA40	3961
58101-2DA60	3961
58101-2EA10	3959
58101-2EA11	3959
58101-2EA20	3959

OE NO	BESER NO
58101-2EA21	3959
58101-2FA10	4001
58101-2FA20	4001
58101-2FA21	4001
58101-2HA10	3959
58101-2JA10	3960
58101-2JA11	3960
58101-2JA50	3960
58101-2KA10	3959
58101-2PA00	3960
58101-2PA70	3960
58101-2SA00	4049
58101-2SA30	4049
58101-2SA50	4039
58101-2SA70	4039
58101-2TA00	4233
58101-2TA50	4233
58101-2VA00	4166
58101-2VA00	4342
58101-2VA50	4166
58101-2VA50	4342
58101-2VA60	4342
58101-2WA01	3960
58101-2WA70	3960
58101-2WA90	3960
58101-2YA50	4039
58101-33A00	3632
58101-33C00	3632
58101-34A21	3632
58101-38A40	3632
58101-38A60	3632
58101-38A81	3959
58101-38A90	3959
58101-39A20	3843
58101-39A30	3843
58101-39A40	3843
58101-39A60	3976/1
58101-3AA10	3843
58101-3AA20	3843
58101-3BA02	3976/1
58101-3CA20	3632
58101-3CA70	3959
58101-3CA80	3959
58101-3ED00	3978
58101-3EE00	3978
58101-3EU00	3978
58101-3FA00	3976/1
58101-3FA10	3976/1
58101-3KA01	3959
58101-3KA40	3959
58101-3KA61	3959
58101-3MA00	3960
58101-3MA01	3960
58101-3MA20	3960
58101-3NA50	4342
58101-3QA10	4233
58101-3QA50	4233
58101-3SA20	4049
58101-3SA21	4049
58101-3SA25	4049
58101-3SA26	4049
58101-3VA50	4233
58101-3XA00	4166
58101-3XA00	4342
58101-3XA10	4342
58101-3XA20	4166
58101-3XA20	4342
58101-3ZA10	4039
58101-3ZA70	4039
58101-43A00	3507
58101-44A00	3507
58101-44A10	3507
58101-4AA00	3648
58101-4AA10	3648
58101-4AA26	3843
58101-4AA30	3648
58101-4AA60	3648
58101-4AA61	3648
58101-4AA80	3648
58101-4BA00	3507

OE NO	BESER NO
58101-4BA10	3507
58101-4DA60	3960
58101-4DU00	3960
58101-4FA00	4231
58101-4FA10	4231
58101-4LA00	4136
58101-59A00	4251/1
58101-A3A05	4265
58101-A5A00	4342
58101-A6A00	4166
58101-A6A00	4342
58101-A6A01	4166
58101-A6A01	4342
58101-A6A02	4342
58101-A6A03	4342
58101-A6A73	4342
58101-A7A00	4166
58101-A7A00	4342
58101-A7A01	4342
58101-B2A60	4039
58101-B4A00	4321
58101-B4A05	4321
58101-B4A06	4321
58101-B9A30	4321
58101-B9A35	4321
58101-B9A70	4321
58101-C8A50	4136
58101-D3A00	4353
58101-D3A10	4353
58101-D3A11	4353
58101-D7A00	4039
58101-D7A10	4353
58101-D7A50	4039
58101-D9A00	4353
58101-F2A50	4353
58101-H1A80	3976/1
58101-M2A01	3622
58103-11100	3709
58103-11101	3709
58103-21300	3709
58103-21310	3709
58103-21330	3709
58103-31000	3312
58103-31010	3312
58115-11100	3709
58115-11101	3709
58115-FDA00	4269
58115-FDC00	4269
58302-07A00	3969
58302-07A10	3969
58302-0XA00	3969
58302-0ZA00	3980
58302-17A00	3993
58302-1CA00	3993
58302-1CA10	3993
58302-1DA00	4165
58302-1DE00	4165
58302-1FE00	3993
58302-1GA00	3980
58302-1HA00	3980
58302-1HA10	3980
58302-1JA30	3980
58302-1KA30	3980
58302-1MA00	3980
58302-1MA40	3980
58302-1PA30	4040
58302-25830	3993
58302-26A00	3993
58302-26A10	3993
58302-26A20	3993
58302-26A30	3993
58302-28A00	4087
58302-29A00	4087
58302-29A10	4087
58302-2DA00	4087
58302-2DA10	4087
58302-2EA00	3993
58302-2EA30	3993
58302-2EA31	4061
58302-2FA10	4087

OE NO	BESER NO
58302-2GA00	3993
58302-2HA00	3993
58302-2KA00	4061
58302-2KA10	4061
58302-2LA00	3980
58302-2SA10	3980
58302-2SA30	3980
58302-2SA35	3980
58302-2SA70	3980
58302-2TA60	4061
58302-2YA31	3980
58302-38A10	3993
58302-38A20	3993
58302-38A30	3993
58302-38A40	3993
58302-39A40	3993
58302-3AA20	3993
58302-3CA10	3993
58302-3ED00	3979
58302-3EE00	3979
58302-3EU00	3979
58302-3FA00	3993
58302-3FA01	4061
58302-3FA11	4061
58302-3KA30	3993
58302-3KA31	4061
58302-3KA51	3993
58302-3KA52	4061
58302-3KA62	4061
58302-3KA63	4061
58302-3XA30	4061
58302-A2A20	4040
58302-A2A30	4040
58302-D3A00	4061
58302-D7A00	3980
58302-M2A00	4108
58675-00810	4354
5C0 698 151	3782/1
5H103-31000	3484
5K0 698 151	3904
5K0 698 451	4135
5L3Z-2001-A	4340
5N0 698 451	4390
6C0 698 151	4200
6C0 698 151	3782/1
6C112K021AB	3906
6C112K021AB	3906/1
6C112K021AB	3906/1A
6C112K021AB	3906/2
6C112K021AC	3906
6C112K021AC	3906/1
6C112K021AC	3906/1A
6C112K021AC	3906/2
6C112K021AD	3906
6C112K021AD	3906/1
6C112K021AD	3906/1A
6C112K021AD	3906/2
6C112K021AE	3906
6C112K021AE	3906/1
6C112K021AE	3906/1A
6C112K021AE	3906/2
6C112K021BB	3920
6C112K021BB	3920/1
6C112K021BC	3920
6C112K021BC	3920/1
6C112K021BD	3920
6C112K021BD	3920/1
6C112K021BE	3920/1
6C112M008AB	3907
6C112M008AB	3907/1
6C112M008AB	3907/1A
6C112M008AB	3907/2
6C112M008AC	3907
6C112M008AC	3907/1
6C112M008AC	3907/1A
6C112M008AC	3907/2
6C112M008AD	3907
6C112M008AD	3907/1
6C112M008AD	3907/1A
6C112M008AD	3907/2

OE	BESER
NO	NO
6C112M008AE	3907/1
6C112M008AE	3907/1A
6C112M008AE	3907/2
6C112M008AF	3907/1
6C112M008AF	3907/1A
6C112M008AF	3907/2
6G912M008GB	4157
6G912M008GC	4157
6L3Z-2001-A	4340
6M512K021AA	3885
6N0 698 151	3566
6Q0 698 151	3782/1
6Q0 698 451	4152
6QD 698 151	3782/1
6R3Z-2001-A	4332
6RD 698 151	3782/1
6RU 698 151	4200
6U0 698 151	3419
6U0 698 151	3731
6U7 615 105	3419
6X0 698 451	3529/1
7 173 717 8	3608
7 175 298 6	3618/1
7 176 914 0	3618/1
7 177 002 6	3981
7 177 096 4	3790/1
7 736 214 9	3618/1
7 736 220 5	3790/1
7 736 226 9	3618/1
7 736 332 1	3618/1
7 736 349 6	3790/1
7 736 378 2	3827
7 736 601 7	3981
7 736 633 6	4286
7 736 659 5	4286
7 736 709 2	3981
7 736 836 8	4234
7 736 845 2	3981
701 615 117	3671
701 691 451	3671
701 698 451	4345
76VB2K021AA	3416
76VB2K021BA	3423
76VB2K021CA	3423
76VB2K021DA	3423
77010-50914	3848
77010-54771	3848
7D0 698 451	4345
7E0 698 151	4162
7H0 698 151	3841
7L0 698 451	4076
7L6 698 151	4075
7M0 698 151	3506
7M0 698 451	3529/1
7M512K021AA	3885
7P0 698 451	4310
7P6 698 151	4309
8 634 925 0	3918
8 634 925 5	3918
81AB2K021AB	3570
81AB2K021BB	3570
81AB2K021DE	3570
823 698 151	3327
82AB2K021AA	3570
839 698 151	3343
839 698 151	3483
83BB2K021CA	3570
83BB2K021CB	3570
8450-49-280	3709
84AB2K021AA	3570
84AB2K021CA	3570
84BB2K021BA	3570
853 698 151	3649
855 698 151	3490
857 698 451	3536
85BB2K021AA	3570
861 698 151	3327
867 698 151	3585/1
86AB2K021BA	3570
86AB2K021BB	3570

OE	BESER
NO	NO
86AB2K021BC	3570
86AB2K021EA	3570
86AB2K021EB	3570
86BB2K021CA	3570
86FX2K021DA	3570
86VB2K021BB	3416
86VB2K021CB	3423
86VX2K021AA	3416
87FX2K021CA	3570
87FX2K021GA	3570
87VX2K021BA	3416
87VX2K021CA	3423
88BB2K021AA	3570
88BB2K021BA	3570
891 698 151	3327
8-94461-155	3657
8-97049-429	3657
8-98078-193	3886
89BB2K021AA	3570
89BB2K021AB	3570
89FB2K021AA	3589
89FB2K021CA	3589
89FB2K021DA	3589
89FX2K021BA	3570
89VB2K021BA	3416
89VB2K021CA	3423
89VB2KO21BA	3423/1
89VX2K021AA	3416
89VX2K021BA	3423
89VX2KO21AA	3416
89VX2KO21BA	3423
8D0 698 151	3650
8E0 698 151	3896
8E0 698 451	3529/1
8E0098301AA	3782
8J0 698 151	3904
8K0 698 151	4259
8K0 698 451	4260
8R0 698 151	4259
8R6 698 151	4259
8V0 698 451	4241
8V412K021AA	3885
8V412K021AB	3885
8V512K021AA	4122
9 884 534 0	3827
90FX2K021AA	3589
91AB2K021BB	3464
91AB2K021JA	3464
91AB2M008BC	3545
91AB2M008BD	3545
91FX2K021AA	3589
91FX2K021AB	3589
92VB2K021BC	3445
93BB2K021EB	3558
93BB2K021FB	3593
93BX2K021BA	3593
93BX2K021FB	3593
93GB2K021AB	3593
93GB2K021AC	3593
94GB2K021AA	3593
94GB2K021AB	3593
95VW2K021AA	3506
95VW2K021BB	3506
9610 1972 5	3510
9610 1972 S	3510
96FB2K021AA	3594
96FB2K021BA	3570
96FB2K021CA	3594
96FX2K021AA	3594
96FX2K021BA	3570
96FX2K021SA	3570
97BG2K021AA	3593
97BG2K021AB	3593
97BG2K021BA	3558
97BG2K021BB	3558
97BX2K021AA	3593
97BX2K021AB	3593
97BX2K021AC	3593
97FB2K021AA	3594
97FB2K021BA	3570

OE	BESER
NO	NO
97FU2K021CA	3594
98 84 534 0	3827
98FB2K021AA	3594
98FB2K021BA	3570
98FX2K021AA	3594
98FX2K021BA	3570
9C112K021AA	3906/1
9C112K021AA	3906/1A
9C112K021AA	3906/2
9C112K021BA	3920
9C112K021BA	3920/1
9J1 698 151	4309
9L3Z-2001-A	4340
9R3Z-2001-A	4332
9R3Z-2001-B	4332
A0004206920	3455
A0004206920	3471
A0004210008	3455
A0004210008	3471
A0004216210	3924
A0004230230	4127
A0004237110	3614
A0005860442	3455
A0005860442	3471
A0005861042	3455
A0005861042	3471
A0005862042	3455
A0005862042	3471
A0005862742	3471
A0005862742	3455
A0005864042	3455
A0005864042	3471
A0005864342	3455
A0005864342	3471
A0005864542	3455
A0005864542	3471
A0014208220	3455
A0014208220	3471
A0014211010	3924
A0024200020	3630
A0024200120	3630
A0024200420	3627
A0024200520	3581
A0024200999	3630
A0024201220	3627
A0024201620	3581
A0024201820	3581
A0024202120	3658
A0024202220	3658
A0024202620	3627
A0024204120	3614
A0024204220	3614
A0024204620	3581
A0024204820	3680
A0024208020	3581
A0034200020	3680
A0034201720	3614
A0034203020	3581
A0034204820	3581
A0034204920	3581
A0034205120	4127
A0034208120	3924
A0044201520	3614
A0044201620	3581
A0044202420	3614
A0044202620	3614
A0044204420	4127
A0044206820	3962
A0044208220	3962
A0044209220	3581
A0044209320	3581
A0054200320	3658
A0054204620	3658
A0054205320	3962
A0054207920	4127
A0054208620	3614
A0054209320	4127
A0054209420	4127
A0064200120	4127
A0064204420	3924

OE	BESER
NO	NO
A0064205020	4313
A0064209320	4313
A0074201020	4127
A0074206720	4127
A0074206820	4127
A0084200920	4313
A0084203320	4313
A0084204620	3614
A0084204720	3962
A0084204920	3614
A4154210510	3983
A4420442067	4127
A6384230110	3680
A9024210110	3614
A9064210300	3962
A9064210800	3962
AV612K021BA	3885
AV612K021BB	3885
AV612M008AA	3853/1
AY040-NS015	3699
AY040-NS015	3779
AY040-NS053	3797
AY040-NS058	4143
AY040-NS062	3699
AY040-NS062	3779
AY040-NS072	3797
AY040-NS073	3797
AY040-NS079	4143
AY040-NS082	3699
AY040-NS082	3779
AY040-NS084	3797
AY040-NS091	4143
AY040-NS098	4143
AY040-NS100	3797
AY040-NS108	3797
AY040-NS111	3699
AY040-NS111	3779
AY040-NS117	3699
AY040-NS117	3779
AY040-NS118	3699
AY040-NS118	3779
AY040-NS119	3699
AY040-NS119	3779
AY040-NS122	4143
AY040-NS138	3699
AY040-NS138	3779
AY040-NS934	4143
AY040-TY046	3777
AY112K021BA	4204
AY112K021BB	4204
AY112K021BC	4204
AY112K021BD	4204
AY112K021CA	4204
B2YD-33-23Z	3780
B2YD-33-28Z	3780
B4Y6-33-23Z	3522
B5Y6-33-28Z	3522
B5Y8-33-23Z	3522
B5Y8-33-28Z	3522
B6Y8-26-43Z	3875
BG34-49-280	3449
BG35-49-280	3449
BHY3-33-29Z	4317
BJY7-26-48Z	4316
BJYD-33-23Z	3780
BJYD-33-28Z	3780
BJYM-33-23Z	3780
BJYM-33-28Z	3780
BK212K021AA	4174/1
BK212K021AB	4174/1
BK212K021AC	4174/1
BL53-33-28Z	3449
BL5-33-328Z	3449
BPYK-26-48Z	3853/1
BRY43323Z9A	3640
BV612001B3A	3885
BV612001C3B	3885
BV612K021AC	4226
C1BZ-2200-A	3755
CBY0-33-23Z	3832

OE	BESER
NO	NO
CBY0-33-28Z	3832
CBY9-33-23Z	3832
CK4Z-2001-A	4351
CK4Z-2001-A	4351/1
CN152K021AA	3885
CN152K021CA	3885
D001-33-28Z	3723
D012-33-28Z	3723
D1060-00Q1J	4363
D1060-11P26	3758
D1060-11P27	3758
D1060-11P28	3760
D1060-11P29	3760
D1060-11P85	3758
D1060-11P86	3758
D1060-11P87	3758
D1060-11P90	3758
D1060-11P92	3397
D1060-11P93	3397
D1060-1BN0A	4143
D1060-1FC0A	3699
D1060-1FC0A	3779
D1060-1HA0A	3983/3
D1060-1HA0B	3983/3
D1060-1HJ0A	4229
D1060-1HL0B	4229
D1060-1LB0A	4324
D1060-1LB2A	4324
D1060-1LB2B	4324
D1060-1MF0A	4143
D1060-1N090	3577
D1060-1N090	3647
D1060-2S700	3760
D1060-2S790	3760
D1060-2X80A	3888
D1060-2Y991	3699
D1060-2Y991	3779
D1060-32E25	3758
D1060-32E90	3758
D1060-32E92	3758
D1060-37G94	3758
D1060-3JA0A	4341
D1060-3JA0B	4341
D1060-3S591	3692
D1060-3ST0A	3699
D1060-3ST0A	3779
D1060-3WU0A	4308
D1060-4BA0A	4282
D1060-4CA0A	4282/1
D1060-4CC0A	4308
D1060-4EA0A	4282
D1060-4GA0A	4308
D1060-4GA0J	4308
D1060-4GA5A	4308
D1060-4JA0A	4307
D1060-4KH0C	4307
D1060-4KJ1A	4307
D1060-5BC0A	4341
D1060-5JU0A	4376
D1060-5X00A	4143
D1060-6J091	3700
D1060-85F90	3699
D1060-85F90	3779
D1060-88E85	3699
D1060-88E85	3779
D1060-88E87	3699
D1060-88E87	3779
D1060-88E88	3699
D1060-88E88	3779
D1060-88E89	3699
D1060-88E89	3779
D1060-88E90	3699
D1060-88E90	3779
D1060-88E91	3699
D1060-88E91	3779
D1060-88E92	3699
D1060-88E92	3779
D1060-9C00A	3758
D1060-9C0VA	3758
D1060-9N00A	4038

OE	BESER
NO	NO
D1060-C7192	3415
D1060-D4690	3397
D1060-ED500	4229
D1060-ED51A	4229
D1060-JD00A	4038
D1060-JD00J	4038
D1060-JE00A	4038
D1060-LC44A	3994/1
D1060-MB200	3965/1
D1060-MB600	3965/1
D1060-MB60A	3965/1
D1060-V6790	3758
D1060-V6793	3758
D1060-V6794	3397
D1060-V7090	3692
D1060-V7091	3760
D1060-V7092	3692
D1060-VB2X0	3859
D1060-VC091	3859
D1060-VL32A	3760
D1060-VL33A	3760
D1061-ZX60A	3699
D1061-ZX60A	3779
D106M-3N390	3577
D1080-3JA0A	4341
D1080-JE00A	4038
D1M60-4BA0A	4282
D1M60-4JA0A	4307
D1M6M-1FA0A	4229
D4060-006VA	3660
D4060-1GZ0C	3933
D4060-1MB0A	3933
D4060-4CA0A	4283
D4060-4CA0A	4283/1
D4060-4CA0B	4283
D4060-4CA0B	4283/1
D4060-4CA0C	4283
D4060-4CA0C	4283/1
D4060-4EA0A	4283
D4060-4EA0A	4283/1
D4060-4EA0B	4283
D4060-4EA0B	4283/1
D4060-5SA0A	4283
D4060-5SA0A	4283/1
D4060-8H385	3933
D4060-9N00A	3933
D4060-BM40A	3660
D4060-CB10J	3933
D4060-CY025	3933
D4060-EB300	4025
D4060-EM11A	3933
D4060-J400A	3933
D4060-JA00A	3933
D4060-JA00J	3933
D4060-LC44A	3995/1
D4M60-1BN0A	3933
D4M60-9N00A	3933
D4M60-9N00B	3933
DA060 B9525	3375
DA060-11P90	3758
DA060-31E86	3397
DA060-T7890	3415
DA060-W2290	3370
DA19-33-28Z	3723
DBP 511 114	3604
DBP 511 126	3900
DCY1-33-23Z	3522
DCY5-33-23Z	3522
DCY9-33-23Z	3522
DDY2-33-28Z	3877
DG9C2M007BB	4270
DG9C2M007DB	4270
DG9C2M007HA	4270
E0TZ-2001-B	3544
E8TZ-2001-C	3544
EFY1-33-23Z	4119
EFY5-26-23Z	4215
EFY5-33-23Z	4220
F0TZ-2001-A	3544
F1Y1-26-43Z	4303

OE	BESER
NO	NO
F1YA-23-43Z	4303
F1YA-23-48Z	4303
F1YA-26-43Z	4303
F1YA-26-48Z	4303
F23Z-2200-B	3833
F42Z-2200-A	3833
F57Z-2001-A	3781
F5TZ-2001-A	3781
FA67-49-280	3875
FB71-26-28Z	3875
FDY1-26-43Z	3875
G2YD-33-23Z	4118
G2YD-33-28Z	4118
G2YS-22-23Z	3889
G2YS-33-23Z	3889
G2YS-33-28Z	3889
G4YA-33-28Z	4315
G5Y5-26-43Z	3833
G5Y6-26-43Z	3833
G5Y6-26-48Z	3833
GAYE-26-43B	3833
GAYE-26-43Z	3833
GAYR-23-28Z	3832
GBYT-33-28Z	4315
GEYC-33-23Z	3832
GEYT-23-282	3832
GEYT-33-23Z	3832
GEYT-33-28Z	3832
GEYV-23-232	3832
GEYV-23-282	3832
GEYV-33-23Z	3832
GEYV-33-28Z	3832
GHY1-33-28Z	4315
GHY9-26-48Z	4316
GHY9-33-28Z	4315
GJY1-33-28Z	3437
GJYC-33-23Z	4118
GJYE-33-23Z	3889
GJYE-33-28Z	3889
GJYF-33-23Z	3889
GJYF-33-28Z	3889
GJYG-33-23Z	3889
GJYG-33-28Z	3889
GMY5-33-28Z	4315
GN152K021AC	3885
GN51-33-28Z	3437
GPYB-33-23D	4029
GS39-26-43Z	3875
GSYD-33-23Z	4029
GSYD-33-28Z	4029
H260-33-28Z	3672
H260-33-625	3672
H330-33-28Z	3672
H4502S07003	3686
H4502S10003	3696
H4502S5A003	3686
H4502S9A003	3696
H4502SE0003	3582
H4502SEL003	3686
H4502SF9003	3631
H4502SR3003	3631
H4502SV4901	3695
H722-33-23Z	3672
H722-33-28Z	3672
HE21-33-28Z	3672
J0446535020	3414
J0446535040	3560
J0446535320	3414
J0449135160	3560
J0449135200	3414
J0466535040	3560
JK212K021GA	4174/1
JZW698151AA	3962
JZW698151AF	3682
JZZ698151AA	3782
K05011969AA	4011
K05080871AA	4030
K05080871AB	4030
K05142558AB	4198
K05142561AA	4018

OE	BESER
NO	NO
K05142566AB	4018
K05143350AC	4328
K68028671AA	3893
K68029263AA	4005
K68033078AA	3893
K68052369AA	4338
K68052369AC	4338
K68052370AA	4338
K68053152AB	4005
K68068762AA	4005
K68093323AA	4005
K68093323AB	4005
L1K0698151F	3782
L8E0698451D	3529
LAY3-33-28Z	3892
LAY-33-328Z	3892
LBZ3-33-23Z	3874
LCY1-33-23Z	3874
LDY5-33-23Z	3874
LDY5-33-28Z	3874
LEY5-33-23Z	3874
LEY5-33-28Z	3874
LU793444940	3539
MC 8862 935	3672
MZ 690 000E	3604
MZ 690 001E	3622
MZ 690 009E	3688
RB913311261	3574
RB913311261	3914/1
S083-49-280	3463
S231-49-280	3463
S2YA-33-23Z	3463
S2YA-33-28Z	3463
S4Y9-33-28Z	3892
S4YR-33-23Z	3892
S58101B2A70	4049
S583021WA35	4343
S583022PA70	4060
S583023ZA10	4343
S58302A6A20	4343
S58302B2A70	4343
SE96-33-28Z	3499
SF04-33-28Z	3463
SHY6-33-23Z	3892
SHY6-33-28Z	3892
SU001-A1065	4151
SU001-A1065	4151/1
SU001-A1066	3972
SU001-A1067	3972
SU001-A3132	4369
SU001-A6136	4370
SU001-A8499	4372
SU003-04096	4213
SU003-04097	4213
SU003-04325	4258
T0446 50247	4360
U0Y9-33-28Z	3781
UH1-33-23ZB	3767
UH1-33-23ZD	3767
UHY6-33-23Z	3767
UHY6-33-28Z	3767
UJY6-33-23Z	3767
UJY6-33-28Z	3767
UMY4-33-23Z	3988
UMY4-33-23Z	3988/1
UMY4-33-28Z	3988
UMY4-33-28Z	3988/1
VW4A0698151	3590
YC152K021AC	3784
YC1J2K021AA	3784
YC1J2K021AB	3784
YC1J2K021AC	3784
YM212K021AA	3590/2
YM2J2K021AA	3590/2
YM2J2K021BA	4095
YS612K021CA	3877
YS6J2K021AA	3594
002420122005	3627
002420262005	3627
265442100107	3872

OE	BESER
NO	NO
265442800128	3872
342000200010	3680
449114150000	3579
449160060000	3436
449187101000	3600
449187103000	3600
449187104000	3600
449187107000	3579
449187606000	3436
449187607000	3436
449187608000	3436
449187609000	3436
449187610000	3436
449187611000	3436
449187623000	3436
449187706000	3600
449187708000	3600
449187710000	3600
449187712000	3600
449187715000	3600
449187721000	3600
449197201000	3901
449197205000	3901
449197212000	3901
449197401000	3901
449197403000	3901
449197405000	3901
0060 705 557	3439
0060 749 739	3439
0060 749 867	3439
0060 750 780	3439
0060 750 868	3439
0060 778 277	3439
0060 795 356	3439
0376-49-230A	3709
044650W06000	4276/1
044660W02000	4277
0866-33-625A	3709
0866-49-230A	3709
0870-49-230A	3709
0870-49-230B	3709
0870-49-230C	3709
0870-49-230D	3709
0K045-33-23Z	4009
0K20A-33-23Z	3740
0K20H-33-23Z	3545
0K239-33-23Z	3740
0K240-33-23Z	3740
0K2A4-33-23Z	3740
0K2JA-33-28Z	4028
0K2N1-33-28Z	4269
0K2X3-33-23Z	3740
0K2Y1-33-23Z	3740
0K2Y3-33-23Z	3740
0K30A-33-28Z	3522
0K56A-33-23Z	3802
0K60B-33-28Z	3574
0K60B-33-28Z	3914/1
0K70Y-33-28Z	3463
0K71E-33-28Z	3463
0K71F-33-28Z	3463
0K72A-33-28Z	3653
0K75A-33-28Z	3802
0K75B-33-28Z	3802
0K9B6-33-28Z	4269
0K9D0-33-28Z	4269
110 698 151A	3444/1
171 698 151B	3343
171 698 151B	3483
171 698 151C	3343
171 698 151C	3483
171 698 151D	3343
171 698 151D	3483
171 698 151E	3327
171 698 151F	3444/1
171 698 151G	3444/1
171 698 151H	3343
171 698 151H	3483
171 698 151K	3343
171 698 151K	3483

OE	BESER
NO	NO
191 698 151C	3444/1
191 698 151D	3444/1
191 698 151H	3444/1
191 698 151J	3444/1
191 698 151K	3444/1
1E033323ZB9C	3594
1E033323ZC9C	3594
1J0 698 151K	3590/1
1J0 698 151M	3590/1
1K0 698 151C	3904
1K0 698 151E	3904
1K0 698 451B	3905
1K0 698 451D	3905
1K0 698 451E	3905
1K0 698 451F	3905
1K0 698 451G	3905
1K0 698 451H	3905
1K0 698 451K	3905
1K0 698 451L	4390
1L2Z-2001-CA	3781
1S4Z-2200-BA	3755
2101-3501089	3393
2101-3501090	3393
2108-3501089	3422
2108-3501090	3422
2110-3501080	3422
2121-3501090	3421
251 698 151A	3350
251 698 151B	3350
251 698 151C	3605
251 698 151D	3350
251 698 151E	3350
251 698 151F	3605
26296-TC0601	3752
291 698 151A	3513
29625-031090	3601
2AMV-3369-AA	4338
2D0 698 151C	3567
2D0 698 451A	3678
2D0 698 451B	3804
2D0 698 451C	3678
2D0 698 451D	3678
2E0 698 151A	3962/1
2E0 698 151B	3925
2E0 698 151B	3925/2
2E0 698 151C	3962/1
2E0 698 151E	3925
2E0 698 151E	3925/2
2E0 698 151F	3962/1
2E0 698 151G	3962/1
2E0 698 151H	3925/2
2E0 698 451A	3963
2E0 698 451A	3963/1
2E0 698 451B	3963
2E0 698 451B	3963/1
2E0 698 451G	3963/1
2E0 698 451H	3926/1
2H0 698 151A	3906
2K5 698 151A	4228
2K5 698 151A	4228/1
2K5 698 151B	4228
2K5 698 151B	4228/1
2L54-2001-AA	3781
2L5Z-2001-AA	3781
2M5Z-2001-AB	3801
2Q0 698 151F	4228/1
2Q0 698 151K	4228/1
3 064 838 20	3918
305 698 1515	3458
311 698 151C	3318
321 698 151C	3444/1
321 698 151F	3444/1
321 698 151G	3444/1
357 615 115A	3551
357 615 115B	3551
357 698 151B	3551
374 698 151A	3458
3AA 698 451A	4390
3AA 698 451B	4390
3C0 698 151A	3904

OE	BESER
NO	NO
3C0 698 151B	3904
3C0 698 151C	3904
3C0 698 151D	3904
3C0 698 451A	3905
3C0 698 451B	4390
3C0 698 451C	4390
3C0 698 451D	3905
3C0 698 451E	4390
3C0 698 451F	4390
3L2J-2001-AA	3781
3L2J-2001-BA	3781
3M5J2K021A1A	3885
411 698 151B	3318
411 698 151C	3318
411 698 151E	3343
411 698 151E	3483
421060-2S791	3760
431 698 151C	3378
431 698 151E	3378
431 698 151H	3378
443 698 451B	3536
447 698 451A	3536
45022693 600	3705
481 300 5011	3632
4B0 698 151P	4222
4D0 698 151K	4222
4D0 698 151M	4222
4D0 698 151N	4222
4D0 698 151P	4222
4D0 698 151R	4222
4D0 698 151S	4222
4D0 698 451A	3536
4D0 698 451B	3536
4D0 698 451F	3536
4D0 698 451G	3536
4E0 698 151F	4096
4E0 698 151M	4096
4F0 698 151A	4096
4F0 698 151D	4096
4F0 698 151K	4096
4F0 698 451A	3905
4F0 698 451D	3905
4L3Z-2001-AB	4340
4L3Z-2001-AC	4340
4L3Z-2001-AD	4340
4R3Z-2001-AA	4332
4R3Z-2001-BA	4332
5520 0618 80	3721
55210-M84500	3509
55810-M69P50	4122
580 12689 62	3965
580 12689 64	3965
5K0 698 151A	3904
5K0 698 451A	4135
5Q0 698 151C	4295
5Q0 698 151D	4228
5Q0 698 151D	4228/1
5Q0 698 151E	4295
5Q0 698 151F	4241
5Q0 698 451C	4241
5Q0 698 451N	4241
6N0 698 151C	3566
6Q0 698 151C	4138
6Q0 698 151C	4138/1
6Q0 698 451B	4152
6RU 698 151A	4200
6U0 698 151A	3419
6U0 698 151B	3419
6U0 698 151C	3419
6U0 698 151D	3419
6U0 698 151E	3419
6U0 698 151F	3419
6U0 698 151G	3419
701 698 151D	3553
701 698 151E	3553
7D0 698 151B	3553/1
7D0 698 151G	3553/1
7E0 698 151B	4162
7H0 698 151A	3841/1
7L0 698 451A	4076

OE	BESER
NO	NO
7L0 698 451B	4076
7L0 698 451G	4076
7L0 698 451H	4076
7L5J-2001-AA	3781
7L6 698 151E	3945
7L6 698 151G	3945
7L6 698 451A	4076
7L6 698 451D	4076
7M0 698 151A	3506
7M0 698 151B	3506
7M3 698 151A	4095
7P6 698 151C	3945
803 698 151C	3318
810 698 151B	3318
811 698 151A	3378
811 698 151B	3378
853 698 151	3649
855 698 151B	3490
861 698 151A	3327
867 615 109A	3585/1
8-97047526-0	3674
8-97078457-0	3462
8971 6863 30	4354
8-97947571-0	4124
8-98079104-0	4124
8E0 615 115B	3896
8E0 698 151A	3896
8E0 698 151B	3896
8E0 698 151C	4096
8E0 698 151E	3962/1
8E0 698 151G	4096
8E0 698 151L	4096
8E0 698 151M	3896
8E0 698 151N	3896
8E0 698 451F	3905
8E0 698 451J	3905
8J0 698 151C	3904
8J0 698 151D	3945
8J0 698 151E	3945
8J0 698 151G	3945
8J0 698 151H	3945
8J0 698 151K	3945
8K0 698 451A	4260
8K0 698 451B	4260
8K0 698 451C	4260
8K0 698 451D	4260
8K0 698 451E	4260
8N0 698 151A	3590/1
8V0 698 451B	4241
8V0 698 451F	4241
95VWX2K021AA	3506
95VWX2K021BA	3590/2
A21BJ3501080	3619
A82SX2K021LA	3416
A82SX2K021MA	3423
AY04-0MA-003	3672
B4Y0-26-48ZA	4318
B4Y0-26-48ZB	4318
B4Y0-33-28ZA	4317
B4Y0-33-28ZB	4317
B4Y6-33-23ZA	3522
B5Y8-33-23ZA	3522
BG34-49-280A	3449
BHY1-33-28ZA	4317
BPYK-26-48ZA	3853/1
BPYK-26-48ZB	3853/1
BPYK3323ZA9C	3885
BPYK3323ZB9C	3885
C2Y3-26-48ZA	3853/1
CBY1-33-23ZA	3832
CBY1-33-23ZB	3832
CBY1-33-23ZC	3832
CBY1-33-23ZD	3832
CBY1-33-23ZE	3832
CBY1-33-23ZF	3832
CBY1-33-23ZG	3832
D88BB2K021AA	3570
D89FB2K021AA	3589
DA19-33-28ZA	3723
DCY0-33-23ZB	3522

OE	BESER
NO	NO
DCY0-33-28ZB	3522
DFY1-33-28ZA	4122
DFY1-33-29ZA	4122
E8TA-2018-BA	3544
E8TA-2019-BA	3544
EC25-33-23ZA	4119
EC25-33-23ZB	4119
EC25-33-23ZD	4119
EFY5-26-23ZA	4215
EFY5-33-23ZA	4220
EFY5-33-23ZB	4220
F57Z-2001-AA	3781
FDY1-26-43ZA	3875
G2YS-33-23ZA	3889
G2YS-33-23ZB	3889
G4YA-33-28ZA	4315
G4YA-33-28ZB	4315
G4YA-33-28ZC	4315
G5Y5-26-43ZA	3833
G5Y6-26-43ZA	3833
G5Y6-26-43ZB	3833
G5Y6-26-43ZC	3833
G5Y6-26-48ZA	3833
G5Y6-33-28ZB	3832
GAYE-26-43ZA	3833
GAYE-26-43ZB	3833
GAYE-26-43ZC	3833
GAYR-23-23ZB	3832
GAYR-23-28ZA	3832
GAYR-33-29ZA	3832
GAYR-33-437A	3833
GCYD-33-23ZE	3832
GEYT-33-23ZA	3832
GEYT-33-28ZA	3832
GHY1-33-28ZB	4315
GHY9-26-48ZA	4316
GHY9-26-48ZB	4316
GHY9-26-48ZC	4316
GHY9-33-28ZA	4315
GHY9-33-28ZB	4315
GHY9-33-28ZC	4315
GJ21-33-28ZA	3437
GJ21-33-28ZB	3437
GJYA-33-23ZB	4118
GJYA-33-23ZC	4118
GJYA-33-23ZD	4118
GJYA-33-28ZA	4118
GJYA-33-29ZA	4118
GJYA-33-29ZB	4118
GJYB-33-23ZB	4118
GJYB-33-23ZC	4118
GJYB-33-23ZD	4118
GJYE-33-23ZA	3889
GJYE-33-23ZB	3889
GJYE-33-23ZC	3889
GJYE-33-23ZD	3889
GJYE-33-23ZE	3889
GJYE-33-23ZF	3889
GJYE-33-28ZC	3889
GJYE-33-28ZD	3889
GJYE-33-28ZF	3889
GJYE-33-29ZD	3889
GJYE-33-29ZE	3889
GJYF-33-23ZA	3889
GJYF-33-23ZB	3889
GJYF-33-23ZC	3889
GJYF-33-23ZD	3889
GJYF-33-23ZE	3889
GJYF-33-28ZA	3889
GJYF-33-28ZB	3889
GJYF-33-28ZC	3889
GJYF-33-28ZE	3889
GJYG-33-23ZA	3889
GJYG-33-23ZB	3889
GPYB-33-23ZD	4029
GPYB-33-23ZE	4029
GPYB-33-23ZG	4029
GPYB-33-28ZD	4029
GPYS-33-23ZA	3889
GSYD-33-23ZA	4029

OE	BESER
NO	NO
GSYD-33-28ZA	4029
H260-33-28ZA	3672
H260-33-28ZB	3672
H261-33-28ZA	3672
H330-33-28ZA	3672
H722-33-23ZA	3672
H722-33-28ZA	3672
HE21-33-28ZA	3672
HE21-33-28ZB	3672
JZW 698 151B	3904
JZW 698 451E	4390
JZW 698 451G	4390
JZW 698 451N	3926/1
JZW 698 451P	3963/1
K0BA2-33-28Z	3522
K2JA-33-28ZA	4028
K60A-33-28ZA	3574
K60A-33-28ZA	3914/1
KK150-33-100	3723
KK150-33-28Z	3723
KK32-53-328Z	3723
LCY4-33-23ZD	3874
LEY9-33-23ZA	3874
MCN152K021AA	3885
MDA19-33-23Z	3723
MDA19-33-28Z	3723
S083-49-280A	3463
S231-49-280A	3463
S4Y9-33-28ZA	3892
S4YR-33-23ZA	3892
S58101-1YA30	4265
S58101-2BA10	3960
S58101-2PA70	3960
S58101-A6A02	4342
S58101-A6A03	4342
SA83-49-280A	3463
SE127165005A	3316
SE141165081A	3424/1
SE141165081B	3424/1
SFP100180EVA	3683
SFP100190EVA	3683
SFP100220EVA	4148/1
T11BJ3501080	4153
U0Y9-33-23ZA	3781
UDMY4-33-23Z	3988
UDMY4-33-23Z	3988/1
UHY1-33-23ZA	3767
UHY1-33-23ZB	3767
UHY1-33-23ZD	3767
UHY1-33-28ZA	3767
UHY1-33-28ZB	3767
UHY1-33-28ZD	3767
UMY1-33-23ZA	3988
UMY1-33-23ZA	3988/1
UMY1-33-28ZA	3988
UMY1-33-28ZA	3988/1
UMY1-33-29ZA	3988/1
V84FB2K021AA	3570
VW4A0698151A	3590
VW4A0698151C	3590
VW4D0698151H	3590
VW8D0615116A	3590
XL24-2001-BA	3781
XL2Z-2001-BA	3781
YS4Z-2001-AA	3754
ZZR0-49-280A	3781
2110350108001	3552
000 420 01 20	3550
000 420 01 20	3611
000 420 30 02	4326
000 420 33 02	4338
000 420 59 20	3339
000 420 59 20	3514
000 420 60 20	3339
000 420 60 20	3514
000 420 63 20	3315
000 420 63 20	3515
000 420 64 20	3315
000 420 64 20	3515
000 420 65 20	3315

OE	BESER
NO	NO
000 420 65 20	3515
000 420 66 20	3320
000 420 67 20	3320
000 420 68 20	3315
000 420 68 20	3515
000 420 78 20	3339
000 420 78 20	3514
000 420 82 00	4349
000 420 87 00	4334
000 420 88 20	3550
000 420 88 20	3611
000 420 90 20	3550
000 420 90 20	3611
000 420 91 20	3430
000 420 94 20	3339
000 420 94 20	3514
000 420 95 20	3339
000 420 95 20	3514
000 420 96 00	4338
000 420 97 20	3804
000 420 98 20	3550
000 420 99 20	3408
000 421 41 10	3681
000 421 42 10	3861
000 421 61 10	3923
000 421 61 10	3923/1
000 421 62 10	3924/1
000 586 55 42	3339
000 586 55 42	3514
000 586 75 42	3315
000 586 75 42	3515
001 420 01 20	3550
001 420 01 20	3611
001 420 05 20	3339
001 420 05 20	3514
001 420 07 20	3408
001 420 09 20	3315
001 420 09 20	3515
001 420 12 20	3408
001 420 14 20	3513
001 420 15 20	3679
001 420 75 20	3339
001 420 75 20	3514
001 420 77 20	3320
001 420 78 20	3315
001 420 78 20	3515
001 420 81 20	3430
001 420 90 20	3521
001 420 92 20	3315
001 420 92 20	3515
001 420 94 20	3629
001 420 96 20	3430
001 420 98 20	3629
001 420 99 20	3339
001 420 99 20	3514
001 421 09 10	3923
001 421 09 10	3923/1
001 421 10 10	3924/1
001 586 18 42	3315
001 586 18 42	3515
001 586 32 42	3315
001 586 32 42	3515
001 586 33 42	3315
001 586 33 42	3515
001 586 36 42	3315
001 586 36 42	3515
001 586 63 42	3315
001 586 63 42	3515
002 420 02 20	3430
002 420 03 20	3626
002 420 13 20	3521
002 420 14 20	3390
002 420 15 20	3629
002 420 17 20	3315/1
002 420 19 20	3628
002 420 23 20	3408
002 420 24 20	3315/1
002 420 37 20	3628
002 420 38 20	3678
002 420 39 20	3567

OE	BESER
NO	NO
002 420 40 20	3670
002 420 43 20	3339
002 420 43 20	3514
002 420 44 20	3677
002 420 45 20	3863
002 420 50 20	3863
002 420 51 20	3663
002 420 52 20	3821
002 420 56 20	3678
002 420 57 20	3679
002 420 60 20	3670
002 420 62 20	3679
002 420 69 20	3678
002 420 71 20	3676
002 420 74 20	3676
002 420 75 20	3339
002 420 75 20	3514
002 420 96 20	3677
002 420 99 20	3567
002 586 45 42	3339
002 586 45 42	3514
002 586 46 42	3339
002 586 46 42	3514
003 420 0 720	3513
003 420 01 20	3681
003 420 02 20	3861
003 420 05 20	4102
003 420 06 20	4101
003 420 06 20	4209
003 420 07 20	3513
003 420 08 20	4102
003 420 15 20	3679
003 420 18 20	4102
003 420 19 20	4101
003 420 19 20	4209
003 420 24 20	3804
003 420 25 20	3836
003 420 26 20	3836
003 420 27 20	3676
003 420 28 20	3821
003 420 29 20	3863
003 420 37 20	3315/1
003 420 38 20	3315/1
003 420 42 20	4102
003 420 44 20	3679
003 420 45 20	3836
003 420 52 20	3821
003 420 59 20	3836
003 420 60 20	3836
003 420 64 20	3678
003 420 65 20	4097
003 420 74 20	3315
003 420 74 20	3515
003 420 75 20	3315/1
003 420 76 20	3315/1
003 420 77 20	3679
003 420 78 20	3923/1
003 420 79 10	3923/1
003 420 81 20	3924/1
003 420 87 20	3804
003 420 95 20	3836
003 420 99 20	4097
004 420 02 20	3677
004 420 03 20	3863
004 420 04 20	4102
004 420 05 20	4102
004 420 08 20	4102
004 420 14 20	3513
004 420 17 20	3676
004 420 25 20	3804
004 420 40 20	4210
004 420 62 20	4240
004 420 67 20	3925
004 420 67 20	3925/2
004 420 68 20	3962/1
004 420 69 20	3926
004 420 69 20	3926/1
004 420 80 20	4240
004 420 81 20	3963
004 420 81 20	3963/1

OE	BESER
NO	NO
004 420 82 20	3962/1
004 420 83 20	3925
004 420 83 20	3925/2
004 420 91 20	3676
004 420 94 20	4101
004 420 94 20	4209
004 532 247 A	3419
004 532 247 A	3731
005 420 01 20	3628
005 420 02 20	3629
005 420 07 20	4247
005 420 08 20	4248
005 420 09 20	4248
005 420 10 20	4249
005 420 12 20	4248
005 420 13 20	4249
005 420 15 20	4248
005 420 16 20	4249
005 420 18 20	3663
005 420 19 20	3821
005 420 21 20	3925
005 420 21 20	3925/2
005 420 32 20	3626
005 420 43 20	4247
005 420 44 20	3408
005 420 47 20	3677
005 420 48 20	4391
005 420 52 20	3925
005 420 52 20	3925/2
005 420 53 20	3962/1
005 420 63 20	4391
005 420 70 20	3925
005 420 70 20	3925/2
005 420 74 20	3963
005 420 74 20	3963/1
005 420 78 20	4240
005 420 81 20	4247
005 420 92 20	4391
006 420 13 20	4247
006 420 22 20	3963
006 420 22 20	3963/1
006 420 24 20	4391
006 420 28 20	4249
006 420 38 20	4338
006 420 39 20	4338
006 420 43 20	3923
006 420 43 20	3923/1
006 420 44 20	3924/1
006 420 45 20	3963
006 420 45 20	3963/1
006 420 46 20	4326
006 420 47 20	4326
006 420 57 20	4335
006 420 61 20	4247
006 420 62 20	3836
006 420 64 20	4391
006 420 71 20	4248
006 420 72 20	4335
006 420 84 20	3925/2
006 420 85 20	4326
006 420 92 20	4335
007 420 28 20	4335
007 420 56 20	4248
007 420 58 20	4249
007 420 66 20	4391
007 420 74 20	4391
007 420 75 20	4249
007 420 80 20	4338
007 420 81 20	4338
008 420 03 20	4326
008 420 06 20	4326
008 420 08 20	4335
008 420 13 20	4349
008 420 14 20	4349
008 420 22 20	4335
008 420 34 20	4335
008 420 36 20	4334
008 420 37 20	4334
008 420 46 20	4326
008 420 47 20	3962/1

OE	BESER
NO	NO
008 420 48 20	3963/1
008 420 50 20	3925/2
008 420 51 20	3926/1
00K68052369AC	4338
044 916 00 60	3513
06430-63N-J00	4148
06430-S0K-J01	4148/1
06430-S2X-J00	4148
06430-S7A-J00	4148
06430-S7S-000	4148
06430-S9A-000	4148
06430-SAA-J50	4212
06430-SED-000	4148
06430-SED-E60	4148
06450-S0A-J00	3704
06450-S5A-E50	3607
06450-S5A-G00	3607
06450-S5A-J00	3607
06450-S5T-E00	4110
06450-S5T-E51	4110
06450-S7A-E00	4109
06450-S7A-E00	4232
06450-S9A-A00	3831
06450-SAP-000	3752
0K240-33-23ZA	3740
0K2A3-33-23ZB	3740
0K2JA-33-28ZA	4028
0K2N1-33-28ZA	4269
0K2Y3-33-23ZA	3740
0K60A-33-28ZA	3574
0K60A-33-28ZA	3914/1
0K60B-33-28ZA	3574
0K60B-33-28ZA	3914/1
105142205230.	3318
111 698 151 A	3325
111 698 151 B	3328
111 698 151 C	3325
111 698 151 D	3328
14 114 573 80	3981
16 070 832 80	3529/2
16 078 785 80	3981
16 092 528 80	3529/2
16 098 996 80	4316
16 111 406 80	3820/1
16 113 349 80	3940
16 114 565 80	3939
16 114 569 80	3987
16 114 573 80	3981
16 114 589 80	3940
16 118 391 80	3981
16 124 338 80	3981
16 132 607 80	4369
16 138 199 80	3987
16 168 726 80	3529/2
16 171 909 80	3529/2
16 172 504 80	3529/1
16 172 556 80	3873
16 172 594 80	3939
16 172 648 80	3987
16 172 701 80	3940
16 172 739 80	3981
16 172 773 80	3557
16 172 773 80	3610
16 172 809 80	4151/1
16 172 829 80	3820/1
16 179 368 80	4370
16 197 906 80	3529/2
16 197 907 80	4316
16 203 686 80	4316
16 231 807 80	3529/2
16 238 424 80	3981
16 318 317 80	3529/1
16 356 771 80	4316
16 478 639 80	3981
16 759 918 80	4370
16 781 682 80	4369
163 420 00 20	4126
163 420 00 20	4126/1
163 420 03 20	4126
163 420 03 20	4126/1

OE	BESER
NO	NO
163 420 04 20	4069
163 420 06 20	4102
163 420 07 20	4103
163 420 09 20	4103
163 420 10 20	4102
163 420 11 20	4103
164 420 08 20	4210
164 420 18 20	4210
168 420 00 20	4125
168 420 01 20	4125
168 420 07 20	4125
168 420 08 20	4125
168 420 11 20	4125
168 420 12 20	4125
168 420 13 20	4125
168 420 14 20	4125
168 420 15 20	4125
180 698 151 A	3782/1
180 698 151 B	3782/1
1E0 698 451 B	3529/1
1E0 698 451 D	3529/1
1H0 698 451 D	3529/1
1H0 698 451 H	3529/1
1J0 698 151 A	3782/1
1J0 698 151 B	3782/1
1J0 698 151 C	3782/1
1J0 698 151 H	3782/1
1J0 698 151 J	3782/1
1J0 698 451 C	3529/1
1J0 698 451 G	3529/1
1J0 698 451 K	3529/1
1J0 698 451 L	3529/1
1JE 698 151 B	3782/1
1K0 698 451 M	3529/1
1KD 698 151 F	3782/1
1L4J-2K021-AA	3888
1L4J-2K021-AB	3888
1S0 698 151 A	3782/1
1S0 698 151 B	3782/1
1S0 698 151 C	3782/1
2121-33501090	3421
21BJ3501080AC	3619
26296-TC0-110	3752
2H6 698 451 A	4357
2M5V-2K021-AA	3801
2N0 698 151 A	4356
2Q0 698 151 A	3782/1
2Q0 698 451 B	3529/1
2T14-2K021-AC	3801
2T1J-2K021-AA	3801
321 698 151 1	3343
321 698 151 1	3483
357 698 151 A	3649
3B0 698 451 E	3529/1
41 06 000 11R	4134
41 06 000 12R	3950
41 06 000 23R	4143
41 06 001 11R	4134
41 06 003 79R	3964/1
41 06 012 41R	3849
41 06 013 06R	3964/1
41 06 013 34R	3966
41 06 013 34R	3966/1
41 06 014 08R	3933
41 06 015 96R	4282/1
41 06 021 92R	3503
41 06 023 96R	4140/1
41 06 030 72R	4143
41 06 031 72R	3964/1
41 06 037 50R	3966
41 06 037 50R	3966/1
41 06 043 86R	4056
41 06 04E A0A	4282
41 06 056 12R	4140
41 06 059 61R	3964/1
41 06 071 15R	3964/1
41 06 071 25R	3539/1
41 06 075 85R	4134
41 06 076 13R	3852
41 06 076 90R	3950

OE	BESER
NO	NO
41 06 083 64R	3964/1
41 06 086 38R	4227
41 06 087 13R	3849
41 06 088 85R	4363
41 06 091 92R	3850
41 06 096 46R	4140
41 06 096 46R	4140/1
41 0A 125 82R	3964/1
415 421 03 10	3966
415 421 03 10	3966/1
415 421 04 10	3967
415 421 06 10	3966
415 421 06 10	3966/1
43022-S1A-E02	4155
43022-S1A-E03	4155
43022-S1A-E30	4155
43022-S1A-E50	4155
43022-S2A-000	4148/1
43022-S3N-000	4148
43022-S3N-000	4148/1
43022-S3N-E50	4148
43022-S3N-E50	4148/1
43022-S5A-J00	4148/1
43022-S6D-000	4148/1
43022-S6D-E50	4148/1
43022-S7S-010	4148
43022-S7S-010	4148/1
43022-S84-A10	4148
43022-S9A-A00	4148
43022-S9A-A01	4148
43022-S9A-E50	4148
43022-S9A-E51	4148
43022-S9A-E52	4148
43022-S9A-E52	4148/1
43022-SE0-000	4212
43022-SE0-930	4212
43022-SE0-931	4212
43022-SE0-S00	4212
43022-SEA-E01	4155
43022-SEA-E10	4155
43022-SED-000	4148
43022-SED-000	4148/1
43022-SED-E50	4148
43022-SED-E60	4148
43022-SED-E60	4148/1
43022-SEP-A00	4148
43022-SEP-A01	4148
43022-SEP-C00	4148
43022-SEP-C01	4148
43022-SF1-S00	4212
43022-SF1-S01	4212
43022-SG0-000	4148
43022-SG0-020	4148
43022-SH3-G01	4212
43022-SL5-000	4148/1
43022-SL5-515	4148/1
43022-SL5-525	4148/1
43022-SM4-505	4148
43022-SM4-505	4148/1
43022-SM4-515	4148
43022-SM4-525	4148
43022-SM4-525	4148/1
43022-SM4-G00	4148
43022-SM4-G00	4148/1
43022-SN7-000	4148/1
43022-SN7-E50	4148/1
43022-SP0-000	4148
43022-SP0-000	4148/1
43022-SP0-010	4148
43022-SP0-020	4148
43022-SP0-020	4148/1
43022-SP0-030	4148
43022-SP0-E00	4148
43022-SP0-E01	4148
43022-SP0-E02	4148
43022-SP0-E03	4148
43022-SR3-G01	4212
43022-ST3-E00	4212
43022-ST3-E50	4212
43022-STK-A00	4148

OE	BESER
NO	NO
43022-SV4-010	4148
43022-SV4-020	4148
43022-SV4-030	4148
43022-SV4-A00	4148
43022-SV4-A00	4148/1
43022-SV4-A01	4148
43022-SV4-A02	4148/1
43022-SV4-A20	4148/1
43022-SV4-A22	4148/1
43022-SV4-E50	4148/1
43022-SV4-G00	4148/1
43022-SV4-G02	4148/1
43022-SV4-G22	4148/1
43022-SV4-G23	4148
43022-SWW-G00	4156
43022-SWW-G01	4156
43022-SWW-G02	4156
43022-SX0-A50	4148/1
43022-SX0-A51	4148
43022-SX0-A51	4148/1
43022-SY8-E50	4148/1
43022-SZ3-A01	4148/1
43022-TF2-G00	4148/1
43022-TM8-G01	4148/1
43022-TR0-A00	4148/1
431 698 151 D	3635
431 698 151 F	3635
431 698 151 G	3635
437 698 151 A	3649
44 06 000 02R	3853/1
44 06 002 64R	4057
44 06 002 95R	3529/2
44 06 003 64R	3529/2
44 06 006 78R	3529/2
44 06 008 19R	3529/2
44 06 008 66R	4172/1
44 06 009 41R	4172/1
44 06 011 47R	4057
44 06 014 16R	4142
44 06 016 89R	3853/1
44 06 020 70R	3529/2
44 06 024 66R	3529/2
44 06 026 52R	4287
44 06 035 11R	3529/2
44 06 035 30R	3529/2
44 06 035 58R	4142
44 06 037 34R	4142
44 06 039 05R	3964/1
44 06 039 81R	4283
44 06 039 81R	4283/1
44 06 046 94R	4142
44 06 057 13R	3529/2
44 06 058 39R	3529/2
44 06 058 89R	4283
44 06 058 89R	4283/1
44 06 060 26R	3529/2
44 06 060 82R	4287
44 06 061 33R	3529/2
44 06 062 67R	3967
44 06 064 18R	3529/2
44 06 064 46R	4283
44 06 064 46R	4283/1
44 06 066 33R	4283
44 06 066 33R	4283/1
44 06 070 91R	3795/1
44 06 071 15R	3964/1
44 06 073 24R	3529/2
44 06 079 60R	3529/2
44 06 080 61R	4142
44 06 080 61R	4287
44 06 082 35R	4287
44 06 086 97R	4172/1
44 06 0BA 00F	3853
44 06 613 32R	3529/2
44 08 346 27R	4287
440 615 116 A	3650
440 698 151 A	3650
442 082 20 27	3962/1
443 398 151 F	3635
443 698 151 A	3635

OE	BESER
NO	NO
443 698 151 B	3635
443 698 151 C	3635
443 698 151 D	3635
443 698 151 E	3635
443 698 151 F	3635
443 698 151 G	3635
443 698 151 H	3635
443 698 151 J	3635
443 698 151 K	3650
447 698 451AA	3536
45022-504-V10	3607
45022-692-670	3705
45022-692-671	3705
45022-692-672	3705
45022-692-N50	3705
45022-693-601	3705
45022-S04-E60	3607
45022-S04-V10	3607
45022-S04-V11	3607
45022-S04-V12	3607
45022-S0A-942	4110
45022-S10-A00	3704
45022-S10-A02	3704
45022-S10-E50	3704
45022-S10-G00	3704
45022-S10-G01	3704
45022-S10-G02	3704
45022-S1A-E20	3704
45022-S1A-E70	3704
45022-S1A-E71	3704
45022-S2A-E01	4110
45022-S2A-E50	4110
45022-S30-A00	3704
45022-S30-A01	3704
45022-S30-A02	3704
45022-S30-A50	3704
45022-S30-E50	3704
45022-S47-000	3704
45022-S47-010	3704
45022-S47-020	3704
45022-S5A-E50	3607
45022-S5A-G00	3607
45022-S5A-G01	3607
45022-S5A-J00	3607
45022-S5T-E00	4110
45022-S5T-E51	4110
45022-S6D-E01	3872/1
45022-S6E-E50	4109
45022-S6E-E50	4232
45022-S70-000	3704
45022-S70-010	3704
45022-S70-020	3704
45022-S7A-E00	4109
45022-S7A-E00	4232
45022-S7A-E50	4109
45022-S7A-E50	4232
45022-S7E-E50	4109
45022-S7E-E50	4232
45022-S87-A01	3704
45022-S9A-A00	3831
45022-S9A-A01	3831
45022-S9A-E00	3831
45022-S9A-E50	3831
45022-S9A-E60	3831
45022-S9V-A01	3831
45022-SA0-505	3633
45022-SA0-660	3509
45022-SA0-670	3509
45022-SA0-680	3633
45022-SA0-681	3633
45022-SA0-N50	3509
45022-SA0-N51	3509
45022-SA0-N60	3633
45022-SA0-N61	3633
45022-SA3-670	3324
45022-SA3-G10	3691
45022-SA3-N50	3324
45022-SA5-000	3752
45022-SA5-010	3752
45022-SA5-020	3752

OE	BESER
NO	NO
45022-SA6-600	3691
45022-SA6-670	3691
45022-SA6-671	3691
45022-SA6-672	3691
45022-SA6-N50	3691
45022-SAG-600	3691
45022-SAP-000	3752
45022-SB0-505	3752
45022-SB0-506	3752
45022-SB0-516	3752
45022-SB2-505	3752
45022-SB2-674	3752
45022-SB2-675	3752
45022-SB6-000	3752
45022-SBS-515	3752
45022-SCC-000	3607
45022-SDA-A00	3831
45022-SDC-A00	3831
45022-SDC-A10	3831
45022-SDD-A00	4109
45022-SDD-A00	4232
45022-SEA-E00	4159
45022-SEA-E01	4159
45022-SEA-EZ1	4159
45022-SH3-000	3752
45022-SH3-010	3752
45022-SH3-903	3752
45022-SH3-A01	3691
45022-SH3-A02	3691
45022-SH3-G10	3691
45022-SH3-G11	3691
45022-SH3-G12	3691
45022-SH3-G13	3691
45022-SH3-G14	3691
45022-SH3-N30	3752
45022-SH3-N31	3752
45022-SH3-N32	3752
45022-SJF-E00	4109
45022-SJF-E00	4232
45022-SK3-E00	3872/1
45022-SL0-600	3704
45022-SL0-E50	3704
45022-SL0-E60	3704
45022-SL0-E61	3704
45022-SL0-G00	3704
45022-SL0-G01	3704
45022-SL0-G02	3704
45022-SL0-J00	3704
45022-SL0-J01	3704
45022-SL0-J03	3704
45022-SLR-G01	3704
45022-SLR-G02	3704
45022-SM5-505	3704
45022-SM5-506	3704
45022-SM5-515	3704
45022-SM5-525	3704
45022-SM5-A00	3704
45022-SMA-000	3704
45022-SMT-E00	4110
45022-SMT-E50	4110
45022-SN7-E50	3704
45022-SN7-G50	3704
45022-SP0-A00	3704
45022-SP0-E00	3704
45022-SR3-408	3752
45022-SR3-505	3752
45022-SR3-506	3752
45022-SR3-515	3752
45022-SR3-516	3752
45022-SR3-910	3752
45022-SR3-920	3752
45022-SR3-V00	3607
45022-SR3-V01	3607
45022-SR3-V10	3607
45022-SR3-V11	3607
45022-SR3-V12	3607
45022-ST3-E00	3872/1
45022-ST3-E01	3872/1
45022-ST3-E30	3872/1
45022-SWW-G00	4160

OE	BESER
NO	NO
45022-SWW-G01	4160
45022-SWW-G02	4160
45022-TR2-A00	3607
45022-TR2-A01	3607
460 420 00 20	3513
460 420 01 20	3550
460 420 01 20	3611
470 420 53 00	4376
481 300 50 11	3632
481 3A2 11 00	3976/1
48111-31100K0	3797
484 130 51 00	3895
484 130 80 50	3895
484 130 80 51	3895
484 130 90 A0	3895
484 130 90 A1	3895
484 133 41 A0	4061
4G43-2D007-AA	3945
4L0 698 151 A	4075/1
4L0 698 151 B	4075/1
4L0 698 151 C	4075/1
4M5J-2K021-AA	3801
4U2Z-2V001-CA	4340
4U2Z-2V001-DA	4340
50 01 000 478	3526
50 01 868 606	3965/1
533 698 151 A	3649
542 074 20 28	3963/1
5520065J11L00	3929
5520065J23000	3929
5580061G60B00	3602
5580061G74000	3602
5580062G60DOM	3602
5581062J00L00	3983/1
5581062J31000	3983/1
5581062J50000	3983/1
58101-26A30AT	3843
58101-2DA40AT	3961
58101-3AA20AT	3843
5C0 698 451 B	3529/1
5C0 698 451 C	3529/1
5C0 698 451 D	3529/1
5M21-2M008-CA	3529/1
5M2J-2M008-CA	3529/1
5Q0 698 451 D	3529/1
5Q0 698 451 E	3529/1
5Q0 698 451 M	3529/1
5S6Y-2K021-AA	3801
5Z0 698 151 B	3782/1
6 001 073 149	3618/1
6 001 073 516	3618/1
6 821 149 3AA	4286
60 00 008 125	3492
60 00 008 126	3503
60 00 008 304	3492
60 00 008 895	3539
60 00 061 026	3442
60 01 073 131	3981
60 01 547 619	3503/1
60 01 547 911	3503/1
60 01 549 803	4141
60 01 551 623	3333
60 1586 00 42	3513
60 25 070 807	3503
60 25 071 042	3503
60 25 371 279	3848
60 25 371 650	3529/2
601 420 87 20	3513
601 421 02 08	3513
601 421 04 08	3513
601 421 06 08	3513
601 421 77 20	3689
631 420 01 20	3689
631 420 03 20	3689
638 421 00 10	3681
663 698 151 E	3635
669 420 00 20	3679
669 420 01 20	3679
669 420 15 20	3679
669 421 00 08	3513

OE	BESER
NO	NO
670 420 28 20	3679
6C0 698 151 A	3782/1
6C0 698 151 B	3782/1
6C0 698 151 C	3782/1
6R0 698 151 A	3782/1
6R0 698 151 B	3782/1
6U0 698 151 A	3731
6U0 698 151 B	3731
6U0 698 151 C	3731
6U0 698 151 D	3731
6U0 698 151 E	3731
6U0 698 151 F	3731
6X0 698 451 A	3529/1
74 10 604 386	4056
74 85 114 490	3856
74 85 116 333	3965/1
74 85 121 748	4056
74 85 133 241	4057
74 85 185 244	4172/1
77 01 035 895	3539
77 01 050 914	3848
77 01 050 918	3795/1
77 01 054 771	3848
77 01 054 772	3795/1
77 01 130 036	3503
77 01 170 172	3492
77 01 200 320	3333
77 01 200 734	3374
77 01 200 884	3482
77 01 201 044	3482
77 01 201 059	3374
77 01 201 159	3374
77 01 201 183	3374
77 01 201 542	3380
77 01 201 669	3503
77 01 201 773	3503/1
77 01 201 774	3503
77 01 201 775	3503
77 01 202 050	3539
77 01 202 210	3496/1
77 01 202 213	3495
77 01 202 227	3495
77 01 202 285	3503
77 01 202 289	3503
77 01 202 289	3546
77 01 202 302	3380
77 01 202 516	3503
77 01 202 539	3503
77 01 202 540	3503
77 01 202 709	3527
77 01 202 710	3495
77 01 202 711	3380
77 01 202 712	3503
77 01 202 713	3482
77 01 202 848	3503
77 01 202 890	3329
77 01 202 891	3495
77 01 202 892	3380
77 01 202 893	3374
77 01 202 894	3503
77 01 202 895	3503
77 01 202 896	3539
77 01 202 896	3546
77 01 202 954	3333
77 01 202 955	3806/1
77 01 202 956	3482
77 01 202 973	3539
77 01 202 973	3546
77 01 203 070	3546
77 01 203 071	3526
77 01 203 129	3503
77 01 203 282	3503
77 01 203 730	3539
77 01 203 775	3503
77 01 203 795	3503
77 01 203 796	3503
77 01 203 797	3503
77 01 203 913	3482
77 01 203 917	3482
77 01 203 918	3482

OE	BESER
NO	NO
77 01 203 968	3539
77 01 204 066	3503
77 01 204 220	3539
77 01 204 220	3546
77 01 204 357	3503
77 01 204 530	3380
77 01 204 777	3380
77 01 204 833	3503
77 01 205 014	3527
77 01 205 355	3503
77 01 206 044	3849
77 01 206 085	3503
77 01 206 288	3539
77 01 206 343	3529/2
77 01 206 379	3539/1
77 01 206 598	3950
77 01 206 599	3852
77 01 206 609	3853
77 01 206 727	3856
77 01 206 763	3855
77 01 206 784	3529/2
77 01 207 066	3503/1
77 01 207 184	3849
77 01 207 187	4093
77 01 207 339	3856
77 01 207 484	3529/2
77 01 207 672	3849
77 01 207 673	3850
77 01 207 695	3529/2
77 01 207 968	3853
77 01 207 996	3853
77 01 208 122	3849
77 01 208 182	3852
77 01 208 213	3529/2
77 01 208 218	4137
77 01 208 265	3503
77 01 208 416	3529/2
77 01 208 421	3529/2
77 01 209 077	3539
77 01 209 380	3539/1
77 01 209 444	3849
77 01 209 639	3503
77 01 209 735	3529/2
77 01 209 808	3950
77 01 209 809	3852
77 01 209 841	3529/2
77 01 209 864	3966
77 01 209 864	3966/1
77 01 209 869	3967
77 01 210 110	3966
77 01 210 110	3966/1
77 01 210 130	3503/1
77 01 210 142	3503/1
77 01 210 174	3966
77 01 210 174	3966/1
77 01 348 478	3527
77 01 348 681	3806/1
77 01 348 682	3527
77 01 348 684	3333
77 01 348 863	3333
77 01 349 255	3526
77 01 349 751	3546
77 01 349 973	3503
77 01 484 478	3966
77 01 484 478	3966/1
77 01 486 681	3967
77 11 130 034	3380
77 11 130 036	3503
77 11 130 071	3503
77 11 130 078	3503/1
7D0 698 151 B	3553/1
7D0 698 151 G	3553/1
7D0 698 451 A	4345
7D0 698 451 C	4345
7D0 698 451 D	4345
7D0 698 451 G	4345
7D0 698 451 J	4345
7L0 698 151 A	4075/1
7L0 698 151 C	4075/1
7L0 698 151 D	4075

OE	BESER
NO	NO
7L0 698 151 E	4075/1
7L0 698 151 F	4075
7L0 698 151 G	4075/1
7L0 698 151 H	4075
7L0 698 151 J	4075/1
7L0 698 151 K	4309
7L0 698 151 L	4309
7L0 698 151 M	4309
7L0 698 151 N	4309
7L0 698 151 P	4075/1
7L0 698 151 Q	4075
7L0 698 151 R	4075/1
7L6 698 151 A	4075/1
7L6 698 151 C	4075
7L6 698 151 D	4075/1
7M512K021AALC	3885
7P0 698 151 B	4309
7P0 698 151 C	4309
7P0 698 151 D	4309
7P6 698 151 B	4309
7P6 698 151 G	4309
803 698 151 E	3313
815 698 151 B	3313
835 698 151 A	3649
86 60 000 743	3890
86 60 000 745	3788
86 60 000 746	3876
86 60 000 767	4259
86 60 000 781	3964/1
86 60 003 852	4140/1
86 60 004 059	4282
86 60 004 060	4283
86 60 004 060	4283/1
86 60 004 425	3788
86 60 004 426	3876
86 60 004 445	4283
86 60 004 445	4283/1
86 60 004 453	3873
86 60 004 456	3755
86 60 004 458	3660
86 60 004 459	3763
86 60 004 460	3529/1
86 60 004 461	3529/2
86 60 004 467	4040
86 60 004 470	3550
86 60 004 504	3984/1
86 60 004 505	3671
86 60 004 509	4345
86 60 004 519	3890
86 60 004 535	4259
86 60 004 545	3964/1
86 60 004 559	4282
86 60 004 592	3556
86 60 004 600	3856
86 60 004 602	3850
86 60 004 611	3754
86 60 004 612	3762
86 60 004 622	3659
86 60 004 629	3888
86 60 004 630	3677
86 60 004 633	3577
86 60 004 635	3651
86 60 004 642	3782/1
86 60 004 658	3555
86 60 004 666	3608
86 60 004 672	3557
86 60 004 672	3610
86 60 004 674	3665
86 60 004 686	3722
86 60 004 687	3635
86 60 004 691	3473
86 60 004 700	3750
86 60 004 735	3546
86 60 004 761	3939
86 60 004 762	3940
86 60 004 763	3987
86 60 004 765	3790/1
86 60 004 766	3618/1
86 60 004 771	3603
86 60 004 774	3558

OE	BESER
NO	NO
86 60 004 775	3801
86 60 004 780	3692
86 60 004 781	3760
86 60 004 787	3797
86 60 004 793	3800/2
86 60 005 091	4140/1
86 60 005 117	4140/1
86 60 005 283	4140/1
86 60 005 291	4140/1
86 71 005 852	3529/1
86 71 005 867	3529/1
86 71 016 176	3556
86 71 016 178	3950
86 71 016 186	3856
86 71 016 189	3850
86 71 016 511	3873
86 71 016 515	3754
86 71 016 516	3762
86 71 016 523	3755
86 71 016 530	3659
86 71 016 533	3660
86 71 016 538	3888
86 71 016 539	3677
86 71 016 542	3577
86 71 016 544	3651
86 71 016 550	3763
86 71 016 552	3782/1
86 71 016 554	3529/1
86 71 016 569	3555
86 71 016 577	3608
86 71 016 582	3529/2
86 71 016 584	3557
86 71 016 584	3610
86 71 016 586	3665
86 71 016 628	3722
86 71 016 629	3635
86 71 016 633	3473
86 71 016 635	3852
86 71 016 653	3750
86 71 016 663	4040
86 71 016 673	3550
86 71 016 706	3827
86 71 016 708	3546
86 71 016 741	3939
86 71 016 742	3940
86 71 016 743	3987
86 71 016 753	3790/1
86 71 016 754	3618/1
86 71 016 761	3603
86 71 019 100	3558
86 71 019 101	3801
86 71 019 108	3692
86 71 019 109	3760
86 71 019 116	3797
86 71 019 123	3800/2
86 71 019 171	3984/1
86 71 019 176	3671
86 71 019 180	4345
86AB-2K021-BC	3603
86VB-2K021-AA	3603
86VB-2K021-CA	3603
86VB-2K021-DA	3603
88BB-2K021-AA	3603
8-94461-155-0	3657
8-94463-222-0	3657
8-94611-550-0	3657
8-97114-300-0	3657
8-97114-300-1	3657
8-97164-183-0	3657
8-97168-633-0	4354
8-97318-669-0	3886
8-97318-675-0	3886
8-97329-266-0	4354
8-97329-333-0	3886
8-97368-251-0	3886
8-97368-252-0	3886
8-97374-973-0	3886
8-97377-522-0	4354
8-97378-446-0	4354
8-98051-114-0	3886

OE	BESER
NO	NO
8-98051-117-0	3886
8-98078-193-0	3886
8-98216-926-0	4354
8-98298-384-0	3886
89AB-2K021-AD	3754
89VX-2K021-CA	3603
8A0 615 115 D	3650
8A0 698 151 A	3650
8A0 698 151 B	3650
8A0 698 151 L	3650
8D0 698 151 E	3650
8E0 698 451 B	3529/2
8E0 698 451 L	3529/2
8G0 698 151 D	4259
8K0 698 151 B	4259
8K0 698 151 D	4259
8K0 698 151 E	4259
8K0 698 151 G	4259
8K0 698 151 H	4259
8K0 698 151 J	4259
8U0 698 151 F	3731
8W0 698 151 J	4364
8W0 698 151 K	4364
8W0 698 151 Q	4364
9 404 252 328	3529/1
9 467 529 088	3529/1
9 467 648 988	3529/1
902 423 05 10	3670
905 420 00 20	3679
906 421 00 10	3925/2
906 421 03 00	3962/1
906 421 04 00	3925
906 421 04 00	3925/2
906 421 07 00	3925/2
906 421 08 00	3962/1
906 423 04 00	3926/1
907 420 86 00	4355
907 420 87 00	4384
910 420 36 00	4355
910 420 37 00	4355
910 420 40 00	3925/2
910 420 76 00	3925/2
910 423 56 00	4355
92VB-2K021-AB	3473
92VB-2K021-AC	3473
92VB-2K021-AE	3473
93VX-2K021-AA	3473
93VX-2K021-AB	3473
94 042 481 68	3323
94AB-2K021-AB	3722
94AB-2K021-AC	3722
95B 698 151 C	4309
95WX-2M008-BA	3529/1
97AG-2K021-AB	3722
97AG-2K021-BA	3722
97AX-2K021-AB	3722
98AB-2K021-AD	3754
98AB-2M008-BA	3755
98AX-2K021-AD	3754
98AX-2K021-AE	3754
98AX-2K021-AF	3754
98AX-2K021-AG	3754
98AX-2M008-BA	3755
98AX-2M008-BB	3755
9J1 698 151 J	4309
A002420162005	3581
A002420212005	3658
A002420222005	3658
A003420302037	3581
A004420442067	4127
AUDI4A0698151	3590
BK31-2K021-AA	4351
BK31-2K021-AA	4351/1
BK31-2K021-AB	4351
BK31-2K021-AB	4351/1
BK31-2K021-AC	4351
BK31-2K021-AC	4351/1
BK31-2K021-AD	4351
BK31-2K021-AD	4351/1
BK31-2K021-AE	4351

OE	BESER
NO	NO
BK31-2K021-AF	4351
BL53-33-28Z9A	3449
BL5-33-328Z9A	3449
C1BC-2M007-AA	3755
C1BC-2M008-AA	3755
C1BC-2M008-AB	3755
C1BC-2M008-AC	3755
D1060-00Q1BRV	3964/1
D1060-4EA0ARV	4282
D1060-95F0ARV	3797
D4060-4CA0CRV	4283
D4060-4EA0BVA	4283
E8TA-2B11-4BA	3544
E8TA-2B30-0VA	3544
EC11046952012	3470
EC11046952012	3615
GEYV-33-28Z9C	3832
GHY1-33-28Z9C	4315
GJY1-33-28Z9A	3437
GJYC-33-28Z9C	4118
GN51-33-28Z9A	3437
H4502-SAP-003	3752
J04 465 35040	3560
J04 491 35160	3560
J04 665 35040	3560
JZW 698 151 A	3782/1
JZW 698 151AA	3962/1
JZW 698 151AB	3925/2
JZW 698 451 C	3529/1
KTJK212K021GA	4174/1
KTKV6C2K021AA	3885
KTKV6C2K021AB	3885
KTKV6C2K021AC	3885
LPLA-2M008-EA	4323
ME1M2J2K021BB	3590/2
ME3M5J2K021AA	3885
ME3M5J2M008AA	3853/1
ME4S7J2M008AB	4058
ME6C1J2K021AA	3906
ME6C1J2K021AA	3906/1
ME6C1J2K021AA	3906/1A
ME6C1J2K021AA	3906/2
ME6C1J2K021AB	3906/1
ME6C1J2K021AB	3906/1A
ME6C1J2K021AB	3906/2
ME6C1J2K021BA	3920
ME6C1J2K021BA	3920/1
ME6C1J2K021BB	3920/1
ME6C1J2M008AA	3907/1
ME6C1J2M008AA	3907/1A
ME6C1J2M008AA	3907/2
ME6C1J2M008AB	3907/1
ME6C1J2M008AB	3907/1A
ME6C1J2M008AB	3907/2
ME6C1J2M008AC	3907/1
ME6C1J2M008AC	3907/1A
ME6C1J2M008AC	3907/2
ME6G9J2M008GA	4157
ME97BX2K021AD	3593
ME9S5J2K021AB	4173/2
MEAV6J2K021AA	3885
MEAV6J2K021BA	3885
MEBK2J2K021AA	4174/1
MEYS6J2K021AC	3594
S216CJ3501080	4027
SA94-49-2809A	3463
SE96-33-28Z9A	3463
SEAT4A0698151	3590
SF04-33-28Z9A	3463
UMY4-33-28Z9C	3988/1
YM21-2M008-CA	3529/1
YU2Z-2V001-KA	3754
11180350108000	3552
0K060A-33-28ZA	3574
0K060A-33-28ZA	3914/1
1431V002000000	4281
1431V003000000	4281
45022-1SK-3E01	3872/1
77 11 130 071A	3503
8W0 698 151 AA	4364

OE	BESER
NO	NO
8W0 698 151 AB	4364
8W0 698 151 AF	4364
8W0 698 151 AG	4364
955 351 939 00	4075
955 351 939 01	4075
955 351 939 02	4075
955 351 939 03	4075
955 351 939 04	4075
955 351 939 05	4075
955 351 939 10	4075/1
955 351 939 11	4075/1
955 351 939 12	4075/1
955 351 939 13	4075/1
955 351 939 14	4075/1
955 351 939 15	4075/1
955 351 939 16	4075/1
955 351 939 60	4309
955 351 939 61	4309
955 351 939 62	4309
955 351 939 63	4309
955 351 939 70	4309
955 951 939 12	4075/1
958 351 939 00	4309
958 351 939 01	4309
958 351 939 21	4309
958 351 939 70	4309
95VWX-2M008-AA	3529/1
970 351 948 02	4309
970 351 948 03	4309
970 351 949 01	4309
970 351 949 03	4309
970 351 949 05	4309
970 351 949 06	4309
A000 420 59 20	3339
A000 420 59 20	3514
A000 420 60 20	3339
A000 420 60 20	3514
A000 420 63 20	3515
A000 420 64 20	3515
A000 420 65 20	3515
A000 420 68 20	3515
A000 420 78 20	3339
A000 420 78 20	3514
A000 420 82 00	4349
A000 420 94 20	3339
A000 420 94 20	3514
A000 420 95 20	3339
A000 420 95 20	3514
A000 420 97 20	3804
A000 421 42 10	3861
A000 421 61 10	3923/1
A000 421 62 10	3924/1
A000 586 55 42	3339
A000 586 55 42	3514
A000 586 75 42	3515
A001 420 05 20	3339
A001 420 05 20	3514
A001 420 09 20	3515
A001 420 75 20	3339
A001 420 75 20	3514
A001 420 78 20	3515
A001 420 92 20	3515
A001 420 99 20	3339
A001 420 99 20	3514
A001 421 09 10	3923/1
A001 421 10 10	3924/1
A001 586 18 42	3515
A001 586 32 42	3515
A001 586 33 42	3515
A001 586 36 42	3515
A001 586 63 42	3515
A002 420 43 20	3339
A002 420 43 20	3514
A002 420 45 20	3863
A002 420 50 20	3863
A002 420 52 20	3821
A002 420 75 20	3339
A002 420 75 20	3514
A002 586 45 42	3339
A002 586 45 42	3514

OE	BESER
NO	NO
A002 586 46 42	3339
A002 586 46 42	3514
A003 420 02 20	3861
A003 420 05 20	4102
A003 420 06 20	4101
A003 420 06 20	4209
A003 420 08 20	4102
A003 420 18 20	4102
A003 420 19 20	4101
A003 420 19 20	4209
A003 420 24 20	3804
A003 420 25 20	3836
A003 420 26 20	3836
A003 420 28 20	3821
A003 420 29 20	3863
A003 420 42 20	4102
A003 420 45 20	3836
A003 420 52 20	3821
A003 420 59 20	3836
A003 420 60 20	3836
A003 420 74 20	3515
A003 420 78 20	3923/1
A003 420 79 10	3923/1
A003 420 81 20	3924/1
A003 420 87 20	3804
A003 420 95 20	3836
A004 420 03 20	3863
A004 420 04 20	4102
A004 420 05 20	4102
A004 420 08 20	4102
A004 420 25 20	3804
A004 420 40 20	4210
A004 420 62 20	4240
A004 420 67 20	3925
A004 420 67 20	3925/2
A004 420 68 20	3962/1
A004 420 69 20	3926
A004 420 69 20	3926/1
A004 420 80 20	4240
A004 420 81 20	3963
A004 420 81 20	3963/1
A004 420 82 20	3962/1
A004 420 83 20	3925
A004 420 83 20	3925/2
A004 420 94 20	4101
A004 420 94 20	4209
A0044202420010	3614
A005 420 07 20	4247
A005 420 08 20	4248
A005 420 09 20	4248
A005 420 10 20	4249
A005 420 12 20	4248
A005 420 13 20	4249
A005 420 15 20	4248
A005 420 16 20	4249
A005 420 19 20	3821
A005 420 21 20	3925
A005 420 21 20	3925/2
A005 420 43 20	4247
A005 420 48 20	4391
A005 420 52 20	3925
A005 420 52 20	3925/2
A005 420 53 20	3962/1
A005 420 63 20	4391
A005 420 70 20	3925
A005 420 70 20	3925/2
A005 420 74 20	3963
A005 420 74 20	3963/1
A005 420 78 20	4240
A005 420 81 20	4247
A005 420 92 20	4391
A006 420 13 20	4247
A006 420 22 20	3963
A006 420 22 20	3963/1
A006 420 24 20	4391
A006 420 28 20	4249
A006 420 43 20	3923/1
A006 420 44 20	3924/1
A006 420 45 20	3963
A006 420 45 20	3963/1

OE	BESER
NO	NO
A006 420 61 20	4247
A006 420 62 20	3836
A006 420 64 20	4391
A006 420 71 20	4248
A006 420 84 20	3925/2
A007 420 56 20	4248
A007 420 58 20	4249
A007 420 66 20	4391
A007 420 74 20	4391
A007 420 75 20	4249
A008 420 13 20	4349
A008 420 14 20	4349
A008 420 47 20	3962/1
A008 420 48 20	3963/1
A008 420 50 20	3925/2
A008 420 51 20	3926/1
A163 420 00 20	4126
A163 420 00 20	4126/1
A163 420 03 20	4126
A163 420 03 20	4126/1
A163 420 04 20	4069
A163 420 06 20	4102
A163 420 07 20	4103
A163 420 09 20	4103
A163 420 10 20	4102
A163 420 11 20	4103
A164 420 08 20	4210
A164 420 18 20	4210
A168 420 00 20	4125
A168 420 01 20	4125
A168 420 07 20	4125
A168 420 08 20	4125
A168 420 11 20	4125
A168 420 12 20	4125
A168 420 13 20	4125
A168 420 14 20	4125
A168 420 15 20	4125
A415 421 03 10	3966
A415 421 04 10	3967
A415 421 06 10	3966
A415 421 06 10	3966/1
A442 082 20 27	3962/1
A470 420 53 00	4376
A542 074 20 28	3963/1
A906 421 00 10	3925/2
A906 421 03 00	3962/1
A906 421 04 00	3925
A906 421 04 00	3925/2
A906 421 07 00	3925/2
A906 421 08 00	3962/1
A906 423 04 00	3926/1
A907 420 87 00	4384
AUDI4A0698151A	3590
AUDI4A0698151C	3590
AUDI4D0698151H	3590
BPYK-26-48ZA9C	3853/1
D1060-4EA0A-VA	4282
DA19-33-28ZA9A	3723
GAYR-33-23Z MF	3832
GAYR-33-28ZA9C	3832
J04 465 350 20	3714
J04 465 353 20	3714
J04 491 351 30	3714
J04 491 352 00	3714
JZW 698 151 AF	3782/1
ME2T1J-2K021AB	3801
SEAT4A0698151A	3590
SEAT4A0698151C	3590
SEAT4D0698151H	3590
SKODA4A0698151	3590
446600000000000	4256
006 420 61 20S1	4247
04491-12141-000	3709
04491-87117-000	3709
04491-87401-000	3604
04491-87403-000	3604
04491-87404-000	3604
04491-87Z01-001	3927
04491-97507-000	3604
11600220520330.	3318

OE	BESER
NO	NO
34 10 6 799 801	4382
34 10 6 856 191	4382
34 10 6 859 181	4382
34 10 6 859 182	4382
34 10 6 884 243	4381
34 11 1 103 207	3331
34 11 1 103 321	3331
34 11 1 103 726	3331
34 11 1 103 744	3331
34 11 1 111 649	3331
34 11 1 116 619	3318
34 11 1 117 002	3365
34 11 1 117 352	3365
34 11 1 117 979	3331
34 11 1 118 517	3365
34 11 1 150 523	3365
34 11 1 150 524	3365
34 11 1 150 527	3365
34 11 1 152 655	3365
34 11 1 153 910	3564
34 11 1 154 442	3609
34 11 1 154 443	3609
34 11 1 154 611	3573
34 11 1 155 998	3609
34 11 1 155 999	3609
34 11 1 156 854	3609
34 11 1 156 898	3609
34 11 1 156 899	3609
34 11 1 157 561	3573
34 11 1 157 562	3573
34 11 1 157 569	3564
34 11 1 157 570	3564
34 11 1 157 747	3609
34 11 1 157 923	3573
34 11 1 157 924	3573
34 11 1 158 265	3564
34 11 1 158 270	3365
34 11 1 159 249	3365
34 11 1 159 251	3365
34 11 1 159 257	3331
34 11 1 159 259	3564
34 11 1 159 279	3564
34 11 1 159 415	3573
34 11 1 159 416	3573
34 11 1 160 356	3563
34 11 1 160 357	3563
34 11 1 160 450	3564
34 11 1 160 459	3564
34 11 1 160 532	3563
34 11 1 161 057	3609
34 11 1 161 347	3609
34 11 1 161 349	3430
34 11 1 161 349	3609
34 11 1 161 437	3563
34 11 1 161 438	3563
34 11 1 161 445	3563
34 11 1 161 446	3563
34 11 1 161 717	3573
34 11 1 162 481	3609
34 11 1 162 535	3564
34 11 1 163 227	3881
34 11 1 163 307	3881
34 11 1 163 850	3563
34 11 1 164 737	3563
34 11 1 165 227	3881
34 11 1 165 556	3563
34 11 2 228 248	3564
34 11 2 229 031	3881
34 11 2 229 935	3564
34 11 2 282 090	3881
34 11 2 282 166	3881
34 11 2 282 415	3564/1
34 11 2 282 416	3564/1
34 11 2 282 554	3564
34 11 2 282 555	3564
34 11 2 282 556	3881
34 11 2 282 995	3564/1
34 11 2 283 365	4208
34 11 2 283 865	4180
34 11 2 449 266	4378

OE	BESER
NO	NO
34 11 2 449 269	4380
34 11 2 456 867	4382
34 11 2 456 868	4382
34 11 2 464 194	4382
34 11 2 468 431	4381
34 11 3 427 303	3881
34 11 3 427 503	3881
34 11 4 073 936	4382
34 11 4 074 370	4207
34 11 6 753 668	4180
34 11 6 761 237	3563
34 11 6 761 252	3881
34 11 6 761 283	4180
34 11 6 763 089	4180
34 11 6 763 305	4179
34 11 6 763 591	4180
34 11 6 763 617	4346
34 11 6 763 618	4346
34 11 6 763 652	4208
34 11 6 764 312	4208
34 11 6 764 437	4180
34 11 6 764 438	4180
34 11 6 764 540	4180
34 11 6 767 191	4180
34 11 6 767 580	4180
34 11 6 768 287	4208
34 11 6 770 575	4208
34 11 6 774 258	4208
34 11 6 775 310	4380
34 11 6 775 314	4378
34 11 6 776 161	4180
34 11 6 778 403	4207
34 11 6 779 293	4207
34 11 6 781 873	4180
34 11 6 796 844	4380
34 11 6 798 190	4378
34 11 6 798 978	4382
34 11 6 850 568	4381
34 11 6 850 885	4378
34 11 6 850 886	4378
34 11 6 852 253	4207
34 11 6 854 126	4382
34 11 6 856 193	4382
34 11 6 856 591	4380
34 11 6 858 047	4380
34 11 6 860 242	4380
34 11 6 871 557	4378
34 11 6 872 632	4380
34 11 6 874 331	4381
34 11 9 058 982	3609
34 11 9 058 989	3609
34 12 1 288 889	4389
34 12 1 288 890	4389
34 20 6 799 809	4383
34 20 6 873 093	4383
34 20 6 873 094	4383
34 20 6 877 648	4325
34 20 6 877 648	4325/1
34 20 6 879 857	4325
34 20 6 879 857	4325/1
34 20 8 093 728	4379
34 21 1 117 981	3326/1
34 21 1 150 524	3365
34 21 1 150 556	3326/1
34 21 1 159 252	3706
34 21 1 159 253	3706
34 21 1 159 255	3706
34 21 1 159 265	3326/1
34 21 1 160 708	3564
34 21 2 284 296	4179
34 21 2 284 389	4379
34 21 2 284 390	4379
34 21 2 284 466	4379
34 21 2 284 685	4179
34 21 2 288 889	4389
34 21 2 288 890	4389
34 21 2 288 891	4388
34 21 2 288 892	4388
34 21 2 409 257	4388
34 21 2 409 259	4388

OE	BESER
NO	NO
34 21 2 413 040	4181/1
34 21 2 413 041	4181/1
34 21 2 449 304	4379
34 21 2 456 869	4325/1
34 21 2 468 436	4383
34 21 2 788 284	4325
34 21 2 788 284	4325/1
34 21 6 757 536	4179
34 21 6 761 286	4179
34 21 6 763 012	4179
34 21 6 763 043	4181
34 21 6 763 044	4181
34 21 6 763 305	4179
34 21 6 767 145	4389
34 21 6 767 146	4389
34 21 6 767 148	4388
34 21 6 767 150	4388
34 21 6 768 471	4179
34 21 6 773 161	4388
34 21 6 774 417	4389
34 21 6 774 692	4388
34 21 6 775 346	4379
34 21 6 776 937	4181/1
34 21 6 777 240	4389
34 21 6 779 294	4389
34 21 6 788 183	4389
34 21 6 788 284	4325
34 21 6 788 284	4325/1
34 21 6 790 761	4388
34 21 6 796 741	4325
34 21 6 796 741	4325/1
34 21 6 798 193	4325
34 21 6 798 193	4325/1
34 21 6 798 196	4379
34 21 6 850 569	4383
34 21 6 857 108	4181/1
34 21 6 857 805	4379
34 21 6 861 543	4325
34 21 6 862 202	4325
34 21 6 862 202	4325/1
34 21 6 867 175	4379
34 21 6 868 497	4181/1
34 21 6 870 552	4379
34 21 6 870 558	4325
34 21 6 870 558	4325/1
34 21 6 870 565	4325
34 21 6 870 565	4325/1
34 21 6 873 093	4383
34 21 6 885 451	4325
34 21 6 885 451	4325/1
34 21 6 885 452	4325
34 21 6 885 452	4325/1
34 21 6 892 641	4325/1
34 21 6 892 642	4379
34 21 9 804 735	4389
34 21 9 804 739	4389
34 21 9 808 172	4389
45022-SA3-31126	3691
4L3Z2200AB200AB	4320
55200-51811-000	3721
55200-65D51-000	3884
A 003 420 65 20	4097
A 003 420 99 20	4097
A 910 420 40 00	3925/2
A 910 420 76 00	3925/2
A 910 423 56 00	4355
A00342000200010	3680
ME2T1J-2K021-AA	3801
ME98AJ-2K021-AH	3754
ME98AJ-2K021-AJ	3754
MEBK2J-2M008-AA	4175/1
MEBK3J-2K021-AA	4351
MEBK3J-2K021-AA	4351/1
MEBK3J-2M008-AA	4175/1
MEC1BJ-2M008-AA	3755
SKODA4A0698151A	3590
SKODA4A0698151C	3590
SKODA4D0698151H	3590
002 420 71 20 37	3676
003 420 27 20 37	3676

OE	BESER
NO	NO
005 420 02 20 41	3629
163 420 10 20 41	4102
41060-ED525-C107	4229
A006 420 61 20S1	4247
D1060-ED51A-C107	4229
0001431V004000000	4281
34 11 6 858 04701	4380
34 11 6 858 04702	4380
34 21 2 284 38901	4379
34 21 2 284 38903	4379
A163 420 10 20 41	4102
C0001431V002000000	4281
C0001431V003000000	4281

OPEN PARTS	BESER
NO	NO
BPA0002.20	3350
BPA0010.40	3339
BPA0010.40	3514
BPA0014.40	4103
BPA0017.00	3327
BPA0022.00	3316
BPA0025.30	3425
BPA0042.00	3373
BPA0044.02	3526
BPA0047.30	3513
BPA0052.10	3661
BPA0056.00	3423
BPA0056.12	3423/1
BPA0058.10	3416
BPA0061.02	3527
BPA0101.20	3410
BPA0102.10	3873
BPA0109.00	3579
BPA0109.12	3579
BPA0109.22	3579
BPA0114.00	3625
BPA0119.10	3570
BPA0119.20	3417
BPA0119.22	3417/1
BPA0119.32	3417/1
BPA0129.00	3415
BPA0132.00	3371
BPA0134.00	3650
BPA0134.40	3551
BPA0134.50	3531
BPA0135.20	3536
BPA0135.40	3536
BPA0141.20	3503/1
BPA0141.30	3503
BPA0141.32	3503
BPA0142.20	3689
BPA0143.02	3440
BPA0144.06	3496
BPA0144.14	3493
BPA0144.14	3494
BPA0144.24	3493
BPA0144.24	3494
BPA0144.32	3495
BPA0144.50	3496/1
BPA0146.14	3466
BPA0148.34	3666
BPA0149.02	3394
BPA0155.00	3572
BPA0155.10	3583
BPA0157.00	3611
BPA0157.10	3550
BPA0157.20	3630
BPA0168.00	3621
BPA0170.14	3474
BPA0171.00	3486
BPA0171.10	3444/1
BPA0171.20	3441
BPA0171.60	3585
BPA0171.60	3585/1
BPA0172.10	3790
BPA0172.30	3790/1
BPA0172.32	4141

OPEN PARTS	BESER
NO	NO
BPA0172.35	3549
BPA0184.02	3758
BPA0184.12	3758
BPA0189.00	3408
BPA0191.12	3426
BPA0192.12	3380
BPA0192.34	3487
BPA0192.34	3489
BPA0202.02	3482
BPA0206.00	3603
BPA0208.00	3539/1
BPA0208.12	3539
BPA0211.22	3523
BPA0212.42	3522
BPA0222.00	3661
BPA0222.01	3771
BPA0222.10	3661
BPA0223.00	3605
BPA0224.02	3502
BPA0224.22	3502
BPA0233.00	4212
BPA0233.02	4212
BPA0233.12	4212
BPA0233.64	4212
BPA0236.02	3760
BPA0238.04	3757
BPA0238.04	3857
BPA0239.00	3717
BPA0261.02	3543
BPA0262.02	3457
BPA0263.10	3529
BPA0263.41	4152
BPA0264.02	3432
BPA0265.00	3578
BPA0265.15	3656
BPA0266.00	3412
BPA0266.10	3453
BPA0267.11	3662
BPA0270.00	3564
BPA0281.00	3459
BPA0281.40	3569
BPA0281.42	3568
BPA0284.00	3430
BPA0285.10	3589
BPA0286.30	3470
BPA0286.50	3505
BPA0286.50	3615
BPA0289.02	3882
BPA0291.02	4108
BPA0294.22	4087
BPA0294.32	4087
BPA0296.00	3609
BPA0301.00	3458
BPA0311.00	3873
BPA0315.04	3560
BPA0317.12	4010
BPA0318.12	3632
BPA0318.22	3632
BPA0318.32	3632
BPA0318.82	3632
BPA0318.92	3632
BPA0320.00	3562
BPA0321.02	3680
BPA0321.22	3680
BPA0325.02	4148/1
BPA0325.12	4148/1
BPA0325.22	4148/1
BPA0325.32	4148/1
BPA0331.00	3464
BPA0331.04	3722
BPA0337.02	3683
BPA0337.02	3872/1
BPA0337.10	3872
BPA0342.02	4080
BPA0343.00	3660
BPA0344.00	4104
BPA0345.10	3596
BPA0351.32	3704
BPA0354.02	3685
BPA0354.22	3685

OPEN PARTS	BESER
NO	NO
BPA0596.20	3881
BPA0601.00	3863
BPA0602.02	3799
BPA0603.04	3750
BPA0605.02	4062
BPA0605.12	4062
BPA0609.00	3538
BPA0609.10	3566
BPA0609.20	3637
BPA0618.00	3606
BPA0618.01	3794
BPA0620.20	3419
BPA0630.00	3663
BPA0631.10	3896
BPA0631.12	3896
BPA0633.00	3682
BPA0634.04	3636
BPA0643.00	3659
BPA0643.10	3938
BPA0643.20	3938
BPA0645.02	3687/1
BPA0647.02	3764
BPA0650.00	4125
BPA0651.00	3575
BPA0651.10	3575/2
BPA0655.02	4079
BPA0674.12	3932
BPA0675.02	3778
BPA0678.00	3676
BPA0684.02	3762
BPA0691.00	3754
BPA0693.00	3755
BPA0695.02	4155
BPA0696.00	3744
BPA0697.01	4126
BPA0697.01	4126/1
BPA0698.01	4069
BPA0701.00	3681
BPA0705.02	4281
BPA0708.02	4059
BPA0709.00	3821
BPA0709.10	3821
BPA0710.02	4027
BPA0711.04	3859
BPA0712.02	3768
BPA0713.00	3919
BPA0714.00	3918
BPA0717.00	3861
BPA0719.00	3943
BPA0720.02	3901
BPA0724.02	3928
BPA0727.10	4123
BPA0727.20	4123
BPA0729.02	3913
BPA0733.00	3804
BPA0735.02	4110
BPA0736.02	4011
BPA0740.02	3769
BPA0741.02	3788
BPA0746.02	3993
BPA0746.12	3993
BPA0746.22	3993
BPA0746.62	3895
BPA0747.12	4109
BPA0747.12	4232
BPA0750.02	4084
BPA0766.00	3877
BPA0767.01	4345
BPA0768.00	3836
BPA0769.00	4102
BPA0771.02	3843
BPA0771.12	3843
BPA0772.02	3784
BPA0772.12	3921
BPA0774.02	3846
BPA0774.12	3846
BPA0775.01	4138
BPA0775.01	4138/1
BPA0776.00	4100
BPA0777.00	4093

OPEN PARTS	BESER
NO	NO
BPA0777.10	4093
BPA0800.22	4118
BPA0803.12	3893
BPA0803.22	3893
BPA0804.12	3955
BPA0804.31	3955
BPA0807.02	4012
BPA0813.00	4158
BPA0819.00	3856
BPA0821.02	3802
BPA0822.00	4094
BPA0822.12	3817
BPA0827.04	3934
BPA0828.04	3935
BPA0833.00	3855
BPA0834.00	3848
BPA0834.10	3848
BPA0836.02	4095
BPA0839.02	4153
BPA0840.10	3820
BPA0840.10	3820/1
BPA0840.20	3820
BPA0840.20	3820/1
BPA0840.30	3820
BPA0840.30	3820/1
BPA0841.00	3800
BPA0842.00	3853
BPA0842.20	3853/1
BPA0842.30	3853/1
BPA0843.00	3852
BPA0843.10	3852
BPA0845.01	4271
BPA0849.00	3823
BPA0855.00	4082
BPA0857.00	4180
BPA0857.20	4378
BPA0858.01	3826/1
BPA0858.11	3826/1
BPA0858.32	3826/3
BPA0859.01	3800/1
BPA0859.10	3800
BPA0859.11	3800/1
BPA0859.12	3800/3
BPA0859.21	3800/2
BPA0860.12	4301
BPA0860.12	4301/1
BPA0874.02	3825
BPA0876.01	3933
BPA0876.31	3933
BPA0876.41	3933
BPA0879.12	3986
BPA0880.00	3931
BPA0881.00	3854
BPA0884.00	3910
BPA0888.00	4211
BPA0888.40	4211
BPA0892.00	4179
BPA0893.02	3961
BPA0897.11	3842
BPA0899.00	3831
BPA0951.02	3912
BPA0951.11	3912
BPA0953.02	3959
BPA0954.00	4013
BPA0958.10	4208
BPA0959.01	3835
BPA0960.01	3834
BPA0961.00	3914
BPA0962.00	3950
BPA0964.12	4096
BPA0970.02	3889
BPA0971.02	3769
BPA0973.02	4031
BPA0976.00	3849
BPA0976.10	3849
BPA0976.20	3849
BPA0977.00	3850
BPA0978.02	4112
BPA0984.00	3801
BPA0985.02	4074

OPEN PARTS	BESER
NO	NO
BPA0986.00	3951
BPA0987.00	3983
BPA0987.11	3983/1
BPA0987.22	3983
BPA0988.00	3891
BPA0996.00	4076
BPA1030.01	3904
BPA1031.00	3905
BPA1036.02	4042
BPA1038.02	4028
BPA1038.12	4028
BPA1039.00	4105
BPA1040.00	4111
BPA1041.02	3978
BPA1041.12	3978
BPA1042.02	3979
BPA1045.01	3841/1
BPA1046.02	3890
BPA1047.02	4154
BPA1048.00	3894
BPA1051.02	4106
BPA1052.00	4346
BPA1052.30	4380
BPA1068.02	4159
BPA1069.00	3827
BPA1081.01	4036
BPA1081.11	4036
BPA1082.00	3885
BPA1082.50	3885
BPA1098.14	3886
BPA1100.00	4173
BPA1100.11	4173/1
BPA1100.21	4173/1
BPA1101.04	3940
BPA1102.04	3939
BPA1103.00	3946
BPA1109.02	3923/1
BPA1110.02	3924/1
BPA1113.00	4137
BPA1124.00	4220
BPA1125.00	4215
BPA1126.08	4006
BPA1127.08	4018
BPA1128.08	4198
BPA1129.01	3900
BPA1132.00	4389
BPA1133.02	3968
BPA1134.02	4001
BPA1135.02	3969
BPA1136.01	4213
BPA1136.12	4213
BPA1137.02	4081
BPA1138.00	3984
BPA1139.02	3985
BPA1145.00	4388
BPA1149.10	4058
BPA1151.00	3988/1
BPA1158.00	4293
BPA1159.00	3944
BPA1159.10	3944
BPA1162.01	3952
BPA1166.01	4000
BPA1173.02	4016
BPA1177.00	3987
BPA1179.00	4210
BPA1181.02	4113
BPA1183.01	4121
BPA1196.02	4029
BPA1200.00	3945
BPA1200.30	3945
BPA1202.00	4240
BPA1204.12	3959
BPA1208.02	3880
BPA1209.02	3980
BPA1224.00	3958
BPA1225.02	3929
BPA1226.02	3960
BPA1226.32	4251/1
BPA1231.00	3949
BPA1232.00	3953

OPEN PARTS	BESER
NO	NO
BPA1234.00	4077
BPA1238.00	3820/3
BPA1239.02	3989
BPA1242.01	3975
BPA1243.00	3962
BPA1243.00	3962/1
BPA1245.00	3925
BPA1245.00	3925/2
BPA1245.02	3965/1
BPA1245.10	3965
BPA1246.00	3926
BPA1246.00	3926/1
BPA1246.02	3926
BPA1246.02	3926/1
BPA1247.00	3963
BPA1247.00	3963/1
BPA1248.00	3964
BPA1248.10	3964/1
BPA1250.02	3906
BPA1250.02	3906/1
BPA1250.02	3906/1A
BPA1250.02	3906/2
BPA1250.11	3906
BPA1250.11	3906/1
BPA1250.11	3906/1A
BPA1250.11	3906/2
BPA1251.02	3920
BPA1251.02	3920/1
BPA1252.01	3907
BPA1252.01	3907/1
BPA1252.01	3907/1A
BPA1252.01	3907/2
BPA1252.02	3907
BPA1252.02	3907/1
BPA1252.02	3907/1A
BPA1252.02	3907/2
BPA1256.00	4157
BPA1259.02	4005
BPA1261.12	3976
BPA1264.02	4004
BPA1275.01	3922
BPA1275.01	3922/1
BPA1281.02	4122
BPA1282.00	4092
BPA1282.00	4092/1
BPA1286.02	3954
BPA1289.02	4160
BPA1290.02	4156
BPA1291.02	4035
BPA1292.01	3972
BPA1293.02	4015
BPA1297.00	4207
BPA1299.00	4151
BPA1299.00	4151/1
BPA1301.00	4248
BPA1302.02	4039
BPA1302.22	4039
BPA1303.02	4165
BPA1304.00	4249
BPA1304.10	4259
BPA1305.00	4247
BPA1310.02	3956
BPA1318.00	4038
BPA1323.00	3970
BPA1339.00	3995
BPA1342.00	4390
BPA1343.00	4260
BPA1350.00	4134
BPA1351.00	3966
BPA1351.00	3966/1
BPA1352.00	3967
BPA1356.02	4037
BPA1356.02	4037/1
BPA1362.02	4061
BPA1375.12	4149
BPA1377.00	4391
BPA1379.10	4310
BPA1382.00	3971
BPA1387.00	4142
BPA1388.04	4150

OPEN PARTS	BESER
NO	NO
BPA1403.02	4146
BPA1407.00	4124
BPA1407.12	4308
BPA1410.00	4291
BPA1420.00	4135
BPA1421.00	4325/1
BPA1431.02	4008
BPA1431.12	4230
BPA1432.02	4014
BPA1433.00	4379
BPA1439.11	4057
BPA1440.01	4162
BPA1442.01	4132
BPA1442.01	4172
BPA1442.01	4172/1
BPA1457.00	4382
BPA1468.04	4167
BPA1476.00	4383
BPA1478.00	4381
BPA1482.00	4161
BPA1496.00	4378
BPA1514.00	4204
BPA1516.00	4241
BPA1516.20	4349
BPA1520.02	4174/1
BPA1530.00	4201
BPA1530.00	4201/1
BPA1538.04	4315
BPA1540.10	4140/1
BPA1548.02	4312
BPA1557.00	4374
BPA1560.00	4371
BPA1560.00	4373
BPA1561.02	4176
BPA1561.02	4176/1
BPA1562.00	4372
BPA1582.02	4283/1
BPA1602.02	4351/1
BPA1719.00	4369
BPA1720.00	4370
BPA1724.08	4280
BPA1801.02	4376
BPA4310.01	4249
BPA7843.02	3762

PAGID	BESER
NO	NO
8D355014-721	4188
8DB355012-811	4221
8DB355012-821	4219
8DB355020-531	4202
8DB355021-011	4189
C2004	3679
C2014	3994
C2018	3773
C3002	3537
C3006	3537
C3014	3773
C3016	3926
C3016	3926/1
C4020	3433/1
C4022	3433
C4026	3749
C4030	3575
C4062	3575/2
C4064	3823
C4066	3749/1
C4070	3942
C4074	3575/2
C4076	3823
C5006	3315
C5006	3515
C6006	3523
C6023	3965
C6024	3925
C6024	3925/2
C6026	3962
C6026	3962/1

PAGID	BESER
NO	NO
C6027	3963
C6027	3963/1
C6028	3995
C6029	4092
C6029	4092/1
C7002	4216
C7008	4054
C9005	3965/1
T0001	3633
T0004	3758
T0006	3449
T0007	3634
T0008	3752
T0009	3760
T0013	3746
T0015	3446
T0023	3666
T0033	3600
T0034	4212
T0035	3723
T0044	3448
T0047	3661
T0053	3437
T0063	3662
T0082	3413
T0084	3453
T0210	3526
T0213	3419
T0215	3429
T0221	3466
T0230	3311
T0263	3323
T0264	3321
T0290	3440
T0291	3378
T0296	3374
T0303	3320
T0307	3572
T0310	3625
T0311	3513
T0317	3394
T0318	3402
T0325	3397
T0328	3620
T0331	3714
T0335	3436
T0337	3462
T0348	3603
T0351	3444/1
T0352	3430
T0353	3432
T0355	3400
T0358	3463
T0359	3401
T0365	3582
T0366	3502
T0370	3631
T0373	3395
T0375	3410
T0381	3423
T0388	3585
T0388	3585/1
T0389	3473
T0390	3445
T0391	4087
T0393	3776
T0394	4104
T0397	3426
T0398	3622
T0399	3640
T0405	3318
T0412	3572
T0413	3573
T0449	3327
T0451	3343
T0451	3483
T0456	3365
T0465	3335
T0475	3320
T0481	3318

PAGID	BESER
NO	NO
T0571	3416
T0603	3346
T0609	3317
T0616	3316
T0624	3424/1
T0699	3527
T0810	3393
T0825	3421
T0838	3370
T0841	3410
T0843	3709
T0854	3509
T0859	3415
T0863	3407
T0865	3369
T0882	3371
T1003	3621
T1004	3611
T1005	3549
T1010	3550
T1016	3717
T1021	3470
T1022	3589
T1026	3564
T1027	3578
T1030	3459
T1034	3469
T1036	3629
T1037	3563
T1038	3680
T1040	3583
T1045	3623
T1050	3581
T1062	3558
T1067	3630
T1075	3528
T1079	3736
T1081	3593
T1082	3505
T1082	3615
T1088	3584
T1091	3677
T1092	3863
T1094	3566
T1097	3538
T1099	3617
T1100	4197
T1101	3682
T1104	3656
T1106	3506
T1107	3606
T1111	3567
T1117	3879
T1123	3545
T1124	3670
T1125	3680
T1126	3628
T1130	3867
T1132	4182
T1133	3740
T1136	3881
T1139	3663
T1140	3618
T1141	3570
T1142	3678
T1143	3637
T1151	3897
T1152	3821
T1153	3676
T1154	3590/1
T1160	3569
T1161	3548
T1161	3690
T1164	3762
T1167	3754
T1168	3681
T1169	3861
T1170	3804
T1171	4126
T1171	4126/1

PAGID	BESER
NO	NO
T1172	4069
T1174	4102
T1175	4101
T1175	4209
T1176	4281
T1183	4222
T1185	3568
T1188	4103
T1189	3919
T1190	3918
T1193	3877
T1195	4095
T1196	3794
T1197	3943
T1198	3676
T1200	3584
T1206	3717
T1210	4100
T1211	4093
T1212	3950
T1213	3852
T1215	3853
T1216	3790
T1223	4096
T1225	4042
T1230	4180
T1234	4211
T1236	3931
T1239	3822
T1240	4123
T1241	3829
T1242	3648
T1243	3830
T1244	3913
T1245	3938
T1246	3855
T1250	3892
T1252	4071
T1254	4084
T1255	4155
T1257	4271
T1261	3801
T1263	4148/1
T1265	3802
T1269	3928
T1271	3874
T1273	3932
T1274	3955
T1275	4027
T1277	4009
T1280	4110
T1281	4158
T1282	3767
T1283	4094
T1284	4109
T1284	4232
T1285	3436
T1289	3598/1
T1293	4179
T1296	4011
T1302	3781
T1303	3653
T1305	3993
T1307	3843
T1310	3856
T1314	4012
T1316	4105
T1320	3764
T1321	3574
T1321	3914/1
T1322	4119
T1323	3915
T1324	3854
T1325	4102
T1331	3912
T1332	4013
T1333	3831
T1334	3933
T1335	4269
T1338	3900

PAGID	BESER
NO	NO
T1345	3790/1
T1347	4125
T1349	3552
T1354	3834
T1355	3835
T1356	3914
T1359	3910
T1366	4181
T1367	3961
T1368	3891
T1369	3986
T1370	3859
T1371	4153
T1373	3849
T1374	3850
T1376	3904
T1377	3905
T1378	4028
T1379	4111
T1382	3923/1
T1383	3924/1
T1384	4017
T1389	4179
T1390	3795/1
T1392	4152
T1393	4112
T1395	4106
T1397	4159
T1398	3825
T1399	3983
T1400	3976/1
T1401	3979
T1403	4303
T1404	3769
T1406	3512/2
T1411	4109
T1411	4232
T1412	3959
T1413	3911
T1417	3458
T1420	4088
T1422	3820
T1422	3820/1
T1424	3848
T1425	4074
T1429	3889
T1430	3895
T1431	4082
T1432	3841
T1436	3885
T1438	3892
T1442	4173
T1443	3951
T1445	4389
T1447	4388
T1449	3800
T1454	4240
T1457	3841/1
T1458	3894
T1459	3421
T1461	3939
T1462	3940
T1463	3946
T1468	3820
T1468	3820/1
T1469	3842
T1470	4031
T1474	3667
T1477	4034
T1477	4034/1
T1487	4096
T1489	3853/1
T1491	3685
T1492	3905
T1493	3872
T1496	3984
T1499	3945
T1501	3826
T1502	4018
T1503	4198

PAGID	BESER
NO	NO
T1504	4006
T1505	3976/1
T1508	3978
T1511	4115
T1513	4293
T1514	3944
T1516	4210
T1518	4081
T1519	4001
T1522	3952
T1526	4118
T1527	4016
T1528	3801
T1531	3987
T1532	4137
T1534	4058
T1538	4093
T1543	4213
T1550	4208
T1552	3968
T1553	3969
T1562	3985
T1563	3879
T1565	4059
T1579	3919
T1580	3953
T1581	4077
T1582	3949
T1590	4000
T1591	3880
T1592	3980
T1593	4113
T1594	3983/1
T1597	4303
T1600	3929
T1601	3958
T1602	3960
T1603	3988
T1603	3988/1
T1605	3948
T1610	4036
T1613	4186
T1615	3895
T1618	4208
T1619	4207
T1622	4248
T1623	4248
T1624	4249
T1625	3827
T1626	4309
T1629	3503
T1631	4211
T1637	4247
T1638	4248
T1640	3906
T1640	3906/1
T1640	3906/1A
T1640	3906/2
T1641	3920
T1641	3920/1
T1642	3907
T1642	3907/1
T1642	3907/1A
T1642	3907/2
T1648	3826/1
T1651	3453
T1653	4161
T1655	3820/3
T1656	3922
T1656	3922/1
T1660	4039
T1661	4165
T1663	4150
T1668	4149
T1671	3765
T1672	3989
T1676	3976
T1679	4143
T1681	3996
T1684	3982

PAGID	BESER
NO	NO
T1688	3975
T1689	4274
T1695	3886
T1696	4157
T1699	4390
T1701	3964
T1704	3800/2
T1708	3972
T1710	4151
T1710	4151/1
T1717	3903
T1724	4035
T1726	3956
T1727	4037
T1727	4037/1
T1728	3954
T1729	4156
T1731	4160
T1736	4260
T1743	4029
T1749	4029
T1750	3997
T1751	4038
T1759	3984
T1766	3970
T1769	4325/1
T1771	4181/1
T1772	4141
T1773	3966
T1773	3966/1
T1774	3967
T1775	4134
T1778	4122
T1782	4135
T1788	3971
T1795	3891
T1796	3955
T1798	4309
T1800	3748
T1801	3748
T1806	4391
T1806EP	4391
T1807	4005
T1808	4121
T1817	4258
T1818	4380
T1819	4379
T1820	4015
T1822	4004
T1825	3800/1
T1832	4173/1
T1847	3933
T1848	4061
T1850	4142
T1865	4146
T1874	3797
T1894	3964/1
T1898	3945
T1905	4147
T1908	3980
T1911	4073
T1913	4215
T1914	4220
T1919	4162
T1926	4346
T1933	3928
T1937	4310
T1956	4014
T1957	4014
T1958	4230
T1959	4008
T1962	4378
T1969	4056
T1970	4057
T1971	4132
T1971	4172
T1971	4172/1
T1974	4230
T1975	4008
T1976	4241

PAGID	BESER
NO	NO
T1981	3560
T1987	4256
T1990	3906/1
T1997	4255
T2003	3826/1
T2005	4058
T2006	3474
T2012	4314
T2030	4148/1
T2034	3779
T2050	3853/1
T2052	4382
T2054	3800/3
T2059	4167
T2061	4039
T2071	3945
T2073	4038
T2075	4145
T2083	4240
T2086	4124
T2087	3983/2
T2087	3983/3
T2097	3826/3
T2103	3959
T2105	3952
T2106	3993
T2125	3944
T2127	3944
T2138	3980
T2148	3768
T2164	4381
T2167	4049
T2175	4060
T2178	3998
T2198	4161
T2201	4171
T2201	3922/3
T2201	4171/1
T2204	4200
T2209	4233
T2215	4173/2
T2223	4204
T2243	4176
T2243	4176/1
T2244	4201
T2244	4201/1
T2260	4140
T2262	4226
T2269	4174
T2269	4174/1
T2270	4175
T2275	4140/1
T2284	4315
T2292	4371
T2292	4373
T2303	4372
T2304	4374
T2318	4317
T2496	4030
T2545	4279
T2595	4251/1
T2633	4390
T2649	4301
T2649	4301/1
T2660	4280
T2666	4369
T3003	3757
T3003	3857
T3004	3766
T3007	3882
T3009	3779
T3010	4072
T3011	3560
T3013	3554
T3013	3651
T3014	3522
T3016	3704
T3017	4148/1
T3018	3607
T3019	3688

PAGID	BESER
NO	NO
T3021	4080
T3022	4128
T3023	3696
T3024	3686
T3025	3685
T3031	4108
T3033	3674
T3034	3887
T3036	3507
T3037	3888
T3038	3577
T3038	3647
T3039	3675
T3043	3833
T3049	4099
T3052	3875
T3053	4086
T3058	3745
T3064	3693
T3069	3436
T3076	3673
T3077	4078
T3078	3697
T3081	3883
T3083	3777
T3085	3602
T3090	3898
T3091	3511
T3093	3744
T3095	4059
T3096	3778
T3098	3768
T3099	3769
T3103	3901
T3106	3687/1
T3112	3884
T3115	4010
T3117	3788
T3120	3817
T3123	3809
T3124	3780
T3125	4079
T3129	3890
T3130	4154
T3132	3945
T3135	3916
T3138	4383
T3150	4265
T4006	3484
T4017	3417
T4019	3417/1
T4023	3312
T4074	3320
T4099	3405
T4113	3339
T4113	3514
T4116	3350
T4135	3315
T4135	3515
T4150	3441
T4151	3486
T4154	3444/1
T5003	3490
T5005	3408
T5008	3649
T5009	3619
T5012	3605
T5019	3624
T5021	3650
T5022	3529
T5026	3422
T5027	3457
T5030	3733
T5035	3609
T5037	3467
T5039	3543
T5050	3531
T5051	3551
T5054	3419
T5056	3536

PAGID	BESER
NO	NO
T5061	3642
T5063	3562
T5064	3660
T5065	3683
T5065	3872/1
T5072	3553
T5074	3556
T5077	3503
T5078	3595
T5079	3559
T5090	3750
T5091	3909
T5098	3896
T5099	3636
T5100	4062
T5101	4125
T5110	4125
T5111	3836
T5112	3836
T5115	4020
T5116	3373
T5117	3610
T5118	3755
T5120	3872
T5122	3896
T5128	3846
T5137	4345
T5140	3553/1
T5150	4076
T5161	4138
T5161	4138/1
T5162	3826/1
T5163	3800/1
T5166	3820
T5166	3820/1
T5167	3800
T6006	3442
T6008	3366/1
T6028	3493
T6028	3494
T6064	3495
T6065	3496/1
T6088	3380
T6089	3428
T9000	3482
T9003	3424
T9008	3873
T9011	3641
T9012	3464
T9017	3425
T9025	3689
T9027	4214
T9028	3487
T9028	3489
T9030	3608
T9031	3643
T9033	3539
T9037	3596
T9038	3819
T9039	3878
T9051	3512
T9051	3512/1
T9052	3771
T9054	3799
T9069	3722
T9073	3659
T9098	3784
T9101	3539/1
T9103	3935
T9104	3934
T9107	3921

PERMAFUSE	BESER
NO	NO
83.219.1	3417/1
83.257.0	3494
83.285.1	3489
83.291.1	3444/1
83.291.2	3585/1
83.307.0	3988/1
83.460.0	4148/1
83.460.1	4148/1
83.530.1	3942/A
83.551.0	3872/1
83.554.5	4181/1
83.632.4	4380
83.657.0	3647
83.723.0	3820/1
83.725.0	3820/1
83.735.0	4126/1
83.778.1	4138/1
83.789.1	4378
83.789.2	4378
83.793.2	4345
83.821.0	4097/1
83.854.0	4389
83.854.2	4389
83.855.0	4388
83.855.2	4388
83.882.0	4293
83.886.0	3922/1
83.886.3	4171/1
83.892.0	3906/1
83.892.0	3906/1A
83.892.0	3906/2
83.893.0	3907/1
83.893.0	3907/1A
83.893.0	3907/2
83.900.0	3925/2
83.901.0	3963/1
83.902.0	3962/1
83.903.0	3926/1
83.905.0	3920/1
83.907.0	4092/1
83.912.0	4151/1
83.921.0	4390
83.924.0	3966/1
83.928.0	4037/1
83.993.1	4228/1
83.994.1	4140/1

PEX	BESER
NO	NO
7007	3611
7008	3621
7015	3416
7020	3374
7022	3378
7024	3513
7028	3410
7030	3365
7031	3605
7038	3442
7039	3776
7042	3421
7044	3417
7048	3394
7049	3464
7054	3424
7056	3503
7.061	3494
7061	3493
7062	3496/1
7063	3312
7.065	3486/1
7065	3486
7066	3444
7067	3441
7068	3536
7069	3466
7072	3572
7081	3402
7082	3397

PEX	BESER
NO	NO
7083	3415
7089	3470
7091	3457
7100	3469
7111	3564
7114	3430
7116	3873
7117	3583
7118	3583
7120	4087
7127	3607
7129	3833
7.133	3872/1
7133	3683
7134	4212
7138	3629
7140	3689
7144	3343
7144	3483
7150	3760
7154	4104
7155	3562
7158	4086
7160	3320
7162	3350
7167	3426
7171	3529
7177	3723
7183	3717
7188	3623
7189	3474
7195	3563
7203	3550
7.208	4148/1
7209	3528
7213	3522
7214	3685
7217	3549
7218	3622
7219	4108
7220	3448
7221	4080
7226	3688
7227	3608
7229	3473
7232	3445
7233	3757
7233	3857
7234	3589
7235	3686
7238	3704
7239	3531
7240	3551
7250	3558
7251	3556
7252	3610
7253	3539
7254	3593
7260	4128
7268	3499
7269	3436
7274	3504
7281	3423
7.284	3489
7284	3487
7289	3819
7290	3878
7295	3506
7296	3680
7301	3661
7314	3526
7316	3449
7317	3482
7321	3771
7332	3536
7335	3660
7343	3662
7348	3596
7350	3584
7356	4214

PEX	BESER
NO	NO
7362	3495
7363	3888
7364	3545
7376	4182
7377	3408
7378	3630
7380	3581
7385	3736
7386	3733
7387	3674
7388	3887
7390	3503
7395	3643
7396	3693
7.401	3585/1
7401	3585
7402	3553
7404	3595
7405	3559
7.410	3512/1
7410	3512
7.412	3647
7412	3577
7414	3883
7416	3678
7417	3670
7418	3567
7419	3750
7424	3677
7425	3602
7426	3675
7428	3538
7431	3799
7434	3617
7438	3566
7441	3636
7444	3656
7445	3570
7452	3505
7452	3615
7455	3896
7457	3863
7458	4062
7459	3606
7461	4020
7463	3637
7466	3682
7470	3659
7471	3575
7472	3554
7472	3651
7478	3659
7482	3722
7484	3872
7485	4125
7487	4059
7491	3762
7492	3938
7494	3754
7495	3755
7496	3778
7499	4281
7.500	4126/1
7500	4126
7501	4069
7504	3618
7506	3861
7508	4155
7509	3681
7510	3804
7516	3918
7518	4010
7519	3768
7521	3552
7522	3780
7523	3663
7524	3676
7525	3821
7529	3419
7530	3884

PEX	BESER
NO	NO
7531	3794
7535	3943
7538	3898
7539	3877
7541	3897
7544	3795/1
7546	3846
7552	3921
7554	3836
7555	3511
7557	3744
7558	3687/1
7559	3764
7560	4079
7562	3539/1
7563	4100
7564	4093
7569	4211
7570	3853
7571	3993
7573	3856
7574	3590/1
7575	3373
7576	3919
7578	4102
7579	4094
7583	3879
7585	4101
7585	4209
7588	4103
7595	3931
7596	3854
7597	3950
7603	3679
7604	4027
7607	3852
7609	4123
7610	4011
7612	3769
7613	4095
7614	3834
7615	3835
7617	3790
7619	3935
7620	3934
7621	3826/1
7622	3800/1
7623	3575/2
7626	3553/1
7627	3843
7628	4345
7.630	4097/1
7630	4097
7631	3881
7634	3896
7642	3986
7643	3311
7645	3855
7647	3800
7650	3784
7.651	3820/1
7651	3820
7655	3628
7657	3909
7659	3914
7661	3983
7664	3714
7668	3790/1
7672	4096
7674	4180
7680	4152
7681	4042
7682	3961
7683	3841/1
7685	3842
7686	4110
7688	4112
7690	3749
7691	3801
7692	3817

PEX	BESER
NO	NO
7693	4115
7697	3904
7698	3905
7699	4158
7700	4153
7702	3830
7703	3910
7705	3892
7708	4076
7710	3939
7711	3946
7712	3940
7714	3859
7717	3767
7722	4173
7723	3826
7724	3800
7725	3984
7726	3850
7727	3849
7728	3826/1
7734	3890
7735	4154
7737	3825
7738	3889
7739	4118
7750	4222
7.752	4138/1
7752	4138
7756	3924
7764	3983/1
7771	3945
7773	3885
7781	3822
7782	4119
7783	4159
7784	3901
7785	4012
7786	3955
7.788	3512/2
7789	4072
7792	4271
7795	4009
7797	3959
7801	4084
7803	4109
7803	4232
7804	3915
7807	3831
7.813	4389
7.814	4388
7816	3979
7817	3978
7818	4293
7819	3944
7.820	3962/1
7820	3962
7.821	3925/2
7821	3925
7.822	3963/1
7822	3963
7.823	3926/1
7823	3926
7825	4058
7828	3952
7830	4001
7839	3894
7843	3987
7847	3913
7850	3928
7856	4115
7862	4106
7863	3821
7.867	3920/1
7867	3920
7.868	3907/1
7.868	3907/1A
7.868	3907/2
7868	3907
7.869	3906/1

PEX	BESER
NO	NO
7.869	3906/1A
7.869	3906/2
7869	3906
7870	4074
7872	4137
7874	3933
7879	4161
7880	4173/1
7.062S	3496/1
7.066S	3444
7.089S	3470
7.100S	3469
7.129S	3833
7.183S	3717
7.188S	3623
7.195S	3563
7.203S	3550
7.213S	3522
7.233S	3757
7.233S	3857
7.240S	3551
7.250S	3558
7.253S	3539
7.254S	3593
7.284S	3487
7.284S	3489
7.295S	3506
7.335S	3660
7.356S	4214
7.386S	3733
7.387S	3674
7.388S	3887
7.390S	3503
7.402S	3553
7.416S	3678
7.417S	3670
7.418S	3567
7.424S	3677
7.438S	3566
7.441S	3636
7.444S	3656
7.457S	3863
7.458S	4062
7.466S	3682
7.472S	3554
7.472S	3651
7.485S	4125
7.487S	4059
7.491S	3762
7.492S	3938
7.494S	3754
7.495S	3755
7.499S	4281
7.510S	3681
7.516S	3918
7.525S	3821
7.529S	3419
7.539S	3877
7.546S	3846
7.552S	3921
7.554S	3836
7.563S	4100
7.564S	4093
7.569S	4211
7.570S	3853
7.583S	3879
7.607S	3852
7.631S	3881
7.655S	3628
7.657S	3909
7.659S	3914
7.681S	4042
7.682S	3961
7.708S	4076
7.820S	3962
7.820S	3962/1
7.821S	3925
7.821S	3925/2
7.822S	3963
7.822S	3963/1
7.823S	3926
7.823S	3926/1

QHAZELL	BESER
NO	NO
BP101	3311
BP102	3312
BP110	3373
BP112	3321
BP125	3316
BP126	3318
BP129	3335
BP135	3343
BP135	3483
BP136	3327
BP141	3410
BP153	3378
BP156	3324
BP160	3417/1
BP161	3417
BP163	3423
BP168	3315
BP168	3515
BP169	3661
BP170	3416
BP175	3650
BP186	3317
BP191	3509
BP199	3374
BP200	3503
BP203	3527
BP213	3709
BP215	3320
BP216	3468
BP219	3484
BP220	3365
BP221	3370
BP228	3624
BP234	3419
BP235	3429
BP243	3573
BP244	3572
BP251	3405
BP255	3393
BP256	3421
BP259	3710
BP284	3379
BP287	3513
BP291	3350
BP294	3413
BP296	3323
BP310	3381
BP311	3621
BP316	3369
BP318	3536
BP319	3339
BP319	3514
BP326	3440
BP327	3371
BP329	3752
BP335	3402
BP337	3714
BP341	3579
BP342	3611
BP344	3424/1
BP352	3401
BP353	3466
BP356	3410
BP359	3441
BP360	3486
BP360	3486/1
BP361	3380
BP365	3442
BP366	3397
BP367	3620
BP370	3490
BP371	3482
BP372	3408
BP373	3462
BP374	3444
BP375	3625
BP376	3493
BP376	3494
BP377	3474
BP378	3504

QHAZELL	BESER
NO	NO
BP379	3495
BP398	3366/1
BP399	3619
BP400	3467
BP401	3400
BP404	3649
BP406	3603
BP414	3771
BP416	3449
BP424	3436
BP425	3582
BP427	3437
BP428	3463
BP436	3760
BP437	3415
BP438	3395
BP445	3589
BP446	3549
BP447	3412
BP448	4212
BP449	3469
BP450	3470
BP452	3683
BP452	3872/1
BP454	3496/1
BP455	3457
BP457	3428
BP459	3717
BP462	3583
BP467	3432
BP469	3529
BP470	4212
BP472	3760
BP473	3564
BP474	3873
BP492	3605
BP496	4087
BP501	3422
BP503	3526
BP512	3634
BP520	3464
BP523	3623
BP531	3563
BP532	3578
BP533	3609
BP534	3609
BP537	3487
BP537	3489
BP540	3543
BP542	3600
BP544	3425
BP548	3631
BP551	3632
BP552	3502
BP553	3446
BP554	3757
BP554	3857
BP555	3584
BP559	3662
BP564	3723
BP567	3522
BP569	3550
BP570	3408
BP571	3430
BP572	3448
BP575	4087
BP577	3660
BP578	3562
BP579	4104
BP581	3680
BP586	3882
BP589	3560
BP590	4088
BP591	3642
BP593	3641
BP594	3445
BP595	3473
BP596	3491
BP597	3819
BP599	3593

QHAZELL	BESER
NO	NO
BP600	3558
BP603	3598
BP604	3528
BP605	3539
BP606	3531
BP607	3551
BP609	4128
BP610	3878
BP611	3366
BP639	3746
BP647	3679
BP675	3689
BP678	4108
BP680	3779
BP685	3536
BP693	3629
BP694	3733
BP696	3596
BP697	3622
BP703	3704
BP704	4148/1
BP706	3581
BP707	4072
BP717	3640
BP718	3696
BP719	3436
BP721	3426
BP722	4080
BP728	3523
BP733	3607
BP734	3686
BP737	3695
BP739	3685
BP742	3554
BP742	3651
BP744	4078
BP750	3503
BP754	3556
BP755	3673
BP757	3693
BP761	3688
BP762	3833
BP764	3883
BP766	4214
BP772	3553
BP773	3630
BP778	3635
BP790	3507
BP791	3674
BP792	3887
BP793	3736
BP797	3888
BP799	3608
BP806	3898
BP810	3595
BP811	3559
BP827	3879
BP829	3423/1
BP833	3545
BP838	3994
BP839	3773
BP840	3512
BP840	3512/1
BP841	3875
BP848	3758
BP852	3583
BP854	3745
BP856	3714
BP862	3617
BP864	3750
BP867	3567
BP868	3678
BP869	3670
BP873	3538
BP874	3505
BP874	3615
BP876	3570
BP884	4086
BP891	4182
BP898	3740

QHAZELL	BESER
NO	NO
BP902	3909
BP903	3799
BP904	3574
BP904	3914/1
BP919	3677
BP920	3863
BP922	3506
BP925	3585
BP927	3656
BP929	3680
BP930	3577
BP930	3647
BP956	3867
BP960	3675
BP967	3682
BP968	3636
BP970	3777
BP971	3566
BP973	4062
BP974	3606
BP977	3459
BP978	4020
BP979	3896
BP981	3872
BP982	3722
BP983	3762
BP992	3754
BP1002	3548
BP1002	3690
BP1007	3610
BP1024	3874
BP1031	4197
BP1036	3667
BP1043	3781
BP1045	3809
BP1047	3618
BP1052	3881
BP1056	3637
BP1060	3822
BP1062	3663
BP1067	3659
BP1068	3938
BP1069	3687/1
BP1073	4125
BP1074	3575
BP1079	3653
BP1081	3932
BP1084	3676
BP1091	3755
BP1093	4155
BP1094	3780
BP1096	3681
BP1098	4281
BP1099	4059
BP1100	3821
BP1101	4027
BP1102	3859
BP1103	3919
BP1104	3918
BP1114	3744
BP1115	3778
BP1116	3768
BP1124	3568
BP1131	3897
BP1132	3795/1
BP1133	3419
BP1134	4126
BP1134	4126/1
BP1135	4069
BP1140	3628
BP1149	4094
BP1150	3800
BP1151	3598/1
BP1164	3915
BP1167	3602
BP1168	3697
BP1169	4099
BP1171	4275
BP1178	3884
BP1179	3764

QHAZELL	BESER
NO	NO
BP902	3909
BP903	3799
BP904	3574
BP904	3914/1
BP919	3677
BP920	3863
BP922	3506
BP925	3585
BP927	3656
BP929	3680
BP930	3577
BP930	3647
BP956	3867
BP960	3675
BP967	3682
BP968	3636
BP970	3777
BP971	3566
BP973	4062
BP974	3606
BP977	3459
BP978	4020
BP979	3896
BP981	3872
BP982	3722
BP983	3762
BP992	3754
BP1002	3548
BP1002	3690
BP1007	3610
BP1024	3874
BP1031	4197
BP1036	3667
BP1043	3781
BP1045	3809
BP1047	3618
BP1052	3881
BP1056	3637
BP1060	3822
BP1062	3663
BP1067	3659
BP1068	3938
BP1069	3687/1
BP1073	4125
BP1074	3575
BP1079	3653
BP1081	3932
BP1084	3676
BP1091	3755
BP1093	4155
BP1094	3780
BP1096	3681
BP1098	4281
BP1099	4059
BP1100	3821
BP1101	4027
BP1102	3859
BP1103	3919
BP1104	3918
BP1114	3744
BP1115	3778
BP1116	3768
BP1124	3568
BP1131	3897
BP1132	3795/1
BP1133	3419
BP1134	4126
BP1134	4126/1
BP1135	4069
BP1140	3628
BP1149	4094
BP1150	3800
BP1151	3598/1
BP1164	3915
BP1167	3602
BP1168	3697
BP1169	4099
BP1171	4275
BP1178	3884
BP1179	3764

QHAZELL	BESER
NO	NO
BP1342	3835
BP1343	3914
BP1344	4012
BP1347	3817
BP1350	3854
BP1351	3931
BP1352	3986
BP1353	3618
BP1354	3825
BP1355	3853
BP1357	3879
BP1358	3801
BP1359	3951
BP1362	3912
BP1363	3891
BP1364	4097
BP1364	4097/1
BP1366	4211
BP1368	4013
BP1369	4031
BP1370	4138
BP1370	4138/1
BP1371	3933
BP1373	3910
BP1374	3961
BP1376	3831
BP1377	3849
BP1378	3889
BP1379	3823
BP1380	4159
BP1381	3820
BP1381	3820/1
BP1384	3985
BP1387	3895
BP1389	3978
BP1390	4017
BP1394	4154
BP1395	3890
BP1397	4109
BP1397	4232
BP1398	4180
BP1399	4179
BP1401	3979
BP1402	3790/1
BP1404	3900
BP1408	4119
BP1411	4118
BP1412	3983
BP1415	3850
BP1416	4112
BP1417	4152
BP1419	3904
BP1420	3905
BP1421	4096
BP1424	4346
BP1427	3885
BP1434	3924
BP1435	4042
BP1437	3939
BP1438	3940
BP1439	3946
BP1443	3894
BP1444	3959
BP1447	4028
BP1448	4106
BP1452	3895
BP1454	3575/2
BP1455	3841
BP1456	3841/1
BP1457	3842
BP1463	4076
BP1465	4111
BP1466	4181
BP1467	4105
BP1472	4303
BP1475	4173
BP1476	3892
BP1477	4074
BP1479	4388
BP1481	3769

QHAZELL	BESER
NO	NO
BP1483	4179
BP1484	4389
BP1492	4208
BP1494	3827
BP1498	3853/1
BP1499	4058
BP1505	3987
BP1506	3984
BP1510	3976/1
BP1511	4016
BP1514	4001
BP1515	3968
BP1516	3969
BP1517	4293
BP1518	3944
BP1523	3988
BP1523	3988/1
BP1524	4210
BP1526	3952
BP1528	3906
BP1528	3906/1
BP1528	3906/1A
BP1528	3906/2
BP1529	3920
BP1529	3920/1
BP1530	3907
BP1530	3907/1
BP1530	3907/1A
BP1530	3907/2
BP1532	3983/1
BP1534	4018
BP1535	4006
BP1537	3880
BP1538	3980
BP1540	4113
BP1543	4081
BP1544	4213
BP1545	3929
BP1546	4000
BP1551	3800/2
BP1553	3963
BP1553	3963/1
BP1554	3962
BP1554	3962/1
BP1555	3925
BP1555	3925/2
BP1556	3926
BP1556	3926/1
BP1557	4157
BP1558	4161
BP1561	3964
BP1565	3975
BP1566	3945
BP1572	3972
BP1574	3820/3
BP1575	3922
BP1575	3922/1
BP1577	4173/1
BP1578	3826/1
BP1579	3976
BP1581	4240
BP1582	4247
BP1583	4248
BP1586	3958
BP1588	4151
BP1588	4151/1
BP1592	4039
BP1593	4165
BP1594	3989
BP1595	3960
BP1596	4038
BP1600	3953
BP1601	4077
BP1602	3949
BP1603	4260
BP1604	3903
BP1608	4036
BP1613	3765
BP1615	3982
BP1618	3954

QHAZELL	BESER
NO	NO
BP1619	3954
BP1621	4143
BP1624	3965/1
BP1628	4035
BP1631	3965
BP1632	4160
BP1633	4156
BP1634	3970
BP1635	3971
BP1639	4141
BP1640	3966
BP1640	3966/1
BP1641	3967
BP1644	4134
BP1645	4390
BP1651	4249
BP1652	3956
BP1653	4037
BP1653	4037/1
BP1655	3964/1
BP1656	4142
BP1662	4149
BP1663	4150
BP1665	4207
BP1671	4029
BP1672	4092
BP1672	4092/1
BP1673	3995
BP1675	3984
BP1677	4122
BP1678	4096
BP1679	4147
BP1680	4146
BP1681	3980
BP1696	3904
BP1699	4255
BP1700	4256
BP1702	4391
BP1705	4005
BP1707	4004
BP1717	4198
BP1721	4181/1
BP1732	4135
BP1736	3983/1
BP1737	3996
BP1738	3997
BP1750	4309
BP1751	4121
BP1753	4380
BP1754	3826/3
BP1755	4378
BP1762	4230
BP1763	4008
BP1764	4014
BP1765	4073
BP1767	4379
BP1771	4325/1
BP1775	4060
BP1779	4124
BP1784	3944
BP1795	4015
BP1797	4310
BP1798	4291
BP1799	4056
BP1800	4057
BP1801	4132
BP1801	4172
BP1801	4172/1
BP1807	4162
BP1813	4389
BP1818	3906/1
BP1818	3906/1A
BP1818	3906/2
BP1821	4241
BP1823	4140
BP1824	3826/2
BP1825	4201
BP1825	4201/1
BP1827	4371
BP1827	4373

QHAZELL	BESER
NO	NO
BP1834	4382
BP1836	4383
BP1837	4174
BP1837	4174/1
BP1838	4351/1
BP1839	4175
BP1840	4204
BP1841	4295
BP1847	4372
BP1848	4374
BP1853	3800/3
BP1855	4283/1
BP1857	4145
BP1867	4381
BP1894	4176/1
BP1915	4140/1
BP1933	4370

R BRAKE	BESER
NO	NO
004.0	3320
004.1	3350
015.0	3318
015.3	3318
019.0	3317
020.0	3316
020.1	3346
038.0	3311
044.0	3373
046.0	3321
081.0	3312
081.2	3484
086.3	3333
086.5	3329
095.0	3323
096.0	3709
099.0	3710
100.0	3393
111.0	3327
111.1	3343
111.1	3483
116.0	3366/1
116.1	3366
118.0	3335
134.0	3423
145.1	3405
148.0	3315
148.0	3515
148.1	3339
148.1	3514
148.2	3339
148.2	3514
158.0	3374
172.1	3873
180.1	3527
190.0	3378
190.1	3490
192.1	3365
193.2	3410
196.0	3421
197.0	3324
198.1	3513
210.0	3625
219.1	3417/1
219.2	3417
219.4	3570
222.0	3468
222.1	3466
222.2	3467
230.1	3579
235.1	3526
237.0	3370
239.0	3440
240.1	3503
250.0	3424/1
256.1	3381
256.2	3495
257.0	3493

R BRAKE	BESER
NO	NO
257.2	3496/1
258.0	3419
259.0	3419
259.1	3429
279.0	3509
285.0	3380
285.1	3487
290.0	3621
291.0	3486
291.2	3585
292.0	3441
293.0	3573
296.1	3474
296.3	3474
297.0	3430
297.1	3609
306.0	3892
307.0	3988
309.0	3536
309.1	3536
309.2	3536
310.0	3551
310.2	3531
311.0	3572
311.1	3583
311.2	3572
312.0	3611
312.1	3550
314.0	3624
317.0	3603
318.1	3549
318.3	3548
318.3	3690
318.4	3790
322.0	3408
322.1	3408
324.0	3428
329.0	3482
330.1	3543
331.1	3459
331.2	3540
331.5	3458
331.6	3569
331.7	3568
339.2	3523
340.0	3709
341.0	3501
341.1	3752
344.0	3605
345.0	3425
346.0	4135
347.0	3457
347.1	3610
348.1	3529
348.3	4152
349.0	3491
349.1	3432
350.0	3422
353.0	3552
384.0	3589
387.0	3656
388.0	3539
388.2	3539/1
388.3	3539/1
389.0	3717
390.1	3556
393.0	3564
394.0	3578
395.0	3470
395.1	3505
395.1	3615
395.2	3505
395.2	3615
396.0	3469
398.0	3464
398.1	3722
399.0	4160
402.0	3430
404.0	3609
405.0	3433/1

R BRAKE	BESER
NO	NO
405.1	3433
409.1	3423/1
409.2	3423/1
411.0	3886
412.0	4104
413.0	3562
417.0	3641
420.0	3978
421.0	3979
422.0	4124
425.0	3976
427.0	3623
429.3	3590/1
430.1	4020
432.0	3462
433.0	3446
435.0	3748
436.0	3563
437.0	3746
438.0	3819
439.0	3878
442.0	3600
444.0	3436
445.0	4173
445.1	4173/1
446.0	3608
446.1	3643
446.9	3643
447.1	3473
448.0	3558
449.0	3593
450.0	4214
451.1	4212
453.0	4212
454.0	3686
455.0	3631
456.0	4269
457.0	3504
457.1	3502
462.1	3445
465.0	3831
468.0	3453
469.0	3662
470.0	3723
472.0	3640
473.0	3522
474.0	4118
475.0	3889
480.0	3629
480.1	3628
480.2	3629
484.0	3689
485.0	3679
485.1	3994
485.2	3994
486.0	3400
487.0	4028
490.0	3697
492.0	3622
495.0	3448
496.0	3401
498.0	3766
498.1	3598
501.0	3632
501.2	3632
503.0	3961
504.0	4087
506.0	3928
506.1	3928
510.0	3802
510.1	3802
511.0	4009
512.0	3968
513.0	3581
514.0	3758
514.1	3397
515.0	3503
515.1	3503/1
516.0	3779
517.0	3959

R BRAKE	BESER
NO	NO
519.0	4128
525.0	3415
526.0	3933
526.1	3933
527.0	3760
528.0	3823
530.0	3942
531.0	4001
532.0	4106
535.0	3733
537.0	3528
539.0	3680
539.2	3680
541.0	3736
542.0	3825
543.0	3596
545.0	4079
546.0	3764
547.2	3537
548.0	4017
551.0	3683
552.1	3872
554.1	3879
554.3	4181
556.0	4094
557.0	3913
558.0	3426
559.0	3912
560.0	3884
564.0	3882
565.0	3883
567.0	3890
568.0	4154
569.0	3822
570.0	3776
574.0	3817
575.0	3402
576.0	3714
578.0	3929
579.0	3371
580.0	3560
580.2	3560
581.0	3910
586.0	3642
591.0	3685
591.1	3685
592.0	3688
594.0	3955
597.0	3660
600.0	3674
601.0	3887
608.1	3496
611.0	3666
612.1	3897
613.0	4010
614.0	3618
615.0	3617
617.0	3595
618.0	3559
619.0	3799
621.0	3750
623.0	3538
623.1	3566
623.2	3637
624.0	3554
624.0	3651
627.0	3567
628.0	3678
629.0	3670
629.1	3670
633.0	3677
640.0	3740
641.0	3545
643.0	3778
644.0	3744
645.0	3687/1
645.1	3687/1
646.0	3687/1
647.0	3951
648.0	3395

R BRAKE	BESER
NO	NO
649.0	3511
652.0	3659
652.1	3938
653.0	3682
654.0	3863
655.0	3636
656.0	4125
657.0	3577
658.0	3598/1
660.0	3675
662.0	4062
663.0	3762
667.0	3575
667.1	3575/2
668.0	3553
668.1	3553/1
669.0	3606
669.1	3794
675.0	3994
679.0	3768
680.0	3754
681.0	3755
682.0	4281
683.0	4027
687.1	3841
688.0	3804
690.2	3795/1
691.0	4093
692.0	4271
693.0	3919
694.0	3918
695.1	3896
695.2	3896
696.0	4059
697.0	3943
699.0	3704
700.0	4123
703.0	3888
704.0	3790/1
704.1	4141
705.0	3749/1
705.1	3749
706.0	3809
708.0	3877
711.0	4100
711.1	4100
712.0	3846
712.2	3846
714.0	3681
715.0	3861
718.1	4197
723.0	3820
724.0	3800
725.0	3820
729.0	3901
732.0	3780
733.0	3843
735.0	4126
736.0	4069
737.0	3676
738.0	3898
739.0	3663
740.0	3507
741.0	4095
745.0	3634
747.0	3436
748.0	3607
750.0	3821
751.0	3696
755.0	3757
755.0	3857
756.0	3784
757.0	3921
758.0	3849
760.0	3826/1
760.1	3826
760.2	3826/1
760.4	3826/1
760.8	3826/3
761.0	3800/1

R BRAKE	BESER
NO	NO
761.1	3800
761.2	3800/3
761.3	3800/2
763.0	3934
765.0	3935
767.0	4115
768.8	3826/3
769.0	3853
769.1	3853
769.2	3853/1
769.3	3853/1
770.0	3852
771.0	3437
772.0	3909
773.0	3834
774.0	3835
775.0	3914
778.1	4138
780.0	4158
781.0	4153
782.0	3855
783.0	3856
785.0	3801
786.0	3836
788.0	3881
789.0	4180
790.0	4101
790.0	4209
791.0	4102
792.0	4112
793.2	4345
794.0	3854
795.0	3931
796.0	3986
797.0	4211
801.0	4137
803.0	3769
804.0	3788
805.0	3983
805.1	3983/1
810.0	4155
811.0	4013
813.0	3650
813.1	3619
813.2	3649
813.3	3635
814.0	3850
816.0	4042
817.0	3904
818.0	3905
818.1	3905
819.0	3842
820.0	3885
821.0	4097
823.0	3950
823.1	3950
824.4	4096
828.0	4012
833.0	3993
835.0	3976/1
836.0	4093
838.0	3940
839.0	3939
840.0	3946
841.0	3984
844.1	3923/1
845.0	3924
856.0	3648
857.0	3841/1
858.0	3987
863.0	3958
864.0	3954
866.0	4077
867.0	3949
869.0	3673
871.0	3891
874.0	4210
876.0	4011
878.0	4031
879.0	4248

R BRAKE	BESER
NO	NO
880.0	4247
881.0	3900
882.0	4293
883.0	3944
886.0	3922
886.3	4171
886.3	3922/3
887.0	3820/3
889.0	3964
892.0	3906
892.1	3906/1
893.0	3907
894.0	4161
895.0	4157
897.0	4058
900.0	3925
901.0	3963
902.0	3962
903.0	3926
905.0	3920
906.0	3965
906.1	3965/1
907.0	4092
911.0	3972
912.0	4151
913.0	4259
914.0	4249
914.1	4249
915.0	4260
917.0	3985
919.1	3904
920.0	3970
923.0	3967
924.0	3966
925.0	3953
926.0	3956
928.0	4037
930.0	4134
931.0	4260
933.0	4240
939.0	4143
940.1	4122
941.0	4142
942.0	3964/1
943.0	4121
944.0	3995
945.0	3971
950.0	4038
954.0	4146
962.0	4004
964.0	4150
965.0	4159
967.0	3827
968.0	4008
969.0	4230
973.0	4014
974.0	3880
975.0	3975
976.0	4029
977.0	4213
978.0	4036
993.1	4228
446.0E	3608
RB0140	3515
RB0164	3709
RB0185	3710
RB0197	3515
RB0231	3661
RB0257	3527
RB0311	3509
RB0316	3537
RB0323	3339
RB0323	3514
RB0324	3339
RB0324	3514
RB0337	3536
RB0348	3579
RB0365	3527
RB0405	3513
RB0410	3417/1

R BRAKE	BESER
NO	NO
RB0417	3493
RB0417	3494
RB0420	3611
RB0422	3572
RB0423	3573
RB0444	4087
RB0451	3621
RB0455	3624
RB0460	3444/1
RB0467	3620
RB0473	3625
RB0484	3633
RB0511	3515
RB0517	3550
RB0523	3634
RB0524	3634
RB0542	3603
RB0543	3549
RB0544	3526
RB0611	3449
RB0646	4087
RB0648	3605
RB0692	3717
RB0700	3543
RB0702	3771
RB0722	3679
RB0725	3746
RB0734	3776
RB0745	3430
RB0750	3582
RB0751	4212
RB0752	4212
RB0758	3470
RB0766	3609
RB0771	3622
RB0775	3583
RB0776	3589
RB0778	3583
RB0784	3536
RB0787	3680
RB0789	3529
RB0797	3696
RB0798	4148/1
RB0801	3563
RB0804	3660
RB0809	3649
RB0812	3873
RB0814	3513
RB0834	3537
RB0835	3650
RB0836	3619
RB0837	3641
RB0839	3662
RB0853	3757
RB0853	3857
RB0854	3757
RB0854	3857
RB0858	3623
RB0860	3683
RB0860	3872/1
RB0861	3629
RB0862	3556
RB0864	3489
RB0874	3596
RB0878	4104
RB0879	3640
RB0882	3766
RB0883	3584
RB0885	3760
RB0892	3523
RB0894	3773
RB0918	4214
RB0920	3819
RB0921	3878
RB0922	4128
RB0924	3608
RB0932	3528
RB0933	3888
RB0937	3598
RB0938	3545

R BRAKE	BESER
NO	NO
RB0950	3635
RB0951	3600
RB0953	3608
RB0958	3686
RB0959	3607
RB0960	4212
RB0962	3631
RB0965	3749
RB0968	4182
RB0969	3723
RB0970	3522
RB0974	3630
RB0976	3581
RB0979	3685
RB0980	3688
RB0981	4108
RB0988	3736
RB0989	3733
RB0990	3674
RB0991	3887
RB0999	4078
RB1000	4080
RB1001	3745
RB1002	3882
RB1007	3560
RB1018	3643
RB1019	3704
RB1023	3717
RB1026	3673
RB1027	3693
RB1045	4212
RB1048	3585/1
RB1051	3578
RB1078	3773
RB1084	3623
RB1090	3512
RB1090	3512/1
RB1092	3510
RB1094	3647
RB1096	3883
RB1101	3779
RB1102	3678
RB1103	3670
RB1107	3750
RB1110	3833
RB1111	3507
RB1115	3677
RB1116	3602
RB1117	3675
RB1122	3799
RB1125	3617
RB1133	3695
RB1134	3511
RB1136	3636
RB1141	3656
RB1142	3570
RB1144	4087
RB1152	3505
RB1153	3598/1
RB1155	3642
RB1157	3896
RB1159	3863
RB1161	3994
RB1165	4062
RB1166	3606
RB1168	4020
RB1170	3777
RB1179	3697
RB1184	3682
RB1185	3740
RB1187	4148/1
RB1204	3659
RB1208	3575
RB1217	3659
RB1224	3574
RB1224	3914/1
RB1228	3781
RB1232	3872
RB1233	4125
RB1234	3809

R BRAKE	BESER
NO	NO
RB1236	4059
RB1241	3680
RB1243	3618
RB1246	3653
RB1247	4079
RB1249	3762
RB1251	4034
RB1251	4034/1
RB1255	3938
RB1259	3863
RB1260	3687/1
RB1262	3744
RB1263	3687/1
RB1264	3754
RB1265	3755
RB1266	3648
RB1267	3632
RB1268	3778
RB1273	3748
RB1274	4281
RB1276	4126
RB1276	4126/1
RB1277	4069
RB1282	3618
RB1283	3617
RB1284	3861
RB1287	4155
RB1288	3681
RB1289	3804
RB1297	3919
RB1298	3918
RB1299	3717
RB1300	4010
RB1304	3768
RB1309	3780
RB1310	3663
RB1311	3676
RB1312	3821
RB1315	3848
RB1318	3764
RB1319	3884
RB1320	3794
RB1328	3749/1
RB1332	3872
RB1335	3943
RB1340	3898
RB1342	3901
RB1343	3877
RB1345	3874
RB1348	3897
RB1351	3795/1
RB1353	3846
RB1358	3685
RB1366	3470
RB1367	3784
RB1369	3836
RB1370	4009
RB1372	3843
RB1374	3892
RB1380	4100
RB1381	4093
RB1386	3769
RB1388	3820
RB1388	3820/1
RB1390	4101
RB1390	4209
RB1391	4103
RB1395	4095
RB1398	4011
RB1406	3934
RB1419	3935
RB1428	4094
RB1429	3800
RB1431	3950
RB1432	3852
RB1433	3853
RB1436	4197
RB1438	3539/1
RB1439	3938
RB1440	3800/1

R BRAKE	BESER
NO	NO
RB1441	3790
RB1442	3856
RB1443	4271
RB1444	3826/1
RB1448	3859
RB1450	3854
RB1451	3931
RB1452	3928
RB1455	3802
RB1498	3921
RB1502	4123
RB1507	3900
RB1508	3790/1
RB1509	3933
RB1511	3855
RB1512	4012
RB1513	3817
RB1514	3825
RB1517	4010
RB1518	3548
RB1518	3690
RB1519	4158
RB1520	4153
RB1521	3932
RB1522	3835
RB1523	3834
RB1524	3914
RB1526	3846
RB1530	3881
RB1532	4119
RB1534	3983
RB1535	3849
RB1536	4211
RB1537	3801
RB1540	4028
RB1542	4118
RB1543	4109
RB1543	4232
RB1548	3879
RB1549	3879
RB1552	3879
RB1553	3986
RB1557	3985
RB1558	3831
RB1565	4222
RB1566	3951
RB1567	3904
RB1572	3850
RB1573	3890
RB1577	4180
RB1578	3889
RB1579	3849
RB1580	3767
RB1581	4115
RB1583	3769
RB1584	4105
RB1587	4112
RB1589	4027
RB1592	4042
RB1593	4152
RB1597	4138
RB1597	4138/1
RB1600	3905
RB1606	3978
RB1607	3788
RB1610	4269
RB1611	4076
RB1614	4345
RB1617	3885
RB1618	3765
RB1632	3822
RB1635	3797
RB1640	3823
RB1643	3961
RB1644	3959
RB1645	3993
RB1646	3895
RB1648	3826
RB1649	3849
RB1651	3853/1

R BRAKE	BESER
NO	NO
RB1654	4096
RB1656	3939
RB1657	3940
RB1658	3946
RB1659	4173
RB1660	4293
RB1661	3944
RB1663	4388
RB1664	4389
RB1665	3891
RB1667	4303
RB1668	4303
RB1673	3800
RB1676	3924
RB1679	4137
RB1682	4093
RB1683	4346
RB1684	4181
RB1687	4179
RB1688	4154
RB1689	3910
RB1695	4159
RB1696	4074
RB1697	4081
RB1702	3987
RB1703	4017
RB1705	4082
RB1706	3911
RB1708	4001
RB1709	3968
RB1710	3969
RB1711	3880
RB1712	3980
RB1713	4016
RB1714	3976/1
RB1715	4000
RB1717	3912
RB1719	4084
RB1720	3979
RB1722	4058
RB1723	3829
RB1727	3894
RB1729	3984
RB1734	3830
RB1736	3913
RB1743	3853
RB1744	3853/1
RB1746	4106
RB1747	3929
RB1748	3983/1
RB1751	4111
RB1759	4213
RB1760	3953
RB1761	3949
RB1762	4077
RB1764	3948
RB1765	3984
RB1771	4210
RB1774	3958
RB1775	4161
RB1778	3841/1
RB1779	3841
RB1784	3975
RB1785	3962
RB1785	3962/1
RB1786	3925
RB1786	3925/2
RB1787	3926
RB1787	3926/1
RB1789	3945
RB1790	3945
RB1792	3920
RB1792	3920/1
RB1793	3906
RB1793	3906/1
RB1793	3906/1A
RB1793	3906/2
RB1794	3907
RB1794	3907/1
RB1794	3907/1A

R BRAKE	BESER
NO	NO
RB1794	3907/2
RB1796	4240
RB1798	3976
RB1800	4036
RB1801	4157
RB1802	3972
RB1804	3820/3
RB1806	3955
RB1809	3800/2
RB1813	4002
RB1817	4072
RB1820	4013
RB1821	4248
RB1822	3988
RB1822	3988/1
RB1823	4151
RB1823	4151/1
RB1824	3903
RB1825	3853/1
RB1826	4039
RB1827	4165
RB1828	3960
RB1829	3989
RB1832	3965
RB1834	4038
RB1835	4260
RB1836	3922
RB1836	3922/1
RB1837	4092
RB1837	4092/1
RB1838	3933
RB1843	4173/1
RB1846	3965/1
RB1849	3963
RB1849	3963/1
RB1851	3970
RB1852	3964
RB1854	3966
RB1854	3966/1
RB1855	3967
RB1856	4134
RB1857	4390
RB1863	4247
RB1865	4249
RB1867	3982
RB1868	4029
RB1869	3956
RB1870	4037
RB1870	4037/1
RB1873	3747
RB1874	3996
RB1875	3997
RB1876	4143
RB1880	3995
RB1881	4122
RB1883	3827
RB1887	4160
RB1888	4156
RB1891	4211
RB1892	4147
RB1895	3971
RB1899	3954
RB1901	3933
RB1903	4121
RB1904	4142
RB1908	4005
RB1909	4004
RB1911	4035
RB1913	4149
RB1915	3964/1
RB1916	4146
RB1917	4391
RB1919	4207
RB1921	4309
RB1924	4141
RB1929	4150
RB1939	4008
RB1942	4230
RB1943	4014
RB1946	3944

R BRAKE	BESER
NO	NO
RB1948	3969
RB1953	4162
RB1954	4060
RB1955	3980
RB1956	4291
RB1958	4169
RB1967	4135
RB1972	4208
RB1973	4208
RB1974	3886
RB1976	4061
RB1982	4255
RB1983	4256
RB1987	4310
RB1998	4378
RB1999	4056
RB2000	4132
RB2000	4172
RB2000	4172/1
RB2001	4057
RB2002	4380
RB2003	3952
RB2004	4325/1
RB2005	4379
RB2006	4167
RB2008	4389
RB2019	3983/2
RB2019	3983/3
RB2020	4382
RB2027	4145
RB2029	4166
RB2030	4220
RB2031	4215
RB2034	4265
RB2035	4136
RB2048	4381
RB2049	4383
RB2060	4113
RB2066	3998
RB2067	4006
RB2068	4198
RB2069	4018
RB2074	4015
RB2075	4031
RB2082	4124
RB2088	4258
RB2099	4241
RB2108	4204
RB2110	4200
RB2115	4140
RB2116	4175
RB2119	4174
RB2119	4174/1
RB2126	4315
RB2129	4176
RB2129	4176/1
RB2131	4201
RB2131	4201/1
RB2133	3748
RB2134	4226
RB2136	4233
RB2153	4312
RB2161	4374
RB2162	4372
RB2166	4371
RB2166	4373
RB2169	4318
RB2171	4317
RB2181	4282
RB2188	4283/1
RB2189	4295
RB2202	4308
RB2214	4349
RB2217	4351/1
RB2219	4227
RB2268	4251/1
RB2284	4350/1
RB2294	4370
RB2297	4369
RB2342	4376

R BRAKE	BESER
NO	NO
RB2362	4384
RB2822	4142
1.004.0	3320
1.004.1	3350
1.015.0	3318
1.015.3	3318
1.019.0	3317
1.020.0	3316
1.020.1	3346
1.038.0	3311
1.044.0	3373
1.046.0	3321
1.081.0	3312
1.081.2	3484
1.086.3	3333
1.086.5	3329
1.095.0	3323
1.096.0	3709
1.099.0	3710
1.100.0	3393
1.111.0	3327
1.111.1	3343
1.111.1	3483
1.116.0	3366/1
1.116.1	3366
1.118.0	3335
1.134.0	3423
1.145.1	3405
1.148.0	3315
1.148.0	3515
1.148.1	3339
1.148.1	3514
1.148.2	3339
1.148.2	3514
1.158.0	3374
1.172.1	3873
1.180.1	3527
1.190.0	3378
1.190.1	3490
1.192.1	3365
1.193.2	3410
1.196.0	3421
1.197.0	3324
1.198.1	3513
1.210.0	3625
1.219.1	3417/1
1.219.2	3417
1.219.4	3570
1.222.0	3468
1.222.1	3466
1.222.2	3467
1.230.1	3579
1.235.1	3526
1.237.0	3370
1.239.0	3440
1.240.1	3503
1.250.0	3424/1
1.256.1	3381
1.256.2	3495
1.257.0	3493
1.257.2	3496/1
1.258.0	3419
1.259.0	3419
1.259.1	3429
1.279.0	3509
1.285.0	3380
1.285.1	3487
1.290.0	3621
1.291.0	3486
1.291.2	3585
1.292.0	3441
1.293.0	3573
1.296.1	3474
1.296.3	3474
1.297.0	3430
1.297.1	3609
1.306.0	3892
1.307.0	3988
1.309.0	3536
1.309.1	3536

R BRAKE	BESER
NO	NO
1.309.2	3536
1.310.0	3551
1.310.2	3531
1.311.0	3572
1.311.1	3583
1.311.2	3572
1.312.0	3611
1.312.1	3550
1.314.0	3624
1.317.0	3603
1.318.1	3549
1.318.3	3548
1.318.3	3690
1.318.4	3790
1.322.0	3408
1.322.1	3408
1.324.0	3428
1.329.0	3482
1.330.1	3543
1.331.1	3459
1.331.2	3540
1.331.5	3458
1.331.6	3569
1.331.7	3568
1.339.2	3523
1.340.0	3709
1.341.0	3501
1.341.1	3752
1.344.0	3605
1.345.0	3425
1.346.0	4135
1.347.0	3457
1.347.1	3610
1.348.1	3529
1.348.3	4152
1.349.0	3491
1.349.1	3432
1.350.0	3422
1.353.0	3552
1.384.0	3589
1.387.0	3656
1.388.0	3539
1.388.2	3539/1
1.388.3	3539/1
1.389.0	3717
1.390.1	3556
1.393.0	3564
1.394.0	3578
1.395.0	3470
1.395.1	3505
1.395.1	3615
1.395.2	3505
1.395.2	3615
1.396.0	3469
1.398.0	3464
1.398.1	3722
1.399.0	4160
1.402.0	3430
1.404.0	3609
1.405.0	3433/1
1.405.1	3433
1.409.1	3423/1
1.409.2	3423/1
1.411.0	3886
1.412.0	4104
1.413.0	3562
1.417.0	3641
1.420.0	3978
1.421.0	3979
1.422.0	4124
1.425.0	3976
1.427.0	3623
1.429.3	3590/1
1.430.1	4020
1.432.0	3462
1.433.0	3446
1.435.0	3748
1.436.0	3563
1.437.0	3746
1.438.0	3819

R BRAKE	BESER
NO	NO
1.439.0	3878
1.442.0	3600
1.444.0	3436
1.445.0	4173
1.445.1	4173/1
1.446.0	3608
1.446.1	3643
1.446.9	3643
1.447.1	3473
1.448.0	3558
1.449.0	3593
1.450.0	4214
1.451.1	4212
1.453.0	4212
1.454.0	3686
1.455.0	3631
1.456.0	4269
1.457.0	3504
1.457.1	3502
1.462.1	3445
1.465.0	3831
1.468.0	3453
1.469.0	3662
1.470.0	3723
1.472.0	3640
1.473.0	3522
1.474.0	4118
1.475.0	3889
1.480.0	3629
1.480.1	3628
1.480.2	3629
1.484.0	3689
1.485.0	3679
1.485.1	3994
1.485.2	3994
1.486.0	3400
1.487.0	4028
1.490.0	3697
1.492.0	3622
1.495.0	3448
1.496.0	3401
1.498.0	3766
1.498.1	3598
1.501.0	3632
1.501.2	3632
1.503.0	3961
1.504.0	4087
1.506.0	3928
1.506.1	3928
1.510.0	3802
1.510.1	3802
1.511.0	4009
1.512.0	3968
1.513.0	3581
1.514.0	3758
1.514.1	3397
1.515.0	3503
1.515.1	3503/1
1.516.0	3779
1.517.0	3959
1.519.0	4128
1.525.0	3415
1.526.0	3933
1.526.1	3933
1.527.0	3760
1.528.0	3823
1.530.0	3942
1.531.0	4001
1.532.0	4106
1.535.0	3733
1.537.0	3528
1.539.0	3680
1.539.2	3680
1.541.0	3736
1.542.0	3825
1.543.0	3596
1.545.0	4079
1.546.0	3764
1.547.2	3537
1.548.0	4017

R BRAKE	BESER
NO	NO
1.551.0	3683
1.552.1	3872
1.554.1	3879
1.554.3	4181
1.556.0	4094
1.557.0	3913
1.558.0	3426
1.559.0	3912
1.560.0	3884
1.564.0	3882
1.565.0	3883
1.567.0	3890
1.568.0	4154
1.569.0	3822
1.570.0	3776
1.574.0	3817
1.575.0	3402
1.576.0	3714
1.578.0	3929
1.579.0	3371
1.580.0	3560
1.580.2	3560
1.581.0	3910
1.586.0	3642
1.591.0	3685
1.591.1	3685
1.592.0	3688
1.594.0	3955
1.597.0	3660
1.600.0	3674
1.601.0	3887
1.608.1	3496
1.611.0	3666
1.612.1	3897
1.613.0	4010
1.614.0	3618
1.615.0	3617
1.617.0	3595
1.618.0	3559
1.619.0	3799
1.621.0	3750
1.623.0	3538
1.623.1	3566
1.623.2	3637
1.624.0	3554
1.624.0	3651
1.627.0	3567
1.628.0	3678
1.629.0	3670
1.629.1	3670
1.633.0	3677
1.640.0	3740
1.641.0	3545
1.643.0	3778
1.644.0	3744
1.645.0	3687/1
1.645.1	3687/1
1.646.0	3687/1
1.647.0	3951
1.648.0	3395
1.649.0	3511
1.652.0	3659
1.652.1	3938
1.653.0	3682
1.654.0	3863
1.655.0	3636
1.656.0	4125
1.657.0	3577
1.658.0	3598/1
1.660.0	3675
1.662.0	4062
1.663.0	3762
1.667.0	3575
1.667.1	3575/2
1.668.0	3553
1.668.1	3553/1
1.669.0	3606
1.669.1	3794
1.675.0	3994
1.679.0	3768

R BRAKE	BESER
NO	NO
1.680.0	3754
1.681.0	3755
1.682.0	4281
1.683.0	4027
1.687.1	3841
1.688.0	3804
1.690.2	3795/1
1.691.0	4093
1.692.0	4271
1.693.0	3919
1.694.0	3918
1.695.1	3896
1.695.2	3896
1.696.0	4059
1.697.0	3943
1.699.0	3704
1.700.0	4123
1.703.0	3888
1.704.0	3790/1
1.704.1	4141
1.705.0	3749/1
1.705.1	3749
1.706.0	3809
1.708.0	3877
1.711.0	4100
1.711.1	4100
1.712.0	3846
1.712.2	3846
1.714.0	3681
1.715.0	3861
1.718.1	4197
1.723.0	3820
1.724.0	3800
1.725.0	3820
1.729.0	3901
1.732.0	3780
1.733.0	3843
1.735.0	4126
1.736.0	4069
1.737.0	3676
1.738.0	3898
1.739.0	3663
1.740.0	3507
1.741.0	4095
1.745.0	3634
1.747.0	3436
1.748.0	3607
1.750.0	3821
1.751.0	3696
1.755.0	3757
1.755.0	3857
1.756.0	3784
1.757.0	3921
1.758.0	3849
1.760.0	3826/1
1.760.1	3826
1.760.2	3826/1
1.760.4	3826/1
1.760.8	3826/3
1.761.0	3800/1
1.761.1	3800
1.761.2	3800/3
1.761.3	3800/2
1.763.0	3934
1.765.0	3935
1.767.0	4115
1.768.8	3826/3
1.769.0	3853
1.769.1	3853
1.769.2	3853/1
1.769.3	3853/1
1.770.0	3852
1.771.0	3437
1.772.0	3909
1.773.0	3834
1.774.0	3835
1.775.0	3914
1.778.1	4138
1.780.0	4158
1.781.0	4153

R BRAKE	BESER
NO	NO
1.782.0	3855
1.783.0	3856
1.785.0	3801
1.786.0	3836
1.788.0	3881
1.789.0	4180
1.790.0	4101
1.790.0	4209
1.791.0	4102
1.792.0	4112
1.793.2	4345
1.794.0	3854
1.795.0	3931
1.796.0	3986
1.797.0	4211
1.801.0	4137
1.803.0	3769
1.804.0	3788
1.805.0	3983
1.805.1	3983/1
1.810.0	4155
1.811.0	4013
1.813.0	3650
1.813.1	3619
1.813.2	3649
1.813.3	3635
1.814.0	3850
1.816.0	4042
1.817.0	3904
1.818.0	3905
1.818.1	3905
1.819.0	3842
1.820.0	3885
1.821.0	4097
1.823.0	3950
1.823.1	3950
1.824.4	4096
1.828.0	4012
1.833.0	3993
1.835.0	3976/1
1.836.0	4093
1.838.0	3940
1.839.0	3939
1.840.0	3946
1.841.0	3984
1.844.1	3923/1
1.845.0	3924
1.856.0	3648
1.857.0	3841/1
1.858.0	3987
1.863.0	3958
1.864.0	3954
1.866.0	4077
1.867.0	3949
1.869.0	3673
1.871.0	3891
1.874.0	4210
1.876.0	4011
1.878.0	4031
1.879.0	4248
1.880.0	4247
1.881.0	3900
1.882.0	4293
1.883.0	3944
1.886.0	3922
1.886.3	4171
1.886.3	3922/3
1.887.0	3820/3
1.889.0	3964
1.892.0	3906
1.892.1	3906/1
1.893.0	3907
1.894.0	4161
1.895.0	4157
1.897.0	4058
1.900.0	3925
1.901.0	3963
1.902.0	3962
1.903.0	3926
1.905.0	3920

R BRAKE	BESER
NO	NO
1.906.0	3965
1.906.1	3965/1
1.907.0	4092
1.911.0	3972
1.912.0	4151
1.913.0	4259
1.914.0	4249
1.914.1	4249
1.915.0	4260
1.917.0	3985
1.919.1	3904
1.920.0	3970
1.923.0	3967
1.924.0	3966
1.924.1	3966
1.925.0	3953
1.926.0	3956
1.928.0	4037
1.930.0	4134
1.931.0	4260
1.933.0	4240
1.939.0	4143
1.940.1	4122
1.941.0	4142
1.942.0	3964/1
1.943.0	4121
1.944.0	3995
1.945.0	3971
1.950.0	4038
1.954.0	4146
1.962.0	4004
1.964.0	4150
1.965.0	4159
1.967.0	3827
1.968.0	4008
1.969.0	4230
1.973.0	4014
1.974.0	3880
1.975.0	3975
1.976.0	4029
1.977.0	4213
1.978.0	4036
1.446.0E	3608
RA.07200	3740
RA.17200	3740
RB0766-6	3609
RA.0096.0	3709
RA.0099.0	3710
RA.0148.0	3515
RA.0148.1	3339
RA.0148.1	3514
RA.0148.2	3339
RA.0148.2	3514
RA.0172.1	3873
RA.0180.1	3527
RA.0198.1	3513
RA.0210.0	3625
RA.0219.1	3417/1
RA.0219.4	3570
RA.0230.1	3579
RA.0235.1	3526
RA.0257.0	3493
RA.0279.0	3509
RA.0290.0	3621
RA.0293.0	3573
RA.0297.0	3430
RA.0297.1	3609
RA.0306.0	3892
RA.0307.0	3988
RA.0309.0	3536
RA.0309.1	3536
RA.0309.2	3536
RA.0311.0	3572
RA.0311.1	3583
RA.0311.2	3572
RA.0312.0	3611
RA.0312.1	3550
RA.0314.0	3624
RA.0317.0	3603
RA.0318.1	3549

R BRAKE	BESER
NO	NO
RA.0318.3	3548
RA.0318.3	3690
RA.0318.4	3790
RA.0330.1	3543
RA.0339.2	3523
RA.0340.0	3709
RA.0344.0	3605
RA.0346.0	4135
RA.0348.1	3529
RA.0348.3	4152
RA.0384.0	3589
RA.0387.0	3656
RA.0388.2	3539/1
RA.0388.3	3539/1
RA.0389.0	3717
RA.0390.1	3556
RA.0394.0	3578
RA.0395.0	3470
RA.0395.1	3505
RA.0395.2	3505
RA.0399.0	4160
RA.0402.0	3430
RA.0404.0	3609
RA.0411.0	3886
RA.0412.0	4104
RA.0417.0	3641
RA.0420.0	3978
RA.0421.0	3979
RA.0422.0	4124
RA.0423.0	4308
RA.0425.0	3976
RA.0427.0	3623
RA.0430.1	4020
RA.0435.0	3748
RA.0436.0	3563
RA.0437.0	3746
RA.0438.0	3819
RA.0439.0	3878
RA.0442.0	3600
RA.0445.0	4173
RA.0445.1	4173/1
RA.0446.0	3608
RA.0446.1	3643
RA.0446.9	3643
RA.0450.0	4214
RA.0451.1	4212
RA.0453.0	4212
RA.0454.0	3686
RA.0455.0	3631
RA.0456.0	4269
RA.0465.0	3831
RA.0469.0	3662
RA.0470.0	3723
RA.0472.0	3640
RA.0473.0	3522
RA.0474.0	4118
RA.0475.0	3889
RA.0480.0	3629
RA.0480.1	3628
RA.0480.2	3629
RA.0484.0	3689
RA.0485.0	3679
RA.0485.1	3994
RA.0485.2	3994
RA.0487.0	4028
RA.0490.0	3697
RA.0492.0	3622
RA.0498.0	3766
RA.0498.1	3598
RA.0501.0	3632
RA.0501.2	3632
RA.0503.0	3961
RA.0504.0	4087
RA.0506.0	3928
RA.0506.1	3928
RA.0510.0	3802
RA.0510.1	3802
RA.0511.0	4009
RA.0512.0	3968
RA.0513.0	3581

R BRAKE	BESER
NO	NO
RA.0516.0	3779
RA.0517.0	3959
RA.0519.0	4128
RA.0526.0	3933
RA.0526.1	3933
RA.0527.0	3760
RA.0528.0	3823
RA.0530.0	3942
RA.0531.0	4001
RA.0532.0	4106
RA.0535.0	3733
RA.0537.0	3528
RA.0539.0	3680
RA.0539.2	3680
RA.0541.0	3736
RA.0542.0	3825
RA.0543.0	3596
RA.0545.0	4079
RA.0546.0	3764
RA.0547.2	3537
RA.0548.0	4017
RA.0551.0	3683
RA.0552.1	3872
RA.0554.1	3879
RA.0554.3	4181
RA.0556.0	4094
RA.0557.0	3913
RA.0559.0	3912
RA.0560.0	3884
RA.0564.0	3882
RA.0565.0	3883
RA.0567.0	3890
RA.0568.0	4154
RA.0569.0	3822
RA.0570.0	3776
RA.0574.0	3817
RA.0578.0	3929
RA.0580.0	3560
RA.0580.2	3560
RA.0581.0	3910
RA.0586.0	3642
RA.0591.0	3685
RA.0591.1	3685
RA.0592.0	3688
RA.0594.0	3955
RA.0597.0	3660
RA.0600.0	3674
RA.0601.0	3887
RA.0611.0	3666
RA.0612.1	3897
RA.0613.0	4010
RA.0614.0	3618
RA.0615.0	3617
RA.0619.0	3799
RA.0621.0	3750
RA.0628.0	3678
RA.0629.0	3670
RA.0629.1	3670
RA.0633.0	3677
RA.0640.0	3740
RA.0641.0	3545
RA.0643.0	3778
RA.0644.0	3744
RA.0645.0	3687/1
RA.0645.1	3687/1
RA.0646.0	3687/1
RA.0647.0	3951
RA.0649.0	3511
RA.0652.0	3659
RA.0652.1	3938
RA.0653.0	3682
RA.0654.0	3863
RA.0655.0	3636
RA.0656.0	4125
RA.0658.0	3598/1
RA.0660.0	3675
RA.0662.0	4062
RA.0663.0	3762
RA.0667.0	3575
RA.0667.1	3575/2

R BRAKE	BESER
NO	NO
RA.0669.0	3606
RA.0669.1	3794
RA.0675.0	3994
RA.0679.0	3768
RA.0680.0	3754
RA.0681.0	3755
RA.0682.0	4281
RA.0683.0	4027
RA.0687.1	3841
RA.0688.0	3804
RA.0690.2	3795/1
RA.0691.0	4093
RA.0692.0	4271
RA.0693.0	3919
RA.0694.0	3918
RA.0695.1	3896
RA.0695.2	3896
RA.0696.0	4059
RA.0697.0	3943
RA.0699.0	3704
RA.0700.0	4123
RA.0703.0	3888
RA.0704.0	3790/1
RA.0704.1	4141
RA.0705.0	3749/1
RA.0705.1	3749
RA.0706.0	3809
RA.0708.0	3877
RA.0711.0	4100
RA.0711.1	4100
RA.0712.0	3846
RA.0712.2	3846
RA.0714.0	3681
RA.0715.0	3861
RA.0718.1	4197
RA.0723.0	3820
RA.0724.0	3800
RA.0725.0	3820
RA.0729.0	3901
RA.0732.0	3780
RA.0733.0	3843
RA.0735.0	4126
RA.0736.0	4069
RA.0737.0	3676
RA.0738.0	3898
RA.0739.0	3663
RA.0740.0	3507
RA.0741.0	4095
RA.0745.0	3634
RA.0748.0	3607
RA.0750.0	3821
RA.0751.0	3696
RA.0755.0	3757
RA.0755.0	3857
RA.0756.0	3784
RA.0757.0	3921
RA.0758.0	3849
RA.0760.0	3826/1
RA.0760.1	3826
RA.0760.2	3826/1
RA.0760.4	3826/1
RA.0760.8	3826/3
RA.0761.0	3800/1
RA.0761.1	3800
RA.0761.2	3800/3
RA.0761.3	3800/2
RA.0762.3	4301
RA.0763.0	3934
RA.0765.0	3935
RA.0767.0	4115
RA.0768.8	3826/3
RA.0769.0	3853
RA.0769.1	3853
RA.0769.2	3853/1
RA.0769.3	3853/1
RA.0770.0	3852
RA.0772.0	3909
RA.0773.0	3834
RA.0774.0	3835
RA.0775.0	3914

R BRAKE	BESER
NO	NO
RA.0778.1	4138
RA.0780.0	4158
RA.0781.0	4153
RA.0782.0	3855
RA.0783.0	3856
RA.0785.0	3801
RA.0786.0	3836
RA.0788.0	3881
RA.0789.0	4180
RA.0790.0	4101
RA.0790.0	4209
RA.0791.0	4102
RA.0792.0	4112
RA.0793.2	4345
RA.0794.0	3854
RA.0795.0	3931
RA.0796.0	3986
RA.0797.0	4211
RA.0801.0	4137
RA.0803.0	3769
RA.0804.0	3788
RA.0805.0	3983
RA.0805.1	3983/1
RA.0810.0	4155
RA.0811.0	4013
RA.0813.0	3650
RA.0813.1	3619
RA.0813.2	3649
RA.0813.3	3635
RA.0814.0	3850
RA.0816.0	4042
RA.0817.0	3904
RA.0818.0	3905
RA.0818.1	3905
RA.0819.0	3842
RA.0820.0	3885
RA.0821.0	4097
RA.0823.0	3950
RA.0823.1	3950
RA.0824.4	4096
RA.0828.0	4012
RA.0833.0	3993
RA.0835.0	3976/1
RA.0836.0	4093
RA.0838.0	3940
RA.0839.0	3939
RA.0840.0	3946
RA.0841.0	3984
RA.0844.1	3923/1
RA.0845.0	3924
RA.0856.0	3648
RA.0857.0	3841/1
RA.0858.0	3987
RA.0863.0	3958
RA.0864.0	3954
RA.0866.0	4077
RA.0867.0	3949
RA.0869.0	3673
RA.0871.0	3891
RA.0874.0	4210
RA.0876.0	4011
RA.0878.0	4031
RA.0879.0	4248
RA.0880.0	4247
RA.0881.0	3900
RA.0882.0	4293
RA.0883.0	3944
RA.0886.0	3922
RA.0886.3	4171
RA.0886.3	3922/3
RA.0887.0	3820/3
RA.0889.0	3964
RA.0892.0	3906
RA.0892.1	3906/1
RA.0893.0	3907
RA.0894.0	4161
RA.0895.0	4157
RA.0897.0	4058
RA.0900.0	3925
RA.0901.0	3963

R BRAKE	BESER
NO	NO
RA.0902.0	3962
RA.0903.0	3926
RA.0905.0	3920
RA.0906.0	3965
RA.0906.1	3965/1
RA.0907.0	4092
RA.0911.0	3972
RA.0912.0	4151
RA.0913.0	4259
RA.0914.0	4249
RA.0914.1	4249
RA.0915.0	4260
RA.0917.0	3985
RA.0919.1	3904
RA.0920.0	3970
RA.0923.0	3967
RA.0924.0	3966
RA.0925.0	3953
RA.0926.0	3956
RA.0928.0	4037
RA.0930.0	4134
RA.0931.0	4260
RA.0933.0	4240
RA.0939.0	4143
RA.0940.1	4122
RA.0941.0	4142
RA.0942.0	3964/1
RA.0943.0	4121
RA.0944.0	3995
RA.0945.0	3971
RA.0950.0	4038
RA.0954.0	4146
RA.0962.0	4004
RA.0964.0	4150
RA.0965.0	4159
RA.0967.0	3827
RA.0968.0	4008
RA.0969.0	4230
RA.0973.0	4014
RA.0974.0	3880
RA.0975.0	3975
RA.0976.0	4029
RA.0977.0	4213
RA.0978.0	4036
RA.0993.1	4228
RA.1003.0	4371
RA.1003.0	4373
RA.1004.0	4374
RA.1005.0	4372
RA.1096.0	3709
RA.1099.0	3710
RA.1148.0	3515
RA.1148.1	3339
RA.1148.1	3514
RA.1148.2	3339
RA.1148.2	3514
RA.1154.0	4312
RA.1172.1	3873
RA.1173.0	4370
RA.1174.0	4369
RA.1180.1	3527
RA.1184.0	4280
RA.1191.0	4279
RA.1198.1	3513
RA.1210.0	3625
RA.1219.1	3417/1
RA.1219.4	3570
RA.1230.1	3579
RA.1235.1	3526
RA.1241.0	4376
RA.1257.0	3493
RA.1279.0	3509
RA.1290.0	3621
RA.1293.0	3573
RA.1297.0	3430
RA.1297.1	3609
RA.1306.0	3892
RA.1307.0	3988
RA.1309.0	3536
RA.1309.1	3536

R BRAKE	BESER
NO	NO
RA.1309.2	3536
RA.1311.0	3572
RA.1311.1	3583
RA.1311.2	3572
RA.1312.0	3611
RA.1312.1	3550
RA.1314.0	3624
RA.1317.0	3603
RA.1318.1	3549
RA.1318.3	3548
RA.1318.3	3690
RA.1318.4	3790
RA.1330.1	3543
RA.1339.2	3523
RA.1340.0	3709
RA.1344.0	3605
RA.1346.0	4135
RA.1348.1	3529
RA.1348.3	4152
RA.1384.0	3589
RA.1387.0	3656
RA.1388.2	3539/1
RA.1388.3	3539/1
RA.1389.0	3717
RA.1390.1	3556
RA.1394.0	3578
RA.1395.0	3470
RA.1395.1	3505
RA.1395.2	3505
RA.1399.0	4160
RA.1402.0	3430
RA.1404.0	3609
RA.1411.0	3886
RA.1412.0	4104
RA.1417.0	3641
RA.1420.0	3978
RA.1421.0	3979
RA.1422.0	4124
RA.1425.0	3976
RA.1427.0	3623
RA.1430.1	4020
RA.1435.0	3748
RA.1436.0	3563
RA.1437.0	3746
RA.1438.0	3819
RA.1439.0	3878
RA.1442.0	3600
RA.1445.0	4173
RA.1445.1	4173/1
RA.1446.0	3608
RA.1446.1	3643
RA.1446.9	3643
RA.1450.0	4214
RA.1451.1	4212
RA.1453.0	4212
RA.1454.0	3686
RA.1455.0	3631
RA.1456.0	4269
RA.1465.0	3831
RA.1469.0	3662
RA.1470.0	3723
RA.1472.0	3640
RA.1473.0	3522
RA.1474.0	4118
RA.1475.0	3889
RA.1480.0	3629
RA.1480.1	3628
RA.1480.2	3629
RA.1484.0	3689
RA.1485.0	3679
RA.1485.1	3994
RA.1485.2	3994
RA.1487.0	4028
RA.1490.0	3697
RA.1492.0	3622
RA.1498.0	3766
RA.1498.1	3598
RA.1501.0	3632
RA.1501.2	3632
RA.1503.0	3961

R BRAKE	BESER
NO	NO
RA.1504.0	4087
RA.1506.0	3928
RA.1506.1	3928
RA.1510.0	3802
RA.1510.1	3802
RA.1511.0	4009
RA.1512.0	3968
RA.1513.0	3581
RA.1516.0	3779
RA.1517.0	3959
RA.1519.0	4128
RA.1526.0	3933
RA.1526.1	3933
RA.1527.0	3760
RA.1528.0	3823
RA.1530.0	3942
RA.1531.0	4001
RA.1532.0	4106
RA.1535.0	3733
RA.1537.0	3528
RA.1539.0	3680
RA.1539.2	3680
RA.1541.0	3736
RA.1542.0	3825
RA.1543.0	3596
RA.1545.0	4079
RA.1546.0	3764
RA.1547.2	3537
RA.1548.0	4017
RA.1551.0	3683
RA.1552.1	3872
RA.1554.1	3879
RA.1554.3	4181
RA.1556.0	4094
RA.1557.0	3913
RA.1559.0	3912
RA.1560.0	3884
RA.1564.0	3882
RA.1565.0	3883
RA.1567.0	3890
RA.1568.0	4154
RA.1569.0	3822
RA.1570.0	3776
RA.1574.0	3817
RA.1578.0	3929
RA.1580.0	3560
RA.1580.2	3560
RA.1581.0	3910
RA.1586.0	3642
RA.1591.0	3685
RA.1591.1	3685
RA.1592.0	3688
RA.1594.0	3955
RA.1597.0	3660
RA.1600.0	3674
RA.1601.0	3887
RA.1611.0	3666
RA.1612.1	3897
RA.1613.0	4010
RA.1614.0	3618
RA.1615.0	3617
RA.1619.0	3799
RA.1621.0	3750
RA.1628.0	3678
RA.1629.0	3670
RA.1629.1	3670
RA.1633.0	3677
RA.1640.0	3740
RA.1641.0	3545
RA.1643.0	3778
RA.1644.0	3744
RA.1645.0	3687/1
RA.1645.1	3687/1
RA.1646.0	3687/1
RA.1647.0	3951
RA.1649.0	3511
RA.1652.0	3659
RA.1652.1	3938
RA.1653.0	3682
RA.1654.0	3863

R BRAKE	BESER
NO	NO
RA.1655.0	3636
RA.1656.0	4125
RA.1658.0	3598/1
RA.1660.0	3675
RA.1662.0	4062
RA.1663.0	3762
RA.1667.0	3575
RA.1667.1	3575/2
RA.1669.0	3606
RA.1669.1	3794
RA.1675.0	3994
RA.1679.0	3768
RA.1680.0	3754
RA.1681.0	3755
RA.1682.0	4281
RA.1683.0	4027
RA.1687.1	3841
RA.1688.0	3804
RA.1690.2	3795/1
RA.1691.0	4093
RA.1692.0	4271
RA.1693.0	3919
RA.1694.0	3918
RA.1695.1	3896
RA.1695.2	3896
RA.1696.0	4059
RA.1697.0	3943
RA.1699.0	3704
RA.1700.0	4123
RA.1703.0	3888
RA.1704.0	3790/1
RA.1704.1	4141
RA.1705.0	3749/1
RA.1705.1	3749
RA.1706.0	3809
RA.1708.0	3877
RA.1711.0	4100
RA.1711.1	4100
RA.1712.0	3846
RA.1712.2	3846
RA.1714.0	3681
RA.1715.0	3861
RA.1718.1	4197
RA.1723.0	3820
RA.1724.0	3800
RA.1725.0	3820
RA.1729.0	3901
RA.1732.0	3780
RA.1733.0	3843
RA.1735.0	4126
RA.1736.0	4069
RA.1737.0	3676
RA.1738.0	3898
RA.1739.0	3663
RA.1740.0	3507
RA.1741.0	4095
RA.1745.0	3634
RA.1748.0	3607
RA.1750.0	3821
RA.1751.0	3696
RA.1755.0	3757
RA.1755.0	3857
RA.1756.0	3784
RA.1757.0	3921
RA.1758.0	3849
RA.1760.0	3826/1
RA.1760.1	3826
RA.1760.2	3826/1
RA.1760.4	3826/1
RA.1760.8	3826/3
RA.1761.0	3800/1
RA.1761.1	3800
RA.1761.2	3800/3
RA.1761.3	3800/2
RA.1763.0	3934
RA.1765.0	3935
RA.1767.0	4115
RA.1768.8	3826/3
RA.1769.0	3853
RA.1769.1	3853

R BRAKE	BESER
NO	NO
RA.1769.2	3853/1
RA.1769.3	3853/1
RA.1770.0	3852
RA.1772.0	3909
RA.1773.0	3834
RA.1774.0	3835
RA.1775.0	3914
RA.1778.1	4138
RA.1780.0	4158
RA.1781.0	4153
RA.1782.0	3855
RA.1783.0	3856
RA.1785.0	3801
RA.1786.0	3836
RA.1788.0	3881
RA.1789.0	4180
RA.1790.0	4101
RA.1790.0	4209
RA.1791.0	4102
RA.1792.0	4112
RA.1793.2	4345
RA.1794.0	3854
RA.1795.0	3931
RA.1796.0	3986
RA.1797.0	4211
RA.1801.0	4137
RA.1803.0	3769
RA.1804.0	3788
RA.1805.0	3983
RA.1805.1	3983/1
RA.1810.0	4155
RA.1811.0	4013
RA.1813.0	3650
RA.1813.1	3619
RA.1813.2	3649
RA.1813.3	3635
RA.1814.0	3850
RA.1816.0	4042
RA.1817.0	3904
RA.1818.0	3905
RA.1818.1	3905
RA.1819.0	3842
RA.1820.0	3885
RA.1821.0	4097
RA.1823.0	3950
RA.1823.1	3950
RA.1824.4	4096
RA.1828.0	4012
RA.1833.0	3993
RA.1835.0	3976/1
RA.1836.0	4093
RA.1838.0	3940
RA.1839.0	3939
RA.1840.0	3946
RA.1841.0	3984
RA.1844.1	3923/1
RA.1845.0	3924
RA.1856.0	3648
RA.1857.0	3841/1
RA.1858.0	3987
RA.1863.0	3958
RA.1864.0	3954
RA.1866.0	4077
RA.1867.0	3949
RA.1869.0	3673
RA.1871.0	3891
RA.1874.0	4210
RA.1876.0	4011
RA.1878.0	4031
RA.1879.0	4248
RA.1880.0	4247
RA.1881.0	3900
RA.1882.0	4293
RA.1883.0	3944
RA.1886.0	3922
RA.1886.3	4171
RA.1886.3	3922/3
RA.1887.0	3820/3
RA.1889.0	3964
RA.1892.0	3906

R BRAKE	BESER
NO	NO
RA.1892.1	3906/1
RA.1893.0	3907
RA.1894.0	4161
RA.1895.0	4157
RA.1897.0	4058
RA.1900.0	3925
RA.1901.0	3963
RA.1902.0	3962
RA.1903.0	3926
RA.1905.0	3920
RA.1906.0	3965
RA.1906.1	3965/1
RA.1907.0	4092
RA.1911.0	3972
RA.1912.0	4151
RA.1913.0	4259
RA.1914.0	4249
RA.1914.1	4249
RA.1915.0	4260
RA.1917.0	3985
RA.1919.1	3904
RA.1920.0	3970
RA.1923.0	3967
RA.1924.0	3966
RA.1924.1	3966
RA.1925.0	3953
RA.1926.0	3956
RA.1928.0	4037
RA.1930.0	4134
RA.1931.0	4260
RA.1933.0	4240
RA.1939.0	4143
RA.1940.1	4122
RA.1941.0	4142
RA.1942.0	3964/1
RA.1943.0	4121
RA.1944.0	3995
RA.1945.0	3971
RA.1950.0	4038
RA.1954.0	4146
RA.1962.0	4004
RA.1964.0	4150
RA.1965.0	4159
RA.1967.0	3827
RA.1968.0	4008
RA.1969.0	4230
RA.1973.0	4014
RA.1974.0	3880
RA.1975.0	3975
RA.1976.0	4029
RA.1977.0	4213
RA.1978.0	4036
RA.0446.0E	3608
RA.1446.0E	3608
RB0337-700	3536
RB0417-066	3493
RB0417-066	3494
RB0455-700	3624
RB0648-700	3605
RB0700-700	3543
RB0722-204	3679
RB0745-700	3430
RB0752-701	4212
RB0766-006	3609
RB0766-700	3609
RB0784-700	3536
RB0789-700	3529
RB0804-700	3660
RB0809-700	3649
RB0835-700	3650
RB0836-700	3619
RB0853-700	3757
RB0853-700	3857
RB0860-701	3683
RB0860-701	3872/1
RB0861-200	3628
RB0862-700	3556
RB0892-066	3523
RB0894-066	3773
RB0933-700	3888

R BRAKE	BESER
NO	NO
RB0950-700	3635
RB0989-700	3733
RB1078-110	3773
RB1078-111	3773
RB1078-116	3773
RB1078-117	3773
RB1080-110	3994
RB1080-111	3994
RB1090-201	3512/2
RB1102-046	3678
RB1103-046	3670
RB1107-700	3750
RB1111-700	3507
RB1117-700	3675
RB1122-700	3799
RB1134-700	3511
RB1136-700	3636
RB1155-700	3642
RB1157-203	3896
RB1157-700	3896
RB1161-116	3994
RB1161-117	3994
RB1161-203	3994/1
RB1165-700	4062
RB1204-702	3659
RB1208-117	3575
RB1208-200	3575/2
RB1217-702	3659
RB1232-701	3872
RB1233-701	4125
RB1236-701	4059
RB1255-702	3938
RB1265-700	3755
RB1274-704	4281
RB1282-700	3618
RB1287-703	4155
RB1312-202	3821
RB1315-701	3848
RB1335-203	3943
RB1351-700	3795/1
RB1353-701	3846
RB1367-701	3784
RB1369-701	3836
RB1375-202	3893
RB1380-701	4100
RB1381-701	4093
RB1388-701	3820
RB1388-701	3820/1
RB1406-701	3934
RB1419-701	3935
RB1428-701	4094
RB1429-701	3800
RB1438-700	3539/1
RB1439-702	3938
RB1440-203	3800/3
RB1440-701	3800/1
RB1444-203	3826/3
RB1444-701	3826/1
RB1445-208	4301
RB1445-208	4301/1
RB1450-700	3854
RB1451-700	3931
RB1498-701	3921
RB1502-703	4123
RB1511-703	3855
RB1522-066	3835
RB1523-066	3834
RB1524-066	3914
RB1526-701	3846
RB1534-700	3983
RB1535-701	3849
RB1553-701	3986
RB1572-701	3850
RB1579-701	3849
RB1593-703	4152
RB1597-701	4138
RB1597-701	4138/1
RB1600-703	3905
RB1614-700	4345
RB1617-202	3885

R BRAKE	BESER
NO	NO
RB1617-203	3885
RB1640-117	3823
RB1648-701	3826
RB1649-701	3849
RB1656-700	3939
RB1657-700	3940
RB1658-703	3946
RB1659-700	4173
RB1660-700	4293
RB1661-700	3944
RB1664-700	4389
RB1673-701	3800
RB1674-203	3842
RB1675-701	3923/1
RB1676-701	3924/1
RB1682-701	4093
RB1685-202	4181/1
RB1702-701	3987
RB1722-701	4058
RB1729-701	3984
RB1785-203	3962/1
RB1786-203	3925/2
RB1787-204	3926
RB1787-204	3926/1
RB1793-204	3906/1
RB1810-203	3826/2
RB1813-202	4002
RB1826-201	4039
RB1836-203	4171
RB1836-203	3922/3
RB1836-203	4171/1
RB1837-203	4092/1
RB1843-203	4173/2
RB1849-203	3963/1
RB1854-200	3966
RB1854-200	3966/1
RB1881-200	4122
RB1901-203	3933
RB1939-202	4008
RB1942-202	4230
RB1957-203	4314
RB1958-117	4169
RB1987-200	4310
RB2003-200	3952
RB2111-204	4228
RB2111-204	4228/1
RB2115-202	4140/1
RB15580-203	3995/1

RAICAM	BESER
NO	NO
257.0	3494
285.1	3489
291.1	3444/1
291.2	3585/1
307.0	3988/1
460.0	4148/1
460.1	4148/1
530.1	3942/A
551.0	3872/1
554.5	4181/1
632.4	4380
657.0	3647
723.0	3820/1
725.0	3820/1
735.0	4126/1
778.1	4138/1
789.1	4378
789.2	4378
821.0	4097/1
854.0	4389
854.2	4389
855.0	4388
855.2	4388
886.0	3922/1
886.3	4171/1
892.0	3906/1
892.0	3906/1A

RAICAM	BESER
NO	NO
892.0	3906/2
893.0	3907/1
893.0	3907/1A
893.0	3907/2
900.0	3925/2
901.0	3963/1
902.0	3962/1
903.0	3926/1
905.0	3920/1
907.0	4092/1
912.0	4151/1
921.0	4390
924.0	3966/1
928.0	4037/1
993.1	4228/1
994.1	4140/1
1.257.0	3494
1.285.1	3489
1.291.1	3444/1
1.291.2	3585/1
1.307.0	3988/1
1.460.0	4148/1
1.460.1	4148/1
1.530.1	3942/A
1.551.0	3872/1
1.554.5	4181/1
1.632.4	4380
1.657.0	3647
1.723.0	3820/1
1.725.0	3820/1
1.735.0	4126/1
1.778.1	4138/1
1.789.1	4378
1.789.2	4378
1.821.0	4097/1
1.854.0	4389
1.854.2	4389
1.855.0	4388
1.855.2	4388
1.886.0	3922/1
1.886.3	4171/1
1.892.0	3906/1
1.892.0	3906/1A
1.892.0	3906/2
1.893.0	3907/1
1.893.0	3907/1A
1.893.0	3907/2
1.900.0	3925/2
1.901.0	3963/1
1.902.0	3962/1
1.903.0	3926/1
1.905.0	3920/1
1.907.0	4092/1
1.912.0	4151/1
1.921.0	4390
1.924.0	3966/1
1.924.1	3966/1
1.928.0	4037/1
RA.0257.0	3494
RA.0285.1	3489
RA.0291.1	3444/1
RA.0291.2	3585/1
RA.0307.0	3988/1
RA.0460.0	4148/1
RA.0460.1	4148/1
RA.0530.0	3942/A
RA.0530.1	3942/A
RA.0551.0	3872/1
RA.0554.5	4181/1
RA.0632.4	4380
RA.0657.0	3647
RA.0723.0	3820/1
RA.0725.0	3820/1
RA.0735.0	4126/1
RA.0762.3	4301/1
RA.0778.1	4138/1
RA.0789.1	4378
RA.0789.2	4378
RA.0821.0	4097/1
RA.0854.0	4389

RAICAM	BESER
NO	NO
RA.0854.2	4389
RA.0855.0	4388
RA.0855.2	4388
RA.0886.0	3922/1
RA.0886.3	4171/1
RA.0892.0	3906/1
RA.0892.0	3906/1A
RA.0892.0	3906/2
RA.0893.0	3907/1
RA.0893.0	3907/1A
RA.0893.0	3907/2
RA.0900.0	3925/2
RA.0901.0	3963/1
RA.0902.0	3962/1
RA.0903.0	3926/1
RA.0905.0	3920/1
RA.0907.0	4092/1
RA.0912.0	4151/1
RA.0921.0	4390
RA.0924.0	3966/1
RA.0928.0	4037/1
RA.0944.1	3995/1
RA.0986.0	4176/1
RA.0993.1	4228/1
RA.0994.1	4140/1
RA.1011.0	4325/1
RA.1014.0	4382
RA.1015.0	4381
RA.1026.0	4201/1
RA.1028.0	4174/1
RA.1034.0	4172/1
RA.1045.0	4379
RA.1068.0	4283/1
RA.1077.0	4351/1
RA.1220.0	4350/1
RA.1257.0	3494
RA.1281.0	4384
RA.1285.1	3489
RA.1291.1	3444/1
RA.1291.2	3585/1
RA.1307.0	3988/1
RA.1460.0	4148/1
RA.1460.1	4148/1
RA.1530.1	3942/A
RA.1551.0	3872/1
RA.1554.5	4181/1
RA.1632.4	4380
RA.1657.0	3647
RA.1723.0	3820/1
RA.1725.0	3820/1
RA.1735.0	4126/1
RA.1778.1	4138/1
RA.1789.1	4378
RA.1789.2	4378
RA.1821.0	4097/1
RA.1854.0	4389
RA.1854.2	4389
RA.1855.0	4388
RA.1855.2	4388
RA.1886.0	3922/1
RA.1886.3	4171/1
RA.1892.0	3906/1
RA.1892.0	3906/1A
RA.1892.0	3906/2
RA.1893.0	3907/1
RA.1893.0	3907/1A
RA.1893.0	3907/2
RA.1900.0	3925/2
RA.1901.0	3963/1
RA.1902.0	3962/1
RA.1903.0	3926/1
RA.1905.0	3920/1
RA.1907.0	4092/1
RA.1912.0	4151/1
RA.1921.0	4390
RA.1924.0	3966/1
RA.1924.1	3966/1
RA.1928.0	4037/1
RA.0762.3K1	4301/1
RA.0986.0K1	4176/1
RA.1011.0K1	4325/1
RA.1026.0K1	4201/1
RA.1028.0K1	4174/1
RA.1077.0K1	4351/1

RAYBESTOS	BESER
NO	NO
EHT1171	4388
EHT1760	4228/1
EHT1348H	4390
PGD1406M	4391
PGD1505M	4378
PGD1554M	4389
PGD1561M	4382
PGD1613C	4383

REMSA	BESER
NO	NO
001.02	3405
002.00	3320
002.20	3350
006.00	3318
006.30	3318
006.40	3318
006.60	3318
0066.0	3403
007.40	3326
010.00	3315
010.00	3515
010.20	3315
010.20	3515
010.30	3315
010.30	3515
010.40	3339
010.40	3514
010.50	3339
010.50	3514
010.58	3315
010.58	3515
011.20	3332
014.00	3335
014.10	3365
014.12	3365
014.40	4103
017.00	3327
017.10	3327
017.20	3343
017.20	3483
017.30	3343
017.30	3483
021.06	3333
021.10	3329
021.12	3329
021.14	3329
021.16	3329
022.00	3316
022.10	3317
022.12	3317
022.20	3346
022.30	3316
022.50	3316
022.60	3317
023.20	3346
025.30	3425
026.02	3366/1
026.12	3366
039.00	3311
039.10	3311
042.00	3373
042.00	3627
042.10	3373
042.20	3373
042.30	3373
042.40	3373
042.50	3373
044.02	3526
045.00	3340
045.02	3340
045.10	3340
045.22	3340
045.32	3321
046.00	3378
046.10	3378
046.20	3490
046.40	3378

REMSA	BESER
NO	NO
046.50	3490
047.30	3513
047.32	3513
048.00	3537
048.10	3537
049.00	3319
052.10	3661
052.20	3661
056.00	3423
056.10	3423
056.12	3423/1
056.20	3423
058.10	3416
060.00	3374
060.10	3374
061.02	3527
063.00	3312
063.02	3484
068.02	3323
077.20	3375
079.00	3709
079.10	3709
079.20	3709
079.30	3709
080.00	3393
092.00	3710
098.00	3324
098.02	3324
101.00	3410
101.03	3410
101.10	3410
101.20	3410
101.40	3410
102.10	3873
103.00	3421
106.00	3407
109.22	3579
111.00	3509
114.00	3625
115.00	3369
117.00	3370
118.00	3406
119.00	3417
119.10	3570
119.12	3417/1
119.15	3417
119.20	3417
119.32	3417/1
120.00	3379
129.00	3415
132.00	3371
134.00	3650
134.01	3650
134.02	3619
134.03	3635
134.10	3649
134.11	3649
134.12	3635
134.15	3635
134.20	3650
134.40	3551
134.41	3531
134.50	3531
134.81	3650
134.95	3531
135.00	3536
135.01	3536
135.10	3536
135.11	3536
135.20	3536
135.22	3536
135.40	3536
135.94	3536
139.00	3573
139.02	3573
141.01	3503
141.02	3503
141.10	3503
141.11	3503
141.12	3372

REMSA	BESER
NO	NO
141.12	3503
141.16	3503
141.18	3503
141.20	3503/1
141.30	3503
141.32	3503
141.52	3503
141.78	3503
142.20	3689
143.02	3440
144.02	3381
144.06	3496
144.12	3381
144.24	3493
144.24	3494
144.32	3495
144.42	3381
144.50	3496/1
144.60	3496
146.01	3466
146.04	3466
146.11	3466
146.14	3466
146.22	3467
146.23	3467
146.41	3468
146.44	3468
146.60	3466
146.62	3466
146.80	3466
146.84	3466
147.02	3633
148.14	3666
149.00	3394
149.10	3394
151.02	4087
151.22	4087
154.00	3419
154.01	3419
154.02	3429
154.03	3429
154.10	3419
154.12	3429
155.00	3572
155.02	3572
155.10	3583
155.12	3572
155.20	3583
157.00	3611
157.10	3550
157.20	3630
159.00	3413
163.02	3442
167.04	3402
167.10	3402
168.00	3621
169.01	3624
169.81	3624
170.04	3474
170.14	3474
170.24	3556
170.34	3474
170.76	3474
171.00	3486
171.05	3444/1
171.10	3444/1
171.20	3441
171.60	3585
171.60	3585/1
172.00	3549
172.10	3790
172.11	3548
172.11	3690
172.20	3790/1
172.30	3790/1
172.32	4141
175.00	3400
176.20	3641
176.22	3641
177.00	3620

REMSA	BESER
NO	NO
178.00	3436
178.10	3436
178.20	3436
178.30	3436
178.50	3436
179.00	3875
179.10	3875
181.04	3446
184.00	3397
184.02	3758
187.00	3634
187.02	3634
188.00	3401
189.00	3408
189.02	3408
189.05	3408
189.08	3408
189.10	3408
189.11	3408
189.12	3408
189.24	3408
191.04	3395
191.12	3426
192.02	3380
192.11	3380
192.12	3380
192.34	3487
192.34	3489
192.96	3380
193.00	3501
193.02	3752
197.10	3414
202.02	3482
204.00	3462
206.00	3603
208.00	3539/1
208.12	3539
208.80	3539/1
208.83	3539
211.22	3523
212.00	3449
212.02	3449
212.12	3522
212.22	3522
212.32	3522
212.42	3522
212.52	3522
214.14	3776
220.02	3428
221.00	3422
221.01	3422
221.02	3552
222.00	3661
222.01	3771
222.11	3771
223.00	3605
223.86	3605
224.00	3504
224.02	3502
224.22	3502
228.02	3582
232.00	3746
233.02	4212
233.85	4212
233.86	4212
236.02	3760
238.04	3757
238.04	3857
238.14	3757
238.14	3857
238.24	3757
238.24	3857
239.00	3717
239.50	3717
239.60	3717
244.00	3499
244.02	3463
245.00	3679
245.12	3994
245.22	3994

REMSA	BESER
NO	NO
245.32	3994
245.40	3679
245.41	3994
245.42	3994
254.02	3600
254.12	3600
261.02	3543
261.82	3543
262.02	3457
262.12	3610
262.22	3457
262.82	3457
262.83	3610
263.10	3529
263.12	3529
263.15	3529
263.41	4152
263.88	3529
264.02	3432
264.12	3491
264.13	3432
264.14	3491
265.00	3578
265.02	3578
265.15	3656
266.00	3412
266.10	3453
267.11	3662
270.00	3564
270.10	3584
271.02	3723
273.02	3437
273.12	3437
275.02	3448
278.21	3773
278.22	3773
278.32	3773
278.42	3773
281.00	3459
281.40	3569
281.42	3568
282.00	3469
282.10	3469
284.00	3430
284.02	3430
284.83	3430
284.85	3430
285.10	3589
286.10	3470
286.20	3470
286.30	3470
286.32	3470
286.50	3505
286.50	3615
289.02	3882
289.12	3882
291.02	4108
293.12	3779
294.00	4087
294.20	4087
294.22	4087
294.32	4087
296.00	3609
296.02	3609
297.00	3642
297.10	3642
297.81	3642
306.00	4088
306.12	4088
311.00	3873
315.04	3560
317.12	4010
317.22	4010
318.02	3632
318.05	3632
318.06	3632
318.12	3632
318.32	3632
318.52	3632
318.82	3632

REMSA	BESER
NO	NO
318.92	3632
320.00	3562
320.20	3562
320.81	3562
321.02	3680
321.22	3680
323.02	3631
324.02	3696
325.02	4148/1
325.12	4148/1
325.22	4148/1
325.32	4148/1
325.42	4148/1
325.52	4148/1
331.00	3464
331.04	3722
331.10	3464
333.02	3640
337.02	3683
337.02	3872/1
337.10	3872
337.22	3872
337.80	3683
337.80	3872/1
337.81	3683
337.81	3872/1
337.90	3872
341.02	3695
342.02	4080
343.00	3660
343.40	3660
343.80	3660
343.81	3660
344.00	4104
345.00	3596
345.10	3596
351.02	3704
351.22	3704
351.32	3704
351.42	3704
354.02	3685
354.22	3685
354.32	3685
364.00	3598
364.02	3766
367.00	4072
370.00	4086
370.10	4086
372.00	3424
372.02	3424/1
372.30	3424
379.00	3628
379.12	3628
379.20	3629
381.00	3879
381.20	3879
381.30	3879
381.50	3879
381.60	4181
381.61	4181/1
382.00	3733
382.20	3733
382.81	3733
384.00	3563
385.10	4020
389.02	3883
389.12	3883
390.00	3506
390.41	3590/1
391.00	3473
392.00	3445
393.00	3623
393.02	3623
393.20	3623
393.22	3623
396.00	3892
396.10	3892
396.20	3892
397.00	3874
397.10	3874

REMSA	BESER
NO	NO
397.22	3874
402.02	3554
402.02	3651
402.22	3554
402.22	3651
402.42	3554
402.42	3651
402.52	3554
402.52	3651
403.02	4078
405.02	3688
407.00	3581
410.00	3745
412.00	3714
412.30	3714
413.00	3693
413.04	3693
413.10	3693
413.12	3693
414.01	3608
414.20	3643
415.32	4269
415.42	4269
416.00	3833
417.00	3545
417.10	3545
418.02	3607
418.22	3607
419.02	3686
419.12	3686
419.22	3686
421.00	3777
421.20	3777
424.04	4099
425.02	3674
425.12	3674
425.22	3674
426.02	3887
426.12	3887
429.04	3673
431.00	4128
431.10	4128
432.00	3558
432.01	3593
432.02	3593
433.00	4214
436.02	3749
436.12	3749/1
436.40	3749
436.41	3749/1
438.04	3819
438.14	3819
439.04	3878
441.00	3909
447.00	4197
456.02	3915
456.14	3915
459.00	3511
459.10	3511
460.02	3622
460.12	3622
461.02	3528
462.00	3888
462.20	3888
462.81	3888
467.00	4182
467.20	4182
467.30	4182
467.40	4182
468.00	3736
480.00	3553
480.21	3553/1
480.80	3553/1
480.81	3553
484.02	3867
486.02	3595
486.81	3595
487.02	3559
487.81	3559
494.02	3507

REMSA	BESER
NO	NO
494.81	3507
501.02	3898
502.02	3740
502.22	3740
507.00	3667
571.02	3781
578.00	3567
579.00	3678
580.00	3670
580.10	3670
582.00	3675
582.80	3675
583.00	3809
584.00	3512
584.00	3512/1
584.20	3512/2
586.00	3677
586.10	3677
587.12	3618
587.22	3618
588.10	3897
589.02	3617
589.12	3617
589.22	3617
589.42	3617
591.30	3795/1
591.83	3795/1
592.02	3577
592.02	3647
592.12	3598/1
592.22	3577
592.22	3647
593.00	4034
593.00	4034/1
594.00	3884
594.02	3884
595.02	3602
596.00	3881
596.10	3881
598.02	3697
601.00	3863
601.10	3863
601.20	3863
601.30	3863
602.02	3799
603.04	3750
603.80	3750
605.02	4062
605.12	4062
605.80	4062
605.82	4062
605.83	4062
609.00	3538
609.10	3566
609.20	3637
618.00	3606
618.01	3794
619.02	3574
619.02	3914/1
620.00	3419
620.20	3419
620.80	3419
620.81	3419
621.00	3822
621.20	3822
630.00	3663
631.10	3896
631.12	3896
631.82	3896
631.90	3896
633.00	3682
634.04	3636
634.84	3636
635.00	3872
636.04	4071
636.12	4071
640.00	3994
640.40	3994
643.00	3659
643.10	3938

REMSA	BESER
NO	NO
643.20	3938
643.80	3938
643.81	3659
643.90	3938
645.00	3687/1
645.02	3687/1
645.12	3687/1
647.02	3764
650.00	4125
650.80	4125
650.81	4125
651.00	3575
651.10	3575/2
651.80	3575
651.81	3575/2
651.86	3942/A
655.02	4079
662.02	3653
674.12	3932
675.02	3778
678.00	3676
678.10	3676
679.00	4274
684.02	3762
691.00	3754
693.00	3755
693.80	3755
694.10	4115
695.02	4155
695.82	4155
696.00	3744
697.01	4126
697.01	4126/1
698.01	4069
699.00	3780
701.00	3681
703.02	3648
705.02	4281
705.81	4281
706.00	3830
707.04	3829
708.02	4059
708.82	4059
709.00	3821
709.10	3821
710.02	4027
711.04	3859
711.11	3859
712.02	3768
712.12	3768
713.00	3919
714.00	3918
717.00	3861
719.00	3943
720.02	3901
724.02	3928
724.11	3928
725.02	3748
727.10	4123
727.20	4123
729.02	3913
730.01	3767
733.00	3804
735.02	4110
736.02	4011
736.12	4011
736.32	4011
739.02	4009
740.00	3769
740.02	3769
741.02	3788
746.02	3993
746.12	3993
746.22	3993
746.32	3993
746.42	3895
746.62	3895
747.02	4109
747.02	4232
747.12	4109

REMSA	BESER
NO	NO
747.12	4232
748.02	4017
750.02	4084
752.12	4222
766.00	3877
767.01	4345
768.00	3836
768.10	3836
768.81	3836
769.00	4102
771.02	3843
771.12	3843
771.22	3843
772.02	3784
772.12	3921
772.82	3784
772.83	3921
774.02	3846
774.12	3846
774.82	3846
775.01	4138
775.01	4138/1
775.81	4138
775.81	4138/1
776.00	4100
776.10	4100
776.80	4100
776.81	4100
777.00	4093
777.10	4093
777.80	4093
800.22	4118
802.00	4119
803.12	3893
803.22	3893
804.02	3955
804.12	3955
804.31	3955
807.00	4012
807.02	4012
813.00	4158
819.00	3856
821.02	3802
821.12	3802
822.00	4094
822.12	3817
827.04	3934
827.84	3934
828.04	3935
833.00	3855
833.80	3855
834.00	3848
834.10	3848
836.02	4095
839.02	4153
840.00	3820
840.00	3820/1
840.10	3820
840.10	3820/1
840.20	3820
840.20	3820/1
840.30	3820
840.30	3820/1
840.82	3820
840.82	3820/1
841.00	3800
841.10	3800
841.80	3800
842.00	3853
842.10	3853
842.20	3853/1
842.30	3853/1
842.70	3853/1
843.00	3852
843.10	3852
845.01	4271
849.00	3823
849.10	3823
852.04	4143
852.14	4143

REMSA	BESER
NO	NO
854.00	3911
855.00	4082
857.00	4180
857.20	4378
858.01	3826/1
858.10	3826
858.11	3826/1
858.30	3826
858.32	3826/3
858.80	3826/1
859.01	3800/1
859.10	3800
859.11	3800/1
859.12	3800/3
859.20	3800/2
859.21	3800/2
859.80	3800/1
874.02	3825
876.01	3933
876.21	3933
876.31	3933
876.41	3933
879.12	3986
879.81	3986
880.00	3931
880.80	3931
881.00	3854
881.80	3854
883.11	4303
884.00	3910
888.00	4211
888.20	4211
888.40	4211
892.00	4179
893.02	3961
897.11	3842
899.00	3831
899.02	3831
899.12	3831
951.02	3912
951.11	3912
953.00	3959
953.02	3959
953.12	3959
953.22	3959
954.00	4013
958.10	4208
959.01	3835
960.01	3834
961.00	3914
962.00	3950
964.12	4096
965.01	3765
970.02	3889
971.02	3769
973.02	4031
976.00	3849
976.10	3849
976.20	3849
976.80	3849
976.81	3849
977.00	3850
977.80	3850
978.02	4112
984.00	3801
985.02	4074
986.00	3951
987.00	3983
987.02	3983/2
987.02	3983/3
987.10	3983
987.11	3983/1
988.00	3891
996.00	4076
0001.02	3405
0002.00	3320
0002.20	3350
0006.00	3318
0006.30	3318
0006.40	3318

REMSA	BESER
NO	NO
0006.60	3318
0007.40	3326
0010.00	3315
0010.00	3515
0010.20	3315
0010.20	3515
0010.30	3315
0010.30	3515
0010.40	3339
0010.40	3514
0010.50	3339
0010.50	3514
0010.58	3315
0010.58	3515
0011.20	3331
0014.00	3335
0014.10	3365
0014.12	3365
0014.40	4103
0016.00	3326/1
0017.00	3327
0017.10	3327
0017.20	3343
0017.20	3483
0017.30	3343
0017.30	3483
0018.00	3404
0021.06	3333
0021.10	3329
0021.12	3329
0021.14	3329
0021.16	3329
0022.00	3316
0022.10	3317
0022.12	3317
0022.20	3346
0022.30	3316
0022.50	3316
0022.60	3317
0023.20	3346
0025.30	3425
0026.02	3366/1
0026.12	3366
0037.00	3455
0039.00	3311
0039.10	3311
0042.00	3373
0042.10	3373
0042.20	3373
0042.30	3373
0042.40	3373
0042.50	3373
0044.02	3526
0045.00	3340
0045.02	3340
0045.10	3340
0045.22	3340
0045.32	3321
0046.00	3378
0046.10	3378
0046.20	3490
0046.40	3378
0046.50	3490
0047.30	3513
0047.32	3513
0048.00	3537
0048.10	3537
0049.10	3840
0052.10	3661
0052.20	3661
0054.00	3481
0056.00	3423
0056.10	3423
0056.12	3423/1
0056.20	3423
0058.10	3416
0060.00	3374
0060.10	3374
0061.02	3527
0062.00	3377

REMSA	BESER
NO	NO
0063.00	3312
0063.02	3484
0068.02	3323
0068.12	3322
0069.10	3313
0079.00	3709
0079.10	3709
0079.20	3709
0079.30	3709
0080.00	3393
0092.00	3710
0098.00	3324
0098.02	3324
0101.00	3410
0101.03	3410
0101.10	3410
0101.20	3410
0101.40	3410
0102.10	3873
0103.00	3421
0106.00	3407
0109.22	3579
0111.00	3509
0113.00	3706
0114.00	3625
0115.00	3369
0117.00	3370
0119.00	3417
0119.10	3570
0119.12	3417/1
0119.15	3417
0119.20	3417
0119.32	3417/1
0120.00	3379
0129.00	3415
0132.00	3371
0134.00	3650
0134.01	3650
0134.02	3619
0134.03	3635
0134.10	3649
0134.11	3649
0134.12	3635
0134.15	3635
0134.20	3650
0134.40	3551
0134.41	3531
0134.50	3531
0134.81	3650
0134.95	3531
0135.00	3536
0135.01	3536
0135.10	3536
0135.11	3536
0135.20	3536
0135.22	3536
0135.40	3536
0135.94	3536
0139.00	3573
0139.02	3573
0141.01	3503
0141.02	3503
0141.10	3503
0141.11	3503
0141.12	3503
0141.16	3503
0141.18	3503
0141.20	3503/1
0141.30	3503
0141.32	3503
0141.52	3503
0141.78	3503
0142.20	3689
0143.02	3440
0144.02	3381
0144.06	3496
0144.12	3381
0144.24	3493
0144.24	3494
0144.32	3495

REMSA	BESER
NO	NO
0144.42	3381
0144.50	3496/1
0144.60	3496
0146.01	3466
0146.04	3466
0146.11	3466
0146.14	3466
0146.22	3467
0146.23	3467
0146.41	3468
0146.44	3468
0146.60	3466
0146.62	3466
0146.80	3466
0146.84	3466
0147.02	3633
0148.14	3666
0149.00	3394
0149.10	3394
0151.02	4087
0151.22	4087
0154.00	3419
0154.01	3419
0154.02	3429
0154.03	3429
0154.10	3419
0154.12	3429
0155.00	3572
0155.02	3572
0155.10	3583
0155.12	3572
0155.20	3583
0157.00	3611
0157.10	3550
0157.20	3630
0159.00	3413
0163.02	3442
0167.04	3402
0167.10	3402
0168.00	3621
0169.01	3624
0169.81	3624
0170.04	3474
0170.14	3474
0170.24	3556
0170.34	3474
0170.76	3474
0171.00	3486
0171.05	3444/1
0171.10	3444/1
0171.20	3441
0171.60	3585
0171.60	3585/1
0172.00	3549
0172.10	3790
0172.11	3548
0172.11	3690
0172.20	3790/1
0172.30	3790/1
0172.32	4141
0175.00	3400
0176.20	3641
0176.22	3641
0177.00	3620
0178.00	3436
0178.10	3436
0178.20	3436
0178.30	3436
0178.50	3436
0179.00	3875
0179.10	3875
0181.04	3446
0184.00	3397
0184.02	3758
0187.00	3634
0187.02	3634
0188.00	3401
0189.00	3408
0189.02	3408
0189.05	3408

REMSA	BESER
NO	NO
0189.08	3408
0189.10	3408
0189.11	3408
0189.12	3408
0189.24	3408
0191.04	3395
0191.12	3426
0192.02	3380
0192.11	3380
0192.12	3380
0192.34	3487
0192.34	3489
0192.96	3380
0193.00	3501
0193.02	3752
0199.10	3701
0202.02	3482
0204.00	3462
0206.00	3603
0208.00	3539/1
0208.12	3539
0208.80	3539/1
0208.83	3539
0211.22	3523
0212.00	3449
0212.02	3449
0212.12	3522
0212.22	3522
0212.32	3522
0212.42	3522
0212.52	3522
0214.14	3776
0220.02	3428
0221.00	3422
0221.01	3422
0221.02	3552
0222.00	3661
0222.01	3771
0222.11	3771
0223.00	3605
0223.86	3605
0224.00	3504
0224.02	3502
0224.22	3502
0228.02	3582
0232.00	3746
0233.02	4212
0233.85	4212
0233.86	4212
0236.02	3760
0238.04	3757
0238.04	3857
0238.14	3757
0238.14	3857
0238.24	3757
0238.24	3857
0239.00	3717
0239.50	3717
0239.60	3717
0244.00	3499
0244.02	3463
0245.00	3679
0245.12	3994
0245.22	3994
0245.32	3994
0245.40	3679
0245.41	3994
0245.42	3994
0254.02	3600
0254.12	3600
0261.02	3543
0261.82	3543
0262.02	3457
0262.12	3610
0262.22	3457
0262.82	3457
0262.83	3610
0263.10	3529
0263.12	3529
0263.15	3529

REMSA	BESER
NO	NO
0263.41	4152
0263.88	3529
0264.02	3432
0264.12	3491
0264.13	3432
0264.14	3491
0265.00	3578
0265.02	3578
0265.15	3656
0266.00	3412
0266.10	3453
0267.11	3662
0270.00	3564
0270.10	3584
0271.02	3723
0273.02	3437
0273.12	3437
0275.02	3448
0278.22	3773
0278.32	3773
0278.42	3773
0281.00	3459
0281.02	3461
0281.40	3569
0281.42	3568
0282.00	3469
0282.10	3469
0284.00	3430
0284.02	3430
0284.83	3430
0284.85	3430
0285.10	3589
0286.10	3470
0286.20	3470
0286.30	3470
0286.32	3470
0286.50	3505
0286.50	3615
0289.02	3882
0289.12	3882
0291.02	4108
0293.12	3779
0294.00	4087
0294.20	4087
0294.22	4087
0294.32	4087
0296.00	3609
0296.02	3609
0297.00	3642
0297.10	3642
0297.81	3642
0306.00	4088
0306.12	4088
0311.00	3873
0315.04	3560
0317.12	4010
0317.22	4010
0318.02	3632
0318.05	3632
0318.06	3632
0318.12	3632
0318.32	3632
0318.52	3632
0318.82	3632
0318.92	3632
0320.00	3562
0320.20	3562
0320.81	3562
0321.02	3680
0321.22	3680
0323.02	3631
0324.02	3696
0325.02	4148/1
0325.12	4148/1
0325.22	4148/1
0325.32	4148/1
0325.42	4148/1
0325.52	4148/1
0331.00	3464
0331.04	3722

REMSA	BESER
NO	NO
0331.10	3464
0333.02	3640
0337.02	3683
0337.02	3872/1
0337.10	3872
0337.22	3872
0337.80	3683
0337.80	3872/1
0337.81	3683
0337.81	3872/1
0337.90	3872
0341.02	3695
0342.02	4080
0343.00	3660
0343.40	3660
0343.80	3660
0343.81	3660
0344.00	4104
0345.00	3596
0345.10	3596
0351.02	3704
0351.22	3704
0351.32	3704
0351.42	3704
0354.02	3685
0354.22	3685
0354.32	3685
0362.02	4033
0364.00	3598
0364.02	3766
0367.00	4072
0370.00	4086
0370.10	4086
0372.00	3424
0372.02	3424/1
0372.30	3424
0379.00	3628
0379.12	3628
0379.20	3629
0381.00	3879
0381.20	3879
0381.30	3879
0381.50	3879
0381.60	4181
0381.61	4181/1
0382.00	3733
0382.20	3733
0382.81	3733
0384.00	3563
0385.10	4020
0389.02	3883
0389.12	3883
0390.00	3506
0390.41	3590/1
0391.00	3473
0392.00	3445
0393.00	3623
0393.02	3623
0393.20	3623
0393.22	3623
0396.00	3892
0396.10	3892
0396.20	3892
0397.00	3874
0397.10	3874
0397.22	3874
0402.02	3554
0402.02	3651
0402.22	3554
0402.22	3651
0402.42	3554
0402.42	3651
0402.52	3554
0402.52	3651
0403.02	4078
0405.02	3688
0407.00	3581
0410.00	3745
0412.00	3714
0412.30	3714

REMSA	BESER
NO	NO
0413.00	3693
0413.04	3693
0413.10	3693
0413.12	3693
0414.01	3608
0414.20	3643
0415.32	4269
0415.42	4269
0416.00	3833
0417.00	3545
0417.10	3545
0418.02	3607
0418.22	3607
0419.02	3686
0419.12	3686
0419.22	3686
0421.00	3777
0421.20	3777
0424.04	4099
0425.02	3674
0425.12	3674
0425.22	3674
0426.02	3887
0426.12	3887
0429.04	3673
0431.00	4128
0431.10	4128
0432.00	3558
0432.01	3593
0432.02	3593
0433.00	4214
0438.04	3819
0438.14	3819
0439.04	3878
0441.00	3909
0447.00	4197
0456.02	3915
0456.14	3915
0459.00	3511
0459.10	3511
0460.02	3622
0460.12	3622
0461.02	3528
0462.00	3888
0462.20	3888
0462.81	3888
0467.00	4182
0467.20	4182
0467.30	4182
0467.40	4182
0468.00	3736
0480.00	3553
0480.21	3553/1
0480.80	3553/1
0480.81	3553
0484.02	3867
0486.02	3595
0486.81	3595
0487.02	3559
0487.81	3559
0494.02	3507
0494.81	3507
0501.02	3898
0502.02	3740
0502.22	3740
0507.00	3667
0510.00	3864
0552.02	3868
0562.00	3544
0571.02	3781
0578.00	3567
0579.00	3678
0580.00	3670
0580.10	3670
0582.00	3675
0582.80	3675
0583.00	3809
0584.00	3512
0584.00	3512/1
0584.20	3512/2

REMSA	BESER
NO	NO
0586.00	3677
0586.10	3677
0587.12	3618
0587.22	3618
0588.10	3897
0589.02	3617
0589.12	3617
0589.22	3617
0589.42	3617
0591.30	3795/1
0591.83	3795/1
0592.02	3577
0592.02	3647
0592.12	3598/1
0592.22	3577
0592.22	3647
0593.00	4034
0593.00	4034/1
0594.00	3884
0594.02	3884
0595.02	3602
0596.00	3881
0596.10	3881
0598.02	3697
0601.00	3863
0601.10	3863
0601.20	3863
0601.30	3863
0602.02	3799
0603.04	3750
0603.80	3750
0605.02	4062
0605.12	4062
0605.80	4062
0605.82	4062
0605.83	4062
0609.00	3538
0609.10	3566
0609.20	3637
0618.00	3606
0618.01	3794
0619.02	3574
0619.02	3914/1
0620.00	3419
0620.20	3419
0620.80	3419
0620.81	3419
0621.00	3822
0621.20	3822
0630.00	3663
0631.10	3896
0631.12	3896
0631.82	3896
0631.90	3896
0633.00	3682
0634.04	3636
0634.84	3636
0635.00	3872
0636.04	4071
0636.12	4071
0640.00	3994
0640.40	3994
0643.00	3659
0643.10	3759
0643.10	3938
0643.20	3938
0643.80	3938
0643.81	3659
0643.90	3938
0645.00	3687/1
0645.02	3687/1
0645.12	3687/1
0647.02	3764
0650.00	4125
0650.80	4125
0650.81	4125
0651.00	3575
0651.10	3575/2
0651.80	3575
0651.81	3575/2

REMSA	BESER
NO	NO
0651.86	3942/A
0655.02	4079
0662.02	3653
0674.12	3932
0675.02	3778
0678.00	3676
0678.10	3676
0679.00	4274
0684.02	3762
0691.00	3754
0693.00	3755
0693.80	3755
0694.10	4115
0695.02	4155
0695.82	4155
0696.00	3744
0697.01	4126
0697.01	4126/1
0698.01	4069
0699.00	3780
0701.00	3681
0703.02	3648
0705.02	4281
0705.81	4281
0706.00	3830
0707.04	3829
0708.02	4059
0708.82	4059
0709.00	3821
0709.10	3821
0710.02	4027
0711.04	3859
0711.11	3859
0712.02	3768
0712.12	3768
0713.00	3919
0714.00	3918
0717.00	3861
0719.00	3943
0720.02	3901
0724.02	3928
0724.11	3928
0725.02	3748
0727.10	4123
0727.20	4123
0729.02	3913
0730.01	3767
0733.00	3804
0735.02	4110
0736.02	4011
0736.12	4011
0736.32	4011
0739.02	4009
0740.00	3769
0740.02	3769
0741.02	3788
0746.02	3993
0746.12	3993
0746.22	3993
0746.32	3993
0746.42	3895
0746.62	3895
0747.02	4109
0747.02	4232
0747.12	4109
0747.12	4232
0748.02	4017
0750.02	4084
0752.12	4222
0756.02	4021
0766.00	3877
0767.01	4345
0768.00	3836
0768.10	3836
0768.81	3836
0769.00	4102
0770.00	4101
0770.00	4209
0771.02	3843
0771.12	3843

REMSA	BESER
NO	NO
0771.22	3843
0772.02	3784
0772.12	3921
0772.82	3784
0772.83	3921
0774.02	3846
0774.12	3846
0774.82	3846
0775.01	4138
0775.01	4138/1
0775.81	4138
0775.81	4138/1
0776.00	4100
0776.10	4100
0776.80	4100
0776.81	4100
0777.00	4093
0777.10	4093
0777.80	4093
0799.40	4188
0800.22	4118
0802.00	4119
0803.12	3893
0803.22	3893
0804.02	3955
0804.12	3955
0804.31	3955
0807.00	4012
0807.02	4012
0813.00	4158
0819.00	3856
0821.02	3802
0821.12	3802
0822.00	4094
0822.12	3817
0827.04	3934
0827.84	3934
0828.04	3935
0833.00	3855
0833.80	3855
0834.00	3848
0834.10	3848
0836.02	4095
0837.02	4221
0838.02	4219
0839.02	4153
0840.00	3820
0840.00	3820/1
0840.10	3820
0840.10	3820/1
0840.20	3820
0840.20	3820/1
0840.30	3820
0840.30	3820/1
0840.82	3820
0840.82	3820/1
0841.00	3800
0841.10	3800
0841.80	3800
0842.00	3853
0842.10	3853
0842.20	3853/1
0842.30	3853/1
0842.70	3853/1
0843.00	3852
0843.10	3852
0845.01	4271
0849.00	3823
0849.10	3823
0852.04	4143
0852.14	4143
0854.00	3911
0855.00	4082
0857.00	4180
0857.20	4378
0858.01	3826/1
0858.10	3826
0858.11	3826/1
0858.30	3826
0858.32	3826/3

REMSA	BESER
NO	NO
0858.80	3826/1
0859.01	3800/1
0859.10	3800
0859.11	3800/1
0859.12	3800/3
0859.20	3800/2
0859.21	3800/2
0859.80	3800/1
0860.12	4301
0860.12	4301/1
0874.02	3825
0876.01	3933
0876.21	3933
0876.31	3933
0876.41	3933
0879.12	3986
0879.81	3986
0880.00	3931
0880.80	3931
0881.00	3854
0881.80	3854
0883.11	4303
0884.00	3910
0888.00	4211
0888.20	4211
0888.40	4211
0889.00	4083
0890.00	4276
0892.00	4179
0893.02	3961
0897.11	3842
0899.00	3831
0899.02	3831
0899.12	3831
0951.02	3912
0951.11	3912
0953.00	3959
0953.02	3959
0953.12	3959
0953.22	3959
0954.00	4013
0958.10	4208
0959.01	3835
0960.01	3834
0961.00	3914
0962.00	3950
0964.12	4096
0965.01	3765
0970.02	3889
0971.02	3769
0973.02	4031
0976.00	3849
0976.10	3849
0976.20	3849
0976.80	3849
0976.81	3849
0977.00	3850
0977.80	3850
0978.02	4112
0984.00	3801
0985.02	4074
0986.00	3951
0987.00	3983
0987.02	3983/2
0987.02	3983/3
0987.10	3983
0987.11	3983/1
0988.00	3891
0989.10	4023
0990.02	4097
0994.00	4075
0996.00	4076
1030.01	3904
1031.00	3905
1036.02	4042
1037.00	4216
1038.02	4028
1038.12	4028
1039.00	4105
1040.00	4111

REMSA	BESER
NO	NO
1041.02	3978
1041.12	3978
1042.02	3979
1045.01	3841/1
1045.11	3841
1046.02	3890
1047.02	4154
1048.00	3894
1051.02	4106
1052.00	4346
1052.30	4380
1068.02	4159
1069.00	3827
1073.20	3343
1073.20	3483
1081.01	4036
1081.11	4036
1082.00	3885
1085.02	3976/1
1098.02	3886
1098.14	3886
1100.00	4173
1100.11	4173/1
1100.21	4173/1
1101.04	3940
1102.04	3939
1103.00	3946
1106.02	4030
1109.02	3923/1
1110.02	3924/1
1113.00	4137
1123.02	3797
1126.08	4006
1127.08	4018
1128.08	4198
1129.01	3900
1132.00	4389
1133.02	3968
1134.02	4001
1135.02	3969
1136.01	4213
1137.02	4081
1138.00	3984
1139.02	3985
1145.00	4388
1145.10	4388
1149.10	4058
1151.00	3988
1151.00	3988/1
1152.00	3747
1158.00	4293
1159.00	3944
1159.10	3944
1162.01	3952
1162.12	3952
1166.01	4000
1173.02	4016
1177.00	3987
1179.00	4210
1181.02	4113
1183.01	4121
1196.02	4029
1200.00	3945
1200.30	3945
1202.00	4240
1208.02	3880
1209.02	3980
1223.02	4073
1224.00	3958
1225.02	3929
1226.02	3960
1226.32	4251/1
1228.01	4258
1231.00	3949
1232.00	3953
1233.00	3948
1234.00	4077
1235.02	3982
1238.00	3820/3
1239.02	3989

REMSA	BESER
NO	NO
1242.00	3975
1242.01	3975
1243.00	3962
1243.00	3962/1
1245.00	3925
1245.00	3925/2
1245.02	3965/1
1245.10	3965
1246.00	3926
1246.00	3926/1
1246.02	3926
1246.02	3926/1
1247.00	3963
1247.00	3963/1
1248.00	3964
1248.10	3964/1
1250.00	3906/1
1250.02	3906
1250.02	3906/1
1250.02	3906/1A
1250.02	3906/2
1250.11	3906
1250.11	3906/1
1250.11	3906/1A
1250.11	3906/2
1251.02	3920
1251.02	3920/1
1252.02	3907
1252.02	3907/1
1252.02	3907/1A
1252.02	3907/2
1256.00	4157
1259.02	4005
1261.12	3976
1264.02	4004
1266.00	3903
1270.02	4368
1271.02	3996
1272.00	3997
1274.02	4060
1275.01	3922
1275.01	3922/1
1275.12	4171
1275.12	3922/3
1275.12	4171/1
1281.02	4122
1282.00	4092
1282.00	4092/1
1282.02	4122
1285.12	4202
1286.02	3954
1289.02	4160
1290.02	4156
1291.02	4035
1292.01	3972
1293.02	4015
1297.00	4207
1299.00	4151
1299.00	4151/1
1301.00	4248
1302.02	4039
1302.22	4039
1303.02	4165
1304.00	4249
1304.10	4259
1305.00	4247
1310.02	3956
1312.00	4255
1313.00	4254
1318.00	4038
1323.00	3970
1337.00	4054
1339.00	3995
1342.00	4390
1343.00	4260
1345.00	4309
1350.00	4134
1351.00	3966
1351.00	3966/1
1352.00	3967

REMSA	BESER
NO	NO
1356.02	4037
1356.02	4037/1
1362.02	4061
1375.12	4149
1377.00	4391
1379.10	4310
1382.00	3971
1387.00	4142
1388.04	4150
1395.00	4256
1399.00	4169
1403.02	4146
1407.00	4124
1407.12	4308
1409.10	4314
1412.32	4166
1420.00	4135
1421.00	4325/1
1423.02	4233
1426.02	4049
1431.02	4008
1431.12	4230
1432.02	4014
1432.12	4014
1433.00	4379
1439.01	4057
1439.11	4057
1440.01	4162
1442.01	4132
1442.01	4172
1442.01	4172/1
1449.01	4056
1457.00	4382
1464.08	4145
1466.00	3998
1468.02	4167
1468.04	4167
1476.00	4383
1478.00	4381
1481.02	4265
1482.00	4161
1488.02	4136
1496.00	4378
1510.00	4226
1510.10	4226
1514.00	4204
1516.00	4241
1520.02	4174
1520.02	4174/1
1521.00	4175
1530.00	4201
1530.00	4201/1
1538.04	4315
1540.00	4140
1540.10	4140/1
1544.04	4170
1548.02	4312
1551.00	4270
1553.00	4200
1557.00	4374
1558.00	4205
1560.00	4371
1560.00	4373
1561.02	4176
1561.02	4176/1
1562.00	4372
1569.02	4317
1570.02	4318
1582.02	4283/1
1588.02	4224
1601.01	4295
1602.02	4351/1
1617.08	4227
1719.00	4369
1720.00	4370
1724.08	4280
1801.02	4376
1830.00	4350/1
2390.10	3665
4310.01	4249

REMSA	BESER
NO	NO
7843.02	3762
RAP1189	4372
RAP1306	4369
RAP1433	4370
RAP1445	4371
RAP1445	4373
JCA245.00	3679
JCA245.12	3994
JCA245.22	3994
JCA245.32	3994
JCA245.40	3679
JCA245.41	3994
JCA245.42	3994
JCA277.00	3433/1
JCA277.10	3433/1
JCA277.12	3433
JCA277.40	3433
JCA278.21	3773
JCA278.22	3773
JCA278.32	3773
JCA278.42	3773
JCA436.40	3749
JCA436.41	3749/1
JCA640.00	3994
JCA640.40	3994
JCA823.40	3521
PCA010900	3579
PCA014406	3496
PCA014414	3493
PCA014414	3494
PCA014460	3496
PCA014834	3666
PCA014902	3394
PCA017235	3549
PCA023300	4212
PCA023364	4212
PCA023385	4212
PCA030100	3458
PCA038161	4181/1
PCA045700	4275
PCA049002	3683
PCA049002	3872/1
PCA059620	3881
PCA068402	3762
PCA069701	4126/1
PCA085720	4378
PCA086012	4301
PCA086012	4301/1
PCA105230	4380
PCA108101	4036
PCA108111	4036
PCA111002	3924/1
PCA112400	4220
PCA113200	4389
PCA114500	4388
PCA114510	4388
PCA115100	3988/1
PCA120030	3945
PCA122632	4251/1
PCA124300	3962/1
PCA124500	3925/2
PCA124600	3926/1
PCA124602	3926/1
PCA124700	3963/1
PCA125002	3906/1
PCA125002	3906/1A
PCA125002	3906/2
PCA125011	3906/1
PCA125011	3906/1A
PCA125011	3906/2
PCA125102	3920/1
PCA125201	3907
PCA125202	3907/1
PCA125202	3907/1A
PCA125202	3907/2
PCA127501	3922/1
PCA127512	4171/1
PCA128200	4092/1
PCA129900	4151/1
PCA130400	4249

REMSA	BESER
NO	NO
PCA134200	4390
PCA135100	3966/1
PCA135602	4037/1
PCA137700	4391
PCA137910	4310
PCA140712	4308
PCA141000	4291
PCA142100	4325/1
PCA143300	4379
PCA144201	4172/1
PCA145700	4382
PCA147600	4383
PCA147800	4381
PCA148200	4161
PCA149600	4378
PCA151501	4228/1
PCA152002	4174/1
PCA153000	4201/1
PCA154010	4140/1
PCA154802	4312
PCA155700	4374
PCA156000	4371
PCA156000	4373
PCA156102	4176/1
PCA156200	4372
PCA158202	4283/1
PCA160202	4351/1
PCA171900	4369
PCA172000	4370
PCA172408	4280
PCA180102	4376
PCA183000	4350/1
PCA431001	4249
PCA784302	3762
BPM0001.02	3405
BPM0002.00	3320
BPM0002.20	3350
BPM0006.00	3318
BPM0006.30	3318
BPM0006.40	3318
BPM0006.60	3318
BPM0007.40	3326
BPM0010.00	3315
BPM0010.00	3515
BPM0010.20	3315
BPM0010.20	3515
BPM0010.30	3315
BPM0010.30	3515
BPM0010.40	3339
BPM0010.40	3514
BPM0010.50	3339
BPM0010.50	3514
BPM0010.58	3315
BPM0010.58	3515
BPM0014.00	3335
BPM0014.10	3365
BPM0014.12	3365
BPM0014.40	4103
BPM0017.00	3327
BPM0017.10	3327
BPM0017.20	3343
BPM0017.20	3483
BPM0017.30	3343
BPM0017.30	3483
BPM0021.06	3333
BPM0021.10	3329
BPM0021.12	3329
BPM0021.14	3329
BPM0021.16	3329
BPM0022.00	3316
BPM0022.10	3317
BPM0022.12	3317
BPM0022.20	3346
BPM0022.30	3316
BPM0022.50	3316
BPM0022.60	3317
BPM0023.20	3346
BPM0025.30	3425
BPM0026.02	3366/1
BPM0026.12	3366

REMSA	BESER
NO	NO
BPM0039.00	3311
BPM0039.10	3311
BPM0042.00	3373
BPM0042.10	3373
BPM0042.20	3373
BPM0042.30	3373
BPM0042.40	3373
BPM0042.50	3373
BPM0044.02	3526
BPM0045.00	3340
BPM0045.02	3340
BPM0045.10	3340
BPM0045.22	3340
BPM0045.32	3321
BPM0046.00	3378
BPM0046.10	3378
BPM0046.20	3490
BPM0046.40	3378
BPM0046.50	3490
BPM0047.30	3513
BPM0047.32	3513
BPM0048.00	3537
BPM0048.10	3537
BPM0052.10	3661
BPM0052.20	3661
BPM0056.00	3423
BPM0056.10	3423
BPM0056.12	3423/1
BPM0056.20	3423
BPM0058.10	3416
BPM0060.00	3374
BPM0060.10	3374
BPM0061.02	3527
BPM0063.00	3312
BPM0063.02	3484
BPM0068.02	3323
BPM0079.00	3709
BPM0079.10	3709
BPM0079.20	3709
BPM0079.30	3709
BPM0080.00	3393
BPM0092.00	3710
BPM0098.00	3324
BPM0098.02	3324
BPM0101.00	3410
BPM0101.03	3410
BPM0101.10	3410
BPM0101.20	3410
BPM0101.40	3410
BPM0102.10	3873
BPM0103.00	3421
BPM0106.00	3407
BPM0109.00	3579
BPM0109.12	3579
BPM0109.22	3579
BPM0111.00	3509
BPM0114.00	3625
BPM0115.00	3369
BPM0117.00	3370
BPM0119.00	3417
BPM0119.10	3570
BPM0119.12	3417/1
BPM0119.15	3417
BPM0119.20	3417
BPM0119.32	3417/1
BPM0120.00	3379
BPM0129.00	3415
BPM0132.00	3371
BPM0134.00	3650
BPM0134.01	3650
BPM0134.02	3619
BPM0134.03	3635
BPM0134.10	3649
BPM0134.11	3649
BPM0134.12	3635
BPM0134.15	3635
BPM0134.20	3650
BPM0134.40	3551
BPM0134.41	3531
BPM0134.50	3531

REMSA	BESER
NO	NO
BPM0134.81	3650
BPM0134.95	3531
BPM0135.00	3536
BPM0135.01	3536
BPM0135.10	3536
BPM0135.11	3536
BPM0135.20	3536
BPM0135.22	3536
BPM0135.40	3536
BPM0135.94	3536
BPM0139.00	3573
BPM0139.02	3573
BPM0141.01	3503
BPM0141.02	3503
BPM0141.10	3503
BPM0141.11	3503
BPM0141.12	3503
BPM0141.16	3503
BPM0141.18	3503
BPM0141.20	3503/1
BPM0141.30	3503
BPM0141.32	3503
BPM0141.52	3503
BPM0141.78	3503
BPM0142.20	3689
BPM0143.02	3440
BPM0144.02	3381
BPM0144.06	3496
BPM0144.12	3381
BPM0144.24	3493
BPM0144.24	3494
BPM0144.32	3495
BPM0144.42	3381
BPM0144.50	3496/1
BPM0144.60	3496
BPM0146.01	3466
BPM0146.04	3466
BPM0146.11	3466
BPM0146.14	3466
BPM0146.22	3467
BPM0146.23	3467
BPM0146.41	3468
BPM0146.44	3468
BPM0146.60	3466
BPM0146.62	3466
BPM0146.80	3466
BPM0146.84	3466
BPM0147.02	3633
BPM0148.14	3666
BPM0149.00	3394
BPM0149.10	3394
BPM0151.02	4087
BPM0151.22	4087
BPM0154.00	3419
BPM0154.01	3419
BPM0154.02	3429
BPM0154.03	3429
BPM0154.10	3419
BPM0154.12	3429
BPM0155.00	3572
BPM0155.02	3572
BPM0155.10	3583
BPM0155.12	3572
BPM0155.20	3583
BPM0157.00	3611
BPM0157.10	3550
BPM0157.20	3630
BPM0159.00	3413
BPM0163.02	3442
BPM0167.04	3402
BPM0167.10	3402
BPM0168.00	3621
BPM0169.01	3624
BPM0169.81	3624
BPM0170.04	3474
BPM0170.14	3474
BPM0170.24	3556
BPM0170.34	3474
BPM0170.76	3474
BPM0171.00	3486

REMSA	BESER
NO	NO
BPM0171.05	3444/1
BPM0171.10	3444/1
BPM0171.20	3441
BPM0171.60	3585
BPM0171.60	3585/1
BPM0172.00	3549
BPM0172.10	3790
BPM0172.11	3548
BPM0172.11	3690
BPM0172.20	3790/1
BPM0172.30	3790/1
BPM0172.32	4141
BPM0175.00	3400
BPM0176.20	3641
BPM0176.22	3641
BPM0177.00	3620
BPM0178.00	3436
BPM0178.10	3436
BPM0178.20	3436
BPM0178.30	3436
BPM0178.50	3436
BPM0179.00	3875
BPM0179.10	3875
BPM0181.04	3446
BPM0184.00	3397
BPM0184.02	3758
BPM0187.00	3634
BPM0187.02	3634
BPM0188.00	3401
BPM0189.00	3408
BPM0189.02	3408
BPM0189.05	3408
BPM0189.08	3408
BPM0189.10	3408
BPM0189.11	3408
BPM0189.12	3408
BPM0189.24	3408
BPM0191.04	3395
BPM0191.12	3426
BPM0192.02	3380
BPM0192.11	3380
BPM0192.12	3380
BPM0192.34	3487
BPM0192.34	3489
BPM0192.96	3380
BPM0193.00	3501
BPM0193.02	3752
BPM0202.02	3482
BPM0204.00	3462
BPM0206.00	3603
BPM0208.00	3539/1
BPM0208.12	3539
BPM0208.80	3539/1
BPM0208.83	3539
BPM0211.22	3523
BPM0212.00	3449
BPM0212.02	3449
BPM0212.12	3522
BPM0212.22	3522
BPM0212.32	3522
BPM0212.42	3522
BPM0212.52	3522
BPM0214.14	3776
BPM0220.02	3428
BPM0221.00	3422
BPM0221.01	3422
BPM0221.02	3552
BPM0222.00	3661
BPM0222.01	3771
BPM0222.11	3771
BPM0223.00	3605
BPM0223.86	3605
BPM0224.00	3504
BPM0224.02	3502
BPM0224.22	3502
BPM0228.02	3582
BPM0232.00	3746
BPM0233.00	4212
BPM0233.02	4212
BPM0233.85	4212

REMSA	BESER
NO	NO
BPM0233.86	4212
BPM0236.02	3760
BPM0238.04	3757
BPM0238.04	3857
BPM0238.14	3757
BPM0238.14	3857
BPM0238.24	3757
BPM0238.24	3857
BPM0239.00	3717
BPM0239.50	3717
BPM0239.60	3717
BPM0244.00	3499
BPM0244.02	3463
BPM0254.02	3600
BPM0254.12	3600
BPM0261.02	3543
BPM0261.82	3543
BPM0262.02	3457
BPM0262.12	3610
BPM0262.22	3457
BPM0262.82	3457
BPM0262.83	3610
BPM0263.10	3529
BPM0263.12	3529
BPM0263.15	3529
BPM0263.41	4152
BPM0263.88	3529
BPM0264.02	3432
BPM0264.12	3491
BPM0264.13	3432
BPM0264.14	3491
BPM0265.00	3578
BPM0265.02	3578
BPM0265.15	3656
BPM0266.00	3412
BPM0266.10	3453
BPM0267.11	3662
BPM0270.00	3564
BPM0270.10	3584
BPM0271.02	3723
BPM0273.02	3437
BPM0273.12	3437
BPM0275.02	3448
BPM0281.00	3459
BPM0281.40	3569
BPM0281.42	3568
BPM0282.00	3469
BPM0282.10	3469
BPM0284.00	3430
BPM0284.02	3430
BPM0284.83	3430
BPM0284.85	3430
BPM0285.10	3589
BPM0286.10	3470
BPM0286.20	3470
BPM0286.30	3470
BPM0286.32	3470
BPM0286.50	3505
BPM0286.50	3615
BPM0289.02	3882
BPM0289.12	3882
BPM0291.02	4108
BPM0293.12	3779
BPM0294.00	4087
BPM0294.20	4087
BPM0294.22	4087
BPM0294.32	4087
BPM0296.00	3609
BPM0296.02	3609
BPM0297.00	3642
BPM0297.10	3642
BPM0297.81	3642
BPM0306.00	4088
BPM0306.12	4088
BPM0311.00	3873
BPM0315.04	3560
BPM0317.12	4010
BPM0317.22	4010
BPM0318.02	3632
BPM0318.05	3632

REMSA	BESER
NO	NO
BPM0318.06	3632
BPM0318.12	3632
BPM0318.32	3632
BPM0318.52	3632
BPM0318.82	3632
BPM0318.92	3632
BPM0320.00	3562
BPM0320.20	3562
BPM0320.81	3562
BPM0321.02	3680
BPM0321.22	3680
BPM0323.02	3631
BPM0324.02	3696
BPM0325.02	4148/1
BPM0325.12	4148/1
BPM0325.22	4148/1
BPM0325.32	4148/1
BPM0325.42	4148/1
BPM0325.52	4148/1
BPM0331.00	3464
BPM0331.04	3722
BPM0331.10	3464
BPM0333.02	3640
BPM0337.02	3683
BPM0337.02	3872/1
BPM0337.10	3872
BPM0337.22	3872
BPM0337.80	3683
BPM0337.80	3872/1
BPM0337.81	3683
BPM0337.81	3872/1
BPM0337.90	3872
BPM0341.02	3695
BPM0342.02	4080
BPM0343.00	3660
BPM0343.40	3660
BPM0343.80	3660
BPM0343.81	3660
BPM0344.00	4104
BPM0345.00	3596
BPM0345.10	3596
BPM0351.02	3704
BPM0351.22	3704
BPM0351.32	3704
BPM0351.42	3704
BPM0354.02	3685
BPM0354.22	3685
BPM0354.32	3685
BPM0364.00	3598
BPM0364.02	3766
BPM0367.00	4072
BPM0370.00	4086
BPM0370.10	4086
BPM0372.00	3424
BPM0372.02	3424/1
BPM0372.30	3424
BPM0379.00	3628
BPM0379.12	3628
BPM0379.20	3629
BPM0381.00	3879
BPM0381.20	3879
BPM0381.30	3879
BPM0381.50	3879
BPM0381.60	4181
BPM0381.61	4181/1
BPM0382.00	3733
BPM0382.20	3733
BPM0382.81	3733
BPM0384.00	3563
BPM0385.10	4020
BPM0389.02	3883
BPM0389.12	3883
BPM0390.00	3506
BPM0390.41	3590/1
BPM0391.00	3473
BPM0392.00	3445
BPM0393.00	3623
BPM0393.02	3623
BPM0393.20	3623
BPM0393.22	3623

REMSA	BESER
NO	NO
BPM0396.00	3892
BPM0396.10	3892
BPM0396.20	3892
BPM0397.00	3874
BPM0397.10	3874
BPM0397.22	3874
BPM0402.02	3554
BPM0402.02	3651
BPM0402.22	3554
BPM0402.22	3651
BPM0402.42	3554
BPM0402.42	3651
BPM0402.52	3554
BPM0402.52	3651
BPM0403.02	4078
BPM0405.02	3688
BPM0407.00	3581
BPM0410.00	3745
BPM0412.00	3714
BPM0412.30	3714
BPM0413.00	3693
BPM0413.04	3693
BPM0413.10	3693
BPM0413.12	3693
BPM0414.01	3608
BPM0414.20	3643
BPM0415.32	4269
BPM0415.42	4269
BPM0416.00	3833
BPM0417.00	3545
BPM0417.10	3545
BPM0418.02	3607
BPM0418.22	3607
BPM0419.02	3686
BPM0419.12	3686
BPM0419.22	3686
BPM0421.00	3777
BPM0421.20	3777
BPM0424.04	4099
BPM0425.02	3674
BPM0425.12	3674
BPM0425.22	3674
BPM0426.02	3887
BPM0426.12	3887
BPM0429.04	3673
BPM0431.00	4128
BPM0431.10	4128
BPM0432.00	3558
BPM0432.01	3593
BPM0432.02	3593
BPM0433.00	4214
BPM0438.04	3819
BPM0438.14	3819
BPM0439.04	3878
BPM0441.00	3909
BPM0447.00	4197
BPM0456.02	3915
BPM0456.14	3915
BPM0459.00	3511
BPM0459.10	3511
BPM0460.02	3622
BPM0460.12	3622
BPM0461.02	3528
BPM0462.00	3888
BPM0462.20	3888
BPM0462.81	3888
BPM0467.00	4182
BPM0467.20	4182
BPM0467.30	4182
BPM0467.40	4182
BPM0468.00	3736
BPM0480.00	3553
BPM0480.21	3553/1
BPM0480.80	3553/1
BPM0480.81	3553
BPM0484.02	3867
BPM0486.02	3595
BPM0486.81	3595
BPM0487.02	3559
BPM0487.81	3559

REMSA	BESER
NO	NO
BPM0494.02	3507
BPM0494.81	3507
BPM0501.02	3898
BPM0502.02	3740
BPM0502.22	3740
BPM0507.00	3667
BPM0571.02	3781
BPM0578.00	3567
BPM0579.00	3678
BPM0580.00	3670
BPM0580.10	3670
BPM0582.00	3675
BPM0582.80	3675
BPM0583.00	3809
BPM0584.00	3512
BPM0584.00	3512/1
BPM0584.20	3512/2
BPM0586.00	3677
BPM0586.10	3677
BPM0587.12	3618
BPM0587.22	3618
BPM0588.10	3897
BPM0589.02	3617
BPM0589.12	3617
BPM0589.22	3617
BPM0589.42	3617
BPM0591.30	3795/1
BPM0591.83	3795/1
BPM0592.02	3577
BPM0592.02	3647
BPM0592.12	3598/1
BPM0592.22	3577
BPM0592.22	3647
BPM0593.00	4034
BPM0593.00	4034/1
BPM0594.00	3884
BPM0594.02	3884
BPM0595.02	3602
BPM0596.00	3881
BPM0596.10	3881
BPM0598.02	3697
BPM0601.00	3863
BPM0601.10	3863
BPM0601.20	3863
BPM0601.30	3863
BPM0602.02	3799
BPM0603.04	3750
BPM0603.80	3750
BPM0605.02	4062
BPM0605.12	4062
BPM0605.80	4062
BPM0605.82	4062
BPM0605.83	4062
BPM0609.00	3538
BPM0609.10	3566
BPM0609.20	3637
BPM0618.00	3606
BPM0618.01	3794
BPM0619.02	3574
BPM0619.02	3914/1
BPM0620.00	3419
BPM0620.20	3419
BPM0620.80	3419
BPM0620.81	3419
BPM0621.00	3822
BPM0621.20	3822
BPM0630.00	3663
BPM0631.10	3896
BPM0631.12	3896
BPM0631.82	3896
BPM0631.90	3896
BPM0633.00	3682
BPM0634.04	3636
BPM0634.84	3636
BPM0635.00	3872
BPM0636.04	4071
BPM0636.12	4071
BPM0643.00	3659
BPM0643.10	3938
BPM0643.20	3938

REMSA	BESER
NO	NO
BPM0643.80	3938
BPM0643.81	3659
BPM0643.90	3938
BPM0645.00	3687/1
BPM0645.02	3687/1
BPM0645.12	3687/1
BPM0647.02	3764
BPM0650.00	4125
BPM0650.80	4125
BPM0650.81	4125
BPM0651.00	3575
BPM0651.10	3575/2
BPM0651.80	3575
BPM0651.81	3575/2
BPM0651.86	3942/A
BPM0655.02	4079
BPM0662.02	3653
BPM0674.12	3932
BPM0675.02	3778
BPM0678.00	3676
BPM0678.10	3676
BPM0679.00	4274
BPM0684.02	3762
BPM0691.00	3754
BPM0693.00	3755
BPM0693.80	3755
BPM0694.10	4115
BPM0695.02	4155
BPM0695.82	4155
BPM0696.00	3744
BPM0697.01	4126
BPM0697.01	4126/1
BPM0698.01	4069
BPM0699.00	3780
BPM0701.00	3681
BPM0703.02	3648
BPM0705.02	4281
BPM0705.81	4281
BPM0706.00	3830
BPM0707.04	3829
BPM0708.02	4059
BPM0708.82	4059
BPM0709.00	3821
BPM0709.10	3821
BPM0710.02	4027
BPM0711.04	3859
BPM0711.11	3859
BPM0712.02	3768
BPM0712.12	3768
BPM0713.00	3919
BPM0714.00	3918
BPM0717.00	3861
BPM0719.00	3943
BPM0720.02	3901
BPM0724.02	3928
BPM0724.11	3928
BPM0725.02	3748
BPM0727.10	4123
BPM0727.20	4123
BPM0729.02	3913
BPM0730.01	3767
BPM0733.00	3804
BPM0735.02	4110
BPM0736.02	4011
BPM0736.12	4011
BPM0736.32	4011
BPM0739.02	4009
BPM0740.00	3769
BPM0740.02	3769
BPM0741.02	3788
BPM0746.02	3993
BPM0746.12	3993
BPM0746.22	3993
BPM0746.32	3993
BPM0746.42	3895
BPM0746.62	3895
BPM0747.02	4109
BPM0747.02	4232
BPM0747.12	4109
BPM0747.12	4232

REMSA	BESER
NO	NO
BPM0748.02	4017
BPM0750.02	4084
BPM0752.12	4222
BPM0766.00	3877
BPM0767.01	4345
BPM0768.00	3836
BPM0768.10	3836
BPM0768.81	3836
BPM0769.00	4102
BPM0770.00	4101
BPM0770.00	4209
BPM0771.02	3843
BPM0771.12	3843
BPM0771.22	3843
BPM0772.02	3784
BPM0772.12	3921
BPM0772.82	3784
BPM0772.83	3921
BPM0774.02	3846
BPM0774.12	3846
BPM0774.82	3846
BPM0775.01	4138
BPM0775.01	4138/1
BPM0775.81	4138
BPM0775.81	4138/1
BPM0776.00	4100
BPM0776.10	4100
BPM0776.80	4100
BPM0776.81	4100
BPM0777.00	4093
BPM0777.10	4093
BPM0777.80	4093
BPM0800.22	4118
BPM0802.00	4119
BPM0803.12	3893
BPM0803.22	3893
BPM0804.02	3955
BPM0804.12	3955
BPM0804.31	3955
BPM0807.00	4012
BPM0807.02	4012
BPM0813.00	4158
BPM0819.00	3856
BPM0821.02	3802
BPM0821.12	3802
BPM0822.00	4094
BPM0822.12	3817
BPM0827.04	3934
BPM0827.84	3934
BPM0828.04	3935
BPM0833.00	3855
BPM0833.80	3855
BPM0834.00	3848
BPM0834.10	3848
BPM0836.02	4095
BPM0839.02	4153
BPM0840.00	3820
BPM0840.00	3820/1
BPM0840.10	3820
BPM0840.10	3820/1
BPM0840.20	3820
BPM0840.20	3820/1
BPM0840.30	3820
BPM0840.30	3820/1
BPM0840.82	3820
BPM0840.82	3820/1
BPM0841.00	3800
BPM0841.10	3800
BPM0841.80	3800
BPM0842.00	3853
BPM0842.10	3853
BPM0842.20	3853/1
BPM0842.30	3853/1
BPM0842.70	3853/1
BPM0843.00	3852
BPM0843.10	3852
BPM0845.01	4271
BPM0849.00	3823
BPM0849.10	3823
BPM0852.04	4143

REMSA	BESER
NO	NO
BPM0852.14	4143
BPM0854.00	3911
BPM0855.00	4082
BPM0857.00	4180
BPM0857.20	4378
BPM0858.01	3826/1
BPM0858.10	3826
BPM0858.11	3826/1
BPM0858.30	3826
BPM0858.32	3826/3
BPM0858.80	3826/1
BPM0859.01	3800/1
BPM0859.10	3800
BPM0859.11	3800/1
BPM0859.12	3800/3
BPM0859.20	3800/2
BPM0859.21	3800/2
BPM0859.80	3800/1
BPM0860.12	4301
BPM0860.12	4301/1
BPM0874.02	3825
BPM0876.01	3933
BPM0876.21	3933
BPM0876.31	3933
BPM0876.41	3933
BPM0879.12	3986
BPM0879.81	3986
BPM0880.00	3931
BPM0880.80	3931
BPM0881.00	3854
BPM0881.80	3854
BPM0883.11	4303
BPM0884.00	3910
BPM0888.00	4211
BPM0888.20	4211
BPM0888.40	4211
BPM0892.00	4179
BPM0893.02	3961
BPM0897.11	3842
BPM0899.00	3831
BPM0899.02	3831
BPM0899.12	3831
BPM0951.02	3912
BPM0951.11	3912
BPM0953.00	3959
BPM0953.02	3959
BPM0953.12	3959
BPM0953.22	3959
BPM0954.00	4013
BPM0958.10	4208
BPM0959.01	3835
BPM0960.01	3834
BPM0961.00	3914
BPM0962.00	3950
BPM0964.12	4096
BPM0965.01	3765
BPM0970.02	3889
BPM0971.02	3769
BPM0973.02	4031
BPM0976.00	3849
BPM0976.10	3849
BPM0976.20	3849
BPM0976.80	3849
BPM0976.81	3849
BPM0977.00	3850
BPM0977.80	3850
BPM0978.02	4112
BPM0984.00	3801
BPM0985.02	4074
BPM0986.00	3951
BPM0987.00	3983
BPM0987.02	3983/2
BPM0987.02	3983/3
BPM0987.10	3983
BPM0987.11	3983/1
BPM0988.00	3891
BPM0996.00	4076
BPM1030.01	3904
BPM1031.00	3905
BPM1036.02	4042

REMSA	BESER
NO	NO
BPM1037.00	4216
BPM1038.02	4028
BPM1038.12	4028
BPM1039.00	4105
BPM1040.00	4111
BPM1041.02	3978
BPM1041.12	3978
BPM1042.02	3979
BPM1045.01	3841/1
BPM1045.11	3841
BPM1046.02	3890
BPM1047.02	4154
BPM1048.00	3894
BPM1051.02	4106
BPM1052.00	4346
BPM1052.30	4380
BPM1068.02	4159
BPM1069.00	3827
BPM1073.20	3343
BPM1073.20	3483
BPM1081.01	4036
BPM1081.11	4036
BPM1082.00	3885
BPM1085.02	3976/1
BPM1098.02	3886
BPM1098.14	3886
BPM1100.00	4173
BPM1100.11	4173/1
BPM1100.21	4173/1
BPM1101.04	3940
BPM1102.04	3939
BPM1103.00	3946
BPM1109.02	3923/1
BPM1110.02	3924/1
BPM1113.00	4137
BPM1123.02	3797
BPM1126.08	4006
BPM1127.08	4018
BPM1128.08	4198
BPM1129.01	3900
BPM1132.00	4389
BPM1133.02	3968
BPM1134.02	4001
BPM1135.02	3969
BPM1136.01	4213
BPM1137.02	4081
BPM1138.00	3984
BPM1139.02	3985
BPM1145.00	4388
BPM1145.10	4388
BPM1149.10	4058
BPM1151.00	3988
BPM1151.00	3988/1
BPM1152.00	3747
BPM1158.00	4293
BPM1159.00	3944
BPM1159.10	3944
BPM1162.01	3952
BPM1162.12	3952
BPM1166.01	4000
BPM1173.02	4016
BPM1177.00	3987
BPM1179.00	4210
BPM1181.02	4113
BPM1183.01	4121
BPM1196.02	4029
BPM1200.00	3945
BPM1200.30	3945
BPM1202.00	4240
BPM1208.02	3880
BPM1209.02	3980
BPM1223.02	4073
BPM1224.00	3958
BPM1225.02	3929
BPM1226.02	3960
BPM1226.32	4251/1
BPM1228.01	4258
BPM1231.00	3949
BPM1232.00	3953
BPM1233.00	3948

REMSA	BESER
NO	NO
BPM1234.00	4077
BPM1235.02	3982
BPM1238.00	3820/3
BPM1239.02	3989
BPM1242.00	3975
BPM1242.01	3975
BPM1243.00	3962
BPM1243.00	3962/1
BPM1245.00	3925
BPM1245.00	3925/2
BPM1245.02	3965/1
BPM1245.10	3965
BPM1246.00	3926
BPM1246.00	3926/1
BPM1246.02	3926
BPM1246.02	3926/1
BPM1247.00	3963
BPM1247.00	3963/1
BPM1248.00	3964
BPM1248.10	3964/1
BPM1250.00	3906/1
BPM1250.02	3906
BPM1250.02	3906/1
BPM1250.02	3906/1A
BPM1250.02	3906/2
BPM1250.11	3906
BPM1250.11	3906/1
BPM1250.11	3906/1A
BPM1250.11	3906/2
BPM1251.02	3920
BPM1251.02	3920/1
BPM1252.02	3907
BPM1252.02	3907/1
BPM1252.02	3907/1A
BPM1252.02	3907/2
BPM1256.00	4157
BPM1259.02	4005
BPM1261.12	3976
BPM1264.02	4004
BPM1266.00	3903
BPM1271.02	3996
BPM1272.00	3997
BPM1274.02	4060
BPM1275.01	3922
BPM1275.01	3922/1
BPM1275.12	4171
BPM1275.12	3922/3
BPM1275.12	4171/1
BPM1281.02	4122
BPM1282.00	4092
BPM1282.00	4092/1
BPM1282.02	4122
BPM1286.02	3954
BPM1289.02	4160
BPM1290.02	4156
BPM1291.02	4035
BPM1292.01	3972
BPM1297.00	4207
BPM1299.00	4151
BPM1299.00	4151/1
BPM1301.00	4248
BPM1302.02	4039
BPM1302.22	4039
BPM1303.02	4165
BPM1304.00	4249
BPM1304.10	4259
BPM1305.00	4247
BPM1310.02	3956
BPM1312.00	4255
BPM1318.00	4038
BPM1323.00	3970
BPM1337.00	4054
BPM1339.00	3995
BPM1342.00	4390
BPM1343.00	4260
BPM1345.00	4309
BPM1350.00	4134
BPM1351.00	3966
BPM1351.00	3966/1
BPM1352.00	3967

REMSA	BESER
NO	NO
BPM1356.02	4037
BPM1356.02	4037/1
BPM1362.02	4061
BPM1375.12	4149
BPM1377.00	4391
BPM1379.10	4310
BPM1382.00	3971
BPM1387.00	4142
BPM1388.04	4150
BPM1395.00	4256
BPM1403.02	4146
BPM1407.00	4124
BPM1407.12	4308
BPM1409.10	4314
BPM1412.32	4166
BPM1420.00	4135
BPM1421.00	4325/1
BPM1423.02	4233
BPM1426.02	4049
BPM1431.02	4008
BPM1431.12	4230
BPM1432.02	4014
BPM1432.12	4014
BPM1433.00	4379
BPM1439.01	4057
BPM1439.11	4057
BPM1440.01	4162
BPM1442.01	4132
BPM1442.01	4172
BPM1442.01	4172/1
BPM1449.01	4056
BPM1457.00	4382
BPM1464.08	4145
BPM1466.00	3998
BPM1468.02	4167
BPM1468.04	4167
BPM1476.00	4383
BPM1478.00	4381
BPM1481.02	4265
BPM1482.00	4161
BPM1488.02	4136
BPM1496.00	4378
BPM1510.00	4226
BPM1510.10	4226
BPM1514.00	4204
BPM1516.00	4241
BPM1520.02	4174
BPM1520.02	4174/1
BPM1521.00	4175
BPM1530.00	4201
BPM1530.00	4201/1
BPM1538.04	4315
BPM1540.00	4140
BPM1540.10	4140/1
BPM1548.02	4312
BPM1553.00	4200
BPM1557.00	4374
BPM1560.00	4371
BPM1560.00	4373
BPM1561.02	4176
BPM1561.02	4176/1
BPM1562.00	4372
BPM1569.02	4317
BPM1570.02	4318
BPM1601.01	4295
BPM1602.02	4351/1
BPM1719.00	4369
BPM1720.00	4370
BPM1724.08	4280
BPM1801.02	4376
BPM1830.00	4350/1
BPM4310.01	4249
BPM7843.02	3762
JCA0245.00	3679
JCA0245.12	3994
JCA0245.22	3994
JCA0245.32	3994
JCA0245.40	3679
JCA0245.41	3994
JCA0245.42	3994

REMSA	BESER
NO	NO
JCA0277.00	3433/1
JCA0277.10	3433/1
JCA0277.12	3433
JCA0277.40	3433
JCA0278.21	3773
JCA0278.22	3773
JCA0278.32	3773
JCA0278.42	3773
JCA0436.40	3749
JCA0436.41	3749/1
JCA0640.00	3994
JCA0640.40	3994
JCA1399.00	4169
PCA0001.02	3405
PCA0002.00	3320
PCA0002.20	3350
PCA0006.00	3318
PCA0006.30	3318
PCA0006.40	3318
PCA0006.60	3318
PCA0007.40	3326
PCA0010.00	3315
PCA0010.00	3515
PCA0010.20	3315
PCA0010.20	3515
PCA0010.30	3315
PCA0010.30	3515
PCA0010.40	3339
PCA0010.40	3514
PCA0010.50	3339
PCA0010.50	3514
PCA0010.58	3315
PCA0010.58	3515
PCA0014.00	3335
PCA0014.10	3365
PCA0014.12	3365
PCA0014.40	4103
PCA0017.00	3327
PCA0017.10	3327
PCA0017.20	3343
PCA0017.20	3483
PCA0017.30	3343
PCA0017.30	3483
PCA0021.06	3333
PCA0021.10	3329
PCA0021.12	3329
PCA0021.14	3329
PCA0021.16	3329
PCA0022.00	3316
PCA0022.10	3317
PCA0022.12	3317
PCA0022.20	3346
PCA0022.30	3316
PCA0022.50	3316
PCA0022.60	3317
PCA0023.20	3346
PCA0025.30	3425
PCA0026.02	3366/1
PCA0026.12	3366
PCA0039.00	3311
PCA0039.10	3311
PCA0042.00	3373
PCA0042.10	3373
PCA0042.20	3373
PCA0042.30	3373
PCA0042.40	3373
PCA0042.50	3373
PCA0044.02	3526
PCA0045.00	3340
PCA0045.02	3340
PCA0045.10	3340
PCA0045.22	3340
PCA0045.32	3321
PCA0046.00	3378
PCA0046.10	3378
PCA0046.20	3490
PCA0046.40	3378
PCA0046.50	3490
PCA0047.30	3513
PCA0047.32	3513

REMSA	BESER
NO	NO
PCA0048.00	3537
PCA0048.10	3537
PCA0052.10	3661
PCA0052.20	3661
PCA0056.00	3423
PCA0056.10	3423
PCA0056.12	3423/1
PCA0056.20	3423
PCA0058.10	3416
PCA0060.00	3374
PCA0060.10	3374
PCA0061.02	3527
PCA0063.00	3312
PCA0063.02	3484
PCA0068.02	3323
PCA0079.00	3709
PCA0079.10	3709
PCA0079.20	3709
PCA0079.30	3709
PCA0080.00	3393
PCA0092.00	3710
PCA0098.00	3324
PCA0098.02	3324
PCA0101.00	3410
PCA0101.03	3410
PCA0101.10	3410
PCA0101.20	3410
PCA0101.40	3410
PCA0102.10	3873
PCA0103.00	3421
PCA0106.00	3407
PCA0109.12	3579
PCA0109.22	3579
PCA0111.00	3509
PCA0114.00	3625
PCA0115.00	3369
PCA0117.00	3370
PCA0119.00	3417
PCA0119.10	3570
PCA0119.12	3417/1
PCA0119.15	3417
PCA0119.20	3417
PCA0119.22	3417/1
PCA0119.32	3417/1
PCA0120.00	3379
PCA0129.00	3415
PCA0132.00	3371
PCA0134.00	3650
PCA0134.01	3650
PCA0134.02	3619
PCA0134.03	3635
PCA0134.10	3649
PCA0134.11	3649
PCA0134.12	3635
PCA0134.15	3635
PCA0134.20	3650
PCA0134.40	3551
PCA0134.41	3531
PCA0134.50	3531
PCA0134.81	3650
PCA0134.95	3531
PCA0135.00	3536
PCA0135.01	3536
PCA0135.10	3536
PCA0135.11	3536
PCA0135.20	3536
PCA0135.22	3536
PCA0135.40	3536
PCA0135.94	3536
PCA0139.00	3573
PCA0139.02	3573
PCA0141.01	3503
PCA0141.02	3503
PCA0141.10	3503
PCA0141.11	3503
PCA0141.12	3503
PCA0141.16	3503
PCA0141.18	3503
PCA0141.20	3503/1
PCA0141.30	3503

REMSA	BESER
NO	NO
PCA0141.32	3503
PCA0141.52	3503
PCA0141.78	3503
PCA0142.20	3689
PCA0143.02	3440
PCA0144.02	3381
PCA0144.12	3381
PCA0144.24	3493
PCA0144.24	3494
PCA0144.32	3495
PCA0144.42	3381
PCA0144.50	3496/1
PCA0146.01	3466
PCA0146.04	3466
PCA0146.11	3466
PCA0146.14	3466
PCA0146.22	3467
PCA0146.23	3467
PCA0146.41	3468
PCA0146.44	3468
PCA0146.60	3466
PCA0146.62	3466
PCA0146.80	3466
PCA0146.84	3466
PCA0147.02	3633
PCA0148.14	3666
PCA0149.00	3394
PCA0149.10	3394
PCA0151.02	4087
PCA0151.22	4087
PCA0154.00	3419
PCA0154.01	3419
PCA0154.02	3429
PCA0154.03	3429
PCA0154.10	3419
PCA0154.12	3429
PCA0155.00	3572
PCA0155.02	3572
PCA0155.10	3583
PCA0155.12	3572
PCA0155.20	3583
PCA0157.00	3611
PCA0157.10	3550
PCA0157.20	3630
PCA0159.00	3413
PCA0163.02	3442
PCA0167.04	3402
PCA0167.10	3402
PCA0168.00	3621
PCA0169.01	3624
PCA0169.81	3624
PCA0170.04	3474
PCA0170.14	3474
PCA0170.24	3556
PCA0170.34	3474
PCA0170.76	3474
PCA0171.00	3486
PCA0171.05	3444/1
PCA0171.10	3444/1
PCA0171.20	3441
PCA0171.60	3585
PCA0171.60	3585/1
PCA0172.00	3549
PCA0172.10	3790
PCA0172.11	3548
PCA0172.11	3690
PCA0172.20	3790/1
PCA0172.30	3790/1
PCA0172.32	4141
PCA0175.00	3400
PCA0176.20	3641
PCA0176.22	3641
PCA0177.00	3620
PCA0178.00	3436
PCA0178.10	3436
PCA0178.20	3436
PCA0178.30	3436
PCA0178.50	3436
PCA0179.00	3875
PCA0179.10	3875

REMSA	BESER
NO	NO
PCA0181.04	3446
PCA0184.00	3397
PCA0184.02	3758
PCA0184.12	3758
PCA0187.00	3634
PCA0187.02	3634
PCA0188.00	3401
PCA0189.00	3408
PCA0189.02	3408
PCA0189.05	3408
PCA0189.08	3408
PCA0189.10	3408
PCA0189.11	3408
PCA0189.12	3408
PCA0189.24	3408
PCA0191.04	3395
PCA0191.12	3426
PCA0192.02	3380
PCA0192.11	3380
PCA0192.12	3380
PCA0192.34	3487
PCA0192.34	3489
PCA0192.96	3380
PCA0193.00	3501
PCA0193.02	3752
PCA0197.10	3714
PCA0202.02	3482
PCA0204.00	3462
PCA0206.00	3603
PCA0208.00	3539/1
PCA0208.12	3539
PCA0208.80	3539/1
PCA0208.83	3539
PCA0211.22	3523
PCA0212.00	3449
PCA0212.02	3449
PCA0212.12	3522
PCA0212.22	3522
PCA0212.32	3522
PCA0212.42	3522
PCA0212.52	3522
PCA0214.14	3776
PCA0220.02	3428
PCA0221.00	3422
PCA0221.01	3422
PCA0221.02	3552
PCA0222.00	3661
PCA0222.01	3771
PCA0222.10	3661
PCA0222.11	3771
PCA0223.00	3605
PCA0223.86	3605
PCA0224.00	3504
PCA0224.02	3502
PCA0224.22	3502
PCA0228.02	3582
PCA0232.00	3746
PCA0233.02	4212
PCA0233.12	4212
PCA0233.86	4212
PCA0236.02	3760
PCA0238.04	3757
PCA0238.04	3857
PCA0238.14	3757
PCA0238.14	3857
PCA0238.24	3757
PCA0238.24	3857
PCA0239.00	3717
PCA0239.50	3717
PCA0239.60	3717
PCA0244.00	3499
PCA0244.02	3463
PCA0254.02	3600
PCA0254.12	3600
PCA0261.02	3543
PCA0261.82	3543
PCA0262.02	3457
PCA0262.12	3610
PCA0262.22	3457
PCA0262.82	3457

REMSA	BESER
NO	NO
PCA0262.83	3610
PCA0263.10	3529
PCA0263.12	3529
PCA0263.15	3529
PCA0263.41	4152
PCA0263.88	3529
PCA0264.02	3432
PCA0264.12	3491
PCA0264.13	3432
PCA0264.14	3491
PCA0265.00	3578
PCA0265.02	3578
PCA0265.15	3656
PCA0266.00	3412
PCA0266.10	3453
PCA0267.11	3662
PCA0270.00	3564
PCA0270.10	3584
PCA0271.02	3723
PCA0273.02	3437
PCA0273.12	3437
PCA0275.02	3448
PCA0281.00	3459
PCA0281.40	3569
PCA0281.42	3568
PCA0282.00	3469
PCA0282.10	3469
PCA0284.00	3430
PCA0284.02	3430
PCA0284.83	3430
PCA0284.85	3430
PCA0285.10	3589
PCA0286.10	3470
PCA0286.20	3470
PCA0286.30	3470
PCA0286.32	3470
PCA0286.50	3505
PCA0286.50	3615
PCA0289.02	3882
PCA0289.12	3882
PCA0291.02	4108
PCA0293.12	3779
PCA0294.00	4087
PCA0294.20	4087
PCA0294.22	4087
PCA0294.32	4087
PCA0296.00	3609
PCA0296.02	3609
PCA0297.00	3642
PCA0297.10	3642
PCA0297.81	3642
PCA0306.00	4088
PCA0306.12	4088
PCA0311.00	3873
PCA0315.04	3560
PCA0317.12	4010
PCA0317.22	4010
PCA0318.02	3632
PCA0318.05	3632
PCA0318.06	3632
PCA0318.12	3632
PCA0318.22	3632
PCA0318.32	3632
PCA0318.52	3632
PCA0318.82	3632
PCA0318.92	3632
PCA0320.00	3562
PCA0320.20	3562
PCA0320.81	3562
PCA0321.02	3680
PCA0321.22	3680
PCA0323.02	3631
PCA0324.02	3696
PCA0325.02	4148/1
PCA0325.12	4148/1
PCA0325.22	4148/1
PCA0325.32	4148/1
PCA0325.42	4148/1
PCA0325.52	4148/1
PCA0331.00	3464

REMSA	BESER
NO	NO
PCA0331.04	3722
PCA0331.10	3464
PCA0333.02	3640
PCA0337.02	3683
PCA0337.02	3872/1
PCA0337.10	3872
PCA0337.22	3872
PCA0337.80	3683
PCA0337.80	3872/1
PCA0337.81	3683
PCA0337.81	3872/1
PCA0337.90	3872
PCA0341.02	3695
PCA0342.02	4080
PCA0343.00	3660
PCA0343.40	3660
PCA0343.80	3660
PCA0343.81	3660
PCA0344.00	4104
PCA0345.00	3596
PCA0345.10	3596
PCA0351.02	3704
PCA0351.22	3704
PCA0351.32	3704
PCA0351.42	3704
PCA0354.02	3685
PCA0354.22	3685
PCA0354.32	3685
PCA0364.00	3598
PCA0364.02	3766
PCA0367.00	4072
PCA0370.00	4086
PCA0370.10	4086
PCA0372.00	3424
PCA0372.02	3424/1
PCA0372.30	3424
PCA0379.00	3628
PCA0379.12	3628
PCA0379.20	3629
PCA0381.00	3879
PCA0381.20	3879
PCA0381.30	3879
PCA0381.50	3879
PCA0381.60	4181
PCA0382.00	3733
PCA0382.20	3733
PCA0382.81	3733
PCA0384.00	3563
PCA0385.10	4020
PCA0389.02	3883
PCA0389.12	3883
PCA0390.00	3506
PCA0390.41	3590/1
PCA0391.00	3473
PCA0392.00	3445
PCA0393.00	3623
PCA0393.02	3623
PCA0393.20	3623
PCA0393.22	3623
PCA0396.00	3892
PCA0396.10	3892
PCA0396.20	3892
PCA0397.00	3874
PCA0397.10	3874
PCA0397.22	3874
PCA0402.02	3554
PCA0402.02	3651
PCA0402.22	3554
PCA0402.22	3651
PCA0402.42	3554
PCA0402.42	3651
PCA0402.52	3554
PCA0402.52	3651
PCA0403.02	4078
PCA0405.02	3688
PCA0407.00	3581
PCA0410.00	3745
PCA0412.00	3714
PCA0412.30	3714
PCA0413.00	3693

REMSA	BESER
NO	NO
PCA0413.04	3693
PCA0413.10	3693
PCA0413.12	3693
PCA0414.01	3608
PCA0414.20	3643
PCA0415.32	4269
PCA0415.42	4269
PCA0416.00	3833
PCA0417.00	3545
PCA0417.10	3545
PCA0418.02	3607
PCA0418.22	3607
PCA0419.02	3686
PCA0419.12	3686
PCA0419.22	3686
PCA0421.00	3777
PCA0421.20	3777
PCA0424.04	4099
PCA0425.02	3674
PCA0425.12	3674
PCA0425.22	3674
PCA0426.02	3887
PCA0426.12	3887
PCA0429.04	3673
PCA0431.00	4128
PCA0431.10	4128
PCA0432.00	3558
PCA0432.01	3593
PCA0432.02	3593
PCA0433.00	4214
PCA0438.04	3819
PCA0438.14	3819
PCA0439.04	3878
PCA0441.00	3909
PCA0447.00	4197
PCA0456.02	3915
PCA0456.14	3915
PCA0459.00	3511
PCA0459.10	3511
PCA0460.02	3622
PCA0460.12	3622
PCA0461.02	3528
PCA0462.00	3888
PCA0462.20	3888
PCA0462.81	3888
PCA0467.00	4182
PCA0467.20	4182
PCA0467.30	4182
PCA0467.40	4182
PCA0468.00	3736
PCA0480.00	3553
PCA0480.21	3553/1
PCA0480.80	3553/1
PCA0480.81	3553
PCA0484.02	3867
PCA0486.02	3595
PCA0486.81	3595
PCA0487.02	3559
PCA0487.81	3559
PCA0494.02	3507
PCA0494.81	3507
PCA0501.02	3898
PCA0502.02	3740
PCA0502.22	3740
PCA0507.00	3667
PCA0571.02	3781
PCA0578.00	3567
PCA0579.00	3678
PCA0580.00	3670
PCA0580.10	3670
PCA0582.00	3675
PCA0582.80	3675
PCA0583.00	3809
PCA0584.00	3512
PCA0584.00	3512/1
PCA0584.20	3512/2
PCA0586.00	3677
PCA0586.10	3677
PCA0587.12	3618
PCA0587.22	3618

REMSA	BESER
NO	NO
PCA0588.10	3897
PCA0589.02	3617
PCA0589.12	3617
PCA0589.22	3617
PCA0589.42	3617
PCA0591.30	3795/1
PCA0591.83	3795/1
PCA0592.02	3577
PCA0592.02	3647
PCA0592.12	3598/1
PCA0592.22	3577
PCA0592.22	3647
PCA0593.00	4034
PCA0593.00	4034/1
PCA0594.00	3884
PCA0594.02	3884
PCA0595.02	3602
PCA0596.00	3881
PCA0596.10	3881
PCA0598.02	3697
PCA0601.00	3863
PCA0601.10	3863
PCA0601.20	3863
PCA0601.30	3863
PCA0602.02	3799
PCA0603.04	3750
PCA0603.80	3750
PCA0605.02	4062
PCA0605.12	4062
PCA0605.80	4062
PCA0605.82	4062
PCA0605.83	4062
PCA0609.00	3538
PCA0609.10	3566
PCA0609.20	3637
PCA0618.00	3606
PCA0618.01	3794
PCA0619.02	3574
PCA0619.02	3914/1
PCA0620.00	3419
PCA0620.20	3419
PCA0620.80	3419
PCA0620.81	3419
PCA0621.00	3822
PCA0621.20	3822
PCA0630.00	3663
PCA0631.10	3896
PCA0631.12	3896
PCA0631.82	3896
PCA0631.90	3896
PCA0633.00	3682
PCA0634.04	3636
PCA0634.84	3636
PCA0635.00	3872
PCA0636.04	4071
PCA0636.12	4071
PCA0643.00	3659
PCA0643.10	3938
PCA0643.20	3938
PCA0643.80	3938
PCA0643.81	3659
PCA0643.90	3938
PCA0645.00	3687/1
PCA0645.02	3687/1
PCA0645.12	3687/1
PCA0647.02	3764
PCA0650.00	4125
PCA0650.80	4125
PCA0650.81	4125
PCA0651.00	3575
PCA0651.10	3575/2
PCA0651.80	3575
PCA0651.81	3575/2
PCA0651.86	3942/A
PCA0655.02	4079
PCA0662.02	3653
PCA0674.12	3932
PCA0675.02	3778
PCA0678.00	3676
PCA0678.10	3676

REMSA	BESER
NO	NO
PCA0679.00	4274
PCA0691.00	3754
PCA0693.00	3755
PCA0693.80	3755
PCA0694.10	4115
PCA0695.02	4155
PCA0695.82	4155
PCA0696.00	3744
PCA0697.01	4126
PCA0698.01	4069
PCA0699.00	3780
PCA0701.00	3681
PCA0703.02	3648
PCA0705.02	4281
PCA0705.81	4281
PCA0706.00	3830
PCA0707.04	3829
PCA0708.02	4059
PCA0708.82	4059
PCA0709.00	3821
PCA0709.10	3821
PCA0710.02	4027
PCA0711.04	3859
PCA0711.11	3859
PCA0712.02	3768
PCA0712.12	3768
PCA0713.00	3919
PCA0714.00	3918
PCA0717.00	3861
PCA0719.00	3943
PCA0720.02	3901
PCA0724.02	3928
PCA0724.11	3928
PCA0725.02	3748
PCA0727.10	4123
PCA0727.20	4123
PCA0729.02	3913
PCA0730.01	3767
PCA0733.00	3804
PCA0735.02	4110
PCA0736.02	4011
PCA0736.12	4011
PCA0736.32	4011
PCA0739.02	4009
PCA0740.00	3769
PCA0740.02	3769
PCA0741.02	3788
PCA0746.02	3993
PCA0746.12	3993
PCA0746.22	3993
PCA0746.32	3993
PCA0746.42	3895
PCA0746.62	3895
PCA0747.02	4109
PCA0747.02	4232
PCA0747.12	4109
PCA0747.12	4232
PCA0748.02	4017
PCA0750.02	4084
PCA0752.12	4222
PCA0766.00	3877
PCA0767.01	4345
PCA0768.00	3836
PCA0768.10	3836
PCA0768.81	3836
PCA0769.00	4102
PCA0770.00	4101
PCA0770.00	4209
PCA0771.02	3843
PCA0771.12	3843
PCA0771.22	3843
PCA0772.02	3784
PCA0772.12	3921
PCA0772.82	3784
PCA0772.83	3921
PCA0774.02	3846
PCA0774.12	3846
PCA0774.82	3846
PCA0775.01	4138
PCA0775.01	4138/1

REMSA	BESER
NO	NO
PCA0775.81	4138
PCA0775.81	4138/1
PCA0776.00	4100
PCA0776.10	4100
PCA0776.80	4100
PCA0776.81	4100
PCA0777.00	4093
PCA0777.10	4093
PCA0777.80	4093
PCA0800.22	4118
PCA0802.00	4119
PCA0803.12	3893
PCA0803.22	3893
PCA0804.02	3955
PCA0804.12	3955
PCA0804.31	3955
PCA0807.00	4012
PCA0807.02	4012
PCA0813.00	4158
PCA0819.00	3856
PCA0821.02	3802
PCA0821.12	3802
PCA0822.00	4094
PCA0822.12	3817
PCA0827.04	3934
PCA0827.84	3934
PCA0828.04	3935
PCA0833.00	3855
PCA0833.80	3855
PCA0834.00	3848
PCA0834.10	3848
PCA0836.02	4095
PCA0839.02	4153
PCA0840.00	3820
PCA0840.00	3820/1
PCA0840.10	3820
PCA0840.10	3820/1
PCA0840.20	3820
PCA0840.20	3820/1
PCA0840.30	3820
PCA0840.30	3820/1
PCA0840.82	3820
PCA0840.82	3820/1
PCA0841.00	3800
PCA0841.10	3800
PCA0841.80	3800
PCA0842.00	3853
PCA0842.10	3853
PCA0842.20	3853/1
PCA0842.30	3853/1
PCA0842.70	3853/1
PCA0843.00	3852
PCA0843.10	3852
PCA0845.01	4271
PCA0849.00	3823
PCA0849.10	3823
PCA0852.04	4143
PCA0852.14	4143
PCA0854.00	3911
PCA0855.00	4082
PCA0857.00	4180
PCA0858.01	3826/1
PCA0858.10	3826
PCA0858.11	3826/1
PCA0858.30	3826
PCA0858.32	3826/3
PCA0858.80	3826/1
PCA0859.01	3800/1
PCA0859.10	3800
PCA0859.11	3800/1
PCA0859.12	3800/3
PCA0859.20	3800/2
PCA0859.21	3800/2
PCA0859.80	3800/1
PCA0874.02	3825
PCA0876.01	3933
PCA0876.21	3933
PCA0876.31	3933
PCA0876.41	3933
PCA0879.12	3986

REMSA	BESER
NO	NO
PCA0879.81	3986
PCA0880.00	3931
PCA0880.80	3931
PCA0881.00	3854
PCA0881.80	3854
PCA0883.11	4303
PCA0884.00	3910
PCA0888.00	4211
PCA0888.20	4211
PCA0888.40	4211
PCA0892.00	4179
PCA0893.02	3961
PCA0897.11	3842
PCA0899.00	3831
PCA0899.02	3831
PCA0899.12	3831
PCA0951.02	3912
PCA0951.11	3912
PCA0953.00	3959
PCA0953.02	3959
PCA0953.12	3959
PCA0953.22	3959
PCA0954.00	4013
PCA0958.10	4208
PCA0959.01	3835
PCA0960.01	3834
PCA0961.00	3914
PCA0962.00	3950
PCA0964.12	4096
PCA0965.01	3765
PCA0970.02	3889
PCA0971.02	3769
PCA0973.02	4031
PCA0976.00	3849
PCA0976.10	3849
PCA0976.20	3849
PCA0976.80	3849
PCA0976.81	3849
PCA0977.00	3850
PCA0977.80	3850
PCA0978.02	4112
PCA0984.00	3801
PCA0985.02	4074
PCA0986.00	3951
PCA0987.00	3983
PCA0987.02	3983/2
PCA0987.02	3983/3
PCA0987.10	3983
PCA0987.11	3983/1
PCA0987.22	3983
PCA0988.00	3891
PCA0996.00	4076
PCA1030.01	3904
PCA1031.00	3905
PCA1036.02	4042
PCA1037.00	4216
PCA1038.02	4028
PCA1038.12	4028
PCA1039.00	4105
PCA1040.00	4111
PCA1041.02	3978
PCA1041.12	3978
PCA1042.02	3979
PCA1045.01	3841/1
PCA1045.11	3841
PCA1046.02	3890
PCA1047.02	4154
PCA1048.00	3894
PCA1051.02	4106
PCA1052.00	4346
PCA1068.02	4159
PCA1069.00	3827
PCA1073.20	3343
PCA1073.20	3483
PCA1082.00	3885
PCA1082.50	3885
PCA1085.02	3976/1
PCA1098.02	3886
PCA1098.14	3886
PCA1100.00	4173

REMSA	BESER
NO	NO
PCA1100.11	4173/1
PCA1100.21	4173/1
PCA1101.04	3940
PCA1102.04	3939
PCA1103.00	3946
PCA1109.02	3923/1
PCA1113.00	4137
PCA112.500	4215
PCA1123.02	3797
PCA1126.08	4006
PCA1127.08	4018
PCA1128.08	4198
PCA1129.01	3900
PCA1133.02	3968
PCA1134.02	4001
PCA1135.02	3969
PCA1136.01	4213
PCA1136.12	4213
PCA1137.02	4081
PCA1138.00	3984
PCA1139.02	3985
PCA1149.10	4058
PCA1151.00	3988
PCA1152.00	3747
PCA1158.00	4293
PCA1159.00	3944
PCA1159.10	3944
PCA1162.01	3952
PCA1162.12	3952
PCA1166.01	4000
PCA1173.02	4016
PCA1177.00	3987
PCA1179.00	4210
PCA1181.02	4113
PCA1183.01	4121
PCA1196.02	4029
PCA1200.00	3945
PCA1200.30	3945
PCA1202.00	4240
PCA1204.12	3959
PCA1208.02	3880
PCA1209.02	3980
PCA1223.02	4073
PCA1224.00	3958
PCA1225.02	3929
PCA1226.02	3960
PCA1228.01	4258
PCA1231.00	3949
PCA1232.00	3953
PCA1233.00	3948
PCA1234.00	4077
PCA1235.02	3982
PCA1238.00	3820/3
PCA1239.02	3989
PCA1242.00	3975
PCA1242.01	3975
PCA1243.00	3962
PCA1245.00	3925
PCA1245.02	3965/1
PCA1245.10	3965
PCA1246.00	3926
PCA1246.02	3926
PCA1247.00	3963
PCA1248.00	3964
PCA1248.10	3964/1
PCA1250.00	3906/1
PCA1250.02	3906
PCA1250.11	3906
PCA1251.02	3920
PCA1252.02	3907
PCA1256.00	4157
PCA1259.02	4005
PCA1261.12	3976
PCA1264.02	4004
PCA1266.00	3903
PCA1271.02	3996
PCA1272.00	3997
PCA1274.02	4060
PCA1275.01	3922
PCA1275.12	4171

REMSA	BESER
NO	NO
PCA1275.12	3922/3
PCA1281.02	4122
PCA1282.00	4092
PCA1282.02	4122
PCA1286.02	3954
PCA1289.02	4160
PCA1290.02	4156
PCA1291.02	4035
PCA1292.01	3972
PCA1293.02	4015
PCA1297.00	4207
PCA1299.00	4151
PCA1301.00	4248
PCA1302.02	4039
PCA1302.22	4039
PCA1303.02	4165
PCA1304.10	4259
PCA1305.00	4247
PCA1310.02	3956
PCA1312.00	4255
PCA1318.00	4038
PCA1323.00	3970
PCA1337.00	4054
PCA1339.00	3995
PCA1343.00	4260
PCA1345.00	4309
PCA1350.00	4134
PCA1351.00	3966
PCA1352.00	3967
PCA1356.02	4037
PCA1362.02	4061
PCA1375.12	4149
PCA1379.10	4310
PCA1382.00	3971
PCA1387.00	4142
PCA1388.04	4150
PCA1395.00	4256
PCA1403.02	4146
PCA1407.00	4124
PCA1409.10	4314
PCA1412.32	4166
PCA1420.00	4135
PCA1423.02	4233
PCA1426.02	4049
PCA1431.02	4008
PCA1431.12	4230
PCA1432.02	4014
PCA1432.12	4014
PCA1439.01	4057
PCA1439.11	4057
PCA1440.01	4162
PCA1442.01	4132
PCA1442.01	4172
PCA1449.01	4056
PCA1464.08	4145
PCA1466.00	3998
PCA1468.02	4167
PCA1468.04	4167
PCA1481.02	4265
PCA1482.00	4161
PCA1488.02	4136
PCA1510.00	4226
PCA1510.10	4226
PCA1514.00	4204
PCA1516.00	4241
PCA1520.02	4174
PCA1521.00	4175
PCA1530.00	4201
PCA1538.04	4315
PCA1540.00	4140
PCA1553.00	4200
PCA1561.02	4176
PCA1569.02	4317
PCA1570.02	4318
PCA1601.01	4295
BPM 1582.02	4283/1
BPM1293..02	4015

REMY	BESER
NO	NO
RAP1020	4390
RAP1096	3925/2
RAP1108	4325/1
RAP1111	3926/1
RAP1124	3907/1
RAP1124	3907/1A
RAP1124	3907/2
RAP1125	3907/1
RAP1125	3907/1A
RAP1125	3907/2
RAP1160	3872/1
RAP1161	4283/1
RAP1169	3924/1
RAP1178	4389
RAP1201	4151/1
RAP1213	3906/1
RAP1213	3906/1A
RAP1213	3906/2
RAP1234	3962/1
RAP1240	4379
RAP1260	3988/1
RAP1276	4201/1
RAP1286	3920/1
RAP1291	4228/1
RAP1324	3983/3
RAP1341	3966/1
RAP1414	4283/1
RAP1454	4378
RAP1459	4391
RAP1462	4181/1
RAP1507	4380
RAP1524	4176/1
RAP1525	4176/1
RAP1562	3512/2
RAP1563	4201/1
RAP1584	4283/1
RAP1627	4092/1
RAP1670	3872/1
RAP1714	4140/1
RAP1808	3906/1
RAP1808	3906/1A
RAP1808	3906/2
RAP1907	4351/1
RAP1977	3647
RAP2018	3512/1
RAP2051	4172/1

ROAD HOUSE	BESER
NO	NO
2008.02	3806
2008.1	3806/1
2009	3325
2025.2	3439
2053	3481
2075.6	3601
2082	3328
2110	3705
2133	3418
2133.1	3418
2141.04	3555
2141.21	3555
2141.24	3555
2147	3646
2147.22	3721
2148.04	3672
2148.14	3672
2148.24	3672
2148.34	3672
2148.44	3672
2167.04	3472
2167.1	3472
2181.02	3450
2182.02	3691
2192.01	3580
2192.12	3580
2208.02	3546
2236	3692
2238.04	3657

ROAD HOUSE	BESER
NO	NO
2238.24	3657
2262.12	3557
2262.83	3557
2263.01	3529/1
2263.03	3529/2
2263.07	3529/1
2263.45	3529/1
2263.5	3529/1
2263.87	3529/1
2263.89	3529/1
2285.2	3594
2285.3	3594
2287	3700
2293.22	3699
2325.12	4148
2325.42	4148
2325.52	4148
2350	3700
2357.22	3604
2390.02	3590
2390.11	3590/2
2408	3626
2408.1	3626
2415.12	3832
2415.22	3832
2445	3658
2445.02	3658
2445.81	3658
2495	3930
2587	3618/1
2591	3671
2591.8	3671
2591.9	3671
2614.12	3614
2620	3731
2620.2	3731
2620.8	3731
2620.81	3731
2633.2	3782/1
2633.21	3782
2633.31	3782
2633.41	3782
2634	3644
2634.8	3644
2685.02	3763
2762	4354
2762.1	4354
2767.01	3795
2801	3876
2846.2	3561
2957.02	4040
2957.22	4040
2963.1	3564/1
2991	4127
2995	4075/1
9373	3450
9479	3657
9578	3692
21195.1	4242
21195.2	4242
21210.01	4229
21210.02	4229
21226.32	4251
21237.12	3981
21362.42	4343
21362.52	4343
21387.1	4287
21387.2	4287
21387.3	4287
21391	3529/2
21391.1	3529/2
21412.02	4041
21430.02	4338
21430.1	4338
21450.12	4286
21518.04	4341
21518.15	4341
21536.02	4316
21541	4323
21580.02	4285

ROAD HOUSE	BESER
NO	NO
21582.02	4283
21583.02	4321
21602.02	4351
21612.04	4307
21634.02	4284
21671.04	4239
21676.02	4353
21692.01	4364
21700.02	4246
21718	4253
21830	4350
21858.02	4360
21887	4363
2001.02	3405
2002.00	3320
2002.20	3350
2006.00	3318
2006.30	3318
2006.40	3318
2006.60	3318
2007.40	3326
2010.00	3315
2010.00	3515
2010.20	3315
2010.20	3515
2010.30	3315
2010.30	3515
2010.40	3339
2010.40	3514
2010.50	3339
2010.50	3514
2010.58	3315
2010.58	3515
20139.02	3573
2014.00	3335
2014.10	3365
2014.12	3365
2014.40	4103
20155.12	3572
2017.00	3327
2017.10	3327
2017.20	3343
2017.20	3483
2017.30	3343
2017.30	3483
2021.06	3333
2021.10	3329
2021.12	3329
2021.14	3329
2021.16	3329
2022.00	3316
2022.10	3317
2022.12	3317
2022.20	3346
2022.30	3316
2022.50	3316
2022.60	3317
2025.30	3425
2026.02	3366/1
2026.12	3366
2039.00	3311
2039.10	3311
2042.00	3373
2042.10	3373
2042.20	3373
2042.30	3373
2042.40	3373
2042.50	3373
2044.02	3526
2045.00	3340
2045.02	3340
2045.10	3340
2045.22	3340
2045.32	3321
2046.00	3378
2046.10	3378
2046.20	3490
2046.40	3378
2046.50	3490
2047.30	3513

ROAD HOUSE	BESER
NO	NO
2047.32	3513
2048.00	3537
2048.10	3537
2049.10	3840
2052.10	3661
2052.20	3661
2056.00	3423
2056.10	3423
2056.12	3423/1
2056.20	3423
2058.10	3416
2060.00	3374
2060.10	3374
2061.02	3527
2063.00	3312
2063.02	3484
2068.02	3323
2079.00	3709
2079.10	3709
2079.20	3709
2079.30	3709
2080.00	3393
20803.22	3893
20849.10	3823
20858.30	3826
20860.12	4301/1
20860.12	4301
20876.21	3933
2092.00	3710
20953.00	3959
20953.12	3959
2098.00	3324
2098.02	3324
2101.00	3410
2101.03	3410
2101.10	3410
2101.20	3410
2101.40	3410
2102.10	3873
2103.00	3421
21030.01	3904
21031.00	3905
21036.02	4042
21037.00	4216
21038.02	4028
21038.12	4028
21039.00	4105
21040.00	4111
21041.02	3978
21041.12	3978
21042.02	3979
21045.01	3841/1
21045.11	3841
21046.02	3890
21047.02	4154
21048.00	3894
21051.02	4106
21052.00	4346
21052.30	4380
2106.00	3407
21068.02	4159
21069.00	3827
21081.01	4036
21081.11	4036
21082.00	3885
21082.50	3885
21085.02	3976/1
2109.00	3579
2109.12	3579
2109.22	3579
21098.02	3886
21098.14	3886
21100.00	4173
21100.11	4173/1
21100.21	4173/1
21101.04	3940
21102.04	3939
21103.00	3946
21109.02	3923/1
2111.00	3509

ROAD HOUSE	BESER
NO	NO
21110.02	3924/1
21113.00	4137
21120.02	4107
21123.02	3797
21124.00	4220
21125.00	4215
21126.08	4006
21127.08	4018
21128.08	4198
21129.01	3900
21132.00	4389
21133.02	3968
21134.02	4001
21135.02	3969
21136.01	4213
21136.12	4213
21137.02	4081
21138.00	3984
21139.02	3985
2114.00	3625
21145.00	4388
21145.10	4388
21149.10	4058
2115.00	3369
21151.00	3988/1
21151.00	3988
21152.00	3747
21158.00	4293
21159.00	3944
21159.10	3944
21162.01	3952
21162.12	3952
21166.01	4000
2117.00	3370
21173.02	4016
21177.00	3987
21179.00	4210
21181.02	4113
21183.01	4121
2119.00	3417
2119.10	3570
2119.12	3417/1
2119.15	3417
2119.20	3417
2119.22	3417/1
2119.32	3417/1
21196.02	4029
2120.00	3379
21200.00	3945
21200.30	3945
21202.00	4240
21204.12	3959
21208.02	3880
21209.02	3980
21223.02	4073
21224.00	3958
21225.02	3929
21226.02	3960
21226.32	4251/1
21231.00	3949
21232.00	3953
21233.00	3948
21234.00	4077
21235.02	3982
21238.00	3820/3
21239.02	3989
21242.00	3975
21242.01	3975
21243.00	3962/1
21243.00	3962
21245.00	3925/2
21245.00	3925
21245.02	3965/1
21245.10	3965
21246.00	3926/1
21246.00	3926
21246.02	3926/1
21246.02	3926
21247.00	3963/1
21247.00	3963

ROAD HOUSE	BESER
NO	NO
21248.00	3964
21248.10	3964/1
21250.00	3906/1
21250.02	3906/1
21250.02	3906/1A
21250.02	3906/2
21250.02	3906
21250.11	3906/1
21250.11	3906/1A
21250.11	3906/2
21250.11	3906
21251.02	3920/1
21251.02	3920
21252.01	3907/1
21252.01	3907/1A
21252.01	3907/2
21252.01	3907
21252.02	3907/1
21252.02	3907/1A
21252.02	3907/2
21252.02	3907
21256.00	4157
21259.02	4005
21261.12	3976
21264.02	4004
21266.00	3903
21270.02	4368
21271.02	3996
21272.00	3997
21274.02	4060
21275.01	3922/1
21275.01	3922
21275.12	4171/1
21275.12	4171
21275.12	3922/3
21281.02	4122
21282.00	4092/1
21282.00	4092
21282.02	4122
21286.02	3954
21289.02	4160
2129.00	3415
21290.02	4156
21291.02	4035
21292.01	3972
21293.02	4015
21297.00	4207
21299.00	4151/1
21299.00	4151
21301.00	4248
21302.02	4039
21302.22	4039
21303.02	4165
21304.00	4249
21304.10	4259
21305.00	4247
21310.02	3956
21312.00	4255
21318.00	4038
2132.00	3371
21321.00	4277
21321.20	4277
21323.00	3970
21337.00	4054
21339.00	3995
2134.00	3650
2134.01	3650
2134.02	3619
2134.03	3635
2134.10	3649
2134.11	3649
2134.12	3635
2134.15	3635
2134.20	3650
2134.40	3551
2134.41	3531
2134.50	3531
2134.81	3650
2134.95	3531
21342.00	4390

ROAD HOUSE	BESER
NO	NO
21343.00	4260
21345.00	4309
2135.00	3536
2135.01	3536
2135.10	3536
2135.11	3536
2135.20	3536
2135.22	3536
2135.40	3536
2135.94	3536
21350.00	4134
21351.00	3966/1
21351.00	3966
21352.00	3967
21356.02	4037/1
21356.02	4037
21362.02	4061
21375.12	4149
21377.00	4391
21379.10	4310
21382.00	3971
21387.00	4142
21388.04	4150
2139.00	3573
21395.00	4256
21399.00	4169
21403.02	4146
21407.00	4124
21407.12	4308
21409.10	4314
2141.01	3503
2141.02	3503
2141.10	3503
2141.11	3503
2141.12	3503
2141.16	3503
2141.18	3503
2141.20	3503/1
2141.30	3503
2141.32	3503
2141.52	3503
2141.78	3503
21410.00	4291
21412.32	4166
2142.20	3689
21420.00	4135
21421.00	4325/1
21421.00	4325
21423.02	4233
21426.02	4049
2143.02	3440
21431.02	4008
21431.12	4230
21432.02	4014
21432.12	4014
21433.00	4379
21439.01	4057
21439.11	4057
2144.02	3381
2144.06	3496
2144.12	3381
2144.14	3494
2144.14	3493
2144.24	3494
2144.24	3493
2144.32	3495
2144.42	3381
2144.50	3496/1
2144.60	3496
21440.01	4162
21442.01	4172/1
21442.01	4132
21442.01	4172
21446.02	4339
21449.01	4056
21457.00	4382
2146.01	3466
2146.04	3466
2146.11	3466
2146.14	3466

ROAD HOUSE	BESER
NO	NO
2146.22	3467
2146.23	3467
2146.41	3468
2146.44	3468
2146.60	3466
2146.62	3466
2146.80	3466
2146.84	3466
21464.08	4145
21466.00	3998
21467.02	4019
21468.02	4167
21468.04	4167
2147.02	3633
21472.02	4337
21476.00	4383
21478.00	4381
2148.14	3666
2148.34	3666
21481.02	4265
21482.00	4161
21485.08	4326
21488.02	4136
2149.00	3394
2149.02	3394
2149.10	3394
21496.00	4378
21506.02	4324
2151.02	4087
2151.22	4087
21510.10	4226
21514.00	4204
21516.00	4241
21520.02	4174/1
21530.00	4201/1
21530.00	4201
21534.00	4313
21535.00	4335
21538.04	4315
2154.00	3419
2154.01	3419
2154.02	3429
2154.03	3429
2154.10	3419
2154.12	3429
21540.00	4140
21540.10	4140/1
21548.02	4312
21549.08	4336
2155.00	3572
2155.02	3572
2155.10	3583
2155.20	3583
21553.00	4200
21557.00	4374
21560.00	4371
21560.00	4373
21561.02	4176/1
21561.02	4176
21562.00	4372
21569.02	4317
2157.00	3611
2157.10	3550
2157.20	3630
21570.02	4318
21582.02	4283/1
2159.00	3413
21592.08	4334
21601.01	4295
21602.02	4351/1
2163.02	3442
2167.04	3402
2167.10	3402
2168.00	3621
2169.01	3624
2169.81	3624
2170.04	3474
2170.14	3474
2170.24	3556
2170.34	3474

ROAD HOUSE	BESER
NO	NO
2170.76	3474
2171.00	3486
2171.05	3444/1
2171.10	3444/1
2171.20	3441
2171.60	3585/1
2171.60	3585
21719.00	4369
2172.00	3549
2172.10	3790
2172.11	3548
2172.11	3690
2172.20	3790/1
2172.30	3790/1
2172.32	4141
2172.35	3549
21720.00	4370
21724.08	4280
2175.00	3400
2176.20	3641
2176.22	3641
2177.00	3620
2178.00	3436
2178.10	3436
2178.20	3436
2178.30	3436
2178.50	3436
2179.00	3875
2179.10	3875
21801.02	4376
2181.04	3446
21830.00	4350/1
2184.00	3397
2184.02	3758
2184.12	3758
2187.00	3634
2187.02	3634
2188.00	3401
2189.00	3408
2189.02	3408
2189.05	3408
2189.08	3408
2189.10	3408
2189.11	3408
2189.12	3408
2189.24	3408
2191.04	3395
2191.12	3426
2192.02	3380
2192.11	3380
2192.12	3380
2192.34	3489
2192.34	3487
2192.96	3380
2193.00	3501
2193.02	3752
2197.10	3714
2202.02	3482
2204.00	3462
2206.00	3603
2208.00	3539/1
2208.12	3539
2208.80	3539/1
2208.83	3539
2211.22	3523
2212.00	3449
2212.02	3449
2212.12	3522
2212.22	3522
2212.32	3522
2212.42	3522
2212.52	3522
2214.14	3776
2220.02	3428
2221.00	3422
2221.01	3422
2221.02	3552
2222.00	3661
2222.01	3771
2222.10	3661

ROAD HOUSE	BESER
NO	NO
2222.11	3771
2223.00	3605
2223.86	3605
2224.00	3504
2224.02	3502
2224.22	3502
2228.02	3582
2232.00	3746
2233.00	4212
2233.02	4212
2233.12	4212
2233.64	4212
2233.85	4212
2233.86	4212
2236.02	3760
2238.04	3757
2238.04	3857
2238.14	3757
2238.14	3857
2238.24	3757
2238.24	3857
2239.00	3717
2239.50	3717
2239.60	3717
2244.00	3499
2244.02	3463
2245.00	3679
2245.12	3994
2245.22	3994
2245.32	3994
2245.40	3679
2245.41	3994
2245.42	3994
2254.02	3600
2254.12	3600
2261.02	3543
2261.82	3543
2262.02	3457
2262.12	3610
2262.22	3457
2262.82	3457
2262.83	3610
2263.10	3529
2263.12	3529
2263.15	3529
2263.41	4152
2263.88	3529
2264.02	3432
2264.12	3491
2264.13	3432
2264.14	3491
2265.00	3578
2265.02	3578
2265.15	3656
2266.00	3412
2266.10	3453
2267.11	3662
2270.00	3564
2270.10	3584
2271.02	3723
2273.02	3437
2273.12	3437
2275.02	3448
2277.00	3433/1
2277.10	3433/1
2277.12	3433
2277.40	3433
2278.21	3773
2278.22	3773
2278.32	3773
2278.42	3773
2281.00	3459
2281.40	3569
2281.42	3568
2282.00	3469
2282.10	3469
2284.00	3430
2284.02	3430
2284.83	3430
2284.85	3430

ROAD HOUSE	BESER
NO	NO
2285.10	3589
2286.10	3470
2286.20	3470
2286.30	3470
2286.32	3470
2286.50	3505
2286.50	3615
2289.02	3882
2289.12	3882
2291.02	4108
2293.12	3779
2294.00	4087
2294.20	4087
2294.22	4087
2294.32	4087
2296.00	3609
2296.02	3609
2297.00	3642
2297.10	3642
2297.81	3642
2301.00	3458
2306.00	4088
2306.12	4088
2311.00	3873
2315.04	3560
2317.12	4010
2317.22	4010
2318.02	3632
2318.05	3632
2318.06	3632
2318.12	3632
2318.22	3632
2318.32	3632
2318.52	3632
2318.82	3632
2318.92	3632
2320.00	3562
2320.20	3562
2320.81	3562
2321.02	3680
2321.22	3680
2323.02	3631
2324.02	3696
2325.02	4148/1
2325.12	4148/1
2325.22	4148/1
2325.32	4148/1
2325.42	4148/1
2325.52	4148/1
2331.00	3464
2331.04	3722
2331.10	3464
2333.02	3640
2337.02	3872/1
2337.02	3683
2337.10	3872
2337.22	3872
2337.80	3872/1
2337.80	3683
2337.81	3872/1
2337.81	3683
2337.90	3872
2341.02	3695
2342.02	4080
2343.00	3660
2343.40	3660
2343.80	3660
2343.81	3660
2344.00	4104
2345.00	3596
2345.10	3596
2351.02	3704
2351.22	3704
2351.32	3704
2351.42	3704
2354.02	3685
2354.22	3685
2354.32	3685
2362.02	4033
2364.00	3598

ROAD HOUSE	BESER
NO	NO
2364.02	3766
2367.00	4072
2370.00	4086
2370.10	4086
2372.00	3424
2372.02	3424/1
2372.30	3424
2379.00	3628
2379.12	3628
2379.20	3629
2381.00	3879
2381.20	3879
2381.30	3879
2381.50	3879
2381.60	4181
2381.61	4181/1
2382.00	3733
2382.20	3733
2382.81	3733
2384.00	3563
2385.10	4020
2389.02	3883
2389.12	3883
2390.00	3506
2390.41	3590/1
2391.00	3473
2392.00	3445
2393.00	3623
2393.02	3623
2393.20	3623
2393.22	3623
2396.00	3892
2396.10	3892
2396.20	3892
2397.00	3874
2397.10	3874
2397.22	3874
2402.02	3554
2402.02	3651
2402.22	3554
2402.22	3651
2402.42	3554
2402.42	3651
2402.52	3554
2402.52	3651
2403.02	4078
2405.02	3688
2407.00	3581
2410.00	3745
2412.00	3714
2412.30	3714
2413.00	3693
2413.04	3693
2413.10	3693
2413.12	3693
2414.01	3608
2414.20	3643
2415.32	4269
2415.42	4269
2416.00	3833
2417.00	3545
2417.10	3545
2418.02	3607
2418.22	3607
2419.02	3686
2419.12	3686
2419.22	3686
2421.00	3777
2421.20	3777
2424.04	4099
2425.02	3674
2425.12	3674
2425.22	3674
2426.02	3887
2426.12	3887
2429.04	3673
2431.00	4128
2431.10	4128
24310.01	4249
2432.00	3558

ROAD HOUSE	BESER
NO	NO
2432.01	3593
2432.02	3593
2433.00	4214
2436.02	3749
2436.40	3749
2436.41	3749/1
2438.04	3819
2438.14	3819
2439.04	3878
2441.00	3909
2447.00	4197
2456.02	3915
2456.14	3915
2457.00	4275
2459.00	3511
2459.10	3511
2460.02	3622
2460.12	3622
2461.02	3528
2462.00	3888
2462.20	3888
2462.81	3888
2467.00	4182
2467.20	4182
2467.30	4182
2467.40	4182
2468.00	3736
2480.00	3553
2480.21	3553/1
2480.80	3553/1
2480.81	3553
2484.02	3867
2486.02	3595
2486.81	3595
2487.02	3559
2487.81	3559
2490.02	3872/1
2490.02	3683
2494.02	3507
2494.81	3507
2501.02	3898
2502.02	3740
2502.22	3740
2507.00	3667
2571.02	3781
2578.00	3567
2579.00	3678
2580.00	3670
2580.10	3670
2582.00	3675
2582.80	3675
2583.00	3809
2584.00	3512/1
2584.00	3512
2584.20	3512/2
2586.00	3677
2586.10	3677
2587.12	3618
2587.22	3618
2588.10	3897
2589.02	3617
2589.12	3617
2589.22	3617
2589.42	3617
2591.30	3795/1
2591.83	3795/1
2592.02	3647
2592.02	3577
2592.12	3598/1
2592.22	3647
2592.22	3577
2593.00	4034/1
2593.00	4034
2594.00	3884
2594.02	3884
2595.02	3602
2596.00	3881
2596.10	3881
2596.20	3881
2598.02	3697

ROAD HOUSE	BESER
NO	NO
2601.00	3863
2601.10	3863
2601.20	3863
2601.30	3863
2602.02	3799
2603.04	3750
2603.80	3750
2605.02	4062
2605.12	4062
2605.80	4062
2605.82	4062
2605.83	4062
2609.00	3538
2609.10	3566
2609.20	3637
2618.00	3606
2618.01	3794
2619.02	3914/1
2619.02	3574
2620.00	3419
2620.20	3419
2620.80	3419
2620.81	3419
2621.00	3822
2621.20	3822
2630.00	3663
2631.10	3896
2631.12	3896
2631.82	3896
2631.90	3896
2633.00	3682
2634.04	3636
2634.84	3636
2635.00	3872
2636.04	4071
2636.12	4071
2640.00	3994
2640.40	3994
2643.00	3659
2643.10	3938
2643.20	3938
2643.80	3938
2643.81	3659
2643.90	3938
2645.00	3687/1
2645.02	3687/1
2645.12	3687/1
2647.02	3764
2650.00	4125
2650.80	4125
2650.81	4125
2651.00	3575
2651.10	3575/2
2651.80	3575
2651.81	3575/2
2651.86	3942/A
2655.02	4079
2662.02	3653
2674.12	3932
2675.02	3778
2678.00	3676
2678.10	3676
2679.00	4274
2684.02	3762
2691.00	3754
2693.00	3755
2693.80	3755
2694.10	4115
2695.02	4155
2695.82	4155
2696.00	3744
2697.01	4126/1
2697.01	4126
2698.01	4069
2699.00	3780
2701.00	3681
2703.02	3648
2705.02	4281
2705.81	4281
2706.00	3830

ROAD HOUSE	BESER
NO	NO
2707.04	3829
2708.02	4059
2708.82	4059
2709.00	3821
2709.10	3821
2710.02	4027
2711.04	3859
2711.11	3859
2712.02	3768
2712.12	3768
2713.00	3919
2714.00	3918
2717.00	3861
2719.00	3943
2720.02	3901
2724.02	3928
2724.11	3928
2725.02	3748
2727.10	4123
2727.20	4123
2729.02	3913
2730.01	3767
2733.00	3804
2735.02	4110
2736.02	4011
2736.12	4011
2736.32	4011
2739.02	4009
2740.00	3769
2740.02	3769
2741.02	3788
2746.02	3993
2746.12	3993
2746.22	3993
2746.32	3993
2746.42	3895
2746.62	3895
2747.02	4109
2747.02	4232
2747.12	4109
2747.12	4232
2748.02	4017
2750.02	4084
2752.12	4222
2756.02	4021
2766.00	3877
2767.01	4345
2768.00	3836
2768.10	3836
2768.81	3836
2769.00	4102
2770.00	4101
2770.00	4209
2771.02	3843
2771.12	3843
2771.22	3843
2772.02	3784
2772.12	3921
2772.82	3784
2772.83	3921
2774.02	3846
2774.12	3846
2774.82	3846
2775.01	4138/1
2775.01	4138
2775.81	4138/1
2775.81	4138
2776.00	4100
2776.10	4100
2776.80	4100
2776.81	4100
2777.00	4093
2777.10	4093
2777.80	4093
27843.02	3762
2800.22	4118
2802.00	4119
2803.12	3893
2804.02	3955
2804.12	3955

ROAD HOUSE	BESER
NO	NO
2804.31	3955
2807.00	4012
2807.02	4012
2813.00	4158
2819.00	3856
2821.02	3802
2821.12	3802
2822.00	4094
2822.12	3817
2827.04	3934
2827.84	3934
2828.04	3935
2833.00	3855
2833.80	3855
2834.00	3848
2834.10	3848
2836.02	4095
2839.02	4153
2840.00	3820/1
2840.00	3820
2840.10	3820/1
2840.10	3820
2840.20	3820/1
2840.20	3820
2840.30	3820/1
2840.30	3820
2840.82	3820/1
2840.82	3820
2841.00	3800
2841.10	3800
2841.80	3800
2842.00	3853
2842.10	3853
2842.20	3853/1
2842.30	3853/1
2842.70	3853/1
2843.00	3852
2843.10	3852
2845.01	4271
2849.00	3823
2852.04	4143
2852.14	4143
2854.00	3911
2855.00	4082
2857.00	4180
2857.20	4378
2858.01	3826/1
2858.10	3826
2858.11	3826/1
2858.32	3826/3
2858.80	3826/1
2859.01	3800/1
2859.10	3800
2859.11	3800/1
2859.12	3800/3
2859.20	3800/2
2859.21	3800/2
2859.80	3800/1
2860.12	4301/1
2874.02	3825
2876.01	3933
2876.31	3933
2876.41	3933
2879.12	3986
2879.81	3986
2880.00	3931
2880.80	3931
2881.00	3854
2881.80	3854
2883.11	4303
2884.00	3910
2887.04	4327
2888.00	4211
2888.20	4211
2888.40	4211
2892.00	4179
2893.02	3961
2897.11	3842
2899.00	3831
2899.02	3831

ROAD HOUSE	BESER
NO	NO
2899.12	3831
2951.02	3912
2951.11	3912
2953.00	3959
2953.02	3959
2953.22	3959
2954.00	4013
2958.10	4208
2959.01	3835
2960.01	3834
2961.00	3914
2962.00	3950
2964.12	4096
2965.01	3765
2970.02	3889
2971.02	3769
2973.02	4031
2976.00	3849
2976.10	3849
2976.20	3849
2976.80	3849
2976.81	3849
2977.00	3850
2977.80	3850
2978.02	4112
2984.00	3801
2985.02	4074
2986.00	3951
2987.00	3983
2987.02	3983/3
2987.02	3983/2
2987.10	3983
2987.11	3983/1
2987.22	3983
2988.00	3891
2989.10	4023
2996.00	4076
JSX2436.40	3749
JSX2436.41	3749/1
PSX21514.00	4204
PSX21516.00	4241

SAMKO	BESER
NO	NO
5SP001	3346
5SP002	3317
5SP003	3316
5SP006	3424
5SP007	3424/1
5SP010	3625
5SP011	3543
5SP012	3440
5SP014	3423/1
5SP016	3459
5SP024	3318
5SP026	3350
5SP027	3320
5SP035	3723
5SP036	3437
5SP039	3499
5SP043	4108
5SP047	3395
5SP053	3446
5SP055	3600
5SP056	3746
5SP058	3560
5SP063	4088
5SP072	4212
5SP073	3582
5SP076	3633
5SP090	3779
5SP092	3758
5SP094	3466
5SP095	3425
5SP096	3467
5SP1001	4112
5SP1002	3817
5SP1003	3769
5SP1004	3846

SAMKO	BESER
NO	NO
5SP1005	4012
5SP1007	3574
5SP1007	3914/1
5SP1009	3507
5SP1012	3622
5SP1013	4072
5SP1014	4148/1
5SP1015	3648
5SP102	3432
5SP1020	3653
5SP1021	4071
5SP1025	3764
5SP1028	4027
5SP1029	4084
5SP1030	3697
5SP1037	4155
5SP1042	3901
5SP1050	3829
5SP1053	4009
5SP1062	3769
5SP1065	4069
5SP1067	3740
5SP1068	3825
5SP1070	4110
5SP1071	4109
5SP1071	4232
5SP1072	3802
5SP1076	3618
5SP1079	3609
5SP1080	3951
5SP1081	3898
5SP1082	3436
5SP1088	3877
5SP109	3327
5SP1091	4119
5SP1096	3674
5SP1097	3632
5SP1100	3680
5SP1101	3598/1
5SP1106	3659
5SP1107	3503/1
5SP1108	3380
5SP1109	3942/A
5SP1109B	3942
5SP111	3318
5SP1110	3928
5SP1113	4154
5SP1114	3890
5SP1115	3911
5SP1117	3560
5SP112	3318
5SP1124	4097
5SP1124	4097/1
5SP1129	3609
5SP113	3311
5SP1131	3628
5SP1131A	3628
5SP1132	3874
5SP1133	3662
5SP1134	3680
5SP1138	3502
5SP1142	3433/1
5SP1143	3433
5SP1164	3994
5SP118	3321
5SP1188	3820
5SP1188	3820/1
5SP1189	3853
5SP1190	3885
5SP1191	3643
5SP1192	3800
5SP1193	4180
5SP1194	4181
5SP1195	3946
5SP1196	3939
5SP1197	4042
5SP1199	3894
5SP1202	3940
5SP1205	3841/1
5SP1206	3842

SAMKO	BESER
NO	NO
5SP1207	3978
5SP1208	3687/1
5SP1210	3895
5SP1211	4159
5SP1212	3985
5SP1219	3905
5SP1220	3968
5SP1222	3502
5SP1225	3826/1
5SP1228	3923/1
5SP1229	3983/1
5SP1231	3879
5SP1235	3987
5SP1236	3853/1
5SP1239	4096
5SP1240	4173
5SP1246	3924/1
5SP1249	4389
5SP125	3484
5SP1252	4388
5SP1253	4210
5SP1255	4161
5SP1256	3842
5SP1258	3953
5SP1259	3920
5SP1259	3920/1
5SP126	3312
5SP1260	3906
5SP1260	3906/1
5SP1260	3906/1A
5SP1260	3906/2
5SP1261	3907
5SP1261	3907/1
5SP1261	3907/1A
5SP1261	3907/2
5SP1263	4173/1
5SP1264	3826/1
5SP1266	3826/1
5SP1268	3800/3
5SP127	3393
5SP1271	4346
5SP1272	4157
5SP1274	4247
5SP1275	3925
5SP1275	3925/2
5SP1275A	3925/2
5SP1278	3984
5SP1281	3949
5SP1282	4077
5SP1288	3922
5SP1288	3922/1
5SP1289	3820/3
5SP1293	3926
5SP1293	3926/1
5SP1293A	3926/1
5SP1294	3963
5SP1294	3963/1
5SP1294A	3963/1
5SP1295	3962
5SP1295	3962/1
5SP1295A	3962/1
5SP1295K	3962
5SP1295K	3962/1
5SP1296	4092
5SP1296	4092/1
5SP1296A	4092
5SP1296A	4092/1
5SP1297	3965
5SP1297A	3965/1
5SP1297B	3965
5SP1301	3536
5SP131	3323
5SP1310	3339
5SP1310	3514
5SP1311	3687/1
5SP1312	3954
5SP1314	4038
5SP1315	4037
5SP1315	4037/1
5SP1316	3956

SAMKO	BESER
NO	NO
5SP1318	3929
5SP1319	3975
5SP1322	3976
5SP1326	4058
5SP1327	3820
5SP1327	3820/1
5SP1328	3800/2
5SP133	3873
5SP1333	3958
5SP1334	3900
5SP1340	4248
5SP1342	4074
5SP1343	4017
5SP1344	3969
5SP1345	3880
5SP1346	3797
5SP1347	3955
5SP1348	3972
5SP1349	4001
5SP135	3343
5SP135	3483
5SP1351	3964
5SP1355	3767
5SP1357	3779
5SP1359	3944
5SP136	3710
5SP1360	4293
5SP1361	3910
5SP1362	4076
5SP1363	3912
5SP1364	3831
5SP1365	4031
5SP1367	4179
5SP1368	4105
5SP1369	3959
5SP137	3335
5SP1370	3979
5SP1372	3886
5SP1373	4106
5SP1374	3961
5SP1375	4028
5SP1376	3945
5SP1376A	3945
5SP1376B	3945
5SP1379	3891
5SP1382	3960
5SP1388	4134
5SP1389	4137
5SP139	3366/1
5SP1390	4390
5SP1398	3905
5SP1399	4006
5SP140	3423
5SP1400	4018
5SP1401	4198
5SP1402	4081
5SP1403	4016
5SP1406	4143
5SP1407	4113
5SP1408	4213
5SP141	3315
5SP141	3515
5SP1410	4208
5SP1411	3969
5SP1413	4029
5SP1415	4039
5SP1416	4165
5SP1417	3989
5SP1418	3996
5SP1419	3997
5SP141A	3315
5SP141A	3515
5SP1420	4259
5SP1421	4249
5SP1423	4148/1
5SP143	3416
5SP1432	4303
5SP1436	4111
5SP1441	3512/2
5SP1448	3976/1

SAMKO	BESER
NO	NO
5SP1449	3982
5SP1451	4035
5SP1452	3903
5SP1454	4036
5SP1455	4156
5SP1456	4160
5SP146	3405
5SP1460	4151
5SP1460	4151/1
5SP1461	3995
5SP1461A	3995
5SP1464A	4122
5SP1465	3966
5SP1465	3966/1
5SP1467	4149
5SP1471	3970
5SP1472	4181/1
5SP1483	4000
5SP1484	4142
5SP1487	3967
5SP1489	4260
5SP1491	3827
5SP1493	3964/1
5SP1494	4121
5SP1495	3952
5SP1496	4207
5SP1497	4015
5SP1499	3988
5SP1499	3988/1
5SP1500	3971
5SP1506	4240
5SP151	3374
5SP1516	4082
5SP1522	4146
5SP1536	3841
5SP1548	4005
5SP1551	4162
5SP1555	4004
5SP1558	4061
5SP1562	4008
5SP1563	4008
5SP1570	4132
5SP1570	4172
5SP1570	4172/1
5SP1574	4054
5SP1575	4014
5SP1577	4258
5SP1578	4057
5SP1579	4056
5SP158	3611
5SP1580	4230
5SP1581	4230
5SP1584	4150
5SP1586	4169
5SP1586A	4169
5SP1589	4147
5SP1593	3948
5SP1608	4135
5SP161	3373
5SP1616	4314
5SP1616A	4314
5SP1616B	4314
5SP1618	4325/1
5SP1619	4378
5SP1620	4215
5SP1621	3983/2
5SP1621	3983/3
5SP1622	4220
5SP1625	4060
5SP1630	4124
5SP1631	4379
5SP1635	4002
5SP1639	3893
5SP164	3709
5SP1640	3747
5SP1641	4380
5SP1649	3748
5SP1673	4122
5SP1679	3906/1
5SP1689	4039

SAMKO	BESER
NO	NO
5SP169	3709
5SP1718	3998
5SP1721	4171
5SP1721	3922/3
5SP1721	4171/1
5SP1726	4265
5SP1727	4303
5SP1732	4382
5SP1733	3916
5SP1736	4233
5SP1739	4381
5SP1740	4145
5SP1741	4383
5SP1744	4136
5SP1753	4166
5SP1754	4309
5SP1755	4310
5SP1757	4049
5SP1762	4391
5SP1770	4201/1
5SP1784	4176
5SP1784	4176/1
5SP1786	4174
5SP1786	4174/1
5SP1786A	4174/1
5SP1787	4175
5SP179	3421
5SP1796	4140/1
5SP181	3550
5SP183	3324
5SP1835	4241
5SP1836	4295
5SP1838	4372
5SP1853	4371
5SP1853	4373
5SP187	3490
5SP1873	4374
5SP1876	4388
5SP1879	4226
5SP188	3378
5SP1882	3853/1
5SP190	3410
5SP1984	4351/1
5SP1992	4283/1
5SP2001	4301/1
5SP201	3493
5SP201	3494
5SP202	3371
5SP2030	4369
5SP2034	4370
5SP2057	4251/1
5SP2066	4350/1
5SP2066K	4350/1
5SP2067	4228/1
5SP210	3365
5SP211	3339
5SP211	3514
5SP211A	3339
5SP211A	3514
5SP213	3511
5SP215	3536
5SP216	3650
5SP217	3642
5SP220	3503
5SP221	3619
5SP223	3441
5SP224	3486
5SP224	3486/1
5SP225	3444
5SP226	3486/1
5SP228	3442
5SP230	3381
5SP231	3495
5SP232	3621
5SP233	3417
5SP234	3419
5SP235	3429
5SP236	3624
5SP237	3573
5SP238	3572

SAMKO	BESER
NO	NO
5SP242	3417/1
5SP245	3509
5SP249	3369
5SP250	3379
5SP252	3370
5SP254	3407
5SP257	3620
5SP260	3401
5SP261	3413
5SP264	3397
5SP265	3400
5SP266	3714
5SP268	3402
5SP270	3634
5SP271	3380
5SP274	3474
5SP275	3496/1
5SP276	3428
5SP277	3603
5SP278	3482
5SP280	3408
5SP284	3462
5SP288	3422
5SP289	3415
5SP293	3457
5SP294	3529
5SP295	3589
5SP296	3564
5SP297	3578
5SP299	3649
5SP300	3635
5SP302	3430
5SP304	3470
5SP306	3583
5SP307	3496/1
5SP314	3436
5SP315	3448
5SP318	3641
5SP319	3609
5SP322	3752
5SP324	3662
5SP325	3605
5SP327	3417/1
5SP330	3680
5SP331	3563
5SP331A	3563
5SP333	3469
5SP334	3717
5SP335	3463
5SP336	3875
5SP342	3882
5SP346	3799
5SP348	3632
5SP349	3503
5SP354	4104
5SP355	3562
5SP360	3679
5SP364	3504
5SP366	3522
5SP372	3526
5SP374	3666
5SP378	3760
5SP381	3436
5SP383	3464
5SP384	3487
5SP384	3489
5SP387	3660
5SP392	3661
5SP396	3883
5SP406	3863
5SP406A	3863
5SP408	3513
5SP408A	3513
5SP409	3677
5SP409A	3677
5SP411	3366
5SP417	3584
5SP420	3675
5SP423	3629
5SP423A	3629

SAMKO	BESER
NO	NO
5SP425	3523
5SP427	3596
5SP430	3683
5SP430	3872/1
5SP431	3771
5SP440	3536
5SP445	3539
5SP449	3733
5SP450	3528
5SP455	3867
5SP457	3898
5SP459	4182
5SP461	3593
5SP462	3608
5SP464	3643
5SP465	3736
5SP467	3579
5SP468	3491
5SP470	3888
5SP471	3558
5SP472	3704
5SP474	3994
5SP477	3581
5SP477A	3581
5SP479	4078
5SP481	3473
5SP482	3445
5SP485	3630
5SP485A	3630
5SP486	3878
5SP487	3819
5SP493	3595
5SP494	3559
5SP500	3773
5SP506	4212
5SP508	4148/1
5SP510	3640
5SP512	3833
5SP514	3776
5SP517	4080
5SP518	3688
5SP520	3766
5SP522	3745
5SP524	3887
5SP537	3673
5SP539	4128
5SP542	3502
5SP544	3757
5SP544	3857
5SP546	3426
5SP555	3631
5SP558	3686
5SP561	3554
5SP561	3651
5SP564	3607
5SP565	3674
5SP566	3696
5SP569	3892
5SP570	3874
5SP571	3695
5SP577	3777
5SP578	3685
5SP582	3496
5SP585	3474
5SP586	3773
5SP587	3449
5SP591	3585
5SP599	3623
5SP600	3551
5SP605	3553
5SP608	3567
5SP608A	3567
5SP609	3678
5SP610	3670
5SP611	3512
5SP611	3512/1
5SP612	3506
5SP613	3531
5SP614	3617
5SP617	3577

SAMKO	BESER
NO	NO
5SP617	3647
5SP619	3750
5SP621	4062
5SP623	3680
5SP626	3453
5SP627	3538
5SP628	3570
5SP629	4197
5SP631	4020
5SP636	3610
5SP638	3566
5SP645	3606
5SP650	3656
5SP651	3419
5SP656	3505
5SP656	3615
5SP658	3674
5SP659	3327
5SP662	3659
5SP665	3602
5SP667	3637
5SP668	3682
5SP670	4125
5SP670A	4125
5SP671	4125
5SP672	3681
5SP676	3468
5SP678	3549
5SP679	3569
5SP680	3568
5SP682	3687/1
5SP683	3636
5SP684	3575
5SP685	3757
5SP685	3857
5SP686	3809
5SP687	3897
5SP691	3548
5SP691	3690
5SP693	3744
5SP695	3778
5SP696	3754
5SP697	3755
5SP698	3762
5SP700	3768
5SP701	4086
5SP702	4274
5SP704	3919
5SP705	3918
5SP708	3938
5SP711	4059
5SP712	3822
5SP713	4079
5SP714	4214
5SP717	3722
5SP719	3896
5SP720	3617
5SP725	3663
5SP726	3676
5SP729	3687/1
5SP731	3527
5SP737	3740
5SP738	3495
5SP747	3545
5SP749	3693
5SP756	3790/1
5SP758	3846
5SP759	3577
5SP759	3647
5SP760	3994
5SP761	4281
5SP763	3826/1
5SP763A	3826/3
5SP764	3800/1
5SP764A	3800/3
5SP767	3836
5SP771	3881
5SP775	3784
5SP785	3790
5SP786	4345

SAMKO	BESER
NO	NO
5SP787	3794
5SP789	3820
5SP789	3820/1
5SP791	3855
5SP793	3935
5SP796	3928
5SP798	3884
5SP799	3934
5SP802	3820
5SP802	3820/1
5SP805	3854
5SP806	3931
5SP807	3800
5SP809	4269
5SP813	3780
5SP814	4211
5SP815	3853
5SP816	3539/1
5SP819	4271
5SP826	3765
5SP829	3852
5SP830	3823
5SP830A	3823
5SP831	3986
5SP833	4094
5SP835	3830
5SP836	3788
5SP838	3913
5SP840	4011
5SP844	3667
5SP845	3859
5SP846	3932
5SP847	3993
5SP848	3993
5SP849	4102
5SP853	4152
5SP856	4010
5SP857	3933
5SP858	3843
5SP859	3843
5SP860	3843
5SP865	4100
5SP866	3904
5SP867	3983
5SP869	3848
5SP870	4214
5SP871	4123
5SP877	4118
5SP878	3889
5SP879	3749
5SP880	3749/1
5SP884	3856
5SP885	3914
5SP887	3583
5SP893	4216
5SP896	4182
5SP897	4093
5SP898	3950
5SP899A	4102
5SP899B	4102
5SP900	4101
5SP900	4209
5SP901	4103
5SP901A	4103
5SP903	3938
5SP904	4013
5SP905	4101
5SP905	4209
5SP906	3801
5SP907	3853
5SP910	3850
5SP911	3849
5SP913	3801
5SP919	3501
5SP920	3507
5SP922	3872
5SP924	3872
5SP926	3600
5SP928	4212
5SP934	3598

SAMKO	BESER
NO	NO
5SP936	4034
5SP936	4034/1
5SP939	4275
5SP940	4115
5SP946	3795/1
5SP948	3861
5SP949	3877
5SP952	3943
5SP955	3575/2
5SP956	3804
5SP957	3821
5SP957A	3821
5SP958	4158
5SP961	3537
5SP966	3834
5SP967	3835
5SP969	3590/1
5SP971	4095
5SP973	4138
5SP973	4138/1
5SP977	3553/1
5SP979	3896
5SP983	4126
5SP983	4126/1
5SP986	3408
5SP988	3552
5SP989	3781
5SP994	3921
5SP997	4153

SANGSIN	BESER
NO	NO
SP1283	3866

SBS	BESER
NO	NO
1501221017	3618
1501221018	3617
1501221023	4123
1501221207	3624
1501221214	3584
1501221402	3446
1501221403	3462
1501221405	3757
1501221405	3857
1501221407	3757
1501221407	3857
1501221501	3365
1501221506	3573
1501221507	3578
1501221508	3564
1501221509	3572
1501221510	3563
1501221514	3909
1501221515	3879
1501221517	3881
1501221518	3879
1501221520	3656
1501221530	4389
1501221532	4388
1501221533	4180
1501221534	4208
1501221536	4179
1501221540	4207
1501221545	4325/1
1501221547	4378
1501221549	4379
1501221552	4382
1501221555	4383
1501221918	3493
1501221918	3494
1501221919	3474
1501221923	3873
1501221924	3474
1501221925	3487
1501221925	3489

SBS	BESER
NO	NO
1501221926	3503
1501221930	3819
1501221931	3878
1501221932	3873
1501221934	3799
1501221937	3636
1501221942	3556
1501221944	3935
1501221945	3934
1501221947	3834
1501221948	3835
1501221949	3914
1501221950	3854
1501221951	3931
1501221952	3986
1501221954	3984
1501221955	3964
1501221960	3820/3
1501221961	3972
1501221962	3922
1501221962	3922/1
1501221964	4151
1501221964	4151/1
1501221965	3685
1501221970	4145
1501221974	4371
1501221974	4373
1501221975	4372
1501221977	4201
1501221977	4201/1
1501222205	3369
1501222207	3394
1501222208	3415
1501222210	3369
1501222211	3370
1501222212	3397
1501222214	3758
1501222219	4104
1501222220	3562
1501222221	3660
1501222222	4087
1501222223	3779
1501222236	3598
1501222238	3888
1501222239	4128
1501222244	3577
1501222244	3647
1501222249	3667
1501222251	3697
1501222252	3632
1501222253	4010
1501222255	3859
1501222256	3932
1501222257	3933
1501222258	3983
1501222260	4017
1501222261	4143
1501222262	3933
1501222264	3952
1501222268	3965/1
1501222269	4038
1501222305	3316
1501222306	3317
1501222307	3393
1501222310	3421
1501222314	3424
1501222316	3468
1501222319	3625
1501222321	3422
1501222322	3466
1501222325	3432
1501222326	3543
1501222329	3425
1501222334	3608
1501222337	3441
1501222340	3617
1501222343	3523
1501222344	3773
1501222347	3749
1501222353	3994

SBS	BESER
NO	NO
1501222358	3575
1501222361	3994
1501222362	3790
1501222363	3897
1501222364	3800/1
1501222365	3826/1
1501222367	3575/2
1501222368	3823
1501222374	3643
1501222375	4173
1501222376	3790/1
1501222377	3800
1501222380	3826/1
1501222382	3965
1501222383	4092
1501222383	4092/1
1501222384	4173/1
1501222387	3995
1501222388	3826/3
1501222389	3800/3
1501222390	4121
1501222392	3569
1501222502	3429
1501222503	3417/1
1501222504	3621
1501222507	3417/1
1501222508	3417
1501222509	3484
1501222512	3419
1501222514	3603
1501222515	3589
1501222516	3549
1501222518	3464
1501222519	3593
1501222522	3445
1501222533	3545
1501222534	3558
1501222546	3781
1501222549	3722
1501222550	3755
1501222551	3754
1501222553	4100
1501222554	4093
1501222557	3877
1501222558	3921
1501222559	3784
1501222560	3801
1501222561	3885
1501222562	3853
1501222563	4058
1501222564	3920
1501222564	3920/1
1501222565	3907
1501222565	3907/1
1501222565	3907/1A
1501222565	3907/2
1501222566	3906
1501222566	3906/1
1501222566	3906/1A
1501222566	3906/2
1501222567	4157
1501222568	4161
1501222569	4119
1501222573	4122
1501222574	3988
1501222574	3988/1
1501222579	4204
1501222582	4351/1
1501222602	3324
1501222603	3509
1501222606	3504
1501222607	3582
1501222609	3501
1501222610	4212
1501222612	3631
1501222613	3501
1501222621	4148/1
1501222623	3696
1501222624	3695
1501222625	3686

SBS	BESER
NO	NO
1501222626	3607
1501222631	4155
1501222632	3704
1501222633	3831
1501222634	4148/1
1501222635	4148/1
1501222636	4159
1501222637	4109
1501222637	4232
1501222640	4160
1501222641	4156
1501223001	3407
1501223003	3400
1501223004	3401
1501223006	3448
1501223016	4108
1501223018	3685
1501223019	3688
1501223020	3622
1501223021	3675
1501223023	3809
1501223026	3892
1501223027	4106
1501223028	3955
1501223029	4271
1501223030	4084
1501223031	3900
1501223033	3975
1501223211	3449
1501223213	3437
1501223214	3463
1501223216	3666
1501223220	3522
1501223221	3640
1501223225	3875
1501223230	3723
1501223233	3833
1501223238	3874
1501223239	3780
1501223242	3522
1501223244	4118
1501223245	3889
1501223248	4303
1501223250	3767
1501223255	4029
1501223303	3315
1501223303	3515
1501223304	3339
1501223304	3514
1501223306	3611
1501223307	3513
1501223308	3408
1501223309	3550
1501223312	3679
1501223318	3408
1501223319	3628
1501223320	3689
1501223322	3630
1501223323	3581
1501223326	3680
1501223327	3567
1501223328	3678
1501223329	3670
1501223330	3677
1501223331	3863
1501223333	4125
1501223334	3663
1501223335	3676
1501223338	3804
1501223339	3821
1501223340	3681
1501223341	3861
1501223342	4126
1501223342	4126/1
1501223343	4069
1501223344	4281
1501223345	3836
1501223350	4103
1501223351	3923/1
1501223352	3924/1

SBS	BESER
NO	NO
1501223354	4101
1501223354	4209
1501223360	4210
1501223362	3925
1501223362	3925/2
1501223363	3926
1501223363	3926/1
1501223364	3962
1501223364	3962/1
1501223365	3963
1501223365	3963/1
1501223366	4248
1501223367	4249
1501223368	4247
1501223401	3632
1501223403	3502
1501223404	3507
1501223407	3632
1501223408	3778
1501223409	3648
1501223411	3993
1501223412	3632
1501223413	3961
1501223414	3843
1501223415	3993
1501223418	3632
1501223420	3843
1501223421	3993
1501223422	3993
1501223423	3632
1501223424	3502
1501223425	3959
1501223426	3985
1501223427	3960
1501223428	3989
1501223430	4039
1501223431	4165
1501223433	4035
1501223434	4061
1501223435	3959
1501223436	3959
1501223437	4049
1501223439	4233
1501223501	3740
1501223504	3802
1501223505	4009
1501223506	4028
1501223507	4269
1501223508	3978
1501223509	3979
1501223511	3653
1501223512	3802
1501223513	3968
1501223514	3969
1501223515	3522
1501223516	4269
1501223517	4001
1501223518	4087
1501223520	3880
1501223521	3980
1501223602	3410
1501223604	3717
1501223606	3410
1501223607	3470
1501223608	3469
1501223609	3623
1501223611	3733
1501223614	3623
1501223618	3762
1501223620	3887
1501223621	3674
1501223624	3846
1501223626	3848
1501223627	3795/1
1501223628	4211
1501223629	3853
1501223631	3856
1501223632	3855
1501223633	4042
1501223636	3800/2

SBS	BESER
NO	NO
1501223638	3976
1501223641	4149
1501223643	4150
1501223644	4230
1501223645	4014
1501223646	4008
1501223647	4014
1501223704	3321
1501223709	3381
1501223710	3442
1501223714	3380
1501223715	3457
1501223716	3529
1501223719	3680
1501223723	3366/1
1501223724	3366
1501223728	3496/1
1501223729	3750
1501223733	3610
1501223735	3938
1501223740	3800
1501223741	3820
1501223741	3820/1
1501223743	3939
1501223744	3940
1501223745	3946
1501223747	3970
1501223748	3971
1501223911	3374
1501223913	3527
1501223915	3503
1501223917	3495
1501223918	3380
1501223919	3482
1501223920	3380
1501223921	3526
1501223925	3539
1501223926	3596
1501223928	3496/1
1501223929	3503
1501223938	3659
1501223944	3503/1
1501223946	3539/1
1501223948	3950
1501223949	3852
1501223950	3428
1501223951	3849
1501223952	3850
1501223953	3503/1
1501223954	3827
1501223955	4137
1501223958	4141
1501223959	3966
1501223959	3966/1
1501223960	3967
1501223961	4134
1501223963	4142
1501223970	4140
1501223971	4140/1
1501224005	3771
1501224009	3683
1501224009	3872/1
1501224010	3413
1501224013	3512
1501224013	3512/1
1501224014	3662
1501224016	3433
1501224018	3412
1501224019	3943
1501224022	3872
1501224023	4094
1501224030	4293
1501224031	3944
1501224105	3609
1501224106	3609
1501224303	3419
1501224402	3579
1501224403	3395
1501224406	3426
1501224408	4080

SBS	BESER
NO	NO
1501224409	3764
1501224410	4079
1501224411	3913
1501224413	3912
1501224414	4213
1501224415	4081
1501224501	3710
1501224507	3379
1501224508	3402
1501224509	3371
1501224510	3714
1501224513	3634
1501224519	4088
1501224523	4072
1501224528	3554
1501224528	3651
1501224534	3777
1501224535	4086
1501224536	3554
1501224536	3651
1501224538	3693
1501224539	3673
1501224543	3915
1501224544	4275
1501224545	4071
1501224547	3768
1501224548	3829
1501224549	3830
1501224550	3822
1501224552	3769
1501224553	4013
1501224555	4158
1501224556	4153
1501224557	3788
1501224558	3769
1501224559	3817
1501224560	3825
1501224562	3890
1501224563	4154
1501224568	3910
1501224569	3891
1501224570	4112
1501224572	3987
1501224574	4113
1501224575	4077
1501224576	3958
1501224577	3949
1501224580	3954
1501224582	3954
1501224584	3956
1501224586	4037
1501224586	4037/1
1501224587	3903
1501224704	3327
1501224705	3343
1501224705	3483
1501224706	3350
15012247102	4162
1501224711	3619
1501224712	3536
1501224714	3444
1501224715	3441
1501224716	3486
1501224716	3486/1
1501224717	3531
1501224718	3605
1501224719	3529
1501224720	3649
1501224723	3490
1501224725	3650
1501224727	3650
1501224731	3553
1501224733	3538
1501224735	3585
1501224736	3606
1501224737	3566
1501224738	4020
1501224739	3896
1501224743	3637
1501224747	4345

SBS	BESER
NO	NO
1501224750	3794
1501224751	3553/1
1501224754	4095
1501224756	3896
1501224757	3590/1
1501224758	4096
1501224759	4345
1501224761	3841
1501224762	3841/1
1501224764	3842
1501224770	3904
1501224773	4076
1501224775	3905
1501224776	4222
1501224779	4138
1501224779	4138/1
1501224781	4152
1501224782	4096
1501224788	3945
1501224796	4260
1501224797	4259
1501224798	4309
1501224802	3373
1501224808	3641
1501224809	3642
1501224815	4062
1501224820	3919
1501224821	3918
1501224822	4059
1501225001	3511
1501225002	3687/1
1501225004	3744
1501225007	3951
1501225008	3687/1
1501225009	3894
1501225011	3895
1501225012	3976/1
1501225014	4073
1501225102	3620
1501225104	3600
1501225106	3436
1501225107	3746
1501225109	3898
1501225110	3436
1501225112	3901
1501225204	3882
1501225207	3602
1501225208	3883
1501225210	4027
1501225213	3928
1501225214	3884
1501225217	3983/1
1501225219	4000
1501225220	3929
1501225221	3933
1501229306	3867
1501229308	4197
1501229310	4182
1501229311	4197
1501229318	4012
1501229322	4011
1501229325	4006
1501229326	4018
1501229328	4016
1501229906	3318
1501229907	3320
1501229911	3311
1501229922	3416
1501229923	3312
1501229926	3709
1501229927	3378
1501229930	3423
1501229935	3840
1501229937	3408
1501229938	3405
1501229940	3440
1501229941	3323
1501229945	3378
1501229946	3572
1501229948	3436

SBS	BESER
NO	NO
1501229950	3433/1
1501229952	3536
1501229953	3380
1501229954	3543
1501229955	3496/1
1501229957	3503
1501229958	3419
1501229959	3583
1501229960	3609
1501229961	3463
1501229962	3560
1501229963	3714
1501229964	3440
1501229967	3504
1501229968	3531
1501229969	3444
1501229970	3529
1501229971	3487
1501229971	3489
1501229972	4212
1501229974	3595
1501229975	3559
1501229976	3679
1501229978	3736
1501229980	4148/1
1501229981	3704
1501229982	3466
1501229985	3506
1501229998	4370
150221512	3583
150221538	4181/1
150221550	4388
150221553	4380
150221558	4378
150223440	4039
150223448	4049
150223525	4136
150223648	4057
150223753	3853/1
150223965	4132
150223965	4172
150223965	4172/1
150223966	4056
150223969	3964/1
150224589	4174
150224589	4174/1
150224595	3953
150224599	4176
150224599	4176/1
1502247101	4135
1502247105	3906/1
1502247114	4241
150229333	4198

SAMKO	BESER
NO	NO
2014	3685
2015	3795/1
2016	4345
2017	3453
2020	4155
2021	3632
2024	3554
2024	3651
2025	4027
2031	3695
2038	4034
2038	4034/1
2039	4126
2039	4126/1
2040	4069
2041	3918
2042	3780
2043	3901
2050	3800
2051	3800/1
2052	3826/1
2053	3820

SBS	BESER
NO	NO
2053	3820/1
2055	4211
2056	3834
2057	3835
2058	3914
2061	4112
2062	3950
2063	3852
2064	3846
2065	3935
2067	3934
2070	4197
2071	3855
2072	3856
2073	4100
2078	3697
2080	3667
2081	3859
2082	3539/1
2084	3913
2085	4034
2085	4034/1
2086	3928
2087	4086
2088	3822
2091	3829
2092	3788
2093	3693
2096	4093
2097	3921
2098	3823
2105	3320
2115	3318
2118	3346
2119	3317
2120	3316
2131	3311
2136	3373
2137	3321
2166	3350
2177	3333
2183	3323
2184	3709
2186	3710
2187	3393
2204	3335
2205	3423
2207	3366/1
2217	3329
2219	3327
2220	3343
2220	3483
2226	3405
2236	3315
2236	3515
2238	3374
2245	3312
2262	3625
2265	3527
2270	3410
2271	3365
2275	3378
2280	3421
2301	3417
2307	3650
2308	3536
2311	3466
2315	3440
2316	3503
2318	3369
2320	3370
2323	3424
2328	3513
2329	3579
2332	3324
2333	3509
2342	3467
2346	3417/1
2347	3419
2348	3380

SBS	BESER
NO	NO
2349	3573
2350	3572
2352	3381
2353	3493
2353	3494
2358	3611
2366	3619
2367	3339
2367	3514
2371	3474
2372	3441
2373	3621
2374	3624
2378	3371
2379	3379
2381	3537
2382	3444
2392	3408
2394	3407
2395	3402
2398	3603
2399	3543
2402	3495
2406	3526
2410	3428
2411	3462
2413	3605
2414	3449
2415	3482
2416	3425
2417	3422
2418	3400
2423	3752
2434	3564
2437	3432
2438	3758
2439	3397
2440	3496/1
2448	3529
2450	3714
2454	3436
2455	3634
2457	3504
2458	3401
2461	3620
2463	3457
2465	3423/1
2466	3771
2469	3641
2471	3446
2472	3757
2472	3857
2478	3448
2482	3589
2484	3470
2485	3469
2487	4212
2489	3717
2490	3436
2491	3882
2495	3395
2498	3760
2500	3633
2501	3600
2503	3746
2506	4212
2512	3582
2520	3666
2521	3875
2522	3723
2524	3437
2525	3499
2527	3463
2542	4087
2546	3779
2558	4088
2566	3430
2568	3563
2569	3459
2571	3484

SBS	BESER
NO	NO
2574	3679
2575	3490
2577	3550
2578	3609
2583	3442
2586	3453
2588	3583
2592	3662
2594	3578
2595	3873
2596	3773
2604	3523
2609	4108
2616	3881
2617	3879
2620	3491
2623	3464
2632	3562
2633	4104
2639	3632
2640	3640
2641	3522
2642	3560
2643	4182
2648	3426
2649	3623
2651	3635
2657	3660
2662	3631
2667	3584
2668	3642
2669	3502
2670	4010
2671	3696
2672	3683
2672	3872/1
2674	4080
2677	3766
2678	3469
2683	3733
2684	3539
2685	3473
2686	3445
2687	3366
2696	3607
2698	4214
2700	3558
2701	3593
2702	3559
2703	3595
2707	3531
2708	3551
2711	3433
2712	3596
2713	3528
2714	3878
2715	3819
2717	3608
2720	3503
2721	4128
2723	3540
2726	3685
2727	3688
2736	3888
2738	3622
2739	3553
2740	3745
2742	3749
2743	3736
2744	3799
2745	3511
2751	3689
2753	3618
2754	3617
2755	3740
2758	3538
2763	3883
2766	3750
2767	3567
2768	3670

SBS	BESER
NO	NO
2769	3678
2776	4078
2781	3677
2782	3863
2784	3686
2785	3830
2789	3674
2791	3575
2794	3585
2796	3673
2797	3777
2798	3776
2800	3874
2802	3887
2803	3704
2804	4148/1
2805	3602
2807	3687/1
2808	3545
2817	3682
2821	3577
2821	3647
2823	3680
2827	3570
2830	3636
2831	3872
2842	3656
2845	4125
2847	3675
2848	3512
2848	3512/1
2850	3884
2853	3606
2855	3898
2860	4072
2861	3581
2864	3833
2877	3994
2880	4062
2881	4281
2884	3659
2885	3687/1
2888	3909
2895	3744
2899	4079
2900	3764
2903	3762
2904	3663
2912	3722
2914	3754
2915	3659
2916	3507
2924	3653
2925	3681
2926	3804
2934	3778
2937	3768
2939	3896
2940	4059
2947	3574
2947	3914/1
2956	3809
2958	4123
2959	3676
2960	3821
2966	3749/1
2967	3938
2969	3755
2970	3861
2972	3877
2973	3648
2975	3919
2976	3943
2980	3687/1
2981	3790/1
2982	3836
2983	4009
2986	3846
2987	3843
2988	3892

SBS	BESER
NO	NO
2990	3896
2992	3769
2993	3784
2997	3790
3001	4094
3004	4011
3005	3853
3006	4095
3008	4271
3013	3854
3014	3931
3017	4125
3018	4269
3019	3802
3028	4152
3030	3817
3031	3825
3037	4012
3046	4158
3047	4103
3049	4180
3054	3986
3056	4110
3057	3831
3058	4109
3058	4232
3059	3961
3060	3993
3061	3993
3062	3843
3064	3843
3070	4119
3074	4084
3077	3933
3081	3850
3082	3849
3084	4138
3084	4138/1
3085	3912
3086	4013
3089	4071
3090	4153
3091	4097
3091	4097/1
3092	3877
3094	3983
3095	3767
3097	3632
3100	4173
3101	3900
3102	4087
3107	3904
3108	3905
3111	3951
3113	3801
3115	3502
3116	4118
3117	3889
3121	4101
3121	4209
3123	3955
3124	4042
3130	4076
3132	3978
3133	3979
3135	3890
3136	4154
3138	3842
3147	4345
3149	4216
3155	3987
3159	4388
3162	3931
3169	4389
3170	4346
3171	3800
3172	3885
3173	4181
3174	3841/1
3177	3959

SBS	BESER
NO	NO
3180	4210
3183	4240
3184	4028
3185	4017
3188	3924
3190	4106
3192	4096
3193	3891
3194	4303
3196	4074
3197	3894
3199	4031
3201	3940
3202	3939
3203	3946
3204	3853/1
3206	3984
3207	4137
3208	4293
3209	3944
3210	4159
3211	3985
3212	4001
3213	3968
3214	3969
3215	4081
3216	4180
3218	3841
3220	3983/1
100013	3433/1
100016	3433
100021	3994
100023	3773
100042	3773
100062	3994
100063	3942
2347.1	3429
2347/S	3429
2348.2	3487
2348.2	3489
2348/B	3487
2348/B	3489
2366/A	3649
2380.1	3415
2380/B	3415
2382.1	3486
2382.1	3486/1
2382/A	3486
2382/A	3486/1
2417.1	3552
2417/A	3552
2484.1	3505
2484.1	3615
2484/A	3505
2484/A	3615
2582.1	3680
2582/A	3680
2635.1	4020
2635/A	4020
2659.2	3590/1
2720.1	3503/1
2739.1	3553/1
2752.2	3897
2752/B	3897
2753.3	3618
2758.1	3637
2758.2	3566
2758/B	3566
2791.1	3575/2
2853.1	3794
2938/A	3896
2952.1	3568
2953.1	3569
2967.1	3938

SIMER	BESER
NO	NO
84	3320
91	3318
94	3317
95	3316
96	3346
108	3311
113	3373
114	3321
147	3329
153	3323
154	3709
157	3710
158	3393
161	3315
161	3515
165	3327
166	3343
166	3483
168	3366/1
170	3335
180	3423
184	3416
189	3405
191	3315
191	3515
196	3339
196	3514
198	3374
205	3350
210	3513
212	3625
213	3421
219	3440
222	3312
225	3379
229	3365
230	3468
233	3378
235	3417
238	3419
239	3429
241	3442
242	3527
245	3424/1
249	3484
260	3324
270	3369
272	3370
278	3381
279	3493
279	3494
281	3509
283	3611
284	3503
286	3467
291	3666
293	3407
295	3650
296	3536
297	3619
300	3579
303	3402
306	3621
307	3486
307	3486/1
308	3444
309	3380
311	3441
312	3415
315	3410
317	3466
318	3495
327	3526
328	3422
329	3573
330	3408
332	3603
334	3474
335	3474
340	3428

SIBER	BESER
NO	NO
341	3482
347	3543
348	3425
353	3624
354	3462
355	3413
356	3400
357	3371
358	3449
359	3417/1
360	3605
369	3752
372	3490
374	3620
376	3572
379	3496
382	3457
386	3714
390	3401
397	3432
398	3758
399	3436
400	3634
402	3504
403	3395
410	3529
412	3641
416	3564
417	3397
421	3661
425	3679
426	3537
427	3412
435	3757
435	3857
436	3760
442	4212
444	3499
445	3463
454	3589
456	3873
460	3709
478	3717
480	3448
481	3446
485	3609
486	3633
487	3470
488	3469
489	3578
490	3583
492	3600
493	3437
494	3563
495	3680
496	3723
497	3430
498	3882
503	3683
503	3872/1
504	3464
505	3623
507	3487
507	3489
514	3445
516	3473
519	3596
521	3436
523	4104
525	3562
526	3660
527	3491
531	3640
535	3448
537	3766
540	3531
544	3426
546	3410
548	3469
549	3523

SIBER	BESER
NO	NO
550	3642
551	3607
552	3686
558	3629
566	3632
570	3433/1
572	3433
574	3773
586	4214
587	3539
590	3819
591	3878
601	3528
604	3558
605	3593
607	3608
609	3559
610	3595
613	3503
614	4128
615	3685
616	3688
618	3630
619	3740
620	3704
622	3799
623	3545
625	3553
628	4080
629	3554
629	3651
630	3511
631	3745
638	3888
645	3746
648	3617
652	3674
653	3883
654	3736
655	4078
656	3538
657	4182
662	3779
664	3733
666	3560
674	4087
676	4108
680	3696
681	4148/1
682	4072
688	3567
689	3678
690	3670
691	3675
692	3512
692	3512/1
693	3677
696	3577
696	3647
697	3884
698	3863
699	3750
700	3896
701	4062
707	3606
708	4059
709	3575
711	3422
712	3636
713	3682
715	3663
717	3762
718	3602
720	4125
722	3659
724	3873
728	3744
729	3754
730	4197
733	3581

SIBER	BESER
NO	NO
734	3673
735	3622
736	3697
740	3778
741	3648
742	3507
743	4088
744	3687/1
745	4126
745	4126/1
746	4069
747	3872
753	3681
754	3804
755	4281
756	3861
757	3755
759	3676
761	3821
762	3768
763	3919
764	3918
769	4123
773	3877
776	3777
777	3822
780	3790/1
787	3836
788	3943
790	3833
791	4010
794	3935
795	3934
797	4100
798	4093
802	3784
804	3887
805	3846
807	3769
808	3820
808	3820/1
810	4094
811	3800
812	3826/1
813	3800/1
816	3856
817	3780
818	3817
819	4086
821	3932
824	3695
826	4012
831	4009
834	3950
835	3852
836	3853
838	4095
839	4158
840	4153
842	4112
843	4211
844	3802
845	3854
846	3931
847	3986
848	3848
849	4027
850	3855
851	4079
852	3764
853	3850
854	3849
855	3849
856	3898
857	3901
860	3809
861	4110
862	3834
863	3835
864	3914

SIBER	BESER
NO	NO
866	4102
867	4101
867	4209
869	4097
869	4097/1
870	3801
872	3955
874	3831
875	4109
875	4232
876	3843
877	4269
878	4271
879	3892
880	3928
882	3829
883	4011
884	4103
885	3748
888	3881
889	3879
890	4036
891	3983
901	3904
902	4042
903	4173
906	4076
907	3889
908	3885
909	3825
910	3765
911	3841/1
913	3909
914	3905
915	3875
916	3890
917	4154
920	3767
922	3924
924	4389
925	4180
926	4181
927	4179
928	3968
929	3969
930	3912
935	4388
936	3984
937	3940
938	3939
939	3946
942	3951
943	3891
944	3983/1
945	3987
946	3958
947	3978
948	3979
955	3419
956	3985
957	4213
958	4346
961	3962
961	3962/1
962	3925
962	3925/2
963	3926
963	3926/1
964	4058
966	3920
966	3920/1
967	3906
967	3906/1
967	3906/1A
967	3906/2
968	3907
968	3907/1
968	3907/1A
968	3907/2
970	3963

SIMER	BESER
NO	NO
970	3963/1
971	3748
972	3747
974	3748
976	4122
977	3880
978	3953
979	4037
979	4037/1
980	4210
985	3922
985	3922/1
986	3820/3
987	3959
988	4092
988	4092/1
989	4028
990	3980
991	4038
992	3933
993	4248
994	4247
995	3972
996	4151
996	4151/1
997	4161
999	4157
1000	3976
1004	4259
1005	4260
1006	4249
1009	4390
1011	3886
1012	4293
1013	3944
1014	4159
1015	4155
1016	4137
1017	4029
1018	3966
1018	3966/1
1019	3967
1020	3970
1021	3894
1022	3895
1023	3964
1026	3971
1028	3693
1029	3913
1030	3788
1031	3954
1033	4077
1034	3948
1035	3949
1036	3956
1038	4031
1043	4084
1044	4118
1048	3769
1049	3952
1050	3859
1051	3960
1052	3989
1054	4160
1055	4156
1058	3830
1062	3915
1064	4105
1065	4111
1066	3853/1
1077	4124
1110	3458
145.1	3333
168.1	3366
235.1	3570
238.1	3419
245.1	3424
245.2	3424/1
245.3	3424
279.1	3381

SIMER	BESER
NO	NO
283.1	3550
295.1	3649
296.1	3536
297.1	3635
303.1	3402
307.1	3585
330.1	3408
337.1	3556
339.1	3539/1
346.1	3459
346.2	3540
346.8	3568
352.1	3549
352.4	3790
358.1	3522
369.1	3501
373.1	3423/1
382.1	3610
402.1	3502
416.1	3584
421.1	3771
425.1	3994
425.2	3994
425.3	3994
425.4	3994
427.1	3453
430.1	3662
431.1	3631
485.1	3609
487.1	3505
487.1	3615
489.2	3656
495.1	3680
503.1	3872
504.1	3722
526.1	3660
530.1	3689
537.1	3598
540.1	3551
558.1	3628
561.1	4020
574.1	3773
581.7	3590/1
607.1	3643
615.1	3685
624.1	3776
625.1	3553/1
629.1	3554
629.1	3651
646.2	3897
647.1	3618
656.1	3566
656.2	3637
661.1	3582
681.1	4148/1
681.2	4148/1
693.1	3677
696.1	3598/1
698.1	3863
700.2	3896
701.1	4062
707.1	3794
709.1	3575/2
715/91	3663
722.1	3938
722.2	3938
744.1	3687/1
775.1	4345
775.3	4345
802.1	3921
804.1	3887
805.1	3846
808.1	3820
808.1	3820/1
812.1	3826
813.1	3800
813.2	3800/2
836.1	3853/1
837.1	4138
837.1	4138/1
868.1	4096
903.1	4173/1
911.1	3841
912.1	3842
962.1	3965
962.2	3965/1

STOP	BESER
NO	NO
571202S	3393
571204S	3311
571206S	3321
571215S	3320
571217S	3366/1
571218S	3323
571221S	3327
571224S	3333
571226S	3317
571228S	3405
571232S	3343
571232S	3483
571233S	3416
571234S	3373
571236S	3350
571246S	3527
571247S	3312
571250S	3423
571251S	3374
571262S	3442
571265S	3421
571271S	3365
571272S	3513
571276S	3410
571278S	3339
571278S	3514
571279S	3318
571291S	3417/1
571297S	3424/1
571298S	3484
571300S	3572
571302S	3493
571302S	3494
571304S	3440
571305S	3625
571306S	3482
571308S	3429
571309S	3466
571312S	3621
571315S	3441
571316S	3486
571317S	3444/1
571319S	3474
571321S	3526
571327S	3503
571330S	3432
571331S	3495
571332S	3380
571333S	3380
571334S	3496/1
571336S	3603
571339S	3428
571340S	3366
571344S	3611
571346S	3422
571350S	3536
571352S	3609
571353S	3430
571355S	3564
571356S	3619
571357S	3650
571359S	3457
571361S	3529
571363S	3873
571368S	3537
571370S	3641
571372S	3315
571372S	3515
571375S	3490
571376S	3531
571380S	3605
571382S	3408
571387S	3578
571389S	3717
571391S	3505
571391S	3615
571393S	3543
571394S	3584
571398S	3680
571400S	4104

STOP	BESER
NO	NO
571401S	3624
571406S	3556
571407S	3469
571411S	3563
571412S	3589
571413S	3629
571418S	3642
571421S	3660
571422S	3523
571425S	3596
571428S	3583
571429S	3326
571438S	3683
571438S	3872/1
571439S	3662
571440S	3771
571442S	3423/1
571448S	3459
571452S	3467
571462S	3536
571463S	3316
571464S	3424
571474S	3425
571476S	3539
571491S	3378
571492S	3623
571493S	3733
571509S	3528
571510S	3610
571513S	3529
571515S	3867
571519S	4182
571522S	3593
571523S	3608
571525S	3487
571525S	3489
571526S	3503
571528S	3643
571530S	3736
571536S	3417
571539S	3410
571540S	3419
571542S	3573
571543S	3335
571546S	3578
571552S	3339
571552S	3514
571553S	3315
571553S	3515
571555S	3550
571556S	3611
571557S	3572
571560S	3408
571561S	3609
571722S	3581
571725S	3464
571726S	3464
571743S	3487
571743S	3489
571744S	3496/1
571745S	3473
571746S	3445
571753S	3630
571754S	4214
571756S	3878
571757S	3819
571803S	3661
571822S	3413
571827S	3453
571832S	3558
571833S	3410
571839S	3595
571840S	3559
571843S	3799
571844S	3567
571845S	3680
571846S	3678
571847S	3553
571848S	3585
571848S	3585/1

STOP	BESER
NO	NO
571850S	3545
571852S	3909
571868S	3430
571869S	3491
571870S	3346
571873S	3881
571876S	3863
571877S	3677
571879S	3628
571884S	3617
571885S	3537
571888S	3618
571893S	3608
571897S	3750
571900S	3506
571904S	3610
571910S	3670
571913S	3589
571914S	3570
571915S	3538
571916S	3569
571918S	3879
571919S	3636
571923S	3566
571924S	3623
571925S	3676
571929S	3682
571930S	3938
571934S	3606
571936S	3656
571939S	3637
571941S	4062
571942S	3675
571944S	4125
571945S	4125
571946S	3681
571947S	3861
571948S	4020
571949S	3897
571950S	3804
571954S	3938
571955S	3896
571961S	4102
571962S	4101
571962S	4209
571964S	3722
571967S	3754
571968S	3762
571974S	3549
571976S	3683
571976S	3872/1
571977S	4212
571980S	3943
571984S	3590/1
571985S	3682
571986S	3836
571987S	3836
571988S	3821
571990S	4180
571991S	4179
571995S	4281
571998S	3755
572100S	3723
572118S	3746
572119S	3710
572120S	3709
572127S	4087
572135S	4212
572136S	4212
572138S	4148/1
572140S	3560
572143S	3449
572144S	3449
572145S	3522
572146S	3640
572161S	3833
572164S	3600
572166S	3882
572177S	3579
572178S	3371

STOP	BESER
NO	NO
572181S	3633
572186S	4108
572188S	3776
572193S	3875
572197S	4080
572200S	3688
572205S	3324
572206S	3394
572209S	3400
572210S	3766
572216S	3407
572217S	3745
572221S	3887
572230S	3370
572237S	3501
572238S	3752
572245S	3693
572247S	3883
572250S	3509
572253S	3673
572255S	3402
572257S	4128
572258S	3446
572262S	3620
572267S	3395
572268S	3504
572269S	3502
572271S	3757
572271S	3857
572272S	3757
572272S	3857
572275S	3426
572281S	3448
572288S	3582
572293S	3436
572294S	3436
572295S	3401
572303S	3634
572304S	3634
572309S	3631
572310S	3562
572312S	3397
572313S	3758
572316S	3369
572317S	3437
572318S	3437
572324S	3686
572326S	3379
572331S	3499
572332S	3463
572333S	3554
572333S	3651
572335S	3462
572340S	3607
572345S	3779
572346S	3779
572347S	3632
572348S	3674
572349S	3696
572354S	3695
572355S	3714
572361S	3415
572363S	3714
572367S	3777
572370S	3685
572373S	3760
572377S	4078
572380S	3915
572381S	3622
572382S	3888
572386S	4072
572388S	3740
572392S	4086
572393S	3704
572396S	3577
572396S	3647
572399S	3602
572401S	3778
572402S	3744
572403S	3687/1

STOP	BESER
NO	NO
572404S	3768
572405S	3769
572408S	3687/1
572409S	3898
572411S	3507
572419S	3809
572420S	3884
572423S	4079
572424S	3913
572428S	4115
572432S	4110
572435S	3874
572437S	3780
572442S	3648
572447S	3685
572448S	3859
572449S	4109
572449S	4232
572450S	3788
572451S	4010
572453S	3843
572471S	3928
572477S	3764
572478S	4155
572480S	4159
572482S	3889
572485S	3890
572487S	4158
572488S	4153
572489S	4118
572491S	3817
572492S	3825
572494S	3512
572494S	3512/1
572496S	3632
572497S	3892
572499S	4271
572500S	3900
572501S	3933
572503S	4119
572504S	3831
572510S	4112
572511S	3978
572513S	3961
572514S	3959
572515S	3891
572516S	4154
572518S	3976/1
572519S	4084
572521S	4293
572522S	3944
572526S	3968
572527S	3969
572528S	3829
572530S	3511
572532S	3802
572536S	4009
572537S	3767
572538S	3822
572539S	3951
572541S	4010
572542S	3598/1
572543S	3554
572543S	3651
572546S	4013
572547S	4106
572548S	3830
572549S	3979
572550S	3912
572551S	4017
572553S	3910
572557S	3993
572560S	4269
572562S	4105
572565S	3901
572566S	3764
572567S	3574
572567S	3914/1
572569S	4077
572570S	3976

STOP	BESER
NO	NO
572571S	4036
572572S	3988
572572S	3988/1
572573S	3933
572575S	4143
572577S	4028
572578S	3958
572583S	3911
572584S	3929
572585S	4001
572601S	4037
572601S	4037/1
572604S	3980
572605S	4160
572606S	4156
572607S	3960
572608S	3989
572612S	4039
572613S	4165
572617S	3928
572619S	4035
572621S	4111
572627S	4146
572628S	4029
572629S	4061
572636S	4082
572638S	4081
572639S	4060
572641S	3982
572642S	3903
572643S	3886
572649S	4074
572651S	3948
572654S	3933
572655S	4255
572656S	4256
573003S	3919
573006S	3896
573008S	3539/1
573011S	3846
573012S	4093
573013S	4100
573014S	4123
573015S	3784
573016S	3950
573017S	3852
573018S	3853
573021S	3918
573027S	3935
573029S	3934
573030S	3820
573030S	3820/1
573031S	3800
573034S	4126
573034S	4126/1
573035S	4069
573039S	4059
573041S	3877
573042S	3617
573047S	4095
573050S	3553/1
573053S	3663
573055S	3855
573058S	3848
573059S	3795/1
573068S	3512
573068S	3512/1
573072S	4197
573074S	3826/1
573075S	3800/1
573077S	4011
573083S	3854
573084S	3931
573085S	3801
573089S	4211
573092S	4102
573093S	3676
573094S	3548
573094S	3690
573096S	3986

STOP	BESER
NO	NO
573277S	3907
573277S	3907/1
573277S	3907/1A
573277S	3907/2
573278S	3955
573280S	3972
573281S	4151
573281S	4151/1
573284S	3966
573284S	3966/1
573291S	4249
573295S	4141
573296S	3945
573300S	4207
573305S	4378
573306S	3800/3
573308S	3800/2
573312S	4135
573313S	4150
573320S	4093
573321S	4391
573323S	4004
573325S	4008
573329S	4309
573330S	4162
573332S	4230
573334S	4121
573335S	4014
573340S	4016
573343S	4291
573352S	4325/1
573353S	4379
573357S	4056
573358S	4132
573358S	4172
573358S	4172/1
573359S	4057
573363S	4204
573364S	4380
573365S	4215
573368S	4136
573375S	4148/1
573377S	3895
573379S	4038
573380S	4213
573393S	4113
573395S	4310
573399S	4145
573401S	4383
573404S	4198
573406S	4166
573408S	4220
573409S	4241
573414S	3966
573414S	3966/1
573416S	3998
573419S	4381
573420S	4265
573422S	4140
573430S	3980
573431S	3952
573432S	4382
573434S	4175
573435S	4167
573438S	4174
573438S	4174/1
573440S	4176
573440S	4176/1
573441S	4140/1
573444S	4315
573454S	4049
573461S	4201
573461S	4201/1
573506S	3575
573507S	3926
573507S	3926/1
573508S	3925
573508S	3925/2
573509S	3962
573509S	3962/1

STOP	BESER
NO	NO
573510S	3963
573510S	3963/1
573511S	3965
573512S	4092
573512S	4092/1
573513S	3749
573514S	3823
573517S	3995
573518S	3679
573519S	3926
573519S	3926/1
573520S	3575/2
573524S	3575/2

SWAG	BESER
NO	NO
10 91 6410	4126/1
10 91 6535	3924/1
10 91 6708	3926/1
10 91 6709	3963/1
10 91 6710	3925/2
10 91 6753	3962/1
10 91 6808	4391
20 11 6029	4325/1
20 91 6533	4388
20 91 6560	4389
20 91 6633	4181/1
20 91 6728	4378
20 91 6812	4379
20 91 6825	4380
20 91 6839	4325/1
20 91 6861	4382
20 91 6863	4383
20 91 6865	4378
20 91 6884	4381
30 91 6735	3926/1
30 91 6991	4390
33 10 1792	4301/1
33 10 2623	4283/1
37 91 6937	4092/1
37 94 0586	4092/1
50 91 6637	3906/1
50 91 6637	3906/1A
50 91 6637	3906/2
50 91 6673	3920/1
50 91 6701	3907/1
50 91 6701	3907/1A
50 91 6701	3907/2
50 91 6955	4351/1
60 11 6184	3966/1
60 11 6199	3983/3
60 91 6976	4140/1
62 11 6242	4374
62 91 6765	3820/1
62 91 6840	3922/1
62 91 6891	4151/1
62 91 6959	4372
64 11 6424	4201/1
64 91 6958	4371
64 91 6958	4373
70 91 6873	4148/1
83 91 6739	3988/1
85 91 6114	3872/1
85 91 6297	4148/1
85 91 6775	4148/1
85 91 6800	3872/1

TEXTAR	BESER
NO	NO
2000201	3463
2000401	3701
2001102	3320
2001104	3350
2001105	3320
2001107	3320
2001108	3350
2002701	3455
2003101	3875
2003402	3318
2007101	3471
2007304	3316
2007310	3346
2007404	3317
2008802	3311
2009902	3582
2011201	3395
2015302	3373
2016203	3873
2016603	3393
2016801	3531
2016804	3551
2017301	3318
2018201	3634
2020101	3945
2021703	3945
2022802	3343
2022802	3483
2022803	3327
2026002	3806/1
2028902	3375
2029602	3328
2032301	3335
2032303	3335
2034110	3339
2034110	3514
2034402	3661
2035905	3423
2035908	3423
2036404	3416
2036602	3366/1
2037501	3625
2038002	3526
2039201	3315
2039201	3515
2039204	3315
2039204	3515
2041001	3596
2041002	3596
2041003	3596
2043602	3326/1
2043702	3332
2043703	3331
2044201	3482
2045502	3405
2046801	3320
2048002	3374
2048802	3527
2049105	3312
2054701	3623
2056101	3404
2057401	3490
2057402	3378
2058702	3706
2058805	3365
2059902	3314
2062801	3369
2062902	3573
2063101	3442
2063503	3493
2063503	3494
2066001	3421
2066904	3649
2066921	3650
2066922	3619
2067502	3572
2067602	3590
2067605	3590
2068701	3550
2068703	3611

TEXTAR	BESER
NO	NO
2070302	3709
2071802	3370
2071901	3468
2072902	3379
2073101	3509
2073501	3705
2074101	3440
2074701	4355
2075303	3417
2076701	3579
2077801	3650
2078001	3746
2078302	3417/1
2078401	3513
2083302	3466
2085201	3371
2085702	3621
2086105	3419
2086109	3429
2086301	3415
2087001	3402
2087001	3472
2088003	3446
2088003	3450
2088707	3486
2088708	3585
2088708	3585/1
2088710	3444
2088710	3444/1
2088902	3441
2089501	3646
2089502	3633
2090401	3413
2090506	3380
2090506	3580
2090604	3487
2090604	3489
2090802	3549
2092602	3482
2093903	3410
2093904	3410
2094102	3408
2094103	3408
2095005	3424
2095006	3424/1
2095501	3401
2095802	3394
2095901	3501
2095902	3752
2096101	3529
2096102	3529
2096104	3529/1
2096108	3529/1
2096801	3564
2097401	3496/1
2097904	3605
2098901	3474
2099501	3578
2101202	3502
2101204	3504
2101602	3428
2104202	3418
2105001	3717
2105002	3717
2105503	3430
2105505	3430
2108401	3624
2108902	3583
2109601	3495
2109901	3397
2109902	3758
2110005	3432
2110701	3425
2110704	3425
2111501	3462
2112601	3400
2113102	3439
2114001	3469
2114103	3603
2114401	3536

TEXTAR	BESER
NO	NO
2115305	3628
2115307	3629
2115801	3414
2115801	3714
2115902	3620
2117002	3422
2117105	3464
2117302	3609
2117303	3609
2119003	3470
2119301	3459
2119501	3461
2120203	3589
2120501	3543
2120909	3457
2123302	3641
2123401	4239
2123701	3771
2124801	3634
2124901	3634
2127702	3449
2127801	3680
2127803	3680
2128002	4104
2128201	3879
2130103	3630
2130104	3630
2130304	3627
2130501	3581
2130503	3581
2130504	3581
2130581	3581
2130591	3581
2131201	4212
2133001	3691
2133301	3721
2133801	3600
2134702	3760
2135501	3723
2136301	3685
2136801	3733
2136901	4088
2137001	3685
2137301	3448
2137801	3437
2138501	3642
2138802	3539
2139408	3558
2141101	3736
2143001	3528
2143602	3643
2143905	3658
2143906	3658
2144601	3631
2145902	3662
2146002	3555
2146303	3503
2146304	3503
2146306	3503/1
2146801	3777
2146901	3445
2146902	3445
2147001	3473
2147002	3473
2147102	3909
2147103	3909
2147902	3553
2147903	3553/1
2148101	3888
2148201	4078
2148602	3881
2148604	3881
2148681	3881
2148701	3879
2148702	3879
2148703	3879
2148781	3879
2149001	3915
2149101	4099
2149501	3426

TEXTAR	BESER
NO	NO
2149701	3696
2150001	3882
2151503	3683
2151503	3872/1
2151504	3872
2151901	3453
2151902	3453
2153702	3666
2153702	3672
2153901	3640
2154302	3657
2154302	3757
2154302	3857
2154304	3657
2154501	3660
2154601	3562
2155301	4087
2156101	3699
2156101	3779
2156104	3699
2157302	3689
2157601	3567
2158601	4214
2159201	3670
2160101	3554
2160101	3651
2160901	3487
2160901	3489
2161403	3556
2162102	3678
2162601	4128
2163102	3819
2163201	3878
2163301	3779
2163501	4020
2163602	3617
2164302	3563
2164701	3622
2165001	3604
2165101	3704
2165404	3522
2165701	3766
2166201	3419
2166201	3731
2166404	3677
2166481	3677
2167001	3863
2167081	3863
2167901	3560
2167904	3560
2168801	4072
2169103	3656
2169181	3656
2169401	3607
2169701	3686
2170001	3695
2170301	4080
2170602	4108
2171201	3436
2171202	3436
2171901	4148/1
2172001	4148/1
2172402	3750
2172501	3632
2173001	3745
2175501	3832
2176603	3833
2177501	3673
2178601	4275
2179101	4086

TEXTAR	BESER
NO	NO
2179701	3595
2179901	3559
2181201	3867
2182202	4182
2182901	3665
2183201	3545
2183301	3776
2184002	3688
2184501	3674
2184802	3506
2184903	3590/2
2186102	4062
2186201	3505
2186201	3615
2186601	3637
2186602	3566
2186603	3538
2187501	3887
2188302	3606
2188501	3794
2189801	3821
2189803	3821
2189881	3821
2190003	3663
2190403	3680
2190701	3883
2191901	3676
2191903	3676
2191981	3676
2192703	3618/1
2192901	3618
2194503	3896
2194504	3896
2194701	3693
2195202	3898
2196202	3458
2198004	3659
2198302	4059
2198304	4059
2199901	4281
2203101	4334
2203102	4334
2203401	4351
2203401	4351/1
2206501	4282
2206503	4282
2206503	4282/1
2208701	4227
2210301	4287
2211701	4308
2212301	4285
2214301	4284
2214701	4350
2214701	4350/1
2217801	4356
2232901	4353
2238301	4364
2239701	4234
2242101	4251
2242101	4251/1
2243901	4307
2244901	4246
2247601	4301
2247601	4301/1
2252501	4253
2253105	4270
2258801	4370
2259301	4369
2261001	4280
2266001	4376
2279101	4384
2280201	4357
2300401	3577
2300401	3647
2300501	3598/1
2302001	3861
2302101	3804
2302170	3804
2302201	3681
2302270	3681

TEXTAR	BESER
NO	NO
2303201	4071
2304201	3799
2306101	3511
2306302	3762
2307003	4125
2307004	4125
2307104	3593
2307303	3919
2307381	3919
2307401	3919
2307602	3918
2307681	3918
2307801	4101
2307801	4209
2307881	4101
2307881	4209
2308001	3675
2308101	3507
2308601	3697
2309102	3717
2309501	4115
2309902	3848
2310101	3594
2310301	3570
2311203	3943
2311502	3665
2311901	4222
2312401	3636
2312601	3584
2313001	3782/1
2313005	3782/1
2313081	3682
2313081	3782/1
2313091	3782/1
2313101	3782
2313181	3782
2313191	3782
2314401	3836
2314402	3836
2314481	3836
2314482	3836
2315402	3754
2315702	4103
2315781	4103
2316901	3557
2316901	3610
2317203	3539/1
2317801	4110
2318101	3897
2318902	4069
2319303	4126
2319303	4126/1
2319701	3695
2320201	3877
2321502	3950
2321901	3569
2322416	3795
2322416	4345
2322501	3846
2322702	3548
2322702	3690
2323401	3687/1
2323802	3778
2324102	3744
2324502	3852
2326903	4095
2327102	4102
2327181	4102
2327301	3934
2327701	3935
2327904	4100
2328781	3563
2328902	3617
2329002	3809
2330002	3722
2330301	4034
2330301	4034/1
2330902	4179
2331204	4180
2331207	4180

TEXTAR	BESER
NO	NO
2331281	4180
2331401	3884
2332602	3842
2333102	4276
2333102	4276/1
2333403	4127
2333481	4127
2334001	4112
2334602	3644
2334803	3768
2334901	3768
2335301	3755
2338401	3740
2339201	3590/1
2340001	3602
2340203	4211
2340702	3854
2340902	3931
2341703	4040
2342001	3932
2343401	3921
2344004	3801
2344007	3801
2344201	4009
2344704	4181/1
2347101	3512
2347101	3512/1
2347103	3512/2
2347201	3781
2347402	3564/1
2348202	3853
2348401	3653
2348701	4271
2348801	3892
2349002	3780
2349701	3901
2349901	4274
2350201	4010
2350701	3928
2350801	3928
2351002	3769
2351302	3822
2351501	3874
2351703	4123
2352101	3788
2352402	3829
2352701	4155
2353601	3648
2353902	3830
2354001	3767
2354301	3993
2354304	3993
2354601	3561
2354901	4062
2355202	3790
2355401	3529
2355402	3529/1
2355481	3529/1
2355482	3529
2355701	4093
2355702	4093
2355802	4079
2356501	3667
2356901	3843
2357202	3913
2357701	3784
2358102	4138
2358102	4138/1
2358401	3955
2358403	3955
2358501	4158
2358701	3904
2358781	3904
2359201	3876
2359204	3876
2359301	4084
2359901	3820
2359901	3820/1
2360001	3800
2360406	3877

TEXTAR	BESER
NO	NO
2361101	3859
2361301	3856
2361501	4094
2362002	4154
2362303	4389
2362381	4389
2363101	4011
2363801	4012
2364901	3802
2365201	4148
2365201	4148/1
2365204	4148
2365601	4153
2366201	4027
2366901	3855
2367101	3552
2367301	3895
2369202	4075
2369302	4075/1
2369381	4075/1
2369402	4076
2369801	4143
2370201	3911
2370301	4082
2370502	3826/1
2370503	3826
2370601	3826/3
2370802	3800/1
2370803	3800
2370804	3800/1
2370901	3800/3
2372001	4159
2372301	3885
2372601	3976/1
2372901	4109
2372901	4232
2373001	4179
2373081	4179
2373201	4181
2373281	4181
2373401	4105
2373807	4211
2374303	4097
2374381	4097
2374601	3841/1
2374602	3841
2376302	4096
2376601	3817
2376802	3890
2377501	3569
2377601	3568
2378001	3764
2378401	3574
2378401	3914/1
2378701	4119
2379101	4208
2379301	4346
2379381	4346
2380401	4083
2381601	3825
2382301	4152
2383201	4042
2383281	4042
2383601	4013
2384201	3790/1
2386501	3912
2386801	3831
2387101	3933
2387301	4269
2387902	3900
2389101	3959
2389105	3959
2391401	3905
2391402	3905
2391481	3905
2391482	3905
2391701	3834
2391901	3835
2392101	3914
2392201	4210

TEXTAR	BESER
NO	NO
2392281	4210
2392601	4388
2392701	4388
2392781	4388
2392801	3910
2393001	3849
2393401	3850
2395081	4096
2395401	3820
2395401	3820/1
2395901	3987
2396001	4240
2396004	4240
2396081	4240
2396601	4028
2396701	4111
2397001	4017
2397301	3983
2397302	3983/1
2397401	3951
2397601	3421
2397901	3826/1
2397903	3826/1
2398001	3795/1
2398101	3800/2
2398201	3826
2400701	3923/1
2400801	3924/1
2401401	4106
2402401	3891
2402403	3891
2403101	3961
2403901	4303
2404001	4303
2404601	3889
2405001	3895
2405301	4109
2405301	4232
2405601	4074
2405801	3979
2406601	3892
2407101	3894
2407201	4173
2407202	4173/1
2408301	4031
2409201	3978
2409801	3945
2409802	3945
2409803	3945
2410101	3820
2410101	3820/1
2411103	4030
2412201	3956
2412301	4161
2412305	4161
2413301	3940
2413401	3939
2413501	3946
2413701	3853/1
2415001	3984
2415501	4211
2416201	4137
2416301	4018
2416401	4198
2416601	4006
2416701	3976/1
2417001	4207
2417081	4207
2419101	4293
2419201	3944
2419202	3944
2419204	3944
2419206	3944
2421801	4001
2422201	4081
2422701	3952
2422704	3952
2424401	4277
2424601	4118
2425001	4016

TEXTAR	BESER
NO	NO
2425301	4247
2425381	4247
2426001	4058
2426004	4058/1
2427101	4213
2427501	3968
2427601	3969
2427701	3985
2428303	4122
2428801	3826/2
2429101	3765
2429501	4309
2430101	4000
2430601	4248
2430602	4248
2430603	4248
2430681	4248
2430682	4248
2431001	4249
2431081	4249
2431701	3880
2432001	3980
2432301	4113
2432801	4208
2433601	3953
2433701	4077
2433801	3949
2434601	3929
2434701	3958
2435001	3948
2435101	3960
2435301	3988
2435301	3988/1
2437001	3886
2437201	4036
2438101	4186
2438601	3996
2439301	3827
2440301	3983/2
2440301	3983/3
2440901	4259
2441201	4149
2441204	4149
2442101	4150
2442102	4150
2443801	4220
2443901	4220
2444501	4219
2444801	4221
2445201	4255
2446501	3820/3
2446601	3922
2446601	3922/1
2446602	3922
2446602	3922/1
2446701	4171
2446701	3922/3
2446701	4171/1
2446703	4171
2446703	3922/3
2446703	4171/1
2446901	3981
2446902	3981
2448301	4390
2448302	4390
2448381	4390
2448382	4390
2448401	3906
2448401	3906/1
2448401	3906/1A
2448401	3906/2
2448404	3906/1
2448501	3920
2448501	3920/1
2448601	3907
2448601	3907/1
2448601	3907/1A
2448601	3907/2
2448801	3989
2449101	4165

TEXTAR	BESER
NO	NO
2450101	4039
2451001	3976
2451301	4332
2451401	4333
2452301	3982
2452901	3975
2453701	4157
2453702	4157
2453703	4157
2453801	3964
2455301	4309
2456101	4325
2456101	4325/1
2456102	4325
2456181	4325
2456181	4325/1
2456301	4135
2456701	3903
2457801	4151
2457801	4151/1
2458101	4242
2458102	4242
2458201	4029
2458202	4029
2459501	3972
2459502	3972
2459701	4035
2460201	4004
2460402	4005
2460601	4260
2460602	4260
2461001	3954
2462301	4162
2463201	4038
2463501	4156
2463801	4160
2464701	3797
2465301	3997
2465901	4291
2466001	3970
2466401	4037
2466401	4037/1
2466801	4147
2467001	4215
2467301	4141
2468201	4015
2468801	4378
2468881	4378
2469201	3967
2469301	3966
2469301	3966/1
2469302	3966
2469302	3966/1
2469701	4380
2469781	4380
2470301	4379
2470381	4379
2470901	4134
2472101	4310
2472401	4229
2472403	4229
2472701	4121
2472901	4121/1
2473001	3748
2473401	3748
2473701	3984
2476401	4173/2
2476501	3971
2481701	4330
2481801	4188
2482001	4142
2482002	4142
2483001	3899
2483201	4033
2483501	4032
2484401	4098
2485401	4258
2486201	4127
2486401	4073
2486701	4391

TEXTAR	BESER
NO	NO
2486781	4391
2486901	4326
2487101	3933
2488501	4146
2491401	3964/1
2491801	4256
2493401	4061
2494901	3980
2500801	4241
2502201	4314
2503101	4230
2503401	4008
2507101	4335
2507103	4335
2507601	4230
2507901	4008
2509501	3826/2
2509601	4014
2509602	4014
2511001	4336
2511003	4336
2511201	4057
2513402	4204
2514701	4056
2514901	4124
2517201	4132
2517201	4172
2517201	4172/1
2517901	4313
2517903	4313
2518701	4049
2519001	4338
2519002	4338
2519201	4338
2519202	4338
2519209	4338
2519601	4339
2519901	4382
2520201	4038
2520501	4039
2520901	4167
2521201	3853/1
2522001	4145
2524001	4324
2524601	3998
2525001	4201
2525001	4201/1
2526801	4337
2529201	3980
2530701	4383
2530901	3916
2533701	4343
2533703	4343
2533707	4343
2534801	4136
2535301	4349
2536501	4265
2547801	4389
2548101	4254
2550601	4381
2552001	4060
2558901	4341
2558903	4341
2559901	4202
2560201	4174
2560201	4174/1
2560301	4175
2560303	4175/1
2561001	4019
2561003	4019
2564401	4233
2568101	4200
2568303	4228
2568303	4228/1
2568801	4316
2569801	4176
2569801	4176/1
2570201	4140
2570801	4166
2570801	4342

TEXTAR	BESER
NO	NO
2572001	4323
2572003	4323
2572501	4315
2573601	4226
2573801	4140/1
2574901	4170
2575701	4041
2578001	4040
2579201	4312
2580001	4354
2582301	4205
2582701	4374
2583301	4371
2583301	4373
2583401	4371
2583401	4373
2583901	4372
2587001	4002
2587501	4317
2587801	4318
2594701	4279
2596501	4283
2596501	4283/1
2597301	4286
2598701	4224
2614901	4360
2618801	4363
2620901	4367
2621901	4117
2623601	4361
2626801	4375
2900102	3749
2901703	3433/1
2904101	3523
2906705	3773
2906772	3773
2907101	3537
2907102	3537
2910701	3749/1
2912111	3575/2
2912112	3575
2912170	3575
2912172	3575/2
2912204	3994
2912271	3994
2912272	3994
2912303	3823
2912307	3823
2915301	3614
2916002	3942
2916002	3942/A
2916070	3942
2919001	3926
2919001	3926/1
2919070	3926
2919070	3926/1
2919201	3925
2919201	3925/2
2919202	3925
2919202	3925/2
2920001	3962
2920001	3962/1
2920002	3962
2920002	3962/1
2920070	3962
2920070	3962/1
2921701	3963
2921701	3963/1
2921702	3963
2921702	3963/1
2921770	3963
2921770	3963/1
2922901	3965
2922902	3965/1
2923101	3995
2923103	3995/1
2923201	4092
2923201	4092/1
2924001	4054
2924201	4216

TEXTAR	BESER
NO	NO
2925601	4169
2929601	3930
2932401	3521
2932403	3521
2958101	3315
2958101	3515
2958104	3315
2958104	3515
2958301	3955
2970601	3537
2970602	3537
2983506	3679
2983571	3679
2900120005	3749
2910720005	3749/1
2919019015	3926
2919019015	3926/1
2919220914	3925
2919220914	3925/2
2920020714	3962
2920020714	3962/1
2921720814	3963
2922921414	3965
2922921415	3965/1
2923122814	3995
2923221014	4092
2923221014	4092/1
2924017315	4054
2924219505	4216
20002 15.0 05	3463
20011 15.0 04	3320
20011 18.5 04	3350
20011 19.0 04	3350
20031 13.0 04	3875
20034 15.0 04	3318
20073 12.5 04	3346
20073 17.3 04	3316
20074 10.0 04	3317
20075 150 0 4	3325
20088 14.4 04	3311
20099 15.0 05	3582
20112 18.0 05	3395
20145 17.0 05	3321
20153 16.0 04	3373
20162 15.4 04	3873
20166 16.0 04	3393
20168 16.2 14	3531
20168 19.6 14	3551
20173 14.5 04	3318
20182 15.5 05	3634
20228 15.2 04	3327
20228 18.5 04	3343
20228 18.5 04	3483
20253 16.4 05	3323
20260 165 0 4 T4047	3806/1
20261 19.3 15	3986
20296 162 0 4 T4047	3328
20323 16.5 04	3335
20341 17.5 04	3339
20341 17.5 04	3514
20344 15.0 04	3661
20359 18.0 14	3423
20364 15.0 25	3416
20366 15.0 05	3366/1
20375 16.0 04	3625
20380 15.6 05	3526
20392 15.0 04	3315
20392 15.0 04	3515
20410 15.0 05	3596
20455 19.0 05	3405
20480 15.5 04	3374
20488 18.5 05	3527
20491 15.1 04	3312
20491 15.1 05	3484
20494 14.0 05	3333
20535 14.2 04	3324
20547 16.8 05	3623
20574 15.3 14	3490
20574 19.6 14	3378
20588 16.5 04	3365

TEXTAR	BESER
NO	NO
20628 16.5 04	3369
20629 20.0 05	3573
20631 18.0 05	3442
20635 18.0 05	3493
20635 18.0 05	3494
20660 15.6 04	3421
20669 16.2 14	3649
20669 19.6 14	3650
20669 19.6 15	3619
20675 17.0 05	3572
20676 196 0 5 T490	3590
20687 13.5 04	3611
20687 15.5 04	3550
20703 14.5 14	3709
20718 14.3 04	3370
20719 19.6 25	3468
20724 15.5 04	3407
20729 15.0 05	3379
20731 15.2 04	3509
20735 151 0 4 T4047	3705
20741 19.2 15	3440
20747 199 0 4	4355
20753 18.0 05	3417
20778 19.6 14	3650
20780 13.4 04	3746
20783 18.0 05	3417/1
20784 18.0 04	3513
20833 17.1 25	3466
20836 17.2 25	3467
20852 15.5 04	3371
20854 15.0 05	3579
20857 17.5 05	3621
20861 17.7 14	3419
20861 17.7 15	3429
20863 17.2 04	3415
20870 15.0 04	3402
20870 150 0 4 T4047	3472
20880 15.5 05	3446
20880 155 0 5 T819	3450
20887 15.3 25	3486
20887 17.3 25	3585
20887 19.7 25	3444
20889 17.3 24	3441
20895 14.5 05	3633
20895 145 0 4	3646
20905 18.0 05	3380
20905 180 0 5 T4005	3580
20906 18.0 45	3487
20906 18.0 45	3489
20908 18.0 05	3549
20919 183 1 5 T424	3546
20926 18.5 05	3482
20939 15.4 04	3410
20941 19.3 14	3408
20950 18.0 04	3424
20950 18.0 05	3424/1
20955 15.0 04	3401
20958 16.0 04	3394
20959 15.0 04	3501
20959 15.0 05	3752
20961 15.2 14	3529
20961 172 1 4 T4122	3529/1
20961 172 1 4 T456	3529/1
20968 20.3 05	3564
20973 11.0 05	3496/1
20974 11.0 04	3496
20979 19.7 14	3605
20989 17.7 05	3474
20995 17.3 05	3578
21012 14.8 04	3504
21012 14.8 05	3502
21016 17.0 05	3428
21042 150 0 4 T4047	3418
21050 15.2 04	3717
21050 15.7 04	3717
21055 17.9 14	3430
21084 17.5 15	3624
21089 15.0 05	3583
21096 15.0 05	3495
21099 17.0 04	3397

TEXTAR	BESER
NO	NO
21099 17.0 05	3758
21100 17.0 25	3432
21107 12.0 04	3425
21115 15.5 04	3462
21126 15.0 04	3400
21131 150 0 4 T4078	3439
21140 15.7 04	3469
21141 18.0 04	3603
21144 16.6 14	3536
21153 16.0 04	3628
21153 17.5 04	3629
21158 15.6 04	3714
21159 14.0 04	3620
21170 17.0 14	3422
21171 18.0 04	3464
21173 17.0 14	3609
21190 17.5 05	3470
21193 18.0 05	3459
21202 17.8 05	3589
21205 19.4 15	3543
21209 19.0 15	3457
21209 19.4 15	3457
21233 16.7 14	3641
21234 156 1 4	4239
21237 15.0 05	3771
21243 13.8 04	3436
21249 15.5 05	4088
21277 15.0 05	3449
21278 17.0 05	3680
21280 16.0 04	4104
21301 15.5 04	3630
21304 185 0 4	3626
21305 15.5 04	3581
21305 16.0 04	3581
21312 13.0 05	4212
21333 150 0 5 T4047	3721
21338 14.0 05	3600
21347 17.0 05	3760
21355 14.5 05	3723
21363 15.7 05	3685
21368 18.3 14	3733
21373 16.5 05	3448
21378 15.0 05	3437
21385 13.9 14	3642
21388 18.3 25	3539
21394 18.5 05	3558
21411 17.5 05	3736
21430 17.3 05	3528
21436 17.0 04	3643
21436 17.0 05	3608
21439 203 2 4	3658
21439 203 2 4 T4040	3658
21439 203 2 4 T4100	3658
21446 17.5 05	3631
21459 18.5 05	3662
21460 180 2 5 T4078	3555
21463 18.2 24	3503
21463 18.2 34	3503
21468 15.5 04	3777
21469 19.0 04	3445
21470 19.0 04	3473
21471 18.0 04	3909
21471 18.0 05	3909
21479 19.2 14	3553
21479 19.2 15	3553/1
21480 18.0 15	3423/1
21481 15.7 14	3888
21482 17.0 05	4078
21486 19.3 05	3881
21487 17.2 05	3879
21487 17.3 05	3879
21487 17.3 15	3879
21490 17.1 05	3915
21495 17.0 05	3426
21497 18.0 05	3696
21500 14.8 05	3882
21515 18.0 05	3683
21515 18.0 05	3872/1
21519 18.0 04	3453
21537 15.0 05	3666

TEXTAR	BESER
NO	NO
21537 150 0 5 T4047	3672
21539 15.0 05	3640
21543 16.5 05	3757
21543 16.5 05	3857
21543 165 0 5 T4047	3657
21545 15.6 14	3660
21546 17.5 04	3562
21553 14.0 05	4087
21561 17.0 05	3779
21561 170 0 5	3699
21561 170 0 5 T4136	3699
21573 14.0 15	3689
21576 20.7 05	3567
21586 15.7 04	4214
21592 18.8 05	3670
21601 17.6 05	3554
21601 17.6 05	3651
21609 18.0 05	3487
21609 18.0 05	3489
21614 18.0 05	3556
21621 17.3 05	3678
21626 15.8 04	4128
21631 17.0 14	3819
21632 16.0 14	3878
21635 18.2 15	4020
21636 19.3 05	3617
21643 17.8 05	3563
21647 16.0 05	3622
21650 150 1 4	3604
21650 150 1 4 T4047	3604
21651 17.3 05	3704
21654 15.0 05	3522
21657 16.5 05	3766
21662 17.8 14	3419
21662 178 1 4 T4018	3731
21664 19.8 05	3677
21670 20.3 05	3863
21679 15.0 05	3560
21688 15.3 04	4072
21691 17.3 05	3656
21694 17.3 05	3607
21697 15.8 05	3686
21700 18.5 05	3695
21703 15.0 05	4080
21706 15.5 05	4108
21712 14.0 04	3436
21719 14.6 05	4148/1
21724 19.3 15	3750
21725 17.0 05	3632
21730 14.0 04	3745
21755 165 0 5 T4047	3832
21766 14.8 04	3833
21775 15.0 05	3673
21780 15.5 05	4088
21791 17.0 04	4086
21797 19.7 25	3595
21799 19.7 25	3559
21822 17.2 05	4182
21829 203 0 5 T4083	3665
21832 15.0 04	3545
21833 15.5 05	3776
21840 14.0 05	3688
21845 16.5 05	3674
21848 19.7 05	3506
21849 206 0 5 T490	3590/2
21861 16.8 15	4062
21862 18.3 05	3505
21862 18.3 05	3615
21866 15.3 05	3637
21866 17.2 05	3566
21866 19.7 05	3538
21875 15.8 05	3887
21882 173 1 4	3671
21883 19.6 05	3606
21885 20.6 05	3794
21898 15.7 05	3821
21900 15.8 04	3663
21904 16.9 05	3680
21907 15.4 05	3883
21919 15.3 04	3676

TEXTAR	BESER
NO	NO
21919 15.7 04	3676
21927 179 9 5 T4088	3618/1
21929 17.9 05	3618
21945 19.6 14	3896
21945 19.6 15	3896
21947 15.0 04	3693
21952 15.6 05	3898
21980 18.0 25	3659
21983 17.3 14	4059
21999 15.8 15	4281
22031 193 0 5	4334
22031 193 1 5	4334
22034 170 1 4	4351
22065 167 1 4	4282/1
22103 159 1 4	4287
22123 178 1 5	4285
22143 171 1 5	4284
22147 211 1 4	4350
22178 214 1 4	4356
22329 175 1 5	4353
22383 170 0 5	4364
22421 208 1 5	4251
22439 168 1 5	4307
22449 172 1 5	4246
22525 169 0 5	4253
22802 191 1 4	4357
23004 15.5 05	3577
23004 15.5 05	3647
23005 15.5 05	3598/1
23020 17.9 04	3861
23021 18.9 04	3804
23022 20.9 04	3681
23032 15.5 05	4071
23042 19.0 14	3799
23043 18.6 05	4197
23061 14.0 04	3511
23063 17.3 05	3762
23070 17.0 14	4125
23070 17.0 24	4125
23071 18.5 15	3593
23073 18.9 05	3919
23076 17.5 05	3918
23078 15.9 04	4101
23078 15.9 04	4209
23080 15.1 14	3675
23081 19.0 05	3507
23086 17.0 05	3697
23091 15.2 14	3717
23095 17.0 04	4115
23099 18.4 04	3848
23101 175 0 5 T403	3594
23101 175 0 5 T4047	3594
23103 17.5 05	3570
23112 19.1 05	3943
23124 19.3 15	3636
23126 17.5 05	3584
23130 197 0 5	3782/1
23130 197 0 5 T4097	3782/1
23130 197 0 5 T4433	3782/1
23131 197 0 5	3782
23131 197 0 5 T4097	3782
23131 197 0 5 T4433	3782
23144 19.4 15	3836
23144 19.4 25	3836
23154 19.3 05	3754
23157 16.0 04	4103
23169 19.4 15	3610
23169 194 1 5 T4005	3557
23172 18.3 14	3539/1
23178 16.0 05	4110
23181 17.9 05	3897
23189 16.7 15	4069
23193 16.3 15	4126
23193 16.3 15	4126/1
23215 18.3 15	3950
23224 17.3 15	4345
23224 173 1 5 T4150	3795
23224 173 1 5 T435	3795
23225 17.0 15	3846
23227 18.0 05	3548

TEXTAR	BESER
NO	NO
23227 18.0 05	3690
23234 16.9 05	3687/1
23238 16.0 05	3778
23241 16.5 04	3744
23245 18.3 15	3852
23269 20.1 05	4095
23271 17.7 05	4102
23273 18.0 14	3934
23277 17.7 14	3935
23279 18.4 04	4100
23289 19.0 05	3617
23290 15.5 14	3809
23300 18.0 05	3722
23303 15.2 05	4034
23303 15.2 05	4034/1
23312 20.3 05	4180
23314 14.5 14	3884
23326 17.7 24	3842
23334 168 0 5 T4212	4127
23334 168 0 5 T4415	4127
23340 16.8 15	4112
23346 193 1 4 T4047	3644
23347 20.3 05	4180
23348 16.5 05	3768
23353 14.0 14	3755
23384 18.0 05	3740
23392 20.6 05	3590/1
23400 16.5 14	3602
23402 20.6 05	4211
23407 19.3 15	3854
23409 19.3 15	3931
23417 152 1 5 T428	4040
23420 16.5 05	3932
23434 18.5 15	3921
23440 17.6 05	3801
23442 16.0 05	4009
23471 15.0 04	3512
23471 15.0 04	3512/1
23474 203 0 5 T4089	3564/1
23482 16.8 05	3853
23484 17.0 05	3653
23487 15.5 04	4271
23488 16.0 14	3892
23490 15.0 14	3780
23497 15.5 05	3901
23502 16.0 05	4010
23507 15.0 05	3928
23510 15.5 05	3769
23513 17.0 14	3822
23515 16.0 14	3874
23517 16.5 04	4123
23521 14.0 05	3788
23524 17.7 05	3829
23527 15.0 14	4155
23536 15.5 05	3648
23539 17.5 04	3830
23540 16.5 14	3767
23543 15.0 05	3993
23546 160 1 5 T4047	3561
23552 18.0 05	3790
23554 15.2 14	3529
23554 172 1 4	3529/1
23554 172 1 4 T4415	3529/1
23557 17.2 14	4093
23558 17.0 05	4079
23565 17.9 04	3667
23569 17.0 05	3843
23572 13.8 05	3913
23577 18.5 15	3784
23581 19.0 15	4138
23581 19.0 15	4138/1
23584 16.0 14	3955
23585 17.0 05	4158
23587 20.3 05	3904
23592 150 0 4 T4067	3876
23593 15.0 05	4084
23597 18.0 15	3938
23599 19.0 14	3820
23599 19.0 14	3820/1
23600 19.0 14	3800

TEXTAR	BESER
NO	NO
23604 18.8 05	3877
23611 19.0 05	3859
23613 17.8 04	3856
23615 17.5 04	4094
23620 16.6 05	4154
23623 17.4 15	4389
23631 17.8 05	4011
23638 17.5 05	4012
23649 16.2 05	3802
23652 14.8 05	4148/1
23652 148 0 5	4148
23652 148 0 5 T4067	4148
23656 14.0 05	4153
23662 15.0 14	4027
23669 16.8 14	3855
23671 17.0 14	3552
23693 167 0 4 T4244	4075/1
23694 16.7 04	4076
23703 18.5 14	4082
23705 17.0 15	3826/1
23708 18.2 14	3800
23708 18.2 15	3800/1
23723 18.2 05	3885
23726 16.5 05	3976/1
23729 17.0 05	4109
23729 17.0 05	4232
23732 17.3 05	4181
23734 17.0 04	4105
23738 20.6 05	4211
23746 18.0 05	3841/1
23746 20.1 05	3841
23763 20.3 05	4096
23766 17.8 05	3817
23768 19.2 15	3890
23775 18.0 05	3569
23776 18.0 05	3568
23780 17.0 05	3764
23784 15.5 05	3574
23784 15.5 05	3914/1
23787 18.3 05	4119
23793 20.3 05	4346
23816 15.8 14	3825
23823 17.2 15	4152
23832 19.6 05	4042
23836 16.7 14	4013
23842 18.0 05	3790/1
23865 16.4 05	3912
23868 16.9 05	3831
23871 13.8 05	3933
23873 15.0 05	4269
23879 15.5 05	3900
23891 16.9 05	3959
23904 16.6 05	3769
23914 17.2 14	3905
23914 17.2 24	3905
23917 19.1 15	3834
23919 19.1 15	3835
23921 20.1 14	3914
23926 17.3 05	4388
23930 18.1 14	3849
23934 18.1 14	3850
23950 20.3 05	4096
23966 16.4 05	4028
23967 15.2 04	4111
23970 17.0 05	4017
23973 17.3 14	3983
23974 17.8 04	3951
23980 17.0 14	3795/1
24007 20.2 04	3923/1
24008 17.7 04	3924/1
24024 17.8 05	3891
24031 16.8 05	3961
24045 13.0 04	3875
24046 18.2 05	3889
24050 15.2 05	3895
24058 15.8 05	3979
24066 15.4 04	3892
24071 14.6 04	3894
24072 17.7 14	4173
24083 19.2 14	4031

TEXTAR	BESER
NO	NO
24092 17.3 05	3978
24101 19.0 14	3820
24101 19.0 14	3820/1
24133 17.7 15	3940
24134 18.7 15	3939
24135 17.8 14	3946
24150 17.6 14	3984
24167 17.2 05	3976/1
24244 185 0 5 T4146	4277
24469 190 1 5	3981
24469 190 2 5	3981
24561 180 1 5	4325
24561 180 1 5 T4689	4325
24561 180 1 5 T4789	4325
24581 143 0 4	4242
24581 150 0 4	4242
24724 140 0 5	4229
24862 163 0 5	4127
24869 190 1 4	4326
25071 188 1 5	4335
25071 188 2 5	4335
25110 175 1 4	4336
25110 175 2 4	4336
25179 175 0 4	4313
25179 175 1 4	4313
25179 178 0 4	4313
25190 190 0 5	4338
25192 190 0 5	4338
25192 213 0 5	4338
25196 180 0 5	4339
25240 178 1 5	4324
25268 179 0 5	4337
25337 157 1 5	4343
25337 157 2 5	4343
25337 157 3 5	4343
25434.01	4368
25589 160 0 5	4341
25589 170 0 4	4341
25603 178 3 5	4175/1
25610 187 1 5	4019
25683 203 9 5	4228
25688 143 0 5	4316
25708 178 1 5	4342
25720 173 1 4	4323
25720 173 1 5	4323
25757 178 1 5	4041
25780 150 5	4040
25800 198 1 4	4354
25965 151 0 5	4283
25973 168 1 5	4286
26149 187 1 5	4360
26188 182 1 5	4363
26209 178 0 5	4367
26236 155 1 5	4361
29001 20.0 05	3749
29017 23.0 04	3433/1
29017 23.0 05	3433
29041 18.0 05	3523
29067 22.0 04	3773
29107 20.0 05	3749/1
29121 18.3 04	3575/2
29121 20.3 04	3575
29122 22.0 04	3994
29123 20.3 04	3823
29153 200 1 4 T3011	3614
29160 19.9 04	3942
29296 200 0 5 T3035	3930
29706 17.0 05	3537
29835 22.0 04	3679
40109 17.6 04	3935
40110 17.8 04	3934
40112 19.0 04	3820
40112 19.0 04	3820/1
40118 16.9 14	4093
40119 18.1 24	3850
40120 18.1 24	3849
41100 19.3 25	3834
41101 19.3 25	3835
41102 20.3 24	3914
41103 18.1 05	3790/1

TEXTAR	BESER
NO	NO
41104 17.1 05	3826/1
41105 18.4 05	3800/1
41107 19.4 14	3800
41111 16.5 05	3918
41118 19.3 05	3986
41119 17.7 14	3983
41120 17.0 05	4112
42 123	3826/1
42100 18.0 05	3568
42102 18.0 05	3569
42103 19.0 05	3617
42123 18.0 15	3826/1
507.4146.48	3523
507.5944.11	3575
507.5944.19	3575
507.5944.32	3575/2
507.7304.18	3942
J3600308 16.6	4269
J3600309 15.5	4009
J3600513 19.0	3507
J3600525 15.0	3502
J3600526 16.5	3843
J3600529 16.0	3632
J3600535 16.0	3632
J3601056 15.5	3888
J3601060 16.0	4010
J3601062 15.5	3577
J3601062 15.5	3647
J3602055 15.0	3673
J3602096 16.0	4013
J3603035 14.5	3640
J3605035 16.0	3809
J3605037 15.0	3675
J3606001 14.0	3436
J3606019 15.5	3901
J3608009 15.5	3883
J3608016 15.0	3602
J3608017 14.5	3884
J3610304 15.5	3993
J3610507 15.5	3993
J3610509 15.5	3993
J3612010 15.5	3693
J3612011 15.5	4072
J3612013 15.0	3776
J3612018 14.0	3788
J3612020 13.5	4153
J3613007 13.5	3833
J3614007 13.0	4212
J3614008 14.5	4148/1
J3615003 15.5	4108
J3615005 13.9	3688
J3617001 15.0	4080

TRW	BESER
NO	NO
GD1755	4330
GDB100	3320
GDB101	3318
GDB103	3325
GDB105	3346
GDB106	3316
GDB107	3317
GDB113	3627
GDB114	3555
GDB136	3313
GDB137	3709
GDB138	3710
GDB140	3393
GDB147	3329
GDB148	3333
GDB151	3321
GDB152	3327
GDB156	3323
GDB164	3366/1
GDB172	3439
GDB173	3405
GDB175	3324
GDB179	3314

TRW	BESER
NO	NO
GDB185	3705
GDB186	3601
GDB188	3371
GDB190	3369
GDB194	3407
GDB197	3370
GDB199	3410
GDB211	3579
GDB232	3375
GDB233	3379
GDB238	3417/1
GDB242	3315
GDB242	3515
GDB243	3527
GDB247	3706
GDB251	3415
GDB254	3509
GDB255	3417
GDB261	3331
GDB264	3339
GDB264	3514
GDB265	3421
GDB269	3806
GDB284	3646
GDB288	3394
GDB293	3418
GDB294	3611
GDB295	3709
GDB297	3424/1
GDB298	3573
GDB299	3572
GDB300	3406
GDB308	3381
GDB311	3621
GDB313	3493
GDB313	3494
GDB317	3513
GDB318	3397
GDB321	3423
GDB323	3402
GDB323	3472
GDB325	3752
GDB327	3380
GDB327	3580
GDB328	3495
GDB330	3410
GDB331	3319
GDB333	3840
GDB334	3481
GDB335	3416
GDB340	3416
GDB341	3423
GDB344	3482
GDB345	3462
GDB349	3603
GDB351	3414
GDB351	3714
GDB352	3371
GDB355	3401
GDB356	3433/1
GDB358	3501
GDB359	3625
GDB360	3425
GDB365	3400
GDB366	3620
GDB367	3758
GDB371	3549
GDB373	3504
GDB374	3449
GDB378	3875
GDB380	3395
GDB386	3442
GDB388	3634
GDB392	3583
GDB395	3412
GDB397	3366
GDB399	3605
GDB400	3503
GDB403	3490
GDB404	3619

TRW	BESER
NO	NO
GDB405	3374
GDB407	3350
GDB425	3546
GDB428	3624
GDB429	3773
GDB430	3649
GDB440	3429
GDB442	3642
GDB443	3526
GDB445	3408
GDB446	3474
GDB447	3543
GDB453	3773
GDB454	3444/1
GDB457	3467
GDB458	3466
GDB459	3486
GDB463	3441
GDB469	3422
GDB473	3419
GDB478	3523
GDB481	3679
GDB496	3683
GDB496	3872/1
GDB499	4212
GDB533	3311
GDB576	3373
GDB591	3328
GDB611	3335
GDB628	3378
GDB648	3327
GDB654	3365
GDB656	3318
GDB660	3312
GDB663	3343
GDB663	3483
GDB668	3321
GDB693	3484
GDB695	3440
GDB698	3468
GDB729	3448
GDB736	3746
GDB737	3463
GDB742	3864
GDB747	3415
GDB749	3446
GDB749	3450
GDB750	3633
GDB759	3423/1
GDB760	3413
GDB764	3691
GDB765	3700
GDB766	3760
GDB770	3777
GDB773	3723
GDB774	4148/1
GDB775	4212
GDB779	3423/1
GDB788	3474
GDB790	3556
GDB791	4020
GDB792	3539
GDB793	3457
GDB797	3560
GDB807	3372
GDB807	3503
GDB809	3503
GDB814	3536
GDB817	3430
GDB818	3408
GDB820	3609
GDB823	3529
GDB826	3650
GDB829	3536
GDB833	3432
GDB836	3491
GDB842	3994
GDB848	3562
GDB850	3609
GDB854	3650

TRW	BESER
NO	NO
GDB863	3378
GDB870	3657
GDB870	3757
GDB870	3857
GDB872	3701
GDB875	3672
GDB883	3721
GDB885	3882
GDB886	3600
GDB893	3502
GDB894	3696
GDB895	3632
GDB897	3464
GDB903	3428
GDB905	3496/1
GDB908	3329
GDB911	3550
GDB915	3717
GDB916	3564
GDB917	3578
GDB925	3582
GDB939	3404
GDB951	3470
GDB952	3469
GDB953	3589
GDB957	3733
GDB958	3459
GDB960	3461
GDB962	3629
GDB970	3641
GDB974	3661
GDB976	3771
GDB980	3436
GDB981	3437
GDB983	3499
GDB985	3680
GDB986	3873
GDB989	3426
GDB990	4080
GDB995	3704
GDB996	3695
GDB1003	3699
GDB1003	3779
GDB1005	4104
GDB1009	4010
GDB1012	3766
GDB1017	3692
GDB1017	3760
GDB1023	4108
GDB1024	3522
GDB1026	3666
GDB1026	3672
GDB1027	3875
GDB1029	3640
GDB1030	3539
GDB1033	3487
GDB1033	3489
GDB1039	3610
GDB1040	3623
GDB1041	3596
GDB1043	4088
GDB1044	3551
GDB1048	3531
GDB1049	3590
GDB1050	3536
GDB1055	3529/1
GDB1059	4128
GDB1062	3704
GDB1063	4148/1
GDB1064	3584
GDB1068	3583
GDB1078	3487
GDB1078	3489
GDB1078	3580
GDB1080	3445
GDB1082	3683
GDB1082	3872/1
GDB1084	3473
GDB1086	3464
GDB1092	3553

TRW	BESER
NO	NO
GDB1093	3662
GDB1094	3658
GDB1100	3563
GDB1101	3819
GDB1102	3878
GDB1104	3528
GDB1105	3595
GDB1106	3559
GDB1107	3558
GDB1108	3593
GDB1113	3888
GDB1114	3689
GDB1115	3608
GDB1121	3529
GDB1122	3626
GDB1123	3581
GDB1124	3545
GDB1126	3685
GDB1127	3688
GDB1128	3622
GDB1130	3630
GDB1134	3436
GDB1135	3436
GDB1138	4072
GDB1140	3833
GDB1142	4086
GDB1143	3554
GDB1143	3651
GDB1153	4182
GDB1154	3673
GDB1158	3867
GDB1163	3536
GDB1164	3686
GDB1166	3736
GDB1168	3776
GDB1170	3598
GDB1174	3883
GDB1176	3892
GDB1177	3874
GDB1179	4078
GDB1181	3714
GDB1182	3693
GDB1183	3607
GDB1185	4099
GDB1186	3674
GDB1187	3887
GDB1193	3750
GDB1196	3529/1
GDB1197	3675
GDB1204	3506
GDB1205	3677
GDB1206	3671
GDB1209	3512
GDB1209	3512/1
GDB1212	3617
GDB1215	3863
GDB1216	3799
GDB1217	3496
GDB1218	3538
GDB1219	3585
GDB1219	3585/1
GDB1220	3567
GDB1221	3594
GDB1222	3570
GDB1223	3466
GDB1239	3915
GDB1240	4275
GDB1244	4197
GDB1247	3873
GDB1249	3749
GDB1260	3636
GDB1261	3881
GDB1262	3678
GDB1263	3670
GDB1265	3656
GDB1266	3896
GDB1267	3529/1
GDB1269	3909
GDB1271	3665
GDB1273	3868

TRW	BESER
NO	NO
GDB1274	3566
GDB1280	3419
GDB1280	3731
GDB1282	3606
GDB1283	3663
GDB1286	3809
GDB1287	3682
GDB1289	3680
GDB1292	4125
GDB1293	4125
GDB1297	3424/1
GDB1299	3643
GDB1300	3505
GDB1300	3615
GDB1304	3879
GDB1305	3496/1
GDB1306	3637
GDB1310	3536
GDB1311	3529/1
GDB1313	4059
GDB1314	4062
GDB1318	3628
GDB1319	3872
GDB1321	3659
GDB1330	3529/1
GDB1332	3503/1
GDB1334	3821
GDB1335	3676
GDB1338	3617
GDB1339	3897
GDB1341	3548
GDB1341	3690
GDB1345	3575
GDB1346	3717
GDB1347	3540
GDB1349	3722
GDB1351	3762
GDB1352	3763
GDB1354	3755
GDB1357	3782/1
GDB1358	3754
GDB1361	3759
GDB1361	3938
GDB1364	3618
GDB1365	4281
GDB1366	3896
GDB1367	3553/1
GDB1369	3795
GDB1369	4345
GDB1371	4222
GDB1372	3529/1
GDB1373	3681
GDB1374	3943
GDB1377	3642
GDB1378	4126
GDB1378	4126/1
GDB1379	4069
GDB1383	3790
GDB1386	3782
GDB1387	3618
GDB1388	3919
GDB1389	3918
GDB1390	3644
GDB1391	3794
GDB1393	3568
GDB1396	4123
GDB1397	3782
GDB1399	3804
GDB1403	3590/1
GDB1405	3539/1
GDB1407	3482
GDB1408	3861
GDB1411	3846
GDB1413	3836
GDB1419	3877
GDB1421	3821
GDB1422	3782
GDB1424	3784
GDB1427	3617
GDB1428	3503

TRW	BESER
NO	NO
GDB1434	4100
GDB1435	4093
GDB1438	3529/1
GDB1440	3590/2
GDB1442	3856
GDB1443	3790
GDB1445	3617
GDB1446	3552
GDB1448	3935
GDB1449	3934
GDB1452	3453
GDB1454	4102
GDB1455	4101
GDB1455	4209
GDB1457	4103
GDB1458	3529/1
GDB1460	4095
GDB1461	3921
GDB1462	3820
GDB1462	3820/1
GDB1463	3820
GDB1463	3820/1
GDB1464	3800
GDB1465	3503
GDB1468	3852
GDB1469	3853
GDB1470	3855
GDB1472	4138
GDB1472	4138/1
GDB1473	4094
GDB1475	4152
GDB1478	3848
GDB1479	3795/1
GDB1482	3826/1
GDB1483	3800/1
GDB1486	3618
GDB1487	3618/1
GDB1492	4211
GDB1495	3854
GDB1496	3931
GDB1497	4119
GDB1498	4180
GDB1500	3938
GDB1502	4179
GDB1503	3986
GDB1504	3529/1
GDB1509	4093
GDB1514	3836
GDB1515	4040
GDB1517	3834
GDB1518	3835
GDB1520	4123
GDB1521	3914
GDB1522	3496
GDB1524	3849
GDB1525	4093
GDB1527	3879
GDB1530	3879
GDB1532	3801
GDB1533	3569
GDB1534	3575/2
GDB1535	3823
GDB1540	3950
GDB1545	3676
GDB1546	4127
GDB1548	4075/1
GDB1549	4076
GDB1550	3904
GDB1551	3905
GDB1552	3849
GDB1554	4096
GDB1555	3841
GDB1556	3841/1
GDB1557	3842
GDB1558	4208
GDB1559	4346
GDB1562	4042
GDB1563	3820
GDB1563	3820/1
GDB1570	3846

TRW	BESER
NO	NO
GDB1571	3850
GDB1579	3826
GDB1582	3820
GDB1582	3820/1
GDB1583	3885
GDB1588	3790/1
GDB1589	4173
GDB1590	3826/1
GDB1591	3800
GDB1594	3939
GDB1595	3940
GDB1596	3946
GDB1597	3849
GDB1600	3923/1
GDB1601	3924/1
GDB1604	4123
GDB1606	4137
GDB1612	4389
GDB1613	4211
GDB1614	3983
GDB1617	4096
GDB1619	3584
GDB1620	3984
GDB1621	3853/1
GDB1622	3905
GDB1623	3820
GDB1623	3820/1
GDB1624	3800
GDB1626	4388
GDB1631	4293
GDB1632	3944
GDB1633	3987
GDB1634	3503/1
GDB1635	3503/1
GDB1639	3545
GDB1642	4210
GDB1646	4123
GDB1653	4076
GDB1654	3826/1
GDB1655	3800/1
GDB1657	4211
GDB1658	3782
GDB1659	4096
GDB1663	3940
GDB1665	4058
GDB1666	3512/2
GDB1667	4240
GDB1668	4042
GDB1669	3800
GDB1670	3945
GDB1676	3800
GDB1677	3820
GDB1677	3820/1
GDB1678	3984/1
GDB1679	3748
GDB1680	3747
GDB1682	3820/3
GDB1683	4161
GDB1686	4211
GDB1690	3964
GDB1695	3679
GDB1696	3962
GDB1696	3962/1
GDB1697	3926
GDB1697	3926/1
GDB1698	3925
GDB1698	3925/2
GDB1699	3963
GDB1699	3963/1
GDB1701	3800/2
GDB1702	3881
GDB1703	3922
GDB1703	3922/1
GDB1704	3820/3
GDB1708	4157
GDB1709	4157
GDB1715	3976
GDB1718	3972
GDB1719	3972
GDB1720	4075

TRW	BESER
NO	NO
GDB1723	3920
GDB1723	3920/1
GDB1724	3906
GDB1724	3906/1
GDB1724	3906/1A
GDB1724	3906/2
GDB1725	3907
GDB1725	3907/1
GDB1725	3907/1A
GDB1725	3907/2
GDB1726	4207
GDB1727	4181
GDB1730	4181/1
GDB1732	4157
GDB1733	4240
GDB1736	4248
GDB1737	4249
GDB1738	4247
GDB1740	4151
GDB1740	4151/1
GDB1746	4173/1
GDB1747	3965
GDB1748	4092
GDB1748	4092/1
GDB1749	4141
GDB1750	3800
GDB1752	4220
GDB1753	4119
GDB1754	4215
GDB1759	3561
GDB1761	3970
GDB1763	4390
GDB1765	4260
GDB1774	4309
GDB1780	3995
GDB1783	4149
GDB1784	4150
GDB1785	3966
GDB1785	3966/1
GDB1786	3967
GDB1787	3950
GDB1789	3964/1
GDB1791	4142
GDB1798	4391
GDB1799	3971
GDB1807	3904
GDB1808	4134
GDB1829	3800/3
GDB1832	4096
GDB1834	4291
GDB1840	4325
GDB1840	4325/1
GDB1841	4135
GDB1842	3826/3
GDB1843	4230
GDB1844	4014
GDB1847	4008
GDB1853	3826/1
GDB1854	4378
GDB1864	4121
GDB1869	4379
GDB1875	4310
GDB1878	3800/1
GDB1879	3826/1
GDB1882	4380
GDB1885	4132
GDB1885	4172
GDB1885	4172/1
GDB1887	4162
GDB1891	3826/3
GDB1896	4134
GDB1898	4314
GDB1901	3823
GDB1903	4057
GDB1910	4056
GDB1912	3945
GDB1917	4145
GDB1919	4383
GDB1923	4148/1
GDB1925	4161

TRW	BESER
NO	NO
GDB1927	4014
GDB1932	4326
GDB1934	4381
GDB1938	3853/1
GDB1939	3885
GDB1942	4382
GDB1946	4338
GDB1955	4338
GDB1959	4204
GDB1960	4161
GDB1967	4174
GDB1967	4174/1
GDB1968	4175
GDB1978	3976
GDB1982	4171
GDB1982	3922/3
GDB1982	4171/1
GDB1984	3782/1
GDB1988	4058
GDB1992	4201
GDB1992	4201/1
GDB2000	4260
GDB2001	3800/3
GDB2006	3784
GDB2008	3827
GDB2009	4226
GDB2011	3885
GDB2012	3546
GDB2014	4335
GDB2016	4140
GDB2017	3983
GDB2018	4140/1
GDB2019	4313
GDB2027	4200
GDB2029	4323
GDB2032	4286
GDB2033	3853/1
GDB2034	4374
GDB2035	4371
GDB2035	4373
GDB2036	4372
GDB2039	4173/2
GDB2040	3529/1
GDB2042	4336
GDB2050	4388
GDB2051	4247
GDB2056	4248
GDB2064	3750
GDB2070	4334
GDB2071	4349
GDB2072	4171
GDB2072	3922/3
GDB2072	4171/1
GDB2076	3926
GDB2076	3926/1
GDB2080	4295
GDB2082	4287
GDB2083	3905
GDB2086	3853/1
GDB2091	4285
GDB2096	4227
GDB2099	4284
GDB2106	4224
GDB2107	4260
GDB2108	3782
GDB2115	4270
GDB2117	4351
GDB2117	4351/1
GDB2124	3975
GDB2143	4228/1
GDB2144	4313
GDB2157	4253
GDB2166	4370
GDB2169	4369
GDB2196	4239
GDB2197	4353
GDB2227	4251
GDB2227	4251/1
GDB2228	4301/1
GDB3017	3667

TRW	BESER
NO	NO
GDB3034	3631
GDB3046	3604
GDB3071	3898
GDB3089	3507
GDB3091	3602
GDB3092	3660
GDB3096	3740
GDB3101	3632
GDB3108	3511
GDB3110	3693
GDB3114	3577
GDB3114	3647
GDB3116	3470
GDB3124	3697
GDB3130	4088
GDB3132	3884
GDB3133	3622
GDB3145	3574
GDB3145	3914/1
GDB3147	3554
GDB3147	3651
GDB3148	3872
GDB3152	3822
GDB3154	4148
GDB3154	4148/1
GDB3155	4086
GDB3157	4071
GDB3161	3657
GDB3161	3757
GDB3161	3857
GDB3162	3674
GDB3165	3778
GDB3166	3600
GDB3167	3932
GDB3170	4087
GDB3171	3687/1
GDB3175	4148/1
GDB3176	3686
GDB3177	3704
GDB3178	3417
GDB3180	3577
GDB3180	3647
GDB3182	3883
GDB3183	3882
GDB3184	3402
GDB3184	3472
GDB3187	4155
GDB3188	3704
GDB3190	4155
GDB3191	4148/1
GDB3193	3780
GDB3195	3744
GDB3196	3704
GDB3197	3829
GDB3198	3830
GDB3200	3685
GDB3201	3648
GDB3205	3764
GDB3206	3522
GDB3207	3554
GDB3207	3651
GDB3208	4010
GDB3211	3632
GDB3212	3686
GDB3214	3604
GDB3216	3687/1
GDB3217	4079
GDB3218	3768
GDB3220	3901
GDB3221	4027
GDB3222	3859
GDB3223	3913
GDB3224	3740
GDB3226	4274
GDB3227	4115
GDB3234	4034
GDB3234	4034/1
GDB3235	3915
GDB3236	3928
GDB3237	3745

TRW	BESER
NO	NO
GDB3238	3767
GDB3239	4084
GDB3240	4109
GDB3240	4232
GDB3241	4009
GDB3242	3769
GDB3243	3788
GDB3244	3843
GDB3245	4269
GDB3246	3892
GDB3250	4110
GDB3251	4158
GDB3252	3522
GDB3254	3874
GDB3255	3874
GDB3256	3632
GDB3257	3843
GDB3258	3993
GDB3259	3632
GDB3261	3802
GDB3262	3522
GDB3263	3653
GDB3265	3687/1
GDB3266	3901
GDB3267	3683
GDB3267	3872/1
GDB3268	4109
GDB3268	4232
GDB3269	4148
GDB3269	4148/1
GDB3270	4271
GDB3271	3562
GDB3276	3928
GDB3277	3822
GDB3278	3876
GDB3279	4153
GDB3280	3693
GDB3282	3993
GDB3283	3632
GDB3284	3993
GDB3285	4269
GDB3286	4082
GDB3287	3955
GDB3288	3817
GDB3289	3825
GDB3291	4115
GDB3292	3853
GDB3294	3933
GDB3295	3932
GDB3297	3843
GDB3298	3993
GDB3300	3554
GDB3300	3651
GDB3301	3802
GDB3309	4118
GDB3310	3889
GDB3312	3932
GDB3313	3888
GDB3314	3910
GDB3315	4013
GDB3322	4276
GDB3323	4083
GDB3324	4112
GDB3325	3831
GDB3326	3874
GDB3328	3912
GDB3330	3951
GDB3331	3502
GDB3332	3983
GDB3336	3890
GDB3337	4154
GDB3338	4105
GDB3339	4111
GDB3340	4017
GDB3341	4106
GDB3342	4028
GDB3343	3978
GDB3344	3979
GDB3347	3687/1
GDB3348	3894

TRW	BESER
NO	NO
GDB3352	3959
GDB3353	3767
GDB3355	4159
GDB3357	4303
GDB3359	3928
GDB3360	3976/1
GDB3361	3859
GDB3364	3891
GDB3366	3895
GDB3367	4001
GDB3368	4087
GDB3369	3968
GDB3370	3969
GDB3371	3912
GDB3372	4081
GDB3373	4213
GDB3374	3911
GDB3375	3607
GDB3377	3985
GDB3378	3961
GDB3380	3900
GDB3382	3895
GDB3385	3942
GDB3386	3959
GDB3387	3993
GDB3388	4216
GDB3389	4059
GDB3391	3598/1
GDB3392	4143
GDB3393	3933
GDB3394	3667
GDB3396	3983/1
GDB3397	4105
GDB3399	4113
GDB3403	3988
GDB3403	3988/1
GDB3404	3952
GDB3412	3976/1
GDB3416	4074
GDB3418	3960
GDB3419	3989
GDB3420	3880
GDB3421	3980
GDB3422	3959
GDB3424	4077
GDB3425	3953
GDB3426	3949
GDB3427	3982
GDB3429	3948
GDB3432	3993
GDB3434	3574
GDB3434	3914/1
GDB3435	3975
GDB3436	3883
GDB3437	4122
GDB3439	3965/1
GDB3442	4258
GDB3443	3929
GDB3445	4160
GDB3446	4156
GDB3447	4148
GDB3447	4148/1
GDB3448	4035
GDB3450	4028
GDB3451	3980
GDB3452	3978
GDB3454	3954
GDB3456	4154
GDB3459	3958
GDB3461	4039
GDB3462	4165
GDB3464	3693
GDB3465	3976/1
GDB3466	3886
GDB3467	4038
GDB3469	4036
GDB3474	3980
GDB3475	4277
GDB3479	4147
GDB3480	4037

TRW	BESER
NO	NO
GDB3480	4037/1
GDB3481	3956
GDB3483	3960
GDB3484	4255
GDB3486	4054
GDB3490	4000
GDB3491	3997
GDB3494	4061
GDB3495	4061
GDB3497	4256
GDB3499	4060
GDB3500	3903
GDB3501	4029
GDB3507	3933
GDB3508	3933
GDB3516	4148/1
GDB3517	4242
GDB3520	3952
GDB3521	4038
GDB3523	4028
GDB3524	3996
GDB3528	4167
GDB3530	4039
GDB3532	3998
GDB3534	4167
GDB3535	4265
GDB3537	4343
GDB3540	4233
GDB3545	4124
GDB3546	3983/2
GDB3546	3983/3
GDB3548	4136
GDB3552	4166
GDB3552	4342
GDB3553	4049
GDB3560	4324
GDB3563	3797
GDB3567	3942
GDB3568	4213
GDB3569	4061
GDB3569	4343
GDB3576	4156
GDB3577	4015
GDB3580	4315
GDB3583	4316
GDB3585	4040
GDB3592	4317
GDB3593	4318
GDB3594	4343
GDB3595	3893
GDB3598	4176
GDB3598	4176/1
GDB3611	4170
GDB3613	4229
GDB3614	4019
GDB3617	4283
GDB3617	4283/1
GDB3618	4321
GDB4005	3866
GDB4010	3781
GDB4049	3544
GDB4084	4214
GDB4091	4197
GDB4104	4182
GDB4120	4011
GDB4126	4012
GDB4132	4186
GDB4133	4031
GDB4134	4198
GDB4135	4018
GDB4136	4016
GDB4140	4006
GDB4143	4106
GDB4144	4005
GDB4145	4004
GDB4174	4256
GDB4175	4146
GDB4179	4073
GDB4448	4339
GDB4455	4219

TRW	BESER
NO	NO
GDB4600	3893
GDB4605	4005
GDB4606	4337
GDB5050	3679
GDB5053	3433/1
GDB5054	3433
GDB5058	3773
GDB5062	3749
GDB5063	3749/1
GDB5068	3994
GDB5074	3390
GDB5074	3521
GDB5090	3956
GDB5113	4169
GDB7020	3974
GDB7043	3797
GDB7553	3439
GDB7561	3930
GDB7592	3930
GDB7612	3529/1
GDB7656	3927
GDB7760	3604
GDB7761	3604
GDB7763	3996
GDB7765	4242
GDB1463BTE	3820/1
GDB1546BTE	4127
GDB3583BTE	4316

VALEO	BESER
NO	NO
301032	4092/1
301703	4388
301728	3926/1
301738	3907/1
301738	3907/1A
301738	3907/2
301818	3920/1
301881	3962/1
301882	3925/2
302051	4389
302108	3966/1
302114	4151/1
302137	4379
302138	4382
302142	4383
302155	4201/1
302156	4037/1
302159	4325/1
302162	4140/1
302165	4283/1
302258	4390
302269	4381
302271	4228/1
302273	4378
540101	3526
540107	3440
540125	3366/1
540143	3503
540144	3496/1
540148	3457
540149	3529
540161	3315
540161	3515
540162	3339
540162	3514
540301	3327
540309	3380
540312	3374
540314	3474
540315	3333
540405	3578
540406	3432
540407	3603
540418	3527
540420	3495
540421	3482
540422	3417/1

VALEO	BESER
NO	NO
540428	3873
540429	3680
540434	3543
540437	3423/1
540446	3464
540449	3470
540454	3596
540460	3397
540461	4104
540464	3425
540477	3380
540478	3474
540479	3410
540481	3428
540482	3424/1
540483	3467
540489	3563
540492	3528
540493	3623
540500	3487
540500	3489
540502	3373
540503	3487
540503	3489
540504	3474
540537	3683
540537	3872/1
540540	3819
540541	3878
540547	3559
540548	3595
540555	3593
540556	3558
540557	3473
540558	3445
540561	3469
540564	4128
540741	3750
540750	3618
540751	3617
540754	3799
540792	3567
540793	3678
540794	3670
540795	3636
540797	3506
540799	3677
540805	3680
540806	3562
540807	3589
540852	3659
540856	3570
540866	3316
540887	3759
540891	4125
540892	4125
540937	3681
540938	3861
540941	3762
540944	3754
540964	3769
540966	4281
540971	3531
540972	3896
540978	3943
541611	3537
541612	3773
541614	3433/1
541620	3773
541622	3994
541641	3749
541643	3433/1
541654	3994
541655	3679
541656	3773
541662	3575
541705	3823
541708	3390
541716	3521
541717	3575/2

VALEO	BESER
NO	NO
541728	3926
541728	3926/1
541734	3965
541735	4092
541735	4092/1
541736	3907
541736	3907/1
541736	3907/1A
541736	3907/2
541737	3965/1
541740	4354
548654	3994
551005	3649
551020	3536
551024	3441
551025	3444/1
551027	3486
551039	3408
551427	3350
551447	3421
551616	3650
551659	3746
551662	3371
551665	3419
551671	3585
551671	3585/1
551694	3418
551698	3583
551758	3672
551772	3704
598000	3689
598002	3503
598004	3649
598011	3608
598012	3643
598013	3658
598014	4128
598016	3635
598017	3619
598018	3563
598020	3657
598020	3757
598020	3857
598022	3683
598022	3872/1
598023	3882
598024	4104
598027	3605
598031	3819
598032	3603
598033	3593
598034	3558
598036	3473
598037	3445
598038	3528
598039	3623
598041	3618
598042	3570
598044	3567
598045	3678
598046	3670
598047	3752
598049	3590
598050	3736
598051	3632
598052	3502
598053	4212
598054	3562
598055	3596
598057	3660
598061	3539
598062	3680
598065	3617
598066	3538
598067	3506
598068	3750
598070	3595
598071	3577
598071	3647
598073	3799

VALEO	BESER
NO	NO
598076	3374
598077	3333
598078	3329
598079	3333
598080	3495
598081	3380
598081	3580
598082	3428
598085	3333
598086	3482
598088	3317
598091	3424/1
598099	3327
598103	3572
598104	3573
598105	3611
598106	3350
598108	3365
598109	3315
598109	3515
598110	3339
598110	3514
598111	3320
598112	3537
598118	3624
598119	3474
598122	3415
598123	3397
598124	3486
598125	3536
598127	3441
598128	3444/1
598133	3467
598138	3543
598139	3523
598151	3492
598151	3493
598151	3494
598153	3440
598154	3555
598155	3487
598155	3489
598157	3474
598159	3311
598160	3439
598166	3417/1
598167	3621
598168	3484
598169	3429
598171	3594
598172	3464
598174	3321
598175	3442
598177	3381
598178	3405
598179	3457
598180	3529
598182	3410
598183	3717
598184	3505
598184	3615
598185	3509
598193	3323
598205	3378
598208	3705
598212	3417
598214	3490
598217	3419
598219	3466
598220	3401
598223	3509
598224	3400
598225	3408
598231	3564
598237	3609
598241	3430
598244	3505
598244	3615
598250	3437
598252	3551

VALEO	BESER
NO	NO
598253	3469
598256	3733
598257	3641
598258	3585
598258	3585/1
598259	3578
598260	3909
598266	3402
598266	3472
598268	3723
598274	3522
598286	4212
598290	3833
598291	3583
598292	3873
598293	3449
598295	3680
598298	3682
598299	3681
598300	3804
598301	3861
598302	3566
598305	3665
598311	3656
598315	3408
598316	3744
598317	3754
598319	4062
598320	3675
598322	3762
598324	3759
598324	3938
598325	3659
598326	3636
598329	4281
598334	3417/1
598335	3549
598337	3373
598338	3311
598345	3550
598346	3496/1
598353	3557
598353	3610
598356	3623
598357	3677
598361	3687/1
598366	3527
598371	3625
598374	3526
598375	3806
598379	3370
598380	3423/1
598383	3878
598389	3421
598393	3560
598396	3496/1
598398	3644
598399	3722
598402	3414
598402	3714
598403	3637
598404	3759
598405	3393
598406	3422
598408	3782
598410	4180
598412	3881
598416	3934
598419	3935
598421	3820
598421	3820/1
598422	3790
598425	4123
598426	3826/1
598427	3800/1
598430	3559
598431	3755
598432	3784
598433	4100
598434	4093

VALEO	BESER
NO	NO
598440	3584
598442	4126
598442	4126/1
598443	4069
598444	3676
598445	4102
598446	4101
598446	4209
598447	3821
598448	3836
598451	4115
598456	3846
598461	3938
598463	3529/1
598464	3820
598464	3820/1
598465	3800
598471	3950
598472	3853
598473	3539/1
598479	3919
598480	3918
598482	3671
598484	3896
598487	3782/1
598488	3566
598489	3590/2
598491	4182
598492	4062
598494	3607
598495	3686
598497	3771
598498	3662
598500	3854
598501	3931
598505	3843
598507	3887
598510	4011
598511	4009
598512	3872
598514	4094
598515	3892
598517	3685
598518	3892
598519	3688
598521	4271
598522	3809
598524	3859
598526	3849
598527	4093
598530	4079
598533	3883
598534	3884
598535	3829
598536	4158
598537	3856
598538	3855
598539	4062
598545	3848
598546	3795/1
598547	3921
598548	3780
598549	4125
598551	3554
598551	3651
598553	3986
598556	4012
598557	3850
598558	3849
598560	3848
598564	3877
598565	4095
598566	3852
598568	3834
598569	3835
598570	3914
598573	3529/1
598574	3632
598575	3778
598576	3768

VALEO	BESER
NO	NO
598577	3788
598578	3554
598578	3651
598580	3879
598584	4040
598593	3366/1
598594	3366
598597	3448
598601	3628
598602	3888
598603	3316
598606	3769
598607	3897
598611	3618
598613	3513
598614	3379
598615	3446
598617	3581
598618	3760
598621	3642
598622	3553
598623	3453
598625	3622
598627	3704
598628	3766
598632	3943
598634	3507
598635	3904
598636	3863
598637	4127
598639	3801
598640	4346
598641	3983
598644	3951
598646	3640
598648	3889
598649	3885
598651	3841
598652	3841/1
598654	3978
598655	4075
598656	4075/1
598660	3552
598662	3939
598663	3940
598664	3946
598665	3890
598666	3721
598667	4138/1
598670	3826/1
598671	3842
598672	3933
598673	4153
598674	4152
598675	3606
598676	3794
598678	4211
598679	3817
598680	3825
598682	4148
598682	4148/1
598685	3436
598691	3426
598692	3545
598696	4173
598698	3800
598701	4389
598702	3984
598703	4388
598705	4001
598706	3969
598707	3968
598708	3985
598714	3474
598718	3987
598719	4103
598720	4138
598720	4138/1
598721	3800/1
598728	4210

VALEO	BESER
NO	NO
598730	4025
598731	3877
598732	3755
598733	3928
598736	4112
598737	3769
598738	3952
598740	4058
598741	4293
598742	3944
598743	4198
598744	3959
598748	3993
598749	4042
598752	3905
598754	4181
598757	3831
598758	4155
598759	3843
598760	3686
598762	3512
598762	3512/1
598763	3663
598764	3923/1
598765	3924/1
598769	3905
598770	4076
598773	3827
598775	3503
598777	3693
598778	4084
598779	4096
598781	3961
598783	3853/1
598784	3767
598787	3699
598787	3779
598788	3696
598800	3559
598806	4010
598812	4154
598814	3553/1
598816	3906
598816	3906/1
598816	3906/1A
598816	3906/2
598817	4087
598818	3920
598818	3920/1
598819	3949
598820	4179
598821	3802
598823	3979
598824	4159
598828	4080
598830	3602
598831	4303
598832	3928
598833	4031
598834	4108
598839	3800/2
598842	4028
598843	4027
598847	3983/1
598850	3898
598852	4106
598853	3912
598855	3900
598856	3901
598857	3891
598860	4042
598861	4137
598862	3910
598864	3765
598865	3830
598867	3980
598868	3880
598869	4303
598872	4016
598874	3894

VALEO	BESER
NO	NO
598876	3926
598876	3926/1
598877	3929
598878	4000
598879	4161
598881	3962
598881	3962/1
598882	3925
598882	3925/2
598884	3853/1
598886	3955
598887	4109
598887	4232
598888	4113
598889	4017
598890	3948
598891	3981
598892	3820/3
598893	3975
598894	3982
598895	3913
598896	3958
598897	3560
598899	3972
598901	4160
598906	3781
598907	4110
598908	3648
598909	4269
598910	4269
598911	4148/1
598913	3826
598915	3764
598917	3769
598918	4074
598921	3371
598924	4005
598927	3970
598929	4213
598932	3989
598933	3954
598934	4039
598935	4157
598937	3960
598938	3954
598942	3976
598943	3953
598944	4082
598945	4165
598947	3777
598968	3782
598971	3762
598972	3495
598973	3608
598974	3539
598975	3529
598976	3754
598977	3464
598978	3466
598979	3493
598979	3494
598981	3412
598986	3745
598989	3740
598990	3617
598994	3945
598995	4240
598997	3964
598999	4122
601000	4142
601002	4010
601003	3618/1
601005	3853
601008	3853/1
601009	3933
601010	3966
601010	3966/1
601011	3967
601014	4121
601015	4173/1

VALEO	BESER
NO	NO
601017	4141
601018	3522
601019	3568
601020	3685
601022	4099
601037	4077
601038	4156
601039	4151
601039	4151/1
601040	3956
601042	3971
601044	3853/1
601045	3964/1
601046	4149
601049	4150
601051	4247
601055	4014
601057	4146
601062	3826/3
601065	4029
601066	4134
601067	4038
601069	3800/3
601072	3940
601094	3800
601095	3938
601098	3717
601099	3826/1
601100	4128
601106	4042
601107	3846
601108	4100
601109	3905
601111	3907
601111	3907/1
601111	3907/1A
601111	3907/2
601114	3853/1
601116	3983/2
601116	3983/3
601118	4211
601121	3762
601124	4162
601129	4035
601130	4207
601132	3954
601134	4060
601135	3980
601137	4135
601139	4061
601145	4379
601146	3906
601146	3906/1
601146	3906/1A
601146	3906/2
601148	3933
601150	4056
601151	4057
601152	4132
601152	4172
601152	4172/1
601276	3922
601276	3922/1
601278	3945
601280	4309
601283	4167
601283	4380
601287	3983/2
601287	3983/3
601288	4382
601291	4337
601293	4145
601294	4166
601294	4342
601295	4220
601296	4215
601299	4265
601300	4136
601301	4061
601301	4343

VALEO	BESER
NO	NO
601305	3951
601310	4381
601311	4383
601312	4256
601320	4378
601321	3893
601322	4039
601324	4314
601331	3933
601332	4124
601333	4019
601337	4143
601338	4015
601339	3996
601340	3997
601345	4140
601346	3826/2
601347	4339
601361	4316
601362	4176
601362	4176/1
601364	4204
601366	3949
601367	3885
601369	4379
601371	4201
601371	4201/1
601373	4226
601374	4233
601377	4037
601377	4037/1
601378	4260
601382	4378
601385	4325/1
601387	4310
601388	4249
601389	4391
601395	4374
601396	4372
601397	4371
601397	4373
601399	4286
601400	4324
601402	4317
601409	4321
601411	3630
601412	4140/1
601415	4282
601416	4283
601416	4283/1
601420	4308
601423	4336
601426	4295
601427	3503
601463	3529/1
601464	3820/1
601469	4285
601482	4284
601484	4287
601489	4349
601499	4353
601509	4334
601517	3604
601521	4379
601535	4335
601536	4313
601555	3988/1
601559	4174/1
601600	4253
601675	4341
601680	4307
601681	4239
601691	4251
601691	4251/1
601692	4246
601693	4364
601700	4390
601702	4228
601702	4228/1
601706	4287

VALEO	BESER
NO	NO
601707	3984/1
601717	4229
601725	4181/1
601731	4389
601733	4282/1
601741	4357
601742	4370
601743	4369
601745	4301/1
601761	4356
601762	4350
601762	4350/1
647132	3546
647302	3481
647371	3646
671621	4296
671660	4022
872002	4174/1
872007	3923
872008	3924
872009	4351/1
872013	4369
872014	4370
872020	3861
872021	3804
872023	4350/1
872042	3799
872099	3848
872112	4057
872123	3823
872137	3853/1
872147	4056
872172	4132
872172	4172
872172	4172/1
872190	3926
872190	3926/1
872192	3925
872192	3925/2
872200	3962
872200	3962/1
872225	3846
872229	3965
872230	3965/1
872231	3995
872232	4092
872232	4092/1
872240	4054
872242	4216
872261	3986
872326	3842
872440	3801
872465	3820/3
872466	3922
872466	3922/1
872482	3853
872486	3907
872486	3907/1
872486	3907/1A
872486	3907/2
872538	3964
872557	4093
872569	3843
872577	3784
872578	4151
872578	4151/1
872587	3904
872595	3972
872597	4035
872599	3820
872599	3820/1
872600	3800
872613	3856
872623	4162
872669	3855
872692	3967
872693	3966
872693	3966/1
872705	3826/1
872708	3800

VALEO	BESER
NO	NO
872746	3841/1
872748	3795/1
872765	3971
872816	3906
872816	3906/1
872816	3906/1A
872816	3906/2
872818	3920
872818	3920/1
872832	4042
872914	3905
872918	3834
872919	3835
872921	3914
872930	3849
872973	3983
873190	3963
873190	3963/1
873466	4171
873466	3922/3
873466	4171/1
873569	3843
873577	3921
873746	3841

WAGNER	BESER
NO	NO
P001300	3410
P001310	3410
P001320	3410
P001340	3410
P002310	3873
P003300	3421
P006300	3407
P009322	3579
P011300	3509
P014300	3625
P015300	3369
P017300	3370
P019300	3417
P019310	3570
P019315	3417
P019320	3417
P019332	3417/1
P020300	3379
P029300	3415
P032300	3371
P034300	3650
P034302	3619
P034310	3649
P034312	3635
P034320	3650
P034340	3551
P034350	3531
P035300	3536
P035310	3536
P035320	3536
P035340	3536
P039300	3573
P039302	3573
P041302	3503
P041310	3503
P041312	3503
P041320	3503/1
P041330	3503
P041332	3503
P042320	3689
P043302	3440
P044302	3381
P044306	3496
P044312	3381
P044324	3493
P044332	3495
P044342	3381
P044350	3496/1
P044360	3496
P046304	3466
P046314	3466

WAGNER	BESER
NO	NO
P046322	3467
P046344	3468
P046362	3466
P046380	3466
P047302	3633
P048314	3666
P049300	3394
P049310	3394
P051302	4087
P051322	4087
P054300	3419
P054302	3429
P055300	3572
P055302	3572
P055310	3583
P055312	3572
P055320	3583
P057300	3611
P057310	3550
P057320	3630
P059300	3413
P063302	3442
P067304	3402
P068300	3621
P069301	3624
P070304	3474
P070314	3474
P070324	3556
P070334	3474
P071300	3486
P071320	3441
P071360	3585
P072300	3549
P072310	3790
P072311	3548
P072311	3690
P072330	3790/1
P072332	4141
P075300	3400
P076320	3641
P077300	3620
P078310	3436
P078320	3436
P078330	3436
P079310	3875
P081304	3446
P084300	3397
P084302	3758
P087300	3634
P087302	3634
P088300	3401
P089300	3408
P089302	3408
P089310	3408
P091304	3395
P091312	3426
P092312	3380
P092334	3487
P092396	3380
P093300	3501
P093302	3752
P097310	3714
P101302	3405
P102300	3320
P102320	3350
P106300	3318
P106330	3318
P106360	3318
P110300	3315
P110300	3515
P110320	3315
P110320	3515
P110340	3339
P110340	3514
P114300	3335
P114310	3365
P114312	3365
P114340	4103
P117320	3343
P117320	3483

WAGNER	BESER
NO	NO
P121306	3333
P121316	3329
P122300	3316
P122320	3346
P125330	3425
P126302	3366/1
P126312	3366
P139300	3311
P142300	3373
P142330	3373
P142350	3373
P144302	3526
P145300	3340
P145302	3340
P145332	3321
P146300	3378
P146310	3378
P146320	3490
P147330	3513
P148300	3537
P148310	3537
P152310	3661
P156300	3423
P156312	3423/1
P158310	3416
P160300	3374
P161302	3527
P163300	3312
P163302	3484
P168302	3323
P179300	3709
P179320	3709
P179330	3709
P180300	3393
P192300	3710
P198300	3324
P206300	4088
P206312	4088
P211300	3873
P215304	3560
P217312	4010
P218305	3632
P218306	3632
P218312	3632
P218332	3632
P218352	3632
P218382	3632
P218392	3632
P220300	3562
P220320	3562
P221302	3680
P221322	3680
P223302	3631
P224302	3696
P231300	3464
P231304	3722
P233302	3640
P237302	3683
P237310	3872
P241302	3695
P242302	4080
P243300	3660
P243340	3660
P244300	4104
P245310	3596
P251302	3704
P251332	3704
P251342	3704
P254302	3685
P254322	3685
P254332	3685
P264300	3598
P264302	3766
P267300	4072
P270300	4086
P272302	3424/1
P279300	3628
P279312	3628
P279320	3629
P281300	3879

WAGNER	BESER
NO	NO
P281320	3879
P281330	3879
P281360	4181
P282300	3733
P284300	3563
P285310	4020
P289302	3883
P289312	3883
P290300	3506
P290341	3590/1
P291300	3473
P292300	3445
P293300	3623
P293302	3623
P293320	3623
P293322	3623
P296300	3892
P296310	3892
P297300	3874
P297322	3874
P302302	3482
P304300	3462
P306300	3603
P308300	3539/1
P308312	3539
P311322	3523
P312302	3449
P312312	3522
P312332	3522
P312342	3522
P314314	3776
P320302	3428
P321300	3422
P321302	3552
P322300	3661
P322301	3771
P323300	3605
P324300	3504
P324302	3502
P324322	3502
P328302	3582
P332300	3746
P336302	3760
P338304	3757
P338304	3857
P338314	3757
P338314	3857
P338324	3757
P338324	3857
P339300	3717
P339350	3717
P339360	3717
P344300	3499
P344302	3463
P345300	3679
P345312	3994
P345322	3994
P345332	3994
P354302	3600
P354312	3600
P361302	3543
P362302	3457
P362312	3610
P363310	3529
P363315	3529
P363341	4152
P364302	3432
P364312	3491
P365300	3578
P365315	3656
P366300	3412
P366310	3453
P367311	3662
P370300	3564
P370310	3584
P371302	3723
P373302	3437
P375302	3448
P378322	3773
P378332	3773

WAGNER	BESER
NO	NO
P381300	3459
P381340	3569
P382300	3469
P382310	3469
P384300	3430
P384302	3430
P385310	3589
P386310	3470
P386320	3470
P386330	3470
P386350	3505
P386350	3615
P389302	3882
P389312	3882
P391302	4108
P393312	3779
P394322	4087
P394332	4087
P396300	3609
P396302	3609
P397300	3642
P397310	3642
P401302	3898
P402302	3740
P402322	3740
P407300	3667
P471302	3781
P478300	3567
P479300	3678
P480300	3670
P480310	3670
P482300	3675
P483300	3809
P484300	3512
P486300	3677
P486310	3677
P487312	3618
P487322	3618
P488310	3897
P489302	3617
P489312	3617
P489322	3617
P489342	3617
P491330	3795/1
P492302	3577
P492312	3598/1
P492322	3577
P493300	4034
P494302	3884
P495302	3602
P496300	3881
P496310	3881
P498302	3697
P502302	3554
P502302	3651
P502322	3554
P502322	3651
P502342	3554
P502342	3651
P503302	4078
P505302	3688
P507300	3581
P510300	3745
P512300	3714
P513300	3693
P513304	3693
P514301	3608
P514320	3643
P515332	4269
P515342	4269
P516300	3833
P517300	3545
P517310	3545
P518302	3607
P519302	3686
P519322	3686
P521300	3777
P521320	3777
P524304	4099
P525302	3674

WAGNER	BESER
NO	NO
P525322	3674
P526302	3887
P526312	3887
P529304	3673
P531310	4128
P532300	3558
P532302	3593
P533300	4214
P538304	3819
P539304	3878
P541300	3909
P547300	4197
P556302	3915
P556314	3915
P559300	3511
P560302	3622
P560312	3622
P561302	3528
P562300	3888
P567300	4182
P567320	4182
P567340	4182
P568300	3736
P580300	3553
P584302	3867
P586302	3595
P587302	3559
P594302	3507
P601300	3681
P603302	3648
P605302	4281
P606300	3830
P607304	3829
P608302	4059
P609300	3821
P609310	3821
P610302	4027
P611304	3859
P612302	3768
P613300	3919
P614300	3918
P617300	3861
P619300	3943
P620302	3901
P624302	3928
P624311	3928
P625302	3748
P627310	4123
P627320	4123
P629302	3913
P630301	3767
P633300	3804
P635302	4110
P636302	4011
P636312	4011
P639302	4009
P640302	3769
P641302	3788
P646302	3993
P646312	3993
P646322	3993
P646332	3993
P646342	3895
P646362	3895
P647312	4109
P647312	4232
P648302	4017
P650302	4084
P652312	4222
P666300	3877
P667301	4345
P668300	3836
P669300	4102
P670300	4101
P670300	4209
P671302	3843
P671312	3843
P671322	3843
P672302	3784
P672312	3921

WAGNER	BESER
NO	NO
P674302	3846
P674312	3846
P675301	4138
P676300	4100
P677300	4093
P677310	4093
P701300	3863
P701320	3863
P701330	3863
P702302	3799
P703304	3750
P705302	4062
P705312	4062
P709300	3538
P709310	3566
P709320	3637
P718300	3606
P718301	3794
P719302	3574
P720300	3419
P720320	3419
P721300	3822
P730300	3663
P731310	3896
P731312	3896
P733300	3682
P734304	3636
P735300	3872
P736304	4071
P743300	3659
P743310	3938
P743320	3938
P745302	3687/1
P745312	3687/1
P747302	3764
P750300	4125
P751300	3575
P751310	3575/2
P755302	4079
P762302	3653
P774312	3932
P775302	3778
P778300	3676
P779300	4274
P784302	3762
P791300	3754
P793300	3755
P794310	4115
P795302	4155
P796300	3744
P797301	4126
P798301	4069
P799300	3780
P851302	3912
P851311	3912
P853302	3959
P853312	3959
P853322	3959
P854300	4013
P858310	4208
P859301	3835
P860301	3834
P861300	3914
P862300	3950
P864312	4096
P865301	3765
P870302	3889
P871302	3769
P873302	4031
P876300	3849
P876310	3849
P876320	3849
P877300	3850
P878302	4112
P884300	3801
P885302	4074
P886300	3951
P887300	3983
P887302	3983/2
P887311	3983/1

WAGNER	BESER
NO	NO
P888300	3891
P896300	4076
P900322	4118
P902300	4119
P903312	3893
P903322	3893
P904302	3955
P904312	3955
P904331	3955
P907302	4012
P913300	4158
P919300	3856
P921302	3802
P921312	3802
P922300	4094
P922312	3817
P927304	3934
P928304	3935
P933300	3855
P934300	3848
P934310	3848
P936302	4095
P939302	4153
P940310	3820
P940320	3820
P940330	3820
P941300	3800
P942300	3853
P942320	3853/1
P942330	3853/1
P943300	3852
P943310	3852
P945301	4271
P949300	3823
P949310	3823
P954300	3911
P955300	4082
P957300	4180
P958301	3826/1
P958310	3826
P958311	3826/1
P958330	3826
P958332	3826/3
P959301	3800/1
P959310	3800
P959311	3800/1
P959312	3800/3
P959321	3800/2
P974302	3825
P976301	3933
P976321	3933
P976331	3933
P976341	3933
P979312	3986
P980300	3931
P981300	3854
P983311	4303
P984300	3910
P988300	4211
P988340	4211
P992300	4179
P993302	3961
P997311	3842
P999300	3831
P999302	3831
P0013.00	3410
P0013.10	3410
P0013.20	3410
P0013.40	3410
P0023.10	3873
P0033.00	3421
P0063.00	3407
P0093.22	3579
P0113.00	3509
P0143.00	3625
P0153.00	3369
P0173.00	3370
P0193.00	3417
P0193.10	3570
P0193.15	3417

WAGNER	BESER
NO	NO
P0193.20	3417
P0193.32	3417/1
P0203.00	3379
P0293.00	3415
P0323.00	3371
P0343.00	3650
P0343.02	3619
P0343.10	3649
P0343.12	3635
P0343.20	3650
P0343.40	3551
P0343.50	3531
P0353.00	3536
P0353.10	3536
P0353.20	3536
P0353.40	3536
P0393.00	3573
P0393.02	3573
P0413.02	3503
P0413.10	3503
P0413.12	3503
P0413.20	3503/1
P0413.30	3503
P0413.32	3503
P0423.20	3689
P0433.02	3440
P0443.02	3381
P0443.06	3496
P0443.12	3381
P0443.24	3493
P0443.32	3495
P0443.42	3381
P0443.50	3496/1
P0443.60	3496
P0463.04	3466
P0463.14	3466
P0463.22	3467
P0463.44	3468
P0463.62	3466
P0463.80	3466
P0473.02	3633
P0483.14	3666
P0493.00	3394
P0493.10	3394
P0513.02	4087
P0513.22	4087
P0543.00	3419
P0543.02	3429
P0553.00	3572
P0553.02	3572
P0553.10	3583
P0553.12	3572
P0553.20	3583
P0573.00	3611
P0573.10	3550
P0573.20	3630
P0593.00	3413
P0633.02	3442
P0673.04	3402
P0683.00	3621
P0693.01	3624
P0703.04	3474
P0703.14	3474
P0703.24	3556
P0703.34	3474
P0713.00	3486
P0713.20	3441
P0713.60	3585
P0723.00	3549
P0723.10	3790
P0723.11	3548
P0723.11	3690
P0723.30	3790/1
P0723.32	4141
P0753.00	3400
P0763.20	3641
P0773.00	3620
P0783.10	3436
P0783.20	3436
P0783.30	3436

WAGNER	BESER
NO	NO
P0793.10	3875
P0813.04	3446
P0843.00	3397
P0843.02	3758
P0873.00	3634
P0873.02	3634
P0883.00	3401
P0893.00	3408
P0893.02	3408
P0893.10	3408
P0913.04	3395
P0913.12	3426
P0923.12	3380
P0923.34	3487
P0923.96	3380
P0933.00	3501
P0933.02	3752
P0973.10	3714
P1000300	4173
P1000311	4173/1
P1001304	3940
P1002304	3939
P1003300	3946
P1009302	3923/1
P1013.02	3405
P1013300	4137
P1023.00	3320
P1023.20	3350
P1023302	3797
P1026308	4006
P1027308	4018
P1028308	4198
P1029301	3900
P1033302	3968
P1034302	4001
P1035302	3969
P1036301	4213
P1037302	4081
P1038300	3984
P1039302	3985
P1049310	4058
P1051300	3988
P1052300	3747
P1058300	4293
P1059300	3944
P1059310	3944
P1062301	3952
P1062312	3952
P1063.00	3318
P1063.30	3318
P1063.60	3318
P1066301	4000
P1073302	4016
P1077300	3987
P1079300	4210
P1081302	4113
P1083301	4121
P1096302	4029
P1103.00	3315
P1103.00	3515
P1103.20	3315
P1103.20	3515
P1103.40	3339
P1103.40	3514
P1130301	3904
P1131300	3905
P1136302	4042
P1137300	4216
P1138302	4028
P1138312	4028
P1139300	4105
P1140300	4111
P1141302	3978
P1141312	3978
P1142302	3979
P1143.00	3335
P1143.10	3365
P1143.12	3365
P1143.40	4103
P1145301	3841/1

WAGNER	BESER
NO	NO
P1145311	3841
P1146302	3890
P1147302	4154
P1148300	3894
P1151302	4106
P1152300	4346
P1168302	4159
P1169300	3827
P1173.20	3343
P1173.20	3483
P1181311	4036
P1182300	3885
P1185302	3976/1
P1198314	3886
P1201300	4248
P1202302	4039
P1203302	4165
P1204300	4249
P1204310	4259
P1205300	4247
P1210302	3956
P1213.06	3333
P1213.16	3329
P1218300	4038
P1223.00	3316
P1223.20	3346
P1223300	3970
P1237300	4054
P1239300	3995
P1243300	4260
P1250300	4134
P1251300	3966
P1252300	3967
P1253.30	3425
P1256302	4037
P1262302	4061
P1263.02	3366/1
P1263.12	3366
P1275312	4149
P1282300	3971
P1287300	4142
P1288304	4150
P1300300	3945
P1302300	4240
P1308302	3880
P1309302	3980
P1323302	4073
P1324300	3958
P1325302	3929
P1326302	3960
P1328301	4258
P1331300	3949
P1332300	3953
P1333300	3948
P1334300	4077
P1335302	3982
P1338300	3820/3
P1339302	3989
P1342300	3975
P1342301	3975
P1343300	3962
P1345300	3925
P1345302	3965/1
P1345310	3965
P1346300	3926
P1347300	3963
P1348300	3964
P1348310	3964/1
P1350300	3906/1
P1350302	3906
P1351302	3920
P1352302	3907
P1356300	4157
P1359302	4005
P1361312	3976
P1364302	4004
P1366300	3903
P1371302	3996
P1372300	3997
P1373.02	4368

WAGNER	BESER
NO	NO
P1374302	4060
P1375301	3922
P1381302	4122
P1382300	4092
P1386302	3954
P1389302	4160
P1390302	4156
P1391302	4035
P1392301	3972
P1393.00	3311
P1393302	4015
P1397300	4207
P1399300	4151
P1423.00	3373
P1423.30	3373
P1423.50	3373
P1443.02	3526
P1453.00	3340
P1453.02	3340
P1453.32	3321
P1463.00	3378
P1463.10	3378
P1463.20	3490
P1473.30	3513
P1483.00	3537
P1483.10	3537
P1493.10	3840
P1503302	4146
P1507300	4124
P1509310	4314
P1520300	4135
P1523.10	3661
P1531302	4008
P1531312	4230
P1532302	4014
P1532312	4014
P1539301	4057
P1540301	4162
P1542301	4132
P1542301	4172
P1549301	4056
P1563.00	3423
P1563.12	3423/1
P1583.10	3416
P1603.00	3374
P1613.02	3527
P1633.00	3312
P1633.02	3484
P1683.02	3323
P1793.00	3709
P1793.20	3709
P1793.30	3709
P1803.00	3393
P1923.00	3710
P1983.00	3324
P2063.00	4088
P2063.12	4088
P2113.00	3873
P2153.04	3560
P2173.12	4010
P2183.05	3632
P2183.06	3632
P2183.12	3632
P2183.32	3632
P2183.52	3632
P2183.82	3632
P2183.92	3632
P2203.00	3562
P2203.20	3562
P2213.02	3680
P2213.22	3680
P2233.02	3631
P2243.02	3696
P2313.00	3464
P2313.04	3722
P2333.02	3640
P2373.10	3872
P2413.02	3695
P2423.02	4080
P2433.00	3660

WAGNER	BESER
NO	NO
P2433.40	3660
P2453.00	3596
P2453.10	3596
P2513.02	3704
P2513.32	3704
P2513.42	3704
P2543.02	3685
P2543.22	3685
P2543.32	3685
P2643.00	3598
P2643.02	3766
P2673.00	4072
P2703.00	4086
P2723.02	3424/1
P2793.00	3628
P2793.12	3628
P2793.20	3629
P2813.00	3879
P2813.20	3879
P2813.30	3879
P2813.60	4181
P2823.00	3733
P2843.00	3563
P2853.10	4020
P2893.02	3883
P2893.12	3883
P2903.00	3506
P2903.41	3590/1
P2913.00	3473
P2923.00	3445
P2933.00	3623
P2933.02	3623
P2933.20	3623
P2933.22	3623
P2963.00	3892
P2963.10	3892
P2973.00	3874
P2973.22	3874
P3023.02	3482
P3043.00	3462
P3063.00	3603
P3083.00	3539/1
P3083.12	3539
P3113.22	3523
P3123.02	3449
P3123.12	3522
P3123.32	3522
P3123.42	3522
P3143.14	3776
P3203.02	3428
P3213.00	3422
P3213.02	3552
P3223.00	3661
P3223.01	3771
P3233.00	3605
P3243.00	3504
P3243.02	3502
P3243.22	3502
P3283.02	3582
P3323.00	3746
P3333.02	4212
P3363.02	3760
P3383.04	3757
P3383.04	3857
P3383.14	3757
P3383.14	3857
P3383.24	3757
P3383.24	3857
P3393.00	3717
P3393.50	3717
P3393.60	3717
P3443.00	3499
P3443.02	3463
P3453.00	3679
P3453.12	3994
P3453.22	3994
P3453.32	3994
P3543.02	3600
P3543.12	3600
P3613.02	3543

WAGNER	BESER
NO	NO
P3623.02	3457
P3623.12	3610
P3633.10	3529
P3633.15	3529
P3633.41	4152
P3643.02	3432
P3643.12	3491
P3653.00	3578
P3653.15	3656
P3663.00	3412
P3663.10	3453
P3703.00	3564
P3703.10	3584
P3713.02	3723
P3733.02	3437
P3753.02	3448
P3783.22	3773
P3783.32	3773
P3813.00	3459
P3813.40	3569
P3823.00	3469
P3823.10	3469
P3843.00	3430
P3843.02	3430
P3853.10	3589
P3863.10	3470
P3863.20	3470
P3863.30	3470
P3863.50	3505
P3863.50	3615
P3893.02	3882
P3893.12	3882
P3913.02	4108
P3933.12	3779
P3943.22	4087
P3943.32	4087
P3963.00	3609
P3963.02	3609
P3973.00	3642
P3973.10	3642
P4013.02	3898
P4023.02	3740
P4023.22	3740
P4073.00	3667
P4713.02	3781
P4783.00	3567
P4793.00	3678
P4803.00	3670
P4803.10	3670
P4823.00	3675
P4833.00	3809
P4843.00	3512
P4863.00	3677
P4863.10	3677
P4873.12	3618
P4873.22	3618
P4883.10	3897
P4893.02	3617
P4893.12	3617
P4893.22	3617
P4893.42	3617
P4913.30	3795/1
P4923.02	3577
P4923.12	3598/1
P4923.22	3577
P4933.00	4034
P4943.02	3884
P4953.02	3602
P4963.00	3881
P4963.10	3881
P4983.02	3697
P5023.02	3554
P5023.02	3651
P5023.22	3554
P5023.22	3651
P5023.42	3554
P5023.42	3651
P5033.02	4078
P5053.02	3688
P5073.00	3581

WAGNER	BESER
NO	NO
P5103.00	3745
P5123.00	3714
P5133.00	3693
P5133.04	3693
P5143.01	3608
P5143.20	3643
P5153.32	4269
P5153.42	4269
P5163.00	3833
P5173.00	3545
P5173.10	3545
P5183.02	3607
P5193.02	3686
P5193.22	3686
P5213.00	3777
P5213.20	3777
P5243.04	4099
P5253.02	3674
P5253.22	3674
P5263.02	3887
P5263.12	3887
P5293.04	3673
P5313.10	4128
P5323.00	3558
P5323.02	3593
P5333.00	4214
P5383.04	3819
P5393.04	3878
P5413.00	3909
P5473.00	4197
P5563.02	3915
P5563.14	3915
P5593.00	3511
P5603.02	3622
P5603.12	3622
P5613.02	3528
P5623.00	3888
P5673.00	4182
P5673.20	4182
P5673.40	4182
P5683.00	3736
P5803.21	3553/1
P5843.02	3867
P5863.02	3595
P5873.02	3559
P5943.02	3507
P6013.00	3681
P6033.02	3648
P6053.02	4281
P6063.00	3830
P6073.04	3829
P6083.02	4059
P6093.00	3821
P6093.10	3821
P6103.02	4027
P6113.04	3859
P6123.02	3768
P6133.00	3919
P6143.00	3918
P6173.00	3861
P6193.00	3943
P6203.02	3901
P6243.02	3928
P6243.11	3928
P6253.02	3748
P6273.10	4123
P6273.20	4123
P6293.02	3913
P6303.01	3767
P6333.00	3804
P6353.02	4110
P6363.02	4011
P6363.12	4011
P6393.02	4009
P6403.02	3769
P6413.02	3788
P6463.02	3993
P6463.12	3993
P6463.22	3993
P6463.32	3993

WAGNER	BESER
NO	NO
P6463.42	3895
P6463.62	3895
P6473.12	4109
P6473.12	4232
P6483.02	4017
P6503.02	4084
P6523.12	4222
P6663.00	3877
P6673.01	4345
P6683.00	3836
P6693.00	4102
P6703.00	4101
P6703.00	4209
P6713.02	3843
P6713.12	3843
P6713.22	3843
P6723.02	3784
P6723.12	3921
P6743.02	3846
P6743.12	3846
P6753.01	4138
P6763.00	4100
P6773.00	4093
P6773.10	4093
P7013.00	3863
P7013.20	3863
P7013.30	3863
P7023.02	3799
P7033.04	3750
P7053.02	4062
P7053.12	4062
P7093.00	3538
P7093.10	3566
P7093.20	3637
P7183.00	3606
P7183.01	3794
P7193.02	3574
P7203.00	3419
P7203.20	3419
P7213.00	3822
P7303.00	3663
P7313.10	3896
P7313.12	3896
P7333.00	3682
P7343.04	3636
P7353.00	3872
P7363.04	4071
P7433.00	3659
P7433.10	3938
P7433.20	3938
P7453.02	3687/1
P7453.12	3687/1
P7473.02	3764
P7503.00	4125
P7513.00	3575
P7513.10	3575/2
P7553.02	4079
P7623.02	3653
P7743.12	3932
P7753.02	3778
P7783.00	3676
P7793.00	4274
P7843.02	3762
P7913.00	3754
P7933.00	3755
P7943.10	4115
P7953.02	4155
P7963.00	3744
P7973.01	4126
P7983.01	4069
P7993.00	3780
P8513.02	3912
P8513.11	3912
P8533.02	3959
P8533.12	3959
P8533.22	3959
P8543.00	4013
P8583.10	4208
P8593.01	3835
P8603.01	3834

WAGNER	BESER
NO	NO
P8613.00	3914
P8623.00	3950
P8643.12	4096
P8653.01	3765
P8703.02	3889
P8713.02	3769
P8733.02	4031
P8763.00	3849
P8763.10	3849
P8763.20	3849
P8773.00	3850
P8783.02	4112
P8843.00	3801
P8853.02	4074
P8863.00	3951
P8873.00	3983
P8873.02	3983/2
P8873.11	3983/1
P8883.00	3891
P8963.00	4076
P9003.22	4118
P9023.00	4119
P9033.12	3893
P9033.22	3893
P9043.02	3955
P9043.12	3955
P9043.31	3955
P9073.02	4012
P9133.00	4158
P9193.00	3856
P9213.02	3802
P9213.12	3802
P9223.00	4094
P9223.12	3817
P9273.04	3934
P9283.04	3935
P9333.00	3855
P9343.00	3848
P9343.10	3848
P9363.02	4095
P9393.02	4153
P9403.10	3820
P9403.20	3820
P9403.30	3820
P9413.00	3800
P9423.00	3853
P9423.20	3853/1
P9423.30	3853/1
P9433.00	3852
P9433.10	3852
P9453.01	4271
P9493.00	3823
P9493.10	3823
P9543.00	3911
P9553.00	4082
P9573.00	4180
P9583.01	3826/1
P9583.10	3826
P9583.11	3826/1
P9583.30	3826
P9583.32	3826/3
P9593.01	3800/1
P9593.10	3800
P9593.11	3800/1
P9593.12	3800/3
P9593.21	3800/2
P9603.12	4301
P9743.02	3825
P9763.01	3933
P9763.21	3933
P9763.31	3933
P9763.41	3933
P9793.12	3986
P9803.00	3931
P9813.00	3854
P9833.11	4303
P9843.00	3910
P9873.04	4327
P9883.00	4211
P9883.40	4211

WAGNER	BESER
NO	NO
P9923.00	4179
P9933.02	3961
P9973.11	3842
P9993.00	3831
P9993.02	3831
P10003.00	4173
P10003.11	4173/1
P10013.04	3940
P10023.04	3939
P10033.00	3946
P10093.02	3923/1
P10133.00	4137
P10233.02	3797
P10263.08	4006
P10273.08	4018
P10283.08	4198
P10293.01	3900
P10333.02	3968
P10343.02	4001
P10353.02	3969
P10363.01	4213
P10373.02	4081
P10383.00	3984
P10393.02	3985
P10493.10	4058
P10513.00	3988
P10523.00	3747
P10583.00	4293
P10593.00	3944
P10593.10	3944
P10623.01	3952
P10623.12	3952
P10663.01	4000
P10733.02	4016
P10773.00	3987
P10793.00	4210
P10813.02	4113
P10833.01	4121
P10963.02	4029
P11303.01	3904
P11313.00	3905
P11363.02	4042
P11373.00	4216
P11383.02	4028
P11383.12	4028
P11393.00	4105
P11403.00	4111
P11413.02	3978
P11413.12	3978
P11423.02	3979
P11453.01	3841/1
P11453.11	3841
P11463.02	3890
P11473.02	4154
P11483.00	3894
P11513.02	4106
P11523.00	4346
P11683.02	4159
P11693.00	3827
P11813.11	4036
P11823.00	3885
P11853.02	3976/1
P11983.14	3886
P12013.00	4248
P12023.02	4039
P12033.02	4165
P12043.00	4249
P12043.10	4259
P12053.00	4247
P12103.02	3956
P12123.00	4255
P12183.00	4038
P12233.00	3970
P12373.00	4054
P12393.00	3995
P12433.00	4260
P12453.00	4309
P12503.00	4134
P12513.00	3966
P12523.00	3967

WAGNER	BESER
NO	NO
P12563.02	4037
P12623.02	4061
P12753.12	4149
P12793.10	4310
P12823.00	3971
P12873.00	4142
P12883.04	4150
P12953.00	4256
P13003.00	3945
P13023.00	4240
P13083.02	3880
P13093.02	3980
P13233.02	4073
P13243.00	3958
P13253.02	3929
P13263.02	3960
P13283.01	4258
P13313.00	3949
P13323.00	3953
P13333.00	3948
P13343.00	4077
P13353.02	3982
P13383.00	3820/3
P13393.02	3989
P13423.00	3975
P13423.01	3975
P13433.00	3962
P13453.00	3925
P13453.02	3965/1
P13453.10	3965
P13463.00	3926
P13473.00	3963
P13483.00	3964
P13483.10	3964/1
P13503.00	3906/1
P13503.02	3906
P13513.02	3920
P13523.02	3907
P13563.00	4157
P13593.02	4005
P13613.12	3976
P13643.02	4004
P13663.00	3903
P13713.02	3996
P13723.00	3997
P13743.02	4060
P13753.01	3922
P13753.12	4171
P13753.12	3922/3
P13813.02	4122
P13823.00	4092
P13863.02	3954
P13893.02	4160
P13903.02	4156
P13913.02	4035
P13923.01	3972
P13933.02	4015
P13973.00	4207
P13993.00	4151
P14103.10	4226
P14143.00	4204
P14303.00	4201
P14483.02	4312
P14573.00	4374
P14603.00	4371
P14603.00	4373
P14623.00	4372
P14693.02	4317
P14703.02	4318
P14883.02	4224
P15033.02	4146
P15073.00	4124
P15073.12	4308
P15093.10	4314
P15123.32	4166
P15203.00	4135
P15233.02	4233
P15263.02	4049
P15313.02	4008
P15313.12	4230

WAGNER	BESER
NO	NO
P15323.02	4014
P15323.12	4014
P15393.01	4057
P15403.01	4162
P15423.01	4132
P15423.01	4172
P15493.01	4056
P15643.08	4145
P15663.00	3998
P15683.02	4167
P15813.02	4265
P15883.02	4136
P16193.00	4369
P16203.00	4370
P16243.08	4280
P19013.02	4376
WBP20011B	3350
WBP20034A	3318
WBP20073A	3316
WBP20140A	3329
WBP20153A	3373
WBP20162A	3873
WBP20168A	3650
WBP20168B	3531
WBP20228A	3327
WBP20261A	3986
WBP20328A	3875
WBP20341A	3339
WBP20341A	3514
WBP20359A	3423
WBP20380A	3526
WBP20392A	3315
WBP20392A	3515
WBP20410A	3596
WBP20480A	3374
WBP20488A	3527
WBP20547A	3623
WBP20635A	3493
WBP20635A	3494
WBP20640A	3417
WBP20652A	4020
WBP20660A	3421
WBP20669A	3619
WBP20675A	3572
WBP20676C	3590/1
WBP20687A	3550
WBP20687B	3611
WBP20731A	3509
WBP20741A	3440
WBP20759A	3423
WBP20775A	3424
WBP20780A	3746
WBP20833A	3466
WBP20835A	3679
WBP20841A	3425
WBP20852A	3371
WBP20857A	3621
WBP20861A	3419
WBP20863A	3415
WBP20870A	3402
WBP20887A	3444
WBP20887B	3585
WBP20887C	3486
WBP20887C	3486/1
WBP20889A	3441
WBP20904A	3413
WBP20905A	3380
WBP20907A	3548
WBP20907A	3690
WBP20926A	3482
WBP20939A	3410
WBP20941A	3408
WBP20950A	3424/1
WBP20958A	3394
WBP20959A	3501
WBP20961D	3529
WBP20961F	4152
WBP20968A	3564
WBP20968B	3584
WBP20979A	3605

WAGNER	BESER
NO	NO
WBP20995A	3578
WBP21012A	3502
WBP21012B	3502
WBP21016A	3428
WBP21050A	3717
WBP21050B	3717
WBP21055A	3430
WBP21089A	3583
WBP21089B	3583
WBP21096A	3495
WBP21099A	3397
WBP21100A	3432
WBP21140A	3469
WBP21141A	3603
WBP21144A	3536
WBP21153A	3628
WBP21153B	3629
WBP21158A	3414
WBP21158A	3714
WBP21171A	3464
WBP21173A	3609
WBP21190A	3470
WBP21193A	3459
WBP21202A	3589
WBP21205A	3543
WBP21209A	3457
WBP21232A	3641
WBP21237A	3771
WBP21238A	3661
WBP21243A	3436
WBP21278A	3680
WBP21278C	3680
WBP21280A	4104
WBP21282A	3879
WBP21292A	3563
WBP21301A	3630
WBP21305A	3581
WBP21312A	4212
WBP21347A	3760
WBP21355A	3723
WBP21363A	3685
WBP21363B	3685
WBP21368A	3733
WBP21373A	3448
WBP21385A	3642
WBP21388A	3539
WBP21394A	3558
WBP21395A	3593
WBP21411A	3736
WBP21430B	3528
WBP21436A	3608
WBP21436B	3643
WBP21459A	3662
WBP21463A	3503
WBP21463B	3503/1
WBP21467A	3757
WBP21467A	3857
WBP21468A	3777
WBP21469A	3445
WBP21470A	3473
WBP21471A	3909
WBP21479A	3553
WBP21479B	3553/1
WBP21480A	3423/1
WBP21481A	3888
WBP21486A	3881
WBP21490A	3915
WBP21495A	3426
WBP21500A	3882
WBP21515A	3683
WBP21515A	3872/1
WBP21515B	3872
WBP21519A	3453
WBP21545A	3660
WBP21546A	3562
WBP21553A	4087
WBP21576A	3567
WBP21601A	3554
WBP21601A	3651
WBP21610A	3487

WAGNER	BESER
NO	NO
WBP21610A	3489
WBP21614A	3556
WBP21621A	3678
WBP21626A	4128
WBP21631A	3819
WBP21632A	3878
WBP21637A	3617
WBP21647A	3622
WBP21651A	3704
WBP21651B	3704
WBP21654A	3522
WBP21657A	3598
WBP21662A	3419
WBP21664A	3677
WBP21670A	3863
WBP21679A	3560
WBP21691A	3656
WBP21694A	3607
WBP21697A	3686
WBP21703A	4080
WBP21706A	4108
WBP21719A	4148/1
WBP21724A	3750
WBP21725A	3632
WBP21766A	3833
WBP21775A	3673
WBP21797A	3595
WBP21799A	3559
WBP21822A	4182
WBP21822B	4182
WBP21833A	3776
WBP21840A	3688
WBP21845A	3674
WBP21848A	3506
WBP21861A	4062
WBP21862A	3505
WBP21862A	3615
WBP21866A	3566
WBP21866B	3637
WBP21866C	3538
WBP21875A	3887
WBP21883A	3794
WBP21883B	3606
WBP21898A	3821
WBP21900A	3663
WBP21907A	3883
WBP21919A	3676
WBP21925A	3563
WBP21927C	3618
WBP21930A	3897
WBP21945B	3896
WBP21945C	3896
WBP21947A	3693
WBP21980A	3659
WBP21983A	4059
WBP21998A	4281
WBP23003A	3799
WBP23004A	3577
WBP23004A	3647
WBP23020A	3861
WBP23021A	3804
WBP23022A	3681
WBP23063A	3762
WBP23070A	4125
WBP23070B	4125
WBP23073A	3919
WBP23075A	3918
WBP23078A	4101
WBP23078A	4209
WBP23080A	3675
WBP23094A	4115
WBP23099A	3848
WBP23103A	3570
WBP23112A	3943
WBP23119A	4222
WBP23124A	3636
WBP23130B	3682
WBP23144A	3836
WBP23144B	3836
WBP23154A	3754

WAGNER	BESER
NO	NO
WBP23157A	4103
WBP23172A	3539/1
WBP23178A	4110
WBP23189A	4069
WBP23193A	4126
WBP23193A	4126/1
WBP23202A	3877
WBP23215A	3950
WBP23225A	3846
WBP23234A	3687/1
WBP23234B	3687/1
WBP23238A	3778
WBP23241A	3744
WBP23245A	3852
WBP23269B	4095
WBP23271A	4102
WBP23273A	3934
WBP23277A	3935
WBP23279A	4100
WBP23290A	3809
WBP23300A	3722
WBP23309A	4179
WBP23312A	4180
WBP23314A	3884
WBP23326A	3842
WBP23336A	4011
WBP23340A	4112
WBP23348A	3768
WBP23353A	3755
WBP23384A	3740
WBP23402A	4211
WBP23407A	3854
WBP23409A	3931
WBP23420A	3932
WBP23434A	3784
WBP23440A	3801
WBP23442A	4009
WBP23447A	4181/1
WBP23471A	3512
WBP23471A	3512/1
WBP23471B	3512/2
WBP23482A	3853
WBP23487A	4271
WBP23488A	3892
WBP23490A	3780
WBP23497A	3901
WBP23502A	4010
WBP23507A	3928
WBP23510A	3769
WBP23515A	3874
WBP23517A	4123
WBP23521A	3788
WBP23524A	3829
WBP23527A	4155
WBP23536A	3648
WBP23539A	3830
WBP23540A	3767
WBP23543A	3993
WBP23552A	3790/1
WBP23557A	4093
WBP23557B	4093
WBP23558A	4079
WBP23569A	3843
WBP23572A	3913
WBP23581B	4138
WBP23581B	4138/1
WBP23584A	3955
WBP23585A	4158
WBP23587A	3904
WBP23593A	4084
WBP23597A	3938
WBP23599A	3820
WBP23599A	3820/1
WBP23600A	3800
WBP23611A	3859
WBP23613A	3856
WBP23615A	4094
WBP23620A	4154
WBP23623A	4389
WBP23638A	4012

WAGNER	BESER
NO	NO
WBP23649A	3802
WBP23652A	4148/1
WBP23656A	4153
WBP23662A	4027
WBP23669A	3855
WBP23671A	3552
WBP23673A	3895
WBP23694A	4076
WBP23698A	4143
WBP23705A	3826/1
WBP23705B	3826
WBP23705C	3826/3
WBP23708A	3800/1
WBP23719A	4159
WBP23723A	3885
WBP23729A	4109
WBP23729A	4232
WBP23732A	4181
WBP23746A	3841
WBP23746B	3841/1
WBP23762A	4096
WBP23763A	4096
WBP23766A	3817
WBP23768A	3890
WBP23780A	3764
WBP23791A	4208
WBP23794A	4346
WBP23816A	3825
WBP23832A	4042
WBP23836A	4013
WBP23840A	3921
WBP23865A	3912
WBP23868A	3831
WBP23871A	3933
WBP23873A	4269
WBP23879A	3900
WBP23891A	3959
WBP23914A	3905
WBP23917A	3834
WBP23919A	3835
WBP23921A	3914
WBP23922A	4210
WBP23926A	4388
WBP23930A	3849
WBP23934A	3850
WBP23954A	3820
WBP23954A	3820/1
WBP23959A	3987
WBP23960A	4240
WBP23966A	4028
WBP23967A	4111
WBP23970A	4017
WBP23973A	3983
WBP23973B	3983/1
WBP23974A	3951
WBP23980A	3795/1
WBP23981A	3800/2
WBP23989A	4105
WBP24007A	3923/1
WBP24008A	3924/1
WBP24014A	4106
WBP24024A	3891
WBP24031A	3961
WBP24046A	3889
WBP24056A	4074
WBP24058A	3979
WBP24071A	3894
WBP24072A	4173
WBP24072B	4173/1
WBP24083A	4031
WBP24092A	3978
WBP24098A	3945
WBP24122A	3956
WBP24123A	4161
WBP24133A	3940
WBP24134A	3939
WBP24135A	3946
WBP24136A	3853/1
WBP24137A	3853/1
WBP24150A	3984

WAGNER	BESER
NO	NO
WBP24162A	4137
WBP24163A	4018
WBP24164A	4198
WBP24166A	4006
WBP24167A	3976/1
WBP24170A	4207
WBP24191A	4293
WBP24192A	3944
WBP24218A	4001
WBP24222A	4081
WBP24227A	3952
WBP24246A	4118
WBP24250A	4016
WBP24253A	4247
WBP24260A	4058
WBP24271A	4213
WBP24275A	3968
WBP24276A	3969
WBP24277A	3985
WBP24283B	4122
WBP24291A	3765
WBP24301A	4000
WBP24306A	4248
WBP24310A	4249
WBP24317A	3880
WBP24320A	3980
WBP24336A	3953
WBP24337A	4077
WBP24338A	3949
WBP24343A	4216
WBP24346A	3929
WBP24351A	3960
WBP24370A	3886
WBP24372A	4036
WBP24386A	3996
WBP24412A	4149
WBP24421A	4150
WBP24421B	4150
WBP24465A	3820/3
WBP24466A	3922
WBP24466A	3922/1
WBP24467A	3922
WBP24467A	3922/1
WBP24483A	4390
WBP24483B	4390
WBP24484A	3906
WBP24484A	3906/1
WBP24484A	3906/1A
WBP24484A	3906/2
WBP24485A	3920
WBP24485A	3920/1
WBP24486A	3907
WBP24486A	3907/1
WBP24486A	3907/1A
WBP24486A	3907/2
WBP24510A	3976
WBP24529A	3975
WBP24537A	4157
WBP24537B	4157
WBP24537C	4157
WBP24538A	3964
WBP24561A	4325/1
WBP24578A	4151
WBP24578A	4151/1
WBP24582A	4029
WBP24595A	3972
WBP24597A	4035
WBP24606A	4260
WBP24610A	3954
WBP24632A	4038
WBP24653A	3997
WBP24660A	3970
WBP24664A	4037
WBP24664A	4037/1
WBP24673A	4141
WBP24688A	4378
WBP24692A	3967
WBP24693A	3966
WBP24693A	3966/1
WBP24693B	3966

WAGNER	BESER
NO	NO
WBP24693B	3966/1
WBP24709A	4134
WBP24727A	4121
WBP24765A	3971
WBP24820A	4142
WBP24912A	4381
WBP24914A	3964/1
WBP24949A	3980
WBP25199A	4382
WBP25307A	4383
WBP25698A	4176/1
WBP29001A	3749/1
WBP29041A	3523
WBP29121A	3575
WBP29121B	3575/2
WBP29122A	3994
WBP29123A	3823
WBP29123B	3823
WBP29160C	3942/A
WBP29190A	3926
WBP29190A	3926/1
WBP29192A	3925
WBP29192A	3925/2
WBP29200A	3962
WBP29200A	3962/1
WBP29217A	3963
WBP29217A	3963/1
WBP29229A	3965
WBP29230A	3965/1
WBP29231A	3995
WBP29232A	4092
WBP29232A	4092/1
WBP29784A	3513
WBP29835A	3679
WBP80001A	4143
WBP80011A	4201/1
PSA1414300	4204

WOKING	BESER
NO	NO
P044324	3494
P071305	3444/1
P071310	3444/1
P071360	3585/1
P092334	3489
P225312	4148/1
P225322	4148/1
P225342	4148/1
P225352	4148/1
P237302	3872/1
P281361	4181/1
P484300	3512/1
P492302	3647
P492322	3647
P493300	4034/1
P675301	4138/1
P719302	3914/1
P751386	3942/A
P797301	4126/1
P887302	3983/3
P940310	3820/1
P940320	3820/1
P940330	3820/1
P957320	4378
P0443.24	3494
P0713.05	3444/1
P0713.10	3444/1
P0713.60	3585/1
P0923.34	3489
P1010302	3924/1
P1032300	4389
P1045300	4388
P1045310	4388
P1051300	3988/1
P1152330	4380
P1242300	4390
P1251300	3966/1
P1256302	4037/1
P1277300	4391
P1343300	3962/1

WOKING	BESER
NO	NO
P1345300	3925/2
P1346300	3926/1
P1347300	3963/1
P1350302	3906/1
P1350302	3906/1A
P1350302	3906/2
P1351302	3920/1
P1352302	3907/1
P1352302	3907/1A
P1352302	3907/2
P1375301	3922/1
P1382300	4092/1
P1399300	4151/1
P1533300	4379
P1542301	4172/1
P2253.02	4148/1
P2253.12	4148/1
P2253.22	4148/1
P2253.42	4148/1
P2253.52	4148/1
P2813.61	4181/1
P4843.00	3512/1
P4923.02	3647
P4923.22	3647
P4933.00	4034/1
P6753.01	4138/1
P7193.02	3914/1
P7513.86	3942/A
P7973.01	4126/1
P8873.02	3983/3
P9403.10	3820/1
P9403.20	3820/1
P9403.30	3820/1
P9573.20	4378
P9603.12	4301/1
P10103.02	3924/1
P10323.00	4389
P10453.00	4388
P10453.10	4388
P10513.00	3988/1
P11523.30	4380
P12423.00	4390
P12513.00	3966/1
P12563.02	4037/1
P12773.00	4391
P13263.32	4251/1
P13433.00	3962/1
P13453.00	3925/2
P13463.00	3926/1
P13473.00	3963/1
P13503.02	3906/1
P13503.02	3906/1A
P13503.02	3906/2
P13513.02	3920/1
P13523.02	3907/1
P13523.02	3907/1A
P13523.02	3907/2
P13753.01	3922/1
P13753.12	4171/1
P13823.00	4092/1
P13993.00	4151/1
P14203.02	4174/1
P14303.00	4201/1
P14403.10	4140/1
P14613.02	4176/1
P14823.02	4283/1
P15213.00	4325/1
P15333.00	4379
P15423.01	4172/1
P15573.00	4382
P15763.00	4383
P15783.00	4381
P17023.02	4351/1
P19303.00	4350/1

WVA	BESER
NO	NO
20002	3463
20002	3499
20004	3701
20009	3326
20011	3320
20011	3350
20027	3455
20027	3471
20031	3875
20034	3318
20037	3319
20039	3449
20041	3449
20068	3334
20073	3316
20073	3346
20073	3485
20074	3317
20075	3325
20088	3311
20090	3331/1
20092	3331
20092	3332
20092	3332/1
20099	3582
20104	3582
20107	3318
20108	3582
20112	3395
20113	3395
20140	3329
20141	3329
20143	3322
20145	3321
20145	3340
20146	3321
20151	3377
20153	3373
20161	3403
20162	3873
20166	3393
20168	3531
20168	3551
20171	3481
20172	3481
20191	3463
20192	3463
20193	3752
20194	3752
20226	3840
20227	3840
20228	3327
20228	3343
20228	3483
20245	3344
20252	3313
20253	3323
20260	3806
20260	3806/1
20261	3986
20267	3986
20271	3323
20286	3328
20289	3375
20302	3710
20315	3592
20323	3335
20325	4276
20335	3329
20341	3339
20341	3514
20344	3661
20347	3333
20348	3333
20359	3423
20359	3423/1
20364	3416
20365	3416
20366	3366/1
20367	3366

WVA	BESER
NO	NO
20375	3625
20380	3526
20392	3315
20392	3515
20392	3315/1
20407	3313
20410	3596
20417	3322
20423	3596
20436	3326/1
20437	3331/1
20437	3332/1
20454	3405
20455	3405
20468	3334
20476	3376
20480	3374
20487	3330/1
20488	3527
20489	3527
20491	3312
20491	3484
20494	3333
20494	3329/1
20495	3333
20495	3329/1
20535	3324
20547	3623
20561	3404
20563	3601
20570	3527
20571	3527
20574	3378
20574	3490
20576	3406
20578	3480
20587	3706
20588	3365
20592	3340
20599	3314
20599	3336
20628	3369
20629	3573
20631	3442
20632	3442
20633	3442
20634	3381
20634	3495
20635	3381
20635	3394
20635	3492
20635	3493
20635	3587
20635	3494
20636	3381
20636	3492
20636	3493
20636	3592
20636	3494
20640	3417
20640	3417/1
20651	4020
20660	3421
20668	3536
20669	3619
20669	3635
20669	3649
20669	3650
20671	3330
20672	3330
20673	3330
20675	3572
20676	3590
20676	3665
20676	3590/1
20678	3590
20687	3550
20687	3611
20699	3376
20703	3709

WVA	BESER
NO	NO
20718	3370
20719	3468
20720	3468
20724	3407
20729	3379
20730	3379
20731	3509
20735	3705
20741	3440
20747	4355
20753	3417
20756	3572
20757	3573
20758	3550
20758	3611
20767	3579
20768	3579
20772	3372
20775	3424
20778	3650
20780	3746
20783	3417/1
20784	3513
20787	3440
20793	3484
20833	3466
20834	3466
20836	3467
20837	3467
20838	3466
20838	3467
20852	3371
20854	3579
20857	3621
20858	3621
20859	3492
20859	3493
20859	3494
20860	3493
20860	3494
20861	3419
20861	3429
20862	3429
20863	3415
20870	3402
20870	3472
20880	3446
20880	3450
20881	3446
20881	3450
20882	3446
20882	3450
20887	3444
20887	3486
20887	3585
20887	3444/1
20887	3486/1
20887	3585/1
20888	3444
20888	3486
20888	3585
20888	3444/1
20888	3486/1
20888	3585/1
20889	3441
20889	3441/1
20895	3633
20895	3646
20901	3619
20901	3635
20905	3380
20905	3487
20905	3580
20905	3489
20906	3380
20906	3487
20906	3580
20906	3489
20907	3548
20907	3549

WVA	BESER
NO	NO
20907	3690
20907	3790
20907	3790/1
20908	3549
20919	3539
20919	3546
20920	3546
20921	3546
20926	3482
20928	3482
20929	3482
20933	3689
20934	3689
20935	3372
20936	3372
20937	3372
20938	3372
20939	3410
20940	3408
20941	3408
20947	3537
20950	3424
20950	3424/1
20951	3424/1
20952	3424/1
20955	3401
20958	3394
20959	3501
20959	3752
20960	3529/2
20961	3529
20961	3529/1
20961	3529/2
20968	3564
20968	3584
20973	3496
20973	3496/1
20974	3496
20974	3496/1
20979	3605
20986	3380
20986	3580
20987	3380
20987	3580
20989	3474
20995	3578
20996	3578
21012	3502
21012	3504
21016	3428
21022	3474
21023	3474
21042	3418
21048	3523
21048	3524
21049	3523
21050	3717
21054	3430
21055	3430
21057	3510
21061	3488
21064	3564
21084	3624
21085	3624
21086	3428
21087	3428
21089	3583
21090	3583
21096	3495
21097	3495
21099	3397
21099	3758
21100	3432
21100	3491
21101	3491
21105	3432
21107	3425
21110	3526
21115	3462
21119	3758

WVA	BESER
NO	NO
21126	3400
21130	3758
21131	3439
21140	3469
21141	3603
21144	3536
21153	3628
21153	3629
21158	3414
21158	3714
21159	3620
21160	3423/1
21170	3422
21171	3464
21171	3465
21173	3609
21190	3470
21190	3505
21190	3615
21193	3458
21193	3459
21193	3461
21193	3540
21194	3459
21195	3461
21201	3470
21201	3505
21202	3589
21203	3589
21205	3543
21206	3543
21209	3457
21210	3457
21233	3641
21234	4239
21237	3771
21238	3771
21243	3436
21248	3634
21249	3634
21249	4088
21277	3449
21278	3680
21282	3879
21294	3472
21301	3630
21303	3627
21304	3626
21305	3581
21312	4212
21313	4212
21314	4212
21318	3672
21326	3633
21326	3646
21327	3633
21327	3646
21330	3691
21331	3691
21332	3691
21333	3721
21334	3721
21335	3721
21338	3600
21339	3600
21340	3600
21347	3692
21347	3760
21348	3760
21349	3760
21353	3623
21355	3723
21356	3723
21363	3685
21368	3733
21369	3634
21369	4088
21373	3448
21374	3448
21375	3448

WVA	BESER
NO	NO
21378	3437
21379	3437
21380	3437
21385	3642
21388	3539
21394	3558
21394	3593
21404	3503
21411	3736
21413	3736
21430	3528
21432	3528
21436	3608
21436	3643
21437	3608
21439	3658
21446	3631
21447	3631
21448	3631
21459	3662
21460	3555
21463	3431
21463	3503
21463	3503/1
21468	3777
21469	3445
21470	3473
21471	3909
21472	3503
21473	3503
21479	3553
21479	3553/1
21481	3888
21482	4078
21486	3881
21487	3879
21490	3915
21495	3426
21496	3426
21497	3696
21498	3696
21499	3696
21500	3882
21501	3882
21502	3882
21503	3426
21514	3771
21515	3683
21515	3872
21515	3872/1
21516	3683
21516	3872/1
21517	3683
21517	3872/1
21519	3412
21519	3453
21519	3816
21519	3453/1
21526	3700
21533	3491
21537	3666
21537	3672
21538	3666
21538	3672
21539	3640
21540	3640
21541	3640
21543	3657
21543	3757
21543	3857
21544	3657
21544	3757
21544	3857
21545	3660
21546	3562
21546	3652
21553	4087
21554	4087
21555	4087
21561	3699

WVA	BESER
NO	NO
21561	3779
21562	3699
21562	3779
21572	3680
21573	3689
21576	3567
21577	3567
21586	4214
21592	3670
21593	3670
21601	3554
21601	3651
21602	3554
21602	3651
21603	3554
21603	3651
21613	3555
21614	3556
21615	3556
21616	3556
21621	3678
21622	3678
21626	4128
21631	3819
21632	3878
21633	3699
21633	3779
21635	4020
21636	3617
21637	3617
21638	3593
21642	3881
21643	3563
21644	3563
21647	3622
21648	3622
21649	3622
21650	3604
21651	3704
21652	3704
21653	3704
21654	3522
21655	3522
21656	3522
21657	3598
21657	3766
21658	3766
21659	3766
21662	3731
21664	3677
21670	3863
21676	3564/1
21679	3560
21680	3560
21681	3560
21688	4072
21691	3656
21694	3607
21695	3607
21696	3607
21697	3686
21698	3686
21699	3686
21700	3695
21701	3695
21702	3695
21703	4080
21704	4080
21705	4080
21706	4108
21707	4108
21708	4108
21712	3436
21719	4148
21719	4148/1
21720	4148
21720	4148/1
21721	4148
21721	4148/1
21724	3750

WVA	BESER
NO	NO
21725	3632
21726	3632
21727	3632
21730	3745
21748	3671
21749	3750
21754	3832
21755	3832
21766	3833
21768	3685
21769	3685
21773	3502
21774	3502
21775	3673
21776	3673
21782	4088
21786	4275
21787	4275
21791	4086
21794	3863
21795	3677
21797	3595
21798	3595
21799	3559
21800	3559
21812	3867
21813	3867
21814	3867
21822	4182
21823	4182
21824	4182
21825	4182
21828	3665
21829	3665
21832	3545
21833	3776
21834	3776
21840	3688
21841	3688
21842	3688
21845	3674
21846	3674
21847	3674
21848	3506
21848	3590/2
21849	3506
21849	3590/2
21862	3615
21866	3538
21866	3566
21866	3637
21868	3538
21868	3566
21868	3637
21875	3887
21876	3887
21877	3887
21882	3671
21883	3606
21883	3794
21885	3606
21885	3794
21891	3656
21897	3662
21898	3821
21899	3821
21900	3663
21904	3680
21907	3883
21908	3883
21909	3883
21911	3590/1
21919	3676
21927	3618
21927	3618/1
21928	3618
21928	3618/1
21929	3618
21930	3897
21945	3896

WVA	BESER
NO	NO
21947	3693
21952	3898
21953	3898
21954	3898
21962	3458
21974	3682
21980	3659
21980	3759
21981	3659
21981	3759
21982	4059
21983	4059
21999	4281
22031	4334
22032	4334
22034	4351
22034	4351/1
22035	4295
22036	4295
22037	4295
22041	3820/3
22065	4282/1
22065	4282
22065	4282/1
22087	4227
22103	4287
22117	4308
22118	4308
22119	4308
22123	4285
22124	4285
22125	4285
22143	4284
22144	4284
22147	4350
22147	4350/1
22178	4356
22220	4286
22221	4286
22223	4328
22231	4270
22262	3906
22329	4353
22330	4353
22331	4353
22356	4287
22383	4364
22384	4364
22385	4364
22397	4234
22398	4234
22399	4234
22420	4251
22420	4251/1
22421	4251
22421	4251/1
22422	4251
22422	4251/1
22439	4307
22440	4307
22449	4246
22450	4246
22451	4246
22476	4301
22476	4301/1
22477	4301
22477	4301/1
22525	4253
22526	4253
22531	4270
22588	4370
22589	4370
22593	4369
22610	4280
22660	4376
22661	4376
22662	4376
22791	4384
22802	4357
22993	3662

WVA	BESER
NO	NO
23002	4281
23004	3577
23004	3647
23005	3577
23005	3598/1
23005	3647
23006	3577
23006	3598/1
23006	3647
23020	3861
23021	3804
23022	3681
23032	4071
23037	4088
23038	4088
23042	3799
23043	4197
23044	4197
23052	3763
23053	3763
23054	3763
23055	3763
23061	3511
23063	3762
23064	3762
23066	3762
23067	3762
23070	4125
23071	3558
23071	3593
23073	3919
23074	3919
23076	3918
23077	3918
23078	4101
23078	4209
23080	3675
23081	3507
23082	3507
23083	3507
23086	3697
23094	4115
23095	4115
23099	3848
23101	3594
23102	3594
23103	3570
23104	3570
23112	3943
23114	3943
23119	4222
23124	3636
23125	3636
23126	3584
23127	3675
23130	3682
23130	3782
23131	3782
23144	3836
23145	3836
23154	3754
23155	3754
23157	4103
23163	3794
23169	3557
23169	3610
23170	3557
23170	3610
23172	3539/1
23178	4110
23181	3897
23187	3782
23189	4069
23190	4069
23191	4069
23192	4069
23193	4126
23193	4126/1
23194	4126
23194	4126/1

WVA	BESER
NO	NO
23195	4126
23195	4126/1
23196	4126
23196	4126/1
23202	3877
23203	3877
23205	3759
23215	3950
23217	3950
23218	3568
23218	3569
23224	3795
23224	4345
23225	3846
23226	3846
23227	3548
23227	3690
23228	3548
23228	3690
23234	3687
23234	3687/1
23235	3687/1
23236	3687/1
23238	3778
23239	3778
23240	3778
23241	3744
23245	3852
23247	3852
23269	4095
23270	4095
23271	4102
23273	3934
23277	3935
23278	4100
23279	4100
23280	4222
23289	3617
23290	3809
23300	3722
23301	3722
23303	4034
23303	4034/1
23304	4034
23304	4034/1
23309	4179
23310	4179
23312	4180
23313	4378
23314	3884
23316	3697
23317	3697
23324	3590/2
23326	3842
23331	4276
23331	4276/1
23334	4127
23335	4127
23340	4112
23341	4112
23342	4112
23346	3644
23347	4180
23348	3768
23349	3768
23350	3768
23353	3755
23384	3740
23385	3740
23386	3740
23392	3590/1
23393	3896
23400	3602
23407	3854
23409	3931
23417	4040
23420	3932
23421	3932
23422	3932
23434	3921

WVA	BESER
NO	NO
23435	3921
23440	3801
23441	3801
23442	4009
23443	4009
23444	4009
23445	3553/1
23446	3795
23446	4345
23447	4181/1
23471	3512
23471	3512/1
23471	3512/2
23472	3781
23473	3781
23474	3564/1
23480	3890
23481	3890
23482	3853
23482	3853/1
23483	3853
23484	3653
23485	3653
23486	3653
23487	4271
23488	3892
23490	3780
23497	3901
23498	3901
23499	4274
23502	4010
23503	4010
23504	4010
23505	4071
23506	4071
23507	3928
23508	3928
23509	3928
23510	3769
23511	3769
23512	3769
23513	3822
23515	3874
23517	4123
23521	3788
23522	3788
23523	3788
23524	3829
23525	3829
23527	4155
23530	4110
23531	4110
23536	3648
23537	3648
23538	3648
23539	3830
23540	3767
23543	3993
23544	3993
23545	3993
23546	3561
23547	3561
23549	4062
23552	3790
23554	3529
23554	4152
23554	3529/1
23554	3529/2
23557	4093
23558	4079
23559	4079
23560	4079
23565	3667
23569	3843
23570	3843
23571	3843
23572	3913
23573	3913
23574	3913
23577	3784

WVA	BESER
NO	NO
23578	3784
23579	3784
23580	3784
23581	4138
23581	4138/1
23582	3893
23583	3893
23584	3955
23585	4158
23586	4158
23587	3904
23588	3904
23589	3904
23592	3876
23593	4084
23594	4084
23595	4084
23597	3938
23598	3938
23599	3820
23599	3820/1
23600	3800
23604	3877
23611	3859
23612	3859
23613	3856
23615	4094
23620	4154
23621	4154
23622	4154
23623	4389
23624	4389
23631	4011
23632	4011
23633	4011
23636	3781
23638	4012
23639	4012
23649	3802
23650	3802
23651	3802
23652	4148/1
23653	4148/1
23654	4040
23655	4040
23656	4153
23657	4153
23658	4153
23662	4027
23669	3855
23671	3552
23673	3895
23674	3895
23675	3895
23692	4075
23693	4075/1
23694	4076
23698	4143
23699	4143
23702	3911
23703	4082
23705	3826
23705	3826/1
23705	3826/3
23706	3826/1
23706	3826/3
23708	3800/1
23708	3800/3
23709	3800/1
23709	3800/3
23713	4301
23713	4301/1
23720	4159
23723	3885
23724	3885
23726	3976/1
23727	3976/1
23728	3976/1
23729	4109
23729	4232

WVA	BESER
NO	NO
23732	4181
23732	4181/1
23734	4105
23736	4148/1
23737	4181
23738	4211
23739	4211
23743	4097
23743	4097/1
23744	4097
23744	4097/1
23746	3841
23746	3841/1
23747	3841
23747	3841/1
23749	3841
23749	3841/1
23763	4096
23766	3817
23768	3890
23775	3569
23776	3568
23780	3764
23781	3764
23782	3764
23784	3574
23784	3914/1
23785	3574
23785	3914/1
23786	3574
23786	3914/1
23787	4119
23788	4119
23791	4208
23792	4208
23793	4346
23794	4346
23794	4380
23801	4096
23804	4083
23812	4276
23816	3825
23818	3817
23819	3817
23823	4152
23828	4222
23832	4042
23833	4042
23836	4013
23840	3921
23841	3921
23842	3790/1
23843	4138
23843	4138/1
23844	4042
23845	3832
23846	3832
23848	3915
23849	3915
23865	3912
23866	3912
23867	3912
23868	3831
23869	3831
23870	3831
23871	3933
23872	3933
23873	4269
23874	4269
23875	4269
23879	3900
23880	3900
23891	3959
23892	3959
23893	3959
23901	3670
23902	3670
23914	3905
23917	3834
23918	3834

WVA	BESER
NO	NO
23919	3835
23920	3835
23921	3914
23922	4210
23925	4210
23926	4388
23927	4388
23928	3910
23930	3849
23934	3850
23954	3820/1
23959	3987
23960	4240
23966	4028
23967	4111
23970	4017
23971	4017
23972	4017
23973	3983
23973	3983/1
23973	3983/2
23973	3983/3
23974	3951
23980	3795/1
23981	3800/1
23981	3800/2
23982	3826
23982	3826/2
23987	4028
23987	4187
23988	4028
23988	4187
23989	4105
23990	3567
23991	3567
23993	3979
23997	3979
24007	3923
24007	3923/1
24008	3924
24008	3924/1
24014	4106
24015	4106
24024	3891
24025	3891
24026	3891
24031	3961
24032	3961
24033	3961
24039	4303
24040	4303
24041	4303
24045	3875
24046	3889
24047	3889
24048	3889
24056	4074
24057	4074
24058	3979
24066	3892
24071	3894
24072	4173
24072	4173/1
24072	4173/2
24083	4031
24088	3933
24089	3598/1
24090	4109
24090	4232
24091	4109
24091	4232
24092	3978
24098	3945
24101	3820
24101	3820/1
24111	4030
24113	4030
24115	4030
24122	3956
24123	4161

WVA	BESER
NO	NO
24124	4161
24130	4099
24131	4099
24132	3859
24133	3940
24134	3939
24135	3946
24137	3853/1
24150	3984
24162	4137
24163	4018
24164	4198
24166	4006
24170	4207
24171	4207
24174	3940
24175	3939
24178	3978
24179	3978
24182	3886
24191	4293
24192	3944
24213	4159
24214	4159
24218	4001
24219	4001
24220	4001
24222	4081
24223	4081
24224	4081
24225	4081
24226	4388
24227	3952
24228	3952
24240	4025
24242	4025
24243	4025
24244	4277
24246	4118
24248	4118
24249	4118
24250	4016
24251	4016
24252	4016
24253	4247
24254	4247
24260	4058
24260	4058/1
24271	4213
24272	4213
24275	3968
24276	3969
24277	3985
24283	4122
24284	4122
24285	4122
24288	3826/2
24291	3765
24295	4309
24301	4000
24306	4248
24310	4249
24317	3880
24318	3880
24319	3880
24320	3980
24321	3980
24322	3980
24323	4113
24324	4113
24325	4113
24335	4058/1
24336	3953
24337	4077
24338	3949
24346	3929
24350	3948
24351	3960
24353	3988
24353	3988/1

WVA	BESER
NO	NO
24354	3988/1
24370	3886
24372	4036
24381	4186
24382	4186
24383	4186
24384	4186
24386	3996
24389	4078
24390	4078
24393	3827
24394	3996
24395	3996
24396	4276
24397	3985
24398	3985
24403	3983/1
24403	3983/2
24403	3983/3
24409	4259
24410	3968
24411	3968
24412	4149
24413	4149
24414	4149
24421	4150
24422	4150
24438	4220
24439	4220
24445	4219
24446	4219
24448	4221
24448	4221
24451	3958
24452	4255
24456	4249
24465	3820/3
24466	3922
24466	4171
24466	3922/3
24466	3922/1
24466	4171/1
24467	3922
24467	4171
24467	3922/3
24467	3922/1
24467	4171/1
24468	3981
24469	3981
24473	4259
24479	3969
24480	3969
24483	4390
24484	3906
24484	3906/1
24484	3906/1A
24484	3906/2
24485	3920
24485	3920/1
24486	3907
24486	3907/1
24486	3907/1A
24486	3907/2
24488	3989
24489	3989
24490	3989
24491	4165
24492	4165
24493	4165
24501	4039
24502	4039
24503	4039
24510	3976
24511	3976
24512	3976
24513	4332
24514	4333
24514	4333
24523	3982
24529	3975

WVA	BESER
NO	NO
24530	3975
24537	4157
24538	3964
24538	3964/1
24539	3964
24549	3800/2
24553	4309
24561	4325
24561	4325/1
24562	4325
24562	4325/1
24563	4135
24567	3903
24568	3960
24569	3960
24570	4092/1
24578	4151
24578	4151/1
24581	4242
24582	4029
24590	3956
24591	3956
24594	3886
24595	3886
24595	3972
24597	4035
24598	4035
24602	4004
24603	4004
24604	4005
24605	4005
24606	4260
24608	3972
24609	4035
24610	3954
24611	3954
24612	3954
24623	4162
24624	4162
24625	4162
24626	4022
24626	4190
24627	4022
24627	4190
24628	4021
24629	4029
24630	4029
24632	4038
24633	3982
24634	3982
24635	4156
24636	4156
24637	4156
24638	4160
24639	4160
24640	4160
24647	3797
24648	3797
24649	3797
24653	3997
24659	4291
24660	3970
24664	4037
24664	4037/1
24665	4037
24665	4037/1
24666	4037
24666	4037/1
24667	4074
24668	4147
24669	4147
24670	4215
24671	4215
24672	3988
24672	3988/1
24673	4141
24674	4141
24682	4015
24683	4015
24684	4015

WVA	BESER
NO	NO
24688	4378
24689	4378
24692	3967
24693	3966
24693	3966/1
24697	4380
24703	4379
24704	4379
24709	4134
24710	4134
24721	4310
24724	4229
24725	4229
24726	4229
24727	4121
24728	4121
24729	4121
24729	4121/1
24730	3748
24731	3748
24732	3748
24737	3984/1
24764	4173/1
24764	4173/2
24765	3971
24769	3866
24770	3866
24771	3866
24789	4331
24790	4331
24791	4331
24792	4022
24792	4190
24802	4327
24803	4329
24815	4189
24816	4189
24817	4330
24818	4188
24819	4188
24820	4142
24830	3899
24831	3899
24832	4033
24833	4033
24834	4033
24835	4032
24844	4098
24845	4098
24846	4098
24854	4258
24855	4258
24864	4073
24865	4073
24866	4073
24867	4391
24868	4391
24869	4326
24879	4023
24879	4191
24880	4023
24880	4191
24881	4023
24881	4191
24882	4023
24882	4191
24884	4012
24885	4146
24886	4146
24887	4146
24912	4381
24913	4381
24914	3964/1
24918	4256
24929	4147
24934	4061
24935	4061
24936	4061
25008	4241
25010	4241

WVA	BESER
NO	NO
25021	4314
25022	4314
25030	4107
25031	4230
25032	4230
25033	4230
25034	4008
25035	4008
25036	4008
25060	3927
25071	4335
25072	4335
25086	4228/1
25093	4220
25095	3826/2
25096	4014
25097	4014
25098	4014
25109	4336
25110	4336
25112	4057
25113	4057
25134	4204
25135	4204
25147	4056
25148	4056
25149	4124
25150	4124
25151	4124
25165	4056
25172	4132
25172	4172
25172	4172/1
25173	4132
25173	4172
25173	4172/1
25179	4313
25187	4049
25188	4049
25189	4049
25190	4338
25191	4338
25192	4338
25196	4339
25197	4339
25198	4339
25199	4382
25200	4382
25202	4038
25203	4314
25204	4314
25209	4167
25210	4167
25220	4145
25221	4145
25240	4324
25241	4324
25242	4324
25246	3998
25250	4201
25250	4201/1
25251	4201
25251	4201/1
25261	3983/3
25268	4337
25269	4337
25270	4337
25307	4383
25308	4383
25309	3916
25310	3916
25336	4058/1
25337	4343
25338	4343
25339	4343
25348	4136
25349	4136
25350	4136
25353	4349
25354	4349

WVA	BESER
NO	NO
25365	4265
25366	4265
25367	4265
25371	3868
25372	3868
25373	3868
25434	4368
25481	4254
25506	4381
25507	4381
25520	4060
25521	4060
25522	4060
25581	4319
25582	4319
25588	4341
25589	4341
25600	4202
25601	4202
25602	4174
25602	4174/1
25603	4175
25603	4175/1
25604	4175
25604	4175/1
25610	4019
25611	4019
25612	4019
25644	4233
25645	4233
25646	4233
25681	4200
25682	4200
25683	4228
25683	4228/1
25688	4316
25689	4316
25690	4316
25698	4176
25698	4176/1
25699	4176
25699	4176/1
25700	4176
25700	4176/1
25702	4140
25702	4140/1
25703	4140
25708	4166
25708	4342
25709	4166
25709	4342
25710	4166
25710	4342
25720	4323
25725	4315
25728	4140/1
25729	3983/3
25736	4226
25737	4226
25738	4140/1
25749	4170
25750	4170
25751	4170
25757	4041
25758	4041
25759	4041
25786	4242
25792	4312
25793	4312
25794	4312
25800	4354
25823	4205
25827	4374
25828	4374
25833	4371
25833	4373
25834	4371
25834	4373
25839	4372
25840	4372

WVA	BESER
NO	NO
25870	4002
25871	4002
25872	4002
25875	4317
25876	4317
25877	4317
25878	4318
25879	4318
25880	4318
25918	3907
25947	4279
25948	4279
25949	4279
25965	4283
25965	4283/1
25966	4283
25966	4283/1
25967	4283
25967	4283/1
25970	4282
25970	4282/1
25971	4242
25973	4286
25974	4286
25975	4286
25976	4321
25977	4321
25978	4321
25987	4224
25988	4224
26149	4360
26150	4360
26188	4363
26189	4363
26209	4367
26210	4367
26211	4367
26219	4117
26236	4361
26237	4361
26238	4361
26268	4375
26269	4375
26651	4360
29001	3749
29001	3749/1
29003	3749
29017	3433
29076	3614
29121	3575
29121	3645
29121	3575/1
29121	3575/2
29122	3994
29122	3994/1
29123	3823
29153	3614
29160	3942
29160	3942/A
29192	3925
29192	3925/2
29217	3963/1
29229	3965
29229	3965/1
29230	3965/1
29231	3995
29231	3995/1
29232	4092
29232	4092/1
29240	4054
29241	4054
29242	4216
29243	4216
29256	4169
29296	3930
29297	3930
29324	3390
29324	3521
29325	3390
29398	3995/1
29764	3521
29784	3513
29835	3679

ZIMMERMANN	BESER
NO	NO
200021502	3463
200111501	3320
200111851	3350
201621501	3873
201681601	3531
201681901	3551
202281501	3327
202611901	3986
202611902	3986
203411751	3339
203411751	3514
203441451	3661
203591801	3423
203801552	3526
203921501	3515
203921501	3315/1
204101501	3596
205471701	3623
205881651	3365
206291951	3573
206311801	3442
206351801	3494
206691601	3649
206691901	3619
206751701	3572
206871351	3611
206871551	3550
207411901	3440
207531801	3417
207721801	3503/1
207781961	3650
207801351	3746
207831801	3417/1
208331751	3466
208611801	3419
208701501	3402
208871501	3486
208871501	3486/1
208871502	3486
208871701	3585
208871702	3585
208871702	3585/1
208871951	3444
208871952	3444/1
208891731	3441
208891752	3441
209051801	3380
209061801	3487
209061801	3489
209081801	3549
209261851	3482
209391501	3410
209411901	3408
209501802	3424/1
209611521	3529
209611601	3529/1
209681751	3584
209681951	3564
209681952	3564
209731101	3496/1
209741101	3496
209791951	3605
209891751	3474
209951701	3578
210121501	3504
210121502	3502
210501551	3717
210551801	3430
210891501	3583
210961501	3495
211001701	3432
211071201	3425
211401551	3469
211441651	3536
211531601	3628
211531751	3629
211711851	3464
211731701	3609
211901801	3470
211931802	3459

ZIMMERMANN	BESER
NO	NO
212021801	3589
212051901	3543
212091901	3457
212331651	3641
212771501	3449
212801601	4104
213011501	3630
213051551	3581
213121301	4212
213121302	4212
213471701	3760
213631601	3685
213681851	3733
213731701	3448
213851301	3642
213881801	3539
213941801	3558
213961801	3593
214111701	3736
214301701	3528
214361701	3608
214361702	3643
214361704	3643
214461751	3631
214631802	3503
214681551	3777
214691901	3445
214701901	3473
214711751	3909
214711752	3909
214791901	3553
214791902	3553/1
214811551	3888
214821701	4078
214861901	3881
214861902	3881
214871701	3879
214871702	3879
214871709	3879
214951701	3426
214971801	3696
215001501	3882
215151751	3683
215151751	3872/1
215191801	3453
215431601	3757
215431601	3857
215451551	3660
215461651	3562
215531401	4087
215611701	3779
215731401	3689
215762051	3567
215861501	4214
215921851	3670
216011751	3554
216011751	3651
216141751	3556
216211701	3678
216261551	4128
216311701	3819
216321601	3878
216341801	4020
216361901	3617
216471501	3622
216511751	3704
216541501	3522
216571652	3766
216641951	3677
216702001	3863
216702002	3863
216791501	3560
216911701	3656
216941651	3607
216971501	3686
217031501	4080
217061551	4108
217191501	4148/1
217241901	3750
217251701	3632

ZIMMERMANN	BESER
NO	NO
217661351	3833
217911701	4086
217971951	3595
217991951	3559
218221801	4182
218401451	3688
218451651	3674
218482001	3506
218611701	4062
218621801	3505
218621801	3615
218661501	3637
218661701	3566
218661951	3538
218751551	3887
218831951	3606
218851951	3794
218981551	3821
218981552	3821
219001551	3663
219041691	3680
219151701	4079
219191501	3676
219291751	3618
219451951	3896
219451952	3896
219471551	3693
219741951	3682
219801801	3659
219821701	4059
219991601	4281
230031901	3799
230031902	3799
230041601	3577
230041601	3647
230201801	3861
230211901	3804
230211902	3804
230222051	3681
230222052	3681
230431851	4197
230611401	3511
230631731	3762
230701701	4125
230701702	4125
230701703	4125
230731901	3919
230761751	3918
230781601	4101
230781601	4209
230801501	3675
230941651	4115
230991801	3848
231031801	3570
231241901	3636
231311951	3782
231441951	3836
231541901	3754
231571601	4103
231571602	4103
231721801	3539/1
231781601	4110
231811751	3897
231891651	4069
231931651	4126
232021851	3877
232151801	3950
232241652	4345
232241653	4345
232251701	3846
232271801	3548
232271801	3690
232341701	3687/1
232381601	3778
232411601	3744
232451801	3852
232451802	3852
232691951	4095
232711751	4102
232711752	4102

ZIMMERMANN	BESER
NO	NO
232731801	3934
232771801	3935
232791851	4100
233001851	3722
233091701	4179
233122001	4180
233122002	4180
233122009	4180
233261751	3842
233261752	3842
233401701	4112
233481651	3768
233531501	3755
233922001	3590/1
234001501	3602
234022001	4211
234022002	4211
234022003	4211
234071901	3854
234091901	3931
234341851	3921
234401751	3801
234421651	4009
234821651	3853
234841701	3653
234881551	3892
234901501	3780
234971551	3901
235021601	4010
235071501	3928
235101601	3769
235151551	3874
235171601	4123
235211401	3788
235241751	3829
235271501	4155
235361601	3648
235431551	3993
235431552	3993
235521801	3790/1
235541501	3529
235571701	4093
235691701	3843
235691702	3843
235721401	3913
235771851	3921
235811902	4138
235811902	4138/1
235841601	3955
235851701	4158
235872001	3904
235931501	4084
235971801	3938
235991901	3820
235991901	3820/1
235991902	3820
235991902	3820/1
236001901	3800
236001902	3800
236131801	3856
236151751	4094
236201651	4154
236381851	4012
236491651	3802
236561401	4153
236691701	3855
236731501	3895
236941651	4076
236941652	4076
236941659	4076
236981701	4143
237051801	3826/1
237051802	3826/1
237061802	3826/3
237061803	3826/3
237081901	3800/1
237081902	3800/1
237091901	3800/3
237091902	3800/3
237201751	4159

ZIMMERMANN	BESER
NO	NO
237231801	3885
237291551	4109
237291551	4232
237321701	4181
237321709	4181
237341701	4105
237432001	4097
237461751	3841/1
237461851	3841
237632001	4096
237661751	3817
237681851	3890
237751801	3569
237761801	3568
237801701	3764
237912051	4208
237932001	4346
237932002	4346
237932009	4346
238161601	3825
238291701	4152
238322001	4042
238322002	4042
238361701	4013
238651801	3912
238681701	3831
238681702	3831
238711381	3933
238731601	4269
238791601	3900
238911701	3959
239141701	3905
239141702	3905
239171951	3834
239171952	3834
239191951	3835
239212001	3914
239252101	4210
239301801	3849
239301802	3849
239341801	3850
239541901	3820
239541901	3820/1
239591751	3987
239591752	3987
239601751	4240
239661651	4028
239671551	4111
239701701	4017
239731651	3983/1
239731751	3983
239741751	3951
239801701	3795/1
239811901	3800/2
240072102	3923/1
240072103	3923/1
240081851	3924
240101659	4076
240141551	4106
240241701	3891
240311751	3961
240461851	3889
240581551	3979
240581552	3979
240711451	3894
240721751	4173
240721752	4173/1
240721753	4173
240831901	4031
240921651	3978
240981701	3945
240981703	3945
241221901	3956
241221902	3956
241232001	4161
241331851	3940
241331852	3940
241342001	3939
241351801	3946
241371681	3853/1

ZIMMERMANN	BESER
NO	NO
241501751	3984
241501752	3984
241621501	4137
241701951	4207
241921751	3944
242221751	4081
242271601	3952
242461701	4118
242531751	4247
242601652	4058
242751651	3968
242761501	3969
242761502	3969
242771601	3985
242771602	3985
242831751	4122
243062051	4248
243062052	4248
243062053	4248
243101901	4249
243171751	3880
243201551	3980
243201552	3980
243361751	3953
243371751	4077
243381551	3949
243461701	3929
243471801	3958
243511701	3960
244031751	3983/2
244031751	3983/3
244121901	4149
244121902	4149
244211701	4150
244211702	4150
244211703	4150
244651901	3820/3
244651902	3820/3
244661901	3922
244661902	3922
244661903	4171
244661903	3922/3
244841901	3906
244841902	3906/1
244851901	3920
244861701	3907
244881551	3989
245011701	4039
245101701	3976
245371601	4157
245371602	4157
245381851	3964
245531601	4309
245631651	4135
245702101	4092
245781651	4151
245781652	4151
245821851	4029
245951851	3972
245951852	3972
245971751	4035
246061751	4260
246101551	3954
246231802	4162
246321701	4038
246351601	4156
246381901	4160
246601801	3970
246601802	3970
246641601	4037
246641602	4037
246681901	4147
246921601	3967
246931851	3966
246931852	3966
247211701	4310
247272002	4121
247431901	4259
247651651	3971
247651652	3971

ZIMMERMANN	BESER
NO	NO
248201601	4142
248201602	4142
248851651	4146
249141801	3964/1
250081651	4241
250311851	4230
250311852	4230
250341851	4008
250341852	4008
250961651	4014
250961652	4014
251121801	4057
251341701	4204
251471801	4056
251531551	4060
251721801	4132
251721801	4172
251721801	4172/1
252201851	4145
253481801	4136
253481802	4136
256021702	4174
256021703	4174
256031751	4175
256031752	4175
256821802	4200
256921802	4166
257021801	4140
257361801	4226
290012001	3749
290172301	3433/1
290172302	3433
290411851	3523
290672201	3773
291212001	3575
291222201	3994
291232001	3823
291602001	3942
291901951	3926
291901952	3926
291922101	3925
292002051	3962
292172051	3963
292292101	3965
292292103	3965/1
292312301	3995
295811501	3515
295811501	3315/1
297841801	3513
298352201	3679
22034.170.2	4351/1
22087.185.1	4227
22117.160.1	4308
22147.210.2	4350/1
22476.195.2	4301/1
22588.175.1	4370
22593.175.1	4369
22660.210.2	4376
22791.205.1	4384
23193.165.1	4126/1
23448.170.1	4181/1
23448.970.1	4181/1
23623.170.1	4389
23623.170.2	4389
23623.170.3	4389
23623.970.1	4389
23692.165.1	4075
23743.200.1	4097/1
23926.170.1	4388
23926.170.2	4388
23926.970.1	4388
24008.185.2	3924/1
24008.185.3	3924/1
24466.190.1	3922/1
24466.190.2	3922/1
24466.190.3	4171/1
24483.170.1	4390
24483.170.2	4390
24484.190.1	3906/1
24484.190.1	3906/1A

ZIMMERMANN	BESER
NO	NO
24484.190.1	3906/2
24485.190.1	3920/1
24486.170.1	3907/1
24486.170.1	3907/1A
24486.170.1	3907/2
24561.175.1	4325/1
24561.175.2	4325/1
24561.975.1	4325/1
24570.210.1	4092/1
24578.165.1	4151/1
24578.165.2	4151/1
24664.160.1	4037/1
24664.160.2	4037/1
24688.200.1	4378
24693.185.1	3966/1
24693.185.2	3966/1
24697.190.1	4380
24703.167.1	4379
24703.175.1	4379
24867.205.1	4391
24867.905.1	4391
24912.185.1	4381
25199.195.1	4382
25199.995.1	4382
25250.190.1	4201/1
25250.190.2	4201/1
25307.175.1	4383
25307.975.1	4383
25602.170.2	4174/1
25602.170.3	4174/1
25683.200.1	4228/1
25698.190.2	4176/1
25827.175.1	4374
25827.175.2	4374
25833.170.1	4371
25833.170.1	4373
25839.175.1	4372
25965.155.1	4283/1
29190.195.1	3926/1
29190.195.2	3926/1
29192.210.1	3925/2
29192.210.2	3925/2
29200.205.1	3962/1
29200.205.2	3962/1
29217.205.1	3963/1

	BESER
NO	NO

	BESER
NO	NO

BEŞER®

DİSK VE FREN BALATASINDA ÖNCÜ



Fabrika Merkez (Factory Center) : Ankara Asfaltı No:309 35050 Bornova-İzmir-TÜRKİYE
Telefon (Phone) : 0090 232 478 18 01 Fax: 0090 232 478 18 22

Fabrika İhracat (Factory Export) : Ayhan Sokak No:20 Ege Serbest Bölge Gaziemir-İzmir-TÜRKİYE
Telefon (Phone) : 0090 232 252 54 20 Fax: 0090 232 252 54 22

İstanbul Ofis Avrupa (İstanbul Office) : İkitelli Sanayi Siteleri Dolapdere San. Sit. 5. Ada No:17 İkitelli-İstanbul-TÜRKİYE
Telefon (Phone) : 0090 212 549 89 56 - 57 - 58 Fax: 0090 212 549 89 59

İstanbul Ofis Anadolu (İstanbul Office) : Ferhatpaşa Mah. Üsküdar Cad. No:40/3 Ataşehir-İstanbul-TÜRKİYE
Telefon (Phone) : 0090 216 671 42 47 - 48 Fax: 0090 216 671 42 49

Ankara Ofis (Ankara Office) : Ostim O.S.B. Mah. 1214 Sk. 25 Nolu İş Merk. No:8 Yenimahalle-Ankara-TÜRKİYE
Telefon (Phone) : 0090 312 387 40 50 Fax: 0090 312 387 40 51

TIGLIE PER FRENI ■ DISK BRAKE PADS ■ DİSK BALATA ■ PLAQUETTES
PASTIGLIE PER FRENI ■ DISK BRAKE PADS ■ DİSK BALATA
TIGLIE PER FRENI ■ DISK BRAKE PADS ■ DISK BALATA ■ PLAQUETTES
BRAKE PADS ■ DİSK BALATA ■ PLAQUETTES ■ PASTIGLIE PER FRENI

www.beser.com.tr